2007 ENGINE

Engine Controls and Fuel - 4.8L, 5.3L, 6.0L and 6.2L - Avalanche, Escalade, Suburban, Tahoe & Yukon

SPECIFICATIONS

TEMPERATURE VERSUS RESISTANCE

Temperature Versus Resistance

°C	°F	OHMS
Temperature vs Resistance Values (Approximate)		
150	302	47
140	284	60
130	266	77
120	248	100
110	230	132
100	212	177
90	194	241
80	176	332
70	158	467
60	140	667
50	122	973
45	113	1188
40	104	1459
35	95	1802
30	86	2238
25	77	2796
20	68	3520
15	59	4450
10	50	5670
5	41	7280
0	32	9420
-5	23	12300
-10	14	16180
-15	5	21450
-20	-4	28680
-30	-22	52700
-40	-40	100700

ALTITUDE VERSUS BAROMETRIC PRESSURE

cardiagn.com

Altitude Versus Barometric Pressure

Altitude Measured in Meters (m)	Altitude Measured in Feet (ft)	Barometric Pressure Measured in Kilopascals (kPa)
Determine your altitude by contacting a local weather station or by using another reference source.		
4 267	14,000	56-64
3 962	13,000	58-66
3 658	12,000	61-69
3 353	11,000	64-72
3 048	10,000	66-74
2 743	9,000	69-77
2 438	8,000	71-79
2 134	7,000	74-82
1 829	6,000	77-85
1 524	5,000	80-88
1 219	4,000	83-91
914	3,000	87-95
610	2,000	90-98
305	1,000	94-102
0	0 Sea Level	96-104
-305	-1,000	101-105

IGNITION SYSTEM SPECIFICATIONS

Ignition System Specifications

Application	Specification	
	Metric	English
Firing Order	1-8-7-2-6-5-4-3	
Spark Plug Wire Resistance	397-1,337 ohms	
Spark Plug Torque	15 N.m	11 lb ft
Spark Plug Gap	1.02 mm	0.040 in
Spark Plug Type	GM P/N 12571164 AC Spark Plug P/N 41-985	

FASTENER TIGHTENING SPECIFICATIONS

Fastener Tightening Specifications

Application	Specifications	
	Metric	English
Accelerator Pedal Bolt	9 N.m	80 lb in
Air Cleaner Housing Screw	3 N.m	27 lb in
Air Cleaner Outlet Duct Clamp	4 N.m	35 lb in
Camshaft Position (CMP) Sensor Wire Harness Bolt	12 N.m	106 lb in

cardiagn.com

Chassis Wiring Harness Ground Bolt	18 N.m	13 lb ft
Crankshaft Position (CKP) Sensor Bolt	25 N.m	18 lb ft
Engine Coolant Temperature (ECT) Sensor	20 N.m	15 lb ft
Engine Wiring Harness Clip to Generator Bolt	9 N.m	80 lb in
Engine Wiring Harness Bracket Nut	5 N.m	44 lb in
Evaporative Emission (EVAP) Canister Bolt	25 N.m	18 lb ft
Evaporative Emission (EVAP) Canister Bracket Bolt	25 N.m	18 lb ft
Evaporative Emission (EVAP) Canister Bracket Nut	25 N.m	18 lb ft
Fuel Fill Pipe Bracket Bolt	12 N.m	106 lb in
Fuel Line Bracket Bolt	12 N.m	106 lb in
Fuel Line Bracket Nut	18 N.m	13 lb ft
Fuel Pipe Bracket to Bellhousing Stud Nut	20 N.m	15 lb ft
Fuel Rail Bolt	10 N.m	89 lb in
Fuel Rail Crossover Pipe Retainer Screw	3.8 N.m	34 lb in
Fuel Tank Filler Housing to Body Screw	2.3 N.m	20 lb in
Fuel Tank Filler Housing to Fuel Tank Fill Pipe Screw	2.3 N.m	20 lb in
Fuel Tank Fill Hose Clamp	2.5 N.m	22 lb in
Fuel Tank Strap Bolt	40 N.m	30 lb ft
Heated Oxygen Sensor (HO2S)	42 N.m	31 lb ft
Ignition Coil Bolt	10 N.m	89 lb in
Knock Sensor (KS) Bolt	25 N.m	18 lb ft
Mass Air Flow (MAF)/Intake Air Temperature (IAT) Sensor Adapter Clamp	4 N.m	35 lb in
Negative Battery Cable Stud	25 N.m	18 lb ft
Spare Tire Hoist Crossmember Bolt	50 N.m	37 lb ft
Spark Plug	15 N.m	11 lb ft
Throttle Body Bolt/Nut	10 N.m	89 lb in

SCHEMATIC AND ROUTING DIAGRAMS

EVAPORATIVE EMISSIONS HOSE ROUTING DIAGRAM

cardiagn.com

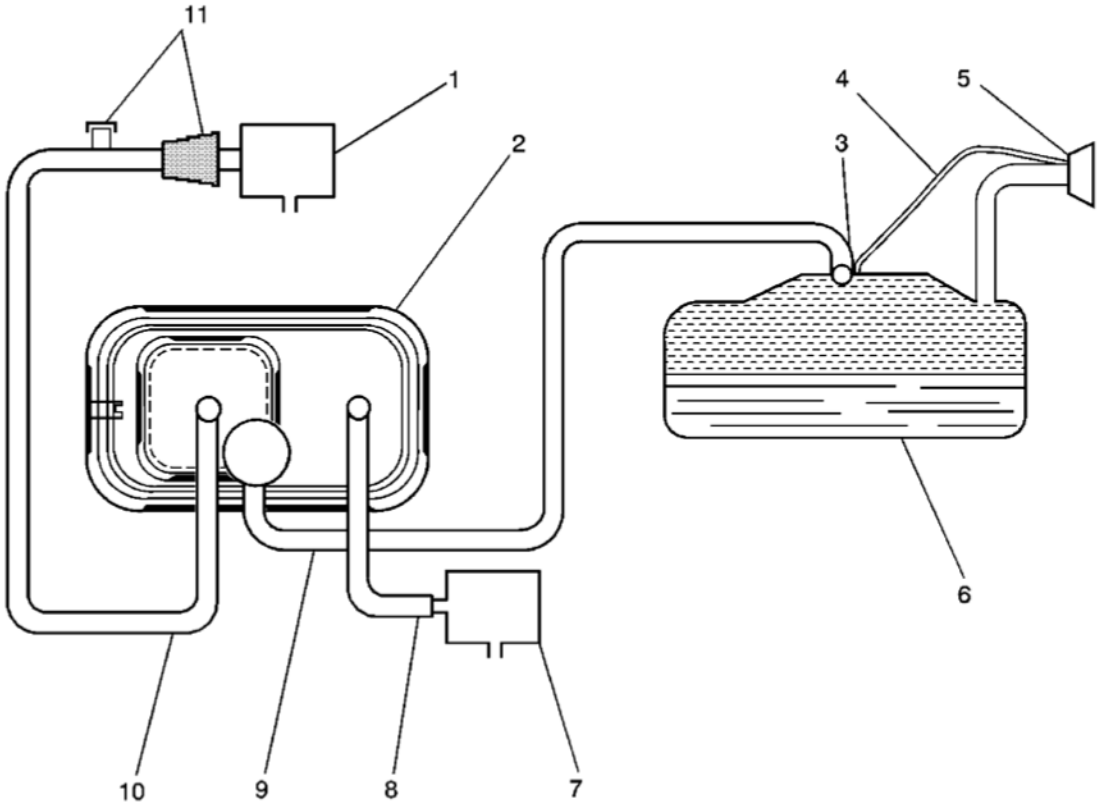

Fig. 1: Evaporative Emissions Hose Routing Diagram
Courtesy of GENERAL MOTORS CORP.

Callouts For Fig. 1

Callout	Component Name
1	EVAP Canister Purge Solenoid Valve
2	EVAP Canister
3	Fluid Level Vent Valve
4	Vapor Recirculation tube
5	Fuel Fill Neck and Fill Cap
6	Fuel Tank
7	EVAP Canister Vent Valve
8	Vent Hose/Pipe
9	EVAP Vapor tube
10	EVAP Purge tube
11	EVAP Service Port or Service Access Connector

FUEL HOSE/PIPES ROUTING DIAGRAM

cardiagn.com

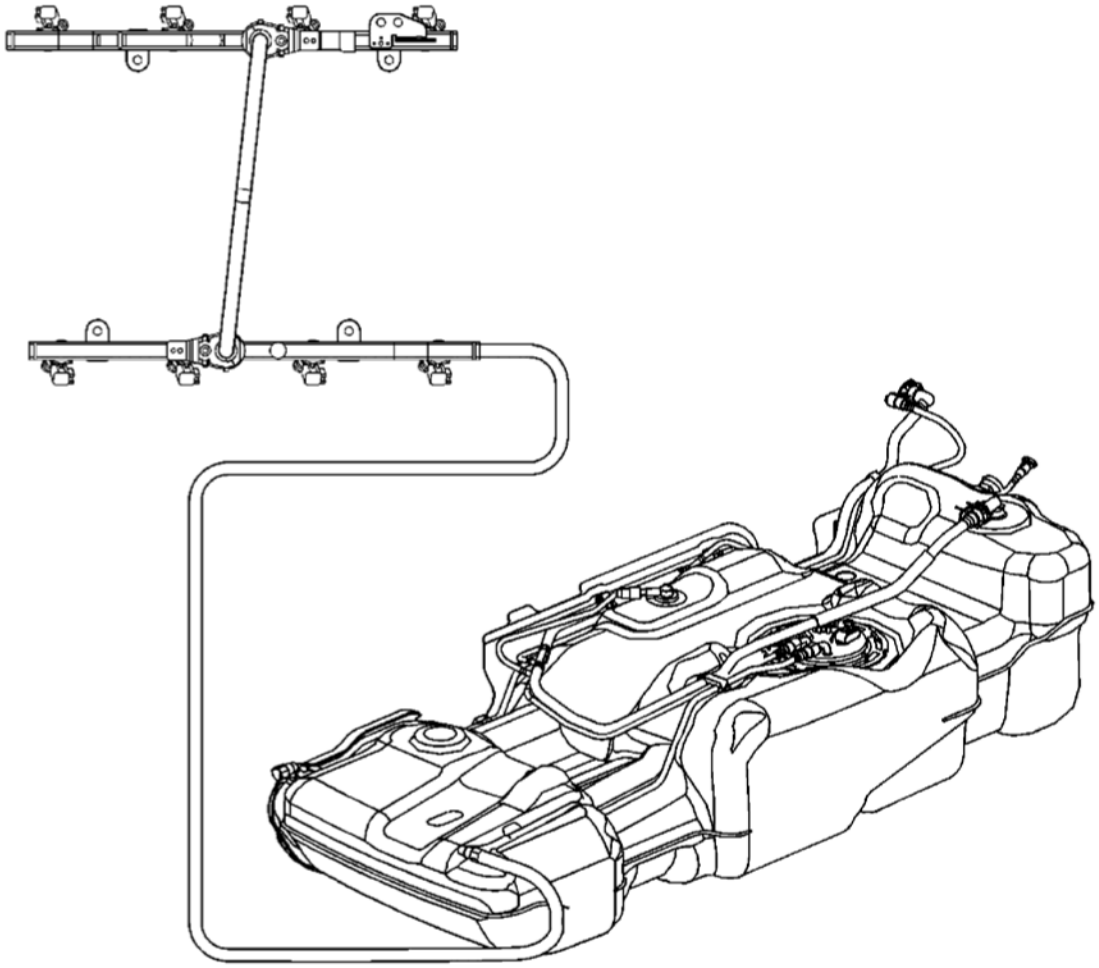

Fig. 2: Fuel Hose/Pipes Routing Diagram
Courtesy of GENERAL MOTORS CORP.

ENGINE CONTROLS SCHEMATIC ICONS

Engine Controls Schematic Icons

Icon	Icon Definition
	NOTE: **The OBD II symbol is used on the circuit diagrams in order to alert the technician that the circuit is essential for proper OBD II emission control circuit operation. Any circuit which fails and causes the malfunction indicator lamp (MIL) to turn ON, or causes emissions-related component damage, is identified as an OBD II circuit.**

cardiagn.com

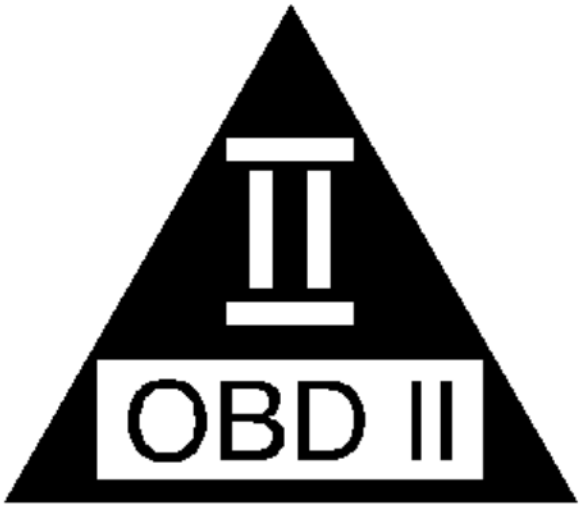

ENGINE CONTROLS SCHEMATICS

cardiagn.com

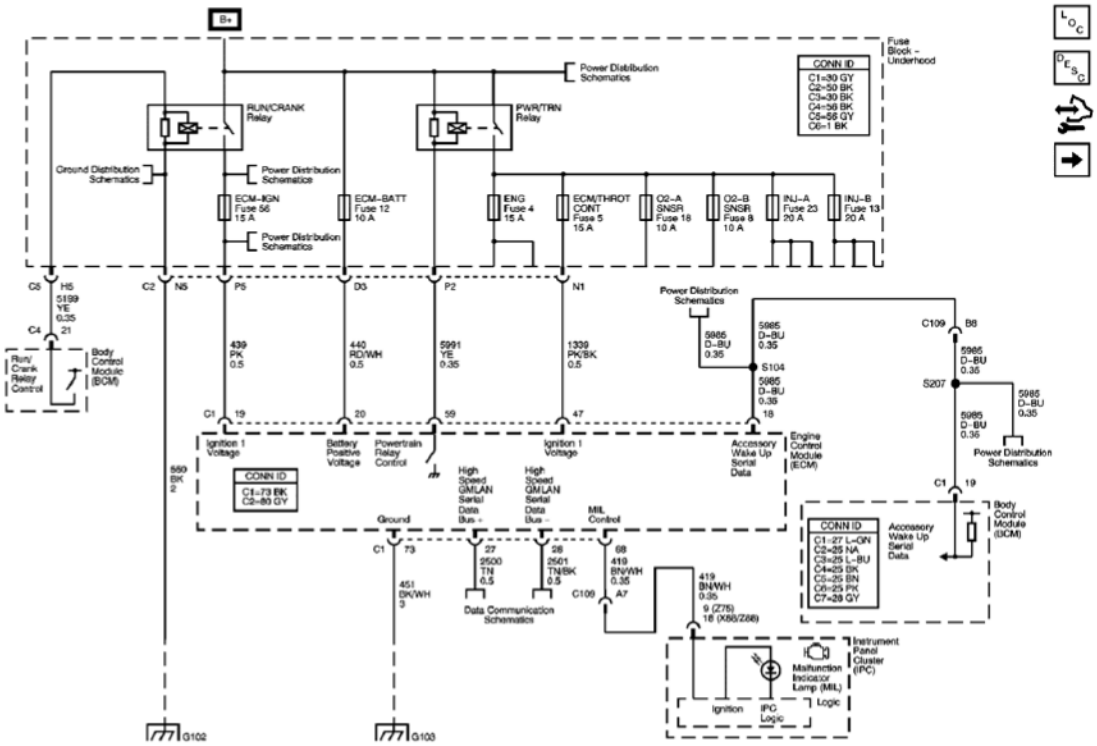

Fig. 3: Module Power, Ground, Serial Data, & MIL Schematic
Courtesy of GENERAL MOTORS CORP.

cardiagn.com

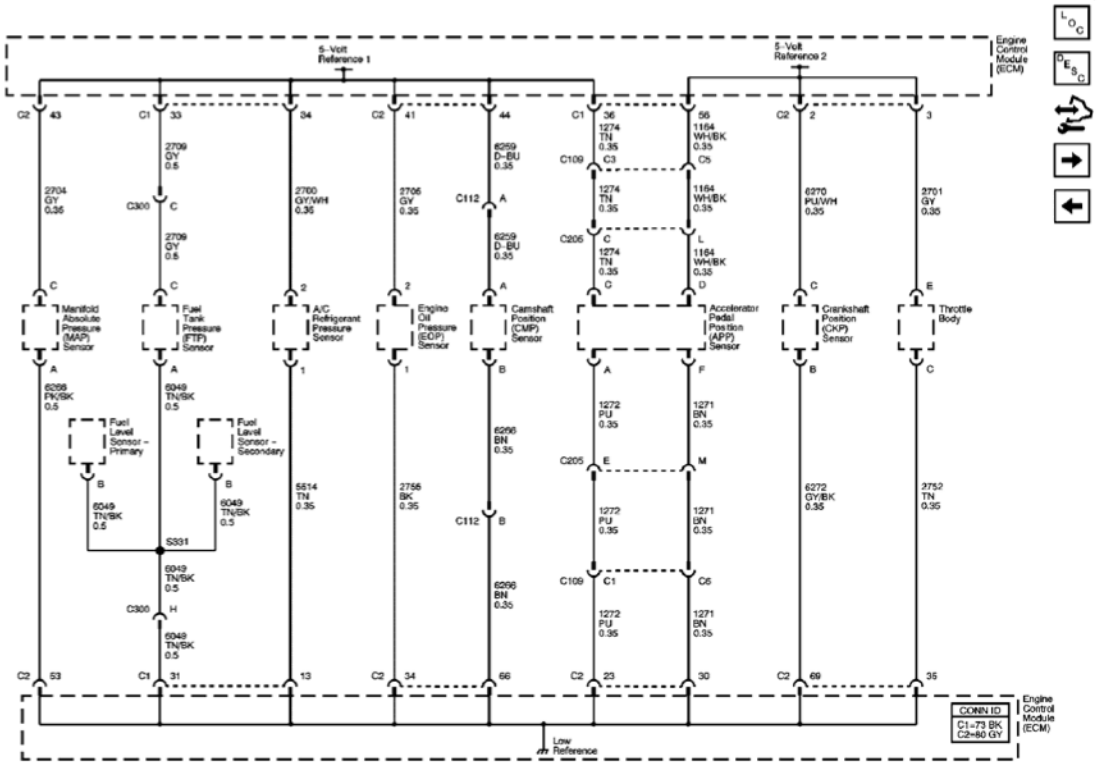

Fig. 4: Engine Data Sensors - 5-Volt & Low Reference Schematic
Courtesy of GENERAL MOTORS CORP.

cardiagn.com

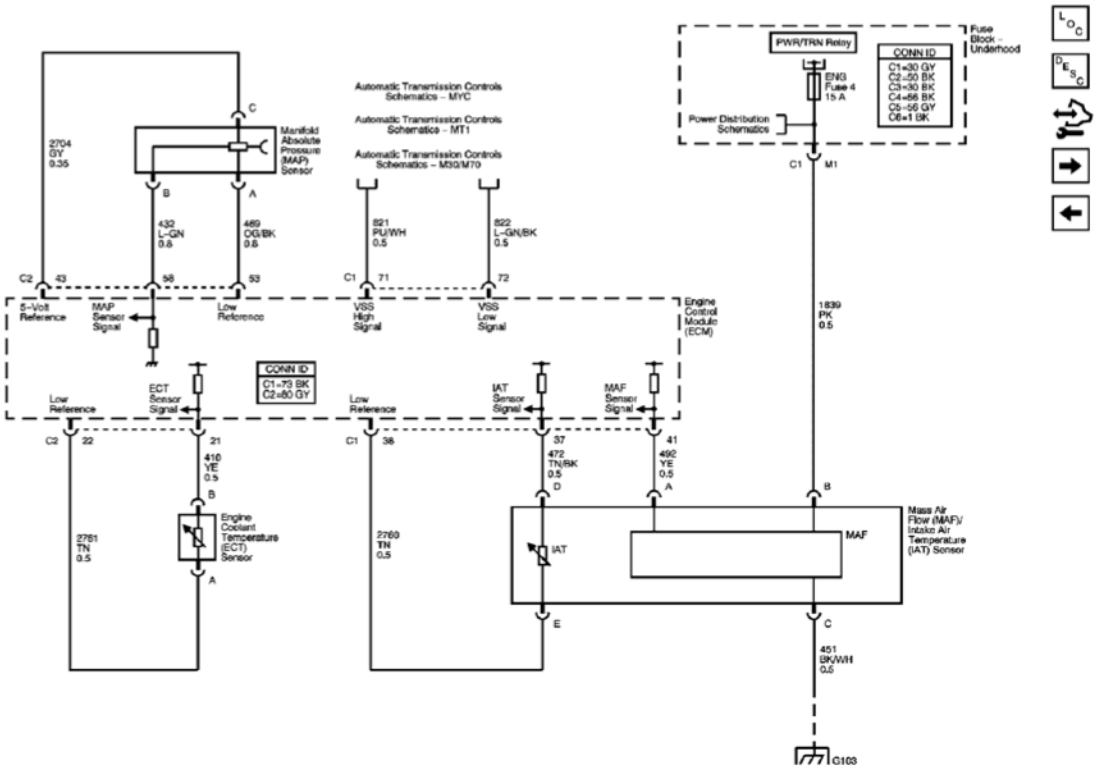

Fig. 5: Engine Data Sensors - Pressure & Temperature Schematic
Courtesy of GENERAL MOTORS CORP.

cardiagn.com

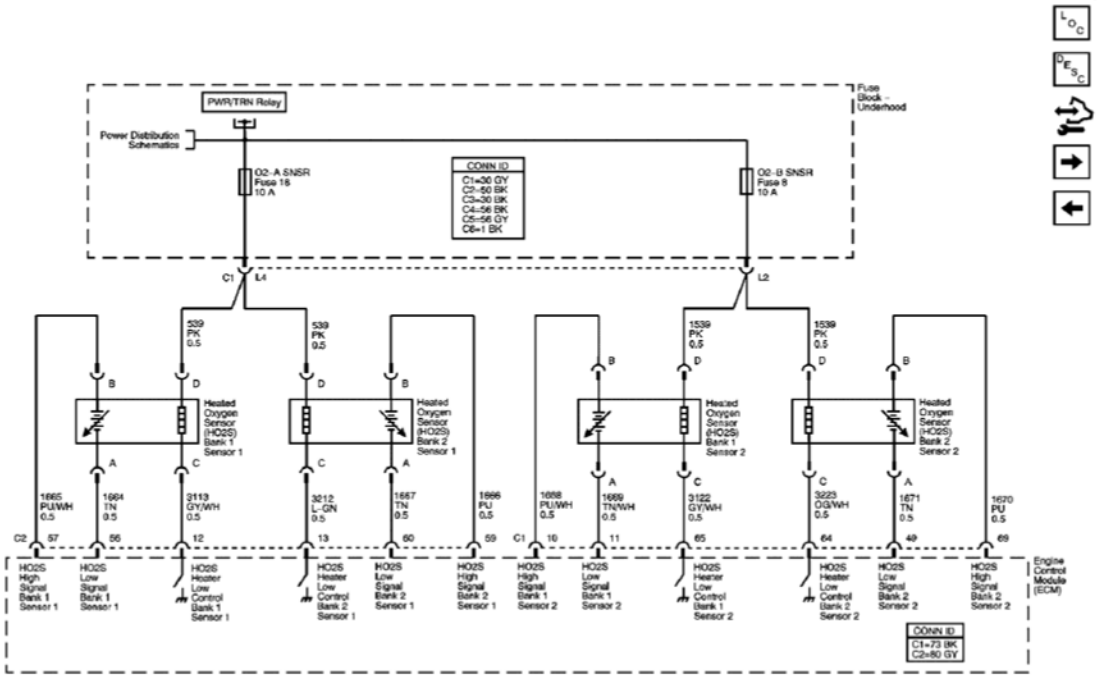

Fig. 6: Engine Data Sensors - Oxygen Sensors Schematic
Courtesy of GENERAL MOTORS CORP.

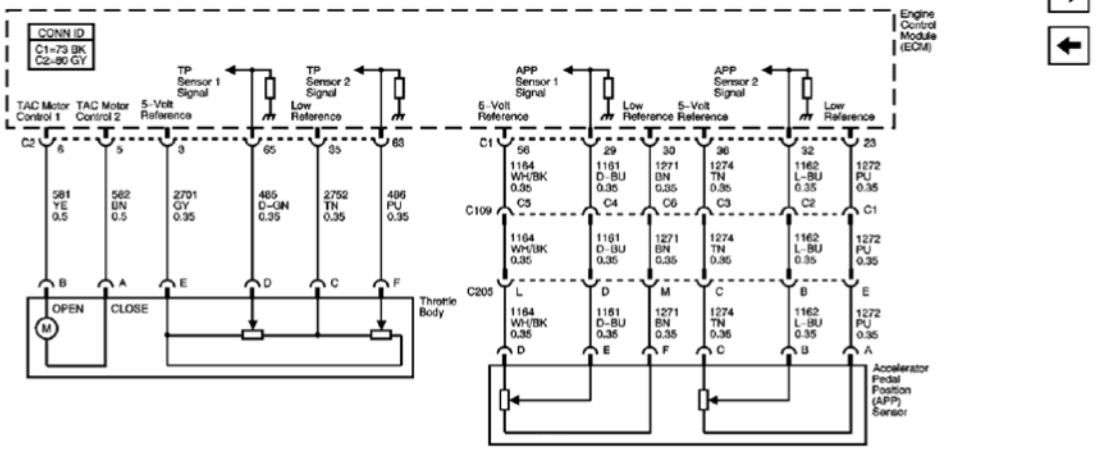

Fig. 7: Engine Data Sensors - Throttle Controls Schematic
Courtesy of GENERAL MOTORS CORP.

cardiagn.com

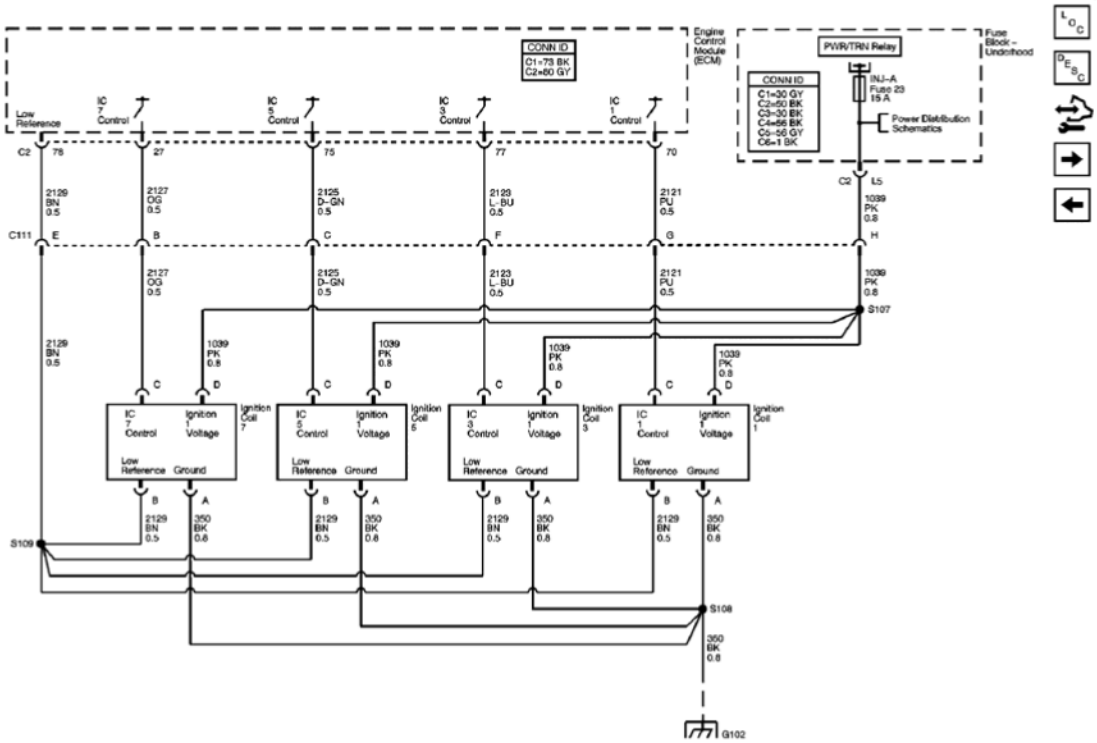

Fig. 8: Ignition Controls - Ignition System Coils 1, 3, 5, & 7 Schematic
Courtesy of GENERAL MOTORS CORP.

cardiagn.com

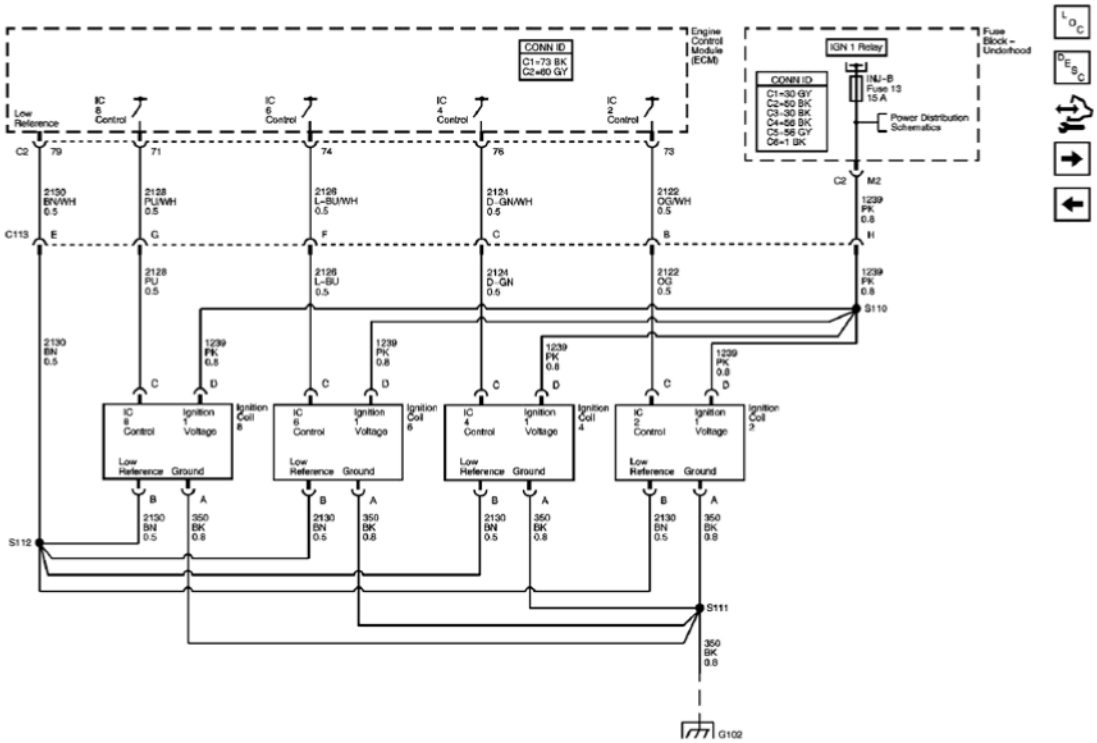

Fig. 9: Ignition Controls - Ignition System Coils 2, 4, 6, & 8 Schematic
Courtesy of GENERAL MOTORS CORP.

cardiagn.com

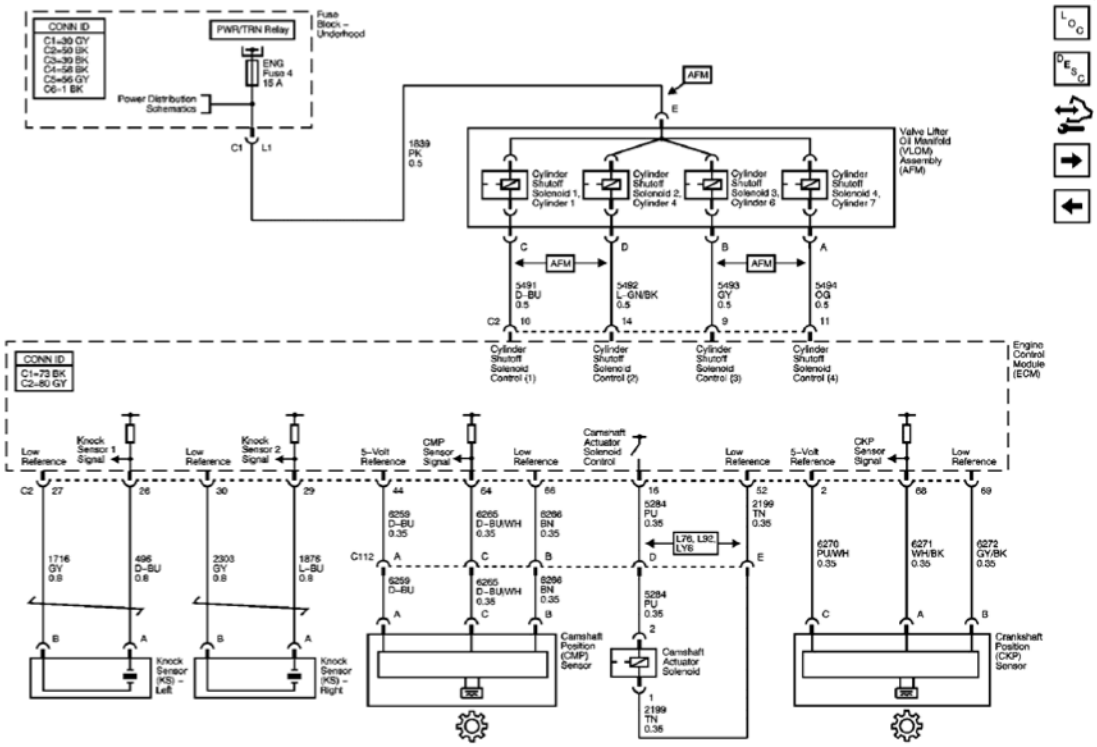

Fig. 10: Ignition Controls - Sensors and Active Fuel Management (AFM) Controls Schematic
Courtesy of GENERAL MOTORS CORP.

cardiagn.com

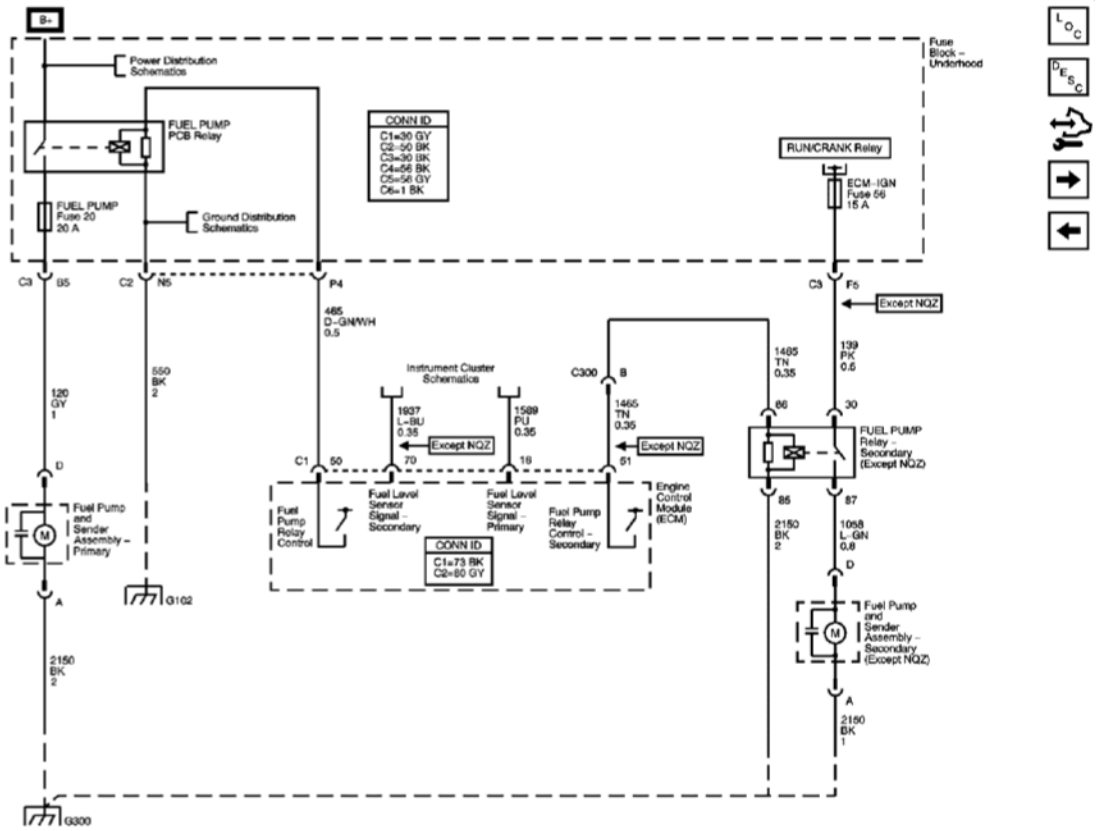

Fig. 11: Fuel Controls - Fuel Pump Controls Schematic
Courtesy of GENERAL MOTORS CORP.

cardiagn.com

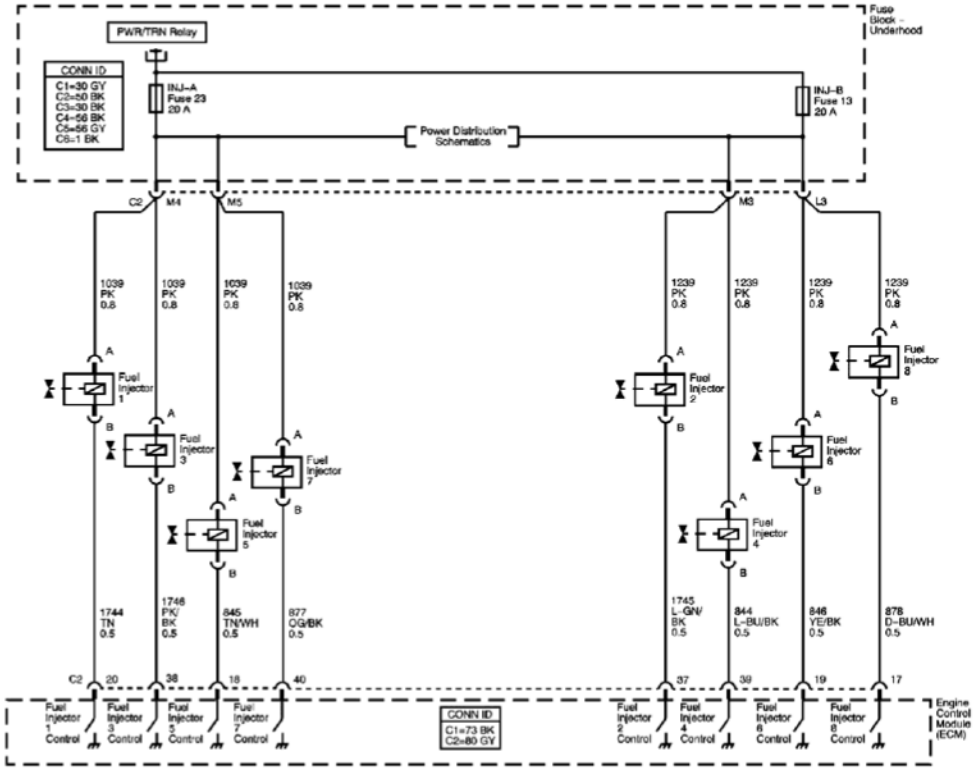

Fig. 12: Fuel Controls - Fuel Injectors Schematic
Courtesy of GENERAL MOTORS CORP.

cardiagn.com

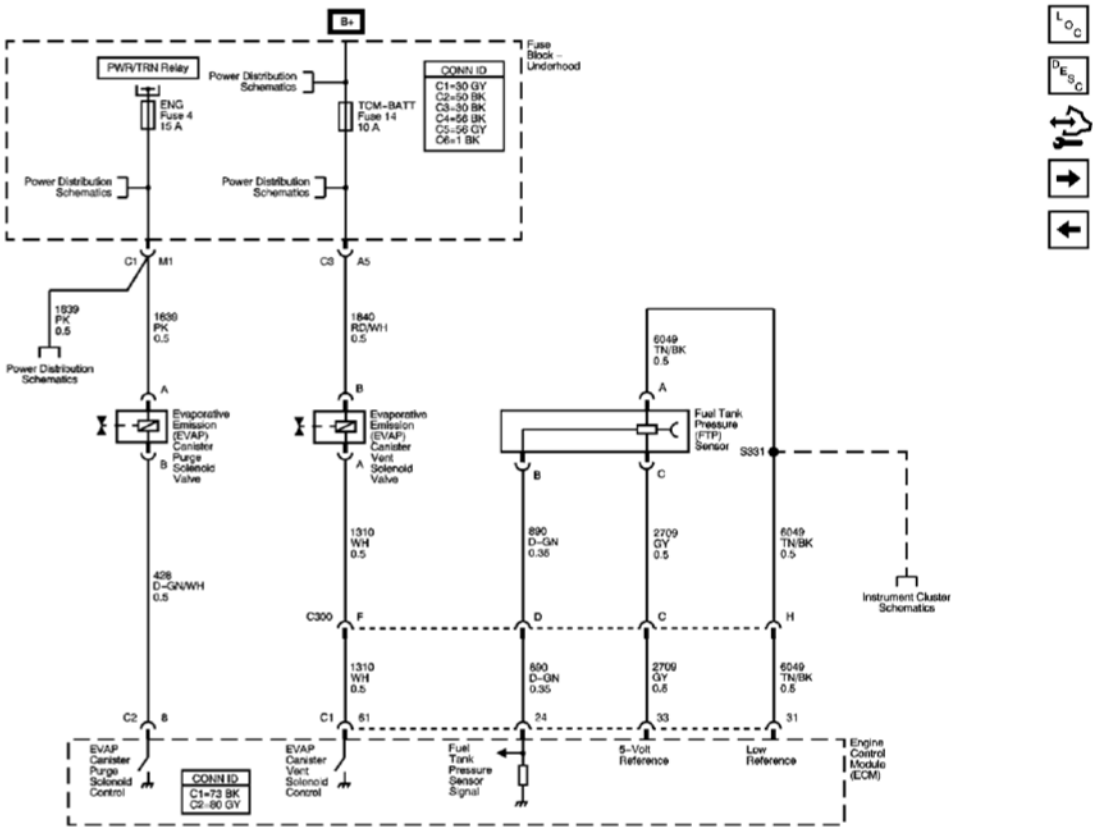

Fig. 13: Fuel Controls - EVAP Controls Schematic
Courtesy of GENERAL MOTORS CORP.

cardiagn.com

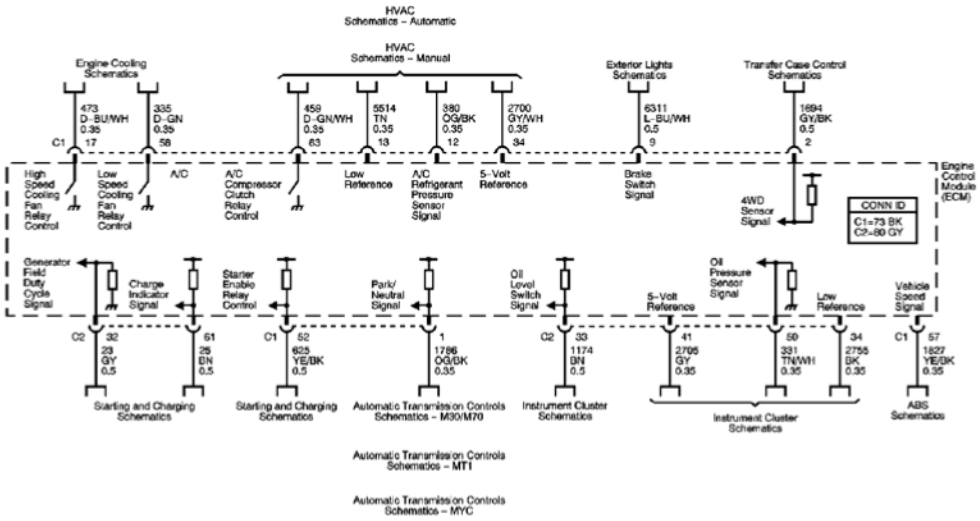

Fig. 14: Controlled/Monitored Subsystem References Schematic
Courtesy of GENERAL MOTORS CORP.

COMPONENT LOCATOR

ENGINE CONTROLS COMPONENT VIEWS

cardiagn.com

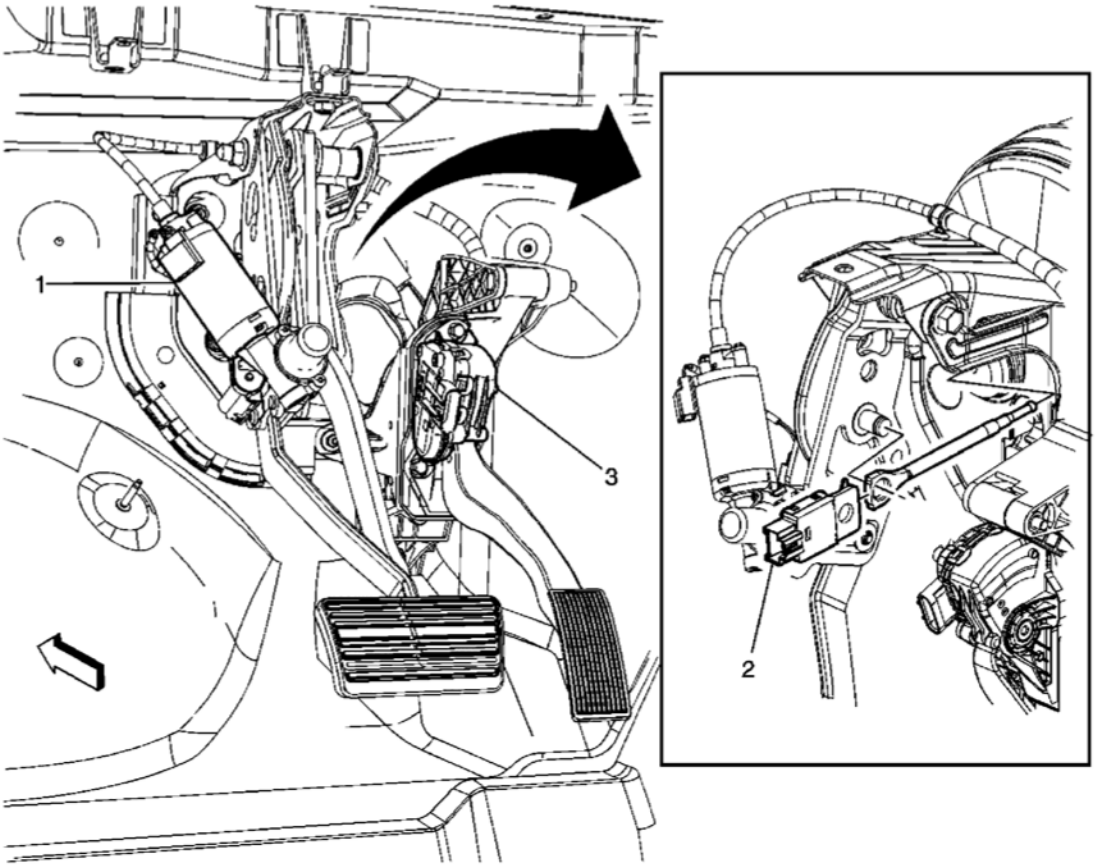

Fig. 15: Pedal Assemblies
Courtesy of GENERAL MOTORS CORP.

Callouts For Fig. 15

Callout	Component Name
1	Adjustable Pedal Assembly (JF4)
2	Accelerator Pedal Position (APP) Sensor

cardiagn.com

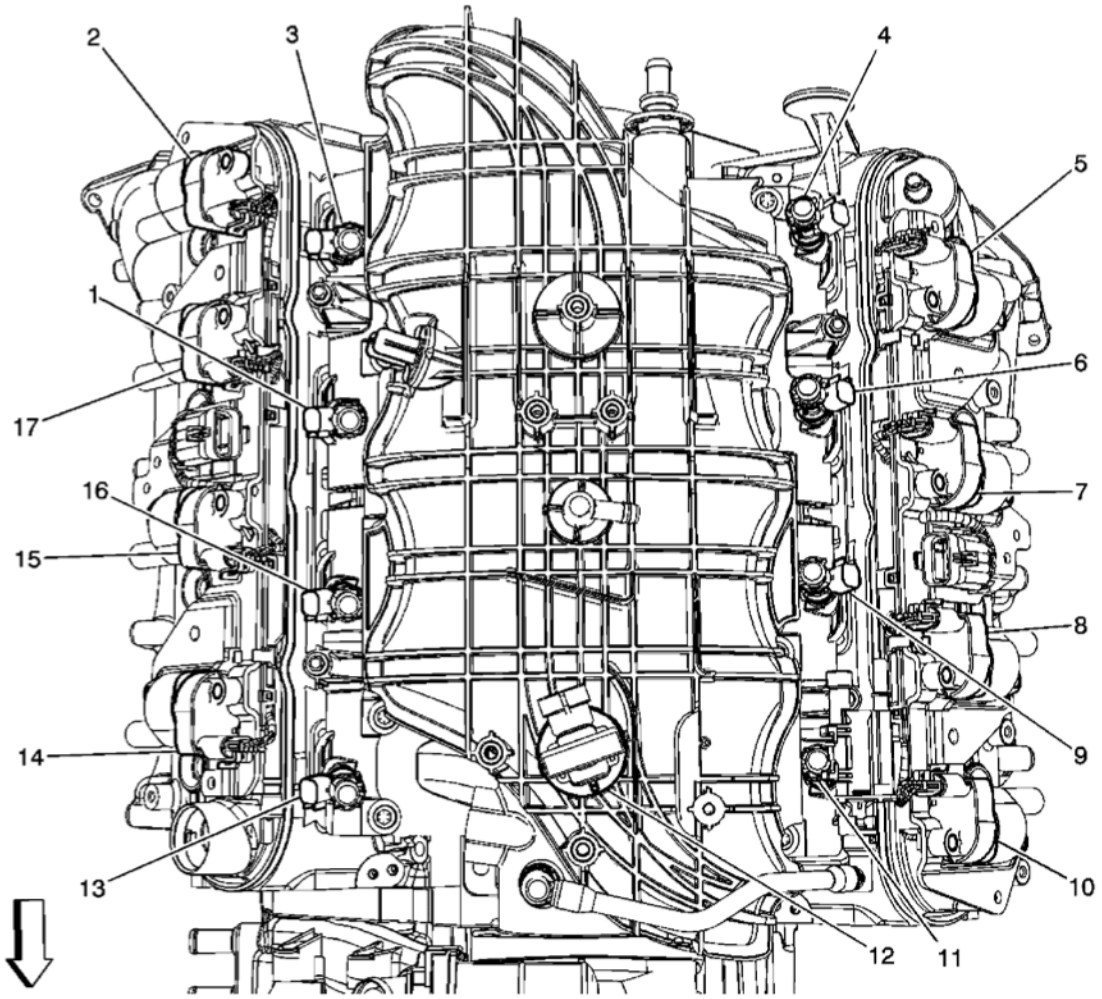

Fig. 16: Top of the Engine
Courtesy of GENERAL MOTORS CORP.

Callouts For Fig. 16

Callout	Component Name
1	Fuel Injector 6
2	Ignition Coil 8
3	Fuel Injector 8
4	Fuel Injector 7
5	Ignition Coil 7
6	Fuel Injector 5
7	Ignition Coil 5
8	Ignition Coil 3
9	Fuel Injector 3
10	Ignition Coil 1

cardiagn.com

11	Fuel Injector 1
12	Manifold Absolute Pressure (MAP) Sensor
13	Fuel Injector 2
14	Ignition Coil 1
15	Ignition Coil 2
16	Fuel Injector 2
17	Ignition Coil 6

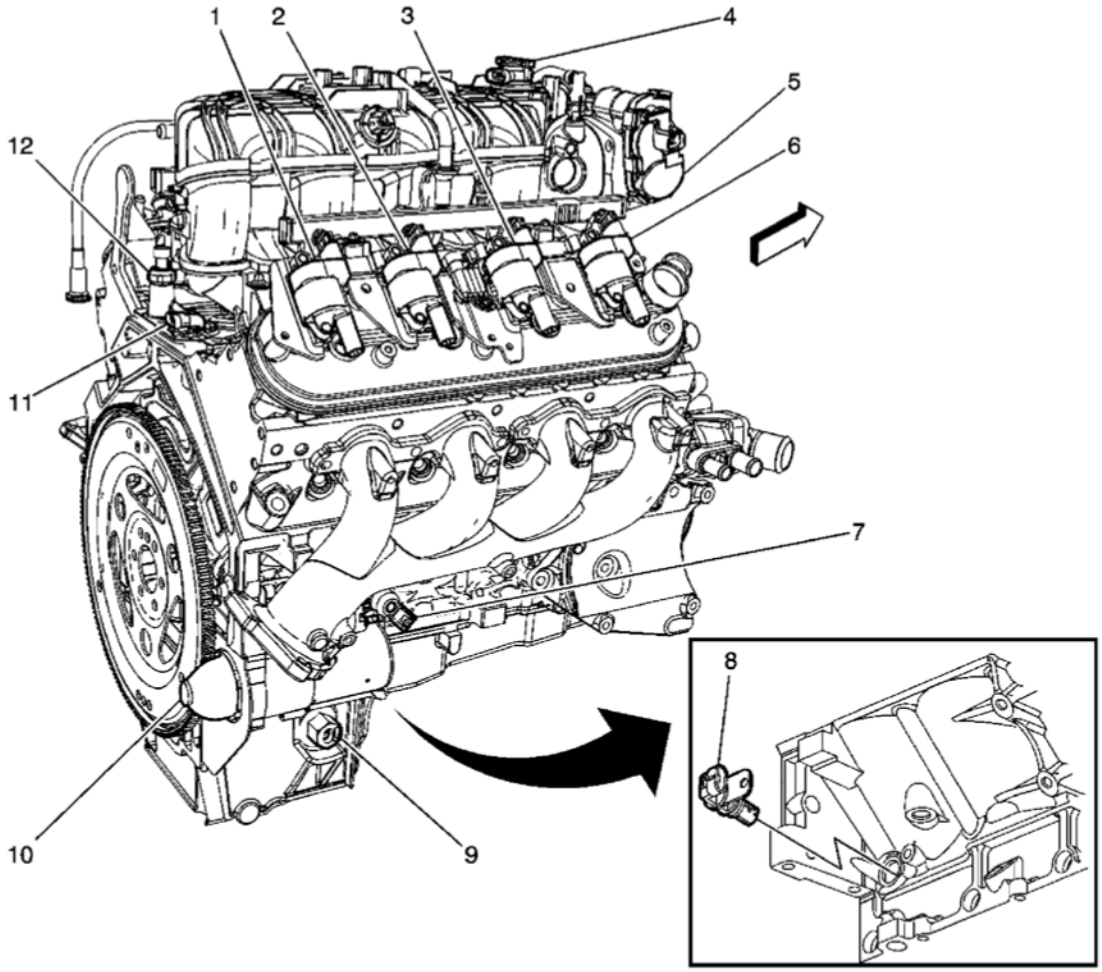

Fig. 17: Right Side of the Engine
Courtesy of GENERAL MOTORS CORP.

Callouts For Fig. 17

Callout	Component Name
1	Ignition Coil 8
2	Ignition Coil 6
3	Ignition Coil 4

cardiagn.com

4	Manifold Absolute Pressure (MAP) Sensor
5	Throttle Body
6	Ignition Coil 2
7	Knock Sensor (KS) - 2
8	Oil Level Switch
9	Starter
10	Valve Lifter Oil Manifold (VLOM) Assembly (DOD)
11	Engine Oil Pressure (EOP) Sensor

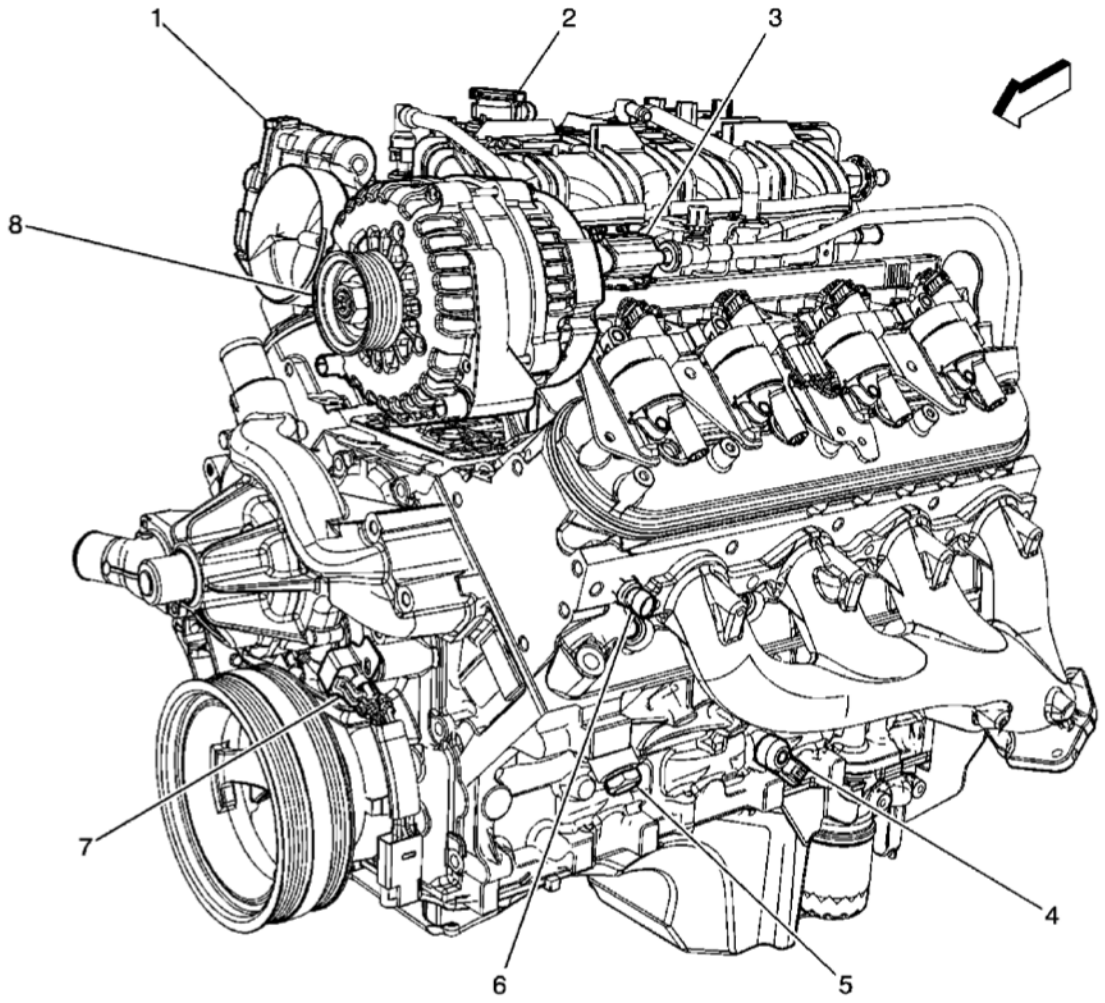

Fig. 18: Front of the Engine
Courtesy of GENERAL MOTORS CORP.

Callouts For Fig. 18

Callout	Component Name
1	Throttle Body

cardiagn.com

2	Manifold Absolute Pressure (MAP) Sensor
3	Evaporative Emission (EVAP) Canister Purge Solenoid Valve
4	Knock Sensor (KS) - 1
5	Engine Block Heater
6	Engine Coolant Temperature (ECT) Sensor
7	Camshaft Position (CMP) Sensor
8	Generator

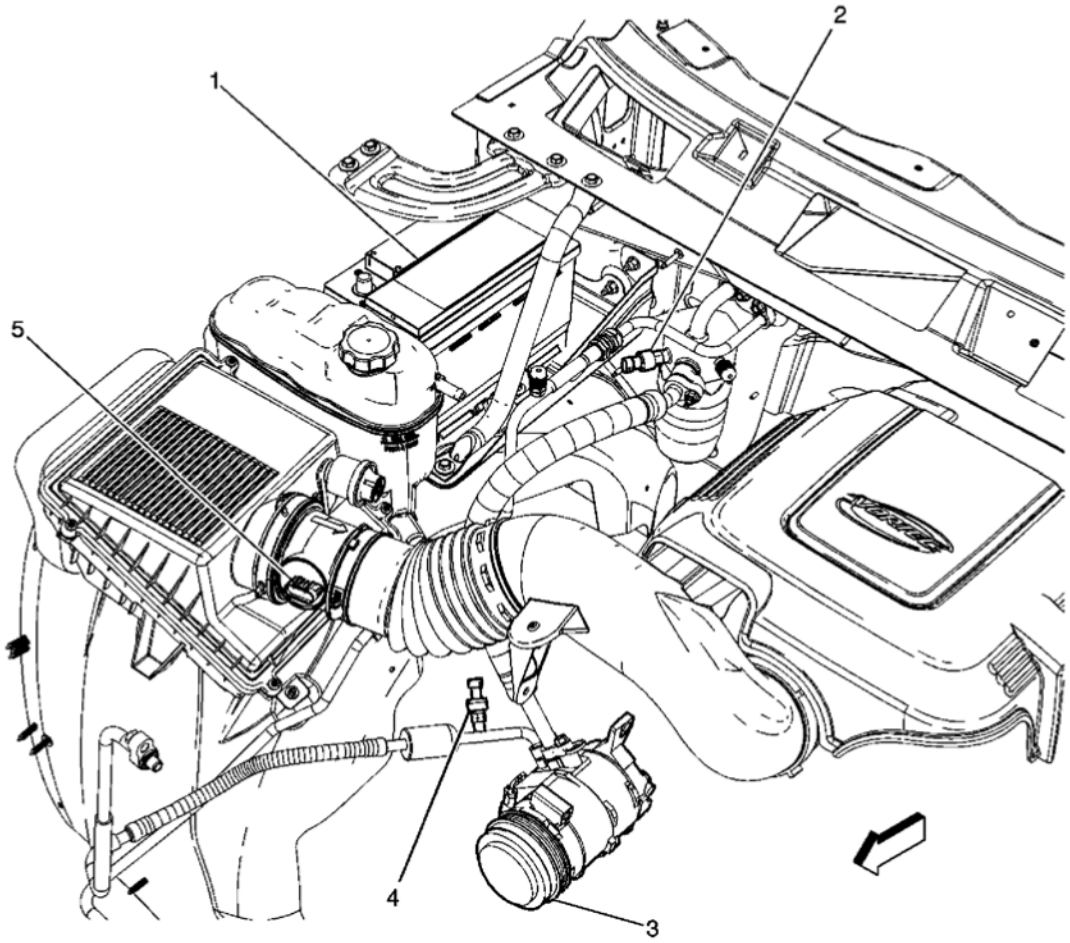

Fig. 19: RR of the Engine Compartment
Courtesy of GENERAL MOTORS CORP.

Callouts For Fig. 19

Callout	Component Name
1	Battery
2	A/C Low Pressure Sensor
3	A/C Compressor Clutch

cardiagn.com

4	A/C Refrigerant Pressure Switch
5	Mass Air Flow (MAF)/Intake Air Temperature (IAT) Sensor

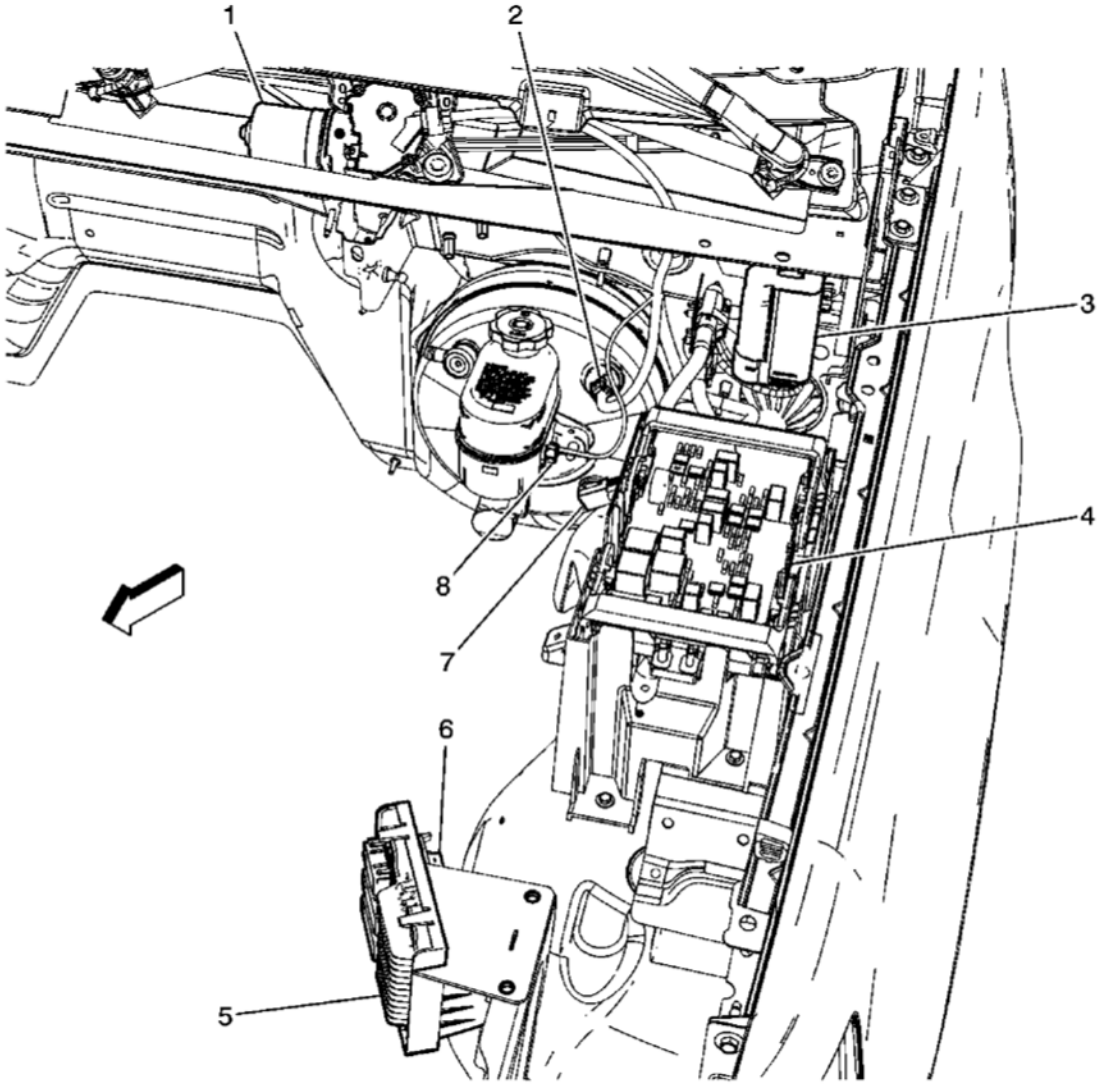

Fig. 20: Left Side of the Engine Compartment
Courtesy of GENERAL MOTORS CORP.

Callouts For Fig. 20

Callout	Component Name
1	Windshield Wiper Motor
2	Power Brake Booster
3	Windshield Washer Solvent Heater
4	Fuse Block - Underhood
5	Engine Control Module (ECM)

cardiagn.com

6	Transmission Control Module (TCM)
7	Brake Booster Vacuum Sensor
8	Brake Fluid Level Switch

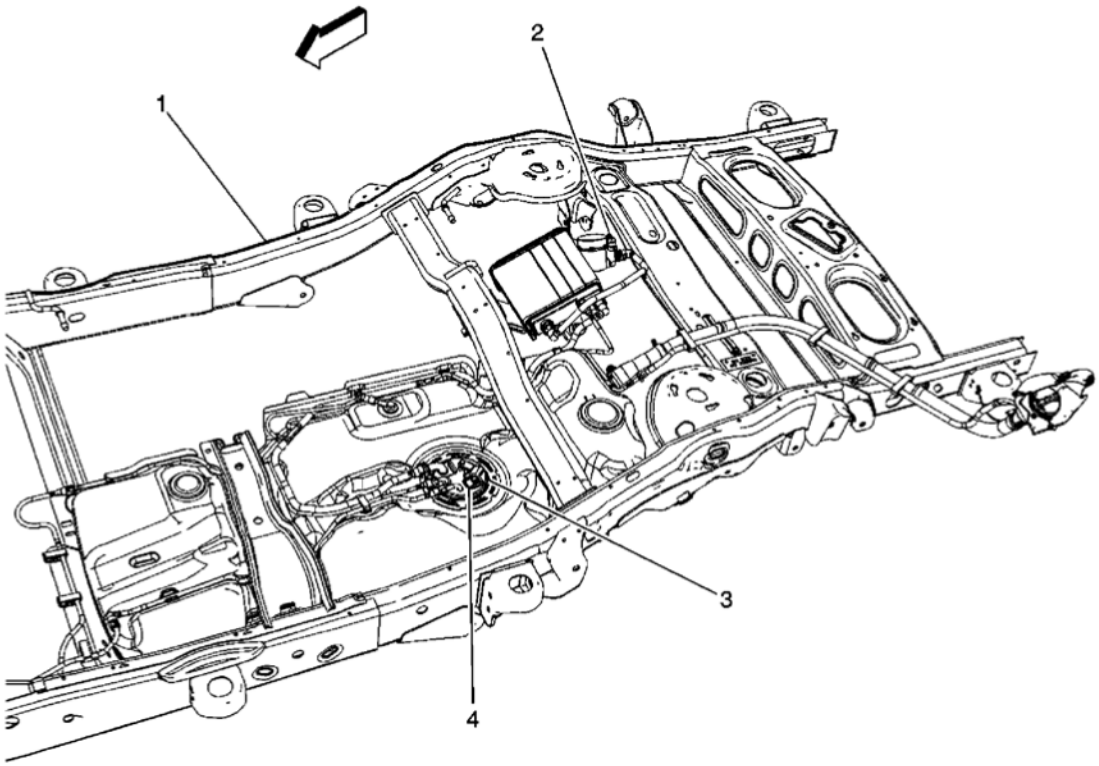

Fig. 21: Chassis Fuel Components (Short Wheel Base)
Courtesy of GENERAL MOTORS CORP.

Callouts For Fig. 21

Callout	Component Name
1	Chassis
2	Evaporative Emissions (EVAP) Canister Vent Solenoid Valve
3	Fuel Tank Pressure (FTP) Sensor
4	Fuel Pump and Sender Assembly

ENGINE CONTROL MODULE CONNECTOR END VIEWS

Engine Control Module (ECM) C1

cardiagn.com

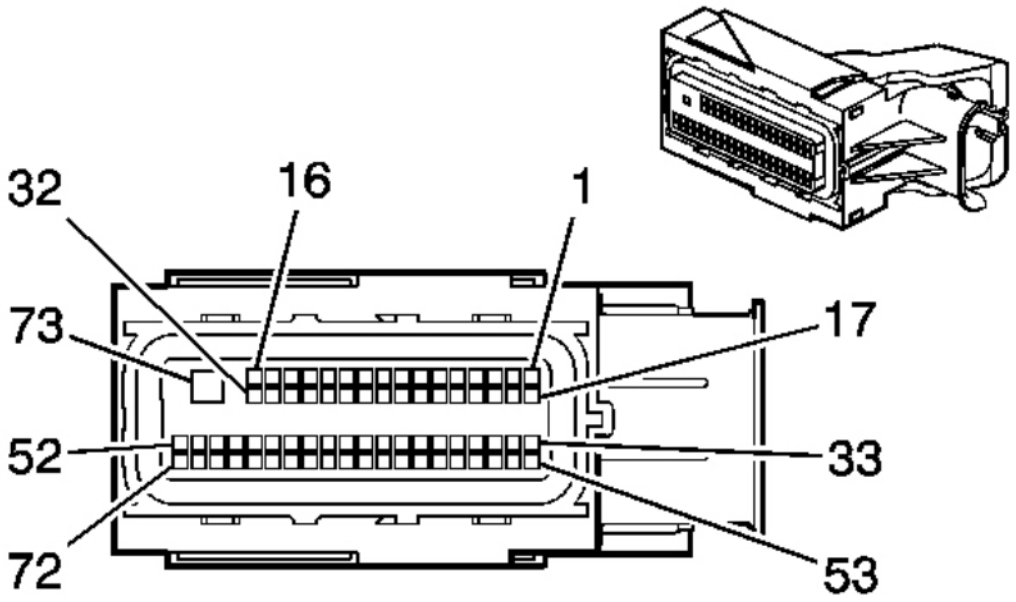

Fig. 22: Engine Control Module (ECM) C1 Connector End View
Courtesy of GENERAL MOTORS CORP.

Engine Control Module (ECM) C1 Connector Parts Information

Connector Part Information

- OEM: 15499466
- Service: 88988931
- Description: 73-Way F Receptacle 0.64 Sealed (BK)

Terminal Part Information

- Pins: 73
- Terminal/Tray: 7116-4152-02/9
- Core/Insulation Crimp: A/5
- Release Tool/Test Probe: 12094430/J-35616-4A (PU)

- Pins: 1, 12-13, 16-17, 23-24, 29-36, 50-52, 56-59, 63, 68, 70-71
- Terminal/Tray: 33467-0003/23
- Core/Insulation Crimp: H/H
- Release Tool/Test Probe: J-38125-213/J-35616-64B (L-BU)

cardiagn.com

- Pins: 2, 9-11, 18-20, 27-28, 37-38, 41, 47, 49, 61, 64-65, 69
- Terminal/Tray: 33467-0005/23
- Core/Insulation Crimp: J/J
- Release Tool/Test Probe: J-38125-213/J-35616-64B (L-BU)

Engine Control Module (ECM) C1 Connector Terminal Identification

Pin	Wire Color	Circuit No.	Function
1	OG/BK	1786	Park/Neutral Signal
2	GY/BK	1694	4WD Low Signal
3-8	-	-	Not Used
9	L-BU/WH	6311	Brake Switch Signal
10	PU/WH	1668	HO2S High Signal - Bank 1 Sensor 2
11	TN/WH	1669	HO2S Low Signal - Bank 1 Sensor 2
12	OG/BK	380	A/C Refrigerant Pressure Sensor Signal
13	TN	5514	Low Reference
14-15	-	-	Not Used
16	PU	1589	Fuel Level Sensor Signal - Primary
17	D-BU/WH	473	High Speed Cooling Fan Relay Control
18	D-BU	5985	Accessory Wakeup Serial Data
19	PK	439	Ignition 1 Voltage
20	RD/WH	440	Battery Positive Voltage
21-22	-	-	Not Used
23	PU	1272	Low Reference
24	D-GN	890	Fuel Tank Pressure Sensor Signal
25-26	-	-	Not Used
27	TN	2501	High Speed GMLAN Serial Data Bus -
28	TN/BK	2500	High Speed GMLAN Serial Data Bus +
29	D-BU	1161	APP Sensor 1 Signal
30	BN	1271	Low Reference
31	TN/BK	6049	Low Reference
32	L-BU	1162	APP Sensor 2 Signal
33	GY	2709	5-Volt Reference
34	GY/WH	2700	5-Volt Reference
35	-	-	Not Used
36	TN	1274	5-Volt Reference
37	TN/BK	472	IAT Sensor Signal
38	TN	2760	Low Reference
39-40	-	-	Not Used
41	YE	492	MAF Sensor Signal
42-46	-	-	Not Used

cardiagn.com

47	PK/BK	1339	Ignition 1 Voltage
48	-	-	Not Used
49	TN	1671	HO2S Low Signal - Bank 2 Sensor 2
50	D-GN/WH	465	Fuel Pump Relay Control - Primary
51	TN	1465	Fuel Pump Relay Control - Secondary (Except NQZ)
52	YE/BK	625	Starter Enable Relay Control
53-55	-	-	Not Used
56	WH/BK	1164	5-Volt Reference
57	YE/BK	1827	Vehicle Speed Signal
58	D-GN	335	Low Speed Cooling Fan Relay Control
59	YE	5991	Powertrain Relay Coil Control
60	-	-	Not Used
61	WH	1310	EVAP Canister Vent Solenoid Control
62	-	-	Not Used
63	D-GN/WH	459	A/C Compressor Clutch Relay Control
64	OG/WH	3223	HO2S Heater Low Control (Bank 2 Sensor 2)
65	GY/WH	3122	HO2S Heater Low Control - Bank 2 Sensor 1
66-67	-	-	Not Used
68	BN/WH	419	MIL Control
69	PU	1670	HO2S High Signal - Bank 2 Sensor 2
70	L-BU	1937	Secondary Fuel Level Sensor Signal
71	OG/BK	6399	Replicated TOS Signal
72	-	-	Not Used
73	BK/WH	451	Ground

Engine Control Module (ECM) C2

cardiagn.com

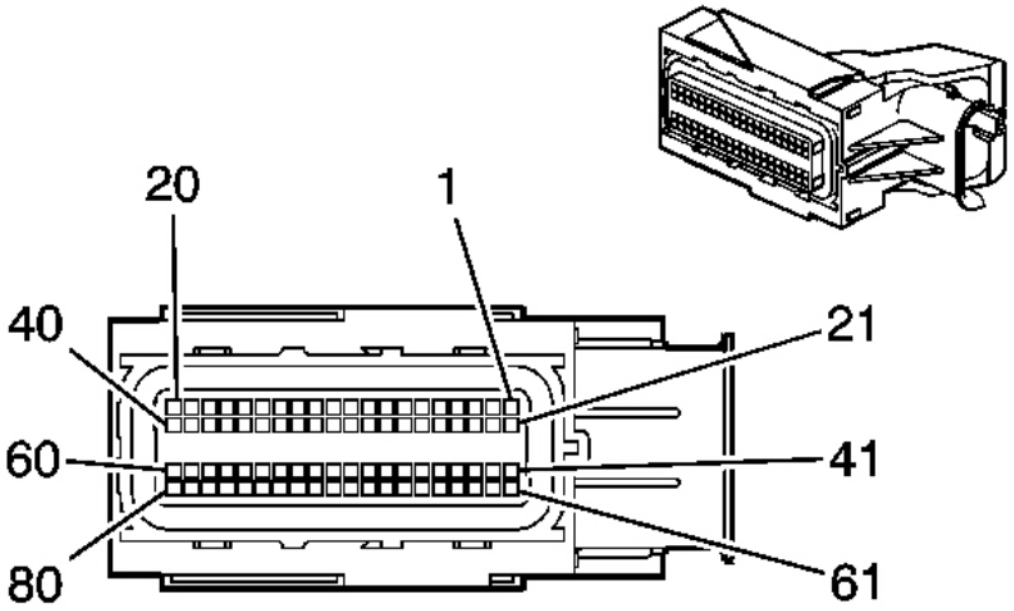

Fig. 23: Engine Control Module (ECM) C2 Connector End View
Courtesy of GENERAL MOTORS CORP.

Engine Control Module (ECM) C2 Connector Parts Information

Connector Part Information

- OEM: 13511426
- Service: 19115670
- Description: 80-Way F Receptacle 0.64 2.8 Sealed (GY)

Terminal Part Information

- Pins: 2-3, 16, 34-35, 41-53, 58, 63-69
- Terminal/Tray: 33467-0003/23
- Core/Insulation Crimp: H/H
- Release Tool/Test Probe: J-38125-213/J-35616-64B (L-BU)

- Pins: 5-14, 17-33, 37-40, 56-57, 59-61, 70-79
- Terminal/Tray: 33467-0005/23
- Core/Insulation Crimp: Pins 5-14, 17-22, 29-33, 37-40, 56-57, 59-61, 70-79: J/J
- Core/Insulation Crimp: Pins 26-27: K/K

cardiagn.com

- Release Tool/Test Probe: J-38125-213/J-35616-64B (L-BU)

Engine Control Module (ECM) C2 Connector Terminal Identification

Pin	Wire Color	Circuit No.	Function
1	-	-	Not Used
2	PU/WH	6270	5-Volt Reference
3	GY	2701	5-Volt Reference
4	-	-	Not Used
5	BN	582	TAC Motor Control - 2
6	YE	581	TAC Motor Control - 1
7	-	-	Not Used
8	D-GN/WH	428	EVAP Canister Purge Solenoid Control
9	GY	5493	Cylinder Shutoff Solenoid Control (3)
10	D-BU	5491	Cylinder Shutoff Solenoid Control (1)
11	OG	5494	Cylinder Shutoff Solenoid Control (4)
12	GY/WH	3113	HO2S Heater Low Control - Bank 1 Sensor 1
13	L-GN	3212	HO2S Heater Low Control - Bank 2 Sensor 1
14	L-GN/BK	5492	Cylinder Shutoff Solenoid Control (2)
15	-	-	Not Used
16	PU	5284	Camshaft Actuator Solenoid Control (L76,L92,LY6)
17	D-BU/WH	878	Fuel Injector 8 Control
18	TN/WH	845	Fuel Injector 5 Control
19	YE/BK	846	Fuel Injector 6 Control
20	TN	1744	Fuel Injector 1 Control
21	YE	410	ECT Sensor Signal
22	TN	2761	Low Reference
23-25	-	-	Not Used
26	D-BU	496	Knock Sensor 1 Signal
27	GY	1716	Low Reference
28	-	-	Not Used
29	L-BU	1876	Knock Sensor 2 Signal
30	GY	2303	Low Reference
31	-	-	Not Used
32	GY	23	Generator Field Duty Cycle Signal
33	BN	1174	Oil Level Switch Signal
34	BK	2755	Low Reference
35	TN	2752	Low Reference
36	-	-	Not Used
37	L-GN/BK	1745	Fuel Injector 2 Control
38	PK/BK	1746	Fuel Injector 3 Control

cardiagn.com

39	L-BU/BK	844	Fuel Injector 4 Control
40	OG/BK	877	Fuel Injector 7 Control
41	GY	2705	5-Volt Reference
42	-	-	Not Used
43	GY	2704	5-Volt Reference
44	D-BU	6259	5-Volt Reference
45-49	-	-	Not Used
50	TN/WH	331	Oil Pressure Sensor Signal
51	-	-	Not Used
52	TN	2199	Low Reference (L76, L92, LY6)
53	OG/BK	469	Low Reference
54-55	-	-	Not Used
56	TN	1664	HO2S Low Signal - Bank 1 Sensor 1
57	PU/WH	1665	HO2S High Signal - Bank 1 Sensor 1
58	L-GN	432	MAP Sensor Signal
59	PU	1666	HO2S High Signal - Bank 2 Sensor 1
60	TN	1667	HO2S Low Signal - Bank 2 Sensor 1
61	BN	25	Charge Indicator Control/Charge Indicator Signal
62	-	-	Not Used
63	PU	486	TP Sensor 2 Signal
64	D-BU/WH	6265	CMP Sensor Signal
65	D-GN	485	TP Sensor 1 Signal
66	BN	6266	Low Reference
67	-	-	Not Used
68	WH/BK	6271	CKP Sensor Signal
69	GY/BK	6272	Low Reference
70	PU	2121	IC 1 Control
71	PU/WH	2128	IC 8 Control
72	OG	2127	IC 7 Control
73	OG/WH	2122	IC 2 Control
74	L-BU/WH	2126	IC 6 Control
75	D-GN	2125	IC 5 Control
76	D-GN/WH	2124	IC 4 Control
77	L-BU	2123	IC 3 Control
78	BN	2129	Low Reference
79	BN/WH	2130	Low Reference
80	-	-	Not Used

ENGINE CONTROLS CONNECTOR END VIEWS

cardiagn.com

Accelerator Pedal Position (APP) Sensor

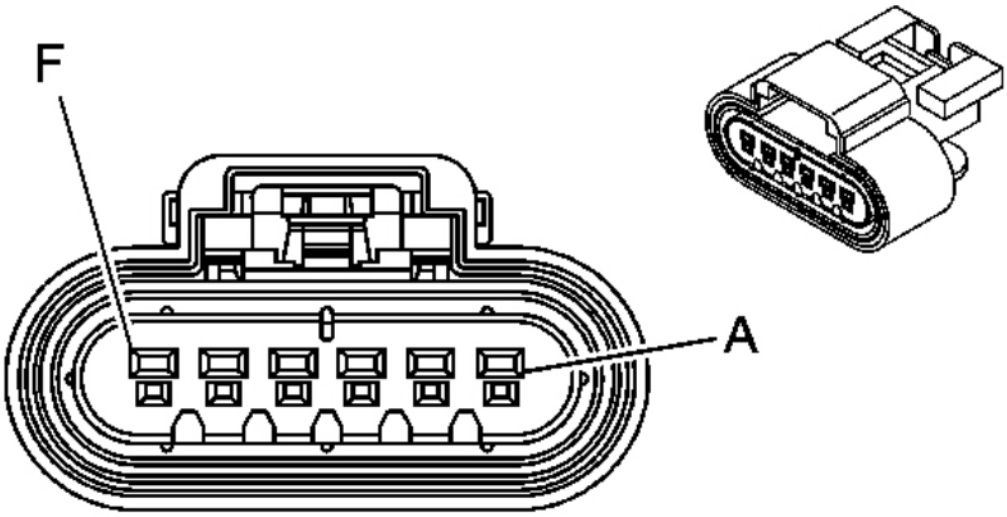

Fig. 24: Accelerator Pedal Position (APP) Sensor Connector End View
Courtesy of GENERAL MOTORS CORP.

Accelerator Pedal Position (APP) Sensor Connector Parts Information

Connector Part Information

- OEM: 15326830
- Service: 88953153
- Description: 6-Way F GT 150 Series Sealed (BK)

Terminal Part Information

- Terminal/Tray: 12191819/8
- Core/Insulation Crimp: E/A
- Release Tool/Test Probe: 15315247/J-35616-2A (GY)

Accelerator Pedal Position (APP) Sensor Connector Terminal Identification

Pin	Wire Color	Circuit No.	Function
A	PU	1272	Low Reference
B	L-BU	1162	APP Sensor 2 Signal
C	TN	1274	5-Volt Reference
D	WH/BK	1164	5-Volt Reference

cardiagn.com

E	D-BU	1161	APP Sensor 1 Signal
F	BN	1271	Low Reference

Camshaft Actuator Solenoid (LY6, L76, L92)

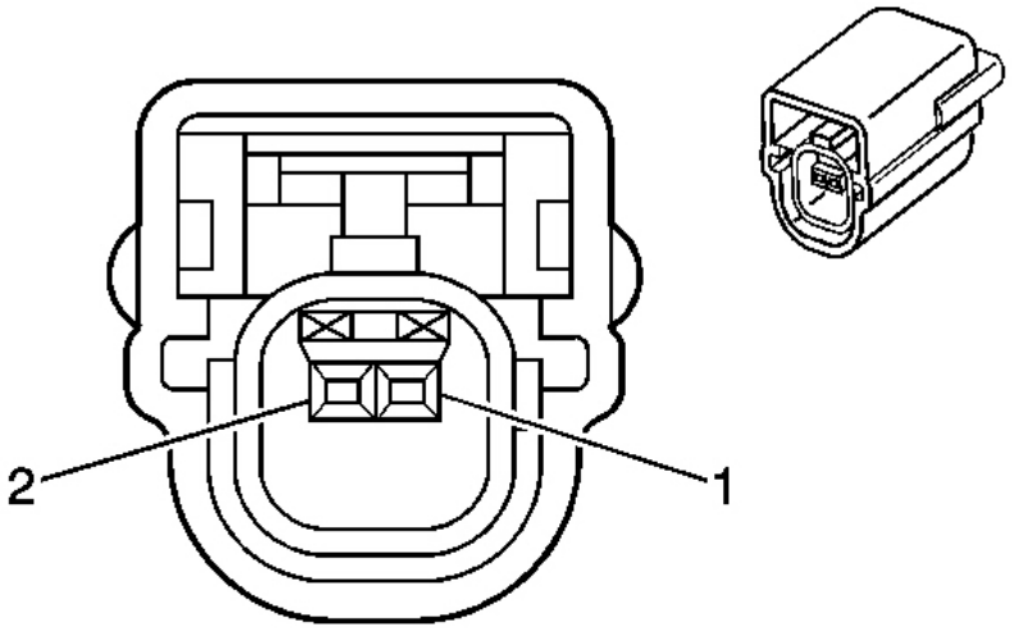

Fig. 25: Camshaft Actuator Solenoid (LY6, L76, L92) Connector End View
Courtesy of GENERAL MOTORS CORP.

Camshaft Actuator Solenoid (LY6, L76, L92) Connector Parts Information

Connector Part Information

- OEM: 15472554
- Service: 88988610
- Description: 2-Way F 0.64 Series Sealed (BK)

Terminal Part Information

- Terminal/Tray: 1393364-2/7
- Core/Insulation Crimp: K/K
- Release Tool/Test Probe: 15315247/J-35616-64B (L-BU)

cardiagn.com

Camshaft Actuator Solenoid (LY6, L76, L92) Connector Terminal Identification

Pin	Wire Color	Circuit No.	Function
1	TN	5284	Camshaft Actuator Solenoid Control
2	PU	2199	Low Reference

Camshaft Position (CMP) Sensor (LY6, L76, L92)

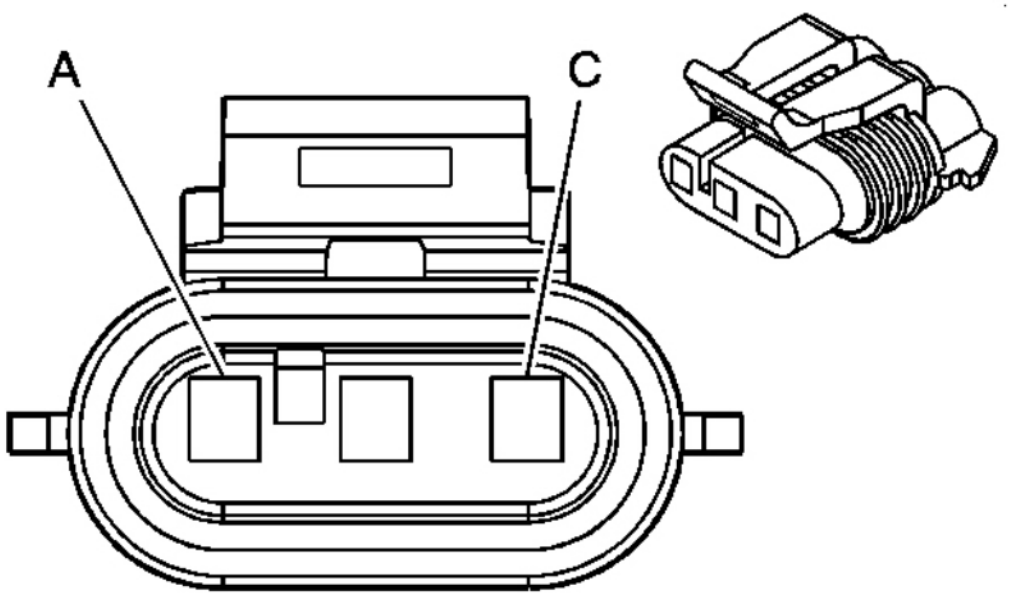

Fig. 26: Camshaft Position (CMP) Sensor (LY6, L76, L92) Connector End View
Courtesy of GENERAL MOTORS CORP.

Camshaft Position (CMP) Sensor (LY6, L76, L92) Connector Parts Information

Connector Part Information

- OEM: 12059595
- Service: 88986451
- Description: 3-Way F Metri-Pack 150 Series, Sealed (BK)

Terminal Part Information

- Terminal/Tray: 12048074/2
- Core/Insulation Crimp: E/1

cardiagn.com

- Release Tool/Test Probe: 12094429/J-35616-2A (GY)

Camshaft Position (CMP) Sensor (LY6, L76, L92) Connector Terminal Identification

Pin	Wire Color	Circuit No.	Function
A	D-BU	6259	5-Volt Reference
B	BN	6266	Low Reference
C	D-BU/WH	6265	CMP Sensor Signal

Crankshaft Position (CKP) Sensor

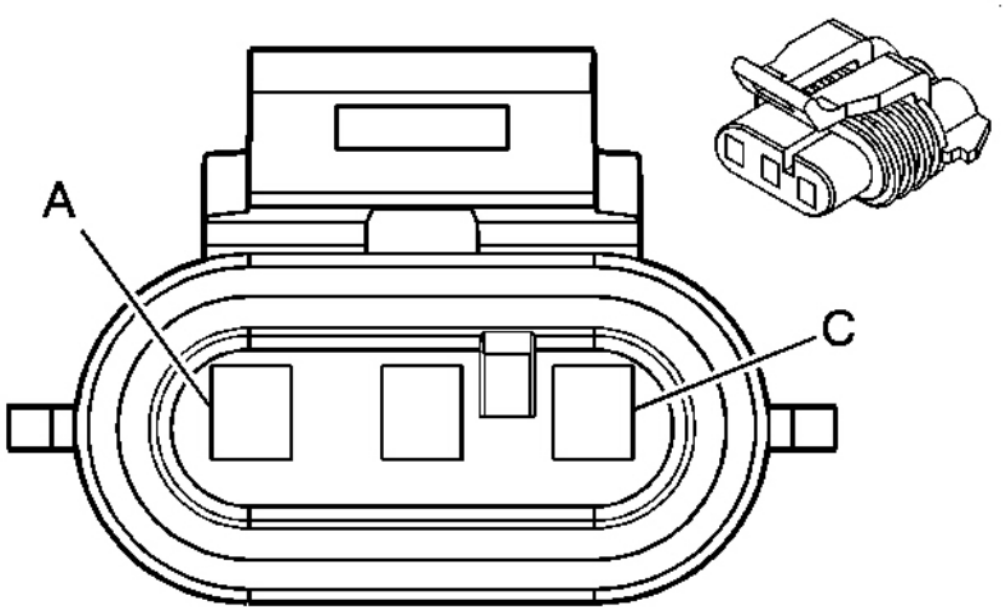

Fig. 27: Crankshaft Position (CKP) Sensor Connector End View
Courtesy of GENERAL MOTORS CORP.

Crankshaft Position (CKP) Sensor Connector Parts Information

Connector Part Information

- OEM: 12129946
- Service: 88987997
- Description: 3-Way F Metri-Pack 150 Series, Sealed (M-GY)

Terminal Part Information

cardiagn.com

- Terminal/Tray: 12048074/2
- Core/Insulation Crimp: E/1
- Release Tool/Test Probe: 12094429/J-35616-2A (GY)

Crankshaft Position (CKP) Sensor Connector Terminal Identification

Pin	Wire Color	Circuit No.	Function
A	WH/BK	6271	CKP Sensor Signal
B	GY/BK	6272	Low Reference
C	PU/WH	6270	5-Volt Reference

Engine Coolant Temperature (ECT) Sensor

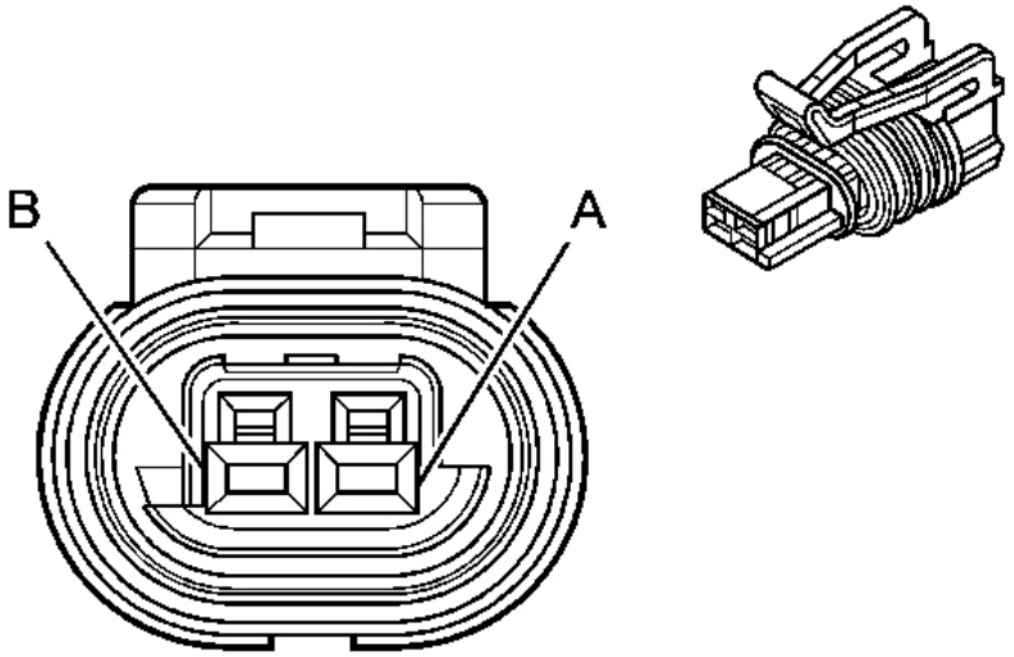

Fig. 28: Engine Coolant Temperature (ECT) Sensor Connector End View
Courtesy of GENERAL MOTORS CORP.

Engine Coolant Temperature (ECT) Sensor Connector Parts Information

Connector Part Information

- OEM: 15449028

cardiagn.com

- Service: 88987993
- Description: 2-Way F 150 GT Series Sealed (BK)

Terminal Part Information

- Terminal/Tray: 15326267/19
- Core/Insulation Crimp: E/4
- Release Tool/Test Probe: 15315247/J-35616-2A (GY)

Engine Coolant Temperature (ECT) Sensor Connector Terminal Identification

Pin	Wire Color	Circuit No.	Function
A	TN	2761	Low Reference
B	YE	410	ECT Sensor Signal

Evaporative Emissions (EVAP) Canister Purge Solenoid Valve

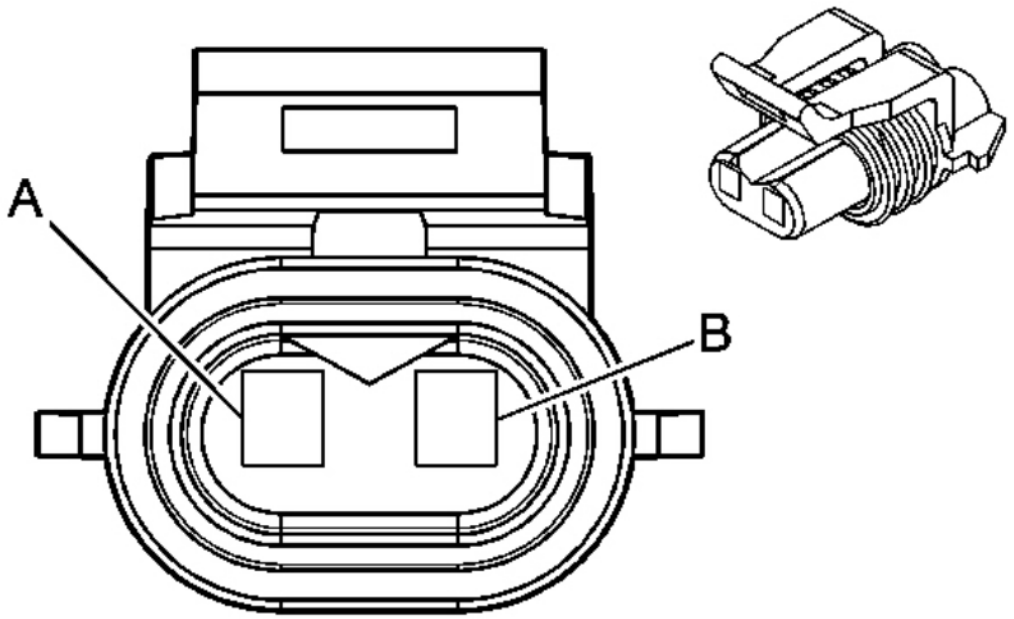

Fig. 29: Evaporative Emissions (EVAP) Canister Purge Solenoid Valve Connector End View
Courtesy of GENERAL MOTORS CORP.

Evaporative Emissions (EVAP) Canister Purge Solenoid Valve Connector Parts Information

Connector Part Information

cardiagn.com

- OEM: 12052643
- Service: 12101858
- Description: 2-Way F Metri-Pack 150 Series, Sealed (RD)

Terminal Part Information

- Terminal/Tray: 12048074/2
- Core/Insulation Crimp: E/1
- Release Tool/Test Probe: 12094429/J-35616-2A (GY)

Evaporative Emissions (EVAP) Canister Purge Solenoid Valve Connector Terminal Identification

Pin	Wire Color	Circuit No.	Function
A	WH	1310	EVAP Canister Vent Solenoid Control
B	RD/WH	1840	Battery Positive Voltage

Evaporative Emissions (EVAP) Canister Purge Solenoid Valve (20 Series)

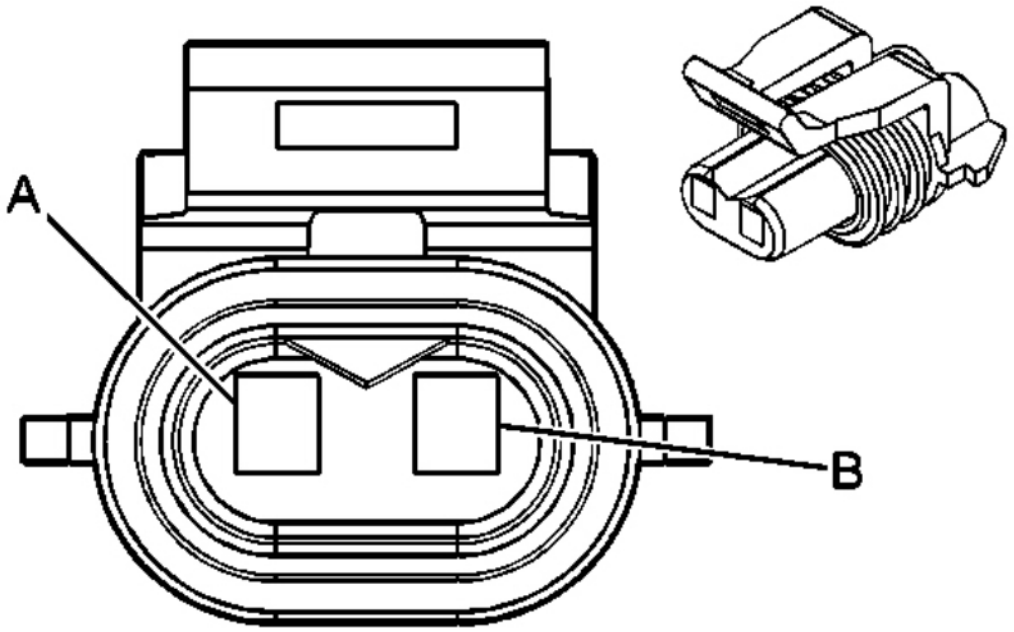

Fig. 30: Evaporative Emissions (EVAP) Canister Purge Solenoid Valve (20 Series) Connector End View
Courtesy of GENERAL MOTORS CORP.

Evaporative Emissions (EVAP) Canister Purge Solenoid Valve (20 Series) Connector Parts Information

cardiagn.com

Connector Part Information

- OEM: 12124037
- Service: 12101858
- Description: 2-Way F Metri-Pack 150 Series, Sealed (BK)

Terminal Part Information

- Terminal/Tray: 12048074/2
- Core/Insulation Crimp: E/1
- Release Tool/Test Probe: 12094429/J-35616-2A (GY)

Evaporative Emissions (EVAP) Canister Purge Solenoid Valve (20 Series) Connector Terminal Identification

Pin	Wire Color	Circuit No.	Function
A	PK	1839	Ignition 1 Voltage
B	D-GN/WH	428	EVAP Canister Purge Solenoid Control

Fuel Injector 1

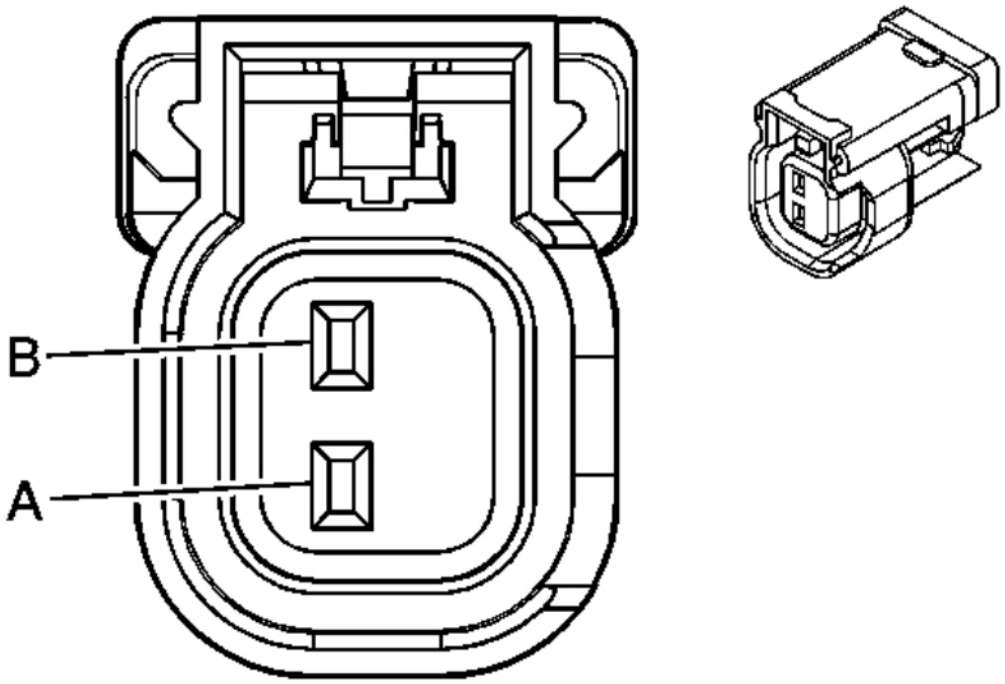

cardiagn.com

Fig. 31: Fuel Injector 1 Connector End View
Courtesy of GENERAL MOTORS CORP.

Fuel Injector 1 Connector Parts Information

Connector Part Information

- OEM: 15355226
- Service: 89046636
- Description: 2-Way F Metri-Pack 150 Tangless Series Sealed (BK)

Terminal Part Information

- Terminal/Tray: 12176636/19
- Core/Insulation Crimp: C/1
- Release Tool/Test Probe: 12094429/J-35616-2A (GY)

Fuel Injector 1 Connector Terminal Identification

Pin	Wire Color	Circuit No.	Function
A	PK/BK	1039	Ignition 1 Voltage
B	TN	1744	Fuel Injector 1 Control

Fuel Injector 2

cardiagn.com

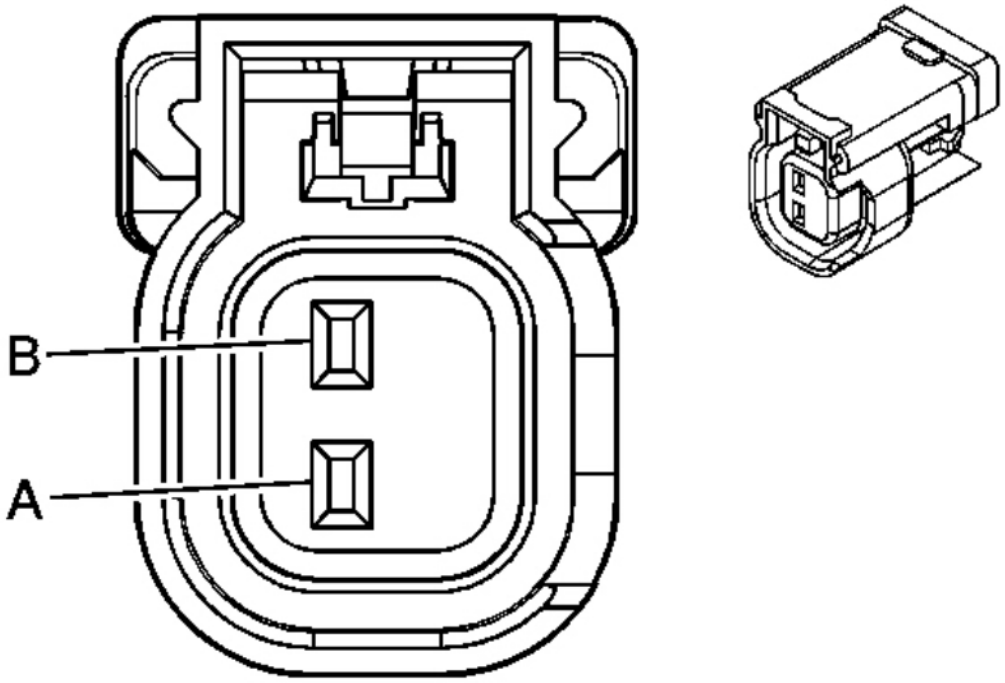

Fig. 32: Fuel Injector 2 Connector End View
Courtesy of GENERAL MOTORS CORP.

Fuel Injector 2 Connector Parts Information

Connector Part Information

- OEM: 15355226
- Service: 89046636
- Description: 2-Way F Metri-Pack 150 Tangless Series Sealed (BK)

Terminal Part Information

- Terminal/Tray: 12176636/19
- Core/Insulation Crimp: C/1
- Release Tool/Test Probe: 12094429/J-35616-2A (GY)

Fuel Injector 2 Connector Terminal Identification

Pin	Wire Color	Circuit No.	Function
A	PK	1239	Ignition 1 Voltage

cardiagn.com

B	L-GN/BK	1745	Fuel Injector 2 Control

Fuel Injector 3

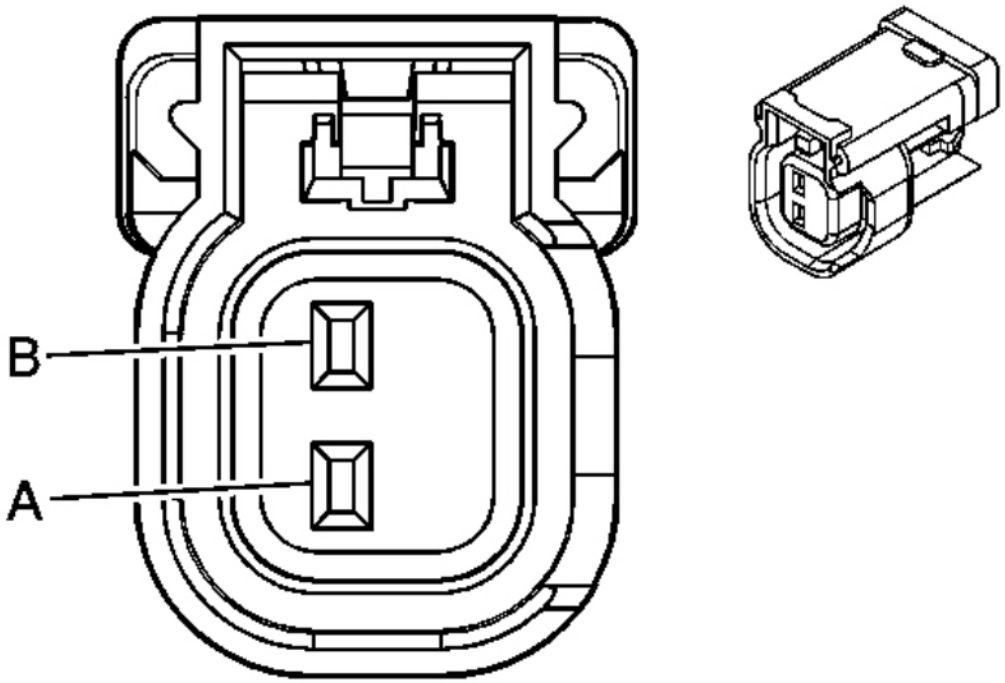

Fig. 33: Fuel Injector 3 Connector End View
Courtesy of GENERAL MOTORS CORP.

Fuel Injector 3 Connector Parts Information

Connector Part Information

- OEM: 15355226
- Service: 89046636
- Description: 2-Way F Metri-Pack 150 Tangless Series Sealed (BK)

Terminal Part Information

- Terminal/Tray: 12176636/19
- Core/Insulation Crimp: C/1
- Release Tool/Test Probe: 12094429/J-35616-2A (GY)

cardiagn.com

Fuel Injector 3 Connector Terminal Identification

Pin	Wire Color	Circuit No.	Function
A	PK/BK	1039	Ignition 1 Voltage
B	PK/BK	1746	Fuel Injector 3 Control

Fuel Injector 4

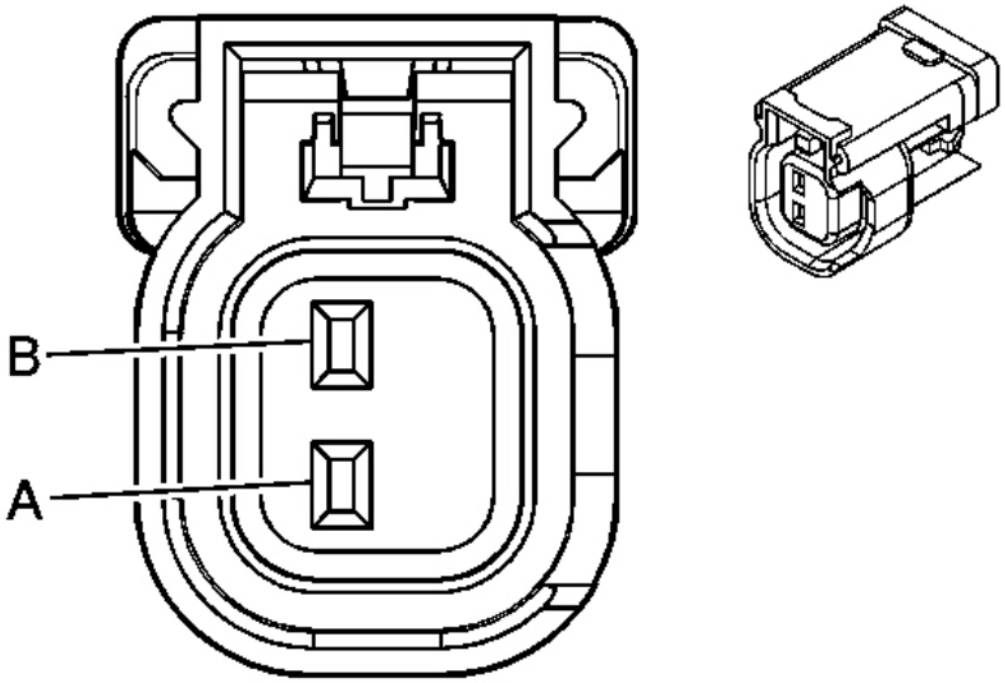

Fig. 34: Fuel Injector 4 Connector End View
Courtesy of GENERAL MOTORS CORP.

Fuel Injector 4 Connector Parts Information

Connector Part Information

- OEM: 15355226
- Service: 89046636
- Description: 2-Way F Metri-Pack 150 Tangless Series Sealed (BK)

Terminal Part Information

- Terminal/Tray: 12176636/19

cardiagn.com

- Core/Insulation Crimp: C/1
- Release Tool/Test Probe: 12094429/J-35616-2A (GY)

Fuel Injector 4 Connector Terminal Identification

Pin	Wire Color	Circuit No.	Function
A	PK	1239	Ignition 1 Voltage
B	L-BU/BK	844	Fuel Injector 4 Control

Fuel Injector 5

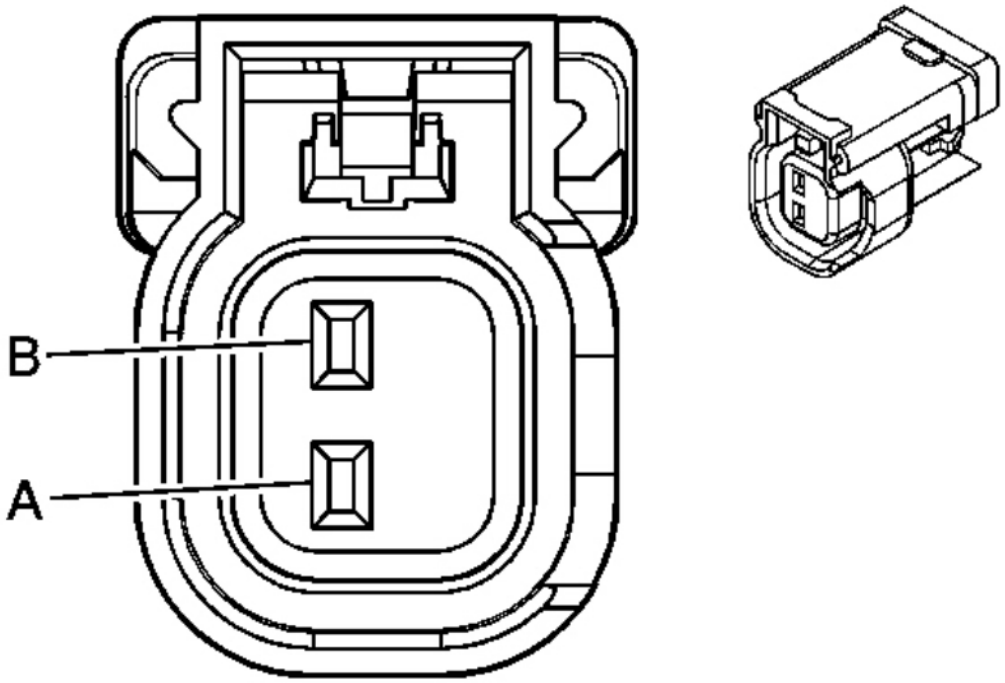

Fig. 35: Fuel Injector 5 Connector End View
Courtesy of GENERAL MOTORS CORP.

Fuel Injector 5 Connector Parts Information

Connector Part Information

- OEM: 15355226
- Service: 89046636

cardiagn.com

- Description: 2-Way F Metri-Pack 150 Tangless Series Sealed (BK)

Terminal Part Information

- Terminal/Tray: 12176636/19
- Core/Insulation Crimp: C/1
- Release Tool/Test Probe: 12094429/J-35616-2A (GY)

Fuel Injector 5 Connector Terminal Identification

Pin	Wire Color	Circuit No.	Function
A	PK	1039	Ignition 1 Voltage
B	TN/WH	845	Fuel Injector 5 Control

Fuel Injector 6

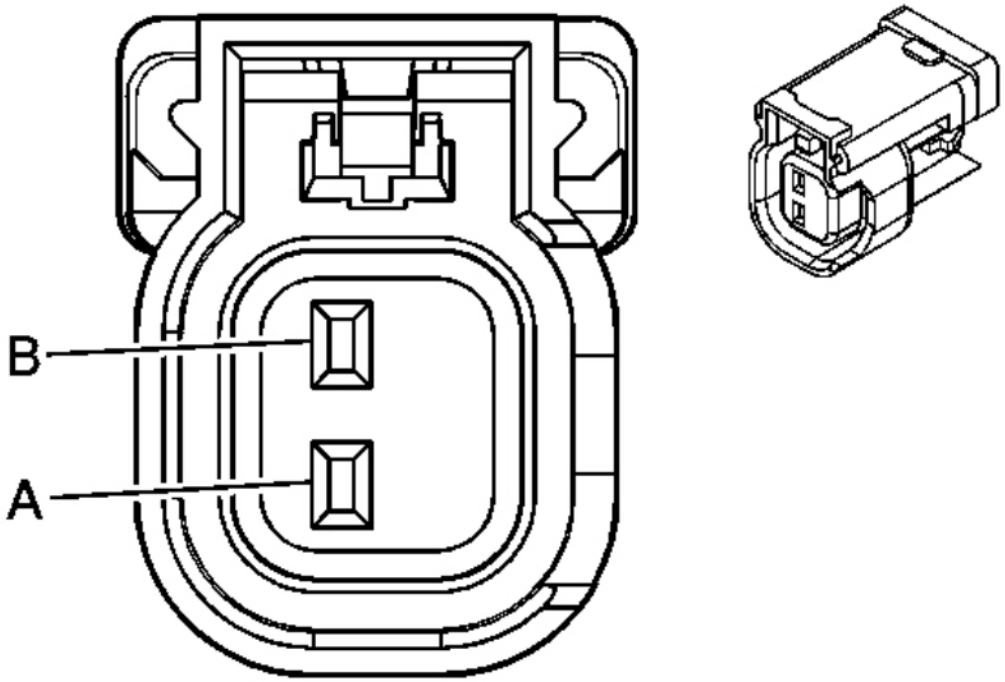

Fig. 36: Fuel Injector 6 Connector End View
Courtesy of GENERAL MOTORS CORP.

Fuel Injector 6 Connector Parts Information

cardiagn.com

Connector Part Information

- OEM: 15355226
- Service: 89046636
- Description: 2-Way F Metri-Pack 150 Tangless Series Sealed (BK)

Terminal Part Information

- Terminal/Tray: 12176636/19
- Core/Insulation Crimp: C/1
- Release Tool/Test Probe: 12094429/J-35616-2A (GY)

Fuel Injector 6 Connector Terminal Identification

Pin	Wire Color	Circuit No.	Function
A	PK/WH	1239	Ignition 1 Voltage
B	YE/BK	846	Fuel Injector 6 Control

Fuel Injector 7

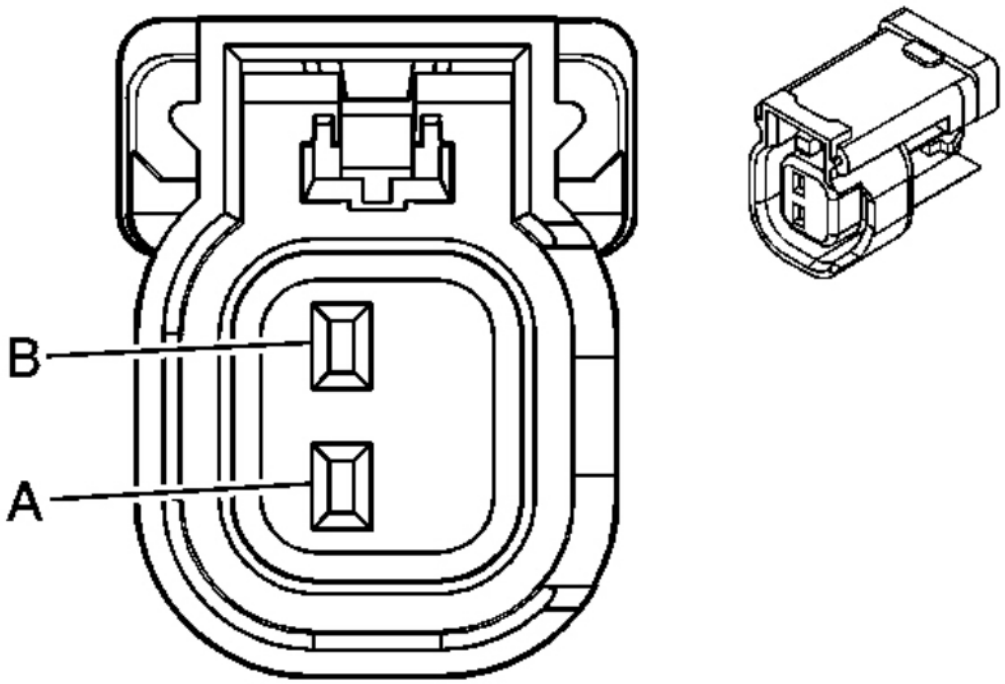

cardiagn.com

Fig. 37: Fuel Injector 7 Connector End View
Courtesy of GENERAL MOTORS CORP.

Fuel Injector 7 Connector Parts Information

Connector Part Information

- OEM: 15355226
- Service: 89046636
- Description: 2-Way F Metri-Pack 150 Tangless Series Sealed (BK)

Terminal Part Information

- Terminal/Tray: 12176636/19
- Core/Insulation Crimp: C/1
- Release Tool/Test Probe: 12094429/J-35616-2A (GY)

Fuel Injector 7 Connector Terminal Identification

Pin	Wire Color	Circuit No.	Function
A	PK	1039	Ignition 1 Voltage
B	OG/BK	877	Fuel Injector 7 Control

Fuel Injector 8

cardiagn.com

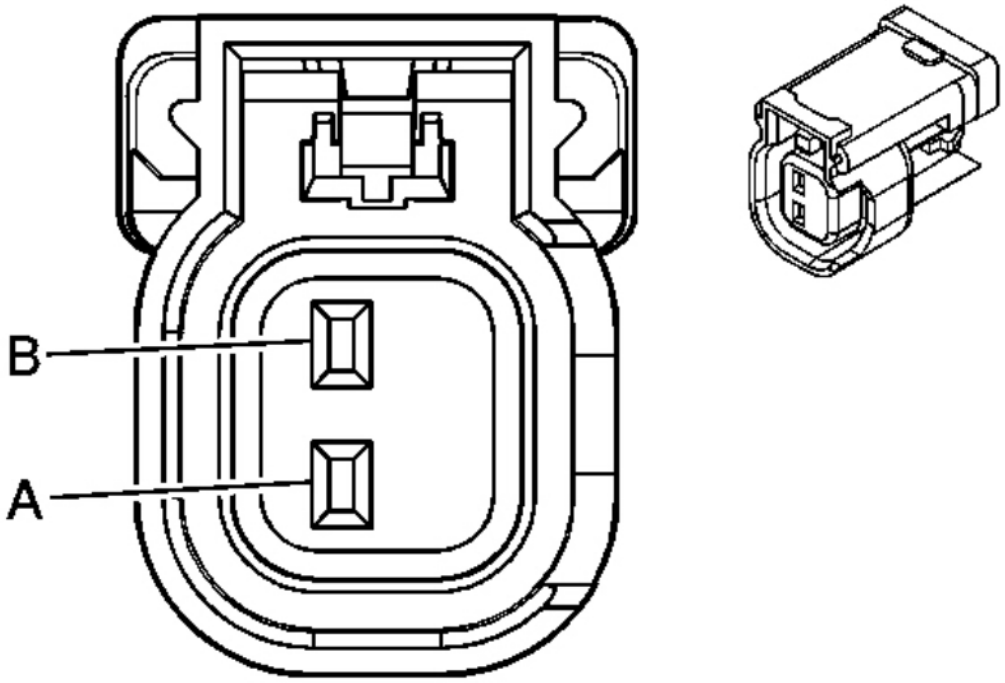

Fig. 38: Fuel Injector 8 Connector End View
Courtesy of GENERAL MOTORS CORP.

Fuel Injector 8 Connector Parts Information

Connector Part Information

- OEM: 15355226
- Service: 89046636
- Description: 2-Way F Metri-Pack 150 Tangless Series Sealed (BK)

Terminal Part Information

- Terminal/Tray: 12176636/19
- Core/Insulation Crimp: C/1
- Release Tool/Test Probe: 12094429/J-35616-2A (GY)

Fuel Injector 8 Connector Terminal Identification

Pin	Wire Color	Circuit No.	Function
A	PK/WH	1239	Ignition 1 Voltage

cardiagn.com

B	D-BU/WH	878	Fuel Injector 8 Control

Fuel Tank Pressure (FTP) Sensor

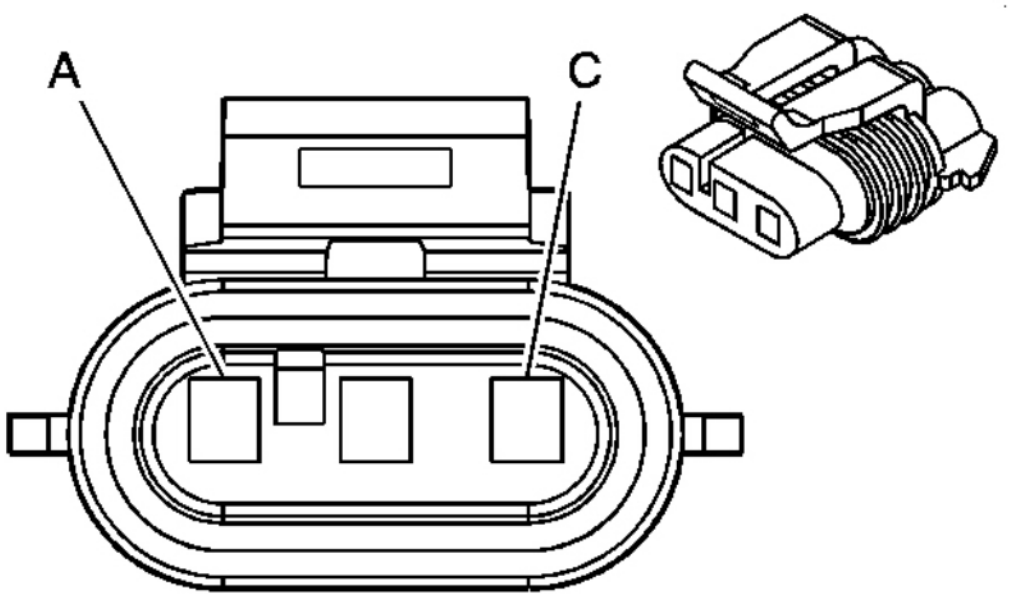

Fig. 39: Fuel Tank Pressure (FTP) Sensor Connector End View
Courtesy of GENERAL MOTORS CORP.

Fuel Tank Pressure (FTP) Sensor Connector Parts Information

Connector Part Information

- OEM: 12059595
- Service: 88986451
- Description: 3-Way F Metri-Pack 150 Series, Sealed (BK)

Terminal Part Information

- Terminal/Tray: 12048074/2
- Core/Insulation Crimp: E/1
- Release Tool/Test Probe: 12094429/J-35616-2A (GY)

Fuel Tank Pressure (FTP) Sensor Connector Terminal Identification

cardiagn.com

Pin	Wire Color	Circuit No.	Function
A	TN/BK	6049	Fuel Tank Sensor Low Reference
B	D-GN	890	Fuel Tank Pressure Sensor Signal
C	GY	2709	5-Volt Reference

Fuel Pump Relay - Secondary (Except NQZ)

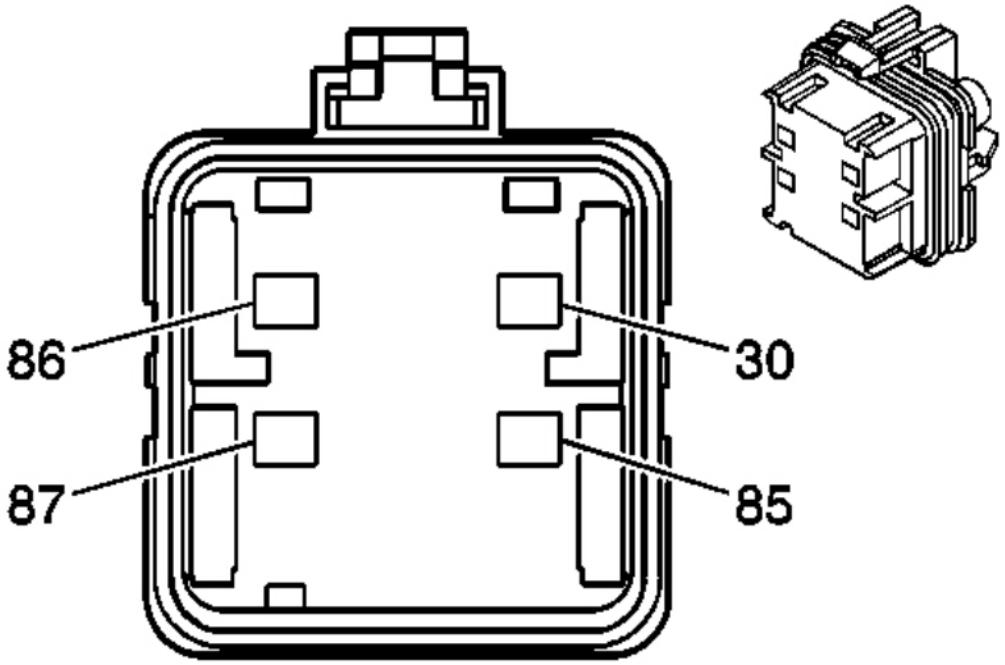

Fig. 40: Fuel Pump Relay - Secondary (Except NQZ) Connector End View
Courtesy of GENERAL MOTORS CORP.

Fuel Pump Relay - Secondary (Except NQZ) Connector Parts Information

Connector Part Information

- OEM: 12129716
- Service: 15306045
- Description: 4-Way F Metri-Pack 280 Series, Flexlock (M-GY)

Terminal Part Information

- Terminal/Tray: 12110847/4

cardiagn.com

- Core/Insulation Crimp: C/5
- Release Tool/Test Probe: 15315247/J-35616-4A (PU)

Fuel Pump Relay - Secondary (Except NQZ) Connector Terminal Identification

Pin	Wire Color	Circuit No.	Function
30	PK	439	Ignition 1 Voltage
85	BK	2150	Ground
86	TN	1465	Fuel Pump Relay Control - Secondary
87	L-GN	1058	Fuel Balance Pump Supply Voltage

Heated Oxygen Sensor (HO2S) Bank 1 Sensor 1 (Except LY6 and L92)

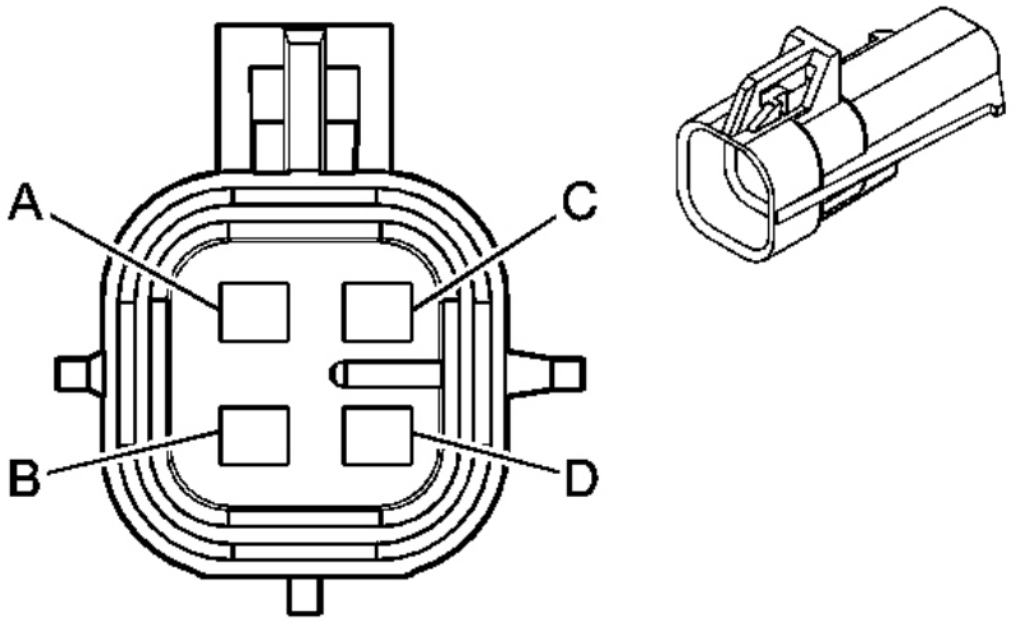

Fig. 41: Heated Oxygen Sensor (HO2S) Bank 1 Sensor 1 (Except LY6 and L92) Connector End View
Courtesy of GENERAL MOTORS CORP.

Heated Oxygen Sensor (HO2S) Bank 1 Sensor 1 (Except LY6 and L92) Connector Parts Information

Connector Part Information

- OEM: 12160825
- Service: 15305801

cardiagn.com

- Description: 4-Way M Metri-Pack 150 Series (BK)

Terminal Part Information

- Terminal/Tray: 12045773/2
- Core/Insulation Crimp: E/1
- Release Tool/Test Probe: 12094429/J-35616-3 (GY)

Heated Oxygen Sensor (HO2S) Bank 1 Sensor 1 (Except LY6 and L92) Connector Terminal Identification

Pin	Wire Color	Circuit No.	Function
A	TN	1664	HO2S Low Signal - Bank 1 Sensor 1
B	PU/WH	1665	HO2S High Signal - Bank 1 Sensor 1
C	GY/WH	3113	HO2S Heater Low Control - Bank 1 Sensor 1
D	PK	539	Ignition 1 Voltage

Heated Oxygen Sensor (HO2S) Bank 1 Sensor 1 (L92)

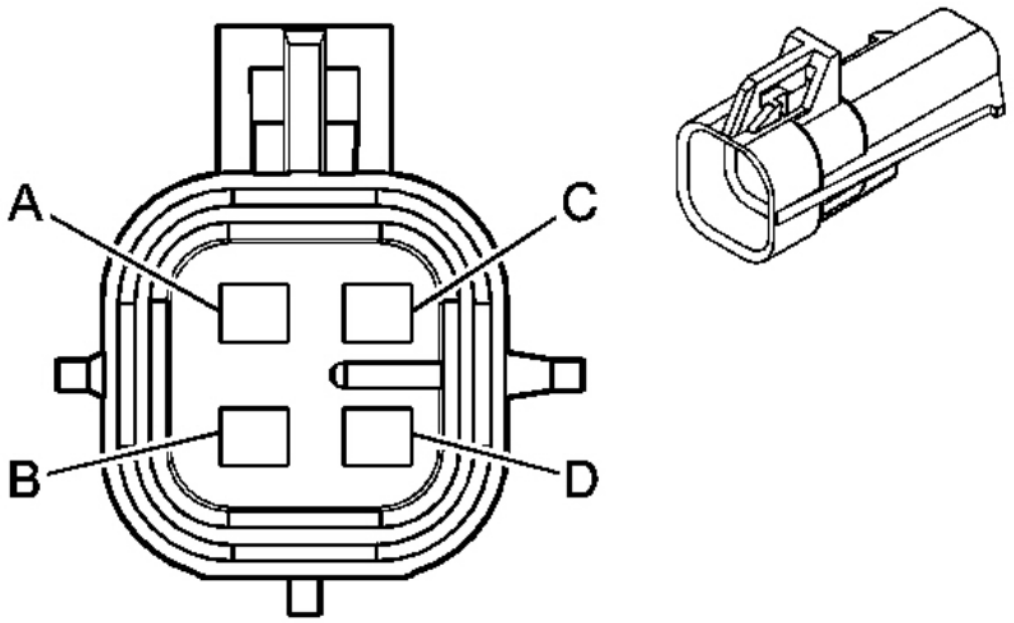

Fig. 42: Heated Oxygen Sensor (HO2S) Bank 1 Sensor 1 (L92) Connector End View
Courtesy of GENERAL MOTORS CORP.

cardiagn.com

Heated Oxygen Sensor (HO2S) Bank 1 Sensor 1 (L92) Connector Parts Information

Connector Part Information

- OEM: 12160825
- Service: 15305801
- Description: 4-Way M Metri-Pack 150 Series (BK)

Terminal Part Information

- Terminal/Tray: 12045773/2
- Core/Insulation Crimp: E/1
- Release Tool/Test Probe: 12094429/J-35616-3 (GY)

Heated Oxygen Sensor (HO2S) Bank 1 Sensor 1 (L92) Connector Terminal Identification

Pin	Wire Color	Circuit No.	Function
A	TN	1664	HO2S Low Signal - Bank 1 Sensor 1
B	PU/WH	1665	HO2S High Signal - Bank 1 Sensor 1
C	GY/WH	3113	HO2S Heater Low Control - Bank 1 Sensor 1
D	PK	539	Ignition 1 Voltage

Heated Oxygen Sensor (HO2S) Bank 1 Sensor 1 (LY6)

cardiagn.com

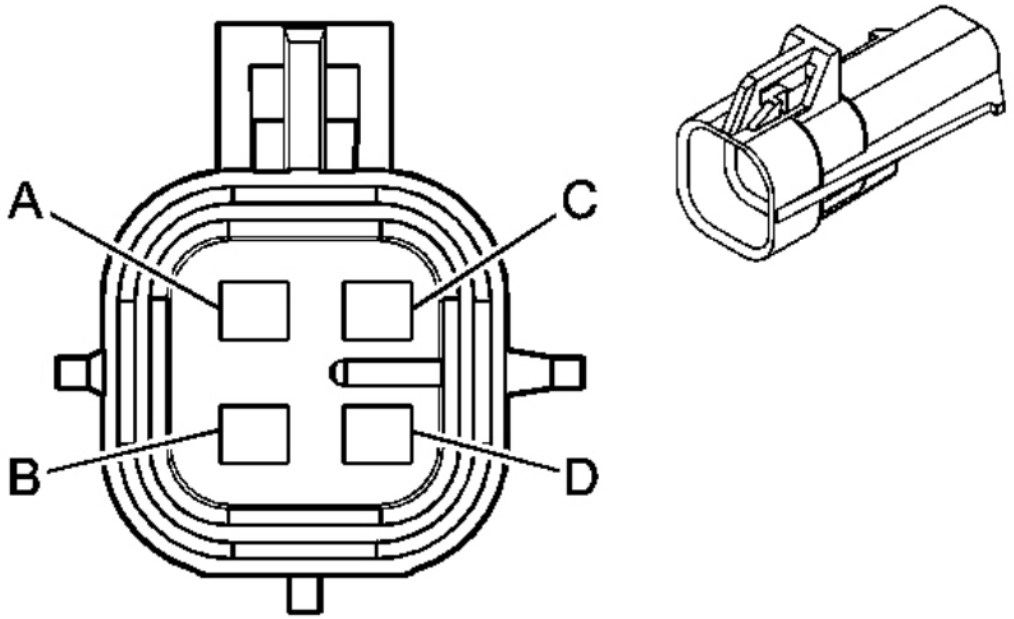

Fig. 43: Heated Oxygen Sensor (HO2S) Bank 1 Sensor 1 (LY6) Connector End View
Courtesy of GENERAL MOTORS CORP.

Heated Oxygen Sensor (HO2S) Bank 1 Sensor 1 (LY6) Connector Parts Information

Connector Part Information

- OEM: 12160825
- Service: 15305801
- Description: 4-Way M Metri-Pack 150 Series, Sealed (BK)

Terminal Part Information

- Terminal/Tray: 12045773/2
- Core/Insulation Crimp: E/1
- Release Tool/Test Probe: 12094429/J-35616-3 (GY)

Heated Oxygen Sensor (HO2S) Bank 1 Sensor 1 (LY6) Connector Terminal Identification

Pin	Wire Color	Circuit No.	Function
A	TN	1664	HO2S Low Signal - Bank 1 Sensor 1
B	PU/WH	1665	HO2S High Signal - Bank 1 Sensor 1
C	GY/WH	3113	HO2S Heater Low Control - Bank 1 Sensor 1

cardiagn.com

D	PK	539	Ignition 1 Voltage

Heated Oxygen Sensor (HO2S) Bank 1 Sensor 2 (Except LY6 and L92)

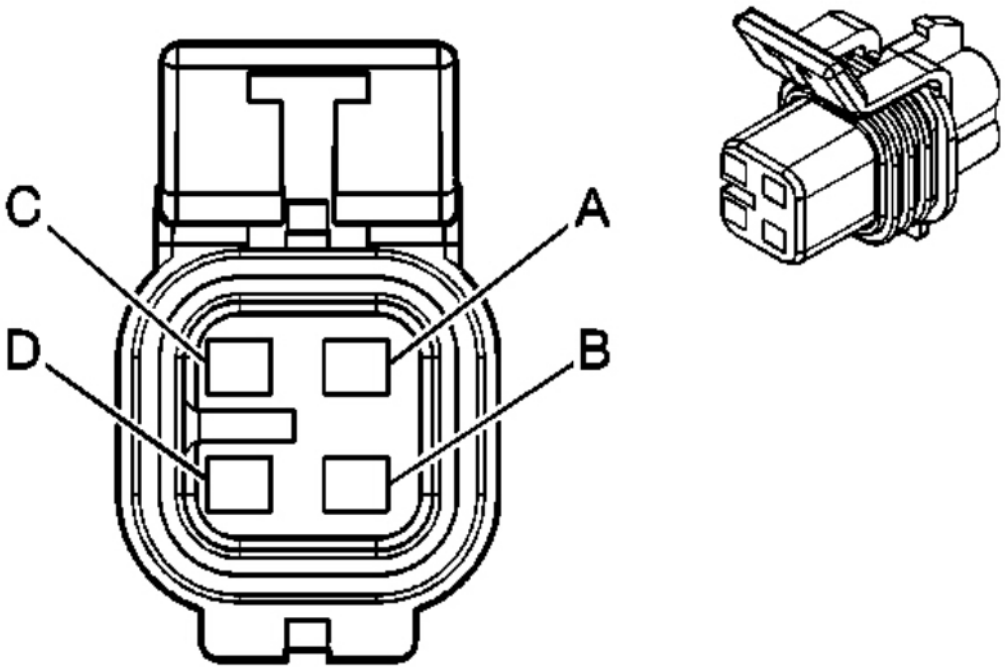

Fig. 44: Heated Oxygen Sensor (HO2S) Bank 1 Sensor 2 (Except LY6 and L92) Connector End View
Courtesy of GENERAL MOTORS CORP.

Heated Oxygen Sensor (HO2S) Bank 1 Sensor 2 (Except LY6 and L92) Connector Parts Information

Connector Part Information

- OEM: 12160482
- Service: 88988598
- Description: 4-Way F Metri-Pack 150 Series, Sealed (BK)

Terminal Part Information

- Terminal/Tray: 12048074/2
- Core/Insulation Crimp: E/1
- Release Tool/Test Probe: 12094429/J-35616-2A (GY)

cardiagn.com

Heated Oxygen Sensor (HO2S) Bank 1 Sensor 2 (Except LY6 and L92) Connector Terminal Identification

Pin	Wire Color	Circuit No.	Function
A	TN/WH	1669	HO2S Low Signal - Bank 1 Sensor 2
B	PU/WH	1668	HO2S High Signal - Bank 1 Sensor 2
C	GY/WH	3122	HO2S Heater Low Control - Bank 1 Sensor 2
D	PK	1539	Ignition 1 Voltage

Heated Oxygen Sensor (HO2S) Bank 1 Sensor 2 (L92)

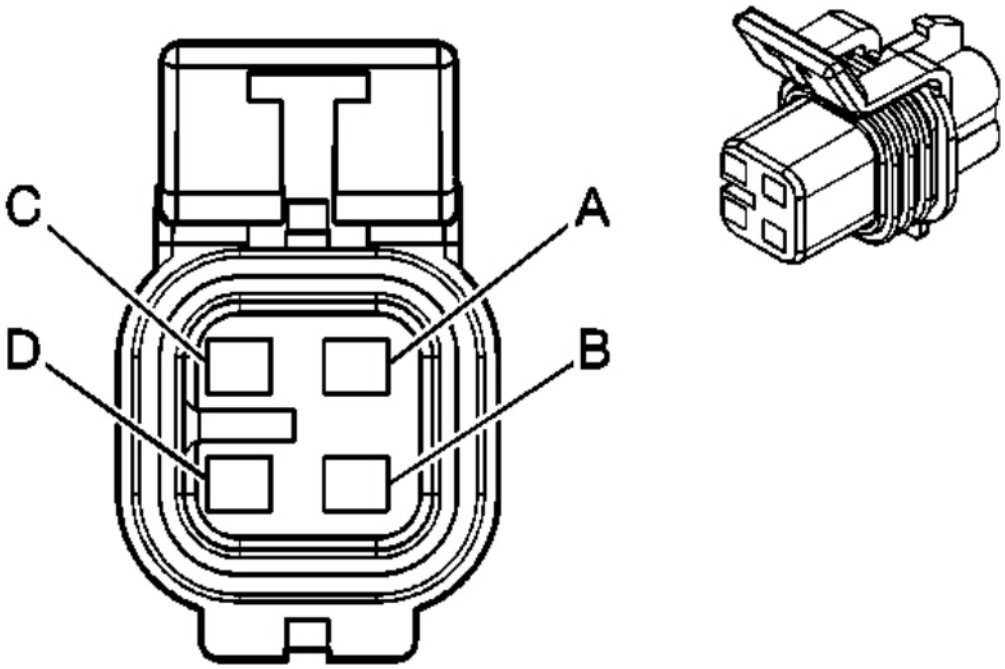

Fig. 45: Heated Oxygen Sensor (HO2S) Bank 1 Sensor 2 (L92) Connector End View
Courtesy of GENERAL MOTORS CORP.

Heated Oxygen Sensor (HO2S) Bank 1 Sensor 2 (L92) Connector Parts Information

Connector Part Information

- OEM: 12160482
- Service: 88988598
- Description: 4-Way F Metri-Pack 150 Series, Sealed (BK)

cardiagn.com

Terminal Part Information

- Terminal/Tray: 12048074/2
- Core/Insulation Crimp: E/1
- Release Tool/Test Probe: 12094429/J-35616-2A (GY)

Heated Oxygen Sensor (HO2S) Bank 1 Sensor 2 (L92) Connector Terminal Identification

Pin	Wire Color	Circuit No.	Function
A	TN/WH	1669	HO2S Low Signal - Bank 1 Sensor 2
B	PU/WH	1668	HO2S High Signal - Bank 1 Sensor 2
C	GY/WH	3122	HO2S Heater Low Control - Bank 1 Sensor 2
D	PK	1539	Ignition 1 Voltage

Heated Oxygen Sensor (HO2S) Bank 1 Sensor 2 (LY6)

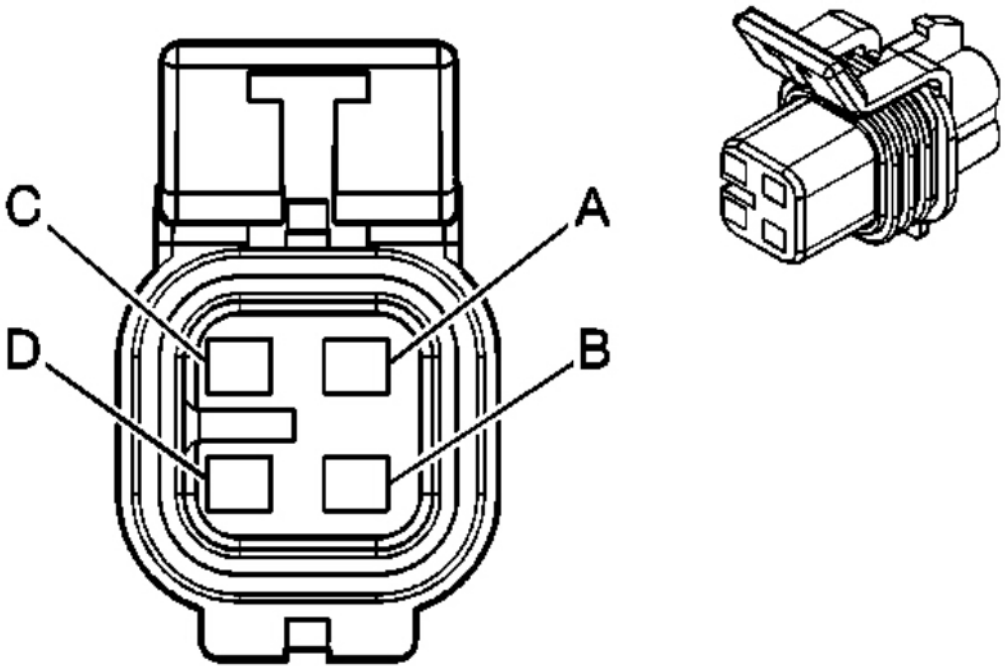

Fig. 46: Heated Oxygen Sensor (HO2S) Bank 1 Sensor 2 (LY6) Connector End View
Courtesy of GENERAL MOTORS CORP.

Heated Oxygen Sensor (HO2S) Bank 1 Sensor 2 (LY6) Connector Parts Information

cardiagn.com

Connector Part Information

- OEM: 12160482
- Service: 88988598
- Description: 4-Way F Metri-Pack 150 Series, Sealed (BK)

Terminal Part Information

- Terminal/Tray: 12048074/2
- Core/Insulation Crimp: E/1
- Release Tool/Test Probe: 12094429/J-35616-2A (GY)

Heated Oxygen Sensor (HO2S) Bank 1 Sensor 2 (LY6) Connector Terminal Identification

Pin	Wire Color	Circuit No.	Function
A	TN/WH	1669	HO2S Low Signal - Bank 1 Sensor 2
B	PU/WH	1668	HO2S High Signal - Bank 1 Sensor 2
C	GY/WH	3122	HO2S Heater Low Control - Bank 1 Sensor 2
D	PK/BK	1539	Ignition 1 Voltage

Heated Oxygen Sensor (HO2S) Bank 2 Sensor 1 (L92)

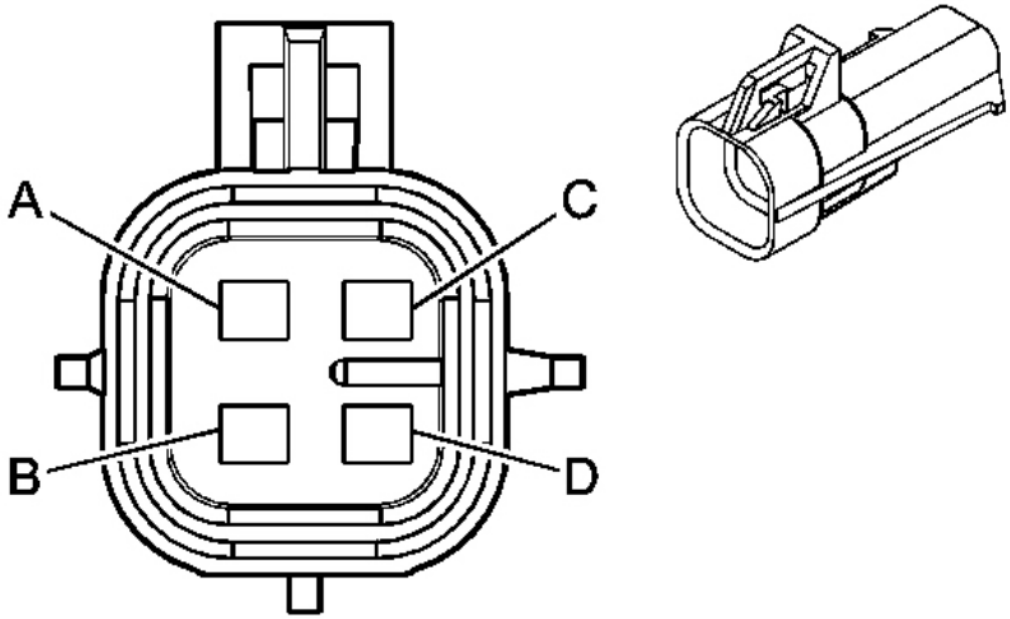

cardiagn.com

Fig. 47: Heated Oxygen Sensor (HO2S) Bank 2 Sensor 1 (L92) Connector End View
Courtesy of GENERAL MOTORS CORP.

Heated Oxygen Sensor (HO2S) Bank 2 Sensor 1 (L92) Connector Parts Information

Connector Part Information

- OEM: 12160825
- Service: 15305801
- Description: 4-Way M Metri-Pack 150 Series (BK)

Terminal Part Information

- Terminal/Tray: 12045773/2
- Core/Insulation Crimp: E/1
- Release Tool/Test Probe: 12094429/J-35616-3 (GY)

Heated Oxygen Sensor (HO2S) Bank 2 Sensor 1 (L92) Connector Terminal Identification

Pin	Wire Color	Circuit No.	Function
A	TN	1667	HO2S Low Signal - Bank 2 Sensor 1
B	PU	1666	HO2S High Signal - Bank 2 Sensor 1
C	L-GN	3212	HO2S Heater Low Control - Bank 2 Sensor 1
D	PK	539	Ignition 1 Voltage

Heated Oxygen Sensor (HO2S) Bank 2 Sensor 1 (LC9, LMG, LY5, LY2, L76)

cardiagn.com

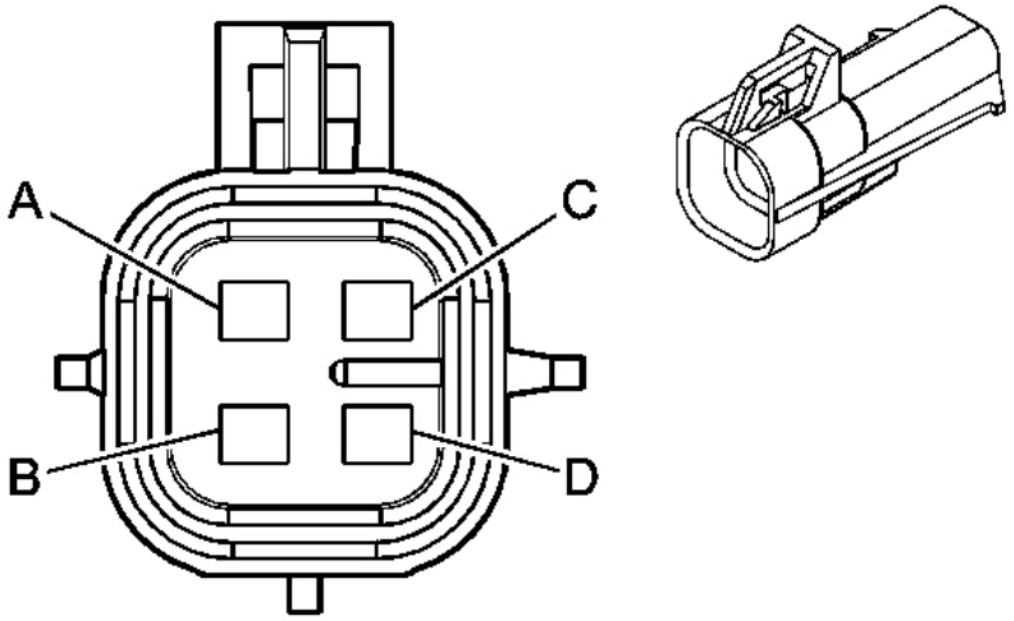

Fig. 48: Heated Oxygen Sensor (HO2S) Bank 2 Sensor 1 (LC9, LMG, LY5, LY2, L76) Connector End View
Courtesy of GENERAL MOTORS CORP.

Heated Oxygen Sensor (HO2S) Bank 2 Sensor 1 (LC9, LMG, LY5, LY2, L76) Connector Parts Information

Connector Part Information

- OEM: 12160825
- Service: 15305801
- Description: 4-Way M Metri-Pack 150 Series (BK)

Terminal Part Information

- Terminal/Tray: 12045773/2
- Core/Insulation Crimp: E/1
- Release Tool/Test Probe: 12094429/J-35616-3 (GY)

Heated Oxygen Sensor (HO2S) Bank 2 Sensor 1 (LC9, LMG, LY5, LY2, L76) Connector Terminal Identification

Pin	Wire Color	Circuit No.	Function
A	TN	1667	HO2S Low Signal - Bank 2 Sensor 1

cardiagn.com

B	PU	1666	HO2S High Signal - Bank 2 Sensor 1
C	L-GN	3212	HO2S Heater Low Control - Bank 2 Sensor 1
D	PK	539	Ignition 1 Voltage

Heated Oxygen Sensor (HO2S) Bank 2 Sensor 1 (LY6)

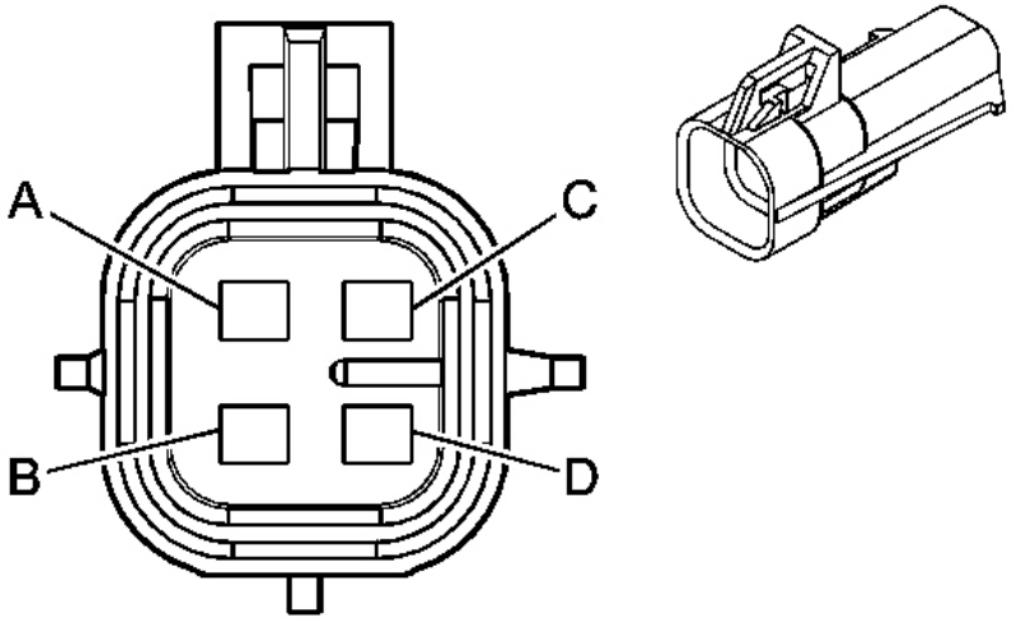

Fig. 49: Heated Oxygen Sensor (HO2S) Bank 2 Sensor 1 (LY6) Connector End View
Courtesy of GENERAL MOTORS CORP.

Heated Oxygen Sensor (HO2S) Bank 2 Sensor 1 (LY6) Connector Parts Information

Connector Part Information

- OEM: 12160825
- Service: 15305801
- Description: 4-Way M Metri-Pack 150 Series (BK)

Terminal Part Information

- Terminal/Tray: 12045773/2
- Core/Insulation Crimp: E/1
- Release Tool/Test Probe: 12094429/J-35616-3 (GY)

cardiagn.com

Heated Oxygen Sensor (HO2S) Bank 2 Sensor 1 (LY6) Connector Terminal Identification

Pin	Wire Color	Circuit No.	Function
A	TN	1667	HO2S Low Signal - Bank 2 Sensor 1
B	PU	1666	HO2S High Signal - Bank 2 Sensor 1
C	L-GN	3212	HO2S Heater Low Control - Bank 2 Sensor 1
D	PK	539	Ignition 1 Voltage

Heated Oxygen Sensor (HO2S) Bank 2 Sensor 2 (Except LY6)

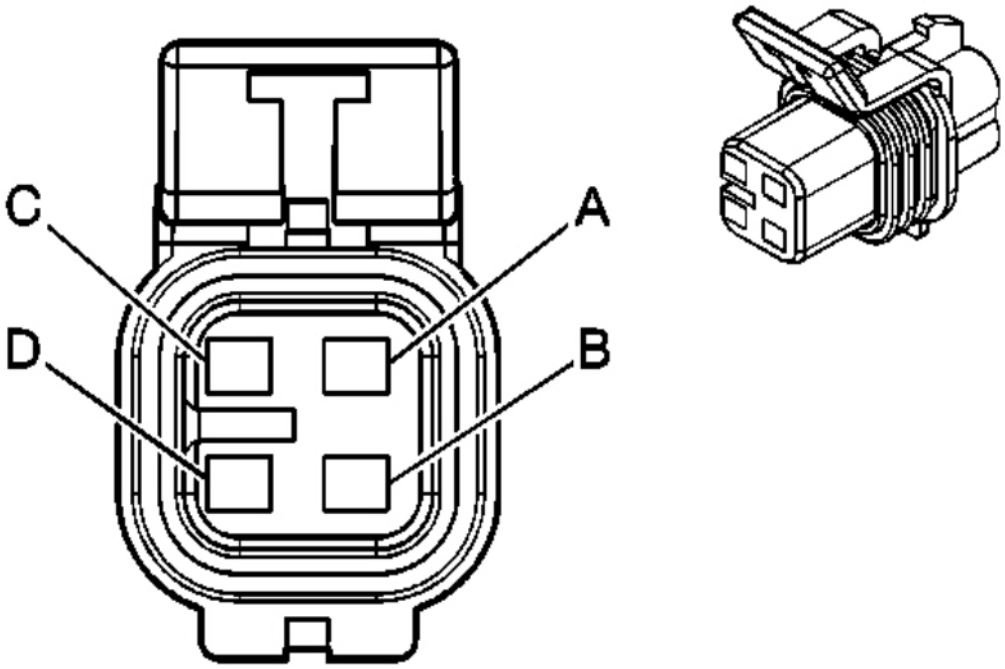

Fig. 50: Heated Oxygen Sensor (HO2S) Bank 2 Sensor 2 (Except LY6) Connector End View
Courtesy of GENERAL MOTORS CORP.

Heated Oxygen Sensor (HO2S) Bank 2 Sensor 2 (Except LY6) Connector Parts Information

Connector Part Information

- OEM: 12160482
- Service: 88988598
- Description: 4-Way F Metri-Pack 150 Series, Sealed (BK)

Terminal Part Information

cardiagn.com

- Terminal/Tray: 12048074/2
- Core/Insulation Crimp: E/1
- Release Tool/Test Probe: 12094429/J-35616-2A (GY)

Heated Oxygen Sensor (HO2S) Bank 2 Sensor 2 (Except LY6) Connector Terminal Identification

Pin	Wire Color	Circuit No.	Function
A	TN	1671	HO2S Low Signal - Bank 2 Sensor 2
B	PU	1670	HO2S High Signal - Bank 2 Sensor 2
C	OG/WH	3223	HO2S Heater Low Control - Bank 2 Sensor 2
D	PK	1539	Ignition 1 Voltage

Heated Oxygen Sensor (HO2S) Bank 2 Sensor 2 (LY6)

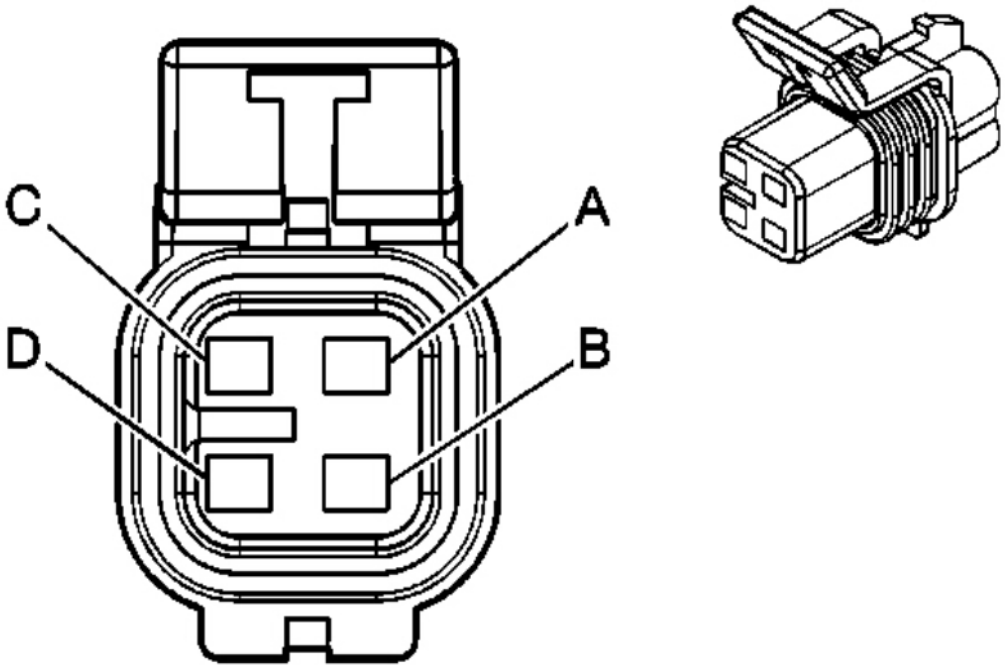

Fig. 51: Heated Oxygen Sensor (HO2S) Bank 2 Sensor 2 (LY6) Connector End View
Courtesy of GENERAL MOTORS CORP.

Heated Oxygen Sensor (HO2S) Bank 2 Sensor 2 (LY6) Connector Parts Information

Connector Part Information

cardiagn.com

- OEM: 12160482
- Service: 88988598
- Description: 4-Way F Metri-Pack 150 Series, Sealed (BK)

Terminal Part Information

- Terminal/Tray: 12048074/2
- Core/Insulation Crimp: E/1
- Release Tool/Test Probe: 12094429/J-35616-2A (GY)

Heated Oxygen Sensor (HO2S) Bank 2 Sensor 2 (LY6) Connector Terminal Identification

Pin	Wire Color	Circuit No.	Function
A	TN	1671	HO2S Low Signal - Bank 2 Sensor 2
B	PU	1670	HO2S High Signal - Bank 2 Sensor 2
C	OG/WH	3223	HO2S Heater Low Control - Bank 2 Sensor 2
D	PK/BK	1539	Ignition 1 Voltage

Ignition Coil 1

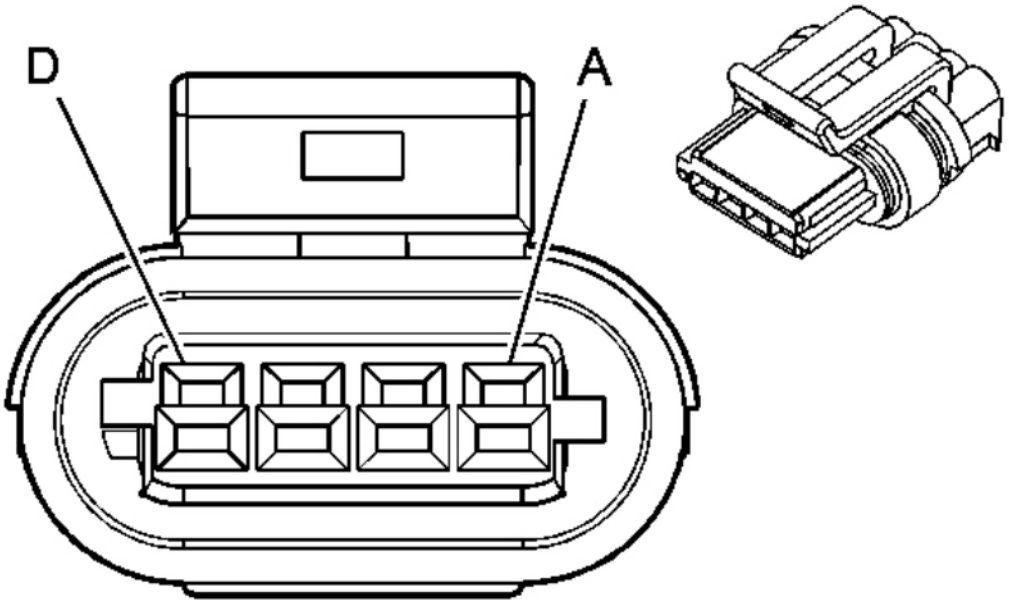

Fig. 52: Ignition Coil 1 Connector End View
Courtesy of GENERAL MOTORS CORP.

cardiagn.com

Ignition Coil 1 Connector Parts Information

Connector Part Information

- OEM: 15439568
- Service: 88987184
- Description: 4-Way F GT 150 Series, Sealed (BK)

Terminal Part Information

- Terminal/Tray: 15326267/19
- Core/Insulation Crimp: Pins A, D: E/1
- Core/Insulation Crimp: Pins B, C: E/4
- Release Tool/Test Probe: 15315247/J-35616-2A (GY)

Ignition Coil 1 Connector Terminal Identification

Pin	Wire Color	Circuit No.	Function
A	BK	151	Ground
B	BN	2129	Low Reference
C	PU	2121	IC 1 Control
D	PK	39	Ignition 1 Voltage

Ignition Coil 2

cardiagn.com

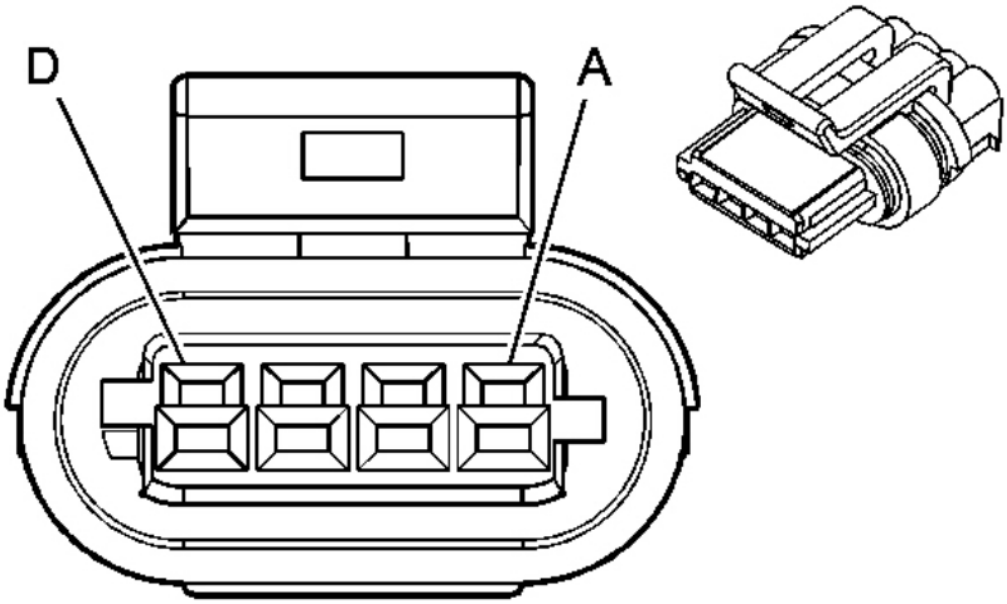

Fig. 53: Ignition Coil 2 Connector End View
Courtesy of GENERAL MOTORS CORP.

Ignition Coil 2 Connector Parts Information

Connector Part Information

- OEM: 15439568
- Service: 88987184
- Description: 4-Way F GT 150 Series, Sealed (BK)

Terminal Part Information

- Terminal/Tray: 15326267/19
- Core/Insulation Crimp: Pins A, D: E/1
- Core/Insulation Crimp: Pins B, C: E/4
- Release Tool/Test Probe: 15315247/J-35616-2A (GY)

Ignition Coil 2 Connector Terminal Identification

Pin	Wire Color	Circuit No.	Function
A	BK	151	Ground
B	BN	2129	Low Reference

cardiagn.com

C	RD	2127	IC 7 Control
D	PK	39	Ignition 1 Voltage

Ignition Coil 3

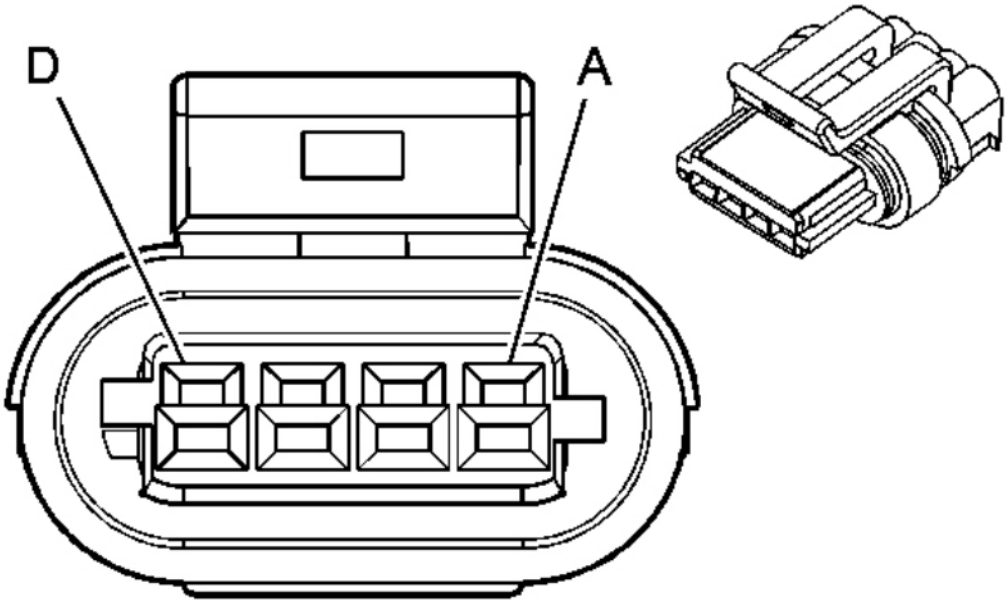

Fig. 54: Ignition Coil 3 Connector End View
Courtesy of GENERAL MOTORS CORP.

Ignition Coil 3 Connector Parts Information

Connector Part Information

- OEM: 15439568
- Service: 88987184
- Description: 4-Way F GT 150 Series, Sealed (BK)

Terminal Part Information

- Terminal/Tray: 15326267/19
- Core/Insulation Crimp: Pins A, D: E/1
- Core/Insulation Crimp: Pins B, C: E/4
- Release Tool/Test Probe: 15315247/J-35616-2A (GY)

cardiagn.com

Ignition Coil 3 Connector Terminal Identification

Pin	Wire Color	Circuit No.	Function
A	BK	151	Ground
B	BN	2129	Low Reference
C	L-BU	2123	IC 3 Control
D	PK	39	Ignition 1 Voltage

Ignition Coil 4

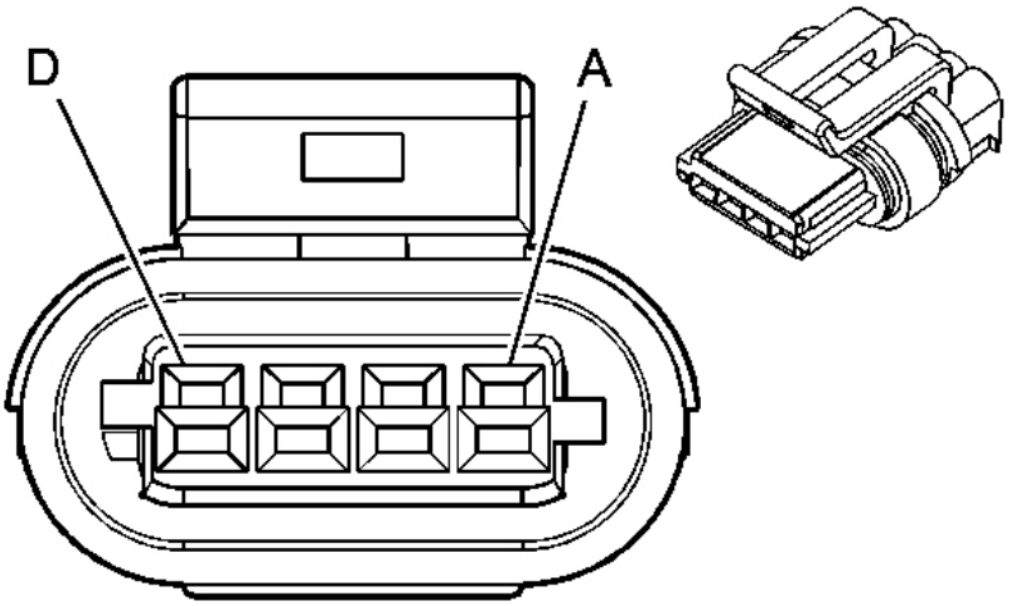

Fig. 55: Ignition Coil 4 Connector End View
Courtesy of GENERAL MOTORS CORP.

Ignition Coil 4 Connector Parts Information

Connector Part Information

- OEM: 15439568
- Service: 88987184
- Description: 4-Way F GT 150 Series, Sealed (BK)

Terminal Part Information

- Terminal/Tray: 15326267/19

cardiagn.com

- Core/Insulation Crimp: Pins A, D: E/1
- Core/Insulation Crimp: Pins B, C: E/4
- Release Tool/Test Probe: 15315247/J-35616-2A (GY)

Ignition Coil 4 Connector Terminal Identification

Pin	Wire Color	Circuit No.	Function
A	BK	151	Ground
B	BN	2129	Low Reference
C	D-GN	2125	IC 5 Control
D	PK	39	Ignition 1 Voltage

Ignition Coil 5

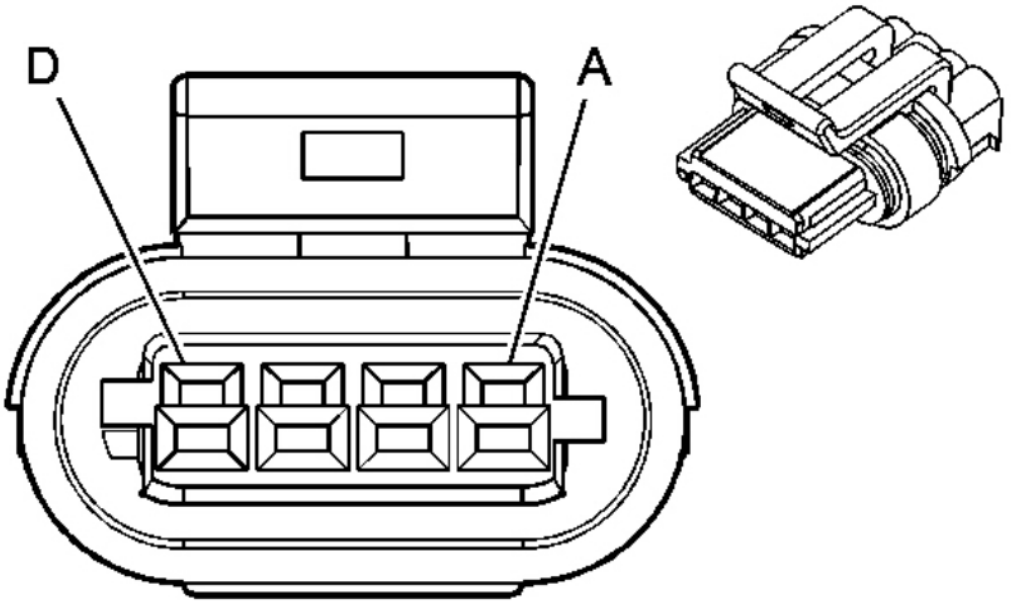

Fig. 56: Ignition Coil 5 Connector End View
Courtesy of GENERAL MOTORS CORP.

Ignition Coil 5 Connector Parts Information

Connector Part Information

- OEM: 15439568

cardiagn.com

- Service: 88987184
- Description: 4-Way F GT 150 Series, Sealed (BK)

Terminal Part Information

- Terminal/Tray: 15326267/19
- Core/Insulation Crimp: Pins A, D: E/1
- Core/Insulation Crimp: Pins B, C: E/4
- Release Tool/Test Probe: 15315247/J-35616-2A (GY)

Ignition Coil 5 Connector Terminal Identification

Pin	Wire Color	Circuit No.	Function
A	BK	151	Ground
B	BN	2129	Low Reference
C	D-GN	2125	IC 5 Control
D	PK	39	Ignition 1 Voltage

Ignition Coil 6

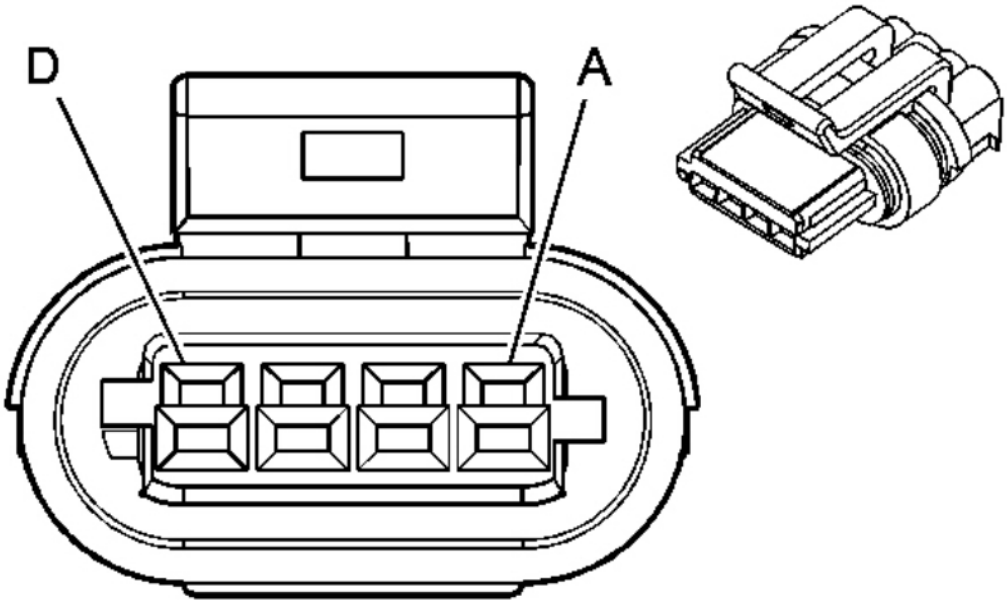

Fig. 57: Ignition Coil 6 Connector End View
Courtesy of GENERAL MOTORS CORP.

cardiagn.com

Ignition Coil 6 Connector Parts Information

Connector Part Information

- OEM: 15439568
- Service: 88987184
- Description: 4-Way F GT 150 Series, Sealed (BK)

Terminal Part Information

- Terminal/Tray: 15326267/19
- Core/Insulation Crimp: Pins A, D: E/1
- Core/Insulation Crimp: Pins B, C: E/4
- Release Tool/Test Probe: 15315247/J-35616-2A (GY)

Ignition Coil 6 Connector Terminal Identification

Pin	Wire Color	Circuit No.	Function
A	BK	151	Ground
B	BN	2129	Low Reference
C	L-BU	2123	IC 3 Control
D	PK	39	Ignition 1 Voltage

Ignition Coil 7

cardiagn.com

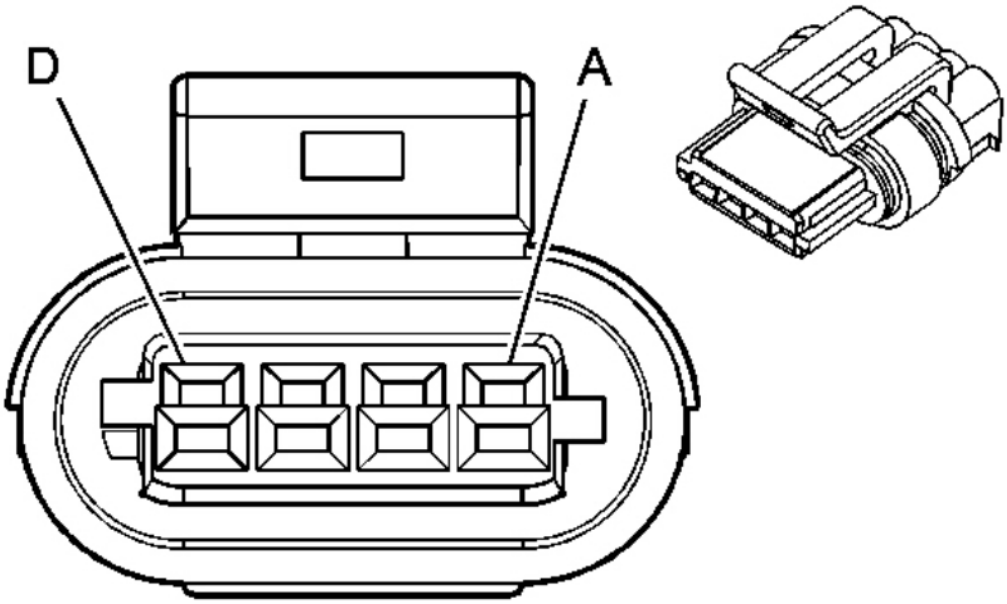

Fig. 58: Ignition Coil 7 Connector End View
Courtesy of GENERAL MOTORS CORP.

Ignition Coil 7 Connector Parts Information

Connector Part Information

- OEM: 15439568
- Service: 88987184
- Description: 4-Way F GT 150 Series, Sealed (BK)

Terminal Part Information

- Terminal/Tray: 15326267/19
- Core/Insulation Crimp: Pins A, D: E/1
- Core/Insulation Crimp: Pins B, C: E/4
- Release Tool/Test Probe: 15315247/J-35616-2A (GY)

Ignition Coil 7 Connector Terminal Identification

Pin	Wire Color	Circuit No.	Function
A	BK	151	Ground
B	BN	2129	Low Reference

cardiagn.com

C	RD	2127	IC 7 Control
D	PK	39	Ignition 1 Voltage

Ignition Coil 8

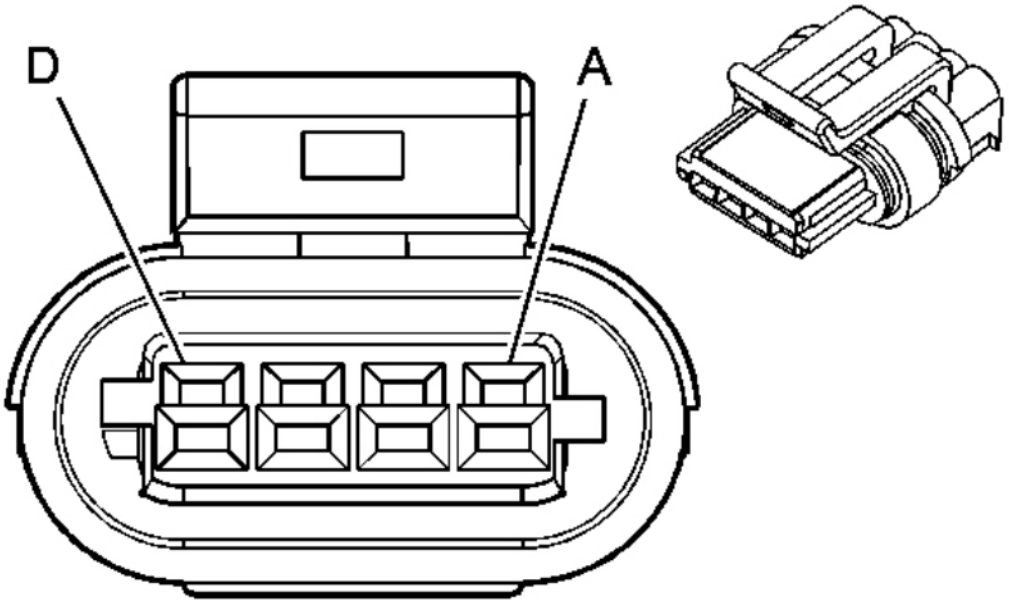

Fig. 59: Ignition Coil 8 Connector End View
Courtesy of GENERAL MOTORS CORP.

Ignition Coil 8 Connector Parts Information

Connector Part Information

- OEM: 15439568
- Service: 88987184
- Description: 4-Way F GT 150 Series, Sealed (BK)

Terminal Part Information

- Terminal/Tray: 15326267/19
- Core/Insulation Crimp: Pins A, D: E/1
- Core/Insulation Crimp: Pins B, C: E/4
- Release Tool/Test Probe: 15315247/J-35616-2A (GY)

cardiagn.com

Ignition Coil 8 Connector Terminal Identification

Pin	Wire Color	Circuit No.	Function
A	BK	151	Ground
B	BN	2129	Low Reference
C	PU	2121	IC 1 Control
D	PK	39	Ignition 1 Voltage

Knock Sensor (KS) - 1

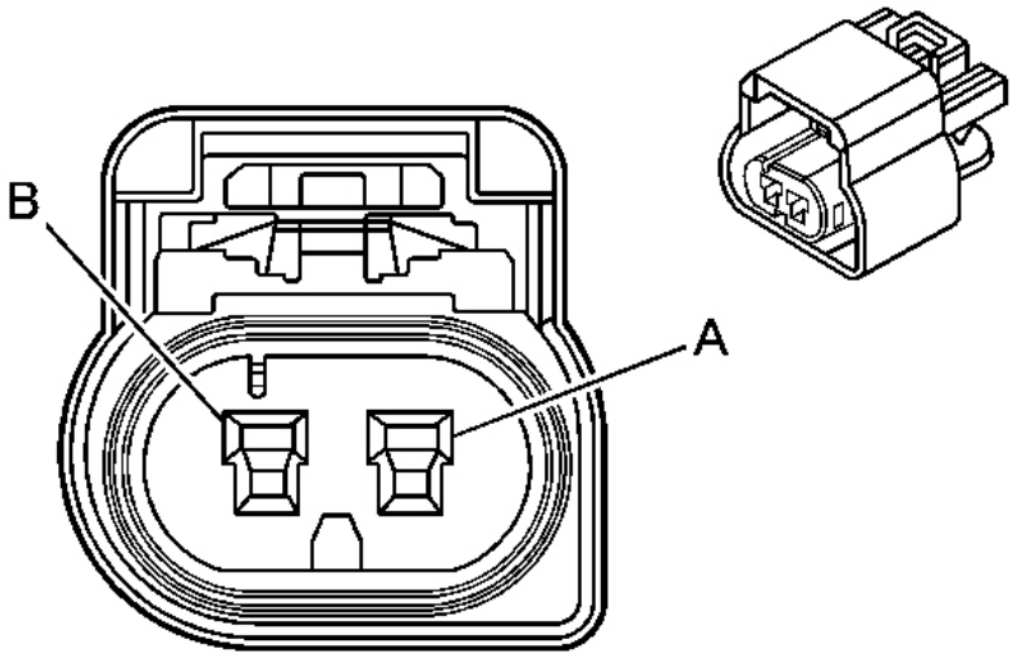

Fig. 60: Knock Sensor (KS) 1 Connector End View
Courtesy of GENERAL MOTORS CORP.

Knock Sensor (KS) 1 Connector Parts Information

Connector Part Information

- OEM: 15374222
- Service: 88953268
- Description: 2-Way F GT 150 Sealed (NA)

Terminal Part Information

cardiagn.com

- Terminal/Tray: 12191819/8
- Core/Insulation Crimp: 2/A
- Release Tool/Test Probe: 15315247/J-35616-2A (GY)

Knock Sensor (KS) - 1 Connector Terminal Identification

Pin	Wire Color	Circuit No.	Function
A	D-BU	496	Knock Sensor 1 Signal
B	GY	1716	Low Reference

Knock Sensor (KS) - 2

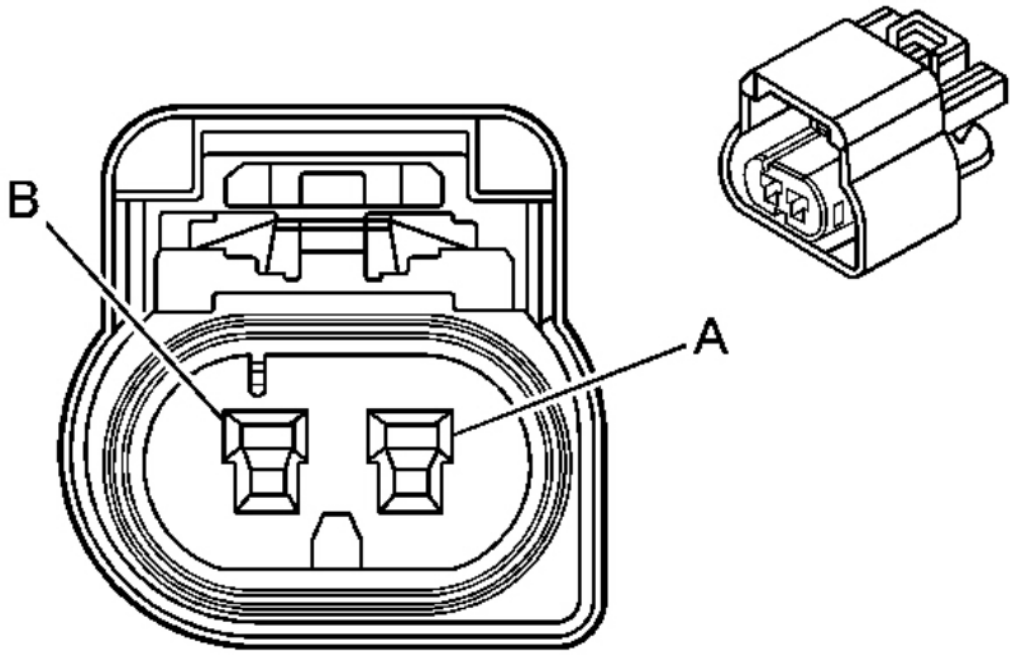

Fig. 61: Knock Sensor (KS) 2 Connector End View
Courtesy of GENERAL MOTORS CORP.

Knock Sensor (KS) 2 Connector Parts Information

Connector Part Information

- OEM: 15374222
- Service: 88953268

cardiagn.com

- Description: 2-Way F GT 150 Sealed (NA)

Terminal Part Information

- Terminal/Tray: 12191819/8
- Core/Insulation Crimp: E/A
- Release Tool/Test Probe: 15315247/J-35616-2A (GY)

Knock Sensor (KS) - 2 Connector Terminal Identification

Pin	Wire Color	Circuit No.	Function
A	L-BU	1876	Knock Sensor 2 Signal
B	GY	2303	Low Reference

Manifold Absolute Pressure (MAP) Sensor

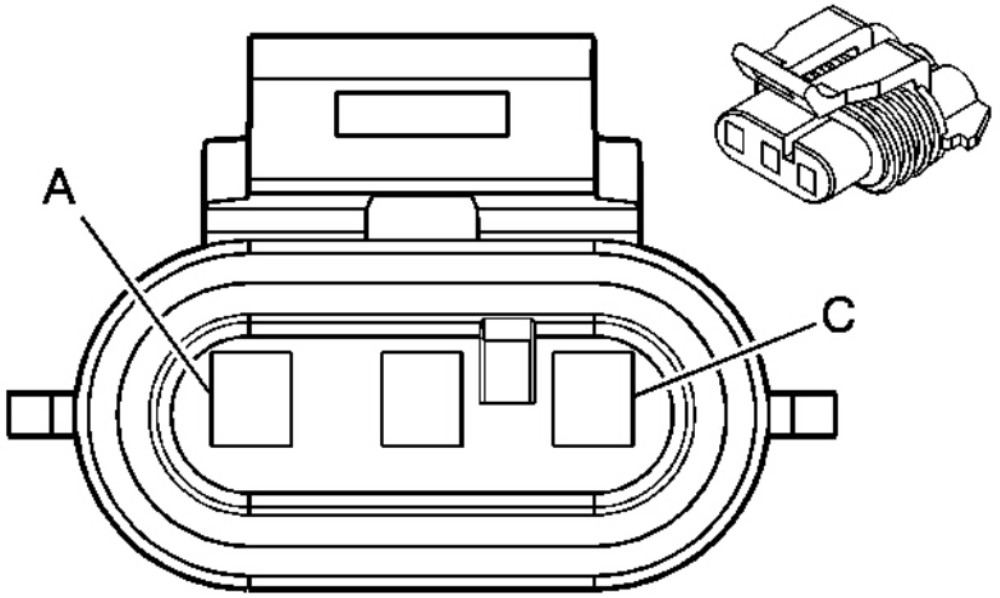

Fig. 62: Manifold Absolute Pressure (MAP) Sensor Connector End View
Courtesy of GENERAL MOTORS CORP.

Manifold Absolute Pressure (MAP) Sensor Connector Parts Information

Connector Part Information

cardiagn.com

- OEM: 12129946
- Service: 88987997
- Description: 3-Way F Metri-Pack 150 Series, Sealed (GY)

Terminal Part Information

- Terminal/Tray: 12048074/2
- Core/Insulation Crimp: E/1
- Release Tool/Test Probe: 12094429/J-35616-2A (GY)

Manifold Absolute Pressure (MAP) Sensor Connector Terminal Identification

Pin	Wire Color	Circuit No.	Function
A	OG/BK	469	Low Reference
B	L-GN	432	MAP Sensor Signal
C	GY	2704	5-Volt Reference

Mass Air Flow (MAF)/Intake Air Temperature (IAT) Sensor

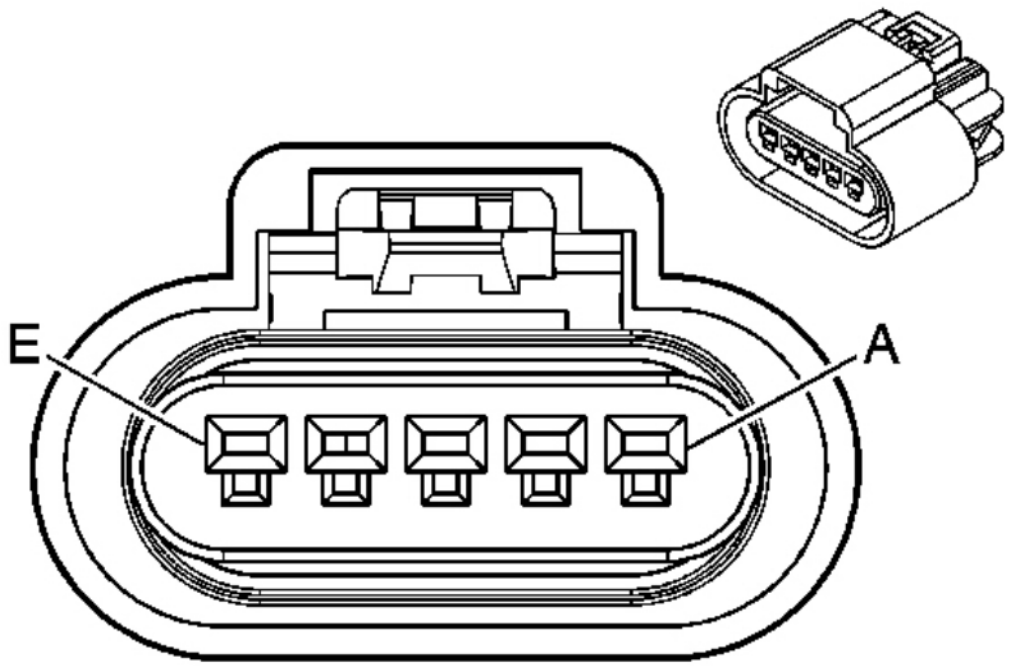

Fig. 63: Mass Air Flow (MAF)/Intake Air Temperature (IAT) Sensor Connector End View
Courtesy of GENERAL MOTORS CORP.

cardiagn.com

Mass Air Flow (MAF)/Intake Air Temperature (IAT) Sensor Connector Parts Information

Connector Part Information

- OEM: 15326822
- Service: 88987186
- Description: 5-Way F GT 150 Sealed 4.0 (BK)

Terminal Part Information

- Terminal/Tray: 12191819/8
- Core/Insulation Crimp: E/A
- Release Tool/Test Probe: 15315247/J-35616-2A (GY)

Mass Air Flow (MAF)/Intake Air Temperature (IAT) Sensor Connector Terminal Identification

Pin	Wire Color	Circuit No.	Function
A	YE	492	MAF Sensor Signal
B	PK	1839	Ignition 1 Voltage
C	BK/WH	451	Ground
D	TN/BK	472	IAT Sensor Signal
E	TN	2760	Low Reference

Throttle Body

cardiagn.com

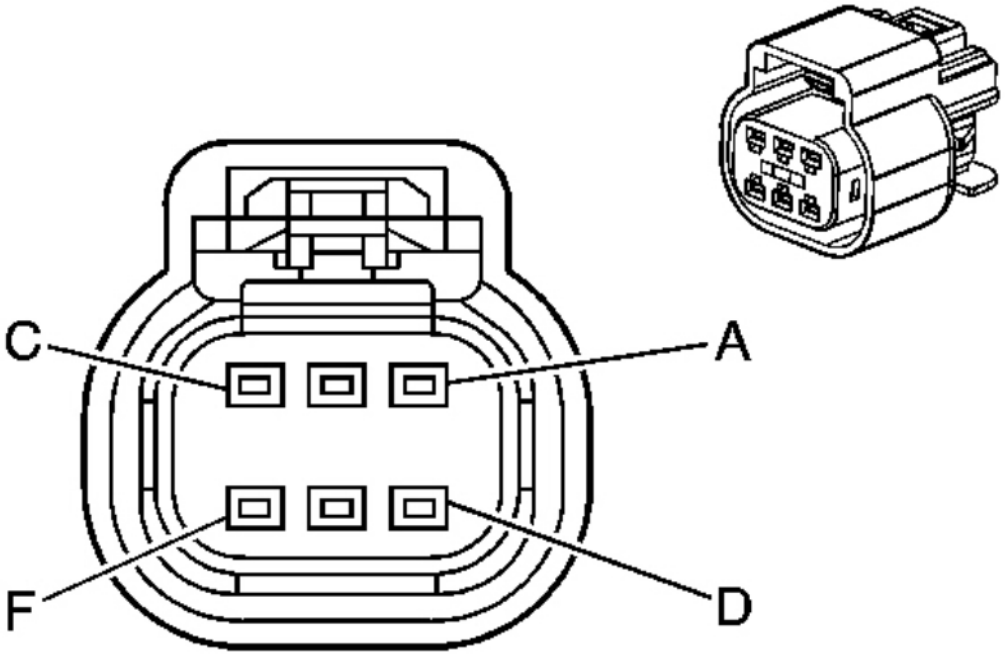

Fig. 64: Throttle Body Connector End View
Courtesy of GENERAL MOTORS CORP.

Throttle Body Connector Parts Information

Connector Part Information

- OEM: 15355297
- Service: 88988106
- Description: 6-Way F GT 150 Series, Sealed (BK)

Terminal Part Information

- Terminal/Tray: 12191819/8
- Core/Insulation Crimp: E/A
- Release Tool/Test Probe: 15315247/J-35616-2A (GY)

Throttle Body Connector Terminal Identification

Pin	Wire Color	Circuit No.	Function
A	BN	582	TAC Motor Control - 2
B	YE	581	TAC Motor Control - 1

cardiagn.com

C	TN	2752	Low Reference
D	D-GN	485	TP Sensor 1 Signal
E	GY	2701	5-Volt Reference
F	PU	486	TP Sensor 2 Signal

Valve Lifter Oil Manifold (VLOM) Assembly (AFM)

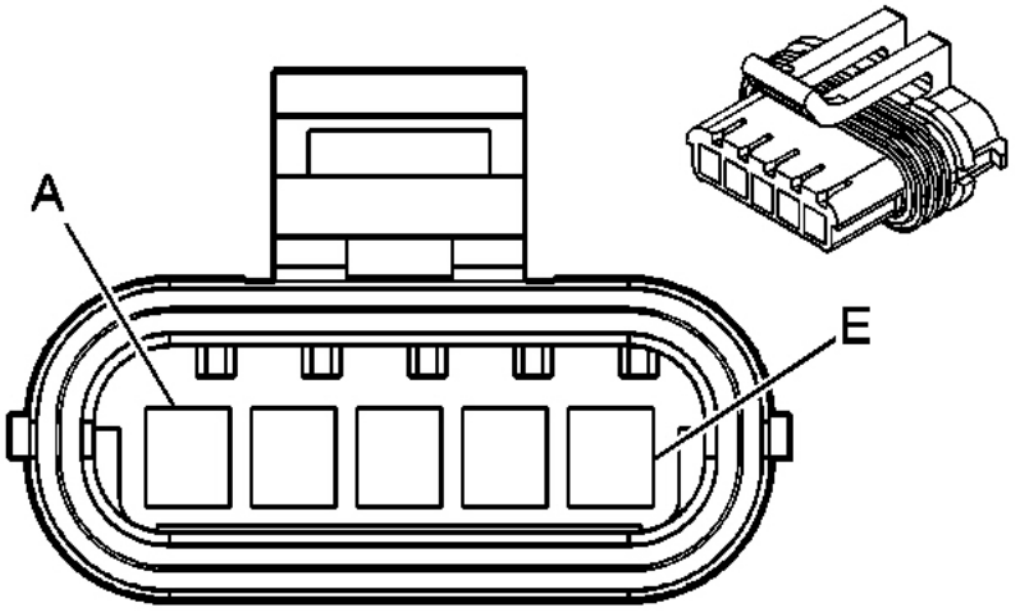

Fig. 65: Valve Lifter Oil Manifold (VLOM) Assembly (AFM) Connector End View
Courtesy of GENERAL MOTORS CORP.

Valve Lifter Oil Manifold (VLOM) Assembly (AFM) Connector Parts Information

Connector Part Information

- OEM: 12186057
- Service: 15306027
- Description: 5-Way F Metri-Pack 150.2, Pull To Seat Series, Sealed (BK)

Terminal Part Information

- Terminal/Tray: 12124075/5
- Core/Insulation Crimp: E/C
- Release Tool/Test Probe: 12180559-1/J-35616-2A (GY)

cardiagn.com

Valve Lifter Oil Manifold (VLOM) Assembly (AFM) Connector Terminal Identification

Pin	Wire Color	Circuit No.	Function
A	OG	5494	Cylinder Shutoff Solenoid Control (4)
B	GY	5493	Cylinder Shutoff Solenoid Control (3)
C	D-BU	5491	Cylinder Shutoff Solenoid Control (1)
D	L-GN/BK	5492	Cylinder Shutoff Solenoid Control (2)
E	PK	1839	Ignition 1 Voltage

DIAGNOSTIC INFORMATION AND PROCEDURES

DIAGNOSTIC CODE INDEX

DIAGNOSTIC CODE INDEX

DTC	Description
DTC P0010 or P0011	Camshaft Position (CMP) System Performance
DTC P0016 (with LY6/L76/L92)	Crankshaft Position (CKP) Camshaft Position (CMP) Correlation
DTC P0016 (without LY6/L76/L92)	Crankshaft Position (CKP) Camshaft Position (CMP) Correlation
DTC P0030, P0036, P0053, P0054, P0135, or P0141	DTC P0030: HO2S Heater Control Circuit Bank 1 Sensor 1 DTC P0036: HO2S Heater Control Circuit Bank 1 Sensor 2 DTC P0053: HO2S Heater Resistance Circuit Bank 1 Sensor 1 DTC P0054: HO2S Heater Resistance Circuit Bank 1 Sensor 2 DTC P0135: HO2S Heater Performance Bank 1 Sensor 1 DTC P0141: HO2S heater Performance Bank 1 Sensor 2
DTC P0050, P0056, P0059, P0060, P0155, or P0161	DTC P0050: HO2S Heater Control Bank 2 Sensor 1 DTC P0056: HO2S Heater Control Bank 2 Sensor 2 DTC P0059: HO2S Heater Resistance Bank 2 Sensor 1 DTC P0060: HO2S Heater Resistance Bank 2 Sensor 2 DTC P0155: HO2S Heater Performance Bank 2 Sensor 1 DTC P0161: HO2S Heater Performance Bank 2 Sensor 2
DTC P0068 or P0121	DTC P0068: Throttle Body Airflow Performance DTC P0121: Throttle Position (TP) Sensor 1 Performance
DTC P0101 or P1101	DTC P0101 : Mass Air Flow (MAF) Sensor Performance DTC P1101: Intake Air Flow System Performance
DTC P0102 or P0103	DTC P0102: Mass Air Flow (MAF) Sensor Circuit Low Frequency DTC P0103: Mass Air Flow (MAF) Sensor Circuit High Frequency
DTC P0106	Manifold Absolute Pressure (MAP) Sensor Performance
DTC P0107 or P0108	DTC P0107: Manifold Absolute Pressure (MAP) Sensor Circuit Low Voltage DTC P0108: Manifold Absolute Pressure (MAP) Sensor Circuit High Voltage
DTC P0112 or P0113	DTC P0112: Intake Air Temperature (IAT) Sensor Circuit Low Voltage DTC P0113: Intake Air Temperature (IAT) Sensor Circuit High Voltage

cardiagn.com

DTC P0116	Engine Coolant Temperature (ECT) Sensor Performance
DTC P0117 or P0118	DTC P0117: Engine Coolant Temperature (ECT) Sensor Circuit Low Voltage DTC P0118: Engine Coolant Temperature (ECT) Sensor Circuit High Voltage
DTC P0120, P0122, P0123, P0220, P0222, P0223, or P2135	DTC P0120: Throttle Position (TP) Sensor 1 Circuit DTC P0122: Throttle Position (TP) Sensor 1 Circuit Low Voltage DTC P0123: Throttle Position (TP) Sensor 1 Circuit High Voltage DTC P0220: Throttle Position (TP) Sensor 2 Circuit DTC P0222: Throttle Position (TP) Sensor 2 Circuit Low Voltage DTC P0223: Throttle Position (TP) Sensor 2 Circuit High Voltage DTC P2135: Throttle Position (TP) Sensor 1-2 Correlation
DTC P0128	Engine Coolant Temperature (ECT) Below Thermostat Regulating Temperature
DTC P0131, P0132, P0137, or P0138	DTC P0131: HO2S Circuit Low Voltage Bank 1 Sensor 1 DTC P0132: HO2S Circuit High Voltage Bank 1 Sensor 1 DTC P0137: HO2S Circuit Low Voltage Bank 1 Sensor 2 DTC P0138: HO2S Circuit High Voltage Bank 1 Sensor 2
DTC P0133, P0134, P0140, P1133, P2A00 or P2A01	DTC P0133: HO2S Slow Response Bank 1 Sensor 1 DTC P0134: HO2S Circuit Insufficient Activity Bank 1 Sensor 1 DTC P0140: HO2S Circuit Insufficient Activity Bank 1 Sensor 2 DTC P1133: HO2S Insufficient Switching Bank 1 Sensor 1 DTC P2A01: HO2S Performance Bank 1 Sensor 2
DTC P0151, P0152, P0157, or P0158	DTC P0151: HO2S Circuit Low Voltage Bank 2 Sensor 1 DTC P0152: HO2S Circuit High Voltage Bank 2 Sensor 1 DTC P0157: HO2S Circuit Low Voltage Bank 2 Sensor 2 DTC P0158: HO2S Circuit High Voltage Bank 2 Sensor 2
DTC P0153, P0154, P0160, P1153, P2A03, or P2A04	DTC P0153: HO2S Slow Response Bank 2 Sensor 1 DTC P0154: HO2S Circuit Insufficient Activity Bank 2 Sensor 1 DTC P0160: HO2S Circuit Insufficient Activity Bank 2 Sensor 2 DTC P1153: HO2S Insufficient Switching Bank 2 Sensor 1 DTC P2A04: HO2S Performance Bank 2 Sensor 2
DTC P0171, P0172, P0174, or P0175	DTC P0171: Fuel Trim System Lean Bank 1 DTC P0172: Fuel Trim System Rich Bank 1 DTC P0174: Fuel Trim System Lean Bank 2 DTC P0175: Fuel Trim System Rich Bank 2
DTC P0201, P0202, P0203, P0204, P0205, P0206, P0207, or P0208	Injector Control Circuits
DTC P0230 or P2632	DTC P0230: Fuel Pump Relay Control Circuit DTC P2632: Fuel Pump Relay 2 Control Circuit
DTC P0300 - P0308	Engine Misfires Detected
DTC P0315	Crankshaft Position (CKP) System Variation Not Learned
DTC P0324, P0325, P0326, P0327, P0328, PO330, P0332,	DTC P0324: Knock Sensor (KS) Module Performance DTC P0325: Knock Sensor (KS) Circuit Bank 1

cardiagn.com

or P0333	DTC P0326: Knock Sensor (KS) Performance DTC P0327: Knock Sensor (KS) Circuit Low Voltage Bank 1 DTC P0328: Knock Sensor (KS) Circuit High Voltage Bank 1 DTC P0330: Knock Sensor (KS) Circuit Bank 2 DTC P0332: Knock Sensor (KS) Circuit Low Voltage Bank 2 DTC P0333: Knock Sensor (KS) Circuit High Voltage Bank 2
DTC P0335 or P0336	DTC P0335: Crankshaft Position (CKP) Sensor Circuit DTC P0336: Crankshaft Position (CKP) Sensor Performance
DTC P0340 or P0341	DTC P0340: Camshaft Position (CMP) Sensor Circuit DTC P0341: Camshaft Position (CMP) Sensor Performance
DTC P0351-P0358	Ignition Coil Control Circuits
DTC P0420 or P0430	Catalyst System Low Efficiency Banks
DTC P0442	Evaporative Emission (EVAP) System Small Leak Detected
DTC P0443 or P0449	Evaporative Emission (EVAP) Purge Solenoid Control Circuit Evaporative Emission (EVAP) Vent Solenoid Control Circuit
DTC P0446	Evaporative Emissions (EVAP) Vent System Performance
DTC P0451, P0452, P0453, or P0454	DTC P0451: Fuel Tank Pressure (FTP) Sensor Performance DTC P0452: Fuel Tank Pressure (FTP) Sensor Circuit Low Voltage DTC P0453: Fuel Tank Pressure (FTP) Sensor Circuit High Voltage DTC P0454: Fuel Tank Pressure (FTP) Sensor Intermittent
DTC P0455	Evaporative Emission (EVAP) System Large Leak Detected
DTC P0496	Evaporative Emission System Flow During Non-Purge
DTC P0506 or P0507	DTC P0506: Idle Speed Low DTC P0507: Idle Speed High
DTC P0601, P0602, P0603, P0604, P0606, P0607, P060D, P062F, or P2610	DTC P0601: Control Module Read Only Memory (ROM) DTC P0602: Control Module Not Programmed DTC P0603: Control Module Long Term Memory Reset DTC P0604: Control Module Random Access Memory (RAM) DTC P0606: Control Module Internal Performance DTC P0607: Control Module Performance DTC P060D: Control Module (APP) System Performance DTC P062F: Control Module Long Term Memory Performance DTC P2610: Control Module Ignition Off Timer Performance
DTC P0641 or P0651	DTC P0641: 5-Volt Reference 1 Circuit DTC P0651: 5-Volt Reference 2 Circuit
DTC P0650	Malfunction Indicator Lamp (MIL) Control Circuit
DTC P0685, P0689, or P0690	DTC P0685: Engine Controls Ignition Relay Control Circuit DTC P0689: Engine Controls Relay Feedback Circuit Low Voltage DTC P0690: Engine Controls Relay Feedback Circuit High Voltage
DTC P0700	Transmission Control Module (TCM) Requested MIL Illumination
DTC P1380 or P1381	DTC 1380: Misfire Detected - Rough Road Data Not Available DTC 1381: Misfire Detected - No Communication with Brake Control Module
DTC P1400	Cold Start Emission Reduction Control System

cardiagn.com

DTC P1516, P2101, P2119, or P2176	DTC P1516: (TAC) Module Throttle Actuator Position Performance DTC P2101: Throttle Actuator Position Performance DTC P2119: Throttle Closed Position Performance DTC P2176: Minimum Throttle Position Not Learned
DTC P1682	Ignition 1 Switch Circuit 2
DTC P2120, P2122, P2123, P2125, P2127, P2128, or P2138	DTC P2120: Accelerator Pedal Position (APP) Sensor 1 Circuit DTC P2122: Accelerator Pedal Position (APP) Sensor 1 Circuit Low Voltage DTC P2123: Accelerator Pedal Position (APP) Sensor 1 Circuit High Voltage DTC P2125: Accelerator Pedal Position (APP) Sensor 2 Circuit DTC P2127: Accelerator Pedal Position (APP) Sensor 2 Circuit Low Voltage DTC P2128: Accelerator Pedal Position (APP) Sensor 2 Circuit High Voltage DTC P2138: Accelerator Pedal Position (APP) Sensor 1-2 Correlation
DTC P2636	Fuel Pump 2 Flow Insufficient
DTC P3400	Cylinder Deactivation System Performance
DTC P3401, P3425, P3441, or P3449	DTC P3401: Cylinder 1 Deactivation Solenoid Control Circuit DTC P3425: Cylinder 4 Deactivation Solenoid Control Circuit DTC P3441: Cylinder 6 Deactivation Solenoid Control Circuit DTC P3449: Cylinder 7 Deactivation Solenoid Control Circuit

REPAIR INSTRUCTIONS

ENGINE CONTROL MODULE REPLACEMENT

Service of the engine control module (ECM) should consist of either replacement of the ECM or programming of the electrically erasable programmable read only memory (EEPROM). If the diagnostic procedures call for the ECM to be replaced, the replacement ECM should be checked to ensure that the correct part is being used. If the correct part is being used, remove the faulty ECM and install the new service ECM.

NOTE:

- **Turn the ignition OFF when installing or removing the control module connectors and disconnecting or reconnecting the power to the control module (battery cable, powertrain control module (PCM)/engine control module (ECM)/transaxle control module (TCM) pigtail, control module fuse, jumper cables, etc.) in order to prevent internal control module damage.**
- **Control module damage may result when the metal case contacts battery voltage. DO NOT contact the control module metal case with battery voltage when servicing a control module, using battery booster cables, or when charging the vehicle battery.**
- **In order to prevent any possible electrostatic discharge damage to the control module, do no touch the connector pins or the soldered components on the circuit board.**

cardiagn.com

- **Remove any debris from around the control module connector surfaces before servicing the control module. Inspect the control module connector gaskets when diagnosing or replacing the control module. Ensure that the gaskets are installed correctly. The gaskets prevent contaminant intrusion into the control module.**
- **The replacement control module must be programmed.**

IMPORTANT: It is necessary to record the remaining engine oil life. If the replacement module is not programmed with the remaining engine oil life, the engine oil life will default to 100 percent. If the replacement module is not programmed with the remaining engine oil life, the engine oil will need to be changed at 5 000 km (3,000 mi) from the last oil change.

Removal Procedure

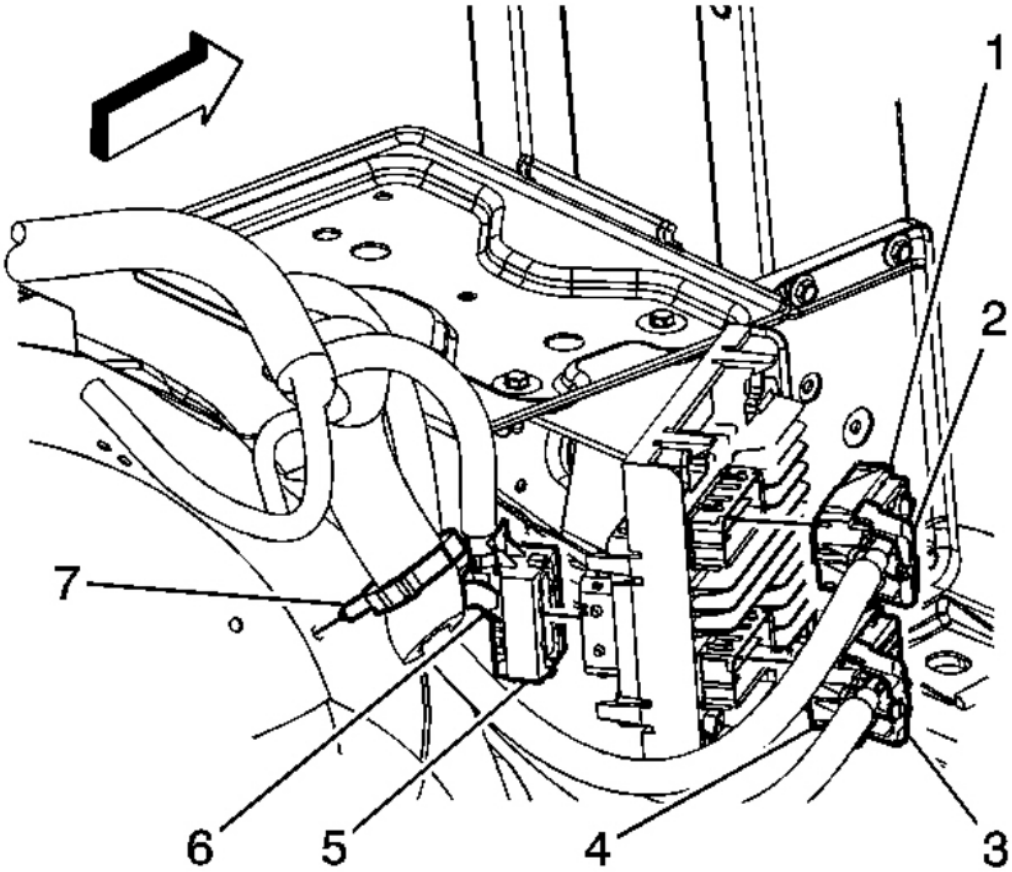

cardiagn.com

Fig. 66: View Of ECM Components
Courtesy of GENERAL MOTORS CORP.

1. Using a scan tool, retrieve the percentage of remaining engine oil. Record the remaining engine oil life.
2. Disconnect the negative battery cable. Refer to **Battery Negative Cable Disconnection and Connection** .
3. Disengage the engine wiring harness upper electrical connector retainer (2) and remove the connector (1) from the ECM.
4. Disengage the engine wiring harness lower electrical connector retainer (3) and remove the connector (4) from the ECM.

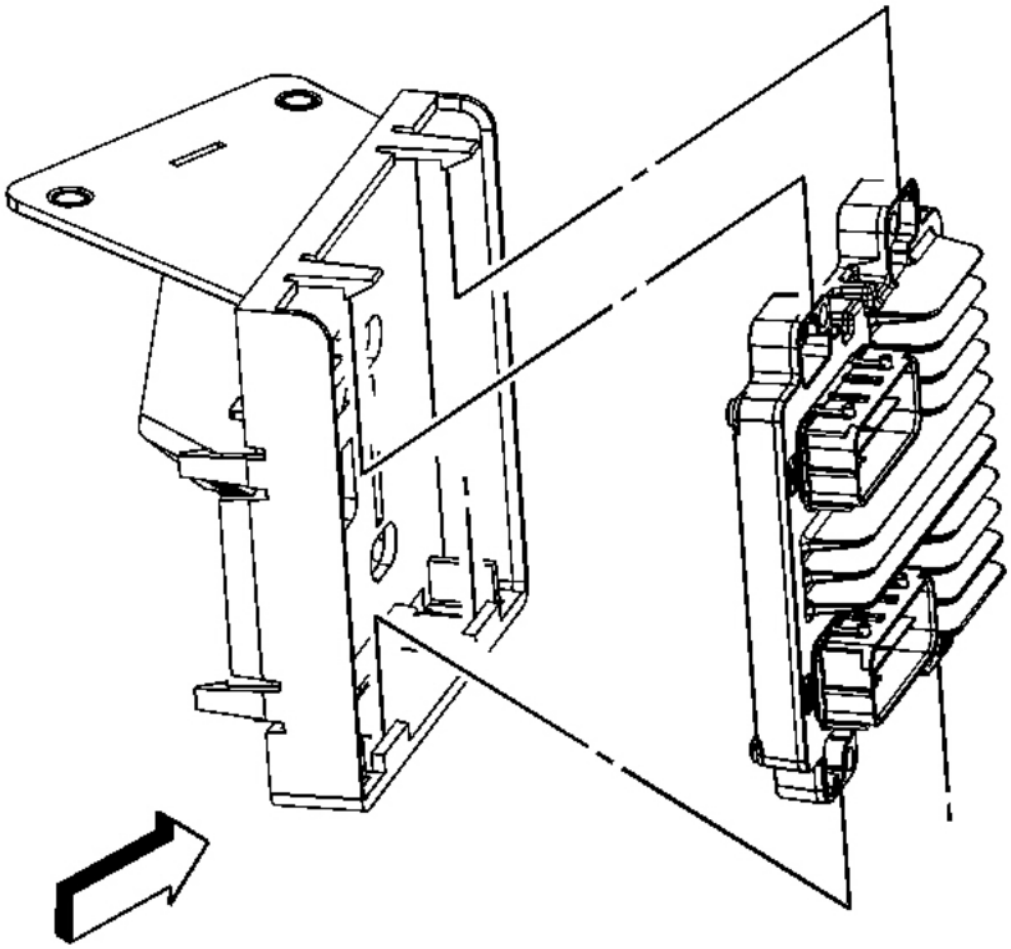

Fig. 67: View Of ECM & Bracket
Courtesy of GENERAL MOTORS CORP.

cardiagn.com

5. Disengage the retainer tabs securing the ECM to the bracket.
6. Remove the ECM.

Installation Procedure

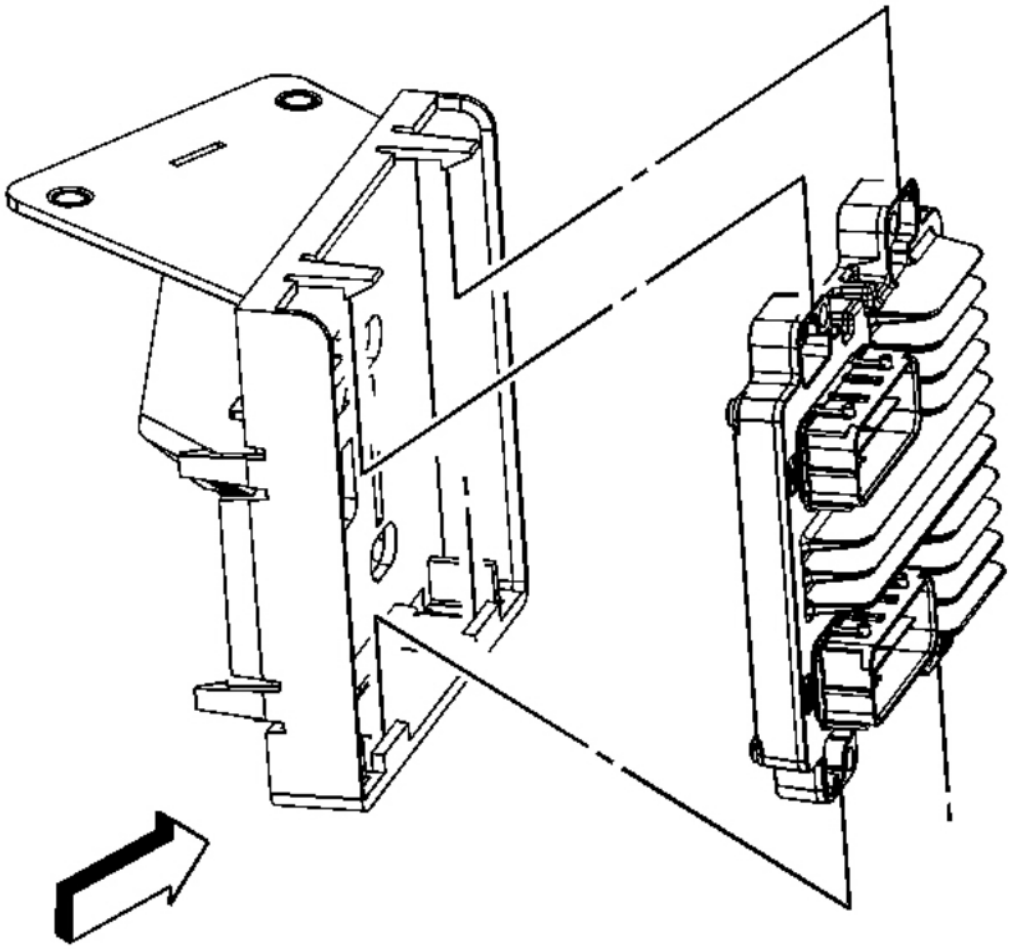

Fig. 68: View Of ECM & Bracket
Courtesy of GENERAL MOTORS CORP.

1. Install the bottom ECM tabs into the bracket.
2. Push the ECM in securing the ECM to the bracket.

cardiagn.com

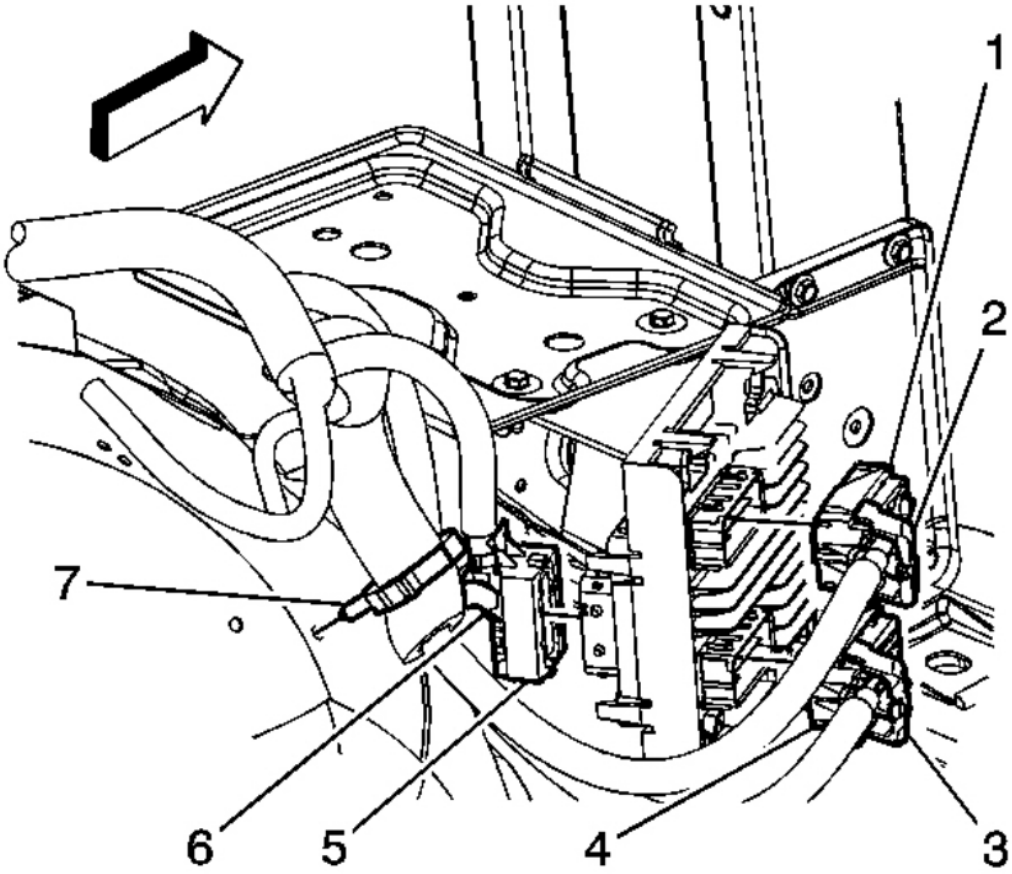

Fig. 69: View Of ECM Components
Courtesy of GENERAL MOTORS CORP.

3. Position the engine wiring harness lower electrical connector and engage the retainer (3) securing the lower connector (4) to the ECM.
4. Position the engine wiring harness upper electrical connector and engage the retainer (2) securing the upper connector (1) to the ECM.
5. Connect the negative battery cable. Refer to **Battery Negative Cable Disconnection and Connection** .
6. If a NEW ECM was installed, program the ECM. Refer to **Control Module References** .

CRANKSHAFT POSITION SYSTEM VARIATION LEARN

1. Install a scan tool.
2. Monitor the engine control module (ECM) for DTCs with a scan tool. If other DTCs are set, except DTC P0315, refer to **Diagnostic Trouble Code (DTC) List - Vehicle** in Vehicle DTC Information for the

cardiagn.com

applicable DTC that set.

3. Select the crankshaft position (CKP) variation learn procedure with a scan tool.
4. The scan tool instructs you to perform the following:
    1. Accelerate to wide open throttle (WOT).
    2. Release throttle when fuel cut-off occurs.
    3. Observe fuel cut-off for applicable engine.
    4. Engine should not accelerate beyond calibrated RPM value.
    5. Release throttle immediately if value is exceeded.
    6. Block drive wheels.
    7. Set parking brake.
    8. DO NOT apply brake pedal.
    9. Cycle ignition from OFF to ON.
    10. Apply and hold brake pedal.
    11. Start and idle engine.
    12. Turn A/C OFF.
    13. Vehicle must remain in Park or Neutral.
    14. The scan tool monitors certain component signals to determine if all the conditions are met to continue with the procedure. The scan tool only displays the condition that inhibits the procedure. The scan tool monitors the following components:
        - CKP sensors activity-If there is a CKP sensor condition, refer to the applicable DTC that set.
        - Camshaft position (CMP) sensor activity-If there is a CMP sensor condition, refer to the applicable DTC that set.
        - Engine coolant temperature (ECT)-If the ECT is not warm enough, idle the engine until the engine coolant temperature reaches the correct temperature.
5. Enable the CKP system variation learn procedure with a scan tool.

IMPORTANT: While the learn procedure is in progress, release the throttle immediately when the engine starts to decelerate. The engine control is returned to the operator and the engine responds to throttle position after the learn procedure is complete.

6. Accelerate to WOT.
7. Release when the fuel cut-off occurs.
8. Test in progress
9. The scan tool displays Learn Status: Learned this ignition. If the scan tool indicates that DTC P0315 ran and passed, the CKP variation learn procedure is complete. If the scan tool indicates DTC P0315 failed or did not run, refer to **DTC P0315** . If any other DTCs set, refer to **Diagnostic Trouble Code (DTC) List - Vehicle** in Vehicle DTC Information for the applicable DTC that set.
10. Turn OFF the ignition for 30 seconds after the learn procedure is completed successfully.
11. The CKP system variation learn procedure is also required when the following service procedures have

cardiagn.com

been performed, regardless of whether DTC P0315 is set:

- A CKP sensor replacement
- An engine replacement
- A ECM replacement
- A harmonic balancer replacement
- A crankshaft replacement
- Any engine repairs which disturb the CKP sensor relationship

THROTTLE LEARN

Description

The engine control module (ECM) learns the idle position of the throttle plate to ensure the correct idle. Anytime the throttle body is cleaned or replaced, the ECM must learn the new throttle position. The idle may be unstable or a DTC may set if the throttle position is not learned.

Conditions for Running the Throttle Learn Procedure

- DTCs P0101, P0102, P0103, P0107, P0108, P0111, P0112, P0113, P0506, and P0507 are not set.
- The engine speed is between 450-4,000 RPM.
- The MAP is greater than 5 kPa.
- The MAF is greater than 2 g/s.
- The ignition 1 voltage is greater than 10 volts.

Throttle Learn

IMPORTANT: Do NOT perform this procedure if DTCs are set. Refer to Diagnostic Trouble Code (DTC) List - Vehicle .

1. Start and idle the engine in Park for 3 minutes.
2. With a scan tool, monitor desired and actual RPM.
3. The ECM will start to learn the new idle cells and Desired RPM should start to decrease.
4. Ignition OFF for 60 seconds.
5. Start and idle the engine in Park for 3 minutes.
6. After the 3 minute run time the engine should be idling normal.

IMPORTANT: During the drive cycle the check engine light may come on with idle speed DTCs. If idle speed codes are set, clear codes so the ECM can continue to learn.

- If the engine idle speed has not been learned the vehicle will need to be driven at speeds above 70 k/mh (44 mph) with several decelerations and extended idles.

cardiagn.com

7. After the drive cycle, the engine should be idling normally.
    - If the engine idle speed has not been learned, turn OFF the ignition for 60 seconds and repeat step 6.
8. Once the engine speed has returned to normal, clear DTCs.

ENGINE COOLANT TEMPERATURE SENSOR REPLACEMENT

Removal Procedure

NOTE: **Use care when handling the coolant sensor. Damage to the coolant sensor will affect the operation of the fuel control system.**

cardiagn.com

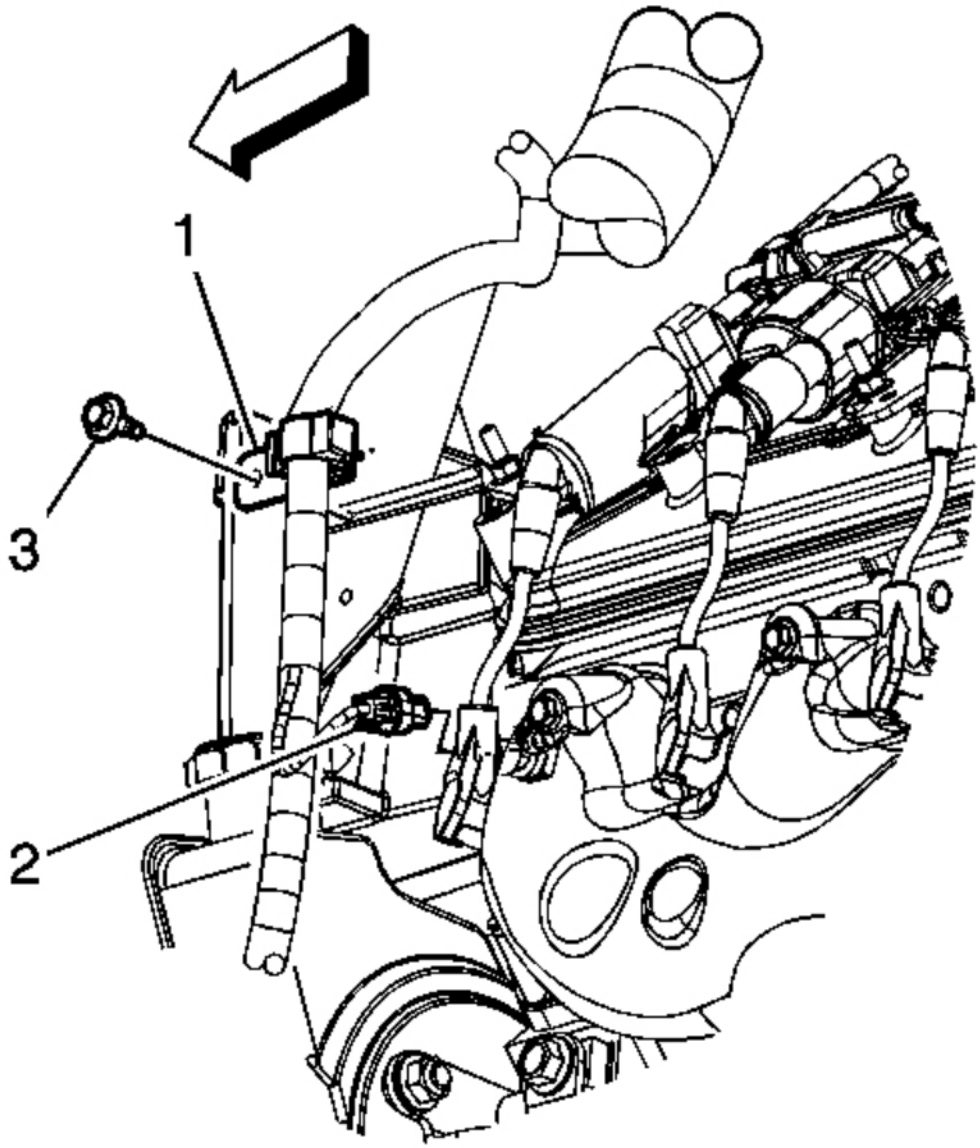

Fig. 70: View Of Engine Wiring Harness, Clip, Bolt & Connector
Courtesy of GENERAL MOTORS CORP.

1. Drain the cooling system to a level below the engine cooling temperature (ECT) sensor. Refer to **Draining and Filling Cooling System** .
2. Disconnect the engine wiring harness electrical connector (2) from the ECT sensor.

cardiagn.com

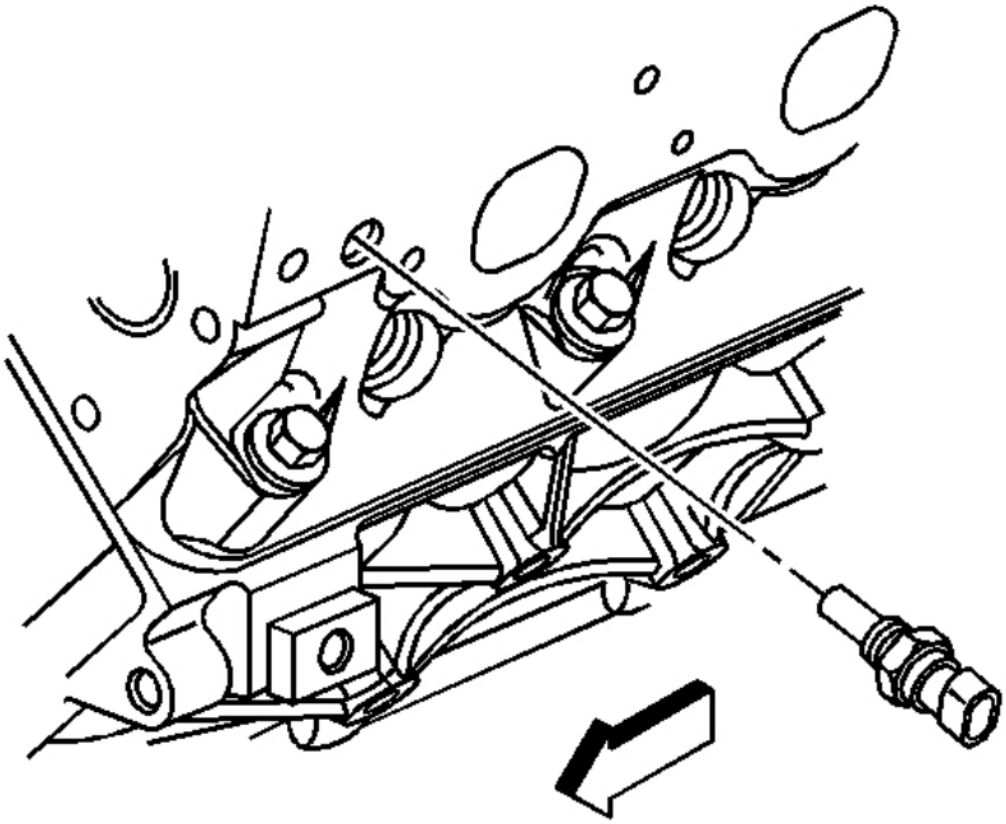

Fig. 71: View Of ECT Sensor
Courtesy of GENERAL MOTORS CORP.

3. Remove the ECT sensor.

Installation Procedure

NOTE: **Replacement components must be the correct part number for the application. Components requiring the use of the thread locking compound, lubricants, corrosion inhibitors, or sealants are identified in the service procedure. Some replacement components may come with these coatings already applied. Do not use these coatings on components unless specified. These coatings can affect the final torque, which may affect the operation of the component. Use the correct torque specification when installing components in order to avoid damage.**

cardiagn.com

NOTE: **Use care when handling the coolant sensor. Damage to the coolant sensor will affect the operation of the fuel control system.**

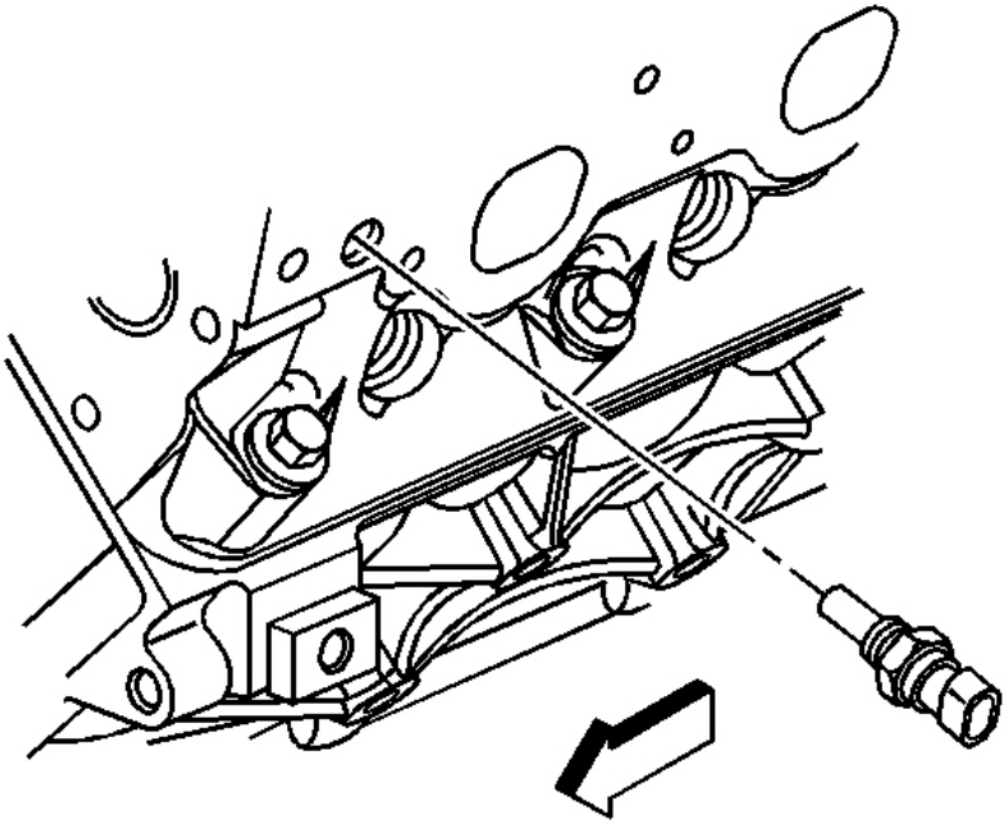

Fig. 72: View Of ECT Sensor
Courtesy of GENERAL MOTORS CORP.

1. If installing the old sensor, coat the threads with sealant GM P/N 12346004 (Canadian P/N 10953480) or equivalent.

   NOTE: **Refer to Fastener Notice .**

2. Install the ECT sensor.

   Tighten: Tighten the sensor to 20 N.m (15 lb ft).

cardiagn.com

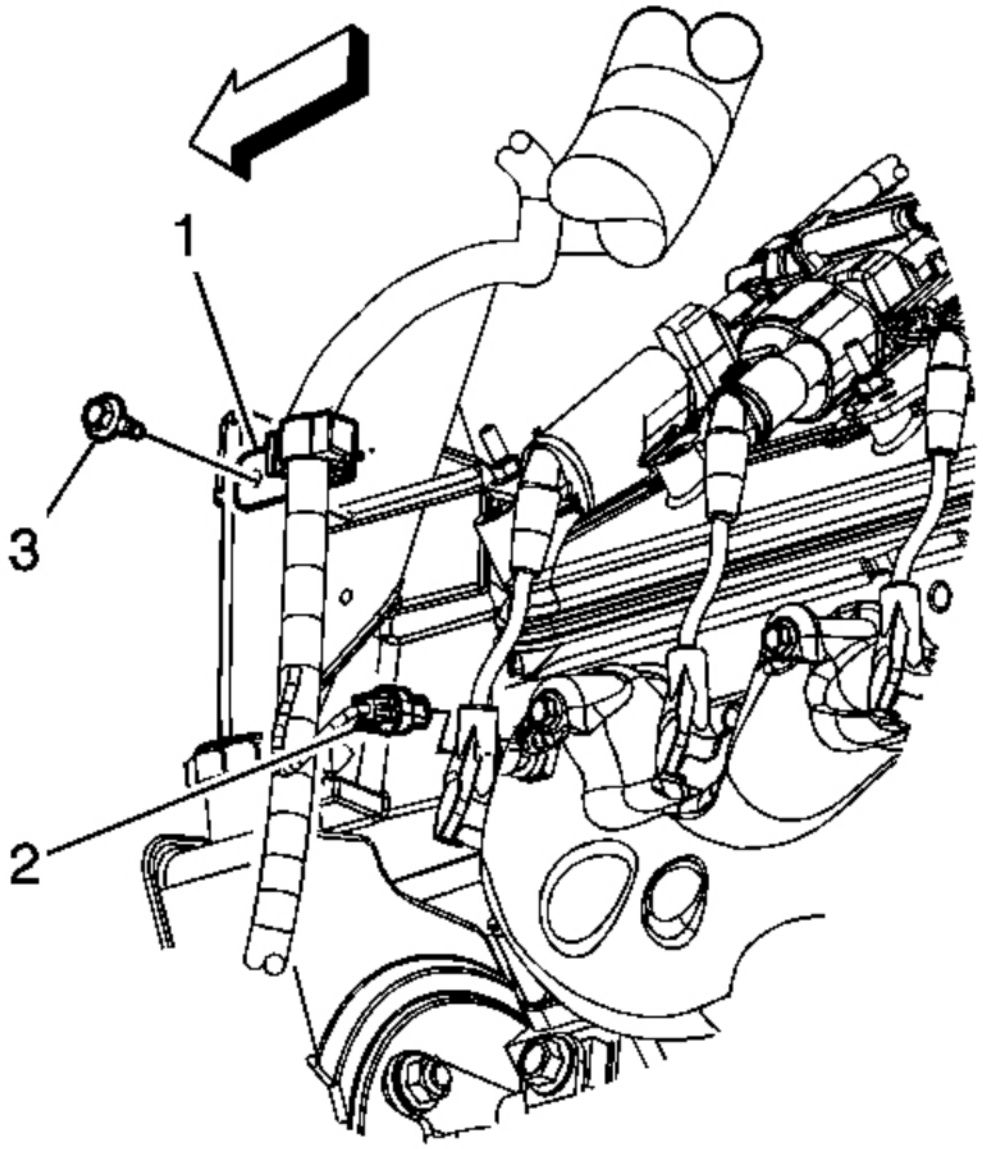

Fig. 73: View Of Engine Wiring Harness, Clip, Bolt & Connector
Courtesy of GENERAL MOTORS CORP.

3. Connect the engine wiring harness electrical connector (2) to the ECT sensor.
4. Refill the cooling. Refer to **Draining and Filling Cooling System** .

MASS AIRFLOW SENSOR/INTAKE AIR TEMPERATURE SENSOR REPLACEMENT

cardiagn.com

Removal Procedure

IMPORTANT: Use care when handling the mass air flow (MAF)/intake air temperature (IAT) sensor. Do not dent, puncture, or otherwise damage the honeycell located at the air inlet end of the MAF/IAT. Do not touch the sensing elements or allow anything including cleaning solvents and lubricants to come in contact with them. Use a small amount of a non-silicone based lubricant, on the air duct only, to aid in installation.

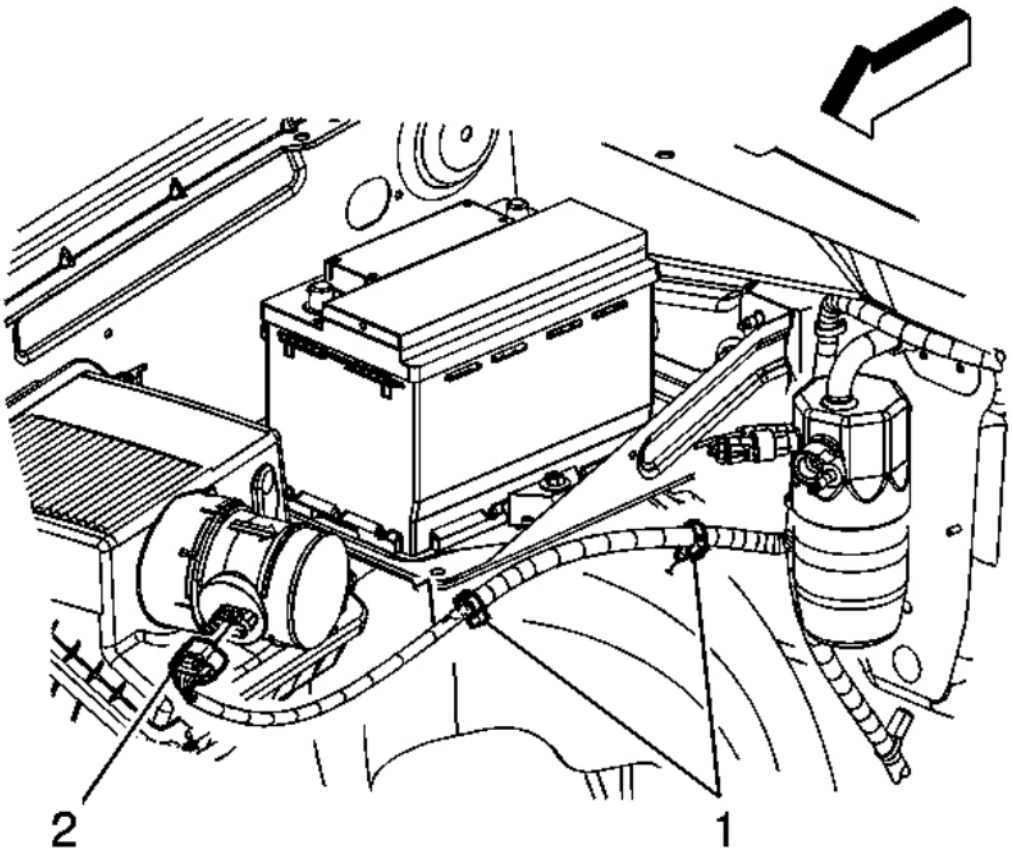

Fig. 74: View Of Throttle Body Heater Hose & Retainers
Courtesy of GENERAL MOTORS CORP.

1. Remove the air cleaner outlet duct. Refer to **Air Cleaner Resonator Outlet Duct Replacement**.
2. Disconnect the engine wiring harness electrical connector (2) from the MAF/IAT sensor.

cardiagn.com

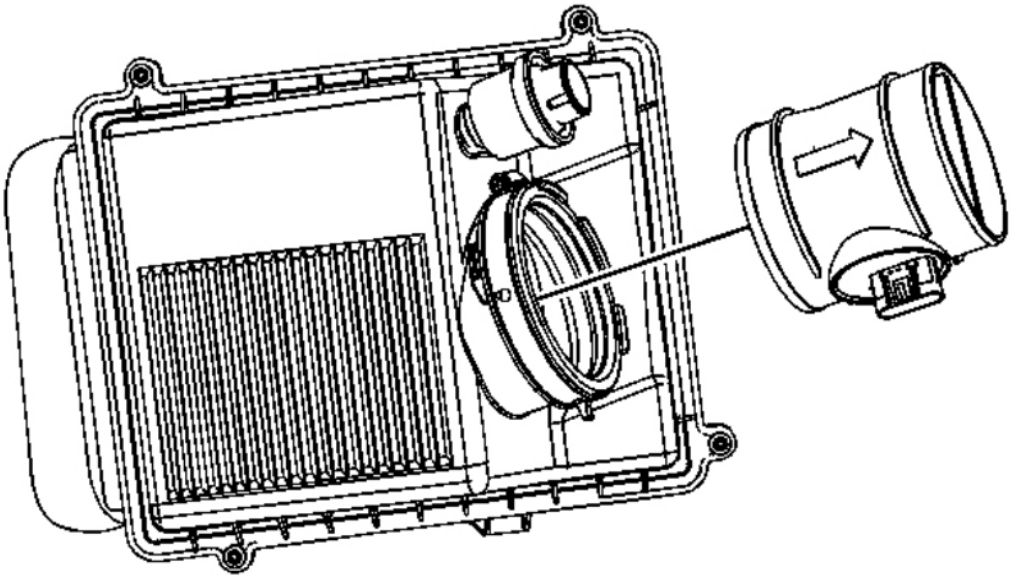

Fig. 75: View Of MAF/IAT Sensor & Clamp
Courtesy of GENERAL MOTORS CORP.

3. Loosen the MAF/IAT sensor adapter clamp.
4. Remove the MAF/IAT sensor from the air cleaner assembly.

Installation Procedure

IMPORTANT: The embossed arrow on the MAF/IAT sensor indicates the proper air flow direction. The arrow must point toward the engine.

cardiagn.com

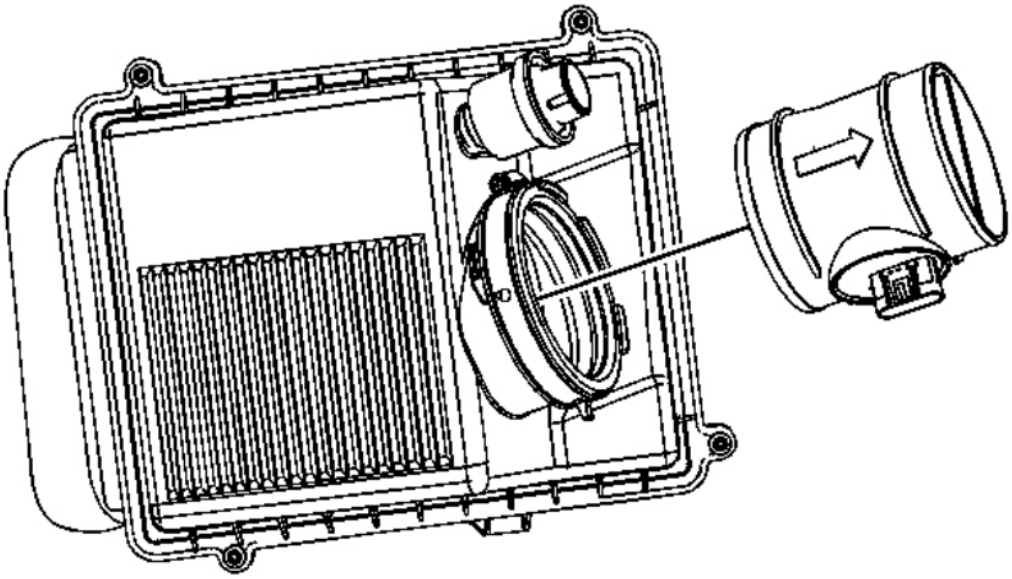

Fig. 76: View Of MAF/IAT Sensor & Clamp
Courtesy of GENERAL MOTORS CORP.

1. Install the MAF/IAT sensor to the air cleaner assembly.

   NOTE: **Refer to Fastener Notice .**

2. Tighten the MAF/IAT sensor adapter clamp.

   Tighten: Tighten the clamp to 4 N.m (35 lb in).

cardiagn.com

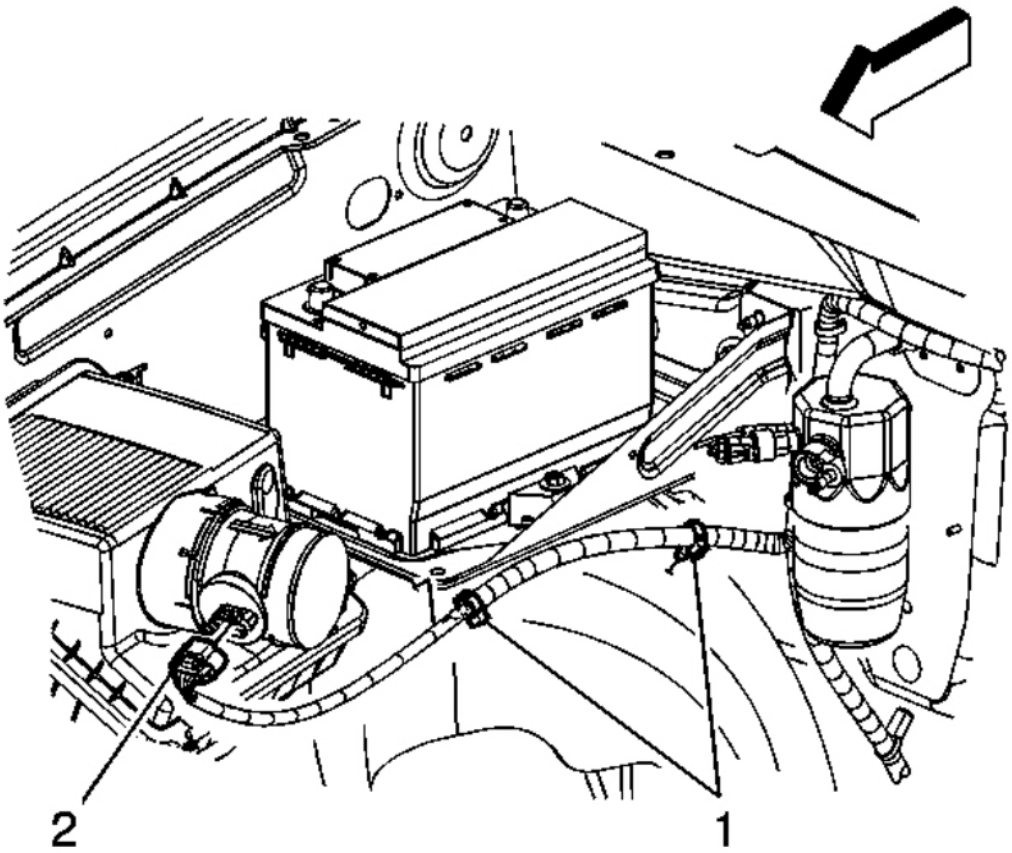

Fig. 77: View Of Throttle Body Heater Hose & Retainers
Courtesy of GENERAL MOTORS CORP.

3. Connect the engine wiring harness electrical connector (2) to the MAF/IAT sensor.
4. Install the air cleaner outlet duct. Refer to **Air Cleaner Resonator Outlet Duct Replacement**.

MANIFOLD ABSOLUTE PRESSURE SENSOR REPLACEMENT

Removal Procedure

cardiagn.com

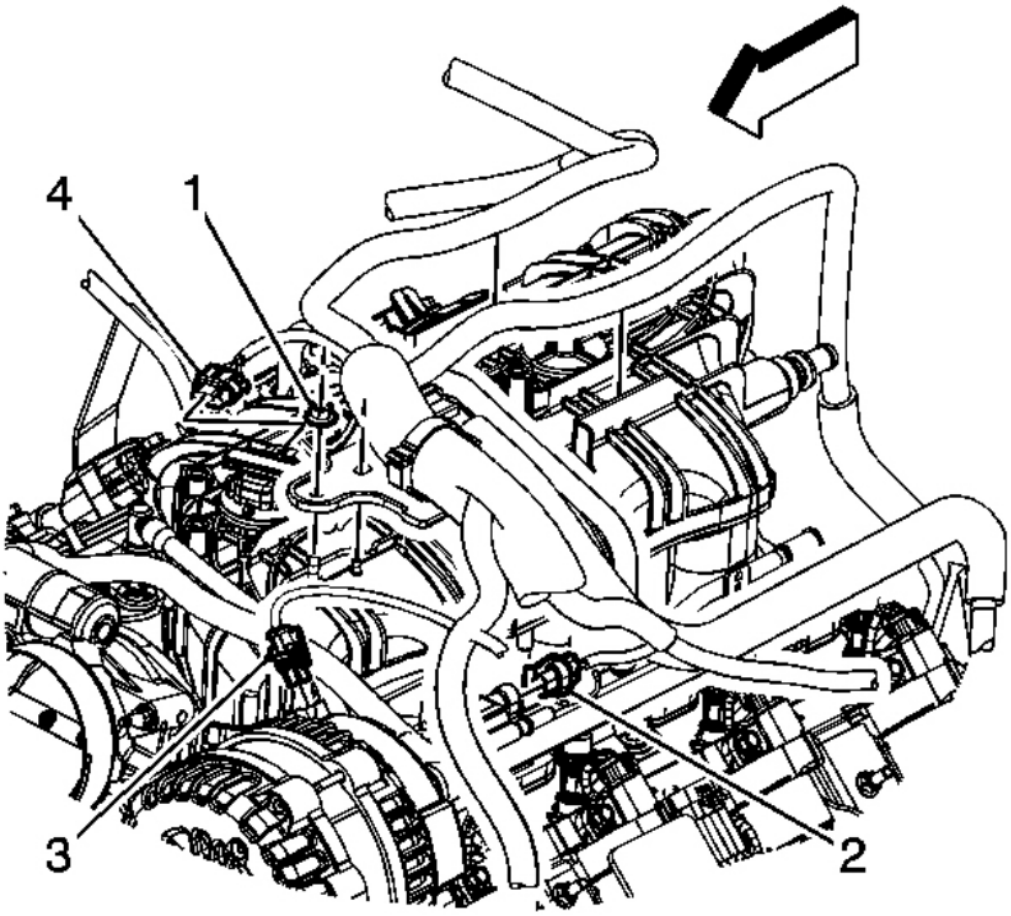

Fig. 78: View Of Engine Harness Retainer Nut & Electrical Connectors
Courtesy of GENERAL MOTORS CORP.

1. Remove the intake manifold sight shield. Refer to **Air Cleaner Resonator Outlet Duct Replacement**.
2. Disconnect the engine wiring harness electrical connector (4) from the manifold absolute pressure (MAP) sensor.

cardiagn.com

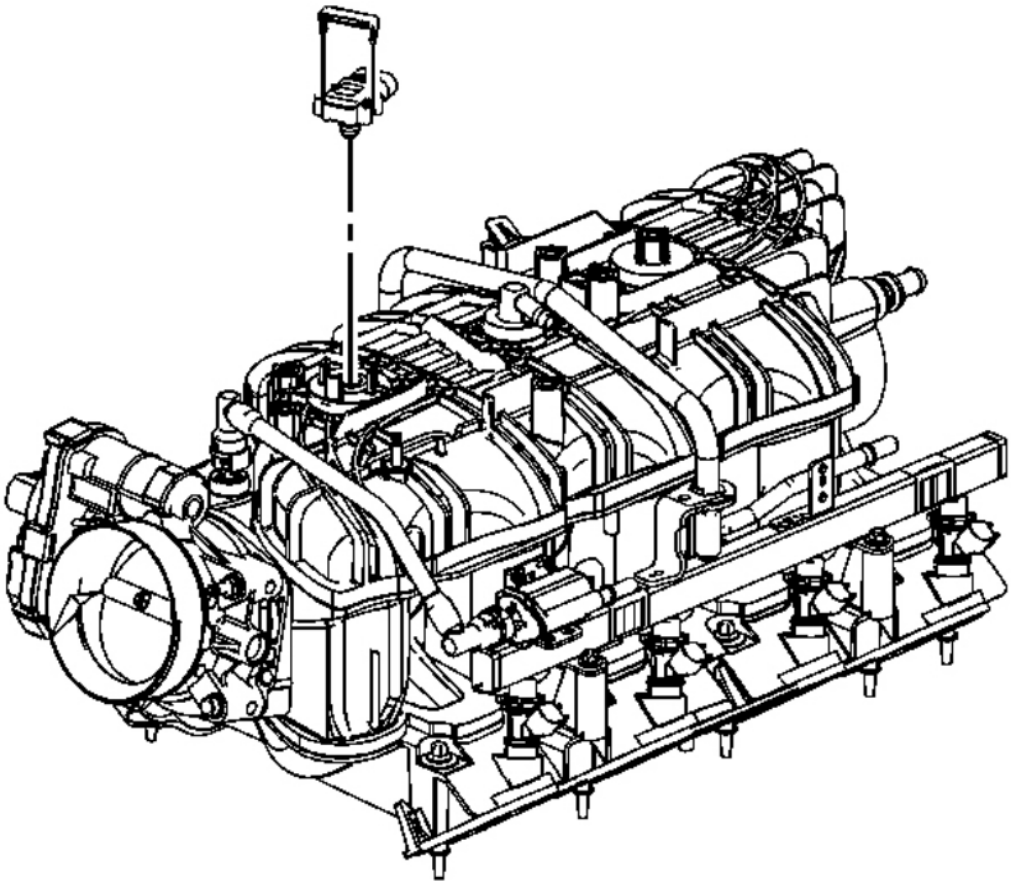

Fig. 79: View Of MAP Sensor & Retainer
Courtesy of GENERAL MOTORS CORP.

3. Remove the MAP sensor retainer.
4. Remove the MAP sensor.

Installation Procedure

IMPORTANT: Lightly coat the MAP sensor seal with clean engine oil before installing the sensor.

cardiagn.com

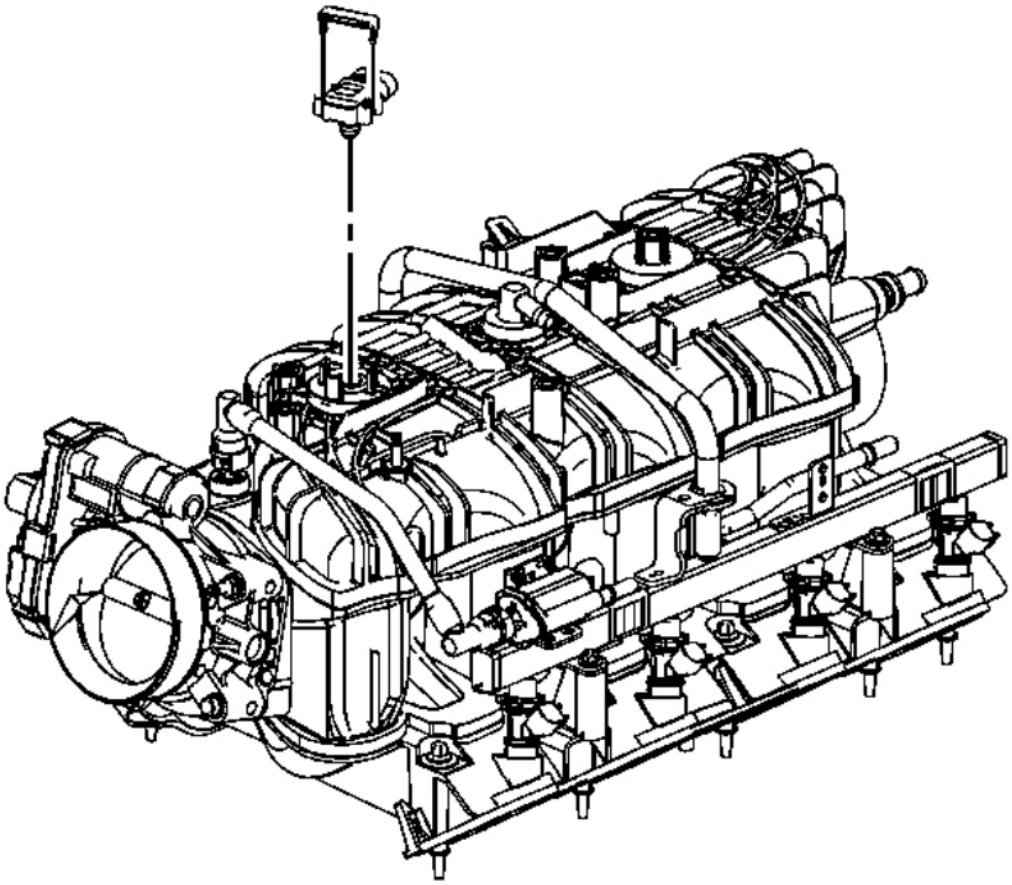

Fig. 80: View Of MAP Sensor & Retainer
Courtesy of GENERAL MOTORS CORP.

1. Install the MAP sensor.
2. Install the MAP sensor retainer.

cardiagn.com

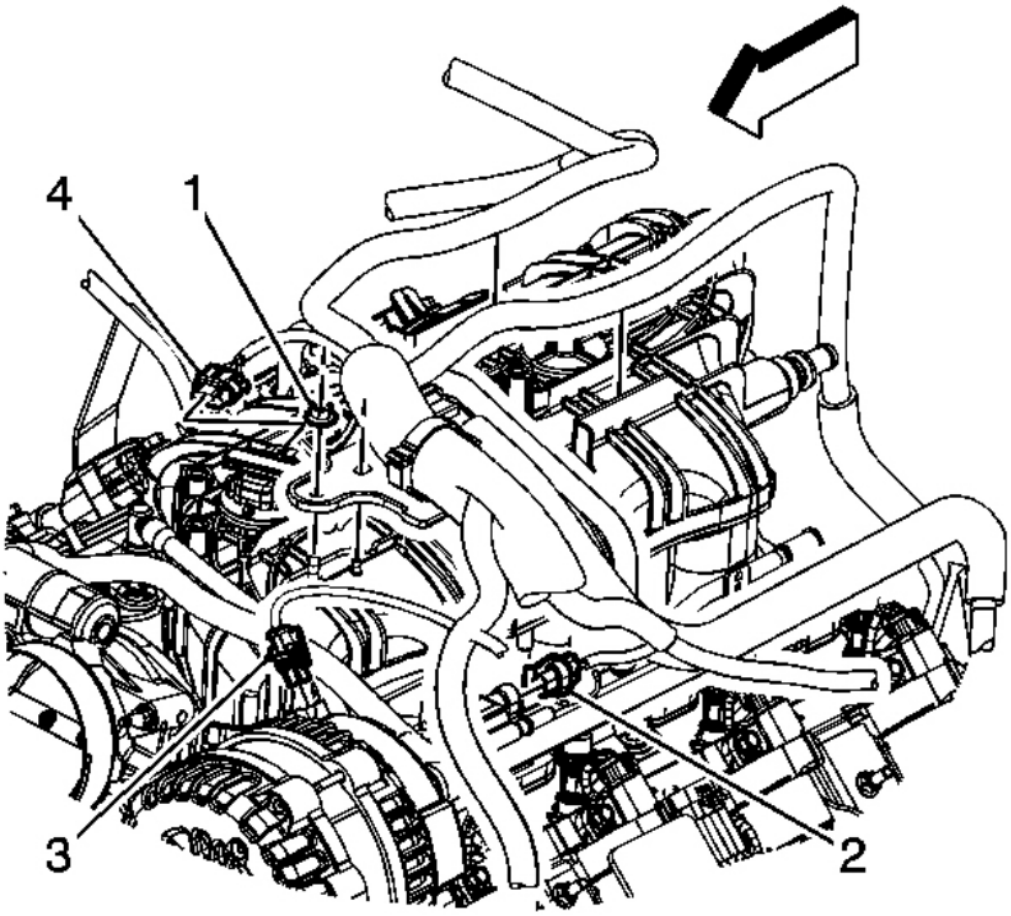

Fig. 81: View Of Engine Harness Retainer Nut & Electrical Connectors
Courtesy of GENERAL MOTORS CORP.

3. Connect the engine harness wiring electrical connector (4) to the MAP sensor.
4. Install the intake manifold sight shield. Refer to **Air Cleaner Resonator Outlet Duct Replacement**.

POWER BRAKE BOOSTER VACUUM SENSOR REPLACEMENT

Removal Procedure

cardiagn.com

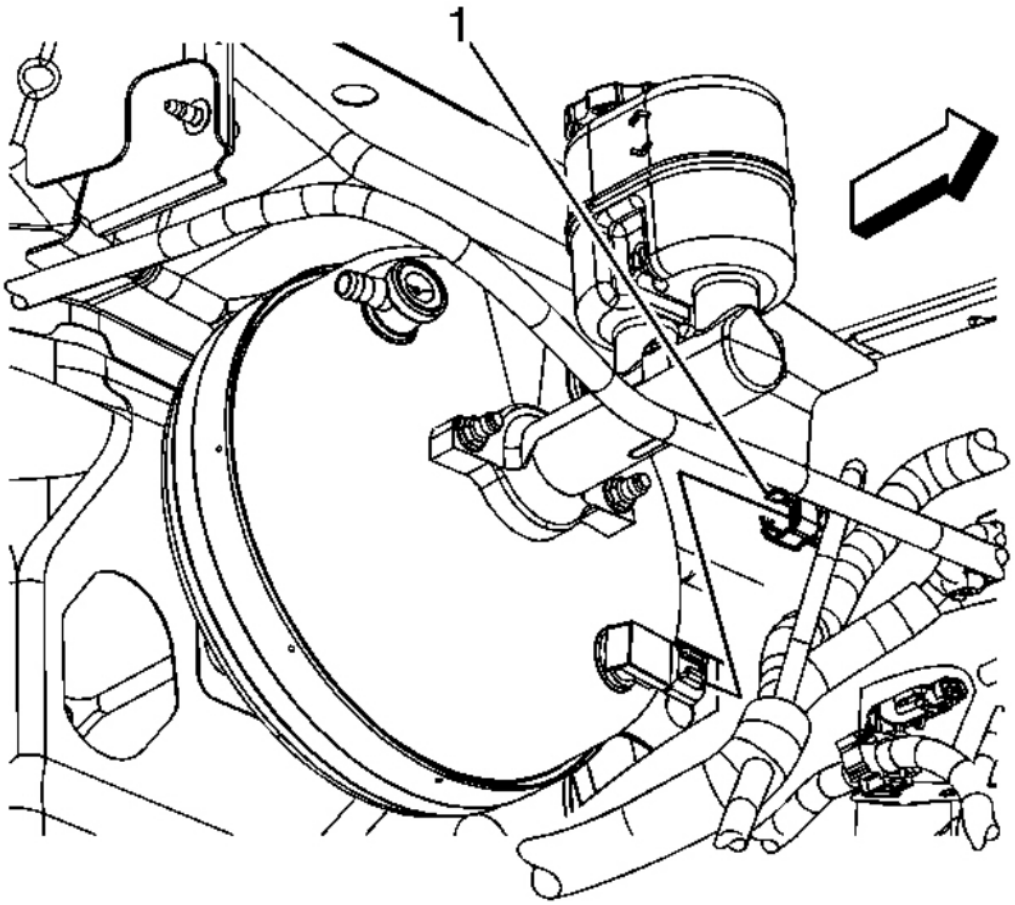

Fig. 82: View Of Wiring Harness Electrical Connector
Courtesy of GENERAL MOTORS CORP.

1. Disconnect the chassis wiring harness electrical connector (1) from the brake booster vacuum sensor.

cardiagn.com

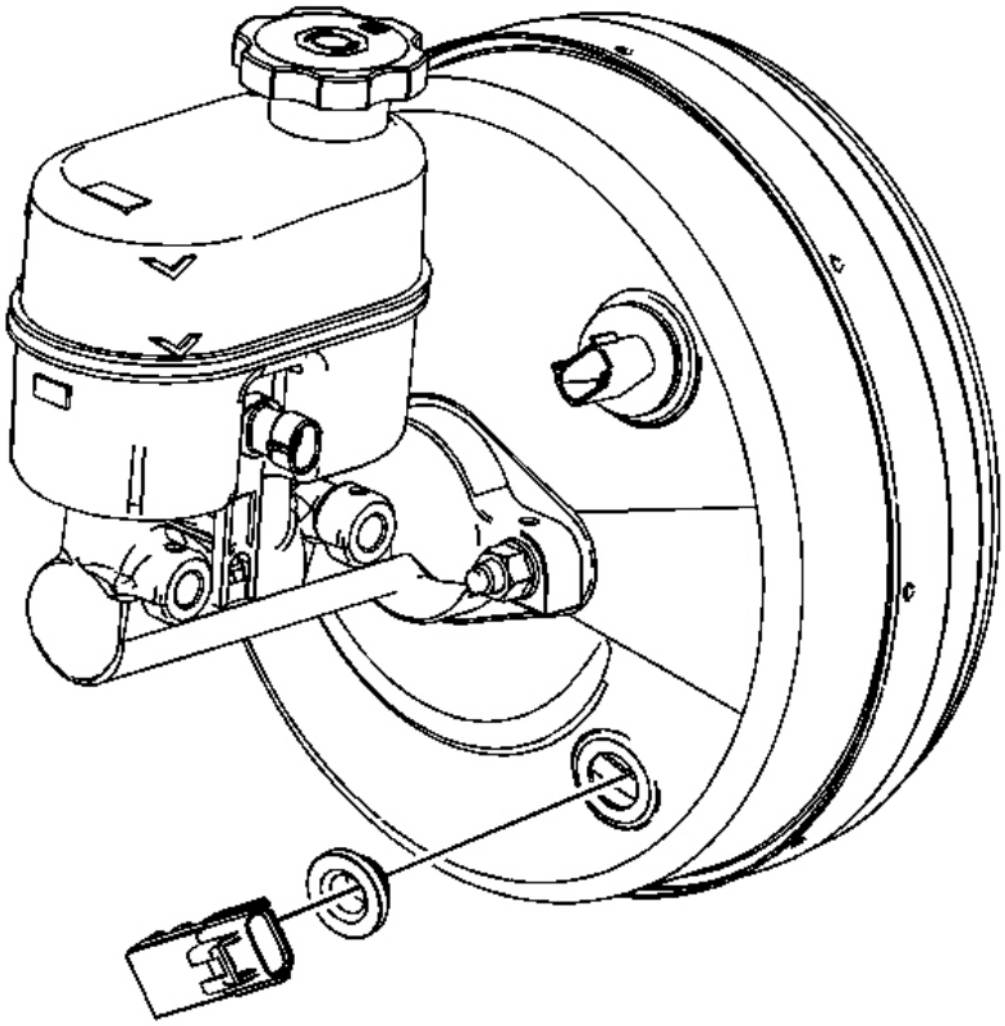

Fig. 83: View Of Brake Booster & Vacuum Sensor
Courtesy of GENERAL MOTORS CORP.

2. Remove the brake booster vacuum sensor from the brake booster.
3. Remove the brake booster vacuum sensor grommet from the brake booster.

Installation Procedure

IMPORTANT: Lightly coat the brake booster vacuum sensor grommet with clean engine oil before installing the sensor.

cardiagn.com

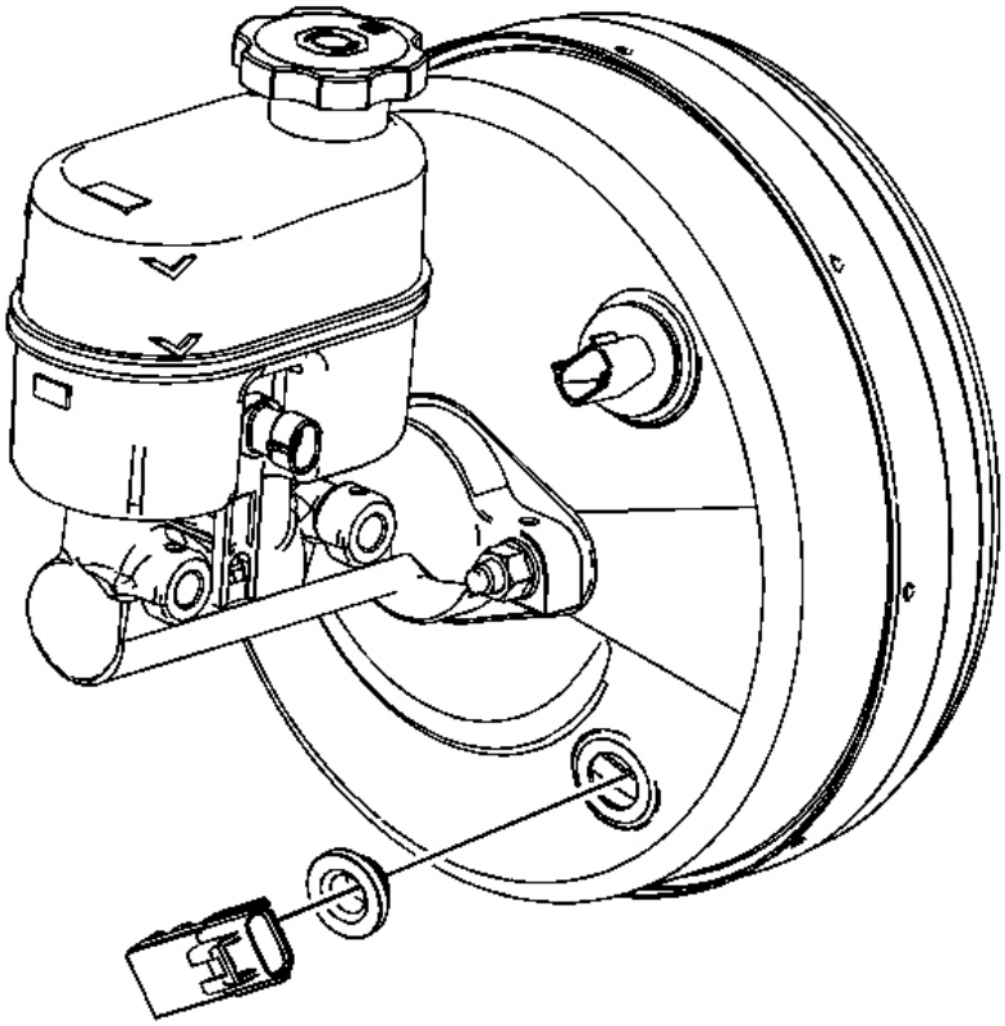

Fig. 84: View Of Brake Booster & Vacuum Sensor
Courtesy of GENERAL MOTORS CORP.

1. Install the brake booster vacuum sensor grommet to the brake booster.
2. Install the brake booster vacuum sensor to the brake booster.

cardiagn.com

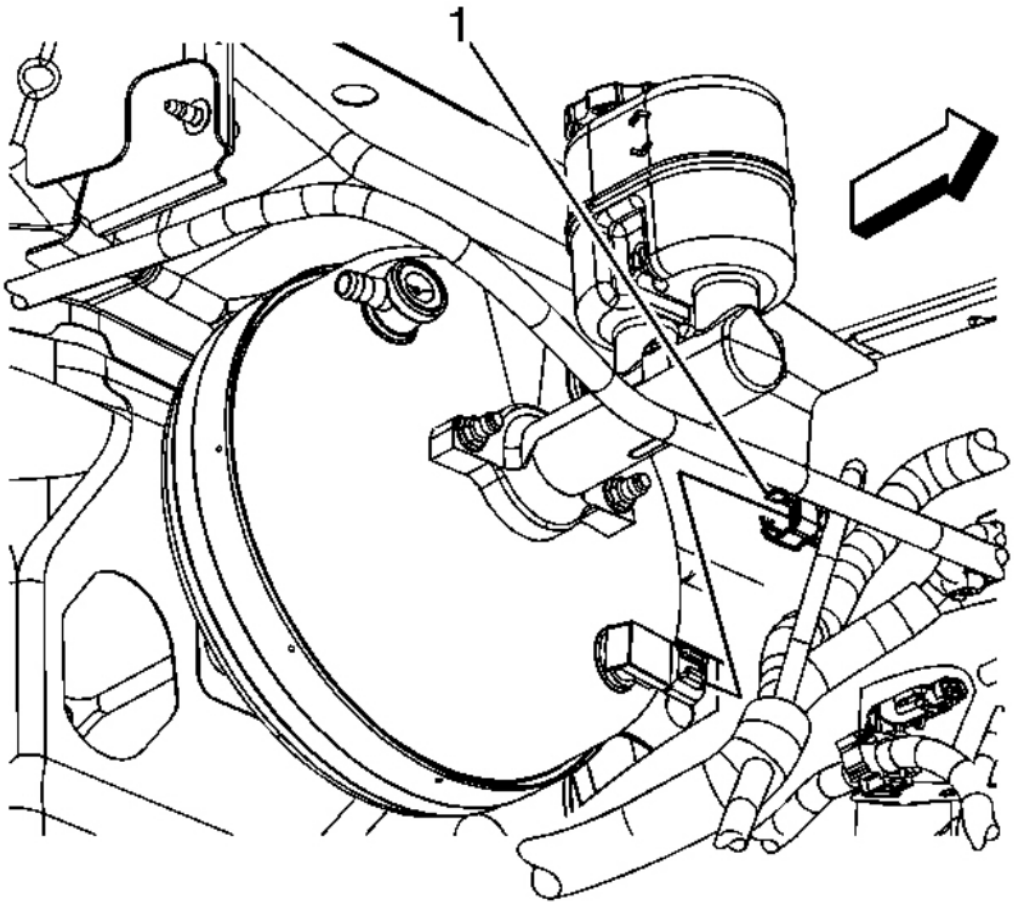

Fig. 85: View Of Wiring Harness Electrical Connector
Courtesy of GENERAL MOTORS CORP.

3. Connect the chassis wiring harness electrical connector (1) to the brake booster vacuum sensor.

HEATED OXYGEN SENSOR REPLACEMENT - BANK 1 SENSOR 1 (1500 SERIES)

Removal Procedure

NOTE: **Do not remove the pigtail from either the heated oxygen sensor (HO2S) or the oxygen sensor (O2S). Removing the pigtail or the connector will affect sensor operation.**
Handle the oxygen sensor carefully. Do not drop the HO2S. Keep the in-line electrical connector and the louvered end free of grease, dirt, or other contaminants. Do not use cleaning solvents of any type.

cardiagn.com

Do not repair the wiring, connector or terminals. Replace the oxygen sensor if the pigtail wiring, connector, or terminal is damaged.
This external clean air reference is obtained by way of the oxygen sensor signal and heater wires. Any attempt to repair the wires, connectors, or terminals could result in the obstruction of the air reference and degraded sensor performance.
The following guidelines should be used when servicing the heated oxygen sensor:

- **Do not apply contact cleaner or other materials to the sensor or vehicle harness connectors. These materials may get into the sensor causing poor performance.**
- **Do not damage the sensor pigtail and harness wires in such a way that the wires inside are exposed. This could provide a path for foreign materials to enter the sensor and cause performance problems.**
- **Ensure the sensor or vehicle lead wires are not bent sharply or kinked. Sharp bends or kinks could block the reference air path through the lead wire.**
- **Do not remove or defeat the oxygen sensor ground wire, where applicable. Vehicles that utilize the ground wired sensor may rely on this ground as the only ground contact to the sensor. Removal of the ground wire will cause poor engine performance.**
- **Ensure that the peripheral seal remains intact on the vehicle harness connector in order to prevent damage due to water intrusion. The engine harness may be repaired using Packard's Crimp and Splice Seals Terminal Repair Kit. Under no circumstances should repairs be soldered since this could result in the air reference being obstructed.**

cardiagn.com

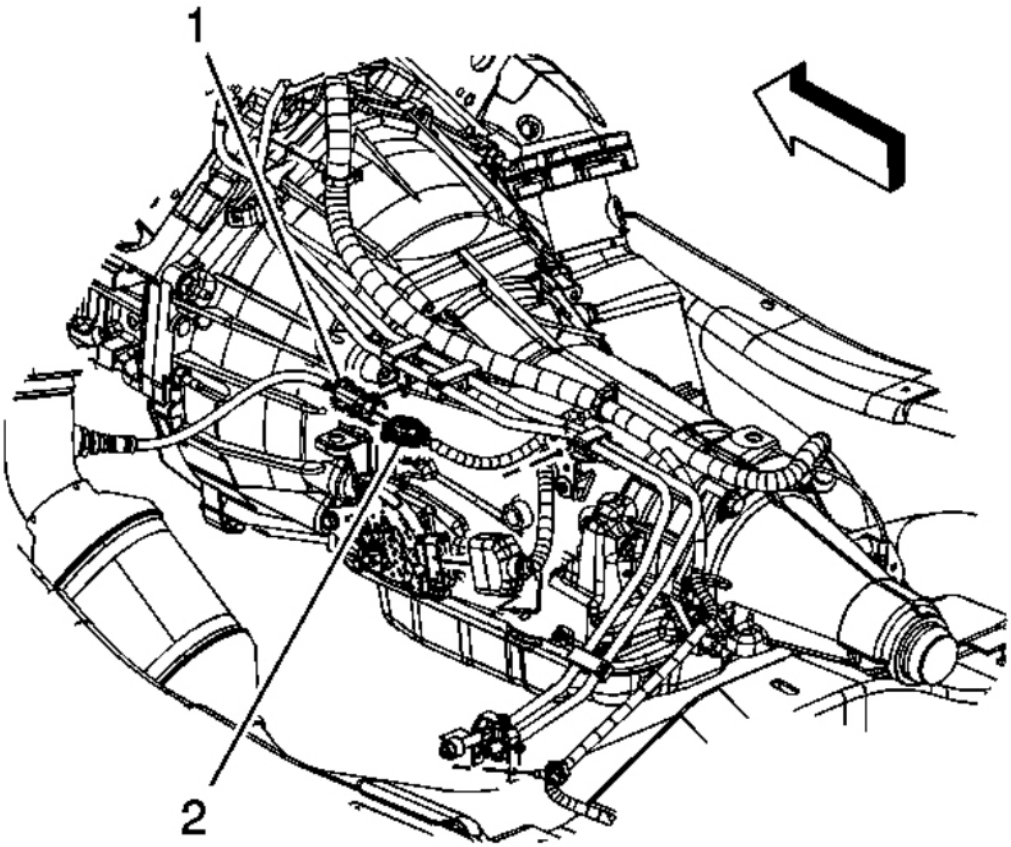

Fig. 86: View Of Left Front HO2S Electrical Connector Clip & Engine Wiring Harness Electrical Connector
Courtesy of GENERAL MOTORS CORP.

1. Raise and support the vehicle. Refer to **Lifting and Jacking the Vehicle** .
2. Unbolt the front propeller shaft from the front differential, if equipped with four wheel drive (4WD). Refer to **Front Propeller Shaft Replacement** .
3. For vehicles equipped with a 4L60-E/4L70-E automatic transmission perform the following steps, for vehicles equipped with a 6L80-E automatic transmission proceed to step 7.
4. Remove the connector position assurance (CPA) retainer.
5. Disconnect the engine wiring harness electrical connector (2) from the HO2S.
6. Remove the HO2S electrical connector clip (1) from the fuel line clip.

cardiagn.com

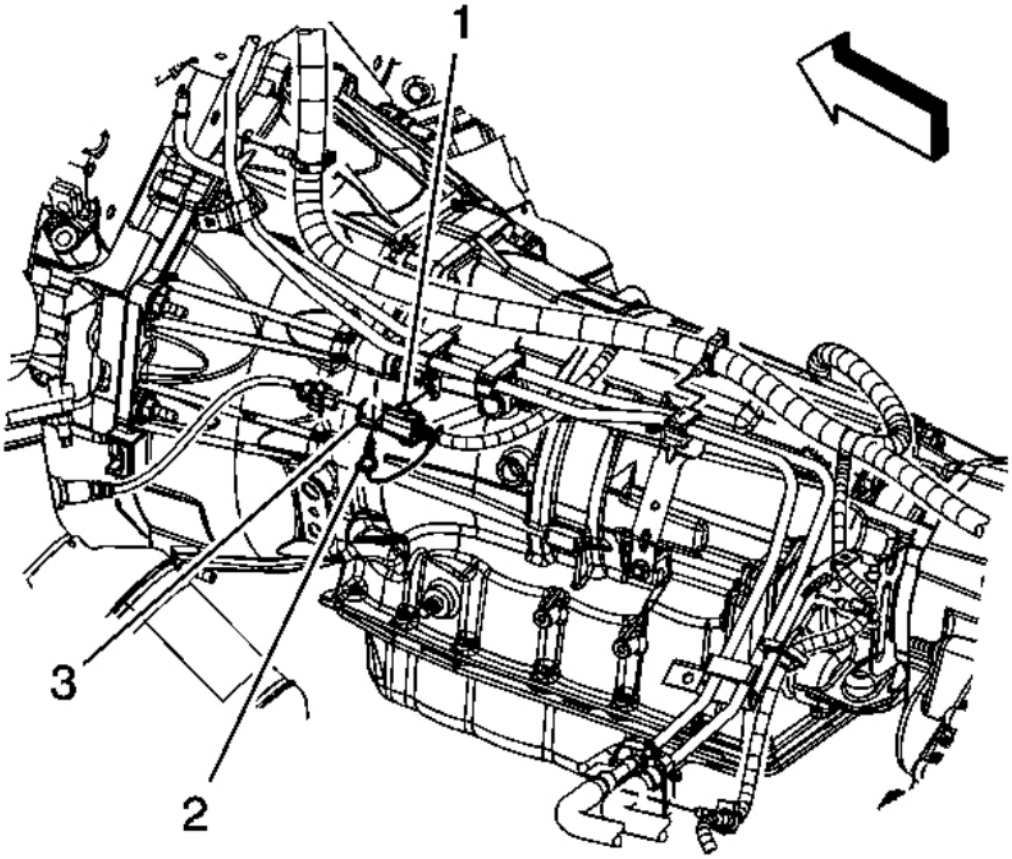

Fig. 87: View Of Engine Wiring Harness Electrical Connector Clip & Electrical Connector
Courtesy of GENERAL MOTORS CORP.

7. Remove the CPA retainer (2).
8. Remove the engine wiring harness electrical connector clip (1) from the fuel line clip.
9. Disconnect the engine wiring harness electrical connector (3) from the HO2S.

cardiagn.com

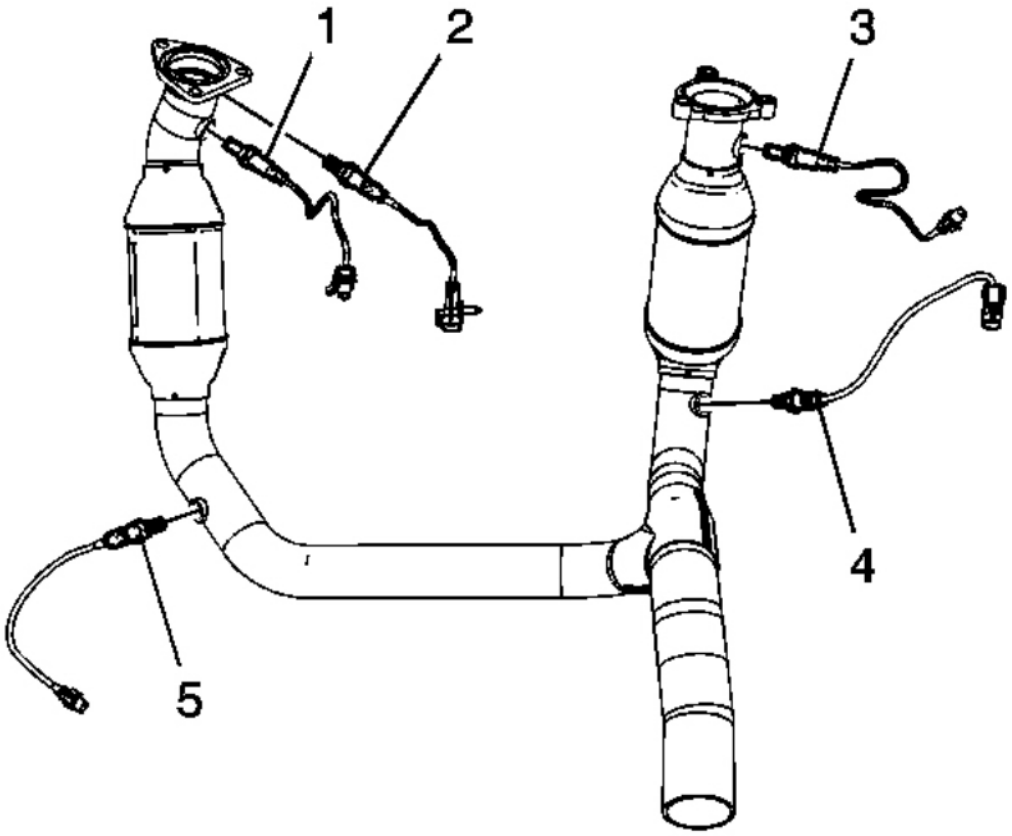

Fig. 88: View Of Catalytic Converter Assembly HO2S's
Courtesy of GENERAL MOTORS CORP.

NOTE: **Refer to Excessive Force and Oxygen Sensor Notice .**

10. Remove the HO2S (1 or 2).

Installation Procedure

IMPORTANT: A special anti-seize compound is used on the HO2S threads. The compound consists of liquid graphite and glass beads. The graphite tends to burn away, but the glass beads remain, making the sensor easier to remove. New, or service replacement sensors already have the compound applied to the threads. If the sensor is removed from an exhaust component and if for any reason the sensor is to be reinstalled, the threads must have anti-seize compound applied before the reinstallation.

cardiagn.com

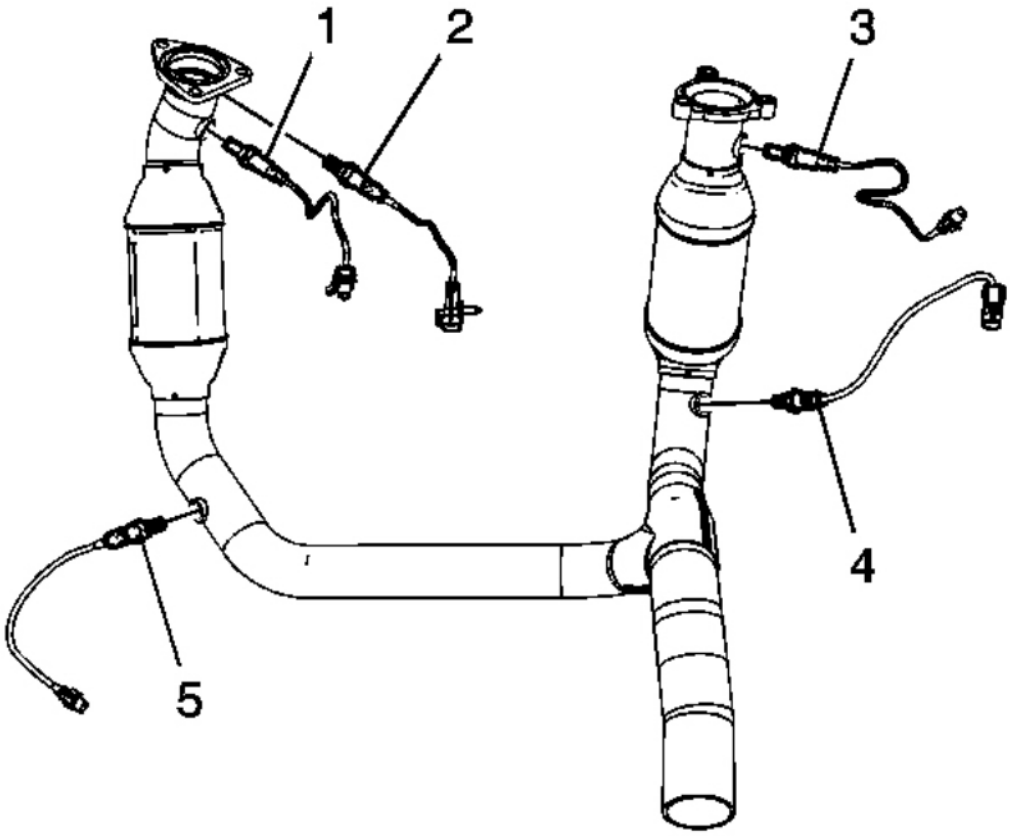

Fig. 89: View Of Catalytic Converter Assembly HO2S's
Courtesy of GENERAL MOTORS CORP.

NOTE: **Refer to Component Fastener Tightening Notice .**

1. If reinstalling the old sensor, coat the threads with anti-seize compound GM P/N 12377953, or equivalent.
2. Install the HO2S (1 or 2).

Tighten: Tighten the sensor to 42 N.m (31 lb ft).

cardiagn.com

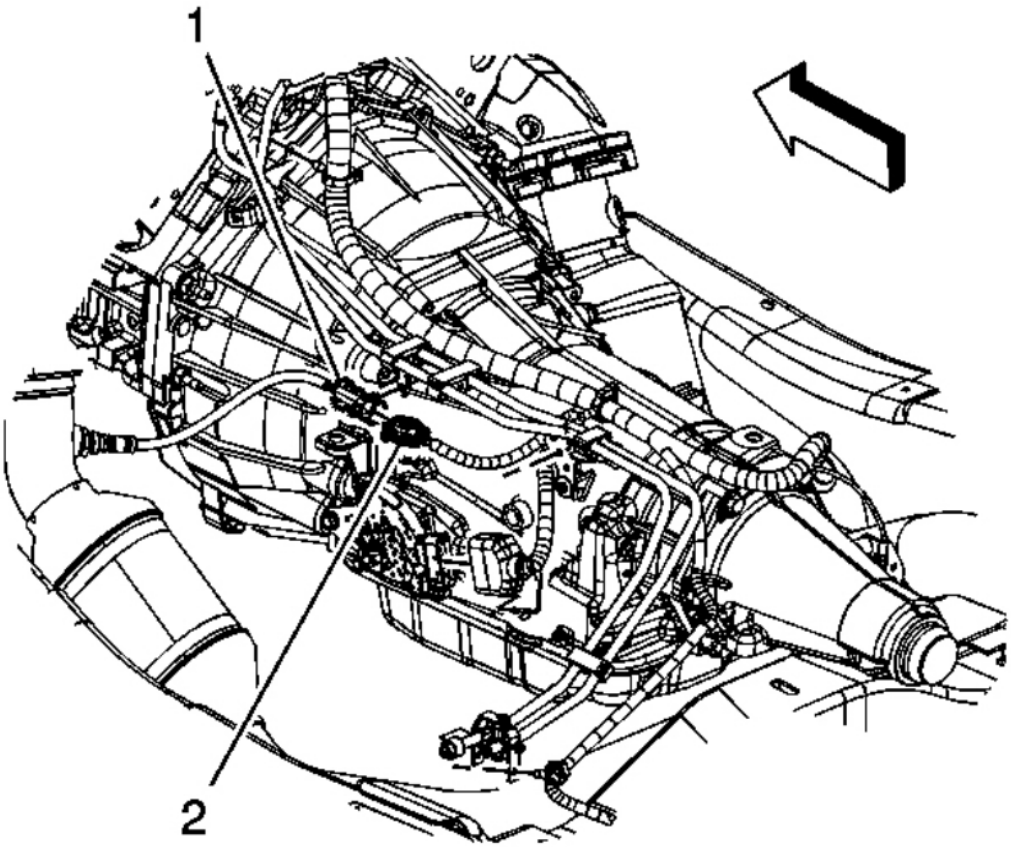

Fig. 90: View Of Left Front HO2S Electrical Connector Clip & Engine Wiring Harness Electrical Connector
Courtesy of GENERAL MOTORS CORP.

3. For vehicles equipped with a 4L60-E/4L70-E automatic transmission perform the following steps, for vehicles equipped with a 6L80-E automatic transmission proceed to step 7.
4. Install the HO2S electrical connector clip (1) to the fuel line clip.
5. Connect the engine wiring harness electrical connector (2) to the HO2S.
6. Install the CPA retainer.

cardiagn.com

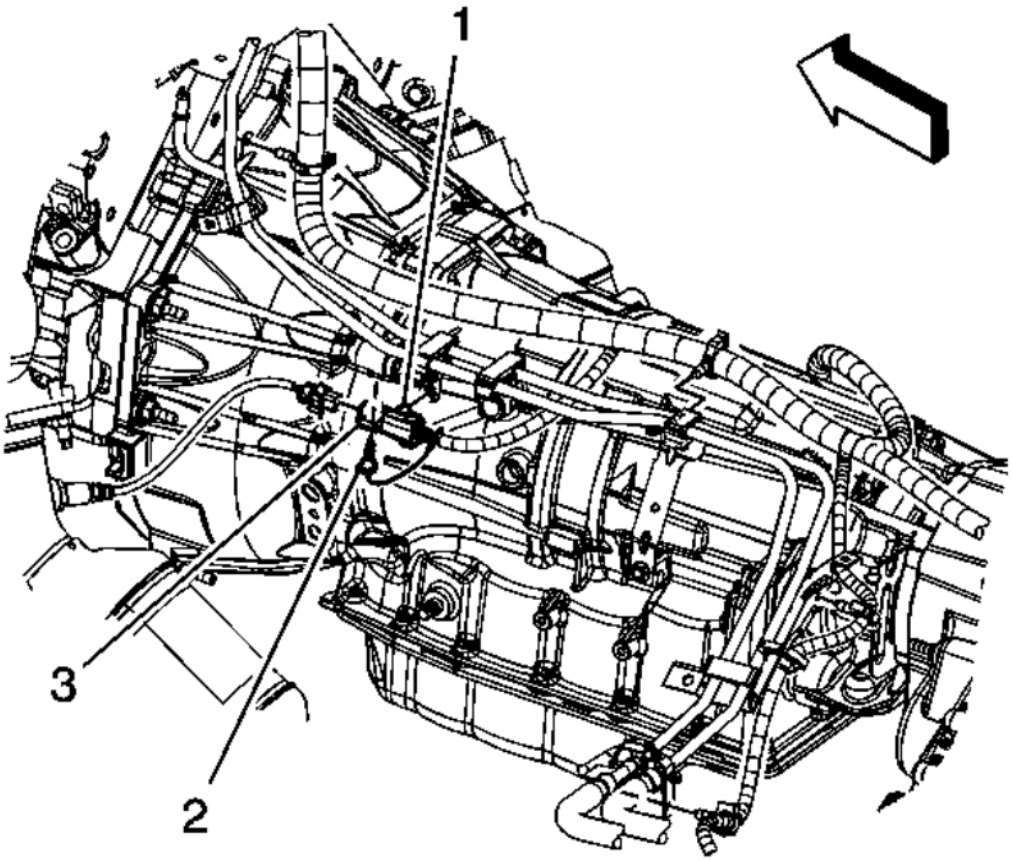

Fig. 91: View Of Engine Wiring Harness Electrical Connector Clip & Electrical Connector
Courtesy of GENERAL MOTORS CORP.

7. Connect the engine wiring harness electrical connector (3) to the HO2S.
8. Install the engine wiring harness electrical connector clip (1) to the fuel line clip.
9. Install the CPA retainer (2).
10. Install the front propeller shaft to the front differential, if equipped with 4WD. Refer to **Front Propeller Shaft Replacement** .
11. Lower the vehicle.

HEATED OXYGEN SENSOR REPLACEMENT - BANK 1 SENSOR 1 (2500 SERIES)

Removal Procedure

NOTE: Do not remove the pigtail from either the heated oxygen sensor (HO2S) or the

cardiagn.com

oxygen sensor (O2S). Removing the pigtail or the connector will affect sensor operation.
Handle the oxygen sensor carefully. Do not drop the HO2S. Keep the in-line electrical connector and the louvered end free of grease, dirt, or other contaminants. Do not use cleaning solvents of any type.
Do not repair the wiring, connector or terminals. Replace the oxygen sensor if the pigtail wiring, connector, or terminal is damaged.
This external clean air reference is obtained by way of the oxygen sensor signal and heater wires. Any attempt to repair the wires, connectors, or terminals could result in the obstruction of the air reference and degraded sensor performance.
The following guidelines should be used when servicing the heated oxygen sensor:

- **Do not apply contact cleaner or other materials to the sensor or vehicle harness connectors. These materials may get into the sensor causing poor performance.**
- **Do not damage the sensor pigtail and harness wires in such a way that the wires inside are exposed. This could provide a path for foreign materials to enter the sensor and cause performance problems.**
- **Ensure the sensor or vehicle lead wires are not bent sharply or kinked. Sharp bends or kinks could block the reference air path through the lead wire.**
- **Do not remove or defeat the oxygen sensor ground wire, where applicable. Vehicles that utilize the ground wired sensor may rely on this ground as the only ground contact to the sensor. Removal of the ground wire will cause poor engine performance.**
- **Ensure that the peripheral seal remains intact on the vehicle harness connector in order to prevent damage due to water intrusion. The engine harness may be repaired using Packard's Crimp and Splice Seals Terminal Repair Kit. Under no circumstances should repairs be soldered since this could result in the air reference being obstructed.**

cardiagn.com

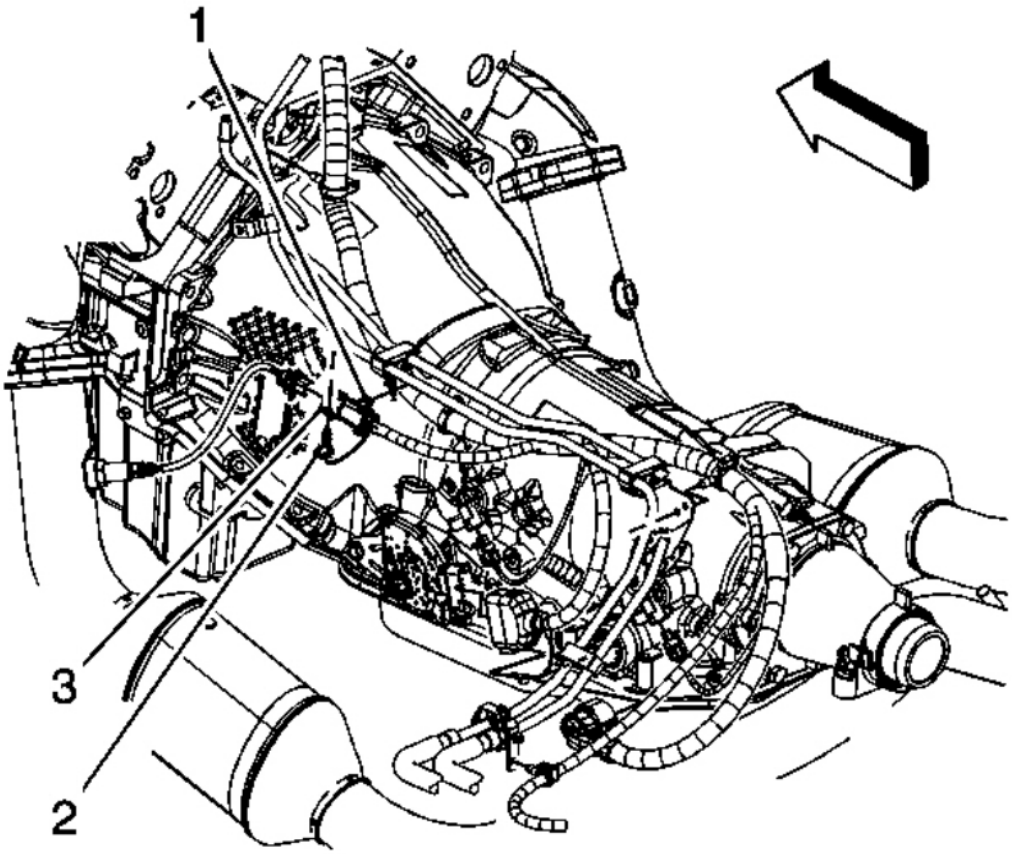

Fig. 92: View Of Left Front CPA Retainer & Engine Wiring Harness Electrical Connector
Courtesy of GENERAL MOTORS CORP.

1. Raise and support the vehicle. Refer to **Lifting and Jacking the Vehicle** .
2. Unbolt the front propeller shaft from the front differential, if equipped with four wheel drive (4WD). Refer to **Front Propeller Shaft Replacement** .
3. Remove the connector position assurance (CPA) retainer (2).
4. Disconnect the HO2S electrical connector from the engine wiring harness electrical connector (3).

cardiagn.com

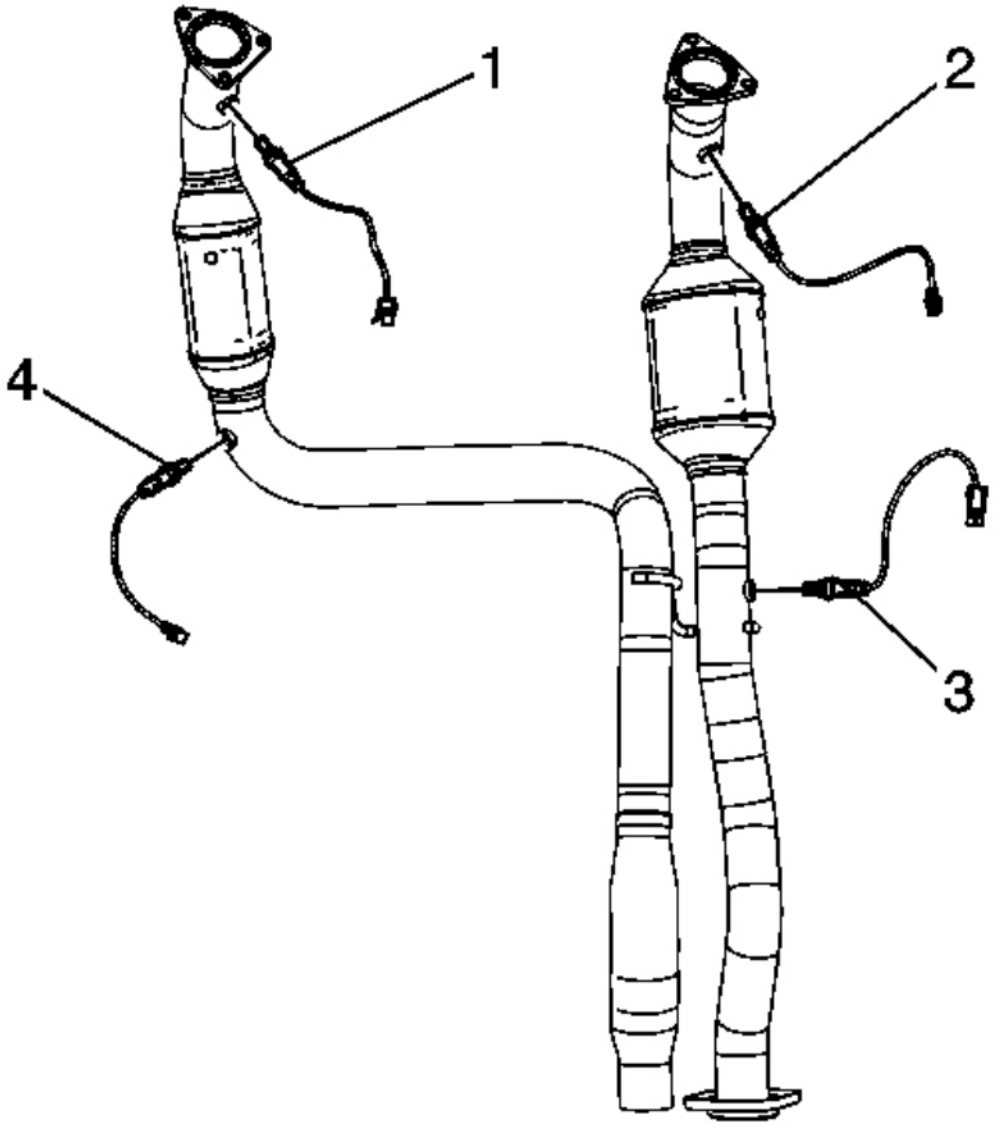

Fig. 93: View Of Catalytic Converter Assembly HO2S's
Courtesy of GENERAL MOTORS CORP.

NOTE: **Refer to Excessive Force and Oxygen Sensor Notice .**

5. Remove the HO2S (1).

cardiagn.com

Installation Procedure

IMPORTANT: A special anti-seize compound is used on the HO2S threads. The compound consists of liquid graphite and glass beads. The graphite tends to burn away, but the glass beads remain, making the sensor easier to remove. New, or service replacement sensors already have the compound applied to the threads. If the sensor is removed from an exhaust component and if for any reason the sensor is to be reinstalled, the threads must have anti-seize compound applied before the reinstallation.

cardiagn.com

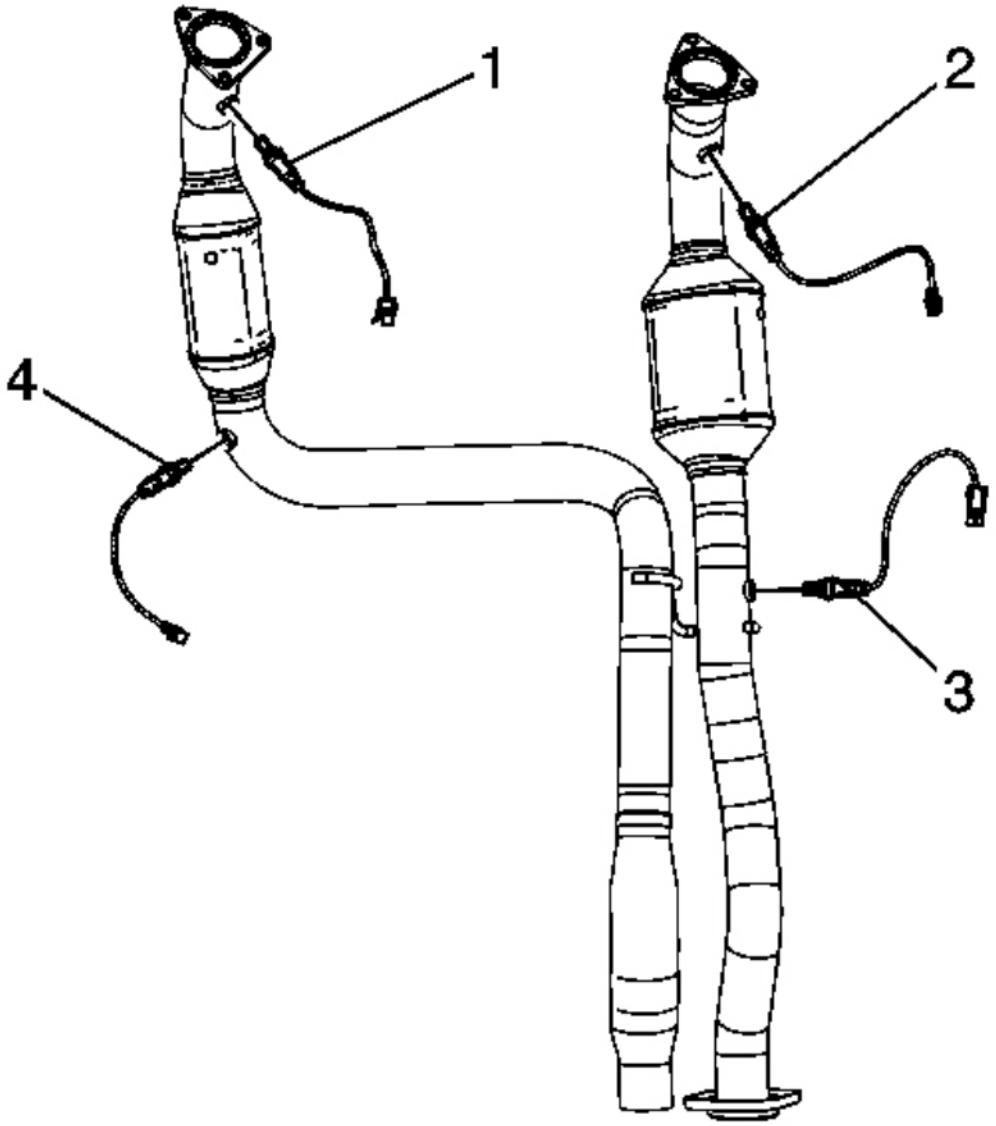

Fig. 94: View Of Catalytic Converter Assembly HO2S's
Courtesy of GENERAL MOTORS CORP.

NOTE: **Refer to Component Fastener Tightening Notice .**

1. If reinstalling the old sensor, coat the threads with anti-seize compound GM P/N 12377953, or equivalent.
2. Install the HO2S (1).

cardiagn.com

Tighten: Tighten the sensor to 42 N.m (31 lb ft).

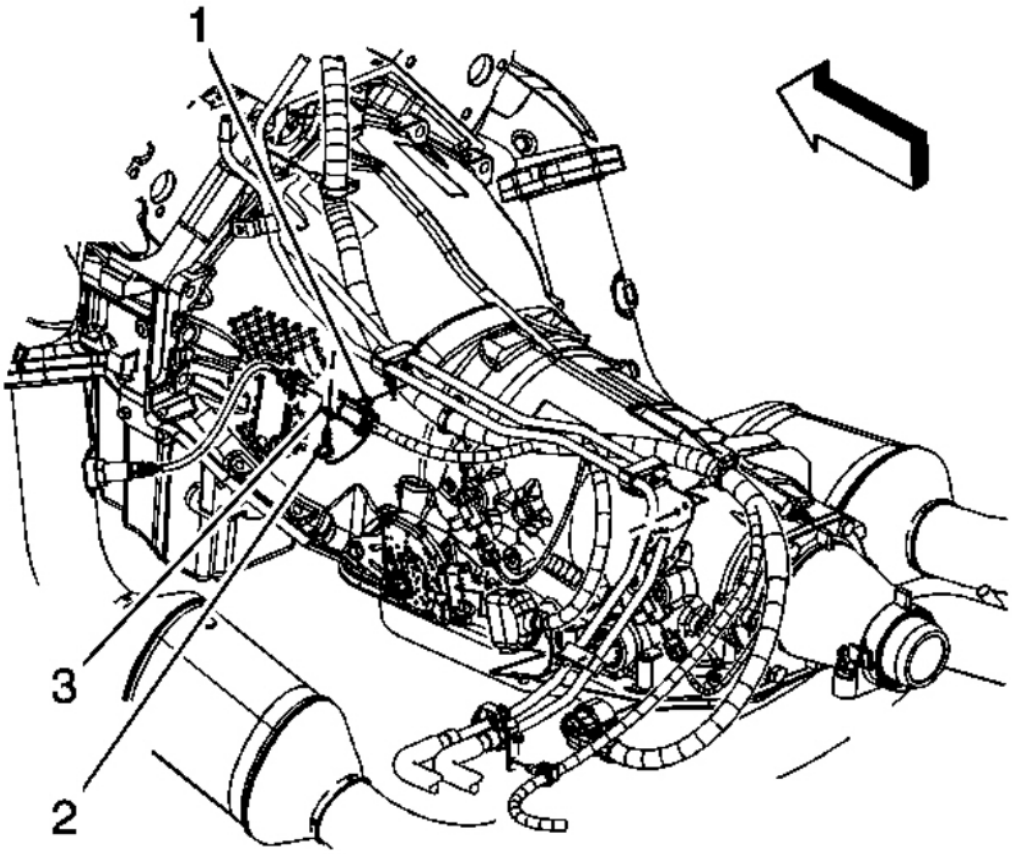

Fig. 95: View Of Left Front CPA Retainer & Engine Wiring Harness Electrical Connector
Courtesy of GENERAL MOTORS CORP.

3. Connect the HO2S electrical connector to the engine wiring harness electrical connector (3).
4. Install the CPA retainer (2).
5. Install the front propeller shaft to the front differential, if equipped with 4WD. Refer to **Front Propeller Shaft Replacement** .
6. Lower the vehicle.

HEATED OXYGEN SENSOR REPLACEMENT - BANK 1 SENSOR 2 (1500 SERIES)

Removal Procedure

cardiagn.com

NOTE: **Do not remove the pigtail from either the heated oxygen sensor (HO2S) or the oxygen sensor (O2S). Removing the pigtail or the connector will affect sensor operation.**
Handle the oxygen sensor carefully. Do not drop the HO2S. Keep the in-line electrical connector and the louvered end free of grease, dirt, or other contaminants. Do not use cleaning solvents of any type.
Do not repair the wiring, connector or terminals. Replace the oxygen sensor if the pigtail wiring, connector, or terminal is damaged.
This external clean air reference is obtained by way of the oxygen sensor signal and heater wires. Any attempt to repair the wires, connectors, or terminals could result in the obstruction of the air reference and degraded sensor performance.
The following guidelines should be used when servicing the heated oxygen sensor:

- **Do not apply contact cleaner or other materials to the sensor or vehicle harness connectors. These materials may get into the sensor causing poor performance.**
- **Do not damage the sensor pigtail and harness wires in such a way that the wires inside are exposed. This could provide a path for foreign materials to enter the sensor and cause performance problems.**
- **Ensure the sensor or vehicle lead wires are not bent sharply or kinked. Sharp bends or kinks could block the reference air path through the lead wire.**
- **Do not remove or defeat the oxygen sensor ground wire, where applicable. Vehicles that utilize the ground wired sensor may rely on this ground as the only ground contact to the sensor. Removal of the ground wire will cause poor engine performance.**
- **Ensure that the peripheral seal remains intact on the vehicle harness connector in order to prevent damage due to water intrusion. The engine harness may be repaired using Packard's Crimp and Splice Seals Terminal Repair Kit. Under no circumstances should repairs be soldered since this could result in the air reference being obstructed.**

cardiagn.com

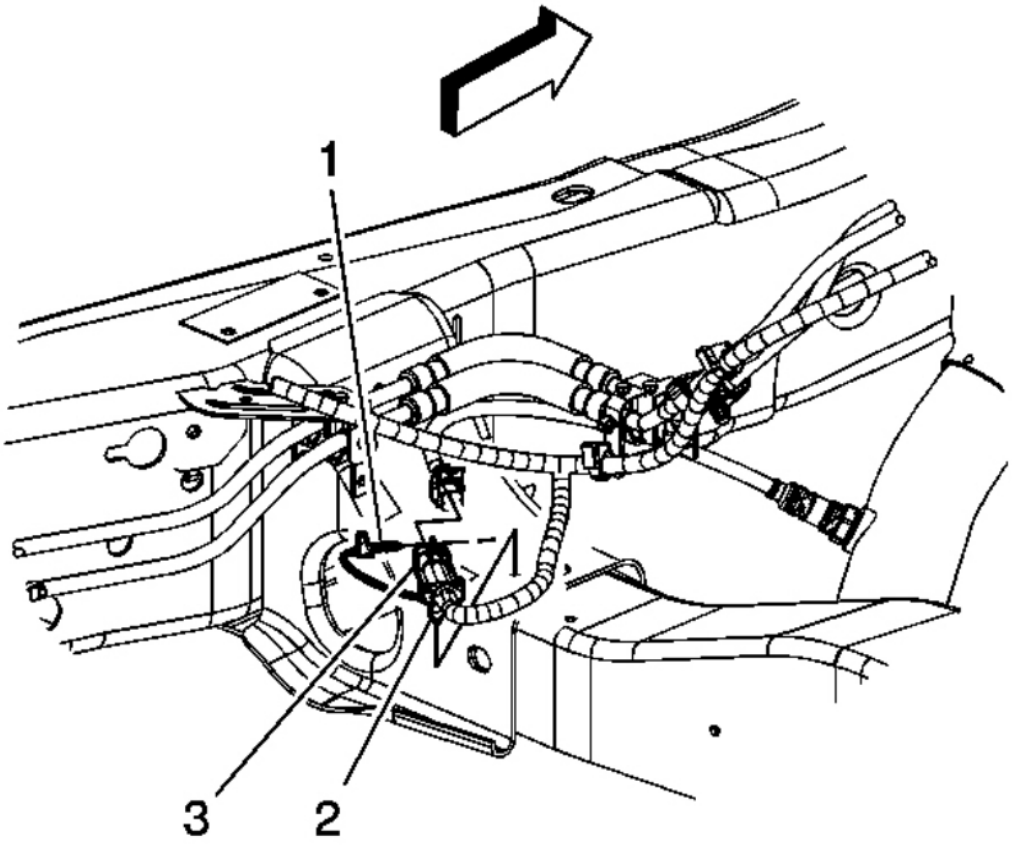

Fig. 96: View Of Left Rear CPA Retainer & Engine Wiring Harness Electrical Connector
Courtesy of GENERAL MOTORS CORP.

1. Raise and support the vehicle. Refer to **Lifting and Jacking the Vehicle** .
2. Remove the connector position assurance (CPA) retainer (1).
3. Disconnect the HO2S electrical connector from the engine wiring harness electrical connector (3).

cardiagn.com

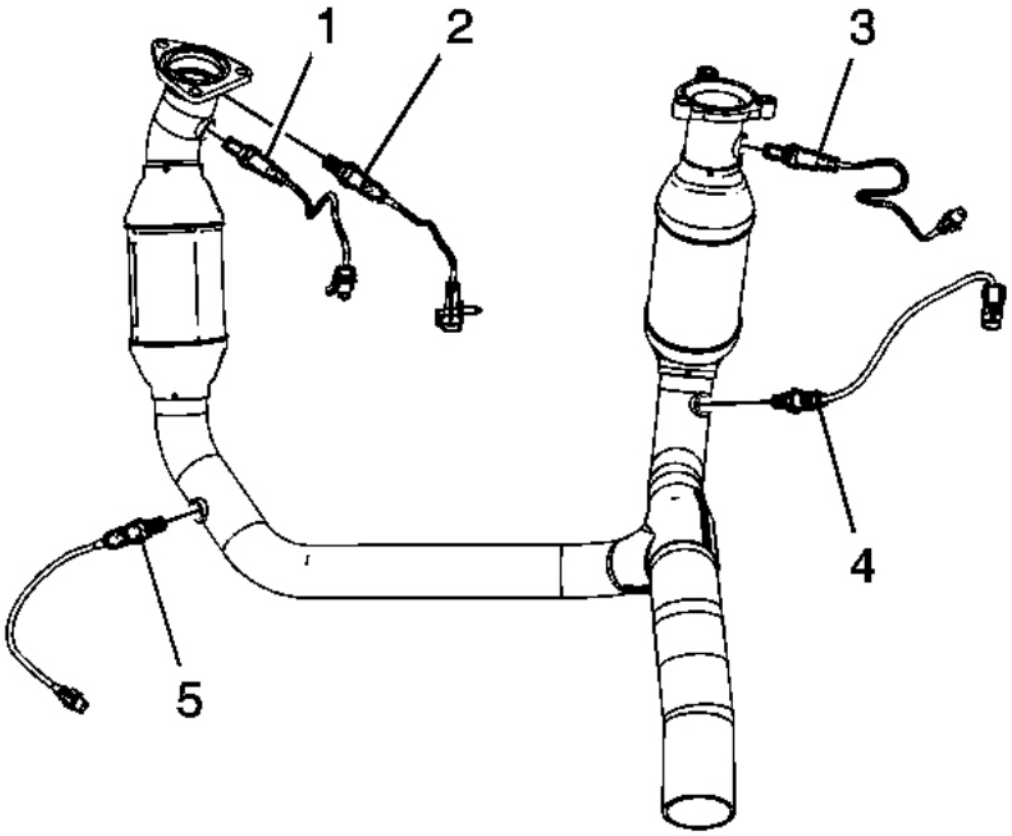

Fig. 97: View Of Catalytic Converter Assembly HO2S's
Courtesy of GENERAL MOTORS CORP.

NOTE: **Refer to Excessive Force and Oxygen Sensor Notice .**

4. Remove the HO2S (5).

Installation Procedure

IMPORTANT: A special anti-seize compound is used on the HO2S threads. The compound consists of liquid graphite and glass beads. The graphite tends to burn away, but the glass beads remain, making the sensor easier to remove. New, or service replacement sensors already have the compound applied to the threads. If the sensor is removed from an exhaust component and if for any reason the sensor is to be reinstalled, the threads must have anti-seize compound applied before the reinstallation.

cardiagn.com

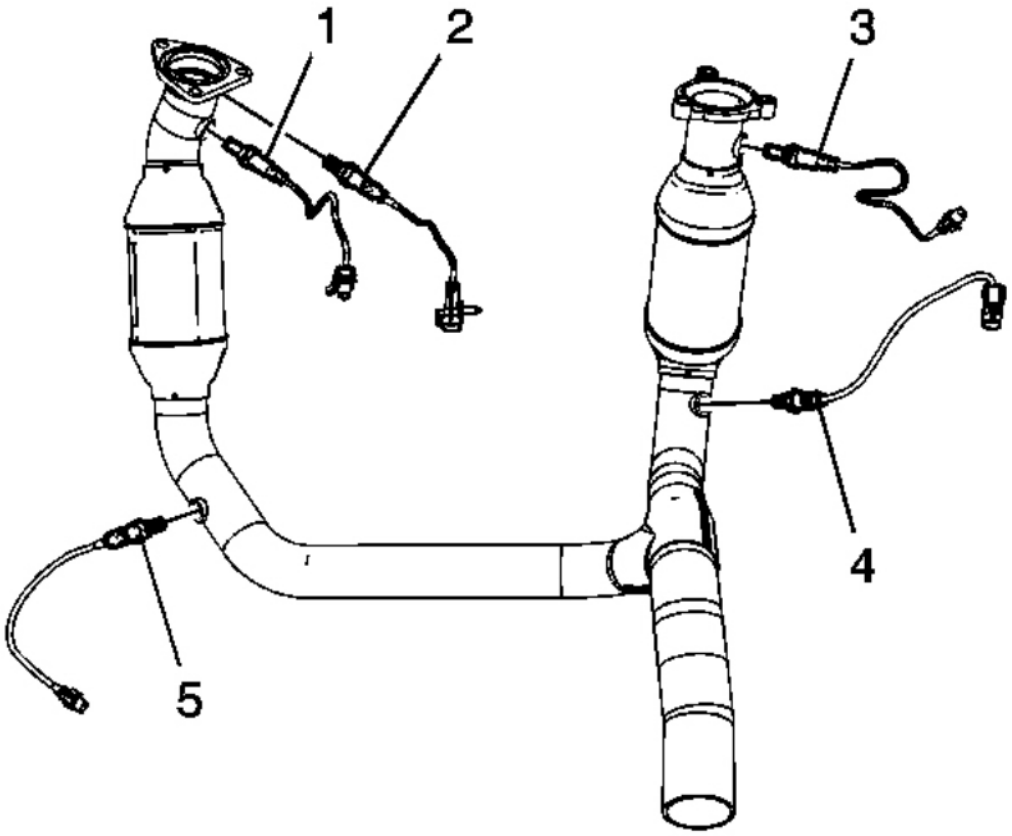

Fig. 98: View Of Catalytic Converter Assembly HO2S's
Courtesy of GENERAL MOTORS CORP.

NOTE: **Refer to Component Fastener Tightening Notice .**

1. If reinstalling the old sensor, coat the threads with anti-seize compound GM P/N 12377953, or equivalent.
2. Install the HO2S (5).

Tighten: Tighten the sensor to 42 N.m (31 lb ft).

cardiagn.com

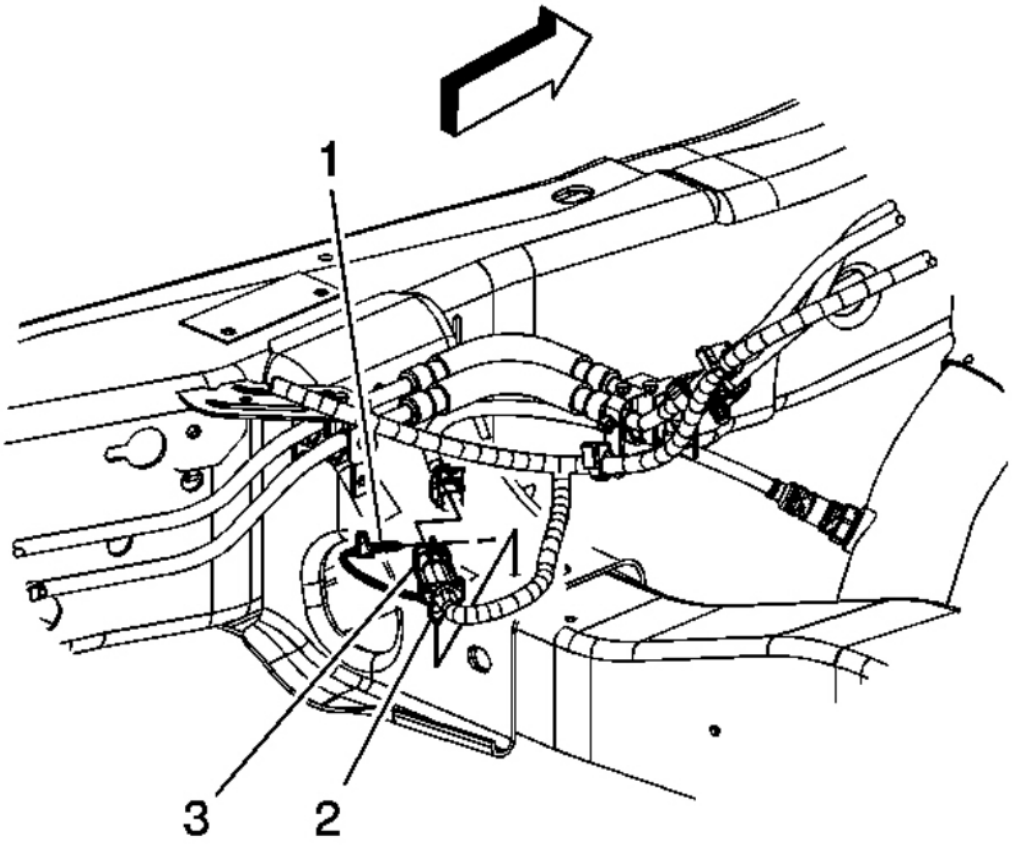

Fig. 99: View Of Left Rear CPA Retainer & Engine Wiring Harness Electrical Connector
Courtesy of GENERAL MOTORS CORP.

3. Connect the HO2S electrical connector to the engine wiring harness electrical connector (3).
4. Install the CPA retainer (1).
5. Lower the vehicle.

HEATED OXYGEN SENSOR REPLACEMENT - BANK 1 SENSOR 2 (2500 SERIES)

Removal Procedure

NOTE: **Do not remove the pigtail from either the heated oxygen sensor (HO2S) or the oxygen sensor (O2S). Removing the pigtail or the connector will affect sensor operation.**
Handle the oxygen sensor carefully. Do not drop the HO2S. Keep the in-line electrical connector and the louvered end free of grease, dirt, or other

cardiagn.com

contaminants. Do not use cleaning solvents of any type.
Do not repair the wiring, connector or terminals. Replace the oxygen sensor if the pigtail wiring, connector, or terminal is damaged.
This external clean air reference is obtained by way of the oxygen sensor signal and heater wires. Any attempt to repair the wires, connectors, or terminals could result in the obstruction of the air reference and degraded sensor performance.
The following guidelines should be used when servicing the heated oxygen sensor:

- **Do not apply contact cleaner or other materials to the sensor or vehicle harness connectors. These materials may get into the sensor causing poor performance.**
- **Do not damage the sensor pigtail and harness wires in such a way that the wires inside are exposed. This could provide a path for foreign materials to enter the sensor and cause performance problems.**
- **Ensure the sensor or vehicle lead wires are not bent sharply or kinked. Sharp bends or kinks could block the reference air path through the lead wire.**
- **Do not remove or defeat the oxygen sensor ground wire, where applicable. Vehicles that utilize the ground wired sensor may rely on this ground as the only ground contact to the sensor. Removal of the ground wire will cause poor engine performance.**
- **Ensure that the peripheral seal remains intact on the vehicle harness connector in order to prevent damage due to water intrusion. The engine harness may be repaired using Packard's Crimp and Splice Seals Terminal Repair Kit. Under no circumstances should repairs be soldered since this could result in the air reference being obstructed.**

cardiagn.com

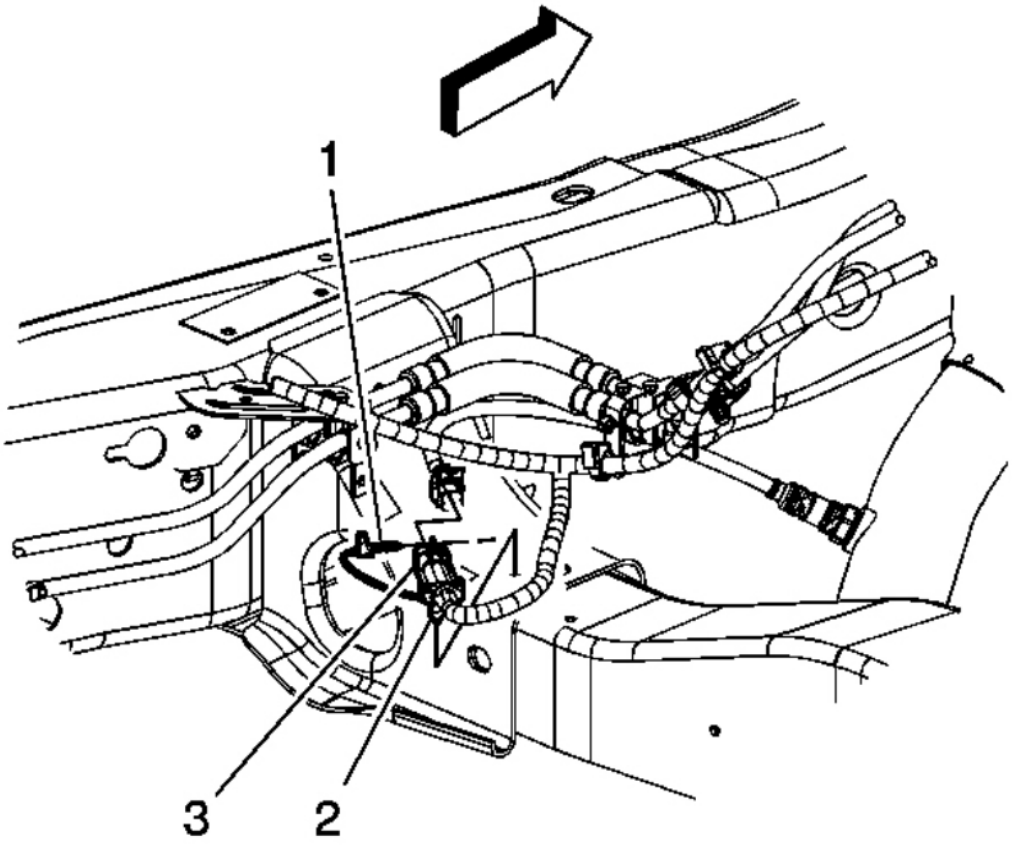

Fig. 100: View Of Left Rear CPA Retainer & Engine Wiring Harness Electrical Connector
Courtesy of GENERAL MOTORS CORP.

1. Raise and support the vehicle. Refer to **Lifting and Jacking the Vehicle** .
2. Remove the connector position assurance (CPA) retainer (1).
3. Disconnect the HO2S electrical connector from the engine wiring harness electrical connector (3).

cardiagn.com

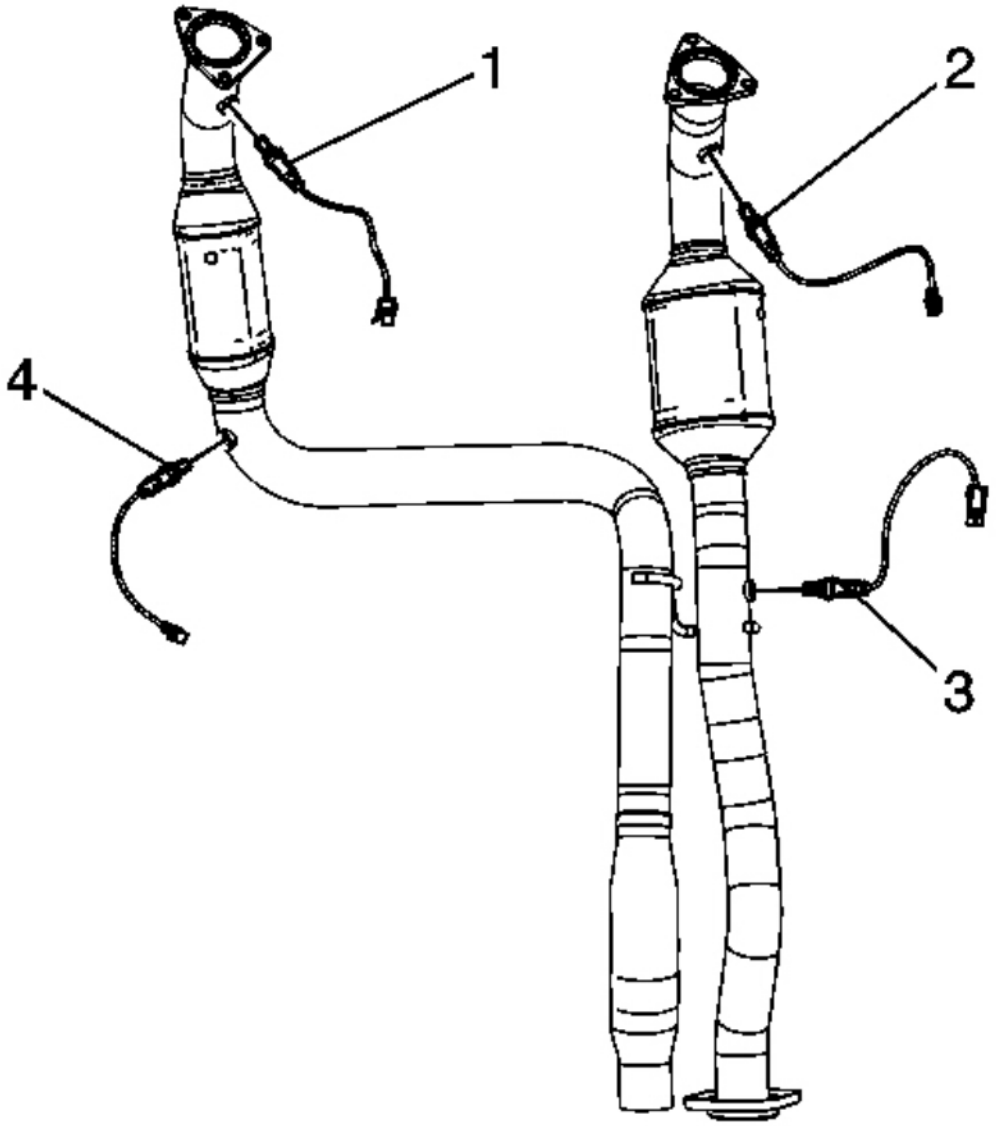

Fig. 101: View Of Catalytic Converter Assembly HO2S's
Courtesy of GENERAL MOTORS CORP.

NOTE: **Refer to Excessive Force and Oxygen Sensor Notice .**

4. Remove the HO2S (4).

cardiagn.com

Installation Procedure

IMPORTANT: A special anti-seize compound is used on the HO2S threads. The compound consists of liquid graphite and glass beads. The graphite tends to burn away, but the glass beads remain, making the sensor easier to remove. New, or service replacement sensors already have the compound applied to the threads. If the sensor is removed from an exhaust component and if for any reason the sensor is to be reinstalled, the threads must have anti-seize compound applied before the reinstallation.

cardiagn.com

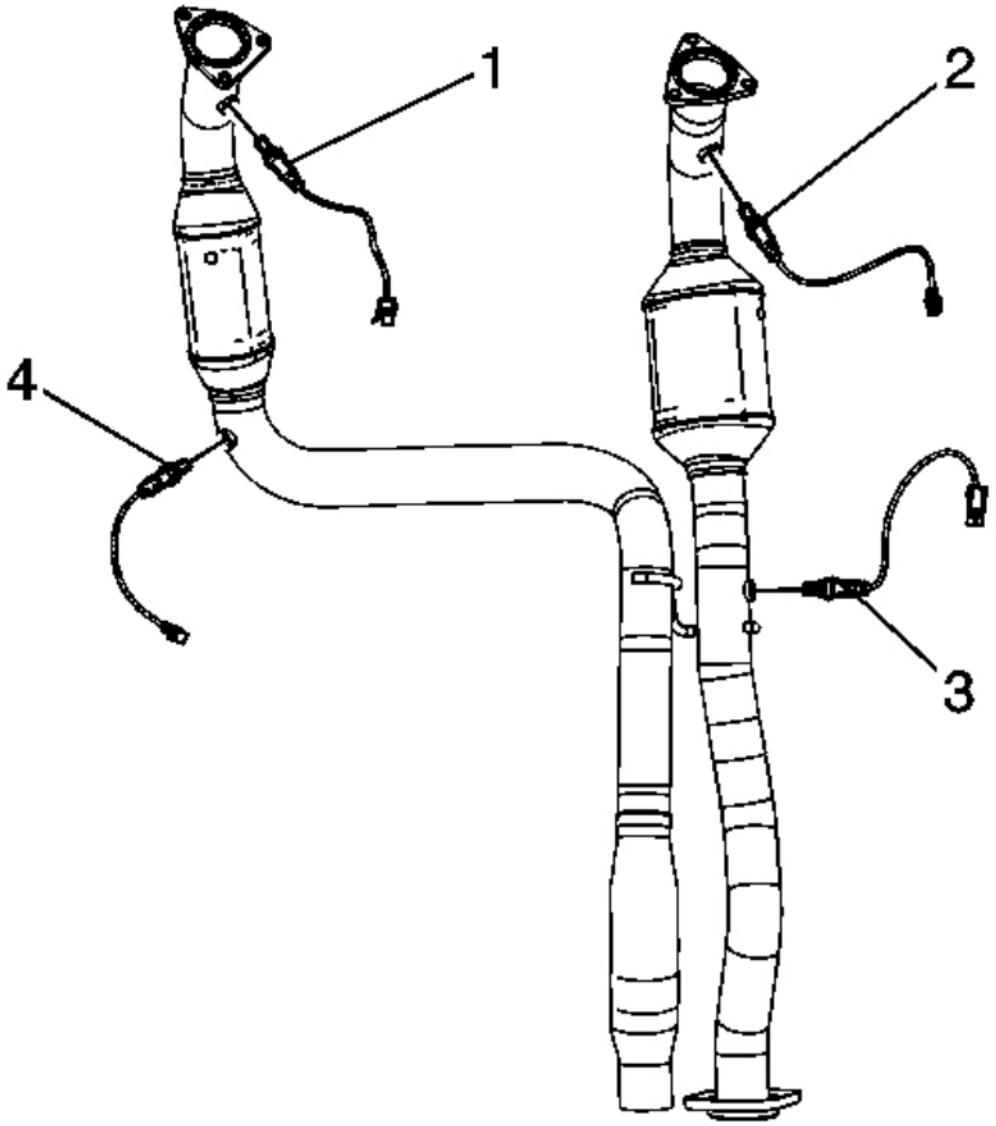

Fig. 102: View Of Catalytic Converter Assembly HO2S's
Courtesy of GENERAL MOTORS CORP.

NOTE: **Refer to Component Fastener Tightening Notice .**

1. If reinstalling the old sensor, coat the threads with anti-seize compound GM P/N 12377953, or equivalent.
2. Install the HO2S (4).

cardiagn.com

Tighten: Tighten the sensor to 42 N.m (31 lb ft).

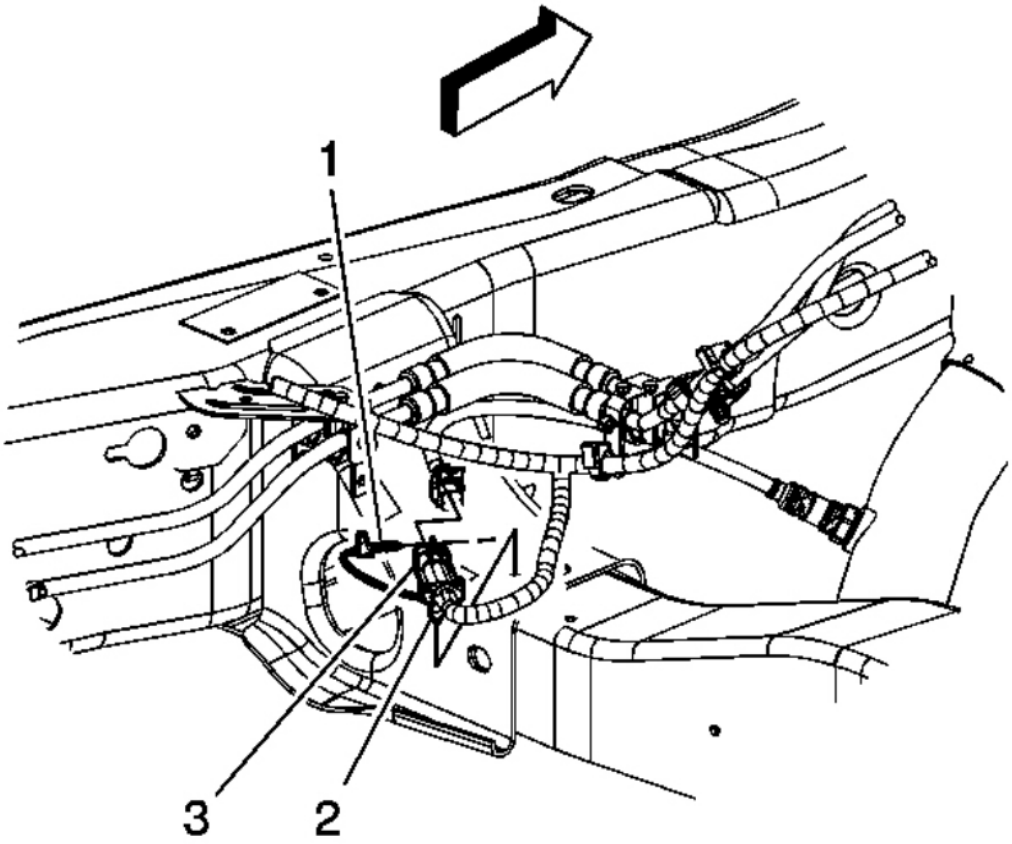

Fig. 103: View Of Left Rear CPA Retainer & Engine Wiring Harness Electrical Connector
Courtesy of GENERAL MOTORS CORP.

3. Connect the HO2S electrical connector to the engine wiring harness electrical connector (3).
4. Install the CPA retainer (1).
5. Lower the vehicle.

HEATED OXYGEN SENSOR REPLACEMENT - BANK 2 SENSOR 1 (1500 SERIES)

Removal Procedure

NOTE: **Do not remove the pigtail from either the heated oxygen sensor (HO2S) or the oxygen sensor (O2S). Removing the pigtail or the connector will affect sensor operation.**

cardiagn.com

Handle the oxygen sensor carefully. Do not drop the HO2S. Keep the in-line electrical connector and the louvered end free of grease, dirt, or other contaminants. Do not use cleaning solvents of any type.
Do not repair the wiring, connector or terminals. Replace the oxygen sensor if the pigtail wiring, connector, or terminal is damaged.
This external clean air reference is obtained by way of the oxygen sensor signal and heater wires. Any attempt to repair the wires, connectors, or terminals could result in the obstruction of the air reference and degraded sensor performance.
The following guidelines should be used when servicing the heated oxygen sensor:

- **Do not apply contact cleaner or other materials to the sensor or vehicle harness connectors. These materials may get into the sensor causing poor performance.**
- **Do not damage the sensor pigtail and harness wires in such a way that the wires inside are exposed. This could provide a path for foreign materials to enter the sensor and cause performance problems.**
- **Ensure the sensor or vehicle lead wires are not bent sharply or kinked. Sharp bends or kinks could block the reference air path through the lead wire.**
- **Do not remove or defeat the oxygen sensor ground wire, where applicable. Vehicles that utilize the ground wired sensor may rely on this ground as the only ground contact to the sensor. Removal of the ground wire will cause poor engine performance.**
- **Ensure that the peripheral seal remains intact on the vehicle harness connector in order to prevent damage due to water intrusion. The engine harness may be repaired using Packard's Crimp and Splice Seals Terminal Repair Kit. Under no circumstances should repairs be soldered since this could result in the air reference being obstructed.**

cardiagn.com

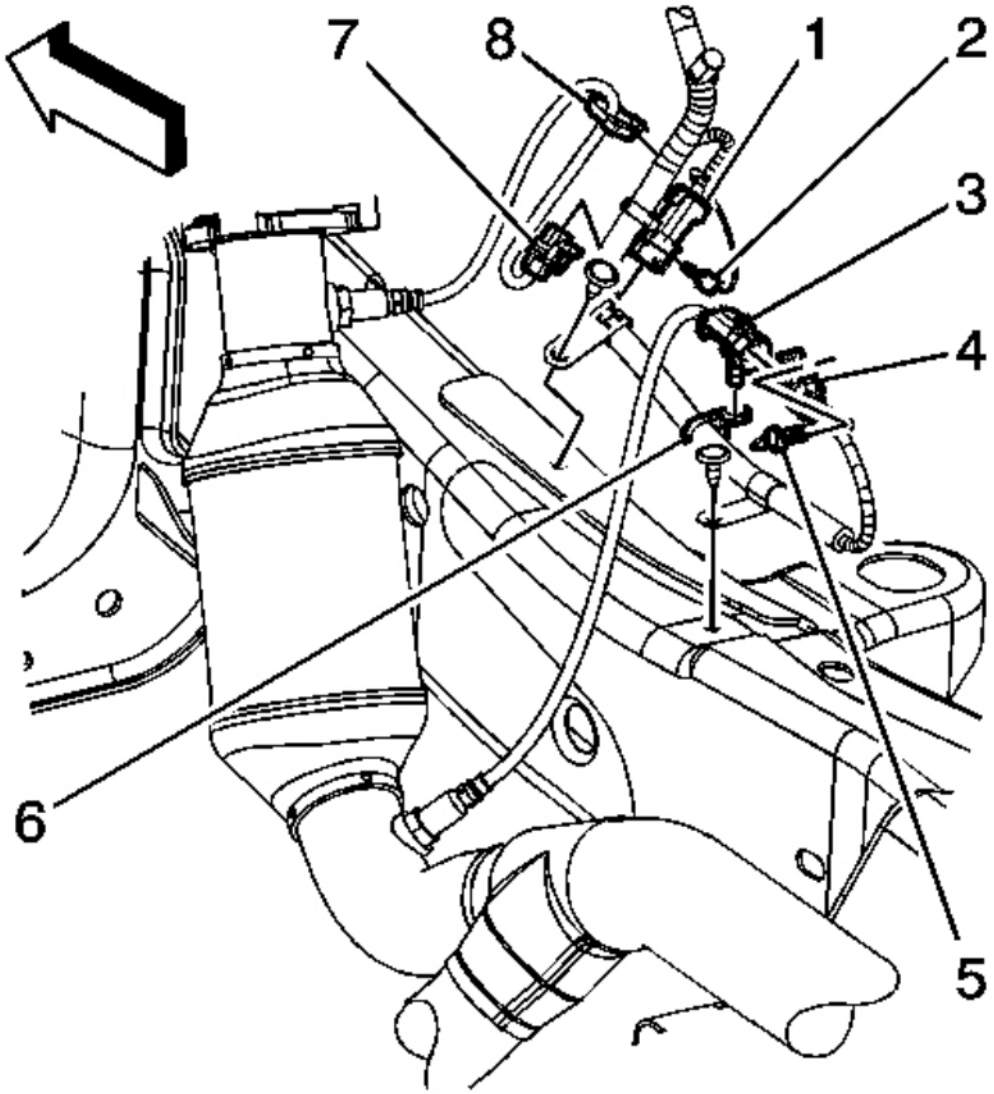

Fig. 104: View Of Engine Wiring Harness Electrical Connectors, (CPA) Retainers & Engine Harness Clips
Courtesy of GENERAL MOTORS CORP.

1. Raise and support the vehicle. Refer to **Lifting and Jacking the Vehicle** .
2. Remove the connector position assurance (CPA) retainer (2).
3. Disconnect the HO2S electrical connector from the engine wiring harness electrical connector (1).

cardiagn.com

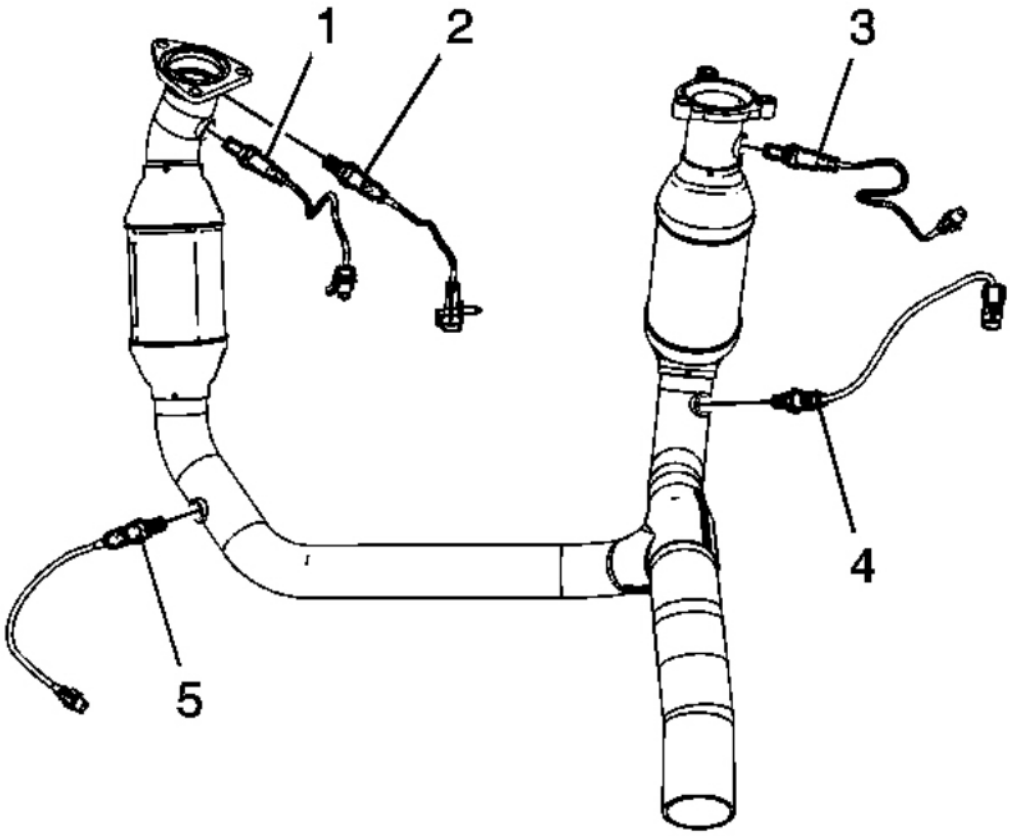

Fig. 105: View Of Catalytic Converter Assembly HO2S's
Courtesy of GENERAL MOTORS CORP.

NOTE: **Refer to Excessive Force and Oxygen Sensor Notice .**

4. Remove the HO2S (3).

Installation Procedure

IMPORTANT: A special anti-seize compound is used on the HO2S threads. The compound consists of liquid graphite and glass beads. The graphite tends to burn away, but the glass beads remain, making the sensor easier to remove. New, or service replacement sensors already have the compound applied to the threads. If the sensor is removed from an exhaust component and if for any reason the sensor is to be reinstalled, the threads must have anti-seize compound applied before the reinstallation.

cardiagn.com

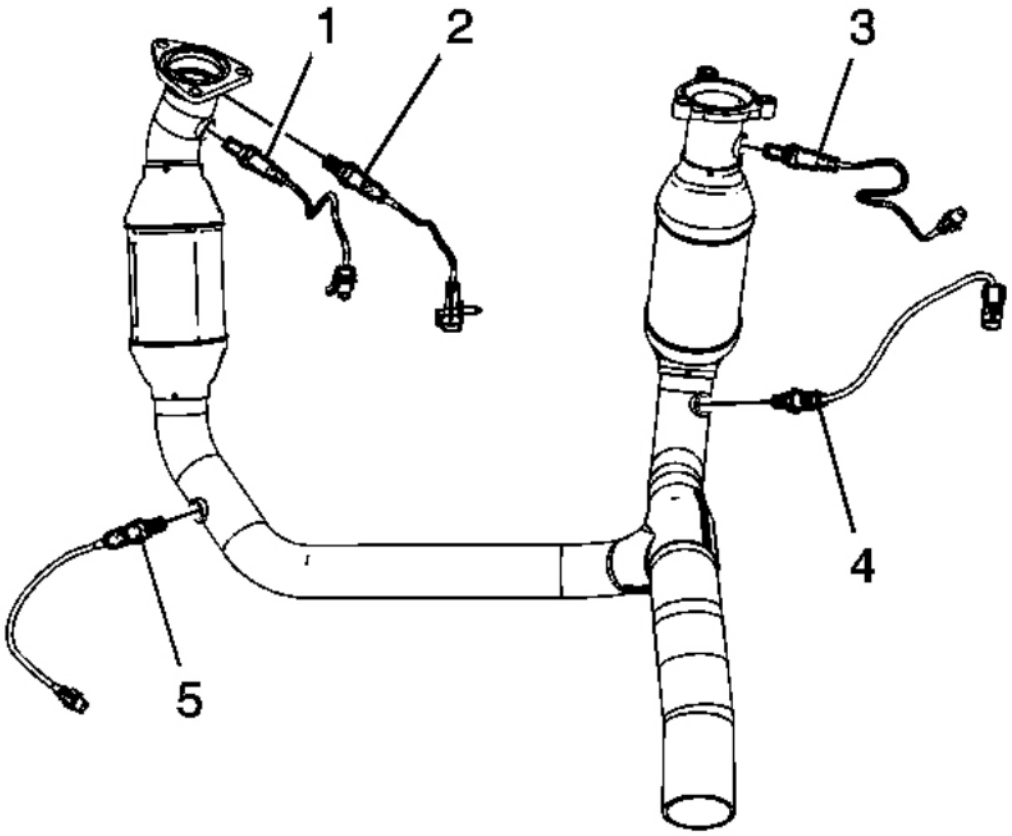

Fig. 106: View Of Catalytic Converter Assembly HO2S's
Courtesy of GENERAL MOTORS CORP.

NOTE: **Refer to Component Fastener Tightening Notice .**

1. If reinstalling the old sensor, coat the threads with anti-seize compound GM P/N 12377953, or equivalent.
2. Install the HO2S (3).

Tighten: Tighten the sensor to 42 N.m (31 lb ft).

cardiagn.com

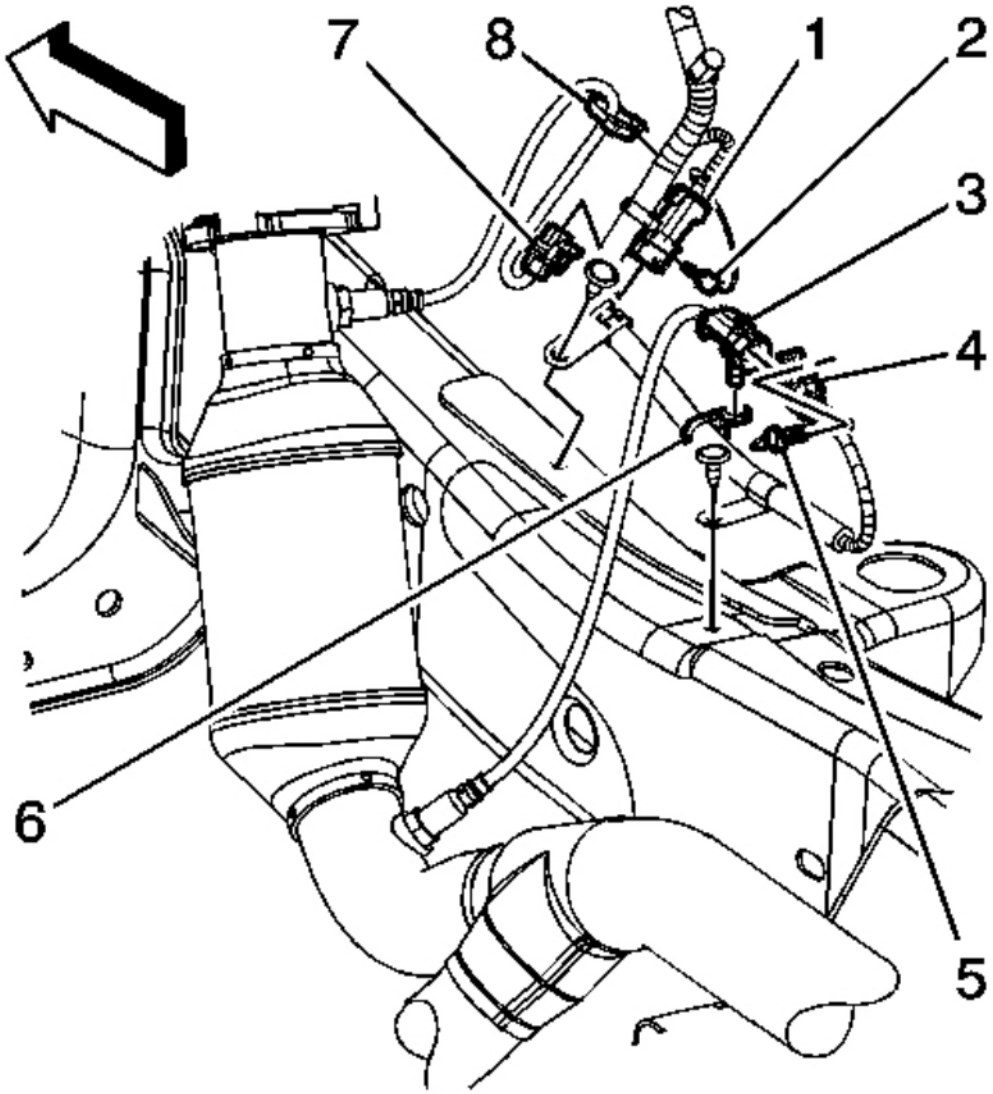

Fig. 107: View Of Engine Wiring Harness Electrical Connectors, (CPA) Retainers & Engine Harness Clips
Courtesy of GENERAL MOTORS CORP.

3. Connect the HO2S electrical connector to the engine wiring harness electrical connector (1).
4. Install the CPA retainer (2).
5. Lower the vehicle.

cardiagn.com

HEATED OXYGEN SENSOR REPLACEMENT - BANK 2 SENSOR 1 (2500 SERIES)

Removal Procedure

NOTE: **Do not remove the pigtail from either the heated oxygen sensor (HO2S) or the oxygen sensor (O2S). Removing the pigtail or the connector will affect sensor operation.**
Handle the oxygen sensor carefully. Do not drop the HO2S. Keep the in-line electrical connector and the louvered end free of grease, dirt, or other contaminants. Do not use cleaning solvents of any type.
Do not repair the wiring, connector or terminals. Replace the oxygen sensor if the pigtail wiring, connector, or terminal is damaged.
This external clean air reference is obtained by way of the oxygen sensor signal and heater wires. Any attempt to repair the wires, connectors, or terminals could result in the obstruction of the air reference and degraded sensor performance.
The following guidelines should be used when servicing the heated oxygen sensor:

- **Do not apply contact cleaner or other materials to the sensor or vehicle harness connectors. These materials may get into the sensor causing poor performance.**
- **Do not damage the sensor pigtail and harness wires in such a way that the wires inside are exposed. This could provide a path for foreign materials to enter the sensor and cause performance problems.**
- **Ensure the sensor or vehicle lead wires are not bent sharply or kinked. Sharp bends or kinks could block the reference air path through the lead wire.**
- **Do not remove or defeat the oxygen sensor ground wire, where applicable. Vehicles that utilize the ground wired sensor may rely on this ground as the only ground contact to the sensor. Removal of the ground wire will cause poor engine performance.**
- **Ensure that the peripheral seal remains intact on the vehicle harness connector in order to prevent damage due to water intrusion. The engine harness may be repaired using Packard's Crimp and Splice Seals Terminal Repair Kit. Under no circumstances should repairs be soldered since this could result in the air reference being obstructed.**

cardiagn.com

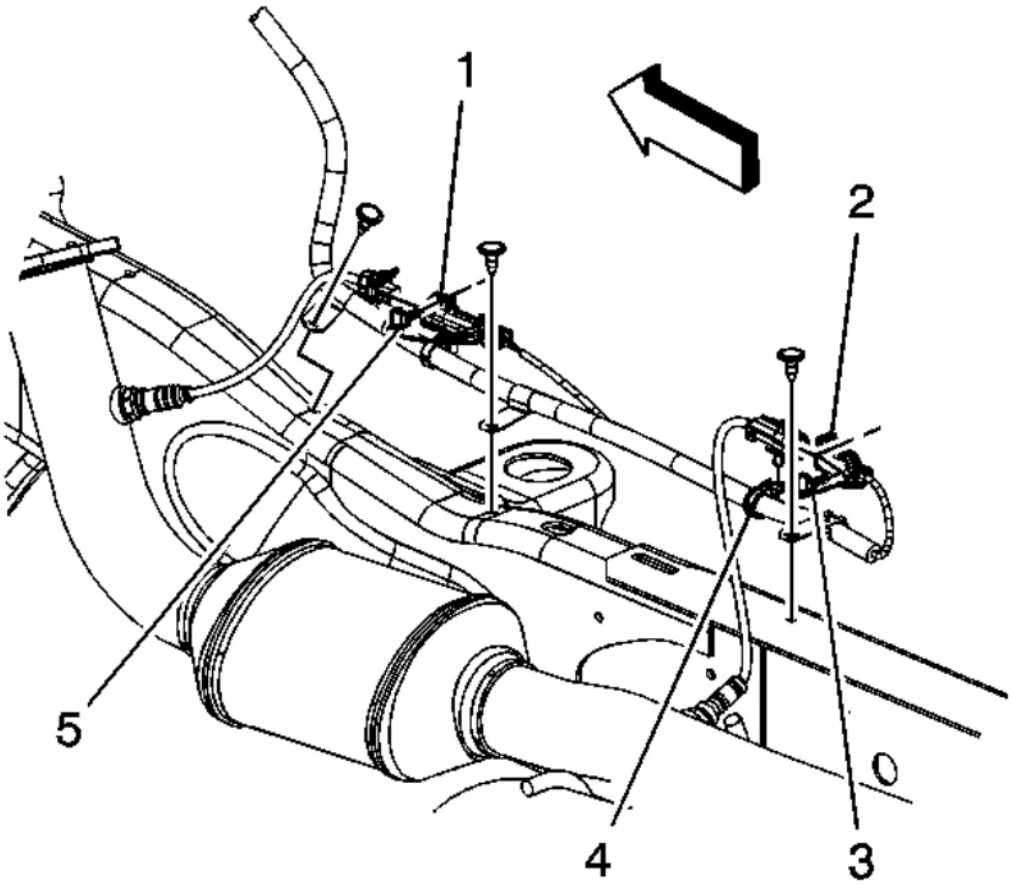

Fig. 108: View Of Engine Wiring Harness Electrical Connectors, (CPA) Retainers & Engine Harness Clip
Courtesy of GENERAL MOTORS CORP.

1. Raise and support the vehicle. Refer to **Lifting and Jacking the Vehicle** .
2. Remove the connector position assurance (CPA) retainer (5).
3. Disconnect the HO2S electrical connector from the engine wiring harness electrical connector (1).

cardiagn.com

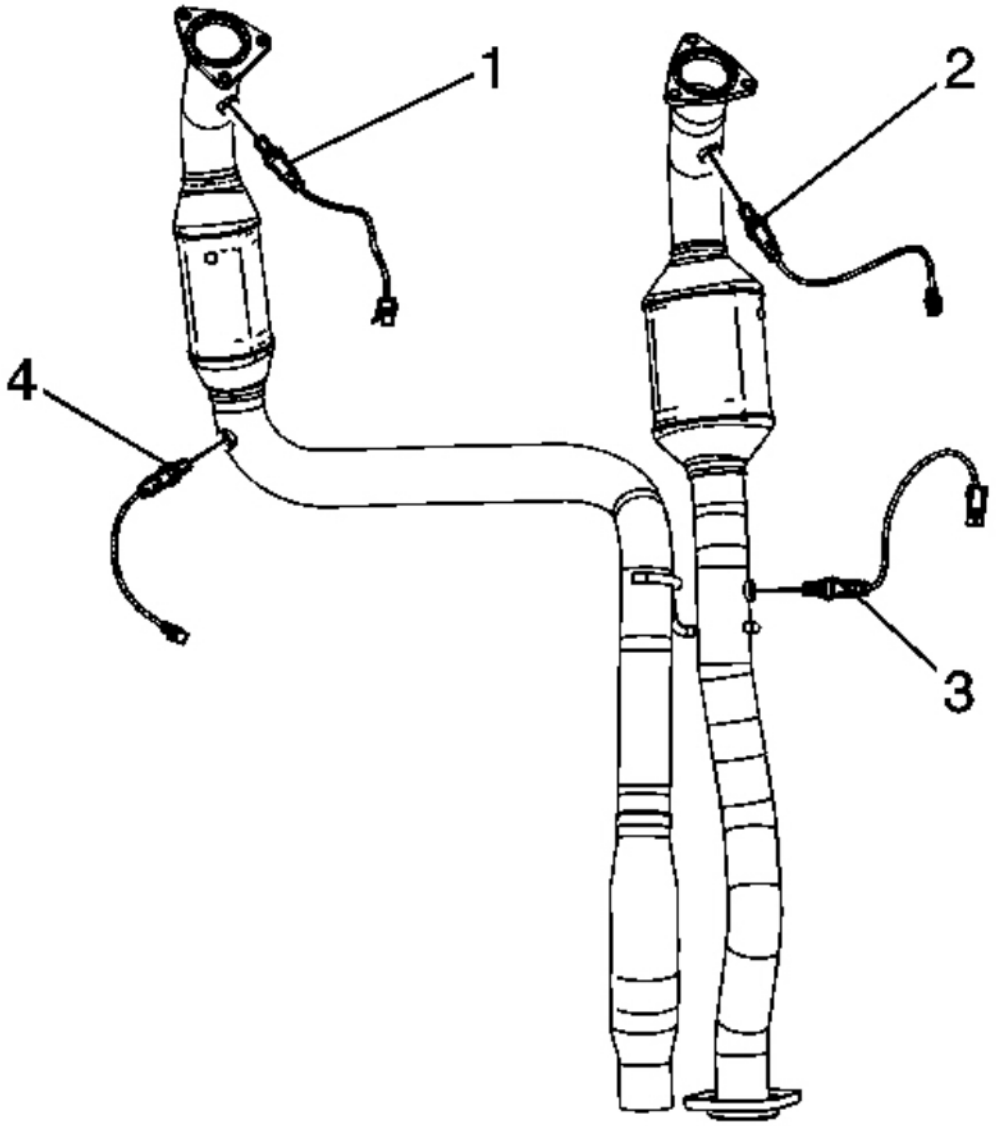

Fig. 109: View Of Catalytic Converter Assembly HO2S's
Courtesy of GENERAL MOTORS CORP.

NOTE: **Refer to Excessive Force and Oxygen Sensor Notice .**

4. Remove the HO2S (2).

cardiagn.com

Installation Procedure

IMPORTANT: A special anti-seize compound is used on the HO2S threads. The compound consists of liquid graphite and glass beads. The graphite tends to burn away, but the glass beads remain, making the sensor easier to remove. New, or service replacement sensors already have the compound applied to the threads. If the sensor is removed from an exhaust component and if for any reason the sensor is to be reinstalled, the threads must have anti-seize compound applied before the reinstallation.

cardiagn.com

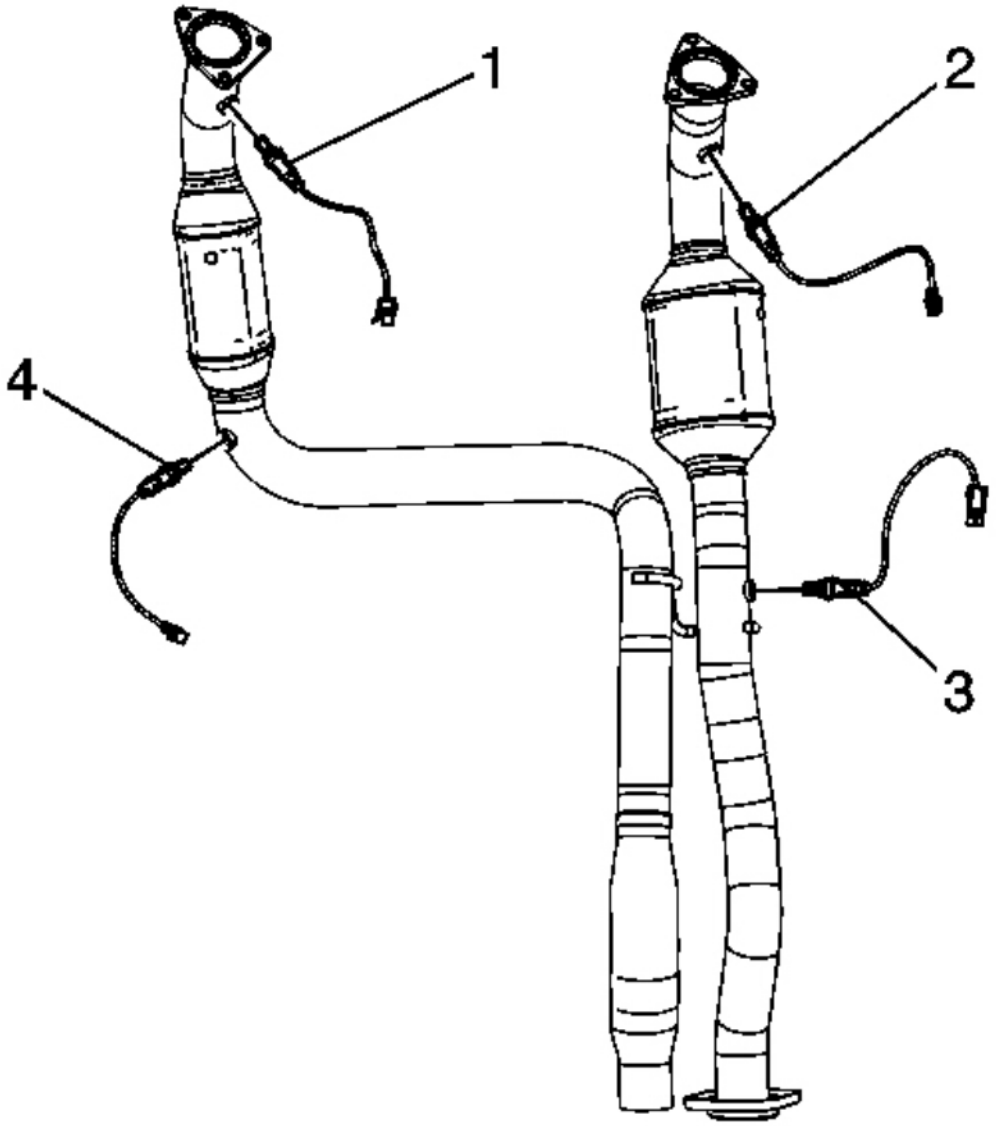

Fig. 110: View Of Catalytic Converter Assembly HO2S's
Courtesy of GENERAL MOTORS CORP.

NOTE: **Refer to Component Fastener Tightening Notice .**

1. If reinstalling the old sensor, coat the threads with anti-seize compound GM P/N 12377953, or equivalent.
2. Install the HO2S (2).

cardiagn.com

Tighten: Tighten the sensor to 42 N.m (31 lb ft).

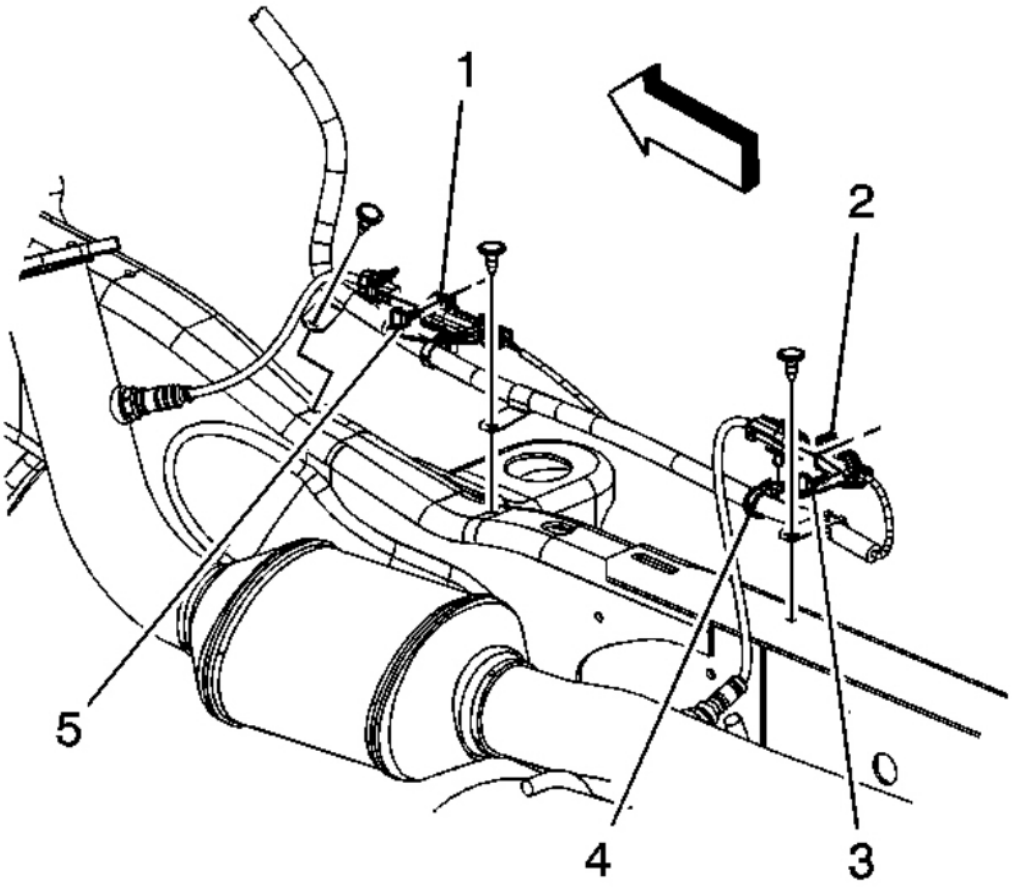

Fig. 111: View Of Engine Wiring Harness Electrical Connectors, (CPA) Retainers & Engine Harness Clip
Courtesy of GENERAL MOTORS CORP.

3. Connect the HO2S electrical connector to the engine wiring harness electrical connector (1).
4. Install the CPA retainer (5).
5. Lower the vehicle.

HEATED OXYGEN SENSOR REPLACEMENT - BANK 2 SENSOR 2 (1500 SERIES)

Removal Procedure

NOTE: **Do not remove the pigtail from either the heated oxygen sensor (HO2S) or the**

cardiagn.com

oxygen sensor (O2S). Removing the pigtail or the connector will affect sensor operation.
Handle the oxygen sensor carefully. Do not drop the HO2S. Keep the in-line electrical connector and the louvered end free of grease, dirt, or other contaminants. Do not use cleaning solvents of any type.
Do not repair the wiring, connector or terminals. Replace the oxygen sensor if the pigtail wiring, connector, or terminal is damaged.
This external clean air reference is obtained by way of the oxygen sensor signal and heater wires. Any attempt to repair the wires, connectors, or terminals could result in the obstruction of the air reference and degraded sensor performance.
The following guidelines should be used when servicing the heated oxygen sensor:

- **Do not apply contact cleaner or other materials to the sensor or vehicle harness connectors. These materials may get into the sensor causing poor performance.**
- **Do not damage the sensor pigtail and harness wires in such a way that the wires inside are exposed. This could provide a path for foreign materials to enter the sensor and cause performance problems.**
- **Ensure the sensor or vehicle lead wires are not bent sharply or kinked. Sharp bends or kinks could block the reference air path through the lead wire.**
- **Do not remove or defeat the oxygen sensor ground wire, where applicable. Vehicles that utilize the ground wired sensor may rely on this ground as the only ground contact to the sensor. Removal of the ground wire will cause poor engine performance.**
- **Ensure that the peripheral seal remains intact on the vehicle harness connector in order to prevent damage due to water intrusion. The engine harness may be repaired using Packard's Crimp and Splice Seals Terminal Repair Kit. Under no circumstances should repairs be soldered since this could result in the air reference being obstructed.**

cardiagn.com

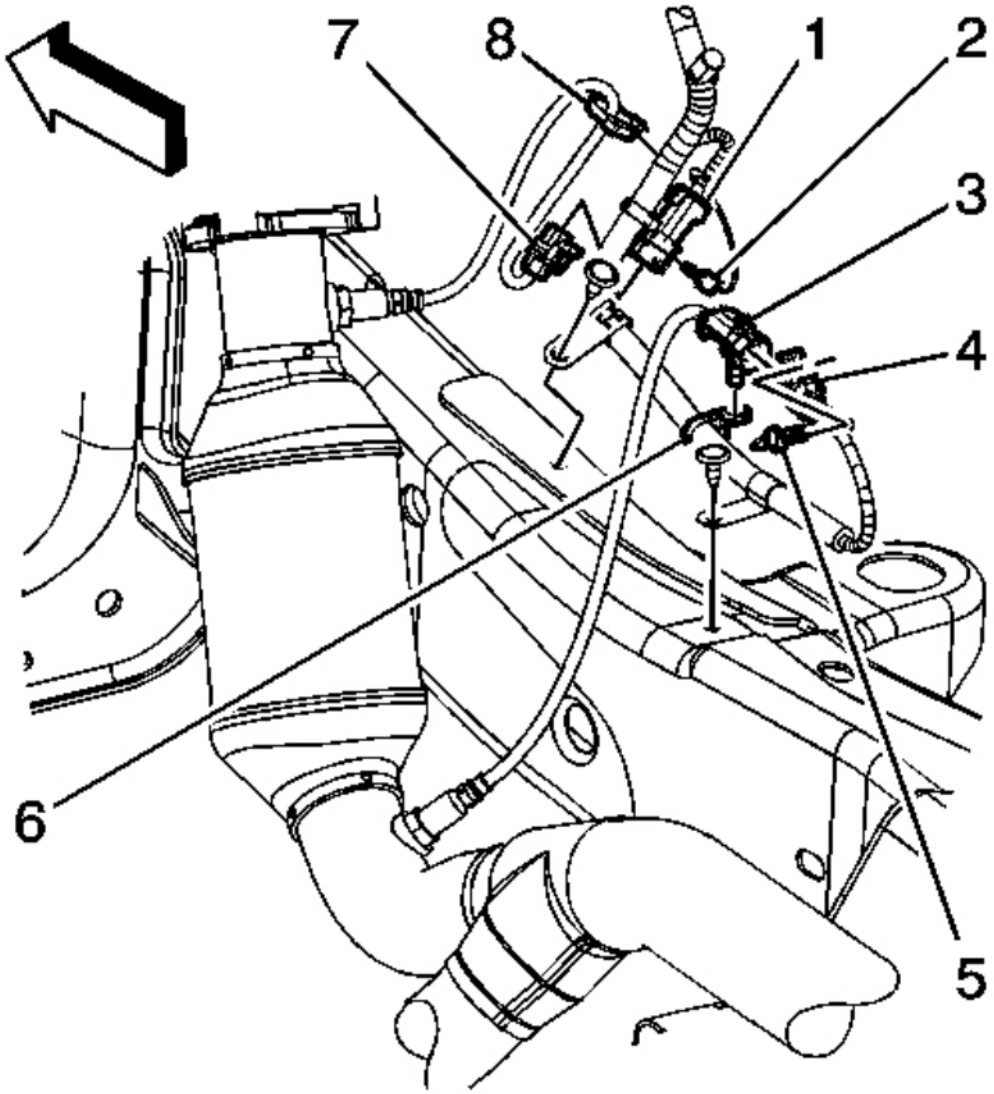

Fig. 112: View Of Engine Wiring Harness Electrical Connectors, (CPA) Retainers & Engine Harness Clips
Courtesy of GENERAL MOTORS CORP.

1. Raise and support the vehicle. Refer to **Lifting and Jacking the Vehicle** .
2. Remove the connector position assurance (CPA) retainer (4).
3. Disconnect the engine wiring harness electrical connector (3) from the HO2S electrical connector.
4. Remove the HO2S electrical connector clip from the engine harness clip (5).

cardiagn.com

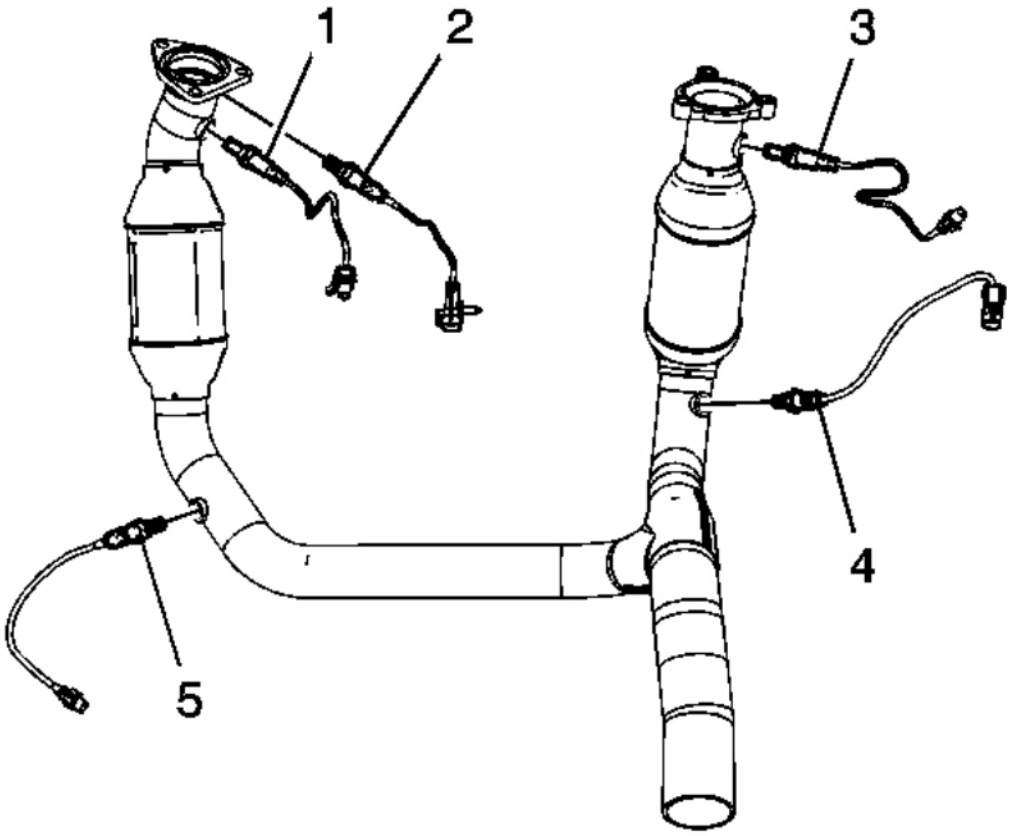

Fig. 113: View Of Catalytic Converter Assembly HO2S's
Courtesy of GENERAL MOTORS CORP.

NOTE: **Refer to Excessive Force and Oxygen Sensor Notice .**

5. Remove the HO2S (4).

Installation Procedure

IMPORTANT: A special anti-seize compound is used on the HO2S threads. The compound consists of liquid graphite and glass beads. The graphite tends to burn away, but the glass beads remain, making the sensor easier to remove. New, or service replacement sensors already have the compound applied to the threads. If the sensor is removed from an exhaust component and if for any reason the sensor is to be reinstalled, the threads must have anti-seize compound applied before the reinstallation.

cardiagn.com

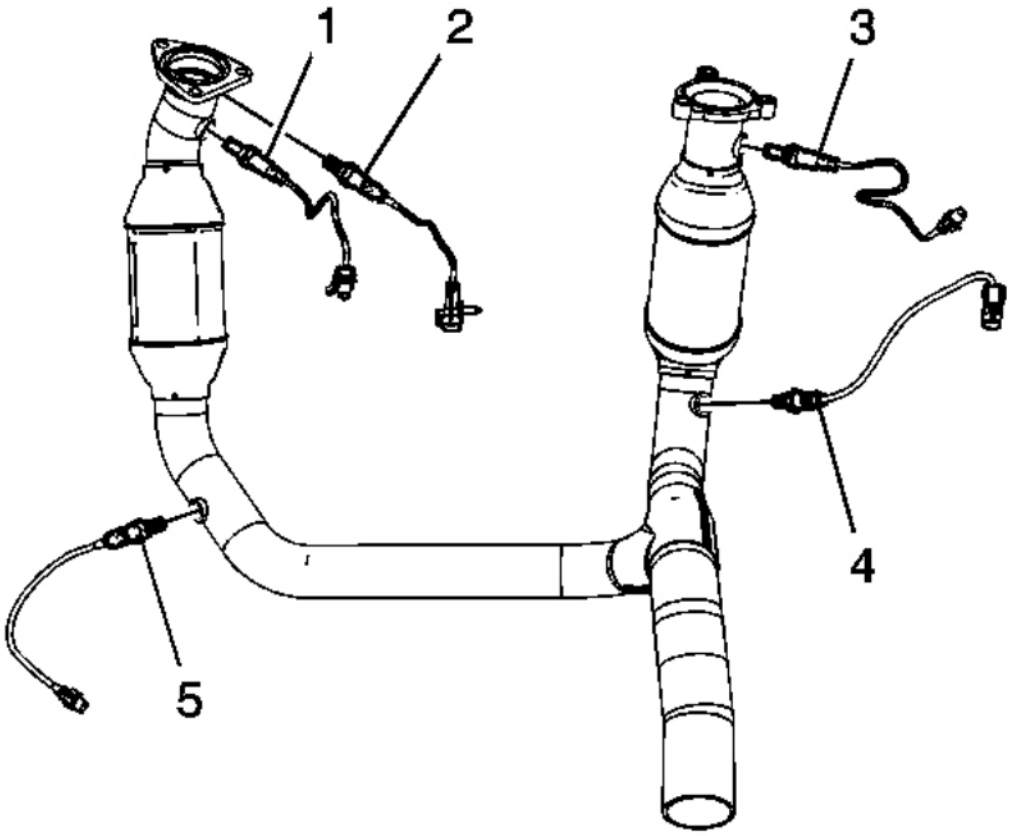

Fig. 114: View Of Catalytic Converter Assembly HO2S's
Courtesy of GENERAL MOTORS CORP.

NOTE: **Refer to Component Fastener Tightening Notice .**

1. If reinstalling the old sensor, coat the threads with anti-seize compound GM P/N 12377953, or equivalent.
2. Install the HO2S (4).

Tighten: Tighten the sensor to 42 N.m (31 lb ft).

cardiagn.com

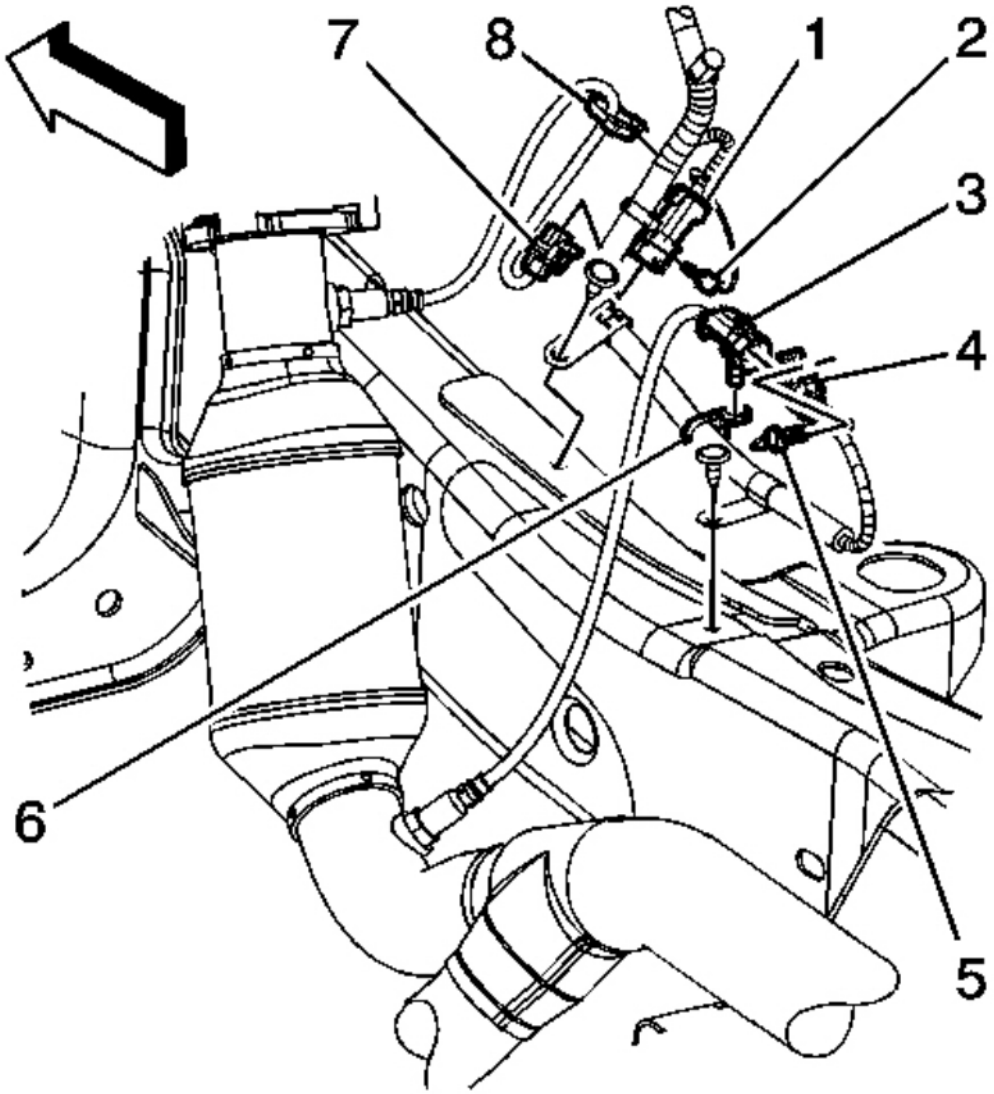

Fig. 115: View Of Engine Wiring Harness Electrical Connectors, (CPA) Retainers & Engine Harness Clips
Courtesy of GENERAL MOTORS CORP.

3. Install the HO2S electrical connector clip to the engine harness clip (5).
4. Connect the engine wiring harness electrical connector (3) to the HO2S electrical connector.
5. Install the CPA retainer (4).
6. Lower the vehicle.

cardiagn.com

HEATED OXYGEN SENSOR REPLACEMENT - BANK 2 SENSOR 2 (2500 SERIES)

Removal Procedure

NOTE: **Do not remove the pigtail from either the heated oxygen sensor (HO2S) or the oxygen sensor (O2S). Removing the pigtail or the connector will affect sensor operation.**
Handle the oxygen sensor carefully. Do not drop the HO2S. Keep the in-line electrical connector and the louvered end free of grease, dirt, or other contaminants. Do not use cleaning solvents of any type.
Do not repair the wiring, connector or terminals. Replace the oxygen sensor if the pigtail wiring, connector, or terminal is damaged.
This external clean air reference is obtained by way of the oxygen sensor signal and heater wires. Any attempt to repair the wires, connectors, or terminals could result in the obstruction of the air reference and degraded sensor performance.
The following guidelines should be used when servicing the heated oxygen sensor:

- **Do not apply contact cleaner or other materials to the sensor or vehicle harness connectors. These materials may get into the sensor causing poor performance.**
- **Do not damage the sensor pigtail and harness wires in such a way that the wires inside are exposed. This could provide a path for foreign materials to enter the sensor and cause performance problems.**
- **Ensure the sensor or vehicle lead wires are not bent sharply or kinked. Sharp bends or kinks could block the reference air path through the lead wire.**
- **Do not remove or defeat the oxygen sensor ground wire, where applicable. Vehicles that utilize the ground wired sensor may rely on this ground as the only ground contact to the sensor. Removal of the ground wire will cause poor engine performance.**
- **Ensure that the peripheral seal remains intact on the vehicle harness connector in order to prevent damage due to water intrusion. The engine harness may be repaired using Packard's Crimp and Splice Seals Terminal Repair Kit. Under no circumstances should repairs be soldered since this could result in the air reference being obstructed.**

cardiagn.com

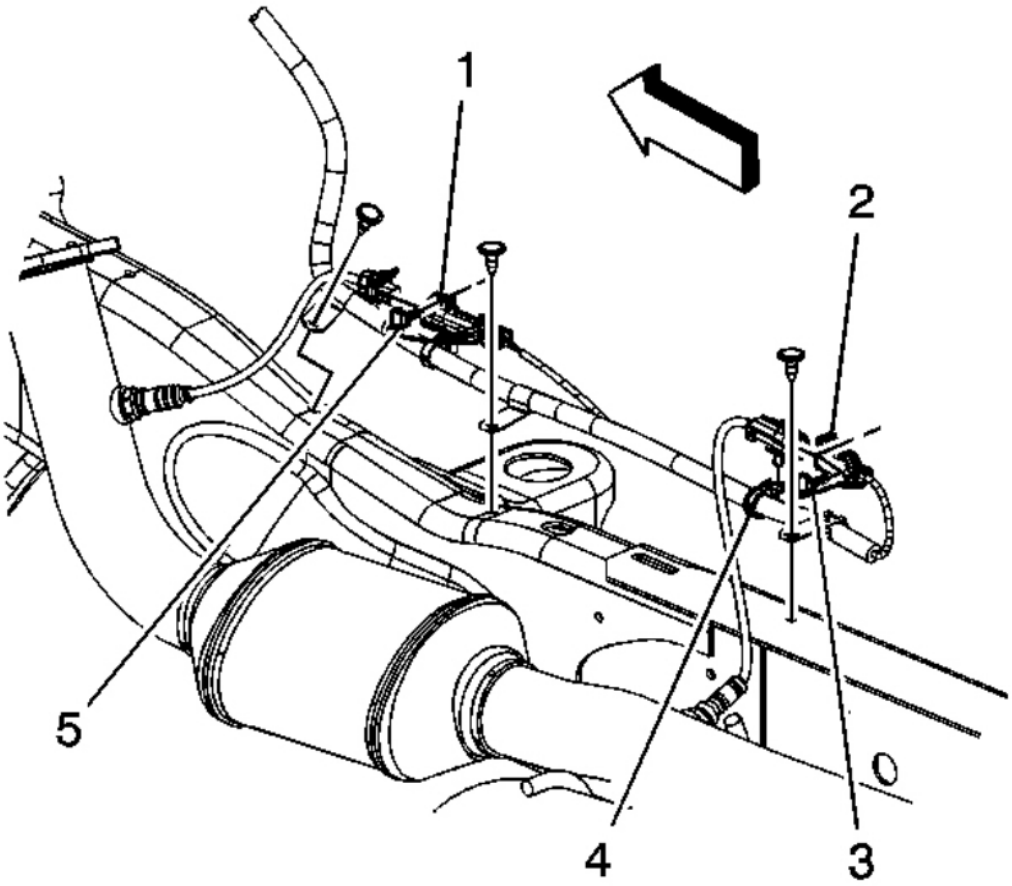

Fig. 116: View Of Engine Wiring Harness Electrical Connectors, (CPA) Retainers & Engine Harness Clip
Courtesy of GENERAL MOTORS CORP.

1. Raise and support the vehicle. Refer to **Lifting and Jacking the Vehicle** .
2. Remove the connector position assurance (CPA) retainer (3).
3. Disconnect the engine wiring harness electrical connector (2) from the HO2S electrical connector.
4. Remove the HO2S electrical connector clip from the engine harness clip (4).

cardiagn.com

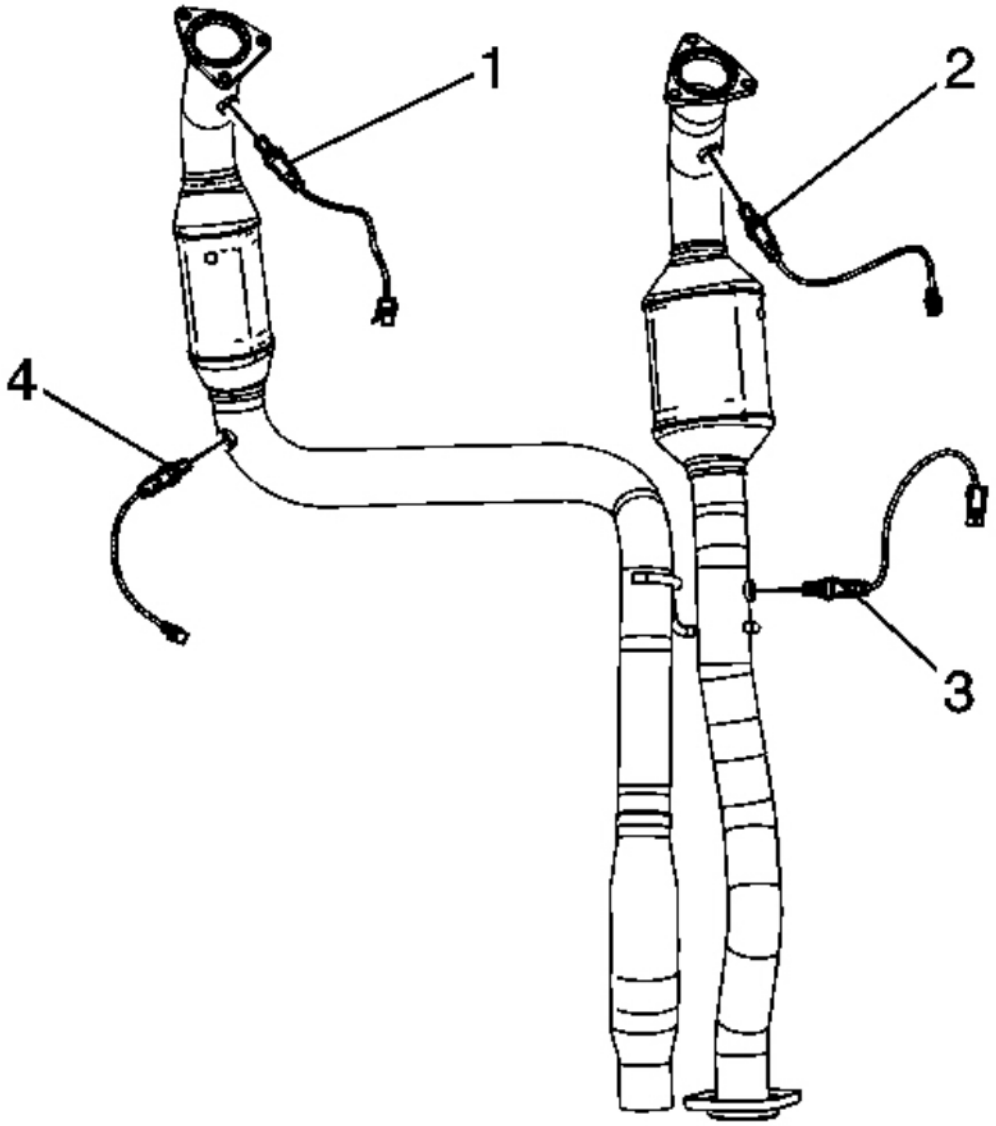

Fig. 117: View Of Catalytic Converter Assembly HO2S's
Courtesy of GENERAL MOTORS CORP.

NOTE: **Refer to Excessive Force and Oxygen Sensor Notice .**

5. Remove the HO2S (3).

cardiagn.com

Installation Procedure

IMPORTANT: A special anti-seize compound is used on the HO2S threads. The compound consists of liquid graphite and glass beads. The graphite tends to burn away, but the glass beads remain, making the sensor easier to remove. New, or service replacement sensors already have the compound applied to the threads. If the sensor is removed from an exhaust component and if for any reason the sensor is to be reinstalled, the threads must have anti-seize compound applied before the reinstallation.

cardiagn.com

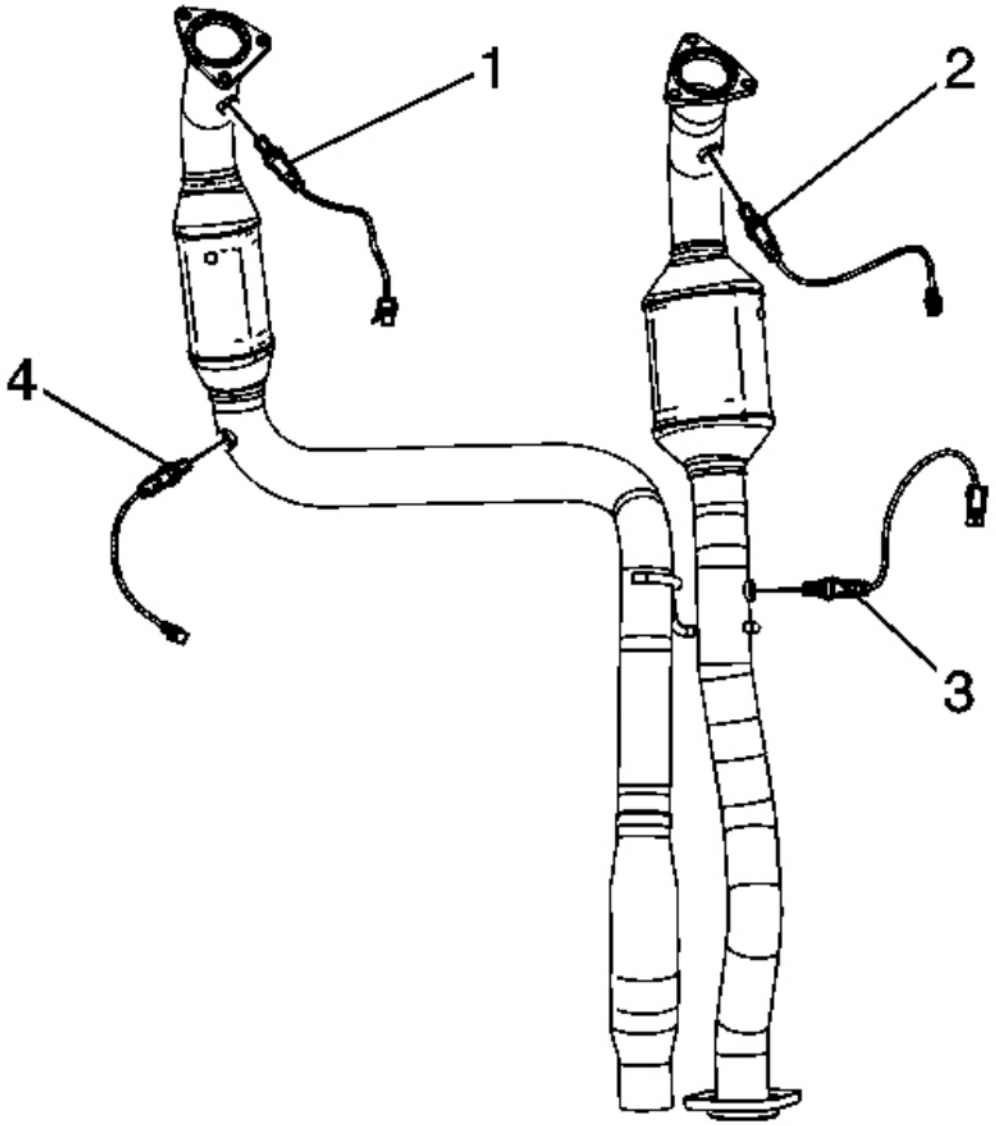

Fig. 118: View Of Catalytic Converter Assembly HO2S's
Courtesy of GENERAL MOTORS CORP.

NOTE: **Refer to Component Fastener Tightening Notice .**

1. If reinstalling the old sensor, coat the threads with anti-seize compound GM P/N 12377953, or equivalent.
2. Install the HO2S (3).

cardiagn.com

Tighten: Tighten the sensor to 42 N.m (31 lb ft).

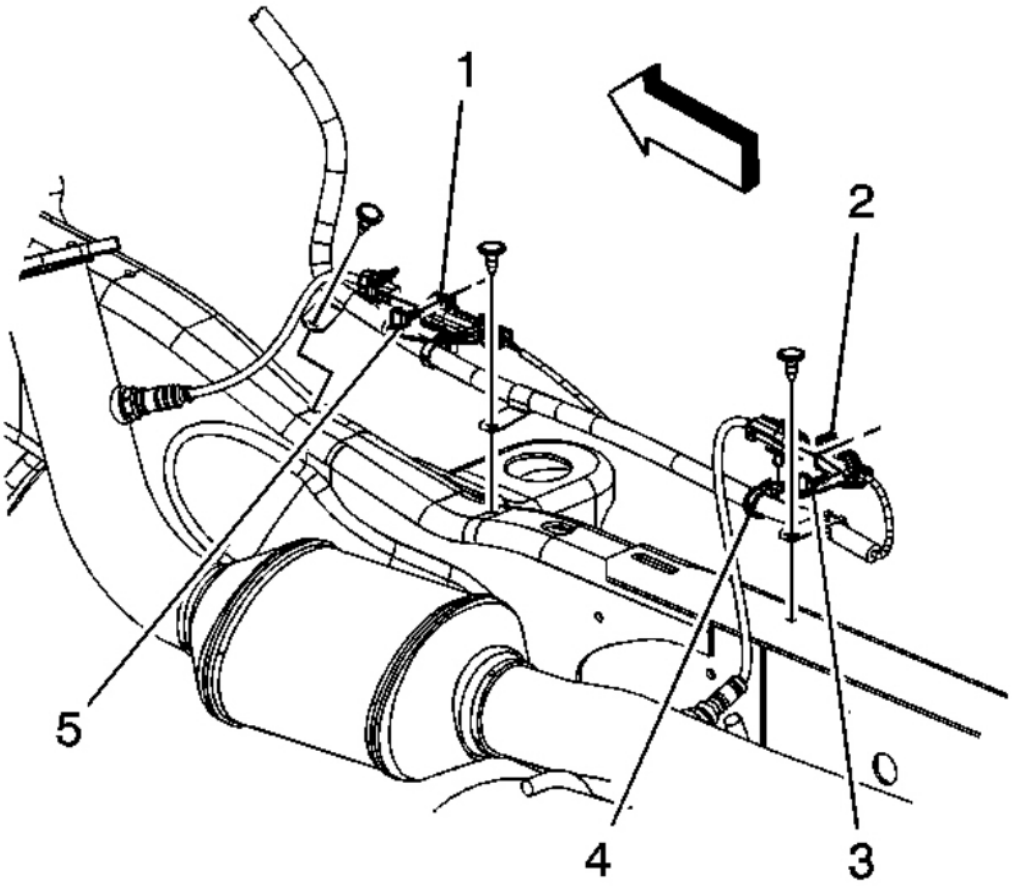

Fig. 119: View Of Engine Wiring Harness Electrical Connectors, (CPA) Retainers & Engine Harness Clip
Courtesy of GENERAL MOTORS CORP.

3. Install the HO2S electrical connector clip to the engine harness clip (4).
4. Connect the engine wiring harness electrical connector (2) to the HO2S electrical connector.
5. Install the CPA retainer (3).
6. Lower the vehicle.

ACCELERATOR PEDAL POSITION SENSOR REPLACEMENT

Removal Procedure

cardiagn.com

NOTE: **Handle the electronic throttle control components carefully. Use cleanliness in order to prevent damage. Do not drop the electronic throttle control components. Do not roughly handle the electronic throttle control components. Do not immerse the electronic throttle control components in cleaning solvents of any type.**

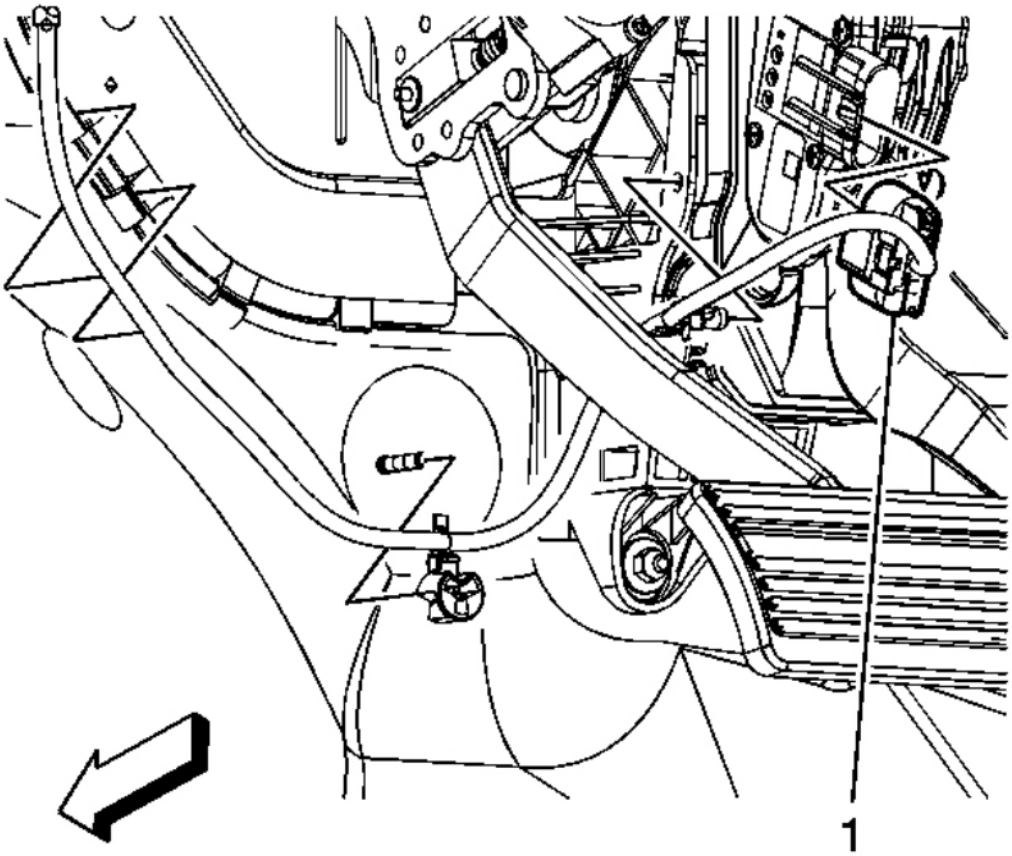

Fig. 120: View Of APP Sensor Electrical Connector
Courtesy of GENERAL MOTORS CORP.

1. Remove the knee bolster. Refer to **Knee Bolster Replacement (Cadillac)** or **Knee Bolster Replacement (Except Cadillac)** .
2. Push down the small tab and disconnect the accelerator pedal position (APP) sensor electrical connector (1).

cardiagn.com

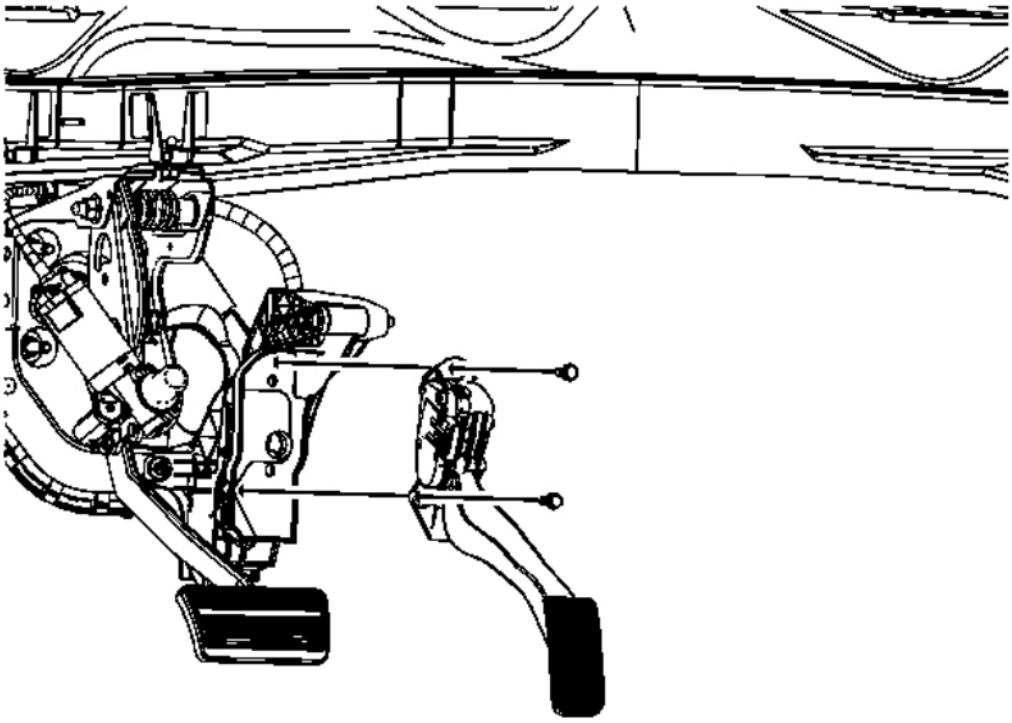

Fig. 121: View Of Accelerator Pedal Position Sensor Assembly
Courtesy of GENERAL MOTORS CORP.

3. Remove the accelerator pedal bolts.
4. Remove the accelerator pedal.

Installation Procedure

cardiagn.com

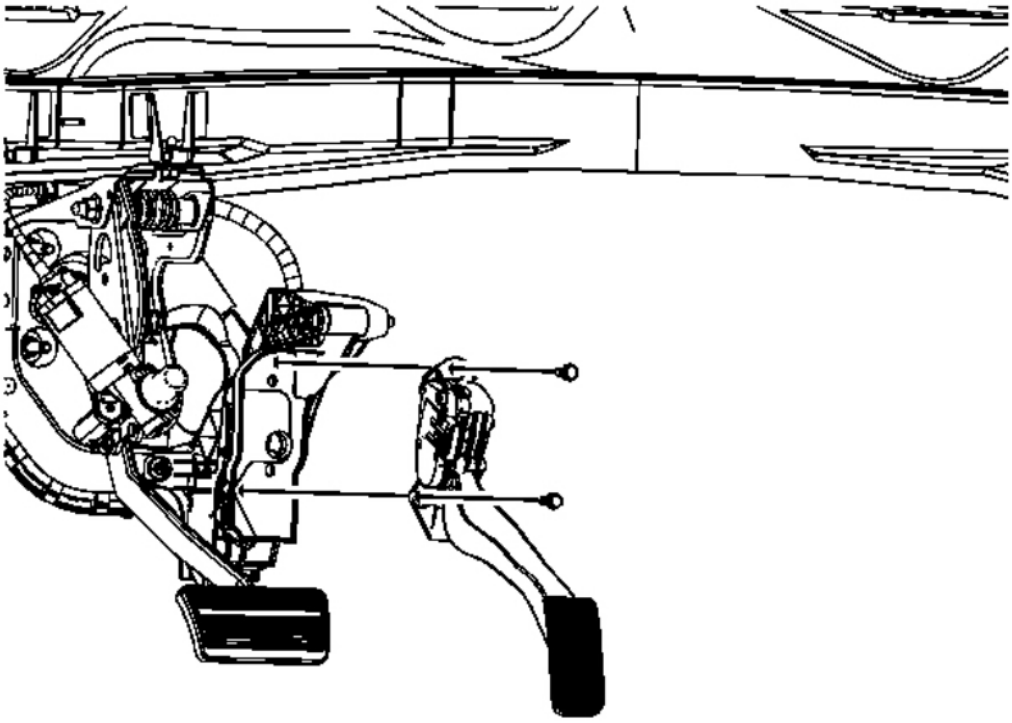

Fig. 122: View Of Accelerator Pedal Position Sensor Assembly
Courtesy of GENERAL MOTORS CORP.

1. Position the accelerator pedal to the accelerator pedal bracket.

   NOTE: **Refer to Fastener Notice .**

2. Install the accelerator pedal bolts.

   Tighten: Tighten the bolts to 9 N.m (80 lb in).

cardiagn.com

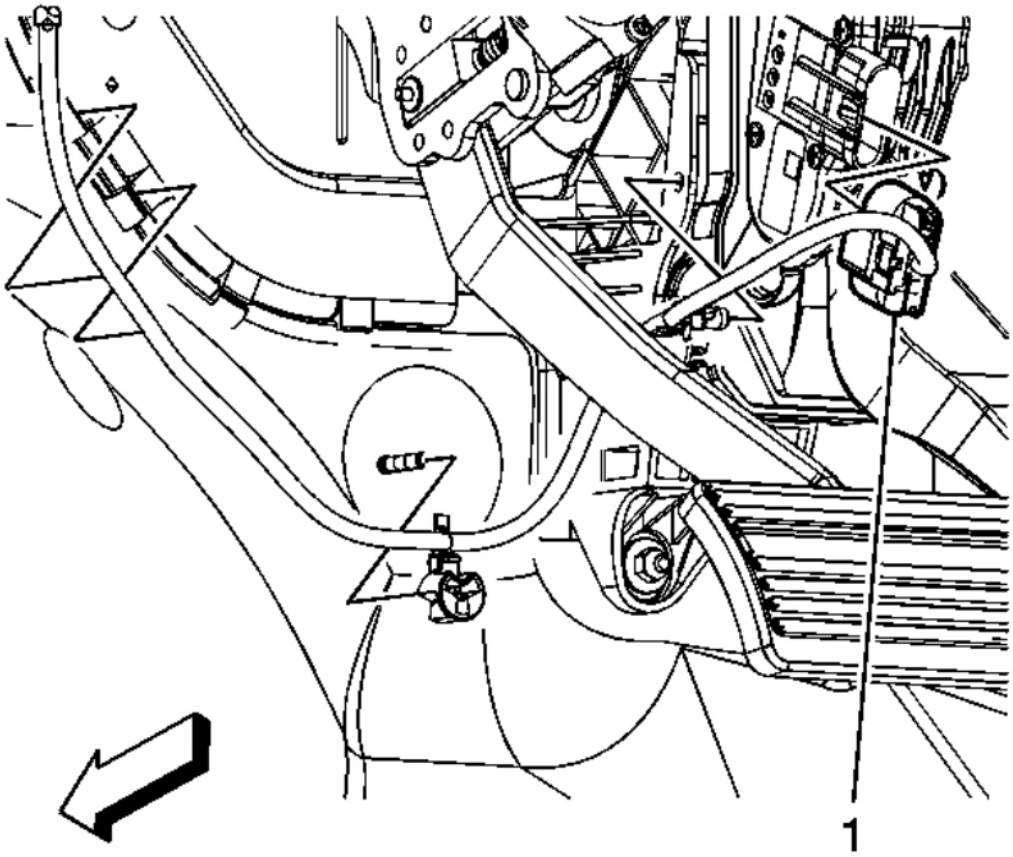

Fig. 123: View Of APP Sensor Electrical Connector
Courtesy of GENERAL MOTORS CORP.

3. Connect the APP sensor electrical connector (1).
4. Connect a scan tool to the diagnostic port in order to test for proper throttle-opening and throttle-closing range.
5. Operate the accelerator pedal and monitor the throttle angles. The accelerator pedal should operate freely, without binding, between a closed throttle, and a wide open throttle (WOT).
6. Verify that the vehicle meets the following conditions:
   - The vehicle is not in a reduced engine power mode.
   - The ignition is ON.
   - The engine is OFF.
7. Install the knee bolster. Refer to **Knee Bolster Replacement (Cadillac)** or **Knee Bolster Replacement (Except Cadillac)** .

cardiagn.com

THROTTLE BODY ASSEMBLY REPLACEMENT

Removal Procedure

NOTE: **Handle the electronic throttle control components carefully. Use cleanliness in order to prevent damage. Do not drop the electronic throttle control components. Do not roughly handle the electronic throttle control components. Do not immerse the electronic throttle control components in cleaning solvents of any type.**

NOTE: **DO NOT for any reason, insert a screwdriver or other small hand tools into the throttle body to hold open the throttle plate, as the wedge inside the throttle body could be damaged.**

cardiagn.com

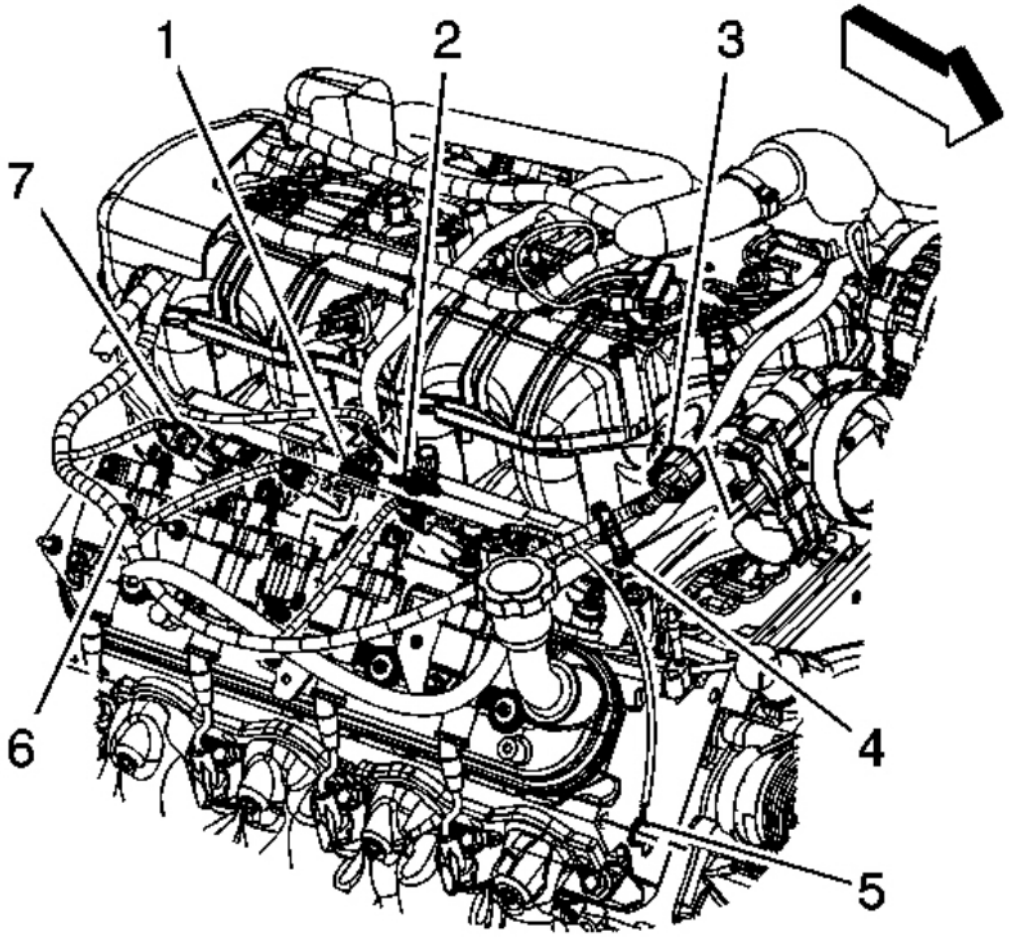

Fig. 124: View Of CPA Retainer, Engine Harness Electrical Connectors & Harness Clips
Courtesy of GENERAL MOTORS CORP.

1. Remove the air cleaner outlet duct. Refer to **Air Cleaner Resonator Outlet Duct Replacement**.
2. Disconnect the engine wiring harness electrical connector (3) from the electronic throttle control.

cardiagn.com

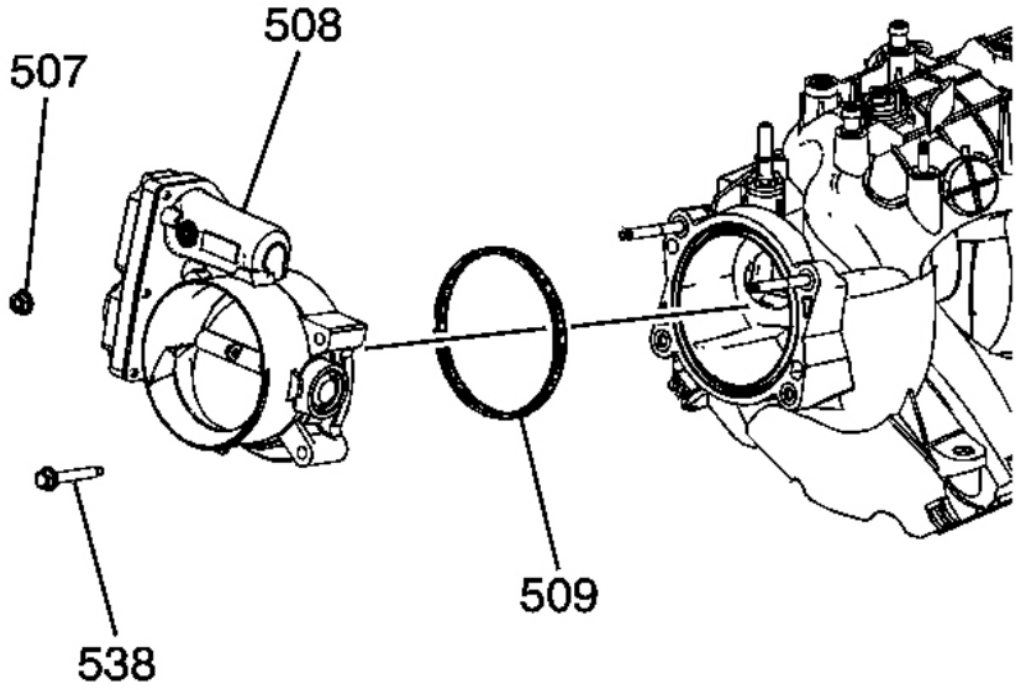

Fig. 125: Throttle Body Assembly
Courtesy of GENERAL MOTORS CORP.

3. Remove the throttle body nuts (507) and bolts (538).
4. Remove the throttle body (508).
5. Remove and discard the throttle body gasket (509).

Installation Procedure

cardiagn.com

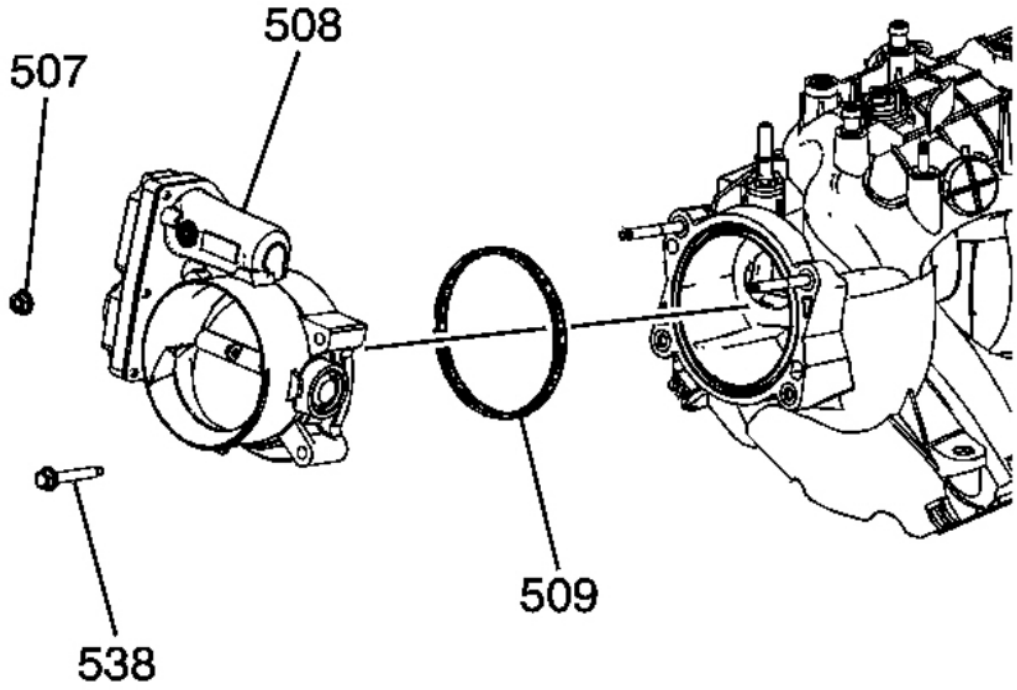

Fig. 126: Throttle Body Assembly
Courtesy of GENERAL MOTORS CORP.

1. Install a NEW throttle body gasket to the intake manifold. Align the tab of the gasket with the notch in the manifold.

   NOTE: **Refer to Fastener Notice .**

2. Install the throttle body (508), bolts (538), and nuts (507).

   Tighten: Tighten the bolts/nuts to 10 N.m (89 lb in).

cardiagn.com

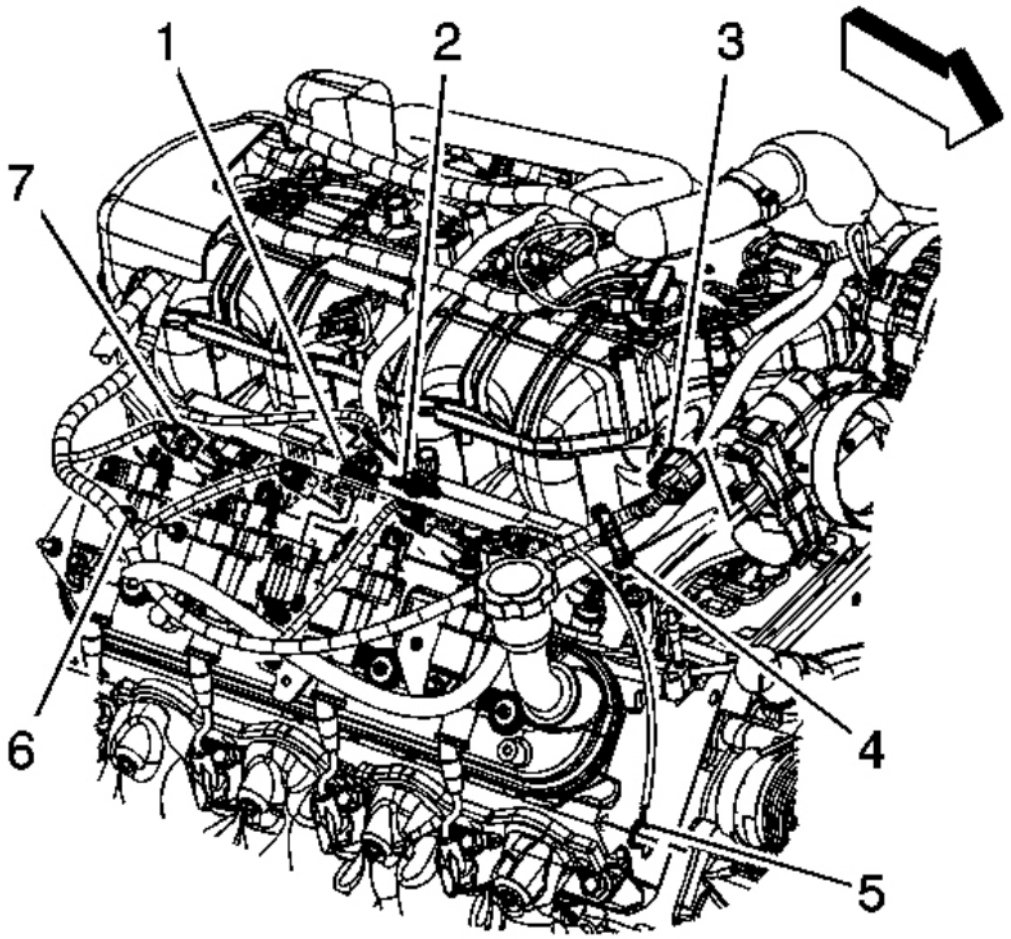

Fig. 127: View Of CPA Retainer, Engine Harness Electrical Connectors & Harness Clips
Courtesy of GENERAL MOTORS CORP.

IMPORTANT: Verify that the engine wiring harness electrical connector seal for the electronic throttle control is properly installed and not damaged.

3. Connect the engine wiring harness electrical connector (3) to the electronic throttle control.
4. Install the air cleaner outlet duct. Refer to **Air Cleaner Resonator Outlet Duct Replacement**.
5. Connect a scan tool in order to test for proper throttle-opening and throttle-closing range.
6. Operate the accelerator pedal and monitor the throttle angles. The accelerator pedal should operate freely, without binding, between a closed throttle, and a wide open throttle (WOT).
7. Verify that the vehicle meets the following conditions:

cardiagn.com

- The vehicle is not in a reduced engine power mode.
- The ignition is ON.
- The engine is OFF.

8. Start the engine.
9. Inspect for coolant leaks.

THROTTLE BODY CLEANING

1. Remove the air cleaner outlet duct. Refer to **Air Cleaner Resonator Outlet Duct Replacement**.

CAUTION: Turn OFF the ignition before inserting fingers into the throttle bore. Unexpected movement of the throttle blade could cause personal injury.

NOTE: Do not insert any tools into the throttle body bore in order to avoid damage to the throttle valve plate.

2. Inspect the throttle body bore and the throttle plate for deposits. You will need to open the throttle plate in order to inspect all surfaces.

NOTE: Do not use any solvent that contains Methyl Ethyl Ketone (MEK). This solvent may damage fuel system components.

3. Clean the throttle body bore and the throttle plate using a clean shop towel with GM Top Engine Cleaner, P/N 1052626, or AC-Delco Carburetor Tune-Up Conditioner, P/N X66-P, or an equivalent product.
4. Install the air cleaner outlet duct. Refer to **Air Cleaner Resonator Outlet Duct Replacement**.

FUEL PRESSURE GAGE INSTALLATION AND REMOVAL

Tools Required

J 34730-1A Fuel Pressure Gage. See **Special Tools**.

Installation Procedure

cardiagn.com

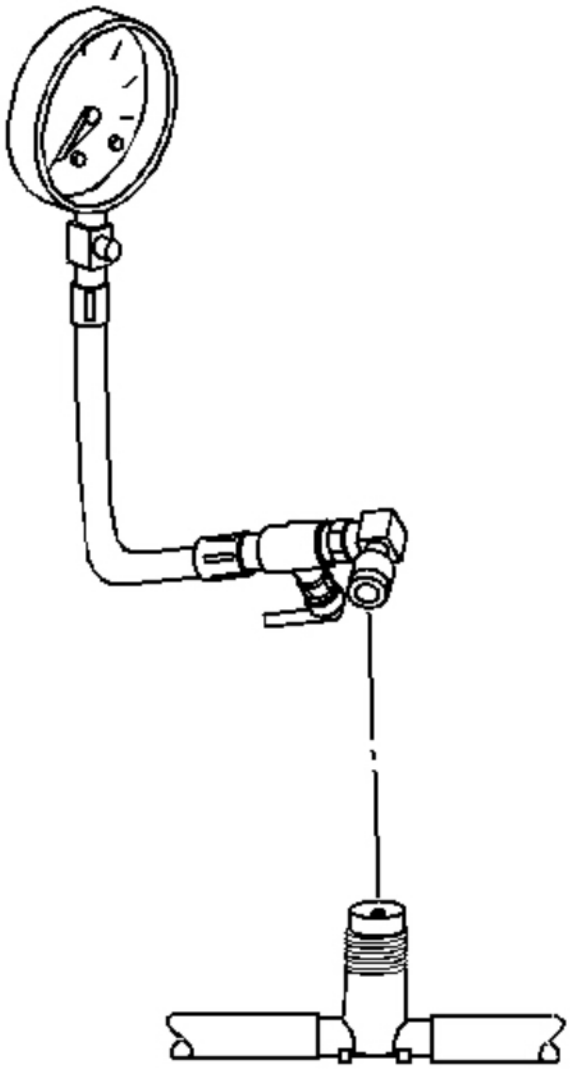

Fig. 128: Identifying Fuel Pressure Gauge J 34730-1A
Courtesy of GENERAL MOTORS CORP.

1. Remove the air cleaner outlet duct. Refer to **Air Cleaner Resonator Outlet Duct Replacement**.

CAUTION: Gasoline or gasoline vapors are highly flammable. A fire could occur if an ignition source is present. Never drain or store gasoline or diesel fuel in an open container, due to the possibility of fire or explosion. Have a dry chemical (Class B) fire extinguisher nearby.

cardiagn.com

2. Remove the fuel pressure service valve cap.

CAUTION: Wrap a shop towel around the fuel pressure connection in order to reduce the risk of fire and personal injury. The towel will absorb any fuel leakage that occurs during the connection of the fuel pressure gage. Place the towel in an approved container when the connection of the fuel pressure gage is complete.

3. Connect the **J 34730-1A** to the fuel pressure service valve. See **Special Tools**. Wrap a shop towel around the valve while connecting the gage in order to avoid fuel spillage.

CAUTION: Do not drain the fuel into an open container. Never store the fuel in an open container due to the possibility of a fire or an explosion.

4. Install the bleed hose from the **J 34730-1A** into an approved fuel container. See **Special Tools**.

Removal Procedure

cardiagn.com

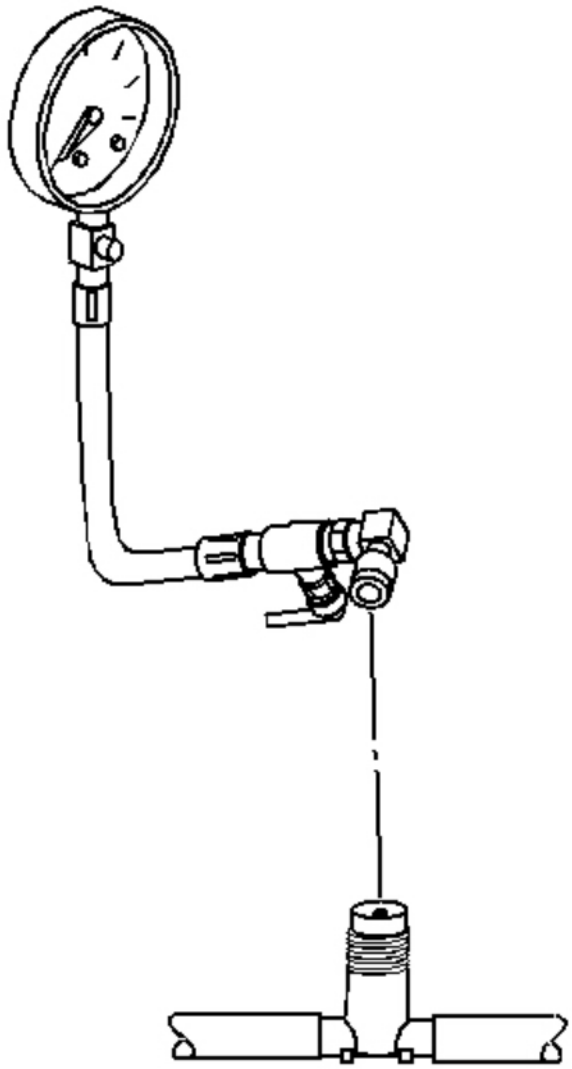

Fig. 129: Identifying Fuel Pressure Gauge J 34730-1A
Courtesy of GENERAL MOTORS CORP.

1. Remove the bleed hose from the **J 34730-1A** from the approved fuel container. See **Special Tools**.
2. Remove the shop towel from around the valve and discard into an approved container.
3. Disconnect the **J 34730-1A** from the fuel pressure service valve. See **Special Tools**.
4. Install the fuel pressure service valve cap.
5. Install the air cleaner outlet duct. Refer to **Air Cleaner Resonator Outlet Duct Replacement**.

cardiagn.com

FUEL PRESSURE RELIEF

Tools Required

J 34730-1A Fuel Pressure Gage. See **Special Tools**.

CAUTION: Relieve the fuel system pressure before servicing fuel system components in order to reduce the risk of fire and personal injury.
After relieving the system pressure, a small amount of fuel may be released when servicing the fuel lines or connections. In order to reduce the chance of personal injury, cover the regulator and the fuel line fittings with a shop towel before disconnecting. This will catch any fuel that may leak out. Place the towel in an approved container when the disconnection is complete.

cardiagn.com

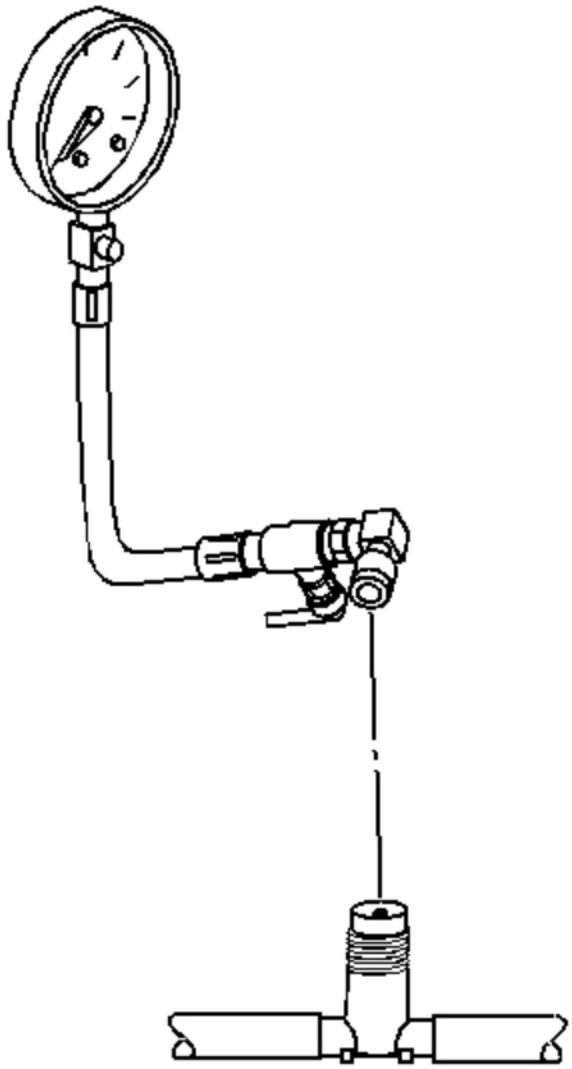

Fig. 130: Identifying Fuel Pressure Gauge J 34730-1A
Courtesy of GENERAL MOTORS CORP.

1. Disconnect the negative battery cable. Refer to **Battery Negative Cable Disconnection and Connection** .
2. Install the **J 34730-1A** to the fuel pressure service valve. See **Special Tools**. Refer to **Fuel Pressure Gage Installation and Removal**.
3. Loosen the fuel fill cap in order to relieve fuel tank vapor pressure.

cardiagn.com

4. Open the valve on the **J 34730-1A** in order to bleed the system pressure. See **Special Tools**. The fuel connections are now safe for servicing.
5. Drain any fuel remaining in the gage into an approved container.
6. Once the system pressure is completely relieved, remove the **J 34730-1A** . See **Special Tools**.

QUICK CONNECT FITTING SERVICE - METAL COLLAR

Tool Required

J 41769 Fuel Line Quick Disconnect Tool. See **Special Tools**.

Disconnect Procedure

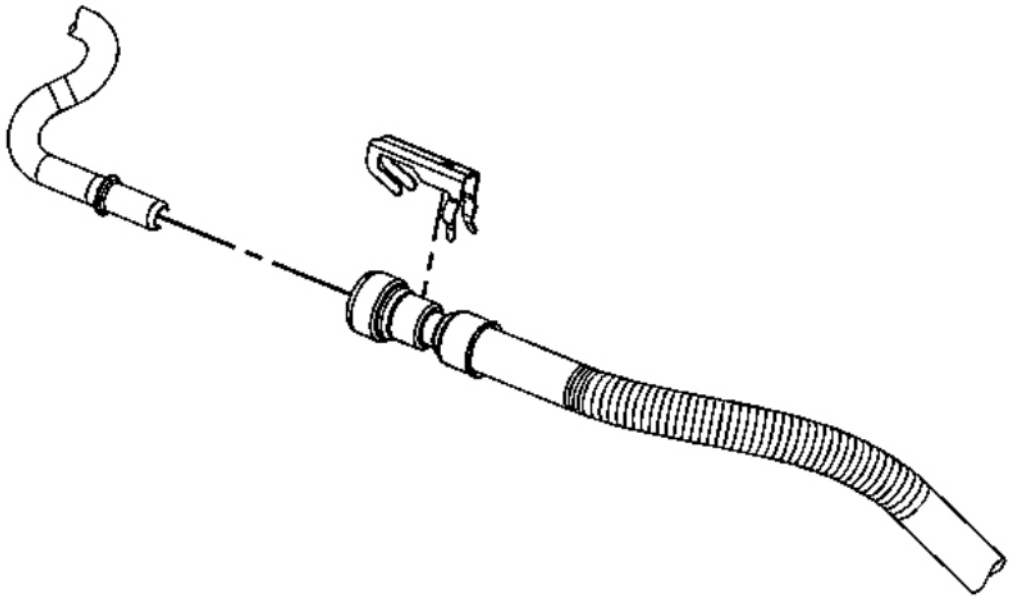

Fig. 131: Fuel Feed Line To Engine Quick-Connect Fitting Retainer
Courtesy of GENERAL MOTORS CORP.

1. Relieve the fuel system pressure. Refer to **Fuel Pressure Relief**.
2. Remove the fuel line retainer.

cardiagn.com

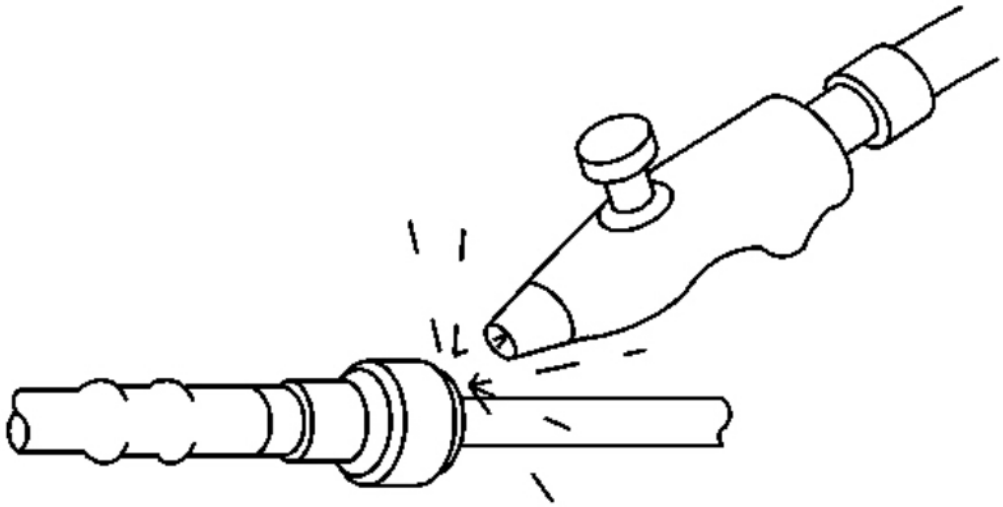

Fig. 132: Blowing Dirt Out Of Fitting (Metal Collar)
Courtesy of GENERAL MOTORS CORP.

CAUTION: Wear safety glasses when using compressed air, as flying dirt particles may cause eye injury.

3. Using compressed air, blow any dirt or debris from around the connection.

cardiagn.com

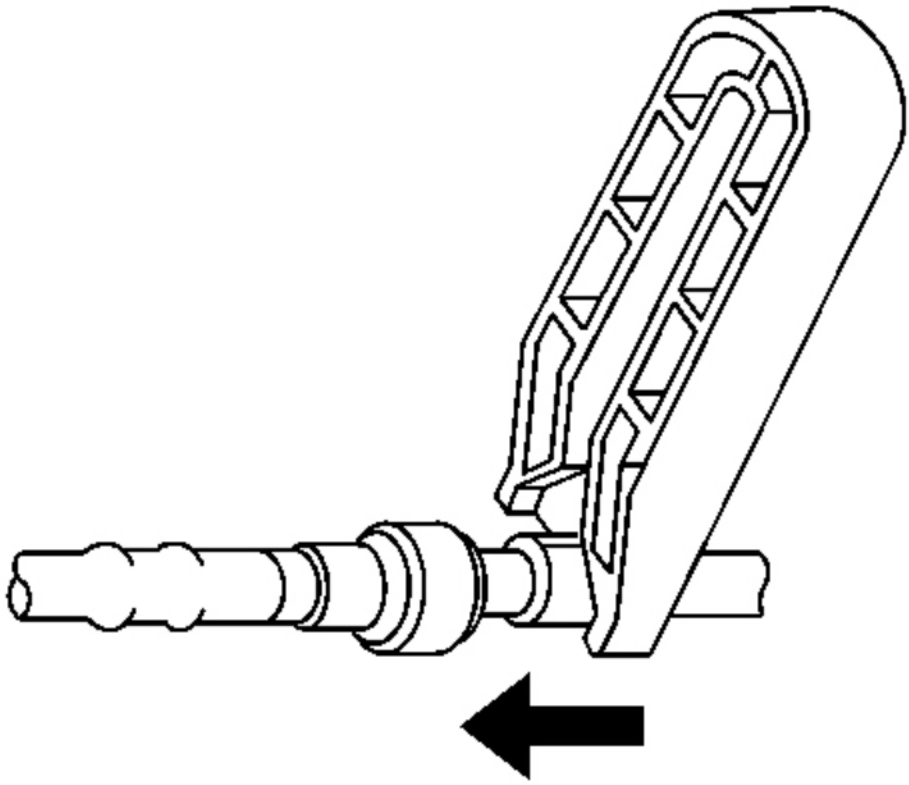

Fig. 133: Releasing Quick Connect Locking Tabs (Metal Collar)
Courtesy of GENERAL MOTORS CORP.

4. Using the correct tool from the **J 41769** , insert the tool into the female connector end, then push inward in order to release the quick connect locking tabs. See **Special Tools**.

cardiagn.com

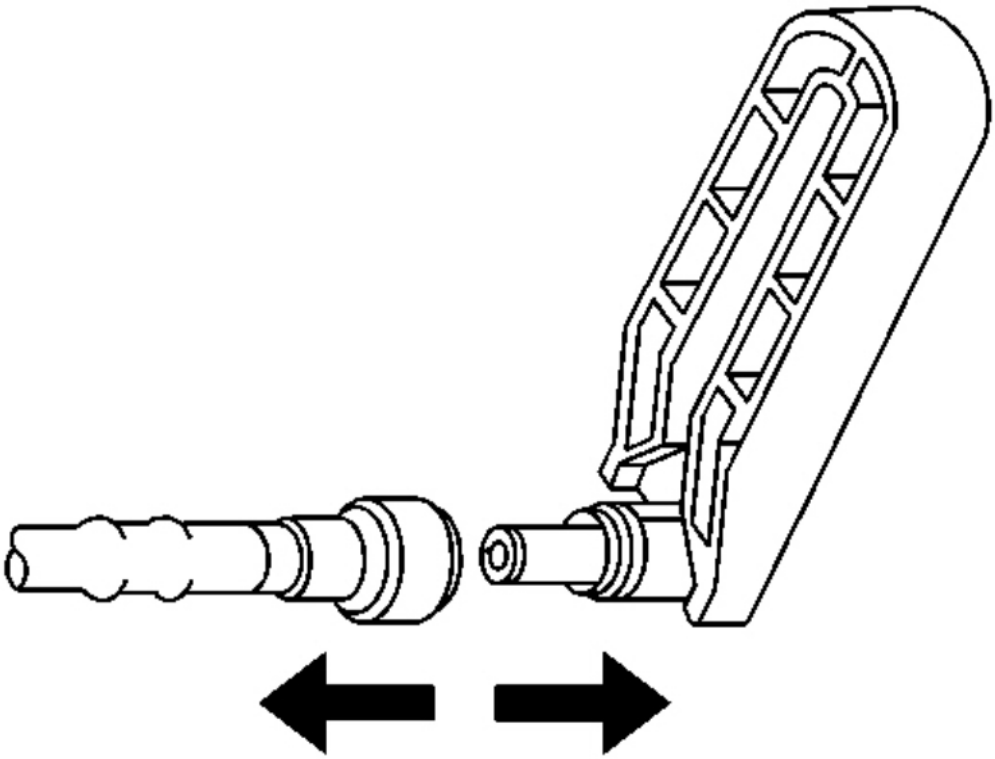

Fig. 134: Releasing Quick Connect Locking Tabs (Metal Collar)
Courtesy of GENERAL MOTORS CORP.

5. Pull the fuel line connection apart.

NOTE: **If necessary, remove rust or burrs from the fuel pipes with an emery cloth. Use a radial motion with the fuel pipe end in order to prevent damage to the O-ring sealing surface. Use a clean shop towel in order to wipe off the male tube ends. Inspect all the connections for dirt and burrs. Clean or replace the components and assemblies as required.**

6. Use a clean shop towel in order to wipe off the male connection end.
7. Inspect both ends of the fitting for dirt and burrs. Clean or replace the components as required.

Connect Procedure

cardiagn.com

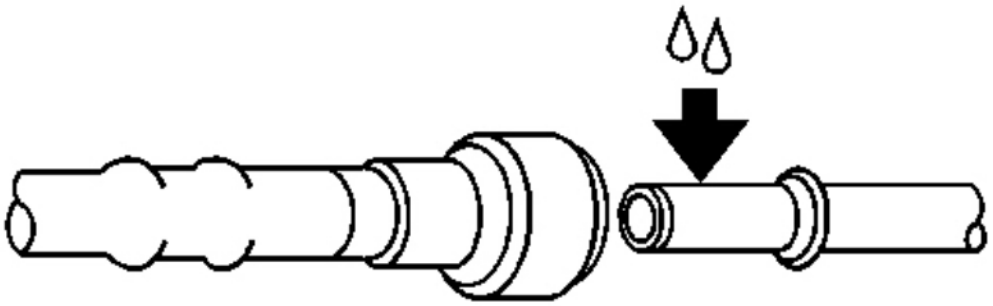

Fig. 135: Oiling Male Pipe Ends (Metal Collar)
Courtesy of GENERAL MOTORS CORP.

CAUTION: In order to reduce the risk of fire and personal injury, before connecting fuel pipe fittings, always apply a few drops of clean engine oil to the male pipe ends.
This will ensure proper reconnection and prevent a possible fuel leak.
During normal operation, the O-rings located in the female connector will swell and may prevent proper reconnection if not lubricated.

1. Apply a few drops of clean engine oil to the male connection end.

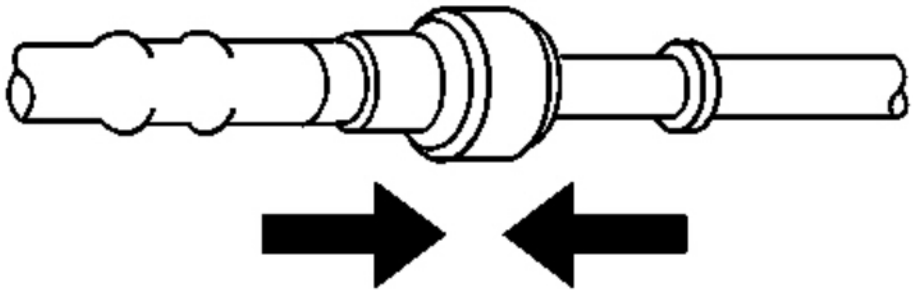

Fig. 136: Assembling Connectors (Metal Collar)

cardiagn.com

Courtesy of GENERAL MOTORS CORP.

2. Push both sides of the fitting together in order to engage the retaining tabs.

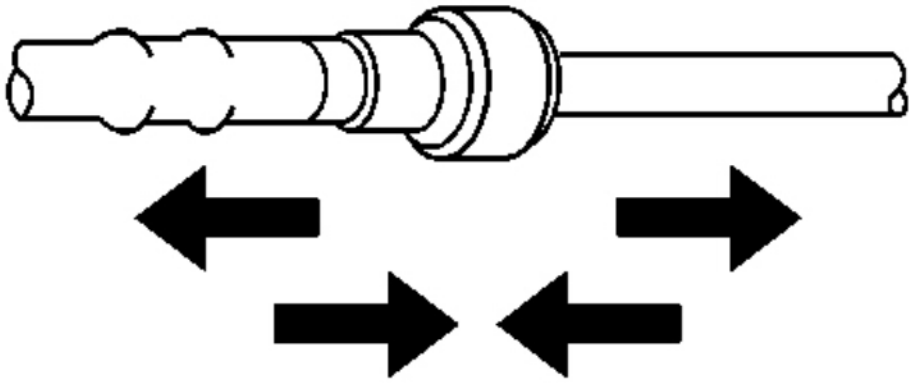

Fig. 137: Ensuring Connection (Metal Collar) Is Secure
Courtesy of GENERAL MOTORS CORP.

3. Once installed, pull on both sides of the connection in order to ensure the connection is secure.

cardiagn.com

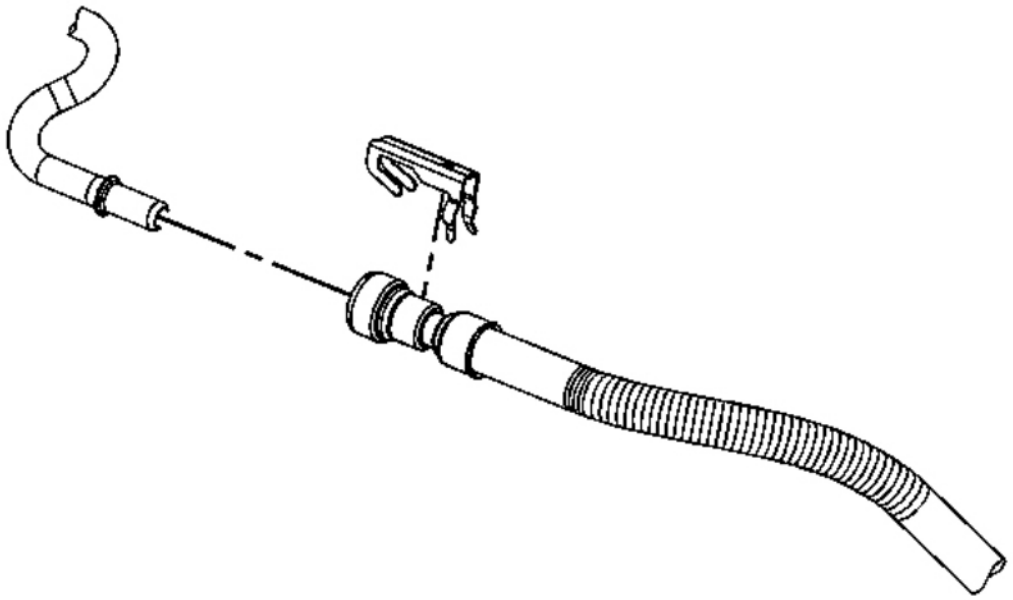

Fig. 138: Fuel Feed Line To Engine Quick-Connect Fitting Retainer
Courtesy of GENERAL MOTORS CORP.

4. Install the fuel line retainer.

QUICK CONNECT FITTING SERVICE - PLASTIC COLLAR

Disconnect Procedure

CAUTION: Refer to Gasoline/Gasoline Vapors Caution .

cardiagn.com

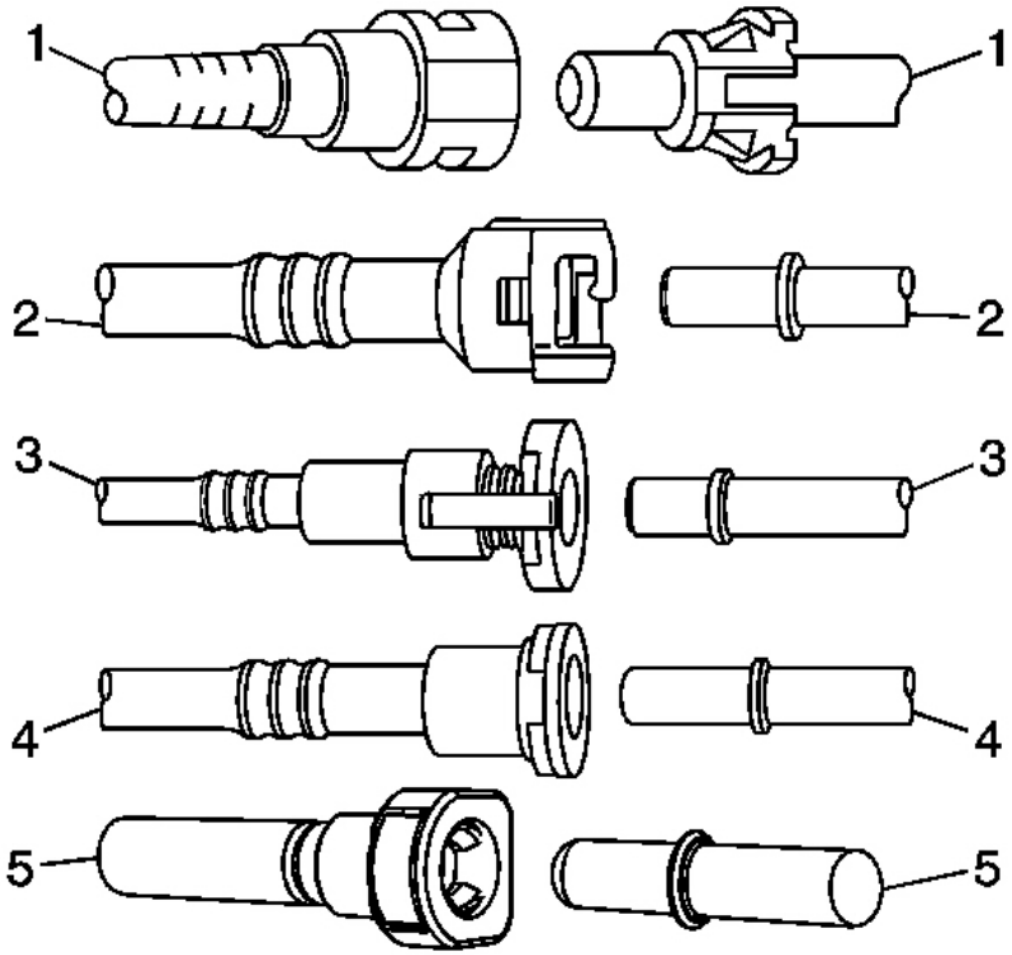

Fig. 139: Identifying Plastic Collar Fuel & Evaporative Emission Quick Connect Fittings
Courtesy of GENERAL MOTORS CORP.

IMPORTANT: There are several types of Plastic Collar Fuel and Evaporative Emission Quick Connect Fittings used on this vehicle.

- **Bartholomew (1)**
- **Q Release (2)**
- **Squeeze to Release (3)**
- **Sliding Retainer (4)**
- **Push Down Tl (5)**

cardiagn.com

The following instructions apply to all of these types of Plastic Collar Quick Connect Fittings except where indicated.

1. Relieve the fuel system pressure. Refer to **Fuel Pressure Relief**.

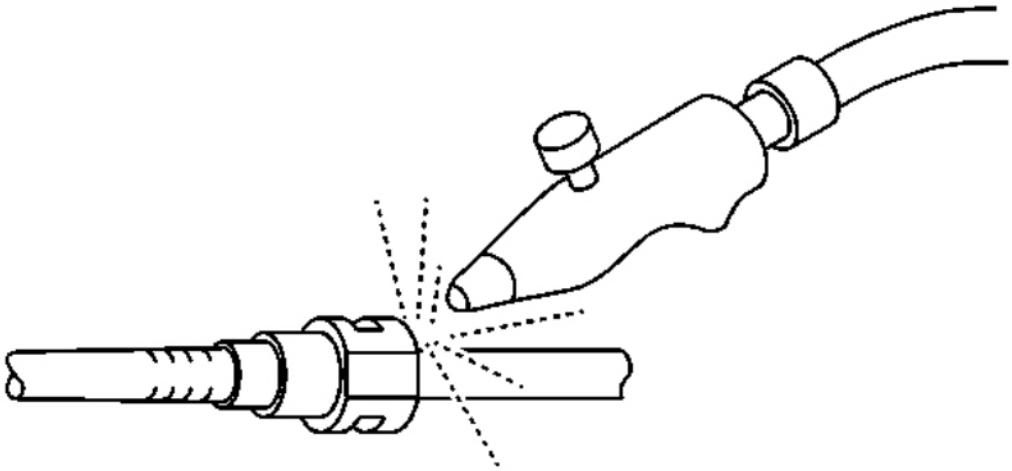

Fig. 140: Blowing Dirt Out Of Fitting (Plastic Collar)
Courtesy of GENERAL MOTORS CORP.

CAUTION: Refer to Safety Glasses Caution .

NOTE: Refer to Fuel and Evaporative Emission Hose/Pipe Connection Cleaning Notice .

2. Using compressed air, blow any dirt or debris from around the connection.

cardiagn.com

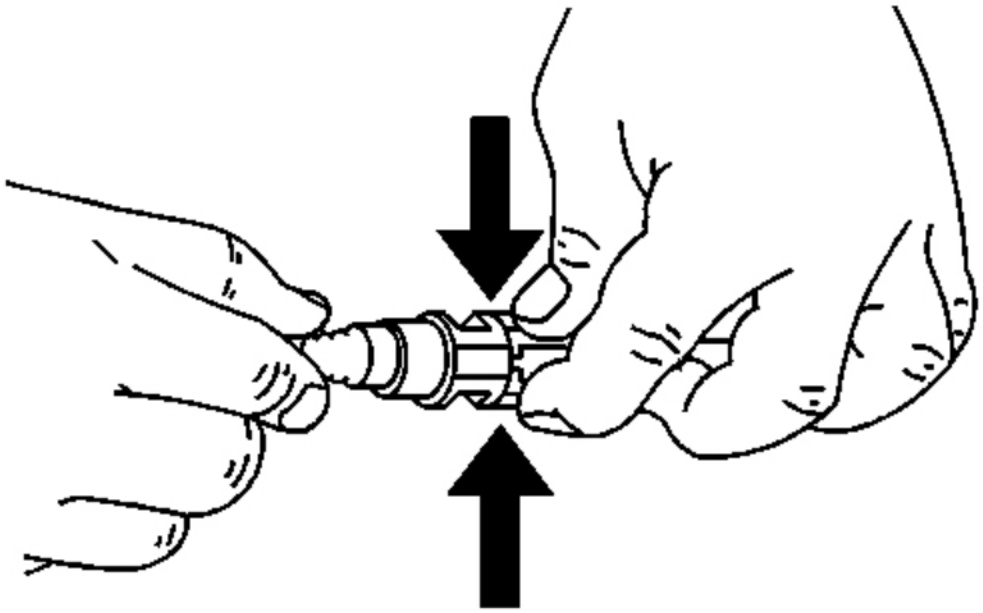

Fig. 141: Squeezing Quick Connect Fitting Release Tabs (Plastic Collar)
Courtesy of GENERAL MOTORS CORP.

3. This step applies to Bartholomew style connector ONLY. Squeeze the plastic quick connect fitting release tabs.

cardiagn.com

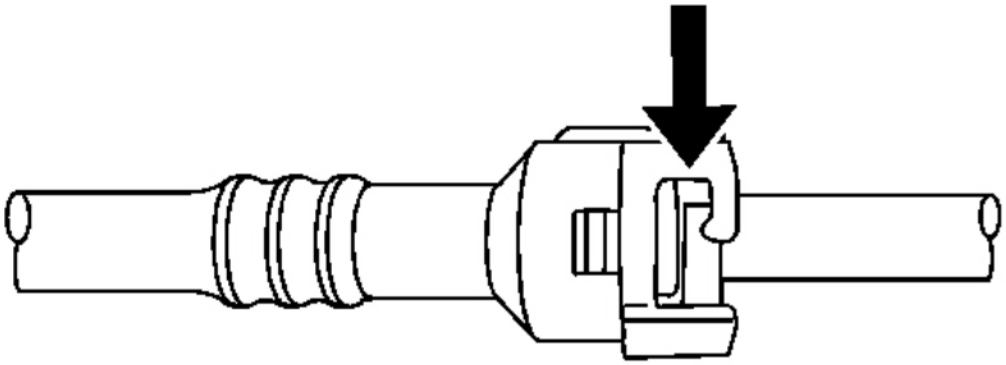

Fig. 142: Releasing Q Release Style Connectors (Plastic Collar)
Courtesy of GENERAL MOTORS CORP.

4. This step applies to Release Tab style connector ONLY. Release the fitting by pushing the tab toward the other side of the slot in the fitting.

cardiagn.com

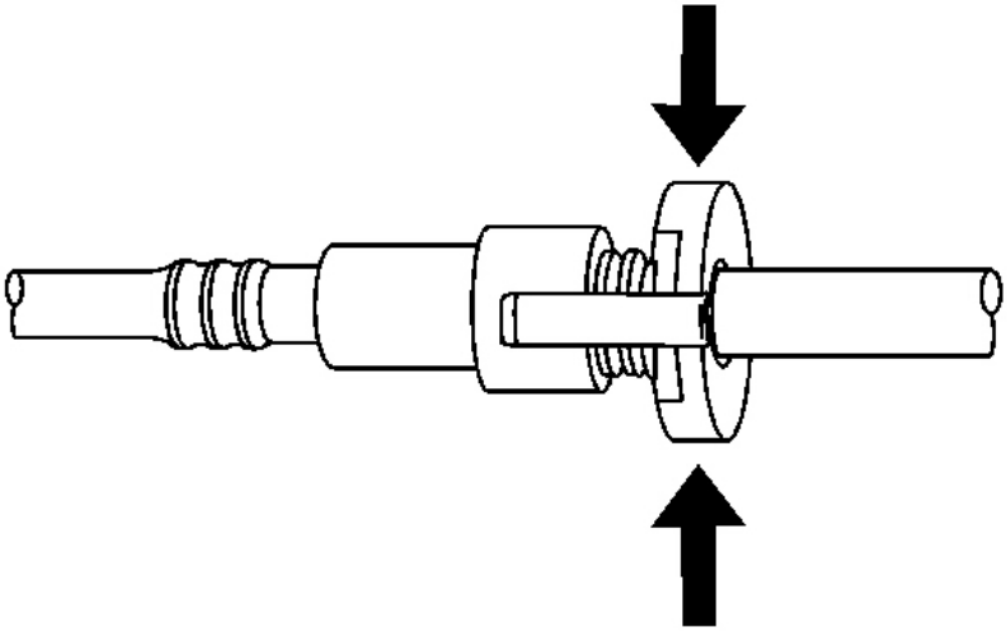

Fig. 143: Disengaging Quick Connect Fitting (Plastic Collar)
Courtesy of GENERAL MOTORS CORP.

5. This step applies to the Squeeze to Release style connector ONLY. Squeeze where indicated by the arrows shown above on both sides of the plastic ring surrounding the quick connect fitting.

cardiagn.com

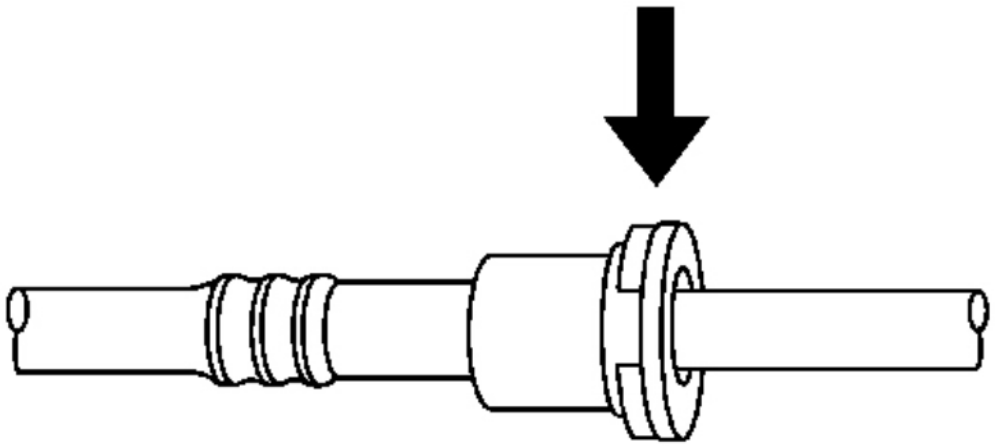

Fig. 144: View Of Sliding Retainer Style Connector
Courtesy of GENERAL MOTORS CORP.

6. This step applies to the Sliding Retainer style connector ONLY. Release the fitting by pressing on one side of the release tab causing it to push in slightly. If the tab doesn't move try pressing the tab in from the opposite side. The tab will only move in one direction.

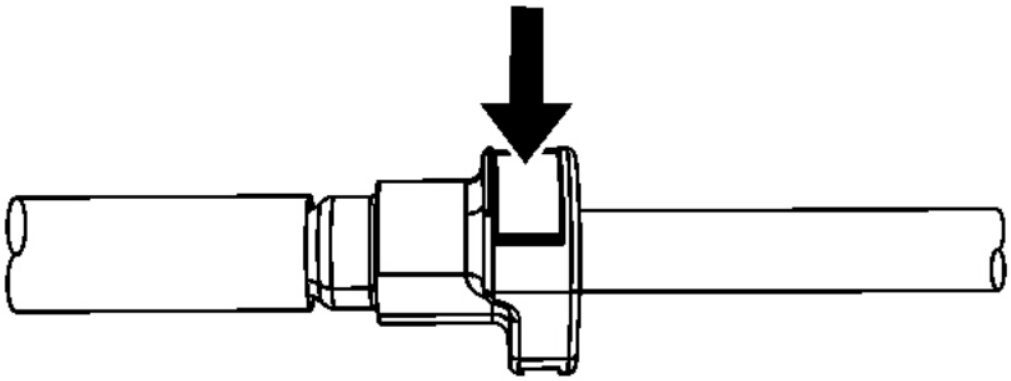

Fig. 145: View Of Push Down TI Style Connector
Courtesy of GENERAL MOTORS CORP.

cardiagn.com

7. This step applies to the Push Down TI style connector ONLY. Release the fitting by pressing on the tab indicated by the arrow.

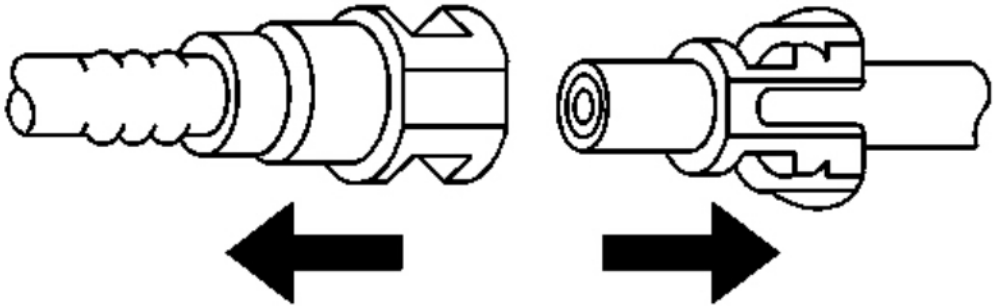

Fig. 146: Pulling Connection Apart (Plastic Collar)
Courtesy of GENERAL MOTORS CORP.

CAUTION: Refer to Relieving Fuel Pressure Caution .

8. Pull the connection apart.

Connect Procedure

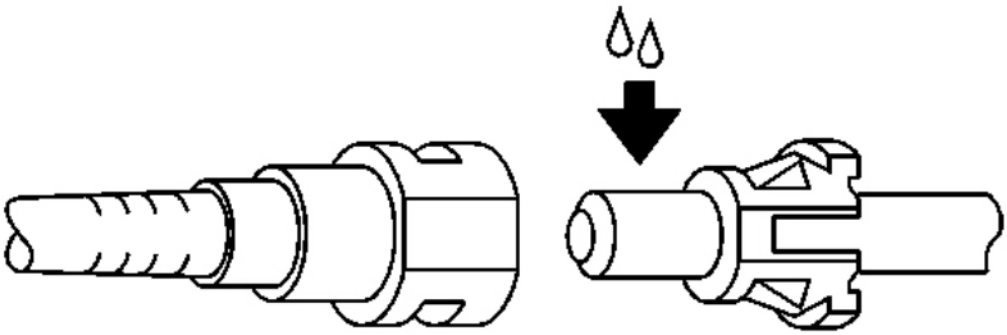

cardiagn.com

Fig. 147: Lubricating Male Pipe End
Courtesy of GENERAL MOTORS CORP.

CAUTION: Refer to Fuel Pipe Fitting Caution .

1. Apply a few drops of clean engine oil to the male connection end.

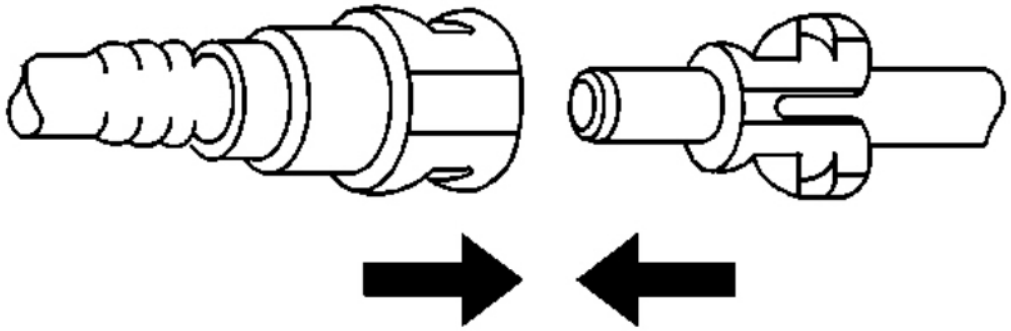

Fig. 148: Connecting Quick-Connect Fittings
Courtesy of GENERAL MOTORS CORP.

2. Push both sides of the quick-connect fitting together in order to cause the retaining feature to snap into place.

cardiagn.com

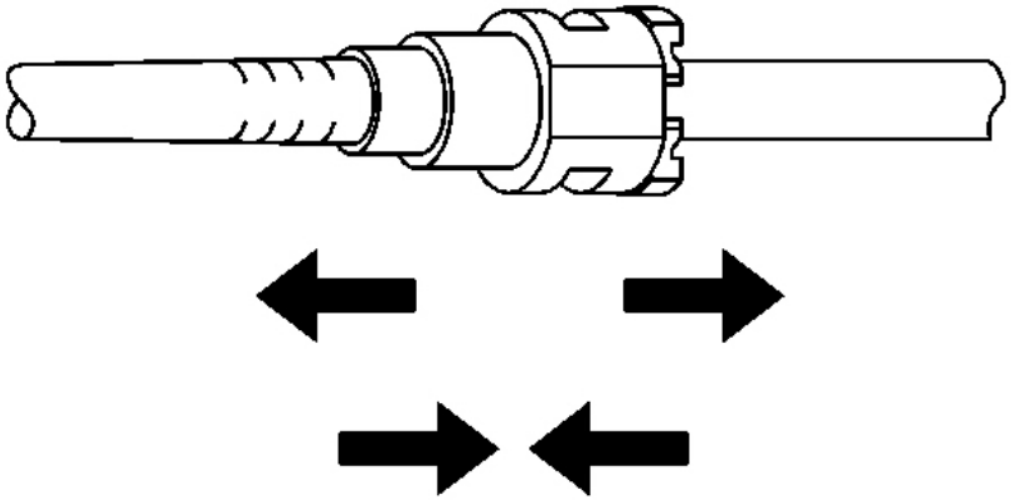

Fig. 149: Ensuring Secure Connection
Courtesy of GENERAL MOTORS CORP.

3. Once installed, pull on both sides of the connection in order to make sure the connection is secure.

FUEL TANK DRAINING (DUAL TANKS - FRONT)

Tools Required

J 45004 Fuel Tank Siphon Hose. See **Special Tools**.

CAUTION: Refer to Gasoline/Gasoline Vapors Caution .

cardiagn.com

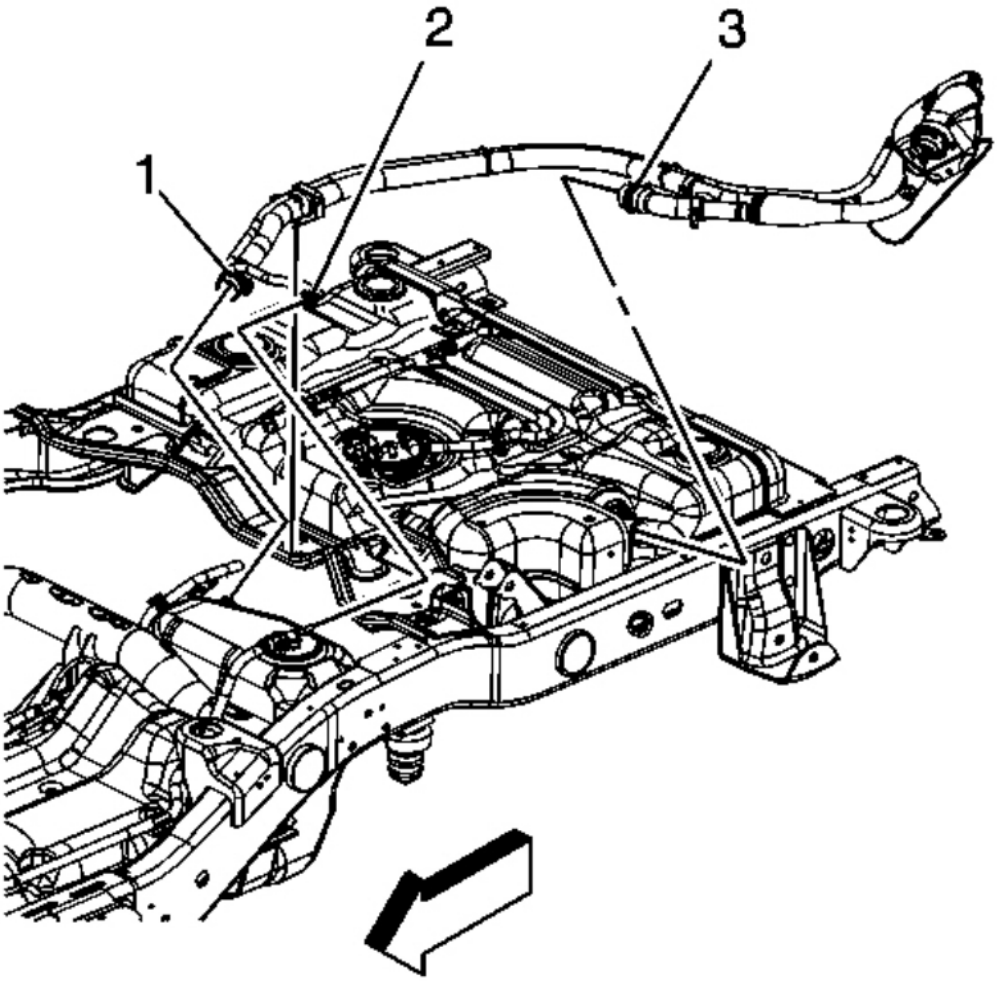

Fig. 150: View Of Fuel Hoses & Clamp
Courtesy of GENERAL MOTORS CORP.

1. Loosen the fuel fill cap in order to relieve the fuel tank vapor pressure.
2. Raise and support the vehicle. Refer to **Lifting and Jacking the Vehicle** .
3. Loosen the fuel fill hose clamp (1) at the front tank.
4. Remove the fuel fill hose from the front tank.
5. Insert the siphon hose from the **J 45004** into the fuel tank. See **Special Tools**.
6. Attach the siphon hose from the **J 45004** to the pump devise hose. See **Special Tools**.
7. Using a hand or air operated pump device, drain as much fuel from the tank as possible.

cardiagn.com

FUEL TANK DRAINING (DUAL TANKS - REAR)

Tools Required

J 45004 Fuel Tank Siphon Hose. See **Special Tools**.

CAUTION: Refer to Gasoline/Gasoline Vapors Caution .

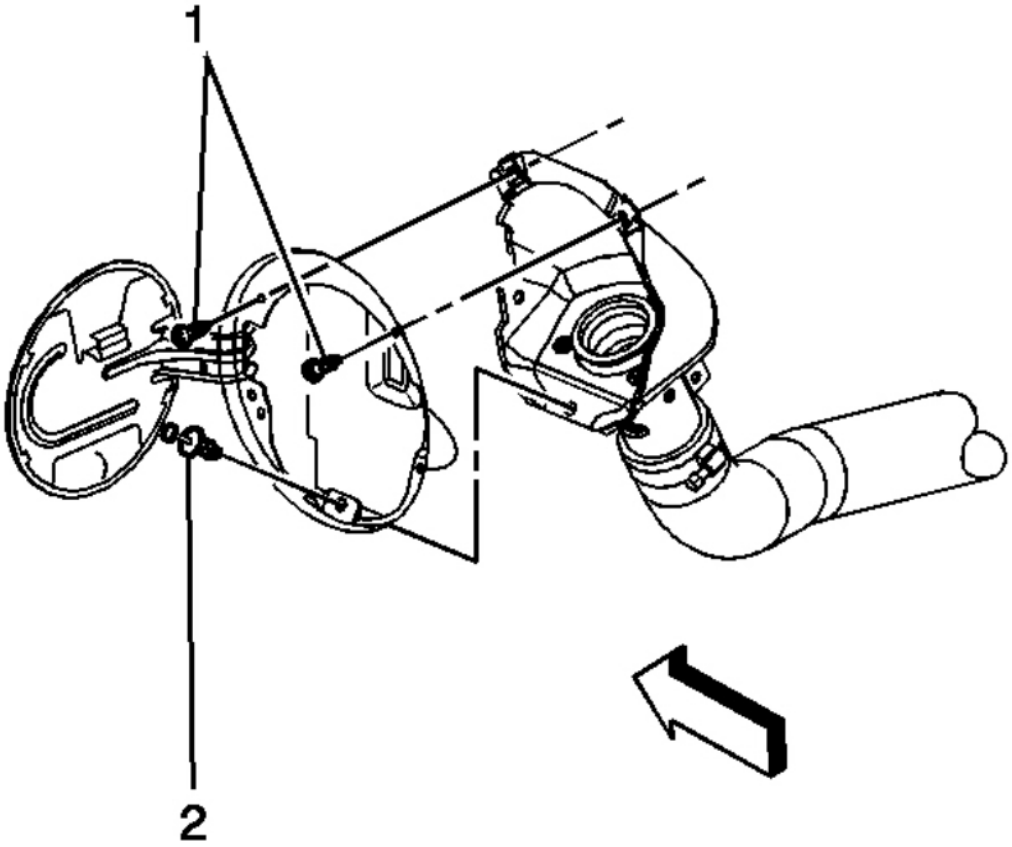

Fig. 151: View Of Fuel Tank Filler Housing To Body Screws & Retainer
Courtesy of GENERAL MOTORS CORP.

1. Remove the fuel fill cap.
2. Remove the fuel tank filler housing to body TORX® screws (1) and retainer (2).

cardiagn.com

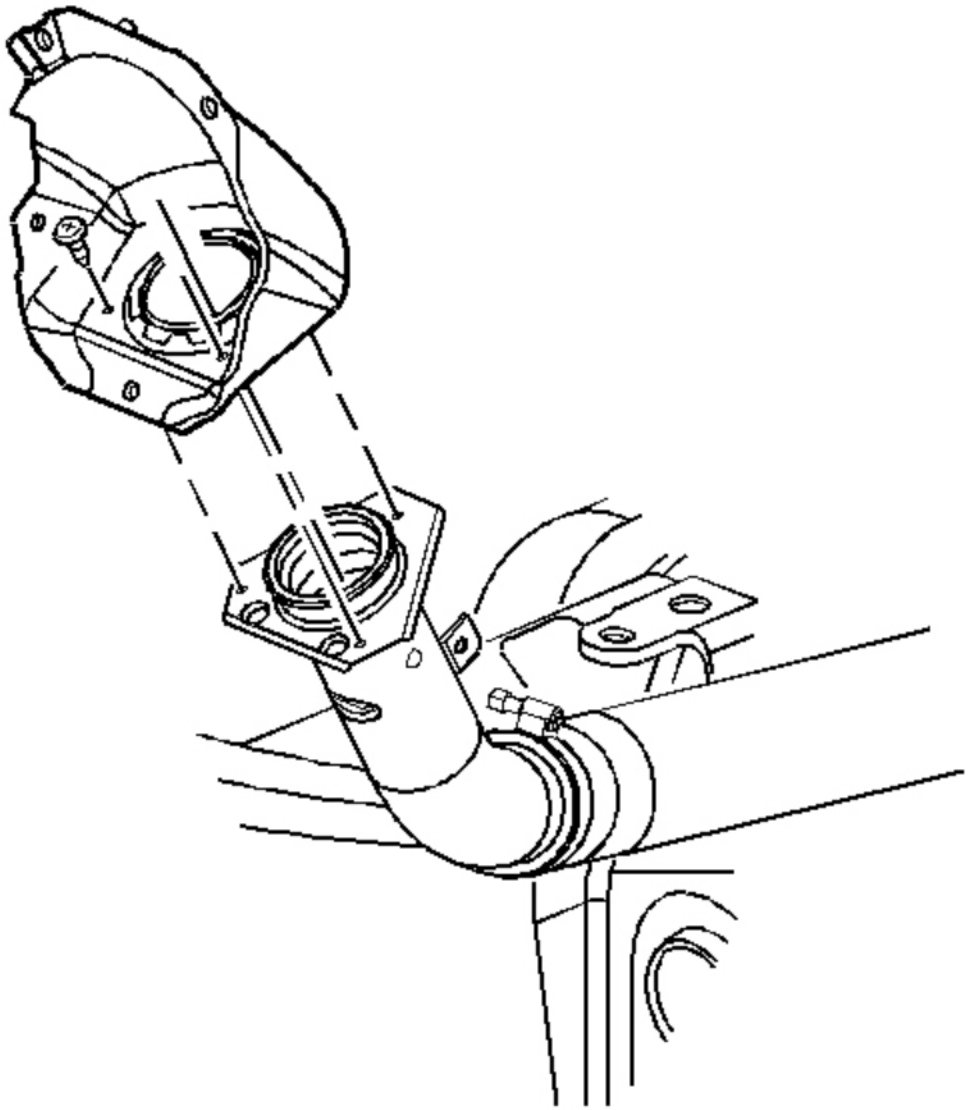

Fig. 152: Identifying Fuel Filler Components
Courtesy of GENERAL MOTORS CORP.

3. Remove the fuel tank filler housing to fuel tank fill pipe screws.
4. Remove the filler housing.

cardiagn.com

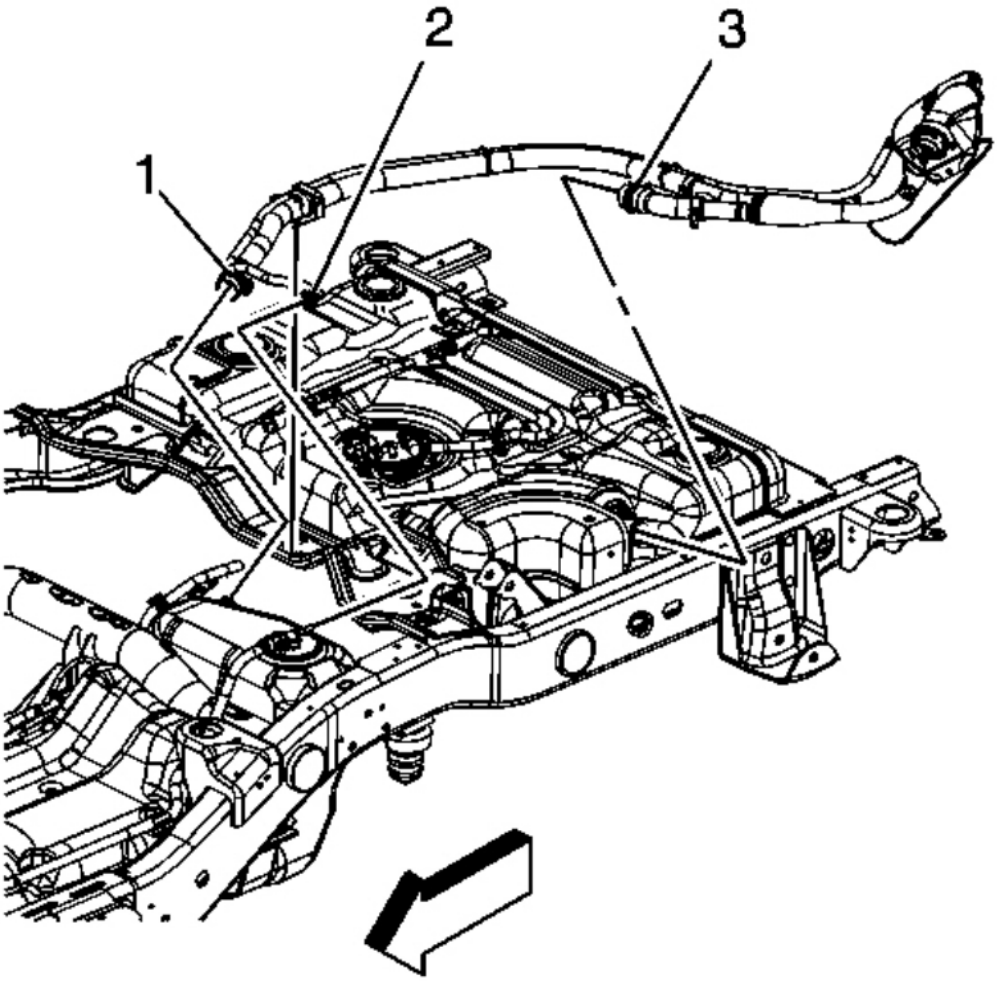

Fig. 153: View Of Fuel Hoses & Clamp
Courtesy of GENERAL MOTORS CORP.

5. Raise and support the vehicle. Refer to **Lifting and Jacking the Vehicle** .
6. Loosen the fill hose clamp (3) at the rear tank.
7. Remove the fill hose from the rear tank.
8. Insert the siphon hose from the **J 45004** into the fuel tank. See **Special Tools**.
9. Attach the siphon hose from the **J 45004** to the pump devise. See **Special Tools**.
10. Using a hand or air operated pump device, drain as much fuel from the tank as possible.

FUEL TANK DRAINING (SINGLE TANK)

cardiagn.com

CAUTION: Refer to Gasoline/Gasoline Vapors Caution .

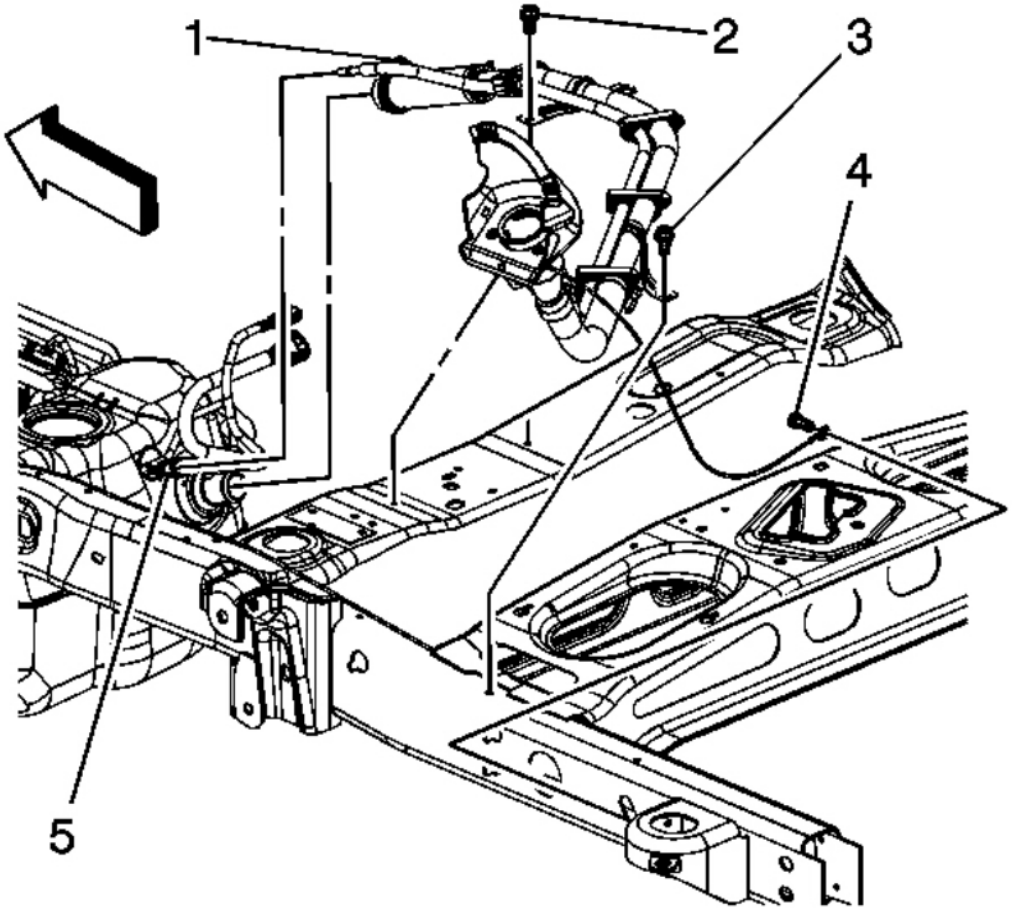

Fig. 154: View Of Fuel Fill Hose, Pipe Bracket Bolts & Quick Connect Fitting
Courtesy of GENERAL MOTORS CORP.

1. Loosen the fuel fill cap in order to relieve the fuel tank vapor pressure.
2. Raise and support the vehicle. Refer to **Lifting and Jacking the Vehicle** .
3. Loosen the fuel fill hose clamp (1).
4. Remove the fill pipe bracket bolts (2, 3) in order to remove the fill hose from the fuel tank.
5. Remove the fuel fill hose from the fuel tank.
6. Insert the hose from the pump devise into the fuel tank.

cardiagn.com

7. Using a hand or air operated pump device, drain as much fuel from the tank as possible.

FUEL TANK FILLER PIPE REPLACEMENT (1500 SERIES)

Removal Procedure

IMPORTANT: Clean the fuel connections and surrounding areas prior to disconnecting the lines in order to avoid possible contamination.

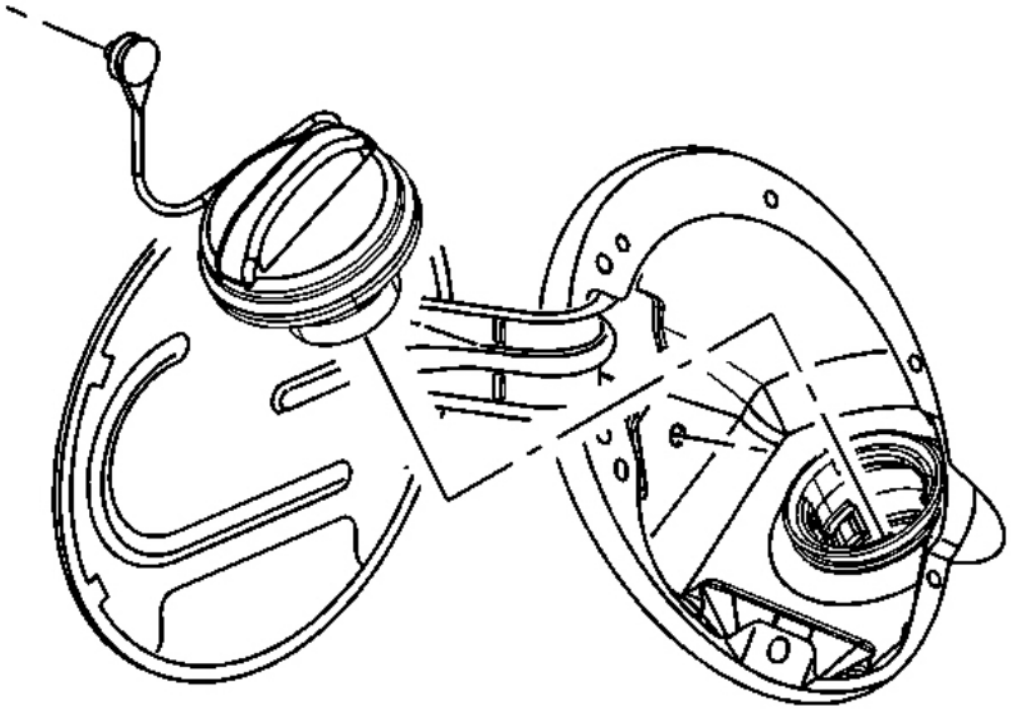

Fig. 155: View Of Filler Door And Tethered Fuel Filler Cap
Courtesy of GENERAL MOTORS CORP.

1. Remove the fuel fill cap.

cardiagn.com

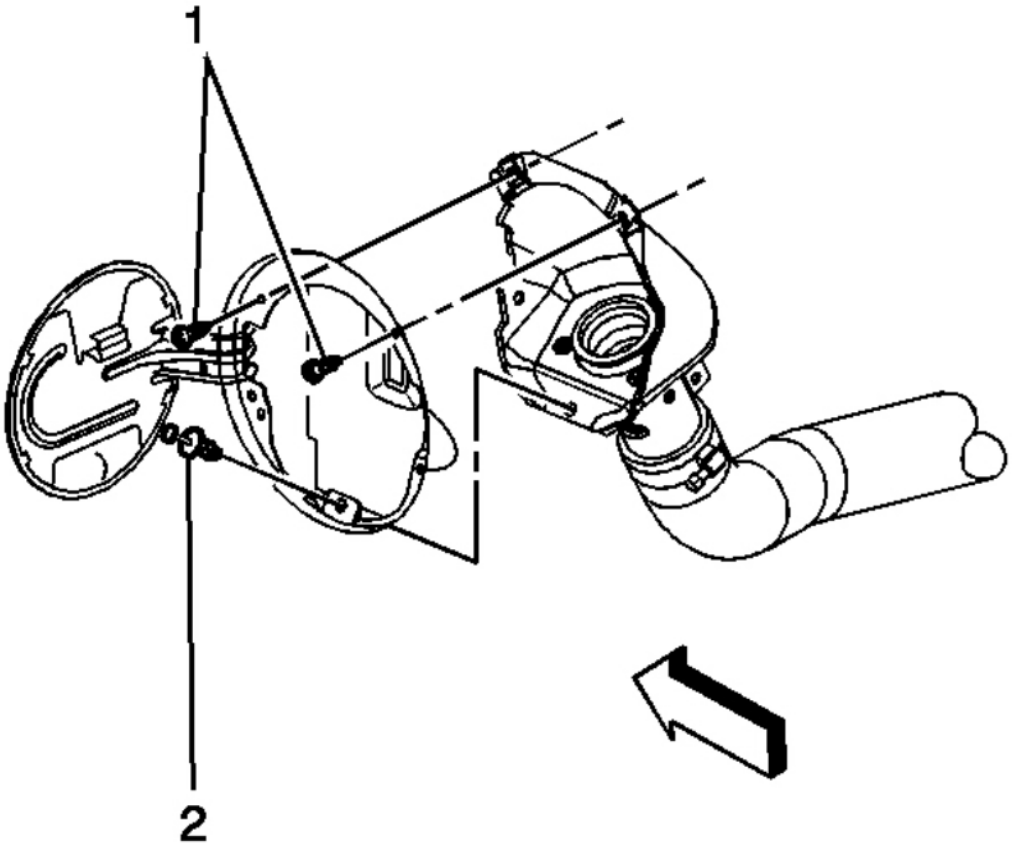

Fig. 156: View Of Fuel Tank Filler Housing To Body Screws & Retainer
Courtesy of GENERAL MOTORS CORP.

2. Remove the fuel tank filler housing to body TORX® screws (1) and retainer (2).

cardiagn.com

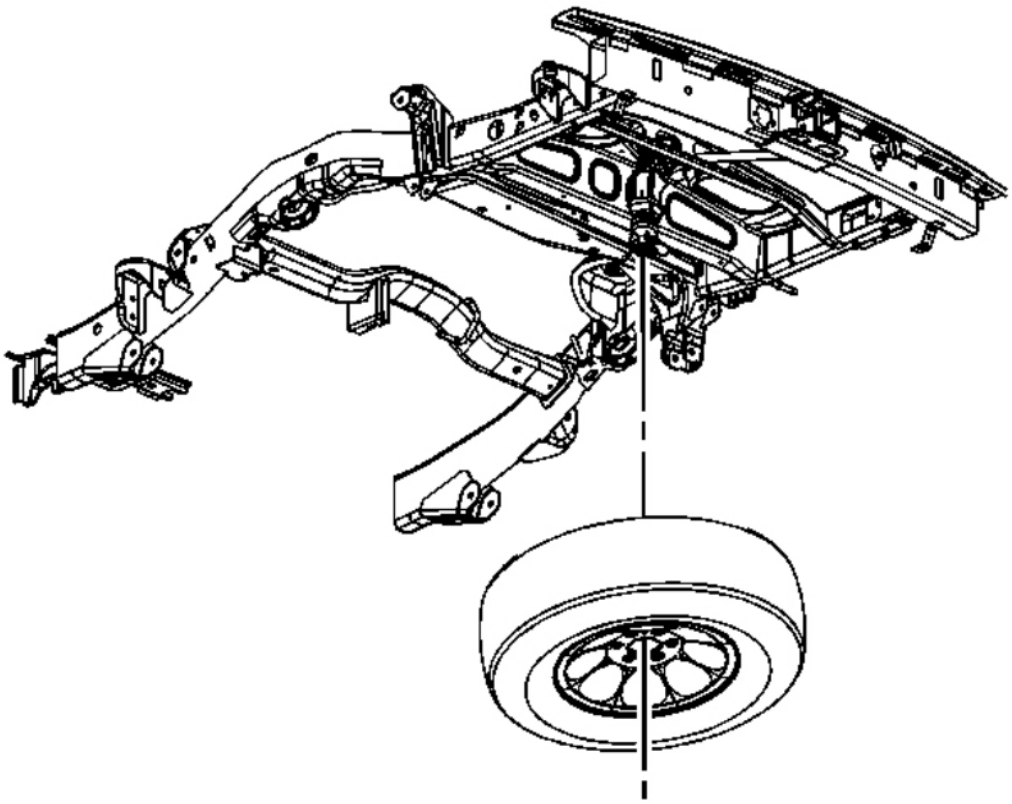

Fig. 157: View Of Spare Tire & Stowage Lock Cylinder
Courtesy of GENERAL MOTORS CORP.

3. Remove the spare tire stowage lock cylinder, if necessary.
4. Remove the spare tire, if necessary.
5. Raise and support the vehicle. Refer to **Lifting and Jacking the Vehicle** .

cardiagn.com

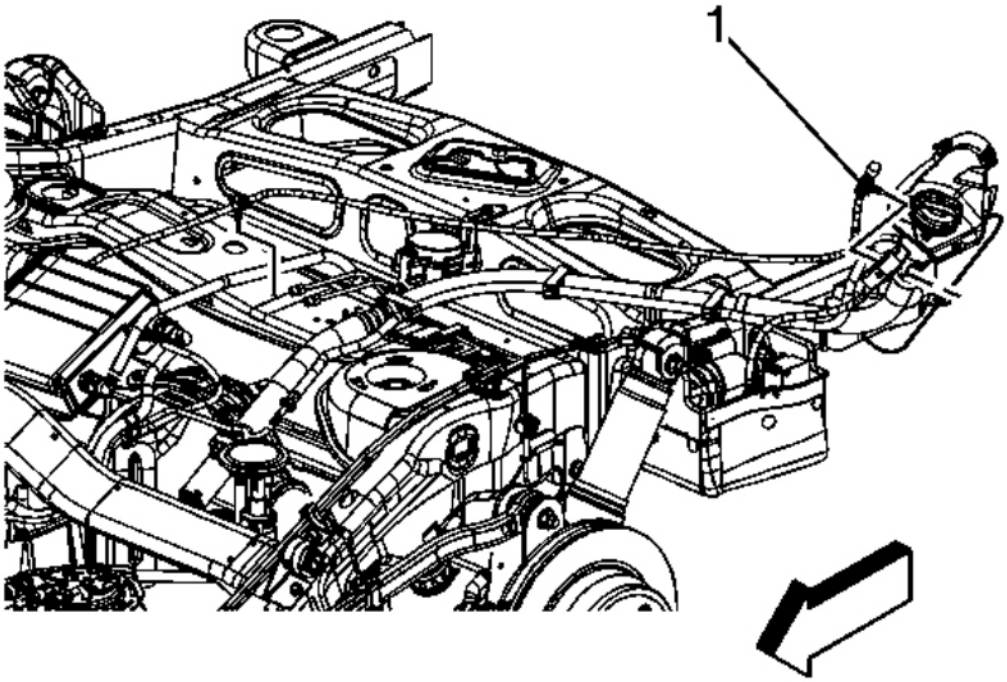

Fig. 158: View Of Rear Axle Vent Hose Clip
Courtesy of GENERAL MOTORS CORP.

6. Remove the rear axle vent hose clip (1) from the fill pipe.
7. If necessary, remove the air suspension hose at the fill pipe.

cardiagn.com

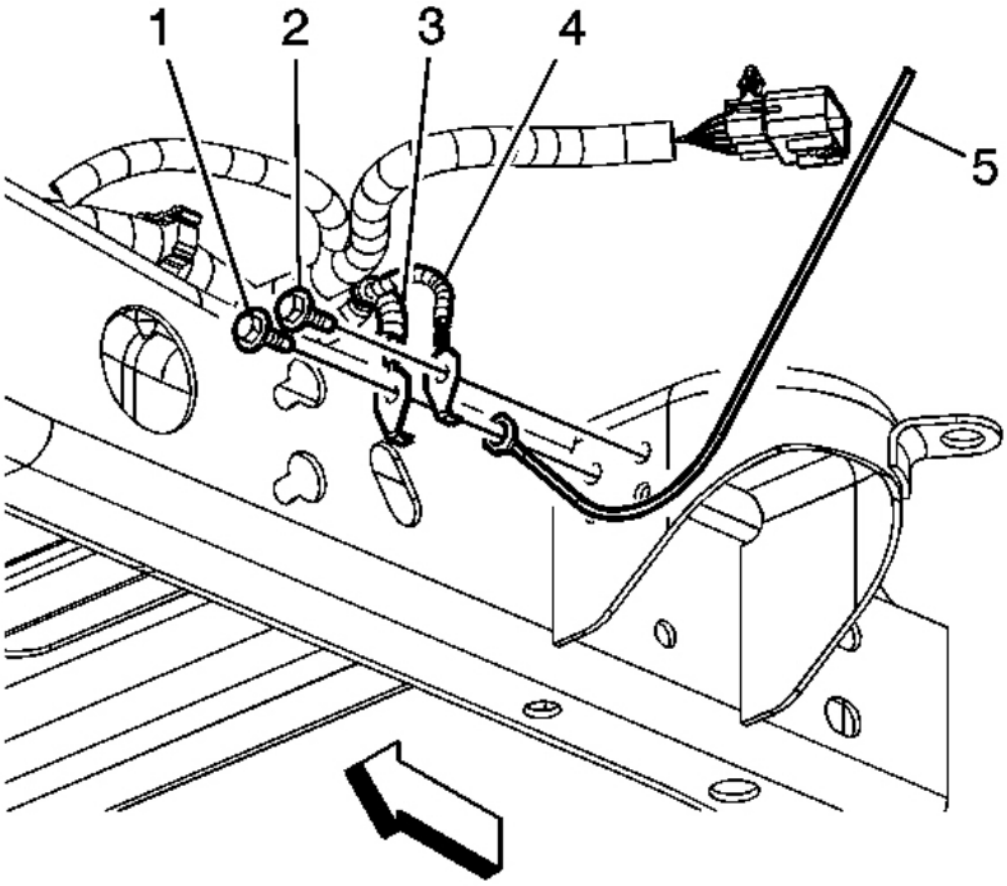

Fig. 159: View Of Fill Pipe Ground Strap, Lamp Ground Wires & Harness Ground Bolts
Courtesy of GENERAL MOTORS CORP.

8. Remove the chassis wiring harness ground bolt (2).
9. Remove the left rear lamp ground wire (4) and fill pipe ground strap (5) from the frame.

cardiagn.com

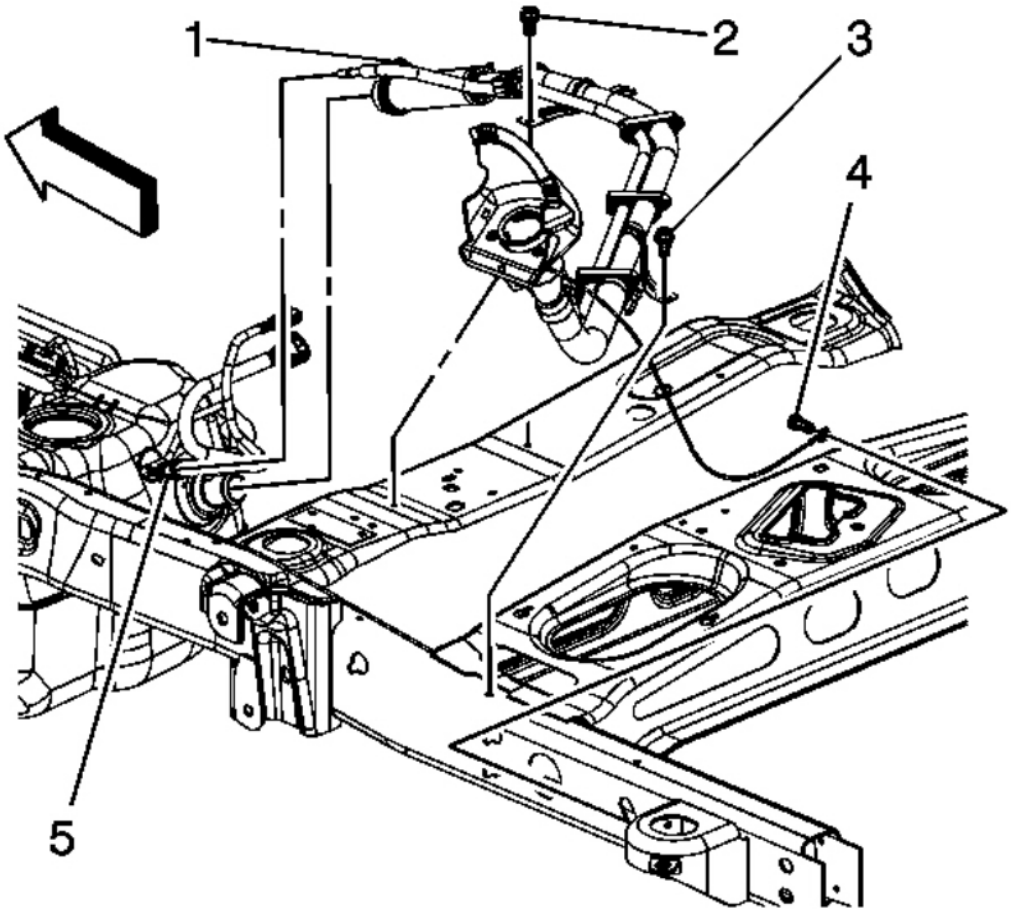

Fig. 160: View Of Fuel Fill Hose, Pipe Bracket Bolts & Quick Connect Fitting
Courtesy of GENERAL MOTORS CORP.

10. Disconnect the fuel tank vent line quick connect fitting (5) from the fill pipe line. Refer to **Quick Connect Fitting Service - Plastic Collar**.
11. Loosen the fuel fill hose clamp (1).
12. Remove the fuel fill pipe bracket bolts (2, 3).
13. Remove the fuel fill hose from the fuel tank.
14. Cap the fuel tank opening and EVAP vent line in order to prevent fuel/EVAP system contamination.
15. If replacing any serviceable part of the fill pipe assembly proceed to the disassemble procedure, otherwise proceed to the installation procedure.

Disassemble

cardiagn.com

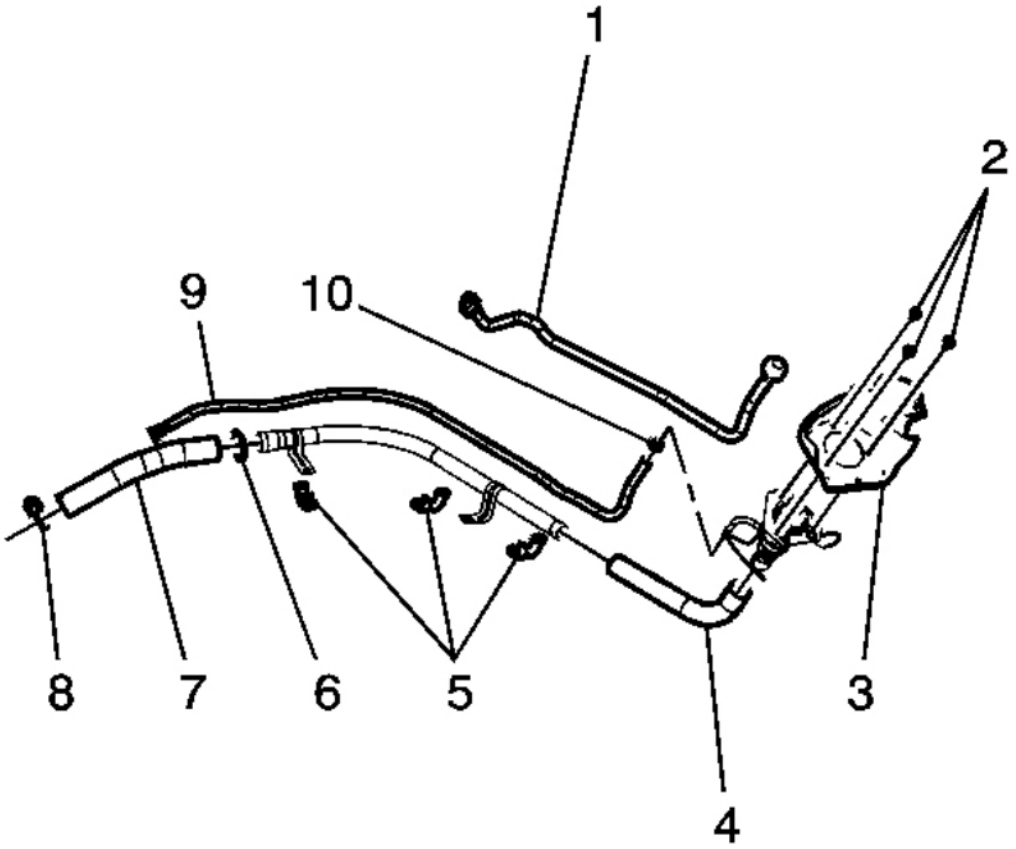

Fig. 161: View Of Fuel Hose Components
Courtesy of GENERAL MOTORS CORP.

- Fuel tank filler vent hose (1)
- Fuel tank fill pipe housing bolts (2)
- Fuel tank fill pipe housing (3)
- Fuel tank fill hose (4)
- Fuel tank fill pipe clip (5)
- Fuel tank fill hose clamp (6)
- Fuel tank fill hose (7)
- Fuel tank fill hose clamp (8)
- Evaporative emission hose (9)
- Evaporative emission hose clamp (10)

cardiagn.com

Assemble

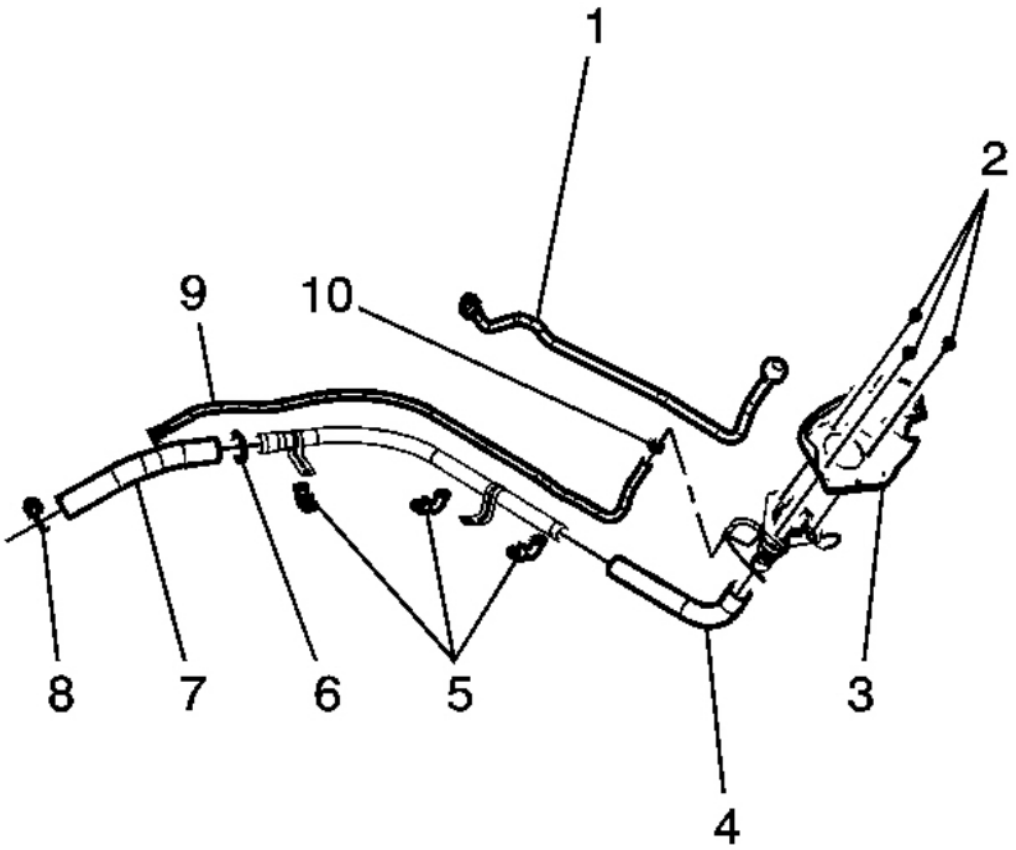

Fig. 162: View Of Fuel Hose Components
Courtesy of GENERAL MOTORS CORP.

NOTE: **Refer to Fastener Notice .**

- Evaporative emission hose clamp (10)

  Tighten: Tighten the clamp to 2.5 N.m (22 lb in).

- Evaporative emission hose (9)
- Fuel tank fill hose clamp (8)

  Tighten: Tighten the clamp to 2.5 N.m (22 lb in).

cardiagn.com

- Fuel tank fill hose (7)
- Fuel tank fill hose clamp (6)

  Tighten: Tighten the clamp to 2.5 N.m (22 lb in).

- Fuel tank fill pipe clip (5)
- Fuel tank fill hose (4)
- Fuel tank fill pipe housing (3)
- Fuel tank fill pipe housing bolts (2)

  Tighten: Tighten the bolts to 2.3 N.m (20 lb in).

- Fuel tank filler vent hose (1)

Installation Procedure

cardiagn.com

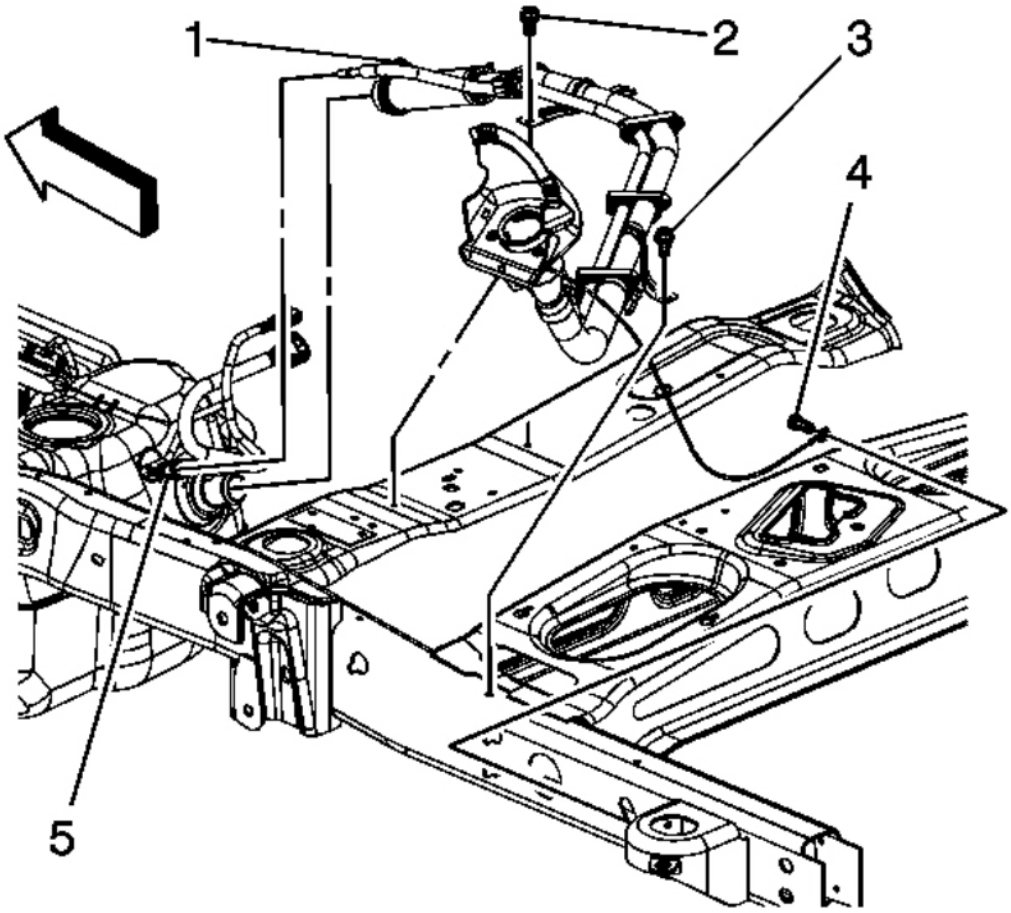

Fig. 163: View Of Fuel Fill Hose, Pipe Bracket Bolts & Quick Connect Fitting
Courtesy of GENERAL MOTORS CORP.

1. Remove the caps from the fuel tank opening and the EVAP vent line.
2. Install the fuel fill hose to the fuel tank. Ensure that the notch in the hose is aligned with the notch on the fuel tank.
3. Tighten the fuel fill hose clamp (1).

   Tighten: Tighten the clamps to 2.5 N.m (22 lb in).

4. Install the fuel fill pipe bracket bolts (2, 3).

   Tighten: Tighten the bolt to 12 N.m (106 lb in).

cardiagn.com

5. Connect the fuel fill pipe vent line to the fuel tank quick connect fitting (5). Refer to **Quick Connect Fitting Service - Plastic Collar**.

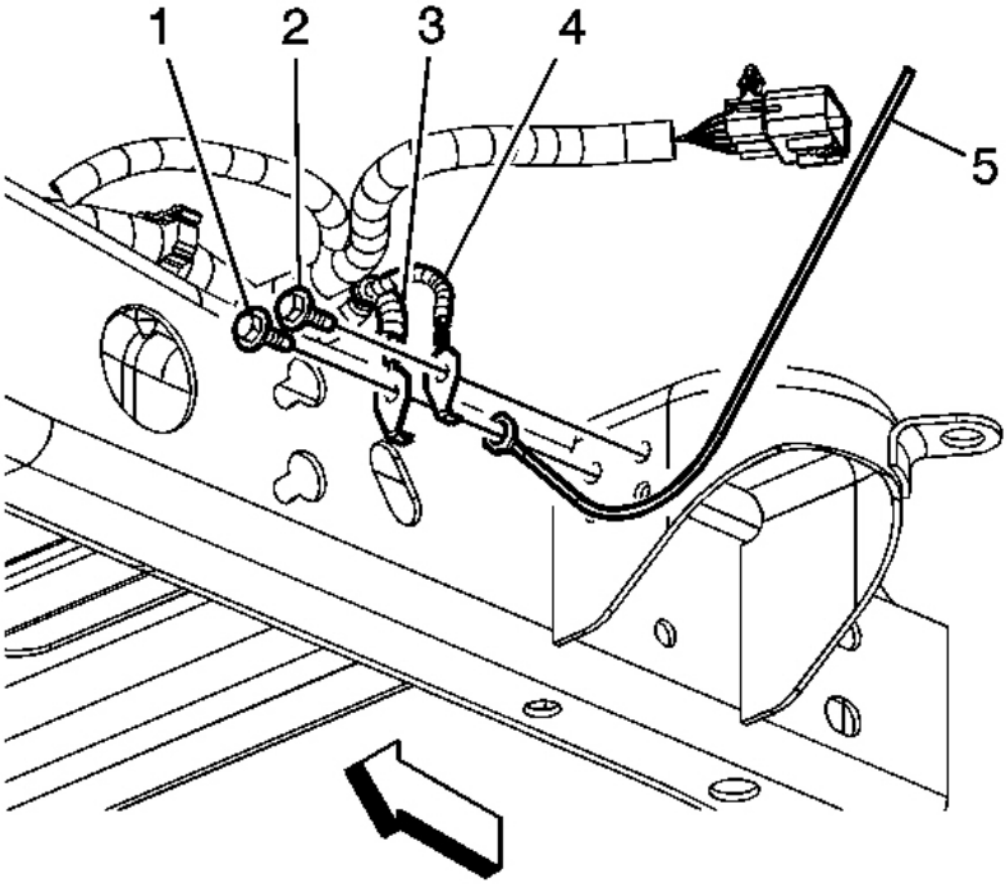

Fig. 164: View Of Fill Pipe Ground Strap, Lamp Ground Wires & Harness Ground Bolts
Courtesy of GENERAL MOTORS CORP.

6. Position the fill pipe ground strap (5) to the left rear lamp ground wire (4).
7. Install the rear lamp ground wire (4) and ground strap (5) to the frame. Insert the lamp ground wire anti-rotation tab into the hole in the frame.
8. Install the chassis wiring harness ground bolt.

   Tighten: Tighten the bolt to 9 N.m (80 lb in).

cardiagn.com

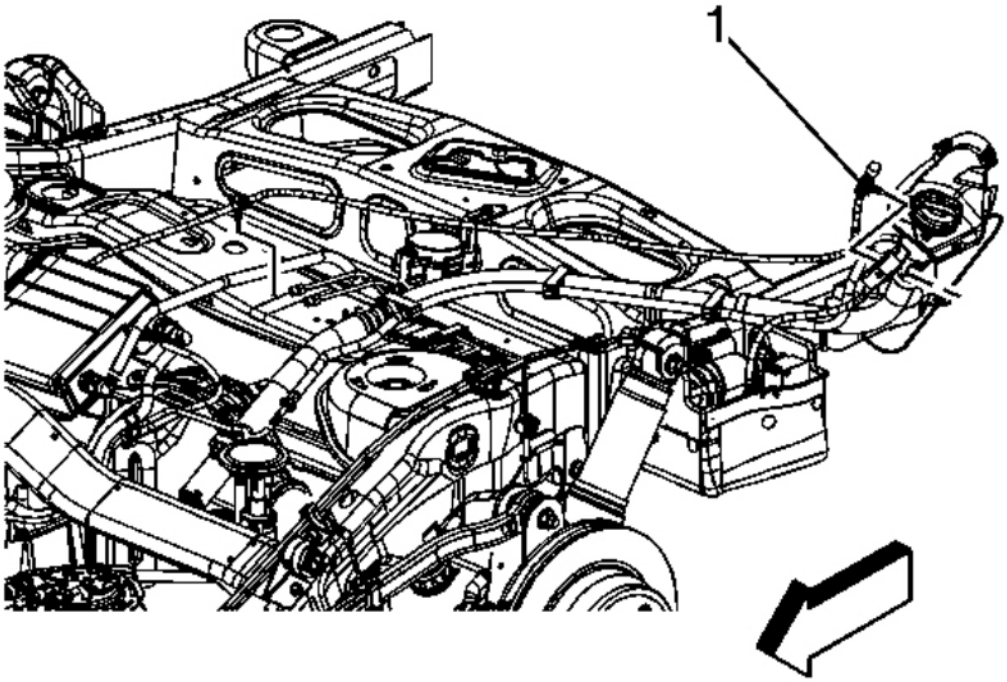

Fig. 165: View Of Rear Axle Vent Hose Clip
Courtesy of GENERAL MOTORS CORP.

9. If necessary, install the air suspension hose at the fill pipe.
10. Install the rear axle vent hose clip (1) to the fill pipe.
11. Lower the vehicle.

cardiagn.com

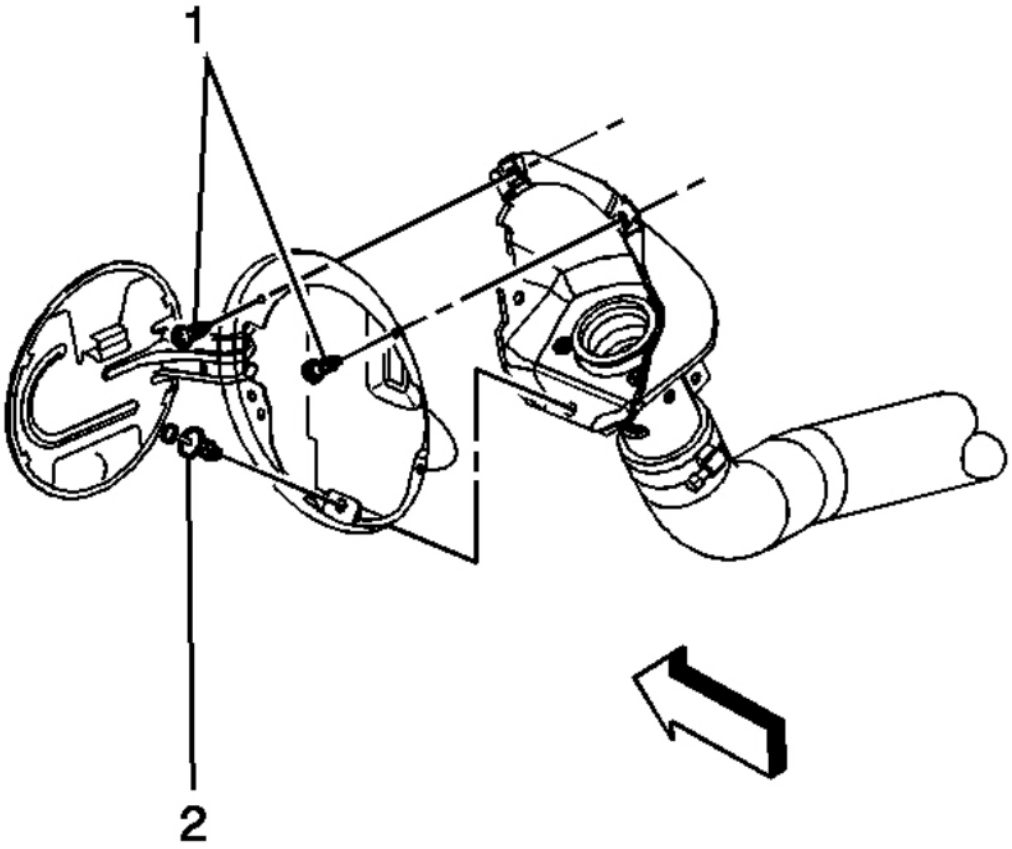

Fig. 166: View Of Fuel Tank Filler Housing To Body Screws & Retainer
Courtesy of GENERAL MOTORS CORP.

12. Install the fuel tank filler housing to body TORX® screws (1) and retainer (2).

    Tighten: Tighten the screws to 2.3 N.m (20 lb in).

cardiagn.com

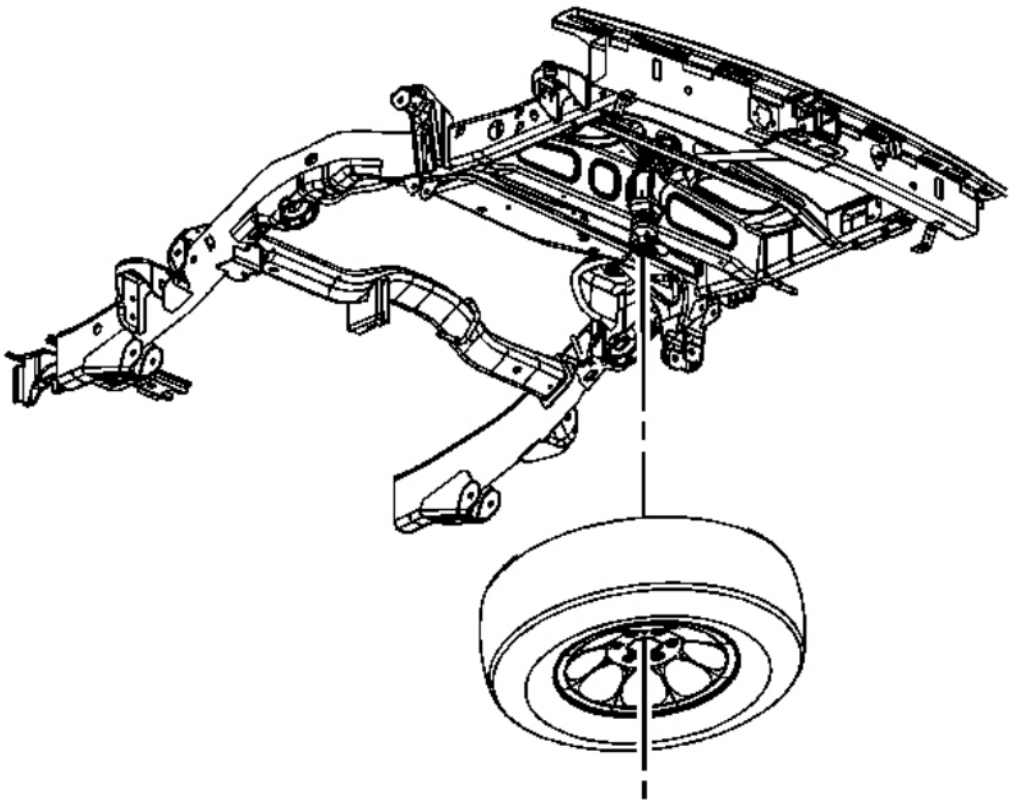

Fig. 167: View Of Spare Tire & Stowage Lock Cylinder
Courtesy of GENERAL MOTORS CORP.

13. Install the spare tire, if necessary.
14. Install the spare tire stowage lock cylinder, if necessary.

cardiagn.com

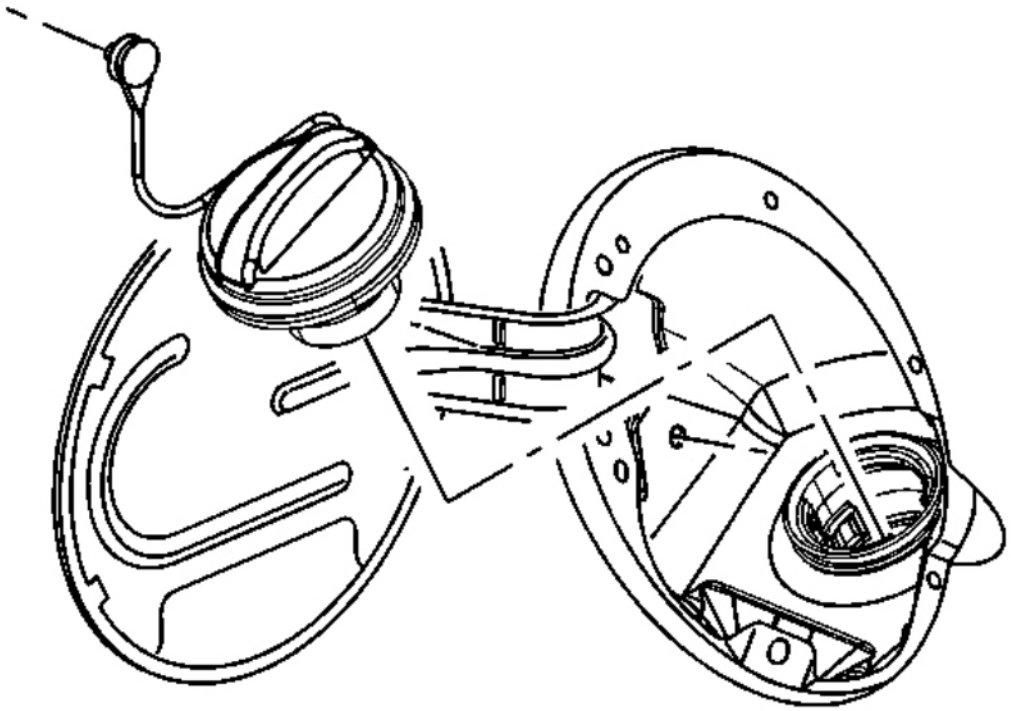

Fig. 168: View Of Filler Door And Tethered Fuel Filler Cap
Courtesy of GENERAL MOTORS CORP.

15. Install the fuel fill cap.

FUEL TANK FILLER PIPE REPLACEMENT (2500 SERIES)

Removal Procedure

cardiagn.com

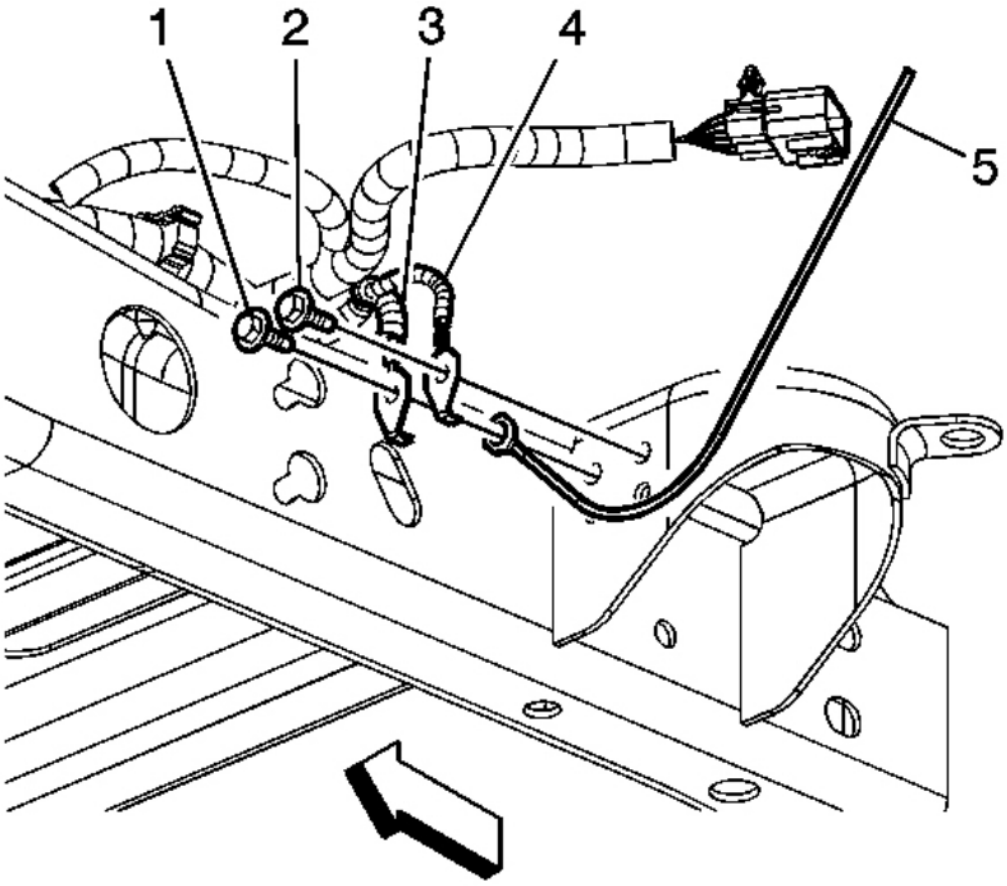

Fig. 169: View Of Fill Pipe Ground Strap, Lamp Ground Wires & Harness Ground Bolts
Courtesy of GENERAL MOTORS CORP.

1. Remove the rear fuel tank. Refer to **Fuel Tank Replacement (1500 LWB - 117.3L (31 gal) Tank)** or **Fuel Tank Replacement (1500 LWB - 117.3L (31 gal) Tank + E85)** or **Fuel Tank Replacement (1500 SWB - 98.4L (26 gal) Tank)** or **Fuel Tank Replacement (1500 SWB - 98.4L (26 gal) Tank + E85)** or **Fuel Tank Replacement (2500 LWB - 43.5L (11.5 gal) Tank-Rear)** or **Fuel Tank Replacement (2500 LWB - 98.4L (26 gal) Tank-Front)**.
2. Remove the chassis wiring harness ground bolt (2).
3. Remove the left rear lamp ground wire (4) and fill pipe ground strap (5) from the frame.

cardiagn.com

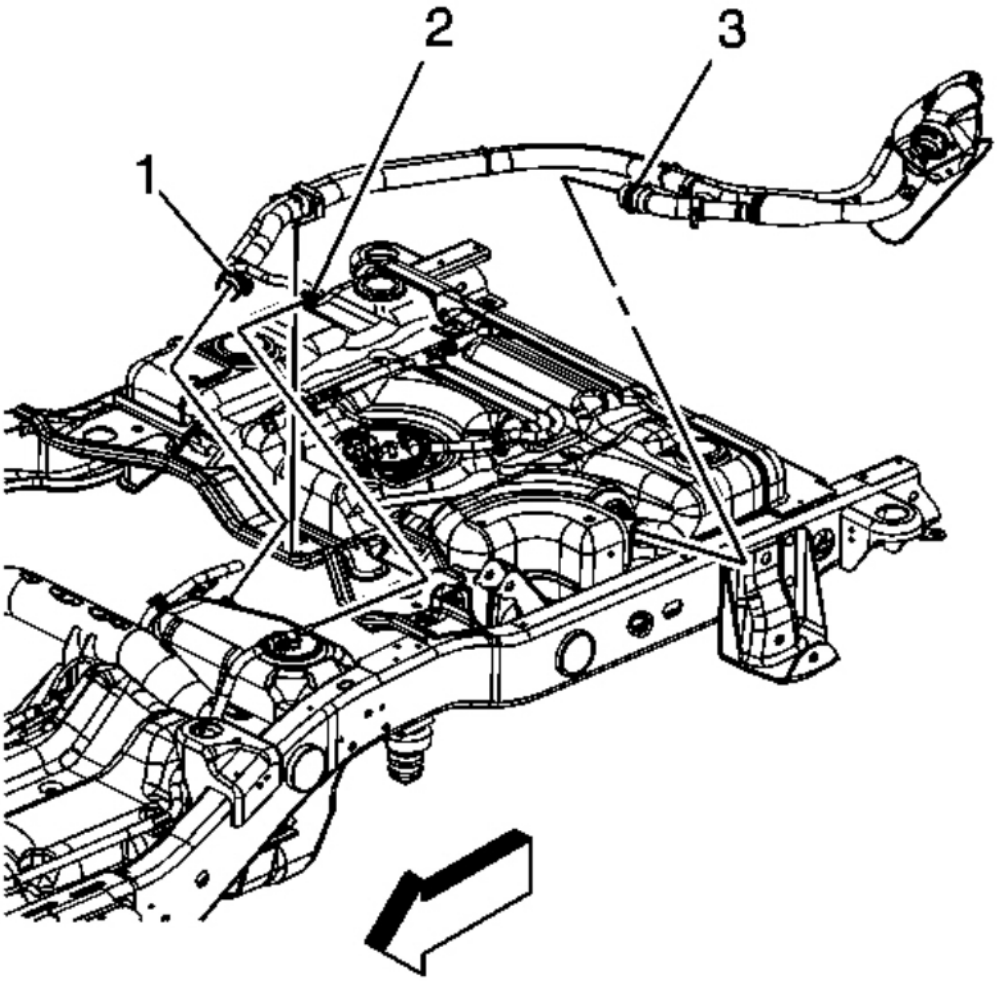

Fig. 170: View Of Fuel Hoses & Clamp
Courtesy of GENERAL MOTORS CORP.

4. Remove the rear axle vent hose clip from the fill pipe neck.
5. Loosen the fuel tank fill hose clamp (1) at the front tank.
6. Disconnect the fuel fill hose evaporative emission (EVAP) line quick connect fitting (2) from the fuel tank line. Refer to **Quick Connect Fitting Service - Plastic Collar**.
7. Remove the fuel fill hose from the front tank.
8. Remove the fuel fill hose integral clamp from the crossmember.
9. Remove the fuel fill hose/pipe assembly.

cardiagn.com

10. Cap the open end of the fuel tank in order to prevent fuel system contamination.
11. Cap the open ends of the fuel/EVAP lines in order to prevent fuel/EVAP system contamination.
12. If replacing any serviceable part of the fill pipe assembly proceed to the disassemble procedure, otherwise proceed to the installation procedure.

Disassemble

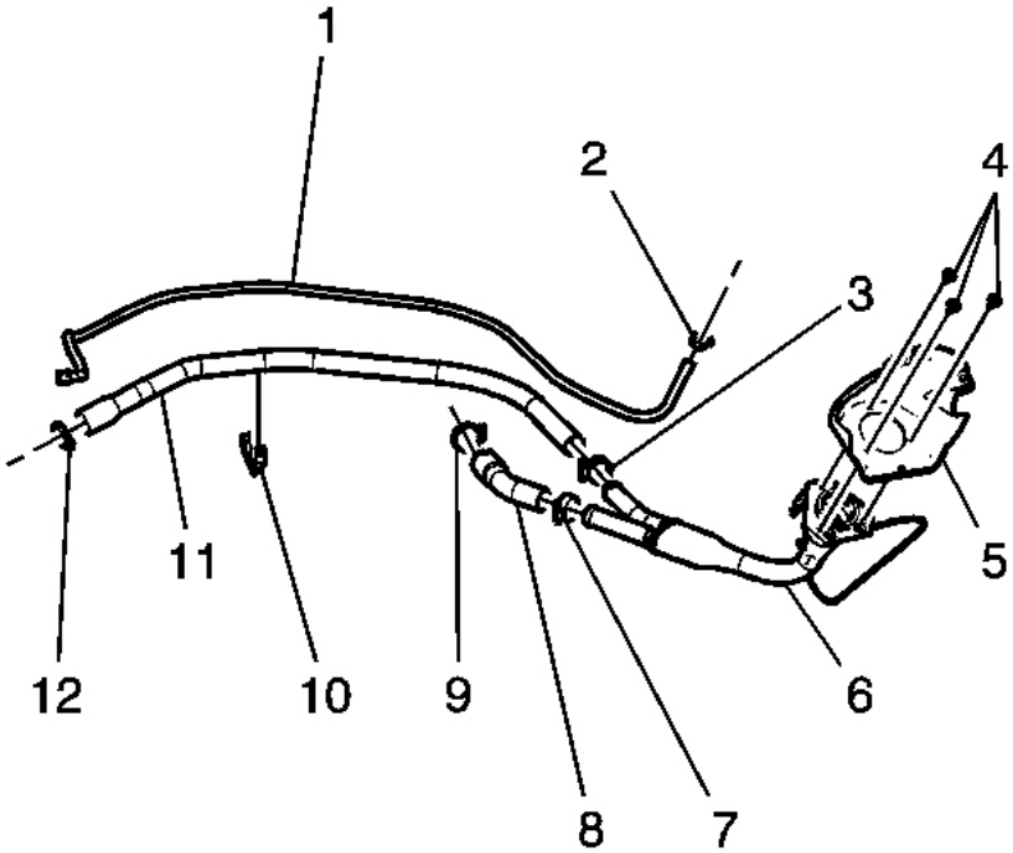

Fig. 171: View Of Fuel Hose Components
Courtesy of GENERAL MOTORS CORP.

- Evaporative emission canister hose (1)
- Evaporative emission canister hose clamp (2)
- Fuel tank fill pipe clamp (3)
- Fuel tank fill pipe housing bolts (4)
- Fuel tank fill pipe housing (5)

cardiagn.com

- Fuel tank fill pipe restrictor (6)
- Fuel tank fill pipe clamp (7)
- Fuel tank vent hose (8)
- Fuel tank fill hose clamp (9)
- Evaporative emission canister hose clip (10)
- Fuel tank fill pipe (11)
- Fuel tank fill hose clamp (12)

Assemble

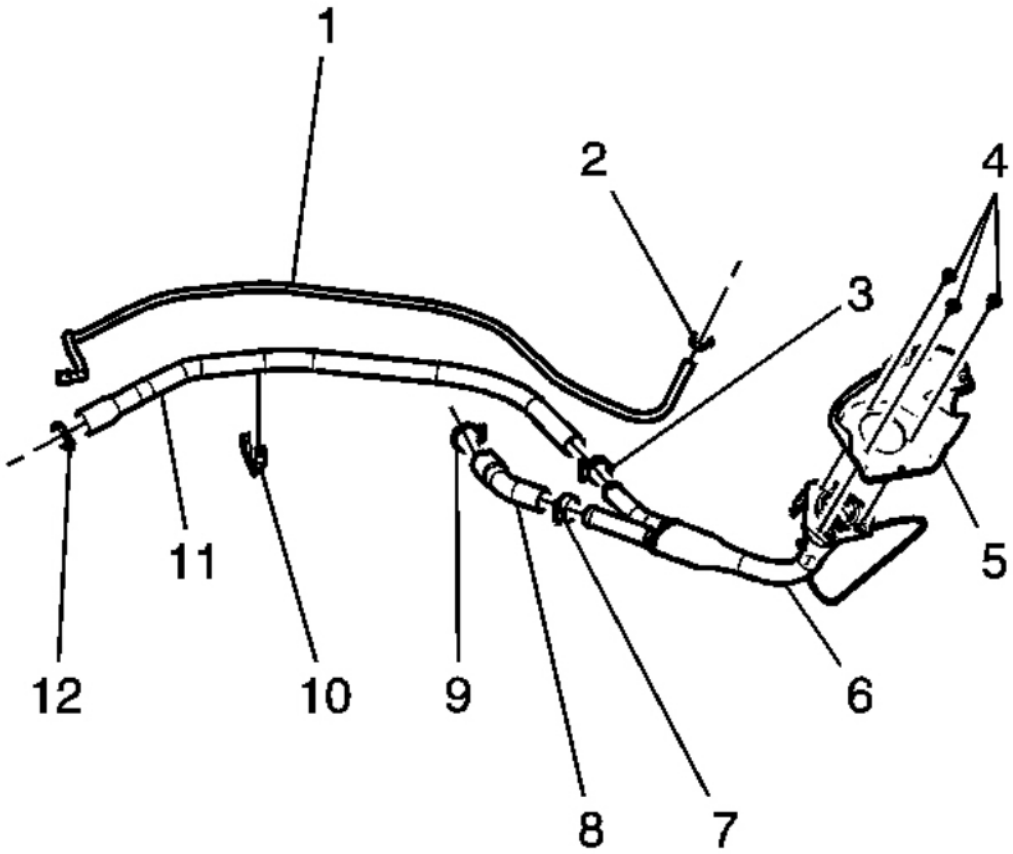

Fig. 172: View Of Fuel Hose Components
Courtesy of GENERAL MOTORS CORP.

NOTE: **Refer to Fastener Notice .**

cardiagn.com

- Fuel tank fill hose clamp (12)

  Tighten: Tighten the clamp to 2.5 N.m (22 lb in).

- Fuel tank fill pipe (11)
- Evaporative emission canister hose clip (10)
- Fuel tank fill hose clamp (9)

  Tighten: Tighten the clamp to 2.5 N.m (22 lb in).

- Fuel tank vent hose (8)
- Fuel tank fill pipe clamp (7)

  Tighten: Tighten the clamp to 2.5 N.m (22 lb in).

- Fuel tank fill pipe restrictor (6)
- Fuel tank fill pipe housing (5)
- Fuel tank fill pipe housing bolts (4)

  Tighten: Tighten the bolts to 2.3 N.m (20 lb in).

- Fuel tank fill pipe clamp (3)

  Tighten: Tighten the clamp to 2.5 N.m (22 lb in).

- Evaporative emission canister hose clamp (2)

  Tighten: Tighten the clamp to 2.5 N.m (22 lb in).

- Evaporative emission canister hose (1)

Installation Procedure

cardiagn.com

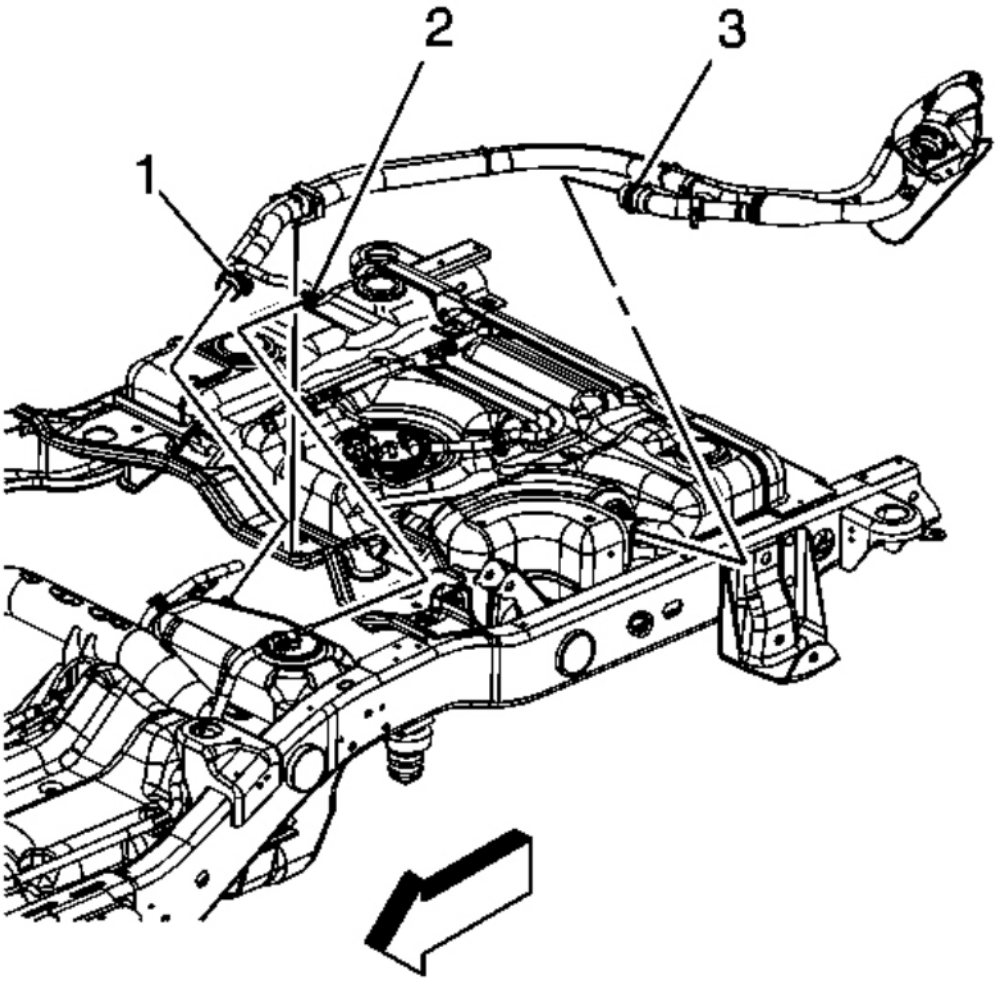

Fig. 173: View Of Fuel Hoses & Clamp
Courtesy of GENERAL MOTORS CORP.

1. Remove the caps from the open end of the front fuel tank.
2. Remove the caps from the fuel/EVAP lines.
3. Install the fuel fill hose/pipe assembly.
4. Install the fuel fill hose to the front tank.
5. Connect the fuel fill hose EVAP line quick connect fitting (2) to the fuel tank line. Refer to **Quick Connect Fitting Service - Plastic Collar**.
6. Tighten the fuel tank fill hose clamp (1) at the front tank.

cardiagn.com

Tighten: Tighten the clamps to 2.5 N.m (22 lb in).

7. Install the fuel fill hose integral clamp to the crossmember.
8. Install the rear axle vent hose clip to the fill pipe neck.

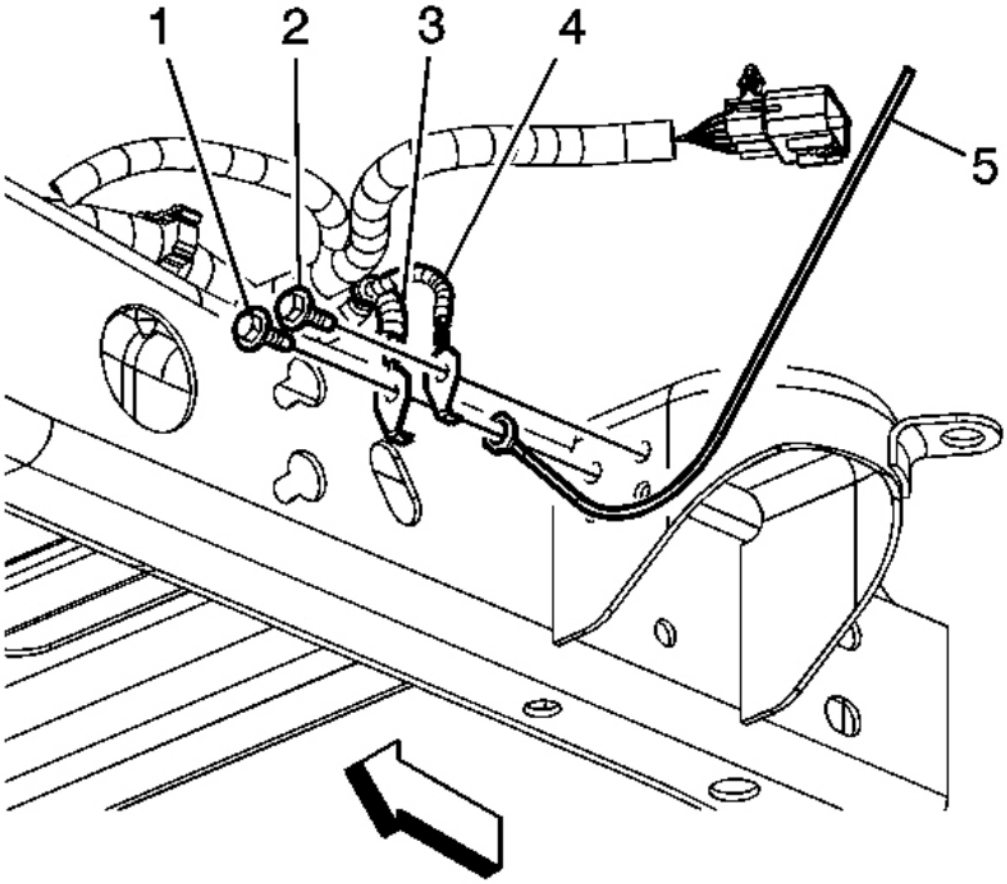

Fig. 174: View Of Fill Pipe Ground Strap, Lamp Ground Wires & Harness Ground Bolts
Courtesy of GENERAL MOTORS CORP.

9. Position the fill pipe ground strap (5) to the left rear lamp ground wire (4).
10. Install the rear lamp ground wire (4) and ground strap (5) to the frame. Insert the lamp ground wire anti-rotation tab into the hole in the frame.
11. Insert the chassis wiring harness ground bolt.

Tighten: Tighten the bolt to 9 N.m (80 lb in).

cardiagn.com

12. Install the rear fuel tank. Refer to **Fuel Tank Replacement (1500 LWB - 117.3L (31 gal) Tank)** or **Fuel Tank Replacement (1500 LWB - 117.3L (31 gal) Tank + E85)** or **Fuel Tank Replacement (1500 SWB - 98.4L (26 gal) Tank)** or **Fuel Tank Replacement (1500 SWB - 98.4L (26 gal) Tank + E85)** or **Fuel Tank Replacement (2500 LWB - 43.5L (11.5 gal) Tank-Rear)** or **Fuel Tank Replacement (2500 LWB - 98.4L (26 gal) Tank-Front)**.

FUEL TANK REPLACEMENT (1500 LWB - 117.3L (31 GAL) TANK)

Tools Required

J 45722 Fuel Sender Lock Ring Wrench. See **Special Tools**.

Removal Procedure

IMPORTANT: Clean the fuel and evaporative emission (EVAP) connections and surrounding areas prior to disconnecting the lines in order to avoid possible system contamination.

cardiagn.com

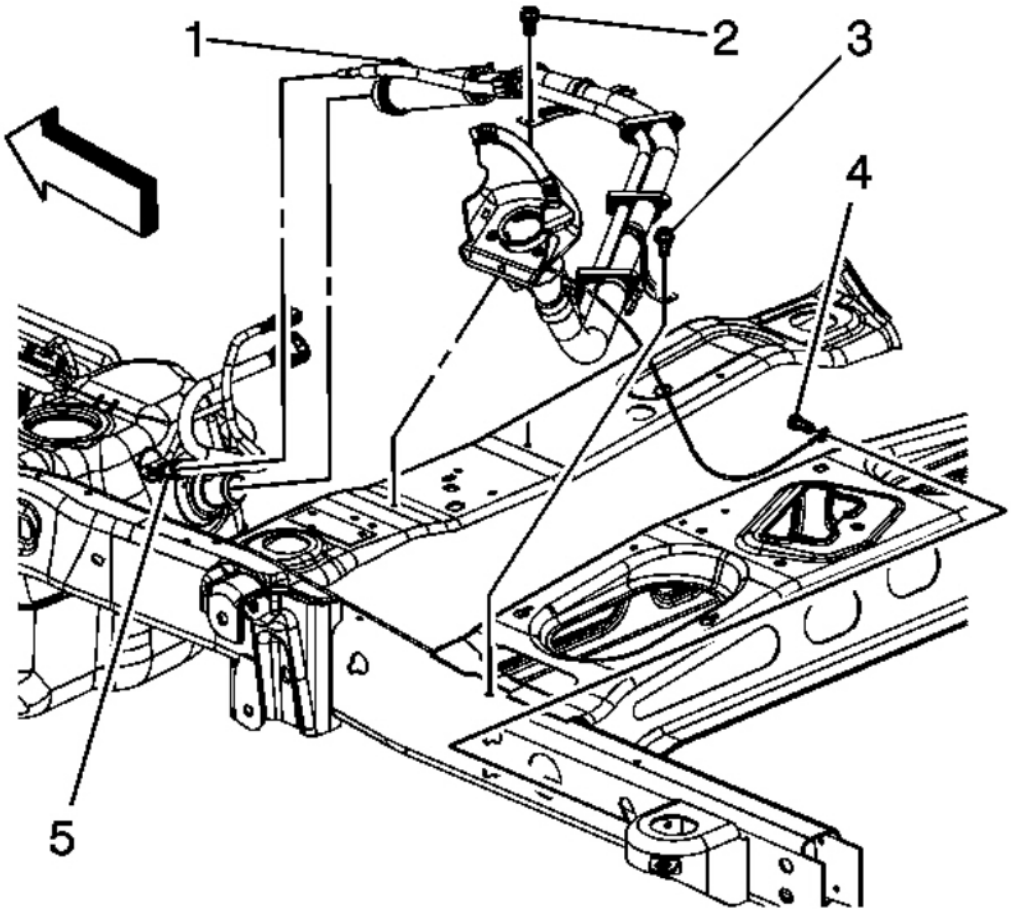

Fig. 175: View Of Fuel Fill Hose, Pipe Bracket Bolts & Quick Connect Fitting
Courtesy of GENERAL MOTORS CORP.

1. Relieve the fuel system pressure. Refer to **Fuel Pressure Relief**.
2. Drain the fuel tank. Refer to **Fuel Tank Draining (Dual Tanks - Front)** or **Fuel Tank Draining (Dual Tanks - Rear)** or **Fuel Tank Draining (Single Tank)**.
3. Disconnect the fuel tank vent line quick connect fitting (5) from the fuel fill pipe line. Refer to **Quick Connect Fitting Service - Plastic Collar**.

cardiagn.com

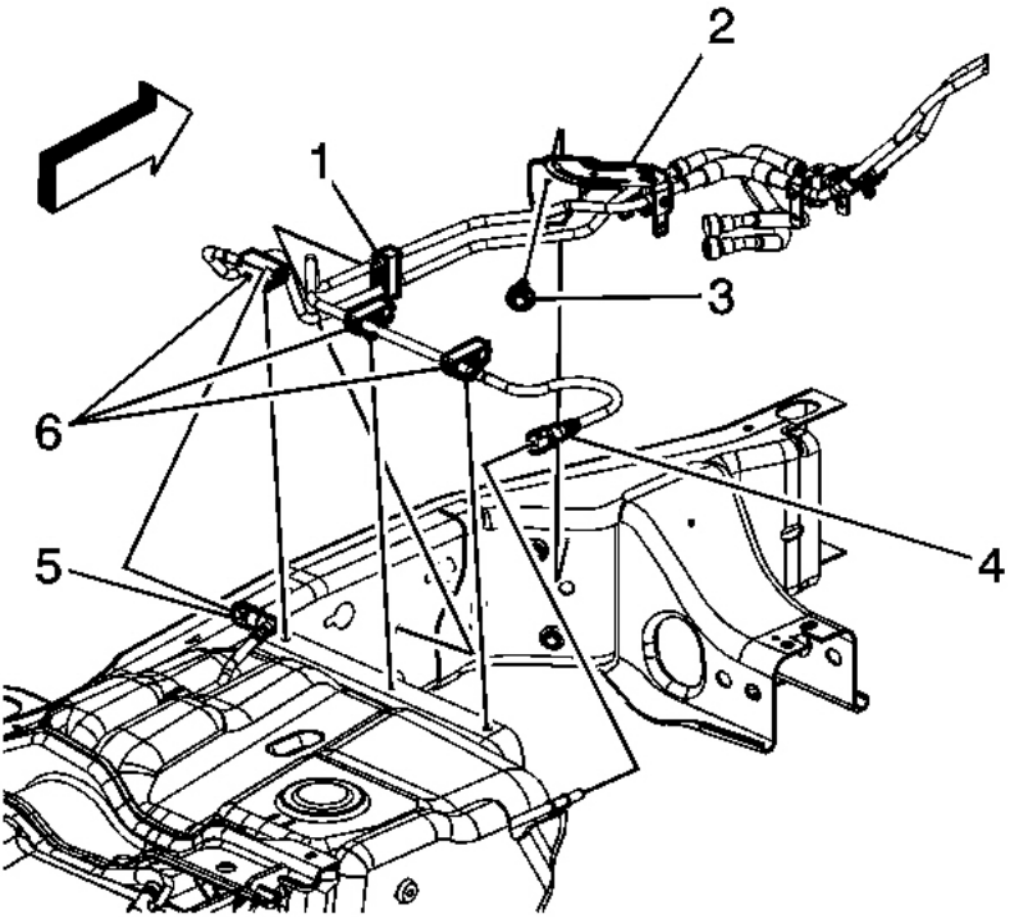

Fig. 176: View Of EVAP Lines, Fuel Feed Lines & Fittings
Courtesy of GENERAL MOTORS CORP.

4. Disconnect the chassis EVAP line quick connect fitting (4) from the fuel tank line. Refer to **Quick Connect Fitting Service - Plastic Collar**.
5. Disconnect the fuel tank fuel feed line quick connect fitting (5) from the chassis line. Refer to **Quick Connect Fitting Service - Plastic Collar**.
6. Cap the fuel and EVAP lines in order to prevent possible fuel and/or EVAP system contamination.

cardiagn.com

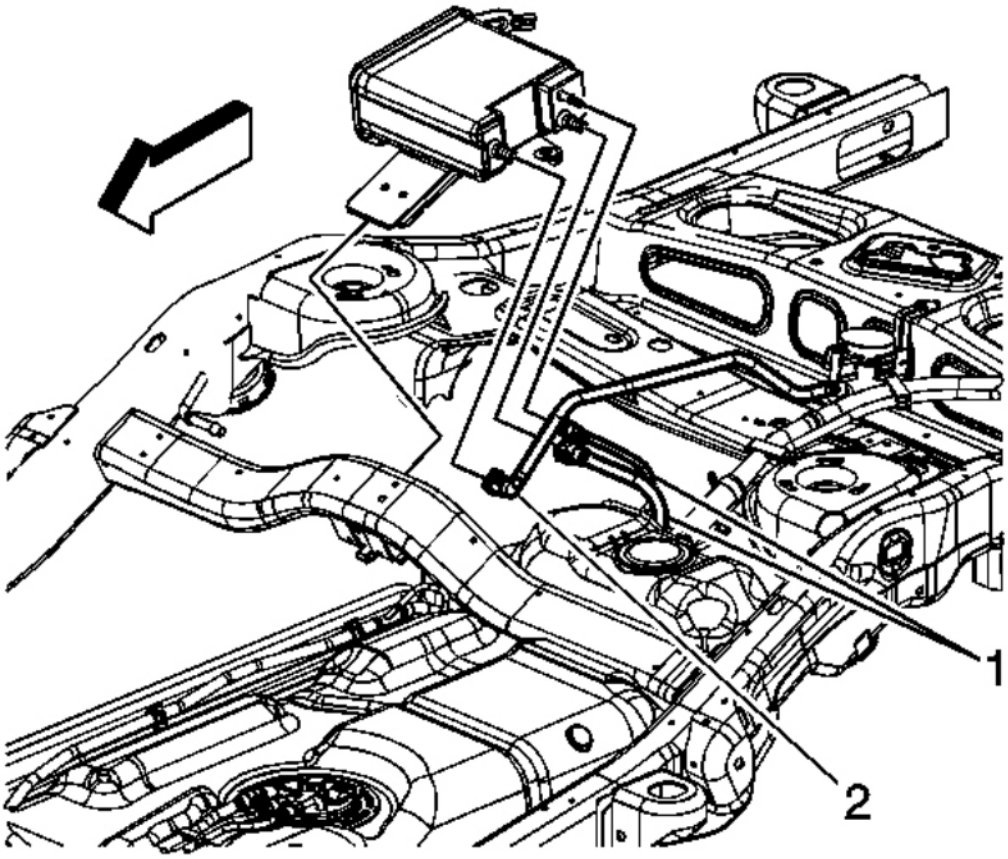

Fig. 177: View Of Fuel Tank EVAP Lines & Canister
Courtesy of GENERAL MOTORS CORP.

7. Disconnect the fuel tank EVAP lines (1) from the EVAP canister. Refer to **Quick Connect Fitting Service - Plastic Collar**.
8. Cap the EVAP lines in order to prevent possible EVAP system contamination.
9. Using an adjustable jack, support the fuel tank.
10. Remove the fuel tank strap bolts.

NOTE: **Refer to Damage to Fuel Tank Straps Notice .**

11. Remove the fuel tank straps.
12. With the aid of an assistant, carefully lower the rear of the fuel tank.
13. Slide the front of the tank away from the frame.

cardiagn.com

14. Lower the fuel tank slightly until the chassis wiring harness electrical connectors can be accessed.

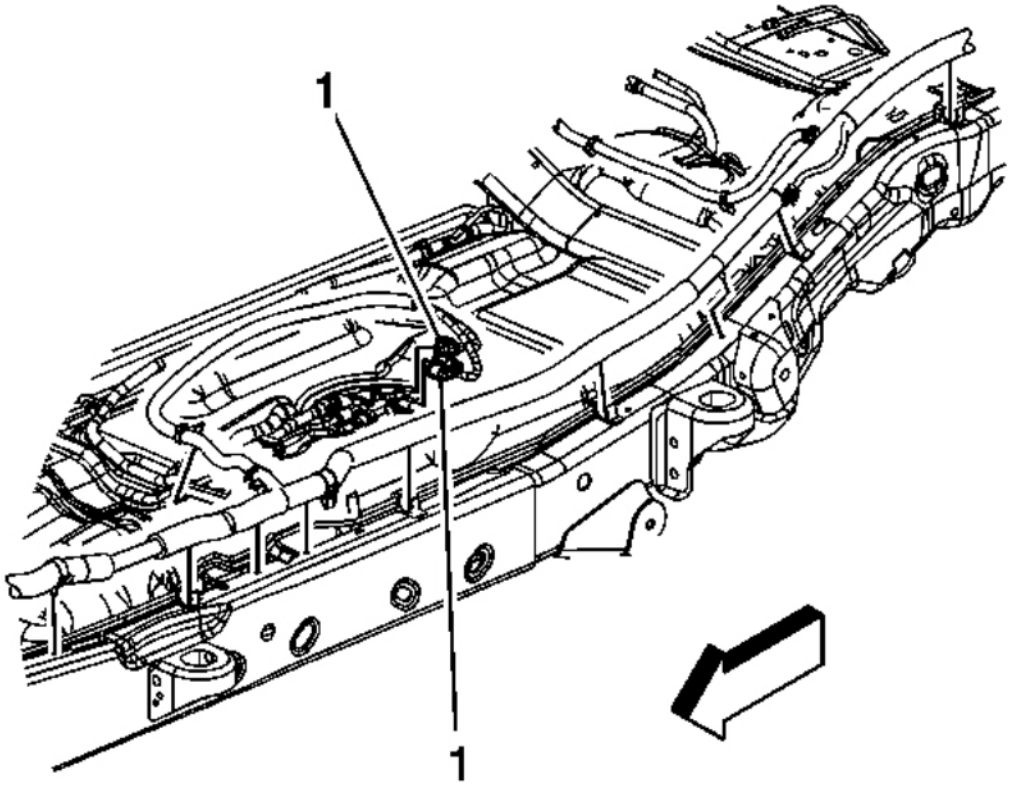

Fig. 178: View Of Chassis Wiring Harness Electrical Connectors & Module
Courtesy of GENERAL MOTORS CORP.

15. Disengage the chassis wiring harness electrical connector, connector position assurance (CPA) retainer at the module.
16. Disconnect the chassis wiring harness electrical connectors (1) from the module and the fuel pressure sensor.

cardiagn.com

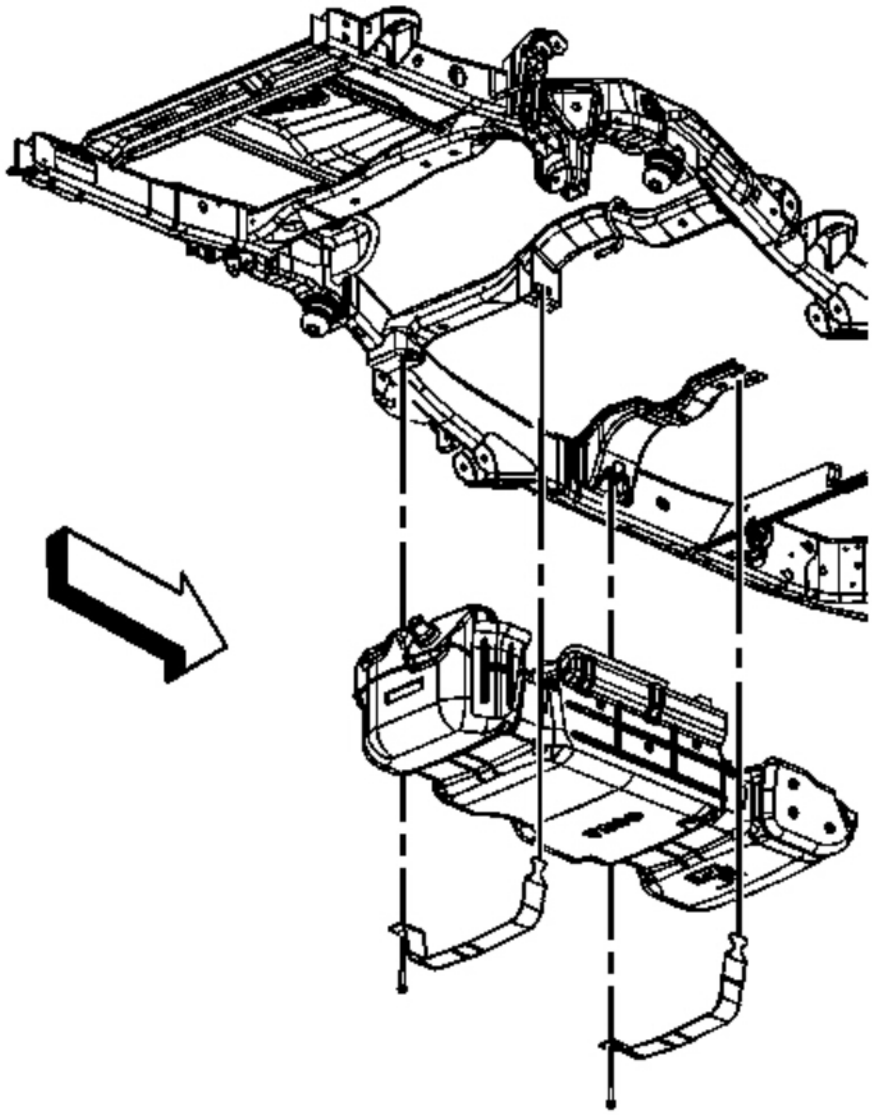

Fig. 179: View Of Fuel Tank & Straps (Single Tank)
Courtesy of GENERAL MOTORS CORP.

17. Completely lower the fuel tank.
18. With the aid of an assistant, place the fuel tank in a suitable work area.
19. If replacing the fuel tank proceed to the next step, otherwise proceed to step 18 in the installation procedure.

cardiagn.com

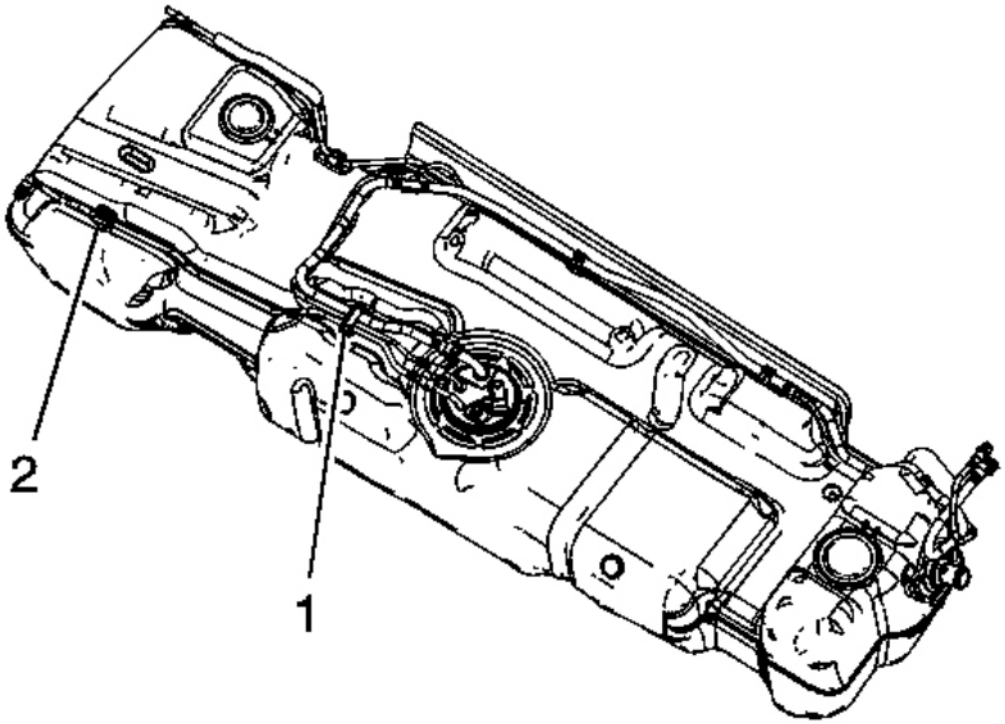

Fig. 180: View Of Fuel Feed Line Retainer & EVAP Line Clip
Courtesy of GENERAL MOTORS CORP.

20. Remove the fuel feed line from the retaining feature (2) in the fuel tank.
21. Open the fuel/EVAP line clip (1) and remove the fuel feed line from the clip.
22. Disconnect the fuel feed line quick connect fitting at the fuel tank module. Refer to **Quick Connect Fitting Service - Plastic Collar**.

cardiagn.com

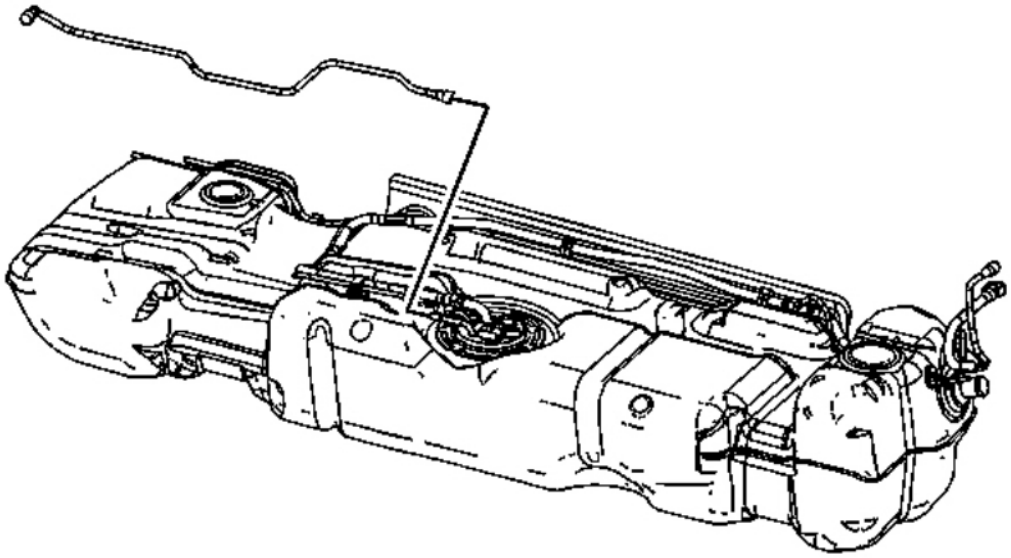

Fig. 181: View Of Fuel Feed Line
Courtesy of GENERAL MOTORS CORP.

23. Remove the fuel feed line from the fuel tank.

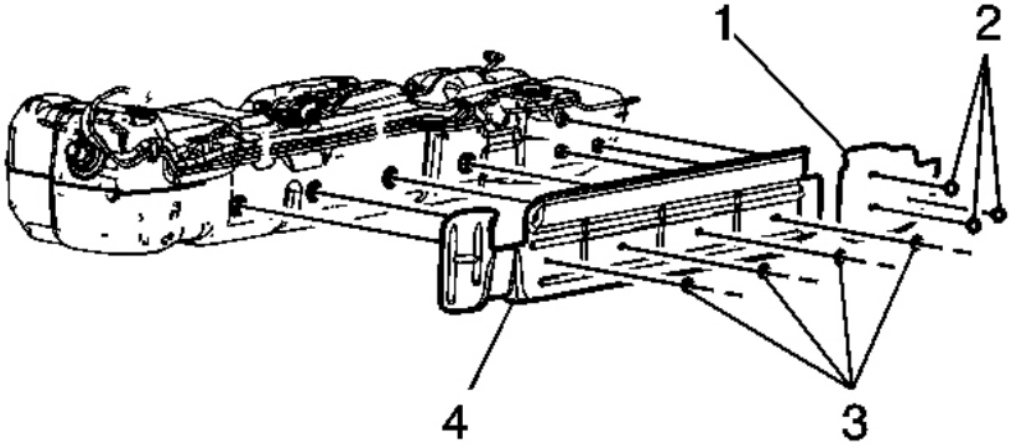

cardiagn.com

Fig. 182: View Of Fuel Tank Shields & Retainers
Courtesy of GENERAL MOTORS CORP.

24. Remove the fuel tank shield retainers (2 and 3) and shields (1 and 4).

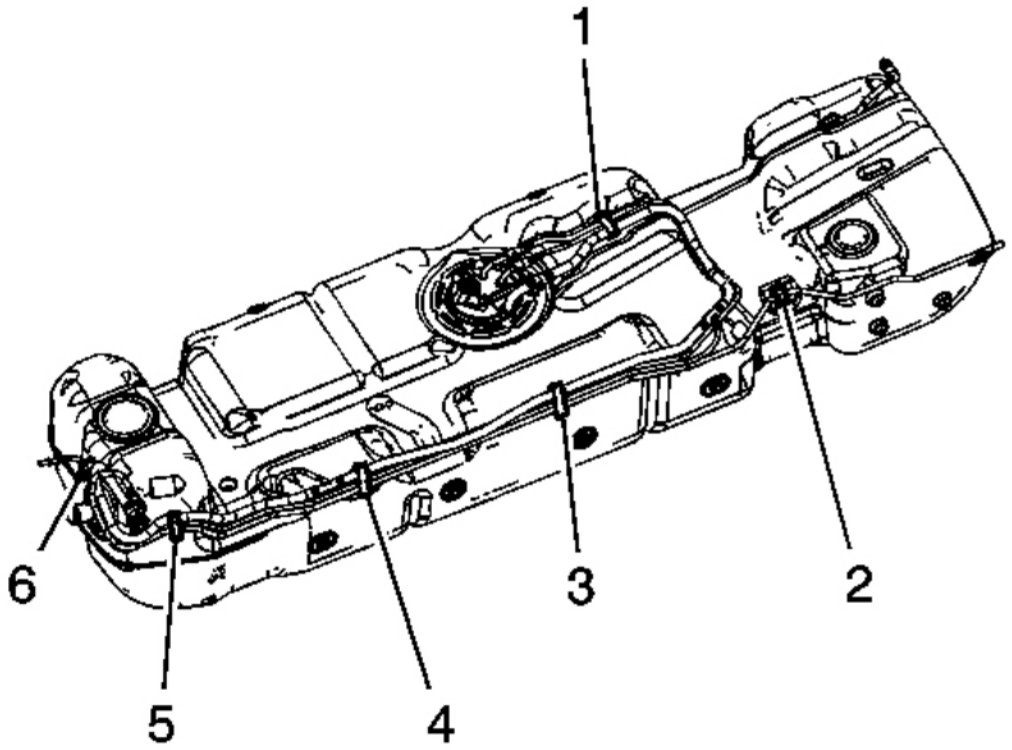

Fig. 183: View Of Fuel Tank Clips
Courtesy of GENERAL MOTORS CORP.

25. Remove the EVAP line from the fuel tank clips (2 and 6).
26. Open the fuel tank clips (1, 3, 4, and 5) and remove the EVAP lines from the clips.
27. Disconnect the EVAP line quick connect fittings at the fuel tank module and fuel tank vent valve. Refer to **Quick Connect Fitting Service - Plastic Collar**.

cardiagn.com

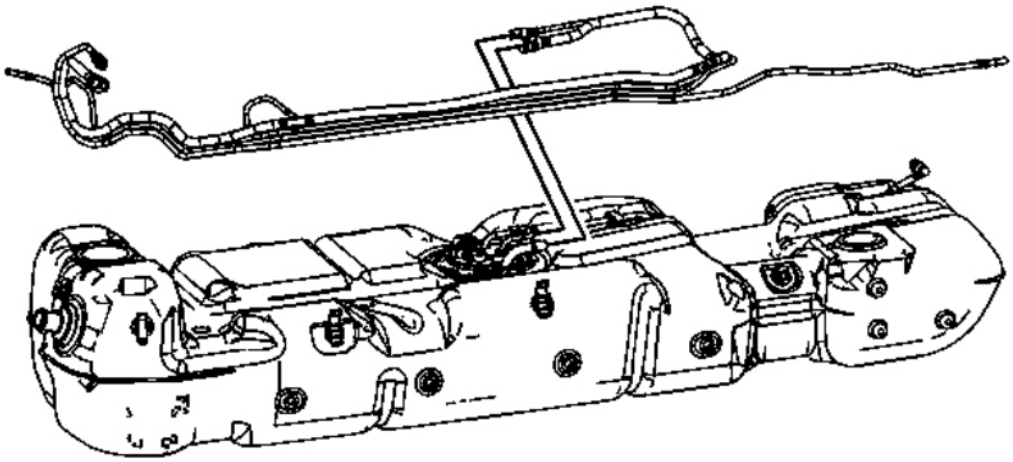

Fig. 184: View Of EVAP Lines
Courtesy of GENERAL MOTORS CORP.

28. Remove the EVAP lines from the fuel tank.

cardiagn.com

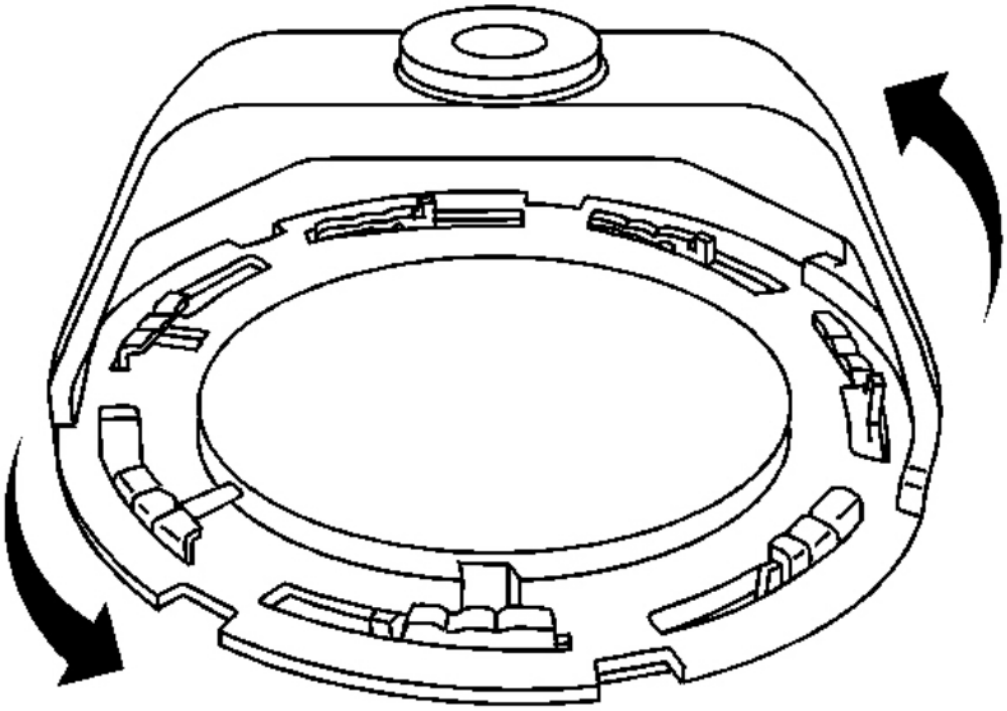

Fig. 185: Identifying Lock Ring
Courtesy of GENERAL MOTORS CORP.

29. Using the **J 45722** , remove the lock ring. See **Special Tools**.

cardiagn.com

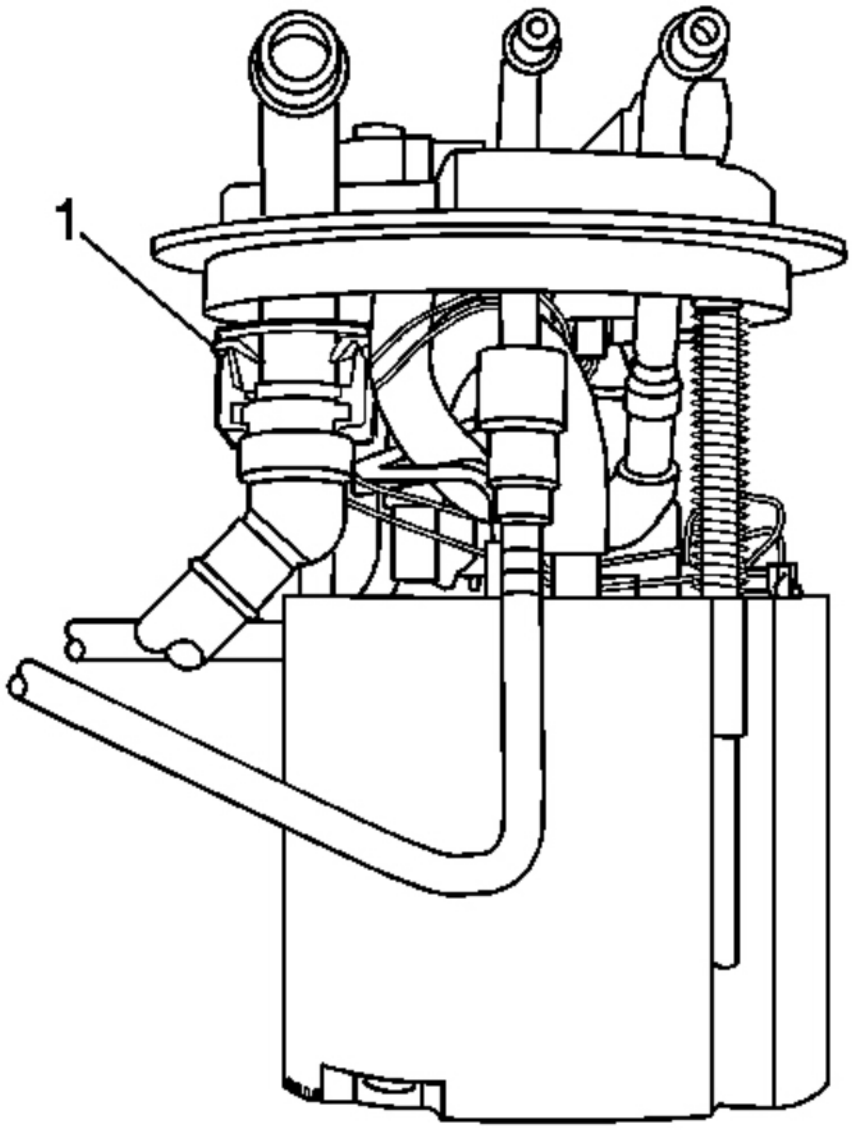

Fig. 186: View Of Quick Connect Fittings At Module Cover
Courtesy of GENERAL MOTORS CORP.

30. Carefully lift the module from the fuel tank, enough to access the quick connect fittings (1) under the module cover. Disconnect the quick connect fittings. Refer to **Quick Connect Fitting Service - Plastic Collar**.
31. Remove the fuel tank module.

cardiagn.com

32. Remove and discard the fuel tank module seal.

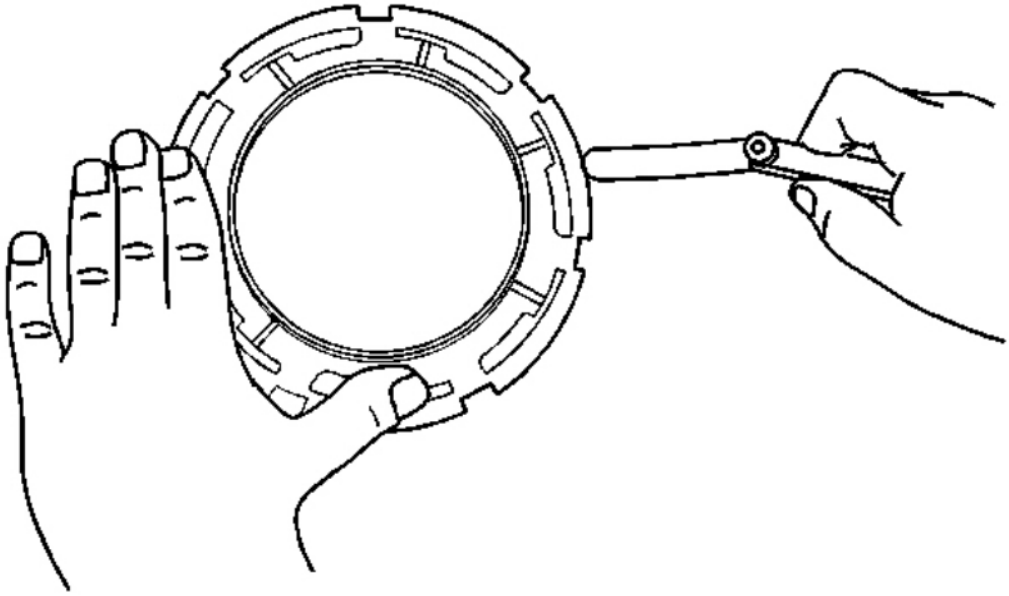

Fig. 187: Checking Lock Ring For Flatness
Courtesy of GENERAL MOTORS CORP.

IMPORTANT:

- **Some lock rings were manufactured with "DO NOT REUSE" stamped into them. These lock rings may be reused if they are not damaged or warped.**
- **Inspect the lock ring for damage due to improper removal or installation procedures. If damage is found, install a NEW lock ring.**
- **Check the lock ring for flatness.**

33. Place the lock ring on a flat surface. Measure the clearance between the lock ring and the flat surface using a feeler gage at 7 points.
34. If warpage is less than 0.41 mm (0.016 in), the lock ring does not require replacement.
35. If warpage is greater than 0.41 mm (0.016 in), the lock ring must be replaced.

Installation Procedure

cardiagn.com

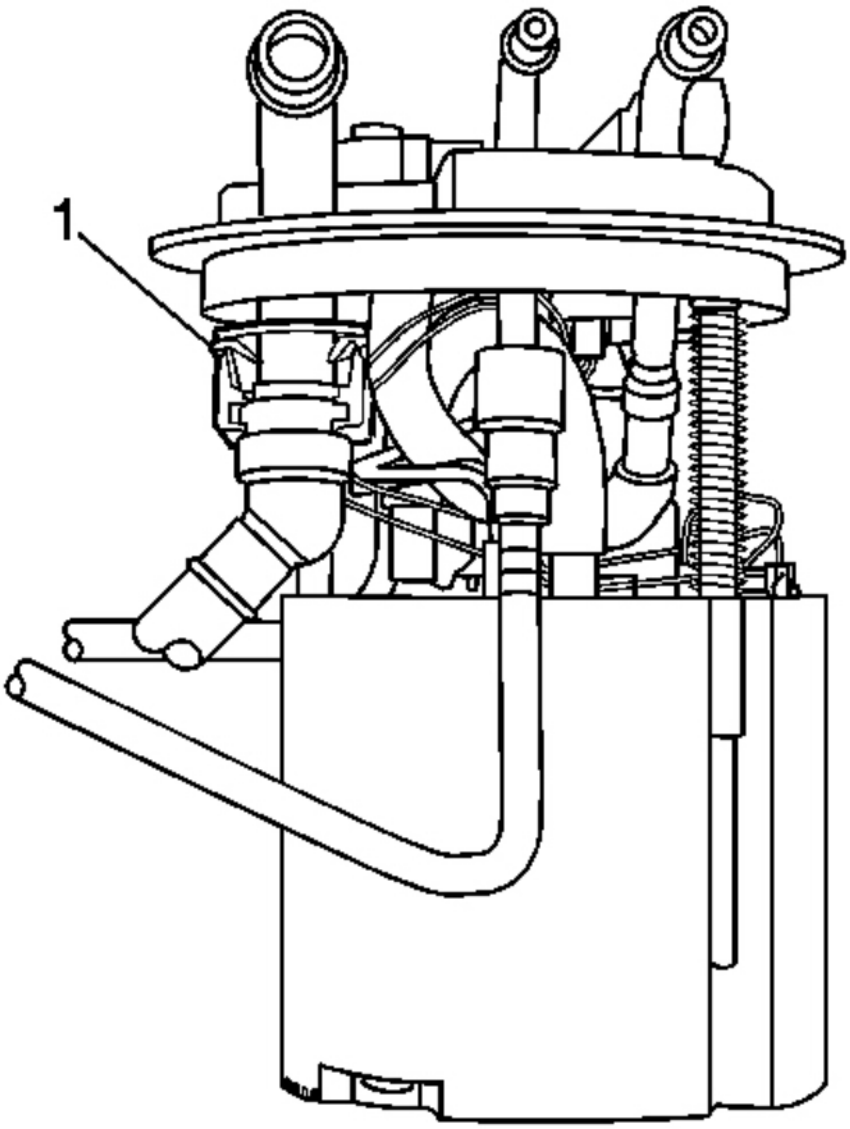

Fig. 188: View Of Quick Connect Fittings At Module Cover
Courtesy of GENERAL MOTORS CORP.

1. If the fuel tank was replaced perform the following steps, otherwise proceed to step 18.
2. Install the NEW fuel tank module seal onto the fuel tank.
3. Pull the vent lines in the fuel tank up as far as possible for ease of installation.
4. Position the fuel tank module part way into the fuel tank.

cardiagn.com

5. Connect the quick connect fittings (1) to the module cover. Refer to **Quick Connect Fitting Service - Plastic Collar**.
6. Install the fuel tank module into the fuel tank.
7. Place the lock ring into position.

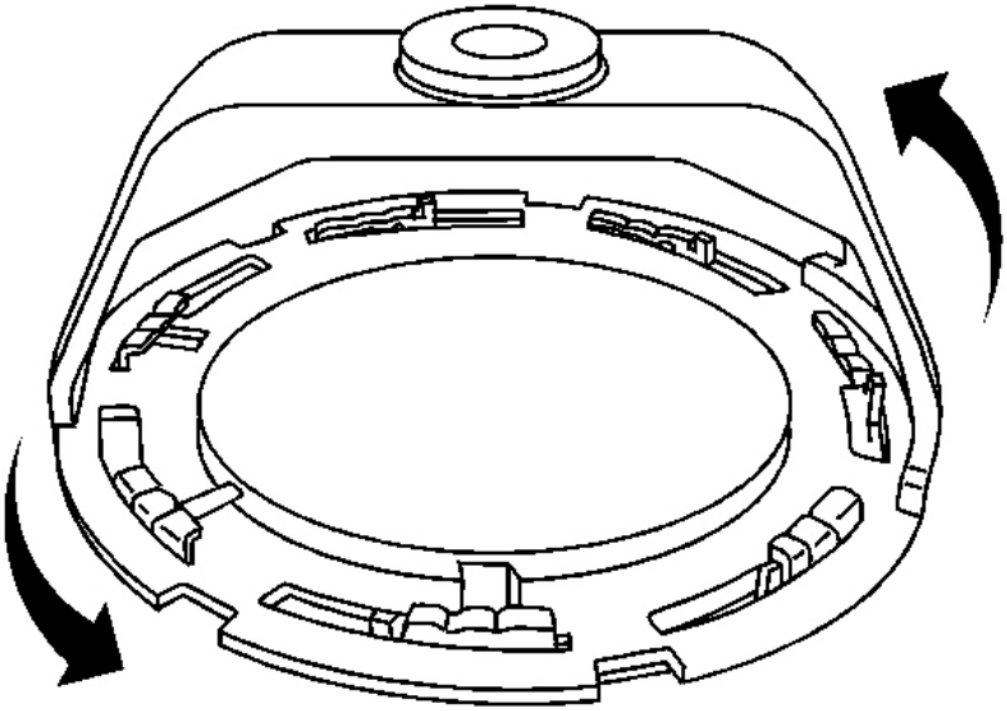

Fig. 189: Identifying Lock Ring
Courtesy of GENERAL MOTORS CORP.

IMPORTANT: Always replace the fuel module seal when installing the fuel module. Replace the lock ring if necessary. DO NOT apply any type of lubrication in the seal groove.
Ensure the lock ring is installed with the correct side facing upward. A correctly installed lock ring will only turn in a clockwise direction.

8. Rotate the lock ring counterclockwise using the **J 45722** . See **Special Tools**.

cardiagn.com

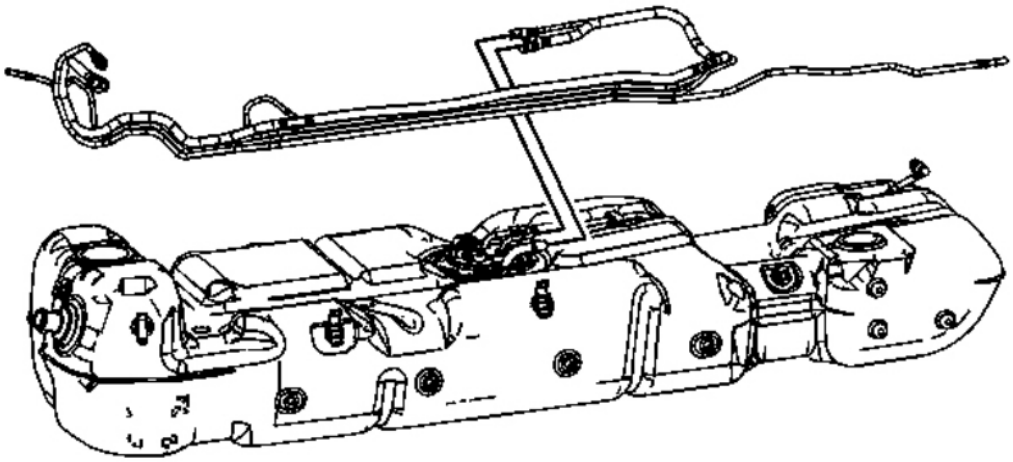

Fig. 190: View Of EVAP Lines
Courtesy of GENERAL MOTORS CORP.

9. Install the EVAP lines to the fuel tank.

cardiagn.com

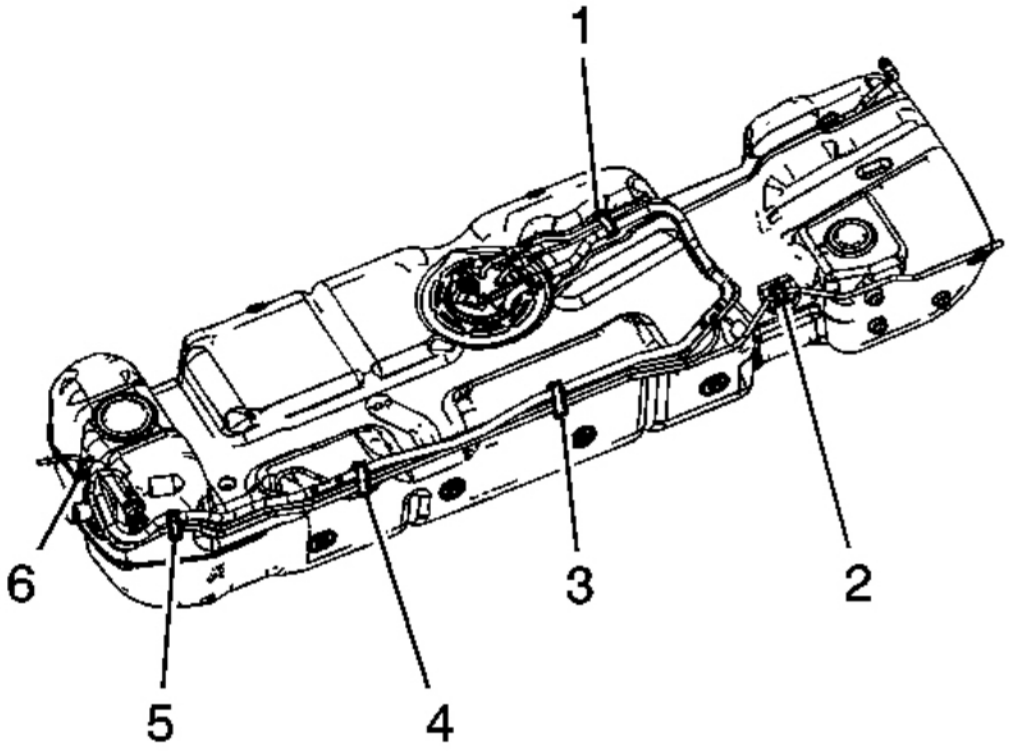

Fig. 191: View Of Fuel Tank Clips
Courtesy of GENERAL MOTORS CORP.

10. Connect the EVAP line quick connect fittings at the fuel tank module and fuel tank vent valve. Refer to **Quick Connect Fitting Service - Plastic Collar**.
11. Install the EVAP lines to the fuel tank clips (1, 3, 4, and 5) and close the clips.
12. Install the EVAP line to the fuel tank clips (2 and 6).

cardiagn.com

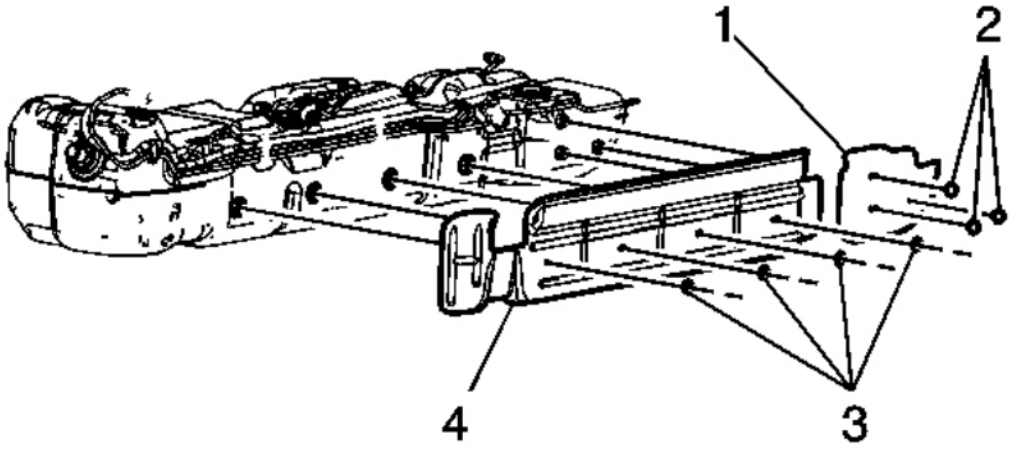

Fig. 192: View Of Fuel Tank Shields & Retainers
Courtesy of GENERAL MOTORS CORP.

13. Install the fuel tank shields (1 and 4) and retainers (2 and 3).

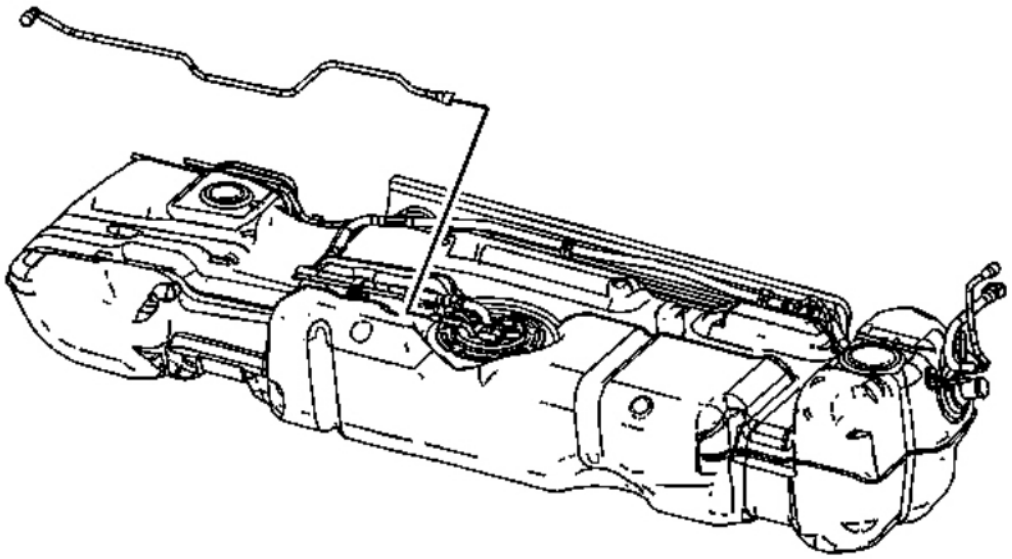

cardiagn.com

Fig. 193: View Of Fuel Feed Line
Courtesy of GENERAL MOTORS CORP.

14. Install the fuel feed line to the fuel tank.

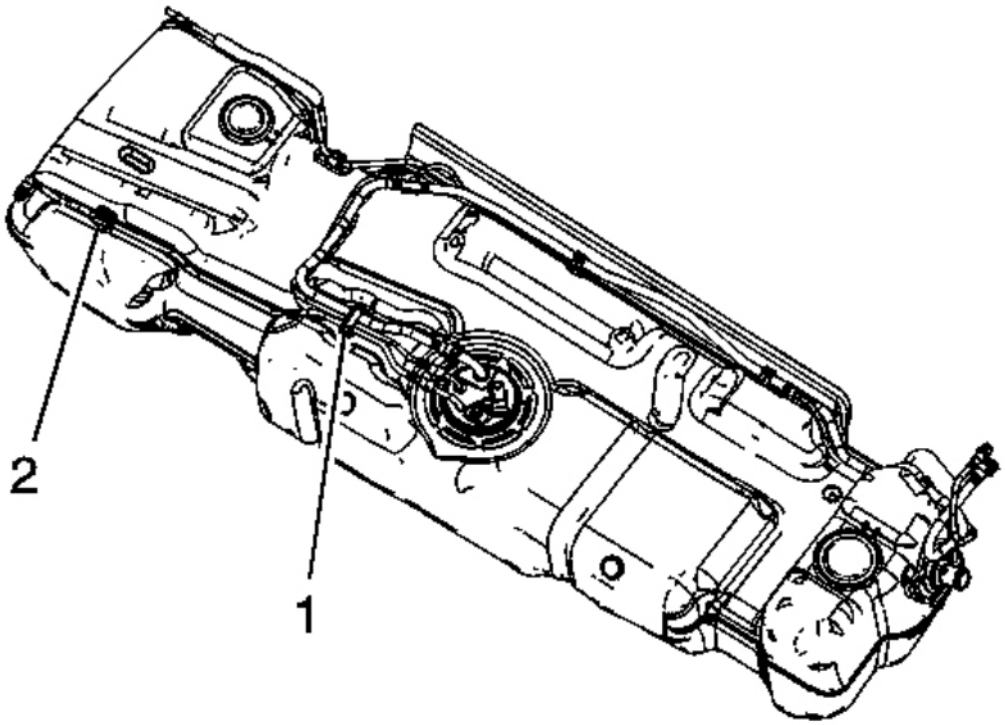

Fig. 194: View Of Fuel Feed Line Retainer & EVAP Line Clip
Courtesy of GENERAL MOTORS CORP.

15. Connect the fuel feed line quick connect fitting at the fuel tank module. Refer to **Quick Connect Fitting Service - Plastic Collar**.
16. Install the fuel feed line to the clip (1) and close the clip.
17. Install the fuel feed line to the retaining feature (2) in the fuel tank.

cardiagn.com

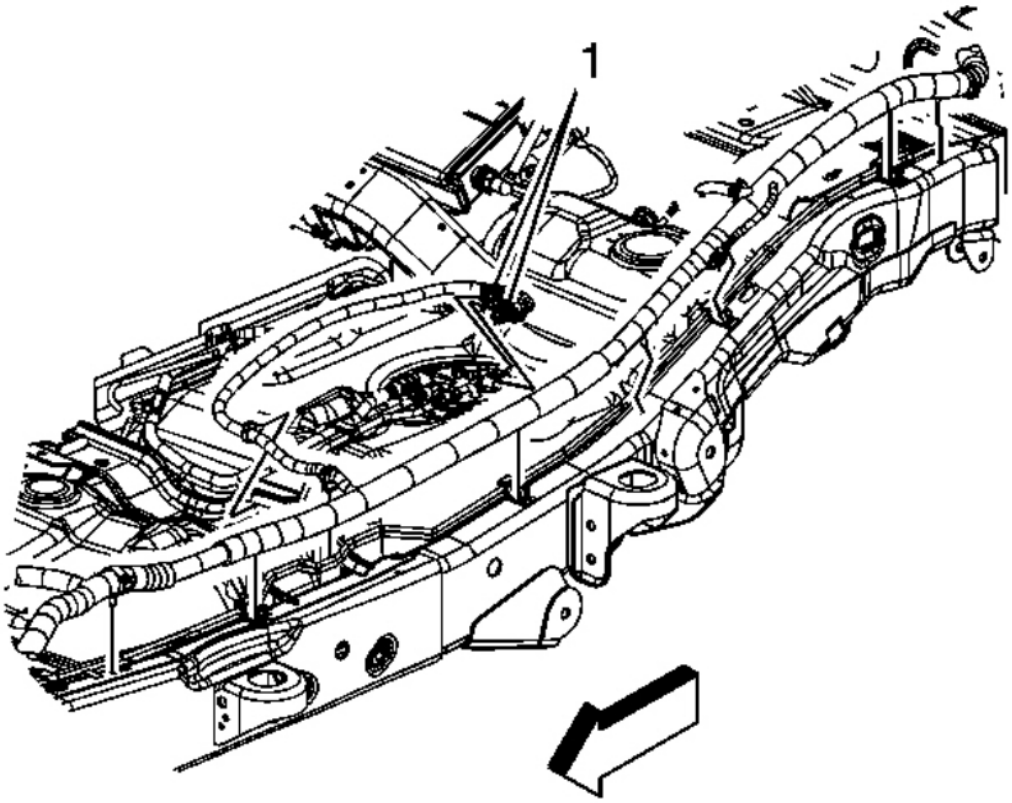

Fig. 195: View Of Chassis Wiring Harness Electrical Connectors
Courtesy of GENERAL MOTORS CORP.

18. Place the fuel tank onto a suitable jack.
19. With the aid of an assistant, partially raise the fuel tank until the electrical connections can be made.
20. Connect the chassis wiring harness electrical connectors (1) to the fuel tank module and fuel pressure sensor.
21. Engage the chassis harness electrical connector CPA retainer at the module electrical connector.

cardiagn.com

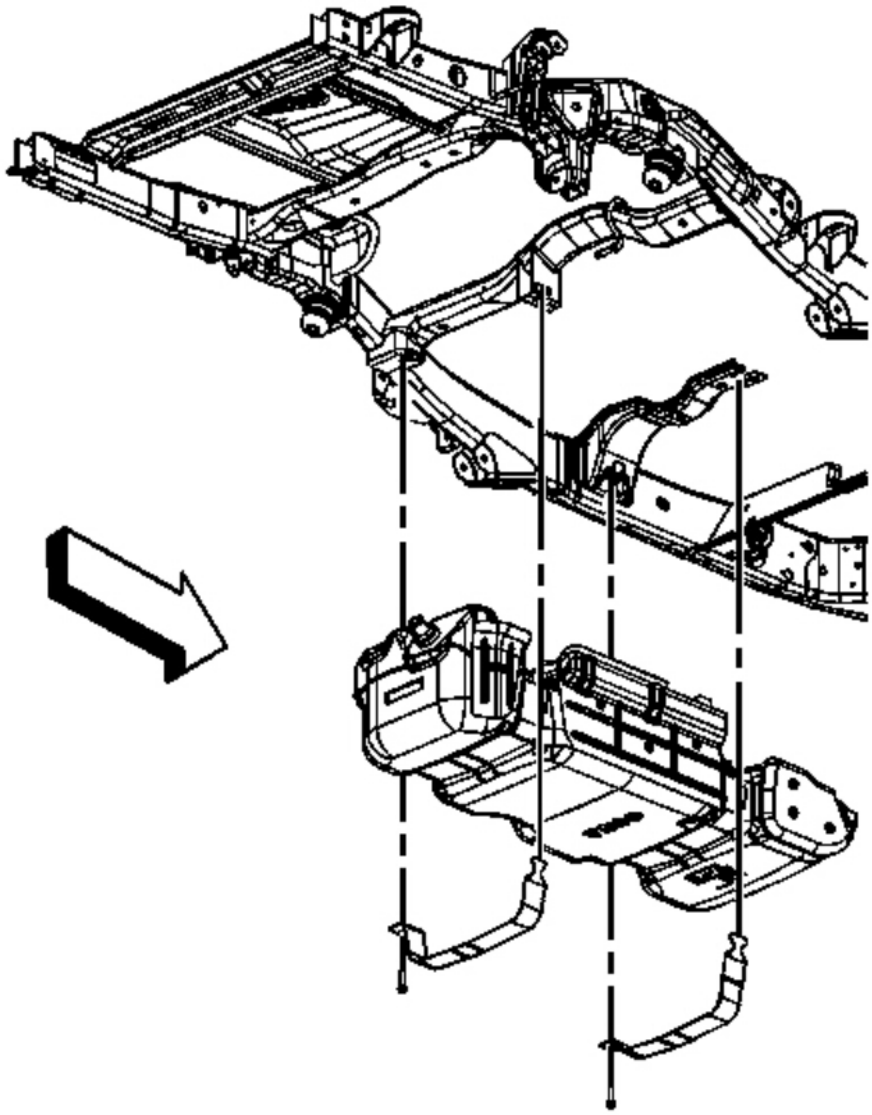

Fig. 196: View Of Fuel Tank & Straps (Single Tank)
Courtesy of GENERAL MOTORS CORP.

22. Completely raise the fuel tank.
23. Install the fuel tank straps.

NOTE: **Refer to Fastener Notice .**

cardiagn.com

24. Install the fuel tank strap bolts.

    Tighten: Tighten the bolts to 40 N.m (30 lb ft).

25. Remove the adjustable jack from the fuel tank.

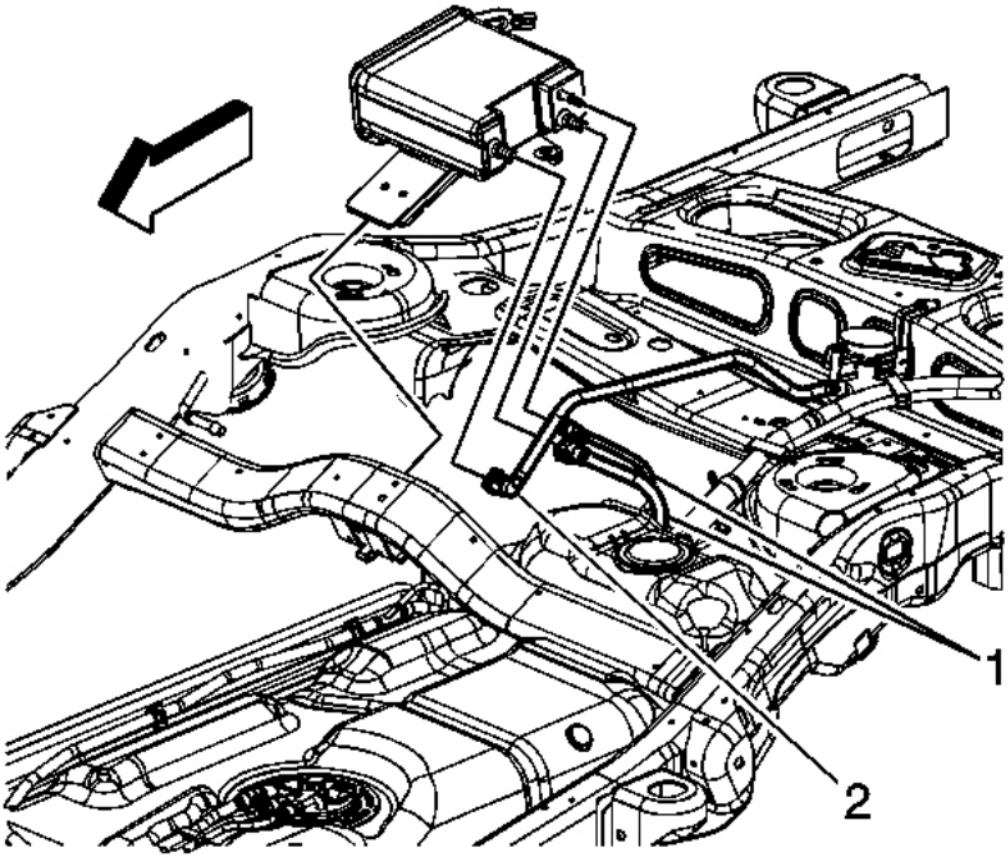

Fig. 197: View Of Fuel Tank EVAP Lines & Canister
Courtesy of GENERAL MOTORS CORP.

26. Remove the caps from the EVAP lines.
27. Connect the fuel tank EVAP lines (1) to the EVAP canister. Refer to **Quick Connect Fitting Service - Plastic Collar**.

cardiagn.com

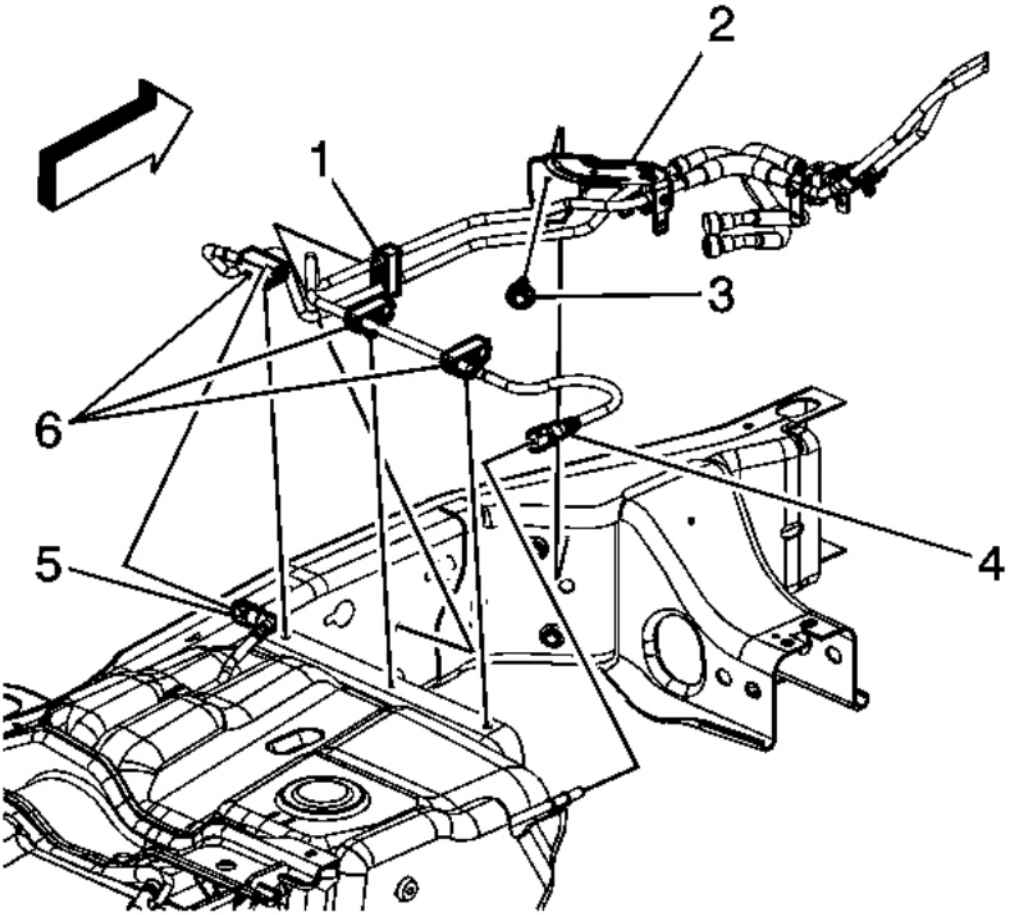

Fig. 198: View Of EVAP Lines, Fuel Feed Lines & Fittings
Courtesy of GENERAL MOTORS CORP.

28. Remove the caps from the fuel and EVAP lines.
29. Connect the chassis EVAP line quick connect fitting (4) to the fuel tank line. Refer to **Quick Connect Fitting Service - Plastic Collar**.
30. Connect the fuel tank fuel feed line quick connect fitting (5) to the chassis line. Refer to **Quick Connect Fitting Service - Plastic Collar**.

cardiagn.com

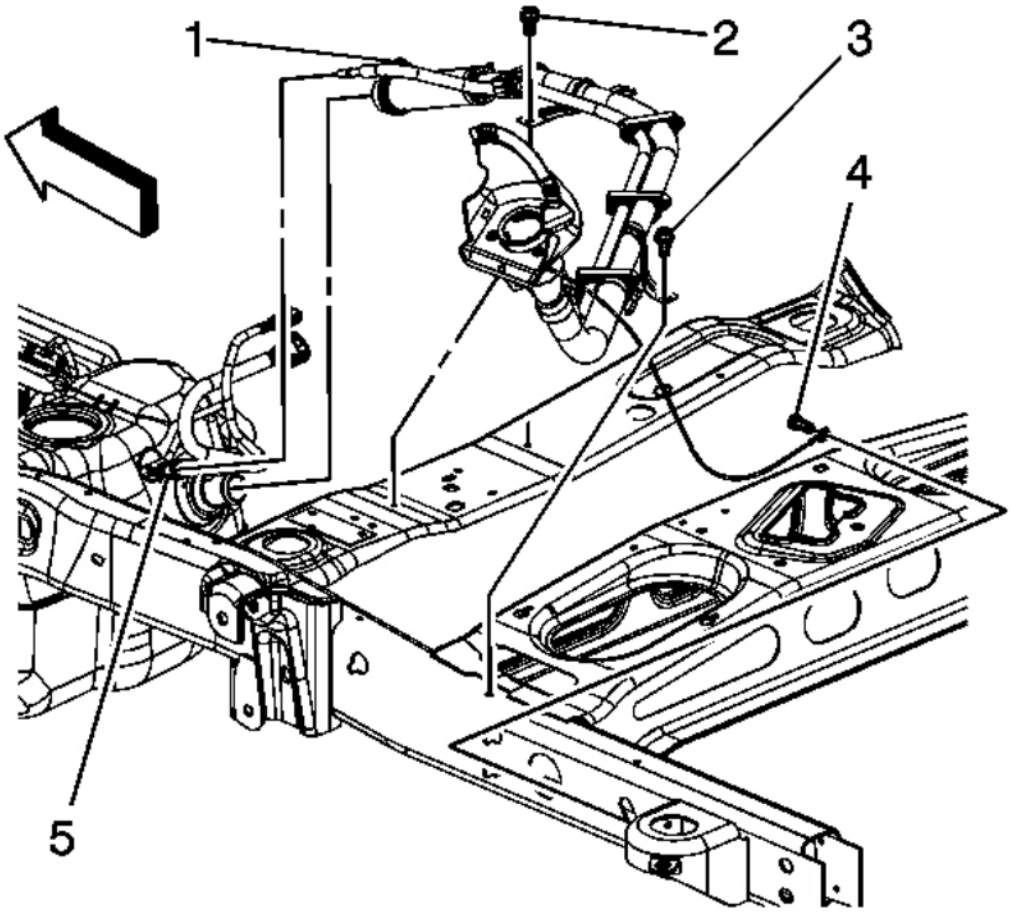

Fig. 199: View Of Fuel Fill Hose, Pipe Bracket Bolts & Quick Connect Fitting
Courtesy of GENERAL MOTORS CORP.

31. Connect the fuel tank vent line quick connect fitting (5) to the fuel fill pipe line. Refer to **Quick Connect Fitting Service - Plastic Collar**.
32. Install the fuel fill hose to the fuel tank. Ensure that the notch in the hose is aligned with the notch on the fuel tank.
33. Install the fill pipe bracket bolts (2 and 3).

    Tighten: Tighten the bolts to 12 N.m (106 lb in).

34. Tighten the fuel fill hose clamp (1).

    Tighten: Tighten the clamp to 2.5 N.m (22 lb in).

cardiagn.com

35. Lower the vehicle.
36. Refill the fuel tank.
37. Install the fuel fill cap.
38. Connect the negative battery cable. Refer to **Battery Negative Cable Disconnection and Connection** .
39. Use the following procedure in order to inspect for leaks:
    1. Turn the ignition ON, with the engine OFF, for 2 seconds.
    2. Turn the ignition OFF for 10 seconds.
    3. Turn the ignition ON, with the engine OFF.
    4. Inspect for fuel leaks.
40. Install the intake manifold sight shield. Refer to **Upper Intake Manifold Sight Shield Replacement** .

FUEL TANK REPLACEMENT (1500 LWB - 117.3L (31 GAL) TANK + E85)

Tools Required

J 45722 Fuel Sender Lock Ring Wrench. See **Special Tools**.

Removal Procedure

IMPORTANT: Clean the fuel and evaporative emission (EVAP) connections and surrounding areas prior to disconnecting the lines in order to avoid possible system contamination.

cardiagn.com

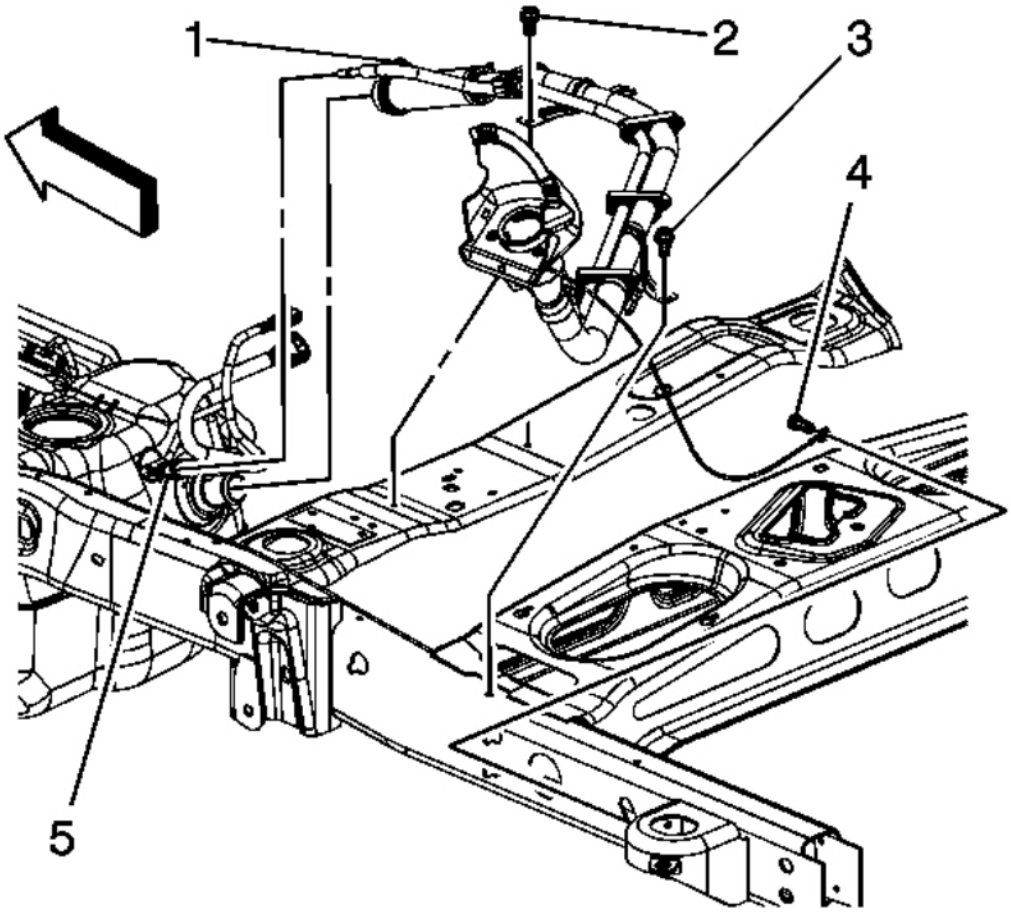

Fig. 200: View Of Fuel Fill Hose, Pipe Bracket Bolts & Quick Connect Fitting
Courtesy of GENERAL MOTORS CORP.

1. Relieve the fuel system pressure. Refer to **Fuel Pressure Relief**.
2. Drain the fuel tank. Refer to **Fuel Tank Draining (Dual Tanks - Front)** or **Fuel Tank Draining (Dual Tanks - Rear)** or **Fuel Tank Draining (Single Tank)**.
3. Disconnect the fuel tank vent line quick connect fitting (5) from the fuel fill pipe line. Refer to **Quick Connect Fitting Service - Plastic Collar**.

cardiagn.com

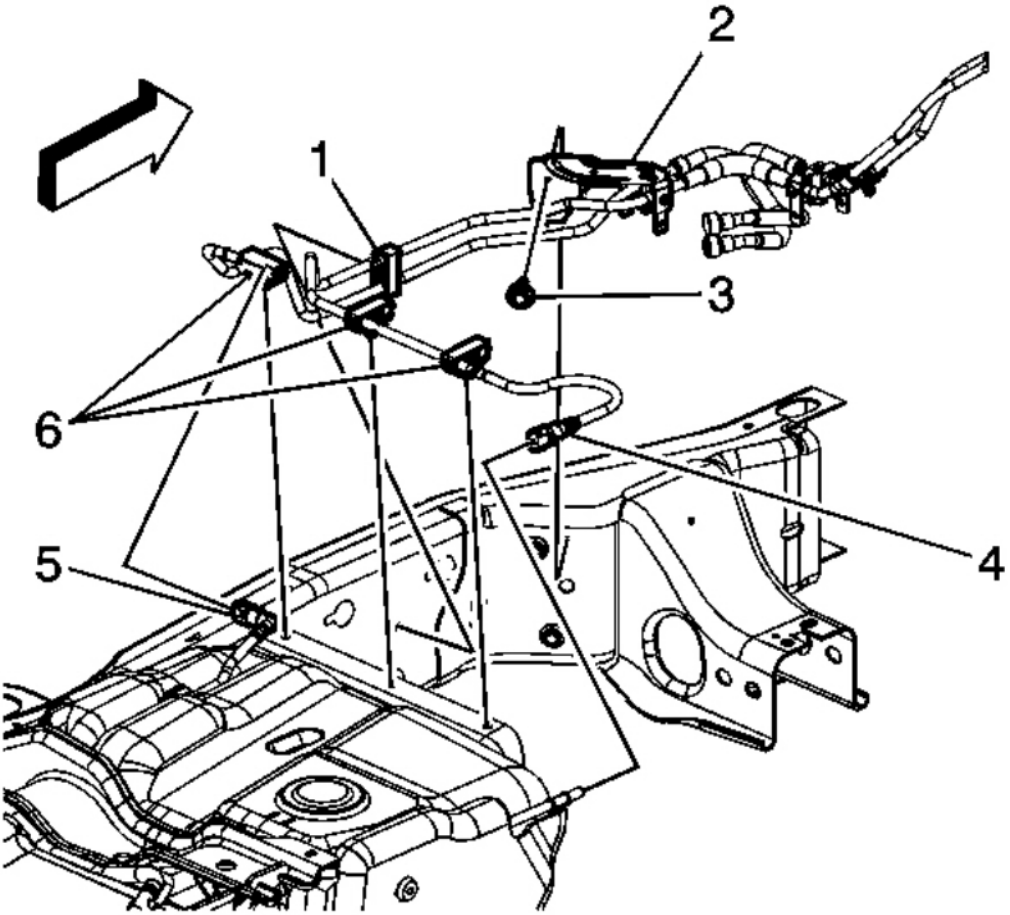

Fig. 201: View Of EVAP Lines, Fuel Feed Lines & Fittings
Courtesy of GENERAL MOTORS CORP.

4. Disconnect the chassis EVAP line quick connect fitting (4) from the fuel tank line. Refer to **Quick Connect Fitting Service - Plastic Collar**.
5. Disconnect the fuel tank fuel feed line quick connect fitting (5) from the chassis line. Refer to **Quick Connect Fitting Service - Plastic Collar**.
6. Cap the fuel and EVAP lines in order to prevent possible fuel and/or EVAP system contamination.

cardiagn.com

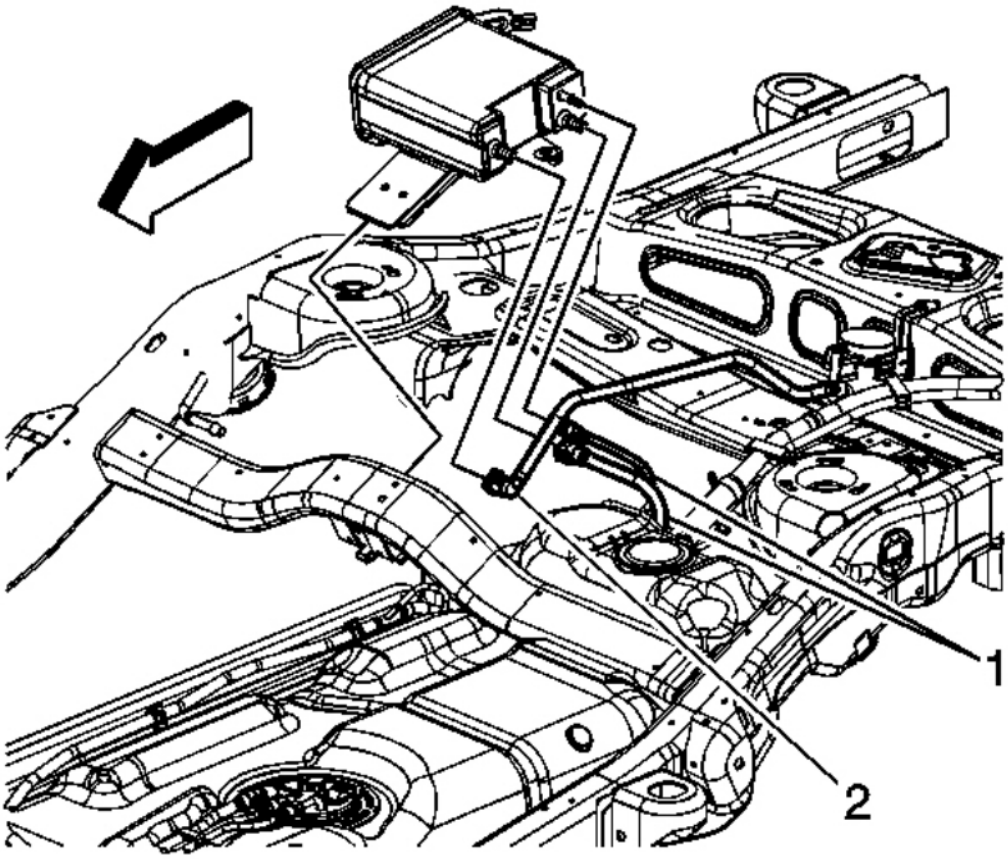

Fig. 202: View Of Fuel Tank EVAP Lines & Canister
Courtesy of GENERAL MOTORS CORP.

7. Disconnect the fuel tank EVAP lines (1) from the EVAP canister. Refer to **Quick Connect Fitting Service - Plastic Collar**.
8. Cap the EVAP lines in order to prevent possible EVAP system contamination.
9. Using an adjustable jack, support the fuel tank.
10. Remove the fuel tank strap bolts.

NOTE: **Refer to Damage to Fuel Tank Straps Notice .**

11. Remove the fuel tank straps.
12. With the aid of an assistant, carefully lower the rear of the fuel tank.
13. Slide the front of the tank away from the frame.

cardiagn.com

14. Lower the fuel tank slightly until the chassis wiring harness electrical connectors can be accessed.

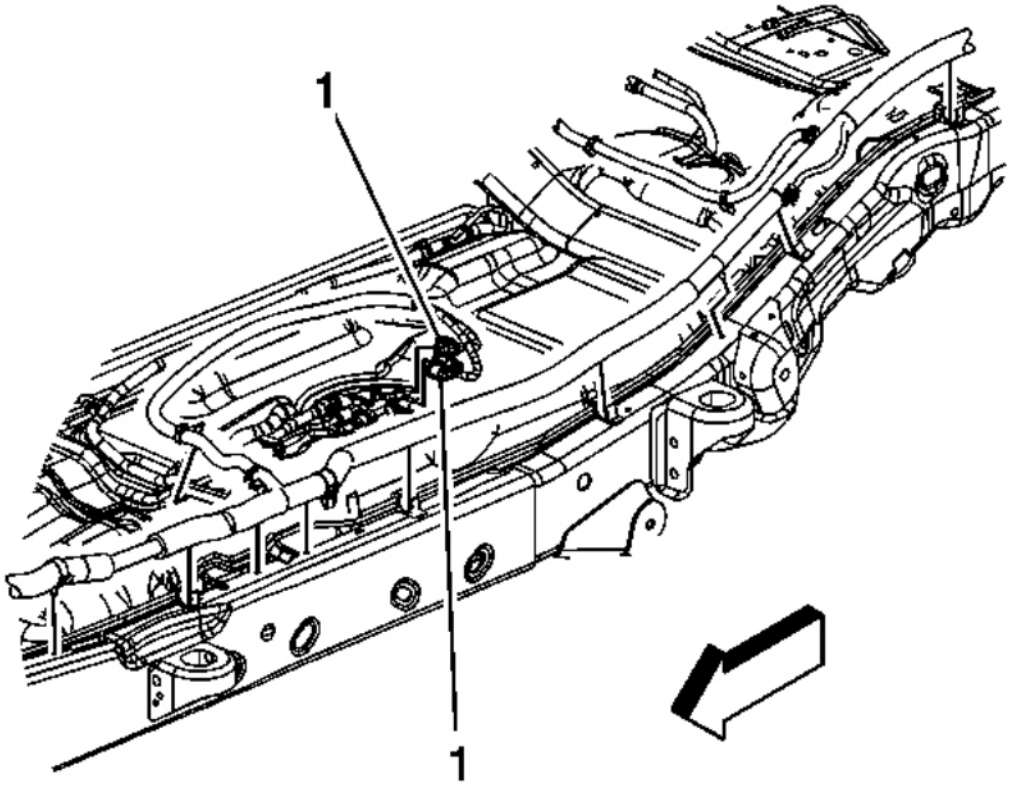

Fig. 203: View Of Chassis Wiring Harness Electrical Connectors & Module
Courtesy of GENERAL MOTORS CORP.

15. Disengage the chassis wiring harness electrical connector, connector position assurance (CPA) retainer at the module.
16. Disconnect the chassis wiring harness electrical connectors (1) from the module and the fuel pressure sensor.

cardiagn.com

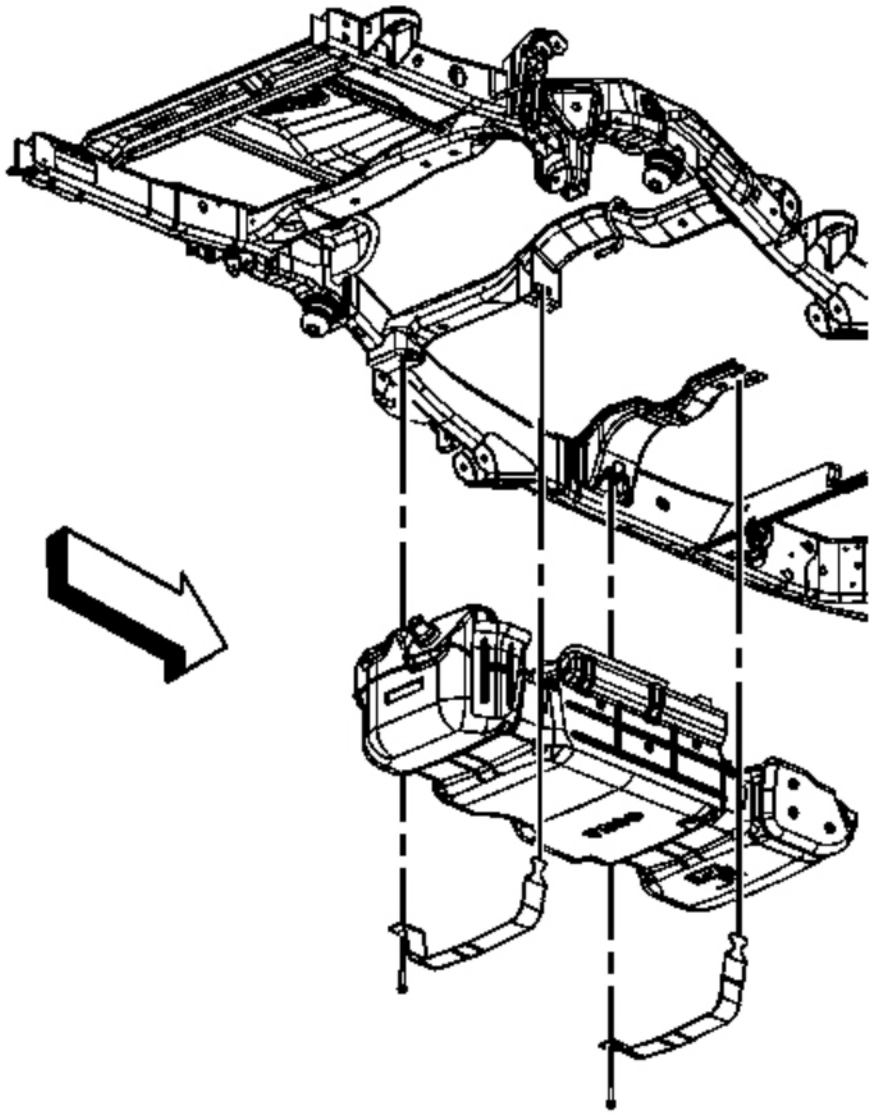

Fig. 204: View Of Fuel Tank & Straps (Single Tank)
Courtesy of GENERAL MOTORS CORP.

17. Completely lower the fuel tank.
18. With the aid of an assistant, place the fuel tank in a suitable work area.
19. If replacing the fuel tank proceed to the next step, otherwise proceed to step 18 in the installation procedure.

cardiagn.com

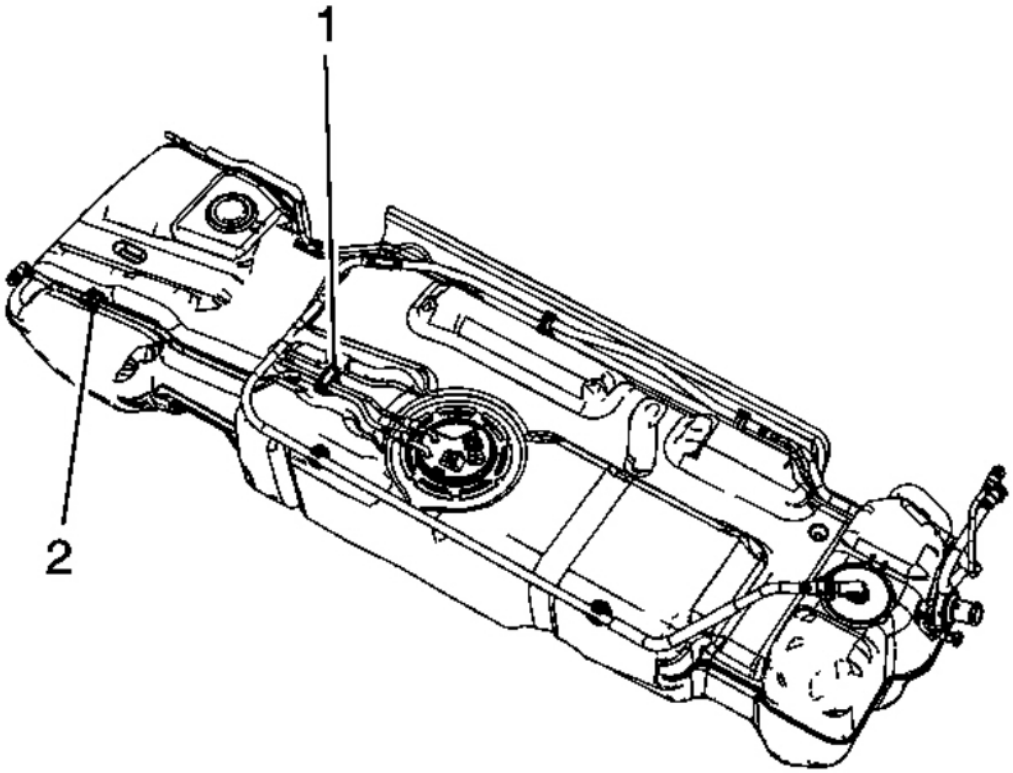

Fig. 205: View Of EVAP Line Clip & Retainer
Courtesy of GENERAL MOTORS CORP.

20. Remove the fuel feed line from the retaining feature (2) in the fuel tank.
21. Open the fuel/EVAP line clip (1) and remove the fuel feed line from the clip.
22. Disconnect the fuel feed line quick connect fitting at the fuel tank module. Refer to **Quick Connect Fitting Service - Plastic Collar**.

cardiagn.com

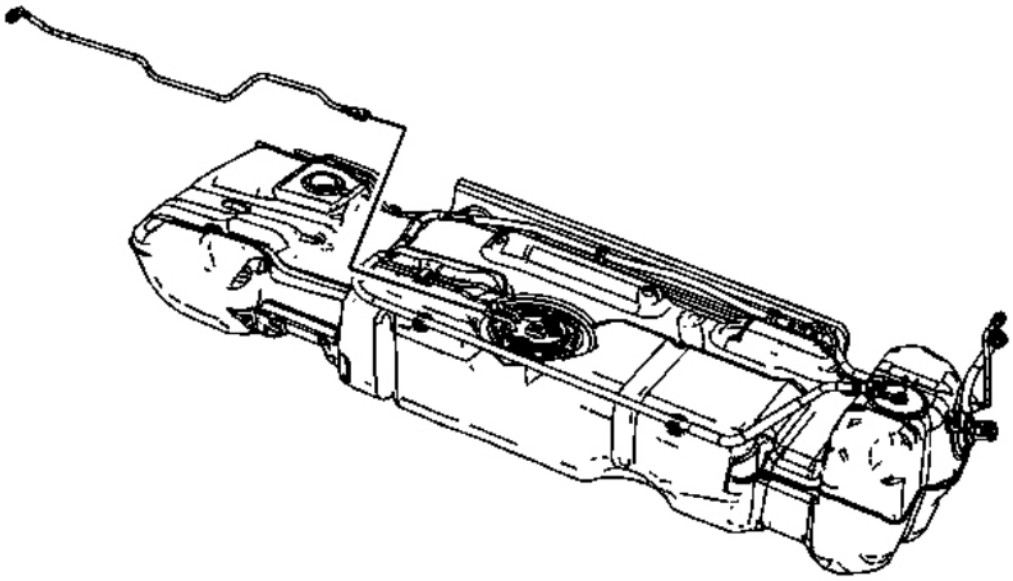

Fig. 206: View Of Fuel Feed Line
Courtesy of GENERAL MOTORS CORP.

23. Remove the fuel feed line from the fuel tank.

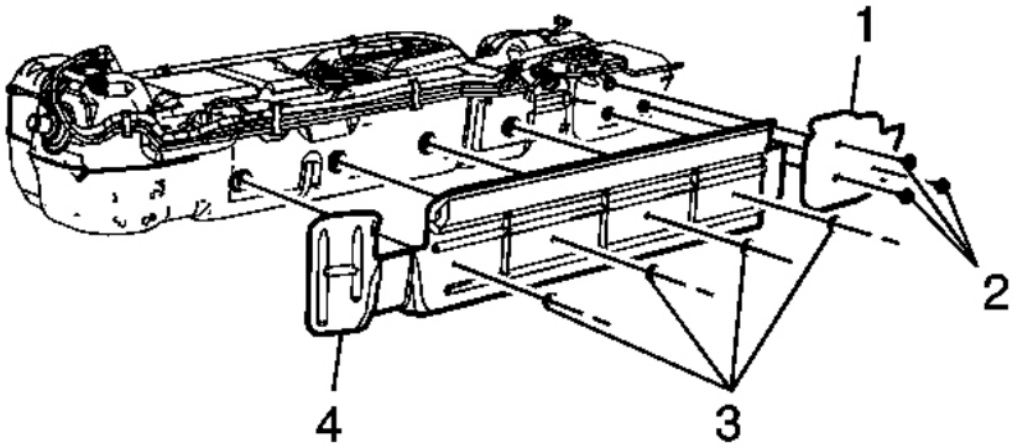

cardiagn.com

Fig. 207: View Of Fuel Tank Shields & Retainers
Courtesy of GENERAL MOTORS CORP.

24. Remove the fuel tank shield retainers (2 and 3) and shields (1 and 4).

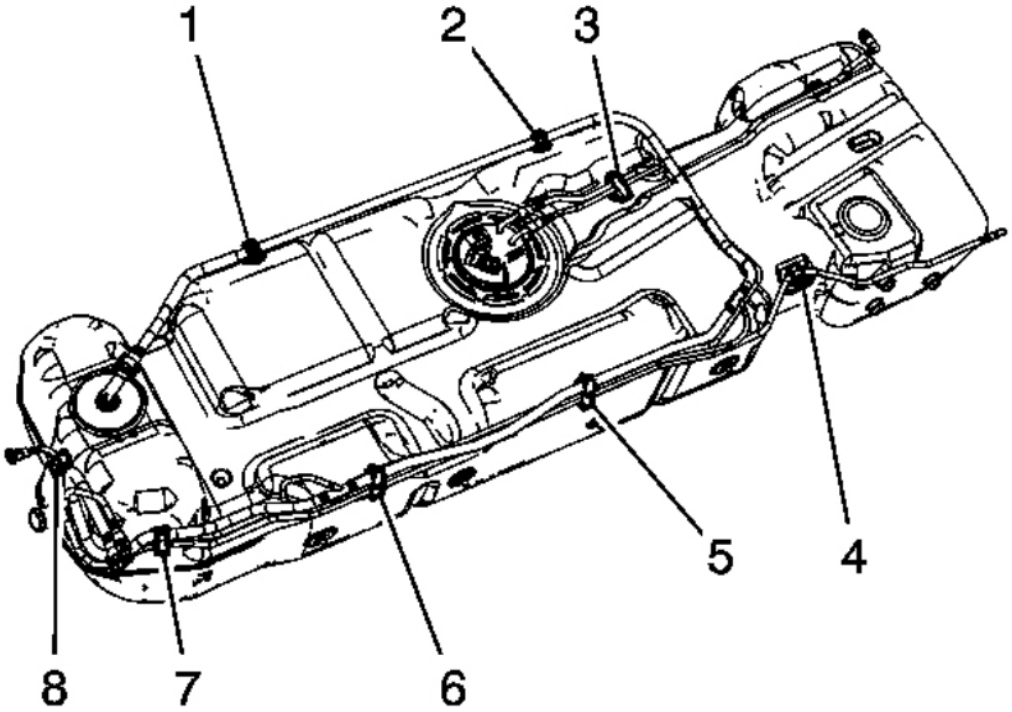

Fig. 208: View Of Fuel Tank Clips
Courtesy of GENERAL MOTORS CORP.

25. Remove the EVAP line from the fuel tank clips (1, 2, 4, and 8).
26. Open the fuel tank clips (3, 5, 6, and 7) and remove the EVAP lines from the clips.
27. Disconnect the EVAP line quick connect fittings at the fuel tank module and fuel tank vent valve. Refer to **Quick Connect Fitting Service - Plastic Collar**.

cardiagn.com

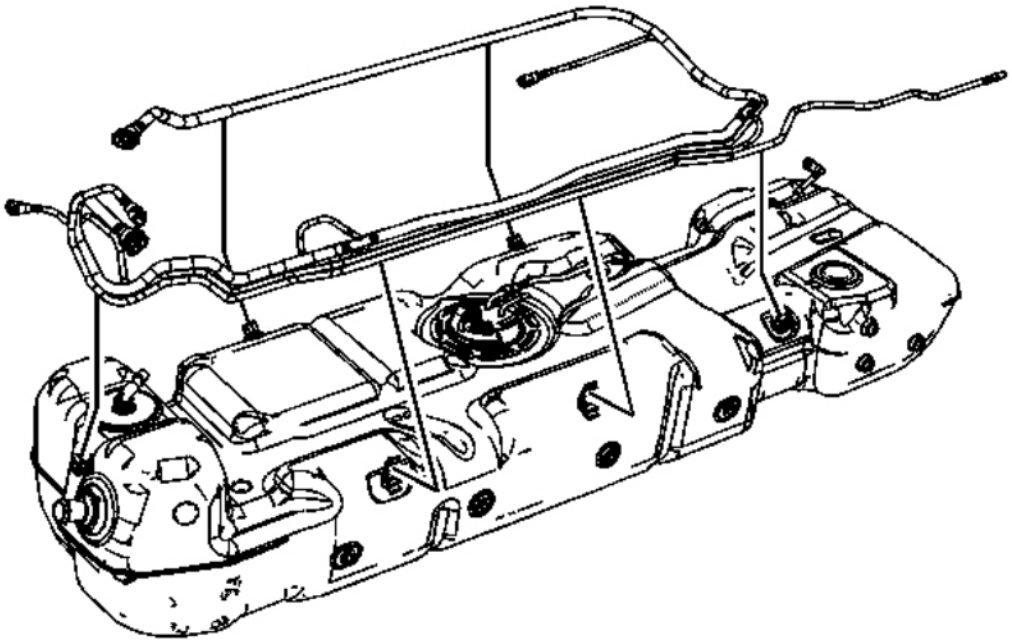

Fig. 209: View Of EVAP Lines
Courtesy of GENERAL MOTORS CORP.

28. Remove the EVAP lines from the fuel tank.

cardiagn.com

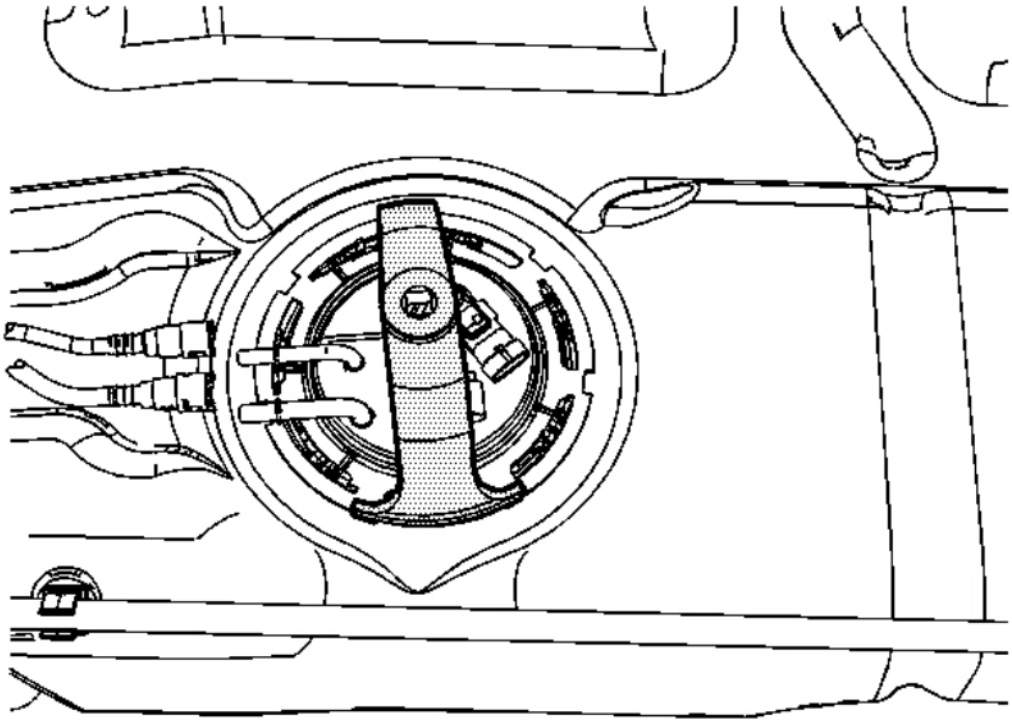

Fig. 210: View of Special Tool & Lock Ring
Courtesy of GENERAL MOTORS CORP.

29. Using the **J 45722** , remove the lock ring. See **Special Tools**.

cardiagn.com

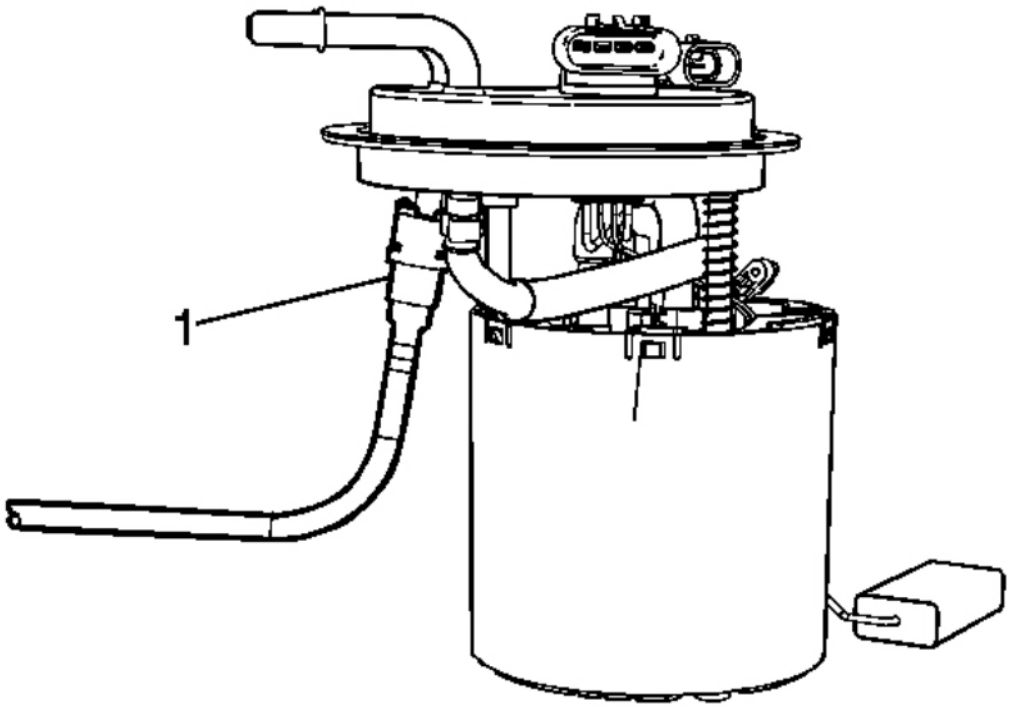

Fig. 211: View Of Fuel Tank Module & Quick Connect Fitting
Courtesy of GENERAL MOTORS CORP.

30. Carefully lift the module from the fuel tank, enough to access the quick connect fitting (1) under the module cover. Disconnect the quick connect fitting. Refer to **Quick Connect Fitting Service - Plastic Collar**.
31. Remove the fuel tank module.
32. Remove and discard the fuel tank module seal.

cardiagn.com

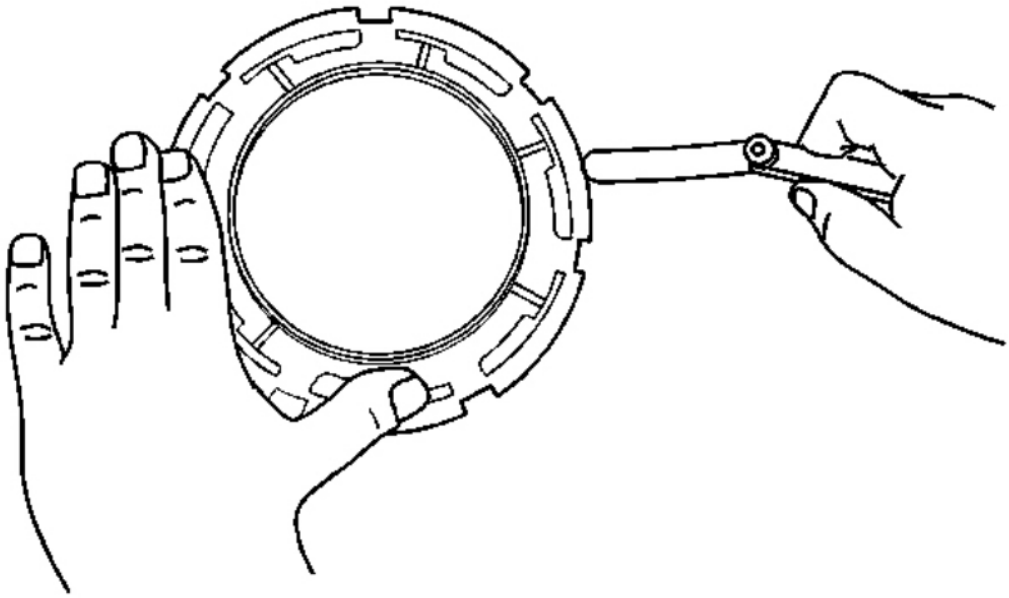

Fig. 212: Checking Lock Ring For Flatness
Courtesy of GENERAL MOTORS CORP.

IMPORTANT:

- **Some lock rings were manufactured with "DO NOT REUSE" stamped into them. These lock rings may be reused if they are not damaged or warped.**
- **Inspect the lock ring for damage due to improper removal or installation procedures. If damage is found, install a NEW lock ring.**
- **Check the lock ring for flatness.**

33. Place the lock ring on a flat surface. Measure the clearance between the lock ring and the flat surface using a feeler gage at 7 points.
34. If warpage is less than 0.41 mm (0.016 in), the lock ring does not require replacement.
35. If warpage is greater than 0.41 mm (0.016 in), the lock ring must be replaced.

Installation Procedure

cardiagn.com

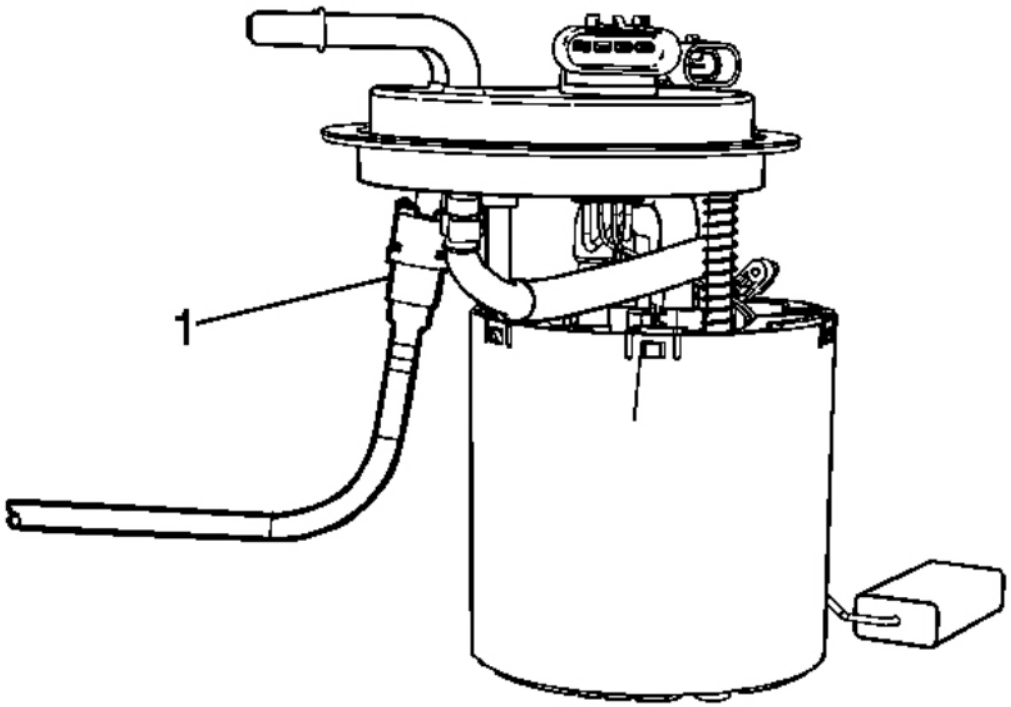

Fig. 213: View Of Fuel Tank Module & Quick Connect Fitting
Courtesy of GENERAL MOTORS CORP.

1. If the fuel tank was replaced perform the following steps, otherwise proceed to step 18.
2. Install a NEW fuel tank module seal onto the fuel tank.
3. Pull the vent line in the fuel tank up as far as possible for ease of installation.
4. Position the fuel tank module part way into the fuel tank.
5. Connect the quick connect fitting (1) to the module cover. Refer to **Quick Connect Fitting Service - Plastic Collar**.
6. Install the fuel tank module into the fuel tank.
7. Place the lock ring into position.

cardiagn.com

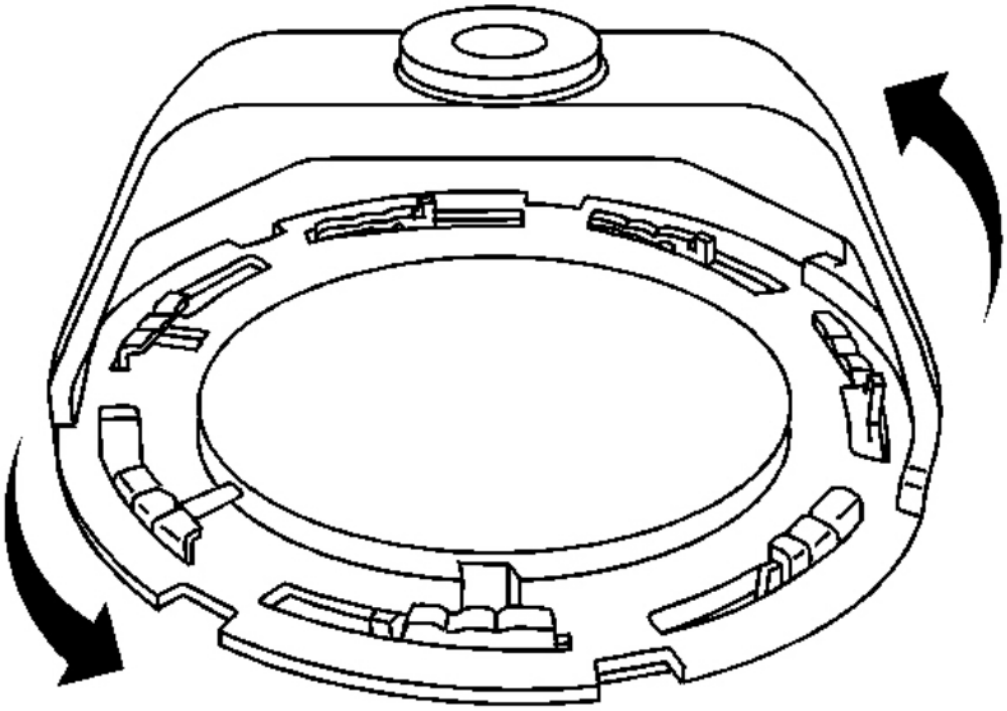

Fig. 214: Identifying Lock Ring
Courtesy of GENERAL MOTORS CORP.

IMPORTANT: Always replace the fuel module seal when installing the fuel module. Replace the lock ring if necessary. DO NOT apply any type of lubrication in the seal groove.
Ensure the lock ring is installed with the correct side facing upward. A correctly installed lock ring will only turn in a clockwise direction.

8. Rotate the lock ring counterclockwise using the **J 45722** . See **Special Tools**.

cardiagn.com

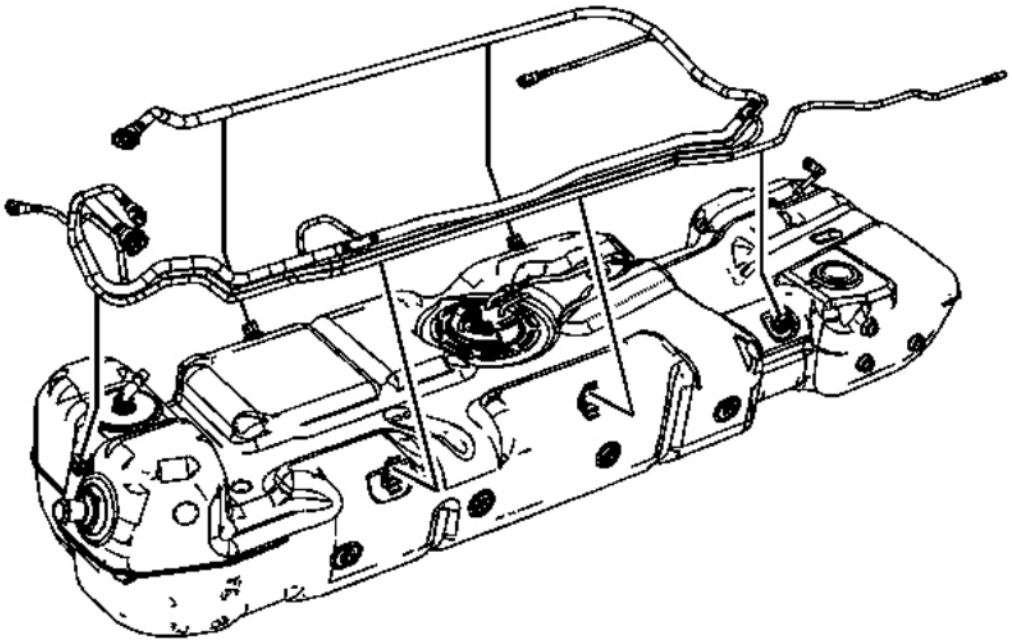

Fig. 215: View Of EVAP Lines
Courtesy of GENERAL MOTORS CORP.

9. Install the EVAP lines to the fuel tank.

cardiagn.com

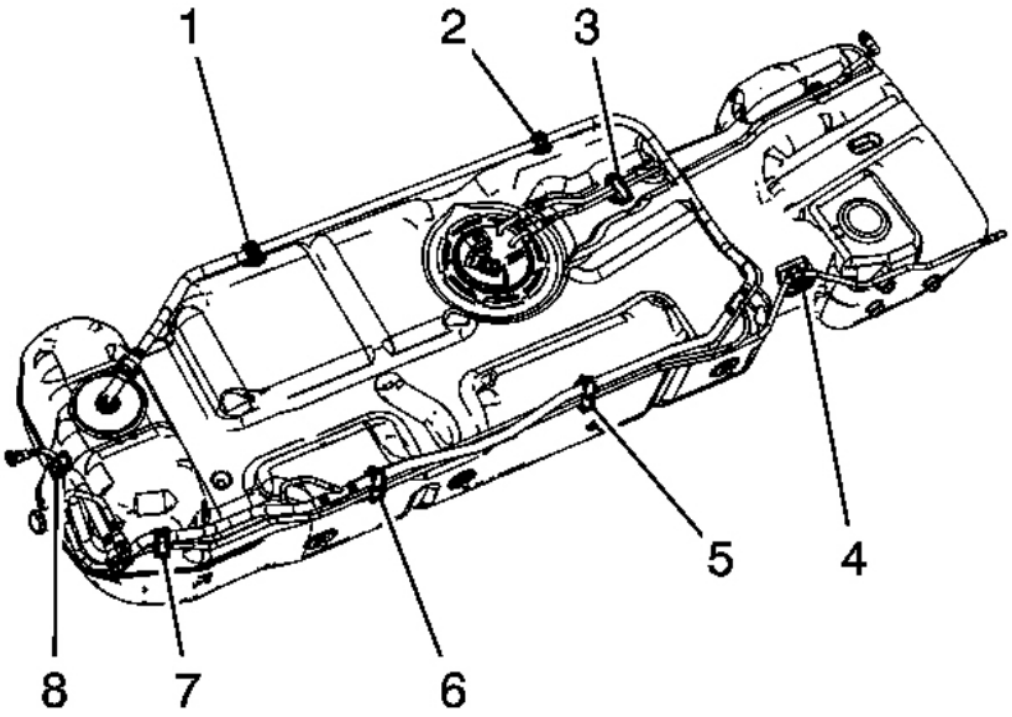

Fig. 216: View Of Fuel Tank Clips
Courtesy of GENERAL MOTORS CORP.

10. Connect the EVAP line quick connect fittings at the fuel tank module and fuel tank vent valve. Refer to **Quick Connect Fitting Service - Plastic Collar**.
11. Install the EVAP lines to the fuel tank clips (3, 5, 6, and 7) and close the clips.
12. Install the EVAP line to the fuel tank clips (1, 2, 4, and 8).

cardiagn.com

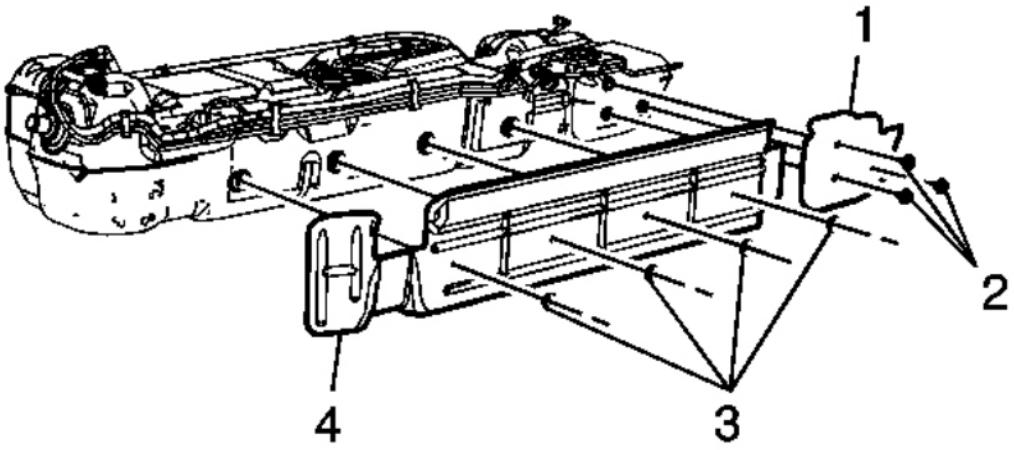

Fig. 217: View Of Fuel Tank Shields & Retainers
Courtesy of GENERAL MOTORS CORP.

13. Install the fuel tank shields (1 and 4) and retainers (2 and 3).

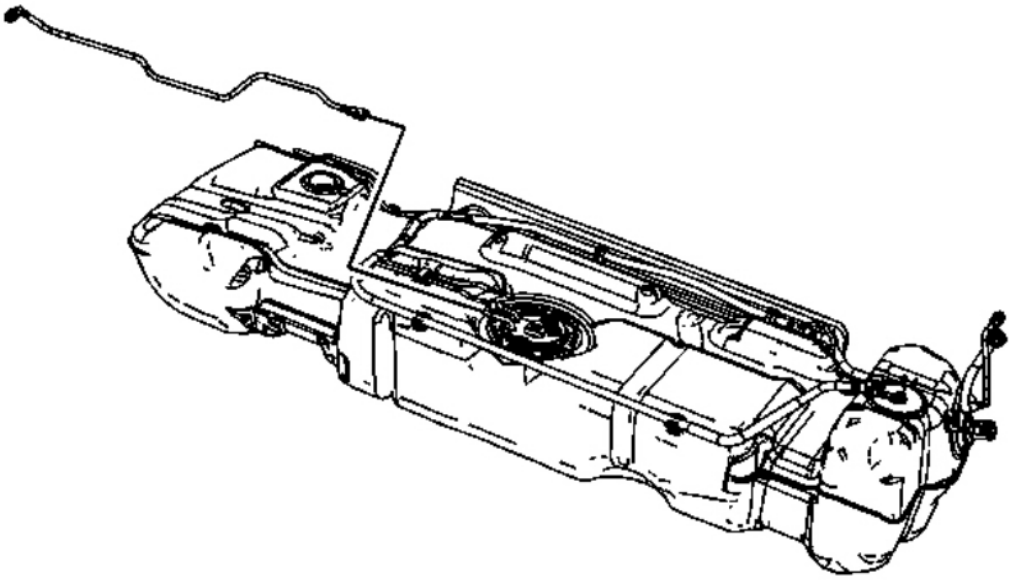

cardiagn.com

Fig. 218: View Of Fuel Feed Line
Courtesy of GENERAL MOTORS CORP.

14. Install the fuel feed line to the fuel tank.

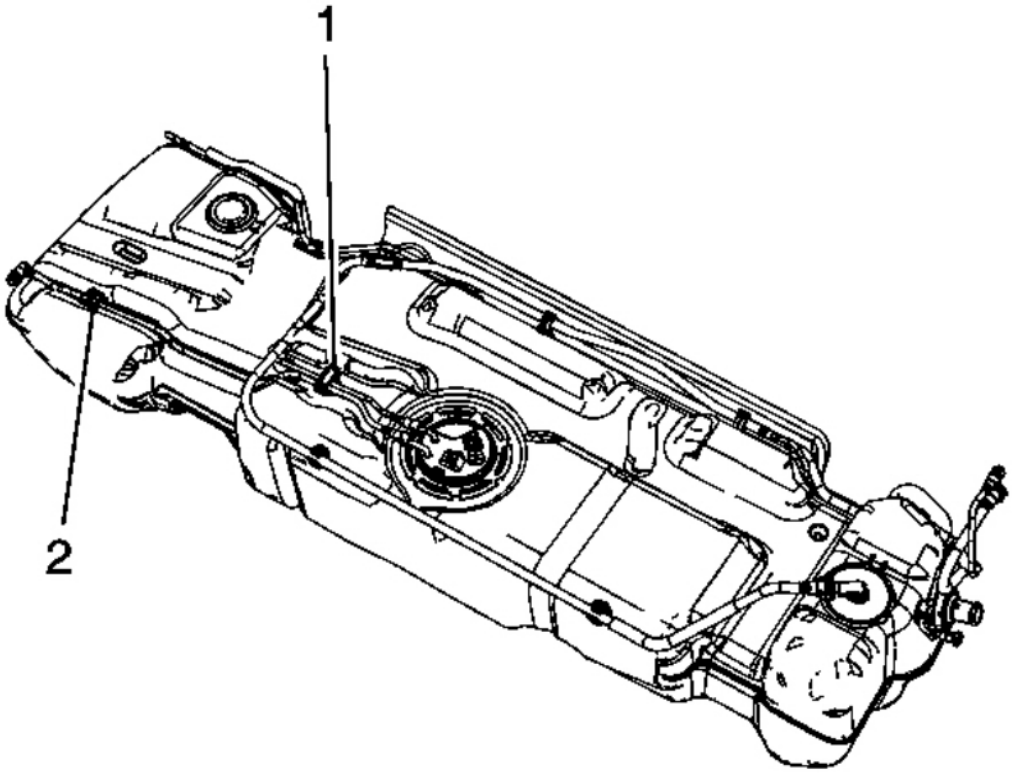

Fig. 219: View Of EVAP Line Clip & Retainer
Courtesy of GENERAL MOTORS CORP.

15. Connect the fuel feed line quick connect fitting at the fuel tank module. Refer to **Quick Connect Fitting Service - Plastic Collar**.
16. Install the fuel feed line to the clip (1) and close the clip.
17. Install the fuel feed line to the retaining feature (2) in the fuel tank.

cardiagn.com

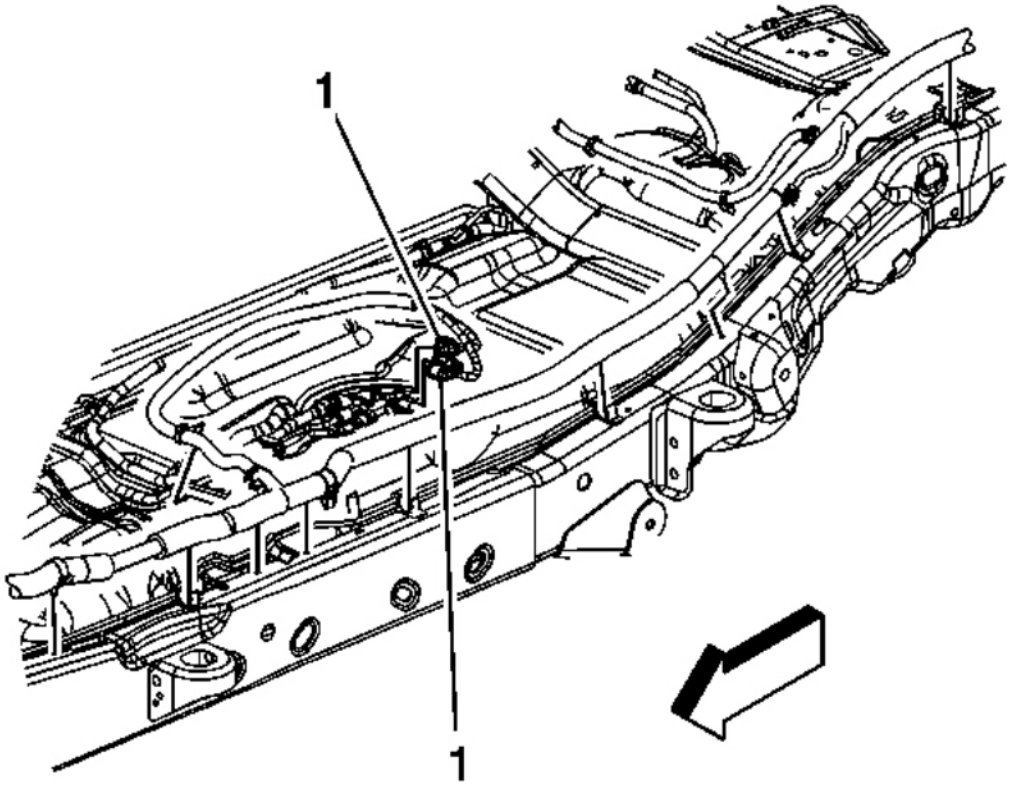

Fig. 220: View Of Chassis Wiring Harness Electrical Connectors & Module
Courtesy of GENERAL MOTORS CORP.

18. Place the fuel tank onto a suitable jack.
19. With the aid of an assistant, partially raise the fuel tank until the electrical connections can be made.
20. Connect the chassis wiring harness electrical connectors (1) to the fuel tank module and fuel pressure sensor.
21. Engage the chassis harness electrical connector CPA retainer at the module electrical connector.

cardiagn.com

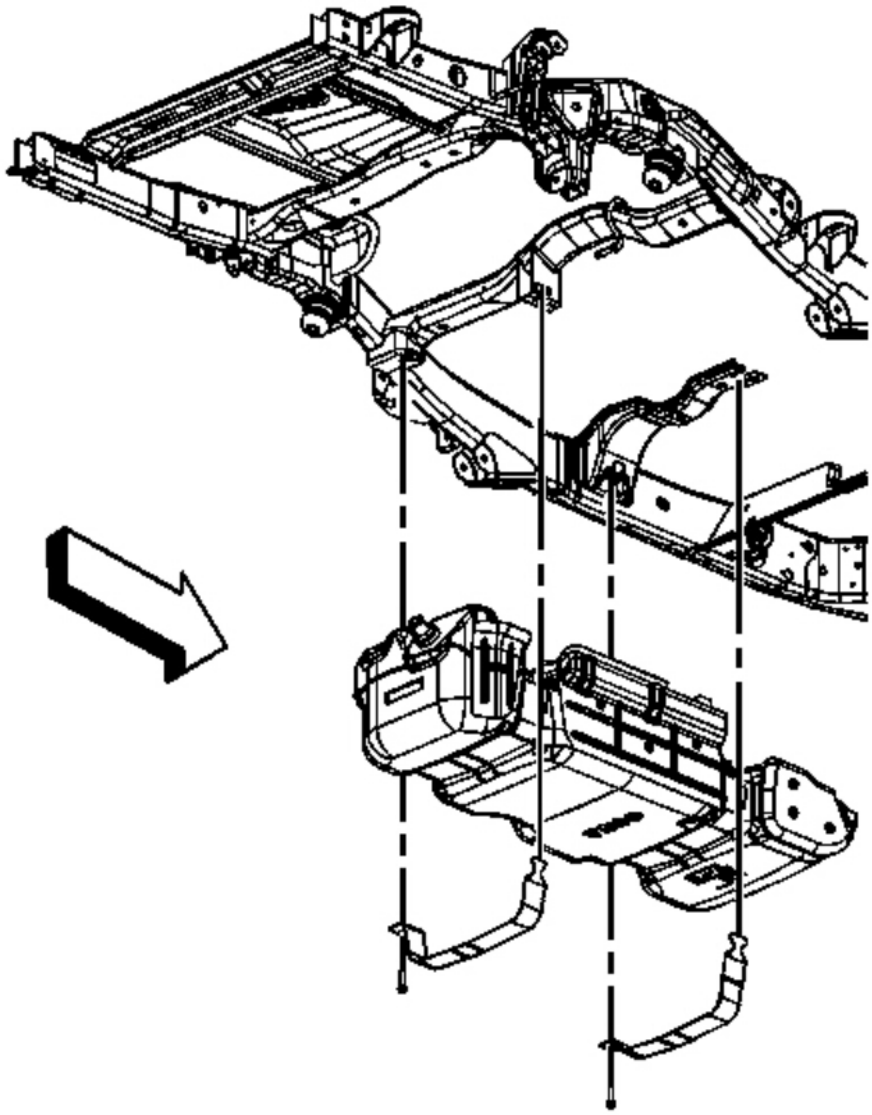

Fig. 221: View Of Fuel Tank & Straps (Single Tank)
Courtesy of GENERAL MOTORS CORP.

22. Completely raise the fuel tank.
23. Install the fuel tank straps.

NOTE: **Refer to Fastener Notice .**

cardiagn.com

24. Install the fuel tank strap bolts.

    Tighten: Tighten the bolts to 40 N.m (30 lb ft).

25. Remove the adjustable jack from the fuel tank.

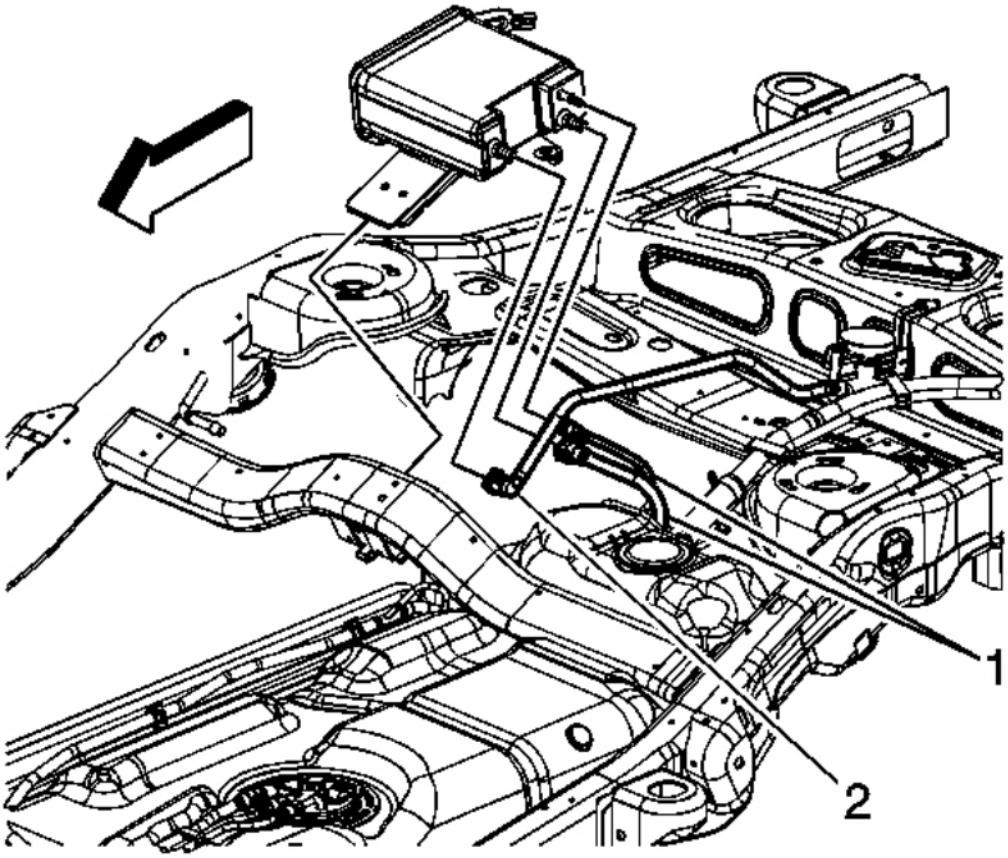

Fig. 222: View Of Fuel Tank EVAP Lines & Canister
Courtesy of GENERAL MOTORS CORP.

26. Remove the caps from the EVAP lines.
27. Connect the fuel tank EVAP lines (1) to the EVAP canister. Refer to **Quick Connect Fitting Service - Plastic Collar**.

cardiagn.com

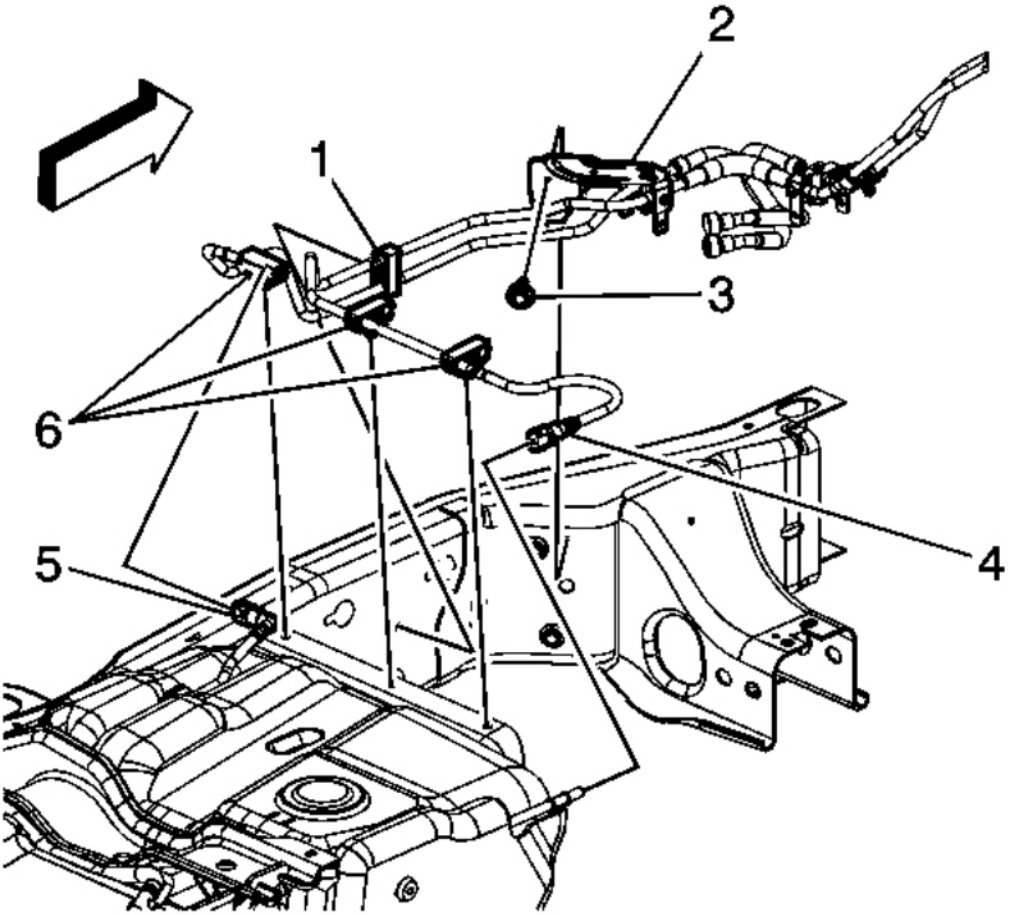

Fig. 223: View Of EVAP Lines, Fuel Feed Lines & Fittings
Courtesy of GENERAL MOTORS CORP.

28. Remove the caps from the fuel and EVAP lines.
29. Connect the chassis EVAP line quick connect fitting (4) to the fuel tank line. Refer to **Quick Connect Fitting Service - Plastic Collar**.
30. Connect the fuel tank fuel feed line quick connect fitting (5) to the chassis line. Refer to **Quick Connect Fitting Service - Plastic Collar**.

cardiagn.com

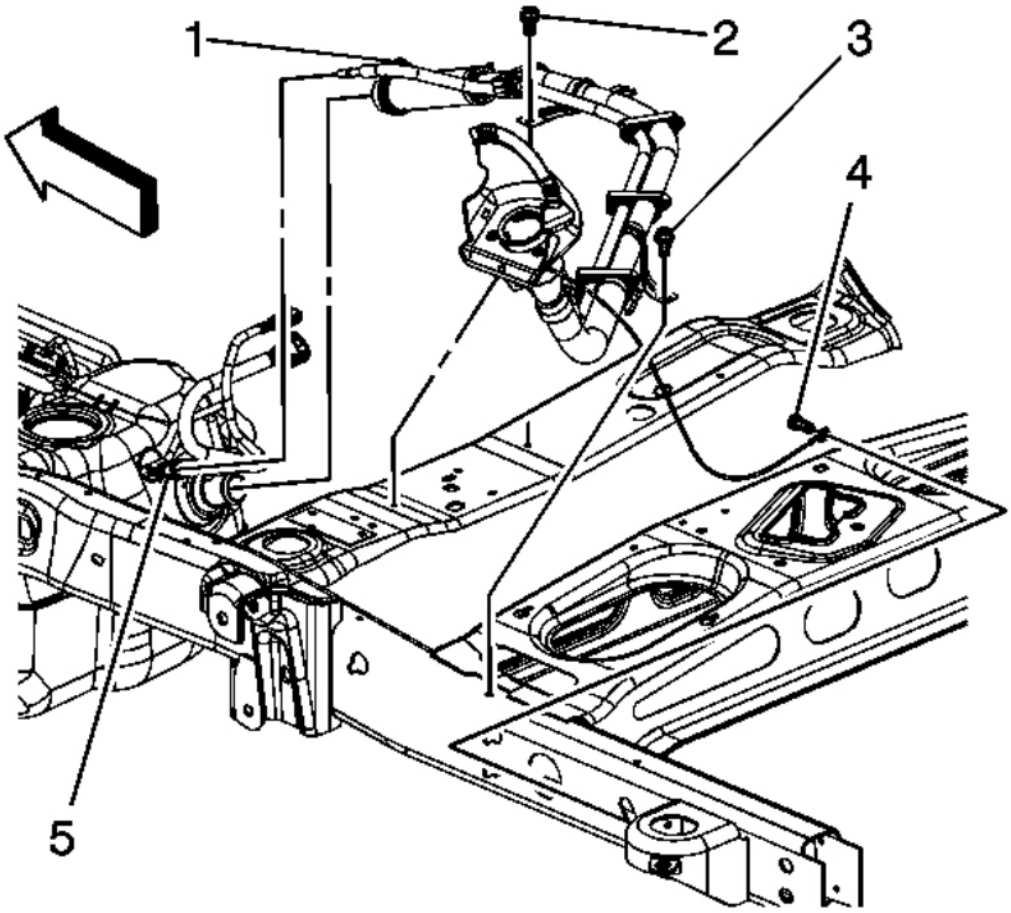

Fig. 224: View Of Fuel Fill Hose, Pipe Bracket Bolts & Quick Connect Fitting
Courtesy of GENERAL MOTORS CORP.

31. Connect the fuel tank vent line quick connect fitting (5) to the fuel fill pipe line. Refer to **Quick Connect Fitting Service - Plastic Collar**.
32. Install the fuel fill hose to the fuel tank. Ensure that the notch in the hose is aligned with the notch on the fuel tank.
33. Install the fill pipe bracket bolts (2 and 3).

    Tighten: Tighten the bolts to 12 N.m (106 lb in).

34. Tighten the fuel fill hose clamp (1).

    Tighten: Tighten the clamp to 2.5 N.m (22 lb in).

cardiagn.com

35. Lower the vehicle.
36. Refill the fuel tank.
37. Install the fuel fill cap.
38. Connect the negative battery cable. Refer to **Battery Negative Cable Disconnection and Connection** .
39. Use the following procedure in order to inspect for leaks:
    1. Turn the ignition ON, with the engine OFF, for 2 seconds.
    2. Turn the ignition OFF for 10 seconds.
    3. Turn the ignition ON, with the engine OFF.
    4. Inspect for fuel leaks.
40. Install the intake manifold sight shield. Refer to **Upper Intake Manifold Sight Shield Replacement** .

FUEL TANK REPLACEMENT (1500 SWB - 98.4L (26 GAL) TANK)

Tools Required

J 45722 Fuel Sender Lock Ring Wrench. See **Special Tools**.

Removal Procedure

IMPORTANT: Clean the fuel and evaporative emission (EVAP) connections and surrounding areas prior to disconnecting the lines in order to avoid possible system contamination.

cardiagn.com

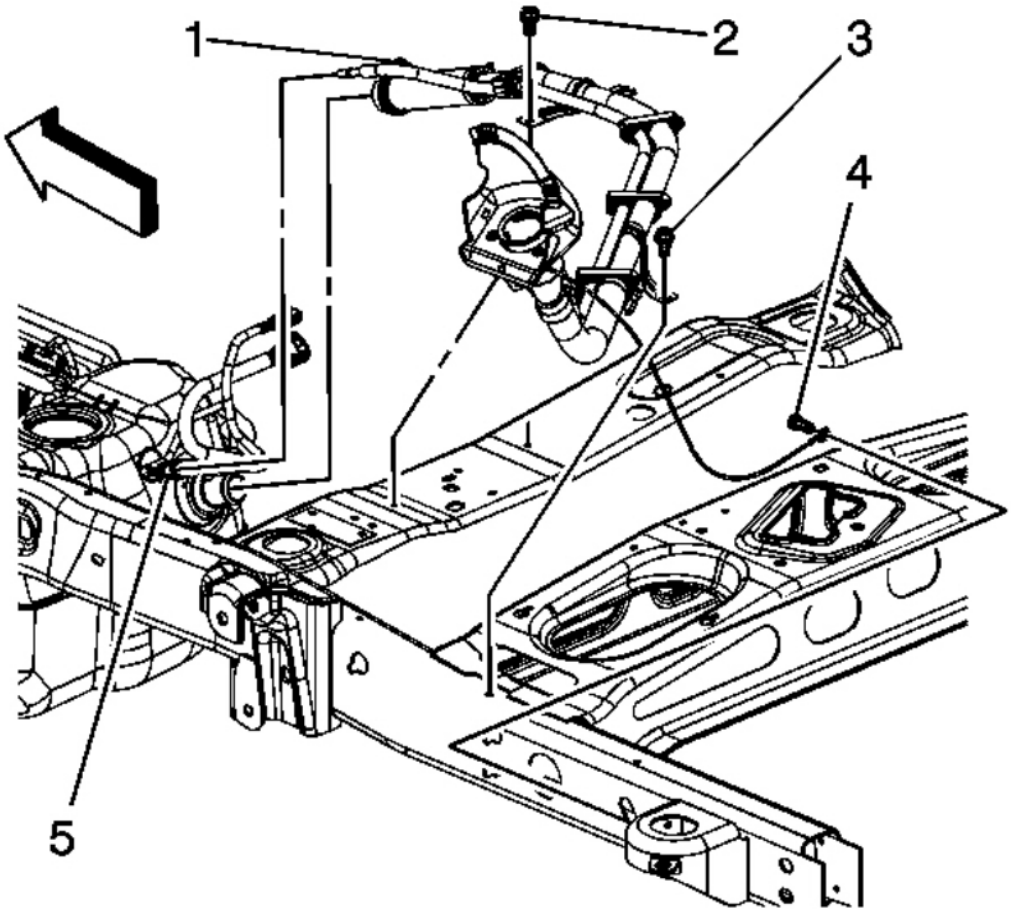

Fig. 225: View Of Fuel Fill Hose, Pipe Bracket Bolts & Quick Connect Fitting
Courtesy of GENERAL MOTORS CORP.

1. Relieve the fuel system pressure. Refer to **Fuel Pressure Relief**.
2. Drain the fuel tank. Refer to **Fuel Tank Draining (Dual Tanks - Front)** or **Fuel Tank Draining (Dual Tanks - Rear)** or **Fuel Tank Draining (Single Tank)**.
3. Disconnect the fuel tank vent line quick connect fitting (5) from the fuel fill pipe line. Refer to **Quick Connect Fitting Service - Plastic Collar**.

cardiagn.com

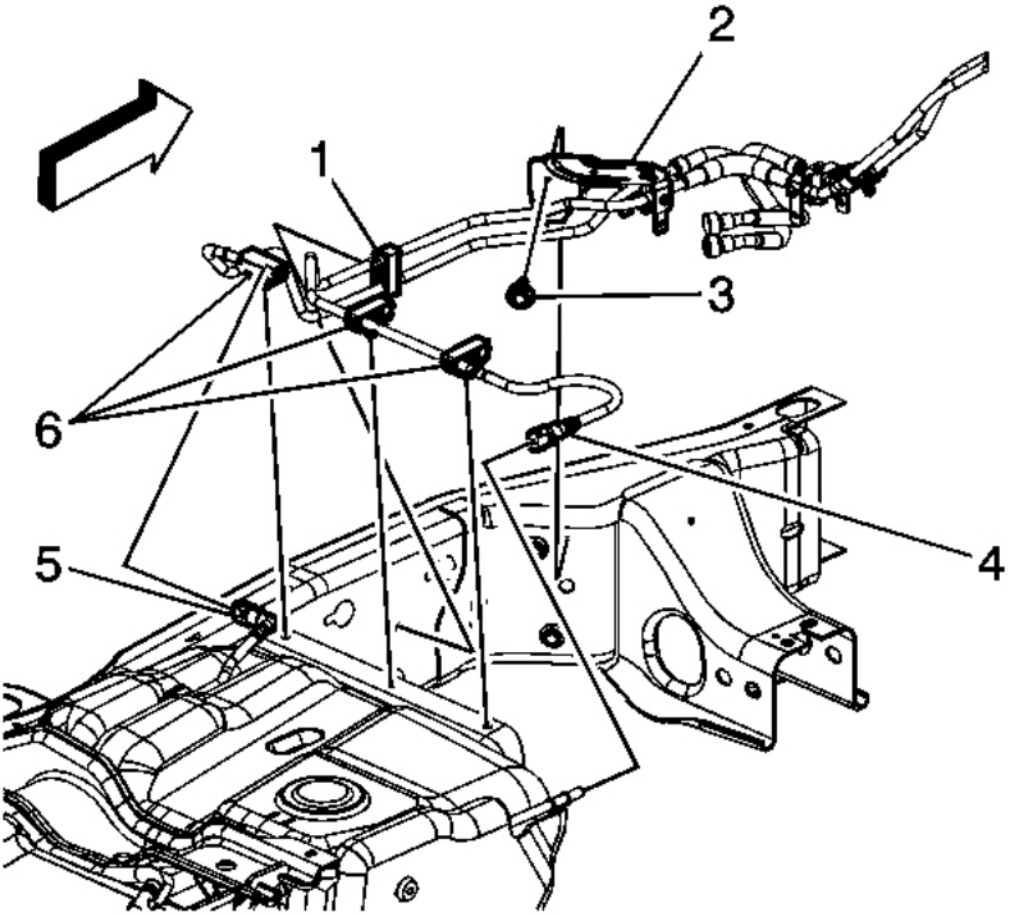

Fig. 226: View Of EVAP Lines, Fuel Feed Lines & Fittings
Courtesy of GENERAL MOTORS CORP.

4. Disconnect the chassis EVAP line quick connect fitting (4) from the fuel tank line. Refer to **Quick Connect Fitting Service - Plastic Collar**.
5. Disconnect the fuel tank fuel feed line quick connect fitting (5) from the chassis line. Refer to **Quick Connect Fitting Service - Plastic Collar**.
6. Cap the fuel and EVAP lines in order to prevent possible fuel and/or EVAP system contamination.

cardiagn.com

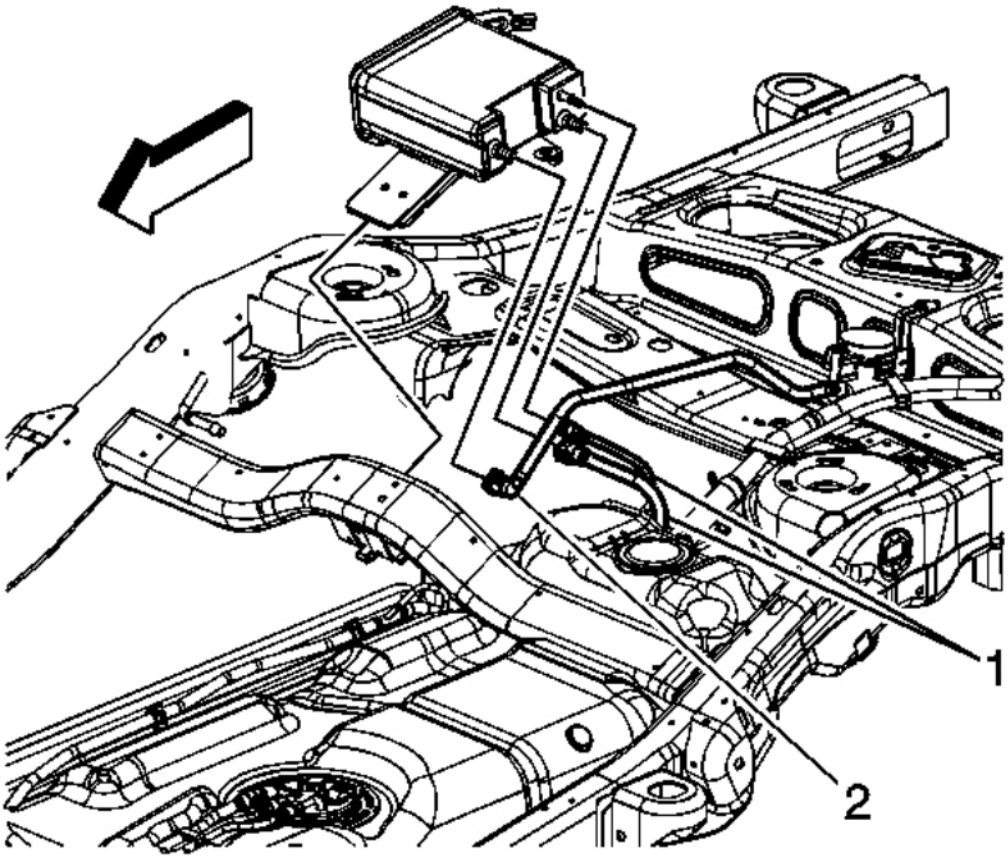

Fig. 227: View Of Fuel Tank EVAP Lines & Canister
Courtesy of GENERAL MOTORS CORP.

7. Disconnect the fuel tank EVAP lines (1) from the EVAP canister. Refer to **Quick Connect Fitting Service - Plastic Collar**.
8. Cap the EVAP lines in order to prevent possible EVAP system contamination.
9. Using an adjustable jack, support the fuel tank.
10. Remove the fuel tank strap bolts.

NOTE: **Refer to Damage to Fuel Tank Straps Notice .**

11. Remove the fuel tank straps.
12. With the aid of an assistant, carefully lower the rear of the fuel tank.
13. Slide the front of the tank away from the frame.

cardiagn.com

14. Lower the fuel tank slightly until the chassis wiring harness electrical connectors can be accessed.

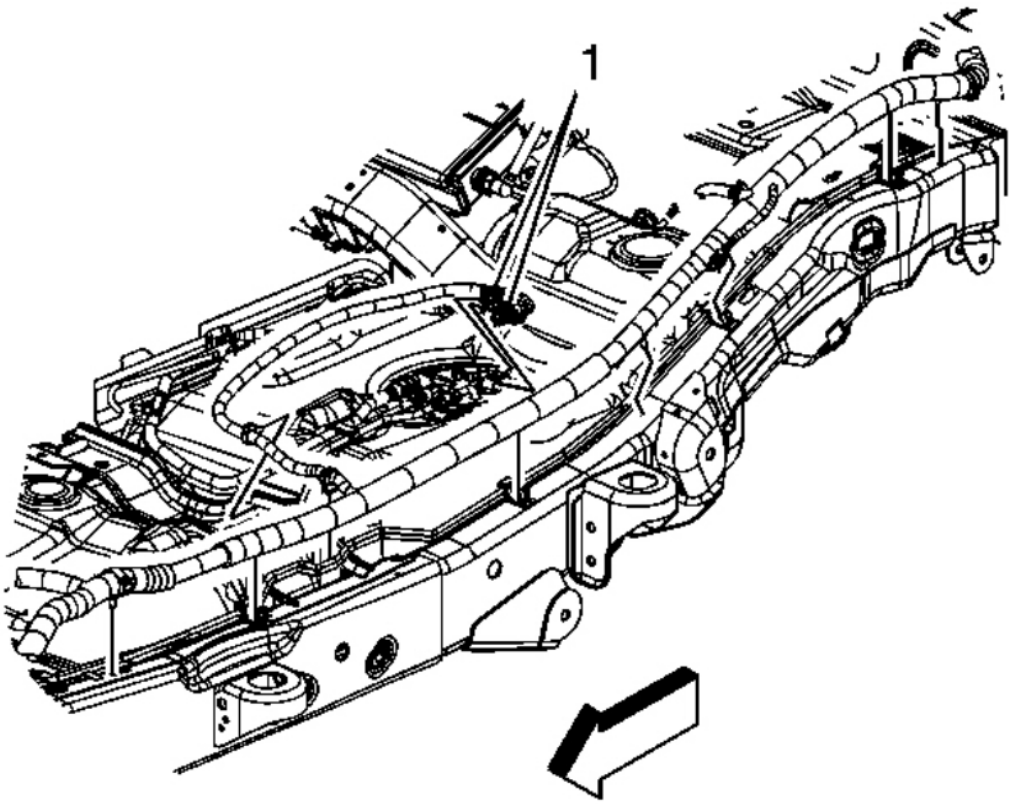

Fig. 228: View Of Chassis Wiring Harness Electrical Connectors
Courtesy of GENERAL MOTORS CORP.

15. Disengage the chassis wiring harness electrical connector, connector position assurance (CPA) retainer at the module.
16. Disconnect the chassis wiring harness electrical connectors (1) from the module and the fuel pressure sensor.

cardiagn.com

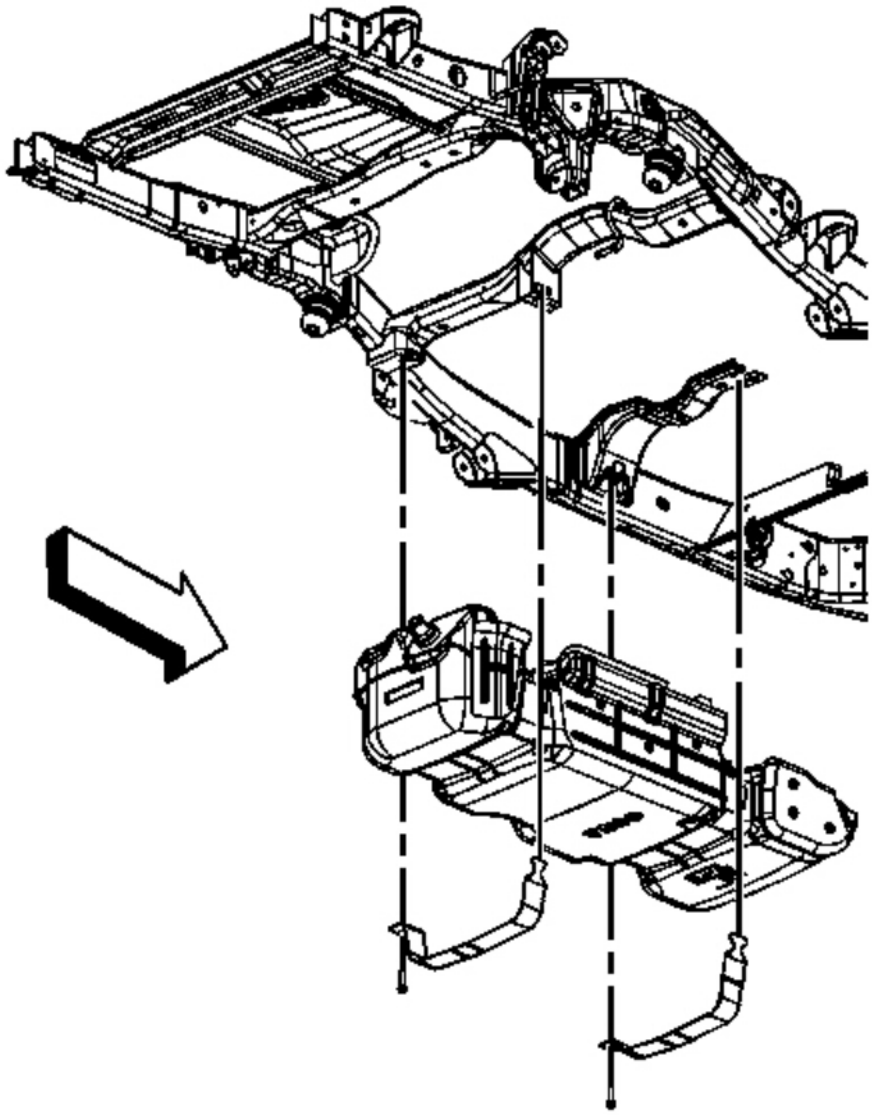

Fig. 229: View Of Fuel Tank & Straps (Single Tank)
Courtesy of GENERAL MOTORS CORP.

17. Completely lower the fuel tank.
18. With the aid of an assistant, place the fuel tank in a suitable work area.
19. If replacing the fuel tank proceed to the next step, otherwise proceed to step 18 in the installation procedure.

cardiagn.com

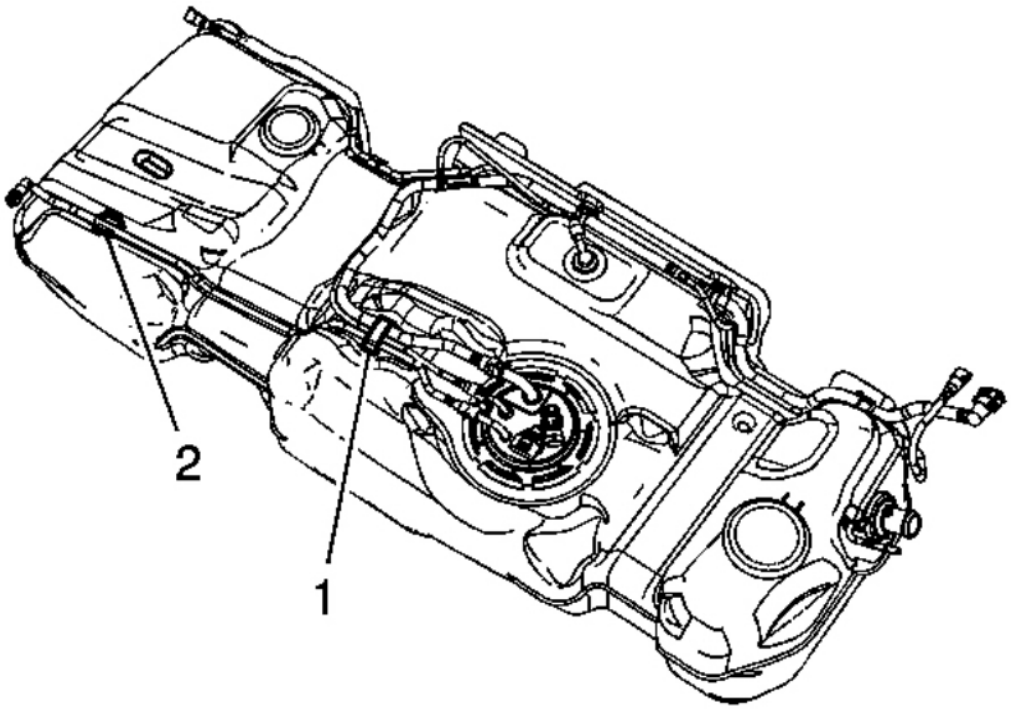

Fig. 230: View Of EVAP Line Clip & Retainer
Courtesy of GENERAL MOTORS CORP.

20. Remove the fuel feed line from the retaining feature (2) in the fuel tank.
21. Open the fuel/EVAP line clip (1) and remove the fuel feed line from the clip.
22. Disconnect the fuel feed line quick connect fitting at the fuel tank module. Refer to **Quick Connect Fitting Service - Plastic Collar**.

cardiagn.com

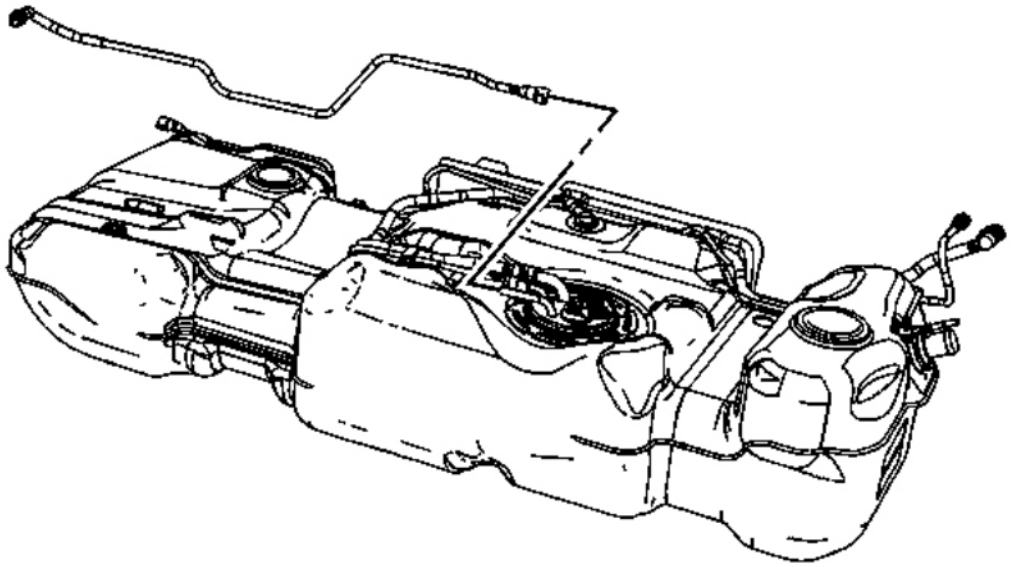

Fig. 231: View Of Fuel Feed Line
Courtesy of GENERAL MOTORS CORP.

23. Remove the fuel feed line from the fuel tank.

cardiagn.com

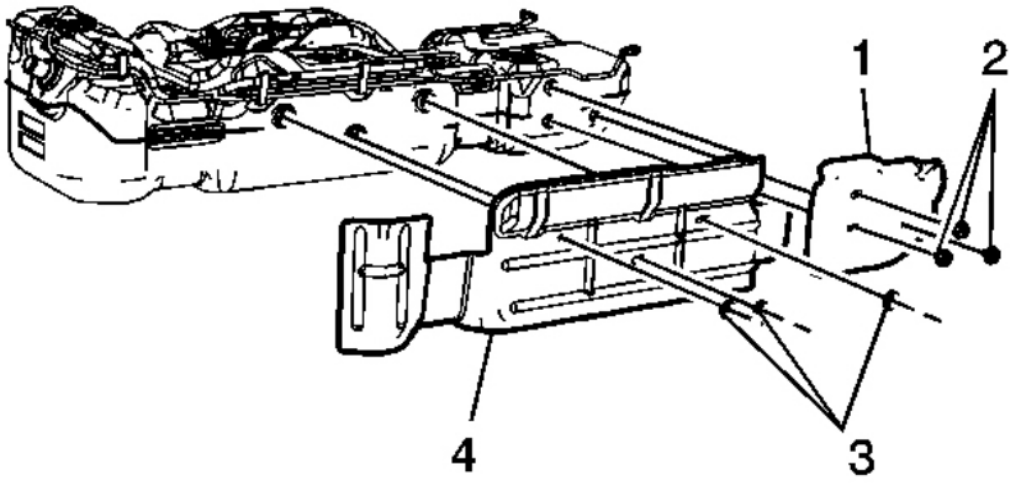

Fig. 232: View Of Fuel Tank Shield & Retainers
Courtesy of GENERAL MOTORS CORP.

24. Remove the fuel tank shield retainers (2 and 3) and shields (1 and 4).

cardiagn.com

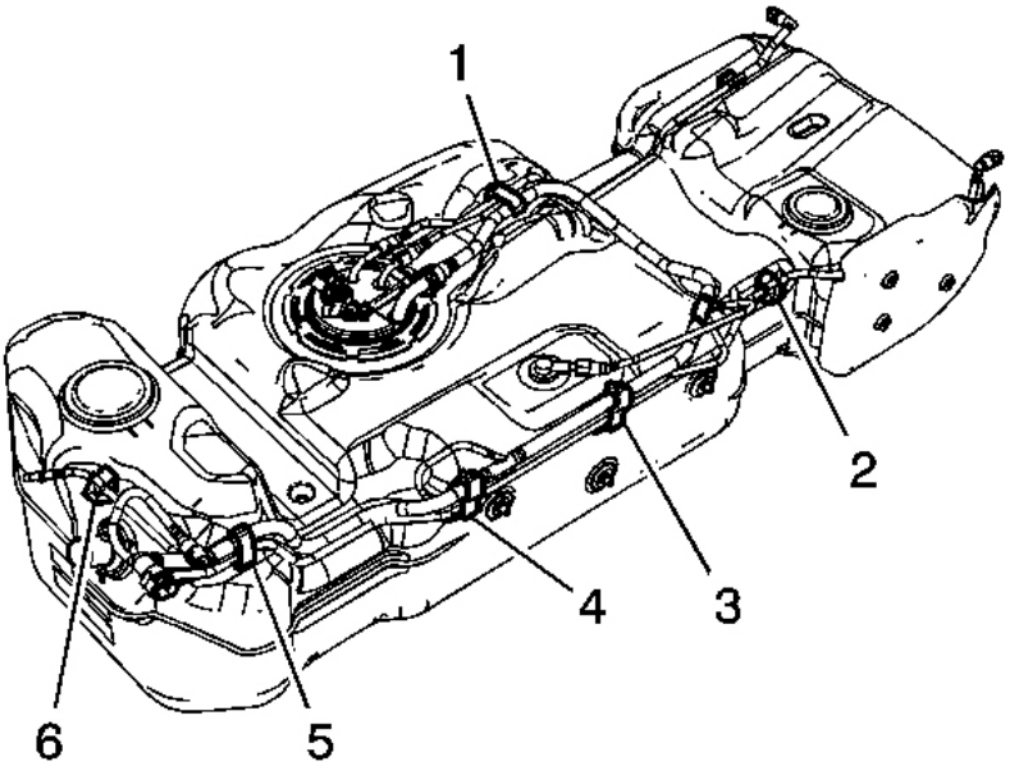

Fig. 233: View Of Fuel Tank Clips
Courtesy of GENERAL MOTORS CORP.

25. Remove the EVAP line from the fuel tank clips (2 and 6).
26. Open the fuel tank clips (1, 3, 4, and 5) and remove the EVAP lines from the clips.
27. Disconnect the EVAP line quick connect fittings at the fuel tank module and fuel tank vent valve. Refer to **Quick Connect Fitting Service - Plastic Collar**.

cardiagn.com

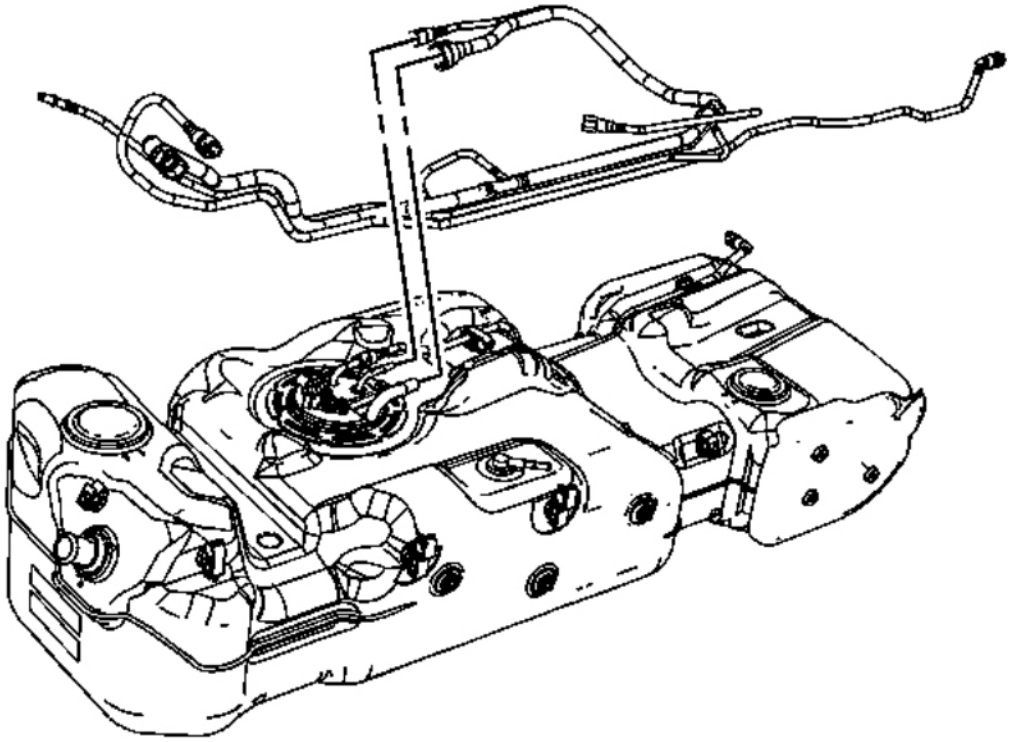

Fig. 234: View Of Fuel Tank EVAP Lines
Courtesy of GENERAL MOTORS CORP.

28. Remove the EVAP lines from the fuel tank.

cardiagn.com

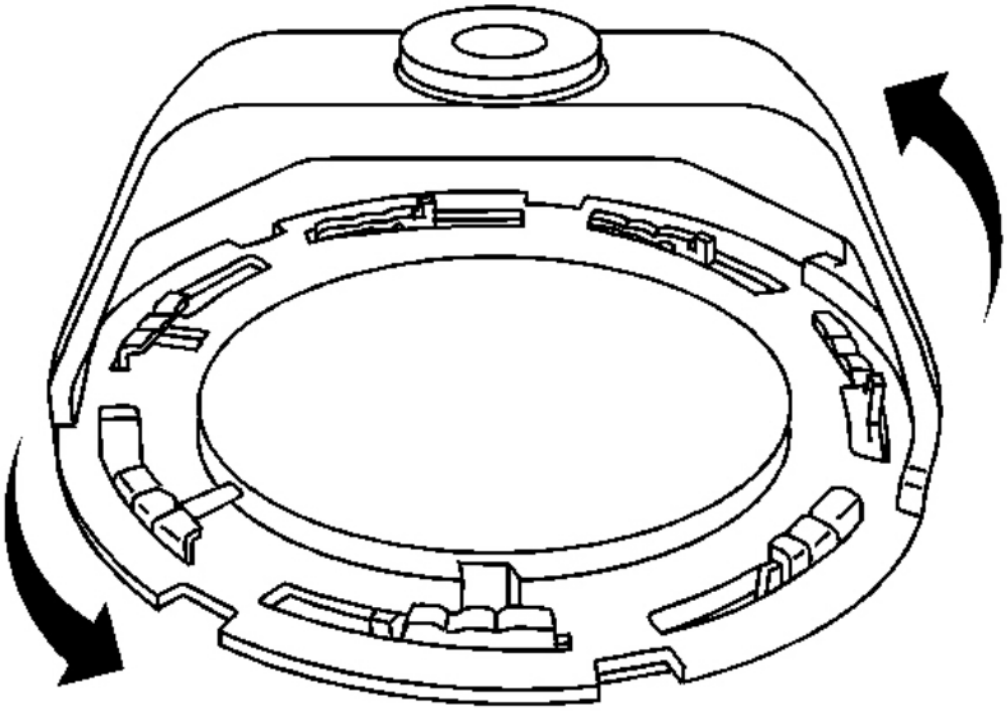

Fig. 235: Identifying Lock Ring
Courtesy of GENERAL MOTORS CORP.

29. Using the **J 45722** , remove the lock ring. See **Special Tools**.

cardiagn.com

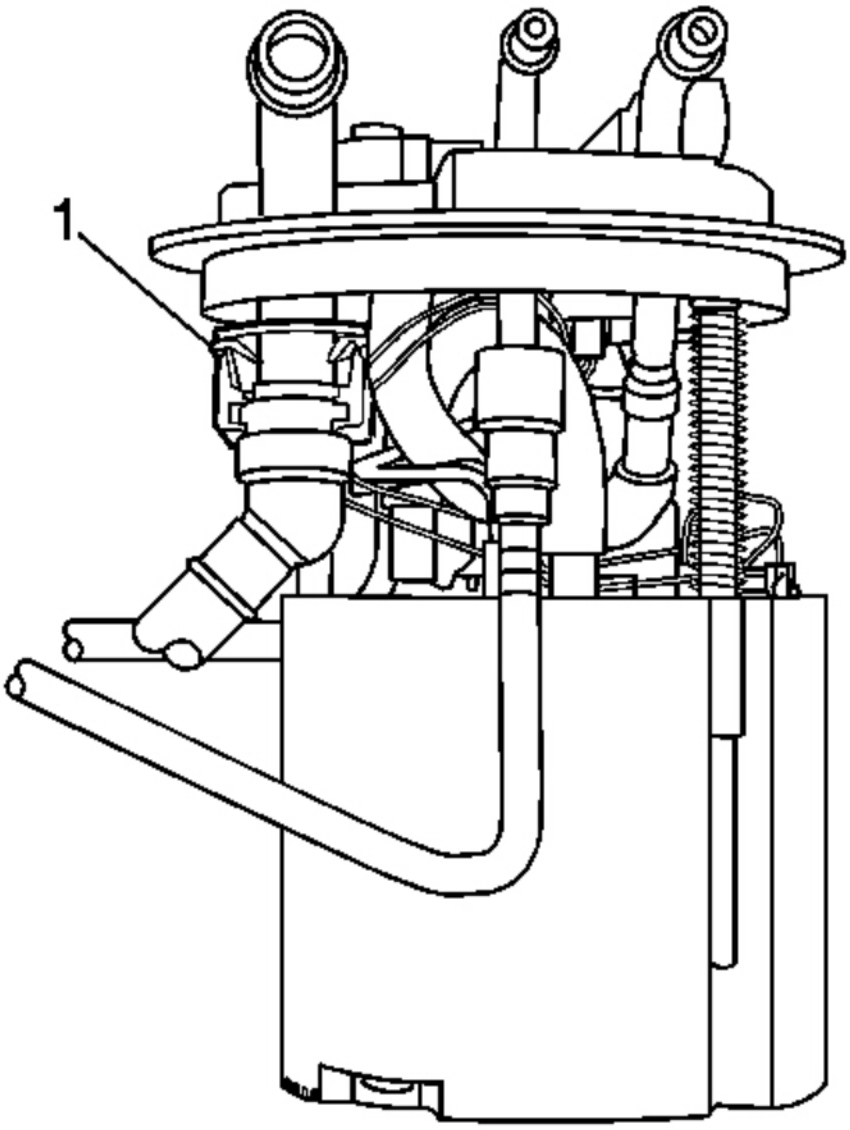

Fig. 236: View Of Quick Connect Fittings At Module Cover
Courtesy of GENERAL MOTORS CORP.

30. Carefully lift the module from the fuel tank, enough to access the quick connect fittings (1) under the module cover. Disconnect the quick connect fittings. Refer to **Quick Connect Fitting Service - Plastic Collar**.
31. Remove the fuel tank module.

cardiagn.com

32. Remove and discard the fuel tank module seal.

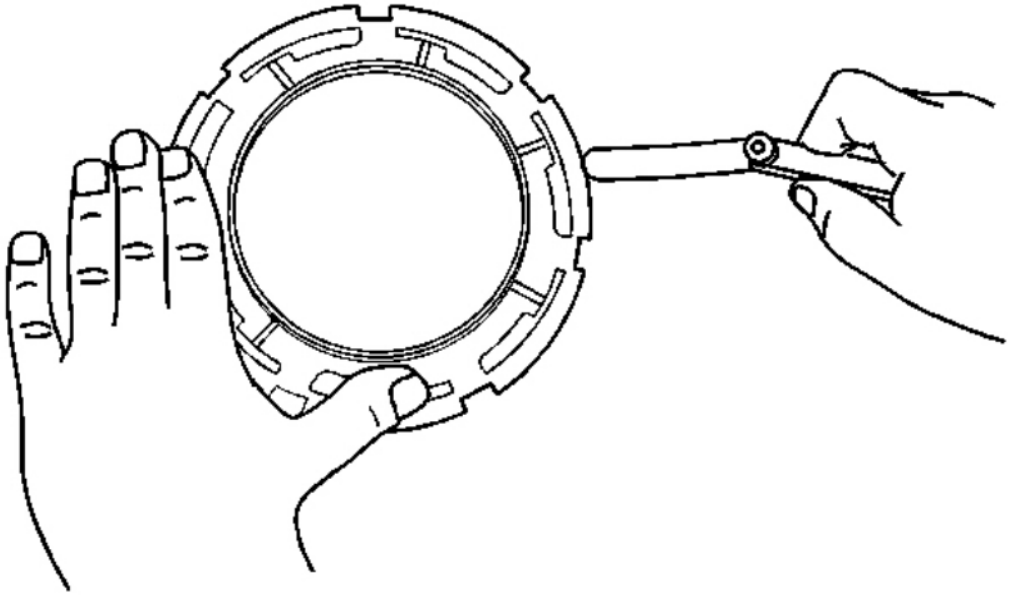

Fig. 237: Checking Lock Ring For Flatness
Courtesy of GENERAL MOTORS CORP.

IMPORTANT:

- **Some lock rings were manufactured with "DO NOT REUSE" stamped into them. These lock rings may be reused if they are not damaged or warped.**
- **Inspect the lock ring for damage due to improper removal or installation procedures. If damage is found, install a NEW lock ring.**
- **Check the lock ring for flatness.**

33. Place the lock ring on a flat surface. Measure the clearance between the lock ring and the flat surface using a feeler gage at 7 points.
34. If warpage is less than 0.41 mm (0.016 in), the lock ring does not require replacement.
35. If warpage is greater than 0.41 mm (0.016 in), the lock ring must be replaced.

Installation Procedure

cardiagn.com

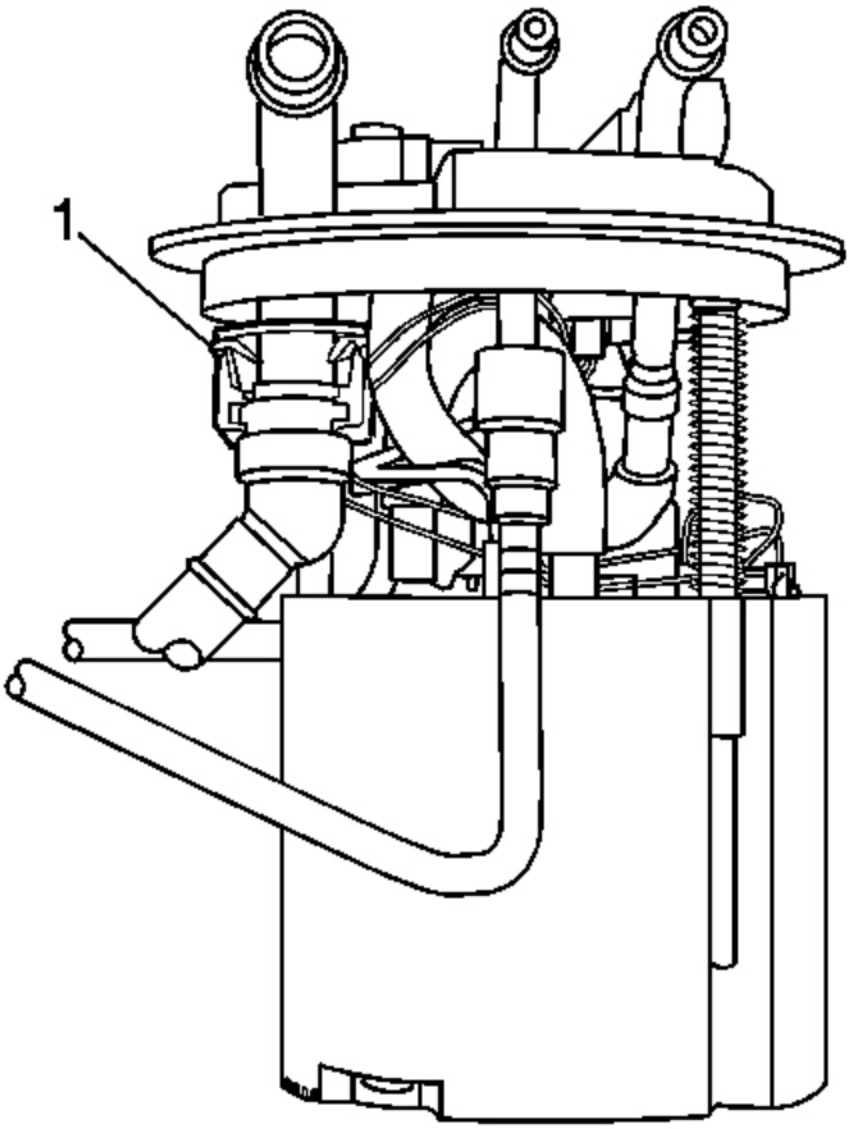

Fig. 238: View Of Quick Connect Fittings At Module Cover
Courtesy of GENERAL MOTORS CORP.

1. If the fuel tank was replaced perform the following steps, otherwise proceed to step 18.
2. Install the NEW fuel tank module seal onto the fuel tank.
3. Pull the vent lines in the fuel tank up as far as possible for ease of installation.
4. Position the fuel tank module part way into the fuel tank.

cardiagn.com

5. Connect the quick connect fittings (1) to the module cover. Refer to **Quick Connect Fitting Service - Plastic Collar**.
6. Install the fuel tank module into the fuel tank.
7. Place the lock ring into position.

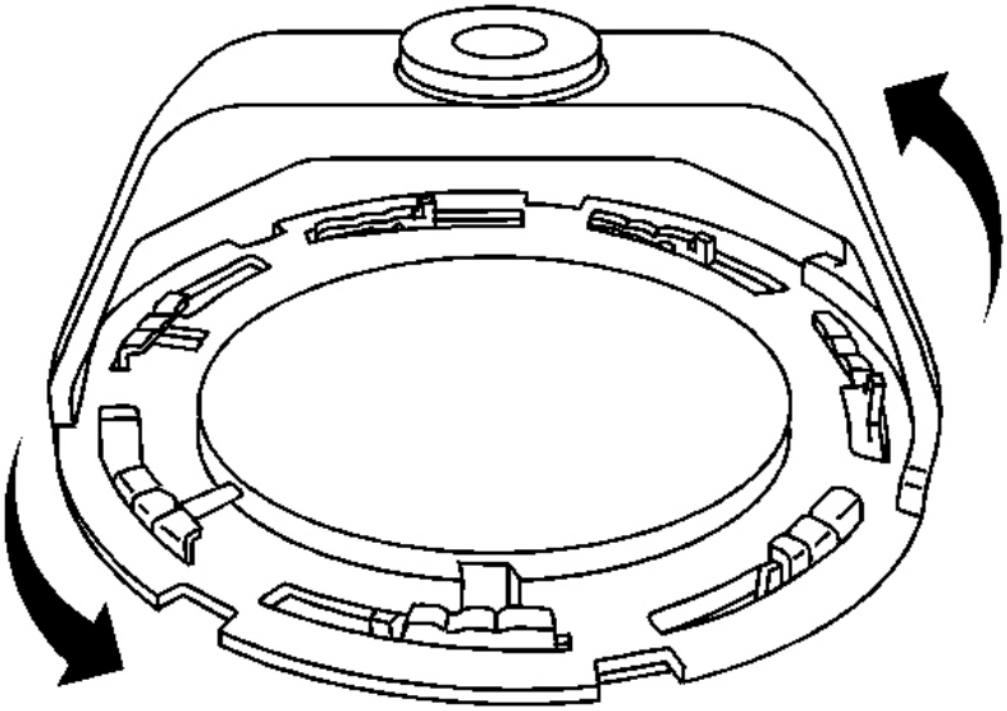

Fig. 239: Identifying Lock Ring
Courtesy of GENERAL MOTORS CORP.

IMPORTANT: Always replace the fuel module seal when installing the fuel module. Replace the lock ring if necessary. DO NOT apply any type of lubrication in the seal groove.
Ensure the lock ring is installed with the correct side facing upward. A correctly installed lock ring will only turn in a clockwise direction.

8. Rotate the lock ring counterclockwise using the **J 45722** . See **Special Tools**.

cardiagn.com

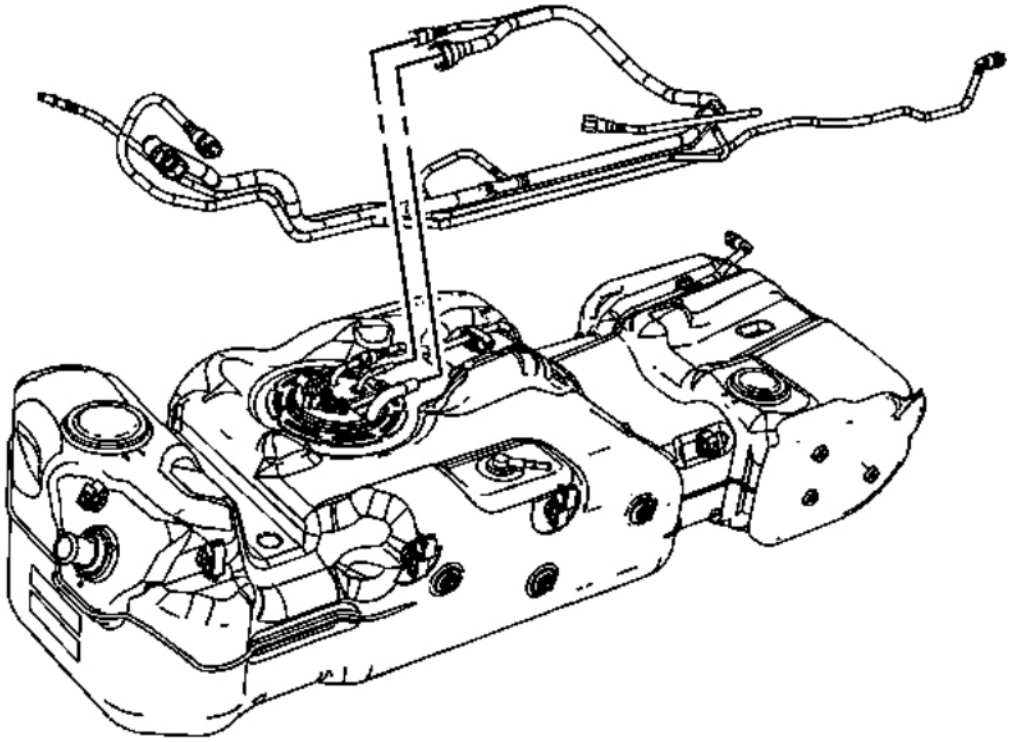

Fig. 240: View Of Fuel Tank EVAP Lines
Courtesy of GENERAL MOTORS CORP.

9. Install the EVAP lines to the fuel tank.

cardiagn.com

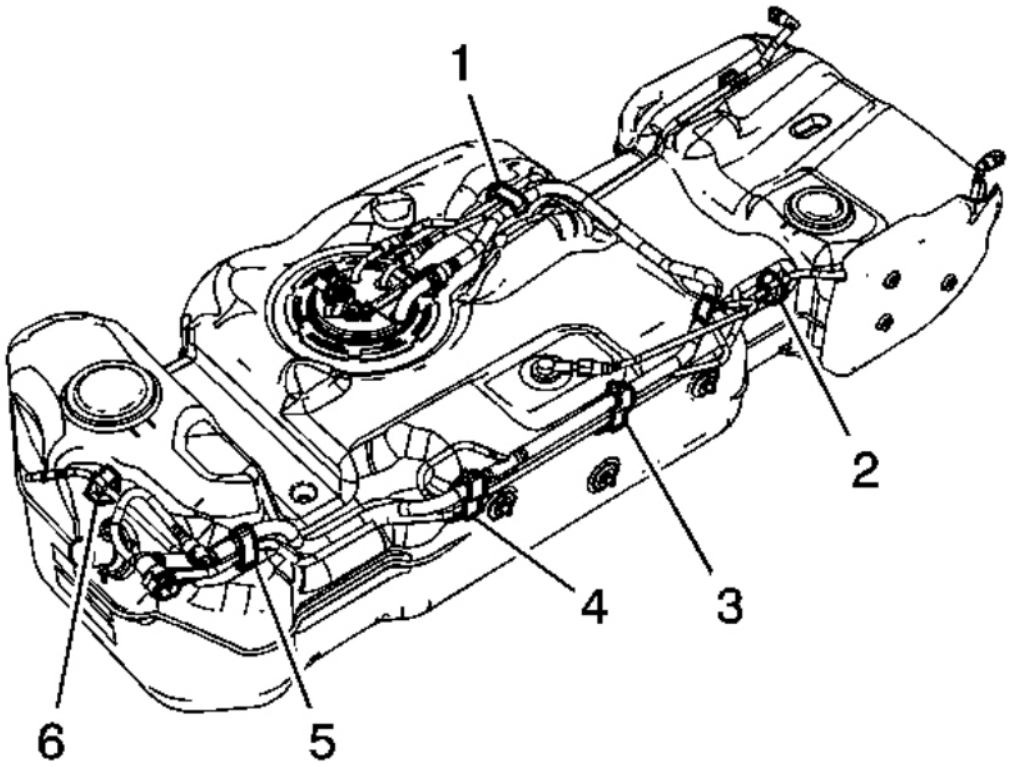

Fig. 241: View Of Fuel Tank Clips
Courtesy of GENERAL MOTORS CORP.

10. Connect the EVAP line quick connect fittings at the fuel tank module and fuel tank vent valve. Refer to **Quick Connect Fitting Service - Plastic Collar**.
11. Install the EVAP lines to the fuel tank clips (1, 3, 4, and 5) and close the clips.
12. Install the EVAP line to the fuel tank clips (2 and 6).

cardiagn.com

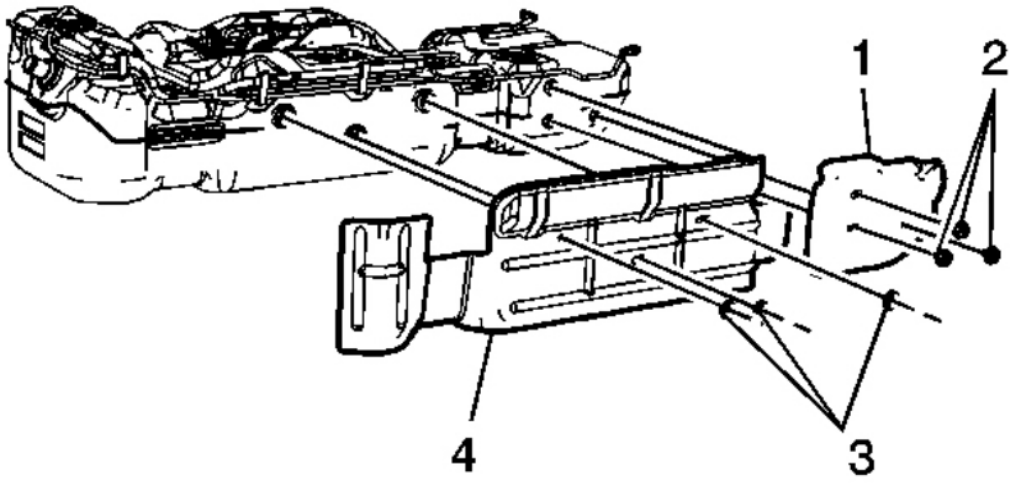

Fig. 242: View Of Fuel Tank Shield & Retainers
Courtesy of GENERAL MOTORS CORP.

13. Install the fuel tank shields (1 and 4) and retainers (2 and 3).

cardiagn.com

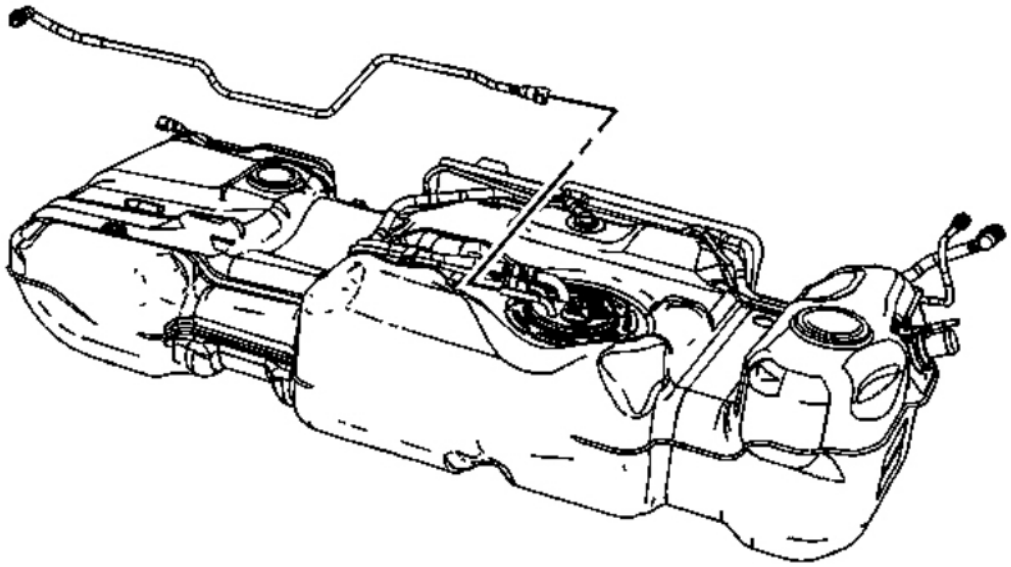

Fig. 243: View Of Fuel Feed Line
Courtesy of GENERAL MOTORS CORP.

14. Install the fuel feed line to the fuel tank.

cardiagn.com

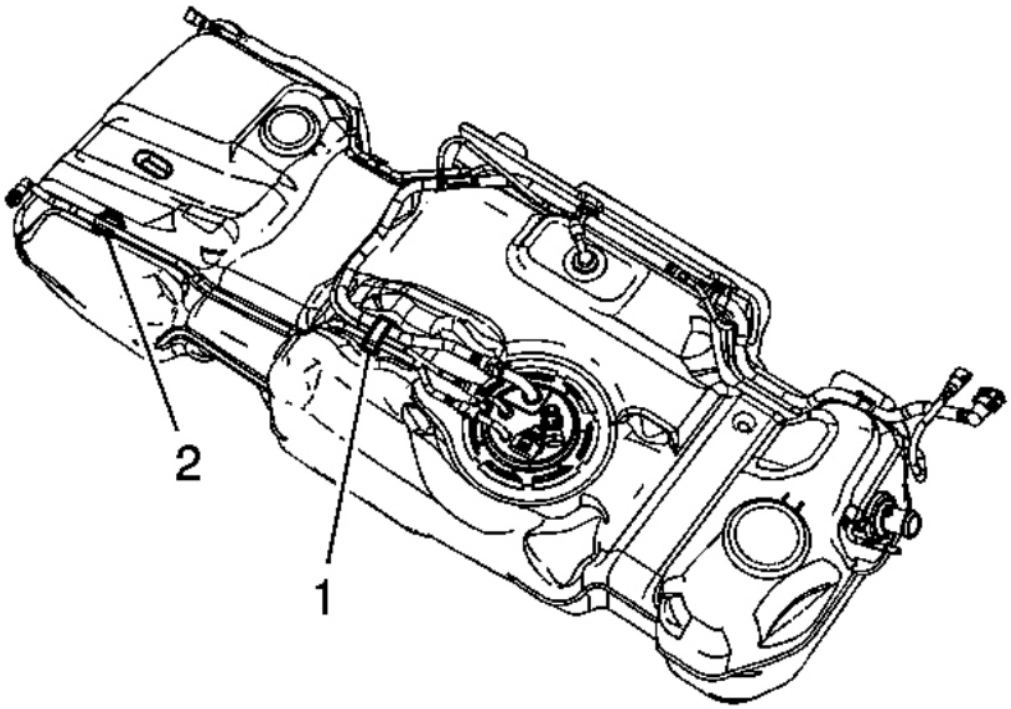

Fig. 244: View Of EVAP Line Clip & Retainer
Courtesy of GENERAL MOTORS CORP.

15. Connect the fuel feed line quick connect fitting at the fuel tank module. Refer to **Quick Connect Fitting Service - Plastic Collar**.
16. Install the fuel feed line to the clip (1) and close the clip.
17. Install the fuel feed line to the retaining feature (2) in the fuel tank.

cardiagn.com

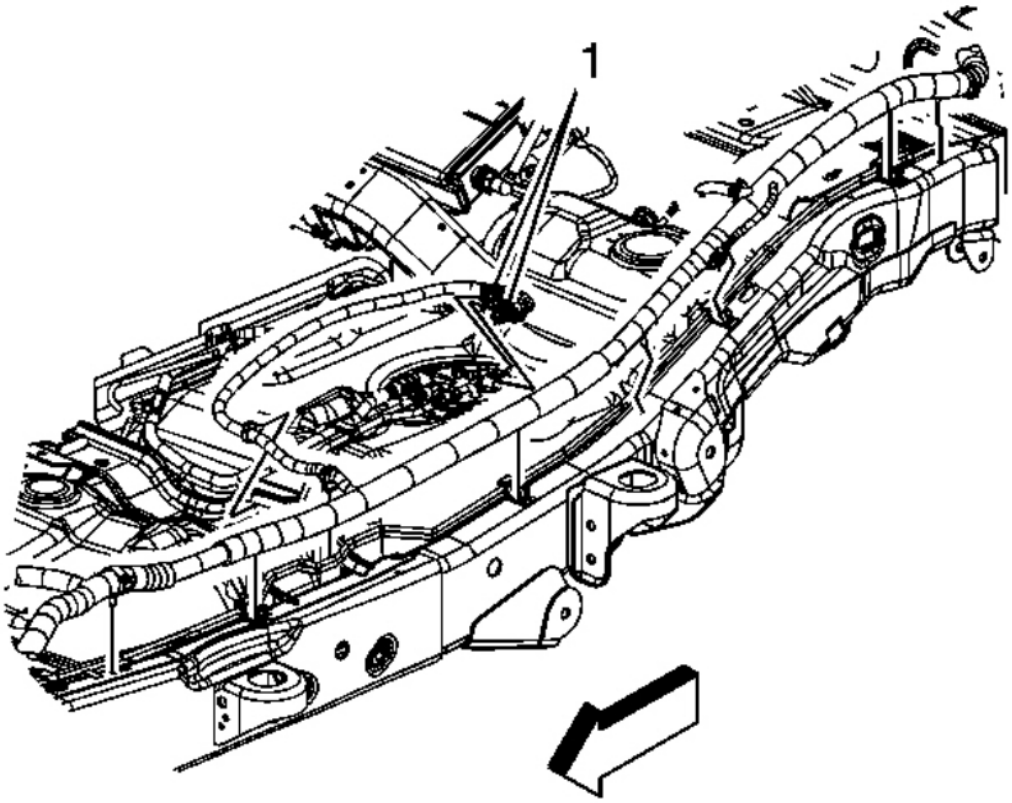

Fig. 245: View Of Chassis Wiring Harness Electrical Connectors
Courtesy of GENERAL MOTORS CORP.

18. Place the fuel tank onto a suitable jack.
19. With the aid of an assistant, partially raise the fuel tank until the electrical connections can be made.
20. Connect the chassis wiring harness electrical connectors (1) to the fuel tank module and fuel pressure sensor.
21. Engage the chassis harness electrical connector CPA retainer at the module electrical connector.

cardiagn.com

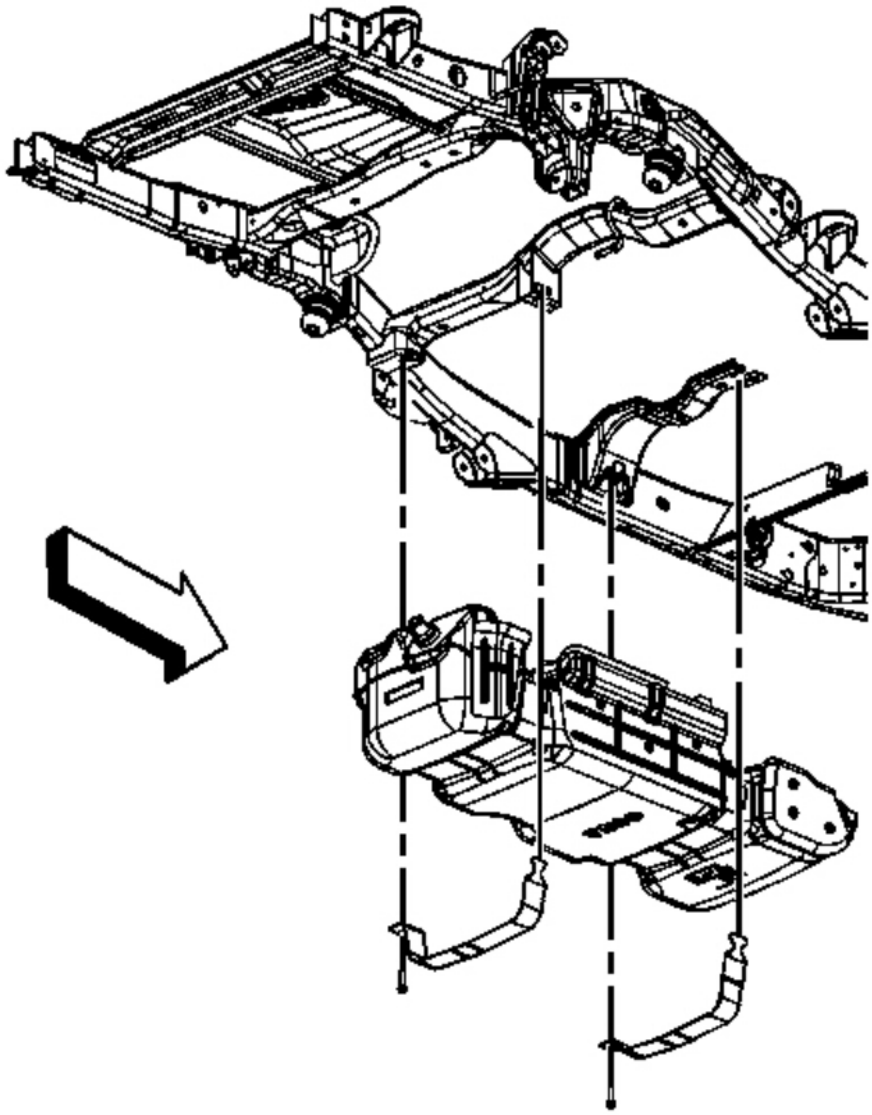

Fig. 246: View Of Fuel Tank & Straps (Single Tank)
Courtesy of GENERAL MOTORS CORP.

22. Completely raise the fuel tank.
23. Install the fuel tank straps.

NOTE: **Refer to Fastener Notice .**

cardiagn.com

24. Install the fuel tank strap bolts.

    Tighten: Tighten the bolts to 40 N.m (30 lb ft).

25. Remove the adjustable jack from the fuel tank.

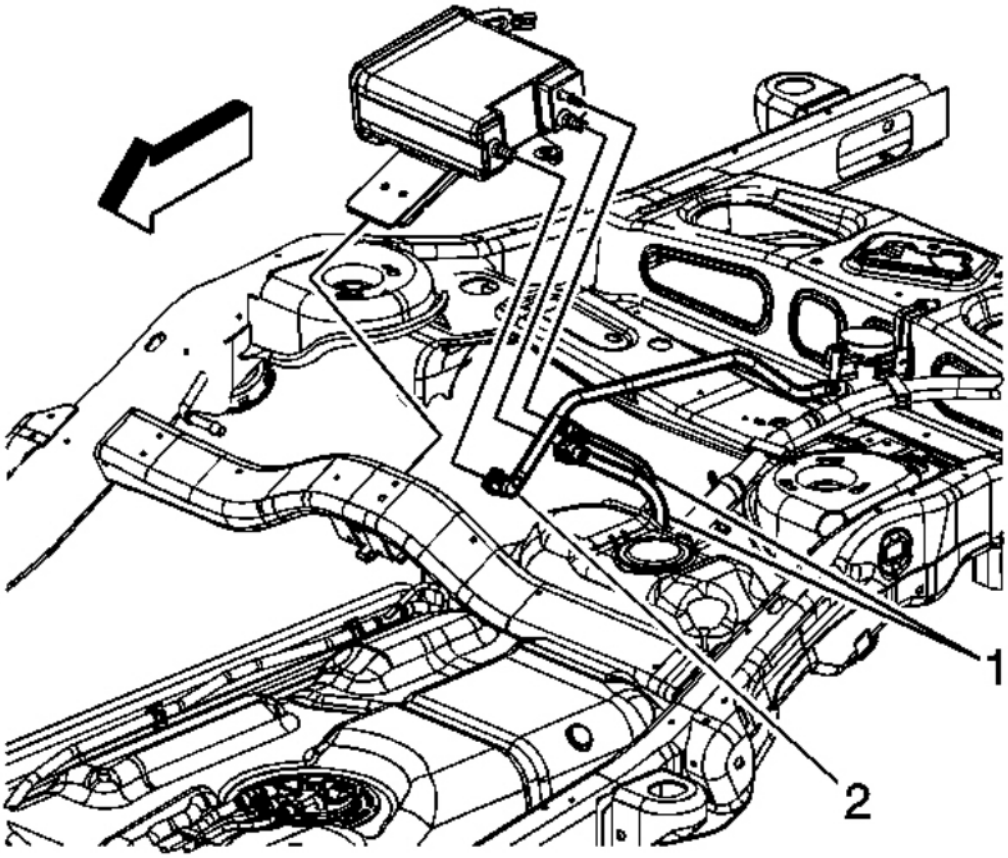

Fig. 247: View Of Fuel Tank EVAP Lines & Canister
Courtesy of GENERAL MOTORS CORP.

26. Remove the caps from the EVAP lines.
27. Connect the fuel tank EVAP lines (1) to the EVAP canister. Refer to **Quick Connect Fitting Service - Plastic Collar**.

cardiagn.com

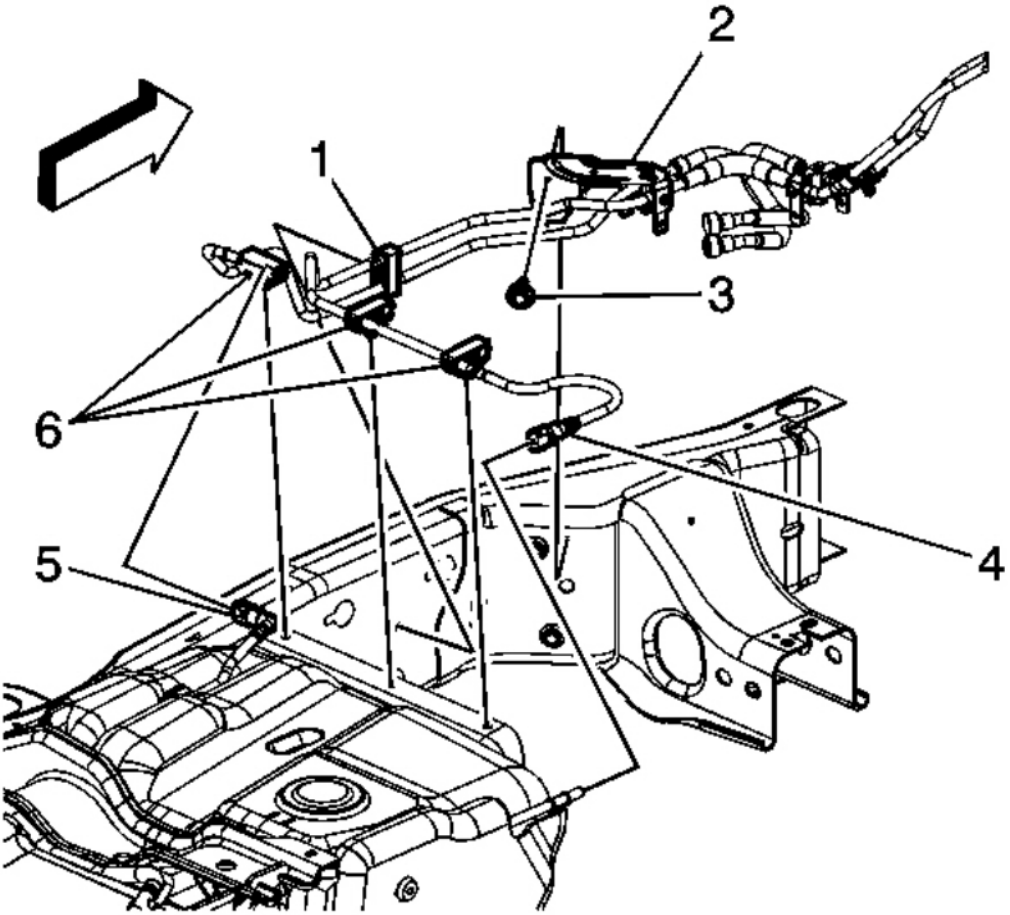

Fig. 248: View Of EVAP Lines, Fuel Feed Lines & Fittings
Courtesy of GENERAL MOTORS CORP.

28. Remove the caps from the fuel and EVAP lines.
29. Connect the chassis EVAP line quick connect fitting (4) to the fuel tank line. Refer to **Quick Connect Fitting Service - Plastic Collar**.
30. Connect the fuel tank fuel feed line quick connect fitting (5) to the chassis line. Refer to **Quick Connect Fitting Service - Plastic Collar**.

cardiagn.com

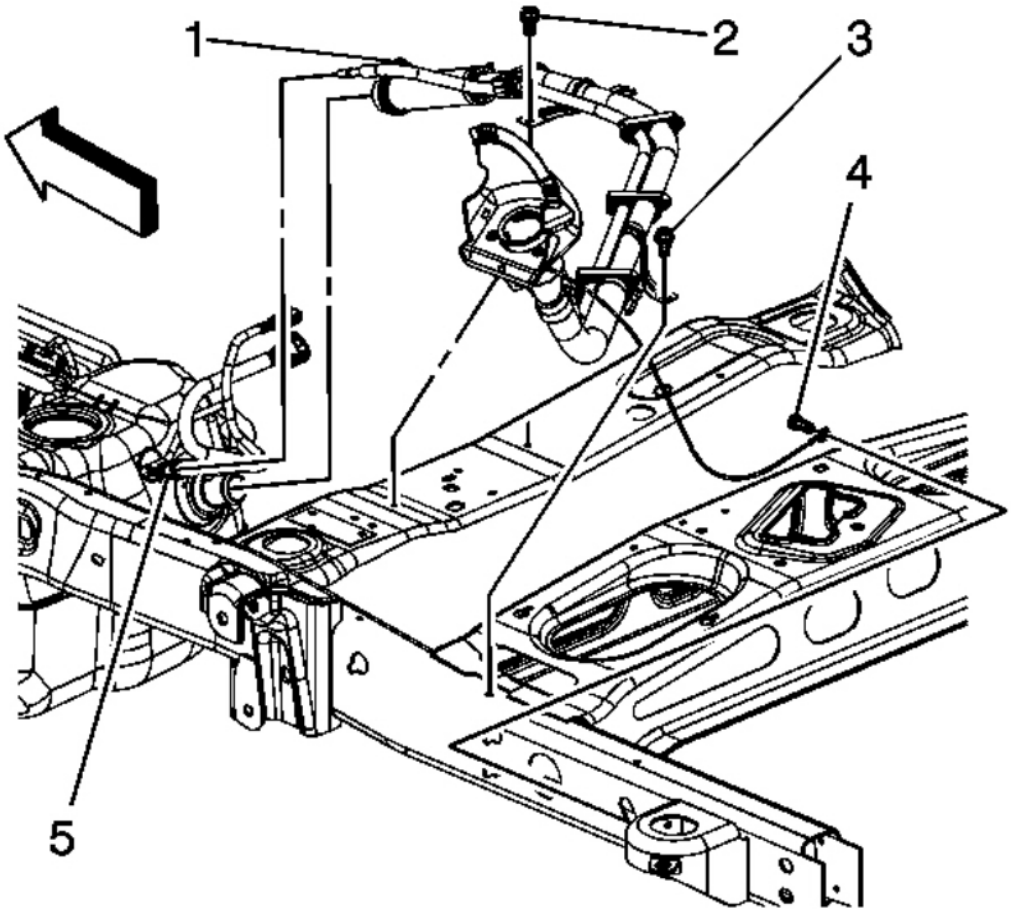

Fig. 249: View Of Fuel Fill Hose, Pipe Bracket Bolts & Quick Connect Fitting
Courtesy of GENERAL MOTORS CORP.

31. Connect the fuel tank vent line quick connect fitting (5) to the fuel fill pipe line. Refer to **Quick Connect Fitting Service - Plastic Collar**.
32. Install the fuel fill hose to the fuel tank. Ensure that the notch in the hose is aligned with the notch on the fuel tank.
33. Install the fill pipe bracket bolts (2 and 3).

    Tighten: Tighten the bolts to 12 N.m (106 lb in).

34. Tighten the fuel fill hose clamp (1).

    Tighten: Tighten the clamp to 2.5 N.m (22 lb in).

cardiagn.com

35. Lower the vehicle.
36. Refill the fuel tank.
37. Install the fuel fill cap.
38. Connect the negative battery cable. Refer to **Battery Negative Cable Disconnection and Connection** .
39. Use the following procedure in order to inspect for leaks:
    1. Turn the ignition ON, with the engine OFF, for 2 seconds.
    2. Turn the ignition OFF for 10 seconds.
    3. Turn the ignition ON, with the engine OFF.
    4. Inspect for fuel leaks.
40. Install the intake manifold sight shield. Refer to **Upper Intake Manifold Sight Shield Replacement** .

FUEL TANK REPLACEMENT (1500 SWB - 98.4L (26 GAL) TANK + E85)

Tools Required

J 45722 Fuel Sender Lock Ring Wrench. See **Special Tools**.

Removal Procedure

IMPORTANT: Clean the fuel and evaporative emission (EVAP) connections and surrounding areas prior to disconnecting the lines in order to avoid possible system contamination.

cardiagn.com

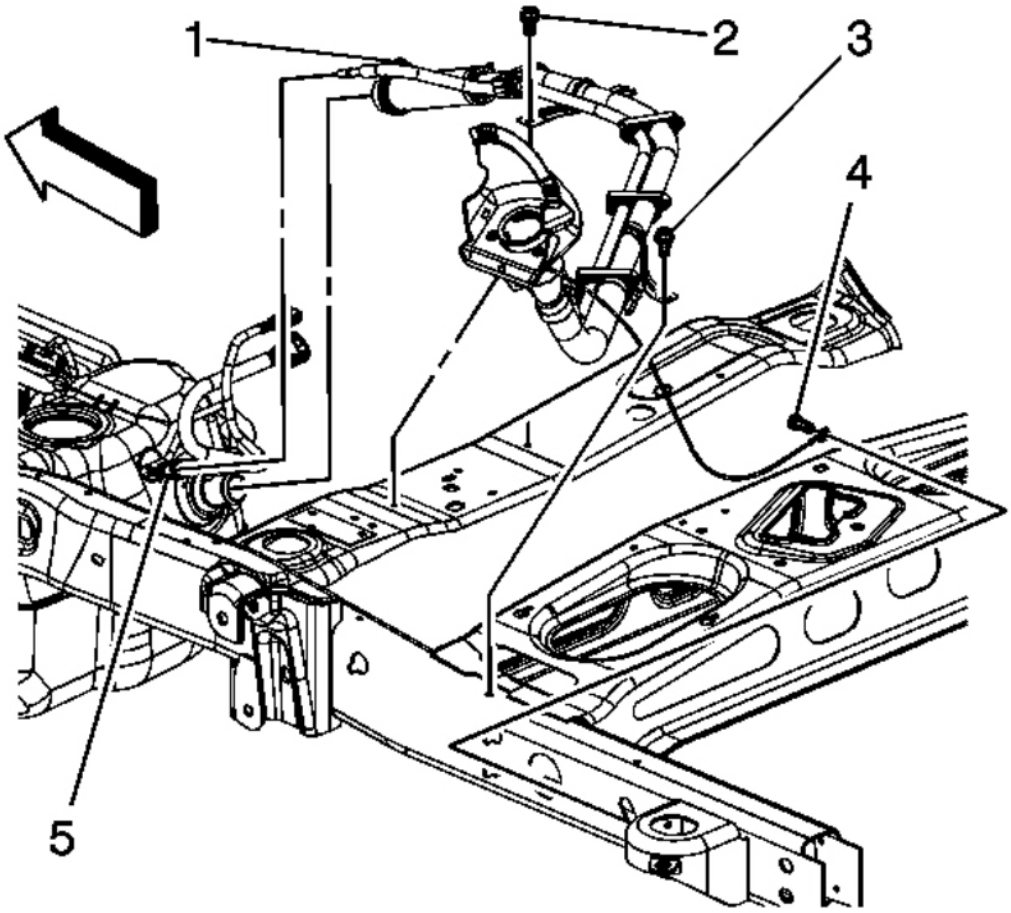

Fig. 250: View Of Fuel Fill Hose, Pipe Bracket Bolts & Quick Connect Fitting
Courtesy of GENERAL MOTORS CORP.

1. Relieve the fuel system pressure. Refer to **Fuel Pressure Relief**.
2. Drain the fuel tank. Refer to **Fuel Tank Draining (Dual Tanks - Front)** or **Fuel Tank Draining (Dual Tanks - Rear)** or **Fuel Tank Draining (Single Tank)**.
3. Disconnect the fuel tank vent line quick connect fitting (5) from the fuel fill pipe line. Refer to **Quick Connect Fitting Service - Plastic Collar**.

cardiagn.com

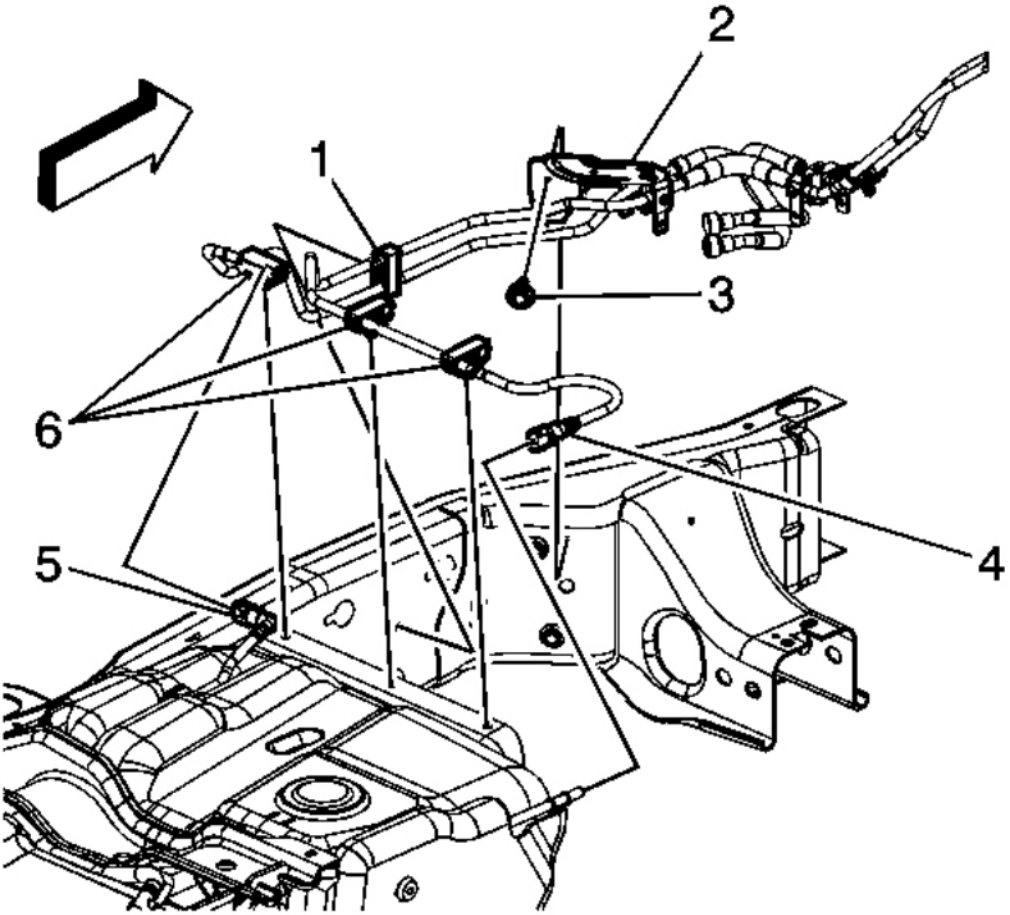

Fig. 251: View Of EVAP Lines, Fuel Feed Lines & Fittings
Courtesy of GENERAL MOTORS CORP.

4. Disconnect the chassis EVAP line quick connect fitting (4) from the fuel tank line. Refer to **Quick Connect Fitting Service - Plastic Collar**.
5. Disconnect the fuel tank fuel feed line quick connect fitting (5) from the chassis line. Refer to **Quick Connect Fitting Service - Plastic Collar**.
6. Cap the fuel and EVAP lines in order to prevent possible fuel and/or EVAP system contamination.

cardiagn.com

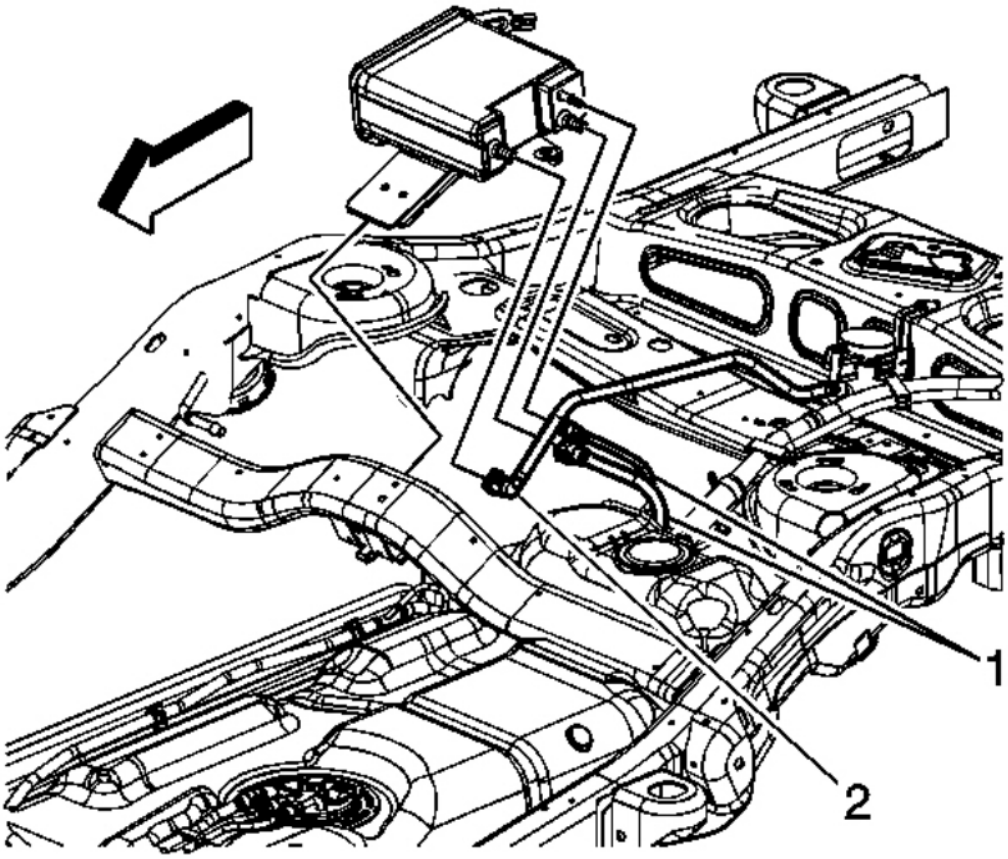

Fig. 252: View Of Fuel Tank EVAP Lines & Canister
Courtesy of GENERAL MOTORS CORP.

7. Disconnect the fuel tank EVAP lines (1) from the EVAP canister. Refer to **Quick Connect Fitting Service - Plastic Collar**.
8. Cap the EVAP lines in order to prevent possible EVAP system contamination.
9. Using an adjustable jack, support the fuel tank.
10. Remove the fuel tank strap bolts.

NOTE: **Refer to Damage to Fuel Tank Straps Notice .**

11. Remove the fuel tank straps.
12. With the aid of an assistant, carefully lower the rear of the fuel tank.
13. Slide the front of the tank away from the frame.

cardiagn.com

14. Lower the fuel tank slightly until the chassis wiring harness electrical connectors can be accessed.

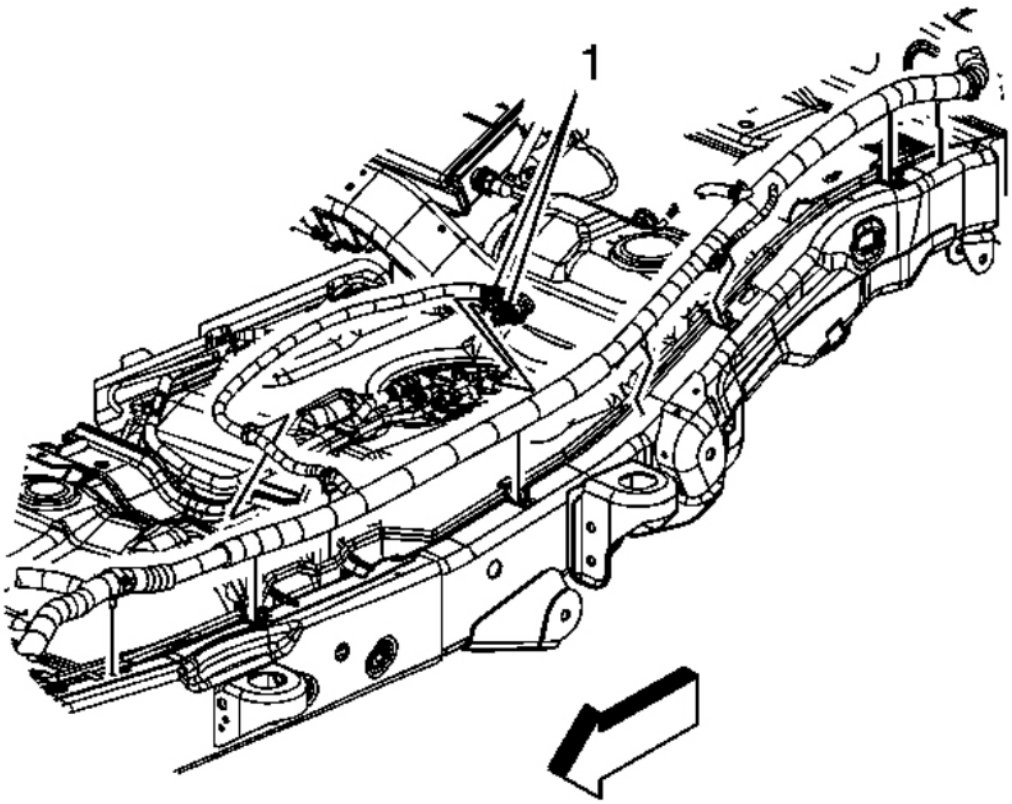

Fig. 253: View Of Chassis Wiring Harness Electrical Connectors
Courtesy of GENERAL MOTORS CORP.

15. Disengage the chassis wiring harness electrical connector, connector position assurance (CPA) retainer at the module.
16. Disconnect the chassis wiring harness electrical connectors (1) from the module and the fuel pressure sensor.

cardiagn.com

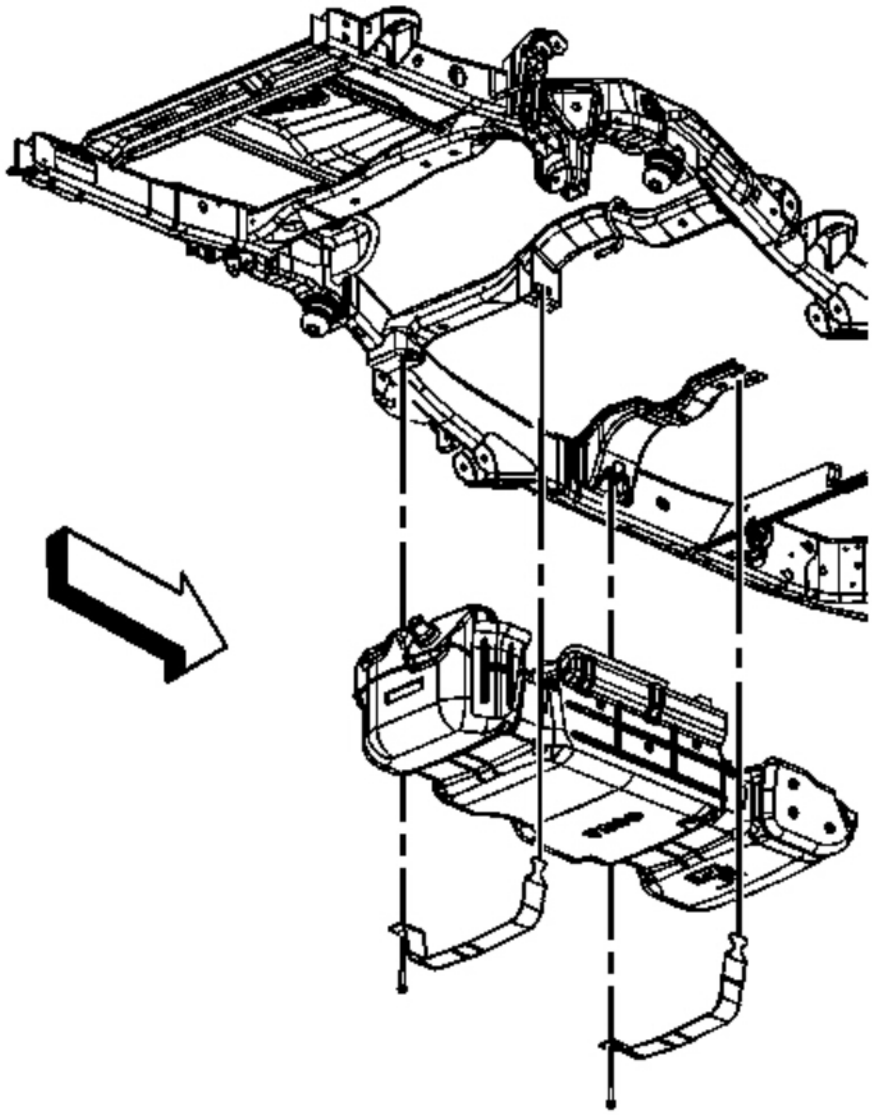

Fig. 254: View Of Fuel Tank & Straps (Single Tank)
Courtesy of GENERAL MOTORS CORP.

17. Completely lower the fuel tank.
18. With the aid of an assistant, Place the fuel tank in a suitable work area.
19. If replacing the fuel tank proceed to the next step, otherwise proceed to step 18 in the installation procedure.

cardiagn.com

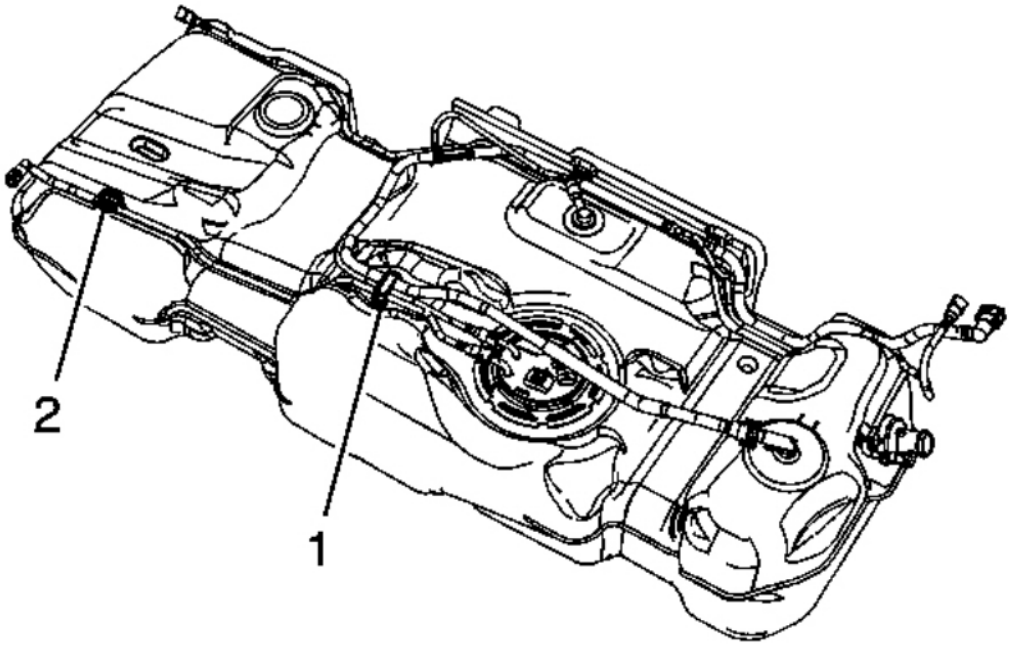

Fig. 255: View Of EVAP Line Clip & Retainer
Courtesy of GENERAL MOTORS CORP.

20. Remove the fuel feed line from the retaining feature (2) in the fuel tank.
21. Open the fuel/EVAP line clip (1) and remove the fuel feed line from the clip.
22. Disconnect the fuel feed line quick connect fitting at the fuel tank module. Refer to **Quick Connect Fitting Service - Plastic Collar**.

cardiagn.com

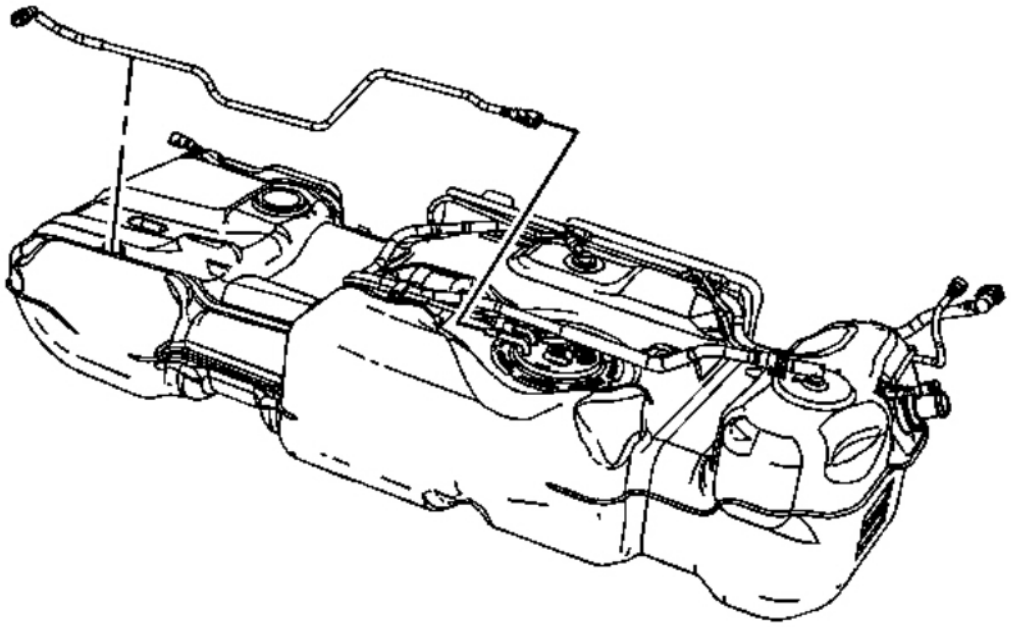

Fig. 256: View Of Fuel Feed Line
Courtesy of GENERAL MOTORS CORP.

23. Remove the fuel feed line from the fuel tank.

cardiagn.com

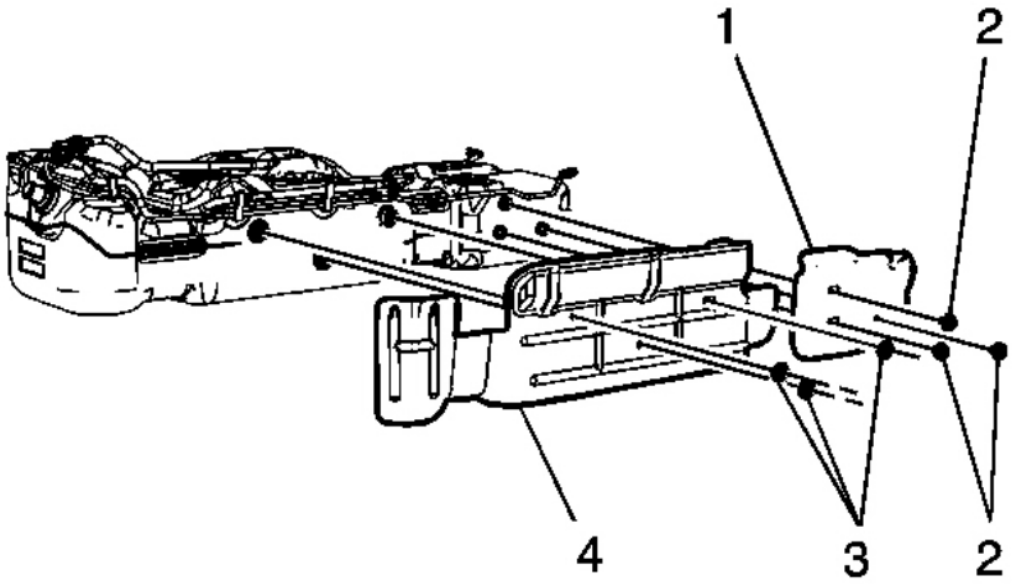

Fig. 257: View Of Fuel Tank Shields & Retainers
Courtesy of GENERAL MOTORS CORP.

24. Remove the fuel tank shield retainers (2 and 3) and shields (1 and 4).

cardiagn.com

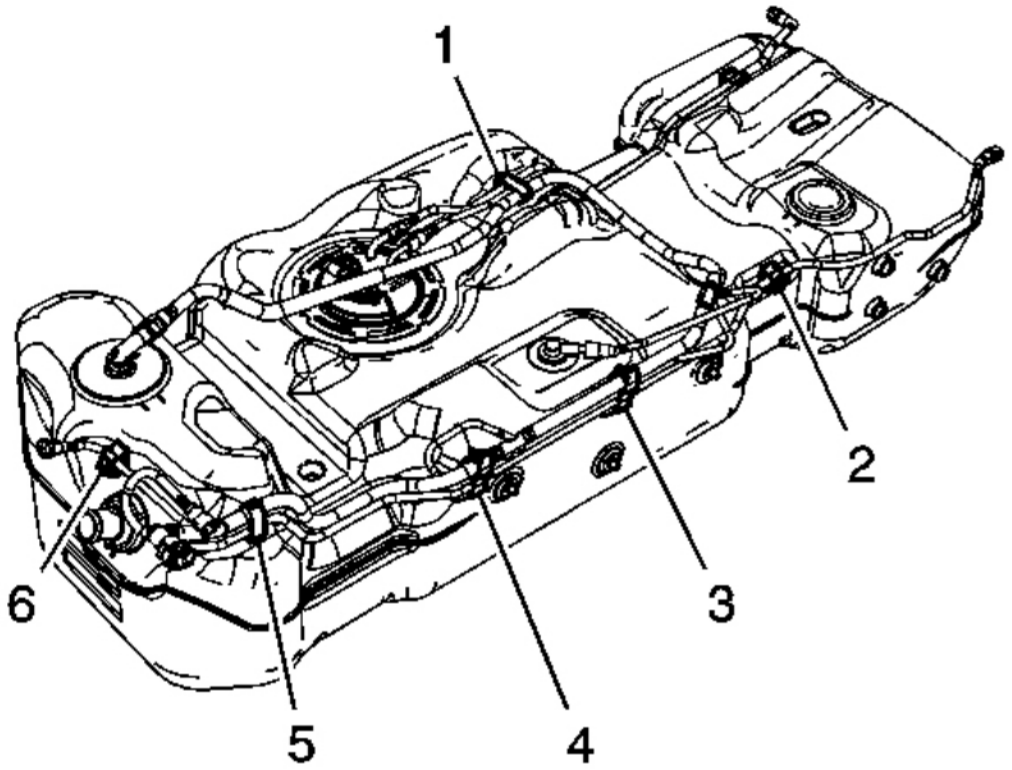

Fig. 258: View Of Fuel Tank Clips
Courtesy of GENERAL MOTORS CORP.

25. Remove the EVAP line from the fuel tank clips (2 and 6).
26. Open the fuel tank clips (1, 3, 4, and 5) and remove the EVAP lines from the clips.
27. Disconnect the EVAP line quick connect fittings at the fuel tank module and fuel tank vent valves. Refer to **Quick Connect Fitting Service - Plastic Collar**.

cardiagn.com

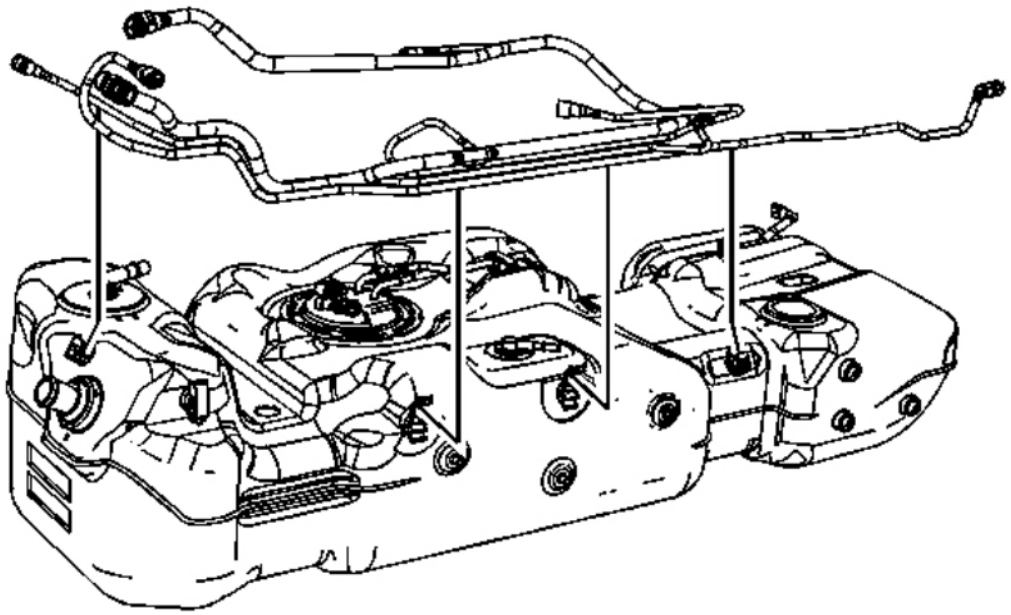

Fig. 259: View Of Fuel Tank EVAP Lines
Courtesy of GENERAL MOTORS CORP.

28. Remove the EVAP lines from the fuel tank.

cardiagn.com

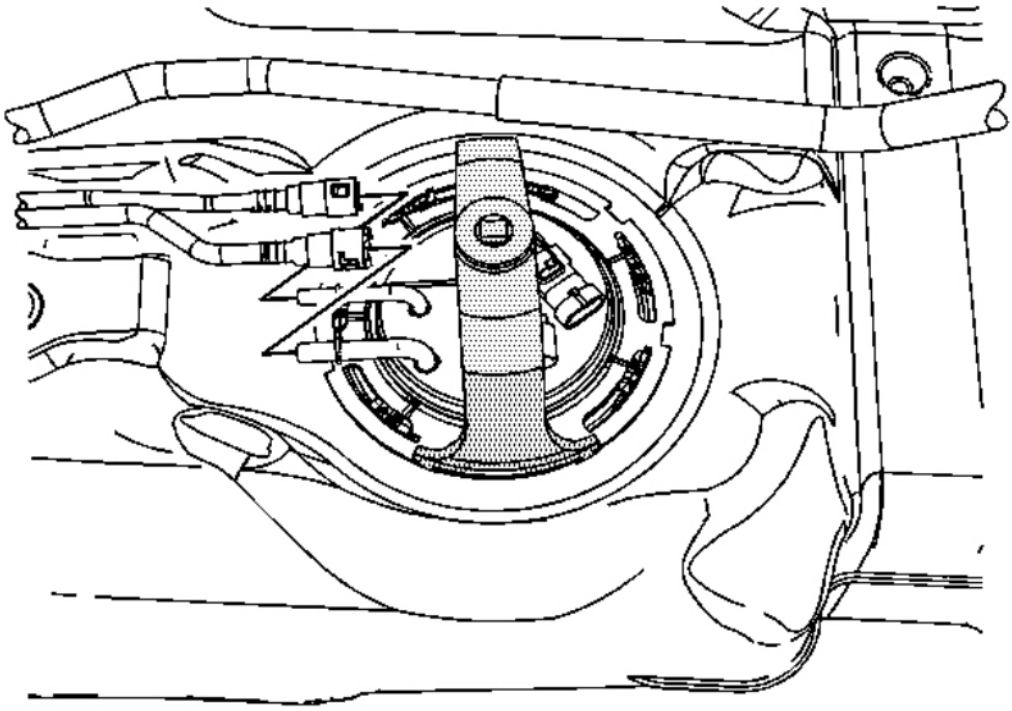

Fig. 260: View Of Special Tool & Lock Ring
Courtesy of GENERAL MOTORS CORP.

29. Using the **J 45722** , remove the lock ring. See**Special Tools**.

cardiagn.com

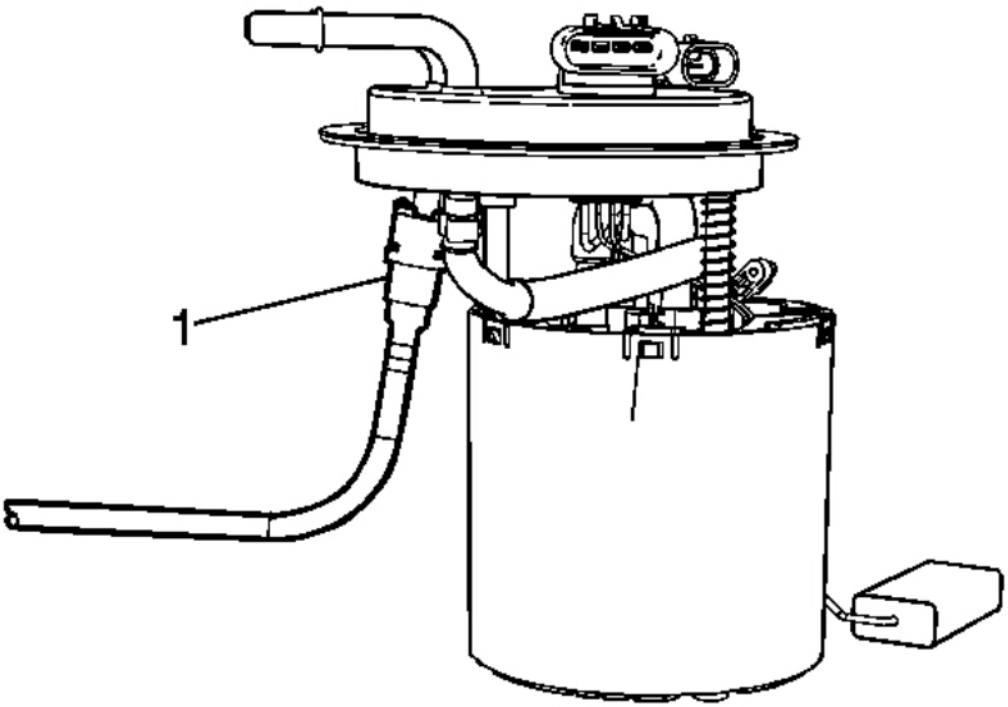

Fig. 261: View Of Fuel Tank Module & Quick Connect Fitting
Courtesy of GENERAL MOTORS CORP.

30. Carefully lift the module from the fuel tank, enough to access the quick connect fitting (1) under the module cover. Disconnect the quick connect fitting. Refer to **Quick Connect Fitting Service - Plastic Collar**.
31. Remove the fuel tank module.
32. Remove and discard the fuel tank module seal.

cardiagn.com

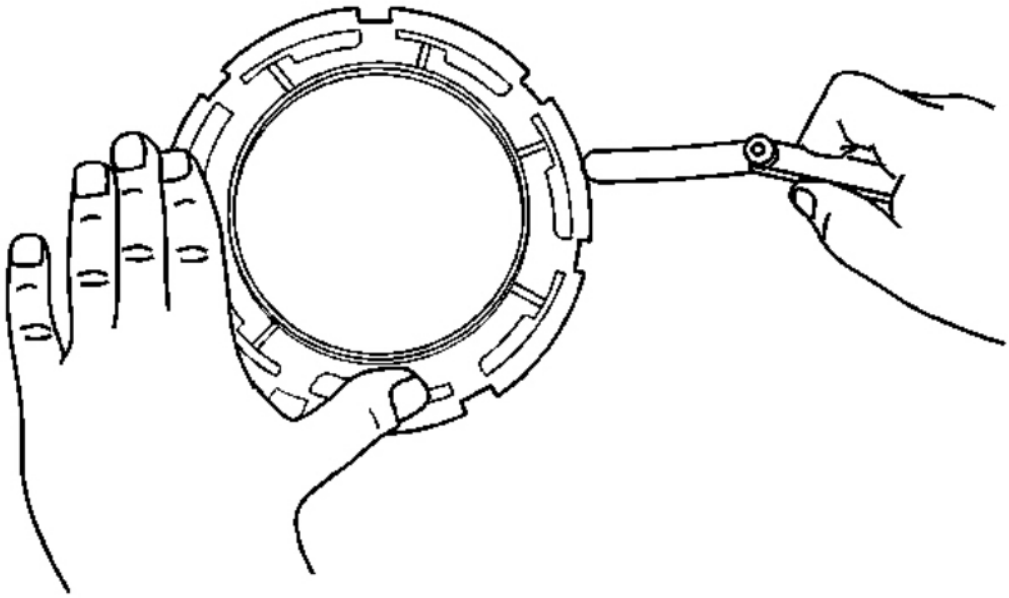

Fig. 262: Checking Lock Ring For Flatness
Courtesy of GENERAL MOTORS CORP.

IMPORTANT:

- **Some lock rings were manufactured with "DO NOT REUSE" stamped into them. These lock rings may be reused if they are not damaged or warped.**
- **Inspect the lock ring for damage due to improper removal or installation procedures. If damage is found, install a NEW lock ring.**
- **Check the lock ring for flatness.**

33. Place the lock ring on a flat surface. Measure the clearance between the lock ring and the flat surface using a feeler gage at 7 points.
34. If warpage is less than 0.41 mm (0.016 in), the lock ring does not require replacement.
35. If warpage is greater than 0.41 mm (0.016 in), the lock ring must be replaced

Installation Procedure

cardiagn.com

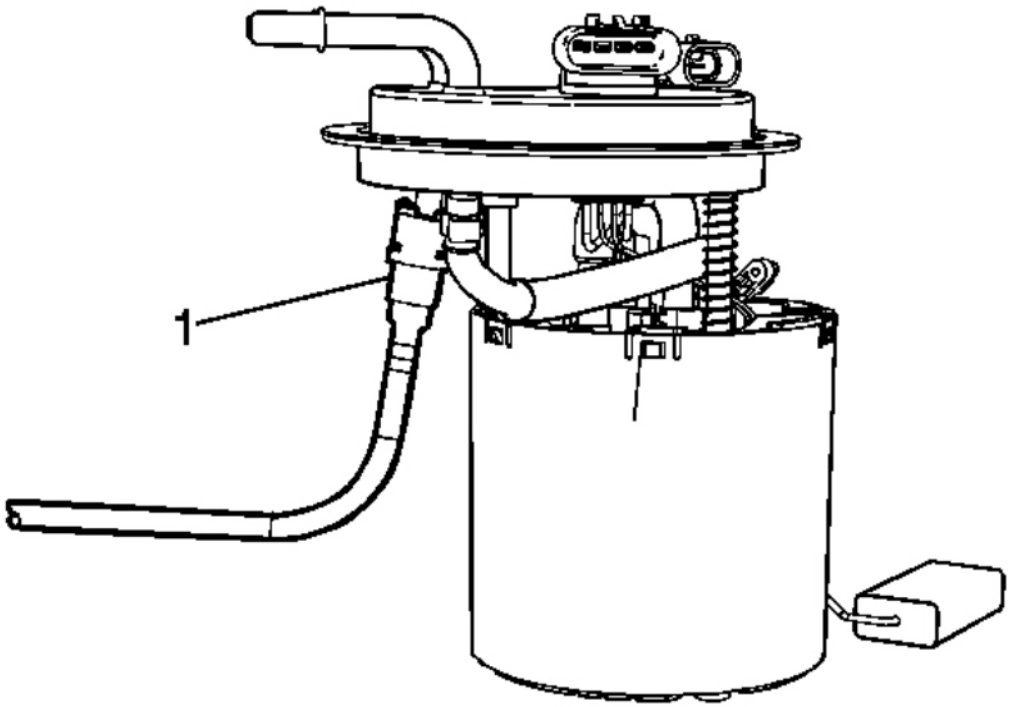

Fig. 263: View Of Fuel Tank Module & Quick Connect Fitting
Courtesy of GENERAL MOTORS CORP.

1. If the fuel tank was replaced perform the following steps, otherwise proceed to step 18.
2. Install the NEW fuel tank module seal onto the fuel tank.
3. Pull the vent lines in the fuel tank up as far as possible for ease of installation.
4. Position the fuel tank module part way into the fuel tank.
5. Connect the quick connect fittings (1) to the module cover. Refer to **Quick Connect Fitting Service - Plastic Collar**.
6. Install the fuel tank module into the fuel tank.
7. Place the lock ring into position.

cardiagn.com

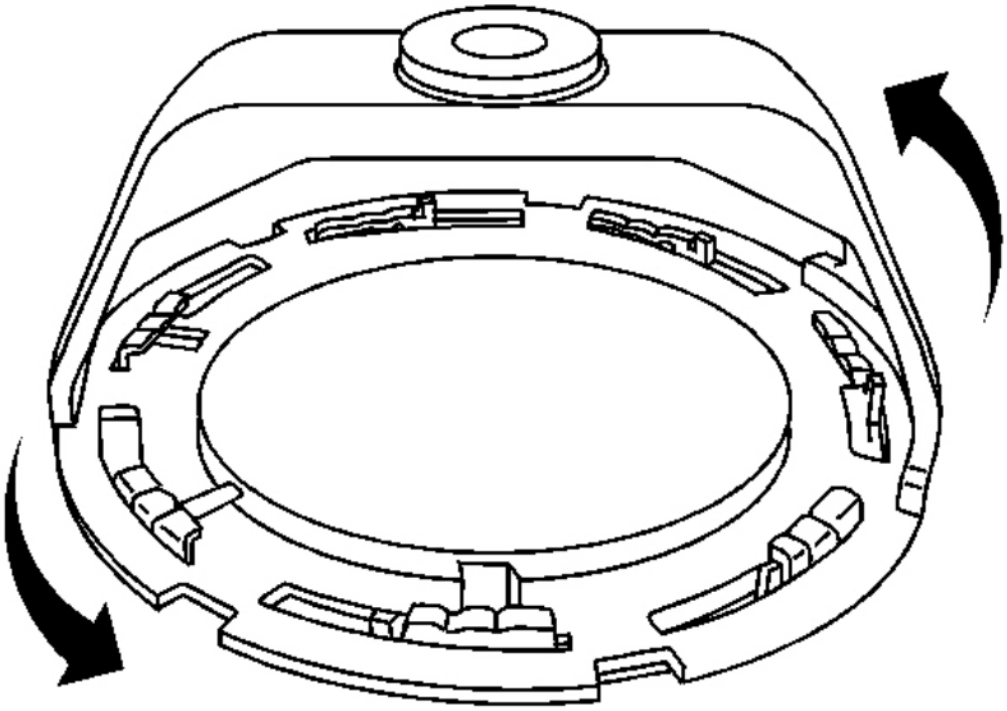

Fig. 264: Identifying Lock Ring
Courtesy of GENERAL MOTORS CORP.

IMPORTANT: Always replace the fuel module seal when installing the fuel module. Replace the lock ring if necessary. DO NOT apply any type of lubrication in the seal groove.
Ensure the lock ring is installed with the correct side facing upward. A correctly installed lock ring will only turn in a clockwise direction.

8. Rotate the lock ring counterclockwise using the **J 45722** . See **Special Tools**.

cardiagn.com

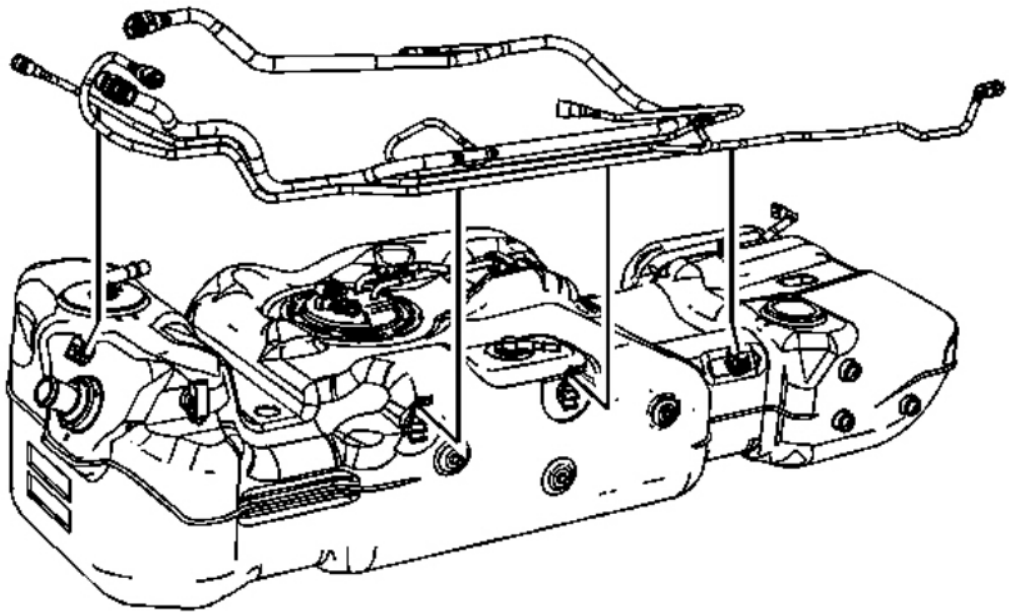

Fig. 265: View Of Fuel Tank EVAP Lines
Courtesy of GENERAL MOTORS CORP.

9. Install the EVAP lines to the fuel tank.

cardiagn.com

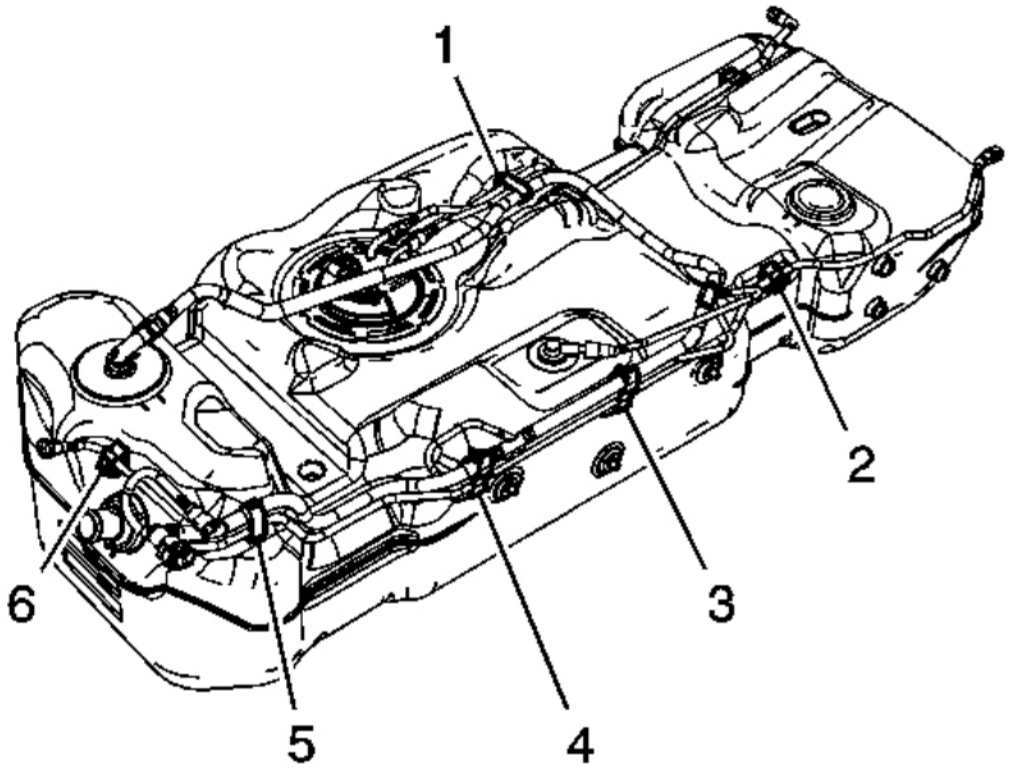

Fig. 266: View Of Fuel Tank Clips
Courtesy of GENERAL MOTORS CORP.

10. Connect the EVAP line quick connect fittings at the fuel tank module and fuel tank vent valves. Refer to **Quick Connect Fitting Service - Plastic Collar**.
11. Install the EVAP lines to the fuel tank clips (1, 3, 4, and 5) and close the clips.
12. Install the EVAP line to the fuel tank clips (2 and 6).

cardiagn.com

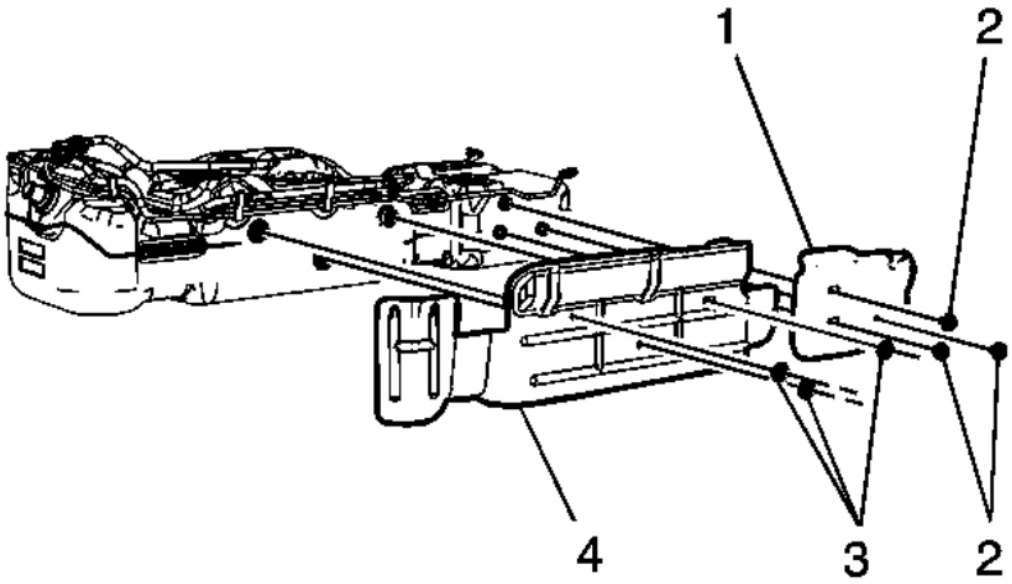

Fig. 267: View Of Fuel Tank Shields & Retainers
Courtesy of GENERAL MOTORS CORP.

13. Install the fuel tank shields (1 and 4) and retainers (2 and 3).

cardiagn.com

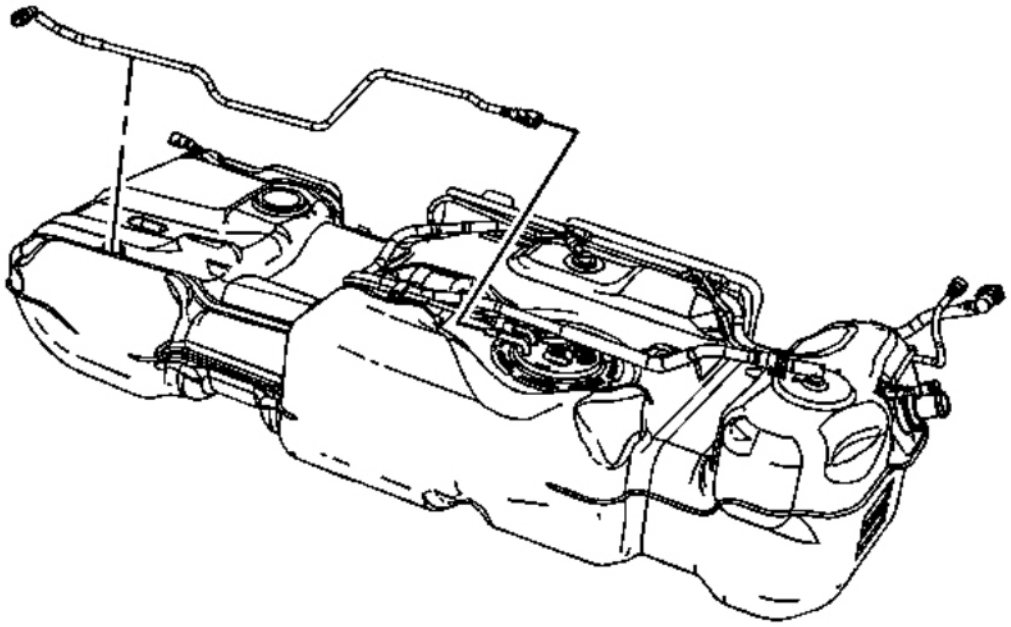

Fig. 268: View Of Fuel Feed Line
Courtesy of GENERAL MOTORS CORP.

14. Install the fuel feed line to the fuel tank.

cardiagn.com

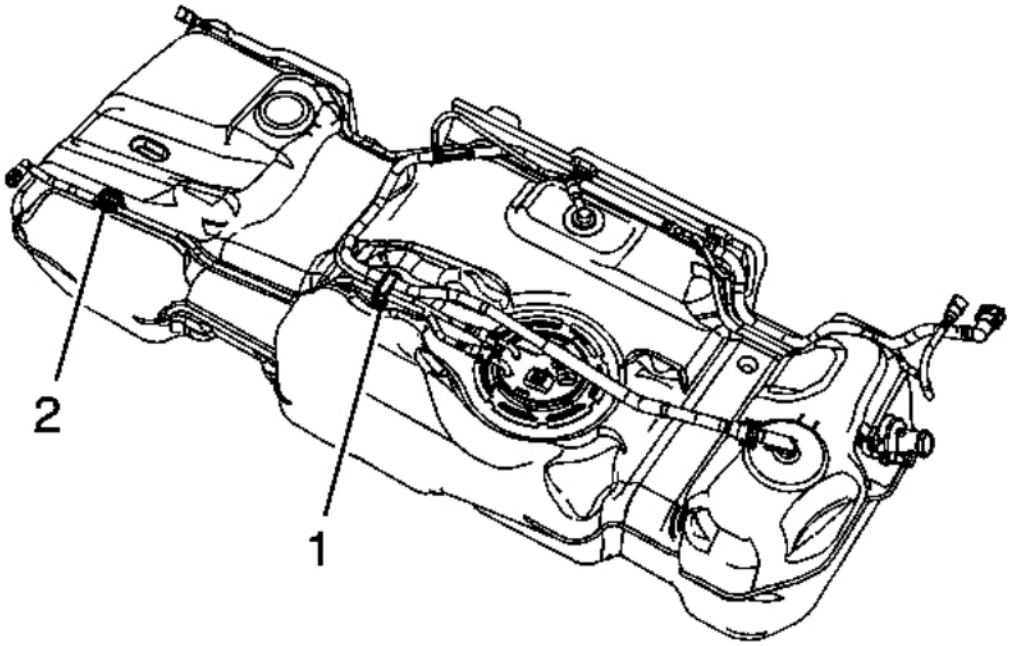

Fig. 269: View Of EVAP Line Clip & Retainer
Courtesy of GENERAL MOTORS CORP.

15. Connect the fuel feed line quick connect fitting at the fuel tank module. Refer to **Quick Connect Fitting Service - Plastic Collar**.
16. Install the fuel feed line to the clip (1) and close the clip.
17. Install the fuel feed line to the retaining feature (2) in the fuel tank.

cardiagn.com

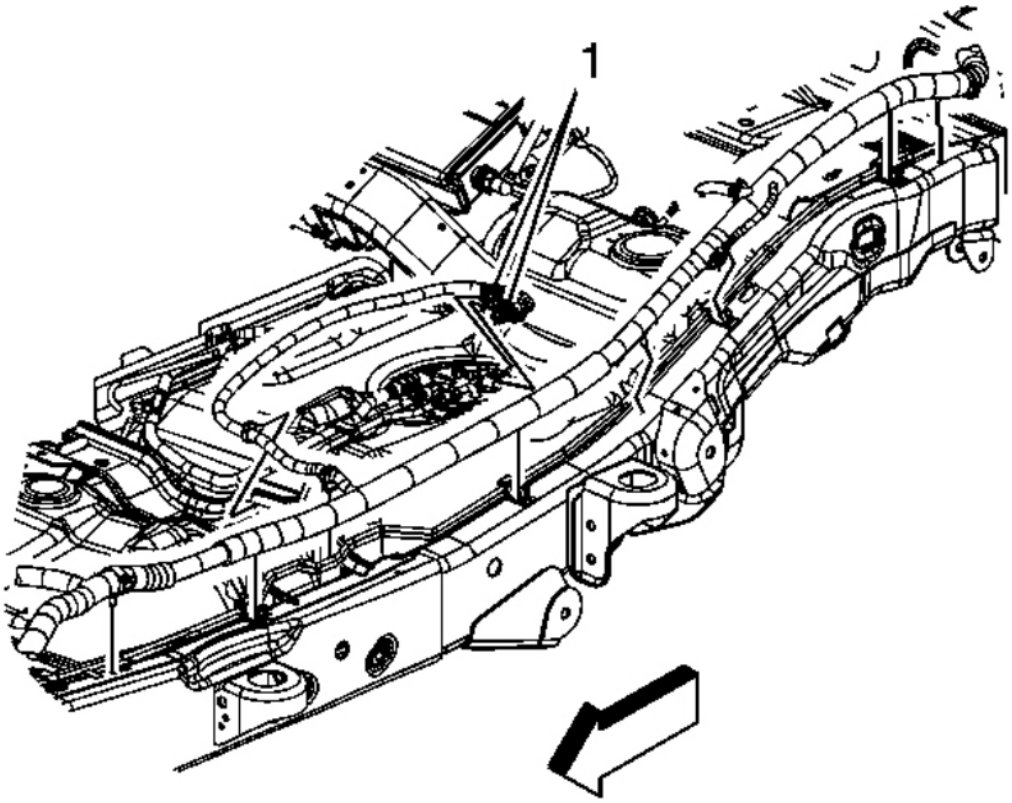

Fig. 270: View Of Chassis Wiring Harness Electrical Connectors
Courtesy of GENERAL MOTORS CORP.

18. Place the fuel tank onto a suitable jack.
19. With the aid of an assistant, partially raise the fuel tank until the electrical connections can be made.
20. Connect the chassis wiring harness electrical connectors (1) to the fuel tank module and fuel pressure sensor.
21. Engage the chassis harness electrical connector CPA retainer at the module electrical connector.

cardiagn.com

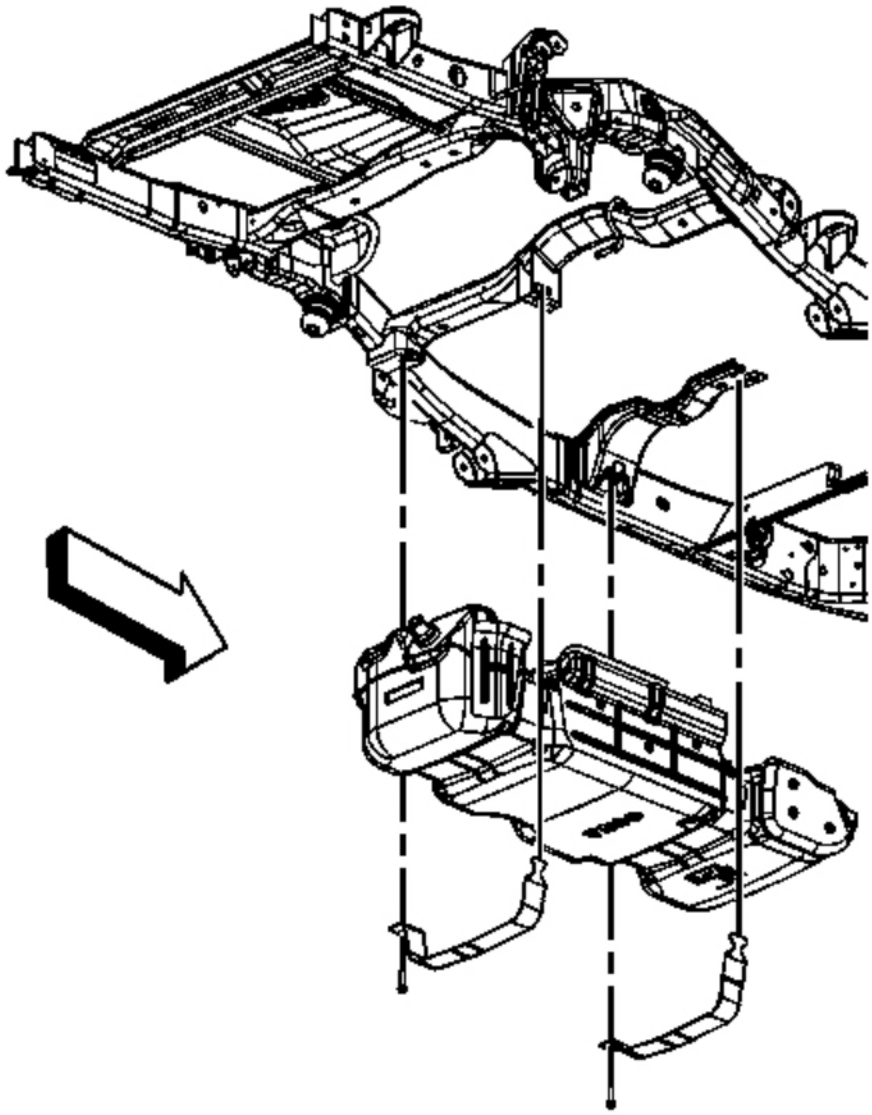

Fig. 271: View Of Fuel Tank & Straps (Single Tank)
Courtesy of GENERAL MOTORS CORP.

22. Completely raise the fuel tank.
23. Install the fuel tank straps.

NOTE: **Refer to Fastener Notice .**

cardiagn.com

24. Install the fuel tank strap bolts.

    Tighten: Tighten the bolts to 40 N.m (30 lb ft).

25. Remove the adjustable jack from the fuel tank.

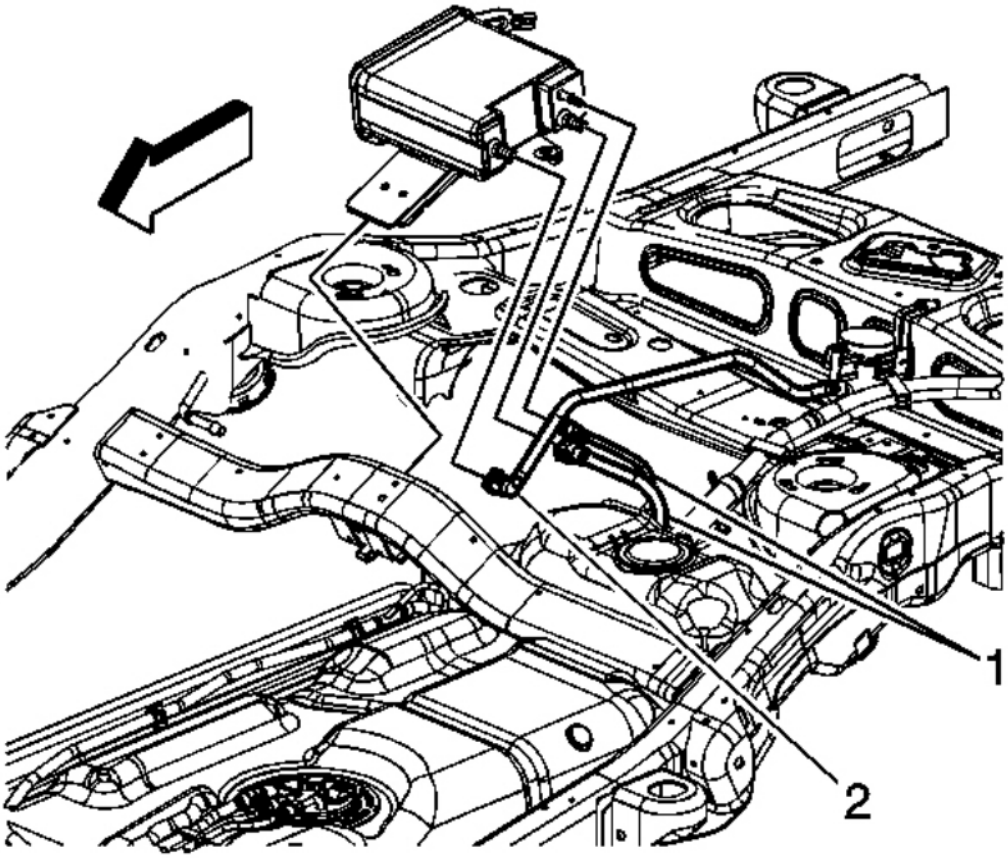

Fig. 272: View Of Fuel Tank EVAP Lines & Canister
Courtesy of GENERAL MOTORS CORP.

26. Remove the caps from the EVAP lines.
27. Connect the fuel tank EVAP lines (1) to the EVAP canister. Refer to **Quick Connect Fitting Service - Plastic Collar**.

cardiagn.com

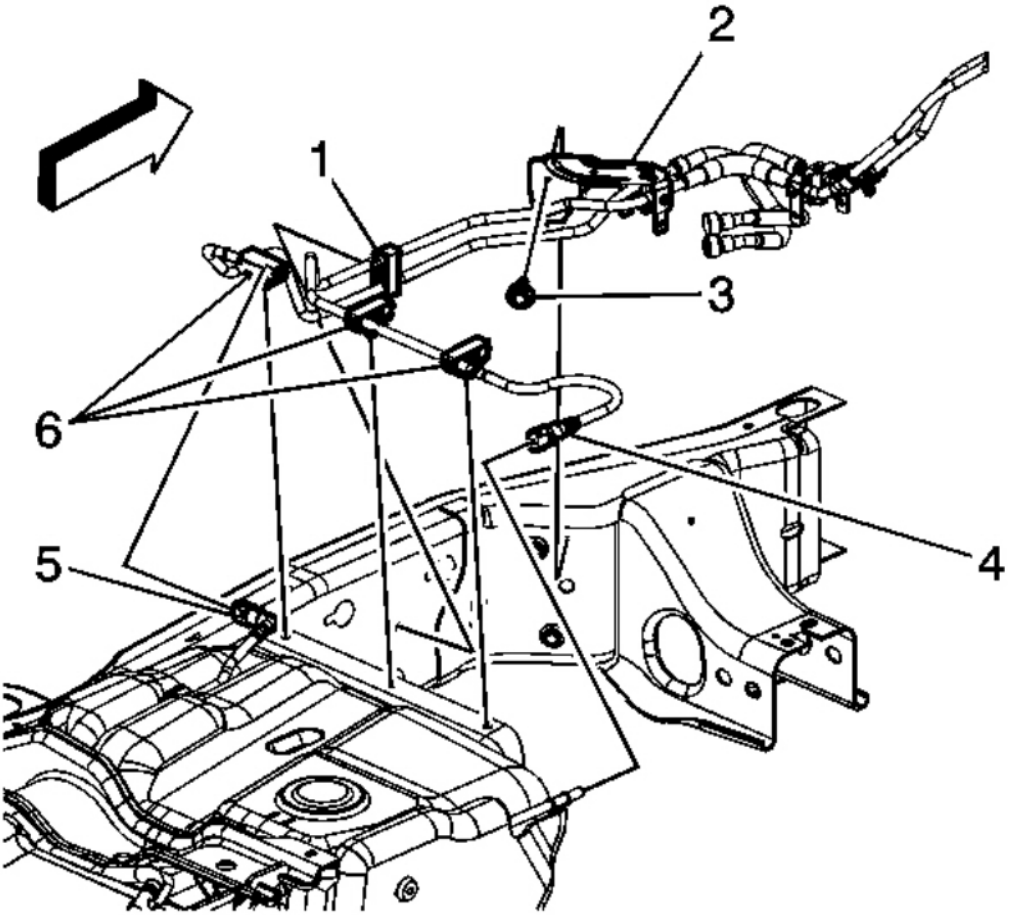

Fig. 273: View Of EVAP Lines, Fuel Feed Lines & Fittings
Courtesy of GENERAL MOTORS CORP.

28. Remove the caps from the fuel and EVAP lines.
29. Connect the chassis EVAP line quick connect fitting (4) to the fuel tank line. Refer to **Quick Connect Fitting Service - Plastic Collar**.
30. Connect the fuel tank fuel feed line quick connect fitting (5) to the chassis line. Refer to **Quick Connect Fitting Service - Plastic Collar**.

cardiagn.com

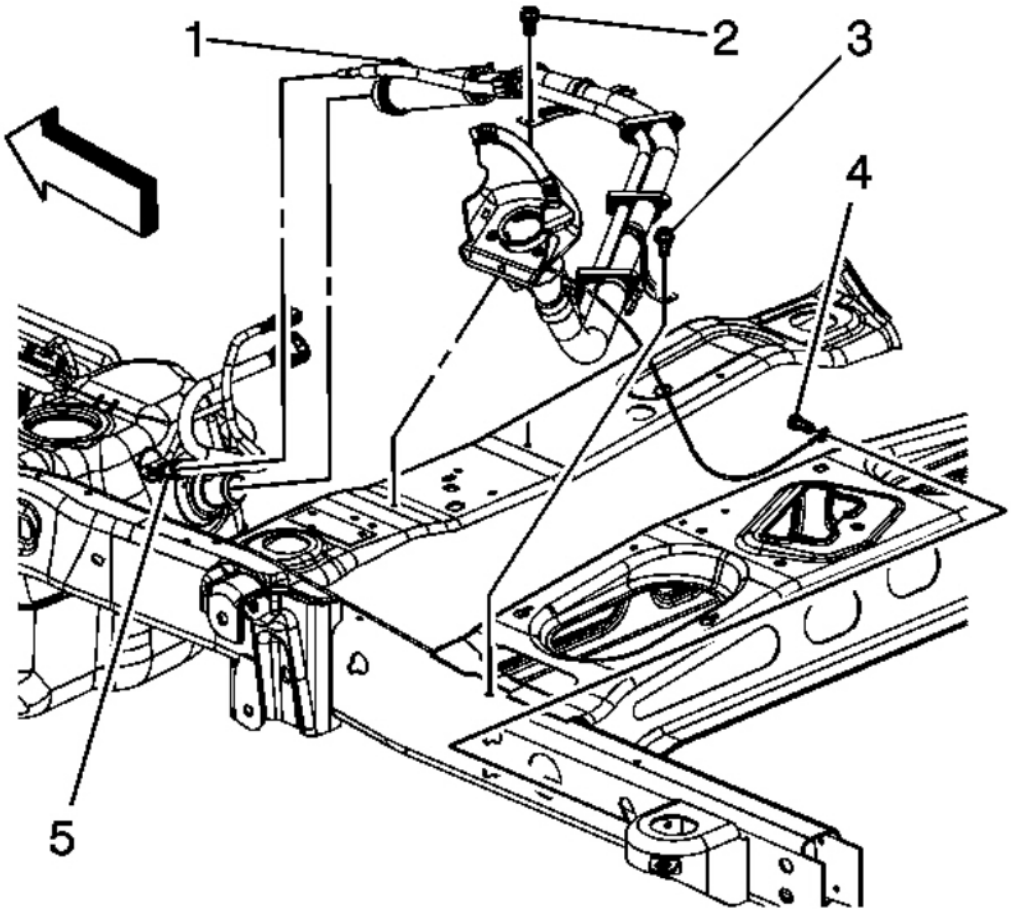

Fig. 274: View Of Fuel Fill Hose, Pipe Bracket Bolts & Quick Connect Fitting
Courtesy of GENERAL MOTORS CORP.

31. Connect the fuel tank vent line quick connect fitting (5) to the fuel fill pipe line. Refer to **Quick Connect Fitting Service - Plastic Collar**.
32. Install the fuel fill hose to the fuel tank. Ensure that the notch in the hose is aligned with the notch on the fuel tank.
33. Install the fill pipe bracket bolts (2 and 3).

    Tighten: Tighten the bolts to 12 N.m (106 lb in).

34. Tighten the fuel fill hose clamp (1).

    Tighten: Tighten the clamp to 2.5 N.m (22 lb in).

cardiagn.com

35. Lower the vehicle.
36. Refill the fuel tank.
37. Install the fuel fill cap.
38. Connect the negative battery cable. Refer to **Battery Negative Cable Disconnection and Connection** .
39. Use the following procedure in order to inspect for leaks:
    1. Turn the ignition ON, with the engine OFF, for 2 seconds.
    2. Turn the ignition OFF for 10 seconds.
    3. Turn the ignition ON, with the engine OFF.
    4. Inspect for fuel leaks.
40. Install the intake manifold sight shield. Refer to **Upper Intake Manifold Sight Shield Replacement** .

FUEL TANK REPLACEMENT (2500 LWB - 43.5L (11.5 GAL) TANK-REAR)

Removal Procedure

IMPORTANT: Clean all fuel and evaporative emission (EVAP) line connections and surrounding areas prior to disconnecting the lines in order to avoid possible fuel and/or EVAP system contamination.

cardiagn.com

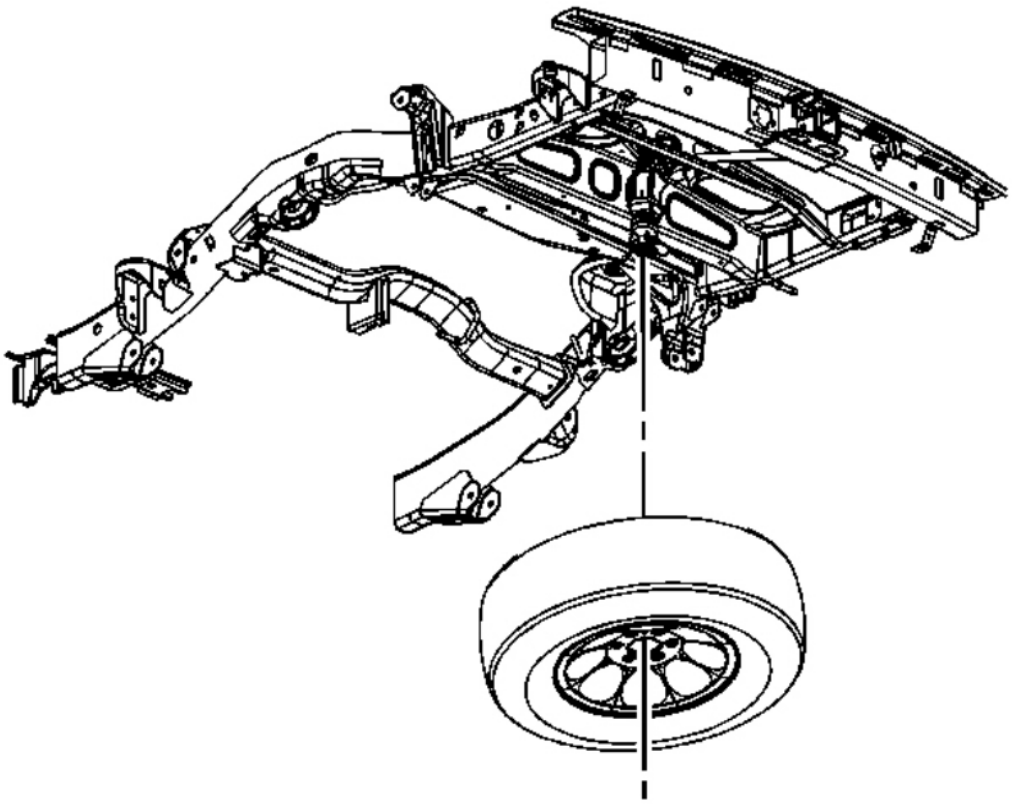

Fig. 275: View Of Spare Tire & Stowage Lock Cylinder
Courtesy of GENERAL MOTORS CORP.

1. Relieve the fuel system pressure. Refer to the **Fuel Pressure Relief**.
2. Remove the spare tire stowage lock cylinder.
3. Remove the spare tire.
4. Drain the fuel tank. Refer to **Fuel Tank Draining (Dual Tanks - Front)** or **Fuel Tank Draining (Dual Tanks - Rear)** or **Fuel Tank Draining (Single Tank)**.
5. Remove the rear exhaust insulator.

cardiagn.com

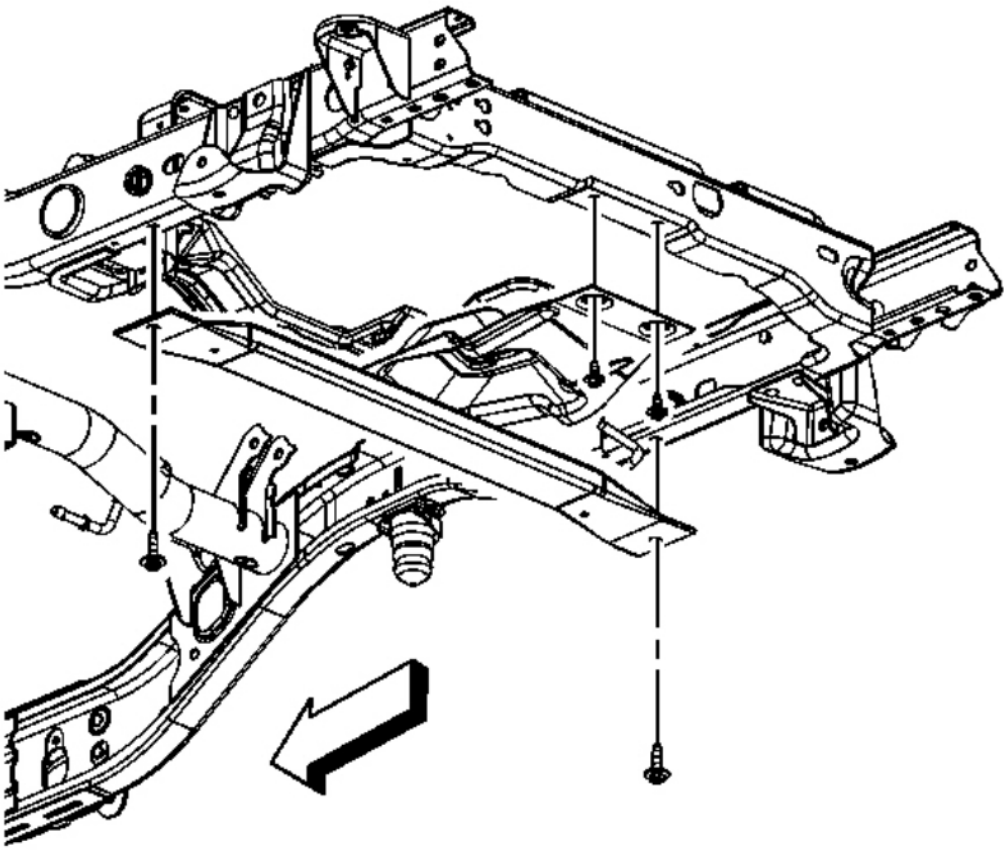

Fig. 276: View Of Spare Tire Hoist Crossmember & Bolts
Courtesy of GENERAL MOTORS CORP.

6. Remove the spare tire hoist crossmember bolts and crossmember.

cardiagn.com

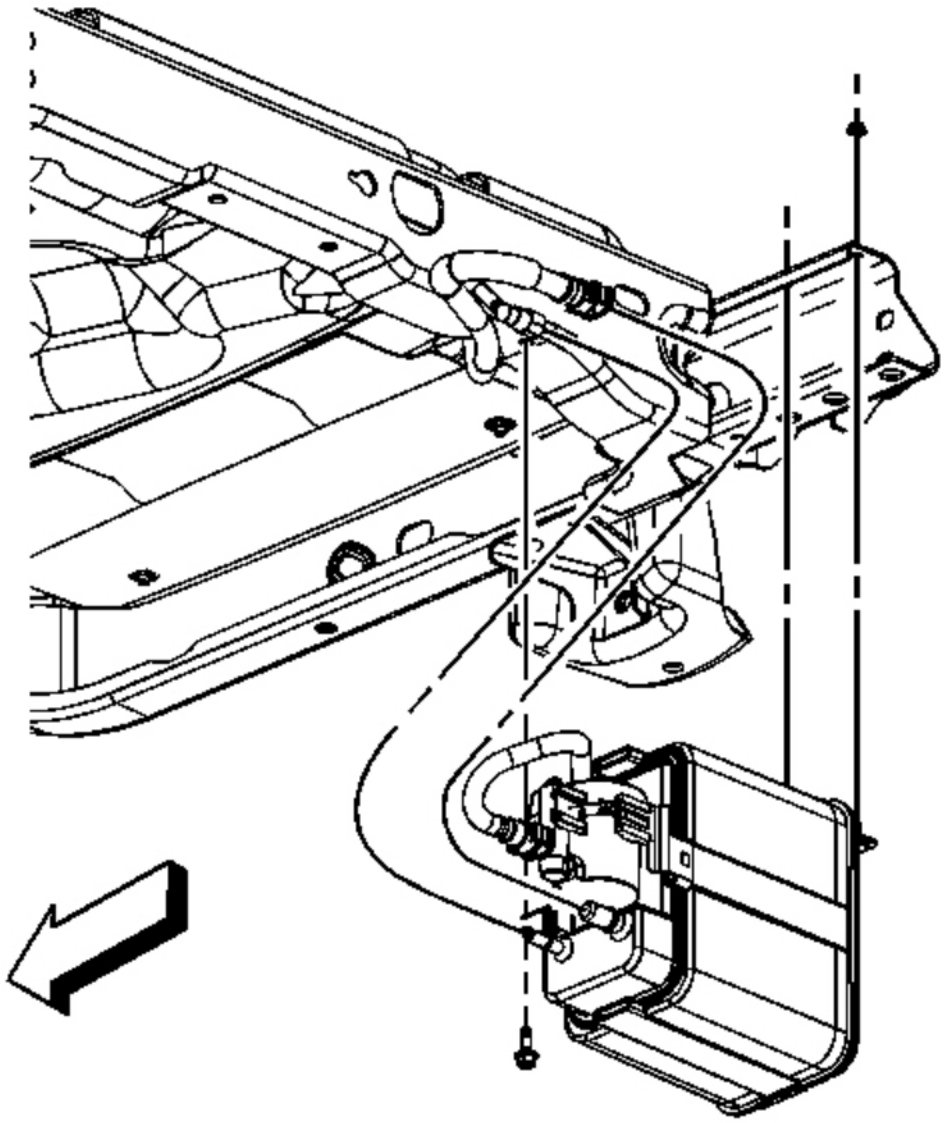

Fig. 277: View Of EVAP Canister & Quick Connect Fittings
Courtesy of GENERAL MOTORS CORP.

7. Disconnect the rear fuel tank EVAP line quick connect fittings from the EVAP canister. Refer to **Quick Connect Fitting Service - Plastic Collar**.

cardiagn.com

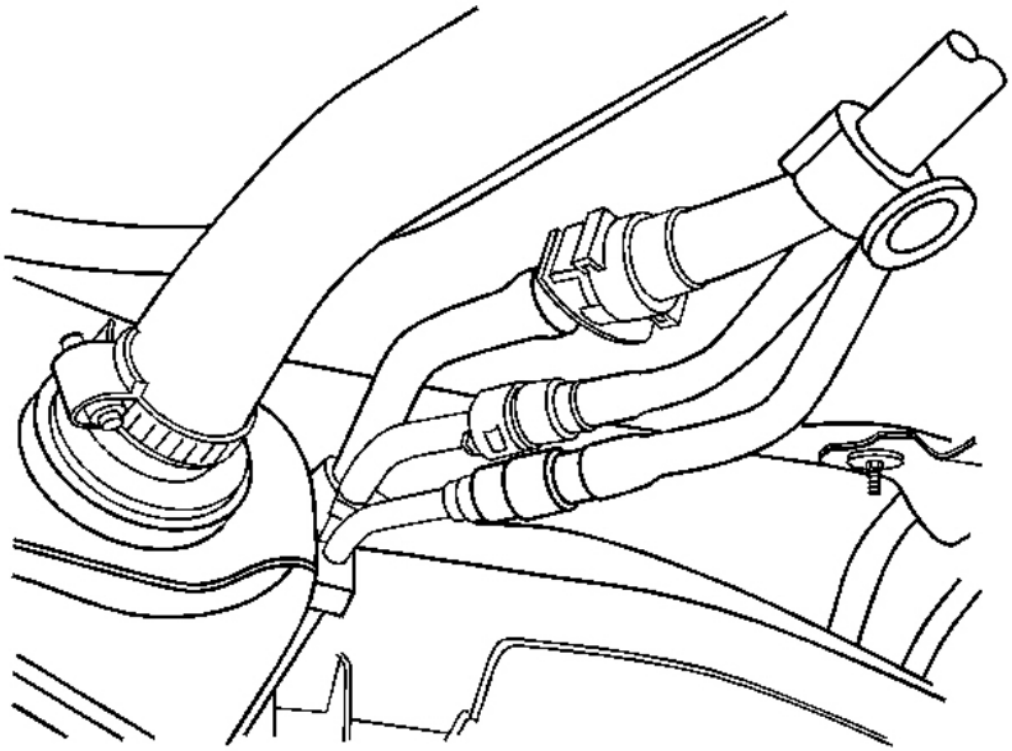

Fig. 278: View Of Fuel & EVAP Intermediate Lines At Fuel Tank
Courtesy of GENERAL MOTORS CORP.

8. Disconnect the fuel and EVAP intermediate line quick connect fittings from the front tank. Refer to **Quick Connect Fitting Service - Plastic Collar**.

cardiagn.com

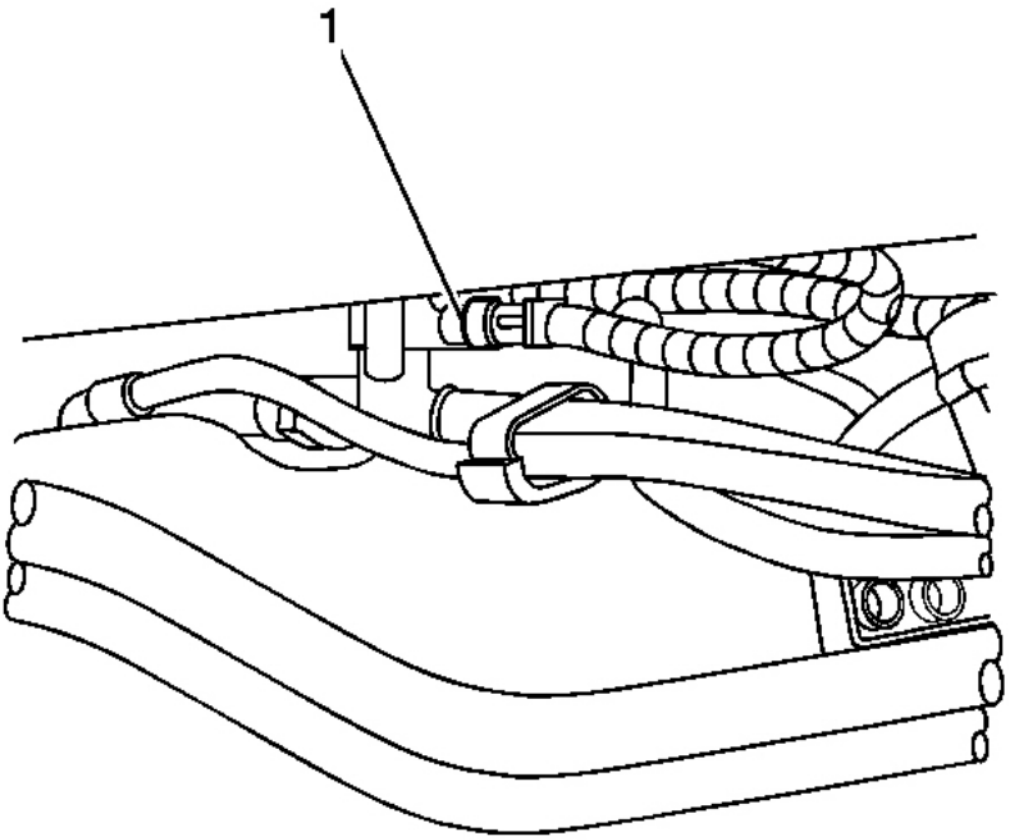

Fig. 279: View Of Fuel Pressure Sensor Electrical Connector
Courtesy of GENERAL MOTORS CORP.

9. Disconnect the chassis harness electrical connector (1) from the fuel pressure sensor.

cardiagn.com

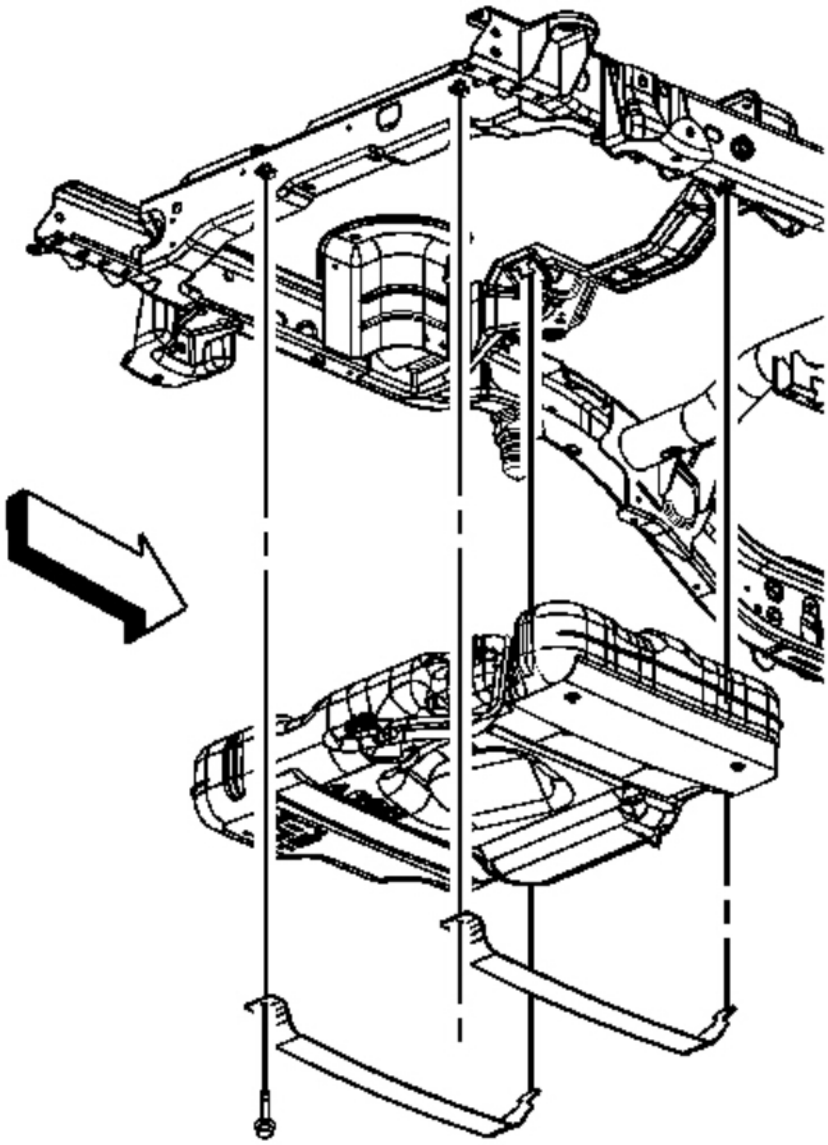

Fig. 280: View Of Fuel Tank & Straps
Courtesy of GENERAL MOTORS CORP.

10. Support the fuel tank with a suitable jack.
11. Remove the fuel tank strap bolts.

cardiagn.com

NOTE: **Refer to Damage to Fuel Tank Straps Notice .**

12. Remove the fuel tank straps.
13. With the aid of an assistant, lower the rear tank until the intermediate line connections can be reached.

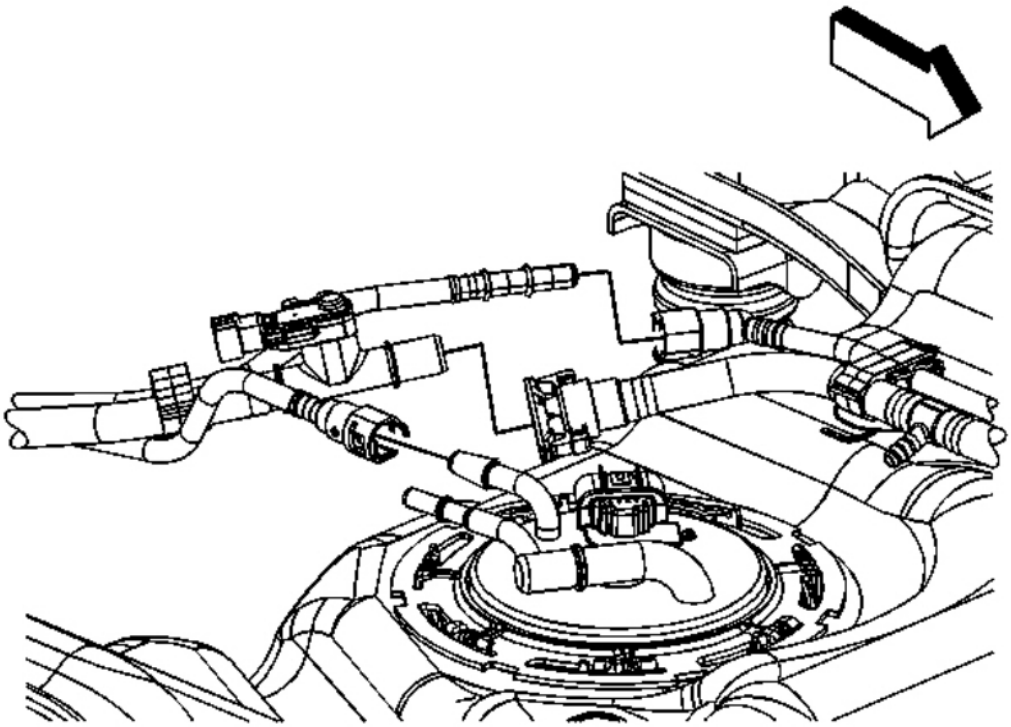

Fig. 281: View Of EVAP Lines & Quick Connect Fittings
Courtesy of GENERAL MOTORS CORP.

14. Disconnect the fuel and EVAP intermediate line quick connect fittings from the rear tank. Refer to **Quick Connect Fitting Service - Plastic Collar**.

cardiagn.com

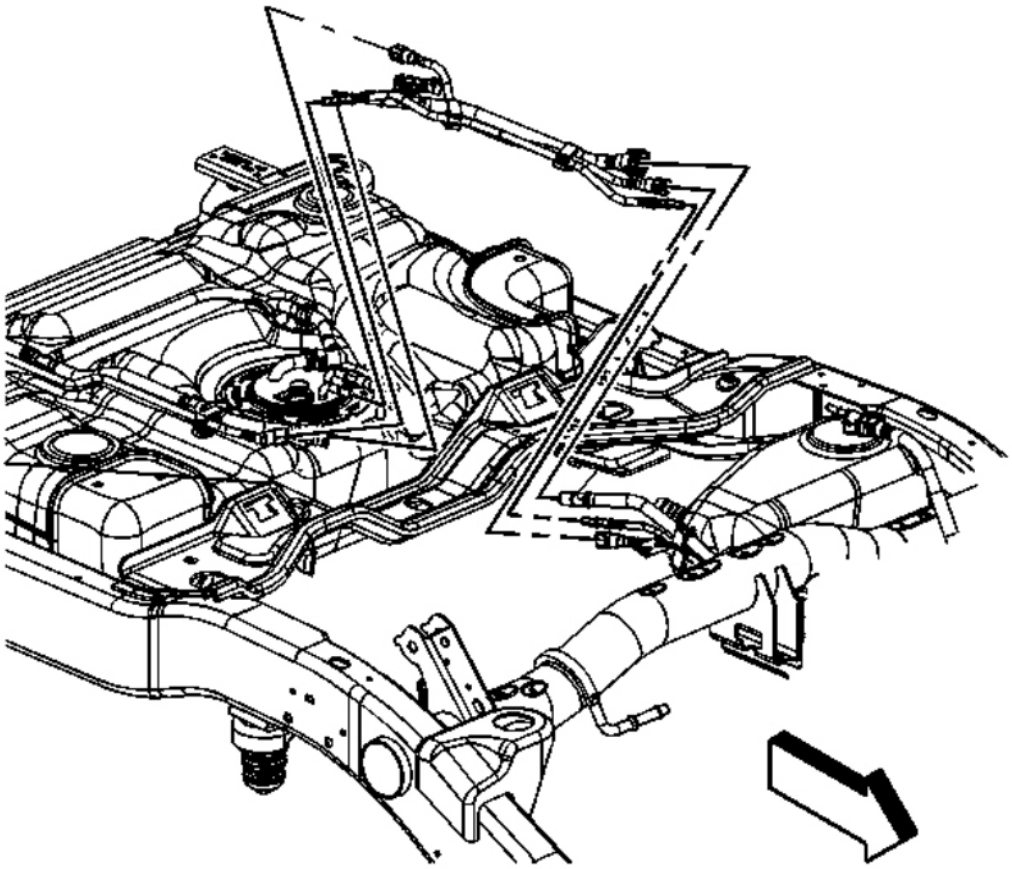

Fig. 282: View Of Fuel & EVAP Intermediate Lines At Fuel Tank
Courtesy of GENERAL MOTORS CORP.

15. Remove the fuel and EVAP intermediate lines.
16. Cap the fuel and EVAP lines in order to prevent possible EVAP/fuel system contamination.

cardiagn.com

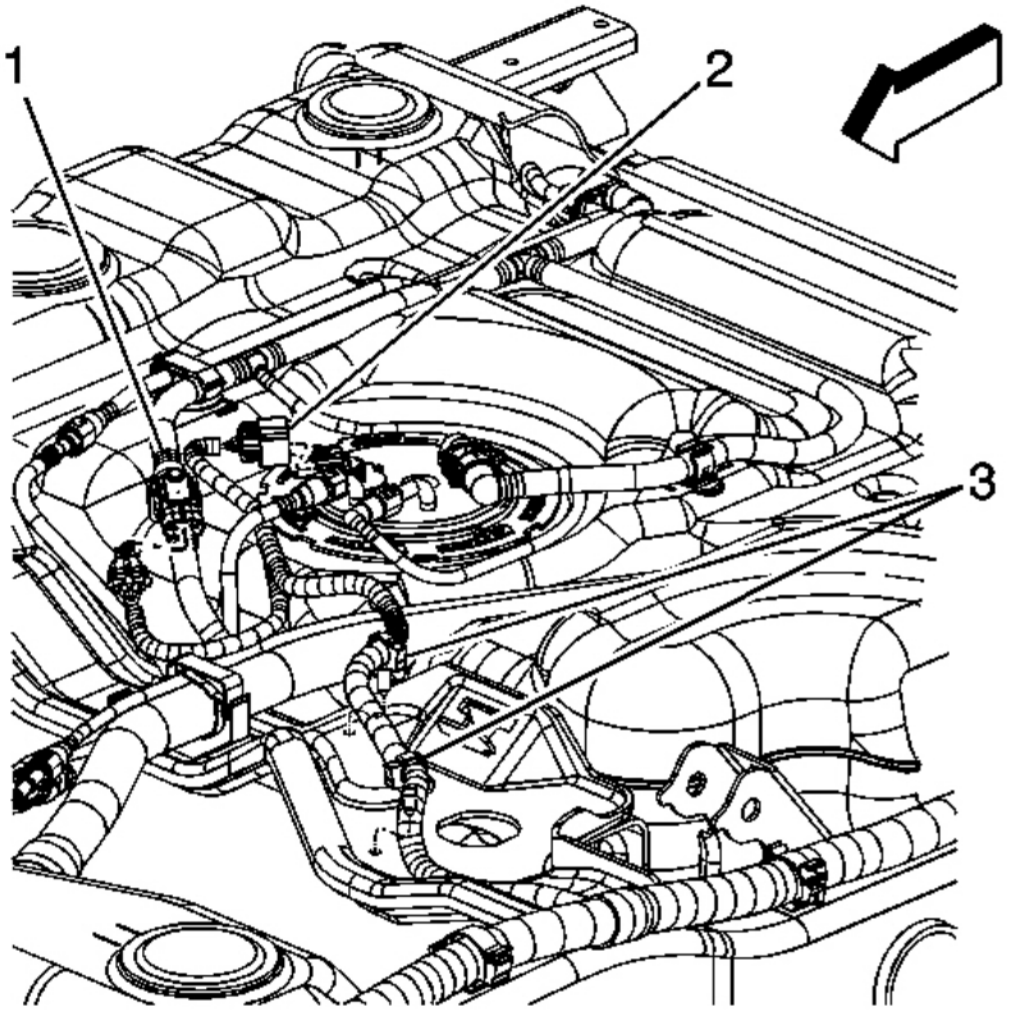

Fig. 283: View Of Sending Unit Electrical Connector (Rear Tank)
Courtesy of GENERAL MOTORS CORP.

17. Disconnect the chassis harness electrical connector (2) from the fuel tank module.
18. Completely lower the fuel tank.
19. With the aid of an assistant, remove the tank from the jack.
20. If replacing the fuel tank proceed to the next step, otherwise proceed to step 14 in the installation procedure.

cardiagn.com

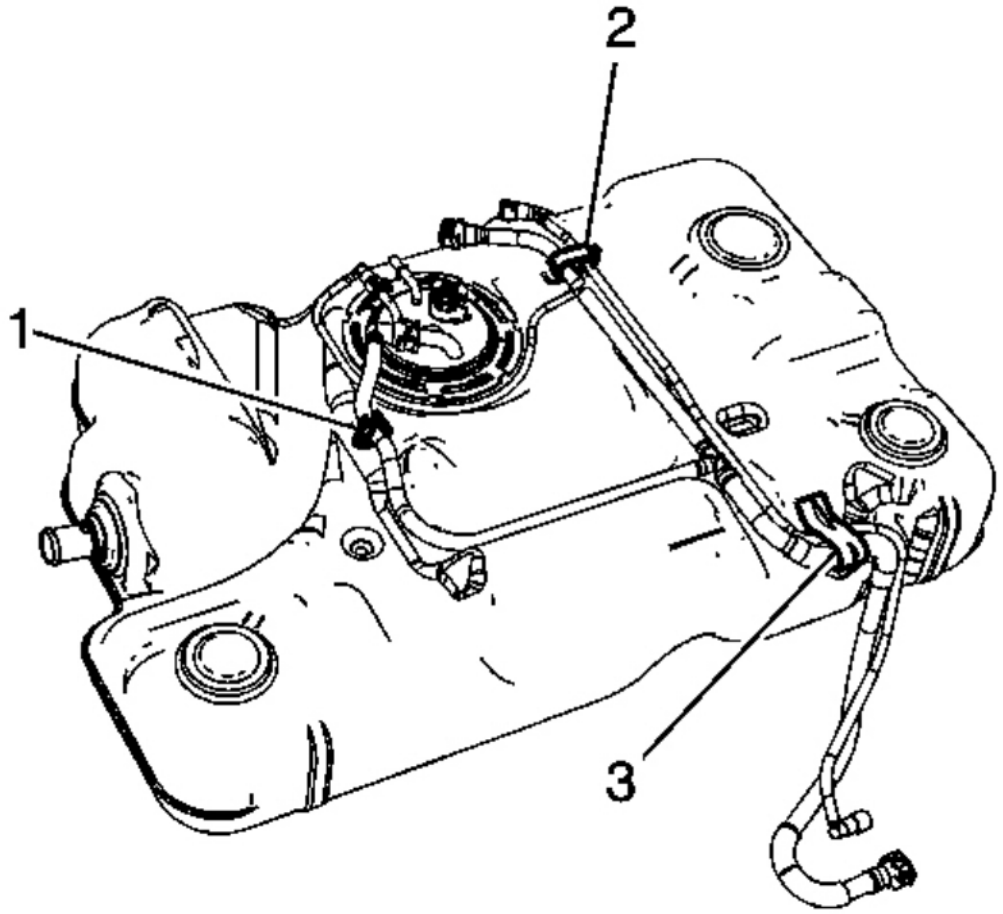

Fig. 284: View Of EVAP Line Clips
Courtesy of GENERAL MOTORS CORP.

21. Remove the EVAP line from the clip (1) on the fuel tank.
22. Open the EVAP line clip (2) and remove the EVAP line from the clip.
23. Remove the EVAP lines from the clip (3).
24. Disconnect the EVAP line quick connect fittings from the fuel tank module. Refer to **Quick Connect Fitting Service - Plastic Collar**.

cardiagn.com

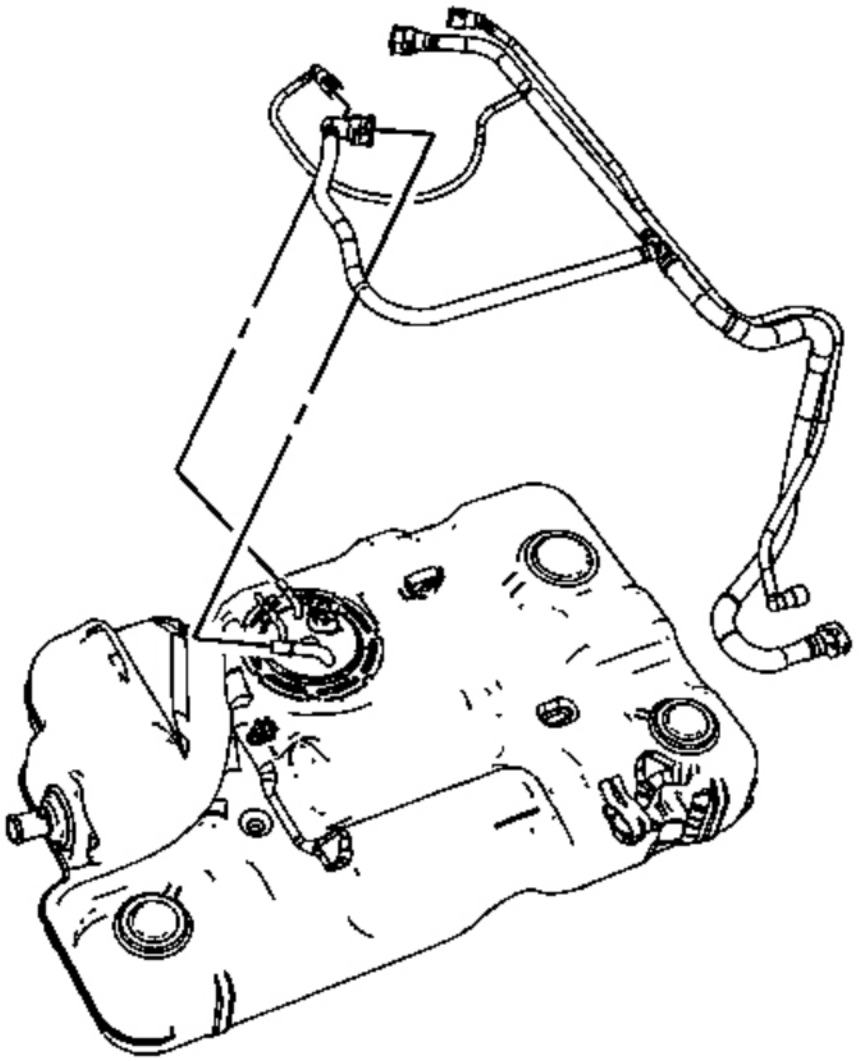

Fig. 285: View Of Fuel Tank EVAP Lines
Courtesy of GENERAL MOTORS CORP.

25. Remove the EVAP lines from the fuel tank.

cardiagn.com

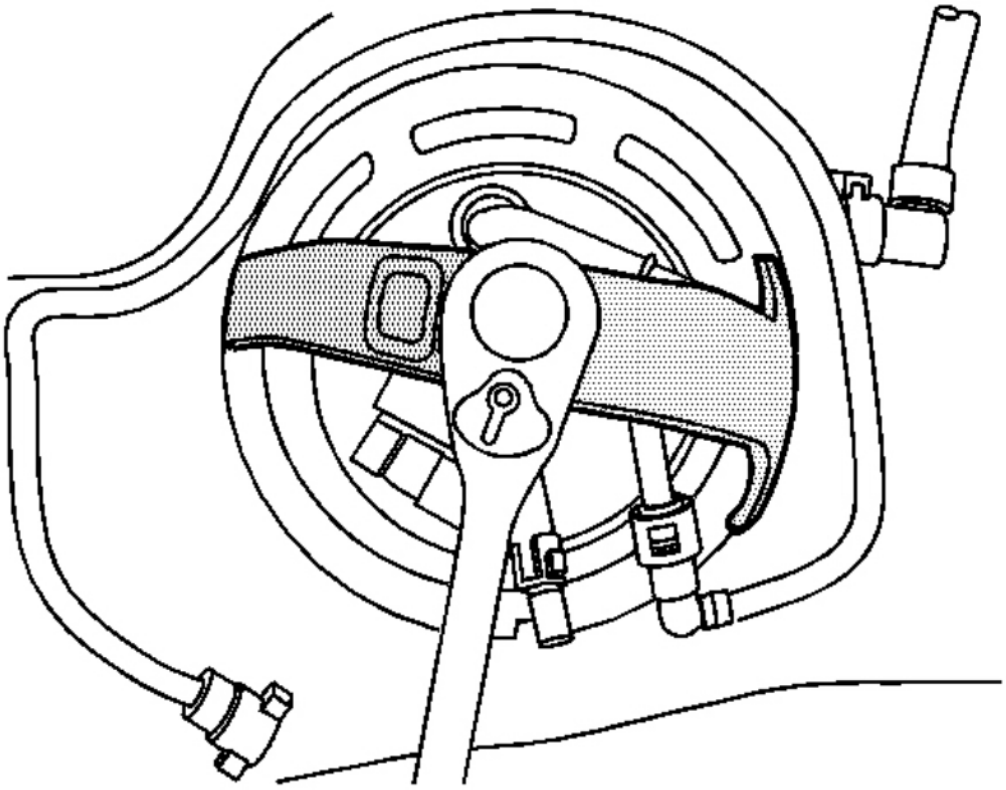

Fig. 286: Rotating Lock Ring Using J 45722 (Rear Tank)
Courtesy of GENERAL MOTORS CORP.

26. Using the **J 45722** , remove the lock ring. See **Special Tools**.

cardiagn.com

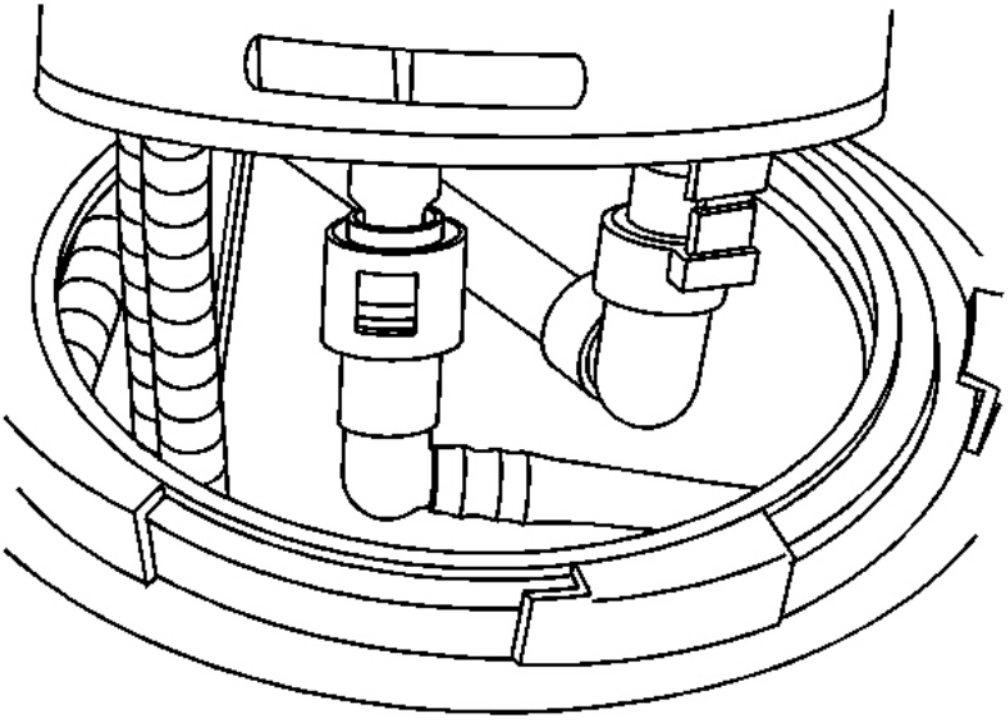

Fig. 287: View Of Vapor Line Quick Connect Fittings (Rear Tank)
Courtesy of GENERAL MOTORS CORP.

27. Carefully lift the module from the fuel tank, enough to access the quick connect fitting under the module cover. Disconnect the quick connect fitting. Refer to **Quick Connect Fitting Service - Plastic Collar**.
28. Remove the fuel tank module.
29. Remove and discard the fuel tank module seal.

cardiagn.com

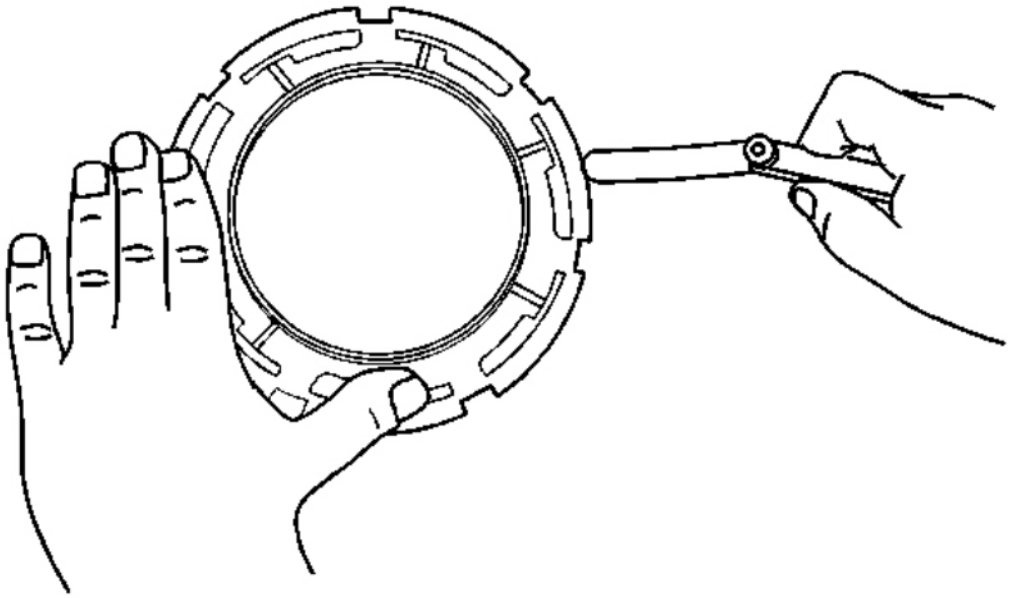

Fig. 288: Checking Lock Ring For Flatness
Courtesy of GENERAL MOTORS CORP.

IMPORTANT:

- **Some lock rings were manufactured with "DO NOT REUSE" stamped into them. These lock rings may be reused if they are not damaged or warped.**
- **Inspect the lock ring for damage due to improper removal or installation procedures. If damage is found, install a NEW lock ring.**
- **Check the lock ring for flatness.**

30. Place the lock ring on a flat surface. Measure the clearance between the lock ring and the flat surface using a feeler gage at 7 points.
31. If warpage is less than 0.41 mm (0.016 in), the lock ring does not require replacement.
32. If warpage is greater than 0.41 mm (0.016 in), the lock ring must be replaced.

Installation Procedure

cardiagn.com

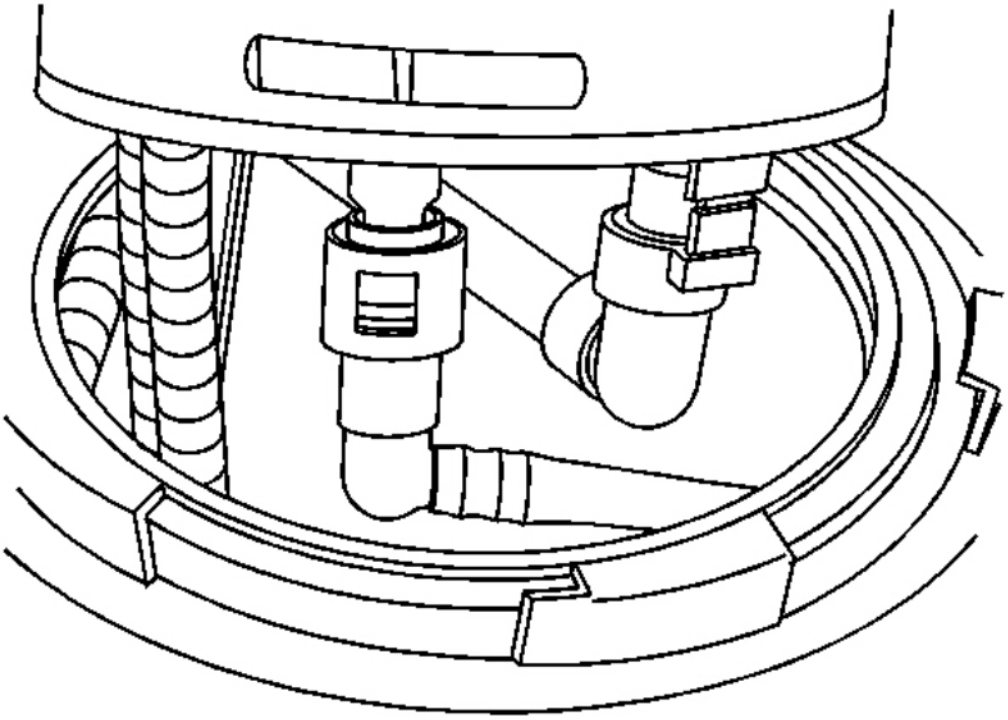

Fig. 289: View Of Vapor Line Quick Connect Fittings (Rear Tank)
Courtesy of GENERAL MOTORS CORP.

1. If the fuel tank was replaced perform the following steps, otherwise proceed to step 14.
2. Install the NEW fuel tank module seal onto the fuel tank.
3. Pull the vent line in the fuel tank up as far as possible for ease of installation.
4. Position the fuel tank module part way into the fuel tank.
5. Connect the quick connect fittings to the module cover. Refer to **Quick Connect Fitting Service - Plastic Collar**.
6. Install the fuel tank module into the fuel tank.
7. Place the lock ring into position.

cardiagn.com

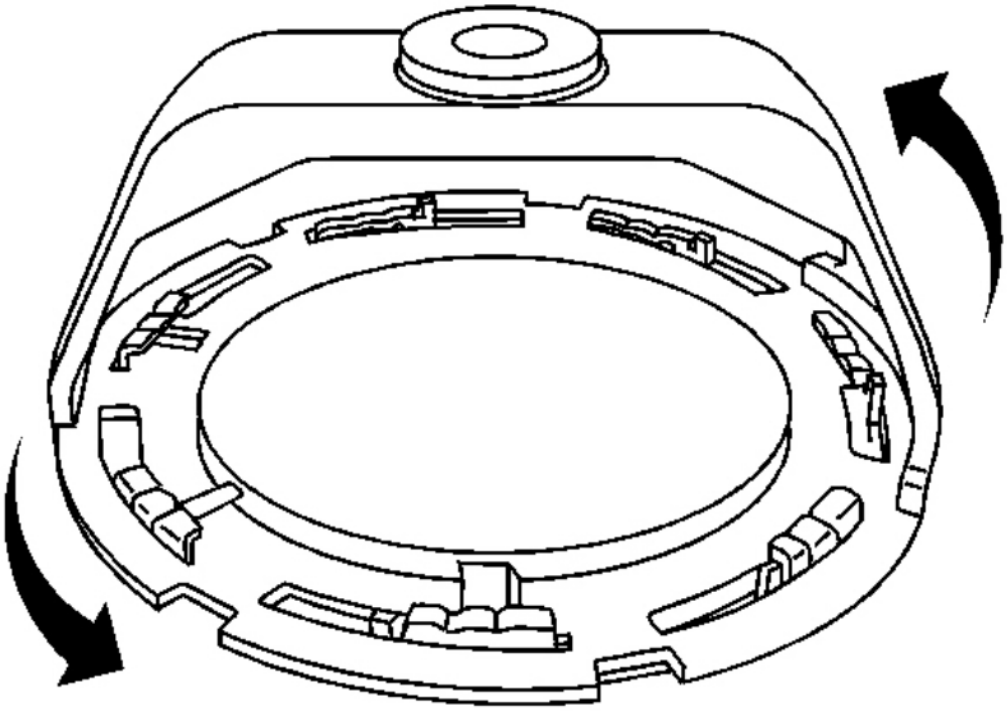

Fig. 290: Identifying Lock Ring
Courtesy of GENERAL MOTORS CORP.

8. Rotate the lock ring counterclockwise using the **J 45722** . See **Special Tools**.

cardiagn.com

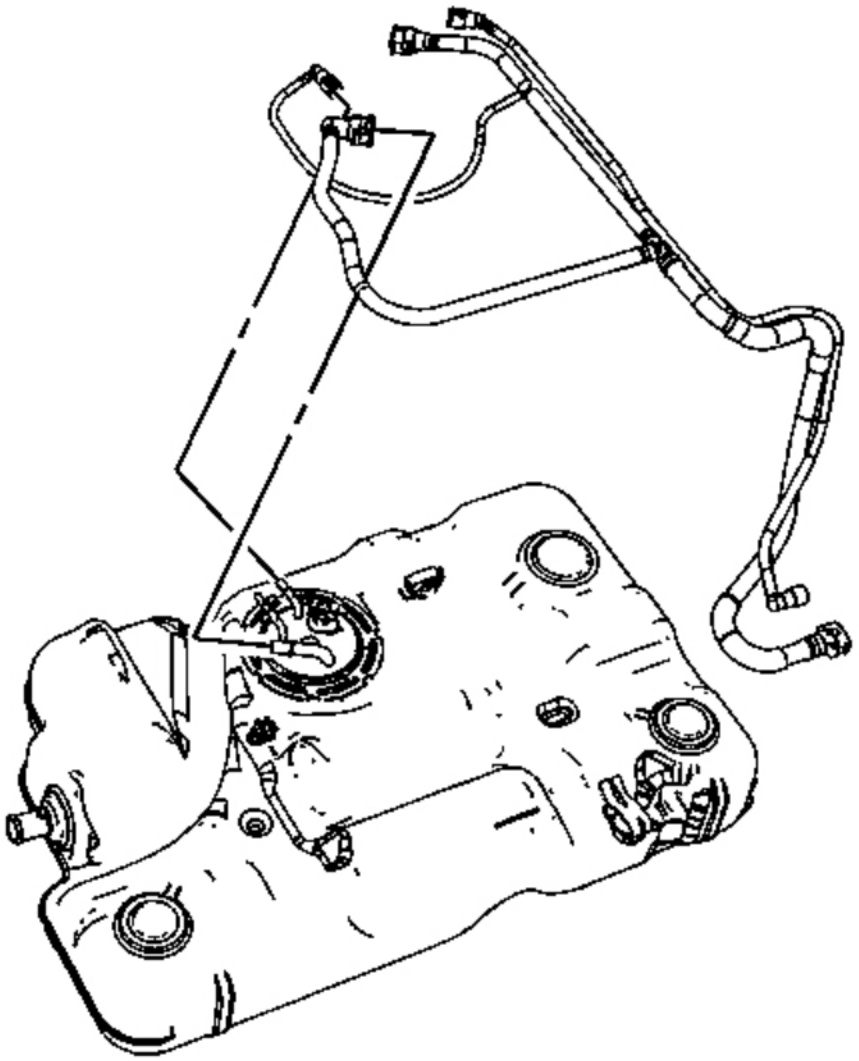

Fig. 291: View Of Fuel Tank EVAP Lines
Courtesy of GENERAL MOTORS CORP.

9. Install the EVAP lines to the fuel tank.

cardiagn.com

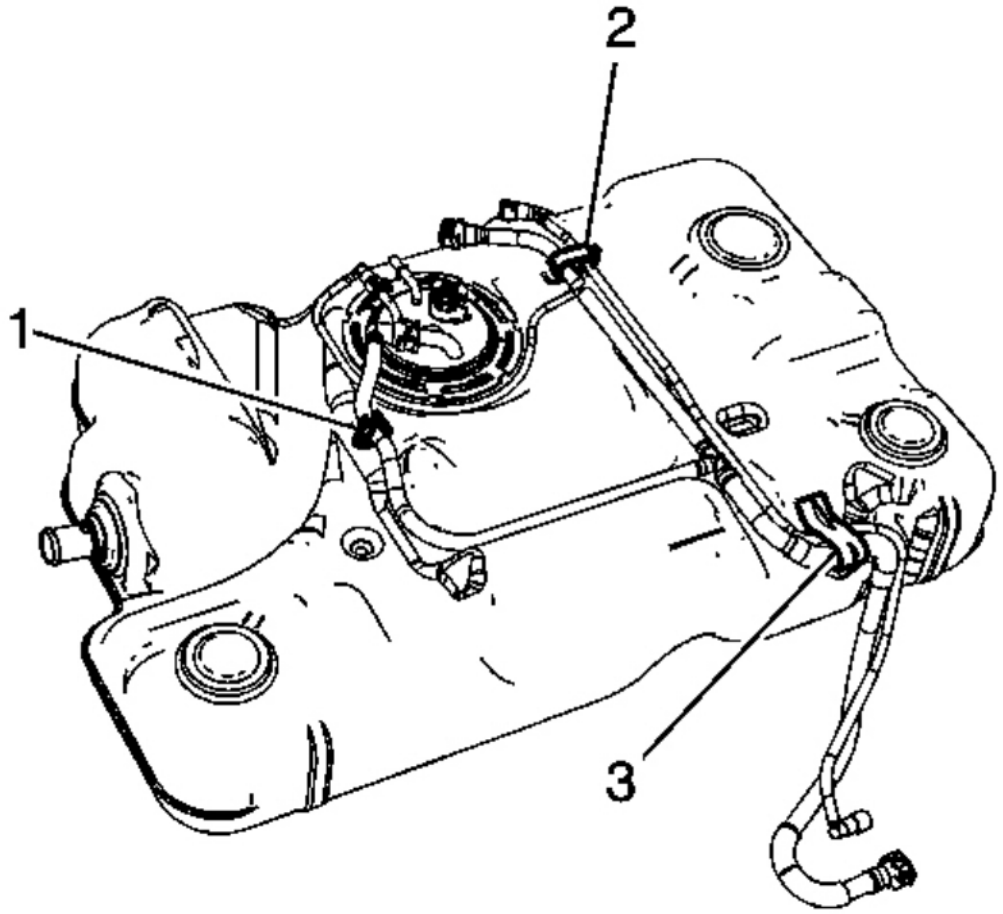

Fig. 292: View Of EVAP Line Clips
Courtesy of GENERAL MOTORS CORP.

10. Connect the EVAP line quick connect fittings to the fuel tank module. Refer to **Quick Connect Fitting Service - Plastic Collar**.
11. Install the EVAP lines to the clip (3).
12. Install the EVAP line to the clip (2) and close the clip.
13. Install the EVAP line to the clip (1) on the fuel tank.

cardiagn.com

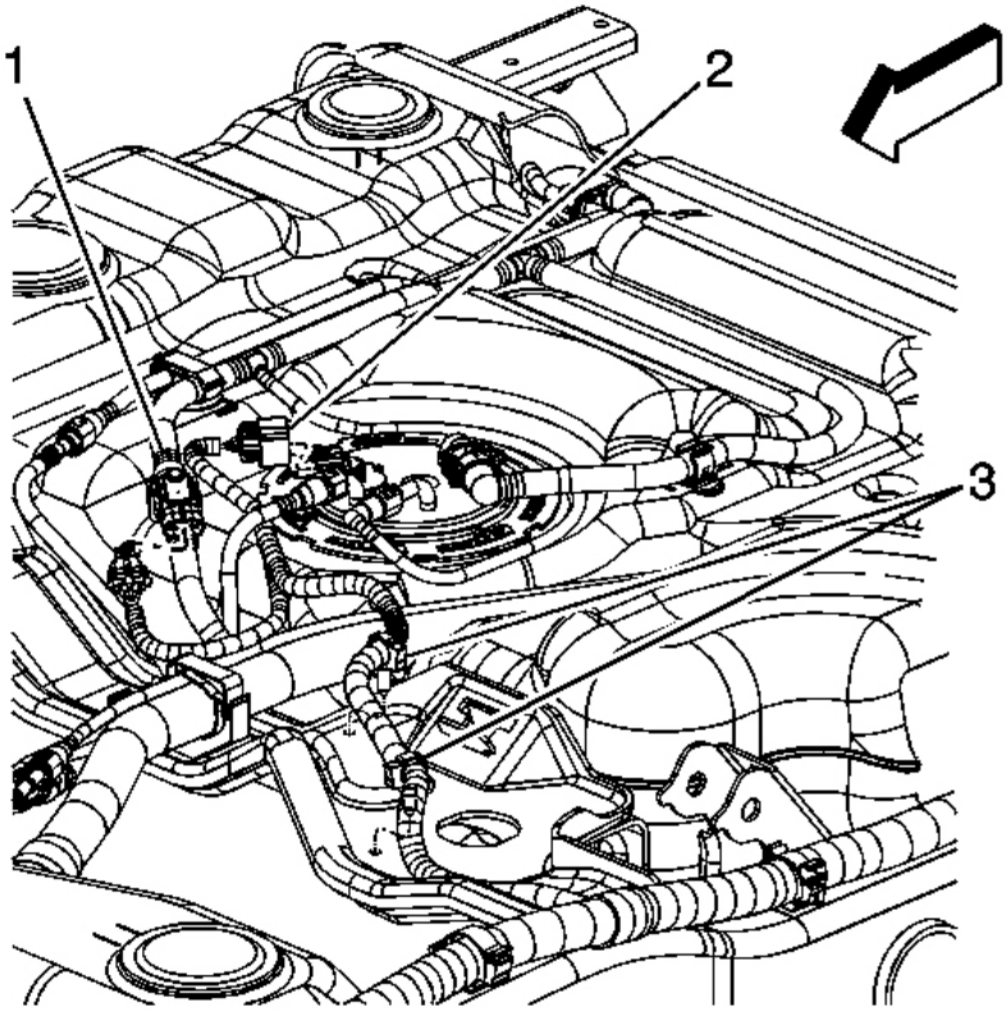

Fig. 293: View Of Sending Unit Electrical Connector (Rear Tank)
Courtesy of GENERAL MOTORS CORP.

14. With the aid of an assistant, install the tank onto the jack.
15. Partially raise the fuel tank.
16. Connect the chassis harness electrical connector (2) to the fuel tank module.

cardiagn.com

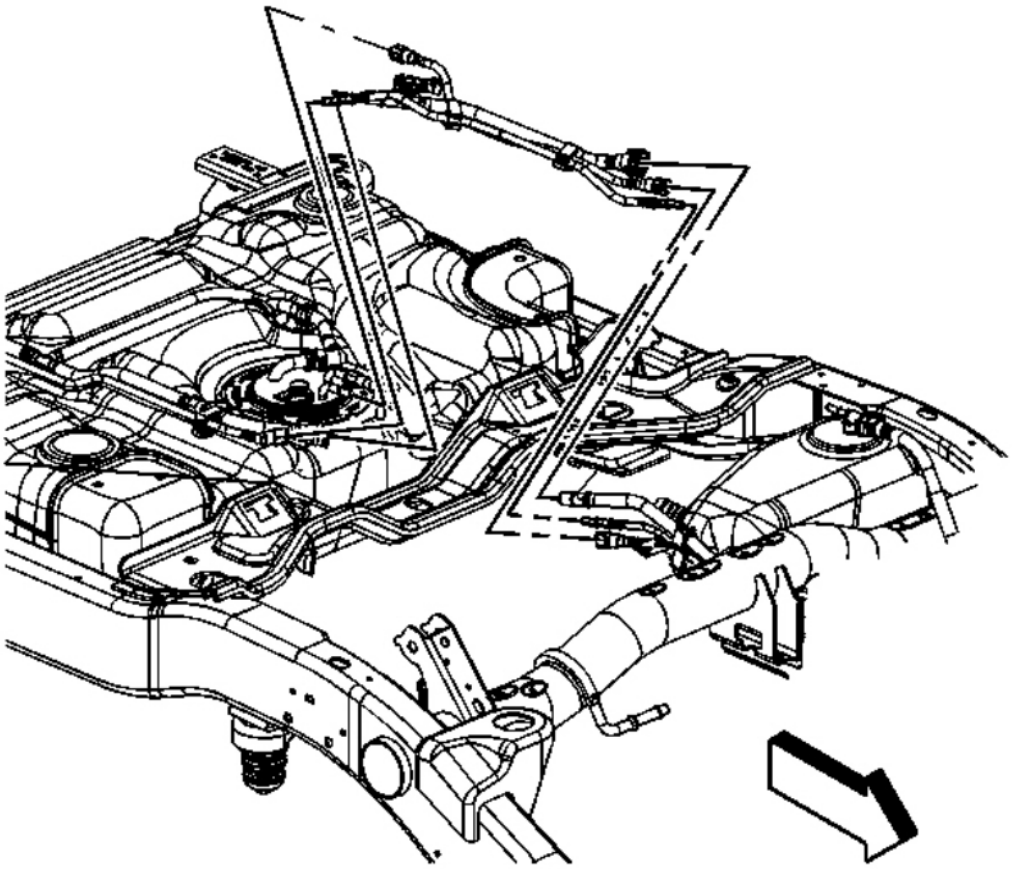

Fig. 294: View Of Fuel & EVAP Intermediate Lines At Fuel Tank
Courtesy of GENERAL MOTORS CORP.

17. Remove the caps from the fuel and EVAP lines.
18. Install the fuel and EVAP intermediate lines.

cardiagn.com

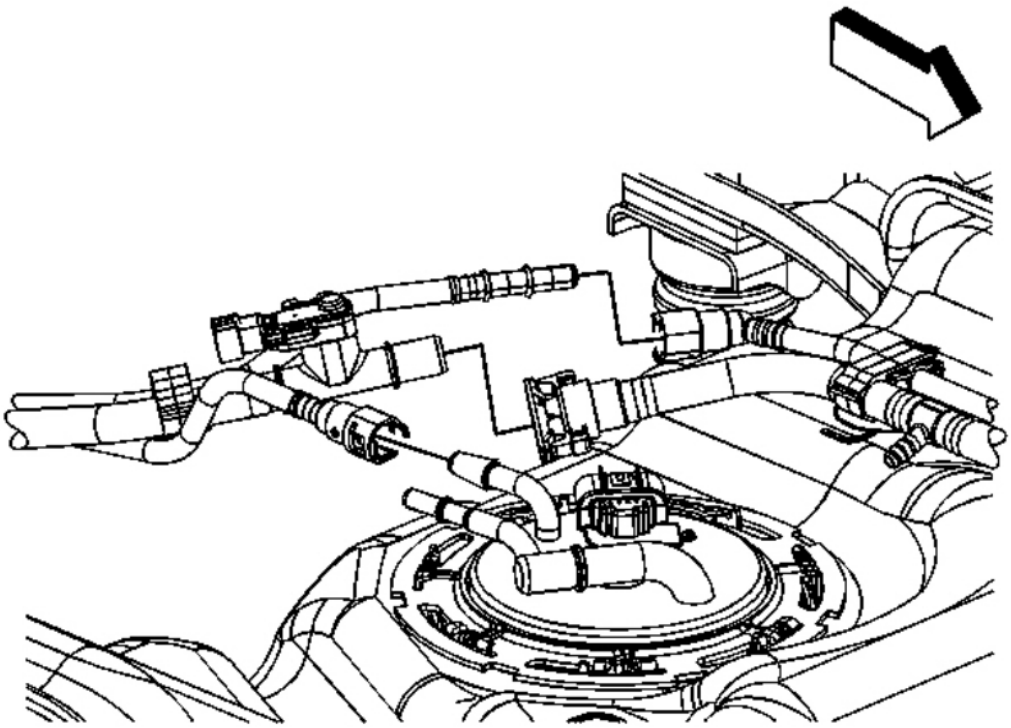

Fig. 295: View Of EVAP Lines & Quick Connect Fittings
Courtesy of GENERAL MOTORS CORP.

19. Connect the fuel and EVAP intermediate lines to the rear tank. Refer to **Quick Connect Fitting Service - Plastic Collar**.

cardiagn.com

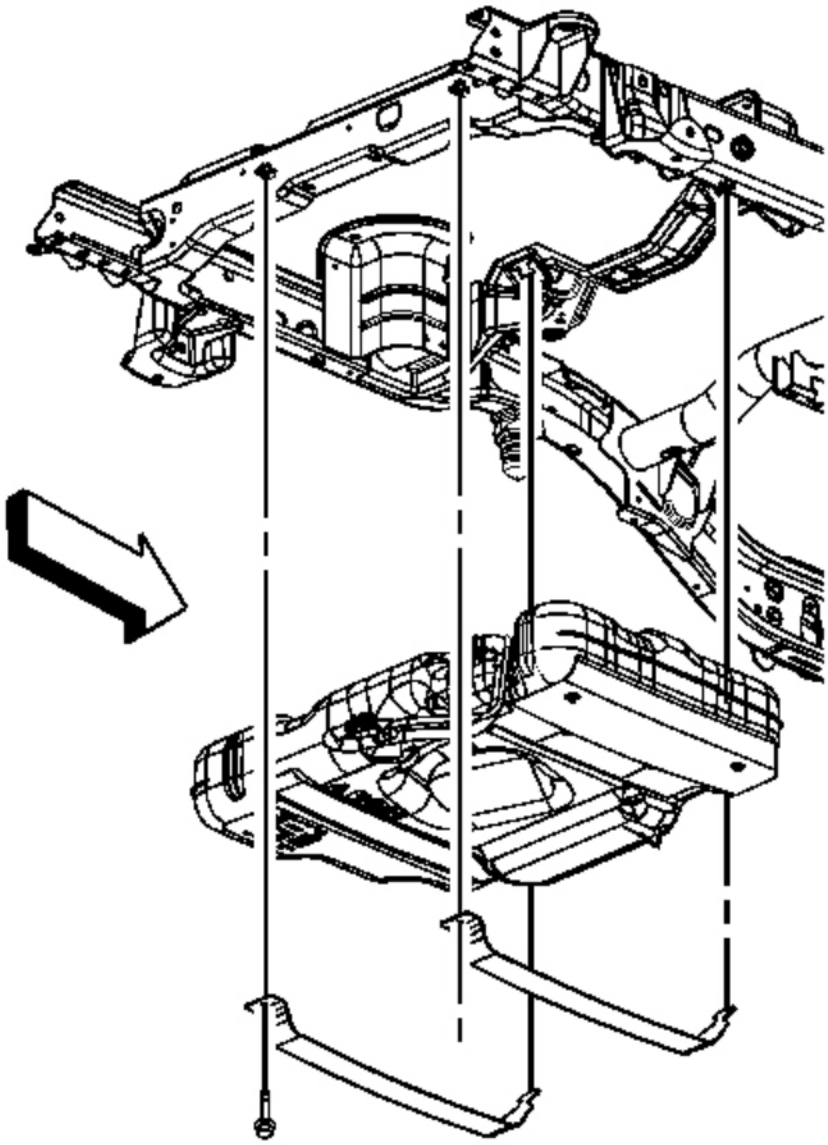

Fig. 296: View Of Fuel Tank & Straps
Courtesy of GENERAL MOTORS CORP.

20. With the aid of an assistant, completely raise the rear tank.
21. Install the fuel tank straps.

cardiagn.com

NOTE: **Refer to Fastener Notice .**

22. Install the fuel tank strap bolts.

    Tighten: Tighten the bolts to 40 N.m (30 lb ft).

23. Remove the adjustable jack from under the fuel tank.

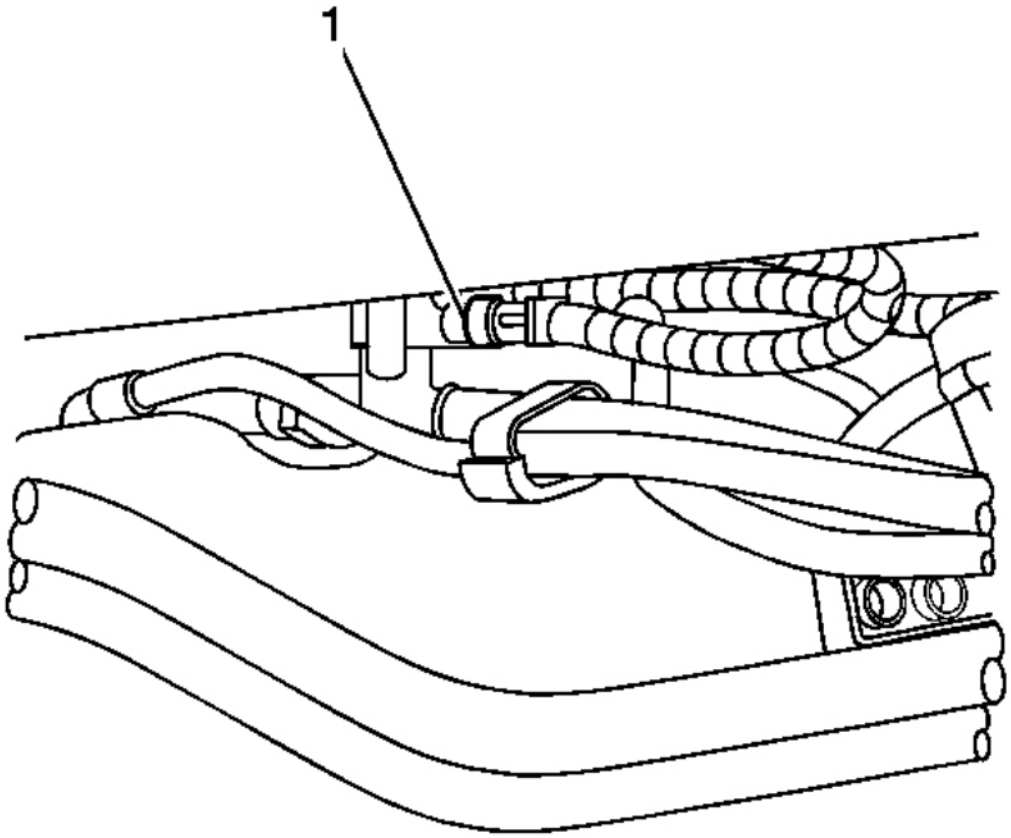

Fig. 297: View Of Fuel Pressure Sensor Electrical Connector
Courtesy of GENERAL MOTORS CORP.

24. Connect the chassis harness electrical connector (1) to the fuel pressure sensor.

cardiagn.com

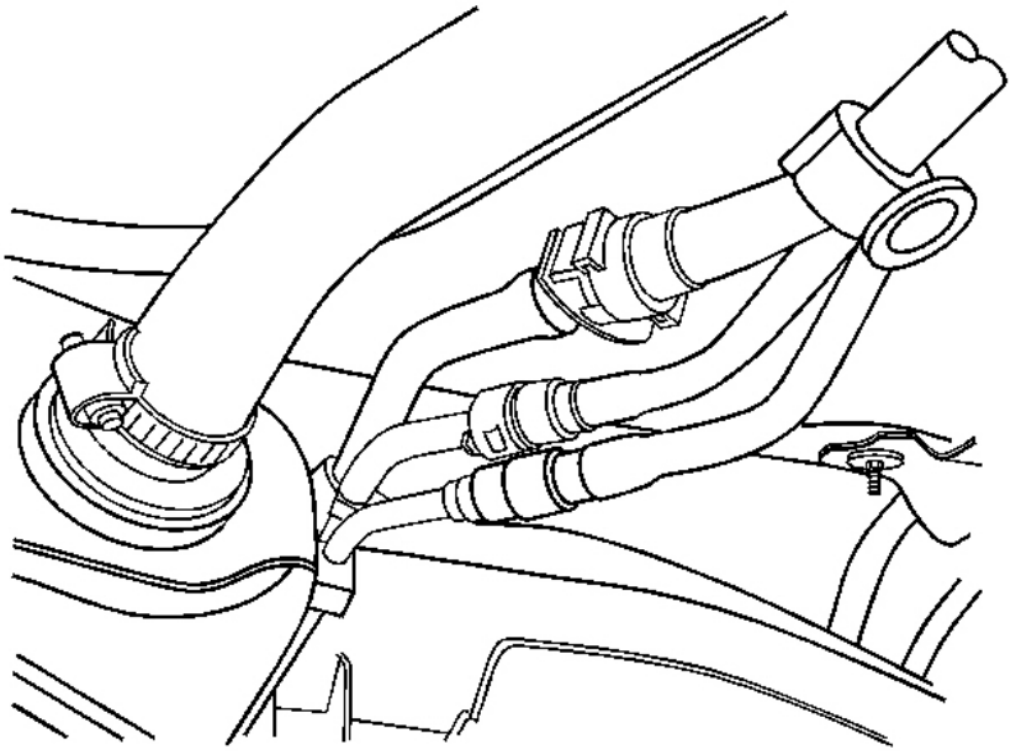

Fig. 298: View Of Fuel & EVAP Intermediate Lines At Fuel Tank
Courtesy of GENERAL MOTORS CORP.

25. Connect the fuel and EVAP intermediate line quick connect fittings to the front tank. Refer to **Quick Connect Fitting Service - Plastic Collar**.

cardiagn.com

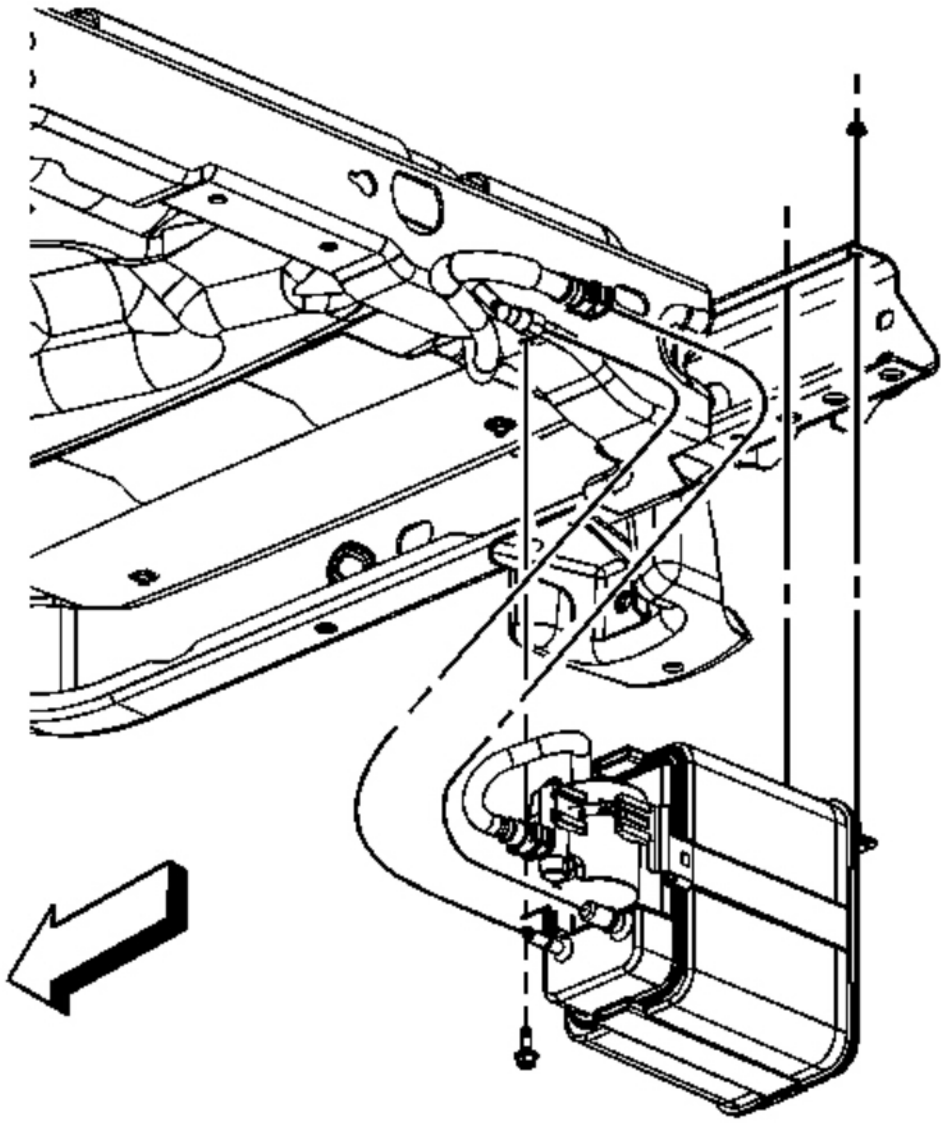

Fig. 299: View Of EVAP Canister & Quick Connect Fittings
Courtesy of GENERAL MOTORS CORP.

26. Connect the rear fuel tank EVAP line quick connect fittings to the EVAP canister. Refer to **Quick Connect Fitting Service - Plastic Collar**.

cardiagn.com

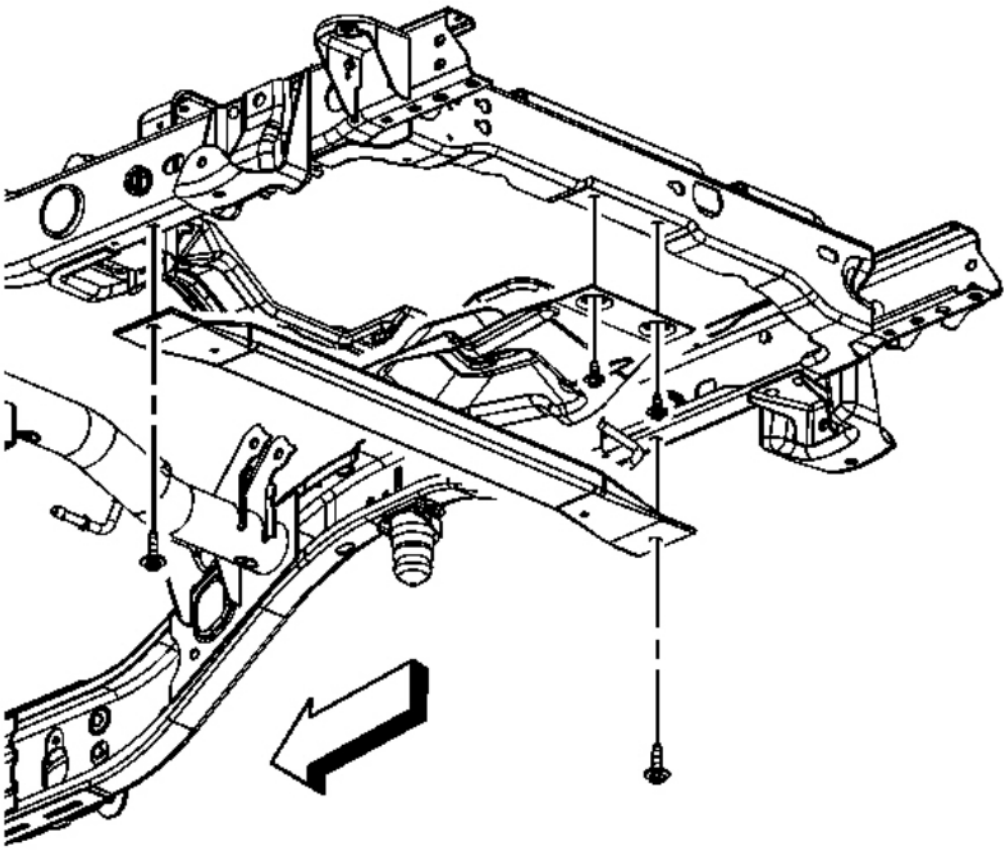

Fig. 300: View Of Spare Tire Hoist Crossmember & Bolts
Courtesy of GENERAL MOTORS CORP.

27. Install the spare tire hoist crossmember and bolts.

    Tighten: Tighten the bolts to 50 N.m (37 lb ft).

28. Install the rear exhaust insulator.

cardiagn.com

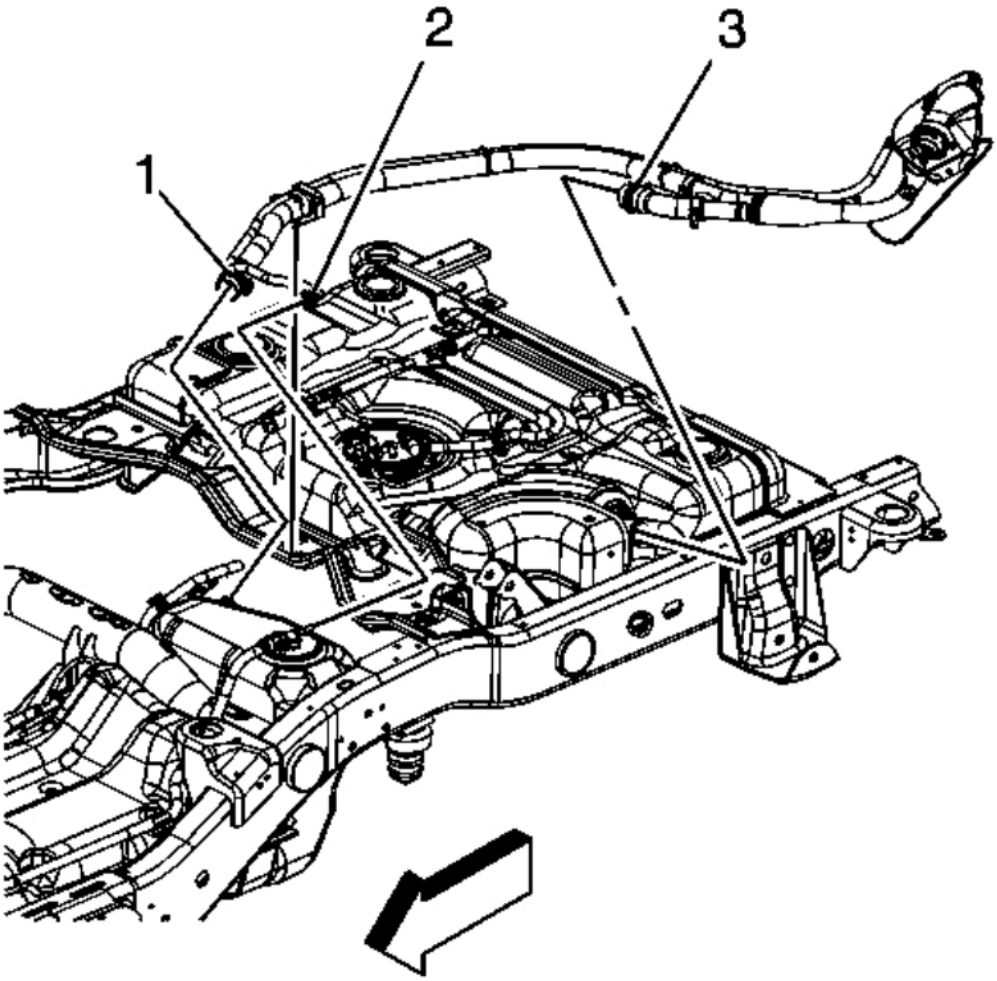

Fig. 301: View Of Fuel Hoses & Clamp
Courtesy of GENERAL MOTORS CORP.

29. Install the fuel fill hose (1, 3) to the fuel tank.
30. Tighten the fuel fill hose clamp (2) at the fuel tank.

    Tighten: Tighten the clamp to 2.5 N.m (22 lb in).

31. Lower the vehicle.

cardiagn.com

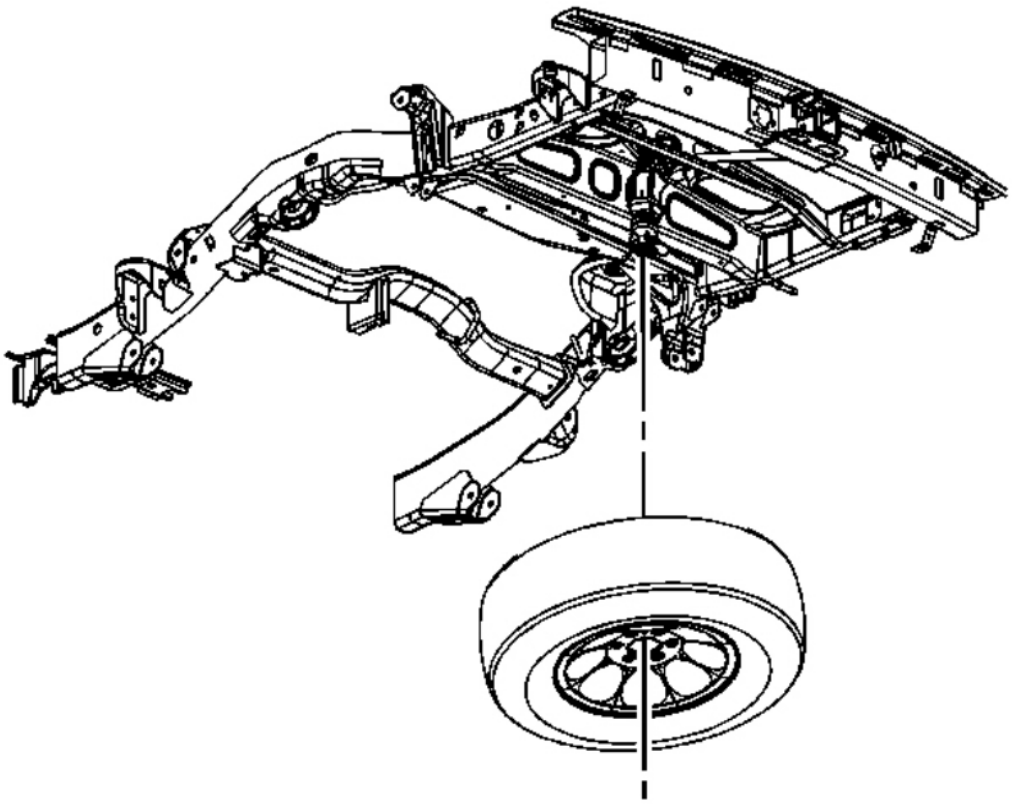

Fig. 302: View Of Spare Tire & Stowage Lock Cylinder
Courtesy of GENERAL MOTORS CORP.

32. Install the spare tire.
33. Install the spare tire stowage lock cylinder.

cardiagn.com

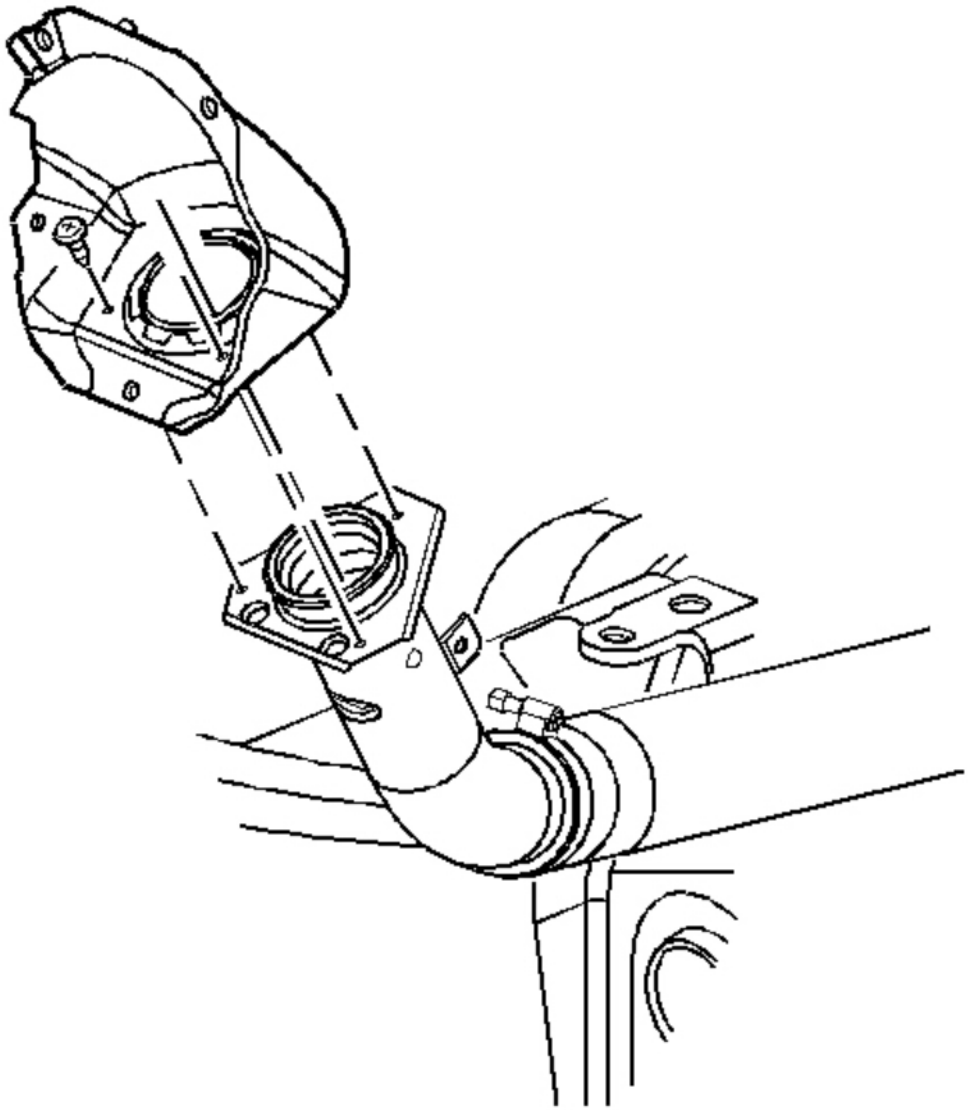

Fig. 303: Identifying Fuel Filler Components
Courtesy of GENERAL MOTORS CORP.

34. Install the fuel tank filler housing.
35. Install the fuel tank filler housing to fuel tank fill pipe bolts.

Tighten: Tighten the bolts to 2.3 N.m (20 lb in).

cardiagn.com

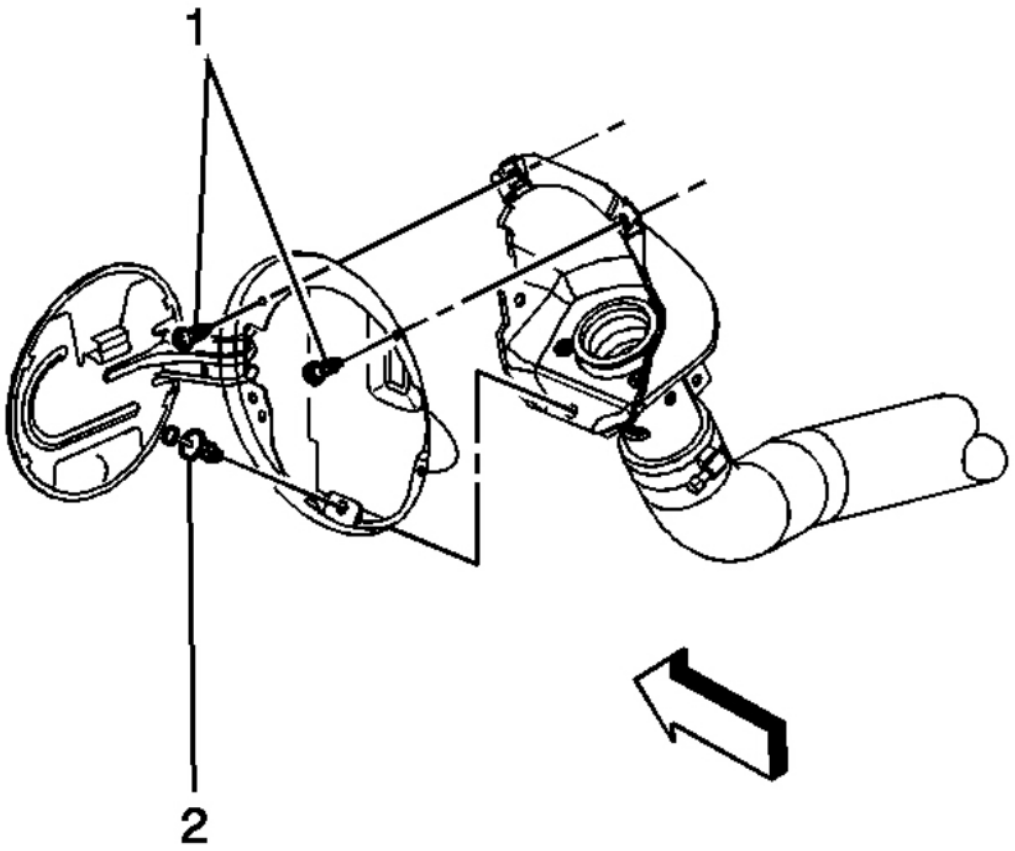

Fig. 304: View Of Fuel Tank Filler Housing To Body Screws & Retainer
Courtesy of GENERAL MOTORS CORP.

36. Install the fuel tank filler housing to body TORX® screws (1) and retainer (2).

    Tighten: Tighten the screws to 2.3 N.m (20 lb in).

37. Refill the fuel tank.
38. Install the fuel fill cap.
39. Connect the negative battery cable. Refer to **Battery Negative Cable Disconnection and Connection** .
40. Use the following procedure in order to inspect for leaks:
    1. Turn the ignition ON, with the engine OFF, for 2 seconds.
    2. Turn the ignition OFF for 10 seconds.
    3. Turn the ignition ON, with the engine OFF.
    4. Inspect for fuel leaks.

cardiagn.com

41. Install the intake manifold sight shield. Refer to **Upper Intake Manifold Sight Shield Replacement** .

FUEL TANK REPLACEMENT (2500 LWB - 98.4L (26 GAL) TANK-FRONT)

Tools Required

J 45722 Fuel Sender Lock Ring Wrench. See **Special Tools**.

Removal Procedure

IMPORTANT: Clean all fuel and evaporative emission (EVAP) line connections and surrounding areas prior to disconnecting the lines in order to avoid possible fuel and/or EVAP system contamination.

cardiagn.com

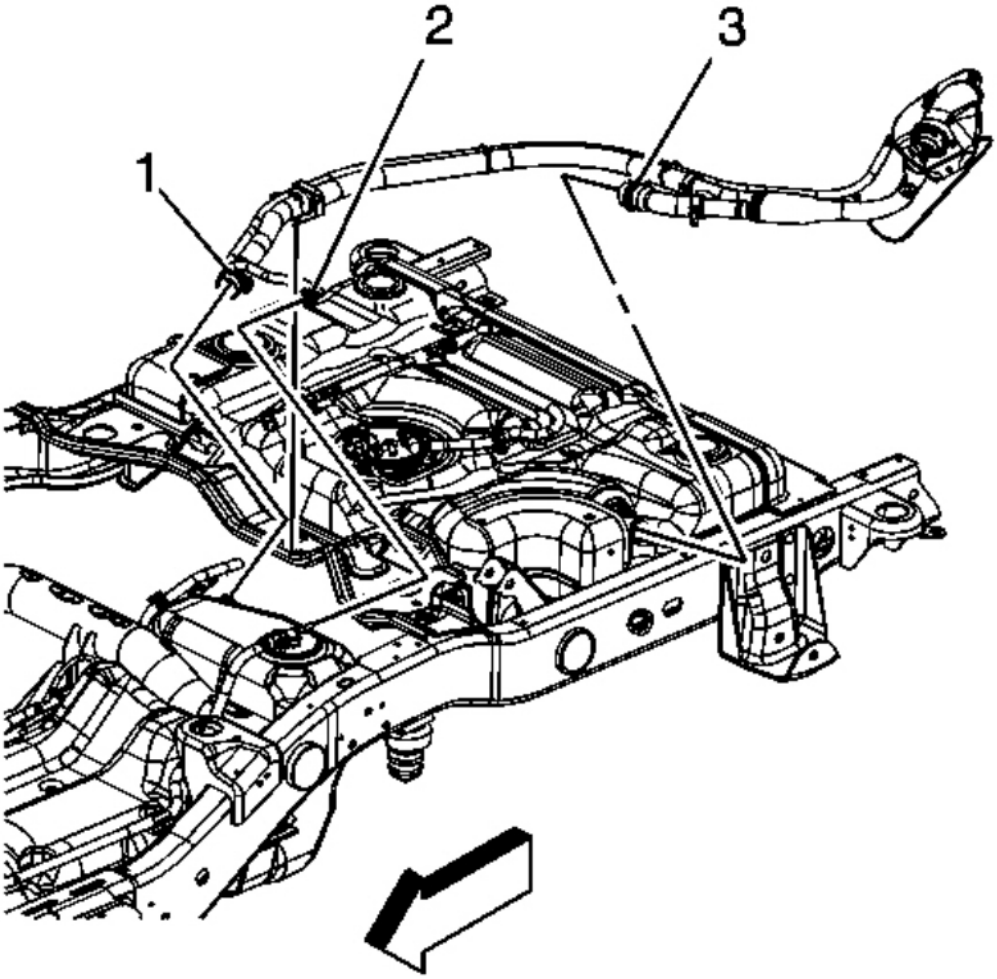

Fig. 305: View Of Fuel Hoses & Clamp
Courtesy of GENERAL MOTORS CORP.

1. Relieve the fuel system pressure. Refer to the **Fuel Pressure Relief**.
2. Drain the fuel tank. Refer to **Fuel Tank Draining (Dual Tanks - Front)** or **Fuel Tank Draining (Dual Tanks - Rear)** or **Fuel Tank Draining (Single Tank)**.
3. Disconnect the fill pipe evaporative emission (EVAP) line quick connect fitting (2) from the fuel tank vent valve. Refer to **Quick Connect Fitting Service - Plastic Collar**.

cardiagn.com

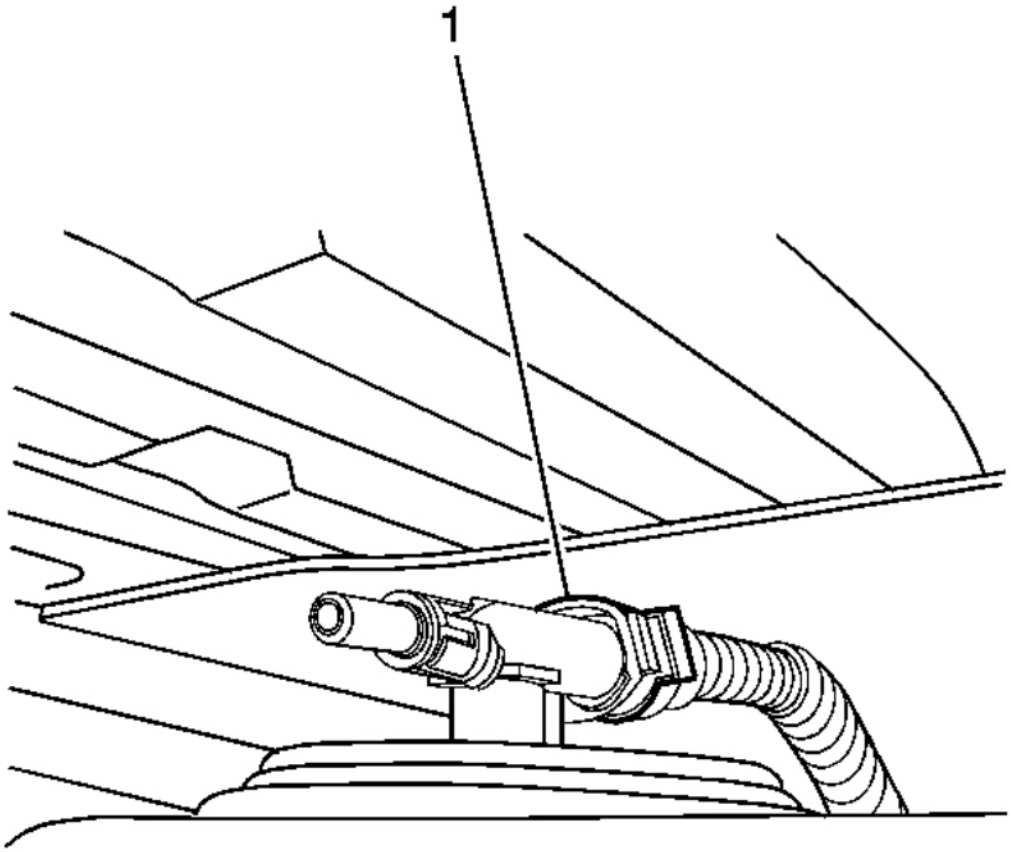

Fig. 306: View Of Vapor Line At Fuel Tank
Courtesy of GENERAL MOTORS CORP.

4. Disconnect the EVAP line quick connect fitting (1) from the fuel tank vent valve. Refer to **Quick Connect Fitting Service - Plastic Collar**.

cardiagn.com

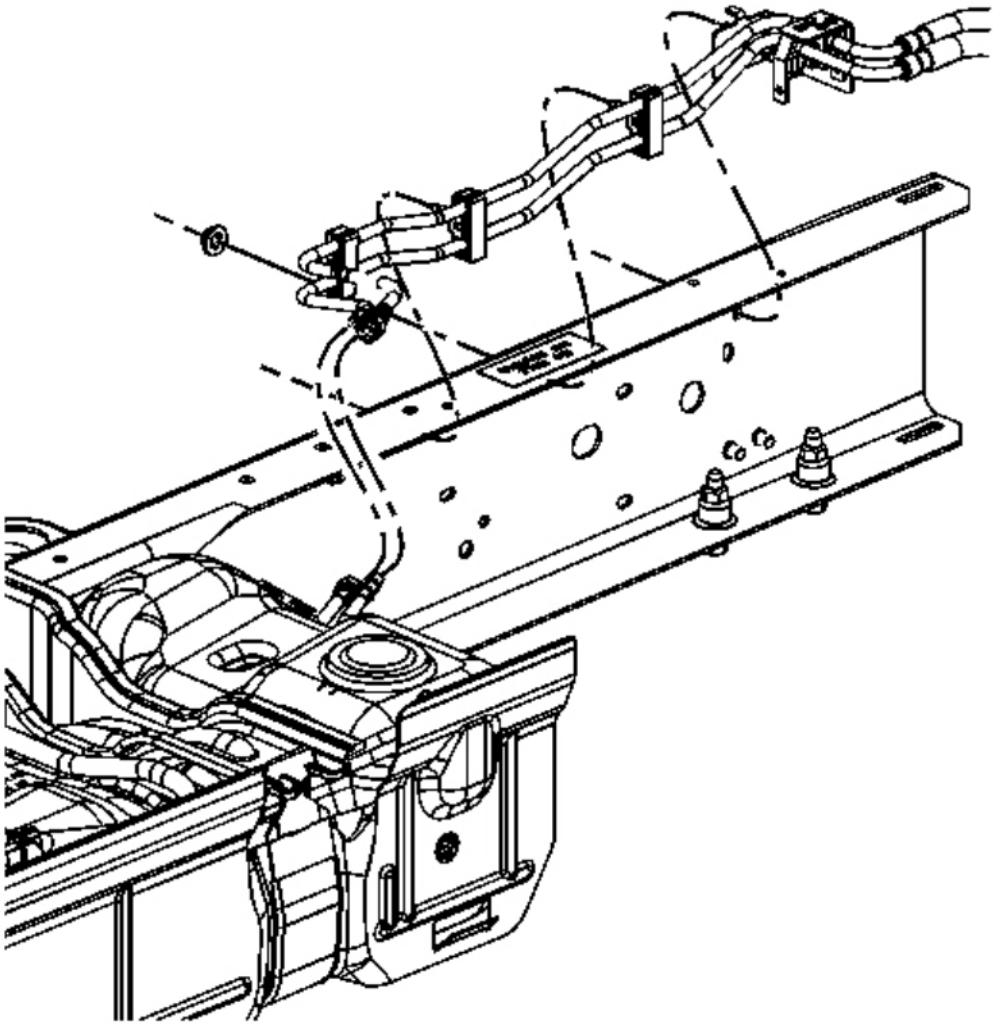

Fig. 307: View Of Fuel Feed & EVAP Lines At Fuel Tank
Courtesy of GENERAL MOTORS CORP.

5. Disconnect the chassis fuel feed and EVAP line quick connect fittings from the fuel tank line quick connect fittings. Refer to **Quick Connect Fitting Service - Plastic Collar**.

cardiagn.com

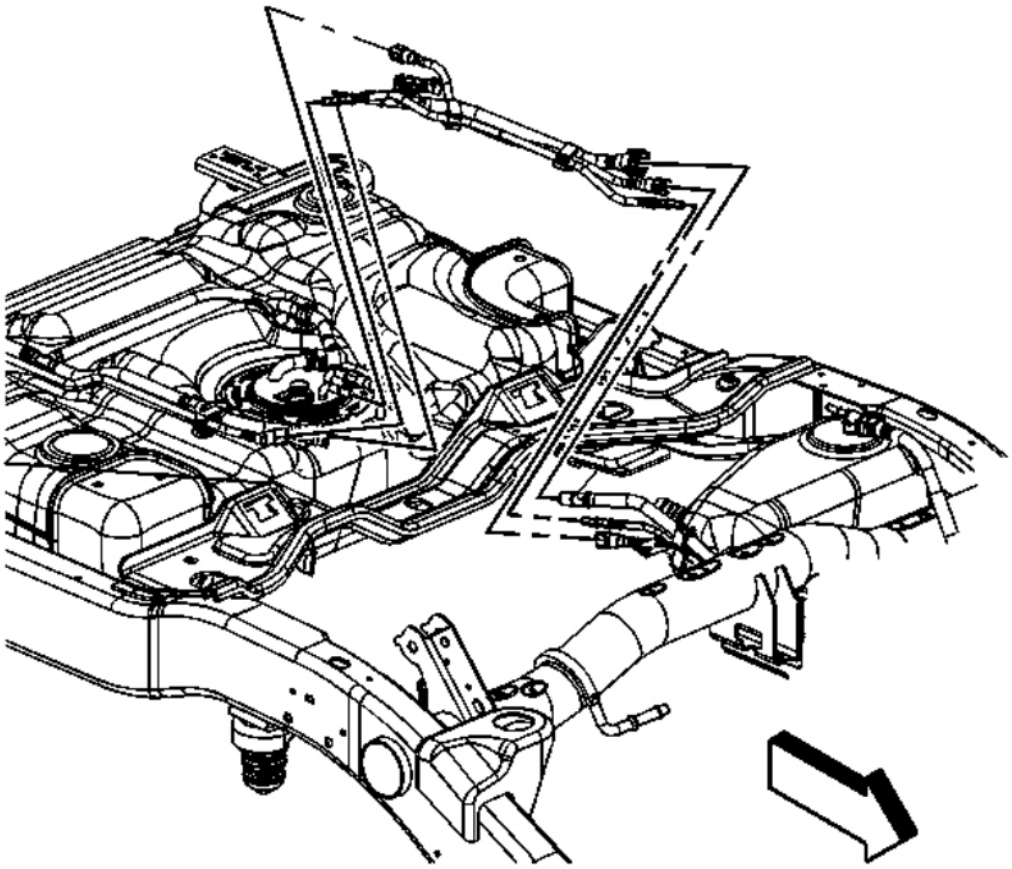

Fig. 308: View Of Fuel & EVAP Intermediate Lines At Fuel Tank
Courtesy of GENERAL MOTORS CORP.

6. Open the clip on the side of the fuel tank retaining the intermediate lines.
7. Disconnect the fuel and EVAP intermediate line quick connect fittings from the front tank lines. Refer to **Quick Connect Fitting Service - Plastic Collar**.
8. Cap the fuel and EVAP lines in order to prevent possible fuel/EVAP system contamination.

cardiagn.com

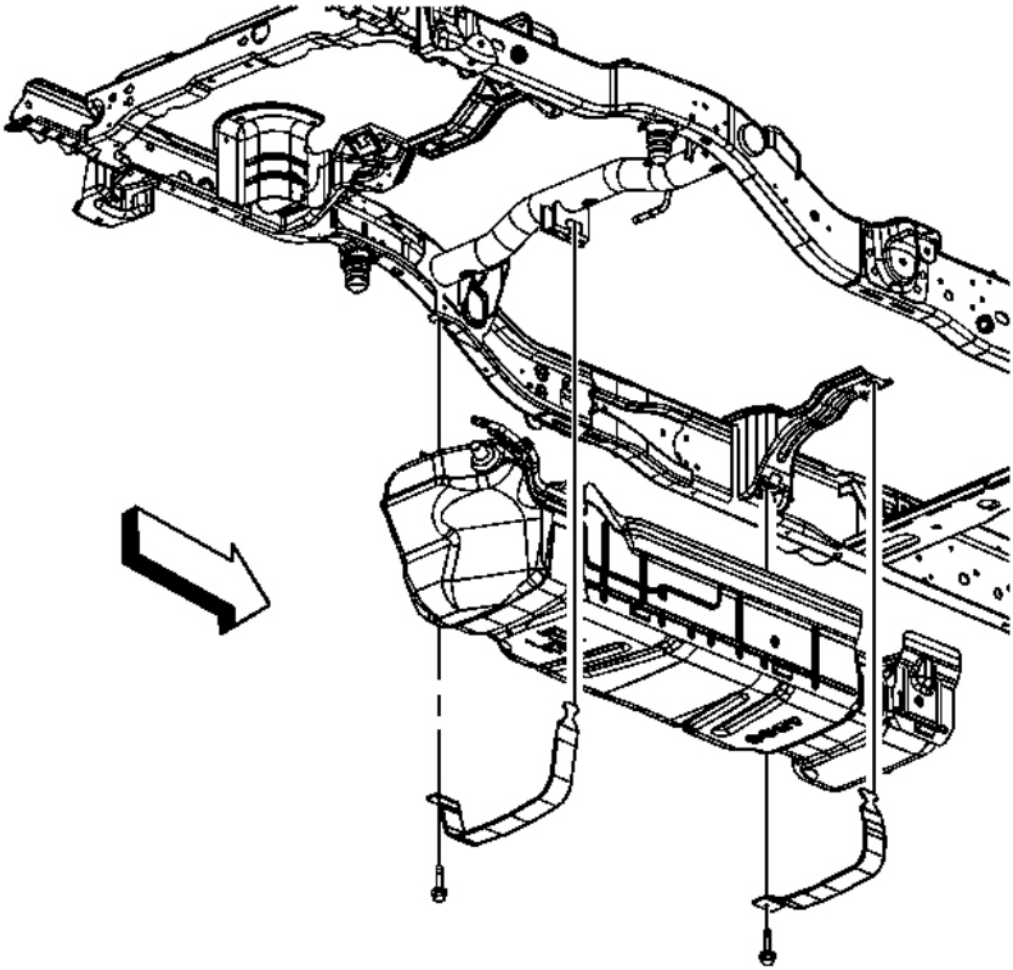

Fig. 309: View Of Fuel Tank & Straps (Front Tank)
Courtesy of GENERAL MOTORS CORP.

NOTE: **Refer to Damage to Fuel Tank Straps Notice .**

9. Using an adjustable jack, support the fuel tank.
10. Remove the fuel tank strap bolts.
11. Remove the fuel tank straps.

IMPORTANT: When lowering the fuel tank, ensure that the EVAP line does not get caught on anything.

cardiagn.com

12. With the aid of an assistant, carefully lower the fuel tank until the electrical connectors can be accessed.

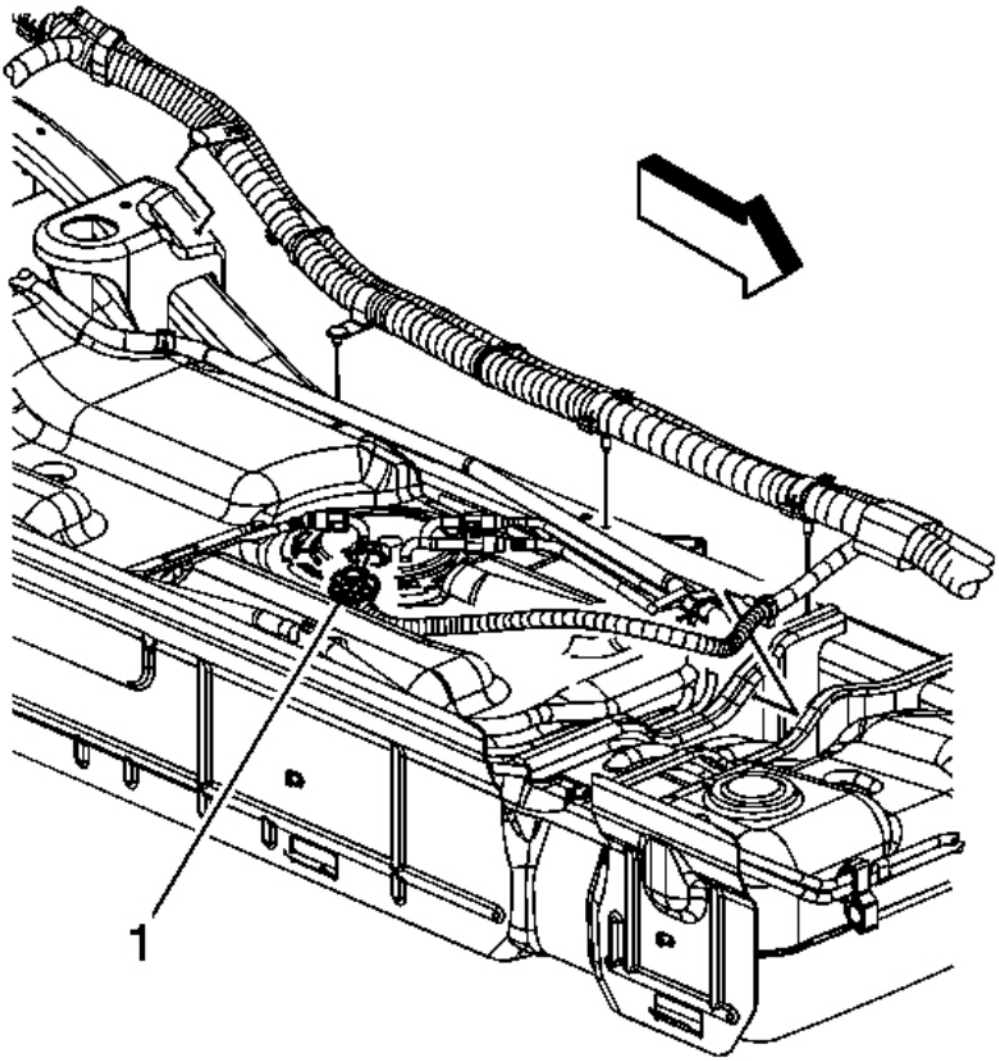

Fig. 310: View Of Fuel Tank Module Electrical Connector
Courtesy of GENERAL MOTORS CORP.

13. Disengage the connector position assurance (CPA) retainer.
14. Disconnect the chassis harness electrical connector (1) from the fuel tank module.
15. Completely lower the fuel tank.
16. Place the fuel tank in a suitable work area.

cardiagn.com

17. If replacing the fuel tank proceed to the next step, otherwise proceed to step 14 in the installation procedure.

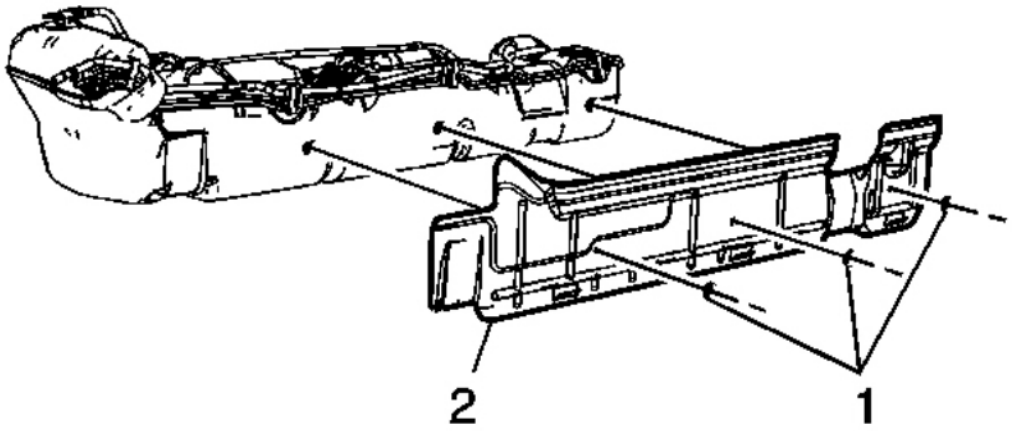

Fig. 311: View Of Fuel Tank Shield & Retainers
Courtesy of GENERAL MOTORS CORP.

18. Remove the fuel tank shield retainers (1) and shield (2).

cardiagn.com

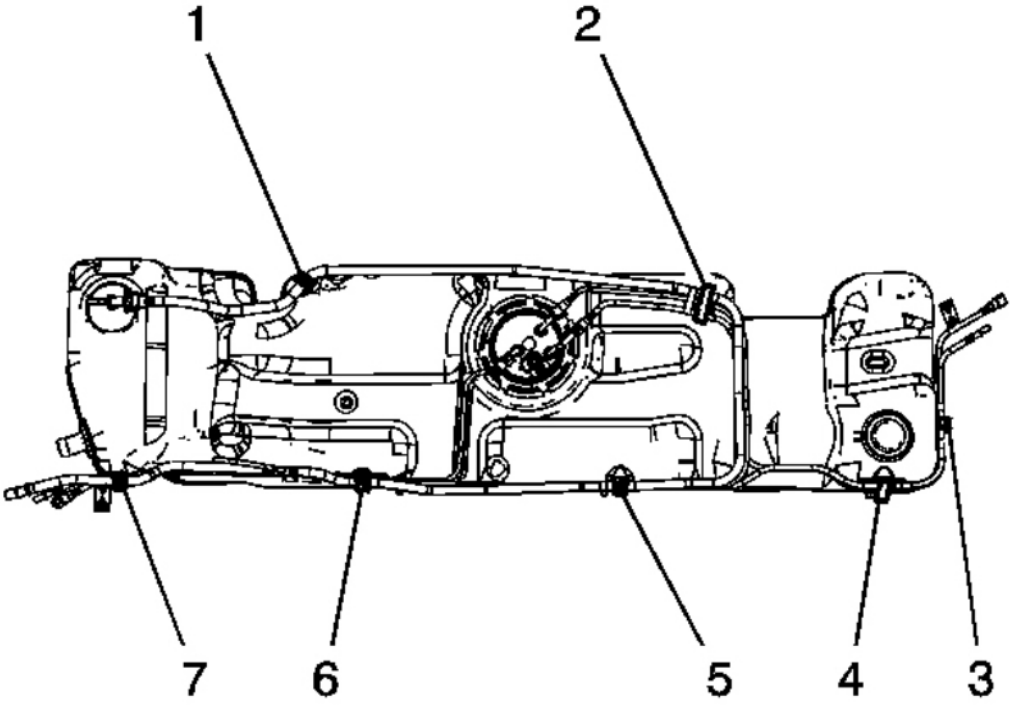

Fig. 312: View Of Fuel Tank Clips
Courtesy of GENERAL MOTORS CORP.

19. Remove the EVAP line from the fuel tank clip (1).
20. Open the fuel tank clips (2-7) and remove the fuel/EVAP lines from the clips.
21. Disconnect the fuel/EVAP line quick connect fittings from the fuel tank module. Refer to **Quick Connect Fitting Service - Plastic Collar**.

cardiagn.com

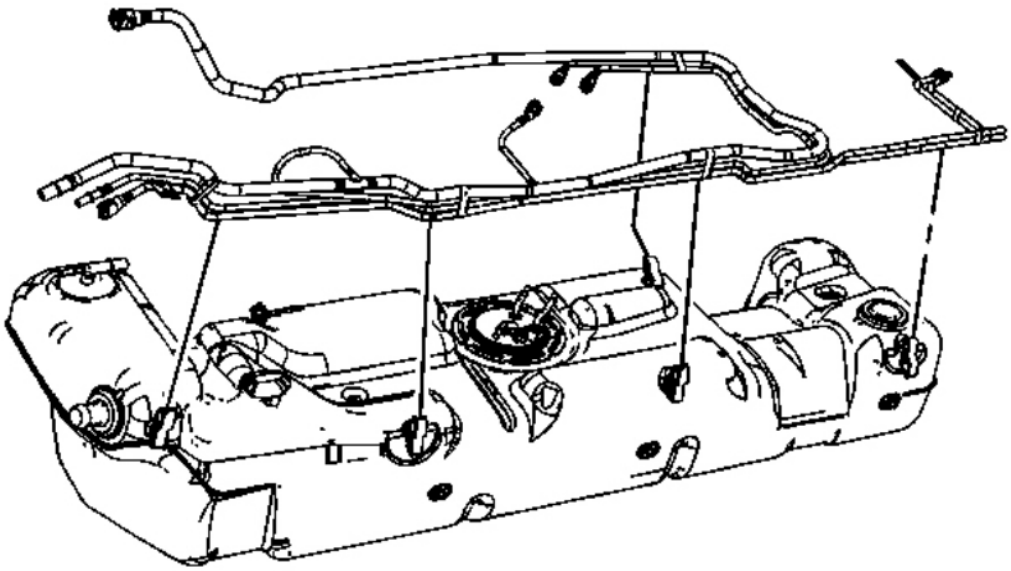

Fig. 313: View Of Fuel Tank EVAP Lines
Courtesy of GENERAL MOTORS CORP.

22. Remove the fuel/EVAP lines from the fuel tank.

cardiagn.com

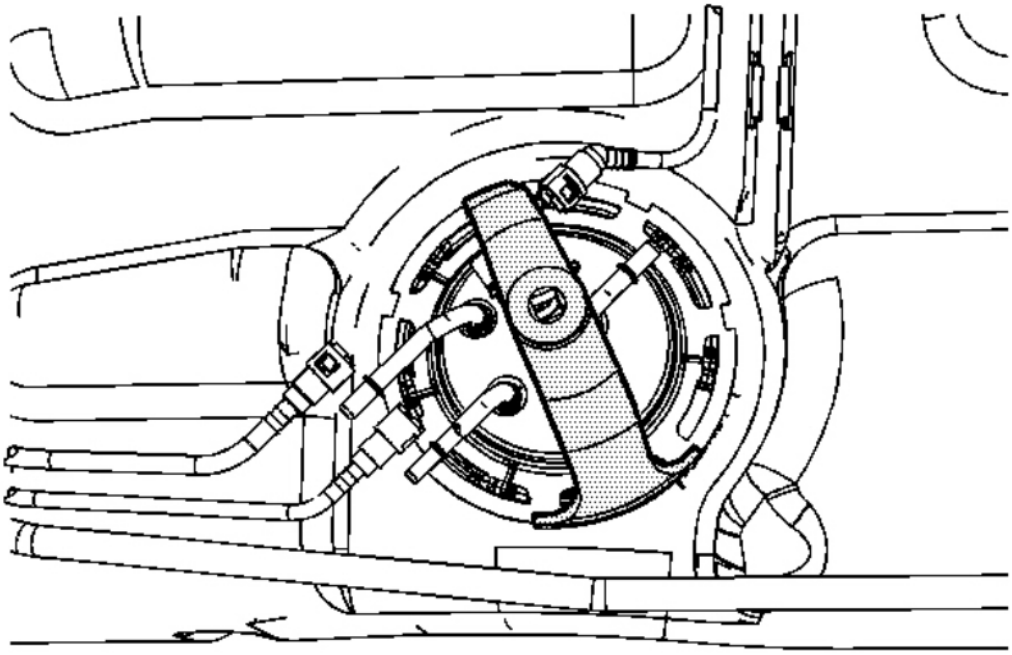

Fig. 314: View Of Special Tool & Lock Ring
Courtesy of GENERAL MOTORS CORP.

23. Using the **J 45722** remove the lock ring. See **Special Tools**.

cardiagn.com

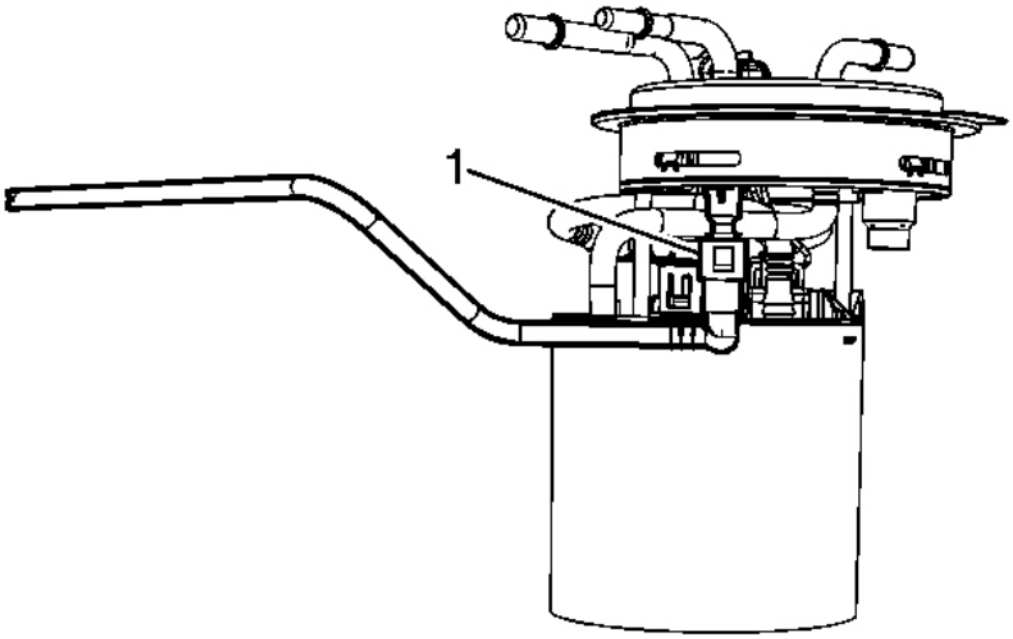

Fig. 315: View Of Fuel Module Quick Connect Fitting
Courtesy of GENERAL MOTORS CORP.

24. Carefully lift the module from the fuel tank, enough to access the quick connect fitting (1) under the module cover. Disconnect the quick connect fitting. Refer to **Quick Connect Fitting Service - Plastic Collar**.
25. Remove the fuel tank module.
26. Remove and discard the fuel tank module seal.

cardiagn.com

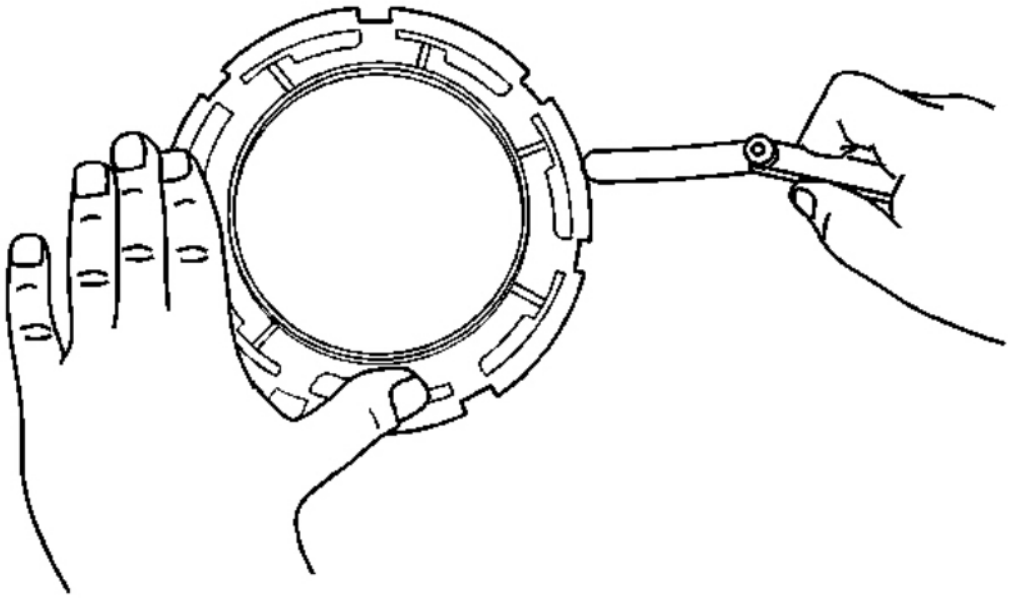

Fig. 316: Checking Lock Ring For Flatness
Courtesy of GENERAL MOTORS CORP.

IMPORTANT:

- **Some lock rings were manufactured with "DO NOT REUSE" stamped into them. These lock rings may be reused if they are not damaged or warped.**
- **Inspect the lock ring for damage due to improper removal or installation procedures. If damage is found, install a NEW lock ring.**
- **Check the lock ring for flatness.**

27. Place the lock ring on a flat surface. Measure the clearance between the lock ring and the flat surface using a feeler gage at 7 points.
28. If warpage is less than 0.41 mm (0.016 in), the lock ring does not require replacement.
29. If warpage is greater than 0.41 mm (0.016 in), the lock ring must be replaced.

Installation Procedure

cardiagn.com

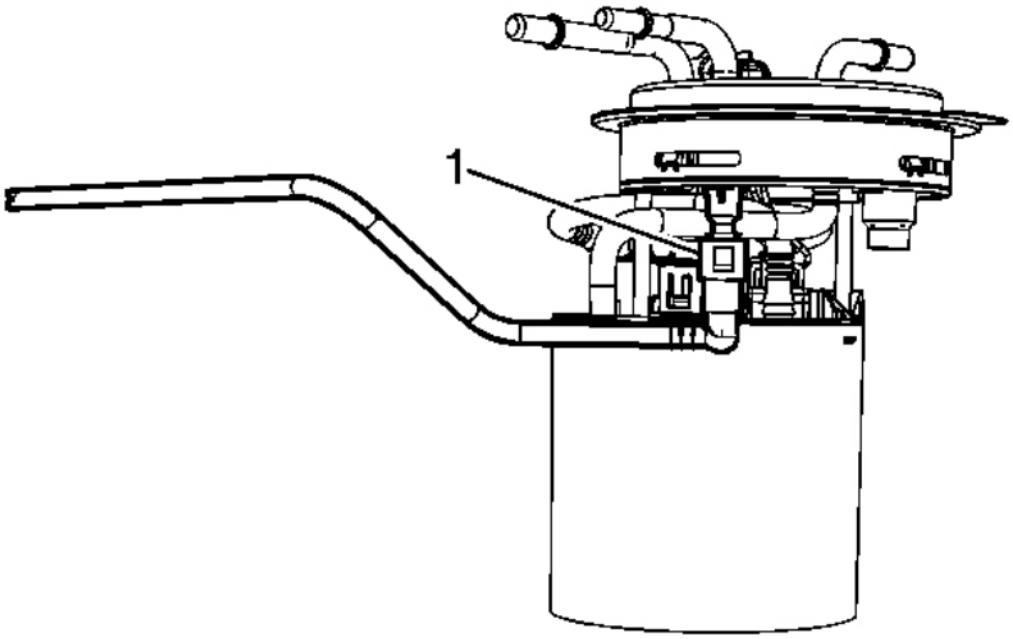

Fig. 317: View Of Fuel Tank Module Quick Connect Fitting
Courtesy of GENERAL MOTORS CORP.

1. If the fuel tank was replaced perform the following steps, otherwise proceed to step 14.
2. Install the NEW fuel tank module seal onto the fuel tank.
3. Pull the vent line in the fuel tank up as far as possible for ease of installation.
4. Position the fuel tank module part way into the fuel tank.
5. Connect the quick connect fitting (1) to the module cover. Refer to **Quick Connect Fitting Service - Plastic Collar**.
6. Install the fuel tank module into the fuel tank.
7. Place the lock ring into position.

cardiagn.com

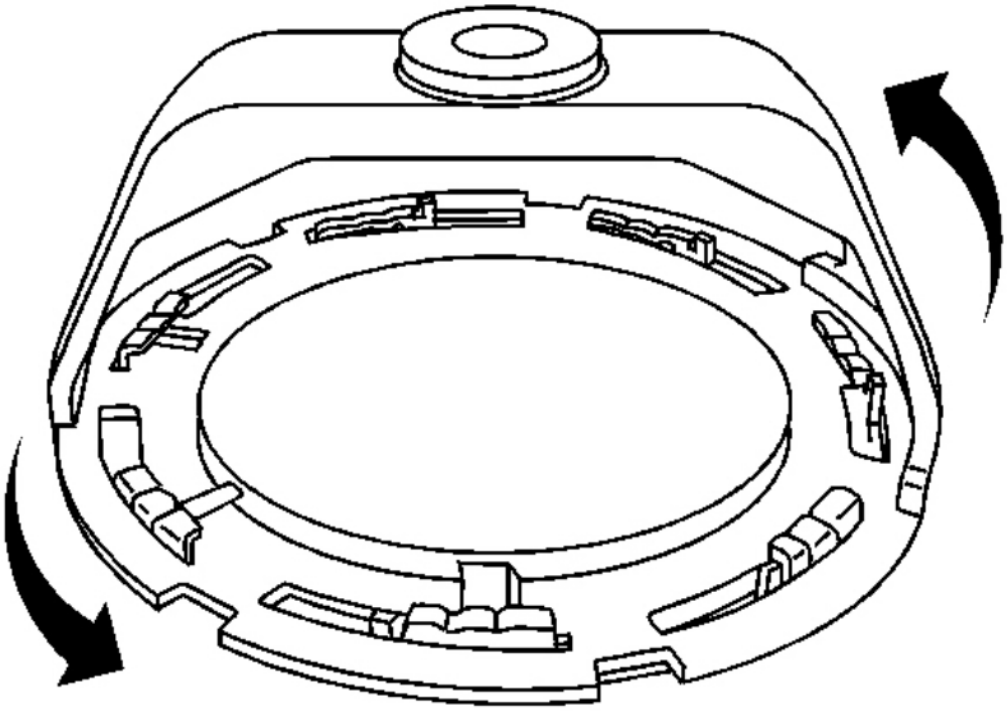

Fig. 318: Identifying Lock Ring
Courtesy of GENERAL MOTORS CORP.

8. Rotate the lock ring counterclockwise using the **J 45722** . See **Special Tools**.

cardiagn.com

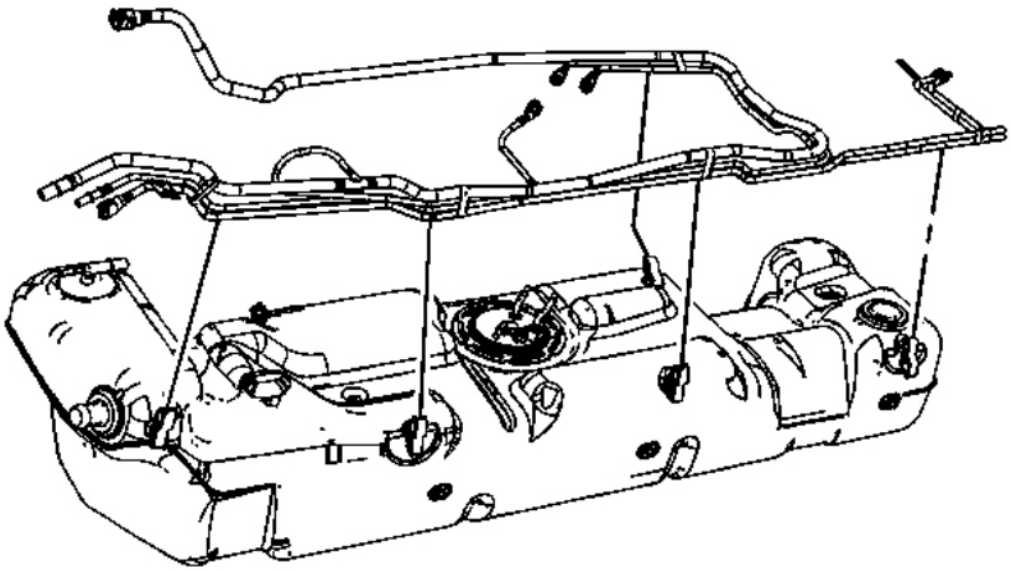

Fig. 319: View Of Fuel Tank EVAP Lines
Courtesy of GENERAL MOTORS CORP.

9. Install the EVAP lines to the fuel tank.

cardiagn.com

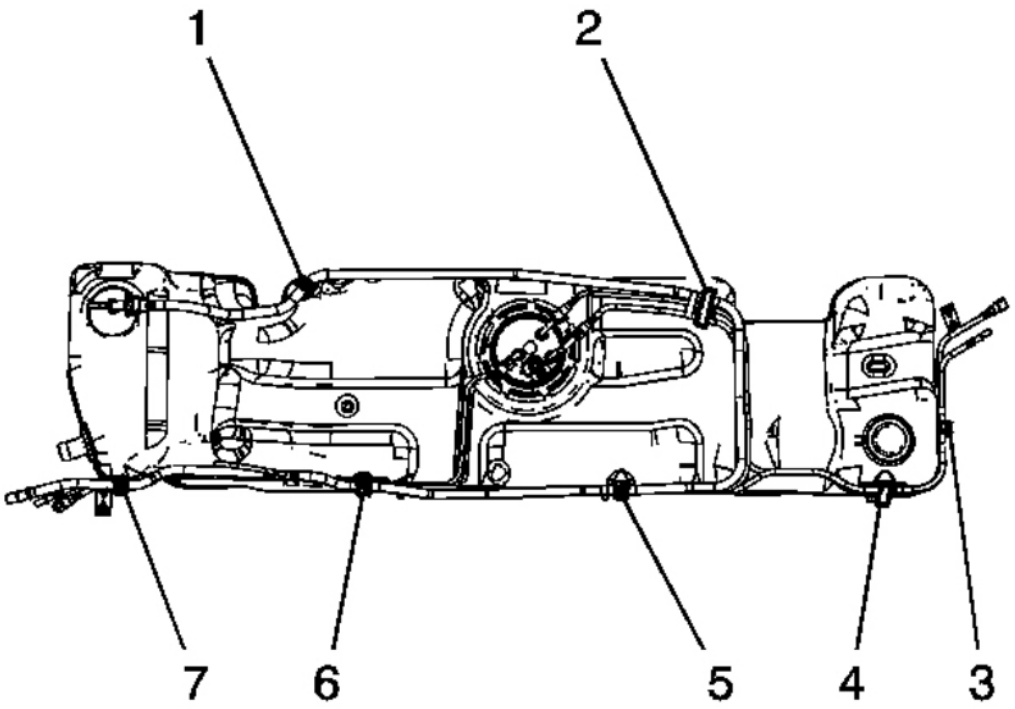

Fig. 320: View Of Fuel Tank Clips
Courtesy of GENERAL MOTORS CORP.

10. Connect the EVAP line quick connect fittings at the fuel tank module. Refer to **Evaporative Emission Hoses/Pipes Replacement - Canister/Fuel Tank (1500 LWB - 117.3L (31 gal) Tank)** or **Evaporative Emission Hoses/Pipes Replacement - Canister/Fuel Tank (1500 LWB - 117.3L (31 gal) Tank w/E85)** or **Evaporative Emission Hoses/Pipes Replacement - Canister/Fuel Tank (1500 SWB - 98.4L (26 gal) Tank)** or **Evaporative Emission Hoses/Pipes Replacement - Canister/Fuel Tank (1500 LWB - 98.4L (26 gal) Tank w/E85)** or **Evaporative Emission Hoses/Pipes Replacement - Canister/Fuel Tank (2500 LWB - 43.5L (11.5 gal) Tank-Rear)**.
11. Install the EVAP lines to the fuel tank clips (2-7) and close the clips.
12. Install the EVAP line to the fuel tank clip (1).

cardiagn.com

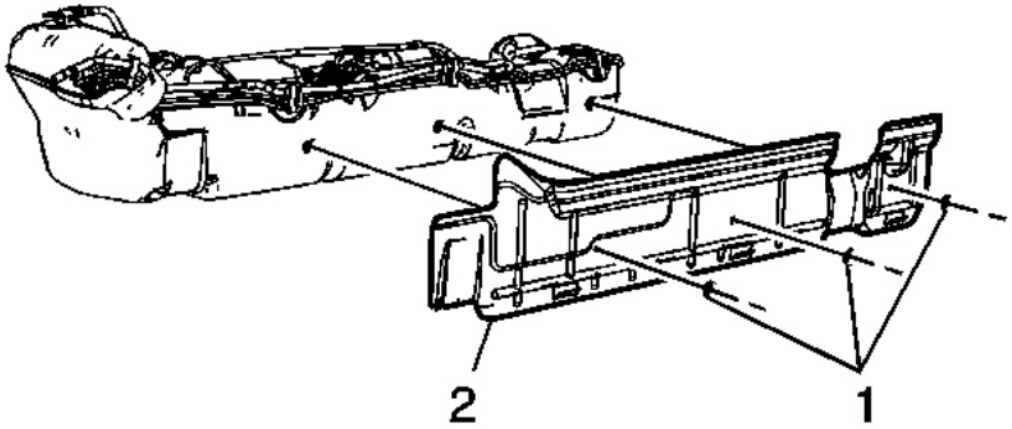

Fig. 321: View Of Fuel Tank Shield & Retainers
Courtesy of GENERAL MOTORS CORP.

13. Install the fuel tank shield (2) and retainers (1).

cardiagn.com

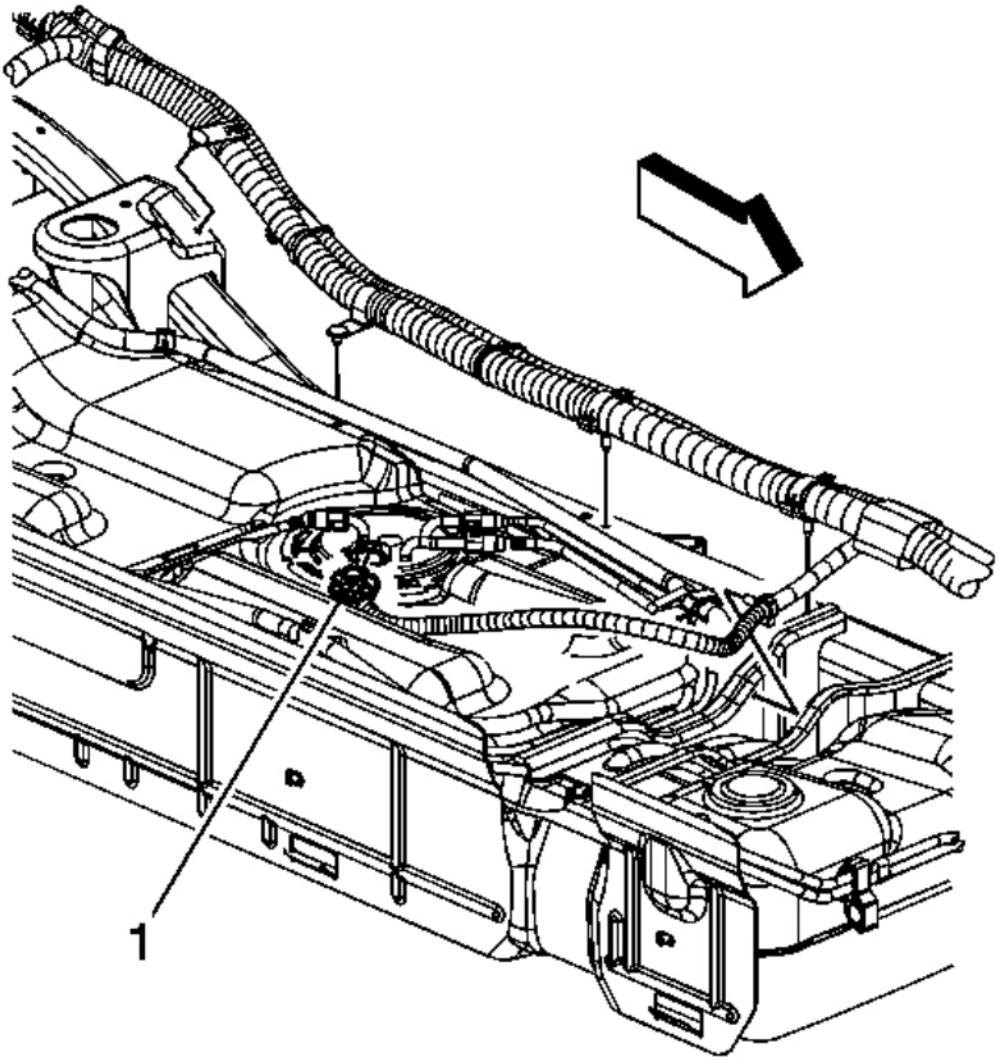

Fig. 322: View Of Fuel Tank Module Chassis Harness Electrical Connector
Courtesy of GENERAL MOTORS CORP.

14. Place the fuel tank onto a suitable jack.
15. With the aid of an assistant, partially raise the fuel tank.
16. Connect the chassis harness electrical connector (1) to the fuel tank module.
17. Engage the CPA retainer.

cardiagn.com

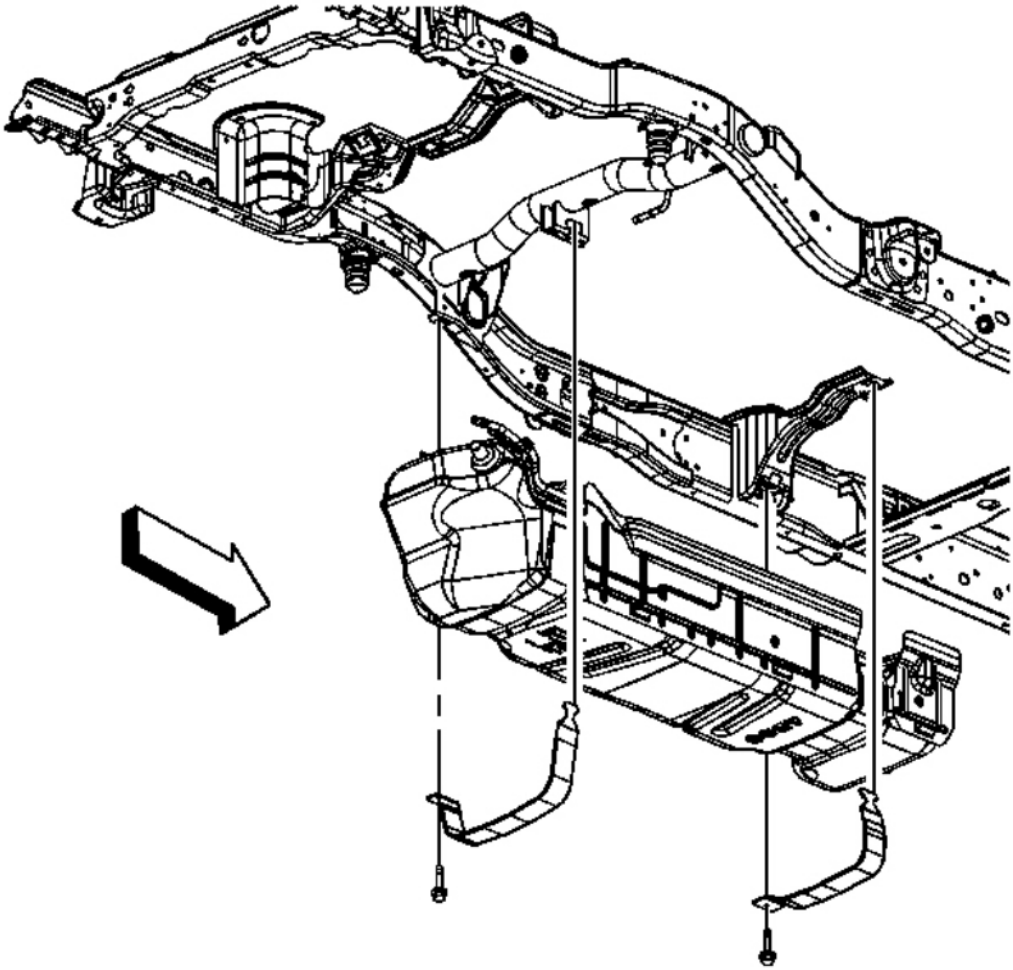

Fig. 323: View Of Fuel Tank & Straps (Front Tank)
Courtesy of GENERAL MOTORS CORP.

IMPORTANT: When installing the fuel tank, ensure that the EVAP line is correctly routed over the frame.

18. With the aid of an assistant, completely raise the fuel tank.
19. Install the fuel tank straps.

NOTE: Refer to Fastener Notice .

20. Install the fuel tank strap bolts.

cardiagn.com

Tighten: Tighten the bolts to 40 N.m (30 lb ft).

21. Remove the adjustable jack from under the fuel tank.

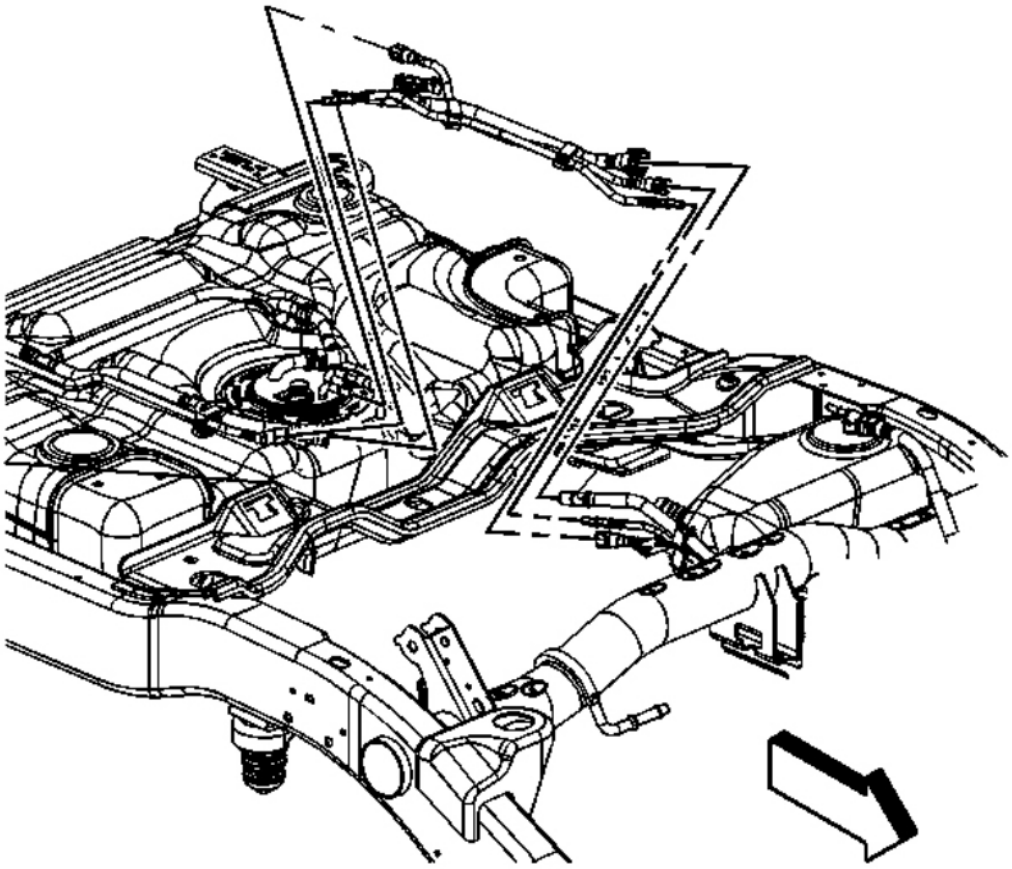

Fig. 324: View Of Fuel & EVAP Intermediate Lines At Fuel Tank
Courtesy of GENERAL MOTORS CORP.

22. Remove the caps from the fuel and EVAP lines.
23. Connect the fuel and EVAP intermediate lines to the front tank. Refer to **Quick Connect Fitting Service - Plastic Collar**.
24. Install the lines to the clip on the side of the fuel tank and close the clip.

cardiagn.com

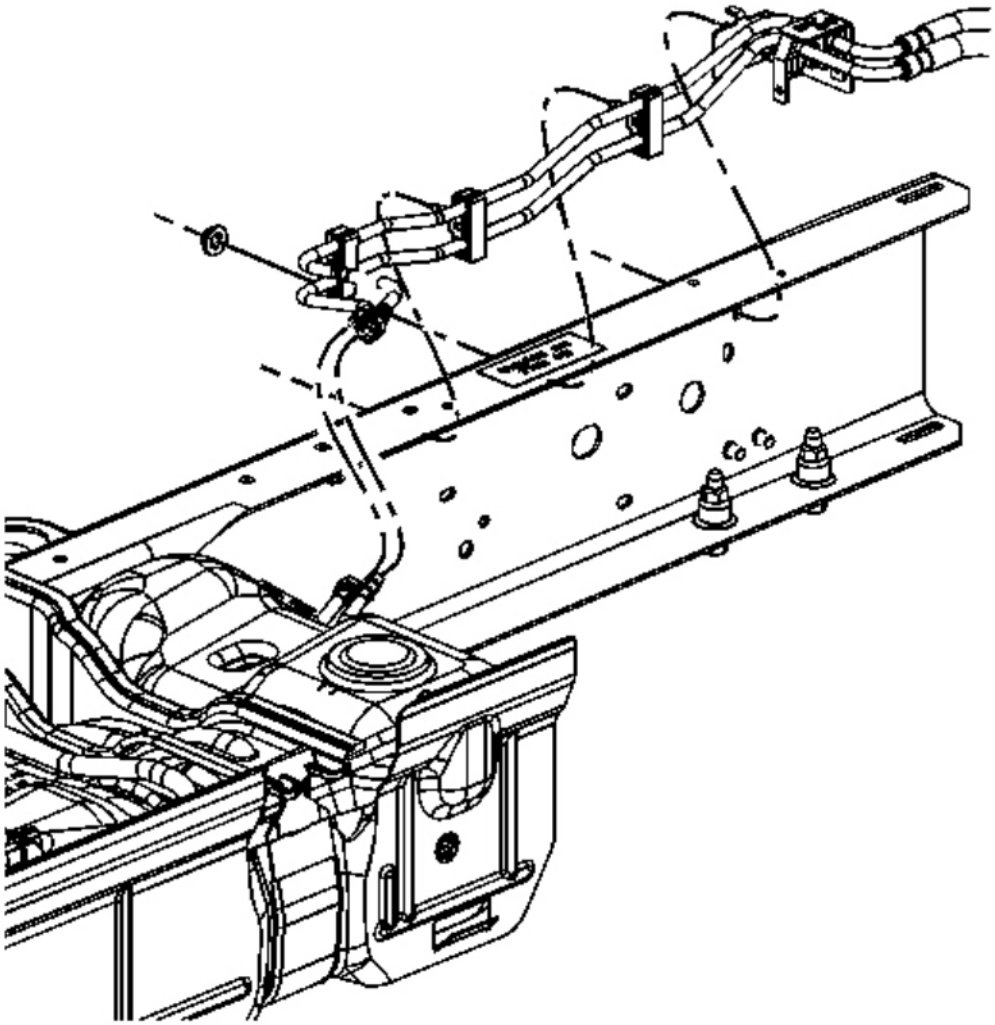

Fig. 325: View Of Fuel Feed & EVAP Lines At Fuel Tank
Courtesy of GENERAL MOTORS CORP.

25. Connect the chassis fuel feed and EVAP line quick connect fittings to the fuel tank line quick connect fittings. Refer to **Quick Connect Fitting Service - Plastic Collar**

cardiagn.com

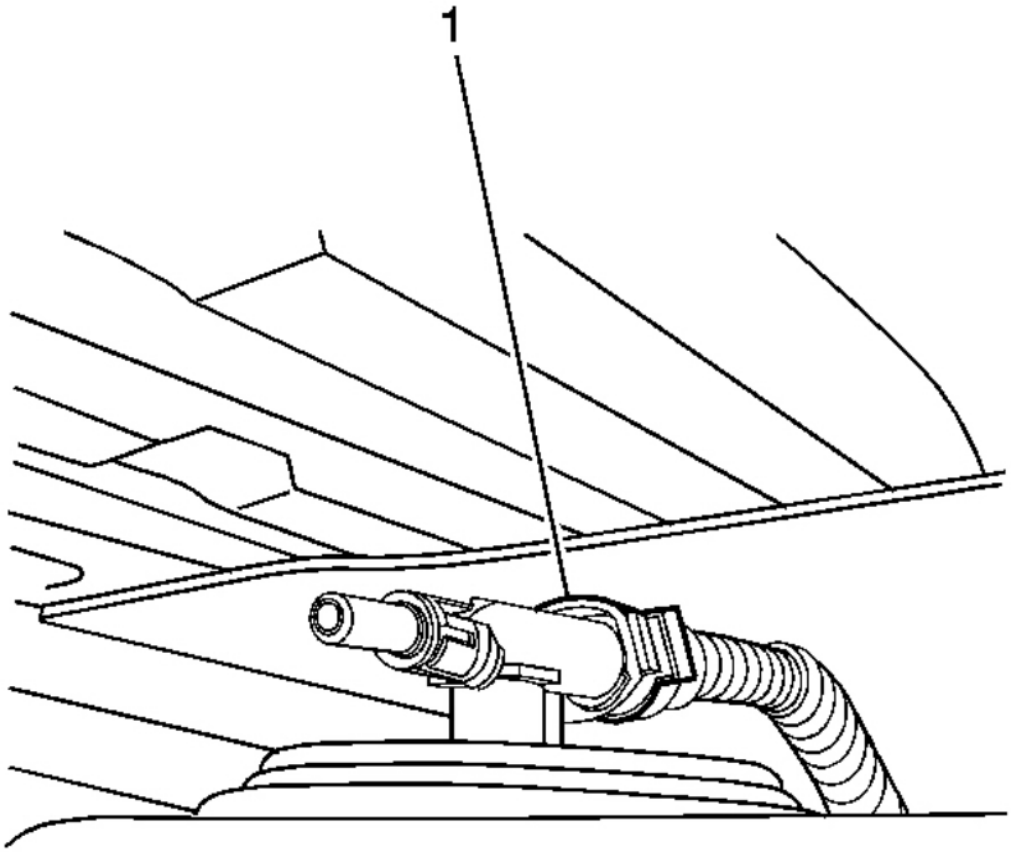

Fig. 326: View Of Vapor Line At Fuel Tank
Courtesy of GENERAL MOTORS CORP.

26. Connect the EVAP line quick connect fitting (1) to the fuel tank vent valve. Refer to **Quick Connect Fitting Service - Plastic Collar**.

cardiagn.com

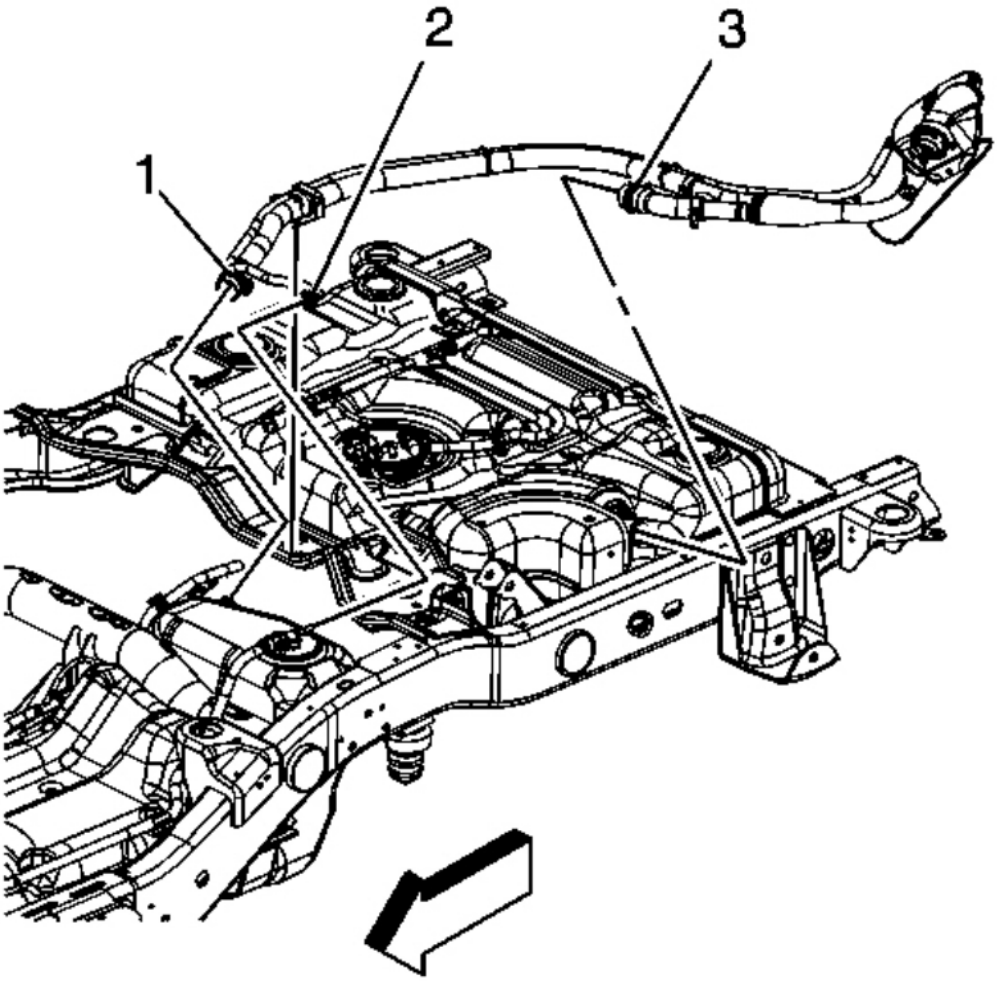

Fig. 327: View Of Fuel Hoses & Clamp
Courtesy of GENERAL MOTORS CORP.

27. Connect the fill pipe EVAP line quick connect fitting (2) to the fuel tank vent valve. Refer to **Quick Connect Fitting Service - Plastic Collar**.
28. Install the fuel fill hose to the fuel tank.
29. Tighten the fuel fill hose clamp at the fuel tank.

    Tighten: Tighten the clamp to 2.5 N.m (22 lb in).

30. Lower the vehicle.

cardiagn.com

31. Refill the fuel tank.
32. Install the fuel fill cap.
33. Connect the negative battery cable. Refer to **Battery Negative Cable Disconnection and Connection** .
34. Use the following procedure in order to inspect for leaks:
    1. Turn the ignition ON, with the engine OFF, for 2 seconds.
    2. Turn the ignition OFF for 10 seconds.
    3. Turn the ignition ON, with the engine OFF.
    4. Inspect for fuel leaks.
35. Install the intake manifold sight shield. Refer to **Upper Intake Manifold Sight Shield Replacement** .

FUEL TANK PRESSURE SENSOR REPLACEMENT (1500 LWB - 117.3L (31 GAL) TANK + E85)

Removal Procedure

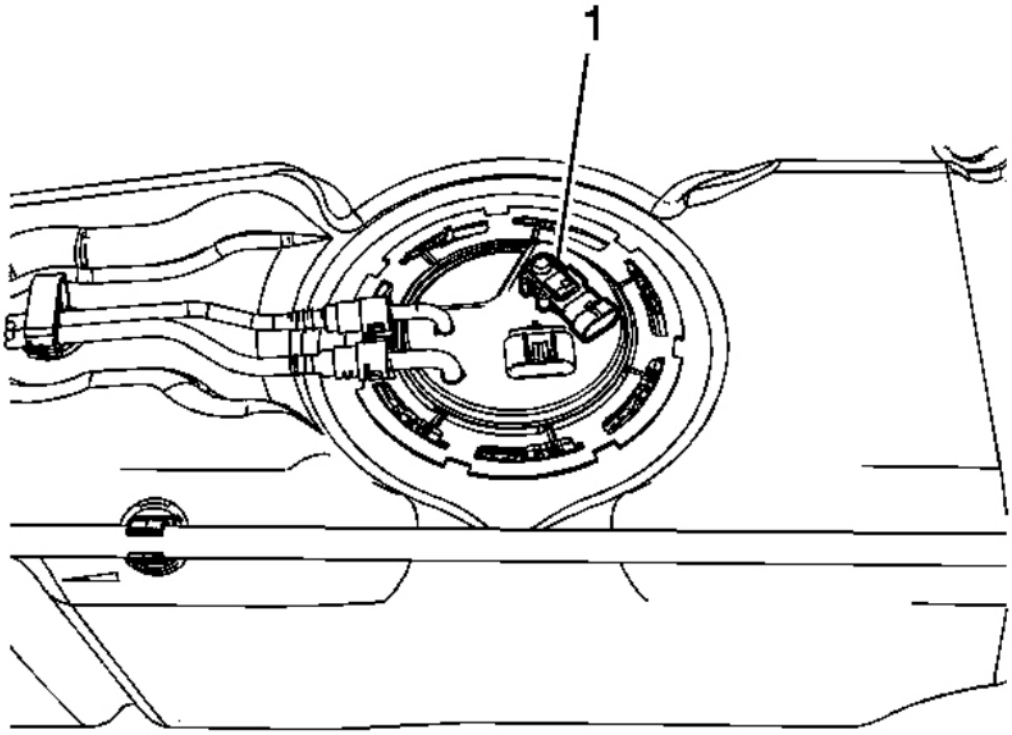

Fig. 328: View Of Fuel Tank Pressure Sensor
Courtesy of GENERAL MOTORS CORP.

cardiagn.com

1. Remove the fuel tank. Refer to **Fuel Tank Replacement (1500 LWB - 117.3L (31 gal) Tank)** or **Fuel Tank Replacement (1500 LWB - 117.3L (31 gal) Tank + E85)** or **Fuel Tank Replacement (1500 SWB - 98.4L (26 gal) Tank)** or **Fuel Tank Replacement (1500 SWB - 98.4L (26 gal) Tank + E85)** or **Fuel Tank Replacement (2500 LWB - 43.5L (11.5 gal) Tank-Rear)** or **Fuel Tank Replacement (2500 LWB - 98.4L (26 gal) Tank-Front)**.
2. Using a slight rocking motion while pulling straight up, remove the fuel tank pressure sensor (1).

Installation Procedure

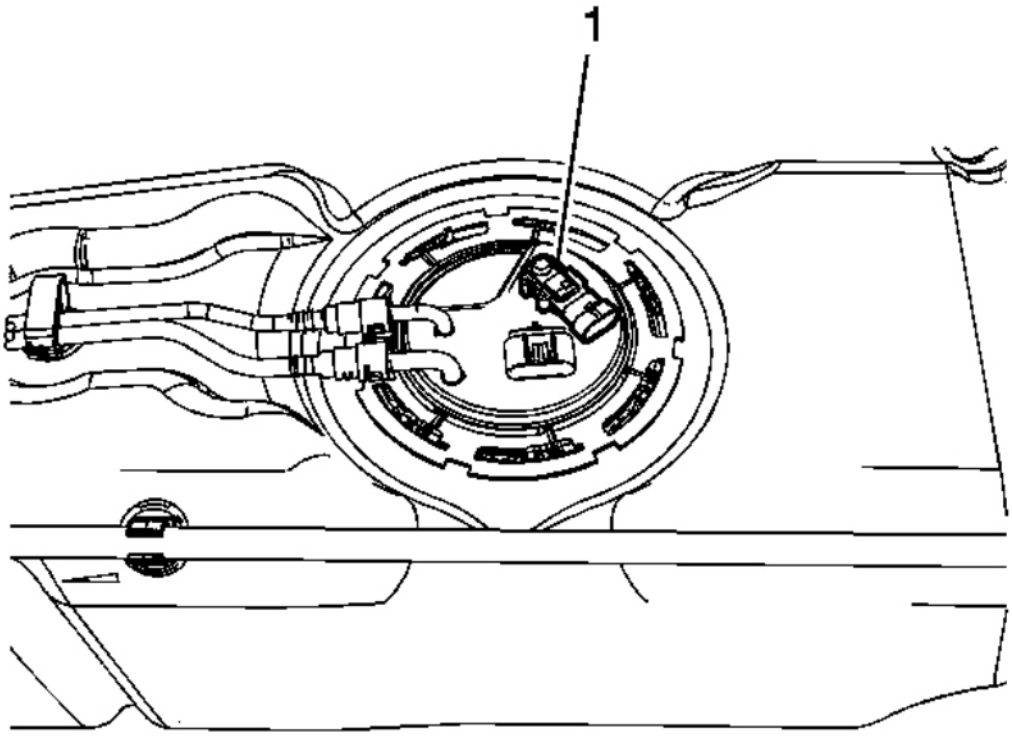

Fig. 329: View Of Fuel Tank Pressure Sensor
Courtesy of GENERAL MOTORS CORP.

1. Install the fuel tank pressure sensor (1).
2. Install the fuel tank. Refer to **Fuel Tank Replacement (1500 LWB - 117.3L (31 gal) Tank)** or **Fuel Tank Replacement (1500 LWB - 117.3L (31 gal) Tank + E85)** or **Fuel Tank Replacement (1500 SWB - 98.4L (26 gal) Tank)** or **Fuel Tank Replacement (1500 SWB - 98.4L (26 gal) Tank + E85)** or **Fuel Tank Replacement (2500 LWB - 43.5L (11.5 gal) Tank-Rear)** or **Fuel Tank Replacement (2500 LWB - 98.4L (26 gal) Tank-Front)**.

cardiagn.com

FUEL TANK PRESSURE SENSOR REPLACEMENT (1500 SWB - 98.4L (26 GAL) TANK + E85)

Removal Procedure

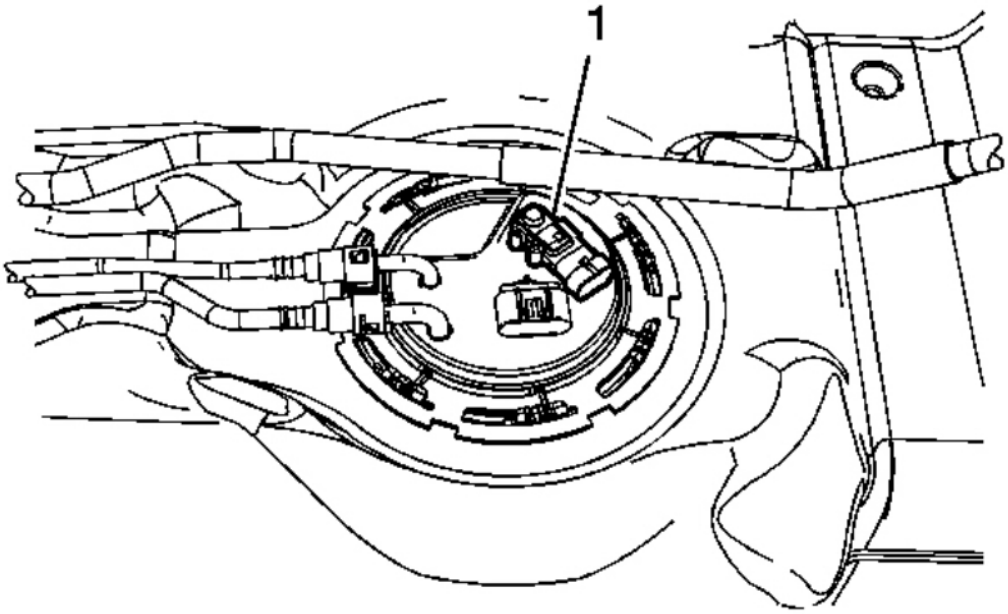

Fig. 330: View Of Fuel Tank Pressure Sensor
Courtesy of GENERAL MOTORS CORP.

1. Remove the fuel tank. Refer to **Fuel Tank Replacement (1500 LWB - 117.3L (31 gal) Tank)** or **Fuel Tank Replacement (1500 LWB - 117.3L (31 gal) Tank + E85)** or **Fuel Tank Replacement (1500 SWB - 98.4L (26 gal) Tank)** or **Fuel Tank Replacement (1500 SWB - 98.4L (26 gal) Tank + E85)** or **Fuel Tank Replacement (2500 LWB - 43.5L (11.5 gal) Tank-Rear)** or **Fuel Tank Replacement (2500 LWB - 98.4L (26 gal) Tank-Front)**.
2. Disconnect the evaporative emission (EVAP) line quick connect fitting from the vent valve and reposition the line out of the way. Refer to **Quick Connect Fitting Service - Plastic Collar**.
3. Using a slight rocking motion while pulling straight up, remove the fuel tank pressure sensor (1).

Installation Procedure

cardiagn.com

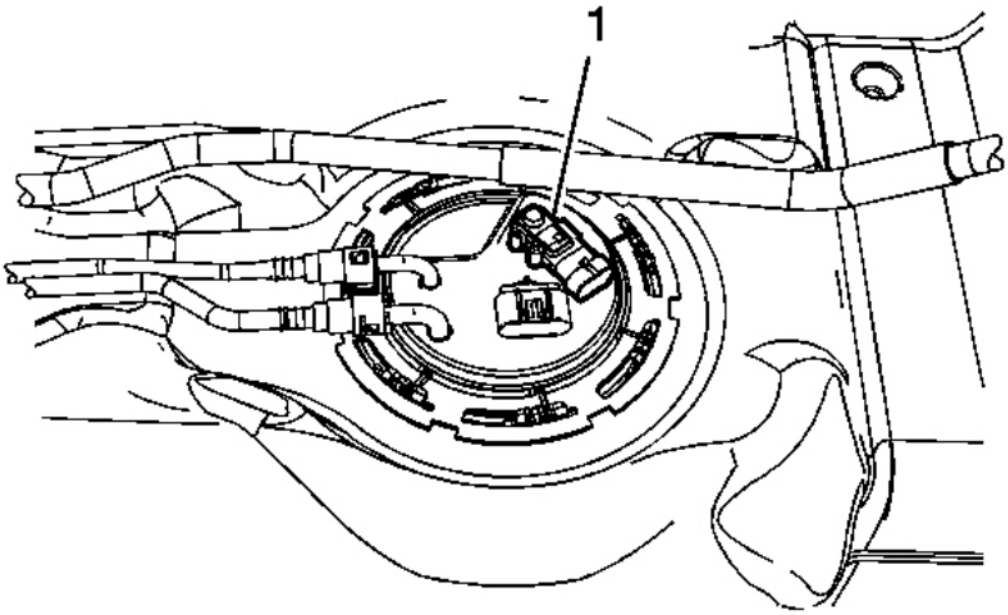

Fig. 331: View Of Fuel Tank Pressure Sensor
Courtesy of GENERAL MOTORS CORP.

1. Install the fuel tank pressure sensor (1).
2. Position the EVAP line and connect the EVAP line quick connect fitting to the vent valve. Refer to **Quick Connect Fitting Service - Plastic Collar**.
3. Install the fuel tank. Refer to **Fuel Tank Replacement (1500 LWB - 117.3L (31 gal) Tank)** or **Fuel Tank Replacement (1500 LWB - 117.3L (31 gal) Tank + E85)** or **Fuel Tank Replacement (1500 SWB - 98.4L (26 gal) Tank)** or **Fuel Tank Replacement (1500 SWB - 98.4L (26 gal) Tank + E85)** or **Fuel Tank Replacement (2500 LWB - 43.5L (11.5 gal) Tank-Rear)** or **Fuel Tank Replacement (2500 LWB - 98.4L (26 gal) Tank-Front)**.

FUEL TANK PRESSURE SENSOR REPLACEMENT (1500 SERIES)

Removal Procedure

cardiagn.com

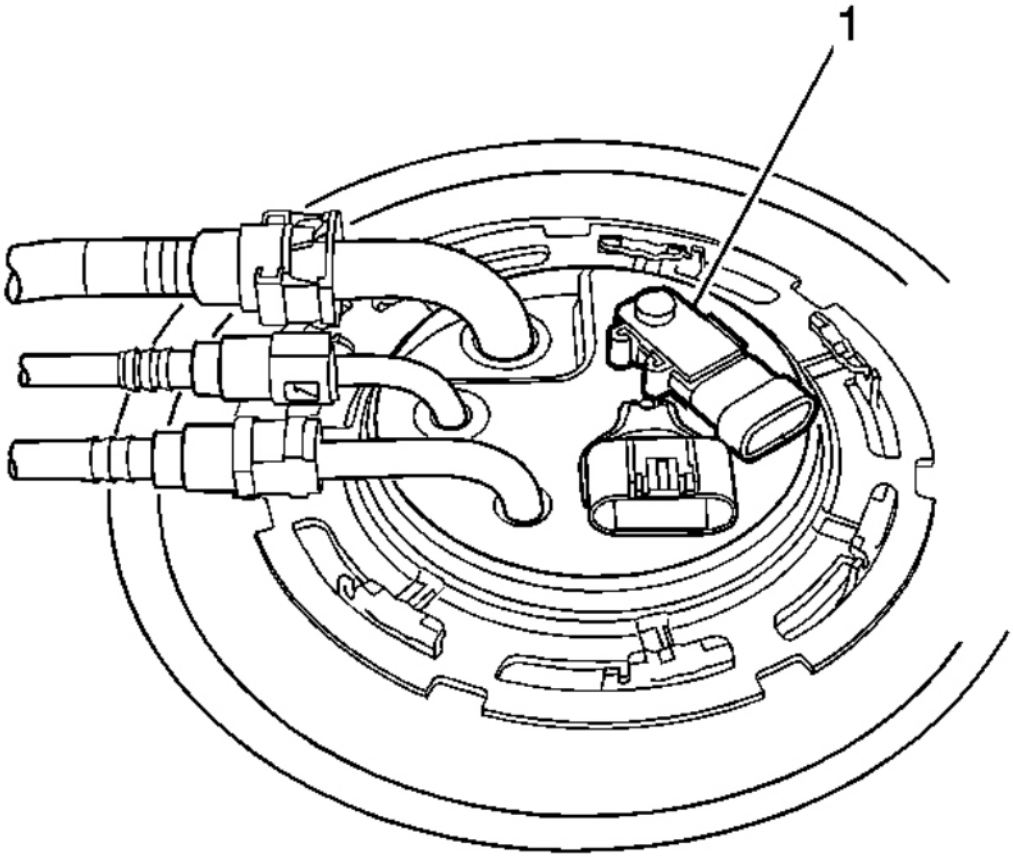

Fig. 332: View Of Fuel Tank Pressure Sensor (1500 Series)
Courtesy of GENERAL MOTORS CORP.

1. Remove the fuel tank. Refer to **Fuel Tank Replacement (1500 LWB - 117.3L (31 gal) Tank)** or **Fuel Tank Replacement (1500 LWB - 117.3L (31 gal) Tank + E85)** or **Fuel Tank Replacement (1500 SWB - 98.4L (26 gal) Tank)** or **Fuel Tank Replacement (1500 SWB - 98.4L (26 gal) Tank + E85)** or **Fuel Tank Replacement (2500 LWB - 43.5L (11.5 gal) Tank-Rear)** or **Fuel Tank Replacement (2500 LWB - 98.4L (26 gal) Tank-Front)**.
2. Using a slight rocking motion while pulling straight up, remove the fuel tank pressure sensor (1).

Installation Procedure

cardiagn.com

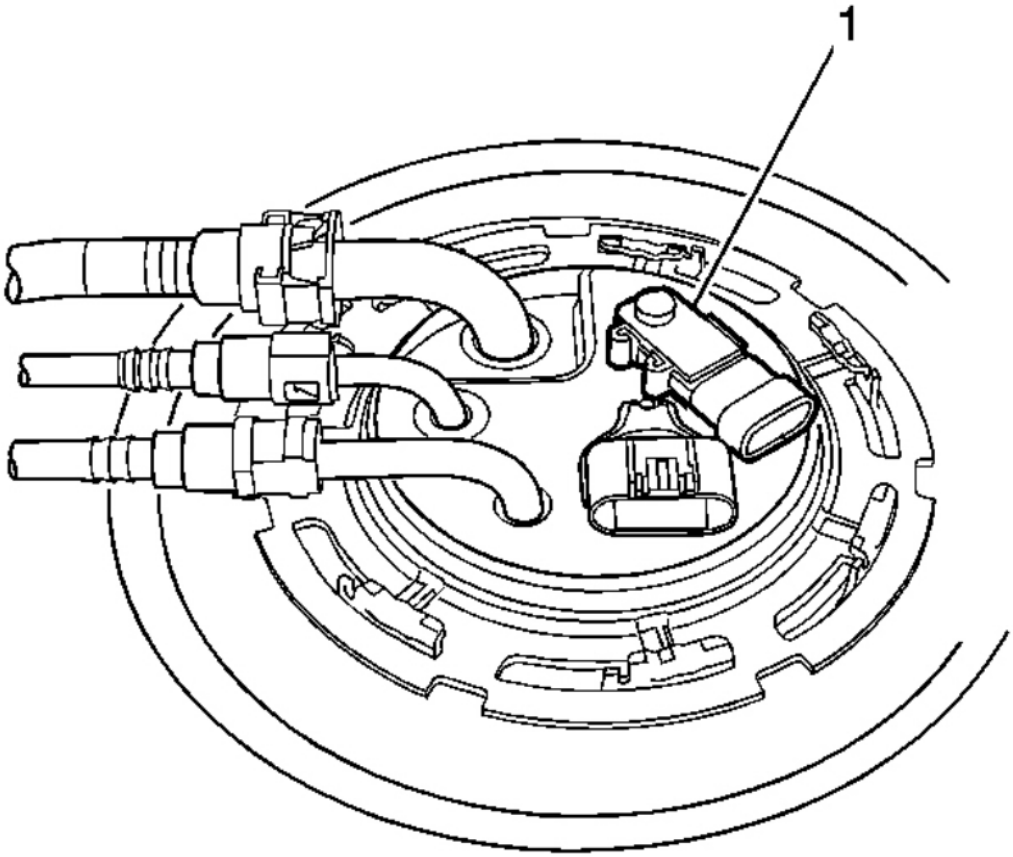

Fig. 333: View Of Fuel Tank Pressure Sensor (1500 Series)
Courtesy of GENERAL MOTORS CORP.

1. Install the fuel tank pressure sensor (1).
2. Install the fuel tank. Refer to **Fuel Tank Replacement (1500 LWB - 117.3L (31 gal) Tank)** or **Fuel Tank Replacement (1500 LWB - 117.3L (31 gal) Tank + E85)** or **Fuel Tank Replacement (1500 SWB - 98.4L (26 gal) Tank)** or **Fuel Tank Replacement (1500 SWB - 98.4L (26 gal) Tank + E85)** or **Fuel Tank Replacement (2500 LWB - 43.5L (11.5 gal) Tank-Rear)** or **Fuel Tank Replacement (2500 LWB - 98.4L (26 gal) Tank-Front)**.

FUEL TANK PRESSURE SENSOR REPLACEMENT (2500 SERIES)

Removal Procedure

IMPORTANT: Clean all fuel and evaporative emission (EVAP) line connections and surrounding areas prior to disconnecting the lines in order to avoid possible

cardiagn.com

fuel and/or EVAP system contamination.

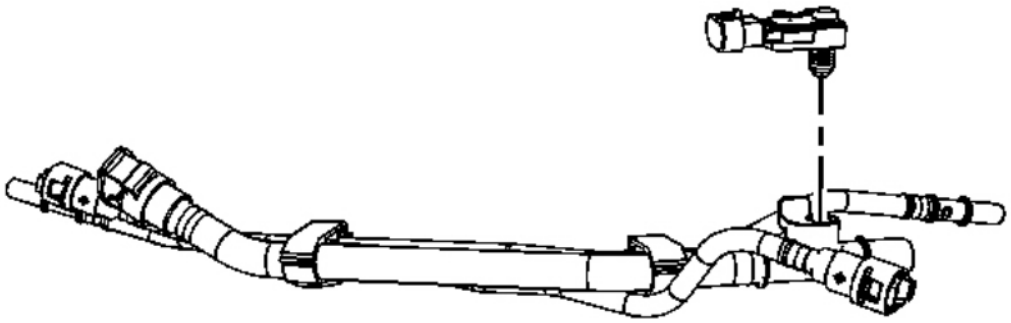

Fig. 334: View Of Fuel Tank Pressure Sensor (2500)
Courtesy of GENERAL MOTORS CORP.

1. Remove the intermediate fuel and evaporative emission (EVAP) lines. Refer to **Fuel Hose/Pipes Assembly Replacement (1500 LWB - 117.3L (31 gal) Tank)** or **Fuel Hose/Pipes Assembly Replacement (1500 LWB - 117.3L (31 gal) Tank + E85)** or **Fuel Hose/Pipes Assembly Replacement (1500 SWB - 98.4L (26 gal) Tank)** or **Fuel Hose/Pipes Assembly Replacement (1500 SWB - 98.4L (26 gal) Tank + E85)**.
2. Gently pry straight up, in order to remove the fuel pressure sensor.

Installation Procedure

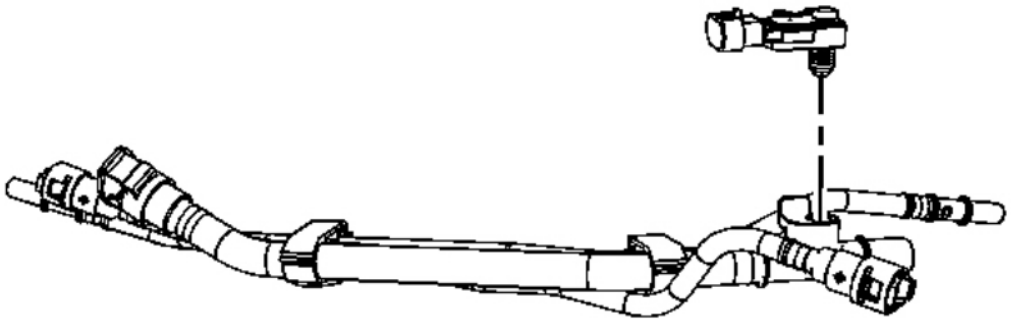

cardiagn.com

Fig. 335: View Of Fuel Tank Pressure Sensor (2500)
Courtesy of GENERAL MOTORS CORP.

1. Lubricate the seal on the fuel pressure sensor.
2. Press the fuel pressure sensor into the line.
3. Install the intermediate fuel and EVAP lines. Refer to **Fuel Hose/Pipes Assembly Replacement (1500 LWB - 117.3L (31 gal) Tank)** or **Fuel Hose/Pipes Assembly Replacement (1500 LWB - 117.3L (31 gal) Tank + E85)** or **Fuel Hose/Pipes Assembly Replacement (1500 SWB - 98.4L (26 gal) Tank)** or **Fuel Hose/Pipes Assembly Replacement (1500 SWB - 98.4L (26 gal) Tank + E85)**.

FUEL TANK PUMP MODULE REPLACEMENT (1500 LWB - 117.3L (31 GAL) TANK + E85)

Tools Required

J 45722 Fuel Sender Lock Ring Wrench. See **Special Tools**.

Removal Procedure

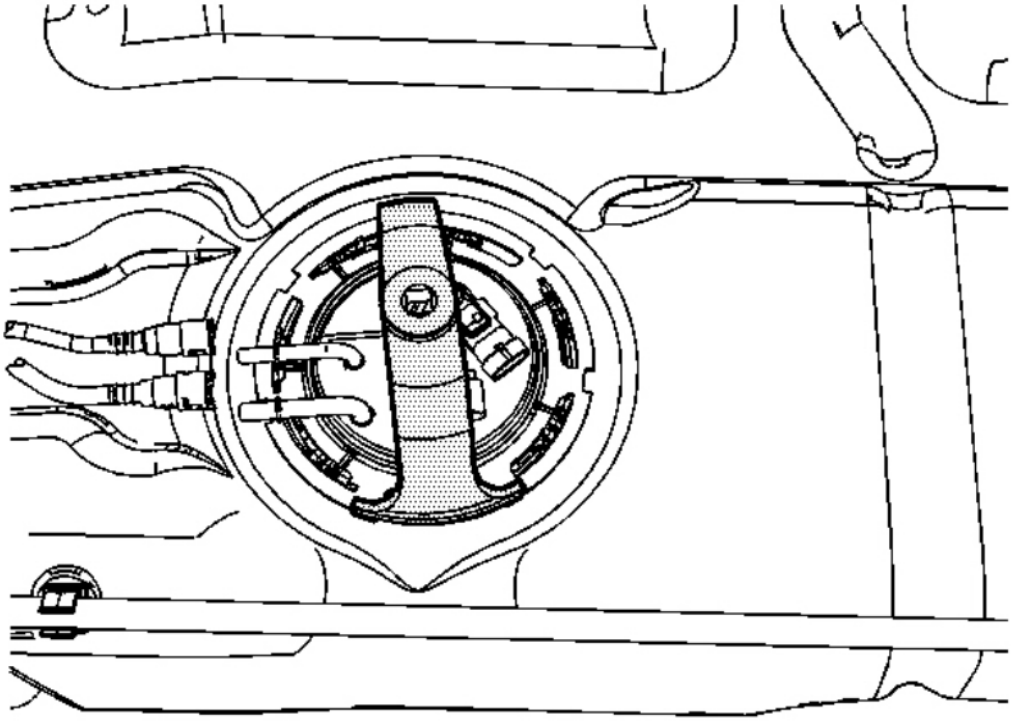

Fig. 336: View of Special Tool & Lock Ring
Courtesy of GENERAL MOTORS CORP.

cardiagn.com

1. Remove the fuel tank. Refer to **Fuel Tank Replacement (1500 LWB - 117.3L (31 gal) Tank)** or **Fuel Tank Replacement (1500 LWB - 117.3L (31 gal) Tank + E85)** or **Fuel Tank Replacement (1500 SWB - 98.4L (26 gal) Tank)** or **Fuel Tank Replacement (1500 SWB - 98.4L (26 gal) Tank + E85)** or **Fuel Tank Replacement (2500 LWB - 43.5L (11.5 gal) Tank-Rear)** or **Fuel Tank Replacement (2500 LWB - 98.4L (26 gal) Tank-Front)**.
2. Disconnect fuel and evaporative emission (EVAP) lines from the fuel tank module. Refer to **Quick Connect Fitting Service - Plastic Collar**.

NOTE: **Avoid damaging the lock ring. Use only J-45722 to prevent damage to the lock ring.**

NOTE: **Do Not handle the fuel sender assembly by the fuel pipes. The amount of leverage generated by handling the fuel pipes could damage the joints.**

IMPORTANT: **Do NOT use impact tools. Significant force will be required to release the lock ring. The use of a hammer and screwdriver is not recommended. Secure the fuel tank in order to prevent fuel tank rotation.**

3. Using the **J 45722** and a long breaker bar, rotate the ring clockwise unlocking the fuel tank module lock ring. See **Special Tools**.
4. Remove the lock ring.

cardiagn.com

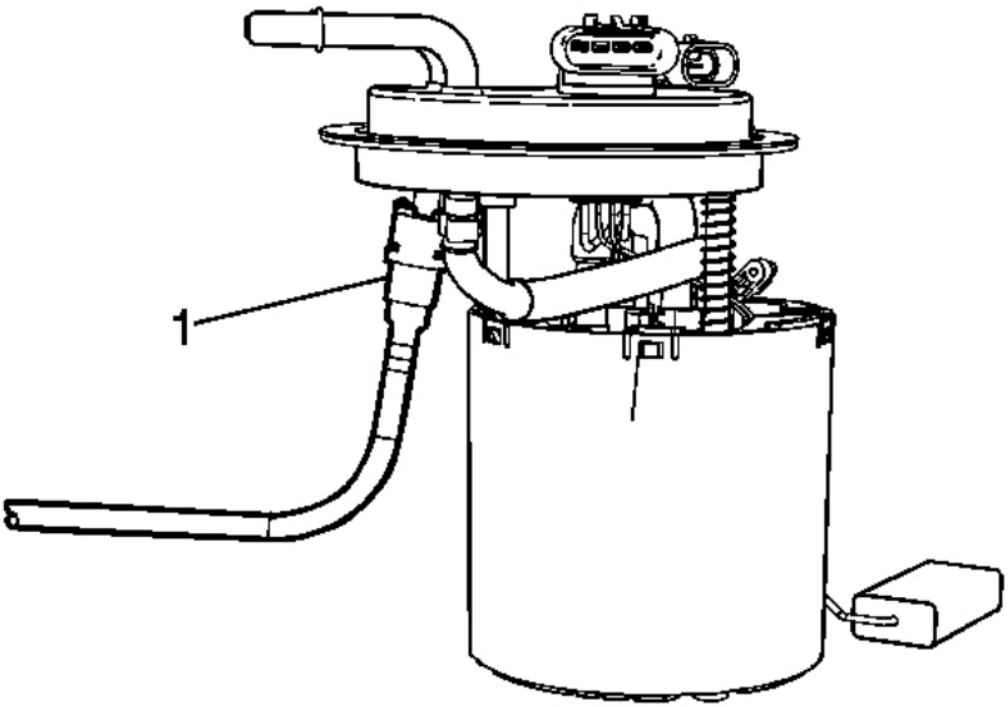

Fig. 337: View Of Fuel Tank Module & Quick Connect Fitting
Courtesy of GENERAL MOTORS CORP.

5. Carefully lift the module from the fuel tank, enough to access the quick connect fitting (1) under the module cover. Disconnect the quick connect fitting. Refer to **Quick Connect Fitting Service - Plastic Collar**.
6. Remove the fuel tank module.
7. Remove and discard the fuel tank module seal.

cardiagn.com

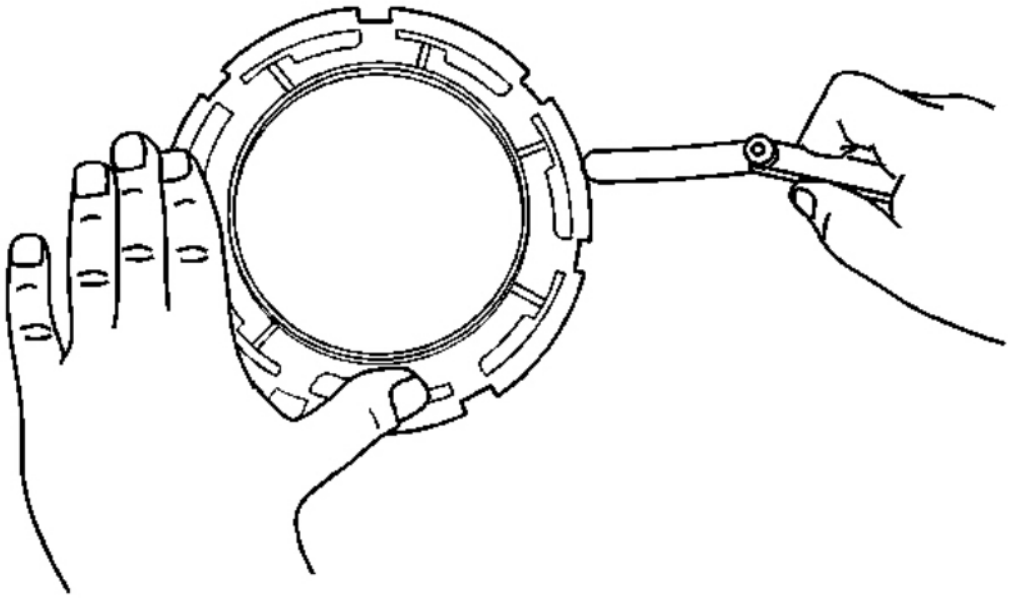

Fig. 338: Checking Lock Ring For Flatness
Courtesy of GENERAL MOTORS CORP.

IMPORTANT:

- **Some lock rings were manufactured with "DO NOT REUSE" stamped into them. These lock rings may be reused if they are not damaged or warped.**
- **Inspect the lock ring for damage due to improper removal or installation procedures. If damage is found, install a NEW lock ring.**
- **Check the lock ring for flatness.**

8. Place the lock ring on a flat surface. Measure the clearance between the lock ring and the flat surface using a feeler gage at 7 points.
9. If warpage is less than 0.41 mm (0.016 in), the lock ring does not require replacement.
10. If warpage is greater than 0.41 mm (0.016 in), the lock ring must be replaced.

Installation Procedure

cardiagn.com

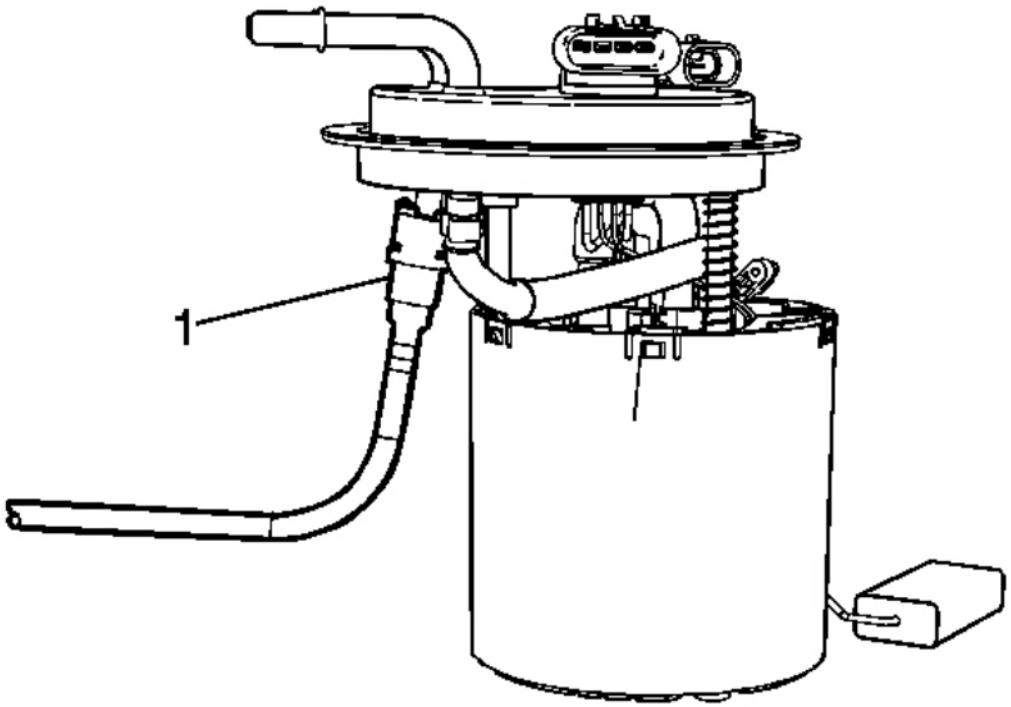

Fig. 339: View Of Fuel Tank Module & Quick Connect Fitting
Courtesy of GENERAL MOTORS CORP.

1. Install a NEW fuel tank module seal onto the fuel tank.
2. Pull the vent line in the fuel tank up as far as possible for ease of installation.
3. Position the fuel tank module part way into the fuel tank.
4. Connect the quick connect fitting (1) to the module cover. Refer to **Quick Connect Fitting Service - Plastic Collar**.
5. Install the fuel tank module into the fuel tank.
6. Place the lock ring into position.

cardiagn.com

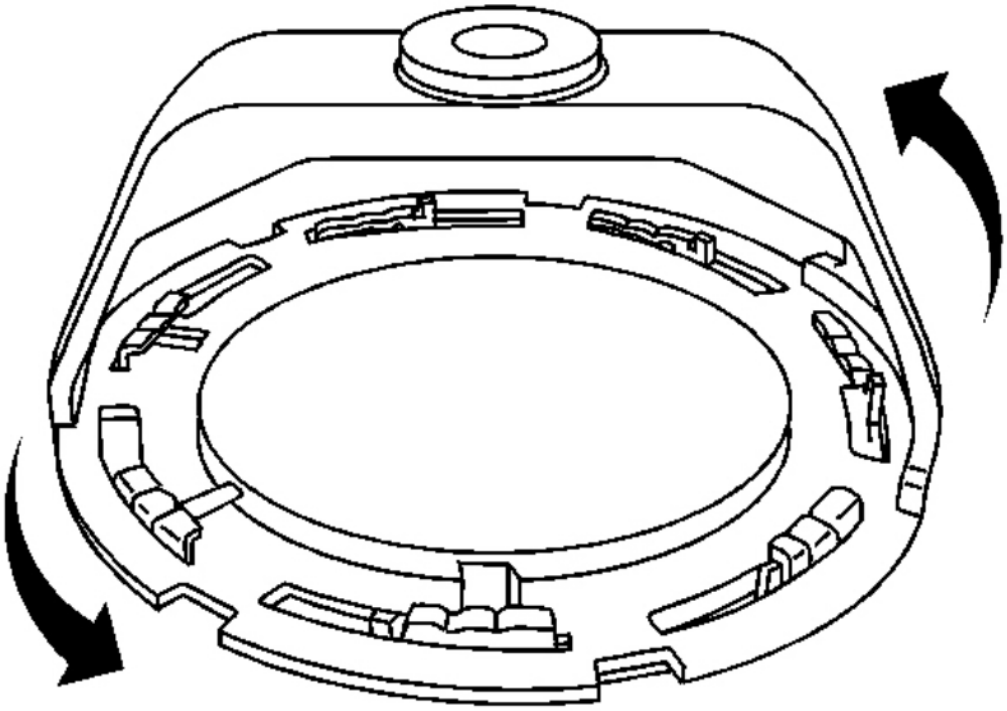

Fig. 340: Identifying Lock Ring
Courtesy of GENERAL MOTORS CORP.

IMPORTANT: Always replace the fuel module seal when installing the fuel module. Replace the lock ring if necessary. DO NOT apply any type of lubrication in the seal groove.
Ensure the lock ring is installed with the correct side facing upward. A correctly installed lock ring will only turn in a clockwise direction.

7. Rotate the lock ring counterclockwise using the **J 45722** until fully seated. See **Special Tools**.
8. Connect the fuel and EVAP lines to the fuel tank module. Refer to **Quick Connect Fitting Service - Plastic Collar**.
9. Install the fuel tank. Refer to **Fuel Tank Replacement (1500 LWB - 117.3L (31 gal) Tank)** or **Fuel Tank Replacement (1500 LWB - 117.3L (31 gal) Tank + E85)** or **Fuel Tank Replacement (1500 SWB - 98.4L (26 gal) Tank)** or **Fuel Tank Replacement (1500 SWB - 98.4L (26 gal) Tank + E85)** or **Fuel Tank Replacement (2500 LWB - 43.5L (11.5 gal) Tank-Rear)** or **Fuel Tank Replacement (2500 LWB - 98.4L (26 gal) Tank-Front)**.

FUEL TANK PUMP MODULE REPLACEMENT (1500 SWB - 98.4L (26 GAL) TANK + E85)

cardiagn.com

Tools Required

J 45722 Fuel Sender Lock Ring Wrench. See **Special Tools**.

Removal Procedure

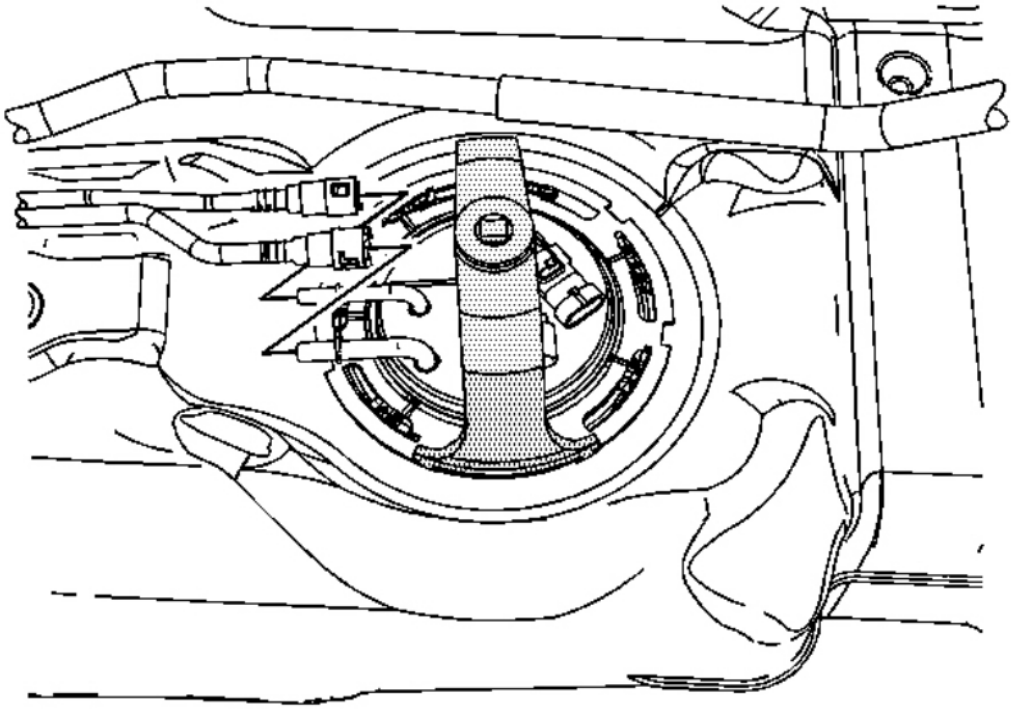

Fig. 341: View of Special Tool & Lock Ring
Courtesy of GENERAL MOTORS CORP.

1. Remove the fuel tank. Refer to **Fuel Tank Replacement (1500 LWB - 117.3L (31 gal) Tank)** or **Fuel Tank Replacement (1500 LWB - 117.3L (31 gal) Tank + E85)** or **Fuel Tank Replacement (1500 SWB - 98.4L (26 gal) Tank)** or **Fuel Tank Replacement (1500 SWB - 98.4L (26 gal) Tank + E85)** or **Fuel Tank Replacement (2500 LWB - 43.5L (11.5 gal) Tank-Rear)** or **Fuel Tank Replacement (2500 LWB - 98.4L (26 gal) Tank-Front)**.
2. Disconnect fuel and evaporative emission (EVAP) lines from the fuel tank module. Refer to **Quick Connect Fitting Service - Plastic Collar**.
3. Disconnect the EVAP vent valve line quick connect fitting at the vent valve and reposition the line out of the way. Refer to **Quick Connect Fitting Service - Plastic Collar**.

NOTE: Avoid damaging the lock ring. Use only J-45722 to prevent damage to the

cardiagn.com

lock ring.

NOTE: **Do Not handle the fuel sender assembly by the fuel pipes. The amount of leverage generated by handling the fuel pipes could damage the joints.**

IMPORTANT: **Do NOT use impact tools. Significant force will be required to release the lock ring. The use of a hammer and screwdriver is not recommended. Secure the fuel tank in order to prevent fuel tank rotation.**

4. Using the **J 45722** and a long breaker bar, rotate the ring clockwise unlocking the fuel tank module lock ring. See **Special Tools**.
5. Remove the lock ring.

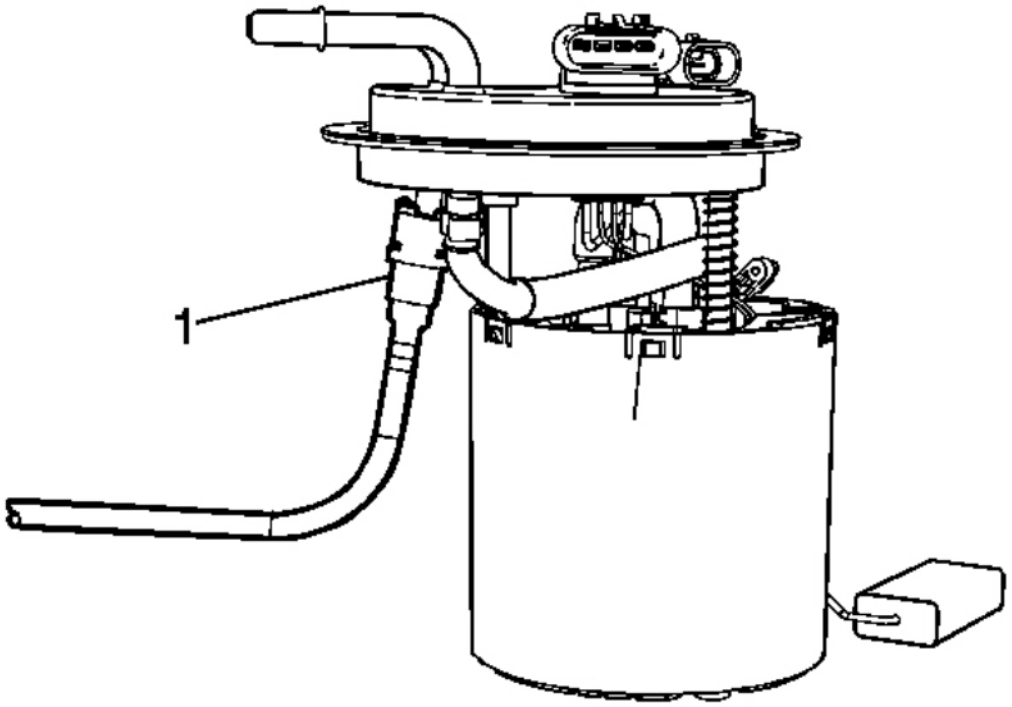

Fig. 342: View Of Fuel Tank Module & Quick Connect Fitting
Courtesy of GENERAL MOTORS CORP.

6. Carefully lift the module from the fuel tank enough to access the quick connect fitting (1) under the module cover. Disconnect the quick connect fitting. Refer to **Quick Connect Fitting Service - Plastic Collar**.

cardiagn.com

7. Remove the fuel tank module.
8. Remove and discard the fuel tank module seal.

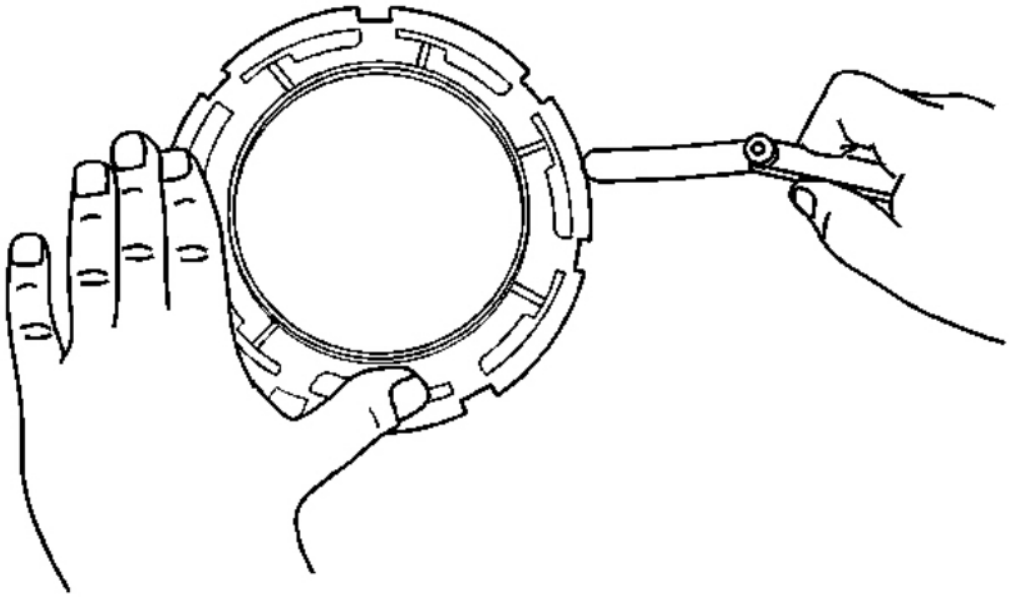

Fig. 343: Checking Lock Ring For Flatness
Courtesy of GENERAL MOTORS CORP.

IMPORTANT:

- **Some lock rings were manufactured with "DO NOT REUSE" stamped into them. These lock rings may be reused if they are not damaged or warped.**
- **Inspect the lock ring for damage due to improper removal or installation procedures. If damage is found, install a NEW lock ring.**
- **Check the lock ring for flatness.**

9. Place the lock ring on a flat surface. Measure the clearance between the lock ring and the flat surface using a feeler gage at 7 points.
10. If warpage is less than 0.41 mm (0.016 in), the lock ring does not require replacement.
11. If warpage is greater than 0.41 mm (0.016 in), the lock ring must be replaced.

Installation Procedure

cardiagn.com

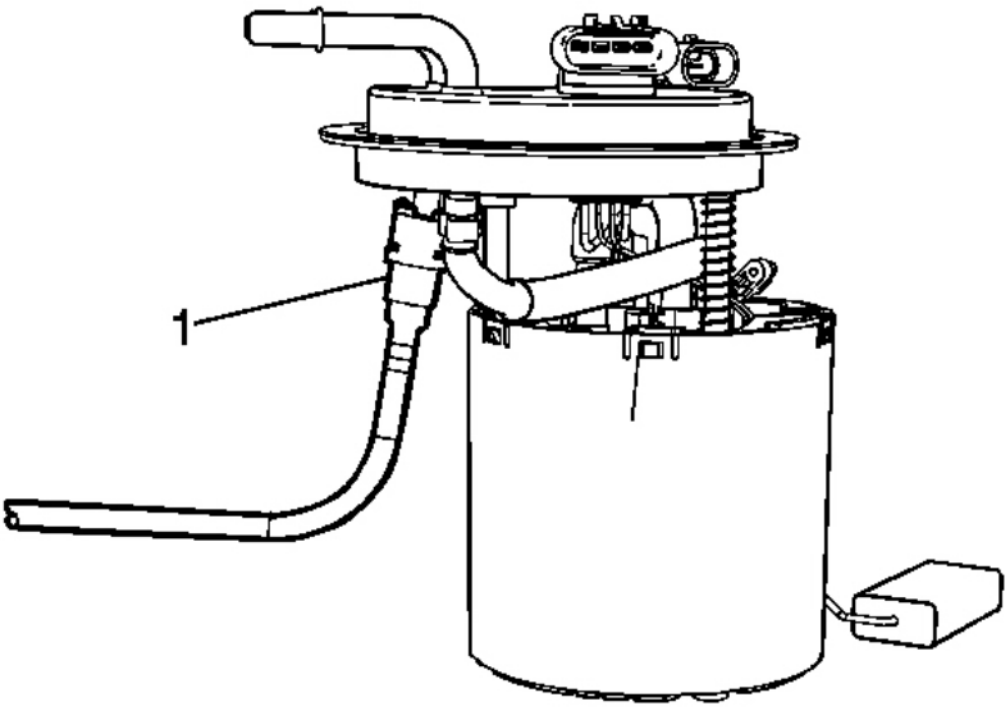

Fig. 344: View Of Fuel Tank Module & Quick Connect Fitting
Courtesy of GENERAL MOTORS CORP.

1. Install the NEW fuel tank module seal onto the fuel tank.
2. Pull the vent line in the fuel tank up as far as possible for ease of installation.
3. Position the fuel tank module part way into the fuel tank.
4. Connect the quick connect fitting (1) to the module cover. Refer to **Quick Connect Fitting Service - Plastic Collar**.
5. Install the fuel tank module into the fuel tank.
6. Place the lock ring into position.

cardiagn.com

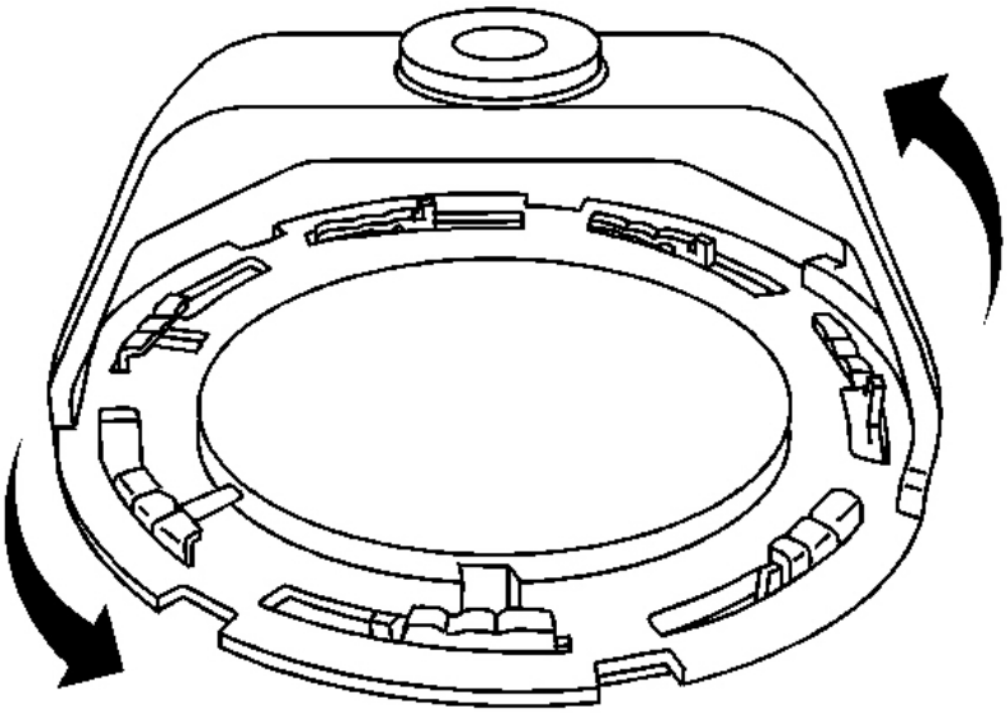

Fig. 345: Identifying Lock Ring
Courtesy of GENERAL MOTORS CORP.

IMPORTANT: Always replace the fuel module seal when installing the fuel module. Replace the lock ring if necessary. DO NOT apply any type of lubrication in the seal groove.
Ensure the lock ring is installed with the correct side facing upward. A correctly installed lock ring will only turn in a clockwise direction.

7. Rotate the lock ring counterclockwise using the **J 45722** until fully seated. See **Special Tools**.
8. Position the EVAP vent valve line and connect the EVAP vent valve line quick connect fitting to the vent valve. Refer to **Quick Connect Fitting Service - Plastic Collar**.
9. Connect the fuel and EVAP lines to the fuel tank module. Refer to **Quick Connect Fitting Service - Plastic Collar**.
10. Install the fuel tank. Refer to **Fuel Tank Replacement (1500 LWB - 117.3L (31 gal) Tank)** or **Fuel Tank Replacement (1500 LWB - 117.3L (31 gal) Tank + E85)** or **Fuel Tank Replacement (1500 SWB - 98.4L (26 gal) Tank)** or **Fuel Tank Replacement (1500 SWB - 98.4L (26 gal) Tank + E85)** or **Fuel Tank Replacement (2500 LWB - 43.5L (11.5 gal) Tank-Rear)** or **Fuel Tank Replacement (2500 LWB - 98.4L (26 gal) Tank-Front)**.

cardiagn.com

FUEL TANK PUMP MODULE REPLACEMENT (1500 SERIES)

Tools Required

J 45722 Fuel Sender Lock Ring Wrench. See **Special Tools**.

Removal Procedure

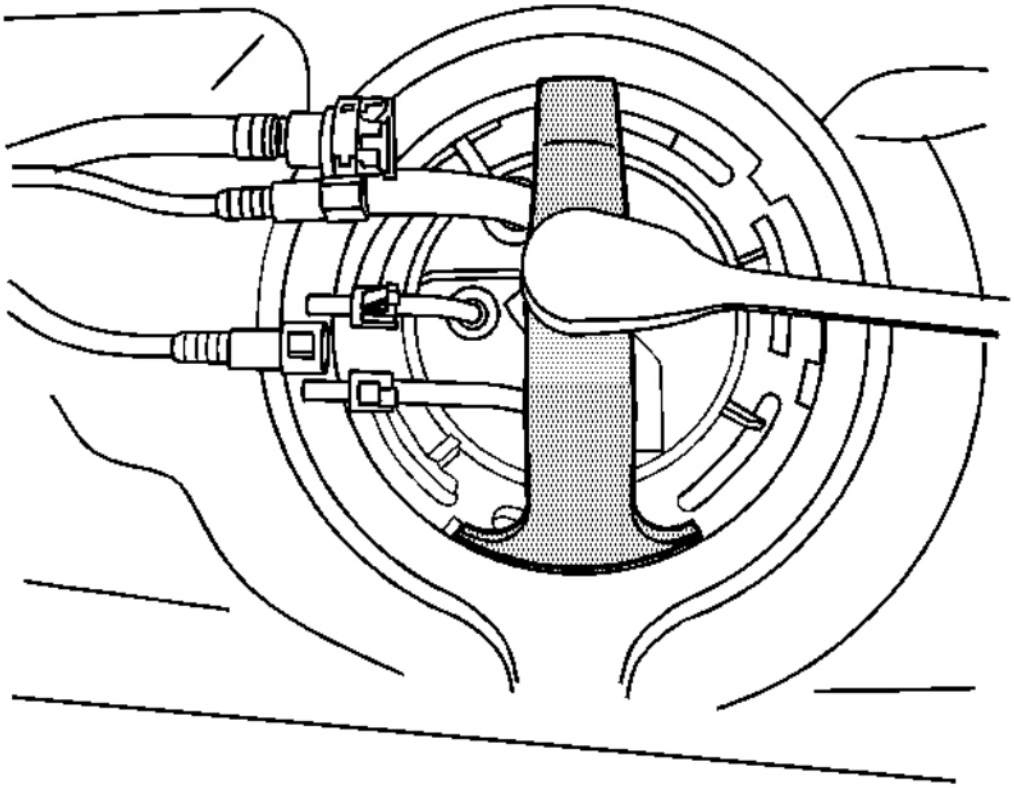

Fig. 346: Rotating Cam Lock Ring Using J 45722
Courtesy of GENERAL MOTORS CORP.

1. Remove the fuel tank. Refer to **Fuel Tank Replacement (1500 LWB - 117.3L (31 gal) Tank)** or **Fuel Tank Replacement (1500 LWB - 117.3L (31 gal) Tank + E85)** or **Fuel Tank Replacement (1500 SWB - 98.4L (26 gal) Tank)** or **Fuel Tank Replacement (1500 SWB - 98.4L (26 gal) Tank + E85)** or **Fuel Tank Replacement (2500 LWB - 43.5L (11.5 gal) Tank-Rear)** or **Fuel Tank Replacement (2500 LWB - 98.4L (26 gal) Tank-Front)**.
2. Disconnect fuel and evaporative emission (EVAP) lines from the fuel tank module. Refer to **Quick Connect Fitting Service - Plastic Collar**.

cardiagn.com

NOTE: **Avoid damaging the lock ring. Use only J-45722 to prevent damage to the lock ring.**

NOTE: **Do Not handle the fuel sender assembly by the fuel pipes. The amount of leverage generated by handling the fuel pipes could damage the joints.**

IMPORTANT: **Do NOT use impact tools. Significant force will be required to release the lock ring. The use of a hammer and screwdriver is not recommended. Secure the fuel tank in order to prevent fuel tank rotation.**

3. Using the **J 45722** and a long breaker bar, rotate the ring clockwise unlocking the fuel tank module lock ring. See **Special Tools**.
4. Remove the lock ring.

cardiagn.com

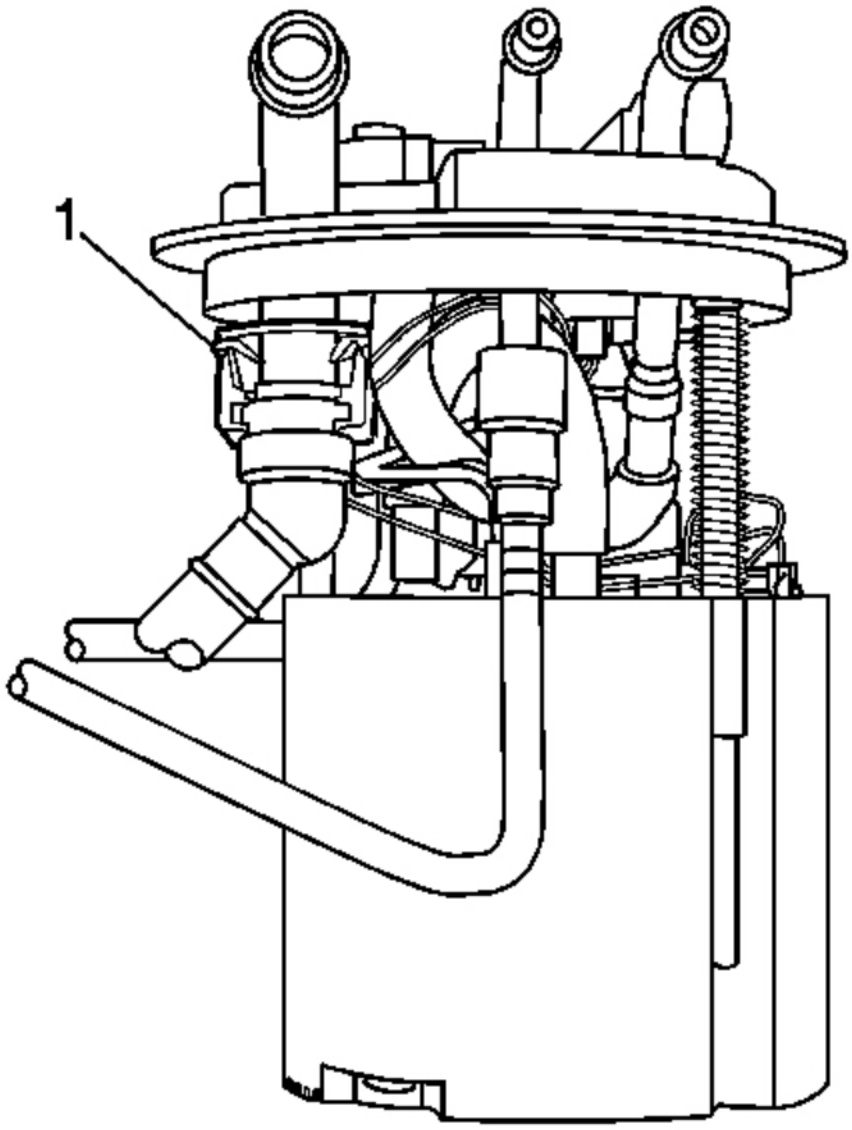

Fig. 347: View Of Quick Connect Fittings At Module Cover
Courtesy of GENERAL MOTORS CORP.

5. Carefully lift the module from the fuel tank enough to access the quick connect fittings (1) under the module cover. Disconnect the quick connect fittings. Refer to **Quick Connect Fitting Service - Plastic Collar**.
6. Remove the fuel tank module.

cardiagn.com

7. Remove and discard the fuel tank module seal.

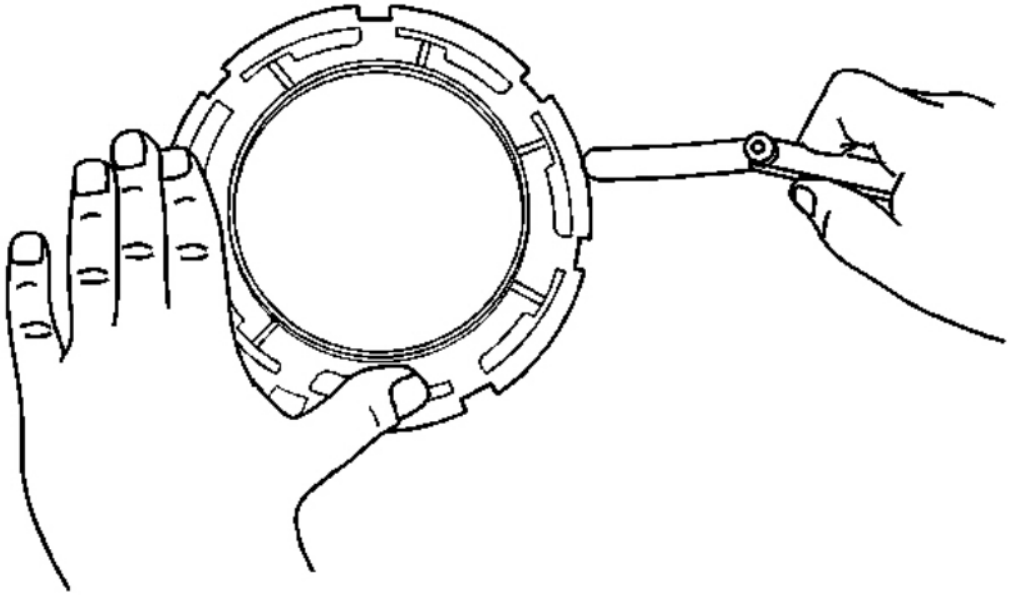

Fig. 348: Checking Lock Ring For Flatness
Courtesy of GENERAL MOTORS CORP.

IMPORTANT:

- **Some lock rings were manufactured with "DO NOT REUSE" stamped into them. These lock rings may be reused if they are not damaged or warped.**
- **Inspect the lock ring for damage due to improper removal or installation procedures. If damage is found, install a NEW lock ring.**
- **Check the lock ring for flatness.**

8. Place the lock ring on a flat surface. Measure the clearance between the lock ring and the flat surface using a feeler gage at 7 points.
9. If warpage is less than 0.41 mm (0.016 in), the lock ring does not require replacement.
10. If warpage is greater than 0.41 mm (0.016 in), the lock ring must be replaced.

Installation Procedure

cardiagn.com

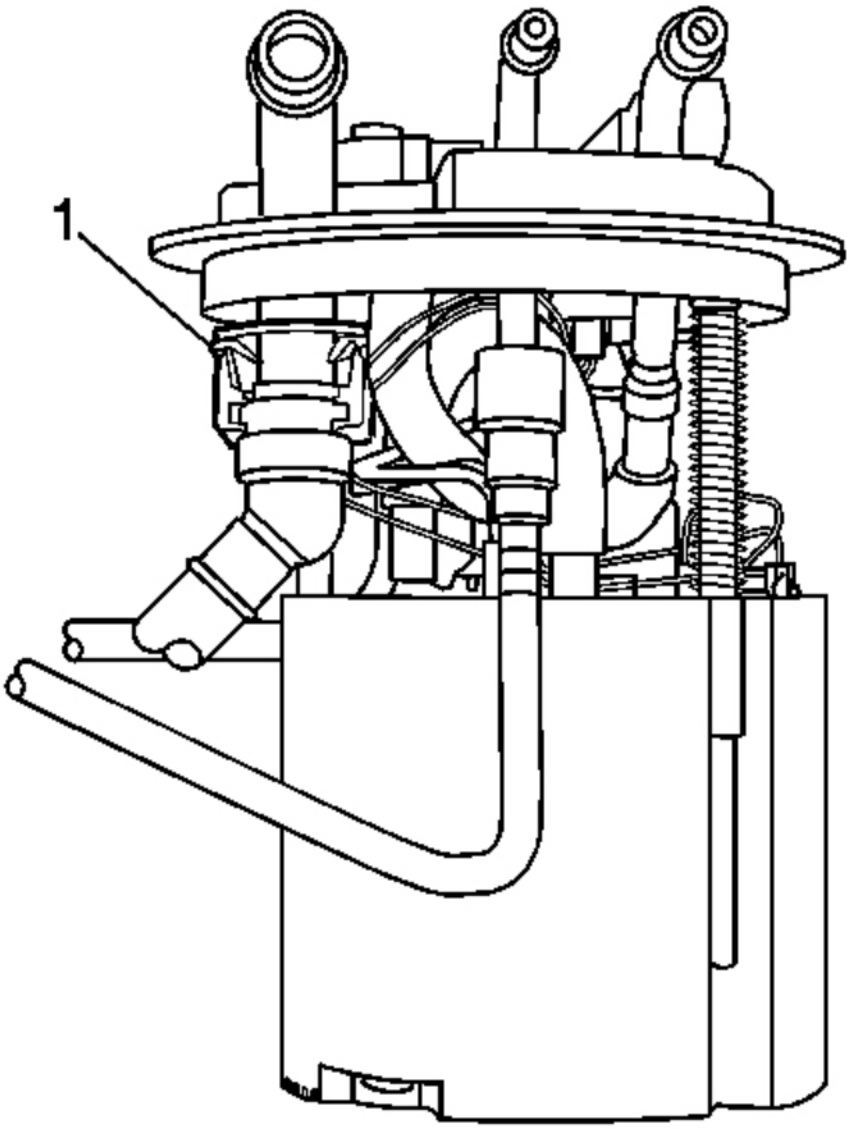

Fig. 349: View Of Quick Connect Fittings At Module Cover
Courtesy of GENERAL MOTORS CORP.

1. Install the NEW fuel tank module seal onto the fuel tank.
2. Pull the vent lines in the fuel tank up as far as possible for ease of installation.
3. Position the fuel tank module part way into the fuel tank.
4. Connect the quick connect fittings (1) to the module cover. Refer to **Quick Connect Fitting Service -**

cardiagn.com

Plastic Collar.

5. Install the fuel tank module into the fuel tank.
6. Place the lock ring into position.

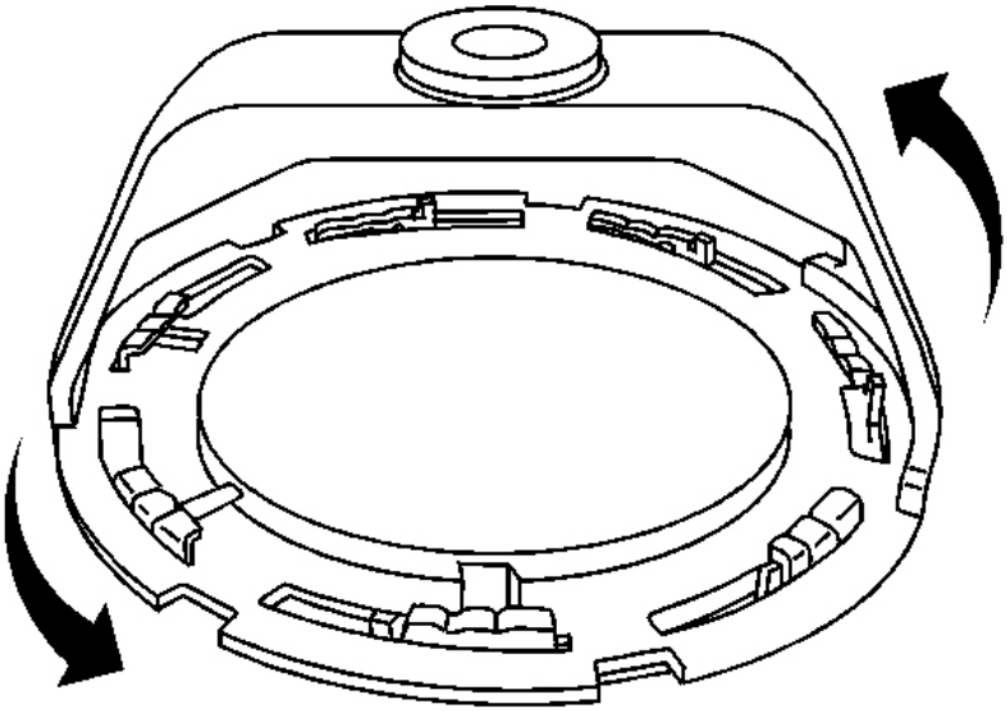

Fig. 350: Identifying Lock Ring
Courtesy of GENERAL MOTORS CORP.

IMPORTANT: Always replace the fuel module seal when installing the fuel module. Replace the lock ring if necessary. DO NOT apply any type of lubrication in the seal groove.
Ensure the lock ring is installed with the correct side facing upward. A correctly installed lock ring will only turn in a clockwise direction.

7. Rotate the lock ring counterclockwise using the **J 45722** until fully seated. See **Special Tools**.
8. Connect the fuel and EVAP lines to the fuel tank module. Refer to **Quick Connect Fitting Service - Plastic Collar**.
9. Install the fuel tank. Refer to **Fuel Tank Replacement (1500 LWB - 117.3L (31 gal) Tank)** or **Fuel Tank Replacement (1500 LWB - 117.3L (31 gal) Tank + E85)** or **Fuel Tank Replacement (1500 SWB - 98.4L (26 gal) Tank)** or **Fuel Tank Replacement (1500 SWB - 98.4L (26 gal) Tank + E85)** or

cardiagn.com

Fuel Tank Replacement (2500 LWB - 43.5L (11.5 gal) Tank-Rear) or **Fuel Tank Replacement (2500 LWB - 98.4L (26 gal) Tank-Front)**.

FUEL TANK PUMP MODULE REPLACEMENT (2500 LWB - 43.5L (11.5 GAL) TANK-REAR)

Tools Required

J 45722 Fuel Sender Lock Ring Wrench. See **Special Tools**.

Removal Procedure

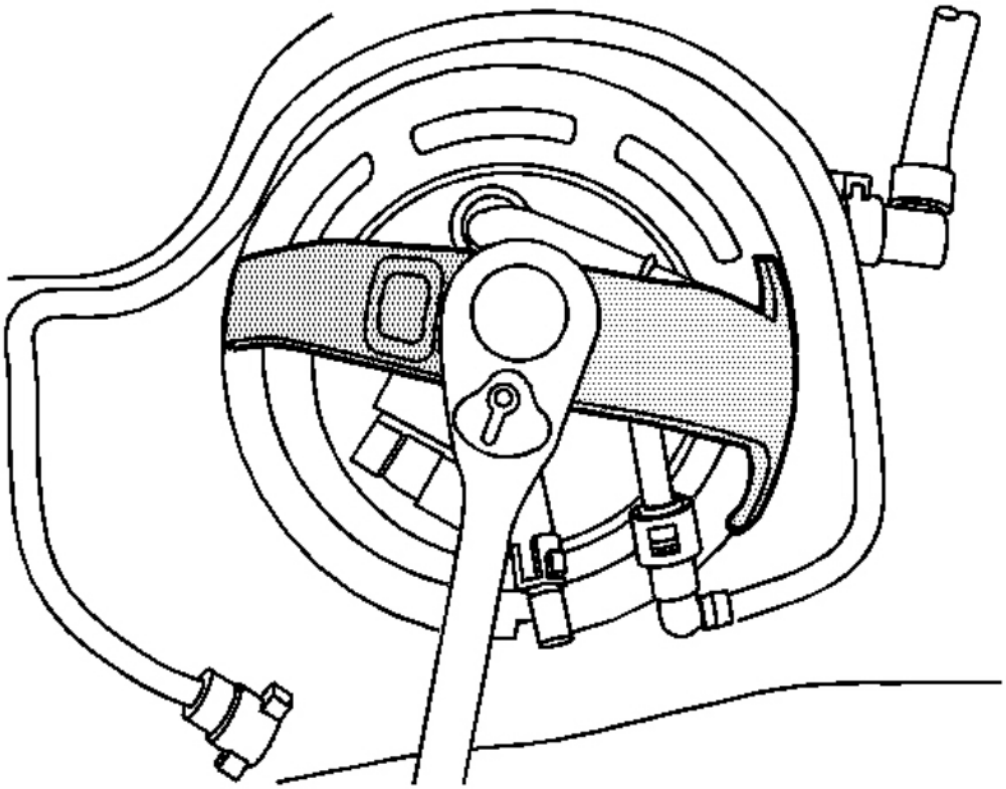

Fig. 351: Rotating Lock Ring Using J 45722 (Rear Tank)
Courtesy of GENERAL MOTORS CORP.

1. Remove the rear fuel tank. Refer to **Fuel Tank Replacement (1500 LWB - 117.3L (31 gal) Tank)** or **Fuel Tank Replacement (1500 LWB - 117.3L (31 gal) Tank + E85)** or **Fuel Tank Replacement (1500 SWB - 98.4L (26 gal) Tank)** or **Fuel Tank Replacement (1500 SWB - 98.4L (26 gal) Tank + E85)** or **Fuel Tank Replacement (2500 LWB - 43.5L (11.5 gal) Tank-Rear)** or **Fuel Tank Replacement (2500**

cardiagn.com

LWB - 98.4L (26 gal) Tank-Front).

2. Disconnect the evaporative emission (EVAP) line quick connect fittings from the fuel tank module. Refer to **Quick Connect Fitting Service - Plastic Collar**.

NOTE: **Avoid damaging the lock ring. Use only J-45722 to prevent damage to the lock ring.**

NOTE: **Do Not handle the fuel sender assembly by the fuel pipes. The amount of leverage generated by handling the fuel pipes could damage the joints.**

IMPORTANT: **Do NOT use impact tools. Significant force will be required to release the lock ring. The use of a hammer and screwdriver is not recommended. Secure the fuel tank in order to prevent fuel tank rotation.**

3. Using the **J 45722** and a long breaker bar, rotate the ring clockwise unlocking the fuel tank module lock ring. See **Special Tools**.
4. Remove the lock ring.

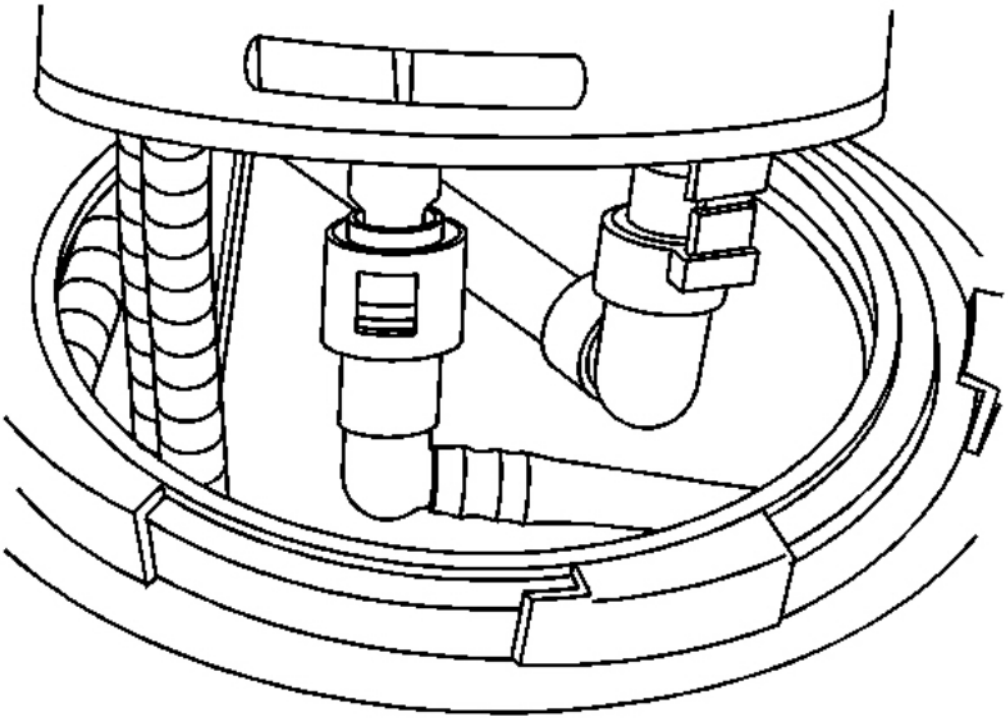

cardiagn.com

Fig. 352: View Of Vapor Line Quick Connect Fittings (Rear Tank)
Courtesy of GENERAL MOTORS CORP.

5. Carefully lift the fuel tank module from the fuel tank enough to access the quick connect fittings below the module cover. Disconnect the quick connect fittings. Refer to **Quick Connect Fitting Service - Plastic Collar**.
6. Remove the fuel tank module.
7. Remove and discard the fuel tank module seal.

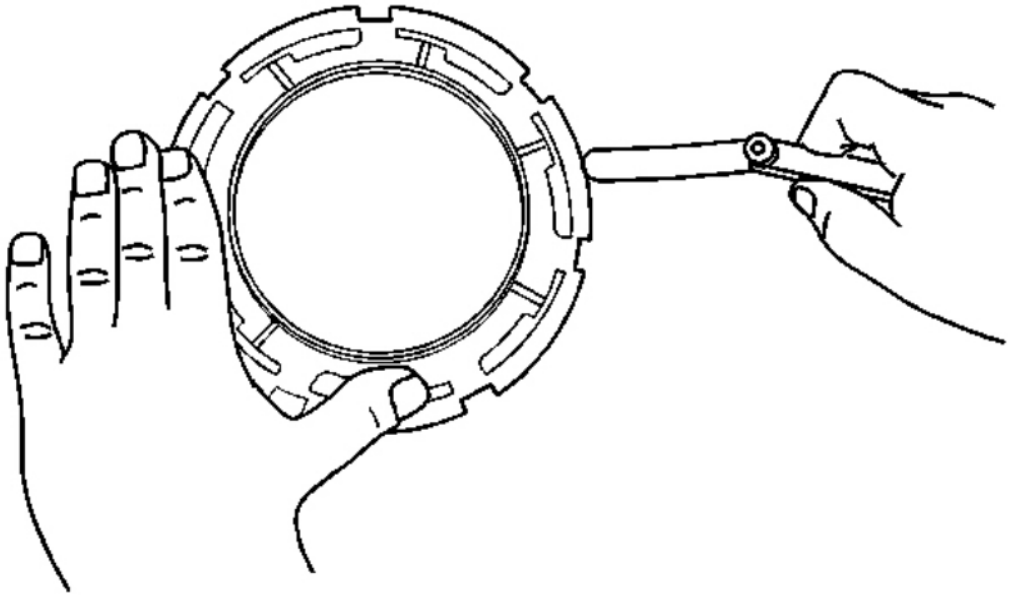

Fig. 353: Checking Lock Ring For Flatness
Courtesy of GENERAL MOTORS CORP.

IMPORTANT:

- **Some lock rings were manufactured with "DO NOT REUSE" stamped into them. These lock rings may be reused if they are not damaged or warped.**
- **Inspect the lock ring for damage due to improper removal or installation procedures. If damage is found, install a NEW lock ring.**
- **Check the lock ring for flatness.**

8. Place the lock ring on a flat surface. Measure the clearance between the lock ring and the flat surface using a feeler gage at 7 points.

cardiagn.com

9. If warpage is less than 0.41 mm (0.016 in), the lock ring does not require replacement.
10. If warpage is greater than 0.41 mm (0.016 in), the lock ring must be replaced.

Installation Procedure

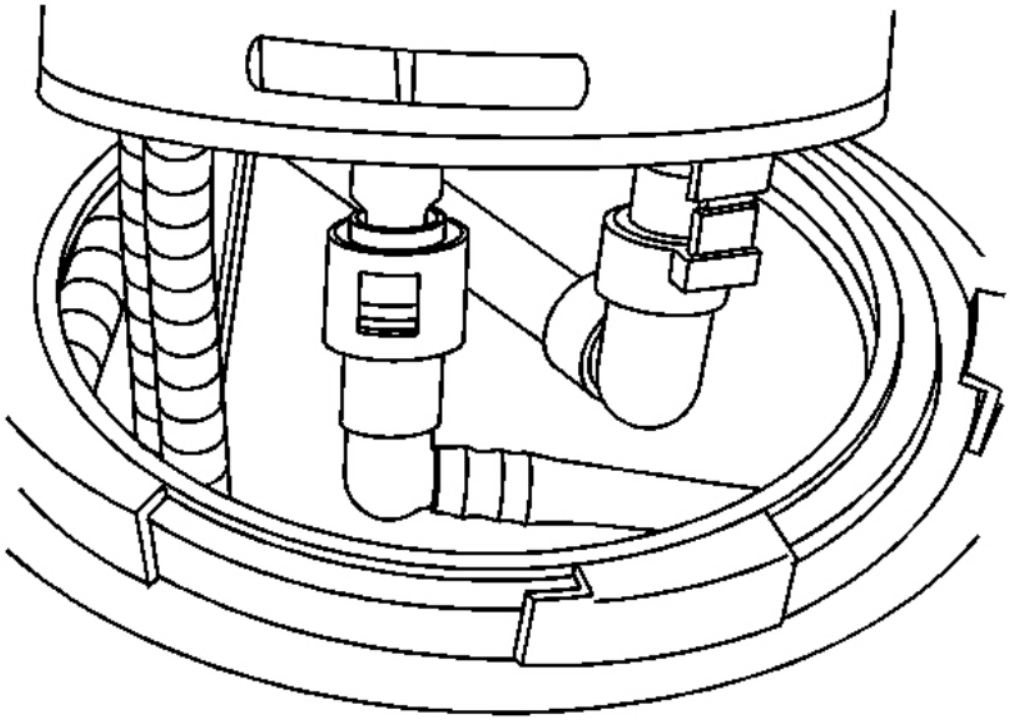

Fig. 354: View Of Vapor Line Quick Connect Fittings (Rear Tank)
Courtesy of GENERAL MOTORS CORP.

1. Install a NEW fuel tank module seal onto the fuel tank.
2. Pull the vent lines in the tank up as far as possible for ease of installation.
3. Position the fuel tank module part way into the fuel tank.
4. Connect the quick connect fittings to the module. Refer to **Quick Connect Fitting Service - Plastic Collar**.
5. Install the module into the fuel tank.
6. Place the lock ring into position.

cardiagn.com

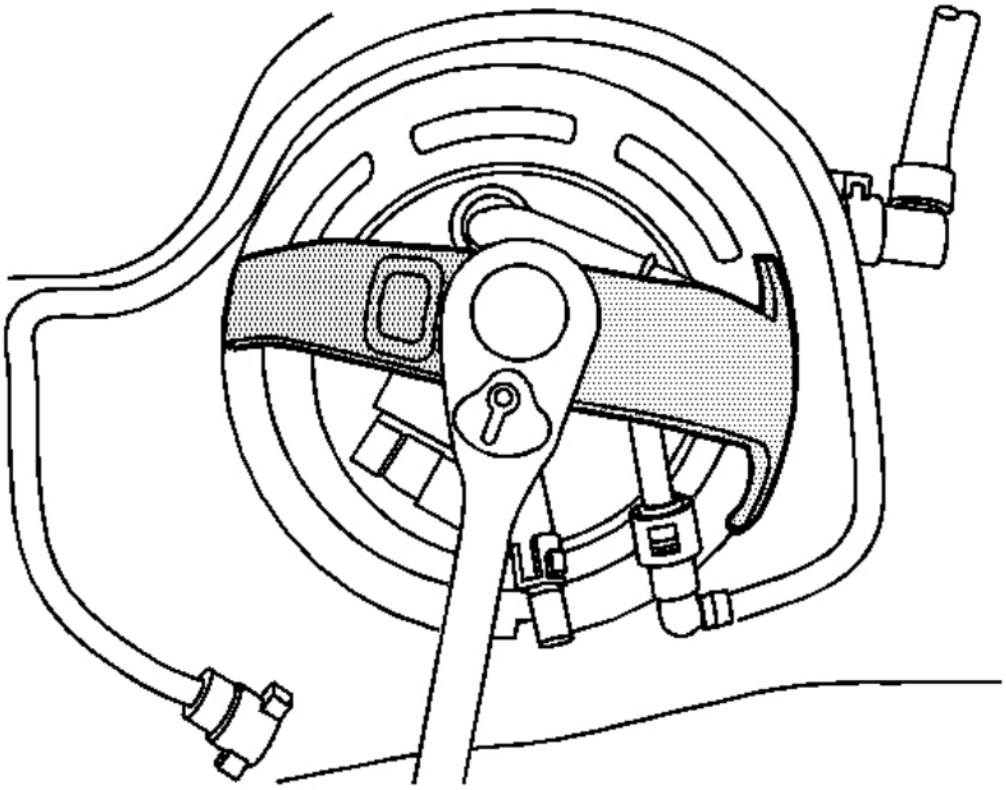

Fig. 355: Rotating Lock Ring Using J 45722 (Rear Tank)
Courtesy of GENERAL MOTORS CORP.

IMPORTANT: Always replace the fuel sender seal when installing the fuel sender assembly. Replace the lock ring if necessary. DO NOT apply any type of lubrication in the seal groove.
Ensure the lock ring is installed with the correct side facing upward. A correctly installed lock ring will only turn in a clockwise direction.

7. Rotate the lock ring counterclockwise using the **J 45722** until fully seated. See **Special Tools**.
8. Connect the EVAP line quick connect fittings to the fuel tank module. Refer to **Quick Connect Fitting Service - Plastic Collar**.
9. Install the rear fuel tank. Refer to **Fuel Tank Replacement (1500 LWB - 117.3L (31 gal) Tank)** or **Fuel Tank Replacement (1500 LWB - 117.3L (31 gal) Tank + E85)** or **Fuel Tank Replacement (1500 SWB - 98.4L (26 gal) Tank)** or **Fuel Tank Replacement (1500 SWB - 98.4L (26 gal) Tank + E85)** or **Fuel Tank Replacement (2500 LWB - 43.5L (11.5 gal) Tank-Rear)** or **Fuel Tank Replacement (2500 LWB - 98.4L (26 gal) Tank-Front)**.

cardiagn.com

FUEL TANK PUMP MODULE REPLACEMENT (2500 LWB - 98.4L (26 GAL) TANK-FRONT)

Tools Required

J 45722 Fuel Sender Lock Ring Wrench. See **Special Tools**.

Removal Procedure

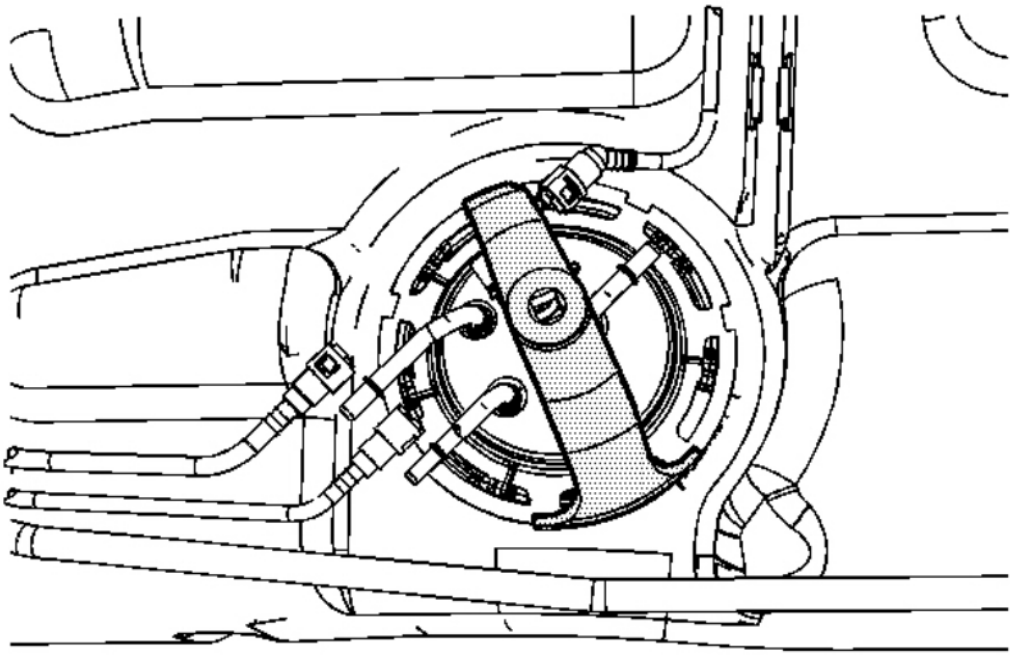

Fig. 356: View of Special Tool & Lock Ring
Courtesy of GENERAL MOTORS CORP.

1. Remove the front fuel tank. Refer to **Fuel Tank Replacement (1500 LWB - 117.3L (31 gal) Tank)** or **Fuel Tank Replacement (1500 LWB - 117.3L (31 gal) Tank + E85)** or **Fuel Tank Replacement (1500 SWB - 98.4L (26 gal) Tank)** or **Fuel Tank Replacement (1500 SWB - 98.4L (26 gal) Tank + E85)** or **Fuel Tank Replacement (2500 LWB - 43.5L (11.5 gal) Tank-Rear)** or **Fuel Tank Replacement (2500 LWB - 98.4L (26 gal) Tank-Front)**.
2. Disconnect the fuel and evaporative emission (EVAP) lines from the fuel tank module. Refer to **Quick Connect Fitting Service - Plastic Collar**.

NOTE: **Avoid damaging the lock ring. Use only J-45722 to prevent damage to the lock ring.**

cardiagn.com

NOTE: **Do Not handle the fuel sender assembly by the fuel pipes. The amount of leverage generated by handling the fuel pipes could damage the joints.**

IMPORTANT: **Do NOT use impact tools. Significant force will be required to release the lock ring. The use of a hammer and screwdriver is not recommended. Secure the fuel tank in order to prevent fuel tank rotation.**

3. Using the **J 45722** and a long breaker bar, rotate the ring clockwise unlocking the fuel tank module lock ring. See **Special Tools**.
4. Remove the lock ring.

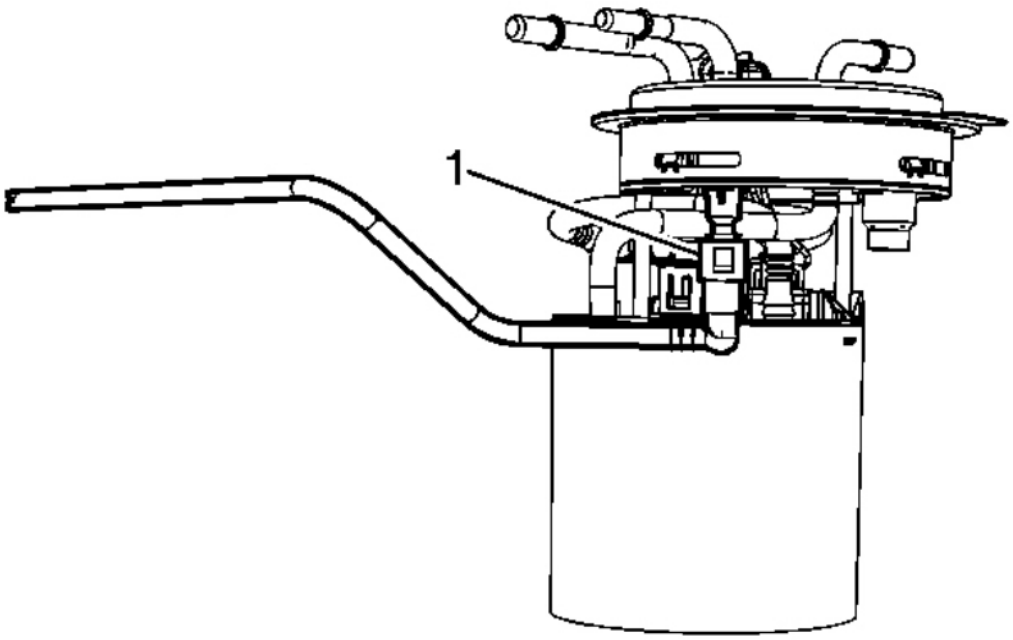

Fig. 357: View Of Fuel Tank Module Quick Connect Fitting
Courtesy of GENERAL MOTORS CORP.

5. Carefully lift the fuel tank module from the fuel tank, enough to access the quick connect fitting (1) below the module cover. Disconnect the quick connect fittings. Refer to **Quick Connect Fitting Service - Plastic Collar**.
6. Remove the fuel tank module.
7. Remove and discard the fuel tank module seal.

cardiagn.com

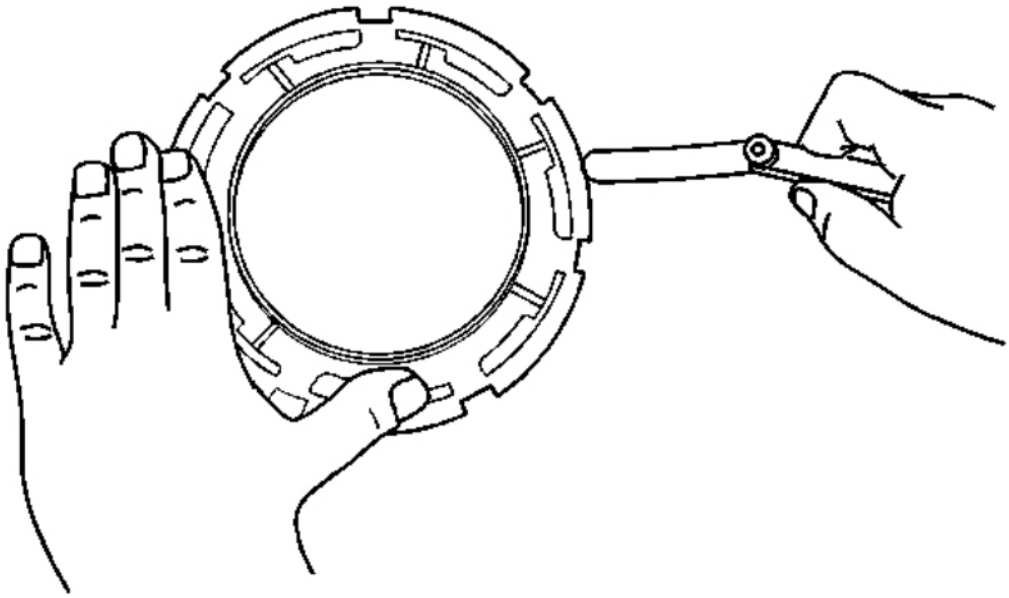

Fig. 358: Checking Lock Ring For Flatness
Courtesy of GENERAL MOTORS CORP.

IMPORTANT:

- **Some lock rings were manufactured with "DO NOT REUSE" stamped into them. These lock rings may be reused if they are not damaged or warped.**
- **Inspect the lock ring for damage due to improper removal or installation procedures. If damage is found, install a NEW lock ring.**
- **Check the lock ring for flatness.**

8. Place the lock ring on a flat surface. Measure the clearance between the lock ring and the flat surface using a feeler gage at 7 points.
9. If warpage is less than 0.41 mm (0.016 in), the lock ring does not require replacement.
10. If warpage is greater than 0.41 mm (0.016 in), the lock ring must be replaced.

Installation Procedure

cardiagn.com

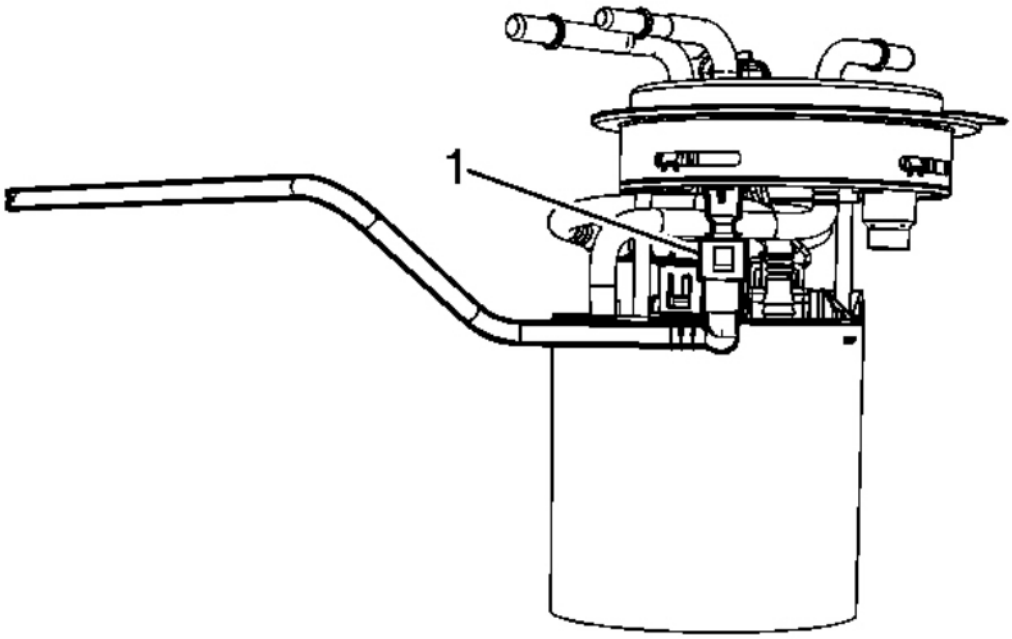

Fig. 359: View Of Fuel Tank Module Quick Connect Fitting
Courtesy of GENERAL MOTORS CORP.

1. Install the NEW fuel tank module seal onto the fuel tank.
2. Pull the vent line in the fuel tank up as far as possible for ease of installation.
3. Position the fuel tank module part way into the fuel tank.
4. Connect the quick connect fitting (1) to the module cover. Refer to **Quick Connect Fitting Service - Plastic Collar**.
5. Install the fuel tank module into the fuel tank.
6. Place the lock ring into position.

cardiagn.com

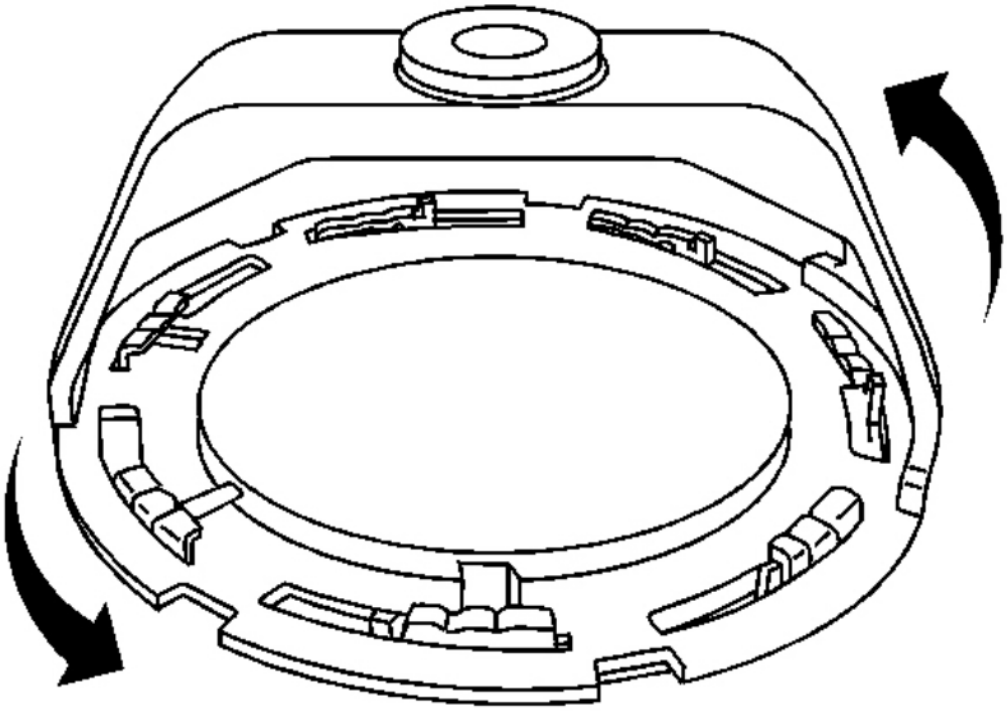

Fig. 360: Identifying Lock Ring
Courtesy of GENERAL MOTORS CORP.

IMPORTANT: Always replace the fuel sender seal when installing the fuel sender assembly. Replace the lock ring if necessary. DO NOT apply any type of lubrication in the seal groove.
Ensure the lock ring is installed with the correct side facing upward. A correctly installed lock ring will only turn in a clockwise direction.

7. Rotate the lock ring counterclockwise using the **J 45722** until fully seated. See **Special Tools**.
8. Connect the fuel and EVAP lines to the fuel tank module. Refer to **Quick Connect Fitting Service - Plastic Collar**.
9. Install the front fuel tank. Refer to **Fuel Tank Replacement (1500 LWB - 117.3L (31 gal) Tank)** or **Fuel Tank Replacement (1500 LWB - 117.3L (31 gal) Tank + E85)** or **Fuel Tank Replacement (1500 SWB - 98.4L (26 gal) Tank)** or **Fuel Tank Replacement (1500 SWB - 98.4L (26 gal) Tank + E85)** or **Fuel Tank Replacement (2500 LWB - 43.5L (11.5 gal) Tank-Rear)** or **Fuel Tank Replacement (2500 LWB - 98.4L (26 gal) Tank-Front)**.

FUEL LEVEL SENSOR REPLACEMENT (1500 SERIES)

cardiagn.com

Removal Procedure

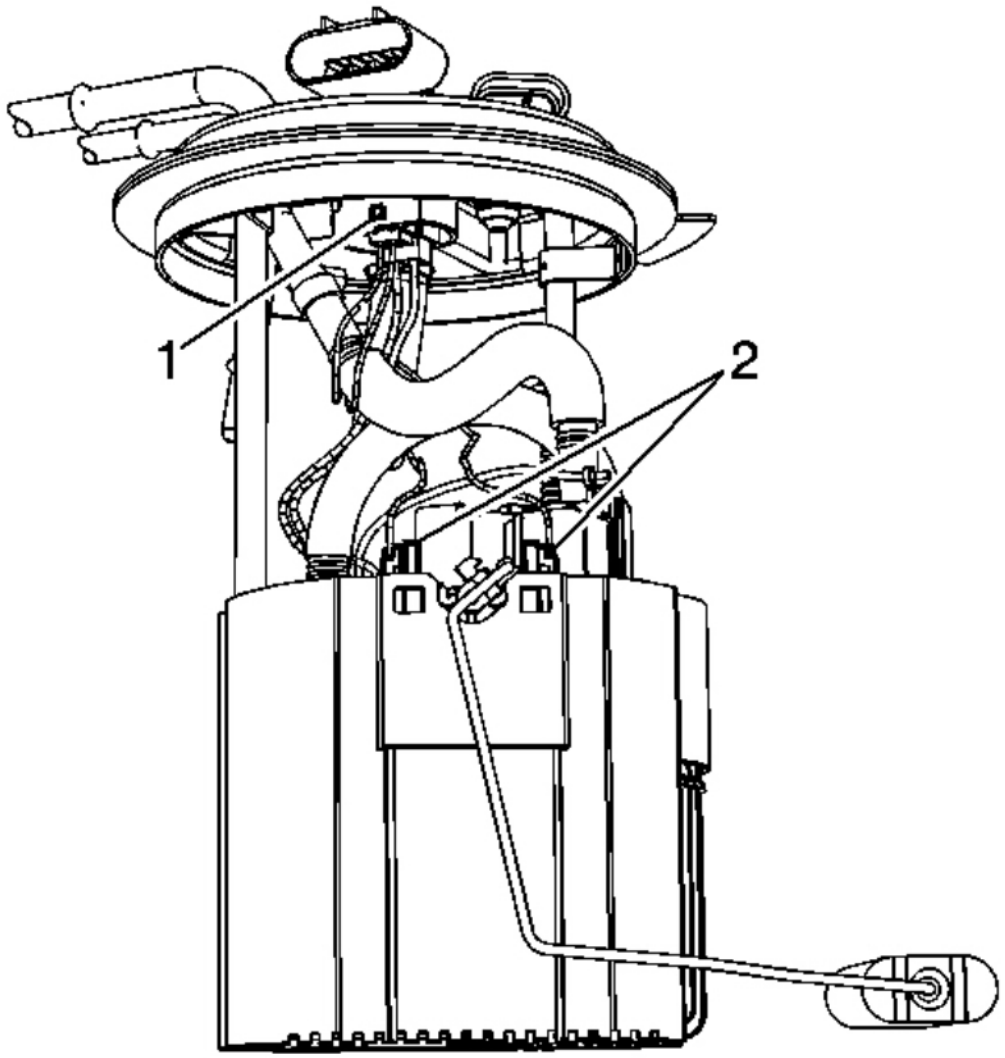

Fig. 361: View Of Fuel Tank Module Components
Courtesy of GENERAL MOTORS CORP.

1. Remove the fuel tank module. Refer to **Fuel Tank Pump Module Replacement (1500 LWB - 117.3L (31 gal) Tank + E85)** or **Fuel Tank Pump Module Replacement (1500 SWB - 98.4L (26 gal) Tank + E85)** or **Fuel Tank Pump Module Replacement (1500 Series)** or **Fuel Tank Pump Module Replacement (2500 LWB - 43.5L (11.5 gal) Tank-Rear)** or **Fuel Tank Pump Module Replacement (2500 LWB - 98.4L (26 gal) Tank-Front)**.

cardiagn.com

2. Using a small pick like tool, push in the retainer (1) in order to disengage the electrical connector.
3. Remove the fuel level sensor electrical connector from the module cover.
4. Push the level sensor locking tangs (2) in towards the inside of the module bucket.

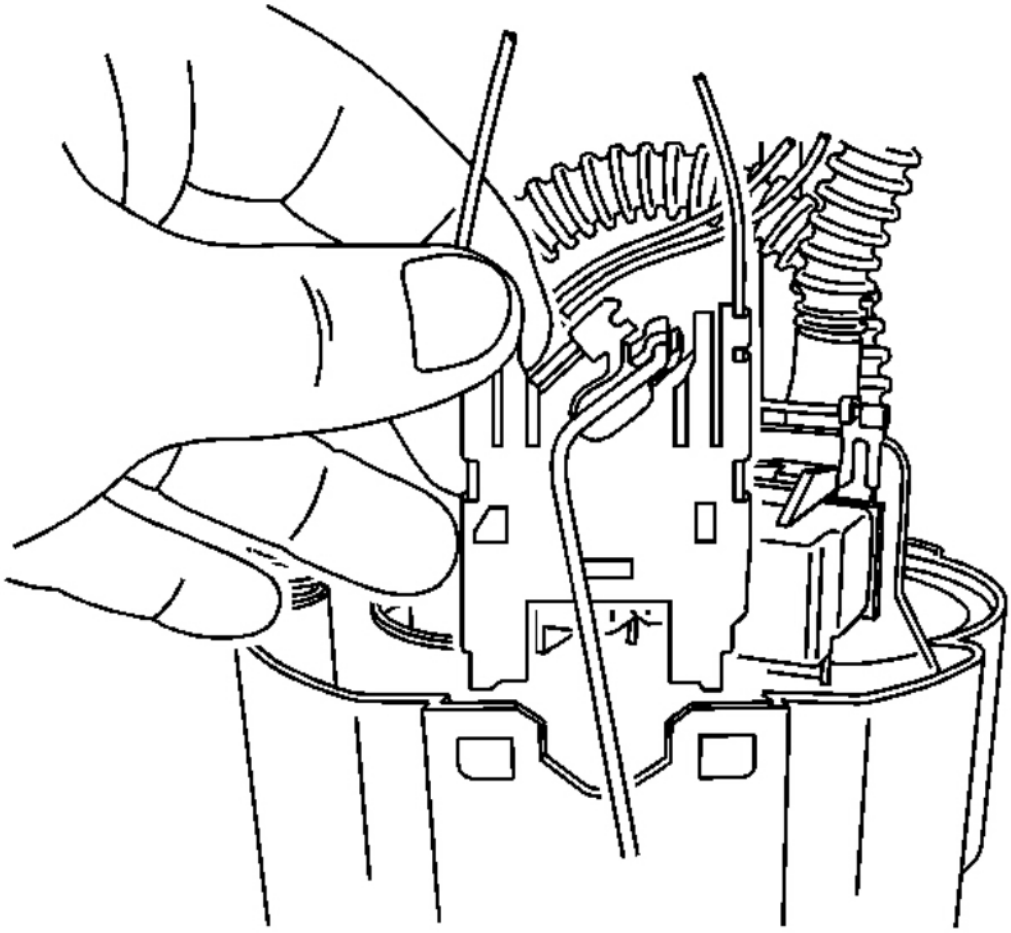

Fig. 362: View Of Fuel Level Sensor At Sending Unit Bucket (4.8L & 5.3L)
Courtesy of GENERAL MOTORS CORP.

5. Slide the fuel level sensor up.

cardiagn.com

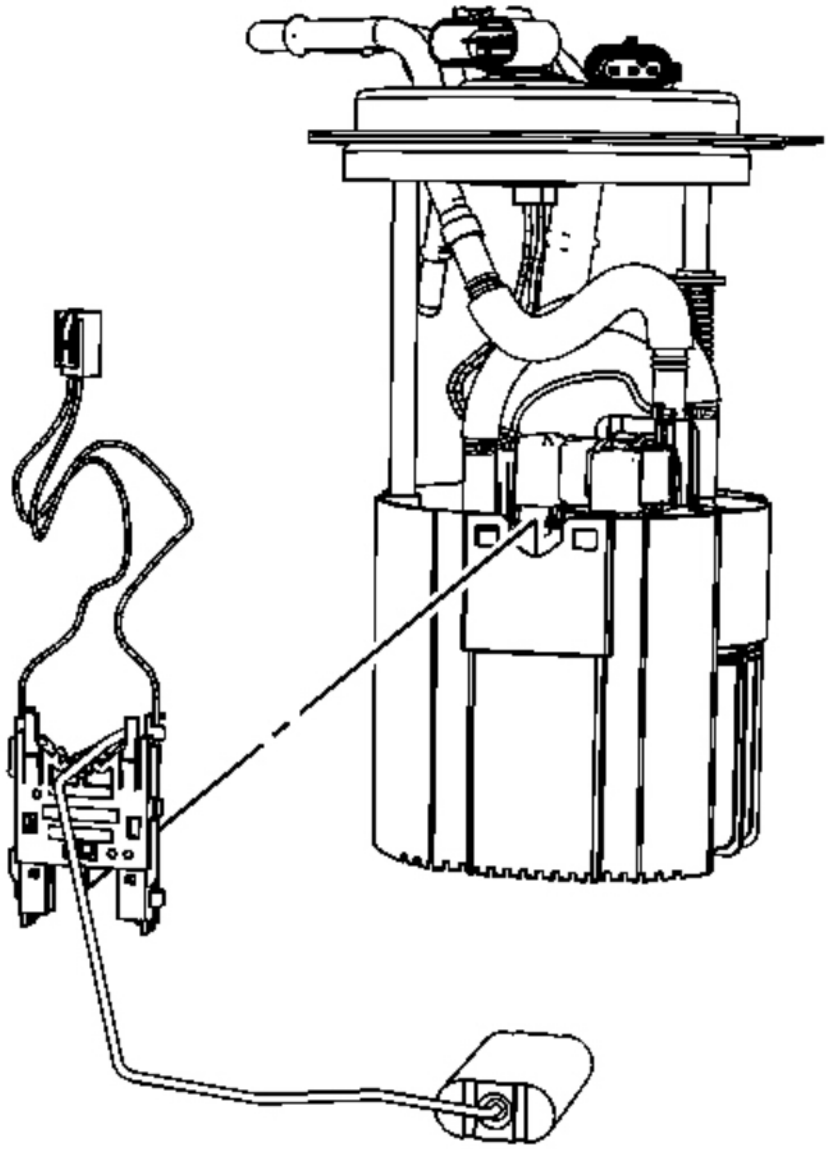

Fig. 363: View Of Fuel Level Sensor
Courtesy of GENERAL MOTORS CORP.

6. Remove the fuel level sensor from the module.

Installation Procedure

cardiagn.com

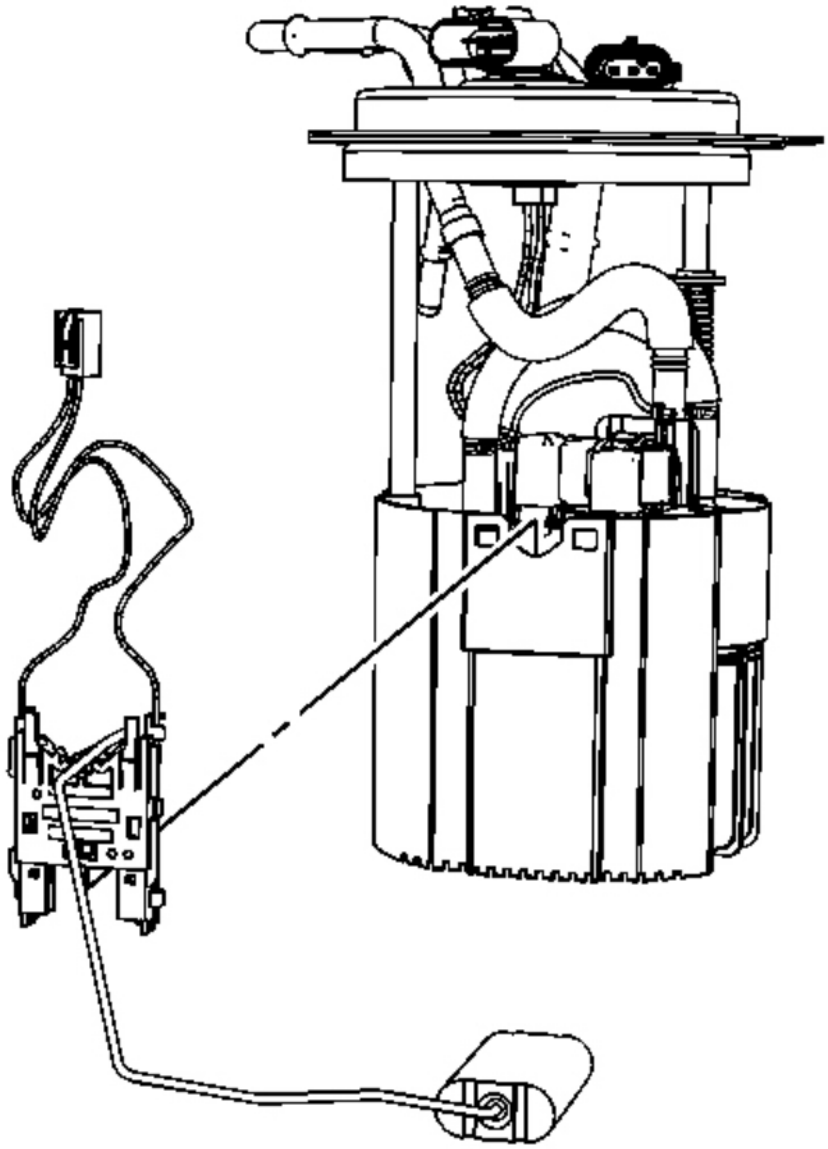

Fig. 364: View Of Fuel Level Sensor
Courtesy of GENERAL MOTORS CORP.

1. Install the fuel level sensor to the module.

cardiagn.com

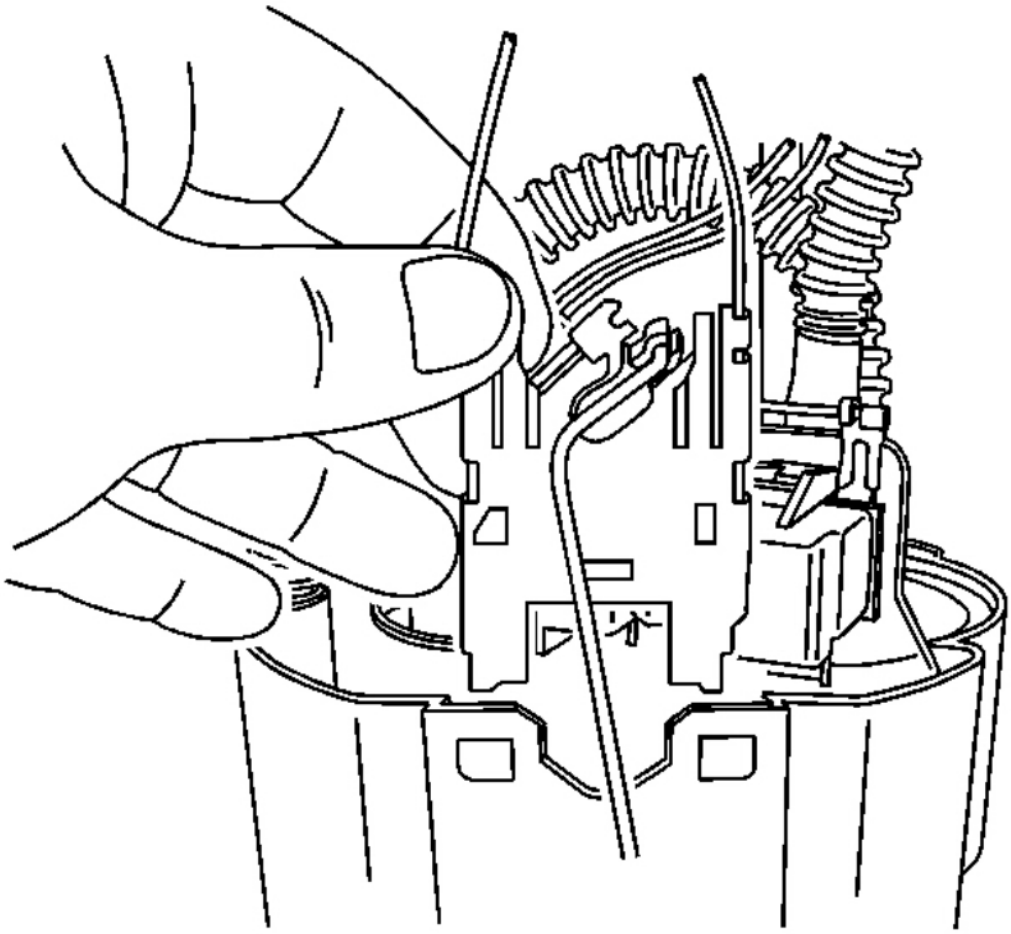

Fig. 365: View Of Fuel Level Sensor At Sending Unit Bucket (4.8L & 5.3L)
Courtesy of GENERAL MOTORS CORP.

2. Position and slide the fuel level sensor down.

cardiagn.com

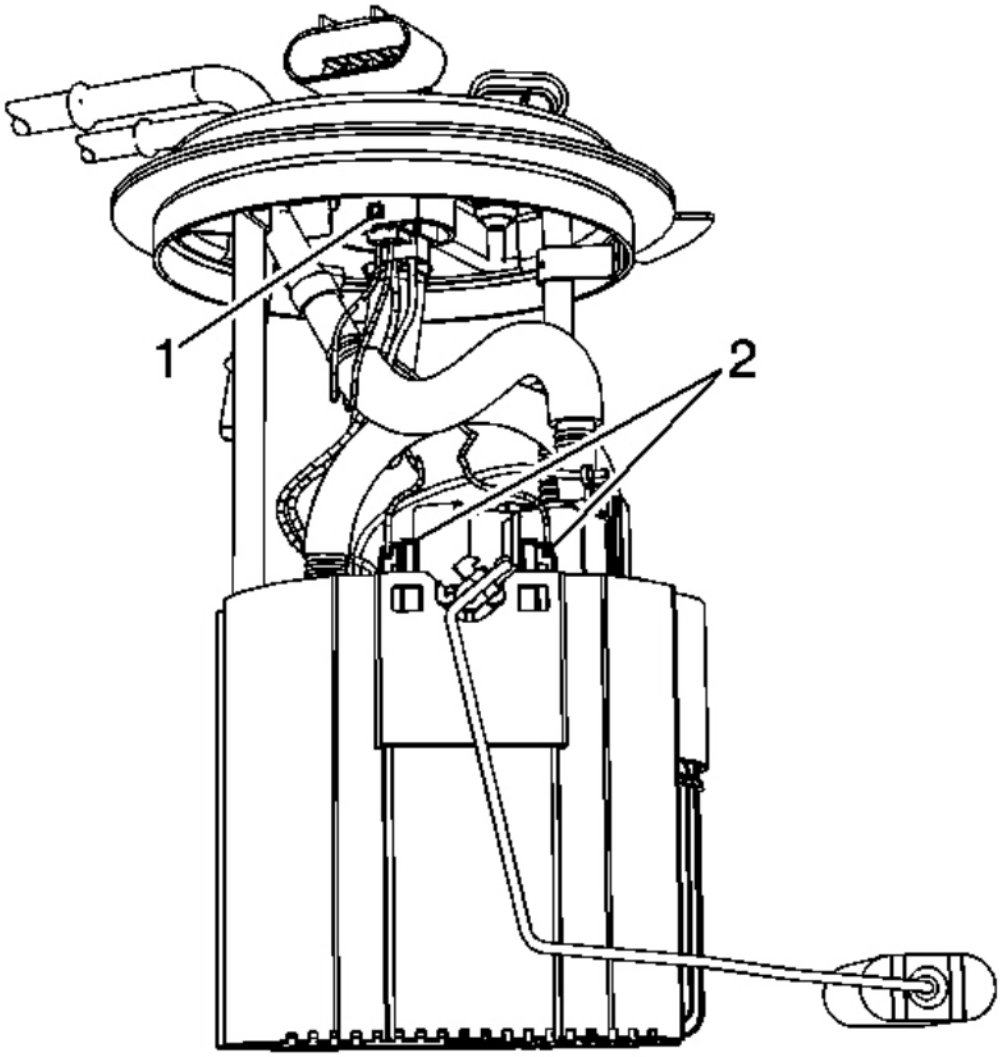

Fig. 366: Locating Fuel Level Sensor Tangs & Retainer
Courtesy of GENERAL MOTORS CORP.

3. Ensure that the level sensor tangs (2) are engaged at the bucket.
4. Install the fuel level sensor electrical connector to the module cover.
5. Ensure that the retainer (1) engaged the module cover.
6. Install the fuel tank module. Refer to **Fuel Tank Pump Module Replacement (1500 LWB - 117.3L (31 gal) Tank + E85)** or **Fuel Tank Pump Module Replacement (1500 SWB - 98.4L (26 gal) Tank + E85)** or **Fuel Tank Pump Module Replacement (1500 Series)** or **Fuel Tank Pump Module Replacement**

cardiagn.com

(2500 LWB - 43.5L (11.5 gal) Tank-Rear) or **Fuel Tank Pump Module Replacement (2500 LWB - 98.4L (26 gal) Tank-Front)**.

FUEL LEVEL SENSOR REPLACEMENT (1500 SERIES W/E85)

Removal Procedure

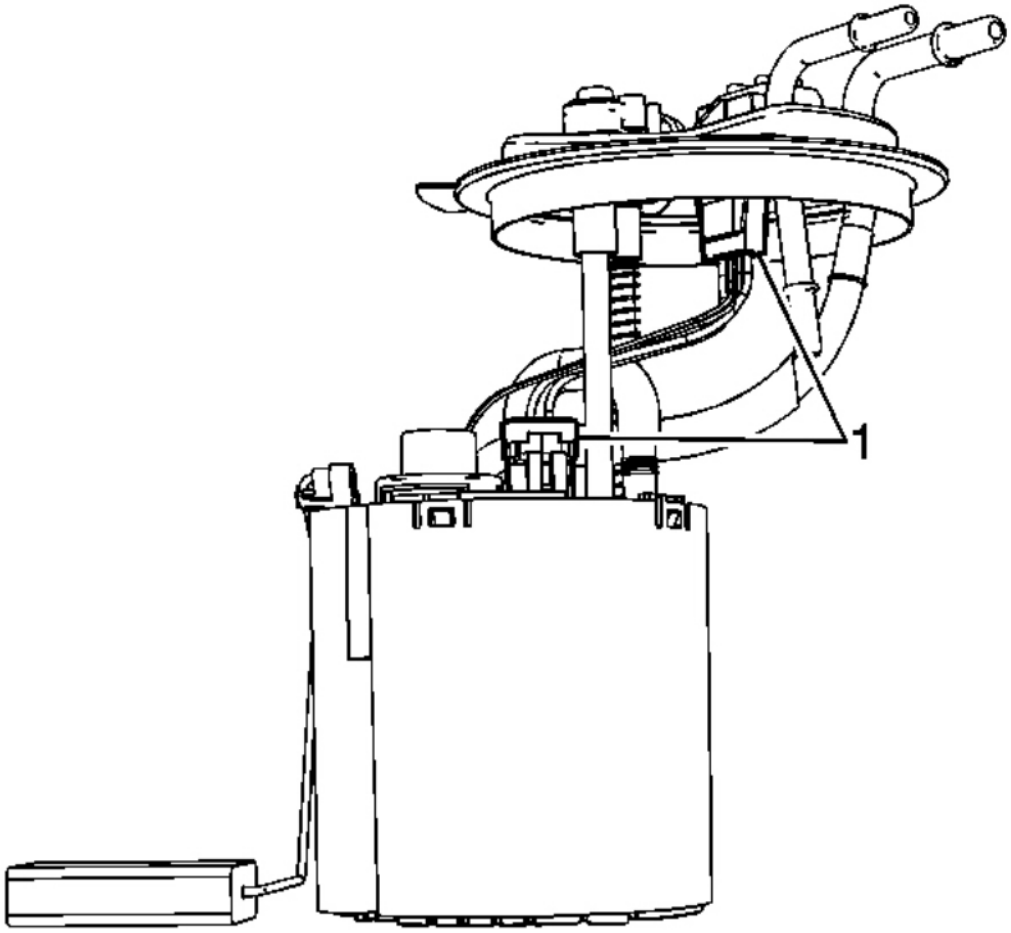

Fig. 367: View Of Fuel Level Sensor Electrical Connectors
Courtesy of GENERAL MOTORS CORP.

1. Remove the fuel tank module. Refer to **Fuel Tank Pump Module Replacement (1500 LWB - 117.3L (31 gal) Tank + E85)** or **Fuel Tank Pump Module Replacement (1500 SWB - 98.4L (26 gal) Tank + E85)** or **Fuel Tank Pump Module Replacement (1500 Series)** or **Fuel Tank Pump Module Replacement (2500 LWB - 43.5L (11.5 gal) Tank-Rear)** or **Fuel Tank Pump Module Replacement**

cardiagn.com

(2500 LWB - 98.4L (26 gal) Tank-Front).

2. Disconnect the fuel level sensor electrical connectors (1).

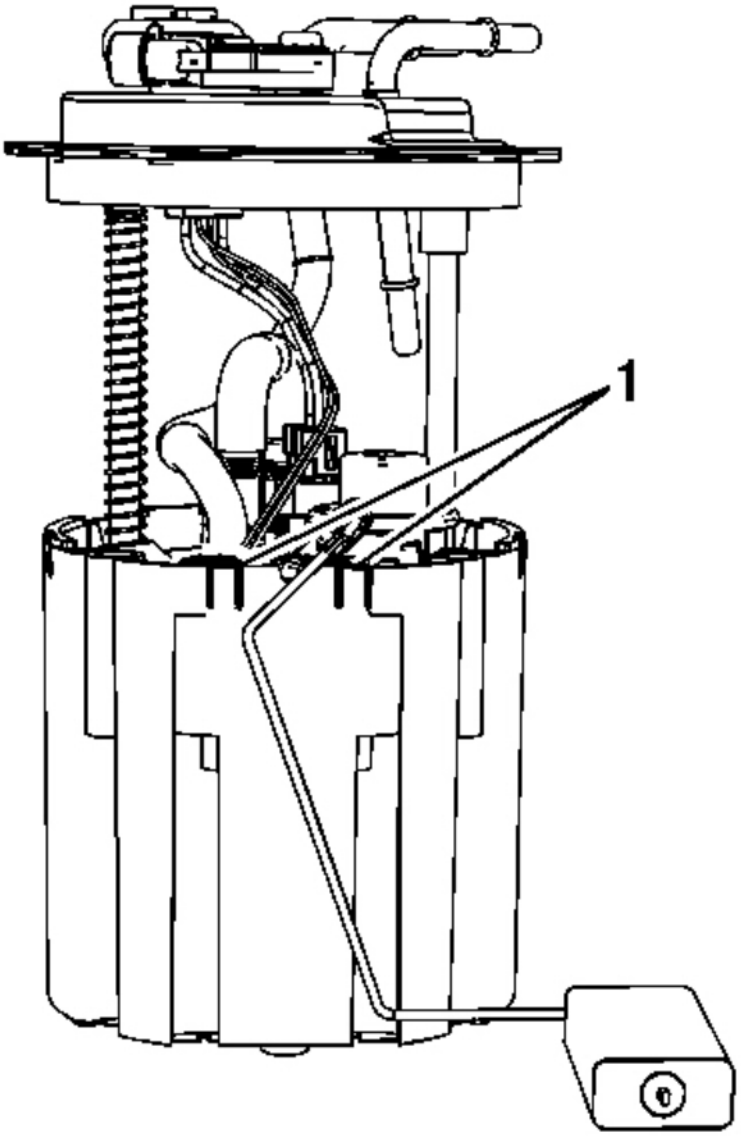

Fig. 368: View Of Fuel Level Sensor Retainers
Courtesy of GENERAL MOTORS CORP.

3. Disengage the retainers (1) and slide the fuel level sensor up.

cardiagn.com

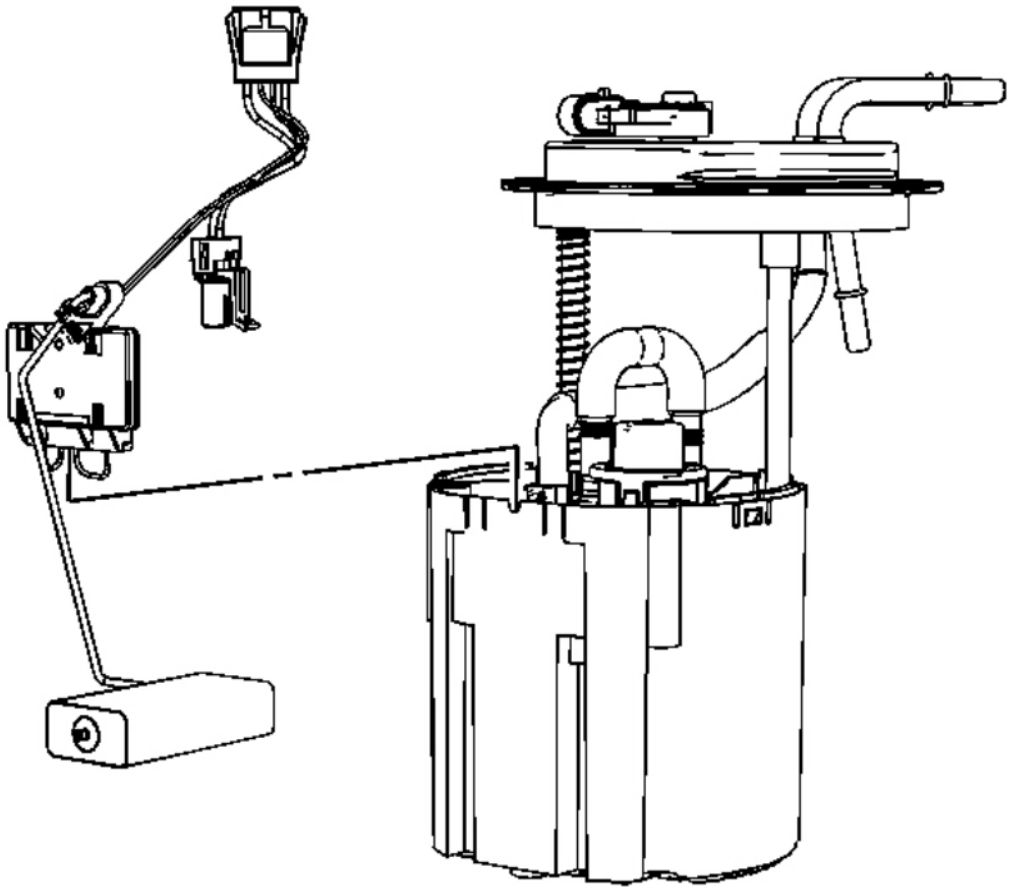

Fig. 369: View of Fuel Level Sensor & Module
Courtesy of GENERAL MOTORS CORP.

4. Remove the fuel level sensor from the module.

Installation Procedure

cardiagn.com

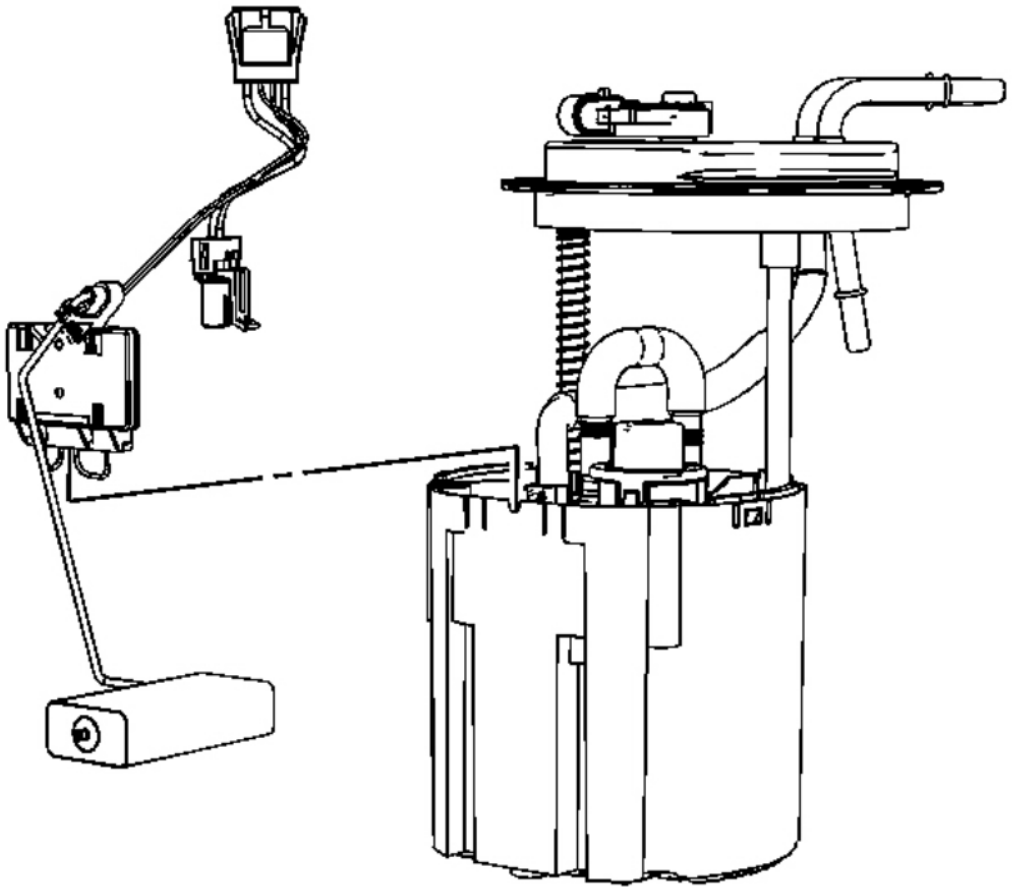

Fig. 370: View of Fuel Level Sensor & Module
Courtesy of GENERAL MOTORS CORP.

1. Install the fuel level sensor to the module.

cardiagn.com

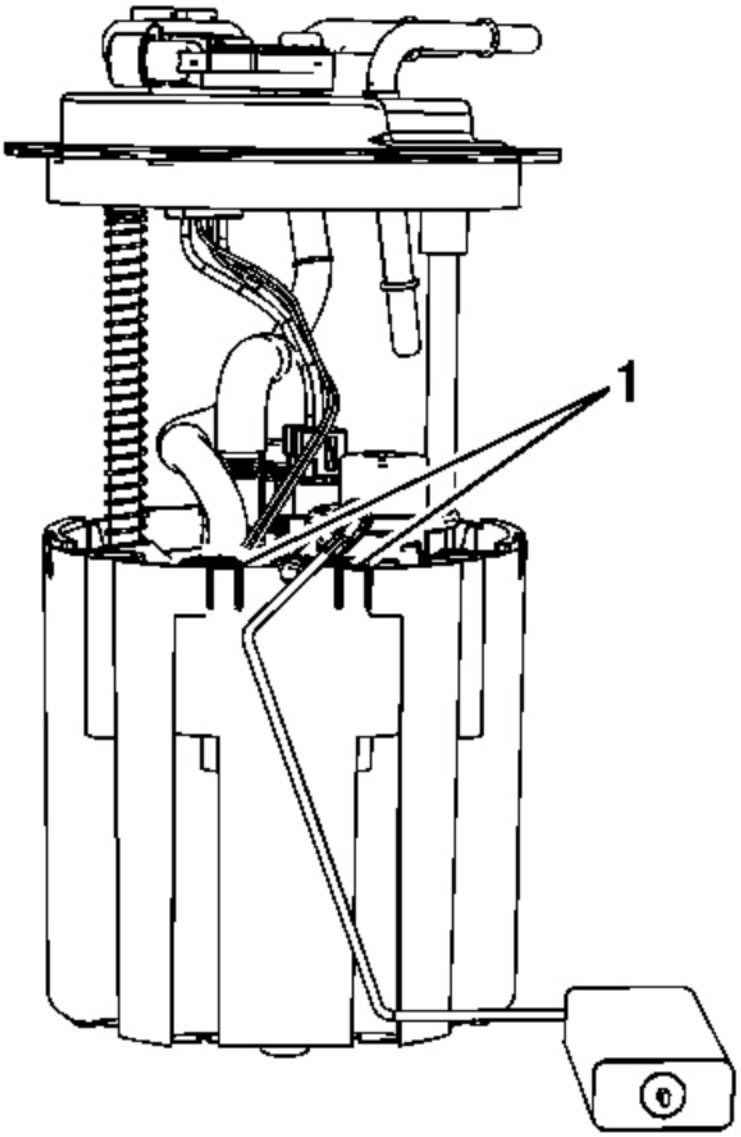

Fig. 371: View Of Fuel Level Sensor Retainers
Courtesy of GENERAL MOTORS CORP.

2. Position and slide the fuel level sensor down until the retainers (1) engage the sensor.

cardiagn.com

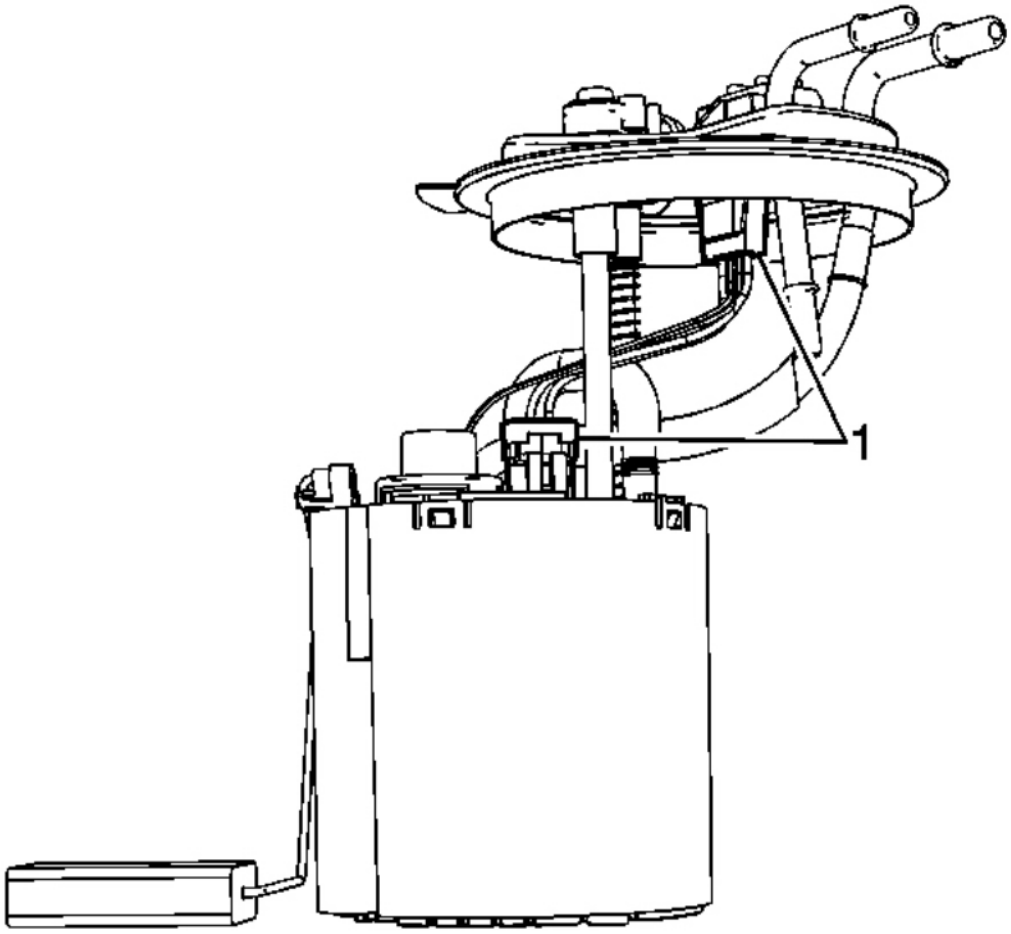

Fig. 372: View Of Fuel Level Sensor Electrical Connectors
Courtesy of GENERAL MOTORS CORP.

3. Connect the fuel level sensor electrical connectors (1).
4. Install the fuel tank module. Refer to **Fuel Tank Pump Module Replacement (1500 LWB - 117.3L (31 gal) Tank + E85)** or **Fuel Tank Pump Module Replacement (1500 SWB - 98.4L (26 gal) Tank + E85)** or **Fuel Tank Pump Module Replacement (1500 Series)** or **Fuel Tank Pump Module Replacement (2500 LWB - 43.5L (11.5 gal) Tank-Rear)** or **Fuel Tank Pump Module Replacement (2500 LWB - 98.4L (26 gal) Tank-Front)**.

FUEL LEVEL SENSOR REPLACEMENT (2500 - 43.5L (11.5 GAL) TANK - REAR)

Removal Procedure

cardiagn.com

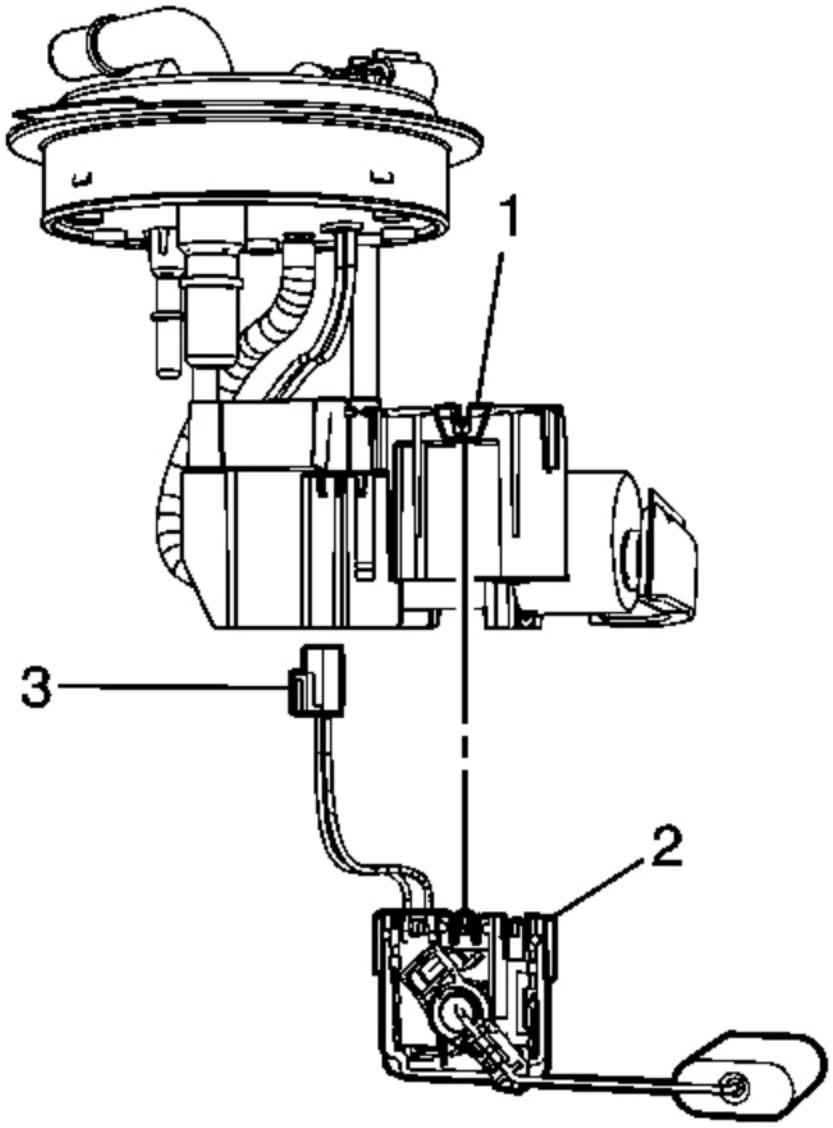

Fig. 373: View Of Fuel Level Sensor, Electrical Connector & Retaining Clip
Courtesy of GENERAL MOTORS CORP.

1. Remove the fuel tank module. Refer to **Fuel Tank Pump Module Replacement (1500 LWB - 117.3L (31 gal) Tank + E85)** or **Fuel Tank Pump Module Replacement (1500 SWB - 98.4L (26 gal) Tank + E85)** or **Fuel Tank Pump Module Replacement (1500 Series)** or **Fuel Tank Pump Module Replacement (2500 LWB - 43.5L (11.5 gal) Tank-Rear)** or **Fuel Tank Pump Module Replacement**

cardiagn.com

(2500 LWB - 98.4L (26 gal) Tank-Front).

2. Disconnect the fuel level sensor electrical connector (3) from under the module cover.
3. Release the level sensor retaining clip (1).
4. Slide the fuel level sensor (2) down off the bucket.

Installation Procedure

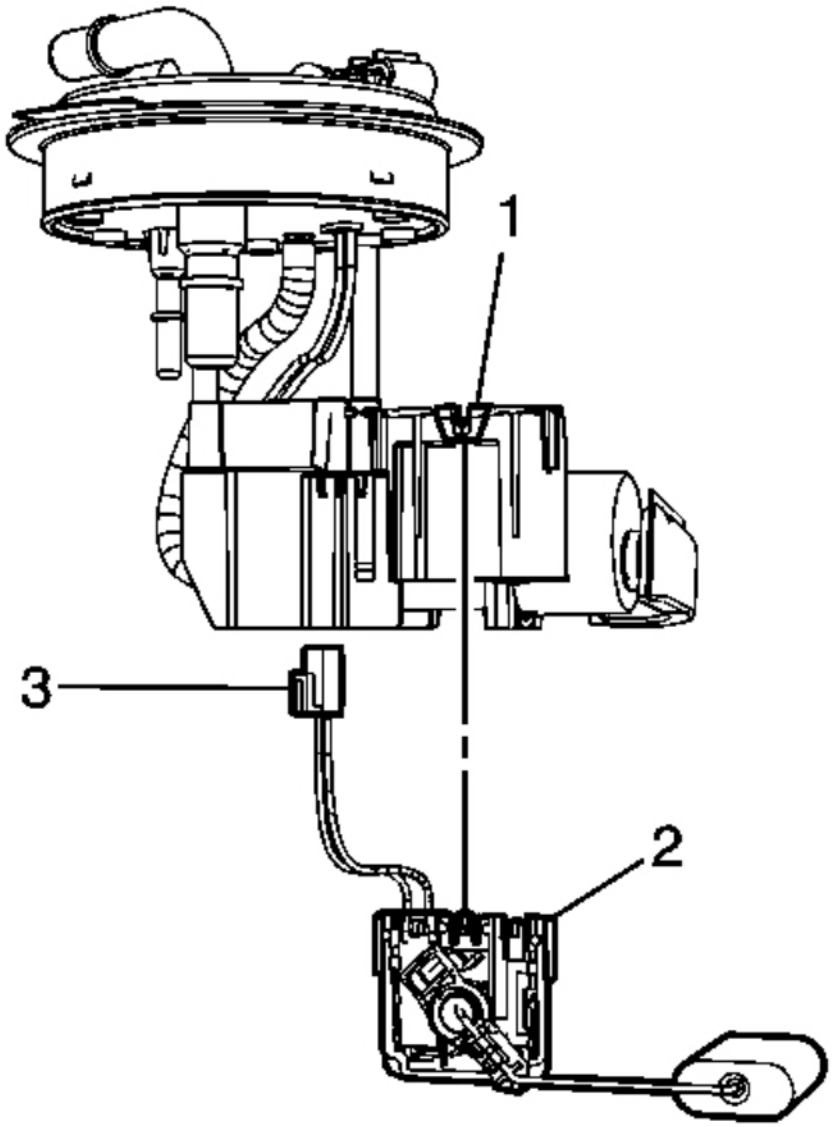

cardiagn.com

Fig. 374: View Of Fuel Level Sensor, Electrical Connector & Retaining Clip
Courtesy of GENERAL MOTORS CORP.

1. Slide the fuel level sensor (2) up onto the bucket until the sensor engages the retaining tab (1).
2. Connect the fuel level sensor electrical connector (3) under the module cover.
3. Install the fuel tank module. Refer to **Fuel Tank Pump Module Replacement (1500 LWB - 117.3L (31 gal) Tank + E85)** or **Fuel Tank Pump Module Replacement (1500 SWB - 98.4L (26 gal) Tank + E85)** or **Fuel Tank Pump Module Replacement (1500 Series)** or **Fuel Tank Pump Module Replacement (2500 LWB - 43.5L (11.5 gal) Tank-Rear)** or **Fuel Tank Pump Module Replacement (2500 LWB - 98.4L (26 gal) Tank-Front)**.

FUEL LEVEL SENSOR REPLACEMENT (2500 - 98.4L (26 GAL) TANK - FRONT)

Removal Procedure

cardiagn.com

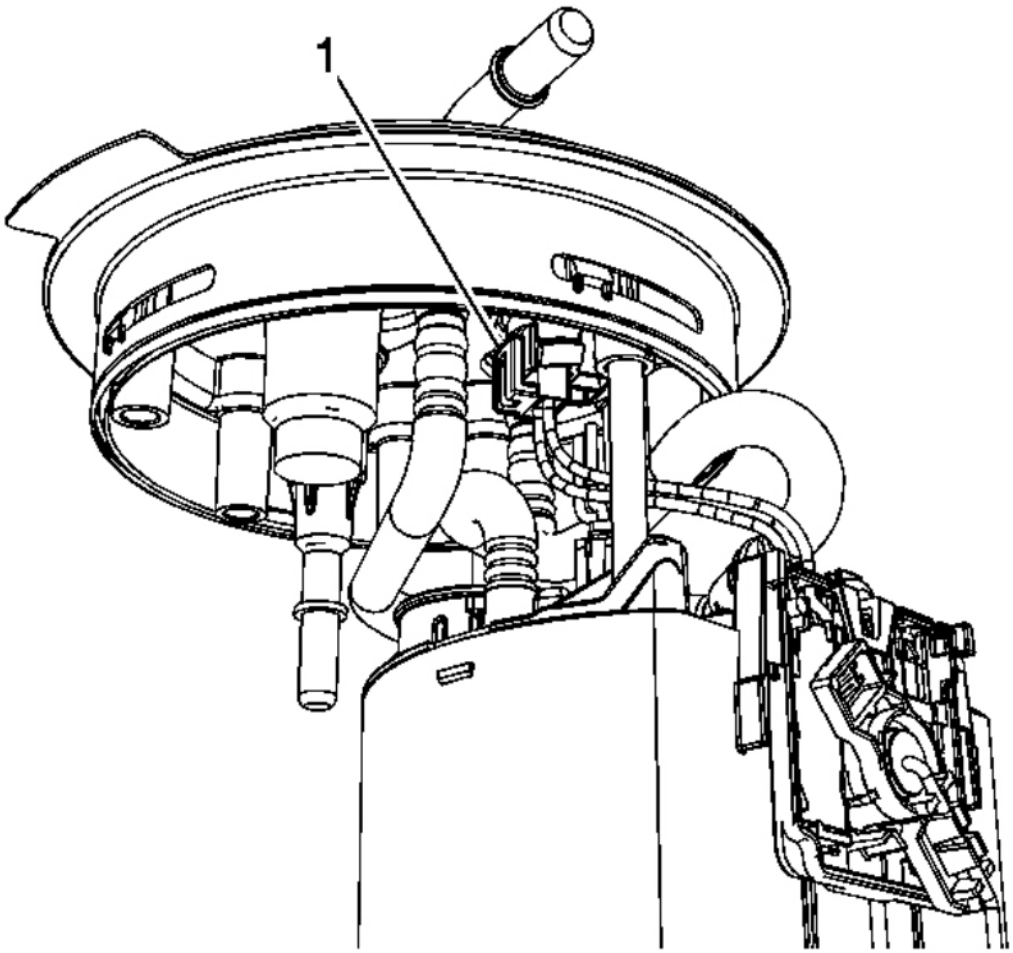

Fig. 375: View Of Fuel Level Sensor Electrical Connector
Courtesy of GENERAL MOTORS CORP.

1. Remove the fuel tank module. Refer to **Fuel Tank Pump Module Replacement (1500 LWB - 117.3L (31 gal) Tank + E85)** or **Fuel Tank Pump Module Replacement (1500 SWB - 98.4L (26 gal) Tank + E85)** or **Fuel Tank Pump Module Replacement (1500 Series)** or **Fuel Tank Pump Module Replacement (2500 LWB - 43.5L (11.5 gal) Tank-Rear)** or **Fuel Tank Pump Module Replacement (2500 LWB - 98.4L (26 gal) Tank-Front)**.
2. Disconnect the fuel level sensor electrical connector (1) from under the module cover.

cardiagn.com

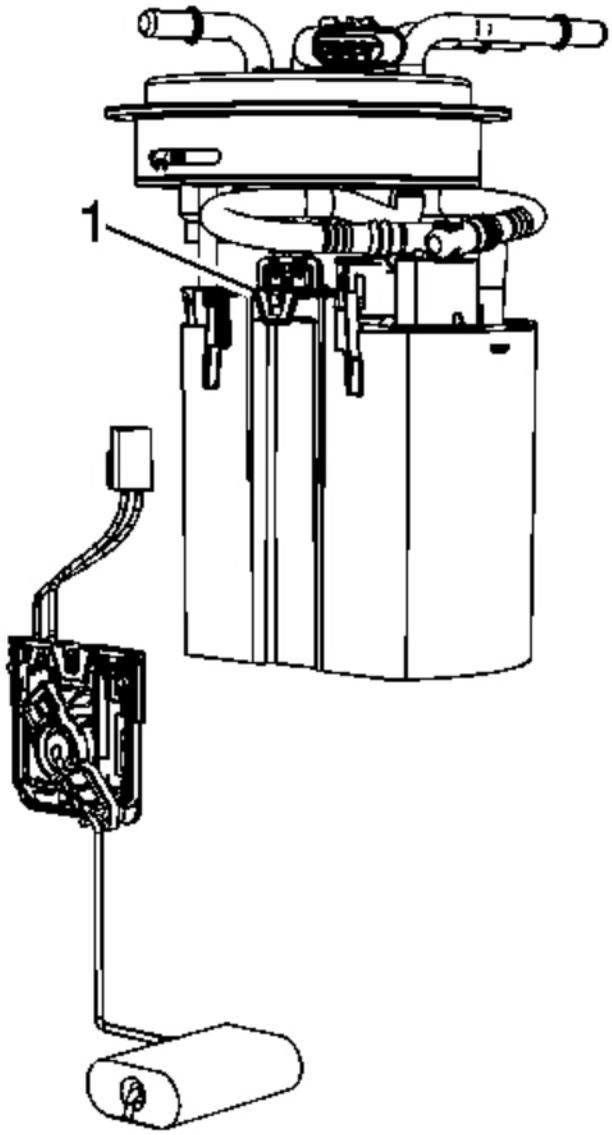

Fig. 376: View Of Fuel Level Sensor Retaining Clip
Courtesy of GENERAL MOTORS CORP.

3. Release the fuel level sensor retaining clip (1).
4. Slide the fuel level sensor down off of the bucket.

Installation Procedure

cardiagn.com

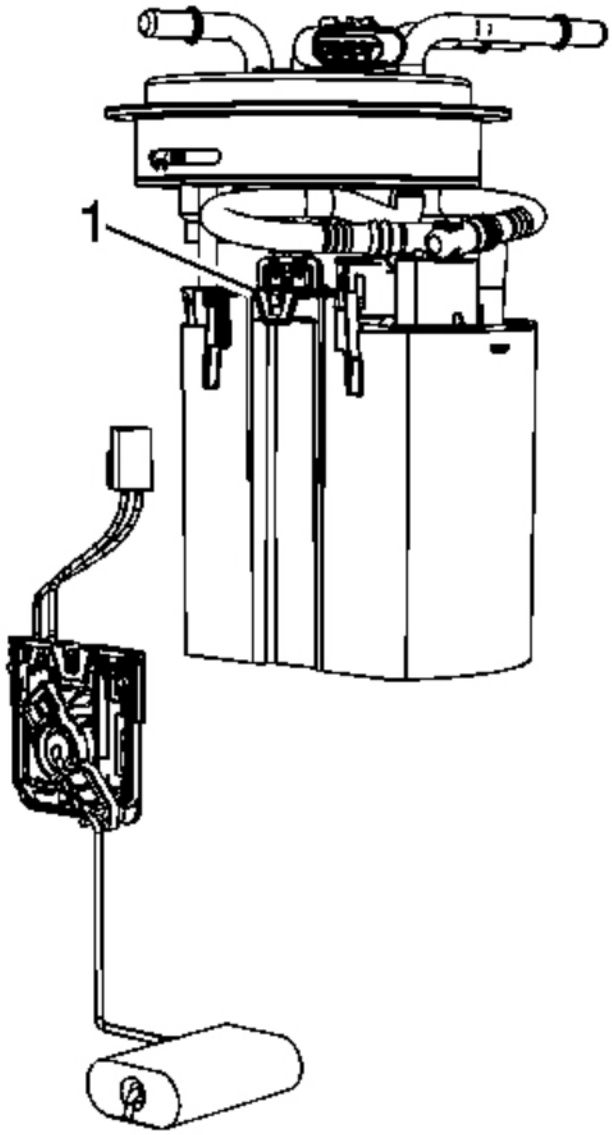

Fig. 377: View Of Fuel Level Sensor Retaining Clip
Courtesy of GENERAL MOTORS CORP.

1. Slide the fuel level sensor up onto the bucket until the sensor engages the retaining tab (1).

cardiagn.com

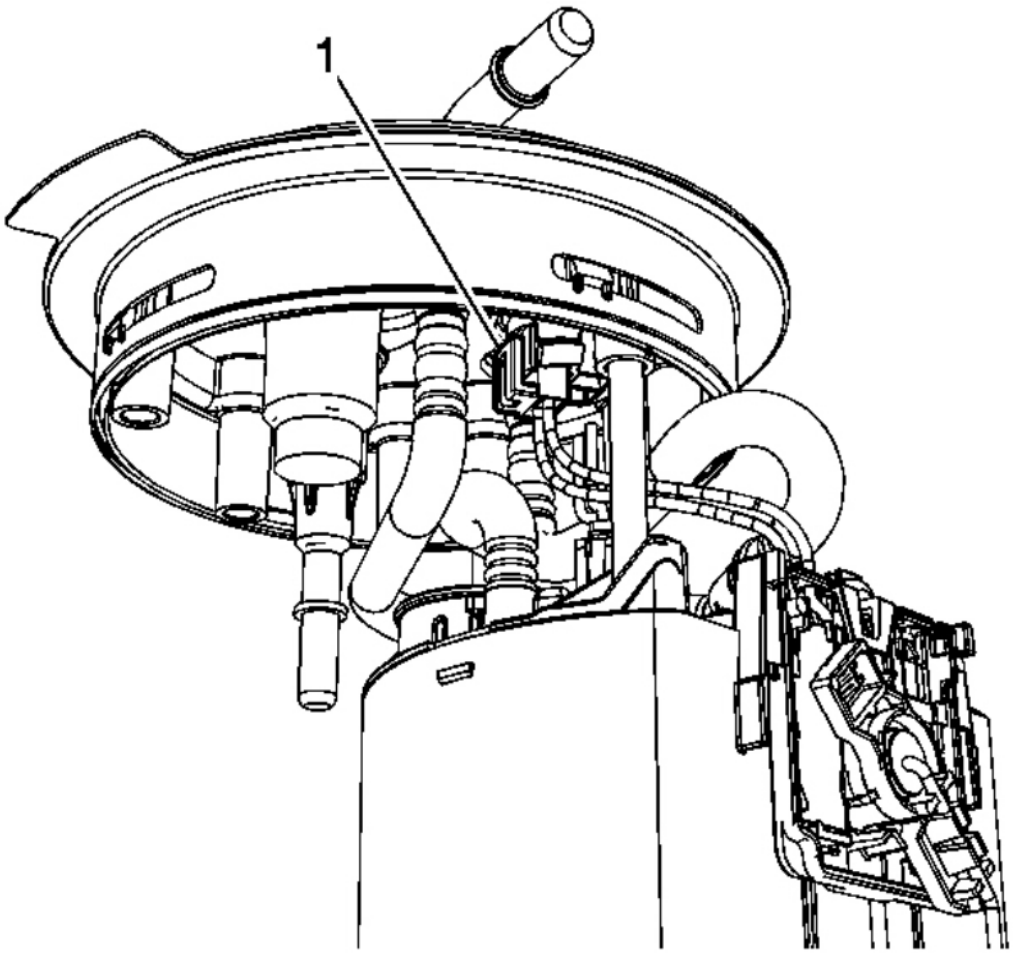

Fig. 378: View Of Fuel Level Sensor Electrical Connector
Courtesy of GENERAL MOTORS CORP.

2. Connect the fuel level sensor electrical connector (1) under the module cover.
3. Install the fuel tank module. Refer to **Fuel Tank Pump Module Replacement (1500 LWB - 117.3L (31 gal) Tank + E85)** or **Fuel Tank Pump Module Replacement (1500 SWB - 98.4L (26 gal) Tank + E85)** or **Fuel Tank Pump Module Replacement (1500 Series)** or **Fuel Tank Pump Module Replacement (2500 LWB - 43.5L (11.5 gal) Tank-Rear)** or **Fuel Tank Pump Module Replacement (2500 LWB - 98.4L (26 gal) Tank-Front)**.

FUEL HOSE/PIPES REPLACEMENT - CHASSIS (1500 SERIES)

Removal Procedure

cardiagn.com

IMPORTANT: Clean all fuel and evaporative emission (EVAP) lines connections and surrounding areas prior to disconnecting the lines in order to avoid possible fuel and/or EVAP system contamination.

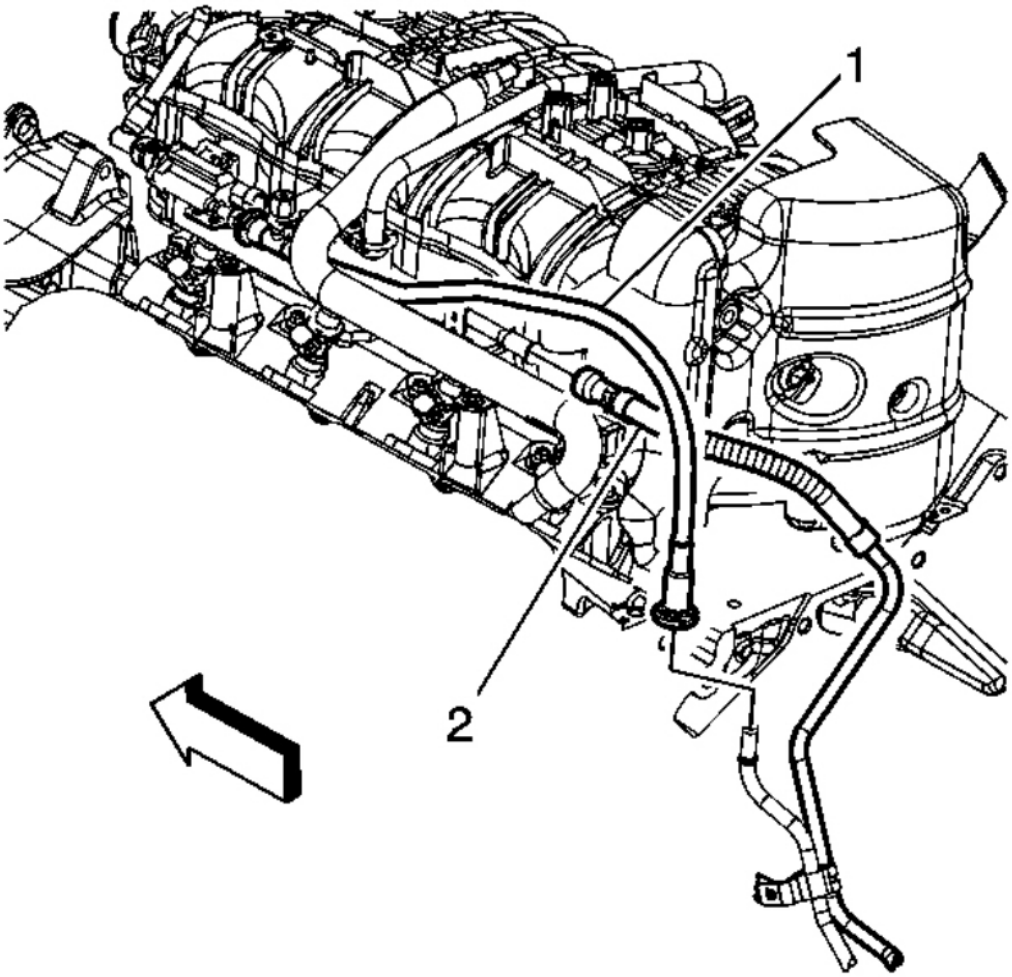

Fig. 379: View Of EVAP Canister Purge Tube & Quick Connect Fitting
Courtesy of GENERAL MOTORS CORP.

1. Relieve the fuel system pressure. Refer to the **Fuel Pressure Relief**.
2. Disconnect the engine evaporative emission (EVAP) line (1) quick connect fitting from the chassis EVAP line. Refer to **Quick Connect Fitting Service - Plastic Collar**.
3. Disconnect the fuel feed line quick connect fitting (2) from the fuel rail. Refer to **Quick Connect Fitting Service - Metal Collar**.

cardiagn.com

4. Cap the fuel rail and EVAP pipes.
5. Raise and support the vehicle. Refer to **Lifting and Jacking the Vehicle** .
6. Unbolt and reposition the front propeller shaft. Refer to **Front Propeller Shaft Replacement** .

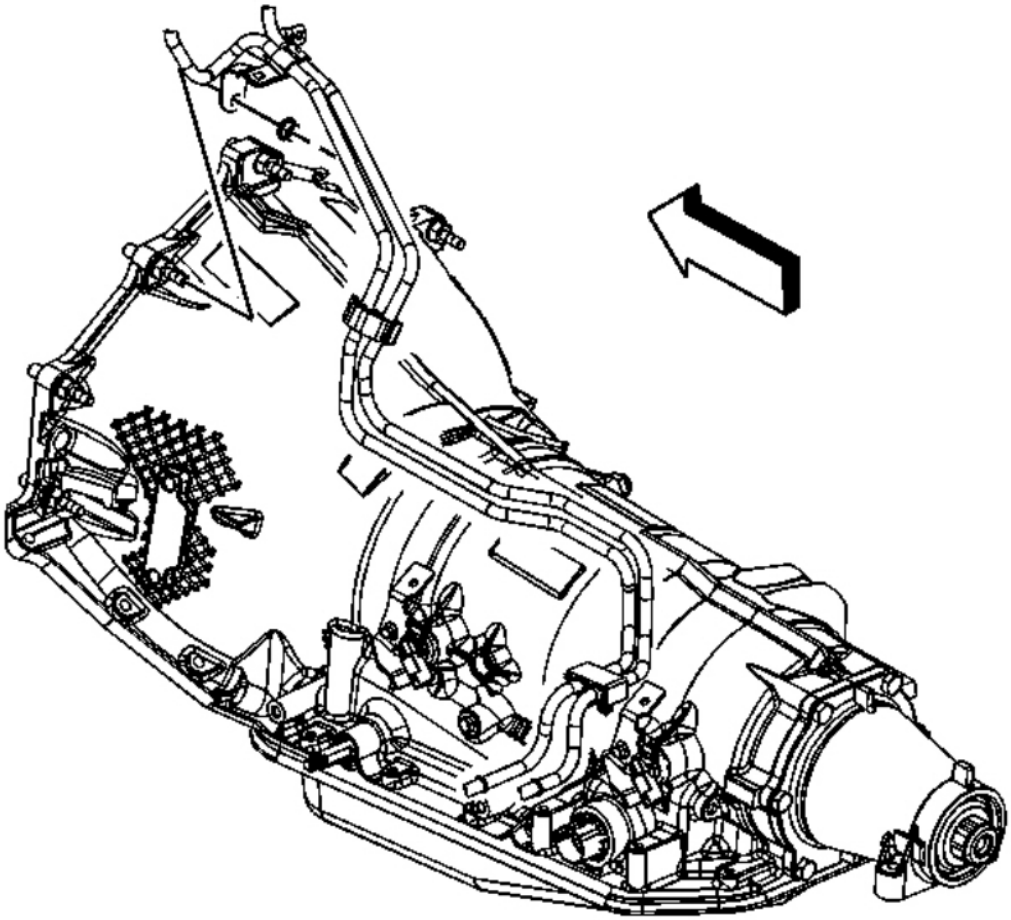

Fig. 380: View Of Fuel/Evaporative Emission Pipe & Bracket
Courtesy of GENERAL MOTORS CORP.

7. Remove the fuel pipe bracket nut from the bellhousing stud.

cardiagn.com

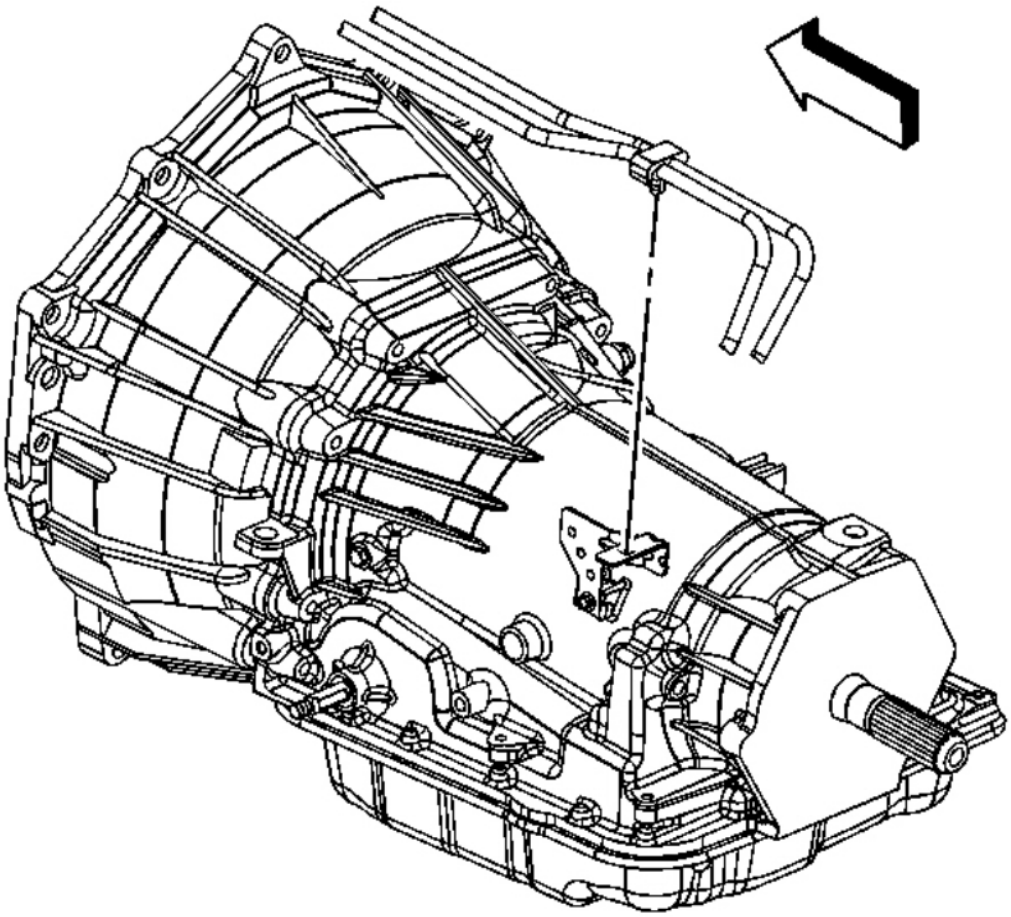

Fig. 381: View Of Fuel Line Clip At Bracket
Courtesy of GENERAL MOTORS CORP.

8. Remove the fuel line clip from the bracket on the automatic transmission.
9. If equipped with 4-wheel drive (4WD), remove the fuel hose/pipe clip from the bracket on the transfer case.

cardiagn.com

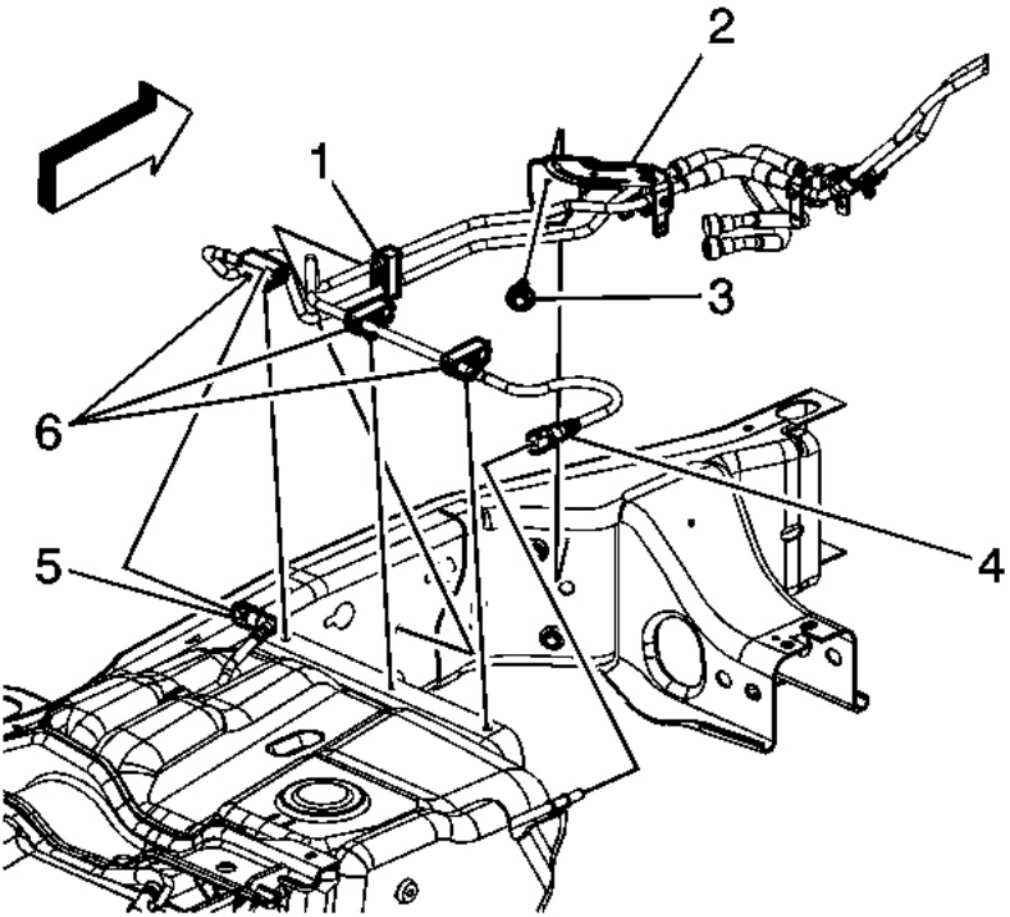

Fig. 382: View Of EVAP Lines, Fuel Feed Lines & Fittings
Courtesy of GENERAL MOTORS CORP.

10. Remove the fuel line bracket bolt (3).
11. Disconnect the chassis EVAP line quick connect fitting (4) from the fuel tank line. Refer to **Quick Connect Fitting Service - Plastic Collar**.
12. Disconnect the fuel tank fuel feed line quick connect fitting (5) from the chassis line. Refer to **Quick Connect Fitting Service - Plastic Collar**.
13. Cap the fuel and EVAP lines in order to prevent possible fuel and/or EVAP system contamination.
14. Remove the fuel/EVAP line clips from the frame and crossmember.
15. Remove the fuel line bracket locator tab from the frame.
16. Remove the fuel/EVAP lines from the vehicle.

cardiagn.com

Installation Procedure

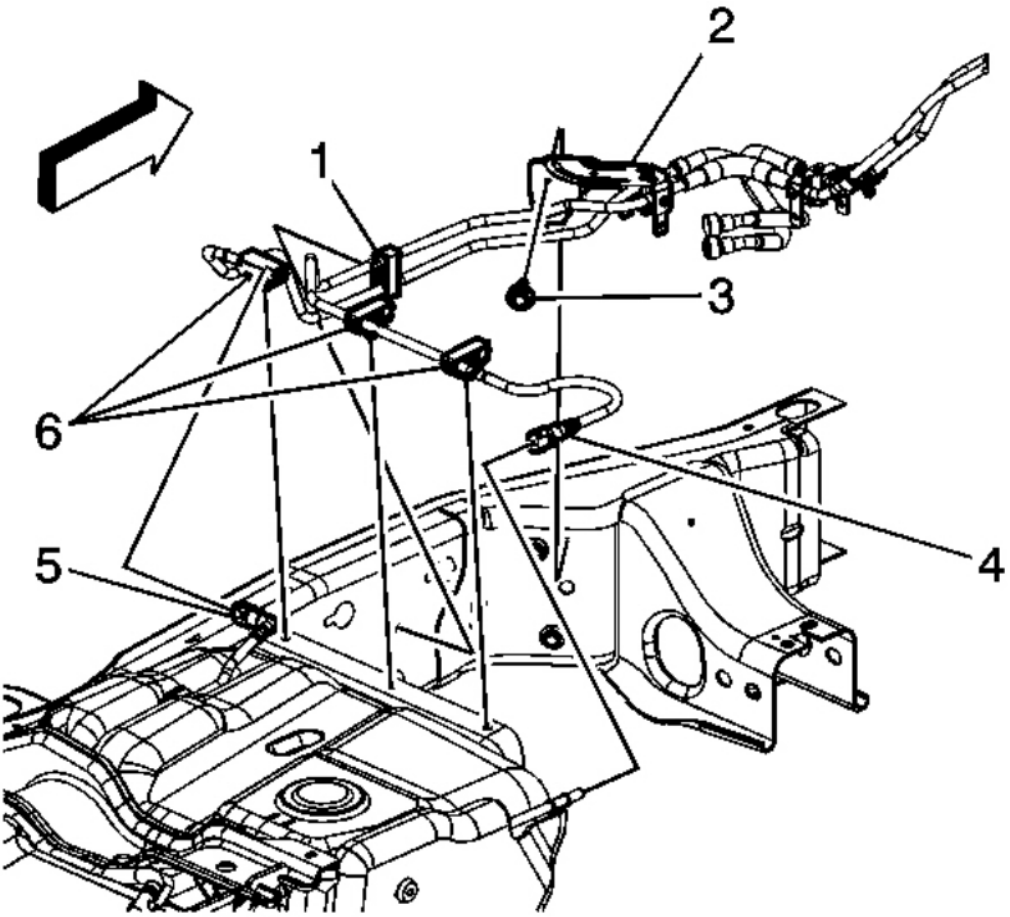

Fig. 383: View Of EVAP Lines, Fuel Feed Lines & Fittings
Courtesy of GENERAL MOTORS CORP.

1. Install the fuel/EVAP lines to the vehicle.
2. Install the fuel line bracket locator tab to the frame.
3. Install the fuel/EVAP line clips to the frame and crossmember.

NOTE: **Refer to Fastener Notice .**

4. Install the fuel line bracket bolt (3).

Tighten: Tighten the bolt to 12 N.m (106 lb in).

cardiagn.com

5. Remove the caps from the fuel and EVAP lines.
6. Connect the chassis EVAP line quick connect fitting (4) to the fuel tank line. Refer to **Quick Connect Fitting Service - Plastic Collar**.
7. Connect the fuel tank fuel feed line quick connect fitting (5) to the chassis line. Refer to **Quick Connect Fitting Service - Plastic Collar**.

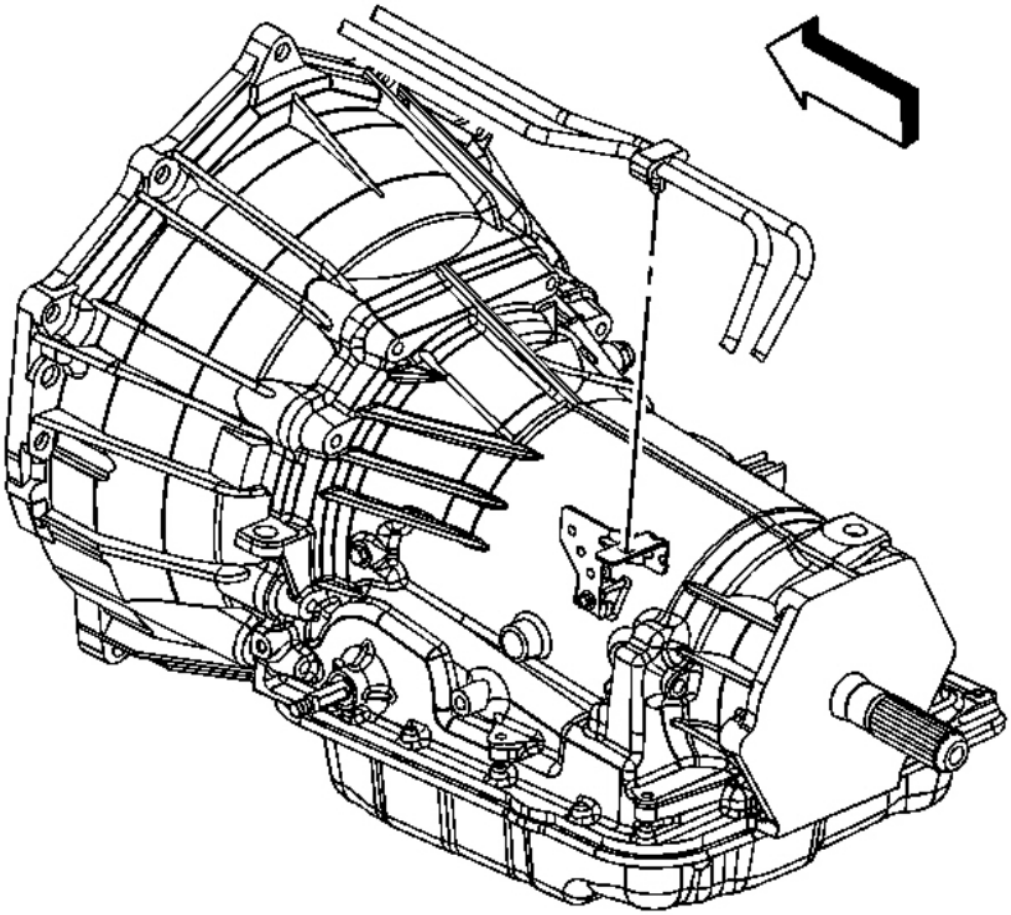

Fig. 384: View Of Fuel Line Clip At Bracket
Courtesy of GENERAL MOTORS CORP.

8. If equipped with 4WD, install the fuel hose/pipe clip to the bracket on the transfer case.
9. Install the fuel line clip to the bracket on the automatic transmission.

cardiagn.com

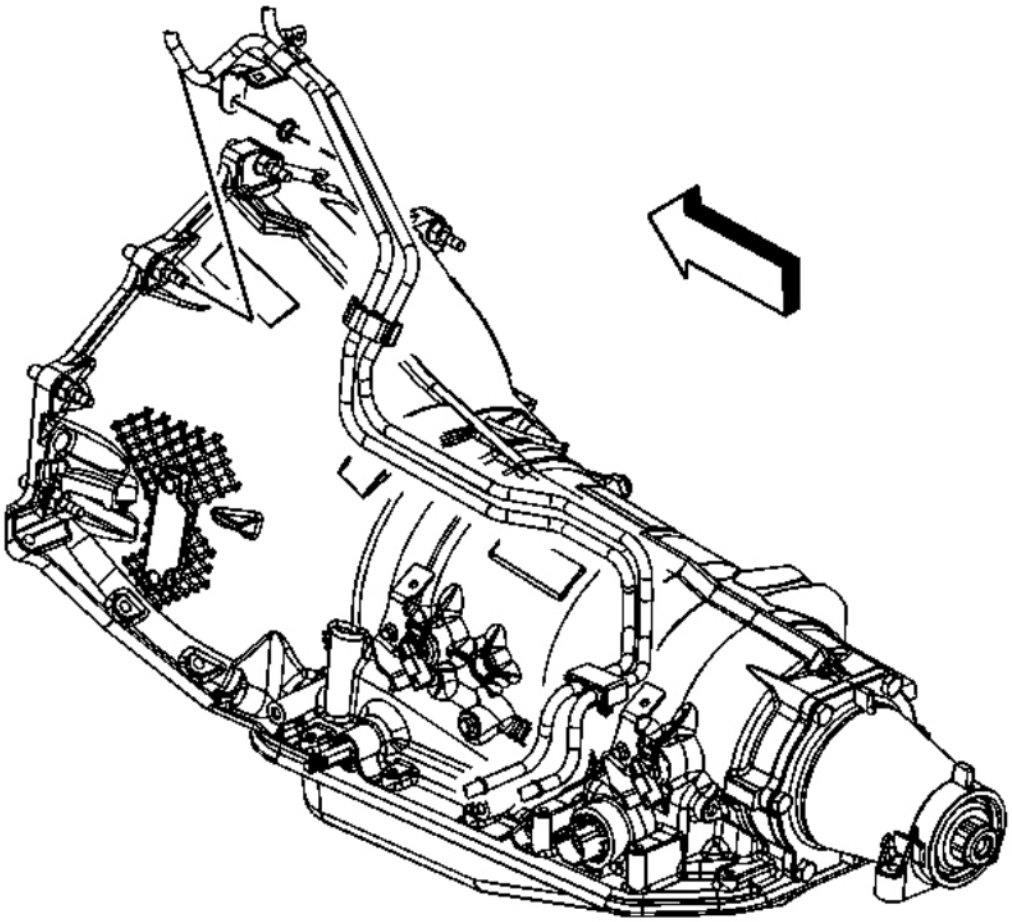

Fig. 385: View Of Fuel/Evaporative Emission Pipe & Bracket
Courtesy of GENERAL MOTORS CORP.

10. Install the fuel pipe bracket nut to the bellhousing stud.

    Tighten: Tighten the nut to 20 N.m (15 lb ft).

11. Position and install the front propeller shaft. Refer to **Front Propeller Shaft Replacement** .
12. Lower the vehicle.

cardiagn.com

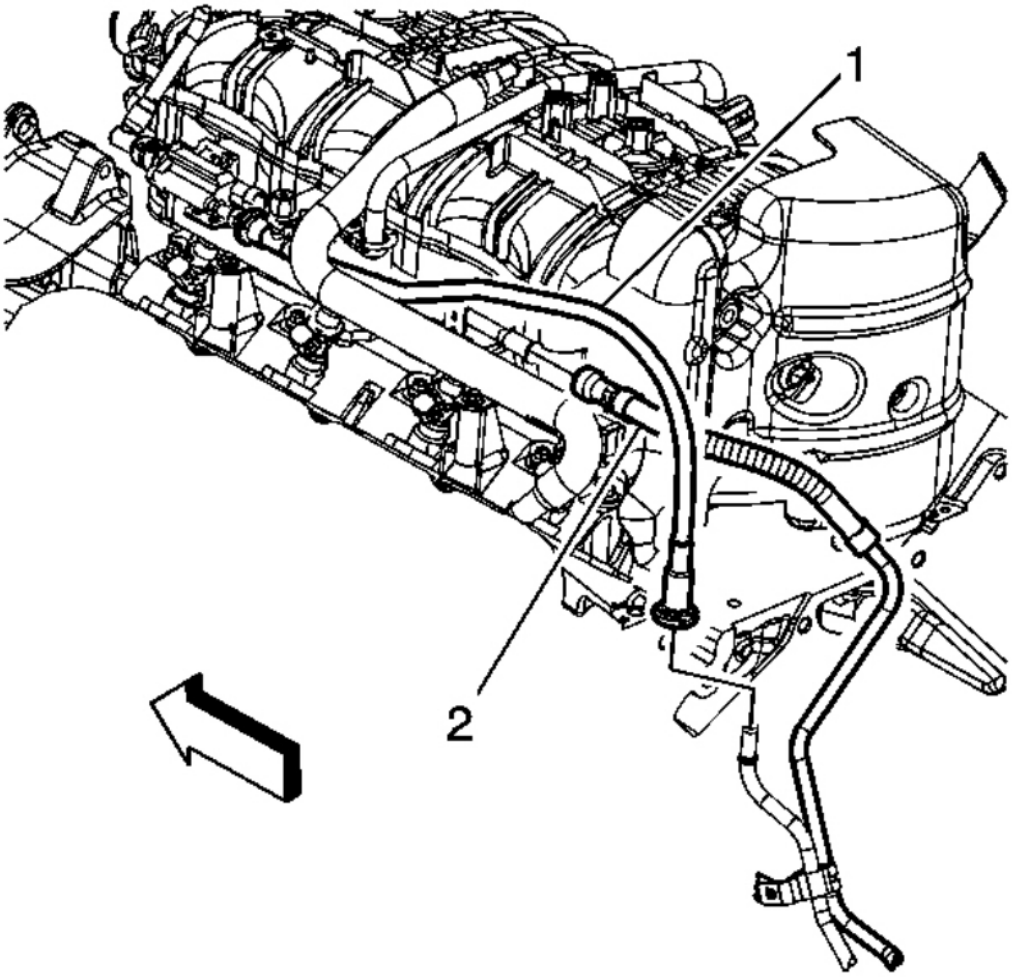

Fig. 386: View Of EVAP Canister Purge Tube & Quick Connect Fitting
Courtesy of GENERAL MOTORS CORP.

13. Remove the caps from the fuel rail and EVAP line.
14. Disconnect the engine evaporative emission (EVAP) line (1) quick connect fitting from the chassis EVAP line. Refer to **Quick Connect Fitting Service - Plastic Collar**.
15. Disconnect the fuel feed line quick connect fitting (2) from the fuel rail. Refer to **Quick Connect Fitting Service - Metal Collar**.
16. Install the fuel fill cap.
17. Connect the negative battery cable. Refer to **Battery Negative Cable Disconnection and Connection** .
18. Use the following procedure in order to inspect for leaks:

cardiagn.com

1. Turn the ignition ON, with the engine OFF, for 2 seconds.
2. Turn the ignition OFF for 10 seconds.
3. Turn the ignition ON, with the engine OFF.
4. Inspect for fuel leaks.

19. Install the intake manifold sight shield. Refer to **Upper Intake Manifold Sight Shield Replacement** .

FUEL HOSE/PIPES REPLACEMENT - CHASSIS (2500 SERIES)

Removal Procedure

IMPORTANT: Clean all fuel and evaporative emission (EVAP) line connections and surrounding areas prior to disconnecting the lines in order to avoid possible fuel and/or EVAP system contamination.

cardiagn.com

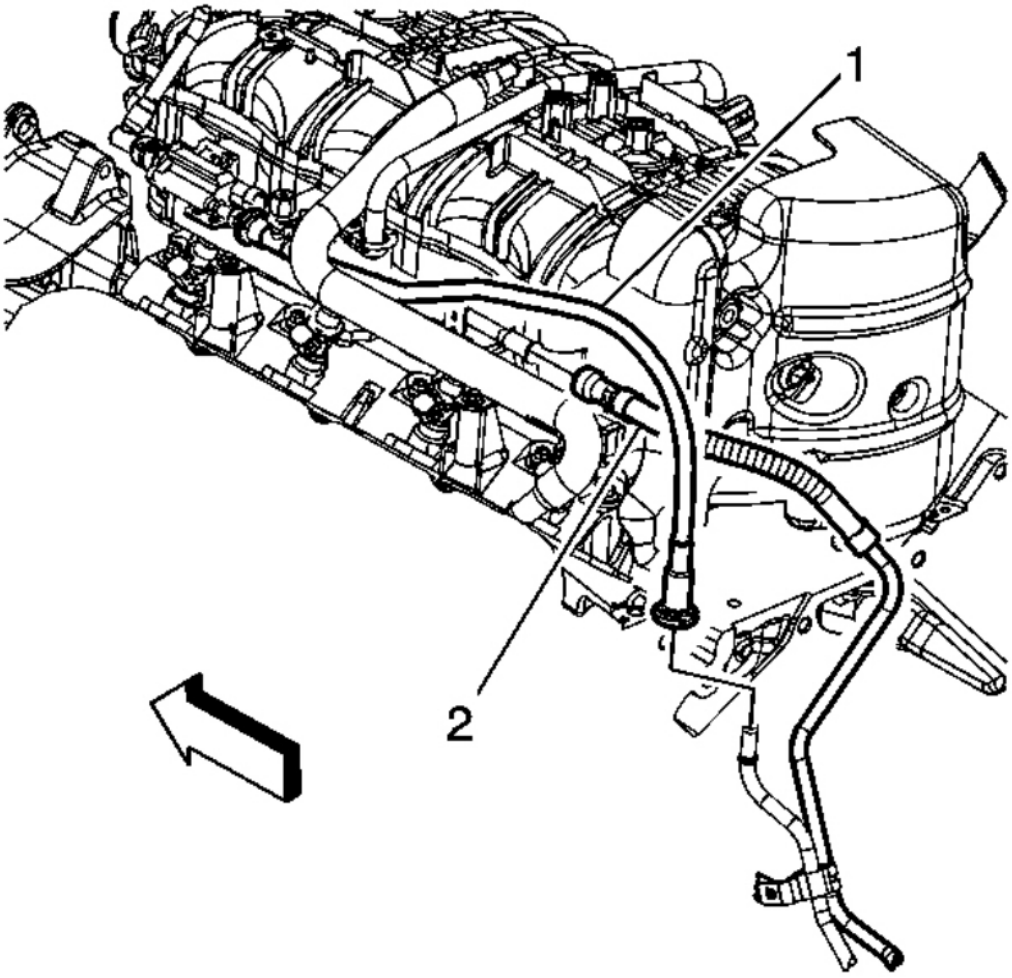

Fig. 387: View Of EVAP Canister Purge Tube & Quick Connect Fitting
Courtesy of GENERAL MOTORS CORP.

1. Relieve the fuel system pressure. Refer to **Fuel Pressure Relief**.
2. Disconnect the fuel feed pipe (2) quick connect fitting at the fuel rail. Refer to **Quick Connect Fitting Service - Metal Collar**.
3. Disconnect the EVAP line (1) quick connect fitting from the chassis line. Refer to **Quick Connect Fitting Service - Plastic Collar**.
4. Cap the fuel rail and EVAP line in order to prevent fuel/EVAP system contamination.
5. Raise and support the vehicle. Refer to **Lifting and Jacking the Vehicle** .

cardiagn.com

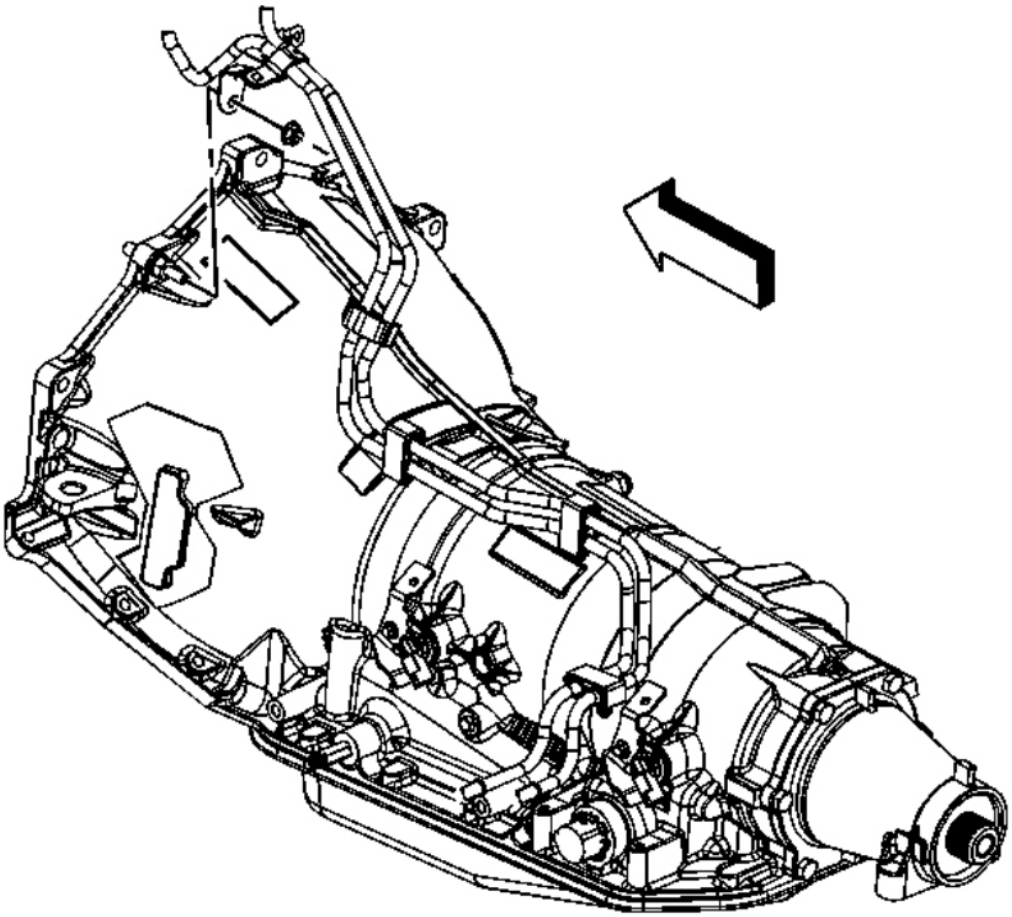

Fig. 388: View Of Fuel Pipe Bracket & Nut At Bellhousing
Courtesy of GENERAL MOTORS CORP.

6. Remove the fuel pipe bracket nut.
7. Remove the fuel pipe bracket from the bellhousing stud.

cardiagn.com

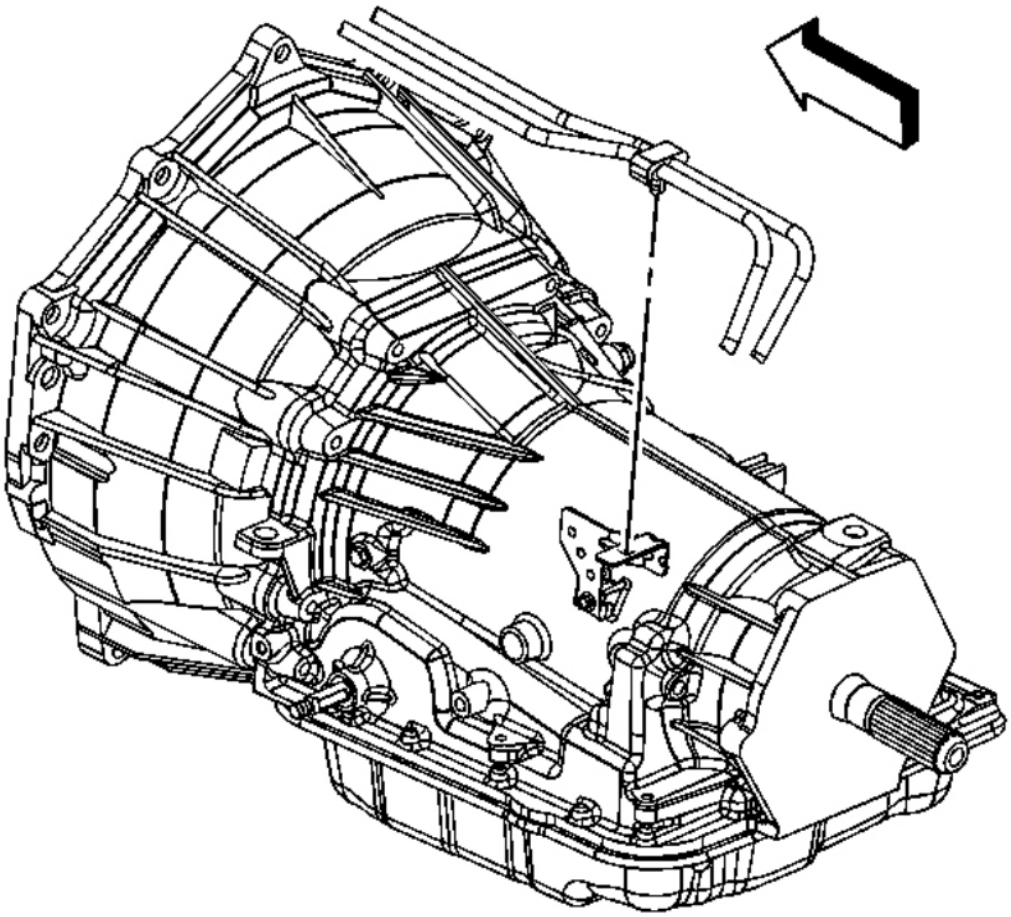

Fig. 389: View Of Fuel Line Clip At Bracket
Courtesy of GENERAL MOTORS CORP.

8. Remove the fuel line clip from the bracket on the automatic transmission.
9. If equipped with 4-wheel drive (4WD), remove the fuel hose/pipe clip from the bracket on the transfer case.

cardiagn.com

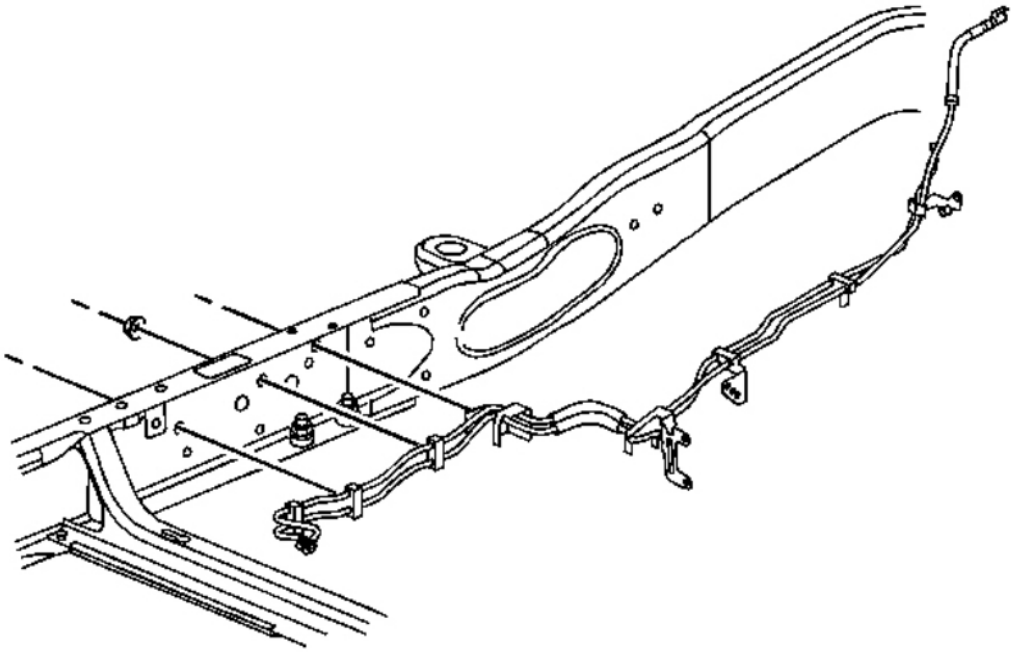

Fig. 390: View Of Fuel/EVAP Line Bundle
Courtesy of GENERAL MOTORS CORP.

10. Remove the fuel line bracket nuts.
11. Remove the fuel/EVAP line bundle.

Installation Procedure

cardiagn.com

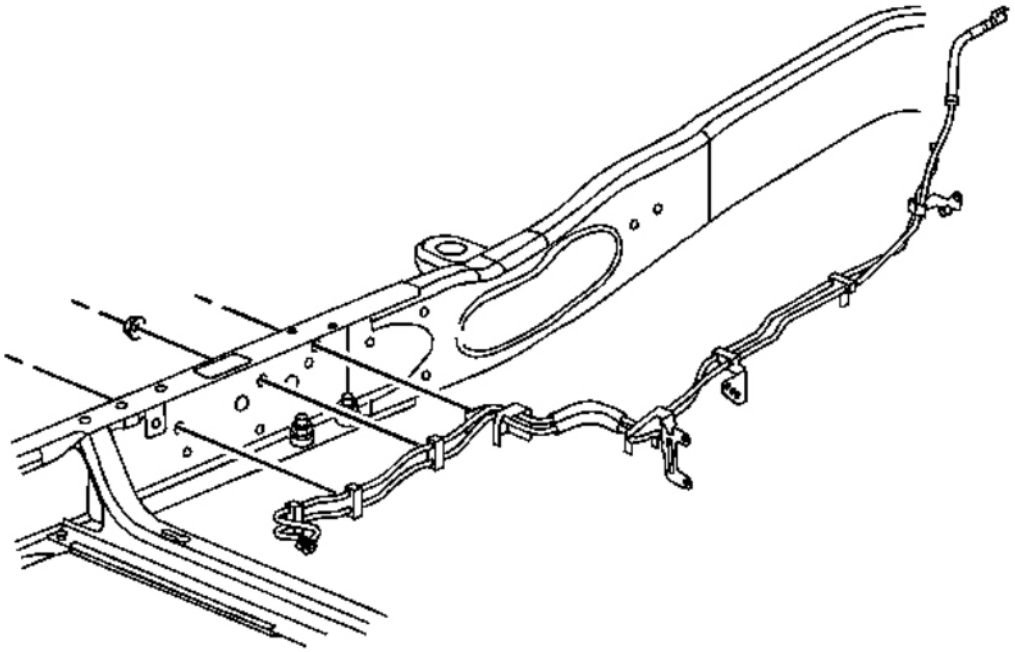

Fig. 391: View Of Fuel/EVAP Line Bundle
Courtesy of GENERAL MOTORS CORP.

NOTE: **Refer to Fastener Notice .**

1. Install the fuel/EVAP line bundle.
2. Install the fuel line bracket nuts.

Tighten: Tighten the bolt to 18 N.m (13 lb ft).

cardiagn.com

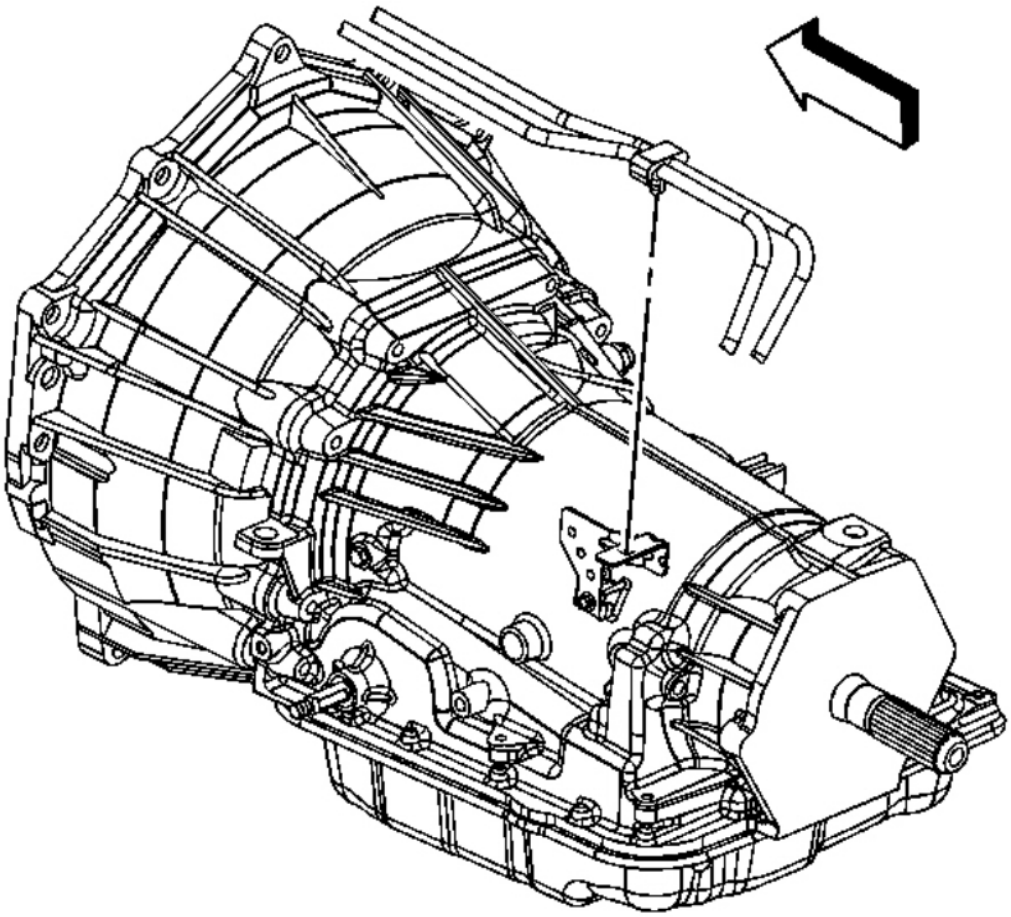

Fig. 392: View Of Fuel Line Clip At Bracket
Courtesy of GENERAL MOTORS CORP.

3. If equipped with 4WD, install the fuel hose/pipe clip to the bracket on the transfer case.
4. Install the fuel line clip to the bracket on the automatic transmission.

cardiagn.com

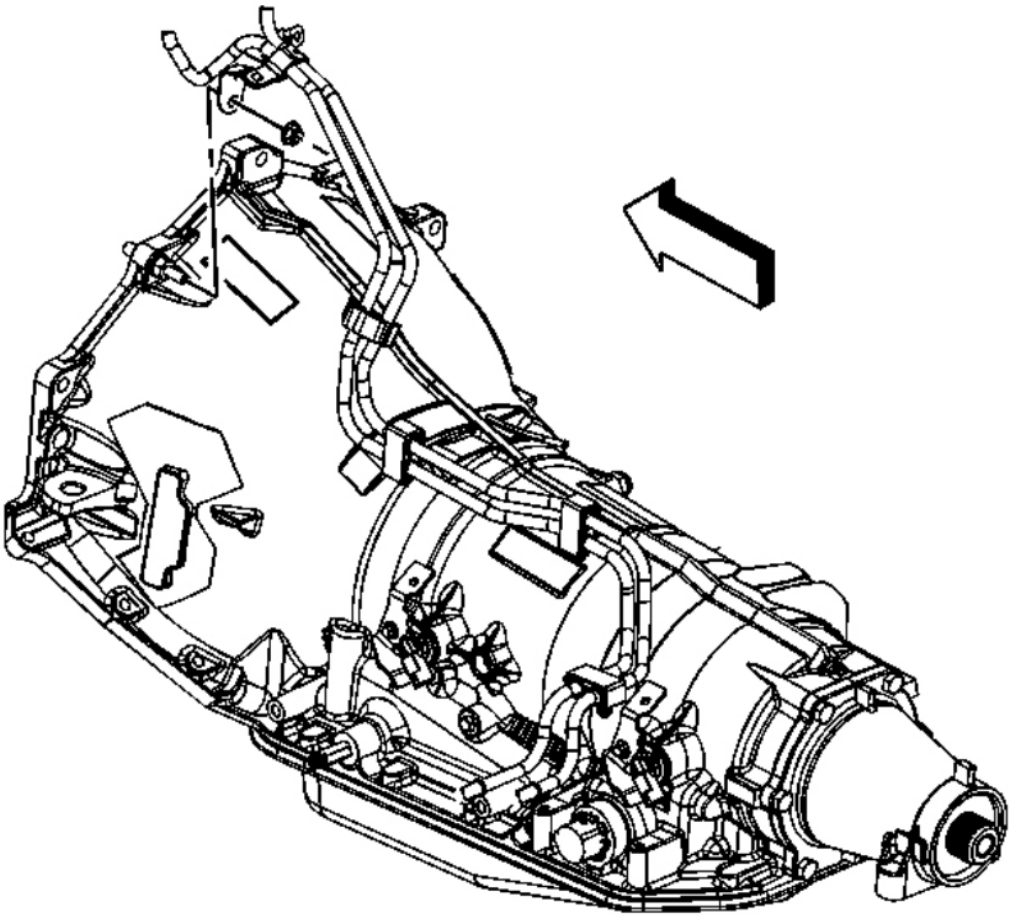

Fig. 393: View Of Fuel Pipe Bracket & Nut At Bellhousing
Courtesy of GENERAL MOTORS CORP.

5. Install the fuel pipe bracket to the bellhousing stud.
6. Install the fuel pipe bracket nut.

   Tighten: Tighten the nut to 20 N.m (15 lb ft).

7. Lower the vehicle.

cardiagn.com

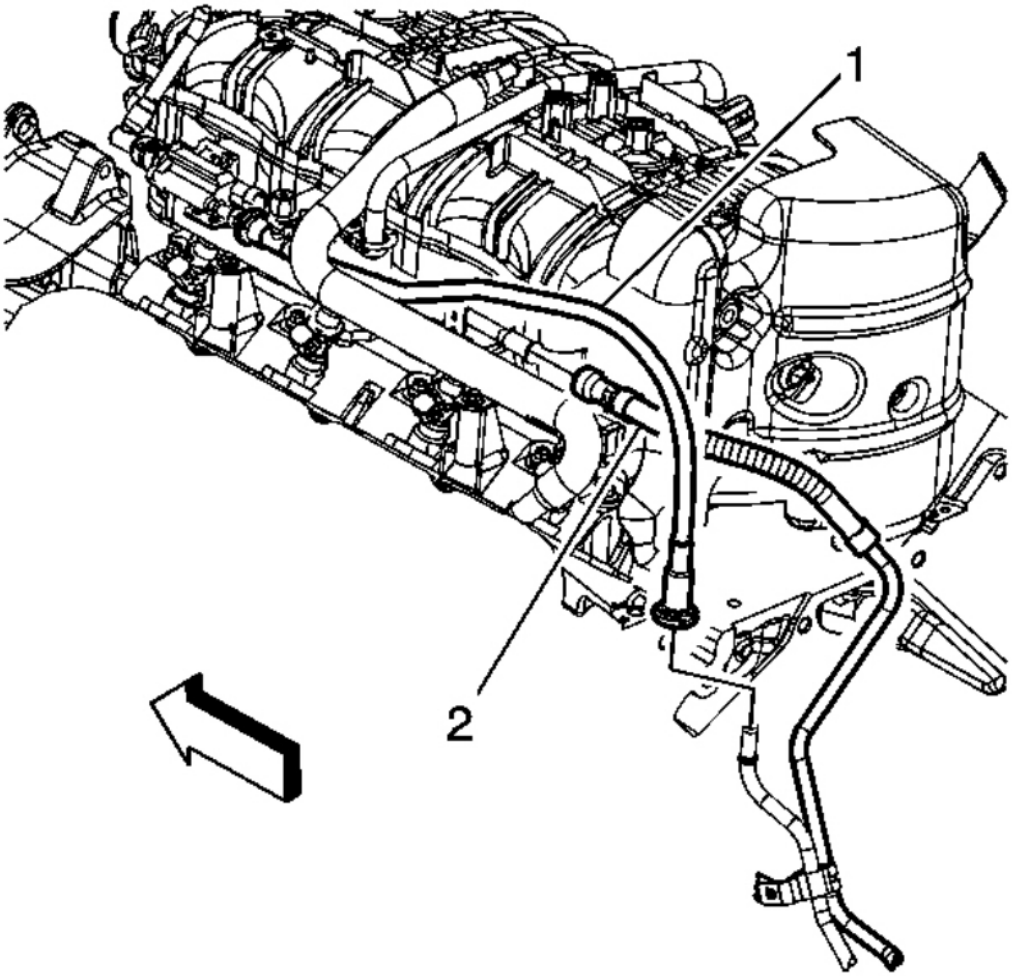

Fig. 394: View Of EVAP Canister Purge Tube & Quick Connect Fitting
Courtesy of GENERAL MOTORS CORP.

8. Remove the caps from the fuel rail and EVAP line.
9. Connect the EVAP line (1) quick connect fitting to the chassis line. Refer to **Quick Connect Fitting Service - Plastic Collar**.
10. Connect the fuel feed line (2) quick connect fitting to the fuel rail. Refer to **Quick Connect Fitting Service - Metal Collar**.
11. Install the fuel fill cap.
12. Connect the negative battery cable. Refer to **Battery Negative Cable Disconnection and Connection** .
13. Use the following procedure in order to inspect for leaks:

cardiagn.com

1. Turn the ignition ON, with the engine OFF, for 2 seconds.
2. Turn the ignition OFF for 10 seconds.
3. Turn the ignition ON, with the engine OFF.
4. Inspect for fuel leaks.

14. Install the intake manifold sight shield. Refer to **Upper Intake Manifold Sight Shield Replacement** .

FUEL HOSE/PIPES ASSEMBLY REPLACEMENT (1500 LWB - 117.3L (31 GAL) TANK)

Removal Procedure

IMPORTANT: Clean the fuel feed line connection and surrounding area prior to disconnecting the fitting in order to avoid possible fuel system contamination.

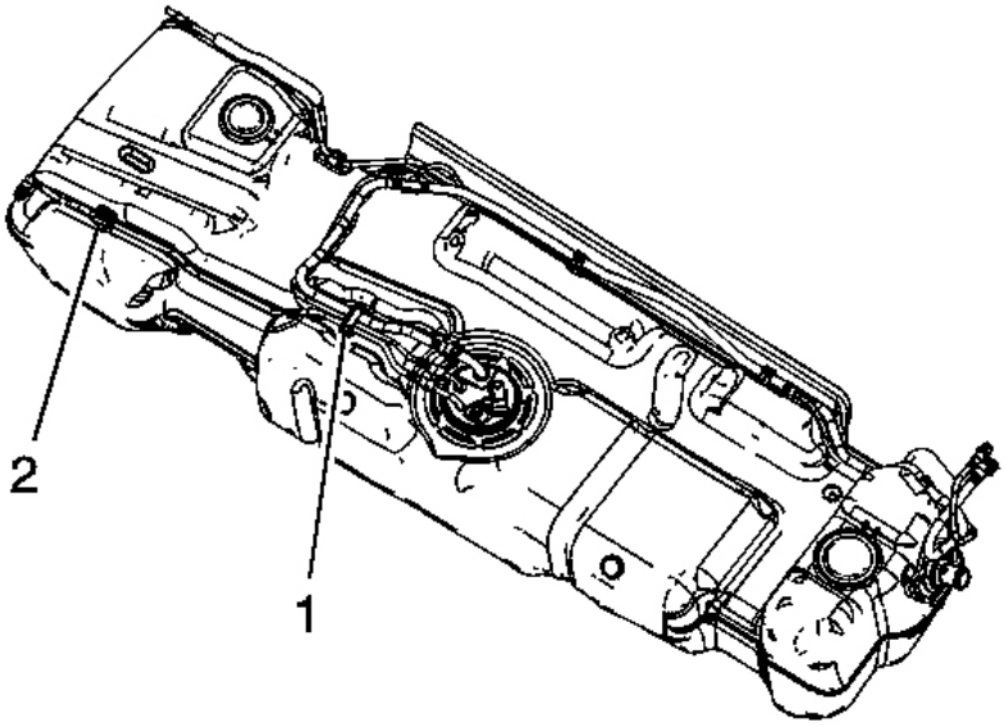

Fig. 395: View Of Fuel Feed Line Retainer & EVAP Line Clip
Courtesy of GENERAL MOTORS CORP.

1. Remove the fuel tank. Refer to **Fuel Tank Replacement (1500 LWB - 117.3L (31 gal) Tank)** or **Fuel Tank Replacement (1500 LWB - 117.3L (31 gal) Tank + E85)** or **Fuel Tank Replacement (1500**

cardiagn.com

SWB - 98.4L (26 gal) Tank) or **Fuel Tank Replacement (1500 SWB - 98.4L (26 gal) Tank + E85)** or **Fuel Tank Replacement (2500 LWB - 43.5L (11.5 gal) Tank-Rear)** or **Fuel Tank Replacement (2500 LWB - 98.4L (26 gal) Tank-Front)**.

2. Remove the fuel feed line from the retaining feature (2) in the fuel tank.
3. Open the fuel/EVAP line clip (1) and remove the fuel feed line from the clip.
4. Disconnect the fuel feed line quick connect fitting at the fuel tank module. Refer to **Quick Connect Fitting Service - Plastic Collar**.

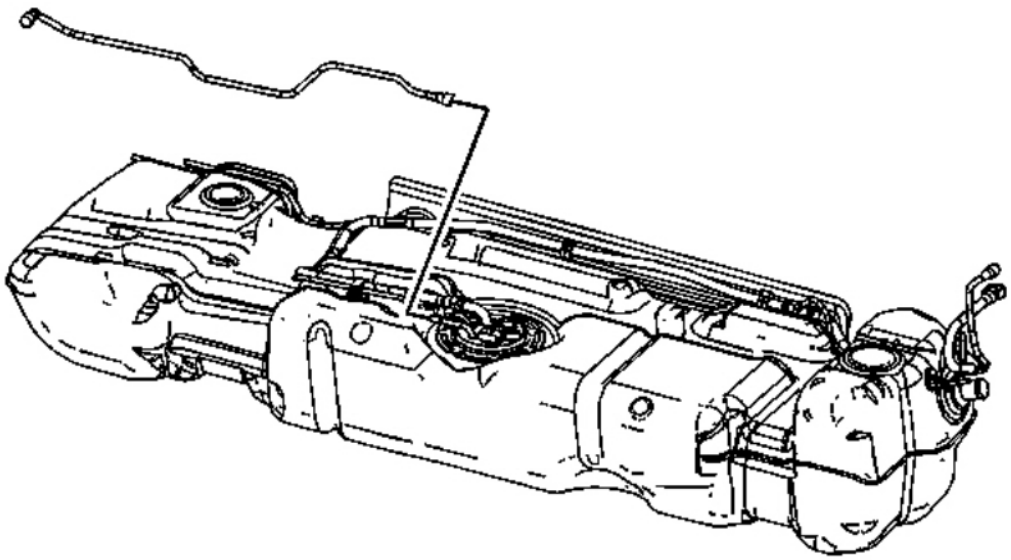

Fig. 396: View Of Fuel Feed Line
Courtesy of GENERAL MOTORS CORP.

5. Remove the fuel feed line from the fuel tank.
6. Cap the fuel feed port on the fuel tank module in order to prevent possible fuel system contamination.

Installation Procedure

cardiagn.com

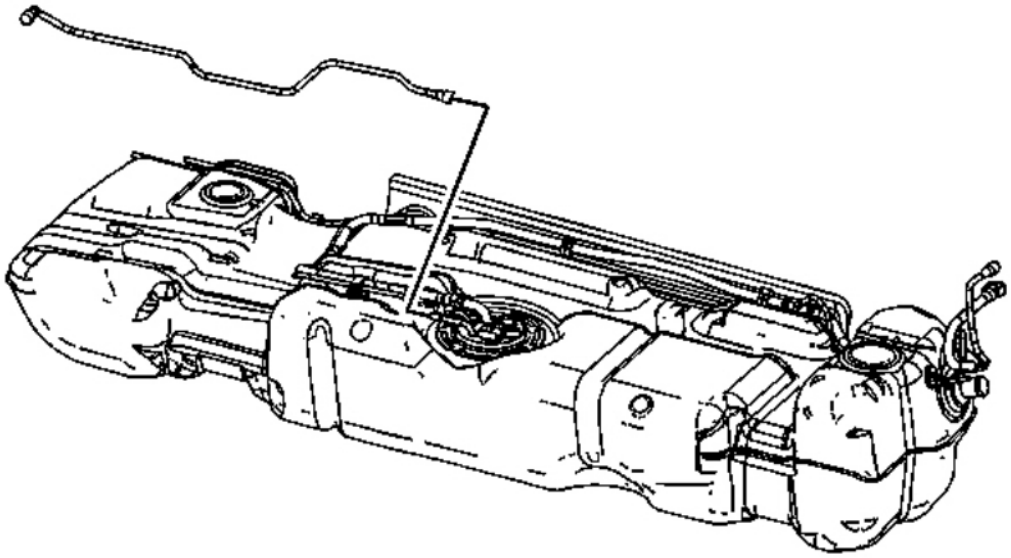

Fig. 397: View Of Fuel Feed Line
Courtesy of GENERAL MOTORS CORP.

1. Install the fuel feed line to the fuel tank.
2. Remove the cap from the fuel feed port on the fuel tank module.

cardiagn.com

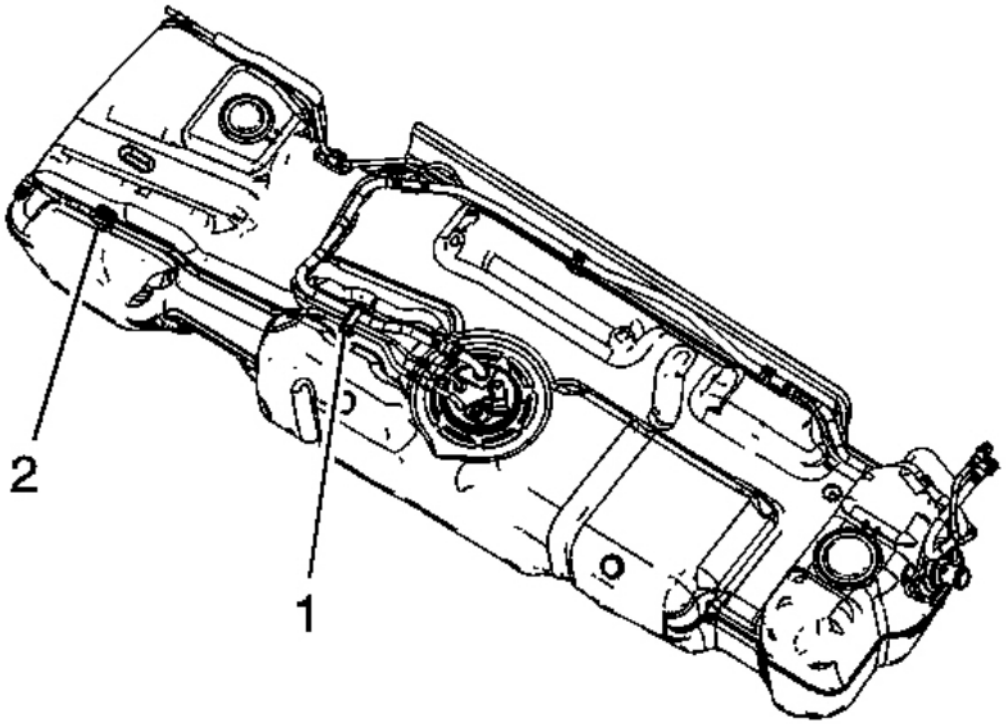

Fig. 398: View Of Fuel Feed Line Retainer & EVAP Line Clip
Courtesy of GENERAL MOTORS CORP.

3. Connect the fuel feed line quick connect fitting at the fuel tank module. Refer to **Quick Connect Fitting Service - Plastic Collar**.
4. Install the fuel feed line to the clip (1) and close the clip.
5. Install the fuel feed line to the retaining feature (2) in the fuel tank.
6. Install the fuel tank. Refer to **Fuel Tank Replacement (1500 LWB - 117.3L (31 gal) Tank)** or **Fuel Tank Replacement (1500 LWB - 117.3L (31 gal) Tank + E85)** or **Fuel Tank Replacement (1500 SWB - 98.4L (26 gal) Tank)** or **Fuel Tank Replacement (1500 SWB - 98.4L (26 gal) Tank + E85)** or **Fuel Tank Replacement (2500 LWB - 43.5L (11.5 gal) Tank-Rear)** or **Fuel Tank Replacement (2500 LWB - 98.4L (26 gal) Tank-Front)**.

FUEL HOSE/PIPES ASSEMBLY REPLACEMENT (1500 LWB - 117.3L (31 GAL) TANK + E85)

Removal Procedure

IMPORTANT: Clean the fuel feed line connection and surrounding area prior to

cardiagn.com

disconnecting the fitting in order to avoid possible fuel system contamination.

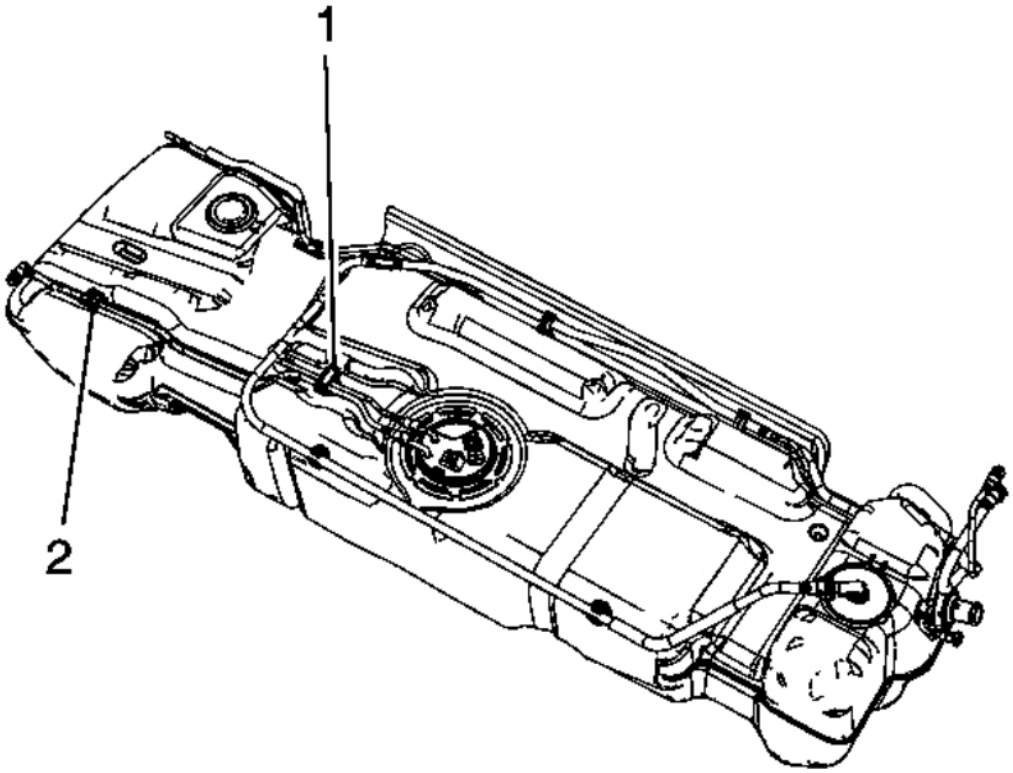

Fig. 399: View Of EVAP Line Clip & Retainer
Courtesy of GENERAL MOTORS CORP.

1. Remove the fuel tank. Refer to **Fuel Tank Replacement (1500 LWB - 117.3L (31 gal) Tank)** or **Fuel Tank Replacement (1500 LWB - 117.3L (31 gal) Tank + E85)** or **Fuel Tank Replacement (1500 SWB - 98.4L (26 gal) Tank)** or **Fuel Tank Replacement (1500 SWB - 98.4L (26 gal) Tank + E85)** or **Fuel Tank Replacement (2500 LWB - 43.5L (11.5 gal) Tank-Rear)** or **Fuel Tank Replacement (2500 LWB - 98.4L (26 gal) Tank-Front)**.
2. Remove the fuel feed line from the retaining feature (2) in the fuel tank.
3. Open the fuel/EVAP line clip (1) and remove the fuel feed line from the clip.
4. Disconnect the fuel feed line quick connect fitting at the fuel tank module. Refer to **Quick Connect Fitting Service - Plastic Collar**.

cardiagn.com

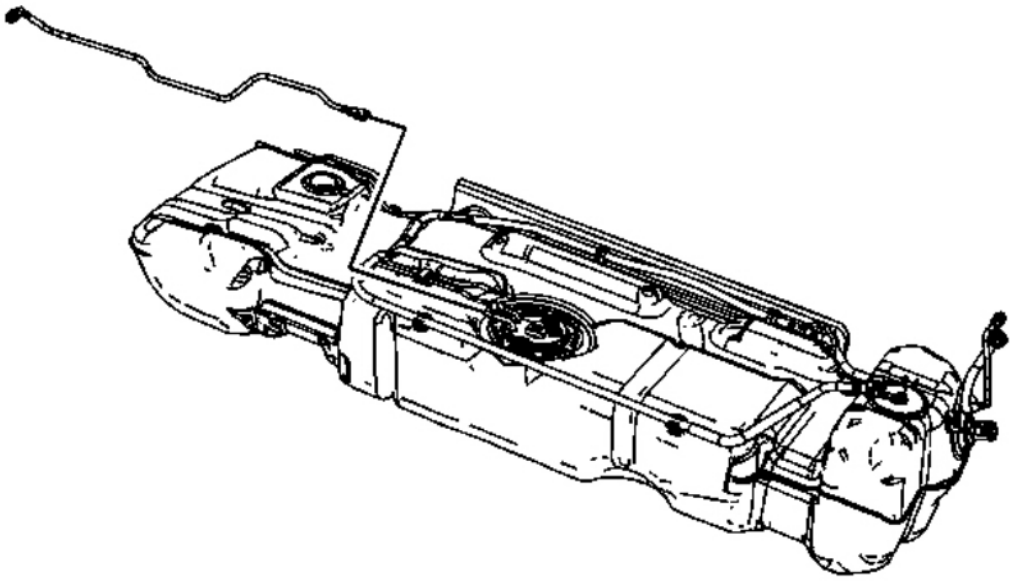

Fig. 400: View Of Fuel Feed Line
Courtesy of GENERAL MOTORS CORP.

5. Remove the fuel feed line from the fuel tank.
6. Cap the fuel feed port on the fuel tank module in order to prevent possible fuel system contamination.

Installation Procedure

cardiagn.com

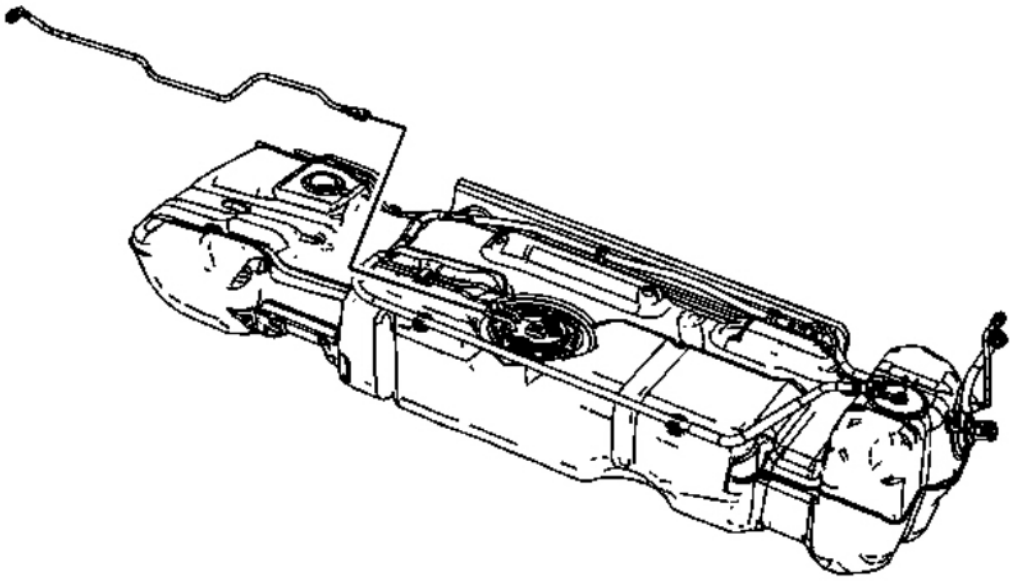

Fig. 401: View Of Fuel Feed Line
Courtesy of GENERAL MOTORS CORP.

1. Install the fuel feed line to the fuel tank.
2. Remove the cap from the fuel feed port on the fuel tank module.

cardiagn.com

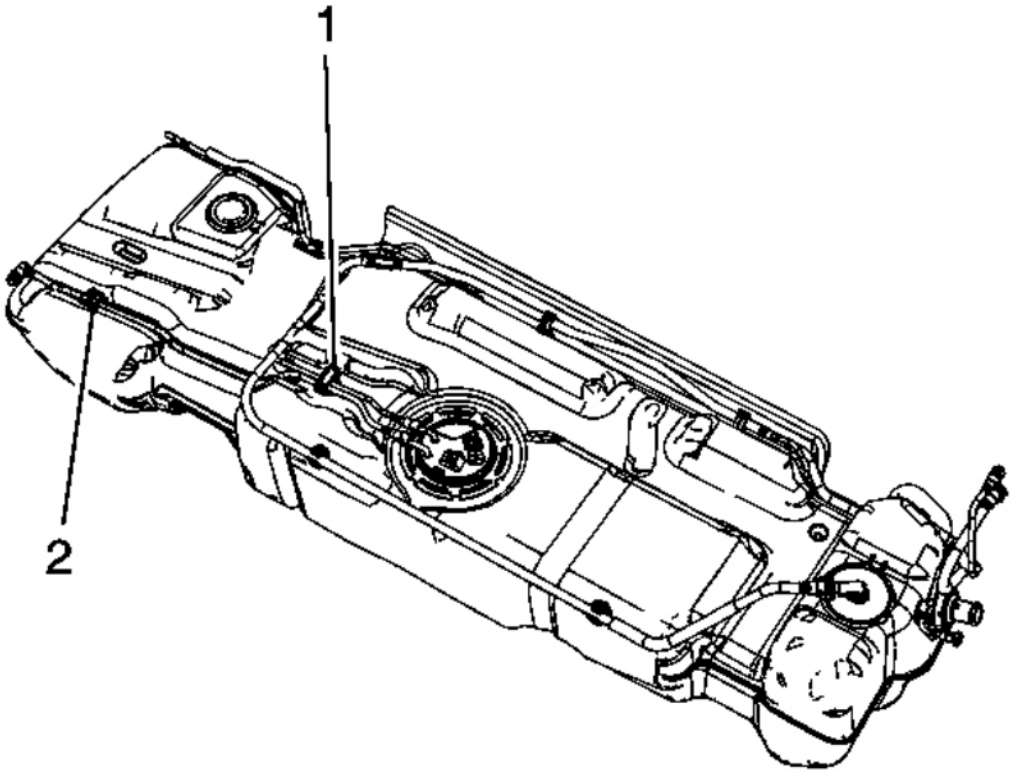

Fig. 402: View Of EVAP Line Clip & Retainer
Courtesy of GENERAL MOTORS CORP.

3. Connect the fuel feed line quick connect fitting at the fuel tank module. Refer to **Quick Connect Fitting Service - Plastic Collar**.
4. Install the fuel feed line to the clip (1) and close the clip.
5. Install the fuel feed line to the retaining feature (2) in the fuel tank.
6. Install the fuel tank. Refer to **Fuel Tank Replacement (1500 LWB - 117.3L (31 gal) Tank)** or **Fuel Tank Replacement (1500 LWB - 117.3L (31 gal) Tank + E85)** or **Fuel Tank Replacement (1500 SWB - 98.4L (26 gal) Tank)** or **Fuel Tank Replacement (1500 SWB - 98.4L (26 gal) Tank + E85)** or **Fuel Tank Replacement (2500 LWB - 43.5L (11.5 gal) Tank-Rear)** or **Fuel Tank Replacement (2500 LWB - 98.4L (26 gal) Tank-Front)**.

FUEL HOSE/PIPES ASSEMBLY REPLACEMENT (1500 SWB - 98.4L (26 GAL) TANK)

Removal Procedure

IMPORTANT: Clean the fuel feed line connection and surrounding area prior to

cardiagn.com

disconnecting the fitting in order to avoid possible fuel system contamination.

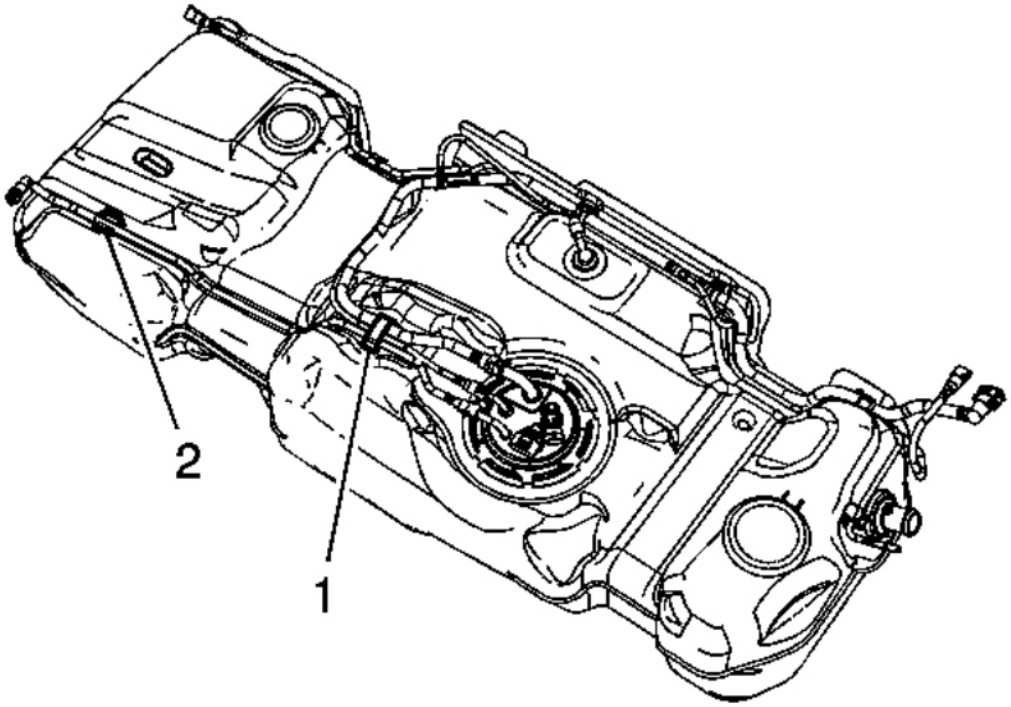

Fig. 403: View Of EVAP Line Clip & Retainer
Courtesy of GENERAL MOTORS CORP.

1. Remove the fuel tank. Refer to **Fuel Tank Replacement (1500 LWB - 117.3L (31 gal) Tank)** or **Fuel Tank Replacement (1500 LWB - 117.3L (31 gal) Tank + E85)** or **Fuel Tank Replacement (1500 SWB - 98.4L (26 gal) Tank)** or **Fuel Tank Replacement (1500 SWB - 98.4L (26 gal) Tank + E85)** or **Fuel Tank Replacement (2500 LWB - 43.5L (11.5 gal) Tank-Rear)** or **Fuel Tank Replacement (2500 LWB - 98.4L (26 gal) Tank-Front)**.
2. Remove the fuel feed line from the retaining feature (2) in the fuel tank.
3. Open the fuel/evaporative emission (EVAP) line clip (1) and remove the fuel feed line from the clip.
4. Disconnect the fuel feed line quick connect fitting at the fuel tank module. Refer to **Quick Connect Fitting Service - Plastic Collar**.

cardiagn.com

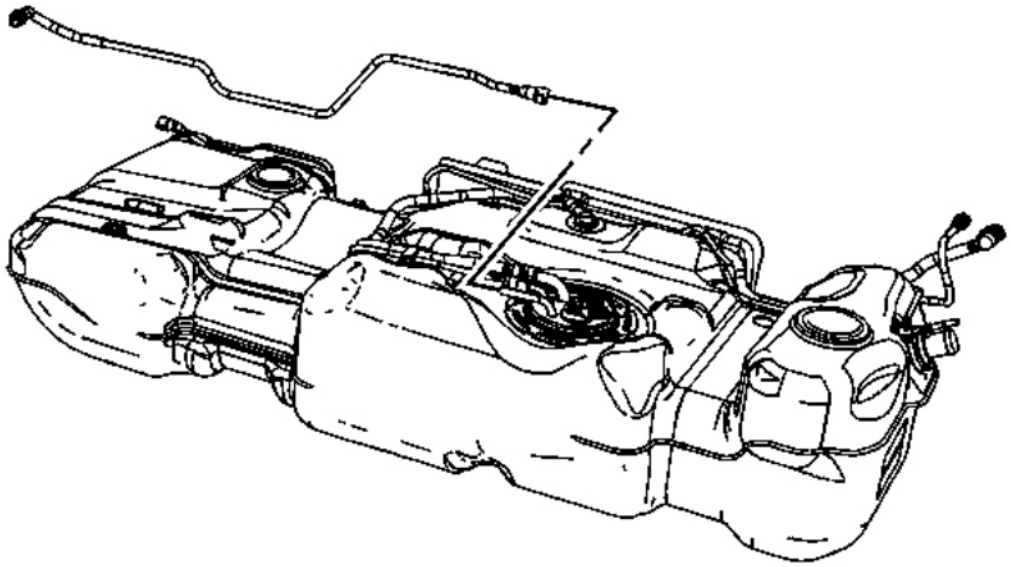

Fig. 404: View Of Fuel Feed Line
Courtesy of GENERAL MOTORS CORP.

5. Remove the fuel feed line from the fuel tank.
6. Cap the fuel feed port on the fuel tank module in order to prevent possible fuel system contamination.

Installation Procedure

cardiagn.com

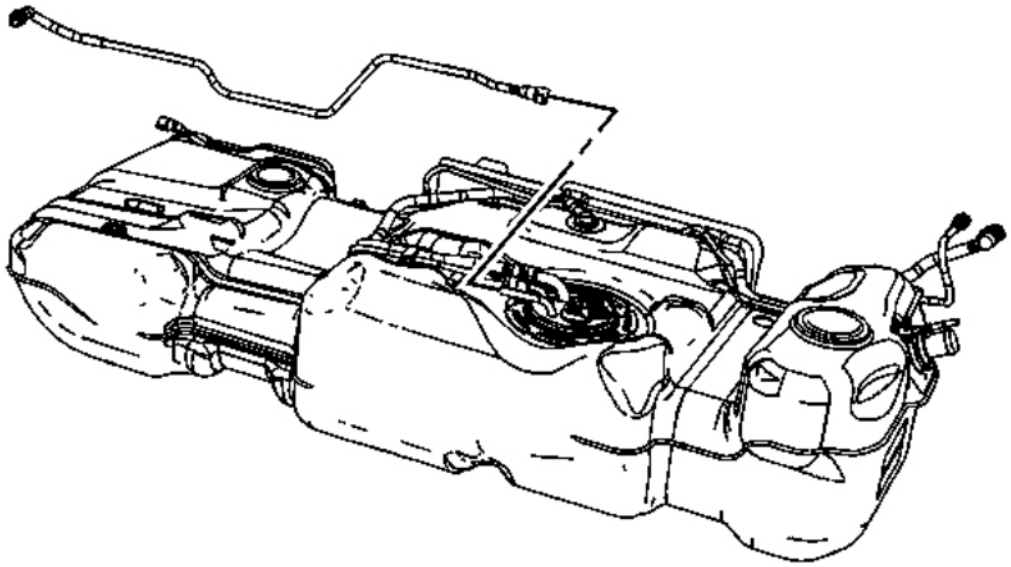

Fig. 405: View Of Fuel Feed Line
Courtesy of GENERAL MOTORS CORP.

1. Install the fuel feed line to the fuel tank.
2. Remove the cap from the fuel feed port on the fuel tank module.

cardiagn.com

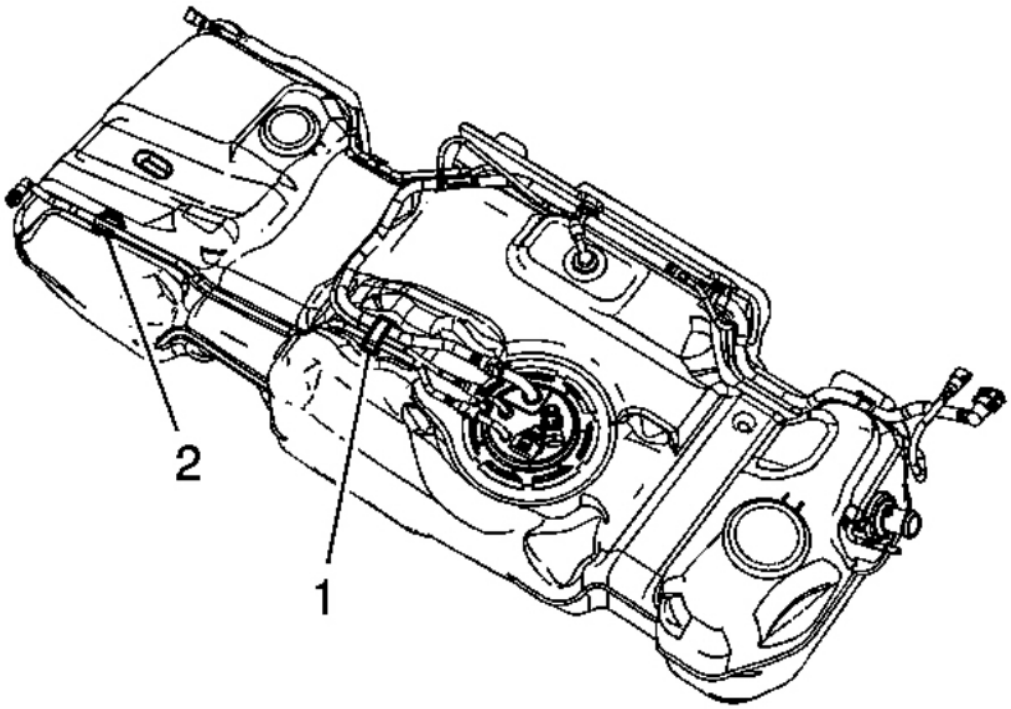

Fig. 406: View Of EVAP Line Clip & Retainer
Courtesy of GENERAL MOTORS CORP.

3. Connect the fuel feed line quick connect fitting at the fuel tank module. Refer to **Quick Connect Fitting Service - Plastic Collar**.
4. Install the fuel feed line to the clip (1) and close the clip.
5. Install the fuel feed line to the retaining feature (2) in the fuel tank.
6. Install the fuel tank. Refer to **Fuel Tank Replacement (1500 LWB - 117.3L (31 gal) Tank)** or **Fuel Tank Replacement (1500 LWB - 117.3L (31 gal) Tank + E85)** or **Fuel Tank Replacement (1500 SWB - 98.4L (26 gal) Tank)** or **Fuel Tank Replacement (1500 SWB - 98.4L (26 gal) Tank + E85)** or **Fuel Tank Replacement (2500 LWB - 43.5L (11.5 gal) Tank-Rear)** or **Fuel Tank Replacement (2500 LWB - 98.4L (26 gal) Tank-Front)**.

FUEL HOSE/PIPES ASSEMBLY REPLACEMENT (1500 SWB - 98.4L (26 GAL) TANK + E85)

Removal Procedure

IMPORTANT: Clean the fuel feed line connection and surrounding area prior to disconnecting the fitting in order to avoid possible fuel system contamination.

cardiagn.com

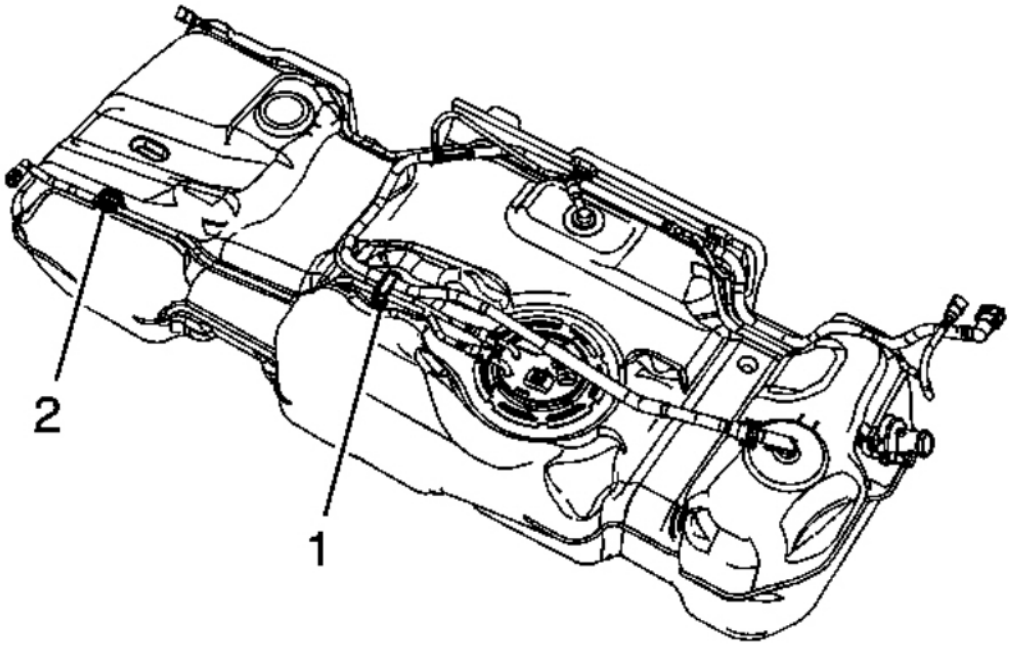

Fig. 407: View Of EVAP Line Clip & Retainer
Courtesy of GENERAL MOTORS CORP.

1. Remove the fuel tank. Refer to **Fuel Tank Replacement (1500 LWB - 117.3L (31 gal) Tank)** or **Fuel Tank Replacement (1500 LWB - 117.3L (31 gal) Tank + E85)** or **Fuel Tank Replacement (1500 SWB - 98.4L (26 gal) Tank)** or **Fuel Tank Replacement (1500 SWB - 98.4L (26 gal) Tank + E85)** or **Fuel Tank Replacement (2500 LWB - 43.5L (11.5 gal) Tank-Rear)** or **Fuel Tank Replacement (2500 LWB - 98.4L (26 gal) Tank-Front)**.
2. Remove the fuel feed line from the retaining feature (2) in the fuel tank.
3. Open the fuel/evaporative emission (EVAP) line clip (1) and remove the fuel feed line from the clip.
4. Disconnect the fuel feed line quick connect fitting at the fuel tank module. Refer to **Quick Connect Fitting Service - Plastic Collar**.

cardiagn.com

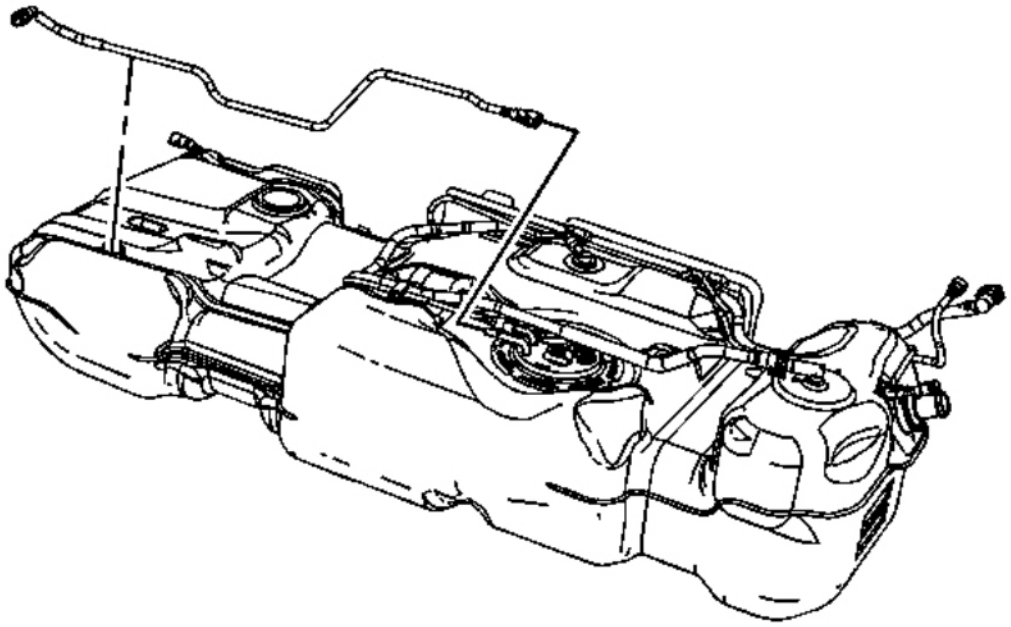

Fig. 408: View Of Fuel Feed Line
Courtesy of GENERAL MOTORS CORP.

5. Remove the fuel feed line from the fuel tank.
6. Cap the fuel feed port on the fuel tank module in order to prevent possible fuel system contamination.

Installation Procedure

cardiagn.com

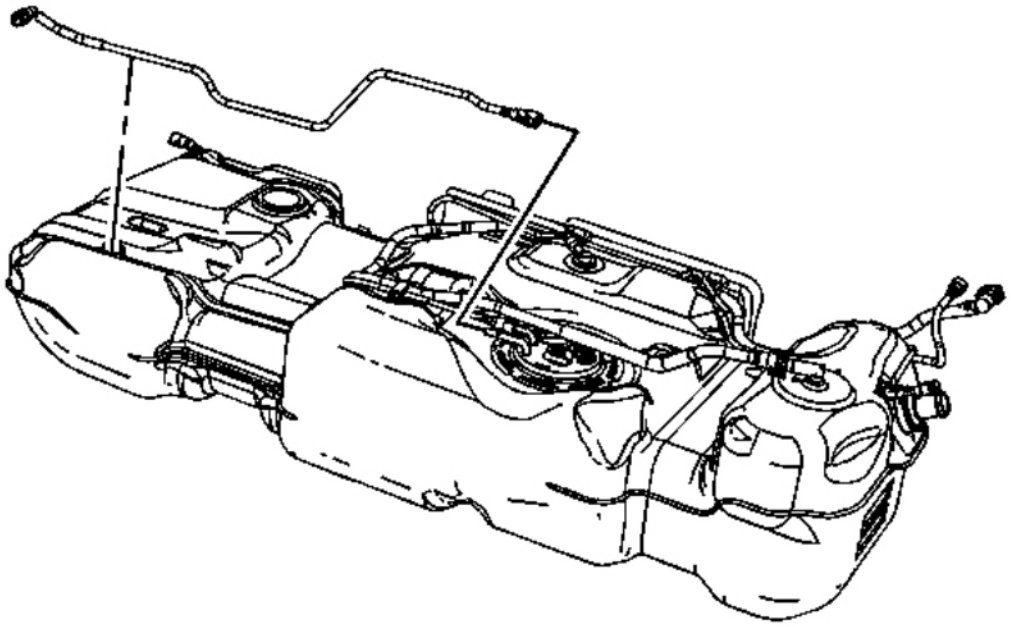

Fig. 409: View Of Fuel Feed Line
Courtesy of GENERAL MOTORS CORP.

1. Install the fuel feed line to the fuel tank.
2. Remove the cap from the fuel feed port on the fuel tank module.

cardiagn.com

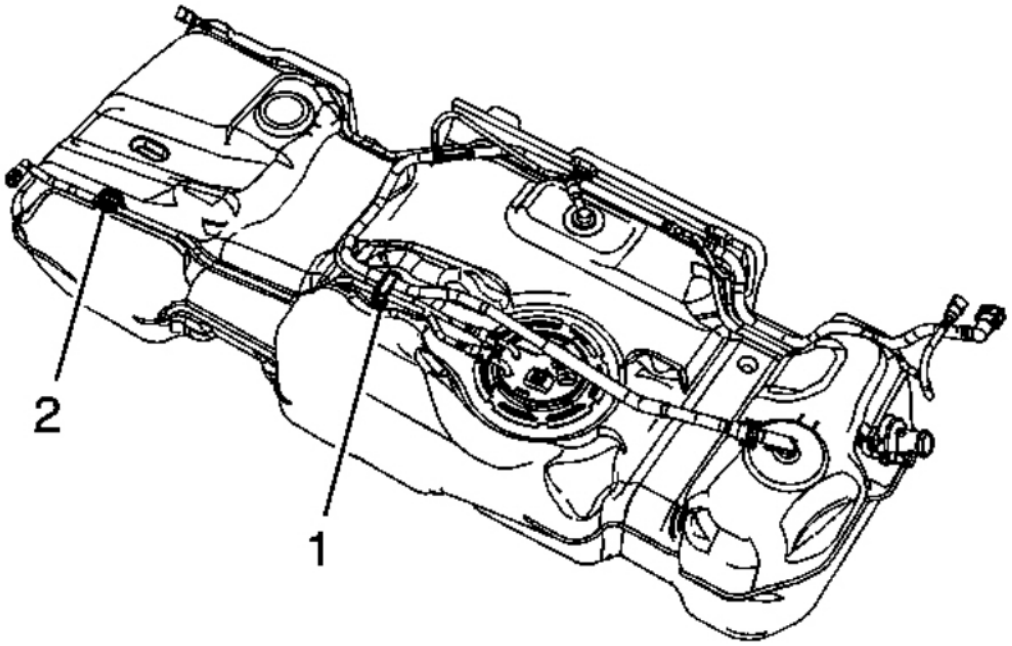

Fig. 410: View Of EVAP Line Clip & Retainer
Courtesy of GENERAL MOTORS CORP.

3. Connect the fuel feed line quick connect fitting at the fuel tank module. Refer to **Quick Connect Fitting Service - Plastic Collar**.
4. Install the fuel feed line to the clip (1) and close the clip.
5. Install the fuel feed line to the retaining feature (2) in the fuel tank.
6. Install the fuel tank. Refer to **Fuel Tank Replacement (1500 LWB - 117.3L (31 gal) Tank)** or **Fuel Tank Replacement (1500 LWB - 117.3L (31 gal) Tank + E85)** or **Fuel Tank Replacement (1500 SWB - 98.4L (26 gal) Tank)** or **Fuel Tank Replacement (1500 SWB - 98.4L (26 gal) Tank + E85)** or **Fuel Tank Replacement (2500 LWB - 43.5L (11.5 gal) Tank-Rear)** or **Fuel Tank Replacement (2500 LWB - 98.4L (26 gal) Tank-Front)**.

FUEL SYSTEM CLEANING

IMPORTANT: Only use oil free compressed air to blow out the fuel pipes.

1. Disconnect the negative battery cable. Refer to **Battery Negative Cable Disconnection and Connection** .
2. Remove the fuel tank module. Refer to **Fuel Tank Pump Module Replacement (1500 LWB - 117.3L (31 gal) Tank + E85)** or **Fuel Tank Pump Module Replacement (1500 SWB - 98.4L (26 gal) Tank +**

cardiagn.com

E85) or **Fuel Tank Pump Module Replacement (1500 Series)** or **Fuel Tank Pump Module Replacement (2500 LWB - 43.5L (11.5 gal) Tank-Rear)** or **Fuel Tank Pump Module Replacement (2500 LWB - 98.4L (26 gal) Tank-Front)**.

3. Inspect the fuel tank module strainer, if equipped. If the strainer is contaminated replace the fuel tank module.
4. Inspect the fuel tank module inlet for dirt and debris. Replace the fuel tank module if you find dirt or debris in the fuel pump inlet.

IMPORTANT: When flushing the fuel tank, handle the fuel and water mixture as a hazardous material. Handle the fuel and water mixture in accordance with all applicable local, state, and federal laws and regulations.

5. Flush the fuel tank with hot water.
6. Pour the water out of the fuel module opening. Rock the tank to be sure that removal of the water from the tank is complete.
7. Remove the fuel rail. Refer to **Fuel Rail Assembly Replacement**.
8. Drain the fuel from the fuel rail. It will be necessary to remove the fuel injectors from the fuel rail to properly clear all debris from the fuel rail and fuel injectors. Refer to **Fuel Injector Replacement**.
9. Use light shop air to remove any debris from the fuel rail and injectors.
10. Use light shop air in the opposite direction of the fuel flow in order to remove any debris from the fuel lines. Catch any fuel from the fuel lines with an approved gasoline container.
11. Install the fuel injectors to the fuel rail. Refer to **Fuel Injector Replacement**.
12. Install the fuel rail. Refer to **Fuel Rail Assembly Replacement**.
13. Install the fuel tank module. Refer to **Fuel Tank Pump Module Replacement (1500 LWB - 117.3L (31 gal) Tank + E85)** or **Fuel Tank Pump Module Replacement (1500 SWB - 98.4L (26 gal) Tank + E85)** or **Fuel Tank Pump Module Replacement (1500 Series)** or **Fuel Tank Pump Module Replacement (2500 LWB - 43.5L (11.5 gal) Tank-Rear)** or **Fuel Tank Pump Module Replacement (2500 LWB - 98.4L (26 gal) Tank-Front)**.
14. Refill the fuel tank.
15. Install the fuel fill cap.
16. Connect the negative battery cable. Refer to **Battery Negative Cable Disconnection and Connection** .

IMPORTANT: If the fuel pump or sender assembly was not replaced, purge the fuel sender assembly.

17. Purge the fuel tank module.
    1. Disconnect the fuel feed line quick connect fitting from the fuel tank to the chassis line. Refer to **Quick Connect Fitting Service - Plastic Collar** .
    2. Connect a length of hose to the fuel feed pipe.
    3. Insert the other end of the hose into an empty 3.8 liter (1 gallon) approved gasoline container.
    4. Add 23 liters (6 gallons) of clean fuel into the fuel tank.
    5. Turn on the fuel pump using the scan tool until 2 liters (1/2 gallon) of fuel flows into the fuel

cardiagn.com

container.

18. Inspect for leaks.
    1. Turn the ignition switch ON for 2 seconds.
    2. Turn the ignition switch OFF for 10 seconds.
    3. Turn the ignition switch ON.
    4. Inspect for fuel leaks.

FUEL RAIL ASSEMBLY REPLACEMENT

Removal Procedure

IMPORTANT: An 8-digit identification number is located on the fuel rail. Refer to this identification number when servicing or when part replacement is required.

cardiagn.com

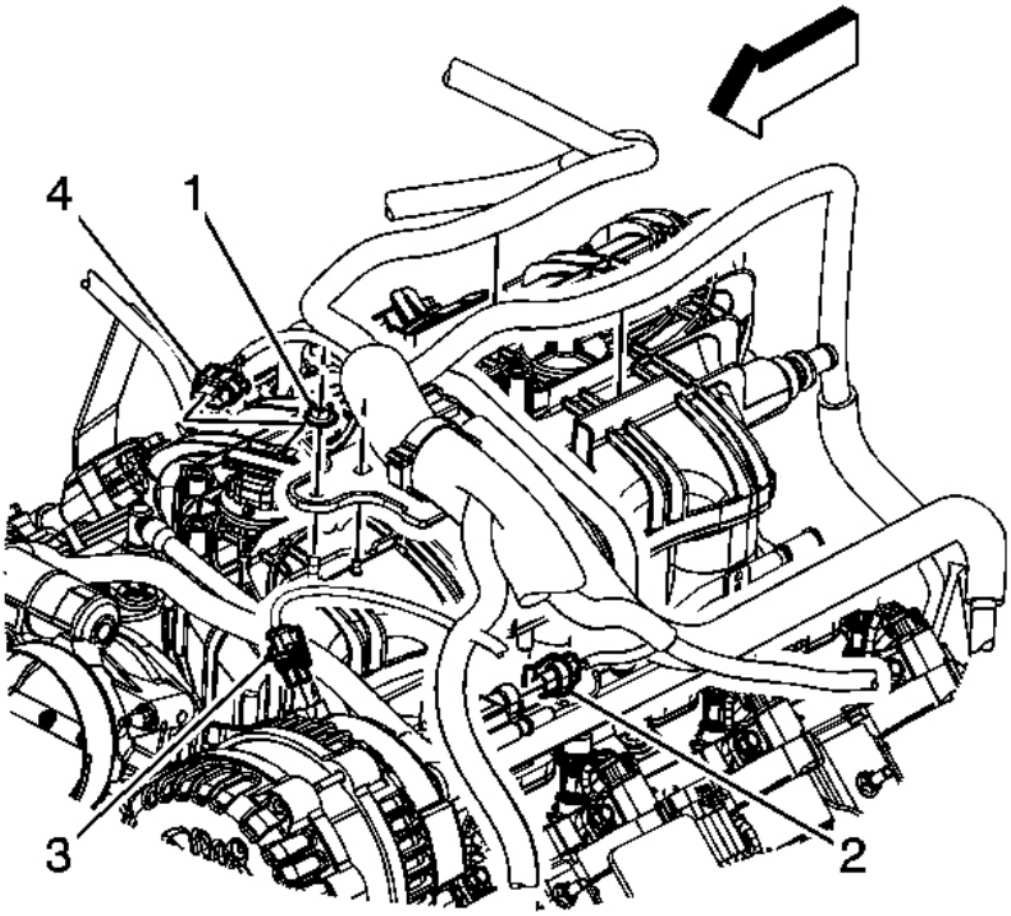

Fig. 411: View Of Engine Harness Retainer Nut & Electrical Connectors
Courtesy of GENERAL MOTORS CORP.

1. Remove the air cleaner outlet duct. Refer to **Air Cleaner Resonator Outlet Duct Replacement**.
2. Relieve the fuel system pressure. Refer to **Fuel Pressure Relief**.
3. Remove the engine wiring harness bracket nut (1).
4. Disconnect the engine wiring harness electrical connector (2) from the evaporative emission (EVAP) purge solenoid.
5. Disconnect the engine wiring harness electrical connector (3) from the generator.
6. Disconnect the engine wiring harness electrical connector (4) from the manifold absolute pressure (MAP) sensor.

cardiagn.com

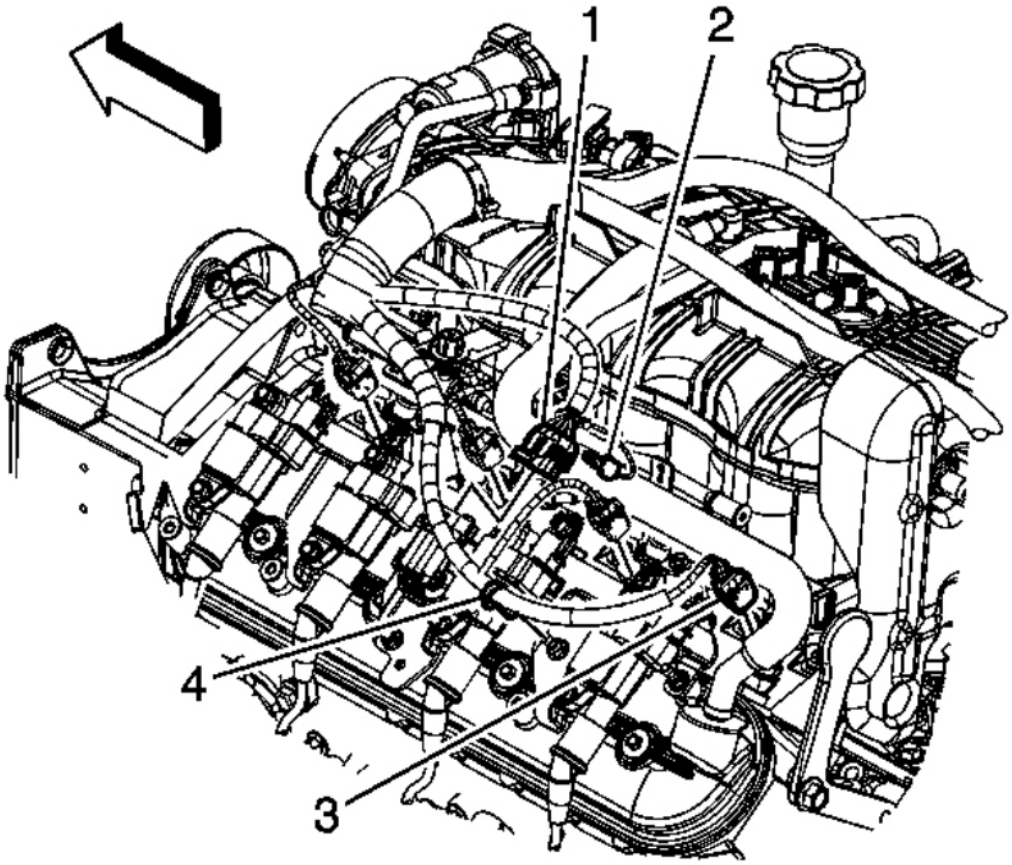

Fig. 412: View Of CPA Retainer, Electrical Connectors & Engine Harness Clips
Courtesy of GENERAL MOTORS CORP.

7. Remove the connector position assurance (CPA) retainer (2).
8. Disconnect the engine wiring harness electrical connector (1) from the ignition coil main electrical connector.
9. Disconnect the engine wiring harness electrical connectors (3) from the fuel injectors, perform the following:
    1. Mark the connectors to their corresponding injectors to ensure correct reassembly.
    2. Pull the CPA retainer on the connector up 1 click.
    3. Push the tab on the connector in.
    4. Disconnect the fuel injector electrical connector.

cardiagn.com

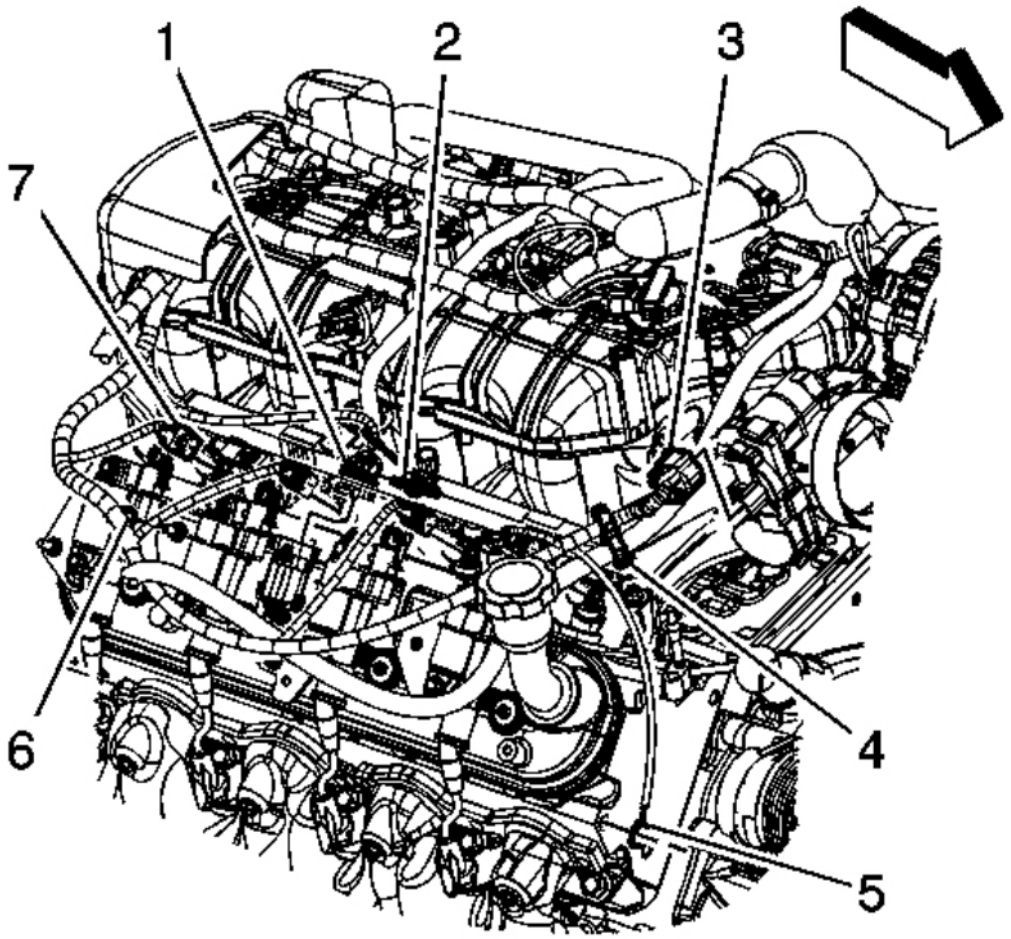

Fig. 413: View Of CPA Retainer, Engine Harness Electrical Connectors & Harness Clips
Courtesy of GENERAL MOTORS CORP.

10. Remove the CPA retainer (2).
11. Disconnect the engine wiring harness electrical connector (1) from the ignition coil main electrical connector.
12. Disconnect the engine wiring harness electrical connector (3) from the electronic throttle control.
13. Disconnect the engine wiring harness electrical connectors (7) from the fuel injectors, perform the following:
    1. Mark the connectors to their corresponding injectors to ensure correct reassembly.
    2. Pull the CPA retainer on the connector up 1 click.
    3. Push the tab on the connector in.

cardiagn.com

4. Disconnect the fuel injector electrical connector.

14. Remove the engine wiring harness clip (4) from the generator battery jumper cable.
15. Remove the engine wiring harness clip (6) from the ignition coil bracket stud.

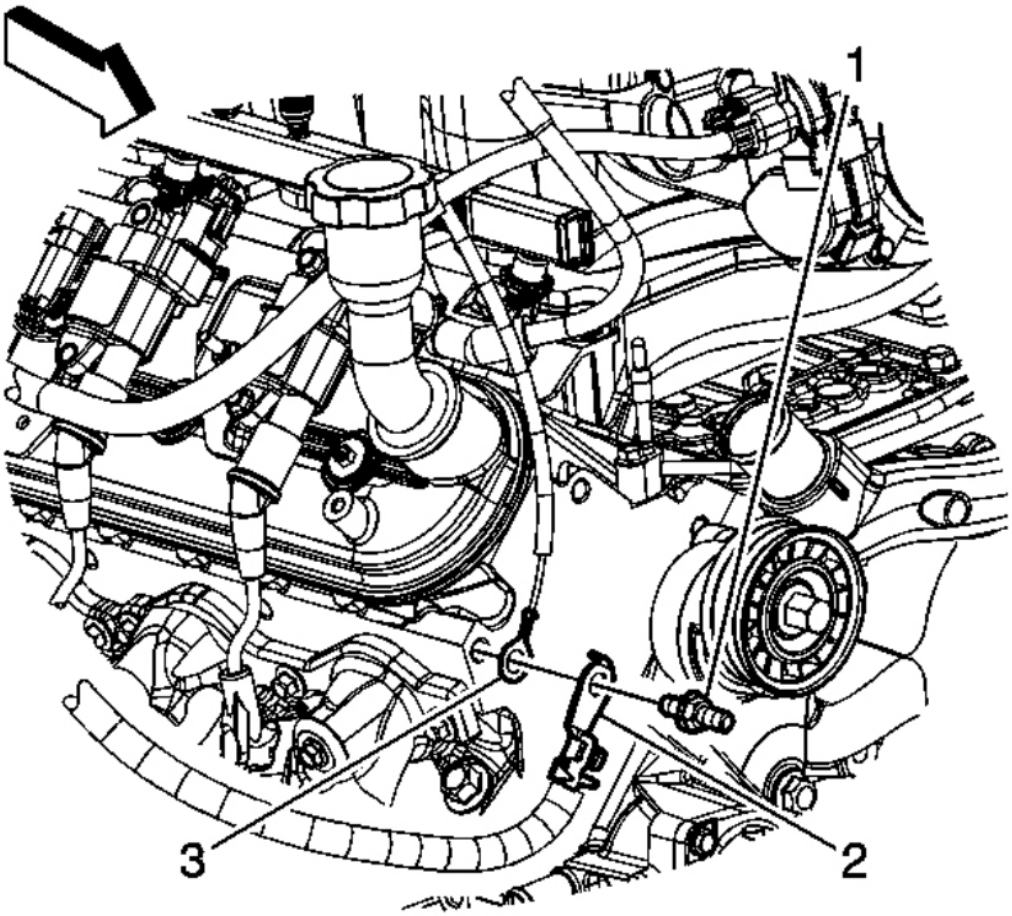

Fig. 414: View Of Battery Cable Terminals & Stud
Courtesy of GENERAL MOTORS CORP.

16. Remove the negative battery cable stud (1) from the right cylinder head.
17. Remove the negative battery cable terminal (2) and engine wiring harness ground terminal (3) from the cylinder head.

cardiagn.com

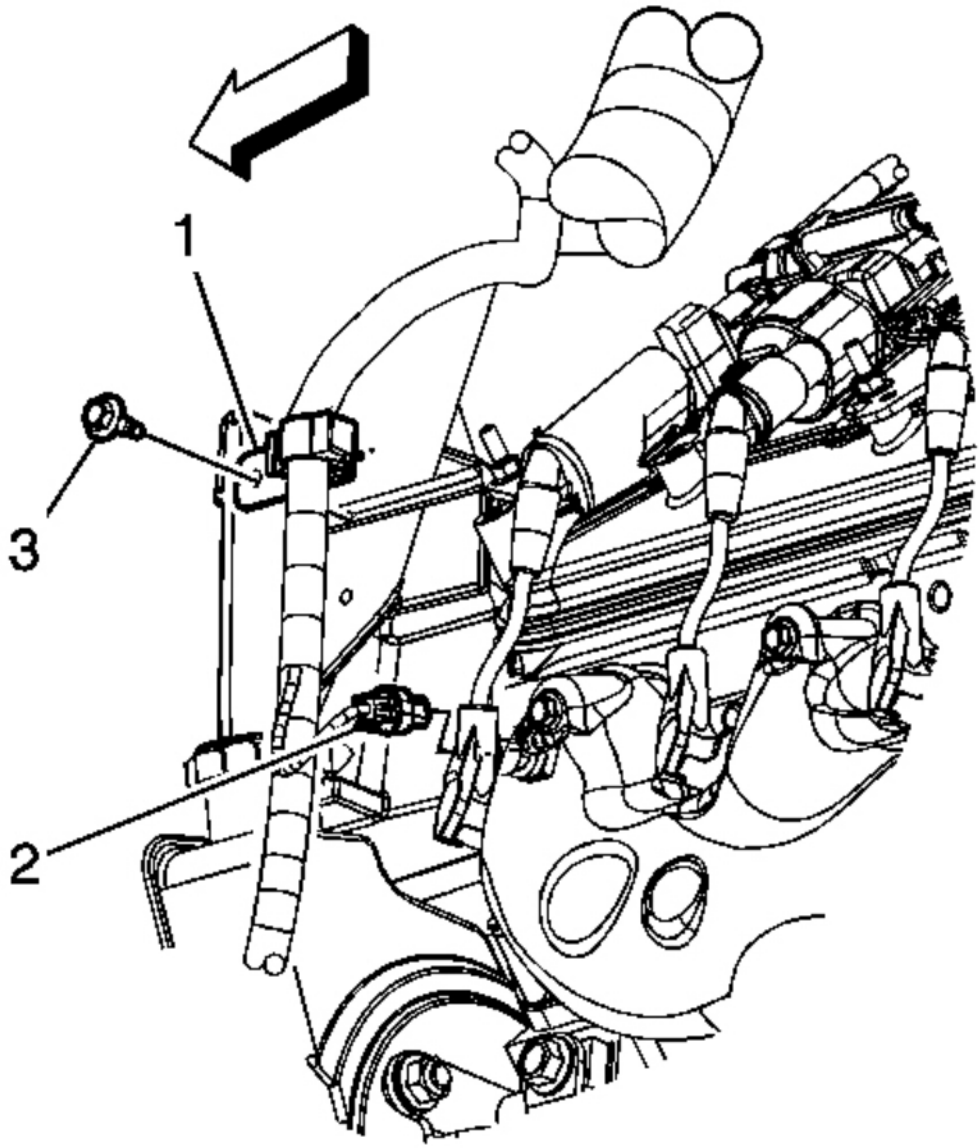

Fig. 415: View Of Engine Wiring Harness, Clip, Bolt & Connector
Courtesy of GENERAL MOTORS CORP.

18. Remove the engine wiring harness clip bolt (3) from the generator bracket.
19. Gather the branches of the engine wiring harness and reposition the aside.

cardiagn.com

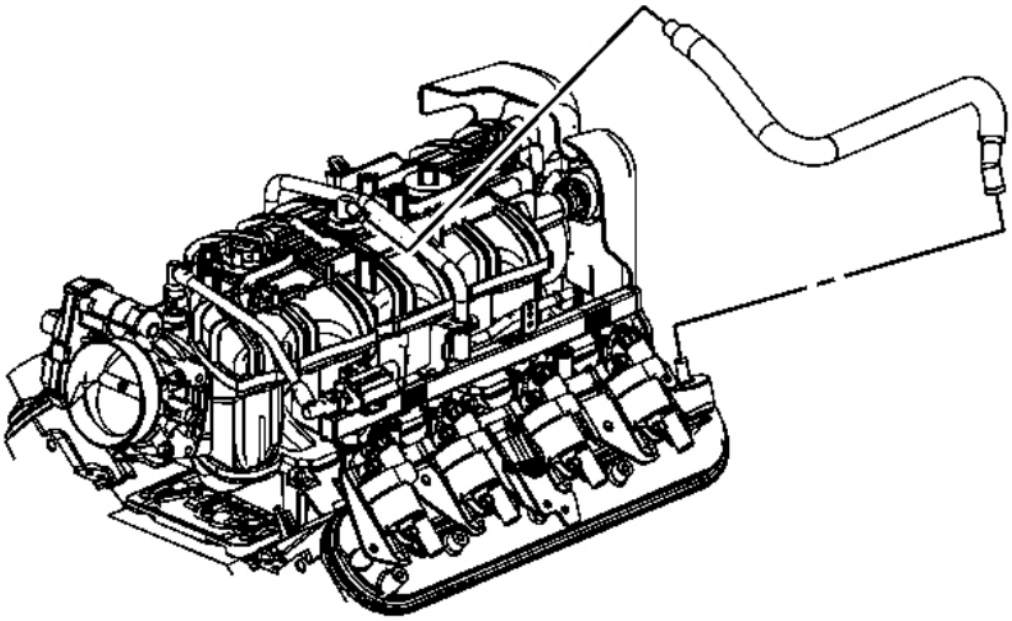

Fig. 416: View Of PCV Hose
Courtesy of GENERAL MOTORS CORP.

20. Remove the positive crankcase ventilation (PCV) hose.

cardiagn.com

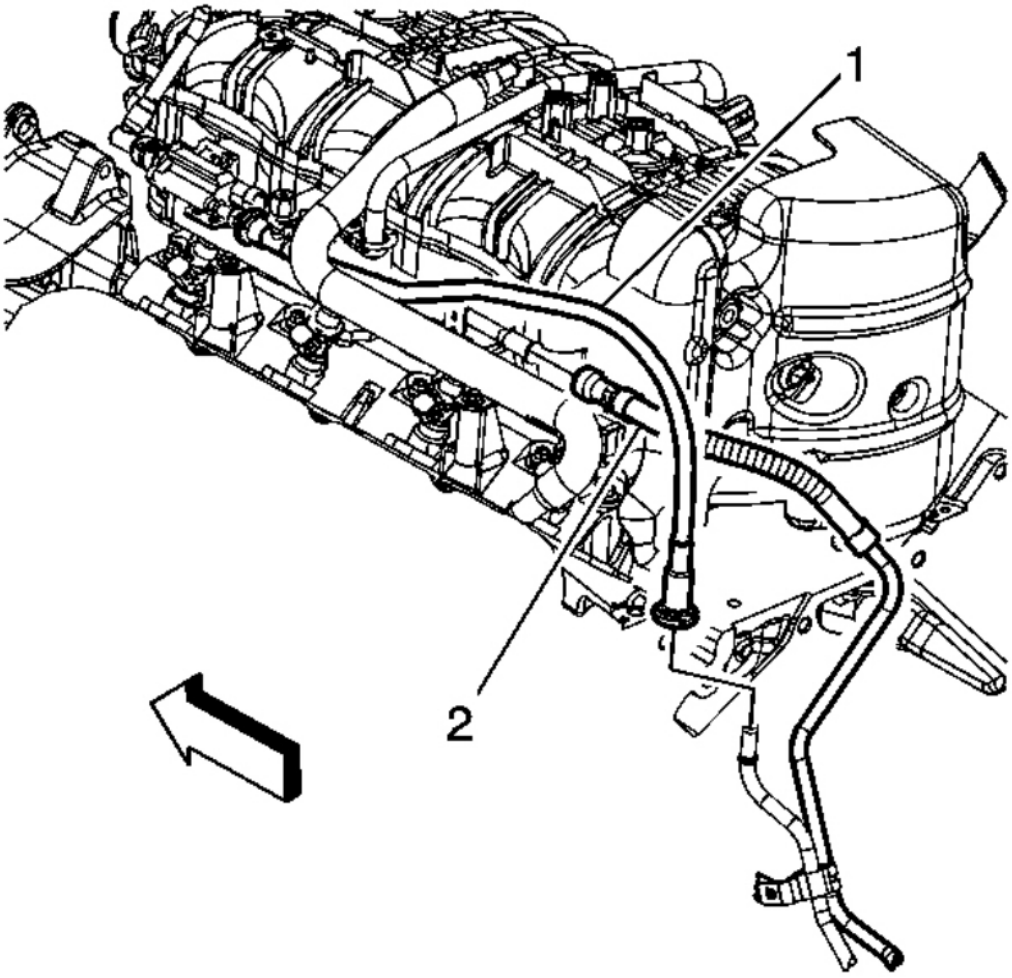

Fig. 417: View Of EVAP Canister Purge Tube & Quick Connect Fitting
Courtesy of GENERAL MOTORS CORP.

21. Disconnect the chassis fuel feed pipe (2) quick connect fitting from the fuel rail. Refer to **Quick Connect Fitting Service - Metal Collar**.

cardiagn.com

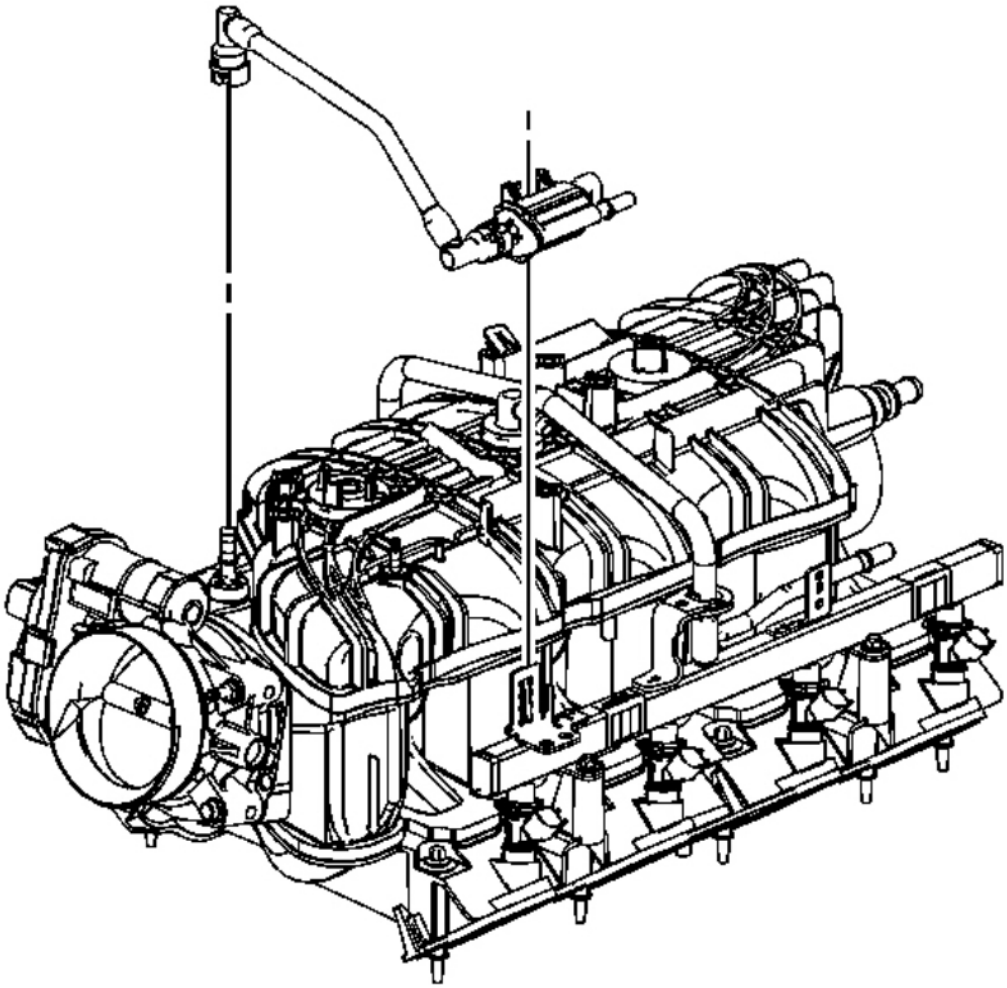

Fig. 418: View Of EVAP Tube & Purge Solenoid
Courtesy of GENERAL MOTORS CORP.

22. Disconnect the EVAP tube quick connect fitting at the intake manifold. Refer to **Quick Connect Fitting Service - Plastic Collar**.
23. Disengage the retainer securing the EVAP canister purge solenoid to the fuel rail.
24. Remove the EVAP tube and purge solenoid.

cardiagn.com

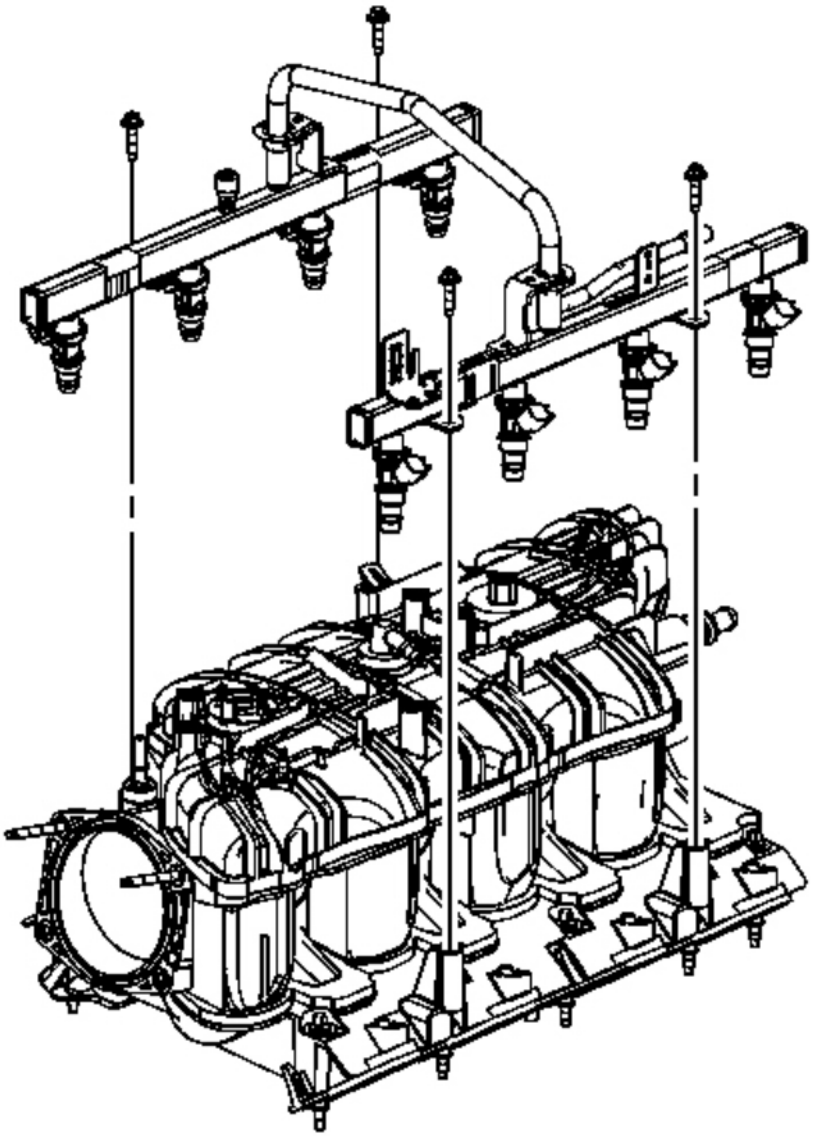

Fig. 419: View Of Fuel Rail & Bolts
Courtesy of GENERAL MOTORS CORP.

25. Remove the fuel rail bolts.

NOTE:

- **Remove the fuel rail assembly carefully in order to prevent damage to the injector electrical connector terminals and the injector spray tips.**

cardiagn.com

Support the fuel rail after the fuel rail is removed in order to avoid damaging the fuel rail components.

- **Cap the fittings and plug the holes when servicing the fuel system in order to prevent dirt and other contaminants from entering open pipes and passages.**

IMPORTANT:

- **Before removal, clean the fuel rail with a spray type engine cleaner, such as GM X-30A or equivalent, if necessary. Follow the package instructions. Do not soak the fuel rail in liquid cleaning solvent.**
- **Lift evenly on both sides of the fuel rail until all injectors are removed from their bores.**

26. Remove the fuel rail assembly.

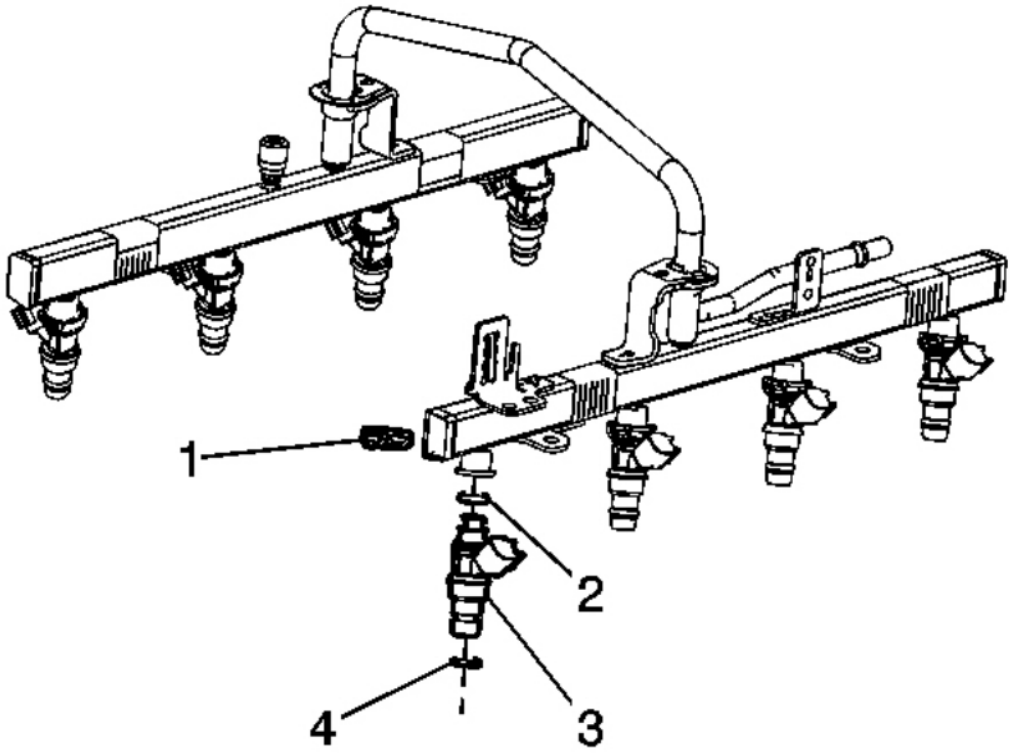

Fig. 420: View Of Fuel Rail & Components
Courtesy of GENERAL MOTORS CORP.

27. Remove the fuel injector retainers (1).

cardiagn.com

28. Remove the fuel injectors (3) from the fuel rail.
29. Remove and discard the fuel injector upper and lower O-ring seals (2 and 4).

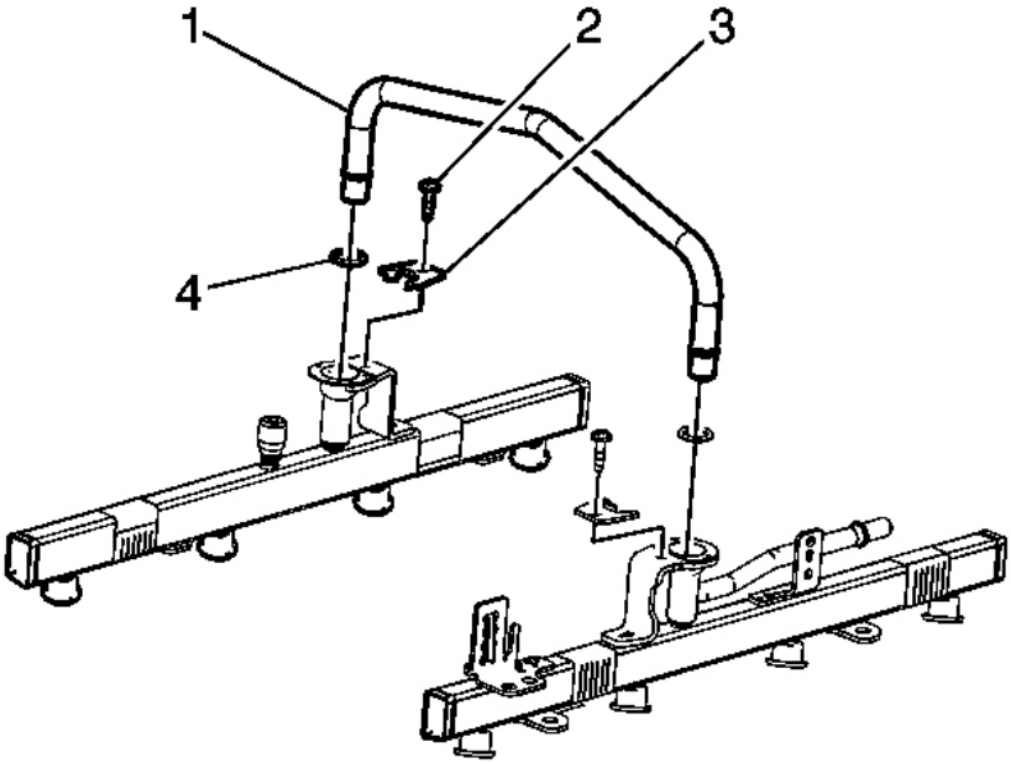

Fig. 421: View Of Fuel Rail Cross Over Pipe & Components
Courtesy of GENERAL MOTORS CORP.

30. Remove the fuel rail crossover pipe retainer screws (2).
31. Remove the fuel rail crossover pipe retainers (3).
32. Remove the fuel rail crossover pipe (1) from the fuel rails.
33. Remove and discard the fuel rail crossover pipe O-ring seals (4).
34. Replace the left and/or right fuel rail as required.

Installation Procedure

cardiagn.com

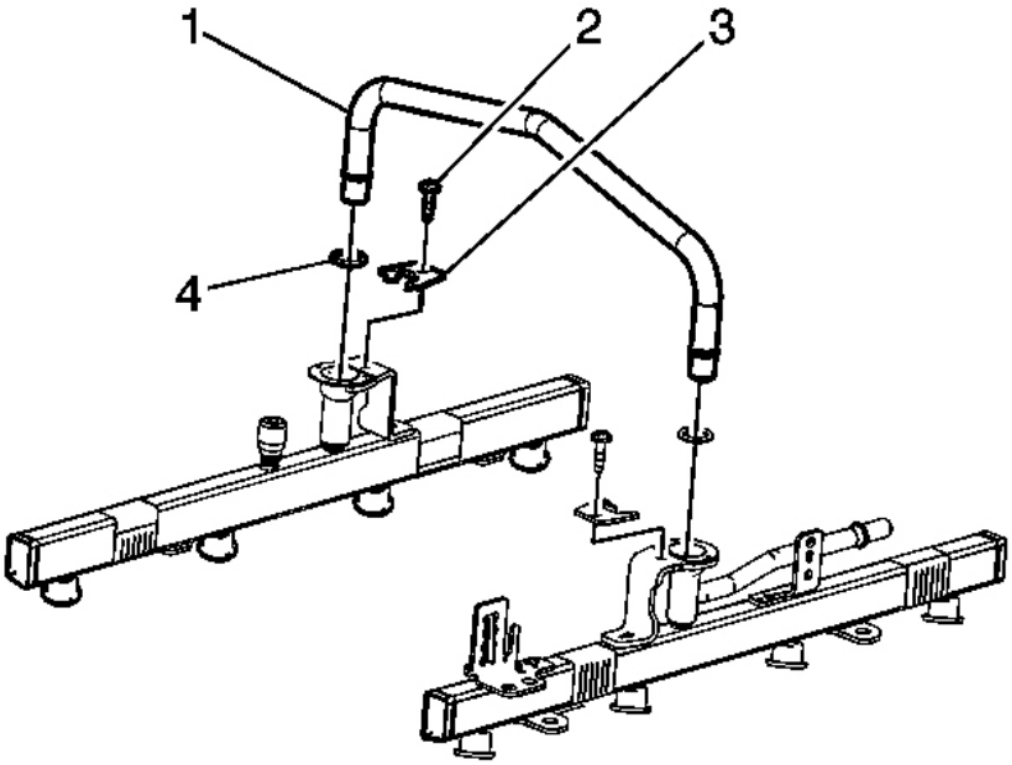

Fig. 422: View Of Fuel Rail Cross Over Pipe & Components
Courtesy of GENERAL MOTORS CORP.

1. Lubricate the NEW fuel rail crossover pipe O-ring seals with clean engine oil.
2. Install NEW fuel rail crossover pipe O-ring seals (4) onto the crossover pipe.
3. Install the fuel rail crossover pipe (1) into the fuel rails.
4. Install the fuel rail crossover pipe retainers (3).

NOTE: **Refer to Fastener Notice .**

5. Install the fuel rail crossover pipe retainer screws (2)

Tighten: Tighten the screws to 3.8 N.m (34 lb in).

cardiagn.com

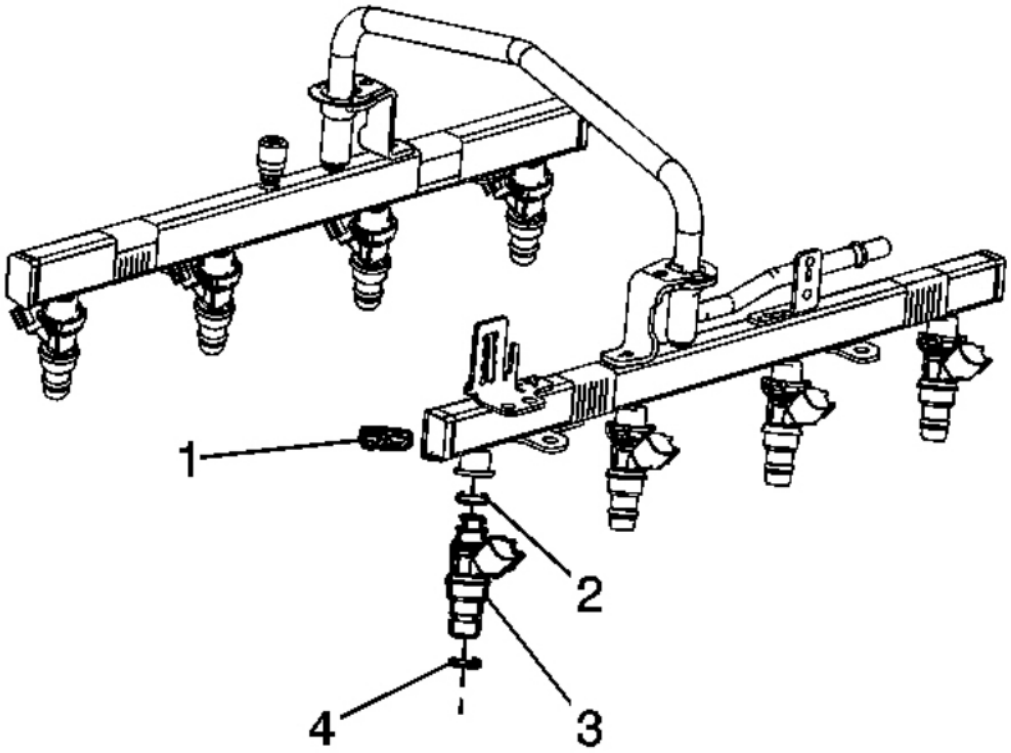

Fig. 423: View Of Fuel Rail & Components
Courtesy of GENERAL MOTORS CORP.

6. Lubricate the NEW fuel injector O-ring seals with clean engine oil.
7. Install the NEW fuel injector upper and lower O-ring seals (2 and 4) onto the injectors.
8. Install the fuel injectors (3) into the fuel rails.
9. Install the fuel injector retainers (1).

cardiagn.com

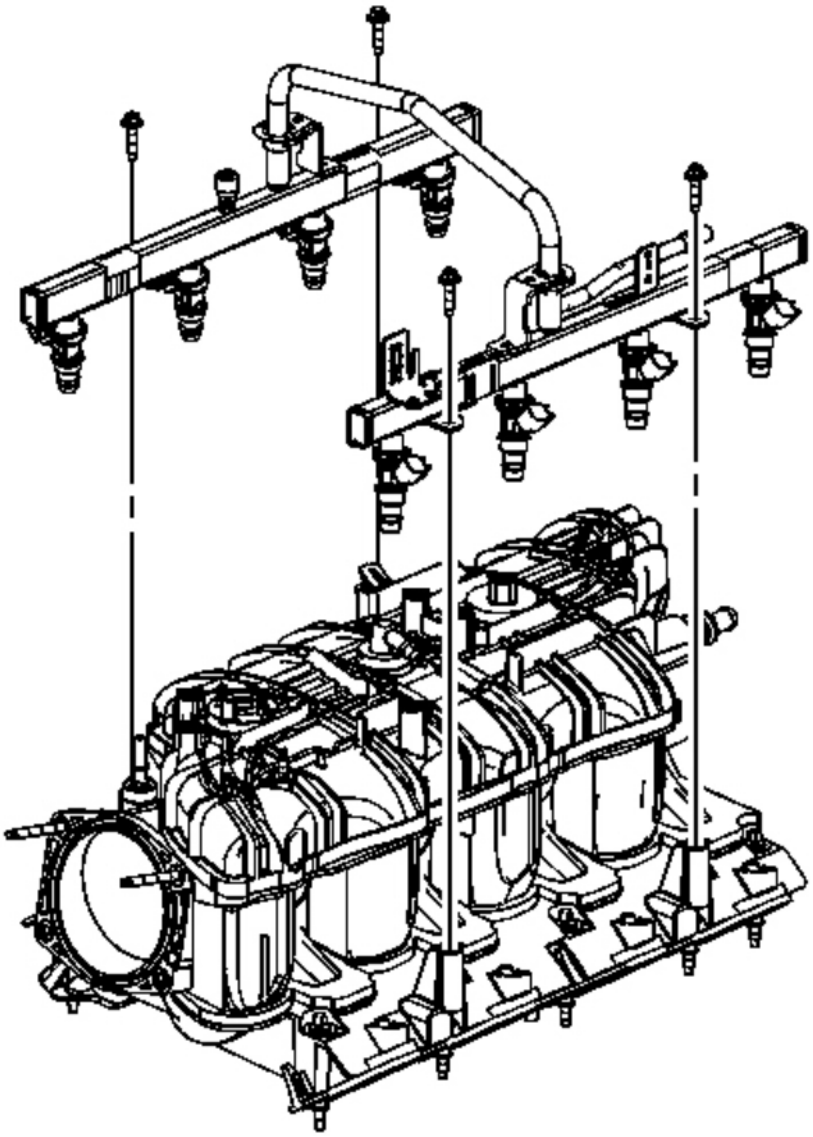

Fig. 424: View Of Fuel Rail & Bolts
Courtesy of GENERAL MOTORS CORP.

10. Ensure the fuel injector lower O-ring seals are adequately lubricated, if not lubricate the fuel injector lower O-ring seals with clean engine oil.
11. Position the fuel rail onto the intake manifold.
12. Firmly push down on both the centers of the left and right fuel rails, until the rails are fully seated against

cardiagn.com

the intake manifold.

IMPORTANT: Push down firmly on both sides of the rail until all injectors have been seated into their bores.

13. Install the fuel rail bolts.

Tighten: Tighten the bolts to 10 N.m (89 lb in).

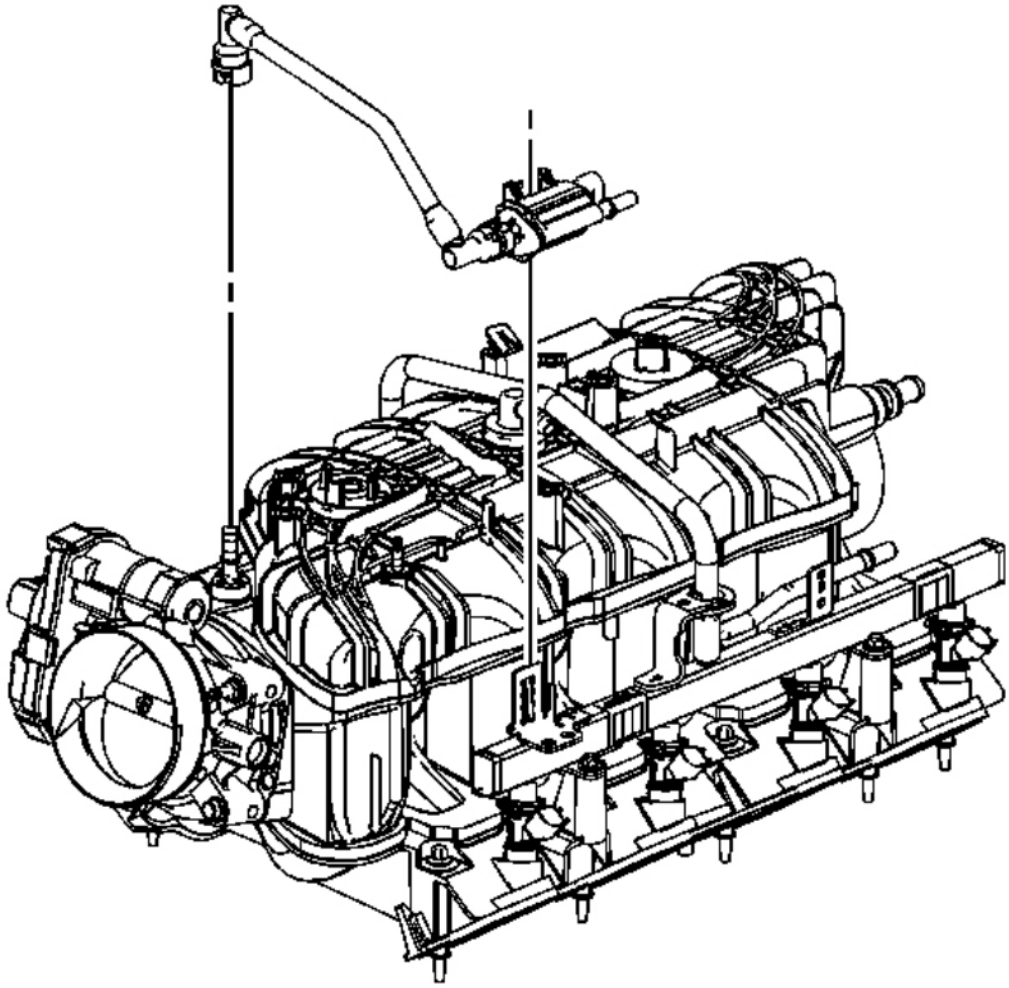

Fig. 425: View Of EVAP Tube & Purge Solenoid
Courtesy of GENERAL MOTORS CORP.

cardiagn.com

14. Install the EVAP tube and purge solenoid.
15. Install the EVAP canister purge solenoid to the fuel rail bracket and engage the retainer.
16. Connect the EVAP tube quick connect fitting at the intake manifold. Refer to **Quick Connect Fitting Service - Plastic Collar**.

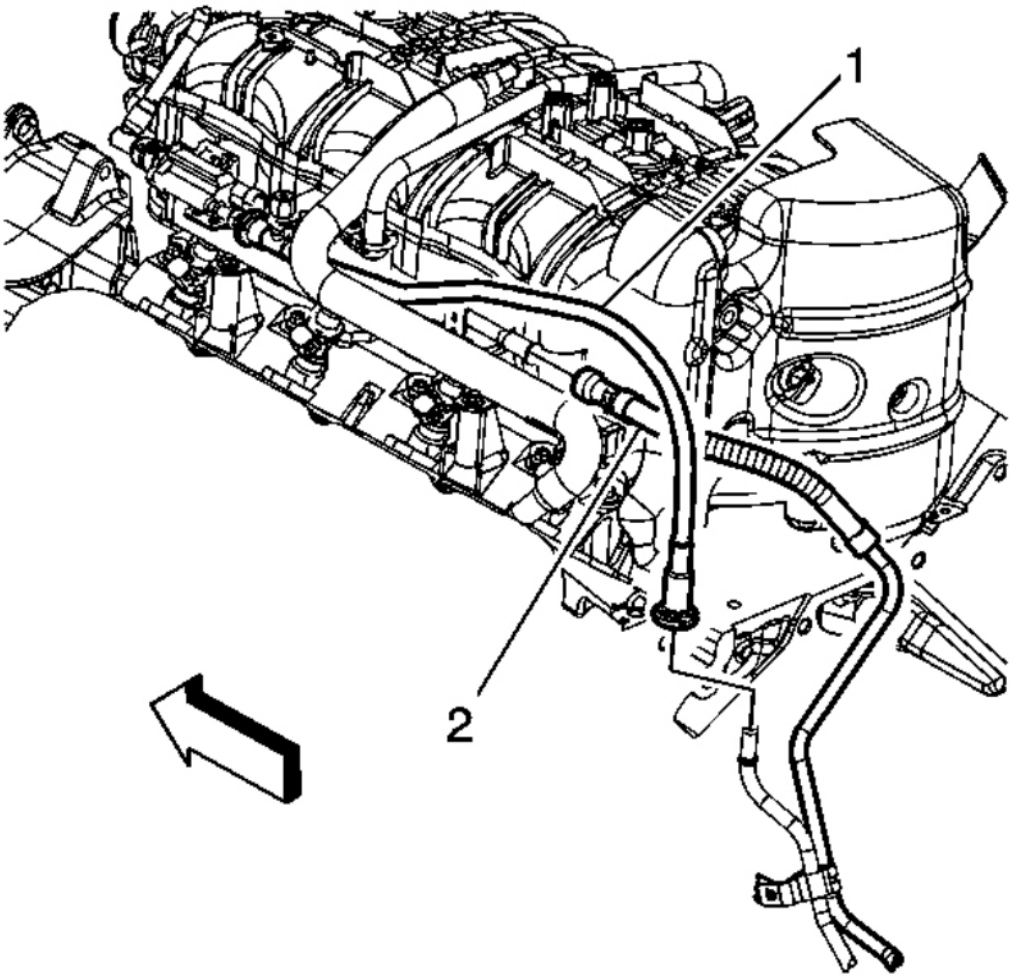

Fig. 426: View Of EVAP Canister Purge Tube & Quick Connect Fitting
Courtesy of GENERAL MOTORS CORP.

17. Connect the chassis fuel feed pipe (2) quick connect fitting to the fuel rail. Refer to **Quick Connect Fitting Service - Metal Collar**.

cardiagn.com

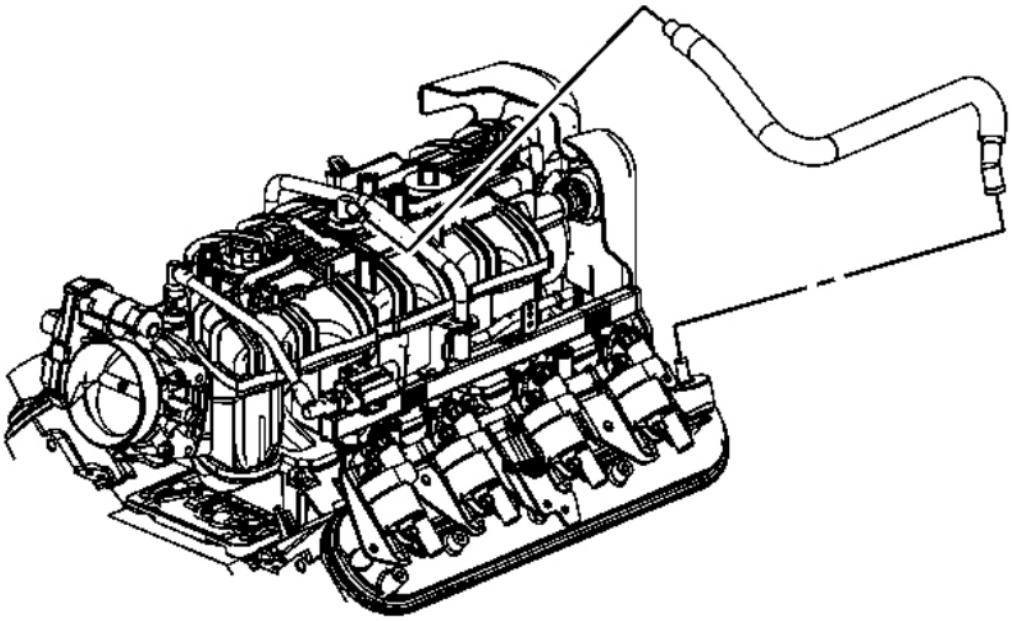

Fig. 427: View Of PCV Hose
Courtesy of GENERAL MOTORS CORP.

18. Install the PCV hose.
19. Gather the branches of the engine wiring harness and position over the top of the engine.

cardiagn.com

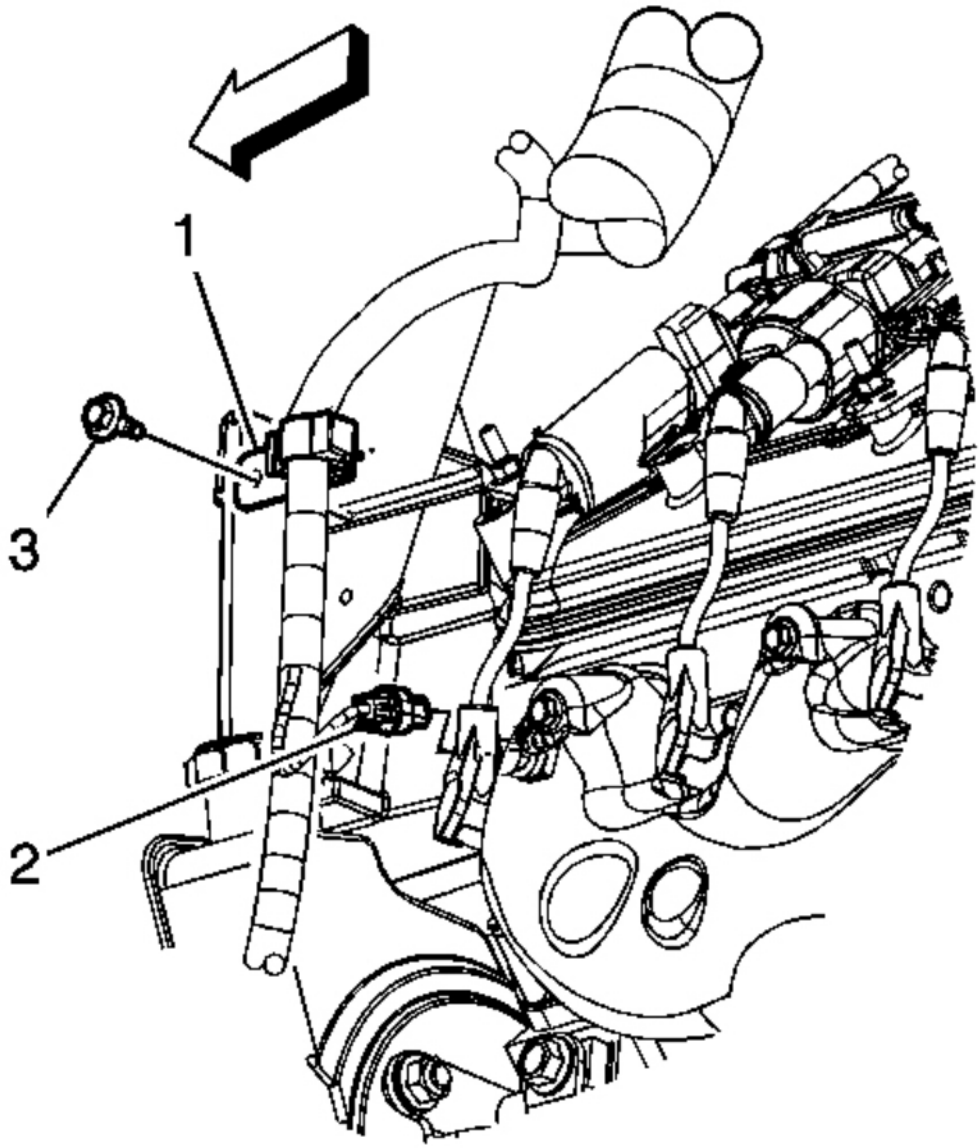

Fig. 428: View Of Engine Wiring Harness, Clip, Bolt & Connector
Courtesy of GENERAL MOTORS CORP.

20. Position the engine wiring harness clip to the generator bracket and install the clip bolt (3).

    Tighten: Tighten the bolt to 9 N.m (80 lb in).

cardiagn.com

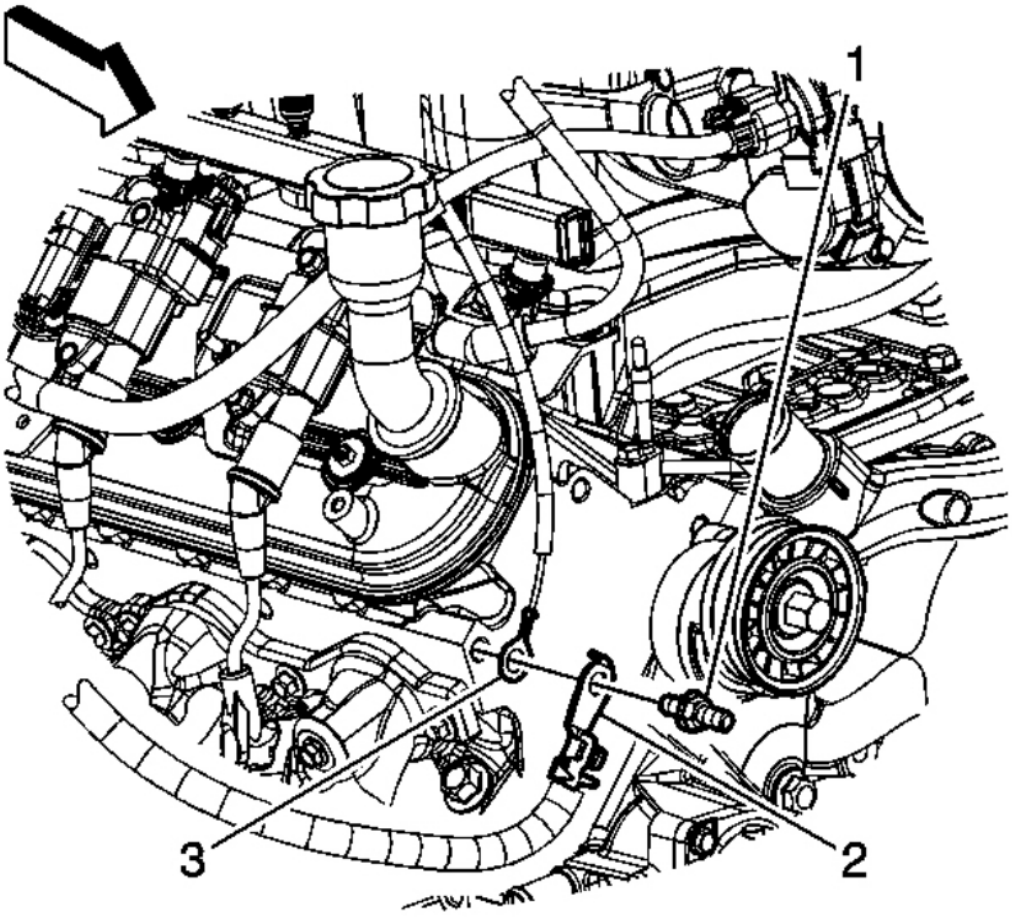

Fig. 429: View Of Battery Cable Terminals & Stud
Courtesy of GENERAL MOTORS CORP.

21. Position the negative battery cable terminal (2) and engine wiring harness ground terminal (3) to the right cylinder head.
22. Install the negative battery cable stud (1) to the cylinder head.

    Tighten: Tighten the stud to 25 N.m (18 lb ft).

cardiagn.com

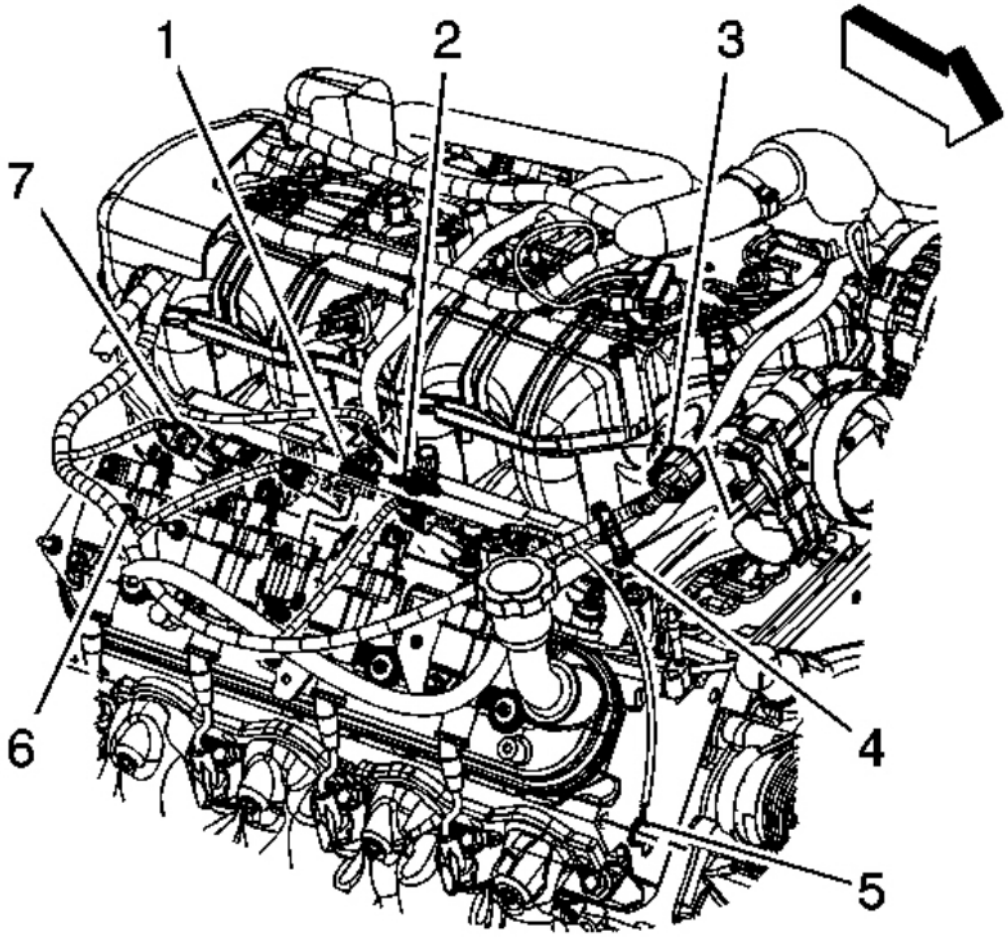

Fig. 430: View Of CPA Retainer, Engine Harness Electrical Connectors & Harness Clips
Courtesy of GENERAL MOTORS CORP.

23. Connect the engine wiring harness electrical connector (1) to the ignition coil main electrical connector.
24. Install the CPA retainer (2).
25. Connect the engine wiring harness electrical connector (3) to the electronic throttle control.
26. Connect the engine wiring harness electrical connectors (7) to the fuel injectors, perform the following:
    1. Ensure that the CPA retainer is pulled out 1 click.
    2. Connect the electrical connectors to their corresponding injectors.
    3. Push the CPA retainer in 1 click.
    4. Ensure that the connector is secured.

cardiagn.com

27. Install the engine wiring harness clip (4) to the generator battery jumper cable.
28. Install the engine wiring harness clip (6) to the ignition coil bracket stud.

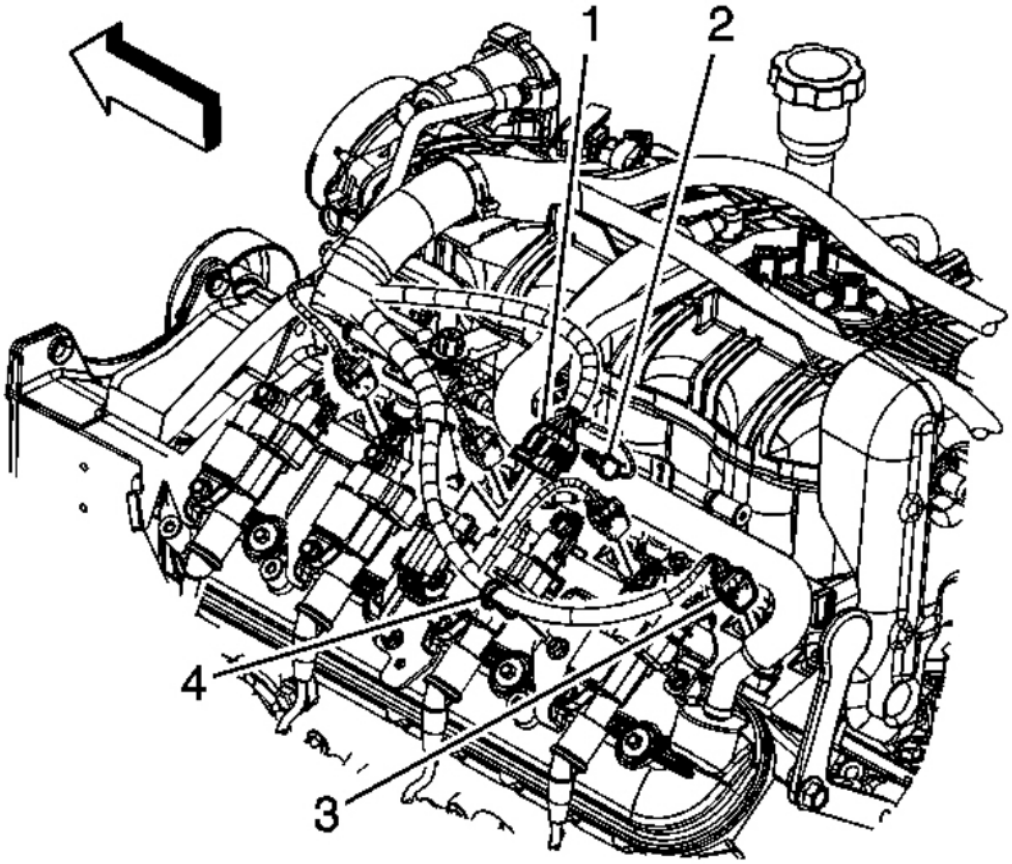

Fig. 431: View Of CPA Retainer, Electrical Connectors & Engine Harness Clips
Courtesy of GENERAL MOTORS CORP.

29. Connect the engine wiring harness electrical connector (1) to the ignition coil main electrical connector.
30. Install the CPA retainer (2).
31. Connect the engine wiring harness electrical connectors (3) to the fuel injectors, perform the following:
    1. Ensure that the CPA retainer is pulled out 1 click.
    2. Connect the electrical connectors to their corresponding injectors.
    3. Push the CPA retainer in 1 click.
    4. Ensure that the connector is secured.

cardiagn.com

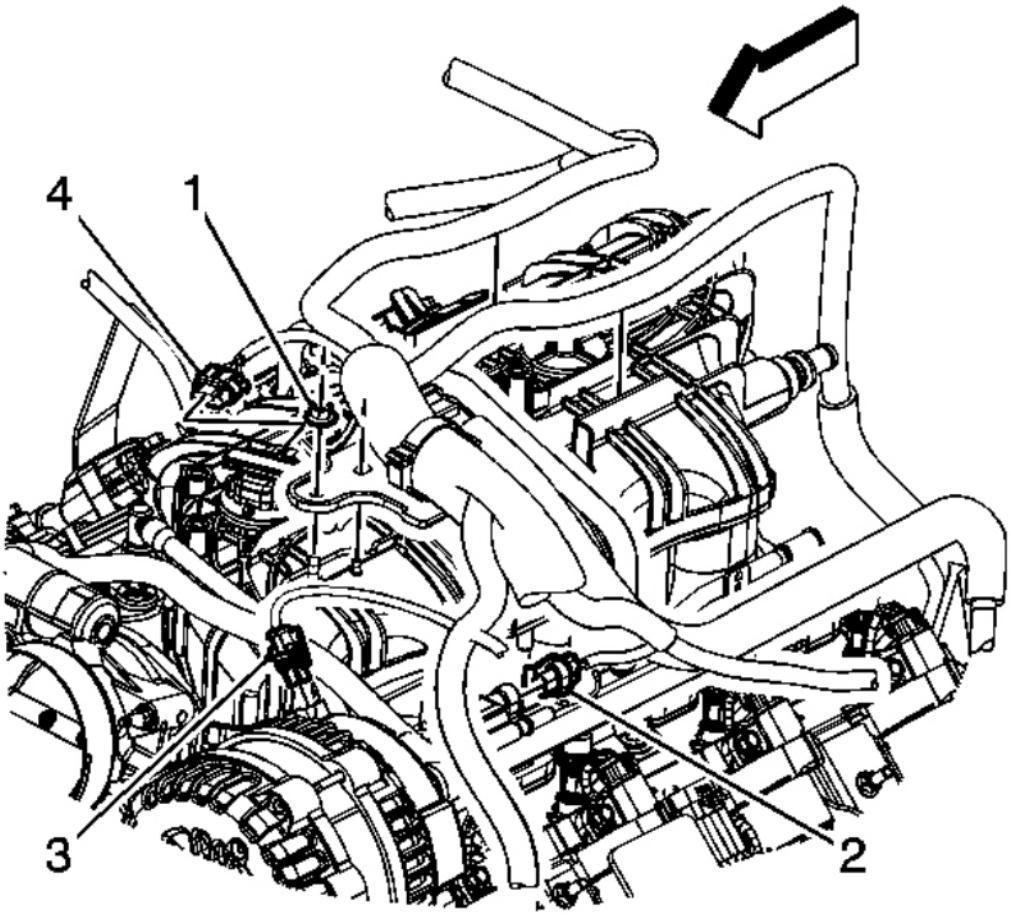

Fig. 432: View Of Engine Harness Retainer Nut & Electrical Connectors
Courtesy of GENERAL MOTORS CORP.

32. Connect the engine wiring harness electrical connector (4) to the MAP sensor.
33. Connect the engine wiring harness electrical connector (3) to the generator.
34. Connect the engine wiring harness electrical connector (2) to the EVAP purge solenoid.
35. Install the engine wiring harness bracket nut (1).

    Tighten: Tighten the nut to 5 N.m (44 lb in).

36. Connect the negative battery cable. Refer to **Battery Negative Cable Disconnection and Connection** .
37. Use the following procedure in order to inspect for leaks:
    1. Turn the ignition ON, with the engine OFF for 2 seconds.

cardiagn.com

2. Turn the ignition OFF for 10 seconds.
3. Turn the ignition ON, with the engine OFF.
4. Inspect for leaks.

38. Install the air cleaner outlet duct. Refer to **Air Cleaner Resonator Outlet Duct Replacement**.

FUEL RAIL CROSSOVER PIPE REPLACEMENT

Removal Procedure

IMPORTANT: An 8-digit identification number is located on the fuel rail. Refer to this identification number when servicing or when part replacement is required.

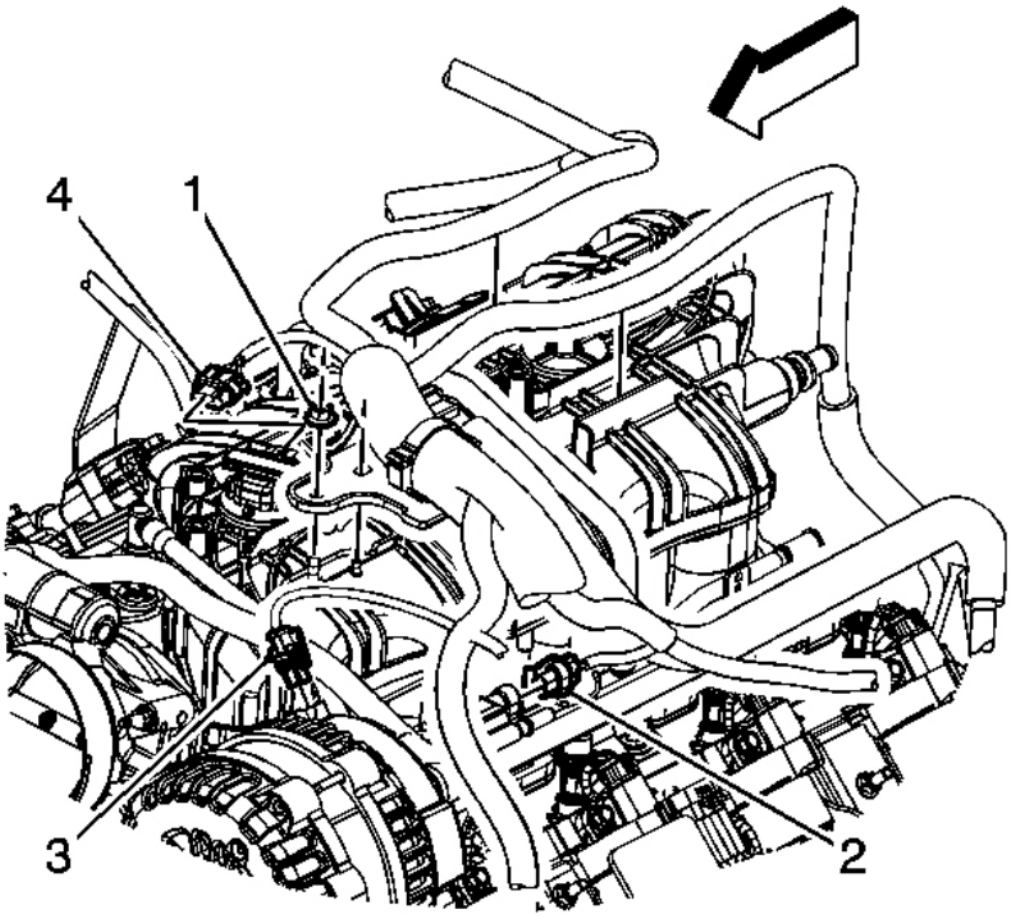

Fig. 433: View Of Engine Harness Retainer Nut & Electrical Connectors

cardiagn.com

Courtesy of GENERAL MOTORS CORP.

1. Remove the air cleaner outlet duct. Refer to **Air Cleaner Resonator Outlet Duct Replacement**.
2. Relieve the fuel system pressure. Refer to **Fuel Pressure Relief**.
3. Remove the engine wiring harness bracket nut (1).
4. Disconnect the engine wiring harness electrical connector (2) from the evaporative emission (EVAP) purge solenoid.
5. Disconnect the engine wiring harness electrical connector (3) from the generator.
6. Disconnect the engine wiring harness electrical connector (4) from the manifold absolute pressure (MAP) sensor.

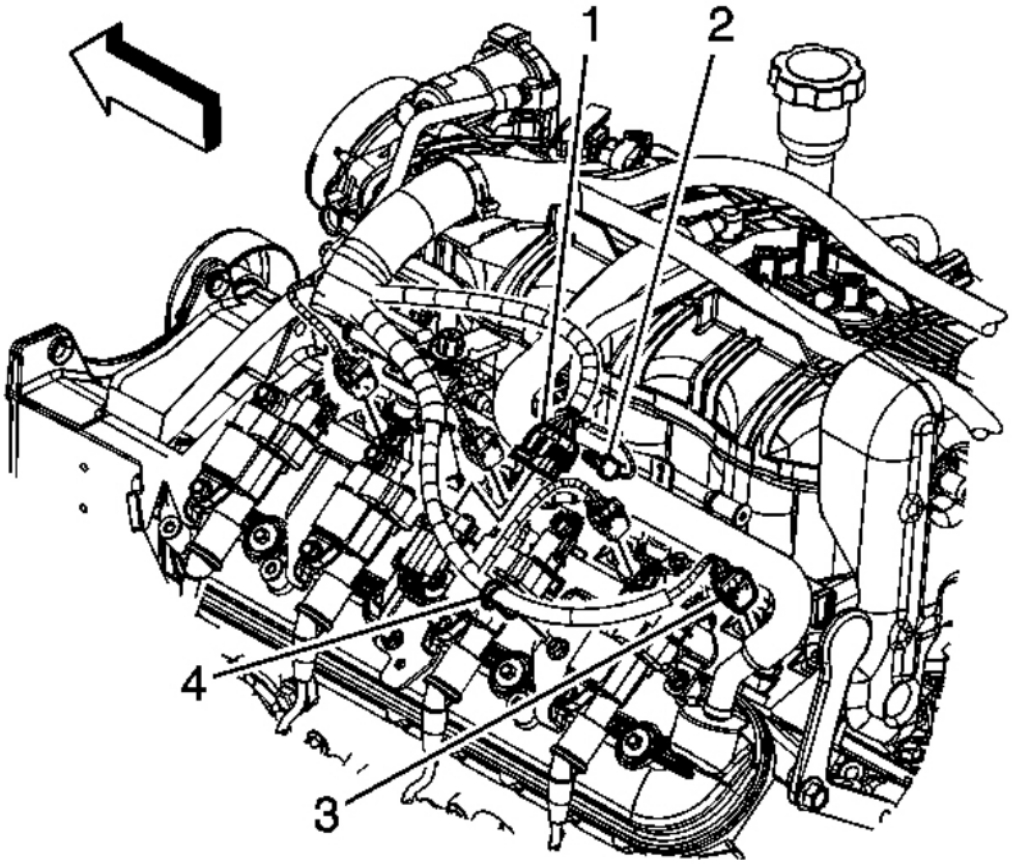

Fig. 434: View Of CPA Retainer, Electrical Connectors & Engine Harness Clips
Courtesy of GENERAL MOTORS CORP.

7. Remove the connector position assurance (CPA) retainer (2).

cardiagn.com

8. Disconnect the engine wiring harness electrical connector (1) from the ignition coil main electrical connector.
9. Disconnect the engine wiring harness electrical connectors (3) from the fuel injectors, perform the following:
    1. Mark the connectors to their corresponding injectors to ensure correct reassembly.
    2. Pull the CPA retainer on the connector up 1 click.
    3. Push the tab on the connector in.
    4. Disconnect the fuel injector electrical connector.

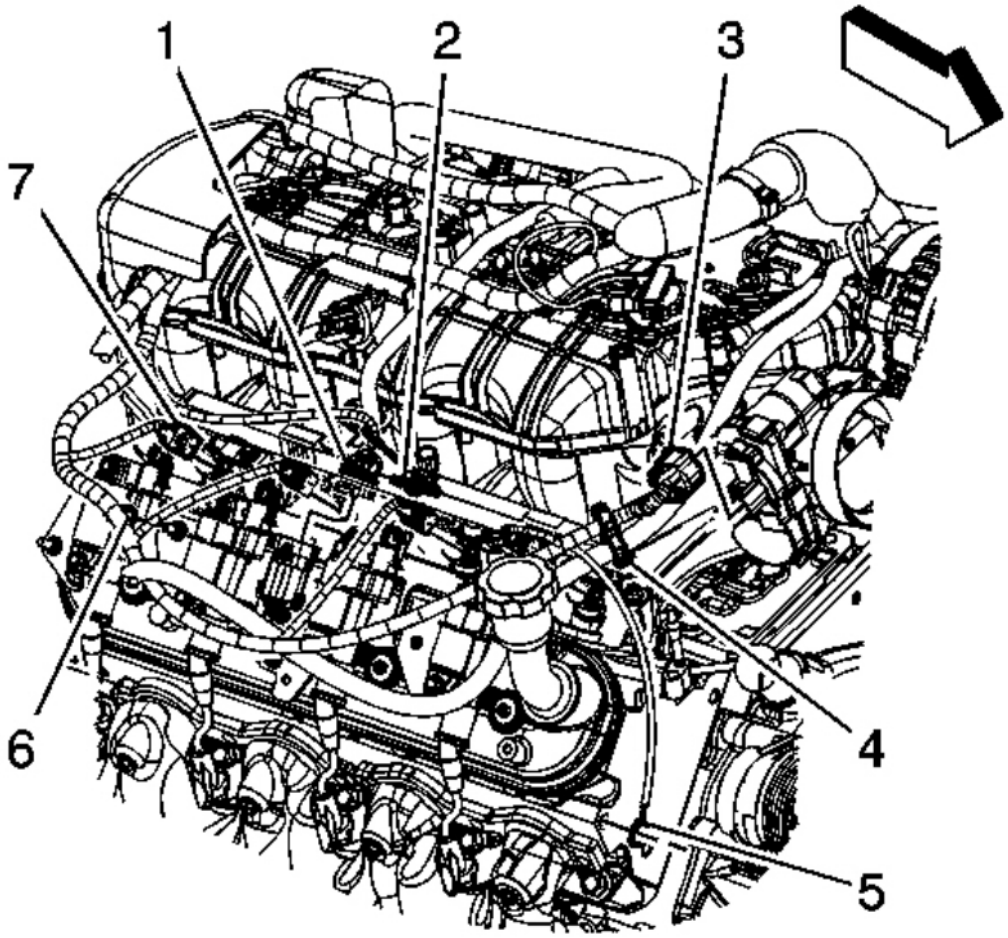

Fig. 435: View Of CPA Retainer, Engine Harness Electrical Connectors & Harness Clips
Courtesy of GENERAL MOTORS CORP.

cardiagn.com

10. Remove the CPA retainer (2).
11. Disconnect the engine wiring harness electrical connector (1) from the ignition coil main electrical connector.
12. Disconnect the engine wiring harness electrical connector (3) from the electronic throttle control.
13. Disconnect the engine wiring harness electrical connectors (7) from the fuel injectors, perform the following:
    1. Mark the connectors to their corresponding injectors to ensure correct reassembly.
    2. Pull the CPA retainer on the connector up 1 click.
    3. Push the tab on the connector in.
    4. Disconnect the fuel injector electrical connector.
14. Remove the engine wiring harness clip (4) from the generator battery jumper cable.
15. Remove the engine wiring harness clip (6) from the ignition coil bracket stud.

cardiagn.com

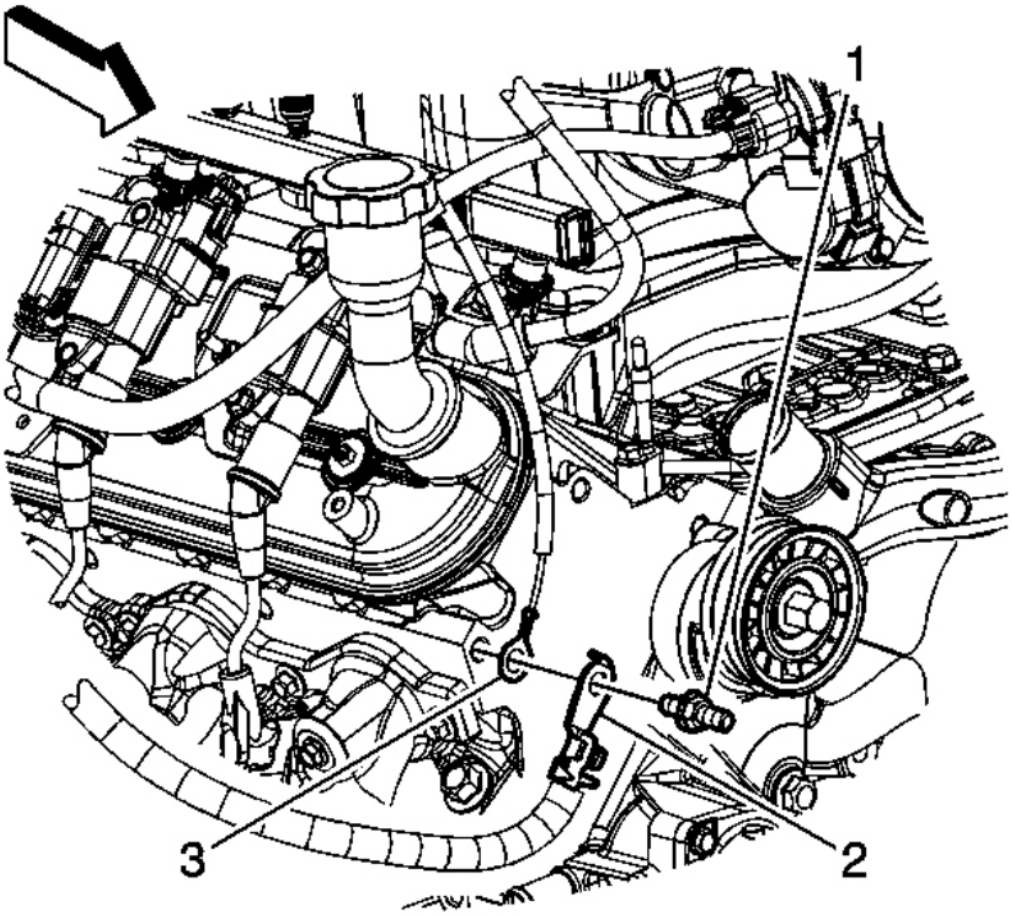

Fig. 436: View Of Battery Cable Terminals & Stud
Courtesy of GENERAL MOTORS CORP.

16. Remove the negative battery cable stud (1) from the right cylinder head.
17. Remove the negative battery cable terminal (2) and engine wiring harness ground terminal (3) from the cylinder head.

cardiagn.com

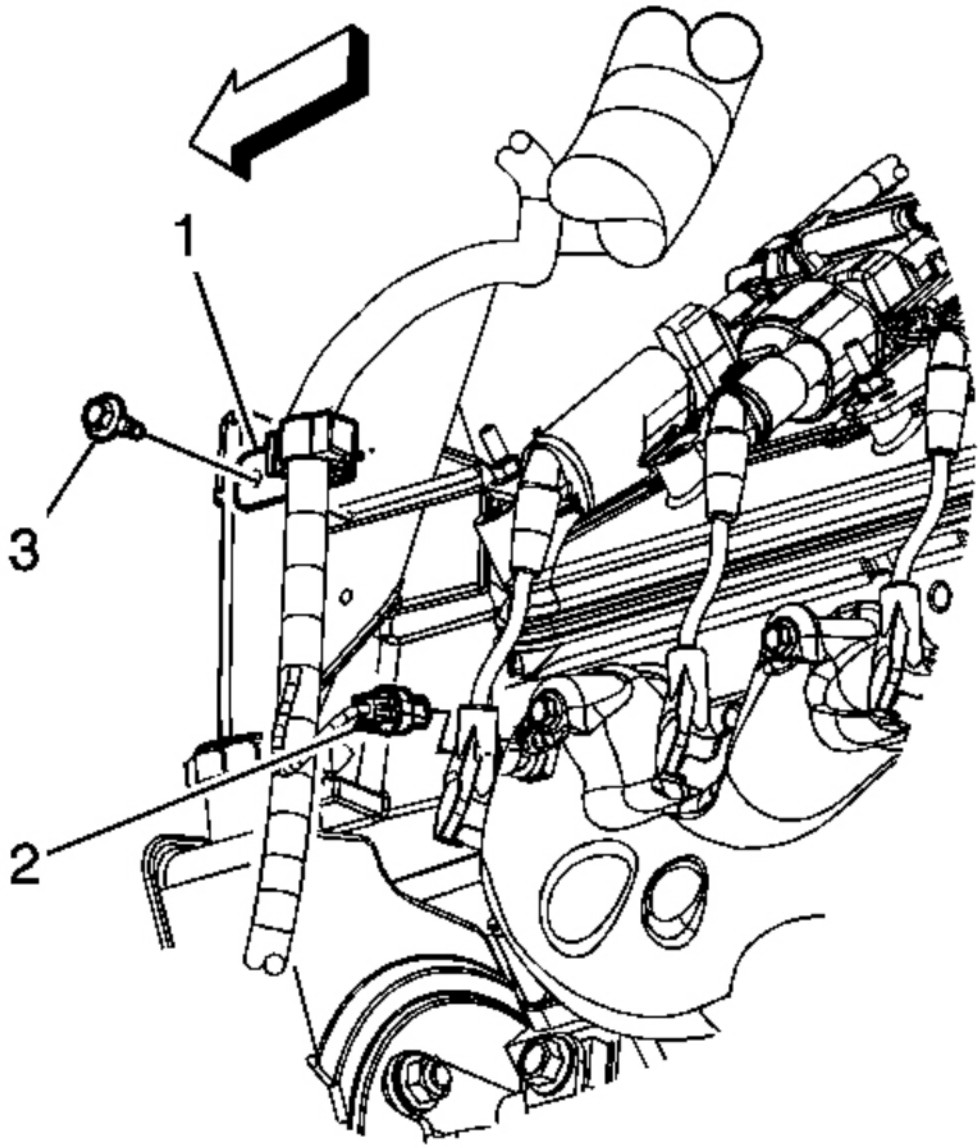

Fig. 437: View Of Engine Wiring Harness, Clip, Bolt & Connector
Courtesy of GENERAL MOTORS CORP.

18. Remove the engine wiring harness clip bolt (3) from the generator bracket.
19. Gather the branches of the engine wiring harness and reposition the aside.

cardiagn.com

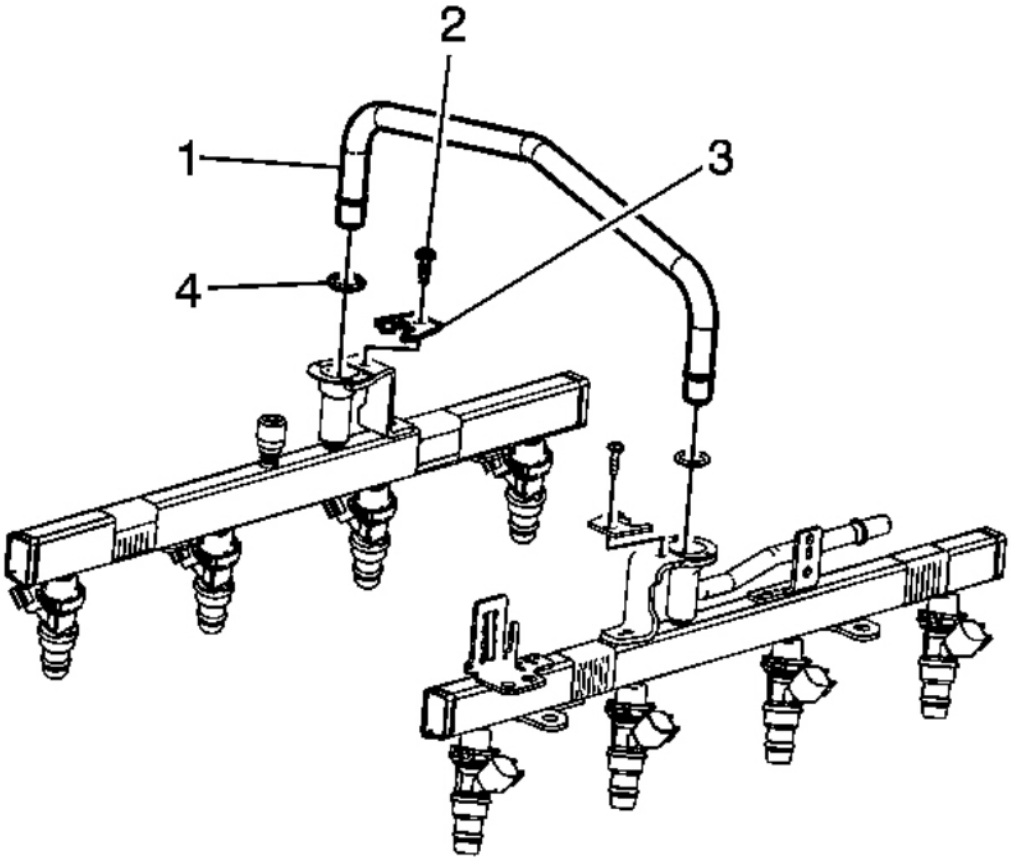

Fig. 438: View Of Fuel Rail Cross Over Pipe & Components
Courtesy of GENERAL MOTORS CORP.

20. Remove the fuel rail crossover pipe retainer screws (2).
21. Remove the fuel rail crossover pipe retainers (3).
22. Remove the fuel rail crossover pipe (1) from the fuel rails.
23. Remove and discard the fuel rail crossover pipe O-ring seals (4).

Installation Procedure

cardiagn.com

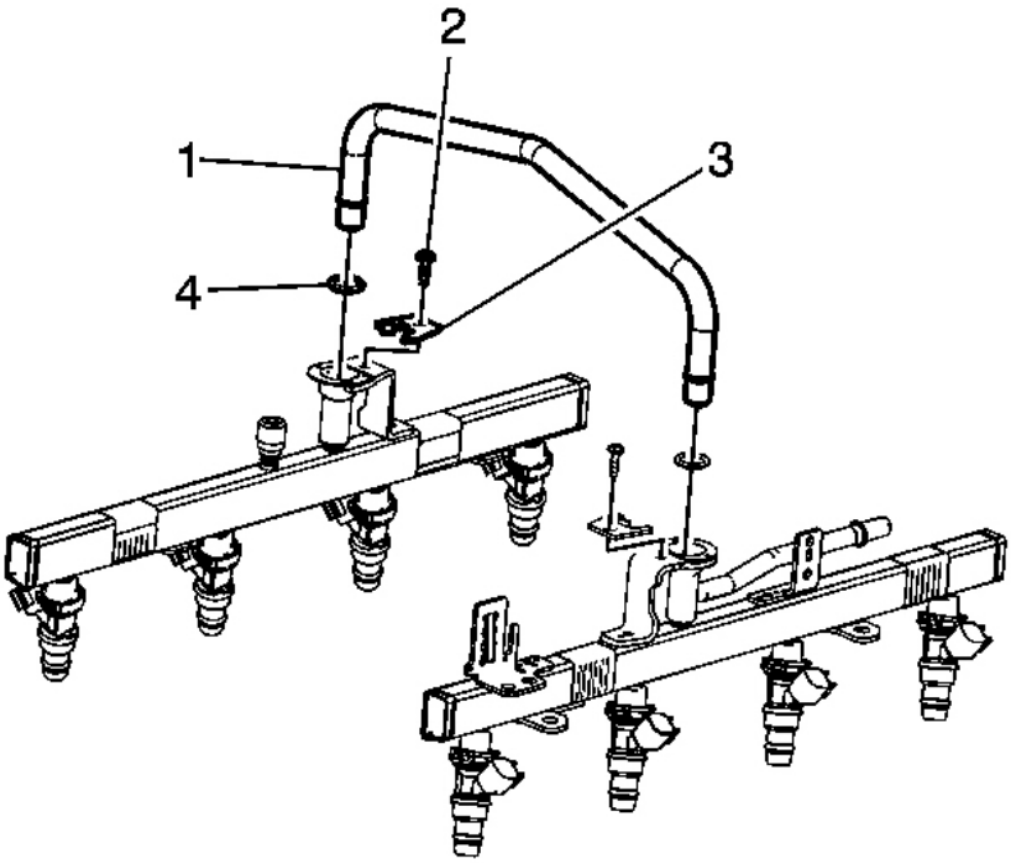

Fig. 439: View Of Fuel Rail Cross Over Pipe & Components
Courtesy of GENERAL MOTORS CORP.

1. Lubricate the NEW fuel rail crossover pipe O-ring seals with clean engine oil.
2. Install NEW fuel rail crossover pipe O-ring seals (4) onto the crossover pipe.
3. Install the fuel rail crossover pipe (1) into the fuel rails.
4. Install the fuel rail crossover pipe retainers (3).

NOTE: **Refer to Fastener Notice .**

5. Install the fuel rail crossover pipe retainer screws (2).

Tighten: Tighten the screws to 3.8 N.m (34 lb in).

cardiagn.com

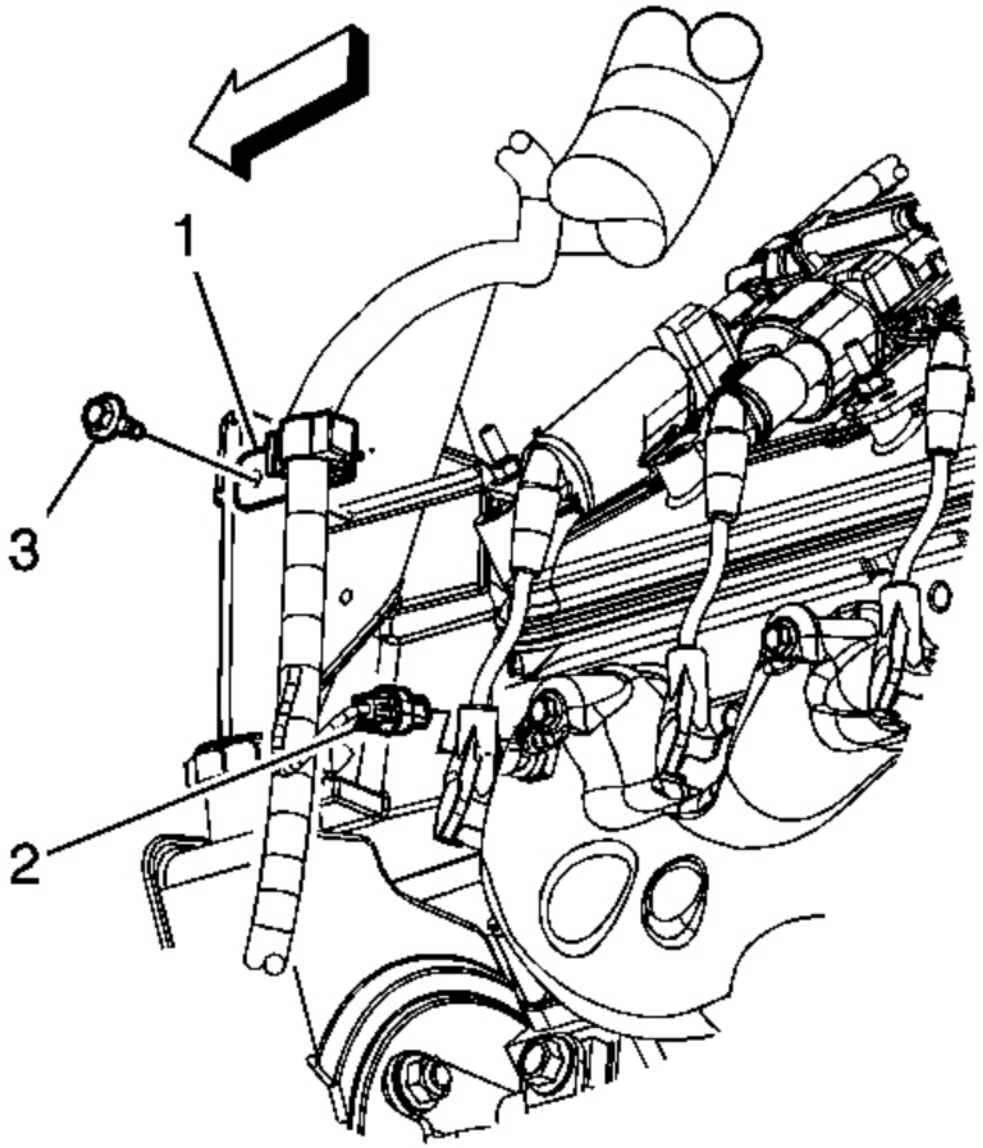

Fig. 440: View Of Engine Wiring Harness, Clip, Bolt & Connector
Courtesy of GENERAL MOTORS CORP.

6. Gather the branches of the engine wiring harness and position over the top of the engine.
7. Position the engine wiring harness clip to the generator bracket and install the clip bolt (3).

Tighten: Tighten the bolt to 9 N.m (80 lb in).

cardiagn.com

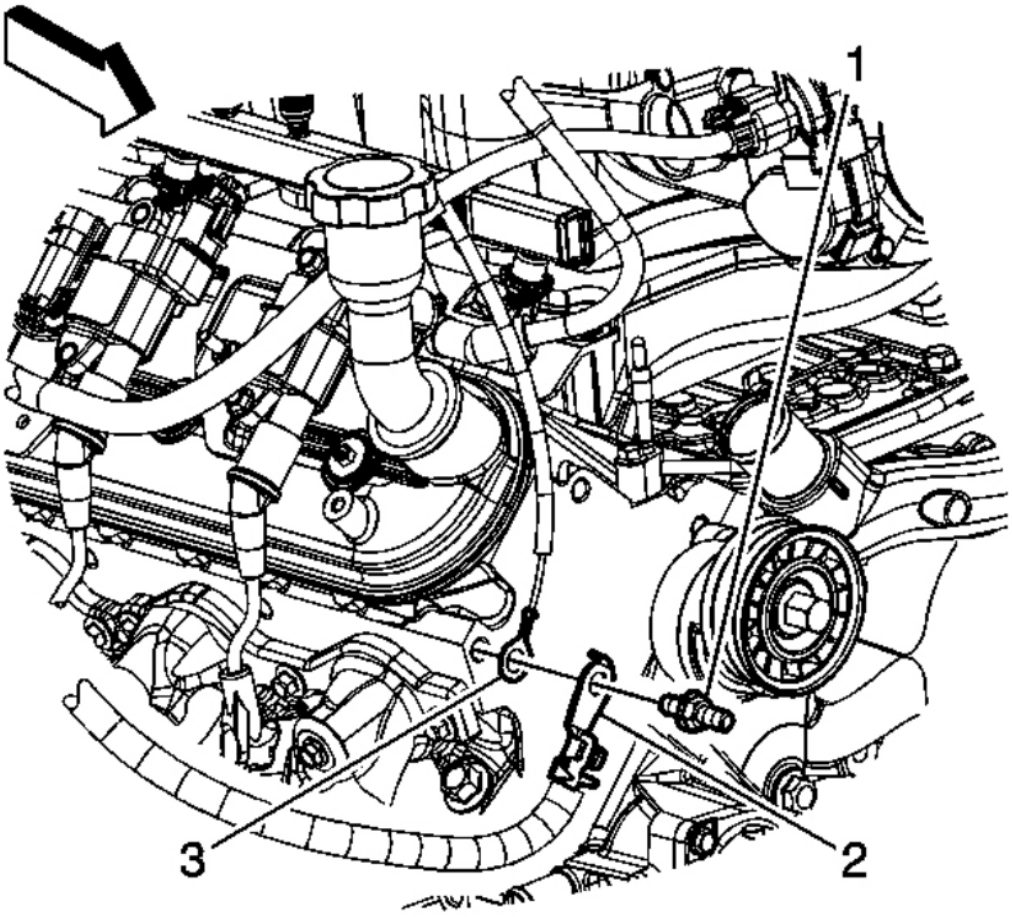

Fig. 441: View Of Battery Cable Terminals & Stud
Courtesy of GENERAL MOTORS CORP.

8. Position the negative battery cable terminal (2) and engine wiring harness ground terminal (3) to the right cylinder head.
9. Install the negative battery cable stud (1) to the cylinder head.

   Tighten: Tighten the stud to 25 N.m (18 lb ft).

cardiagn.com

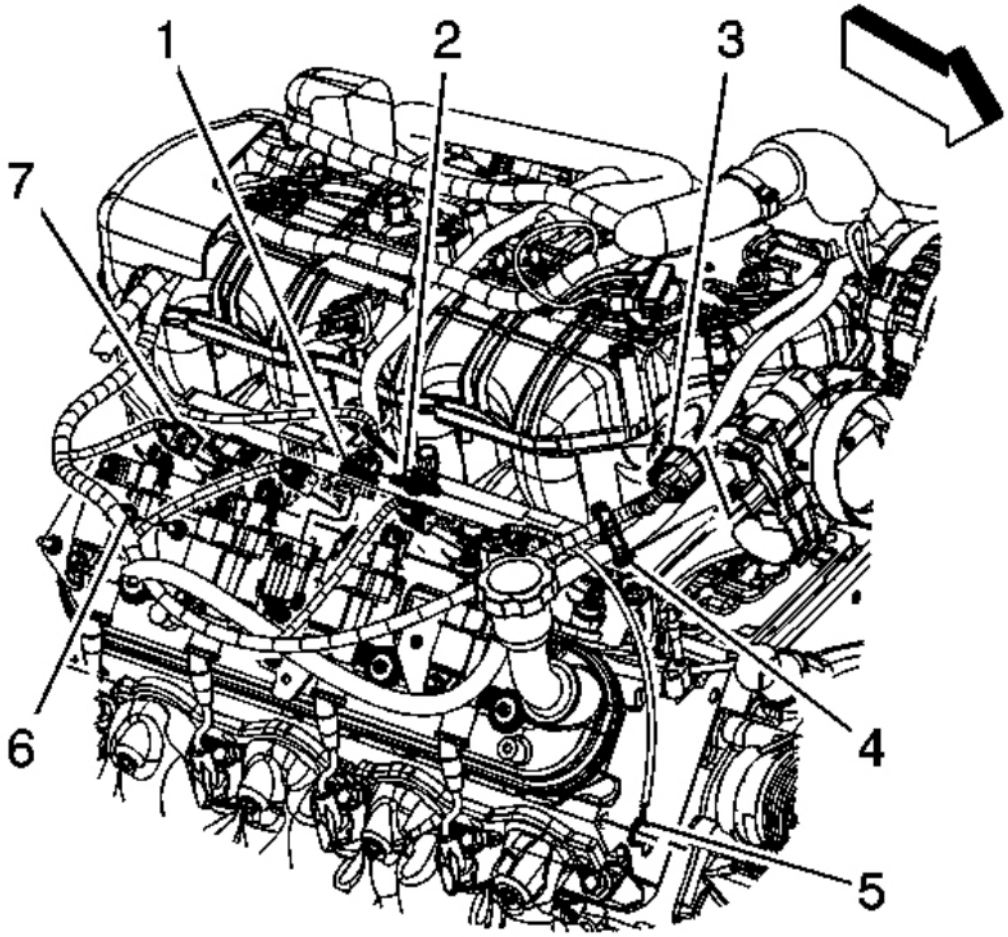

Fig. 442: View Of CPA Retainer, Engine Harness Electrical Connectors & Harness Clips
Courtesy of GENERAL MOTORS CORP.

10. Connect the engine wiring harness electrical connector (1) to the ignition coil main electrical connector.
11. Install the CPA retainer (2).
12. Connect the engine wiring harness electrical connector (3) to the electronic throttle control.
13. Connect the engine wiring harness electrical connectors (7) to the fuel injectors, perform the following:
    1. Ensure that the CPA retainer is pulled out 1 click.
    2. Connect the electrical connectors to their corresponding injectors.
    3. Push the CPA retainer in 1 click.
    4. Ensure that the connector is secured.

cardiagn.com

14. Install the engine wiring harness clip (4) to the generator battery jumper cable.
15. Install the engine wiring harness clip (6) to the ignition coil bracket stud.

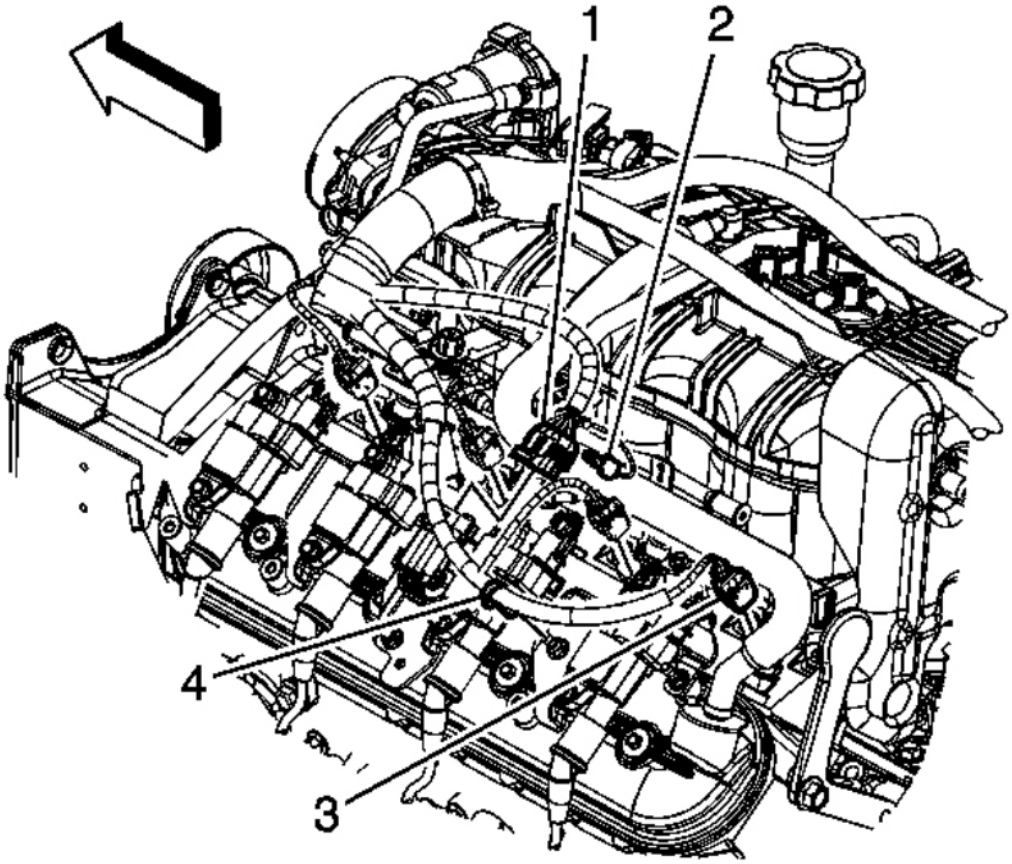

Fig. 443: View Of CPA Retainer, Electrical Connectors & Engine Harness Clips
Courtesy of GENERAL MOTORS CORP.

16. Connect the engine wiring harness electrical connector (1) to the ignition coil main electrical connector.
17. Install the CPA retainer (2).
18. Connect the engine wiring harness electrical connectors (3) to the fuel injectors, perform the following:
    1. Ensure that the CPA retainer is pulled out 1 click.
    2. Connect the electrical connectors to their corresponding injectors.
    3. Push the CPA retainer in 1 click.
    4. Ensure that the connector is secured.

cardiagn.com

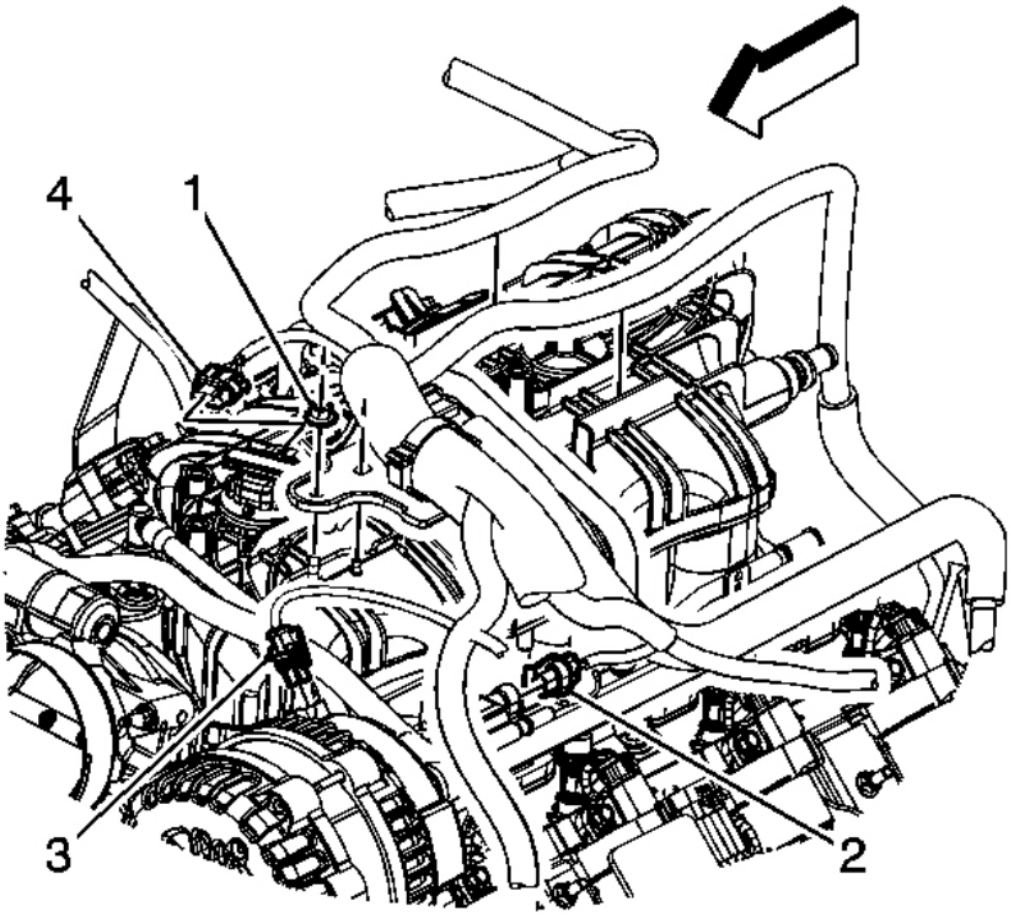

Fig. 444: View Of Engine Harness Retainer Nut & Electrical Connectors
Courtesy of GENERAL MOTORS CORP.

19. Connect the engine wiring harness electrical connector (4) to the MAP sensor.
20. Connect the engine wiring harness electrical connector (3) to the generator.
21. Connect the engine wiring harness electrical connector (2) to the EVAP purge solenoid.
22. Install the engine wiring harness bracket nut (1).

    Tighten: Tighten the nut to 5 N.m (44 lb in).

23. Connect the negative battery cable. Refer to **Battery Negative Cable Disconnection and Connection** .
24. Use the following procedure in order to inspect for leaks:
    1. Turn the ignition ON, with the engine OFF for 2 seconds.

cardiagn.com

2. Turn the ignition OFF for 10 seconds.
3. Turn the ignition ON, with the engine OFF.
4. Inspect for leaks.

25. Install the air cleaner outlet duct. Refer to **Air Cleaner Resonator Outlet Duct Replacement**.

FUEL INJECTOR REPLACEMENT

Removal Procedure

NOTE: **Use care in removing the fuel injectors in order to prevent damage to the fuel injector electrical connector pins or the fuel injector nozzles. Do not immerse the fuel injector in any type of cleaner. The fuel injector is an electrical component and may be damaged by this cleaning method.**

IMPORTANT:

- **An 8-digit identification number is located on the fuel rail. Refer to this identification number when servicing or when part replacement is required.**
- **The engine oil may be contaminated with fuel if the fuel injectors are leaking.**

cardiagn.com

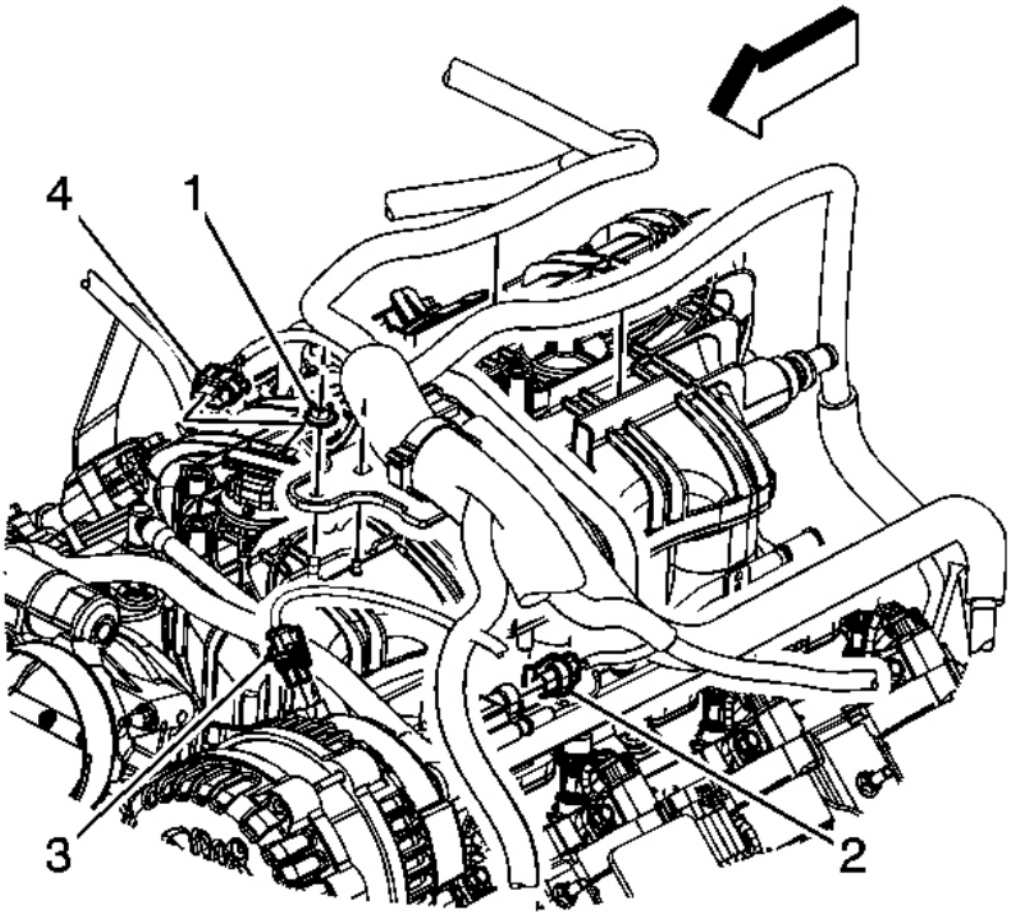

Fig. 445: View Of Engine Harness Retainer Nut & Electrical Connectors
Courtesy of GENERAL MOTORS CORP.

1. Remove the air cleaner outlet duct. Refer to **Air Cleaner Resonator Outlet Duct Replacement**.
2. Relieve the fuel system pressure. Refer to **Fuel Pressure Relief**.
3. Remove the engine wiring harness bracket nut (1).
4. Disconnect the engine wiring harness electrical connector (2) from the evaporative emission (EVAP) purge solenoid.
5. Disconnect the engine wiring harness electrical connector (3) from the generator.
6. Disconnect the engine wiring harness electrical connector (4) from the manifold absolute pressure (MAP) sensor.

cardiagn.com

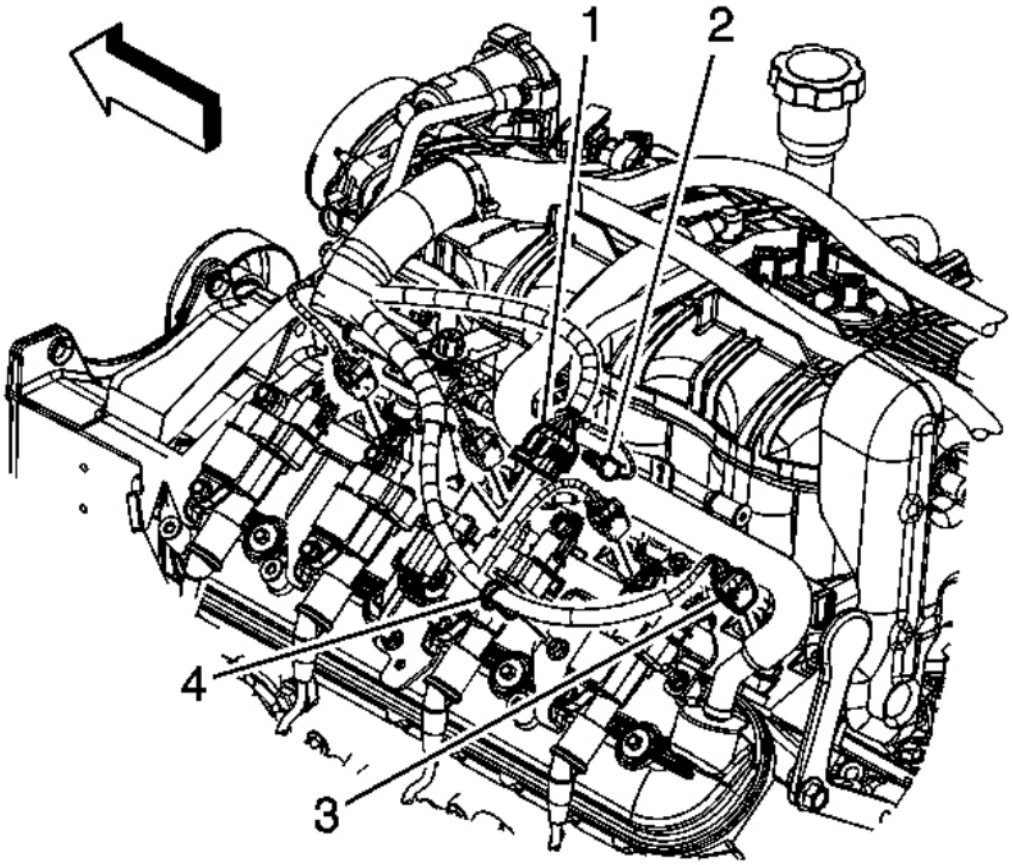

Fig. 446: View Of CPA Retainer, Electrical Connectors & Engine Harness Clips
Courtesy of GENERAL MOTORS CORP.

7. Remove the connector position assurance (CPA) retainer (2).
8. Disconnect the engine wiring harness electrical connector (1) from the ignition coil main electrical connector.
9. Disconnect the engine wiring harness electrical connectors (3) from the fuel injectors, perform the following:
    1. Mark the connectors to their corresponding injectors to ensure correct reassembly.
    2. Pull the CPA retainer on the connector up 1 click.
    3. Push the tab on the connector in.
    4. Disconnect the fuel injector electrical connector.

cardiagn.com

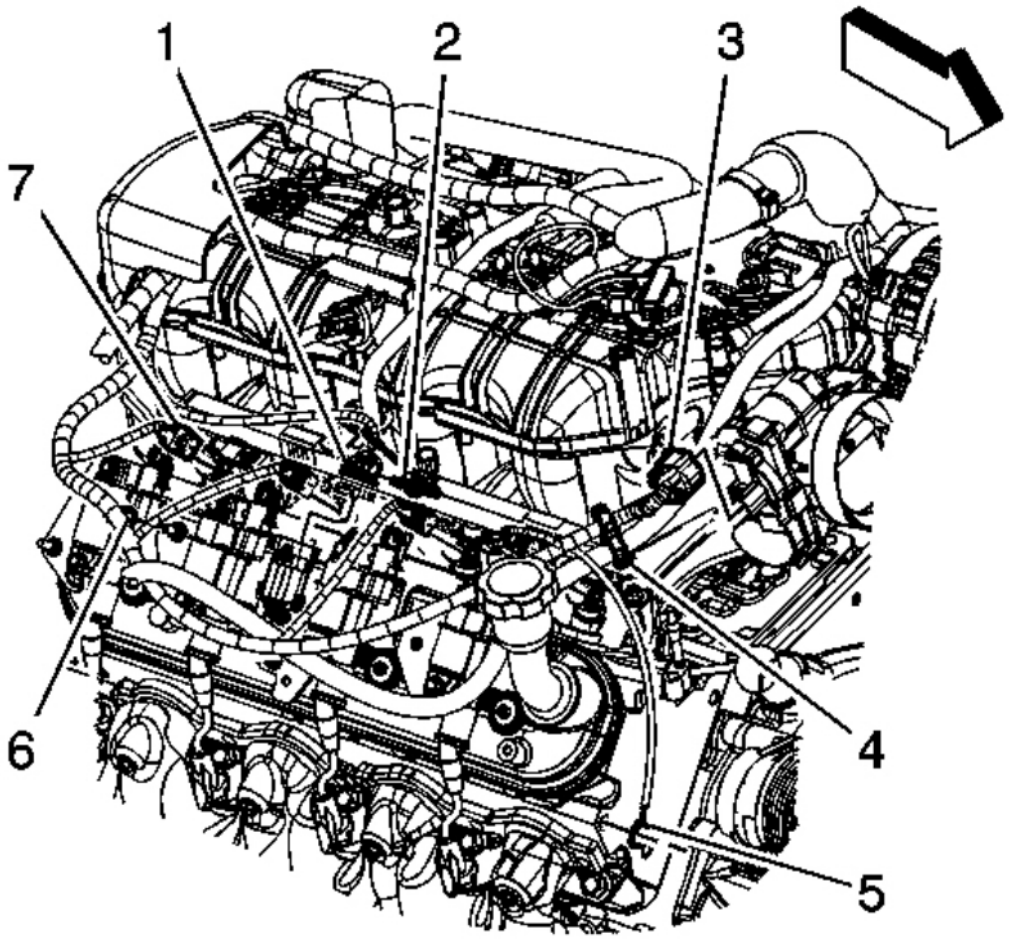

Fig. 447: View Of CPA Retainer, Engine Harness Electrical Connectors & Harness Clips
Courtesy of GENERAL MOTORS CORP.

10. Remove the CPA retainer (2).
11. Disconnect the engine wiring harness electrical connector (1) from the ignition coil main electrical connector.
12. Disconnect the engine wiring harness electrical connector (3) from the electronic throttle control.
13. Disconnect the engine wiring harness electrical connectors (7) from the fuel injectors, perform the following:
    1. Mark the connectors to their corresponding injectors to ensure correct reassembly.
    2. Pull the CPA retainer on the connector up 1 click.
    3. Push the tab on the connector in.

cardiagn.com

4. Disconnect the fuel injector electrical connector.

14. Remove the engine wiring harness clip (4) from the generator battery jumper cable.
15. Remove the engine wiring harness clip (6) from the ignition coil bracket stud.

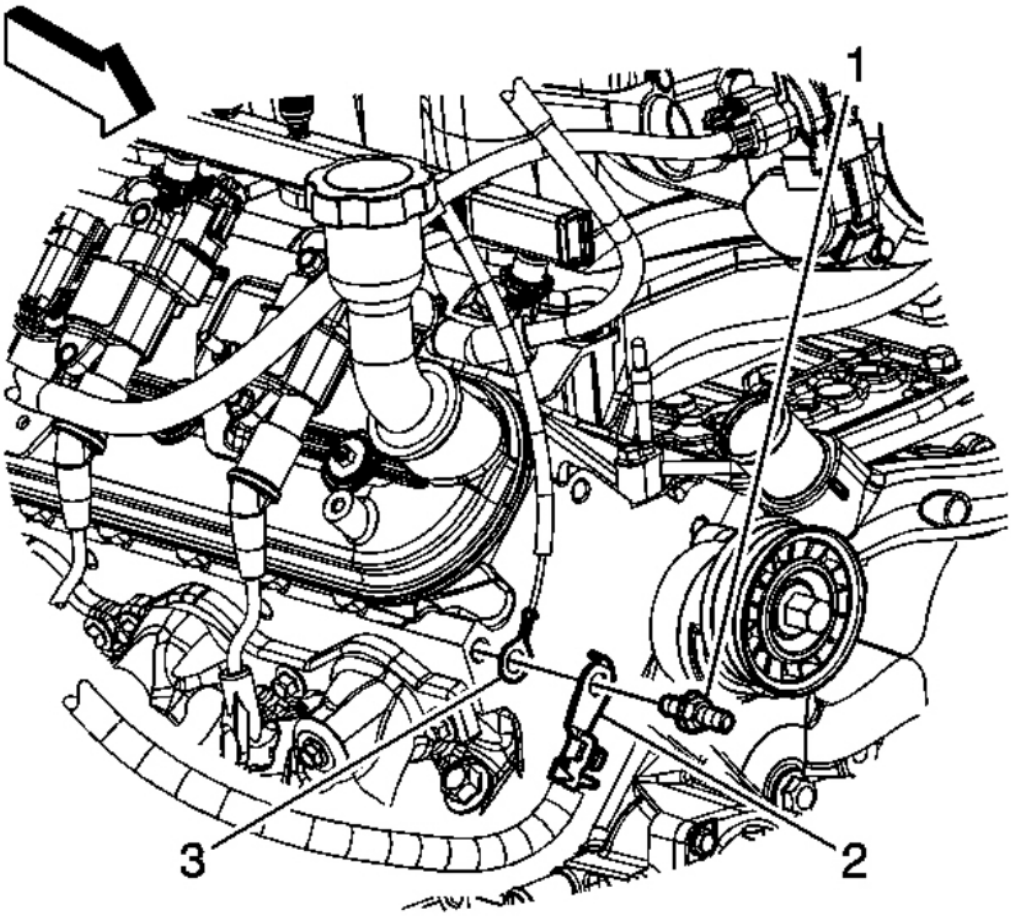

Fig. 448: View Of Battery Cable Terminals & Stud
Courtesy of GENERAL MOTORS CORP.

16. Remove the negative battery cable stud (1) from the right cylinder head.
17. Remove the negative battery cable terminal (2) and engine wiring harness ground terminal (3) from the cylinder head.

cardiagn.com

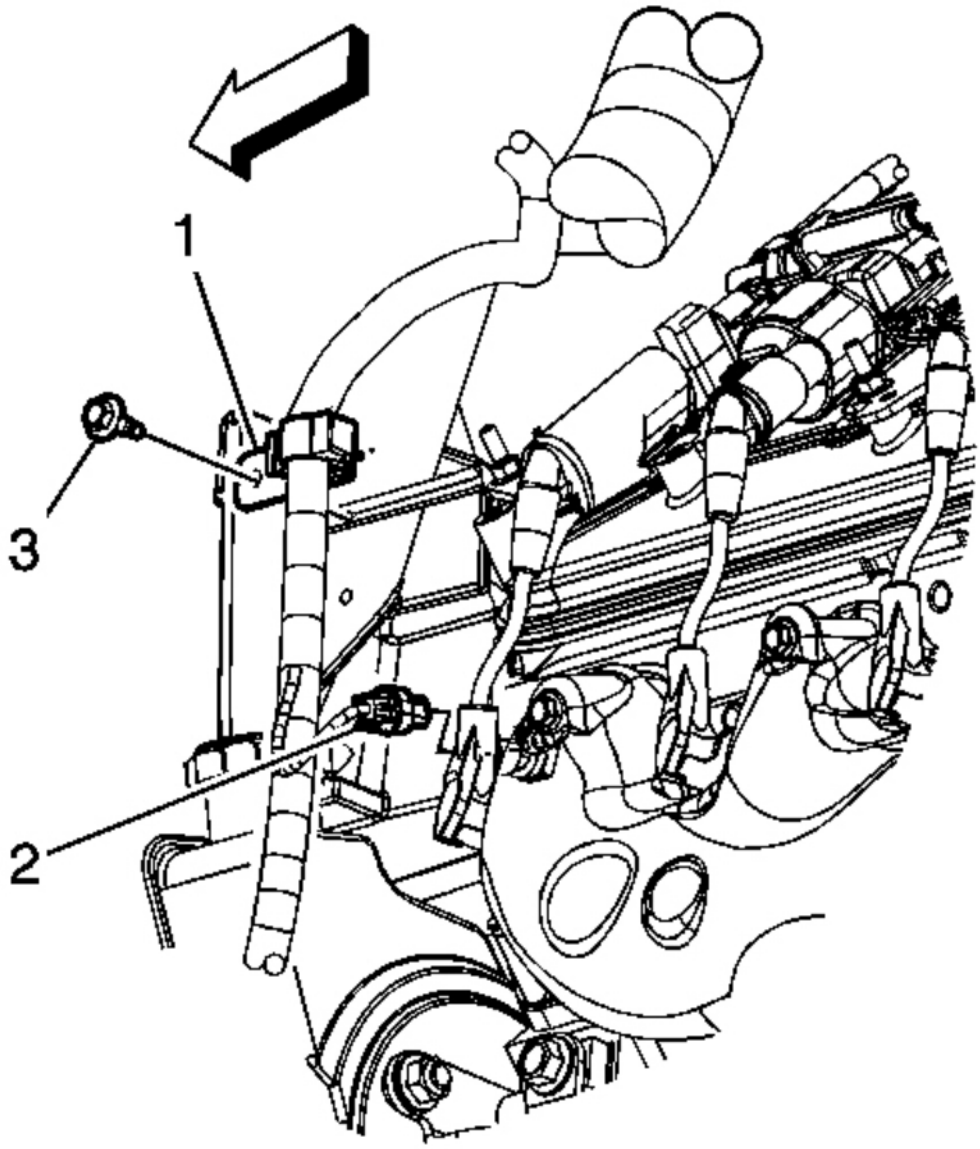

Fig. 449: View Of Engine Wiring Harness, Clip, Bolt & Connector
Courtesy of GENERAL MOTORS CORP.

18. Remove the engine wiring harness clip bolt (3) from the generator bracket.
19. Gather the branches of the engine wiring harness and reposition the aside.

cardiagn.com

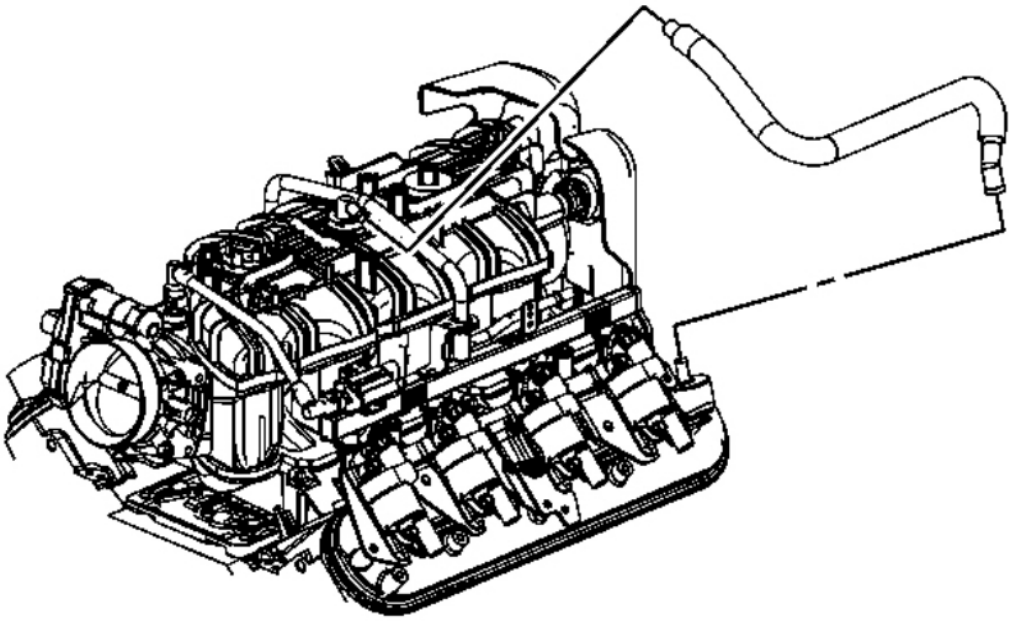

Fig. 450: View Of PCV Hose
Courtesy of GENERAL MOTORS CORP.

20. Remove the positive crankcase ventilation (PCV) hose.

cardiagn.com

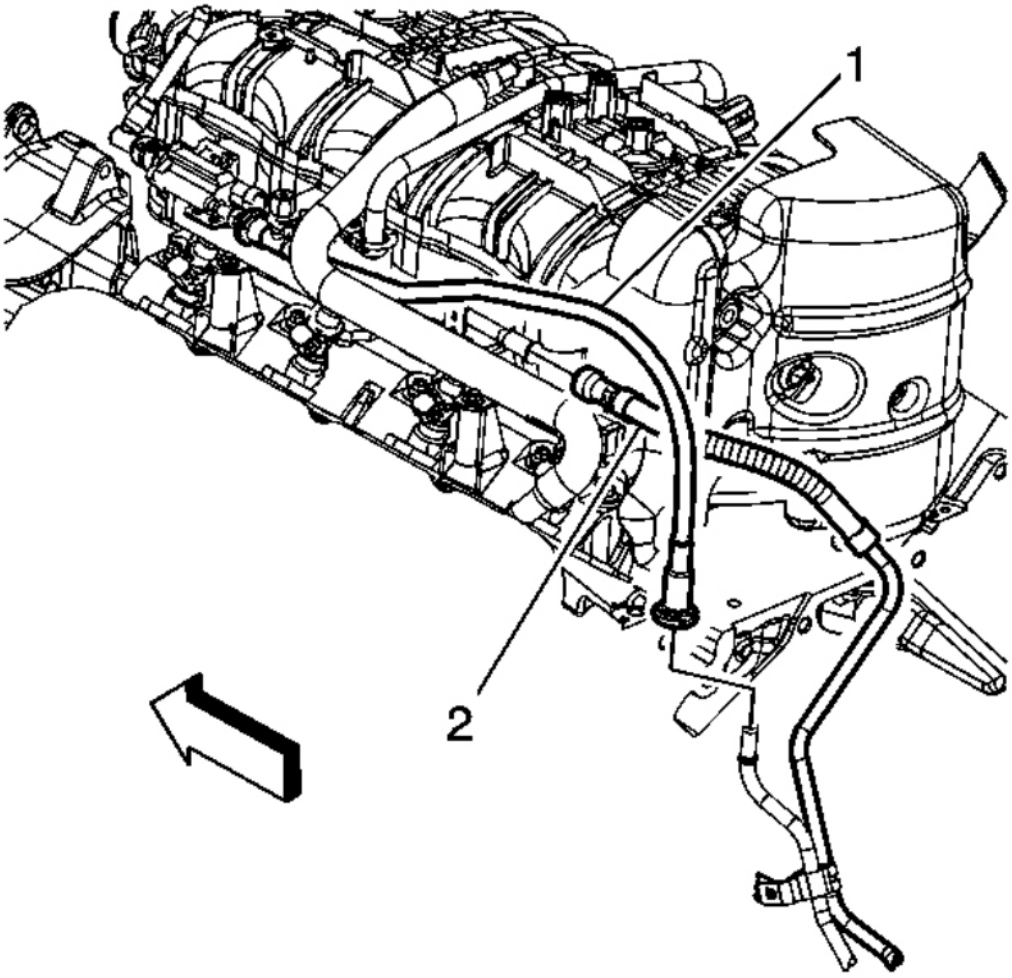

Fig. 451: View Of EVAP Canister Purge Tube & Quick Connect Fitting
Courtesy of GENERAL MOTORS CORP.

21. Disconnect the chassis fuel feed pipe (2) quick connect fitting from the fuel rail. Refer to **Quick Connect Fitting Service - Metal Collar**.

cardiagn.com

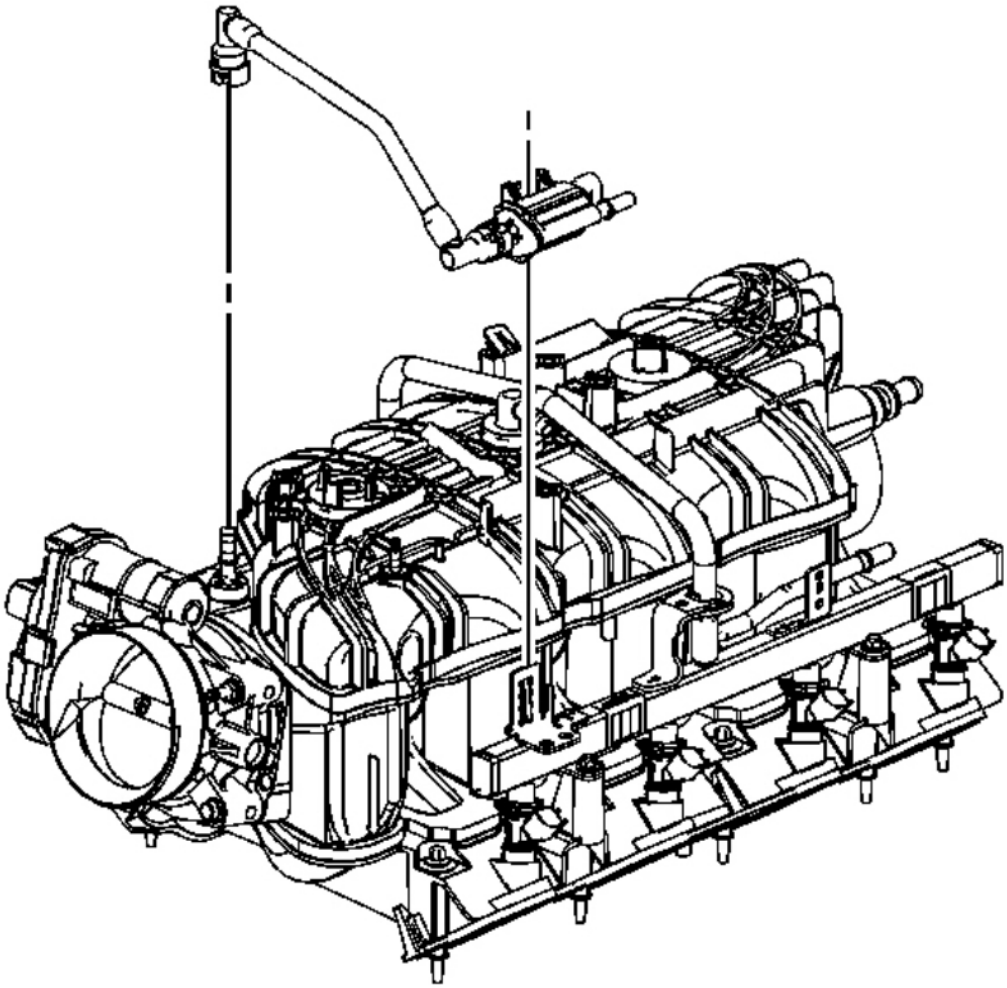

Fig. 452: View Of EVAP Tube & Purge Solenoid
Courtesy of GENERAL MOTORS CORP.

22. Disconnect the EVAP tube quick connect fitting at the intake manifold. Refer to **Quick Connect Fitting Service - Plastic Collar**.
23. Disengage the retainer securing the EVAP canister purge solenoid to the fuel rail.
24. Remove the EVAP tube and purge solenoid.

cardiagn.com

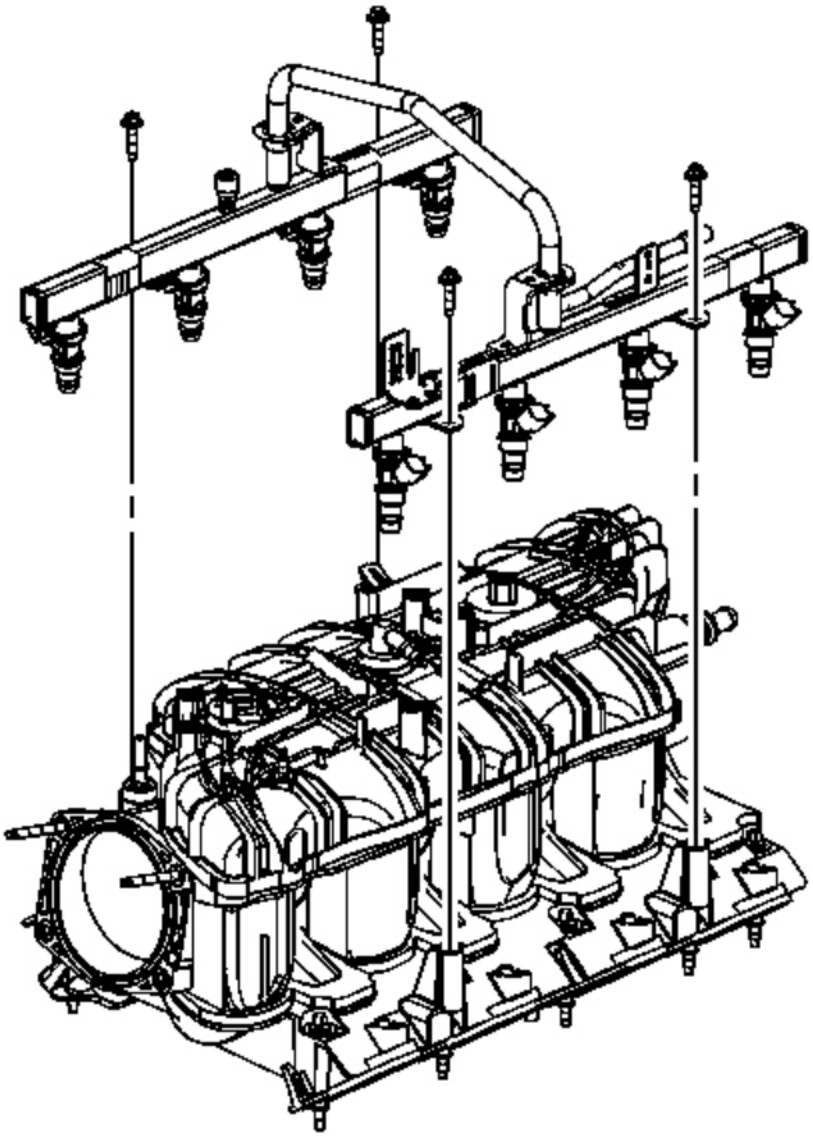

Fig. 453: View Of Fuel Rail & Bolts
Courtesy of GENERAL MOTORS CORP.

25. Remove the fuel rail bolts.

NOTE:

- **Remove the fuel rail assembly carefully in order to prevent damage to the injector electrical connector terminals and the injector spray tips.**

cardiagn.com

Support the fuel rail after the fuel rail is removed in order to avoid damaging the fuel rail components.

- **Cap the fittings and plug the holes when servicing the fuel system in order to prevent dirt and other contaminants from entering open pipes and passages.**

IMPORTANT: Before removal, clean the fuel rail with a spray type engine cleaner, such as GM X-30A or equivalent, if necessary. Follow the package instructions. Do not soak the fuel rail in liquid cleaning solvent.

IMPORTANT: Lift evenly on both sides of the fuel rail until all injectors are removed from their bores.

26. Remove the fuel rail assembly.

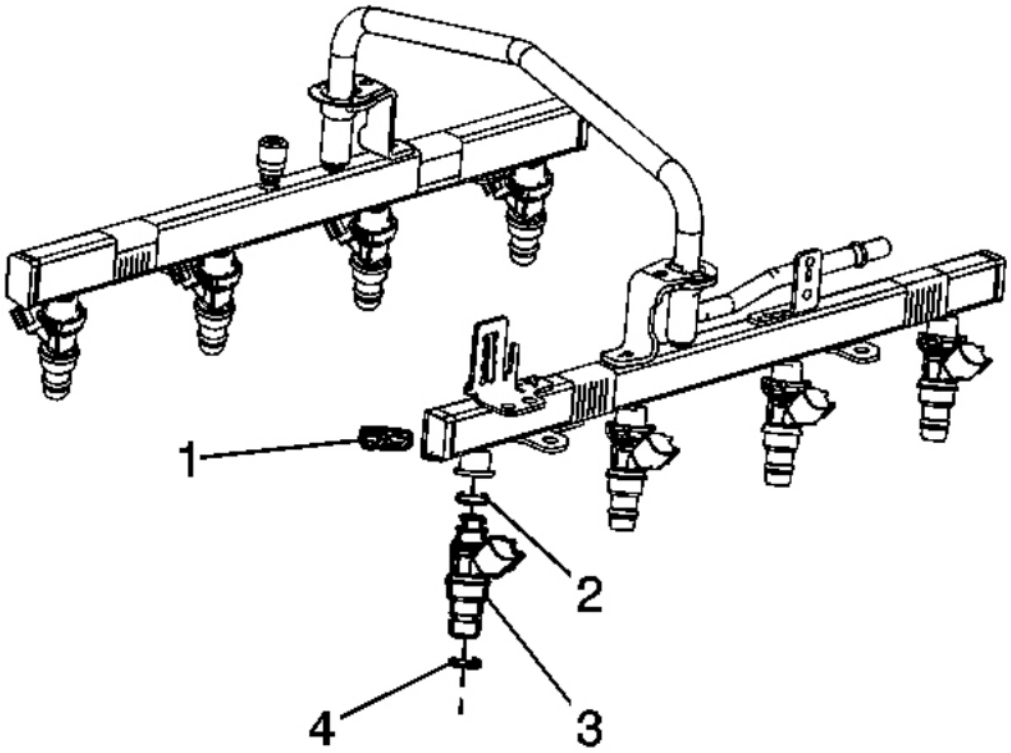

Fig. 454: View Of Fuel Rail & Components
Courtesy of GENERAL MOTORS CORP.

cardiagn.com

27. Remove the fuel injector retainers (1).
28. Remove the fuel injectors (3) from the fuel rail.
29. Remove and discard the fuel injector upper and lower O-ring seals (2 and 4).

Installation Procedure

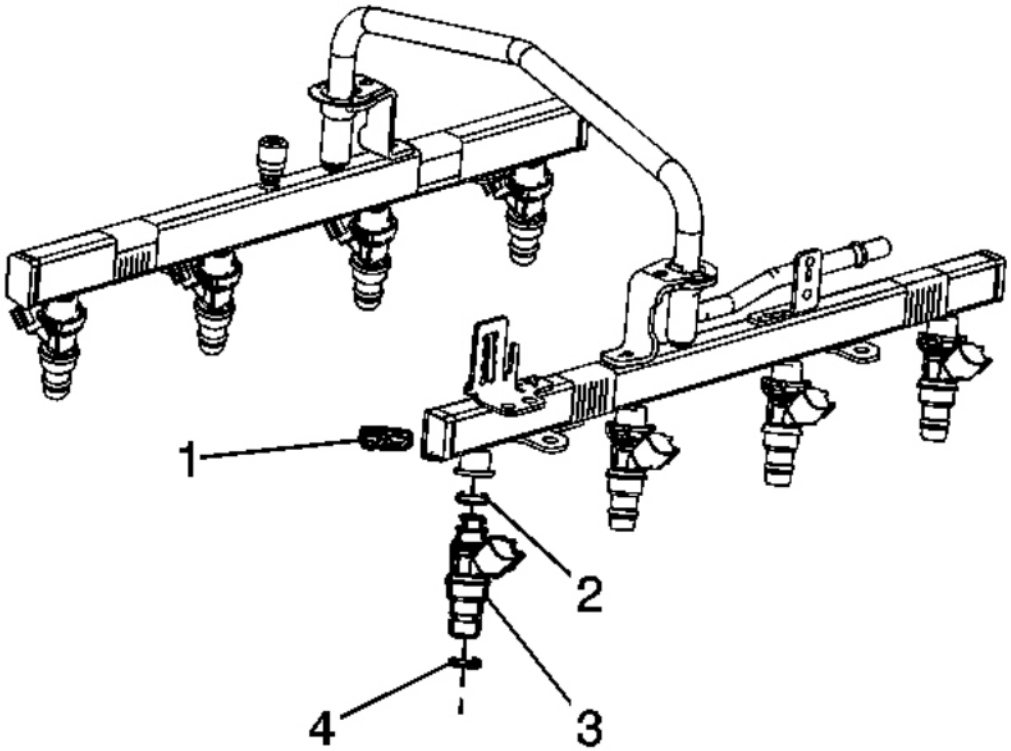

Fig. 455: View Of Fuel Rail & Components
Courtesy of GENERAL MOTORS CORP.

1. Lubricate the NEW fuel injector O-ring seals with clean engine oil.
2. Install the NEW fuel injector upper and lower O-ring seals (2 and 4) onto the injectors.
3. Install the fuel injectors (3) into the fuel rails.
4. Install the fuel injector retainers (1).

cardiagn.com

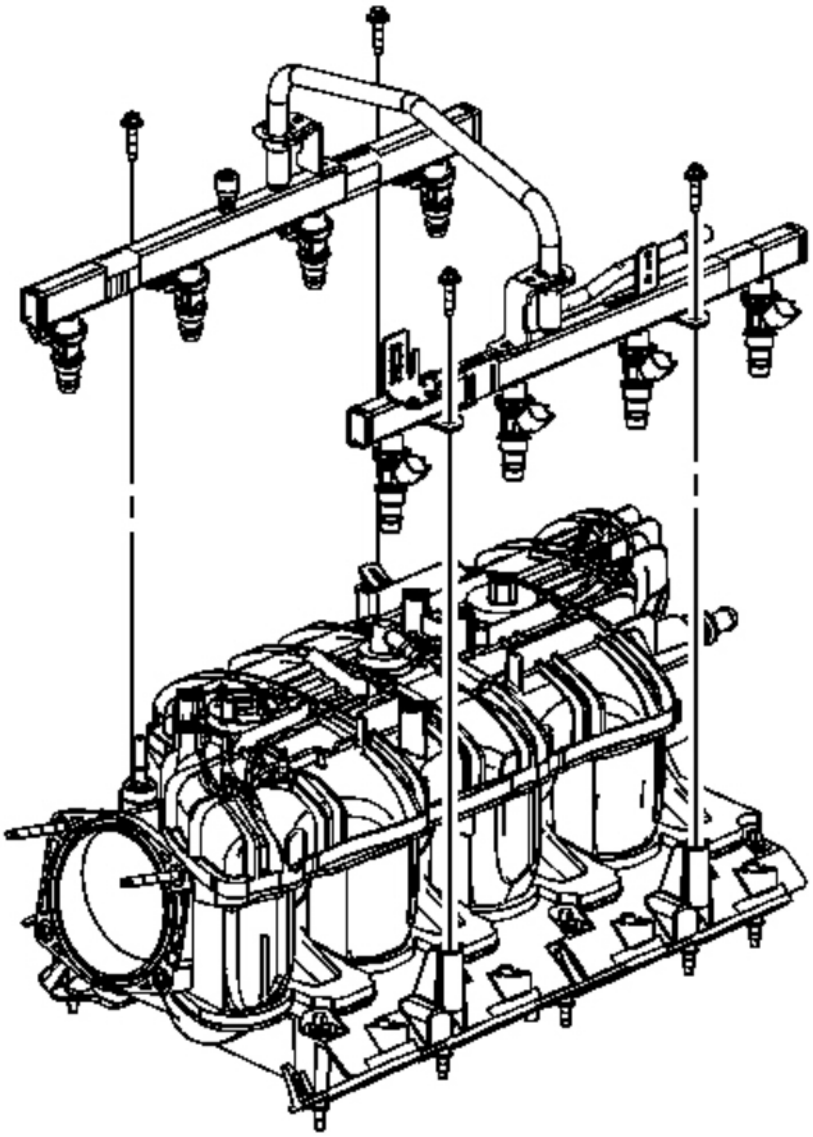

Fig. 456: View Of Fuel Rail & Bolts
Courtesy of GENERAL MOTORS CORP.

5. Ensure the fuel injector lower O-ring seals are adequately lubricated, if not lubricate the fuel injector lower O-ring seals with clean engine oil.
6. Position the fuel rail onto the intake manifold.
7. Firmly push down on both the centers of the left and right fuel rails, until the rails are fully seated against

cardiagn.com

the intake manifold.

NOTE: **Refer to Fastener Notice .**

IMPORTANT: Push down firmly on both sides of the rail until all injectors have been seated into their bores.

8. Install the fuel rail bolts.

Tighten: Tighten the bolts to 10 N.m (89 lb in).

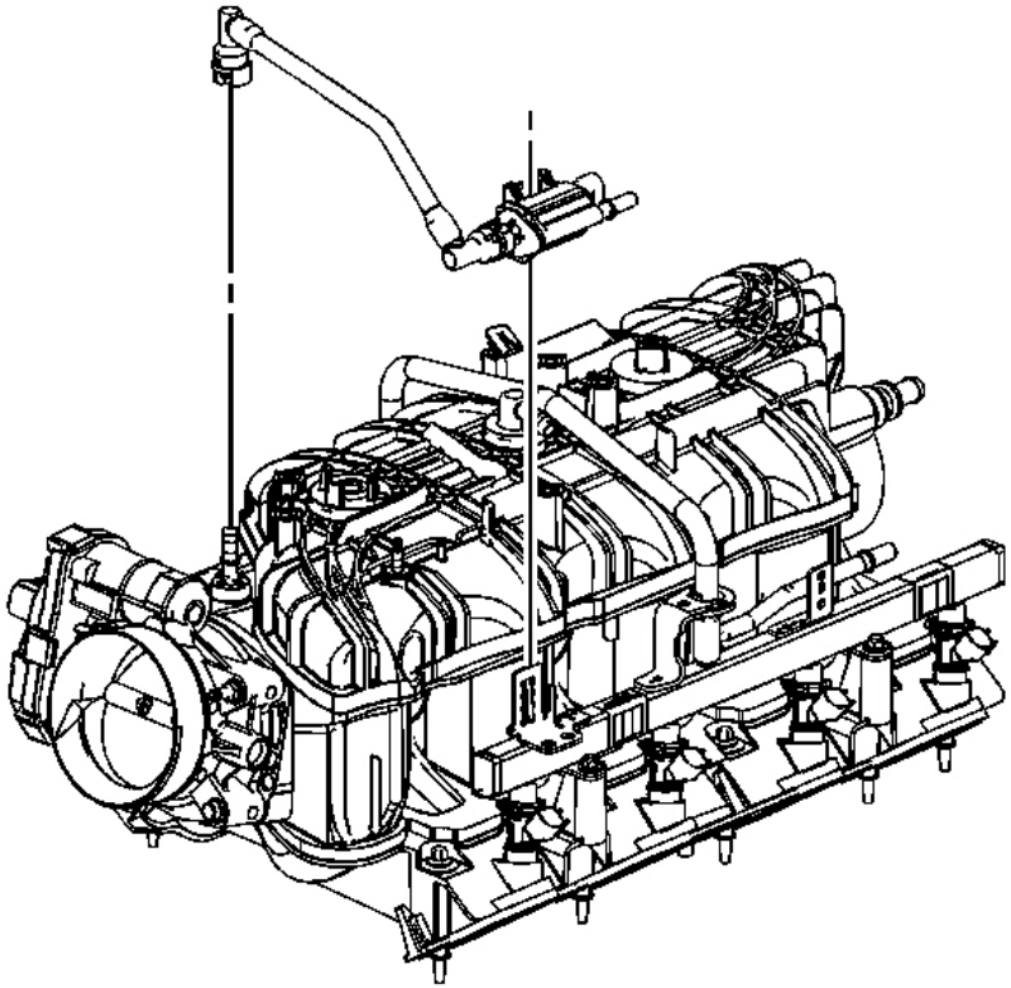

Fig. 457: View Of EVAP Tube & Purge Solenoid

cardiagn.com

Courtesy of GENERAL MOTORS CORP.

9. Install the EVAP tube and purge solenoid.
10. Install the EVAP canister purge solenoid to the fuel rail bracket and engage the retainer.
11. Connect the EVAP tube quick connect fitting at the intake manifold. Refer to **Quick Connect Fitting Service - Plastic Collar**.

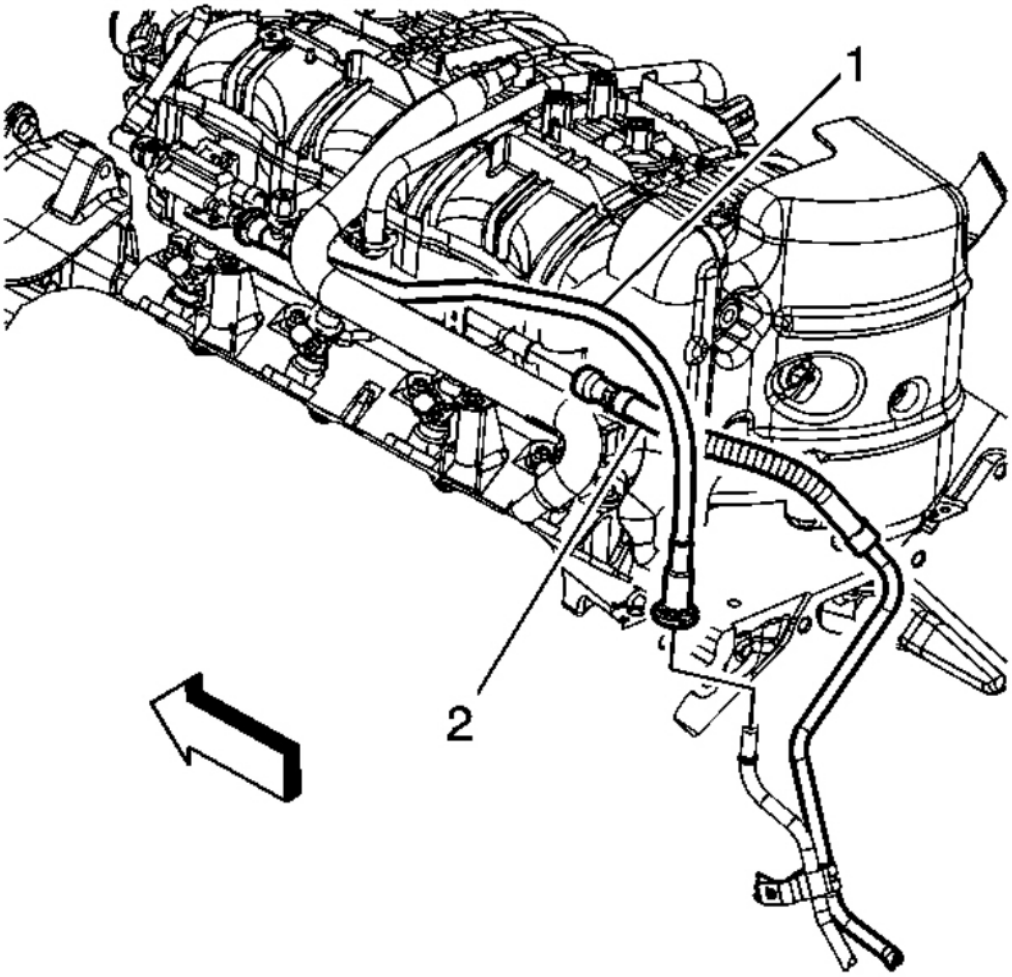

Fig. 458: View Of EVAP Canister Purge Tube & Quick Connect Fitting
Courtesy of GENERAL MOTORS CORP.

12. Connect the chassis fuel feed pipe (2) quick connect fitting to the fuel rail. Refer to **Quick Connect Fitting Service - Metal Collar**.

cardiagn.com

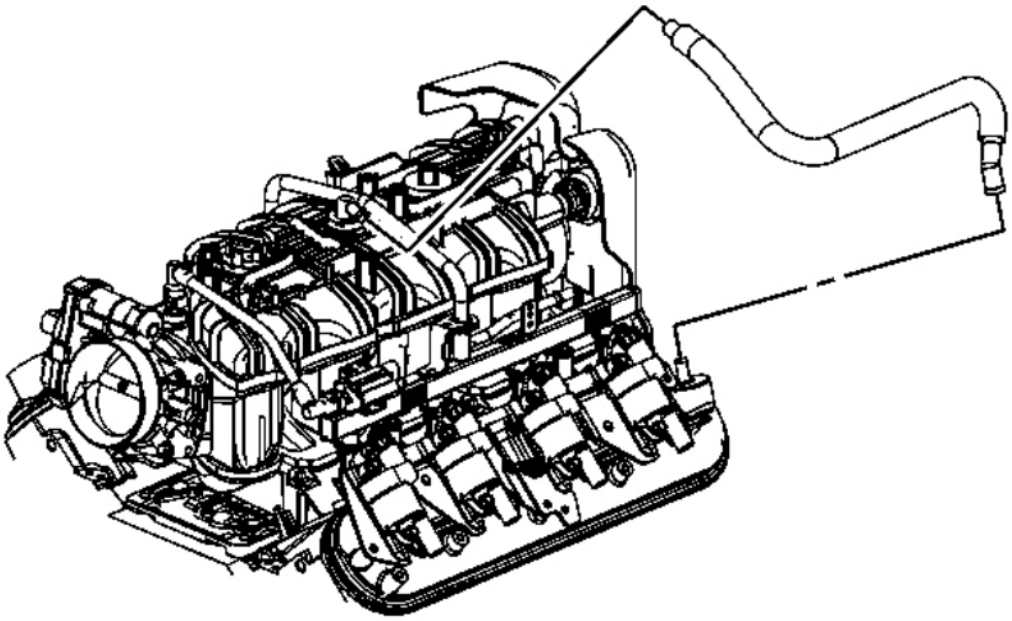

Fig. 459: View Of PCV Hose
Courtesy of GENERAL MOTORS CORP.

13. Install the PCV hose.
14. Gather the branches of the engine wiring harness and position over the top of the engine.

cardiagn.com

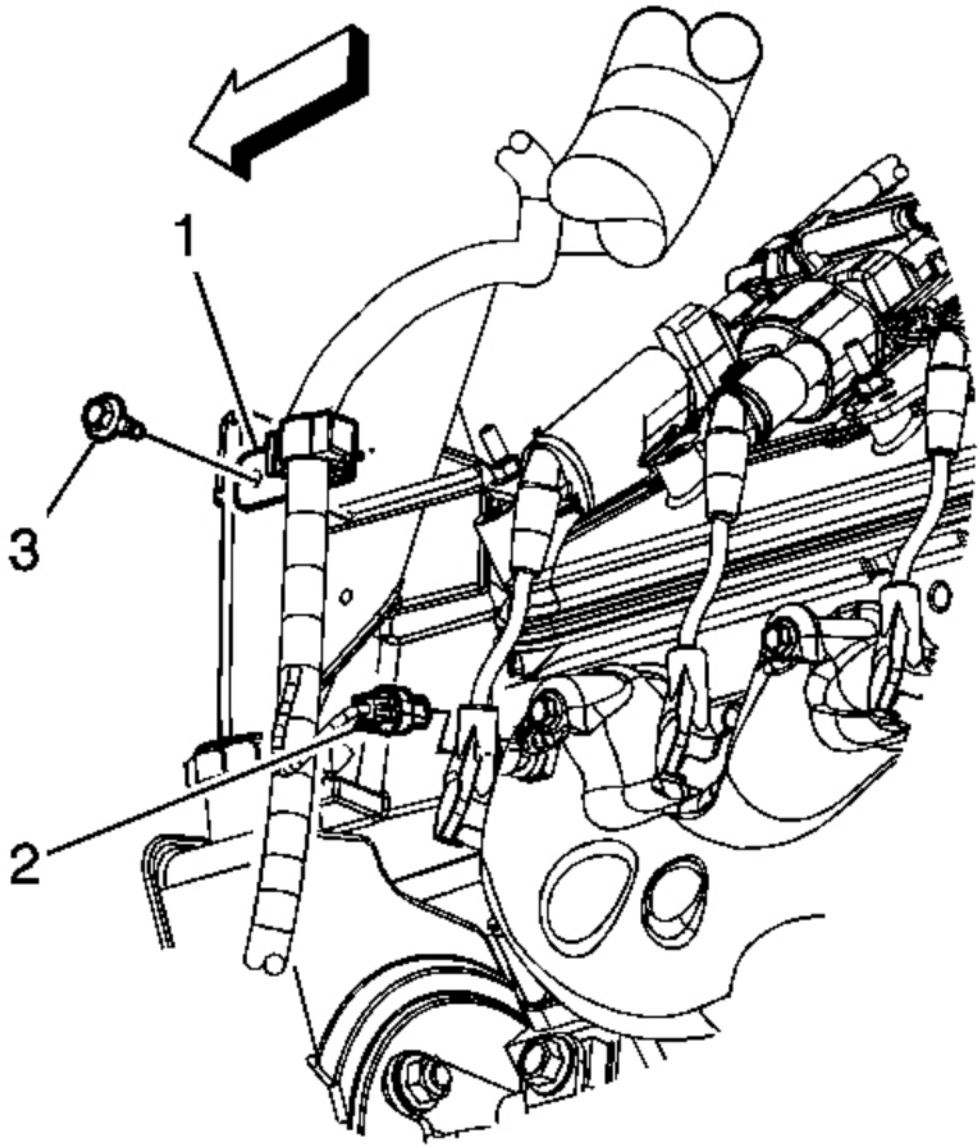

Fig. 460: View Of Engine Wiring Harness, Clip, Bolt & Connector
Courtesy of GENERAL MOTORS CORP.

15. Position the engine wiring harness clip to the generator bracket and install the clip bolt (3).

    Tighten: Tighten the bolts to 9 N.m (80 lb in).

cardiagn.com

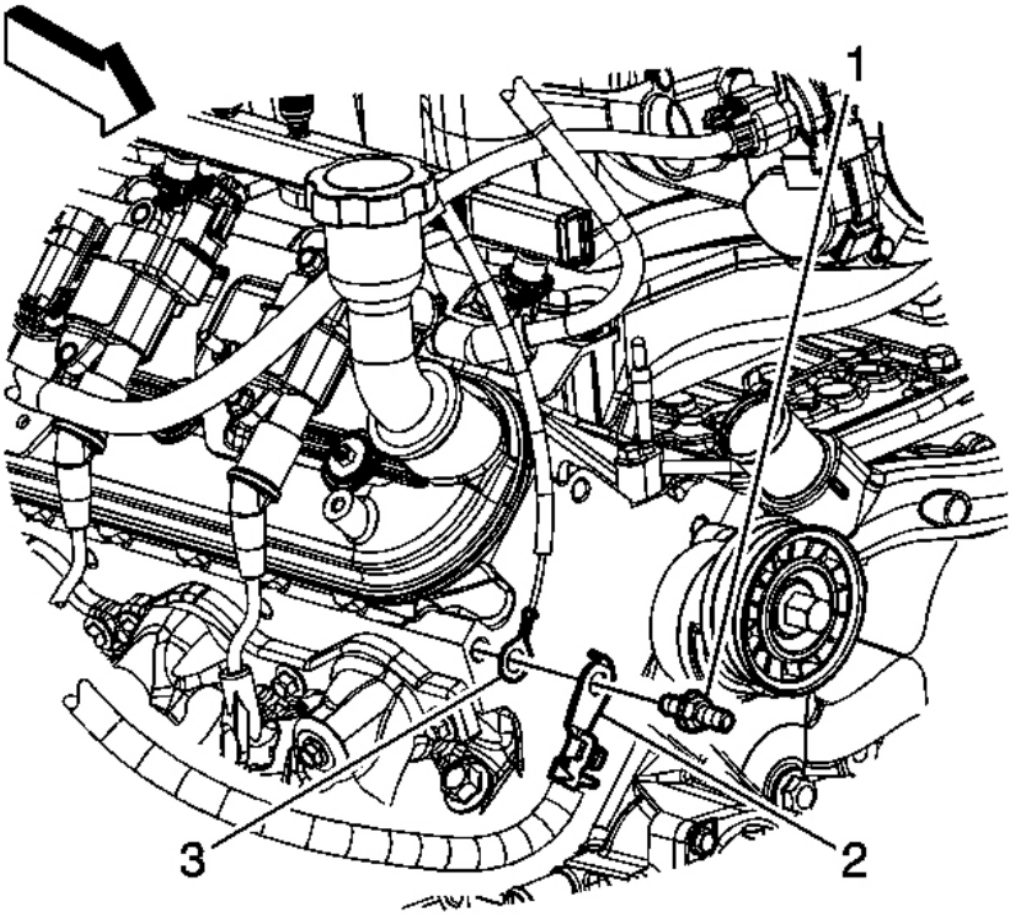

Fig. 461: View Of Battery Cable Terminals & Stud
Courtesy of GENERAL MOTORS CORP.

16. Position the negative battery cable terminal (2) and engine wiring harness ground terminal (3) to the right cylinder head.
17. Install the negative battery cable stud (1) to the cylinder head.

    Tighten: Tighten the stud to 25 N.m (18 lb ft).

cardiagn.com

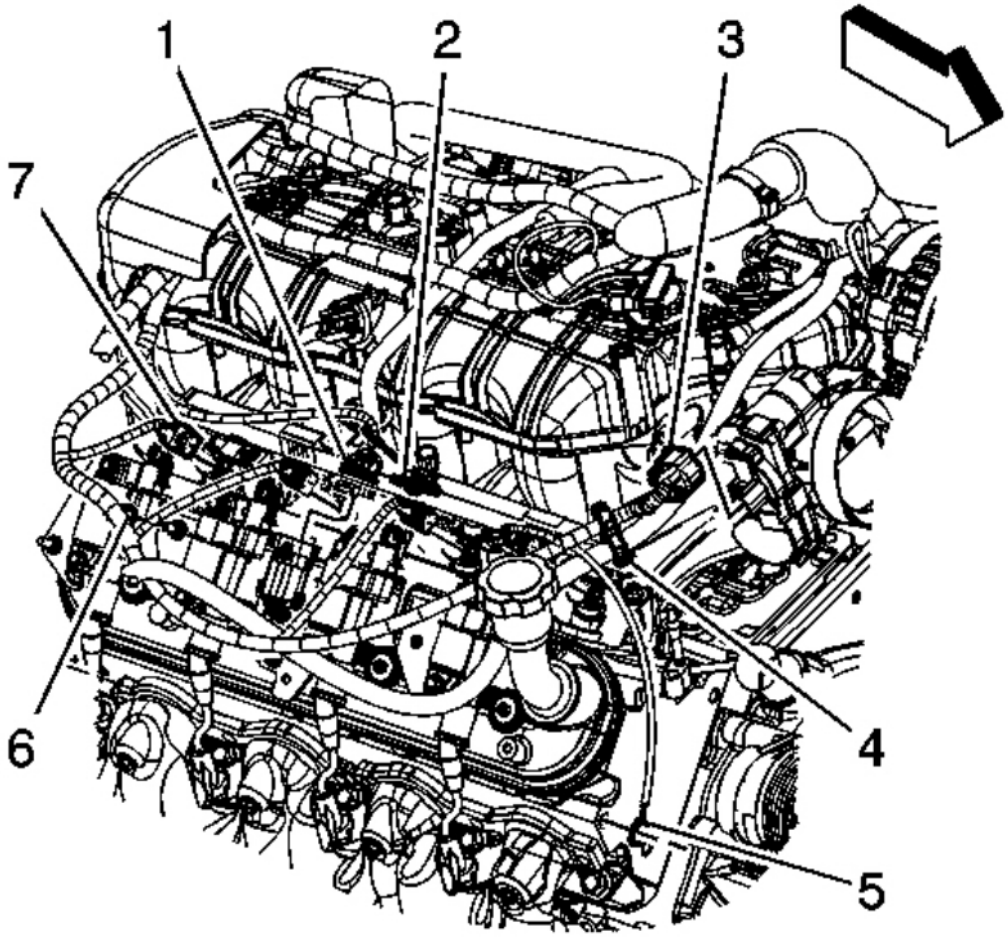

Fig. 462: View Of CPA Retainer, Engine Harness Electrical Connectors & Harness Clips
Courtesy of GENERAL MOTORS CORP.

18. Connect the engine wiring harness electrical connector (1) to the ignition coil main electrical connector.
19. Install the CPA retainer (2).
20. Connect the engine wiring harness electrical connector (3) to the electronic throttle control.
21. Connect the engine wiring harness electrical connectors (7) to the fuel injectors, perform the following:
    1. Ensure that the CPA retainer is pulled out 1 click.
    2. Connect the electrical connectors to their corresponding injectors.
    3. Push the CPA retainer in 1 click.
    4. Ensure that the connector is secured.

cardiagn.com

22. Install the engine wiring harness clip (4) to the generator battery jumper cable.
23. Install the engine wiring harness clip (6) to the ignition coil bracket stud.

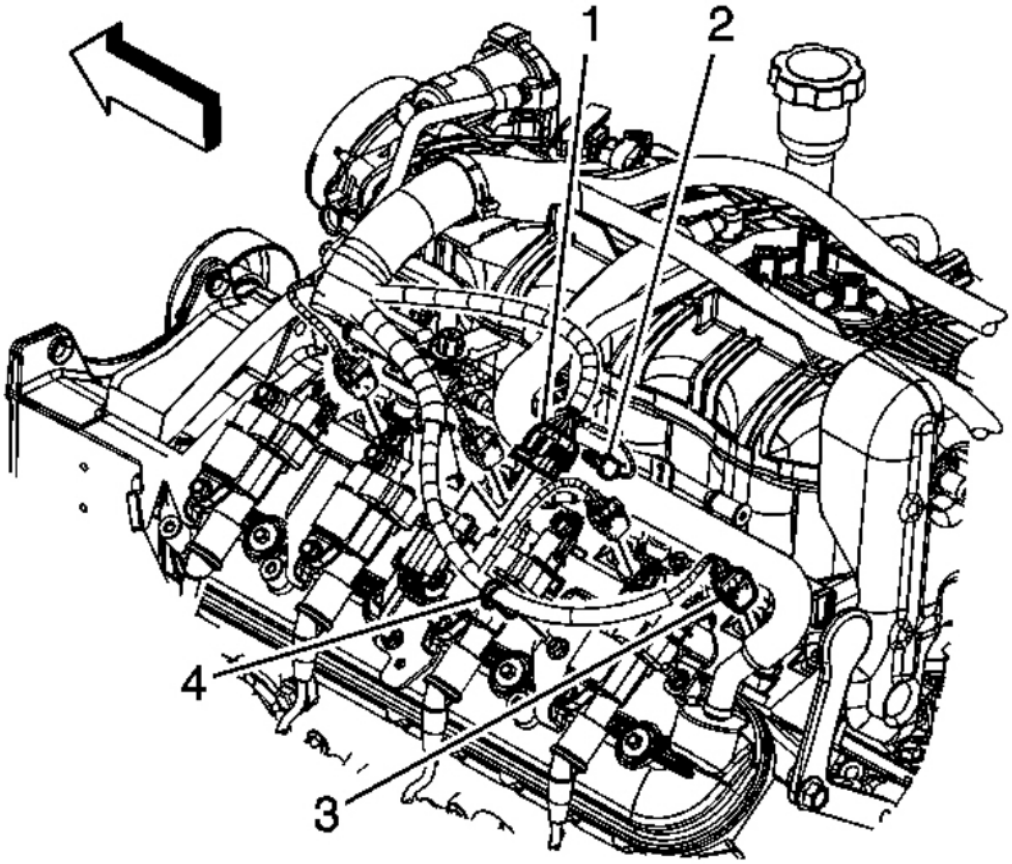

Fig. 463: View Of CPA Retainer, Electrical Connectors & Engine Harness Clips
Courtesy of GENERAL MOTORS CORP.

24. Connect the engine wiring harness electrical connector (1) to the ignition coil main electrical connector.
25. Install the CPA retainer (2).
26. Connect the engine wiring harness electrical connectors (3) to the fuel injectors, perform the following:
    1. Ensure that the CPA retainer is pulled out 1 click.
    2. Connect the electrical connectors to their corresponding injectors.
    3. Push the CPA retainer in 1 click.
    4. Ensure that the connector is secured.

cardiagn.com

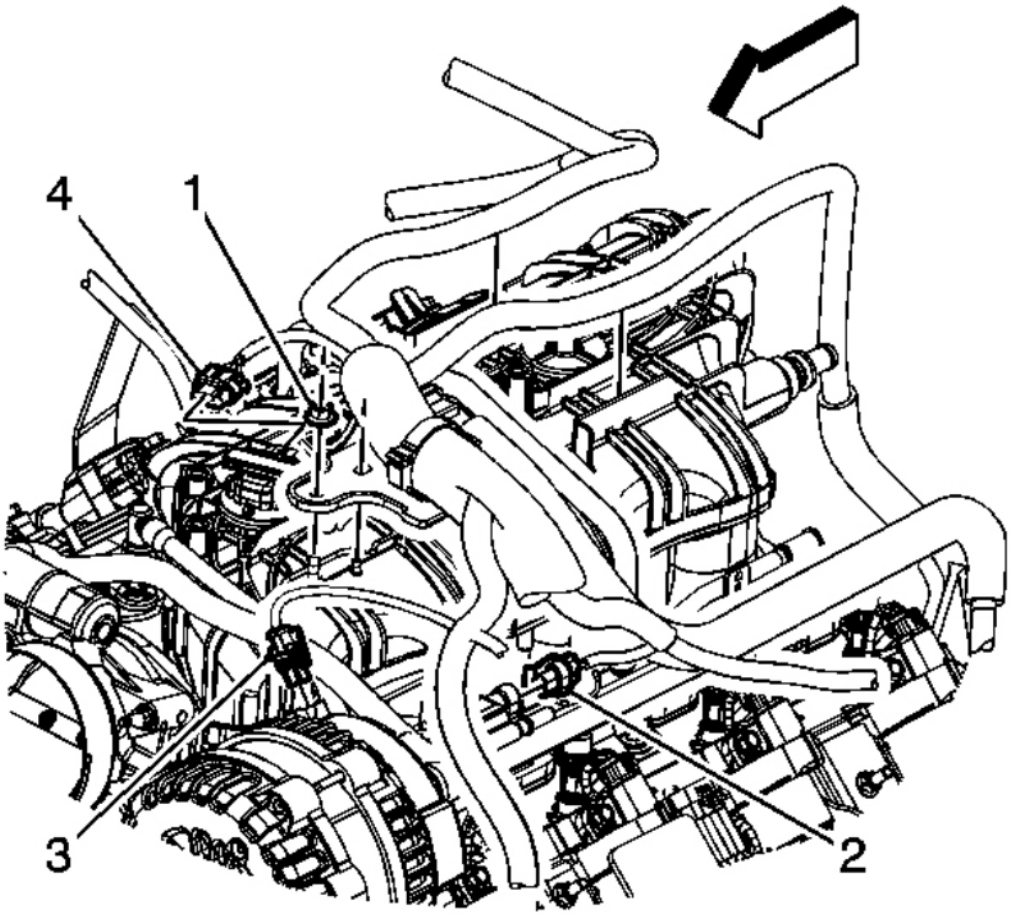

Fig. 464: View Of Engine Harness Retainer Nut & Electrical Connectors
Courtesy of GENERAL MOTORS CORP.

27. Connect the engine wiring harness electrical connector (4) to the MAP sensor.
28. Connect the engine wiring harness electrical connector (3) to the generator.
29. Connect the engine wiring harness electrical connector (2) to the EVAP purge solenoid.
30. Install the engine wiring harness bracket nut (1).

    Tighten: Tighten the nut to 5 N.m (44 lb in).

31. Connect the negative battery cable. Refer to **Battery Negative Cable Disconnection and Connection** .
32. Use the following procedure in order to inspect for leaks:
    1. Turn the ignition ON, with the engine OFF for 2 seconds.

cardiagn.com

2. Turn the ignition OFF for 10 seconds.
3. Turn the ignition ON, with the engine OFF.
4. Inspect for leaks.

33. Install the air cleaner outlet duct. Refer to **Air Cleaner Resonator Outlet Duct Replacement**.

FUEL INJECTOR CLEANING

Tools Required

- **J 37287** Fuel Line Shut-Off Adapters. See **Special Tools**.
- **J 35800-A** Fuel Injector Cleaner. See **Special Tools**.
- **J 42873-1** 3/8 Fuel Line Shut-Off Valve. See **Special Tools**.
- **J 42873-2** 5/16 Return Pipe Shut-Off Valve. See **Special Tools**.
- **J 42964-1** 3/8 Fuel Pipe Shut-Off Valve. See **Special Tools**.
- **J 42964-2** 5/16 Fuel Pipe Shut-Off Valve. See **Special Tools**.

NOTE:

- **GM Top-Engine Cleaner is the only injector cleaning agent recommended. Do not use other cleaning agents, as they may contain methanol which can damage fuel system components.**
- **Under NO circumstances should the top engine cleaner be added to the vehicles fuel tank, as it may damage the fuel pump and other system components.**
- **Do not exceed a 10 percent cleaning solution concentration. Higher concentrations may damage fuel system components. Testing has demonstrated that exceeding the 10 percent cleaning solution concentration does not improve the effectiveness of this procedure.**

IMPORTANT: Vehicles with less than 160 km (100 mi) on the odometer should not have the injectors cleaned. These vehicles should have the injectors replaced.

IMPORTANT: During this procedure you will need a total of 960 ml (32.4 oz) of cleaning solution. That is 2 tanks of solution for the J 35800-A . See Special Tools. Other brands of tools may have a different capacity and would therefore require more or less tanks to complete the procedure. You must use all 960 ml (32.4 oz) of solution to ensure complete injector cleaning.

cardiagn.com

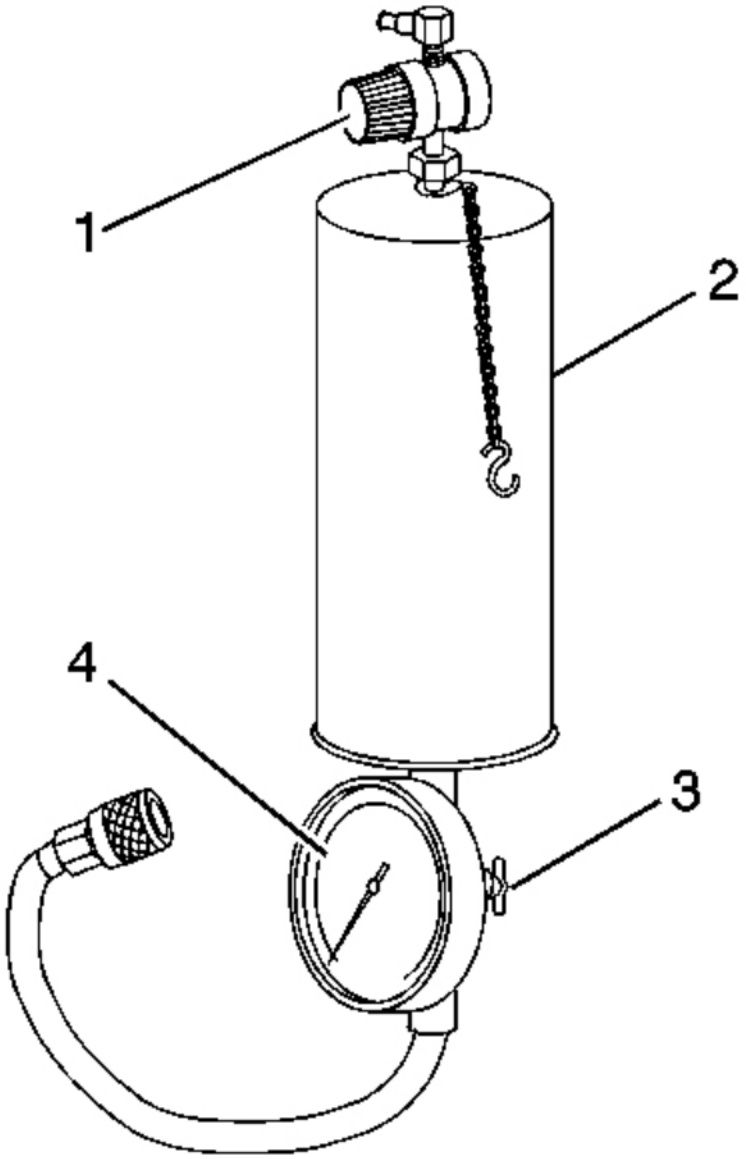

Fig. 465: Identifying Fuel Injector Cleaner
Courtesy of GENERAL MOTORS CORP.

1. Obtain **J 35800-A** (2). See **Special Tools**.

IMPORTANT: Make sure the valve at the bottom of the canister (3) is closed.

cardiagn.com

2. For US dealers, empty 2 pre-measured GM Top-Engine Cleaner containers, 24 ml (0.812 oz) each, GM P/N 12346535, into the **J 35800-A** . See **Special Tools**.
3. For Canadian dealers, measure and dispense 48 ml (1.62 oz) of Top-Engine Cleaner, Canadian P/N 992872, into the **J 35800-A** . See **Special Tools**.
4. If you are using any other brand of tank you will need a total of 96 ml (3.24 oz) of Top-Engine Cleaner mixed with 864 ml (29.16 oz) of regular unleaded gasoline.
5. Fill the injector cleaning tank with regular unleaded gasoline. Be sure to follow all additional instructions provided with the tool.
6. Electrically disable the vehicle fuel pump by removing the fuel pump relay and disconnecting the oil pressure switch connector, if equipped.
7. Disconnect the fuel feed and return line, if equipped, at the fuel rail. Plug the fuel feed and return line, if equipped, coming off the fuel rail with **J 37287** , or **J 42964-1** , and **J 42964-2** or **J 42873-1** , and **J 42873-2** as appropriate for the fuel system. See **Special Tools**.
8. Connect the **J 35800-A** to the vehicle fuel rail. See **Special Tools**.
9. Pressurize the **J 35800-A** to 510 kPa (75 psi). See **Special Tools**.
10. Start and idle the engine until it stalls due to lack of fuel. This should take approximately 15-20 minutes.
11. Disconnect **J 35800-A** from the fuel rail. See **Special Tools**.
12. Reconnect the vehicle fuel pump relay and oil pressure switch connector, if equipped.
13. Remove **J 37287** or **J 42964-1** , and **J 42964-2** or **J 42873-1** , and **J 42873-2** and reconnect the vehicle fuel feed and return lines. See **Special Tools**.
14. Start and idle the vehicle for an additional 2 minutes to ensure residual injector cleaner is flushed from the fuel rail and fuel lines.
15. Repeat steps 1-5 of the Injector Balance Test, and record the fuel pressure drop from each injector.
16. Subtract the lowest fuel pressure drop from the highest fuel pressure drop. If the value is 15 kPa (2 psi) or less, no additional action is required. If the value is greater than 15 kPa (2 psi), replace the injector with the lowest fuel pressure drop.
17. Add one ounce of Port Fuel Injector Cleaner, GM P/N 12345104 (Canadian P/N 10953467), to the vehicle fuel tank for each gallon of gasoline estimated to be in the fuel tank. Instruct the customer to add the reminder of the bottle of Port Fuel Injector Cleaner to the vehicle fuel tank at the next fill-up.
18. Advise the customer to change brands of fuel and to add GM Port Fuel Injector Cleaner every 5 000 km (3,000 mi). GM Port Fuel Injector Cleaner contains the same additives that the fuel companies are removing from the fuel to reduce costs. Regular use of GM Port Fuel Injector Cleaner should keep the customer from having to repeat the injector cleaning procedure.
19. Road test the vehicle to verify that the customer concern has been corrected.

EVAPORATIVE EMISSION CANISTER PURGE SOLENOID VALVE REPLACEMENT

Removal Procedure

IMPORTANT: Clean all evaporative emission (EVAP) line connections and surrounding areas prior to disconnecting, in order to avoid possible EVAP system contamination.

cardiagn.com

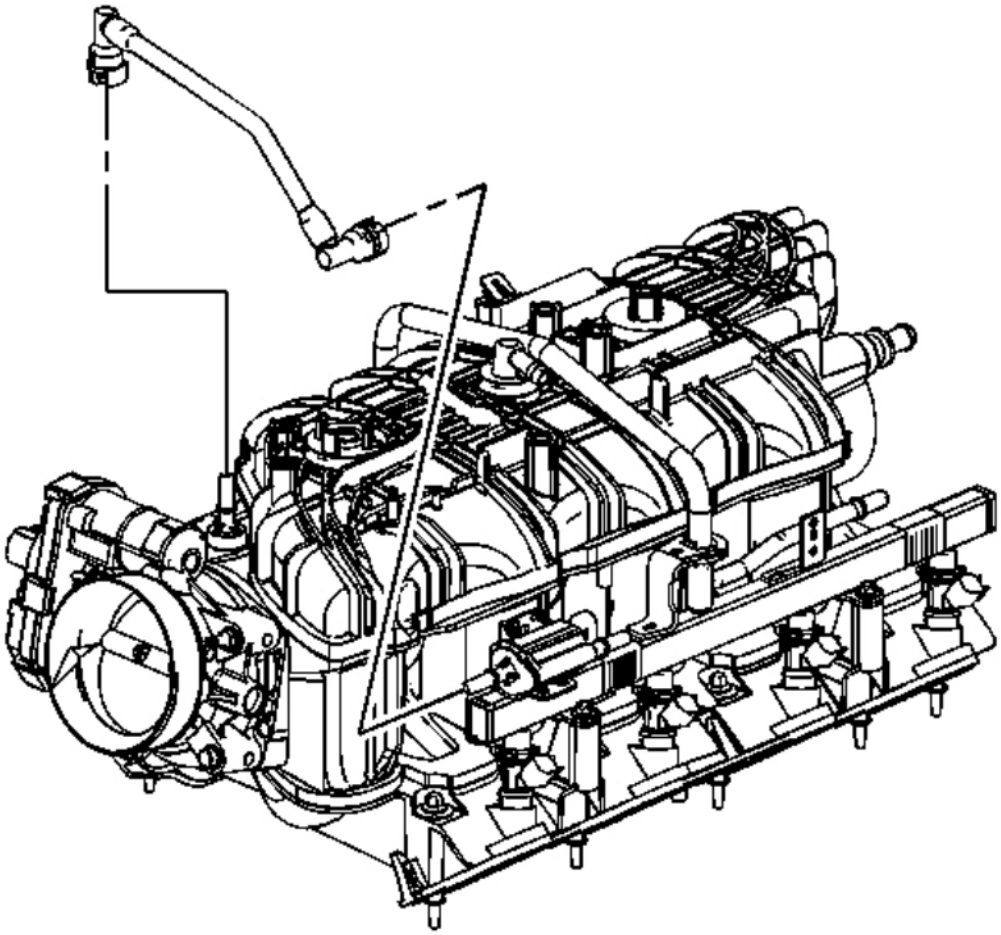

Fig. 466: View of EVAP Line & Canister Purge Solenoid
Courtesy of GENERAL MOTORS CORP.

1. Remove the air cleaner outlet duct. Refer to **Air Cleaner Resonator Outlet Duct Replacement**.
2. Disconnect the EVAP line quick connect fitting from the EVAP canister purge solenoid. Refer to **Quick Connect Fitting Service - Plastic Collar**.

cardiagn.com

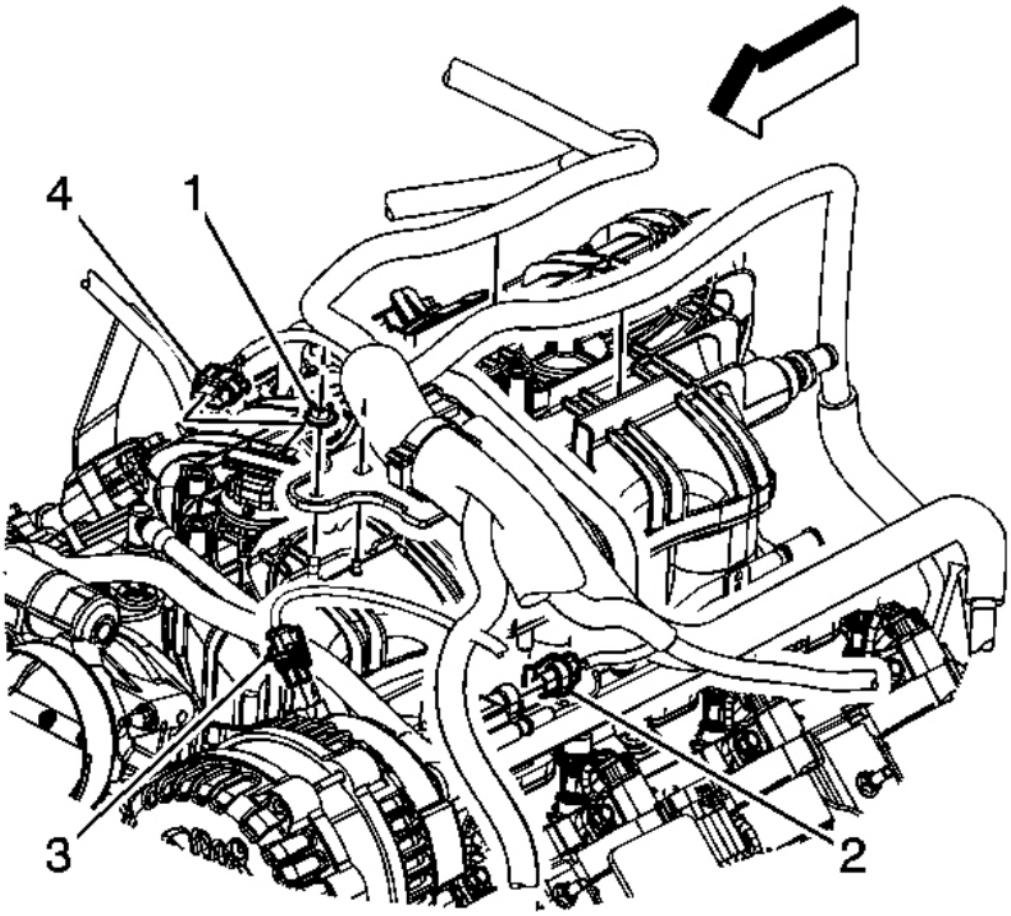

Fig. 467: View Of Engine Harness Retainer Nut & Electrical Connectors
Courtesy of GENERAL MOTORS CORP.

3. Disconnect the engine wiring harness electrical connector (2) from the EVAP canister purge solenoid.

cardiagn.com

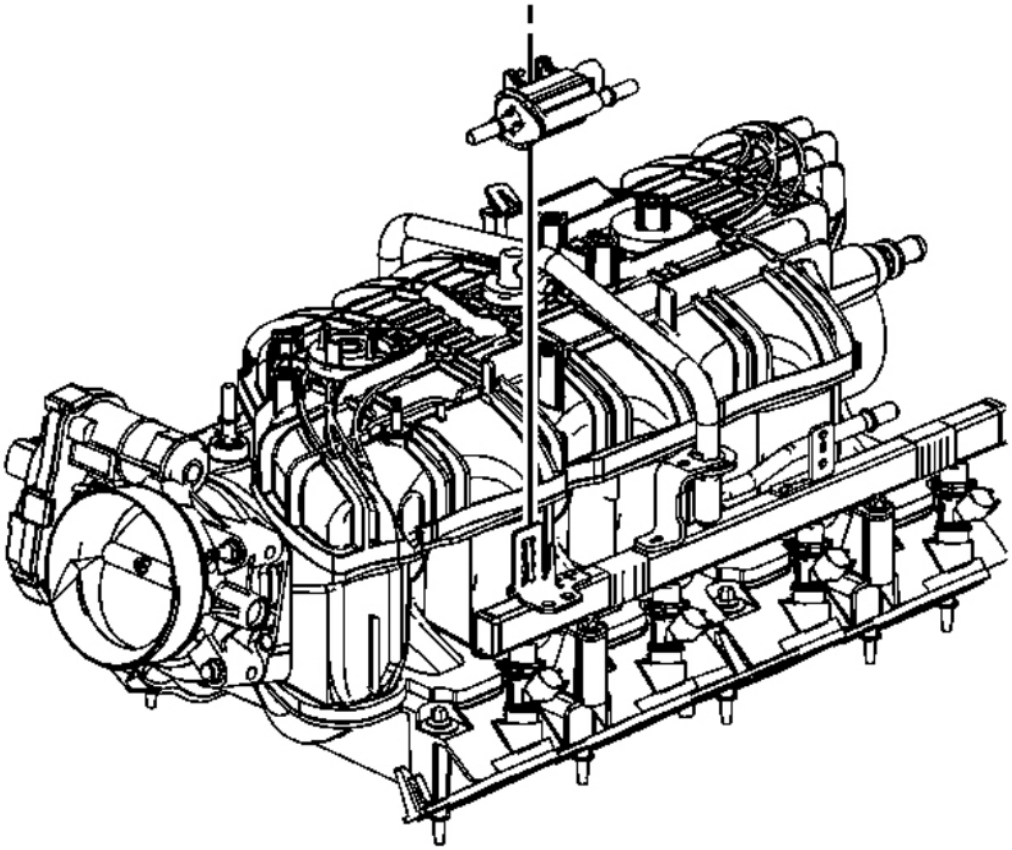

Fig. 468: View Of EVAP Canister Purge Solenoid
Courtesy of GENERAL MOTORS CORP.

4. Disengage the retainer securing the EVAP canister purge solenoid to the fuel rail.
5. Remove the EVAP canister purge solenoid.

Installation Procedure

cardiagn.com

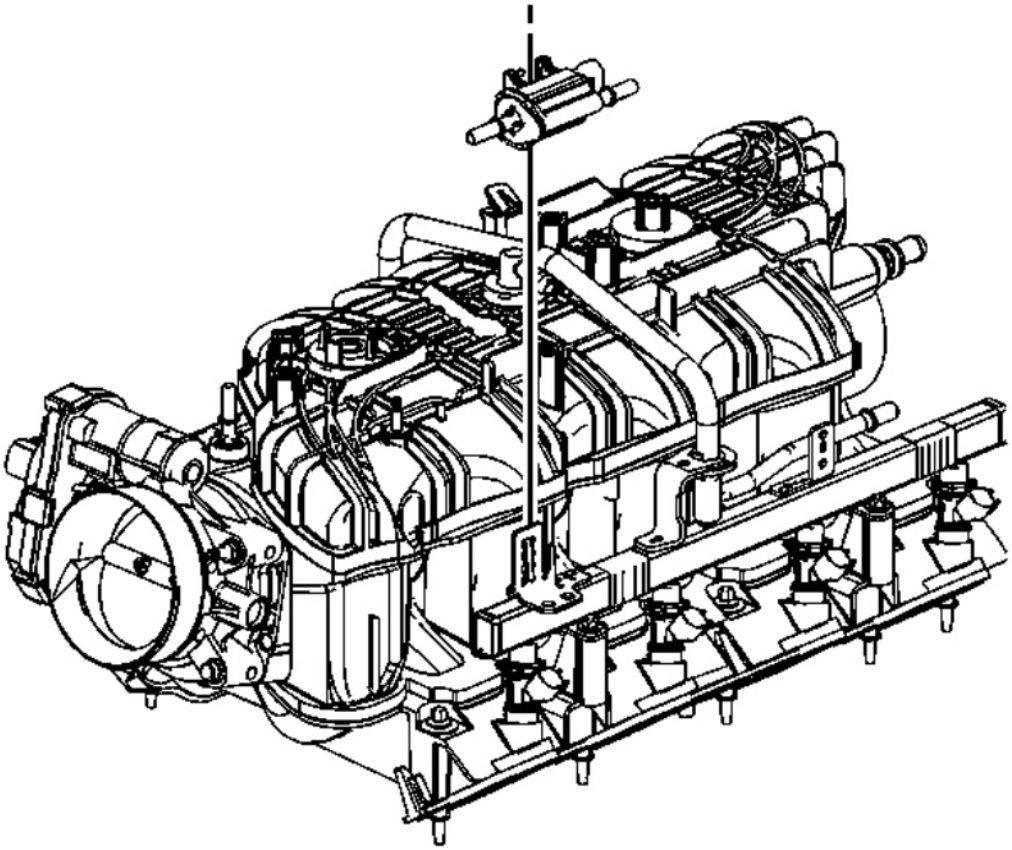

Fig. 469: View Of EVAP Canister Purge Solenoid
Courtesy of GENERAL MOTORS CORP.

1. Install the EVAP canister purge solenoid.
2. Install the EVAP canister purge solenoid to the fuel rail and engage the retainer.

cardiagn.com

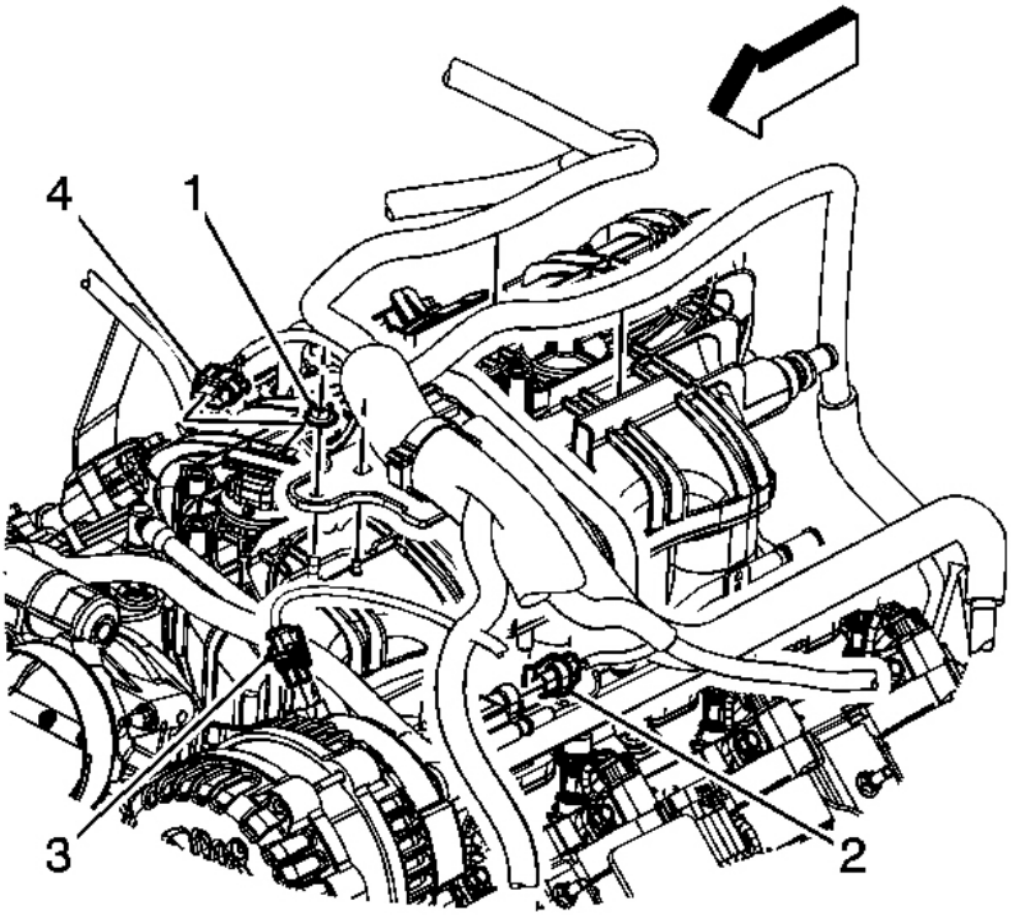

Fig. 470: View Of Engine Harness Retainer Nut & Electrical Connectors
Courtesy of GENERAL MOTORS CORP.

3. Connect the engine wiring harness electrical connector (2) to the EVAP canister purge solenoid.

cardiagn.com

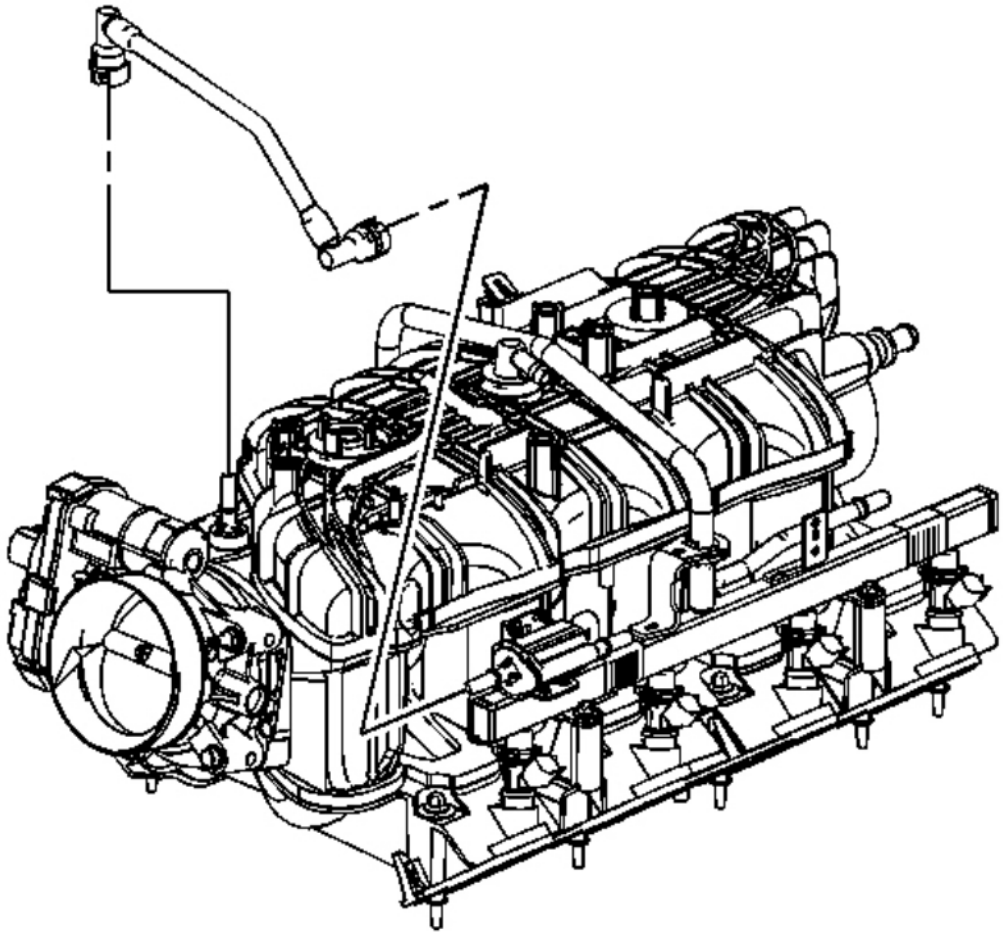

Fig. 471: View of EVAP Line & Canister Purge Solenoid
Courtesy of GENERAL MOTORS CORP.

4. Connect the EVAP line quick connect fitting to the EVAP canister purge solenoid. Refer to **Quick Connect Fitting Service - Plastic Collar**.
5. Install the air cleaner outlet duct. Refer to **Air Cleaner Resonator Outlet Duct Replacement**.

EVAPORATIVE EMISSION CANISTER VENT SOLENOID VALVE REPLACEMENT (1500 SERIES)

Removal Procedure

IMPORTANT: Clean all evaporative emission (EVAP) line connections and surrounding areas

cardiagn.com

prior to disconnecting, in order to avoid possible EVAP system contamination.

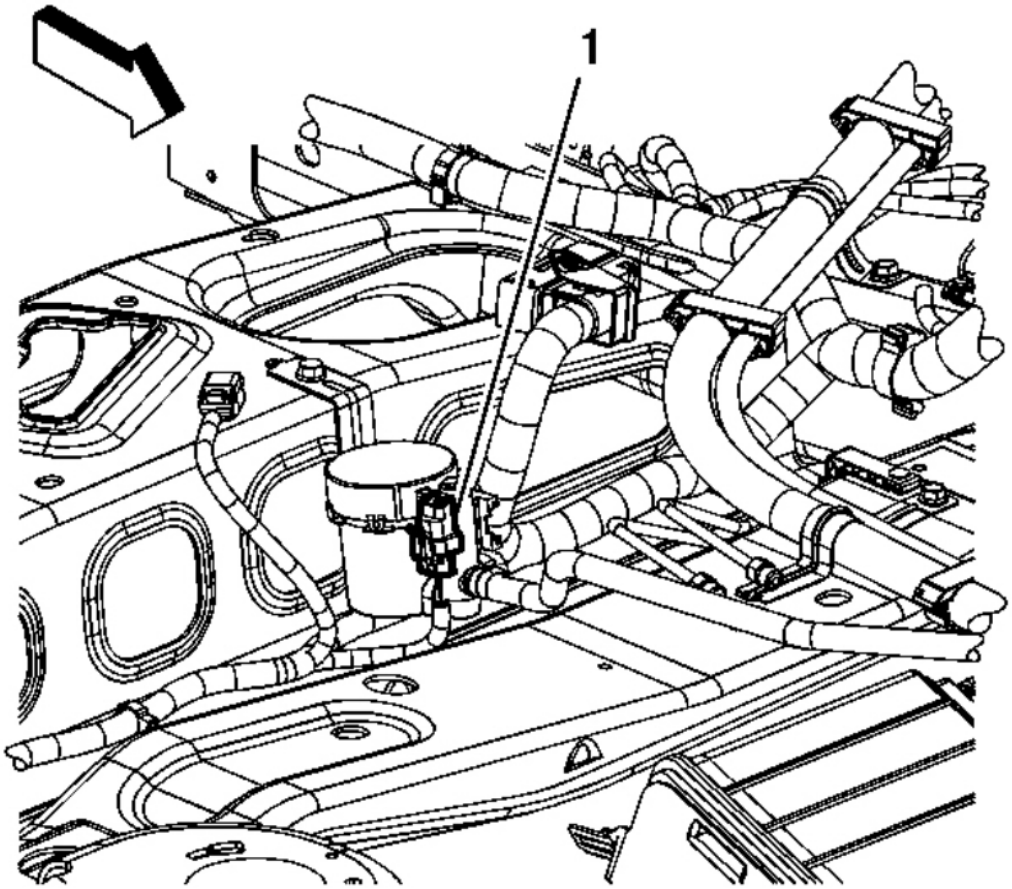

Fig. 472: View Of EVAP Canister Vent Solenoid Electrical Connector
Courtesy of GENERAL MOTORS CORP.

1. Raise and support the vehicle. Refer to **Lifting and Jacking the Vehicle** .
2. Disconnect the chassis wiring harness electrical connector (1) from the EVAP canister vent solenoid.

cardiagn.com

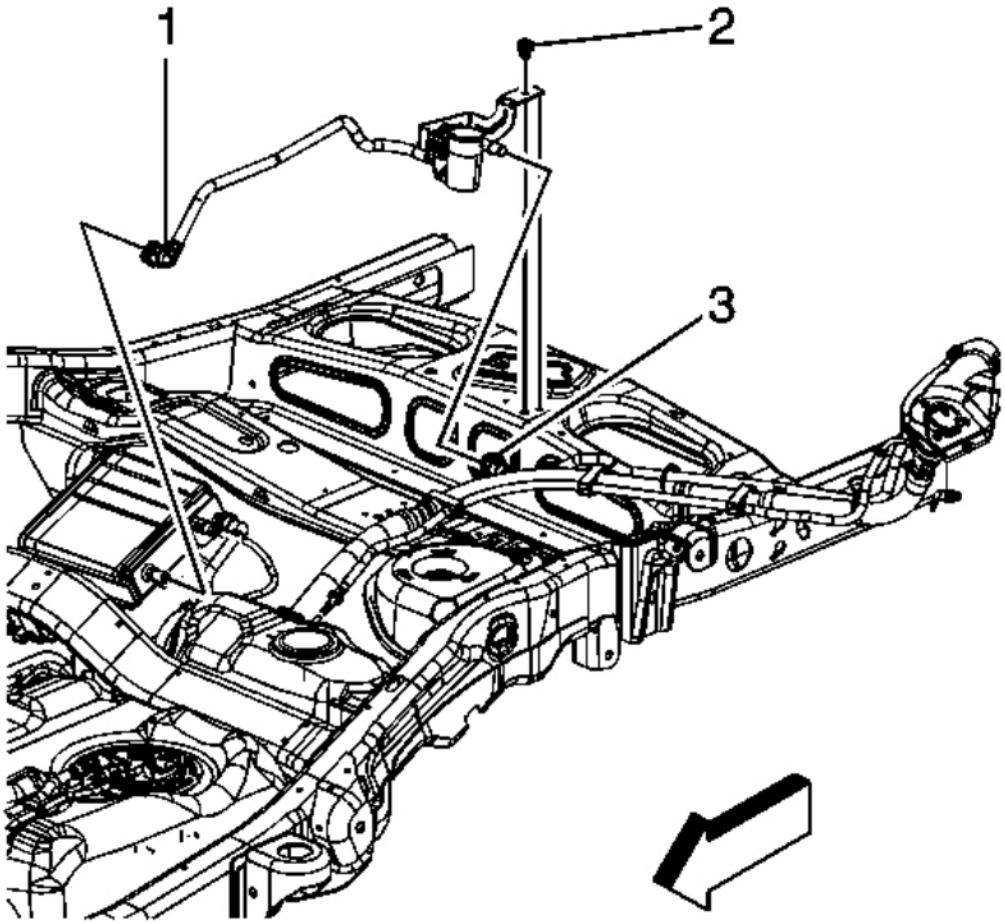

Fig. 473: View Of Quick Connect Fittings
Courtesy of GENERAL MOTORS CORP.

3. Disconnect the EVAP canister vent solenoid quick connect fitting (1) from the EVAP canister. Refer to **Quick Connect Fitting Service - Plastic Collar**.
4. Disconnect the fuel fill pipe EVAP line quick connect fitting (3) from the vent solenoid. Refer to **Quick Connect Fitting Service - Plastic Collar**.

cardiagn.com

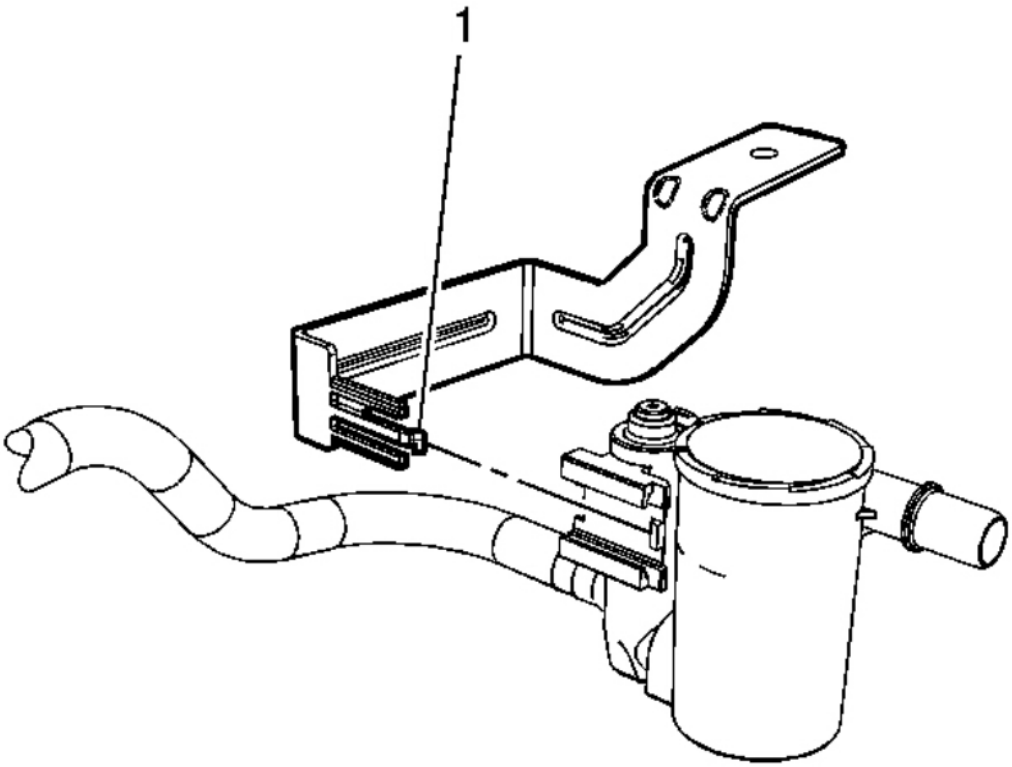

Fig. 474: View Of EVAP Vanister Vent Solenoid Retainer
Courtesy of GENERAL MOTORS CORP.

5. Disengage the retainer (1) securing the EVAP canister vent solenoid to the bracket.
6. Remove the EVAP canister vent solenoid.

Installation Procedure

cardiagn.com

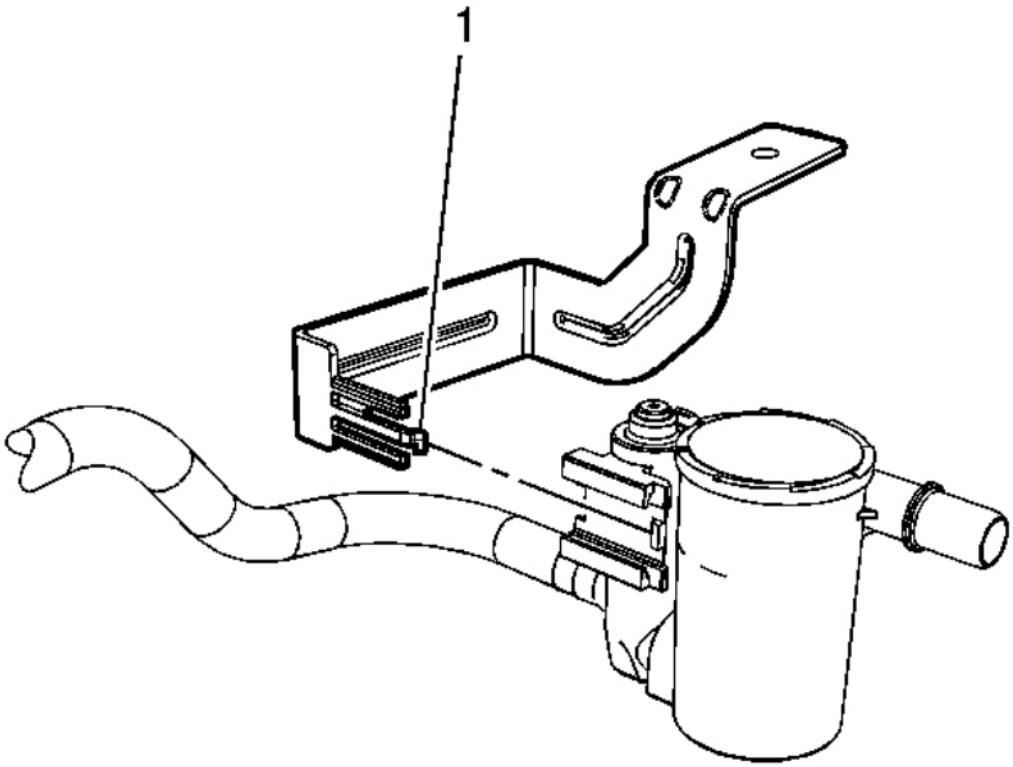

Fig. 475: View Of EVAP Canister Vent Solenoid Retainer
Courtesy of GENERAL MOTORS CORP.

1. Install the EVAP canister vent solenoid.
2. Slide the EVAP canister vent solenoid onto the bracket until the retainer (1) engages the clip.

cardiagn.com

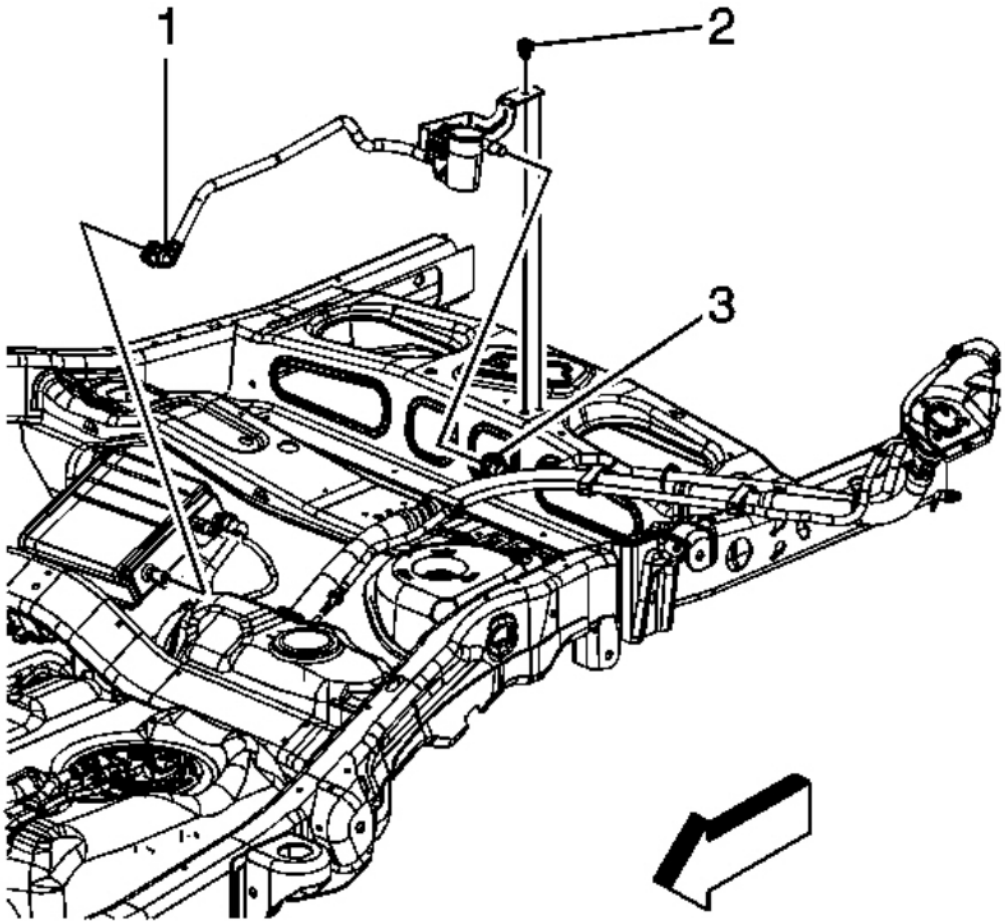

Fig. 476: View Of Quick Connect Fittings
Courtesy of GENERAL MOTORS CORP.

3. Connect the EVAP canister vent solenoid quick connect fitting (1) to the EVAP canister. Refer to **Quick Connect Fitting Service - Plastic Collar**.
4. Connect the fuel fill pipe EVAP line quick connect fitting (3) to the vent solenoid. Refer to **Quick Connect Fitting Service - Plastic Collar**.

cardiagn.com

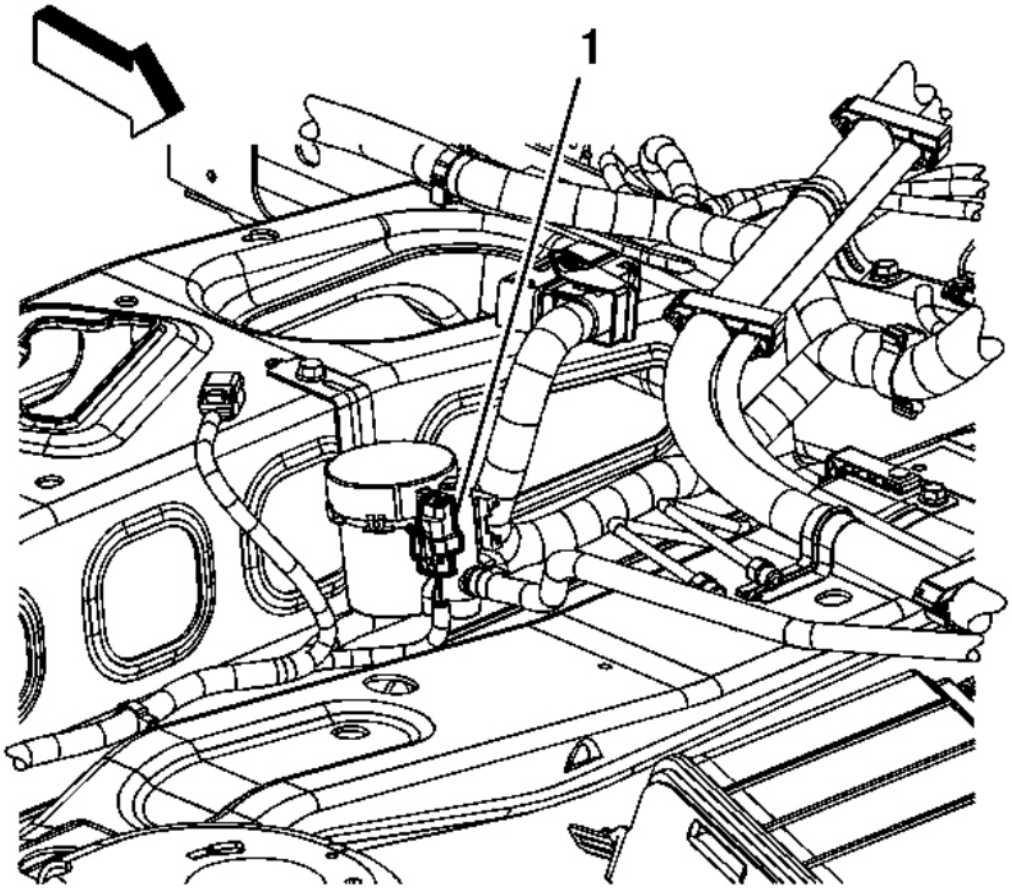

Fig. 477: View Of EVAP Canister Vent Solenoid Electrical Connector
Courtesy of GENERAL MOTORS CORP.

5. Connect the chassis wiring harness electrical connector (1) to the EVAP canister vent solenoid.
6. Lower the vehicle.

EVAPORATIVE EMISSION CANISTER VENT SOLENOID VALVE REPLACEMENT (2500 SERIES)

Removal Procedure

IMPORTANT: Clean all evaporative emission (EVAP) line connections and surrounding areas prior to disconnecting, in order to avoid possible EVAP system contamination.

cardiagn.com

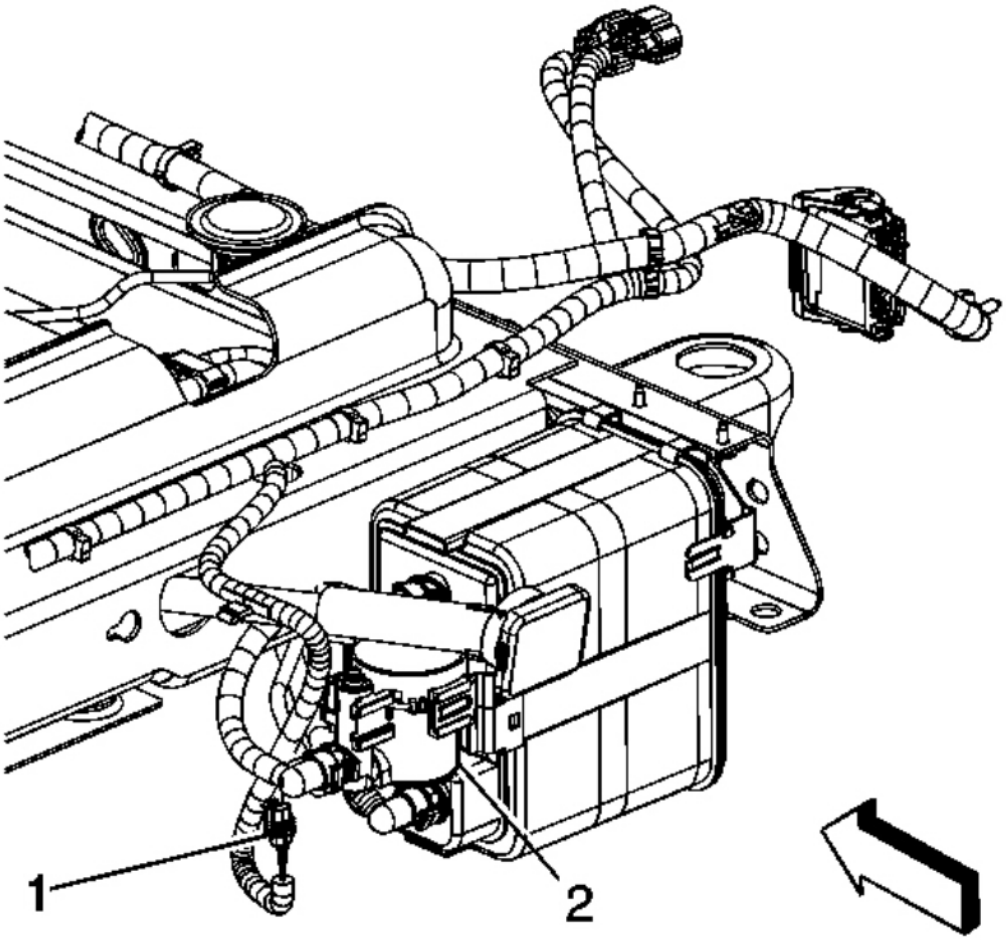

Fig. 478: View Of EVAP CVS Electrical Connector & CVS Bracket
Courtesy of GENERAL MOTORS CORP.

1. Raise and support the vehicle. Refer to **Lifting and Jacking the Vehicle** .
2. Disconnect the chassis wiring harness electrical connector (1) from the EVAP canister vent solenoid.

cardiagn.com

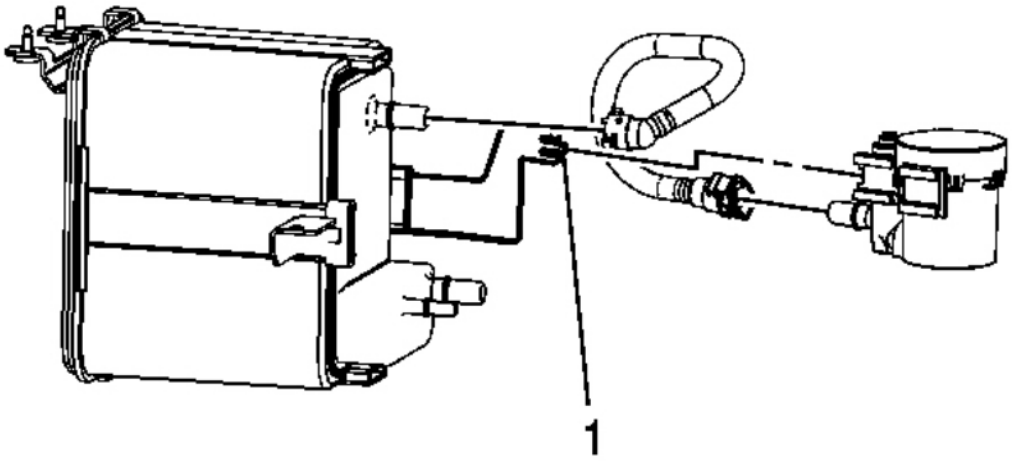

Fig. 479: View Of EVAP Canister Vent Solenoid Retainer
Courtesy of GENERAL MOTORS CORP.

3. Disconnect the EVAP canister vent solenoid line quick connect fitting from the vent solenoid. Refer to **Quick Connect Fitting Service - Plastic Collar**.
4. Disengage the retainer (1) securing the EVAP canister vent solenoid to the bracket.
5. Remove the EVAP canister vent solenoid.

Installation Procedure

cardiagn.com

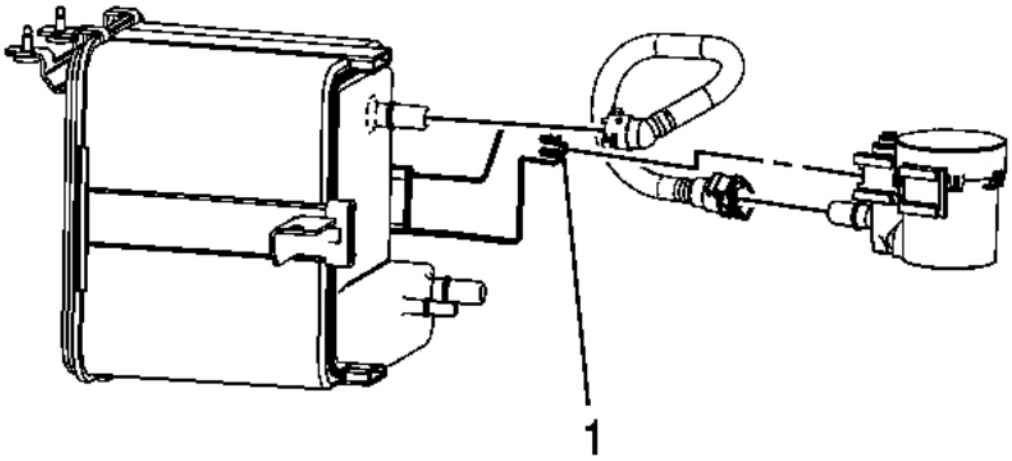

Fig. 480: View Of EVAP Canister Vent Solenoid Retainer
Courtesy of GENERAL MOTORS CORP.

1. Install the EVAP canister vent solenoid.
2. Slide the EVAP canister vent solenoid onto the bracket until the retainer (1) engages the clip.
3. Connect the EVAP canister vent solenoid line quick connect fitting to the vent solenoid. Refer to **Quick Connect Fitting Service - Plastic Collar**.

cardiagn.com

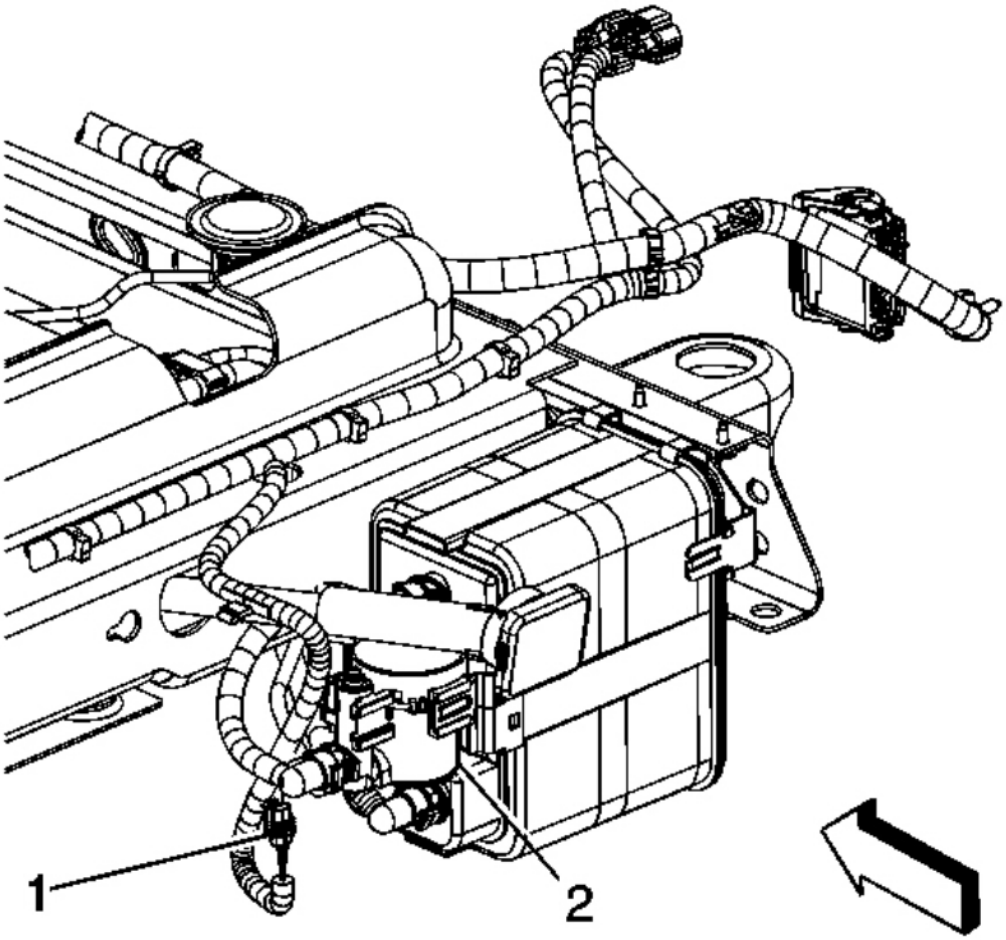

Fig. 481: View Of EVAP CVS Electrical Connector & CVS Bracket
Courtesy of GENERAL MOTORS CORP.

4. Connect the chassis wiring harness electrical connector (1) to the EVAP canister vent solenoid.
5. Lower the vehicle.

EVAPORATIVE EMISSION SYSTEM HOSES/PIPES REPLACEMENT (2500 LWB - 98.4L (26 GAL) TANK-FRONT)

Removal Procedure

IMPORTANT: Clean all fuel and evaporative emission (EVAP) line connections and surrounding areas prior to disconnecting the lines in order to avoid possible

cardiagn.com

fuel and/or EVAP system contamination.

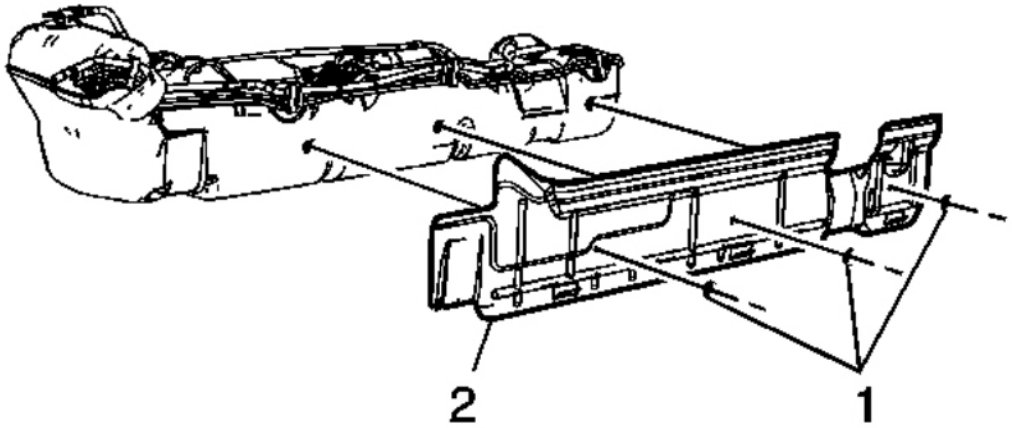

Fig. 482: View Of Fuel Tank Shield & Retainers
Courtesy of GENERAL MOTORS CORP.

1. Remove the fuel tank. Refer to **Fuel Tank Replacement (1500 LWB - 117.3L (31 gal) Tank)** or **Fuel Tank Replacement (1500 LWB - 117.3L (31 gal) Tank + E85)** or **Fuel Tank Replacement (1500 SWB - 98.4L (26 gal) Tank)** or **Fuel Tank Replacement (1500 SWB - 98.4L (26 gal) Tank + E85)** or **Fuel Tank Replacement (2500 LWB - 43.5L (11.5 gal) Tank-Rear)** or **Fuel Tank Replacement (2500 LWB - 98.4L (26 gal) Tank-Front)**.
2. Remove the fuel tank shield retainers (1) and shield (2).

cardiagn.com

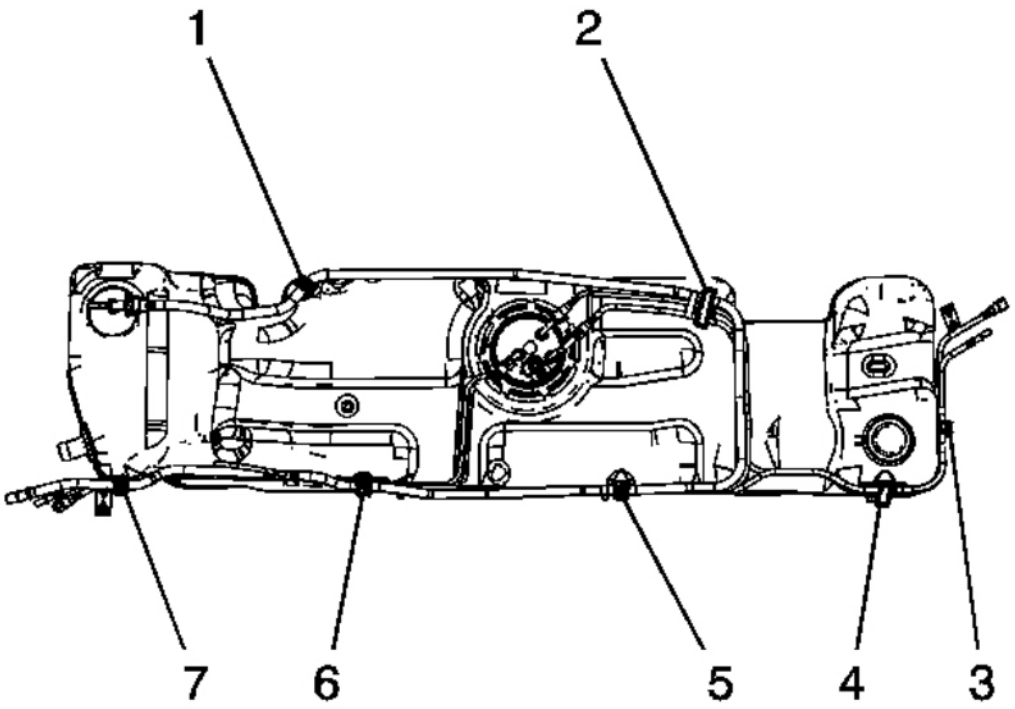

Fig. 483: View Of Fuel Tank Clips
Courtesy of GENERAL MOTORS CORP.

3. Remove the EVAP line from the fuel tank clip (1).
4. Open the fuel tank clips (2-7) and remove the fuel/EVAP lines from the clips.
5. Disconnect the fuel/EVAP line quick connect fittings from the fuel tank module. Refer to **Quick Connect Fitting Service - Plastic Collar**.

cardiagn.com

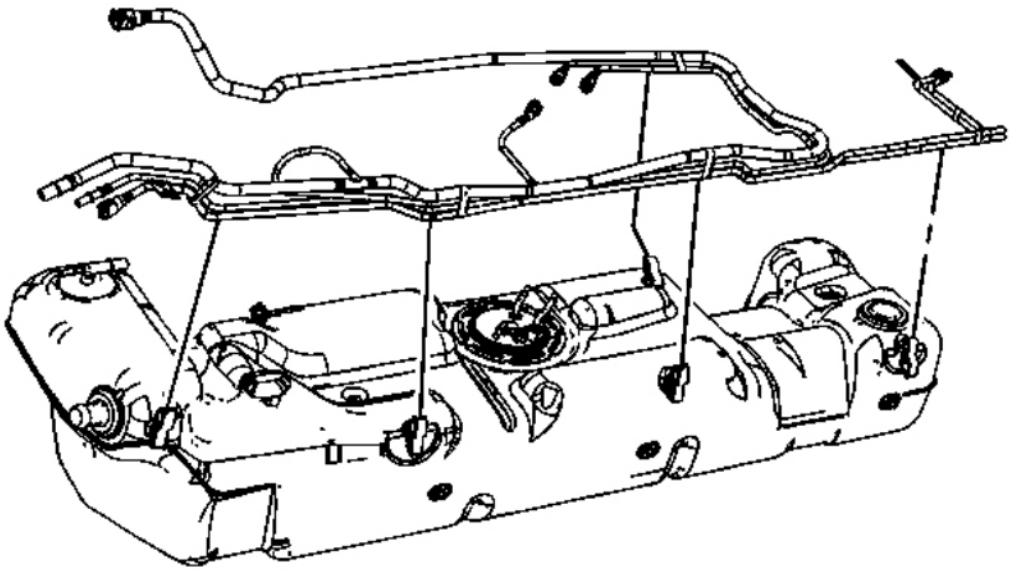

Fig. 484: View Of Fuel Tank EVAP Lines
Courtesy of GENERAL MOTORS CORP.

6. Remove the fuel/EVAP lines from the fuel tank.

Installation Procedure

cardiagn.com

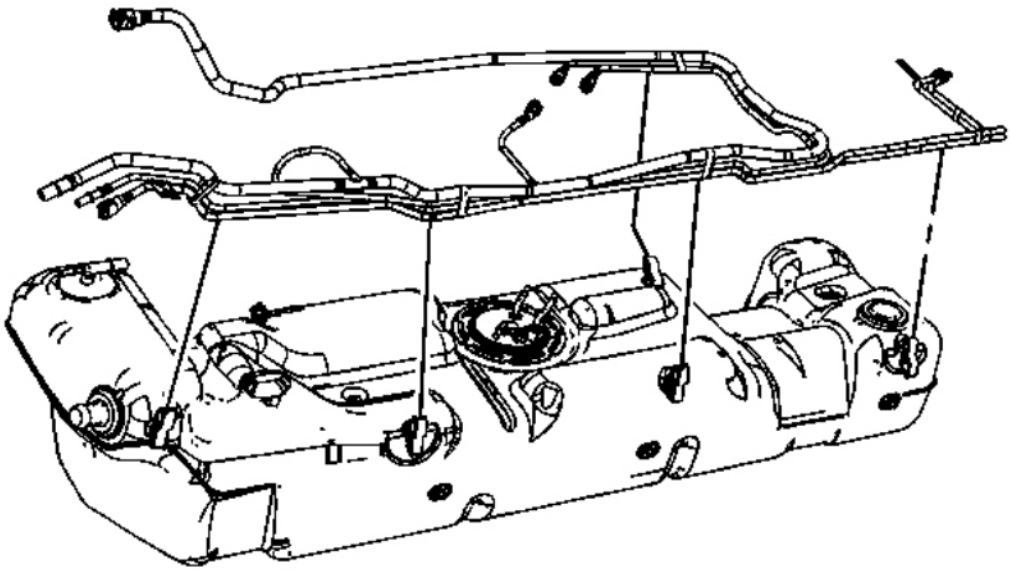

Fig. 485: View Of Fuel Tank EVAP Lines
Courtesy of GENERAL MOTORS CORP.

1. Install the fuel/EVAP lines to the fuel tank.

cardiagn.com

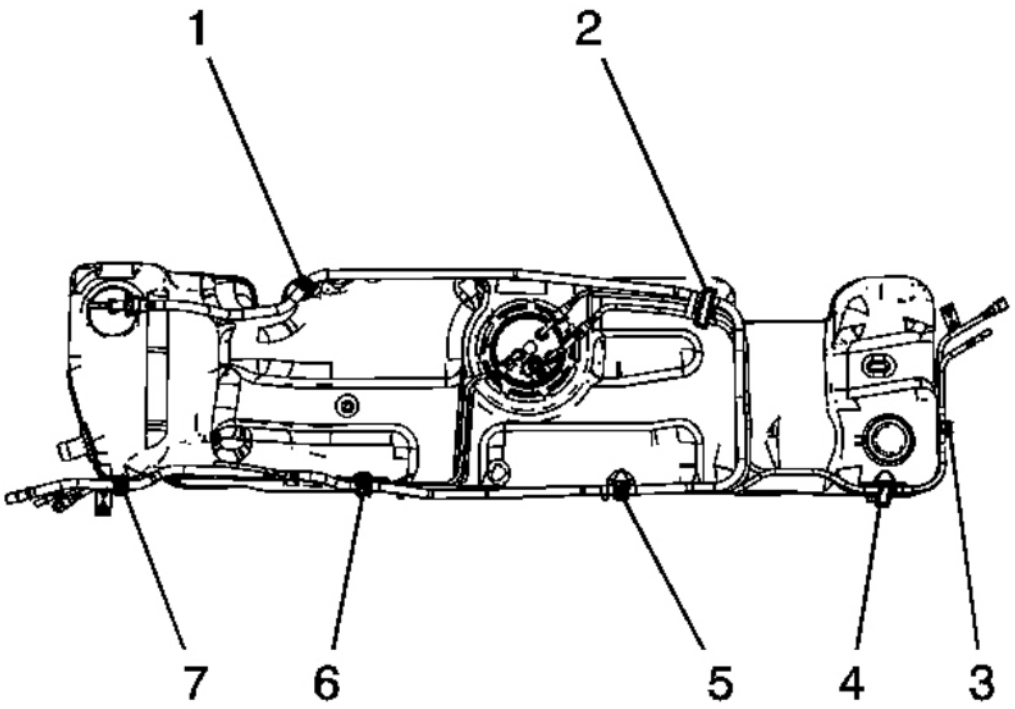

Fig. 486: View Of Fuel Tank Clips
Courtesy of GENERAL MOTORS CORP.

2. Connect the fuel/EVAP line quick connect fittings at the fuel tank module. Refer to **Quick Connect Fitting Service - Plastic Collar**.
3. Install the fuel/EVAP lines to the fuel tank clips (2-7) and close the clips.
4. Install the fuel/EVAP line to the fuel tank clip (1).

cardiagn.com

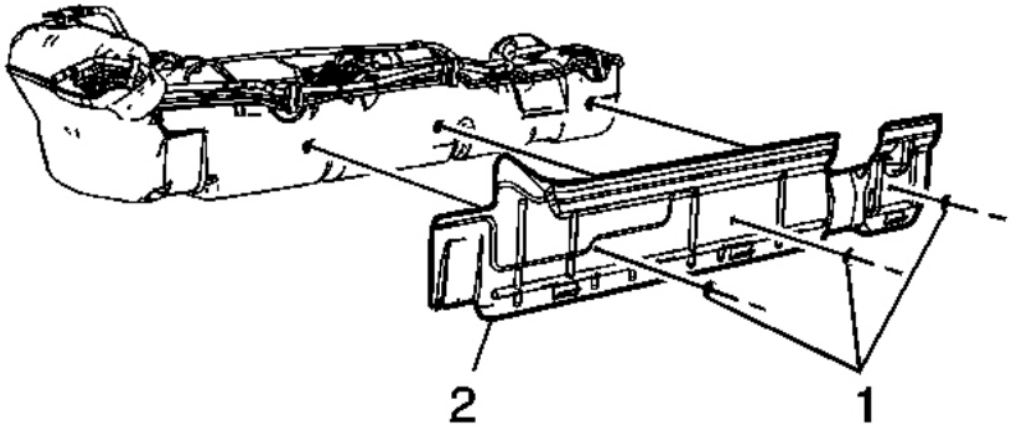

Fig. 487: View Of Fuel Tank Shield & Retainers
Courtesy of GENERAL MOTORS CORP.

5. Install the fuel tank shield (2) and retainers (1).
6. Install the fuel tank. Refer to **Fuel Tank Replacement (1500 LWB - 117.3L (31 gal) Tank)** or **Fuel Tank Replacement (1500 LWB - 117.3L (31 gal) Tank + E85)** or **Fuel Tank Replacement (1500 SWB - 98.4L (26 gal) Tank)** or **Fuel Tank Replacement (1500 SWB - 98.4L (26 gal) Tank + E85)** or **Fuel Tank Replacement (2500 LWB - 43.5L (11.5 gal) Tank-Rear)** or **Fuel Tank Replacement (2500 LWB - 98.4L (26 gal) Tank-Front)**.

EVAPORATIVE EMISSION SYSTEM HOSES/PIPES REPLACEMENT (2500 LWB - INTERMEDIATE)

Removal Procedure

IMPORTANT: Clean all fuel and evaporative emission (EVAP) line connections and surrounding areas prior to disconnecting the lines in order to avoid possible fuel and/or EVAP system contamination.

cardiagn.com

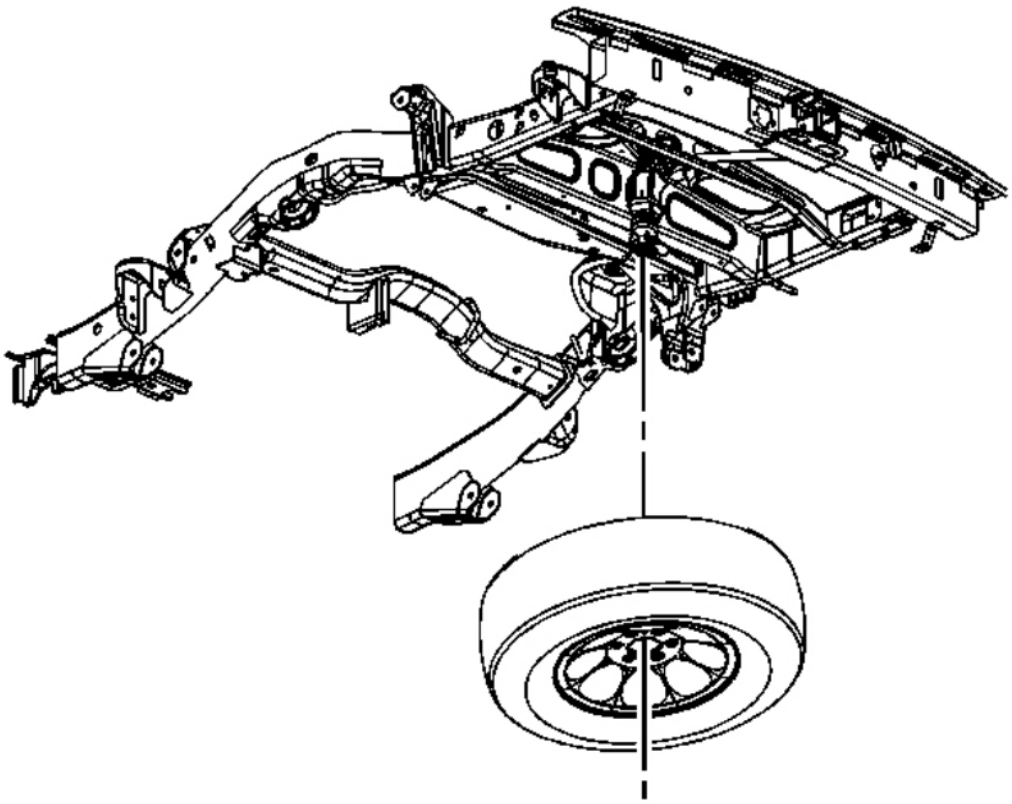

Fig. 488: View Of Spare Tire & Stowage Lock Cylinder
Courtesy of GENERAL MOTORS CORP.

1. Relieve the fuel system pressure. Refer to **Quick Connect Fitting Service - Plastic Collar**.
2. Remove the spare tire stowage lock cylinder.
3. Remove the spare tire.
4. Drain the rear fuel tank. Refer to **Fuel Tank Draining (Dual Tanks - Front)** or **Fuel Tank Draining (Dual Tanks - Rear)** or **Fuel Tank Draining (Single Tank)**.
5. Remove the rear exhaust insulator.

cardiagn.com

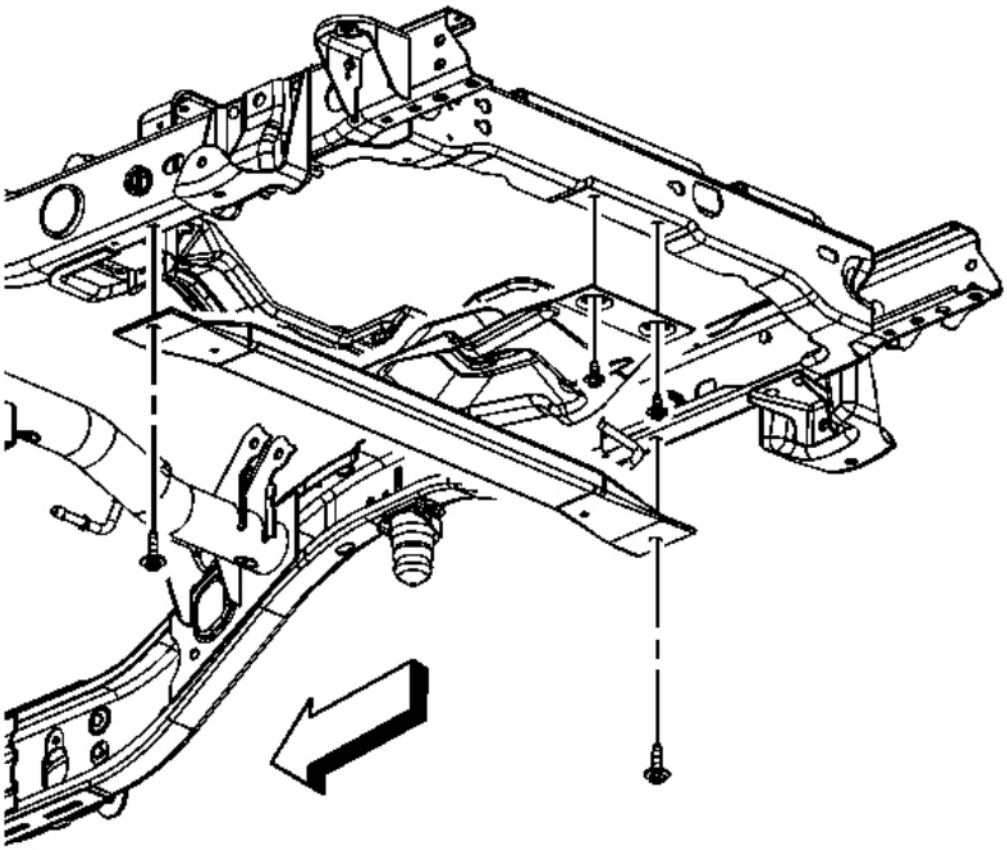

Fig. 489: View Of Spare Tire Hoist Crossmember & Bolts
Courtesy of GENERAL MOTORS CORP.

6. Remove the spare tire hoist crossmember bolts and crossmember.

cardiagn.com

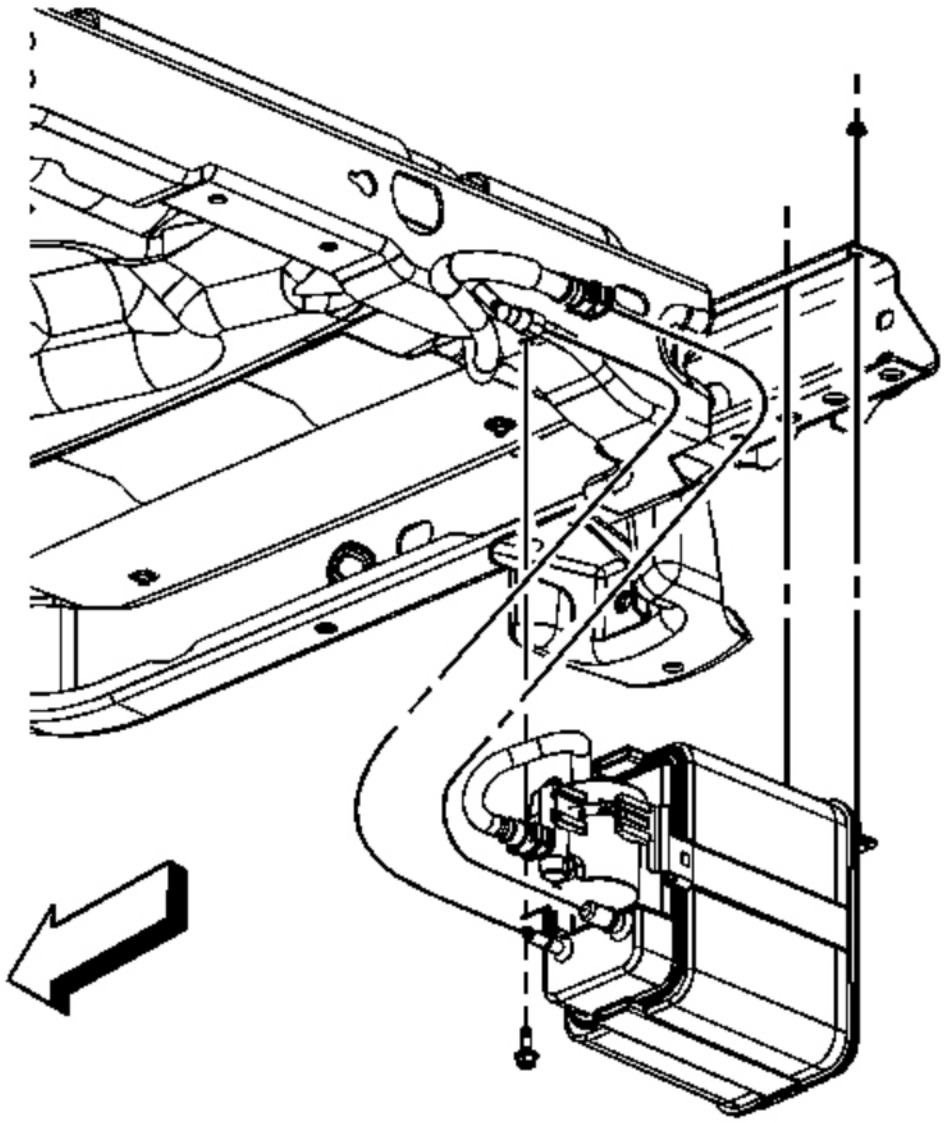

Fig. 490: View Of EVAP Canister & Quick Connect Fittings
Courtesy of GENERAL MOTORS CORP.

7. Disconnect the rear fuel tank EVAP line quick connect fittings from the EVAP canister. Refer to **Quick Connect Fitting Service - Plastic Collar**.

cardiagn.com

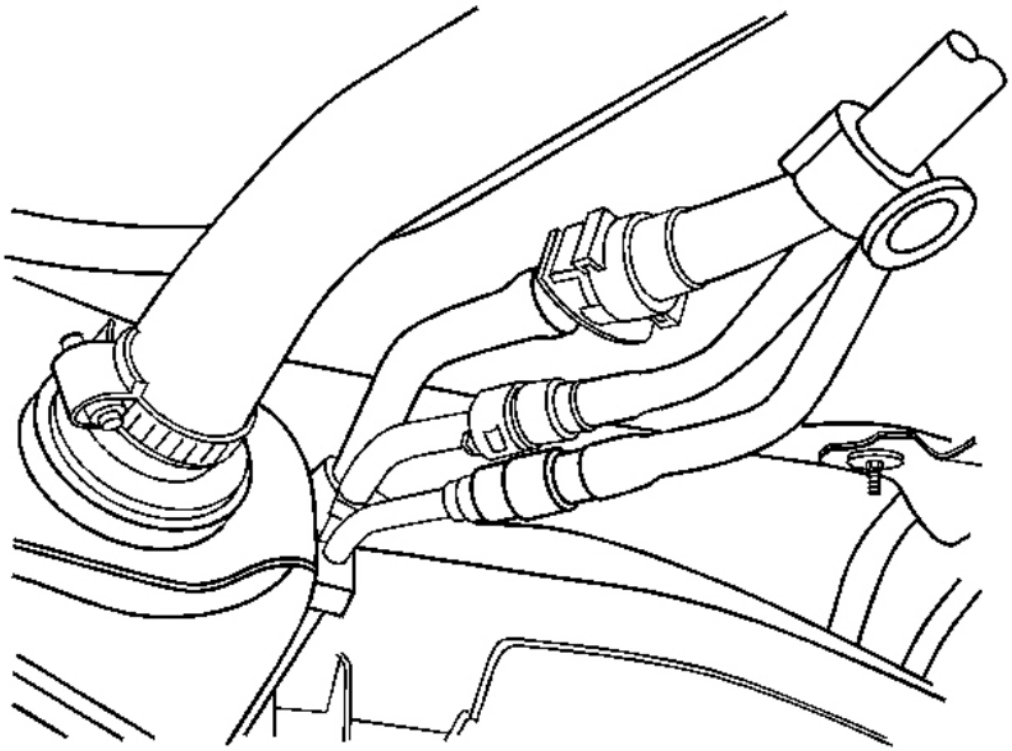

Fig. 491: View Of Fuel & EVAP Intermediate Lines At Fuel Tank
Courtesy of GENERAL MOTORS CORP.

8. Disconnect the fuel and EVAP intermediate line quick connect fittings from the front tank lines. Refer to **Quick Connect Fitting Service - Plastic Collar**.

cardiagn.com

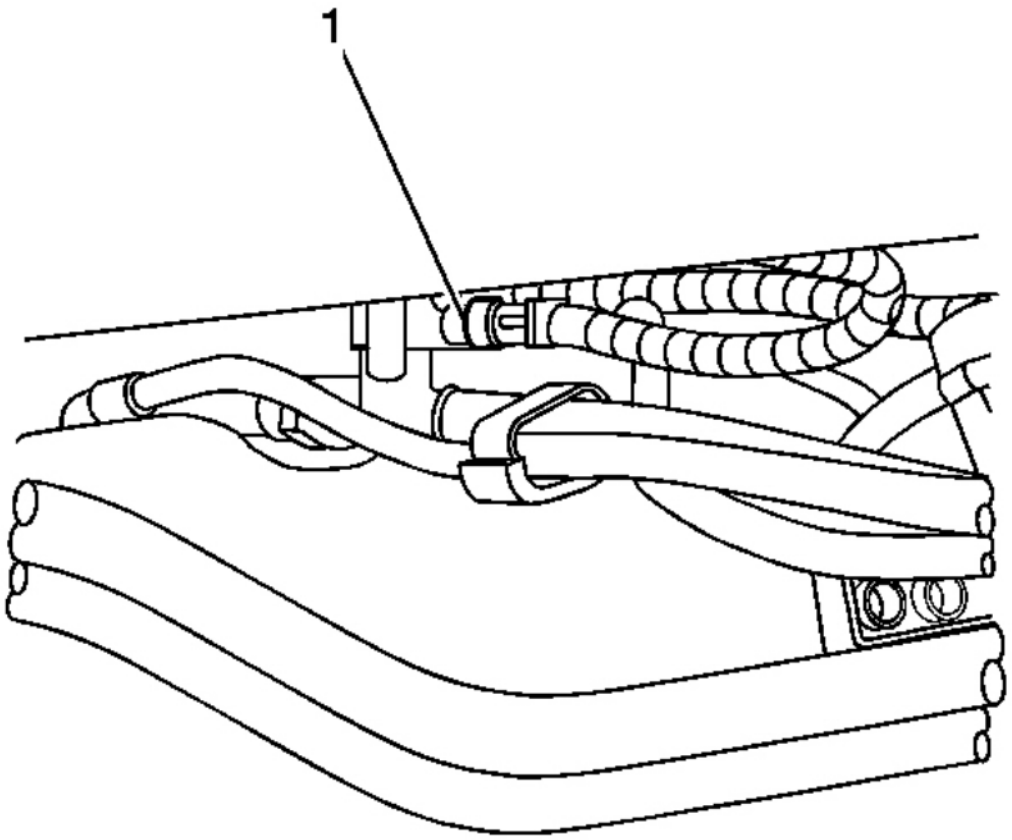

Fig. 492: View Of Fuel Pressure Sensor Electrical Connector
Courtesy of GENERAL MOTORS CORP.

9. Disconnect the chassis harness electrical connector (1) from the fuel pressure sensor.

cardiagn.com

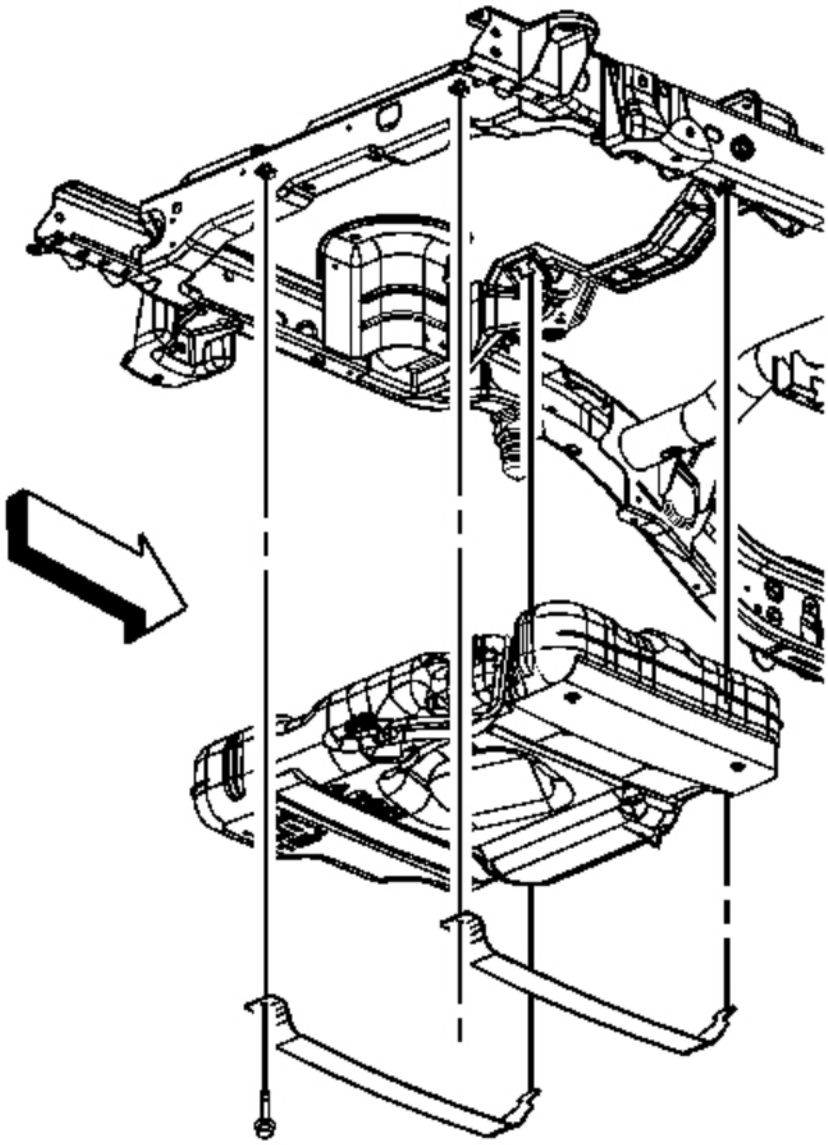

Fig. 493: View Of Fuel Tank & Straps
Courtesy of GENERAL MOTORS CORP.

10. Support the fuel tank with a suitable jack.
11. Remove the fuel tank strap bolts.

cardiagn.com

NOTE: **Refer to Damage to Fuel Tank Straps Notice .**

12. Remove the fuel tank straps.
13. With the aid of an assistant, lower the rear tank until the intermediate line connections can be reached.

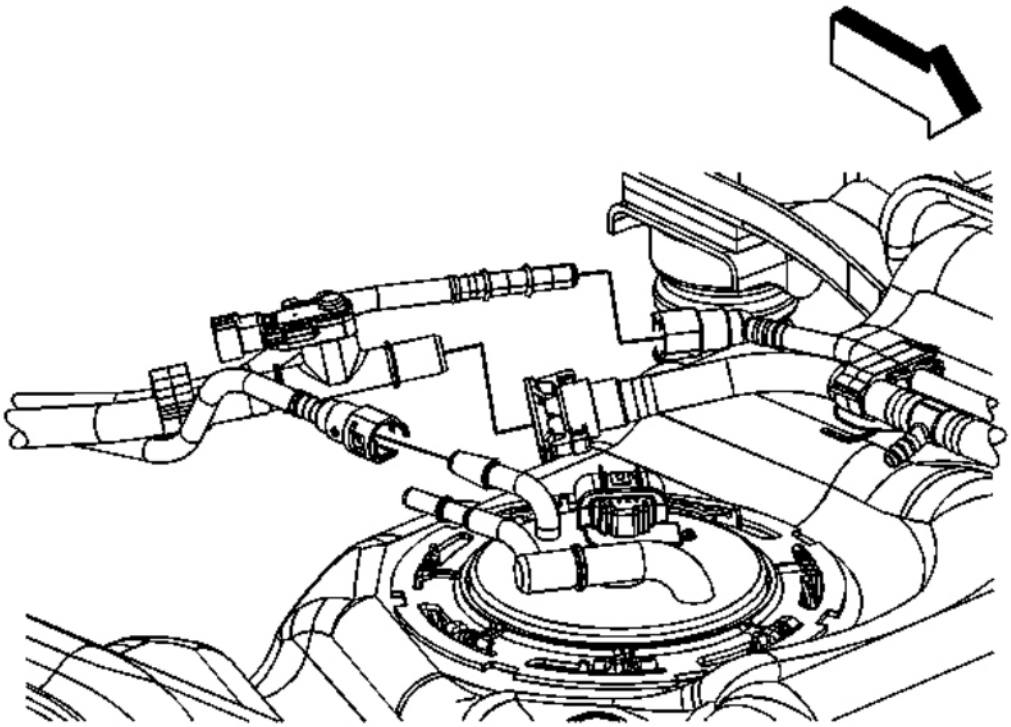

Fig. 494: View Of EVAP Lines & Quick Connect Fittings
Courtesy of GENERAL MOTORS CORP.

14. Disconnect the fuel and EVAP intermediate line quick connect fittings from the rear tank. Refer to **Quick Connect Fitting Service - Plastic Collar**.

cardiagn.com

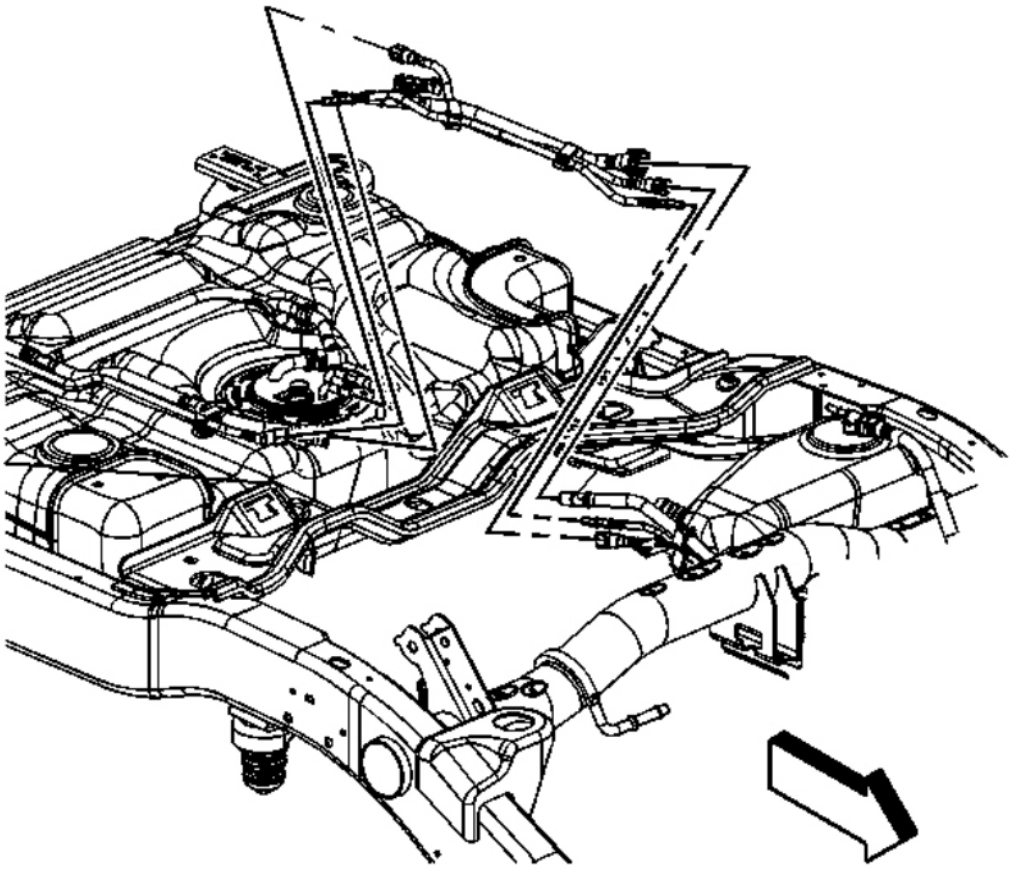

Fig. 495: View Of Fuel & EVAP Intermediate Lines At Fuel Tank
Courtesy of GENERAL MOTORS CORP.

15. Remove the fuel and EVAP intermediate line assembly.
16. Cap the fuel and EVAP lines in order to prevent possible EVAP/fuel system contamination.

Installation Procedure

cardiagn.com

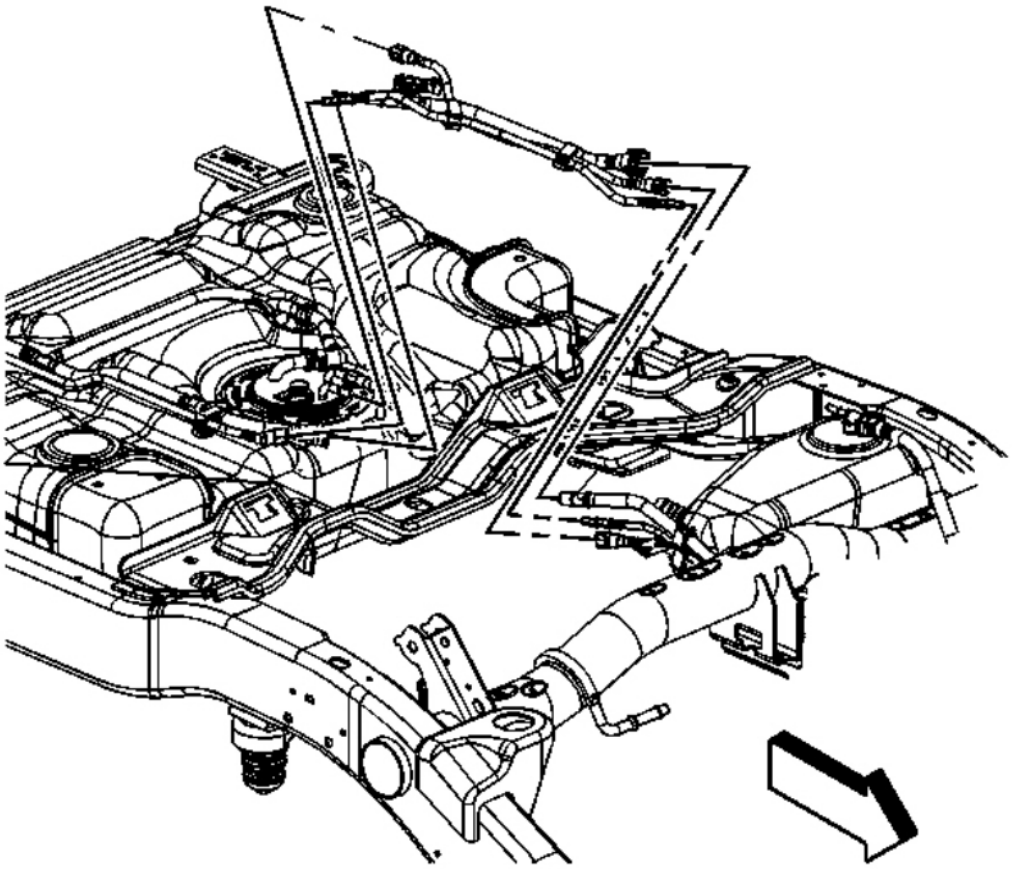

Fig. 496: View Of Fuel & EVAP Intermediate Lines At Fuel Tank
Courtesy of GENERAL MOTORS CORP.

1. Remove the caps from the fuel and EVAP lines.
2. Install the fuel and EVAP intermediate lines.

cardiagn.com

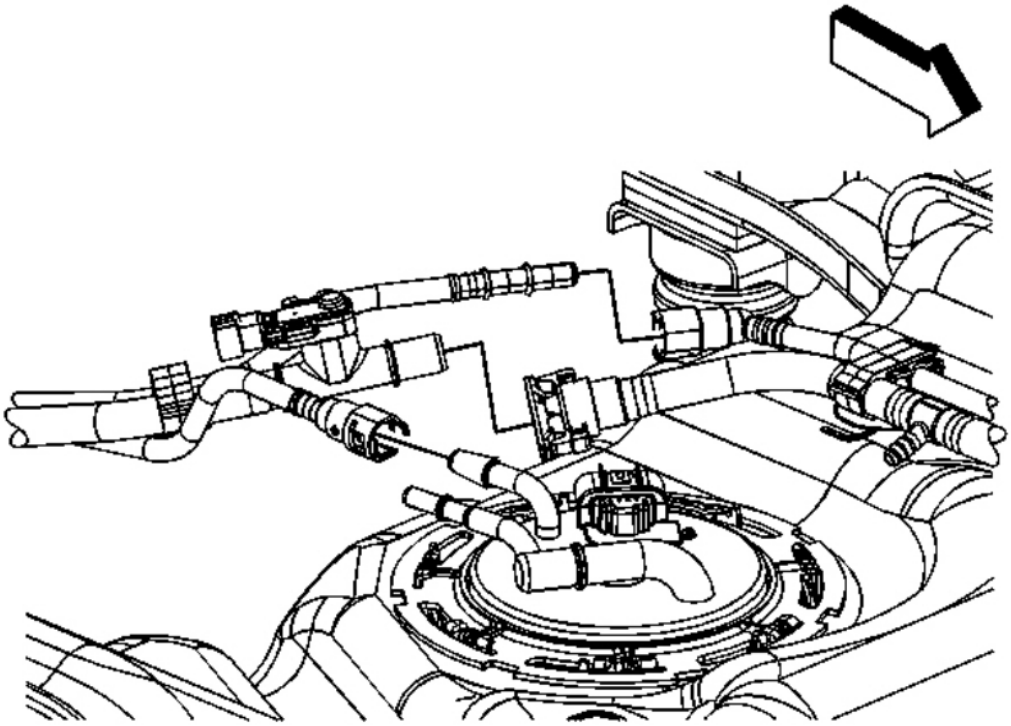

Fig. 497: View Of EVAP Lines & Quick Connect Fittings
Courtesy of GENERAL MOTORS CORP.

3. Connect the fuel and EVAP intermediate line quick connect fittings to the rear tank. Refer to **Quick Connect Fitting Service - Plastic Collar**.

cardiagn.com

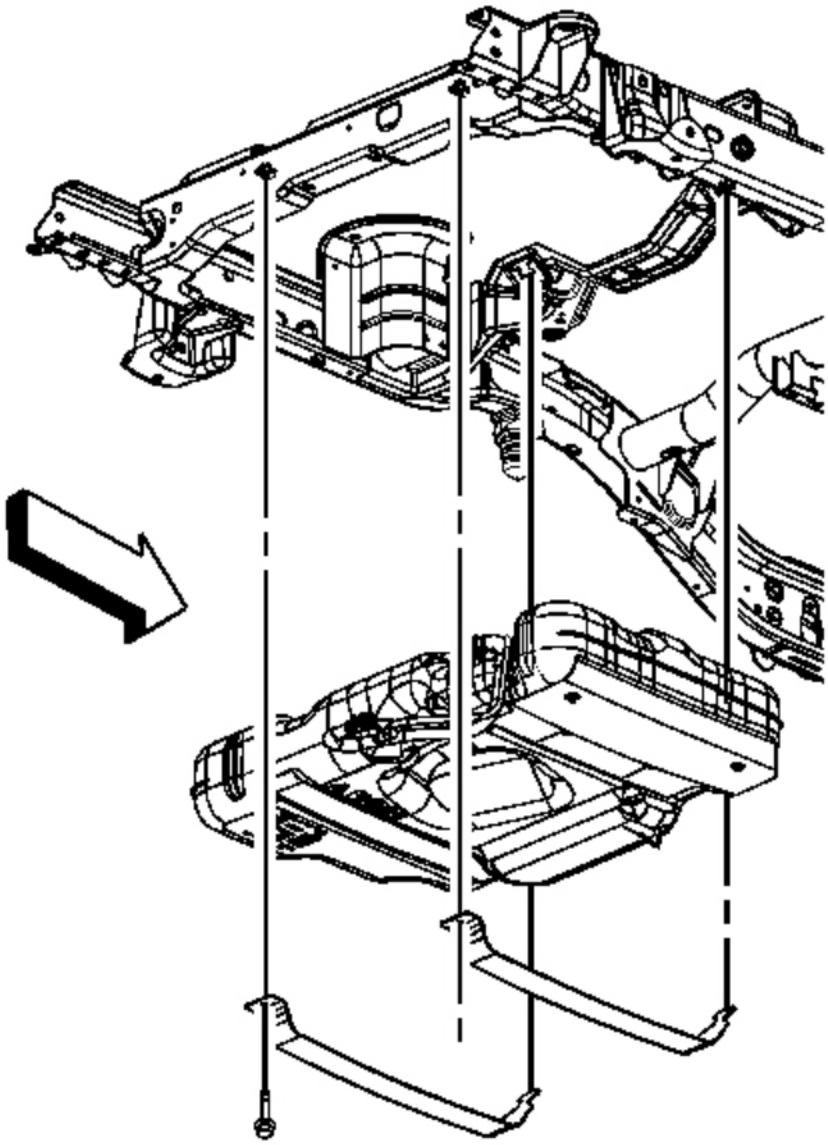

Fig. 498: View Of Fuel Tank & Straps
Courtesy of GENERAL MOTORS CORP.

4. With the aid of an assistant, completely raise the rear tank.
5. Install the fuel tank straps.

cardiagn.com

NOTE: **Refer to Fastener Notice .**

6. Install the fuel tank strap bolts.

   Tighten: Tighten the bolts to 40 N.m (30 lb ft).

7. Remove the adjustable jack from under the fuel tank.

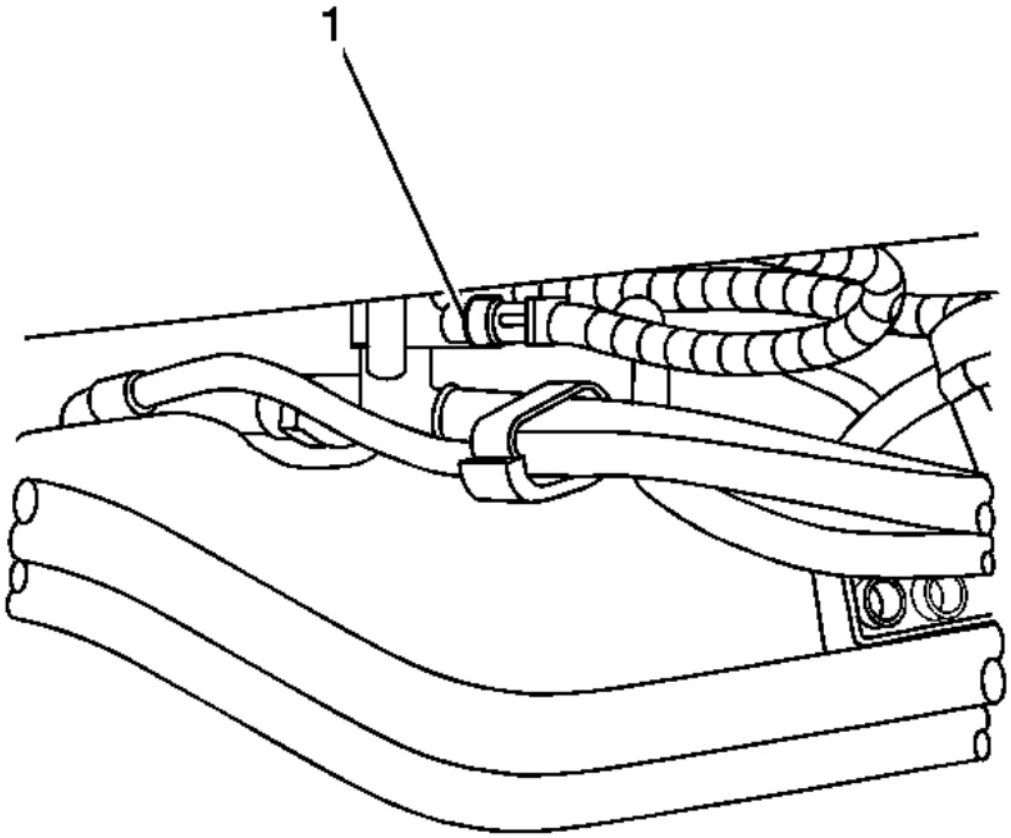

Fig. 499: View Of Fuel Pressure Sensor Electrical Connector
Courtesy of GENERAL MOTORS CORP.

8. Connect the chassis harness electrical connector (1) to the fuel pressure sensor.

cardiagn.com

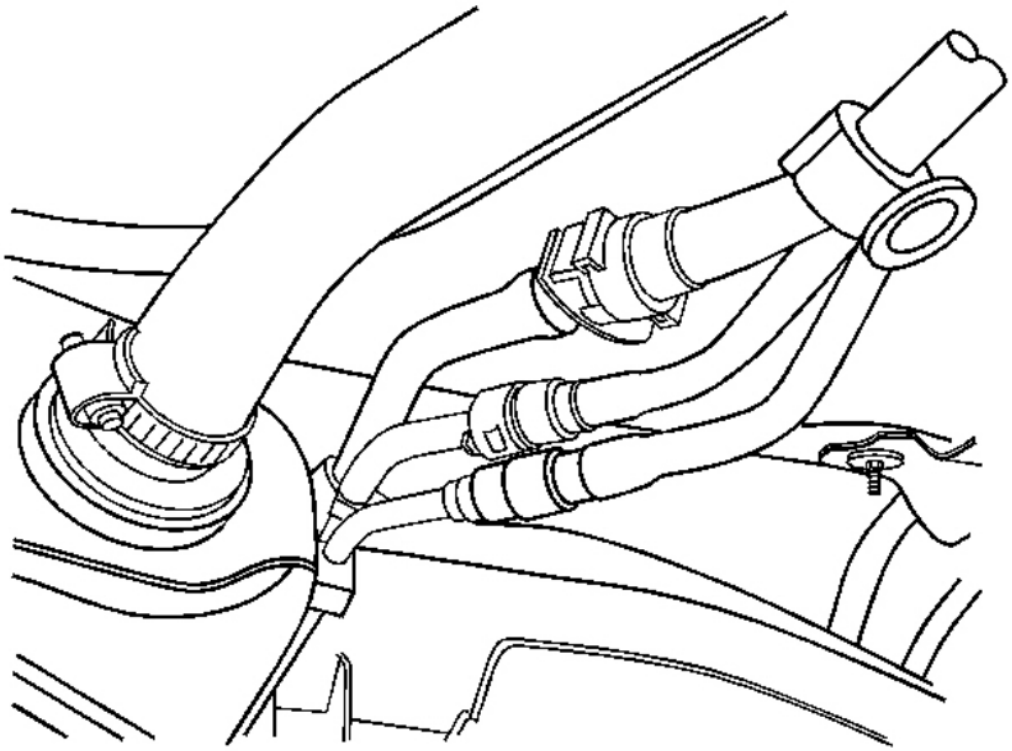

Fig. 500: View Of Fuel & EVAP Intermediate Lines At Fuel Tank
Courtesy of GENERAL MOTORS CORP.

9. Connect the fuel and EVAP intermediate line quick connect fittings to the front tank lines. Refer to **Quick Connect Fitting Service - Plastic Collar**.

cardiagn.com

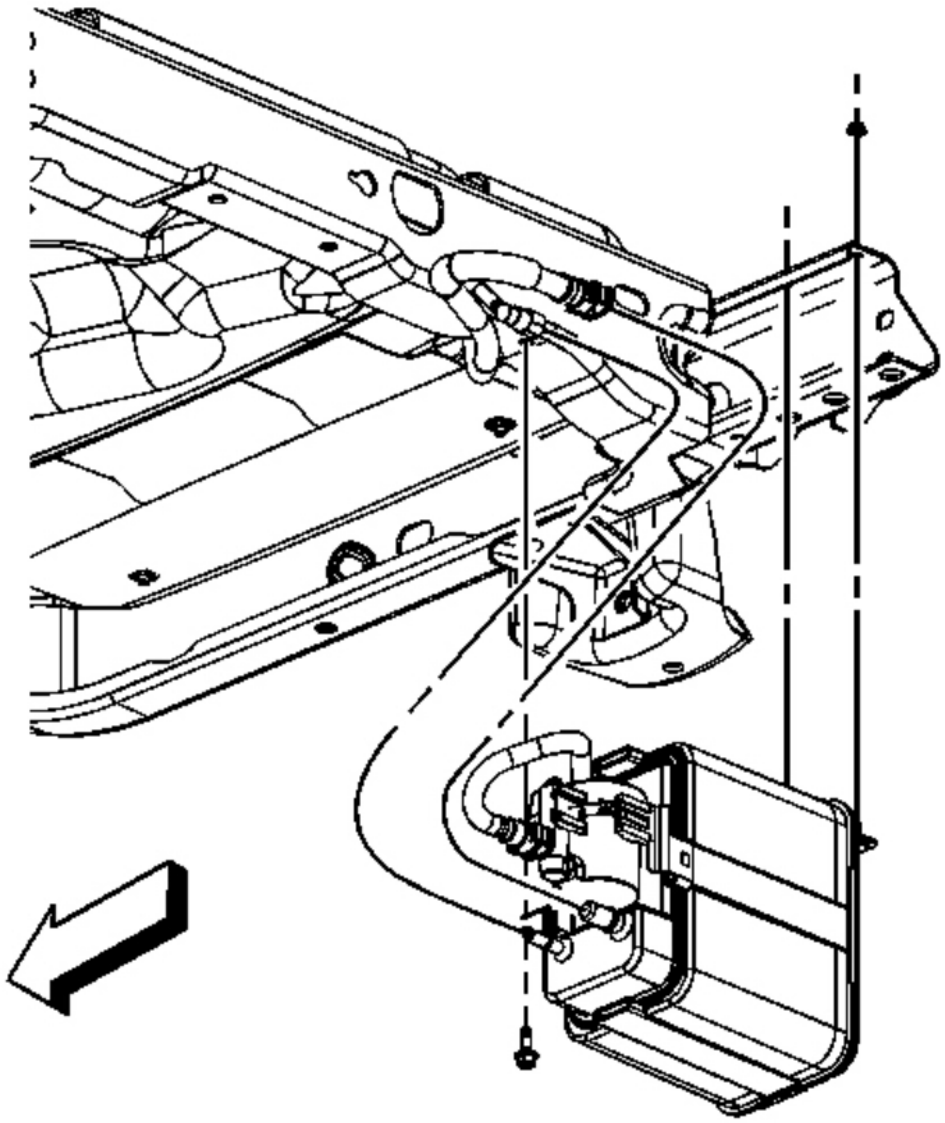

Fig. 501: View Of EVAP Canister & Quick Connect Fittings
Courtesy of GENERAL MOTORS CORP.

10. Connect the rear tank EVAP line quick connect fittings to the EVAP canister. Refer to **Quick Connect Fitting Service - Plastic Collar**.

cardiagn.com

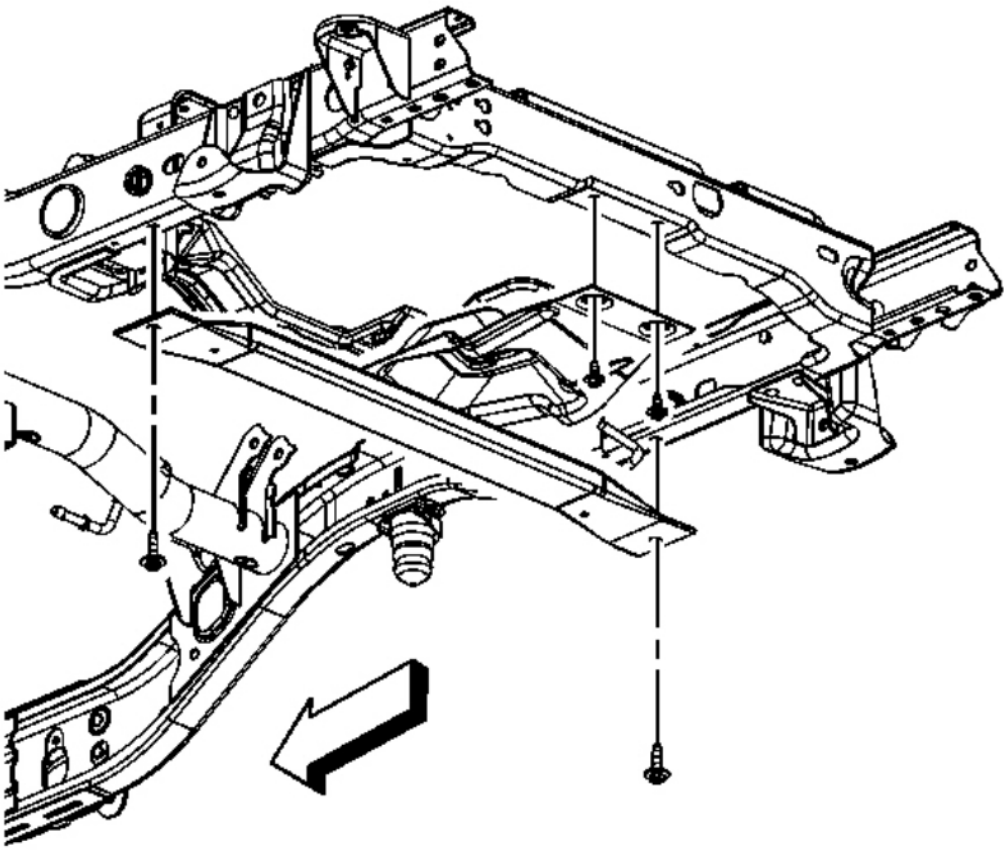

Fig. 502: View Of Spare Tire Hoist Crossmember & Bolts
Courtesy of GENERAL MOTORS CORP.

11. Install the spare tire hoist crossmember and bolts.

    Tighten: Tighten the bolts to 50 N.m (37 lb ft).

cardiagn.com

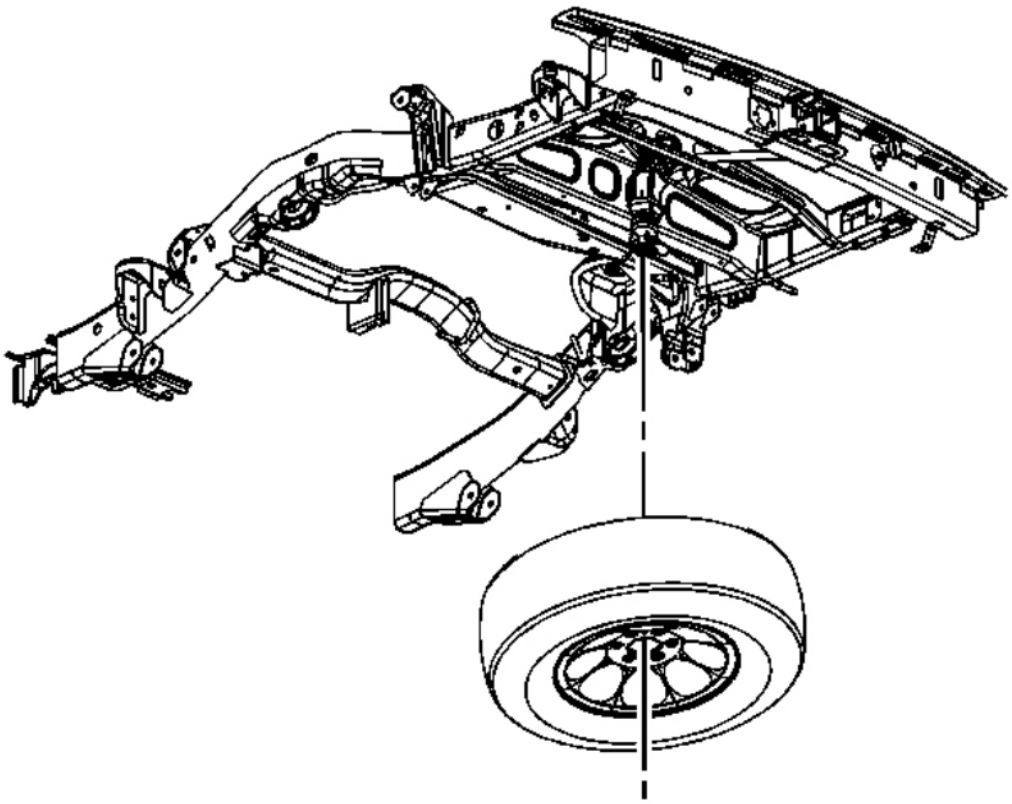

Fig. 503: View Of Spare Tire & Stowage Lock Cylinder
Courtesy of GENERAL MOTORS CORP.

12. Install the rear exhaust insulator.
13. Install the spare tire.
14. Install the spare tire stowage lock cylinder.

cardiagn.com

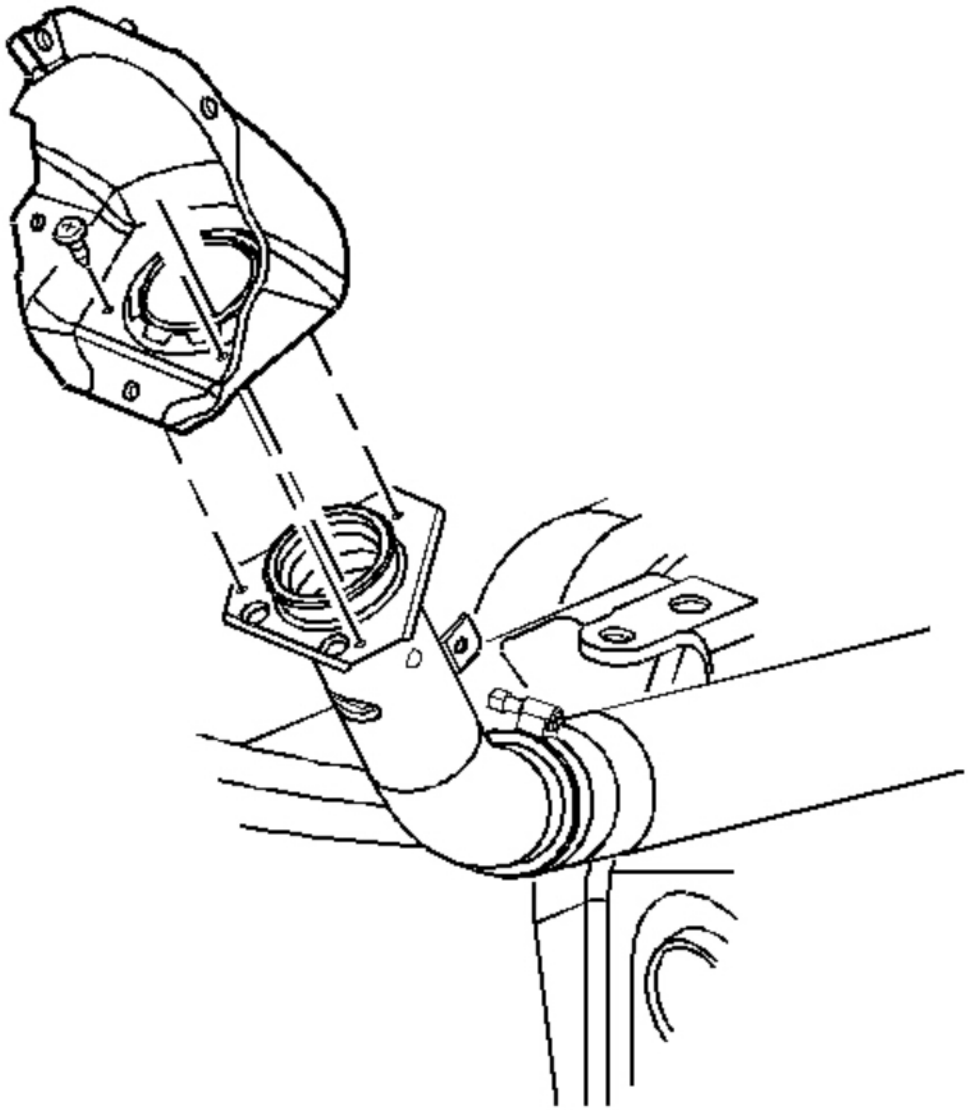

Fig. 504: Identifying Fuel Filler Components
Courtesy of GENERAL MOTORS CORP.

15. Install the fuel tank filler housing.
16. Install the fuel tank filler housing to fuel tank fill pipe bolts.

Tighten: Tighten the bolts to 2.3 N.m (20 lb in).

cardiagn.com

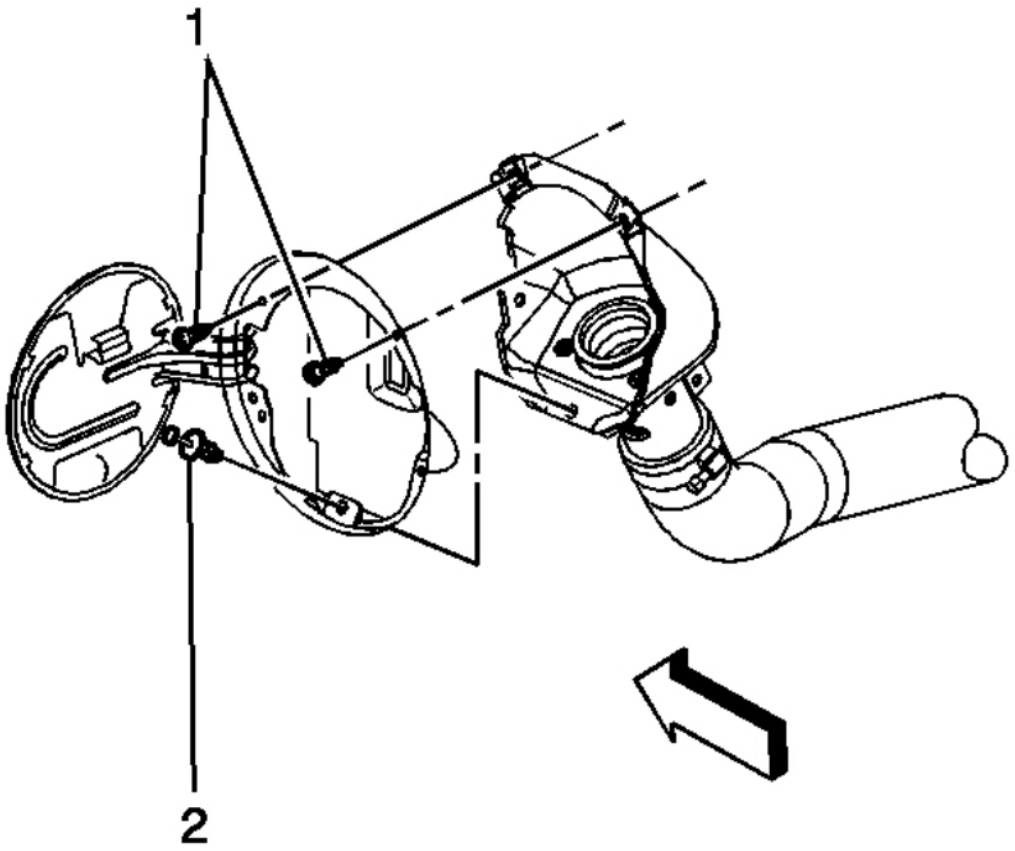

Fig. 505: View Of Fuel Tank Filler Housing To Body Screws & Retainer
Courtesy of GENERAL MOTORS CORP.

17. Install the fuel tank filler housing to body TORX® screws (1) and retainer (2).

    Tighten: Tighten the screws to 2.3 N.m (20 lb in).

18. Refill the fuel tank.
19. Install the fuel fill cap.
20. Connect the negative battery cable. Refer to **Battery Negative Cable Disconnection and Connection** .
21. Use the following procedure in order to inspect for leaks:
    1. Turn the ignition ON, with the engine OFF, for 2 seconds.
    2. Turn the ignition OFF for 10 seconds.
    3. Turn the ignition ON, with the engine OFF.
    4. Inspect for fuel leaks.

cardiagn.com

22. Install the intake manifold sight shield. Refer to **Upper Intake Manifold Sight Shield Replacement** .

EVAPORATIVE EMISSION HOSES/PIPES REPLACEMENT - ENGINE

Removal Procedure

IMPORTANT: Clean all evaporative emission (EVAP) line connections and surrounding areas prior to disconnecting the fittings in order to avoid possible system contamination.

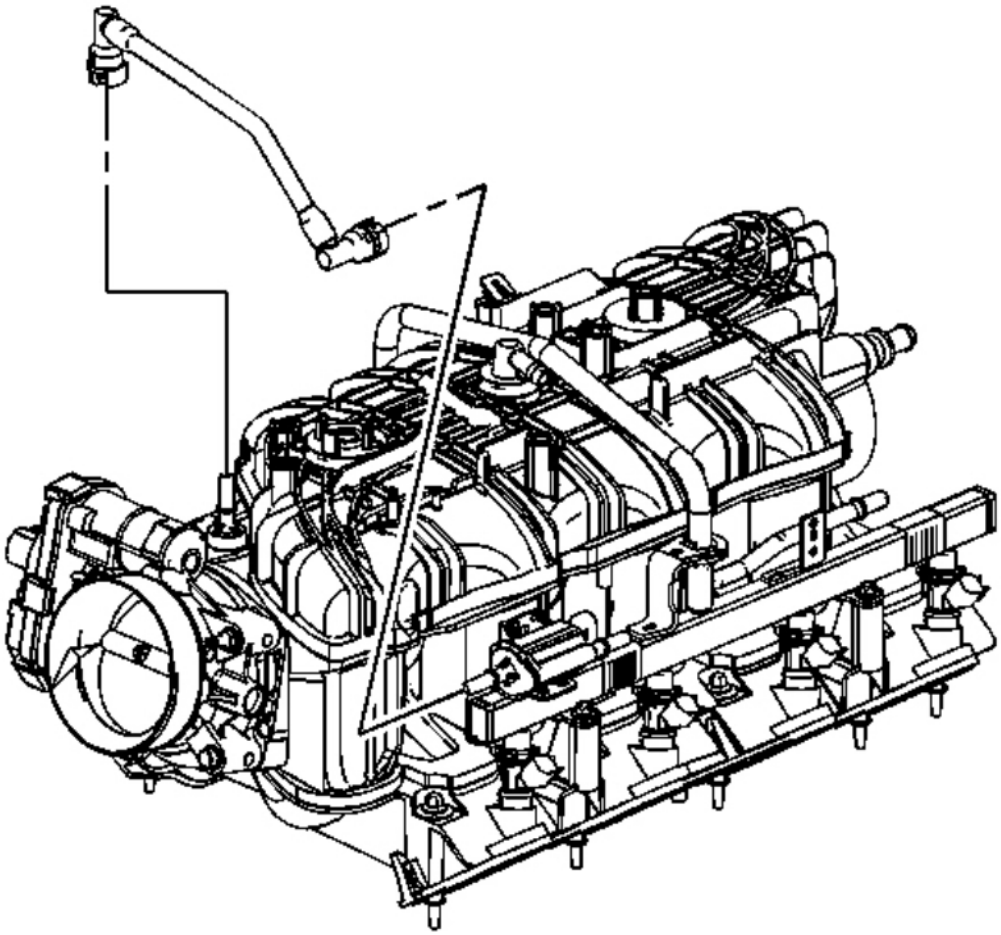

Fig. 506: View of EVAP Line & Canister Purge Solenoid
Courtesy of GENERAL MOTORS CORP.

cardiagn.com

1. Remove the air cleaner outlet duct. Refer to **Air Cleaner Resonator Outlet Duct Replacement**.
2. Disconnect the EVAP line quick connect fitting at the intake manifold. Refer to **Quick Connect Fitting Service - Plastic Collar**.
3. Disconnect the EVAP line quick connect fitting at the EVAP canister purge solenoid. Refer to **Quick Connect Fitting Service - Plastic Collar**.

Installation Procedure

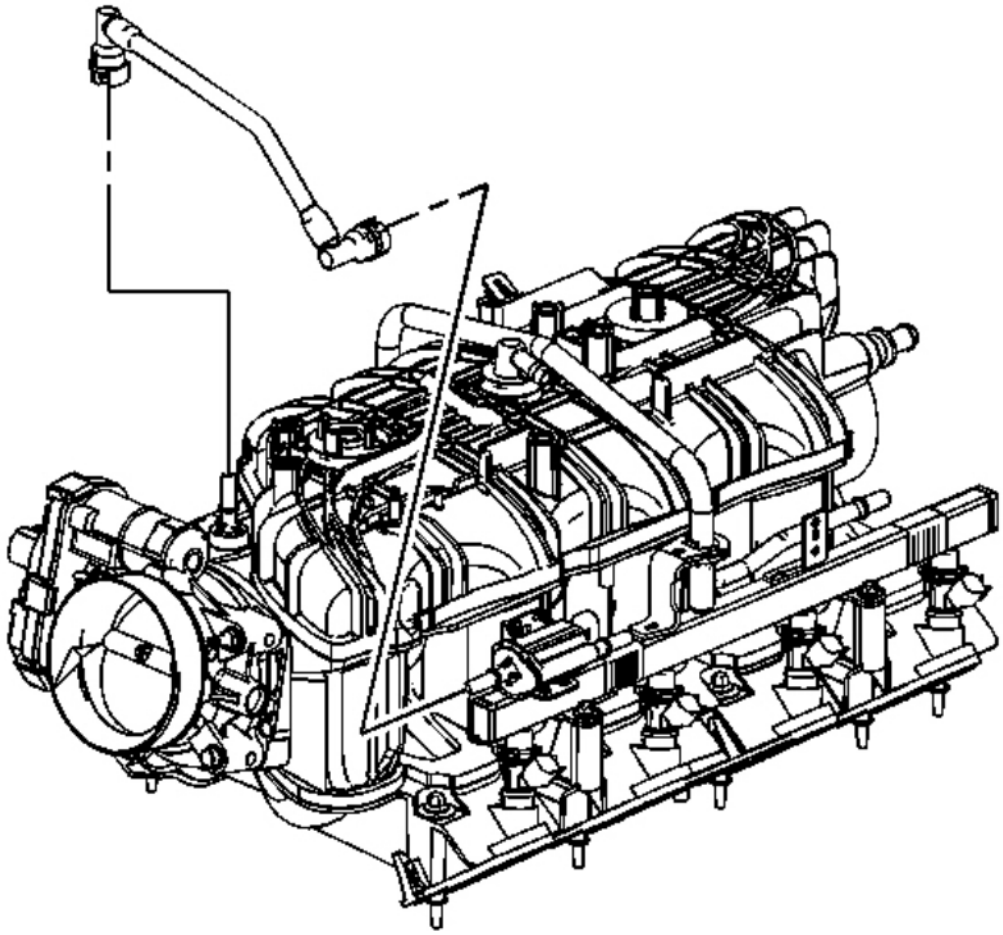

Fig. 507: View of EVAP Line & Canister Purge Solenoid
Courtesy of GENERAL MOTORS CORP.

1. Connect the EVAP line quick connect fitting at the EVAP canister purge solenoid. Refer to **Quick Connect Fitting Service - Plastic Collar**.

cardiagn.com

2. Connect the EVAP line quick connect fitting at the intake manifold. Refer to **Quick Connect Fitting Service - Plastic Collar**.
3. Install the air cleaner outlet duct. Refer to **Air Cleaner Resonator Outlet Duct Replacement**.

EVAPORATIVE EMISSION HOSES/PIPES REPLACEMENT - CHASSIS (1500 SERIES)

Removal Procedure

IMPORTANT: Clean all fuel and evaporative emission (EVAP) lines connections and surrounding areas prior to disconnecting the lines in order to avoid possible fuel and/or EVAP system contamination.

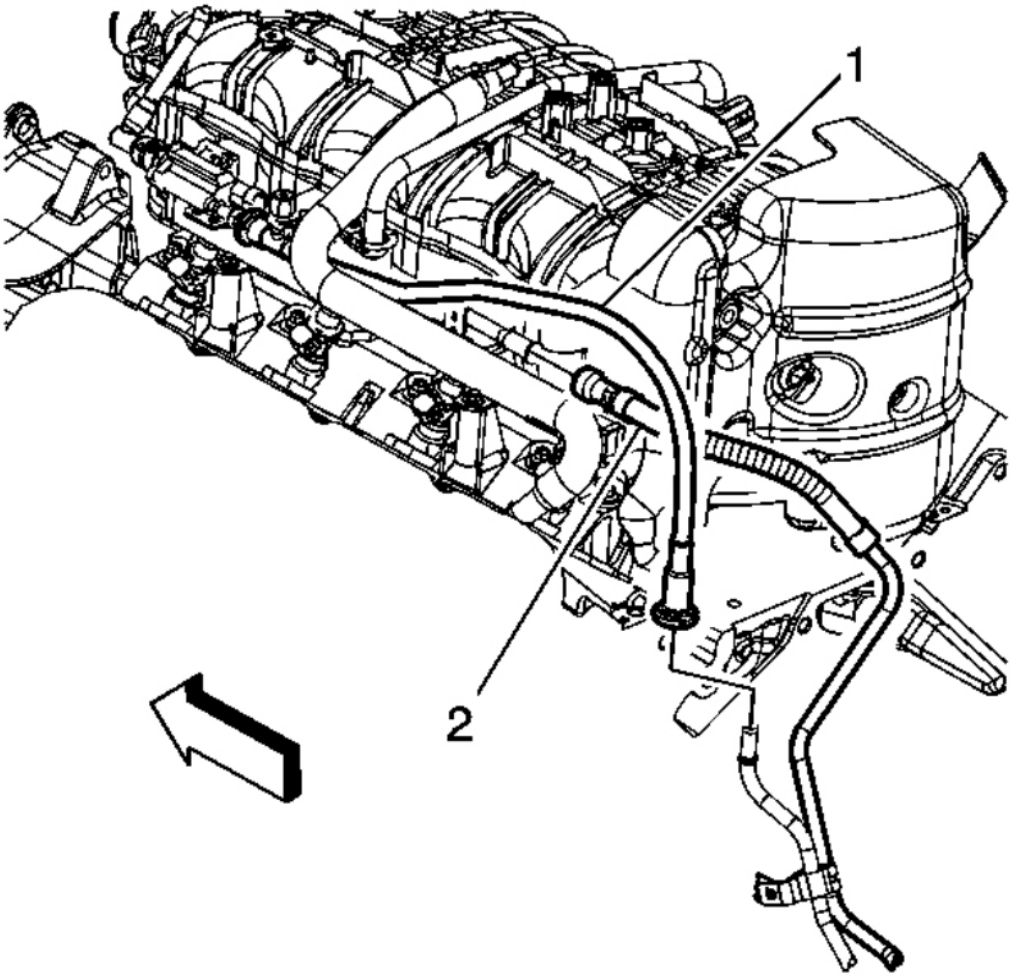

cardiagn.com

Fig. 508: View Of EVAP Canister Purge Tube & Quick Connect Fitting
Courtesy of GENERAL MOTORS CORP.

1. Relieve the fuel system pressure. Refer to the **Fuel Pressure Relief**.
2. Disconnect the EVAP line (1) quick connect fitting from the chassis EVAP line. Refer to **Quick Connect Fitting Service - Plastic Collar**.
3. Disconnect the fuel feed line quick connect fitting (2) from the fuel rail. Refer to **Quick Connect Fitting Service - Metal Collar**.
4. Cap the fuel rail and EVAP pipes.
5. Raise and support the vehicle. Refer to **Lifting and Jacking the Vehicle** .
6. Unbolt and reposition the front propeller shaft. Refer to **Front Propeller Shaft Replacement** .

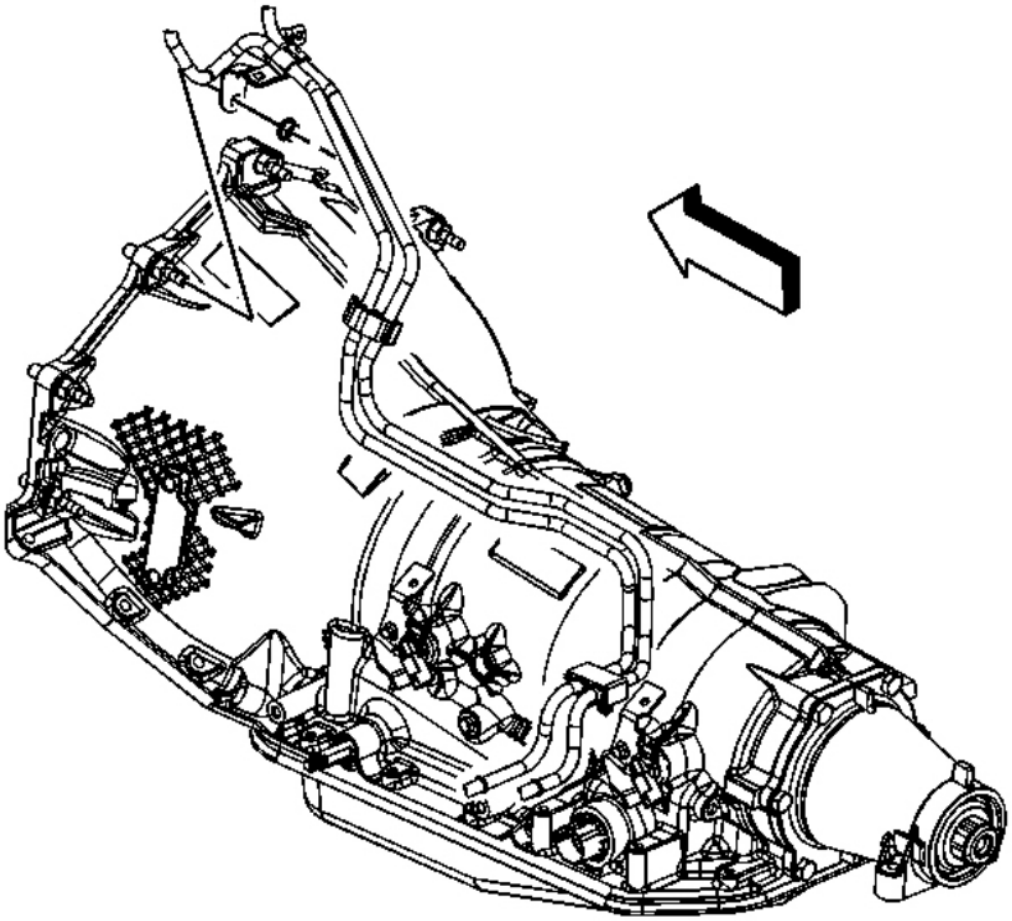

Fig. 509: View Of Fuel/Evaporative Emission Pipe & Bracket

cardiagn.com

Courtesy of GENERAL MOTORS CORP.

7. Remove the fuel pipe bracket nut from the bellhousing stud.

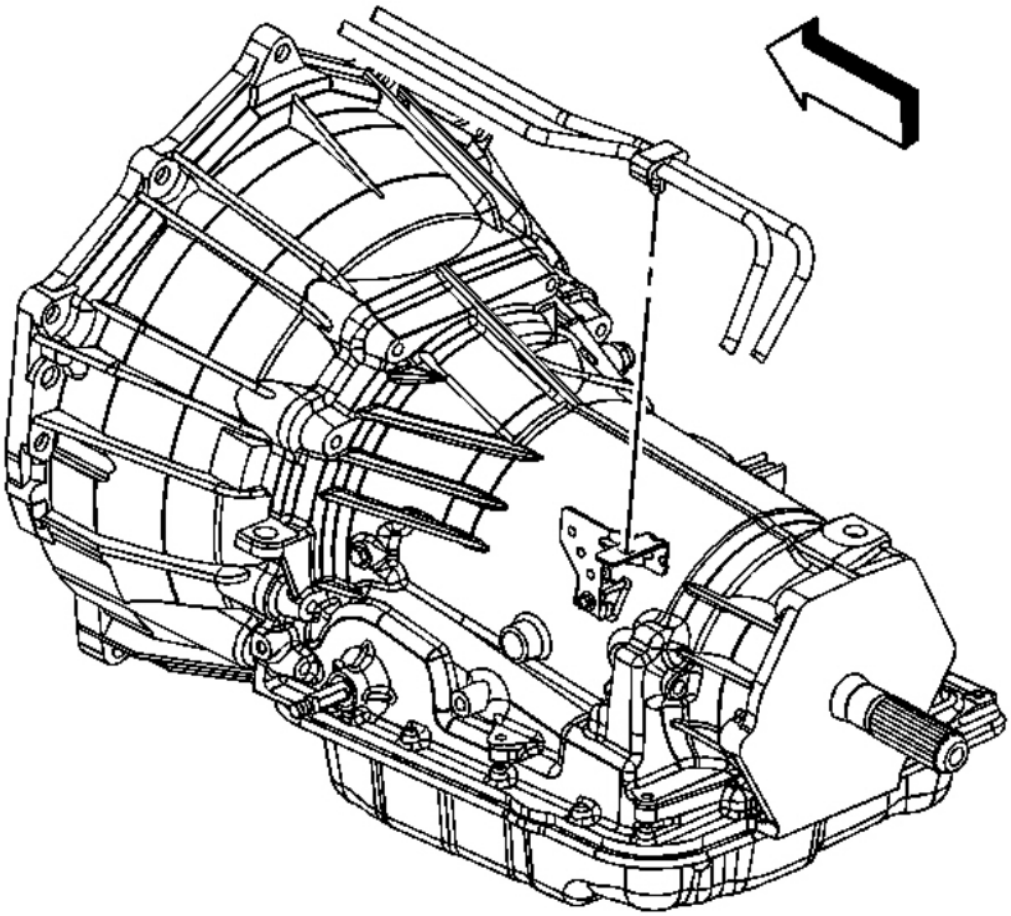

Fig. 510: View Of Fuel Line Clip At Bracket
Courtesy of GENERAL MOTORS CORP.

8. Remove the fuel line clip from the bracket on the automatic transmission.
9. If equipped with 4-wheel drive (4WD), remove the fuel hose/pipe clip from the bracket on the transfer case.

cardiagn.com

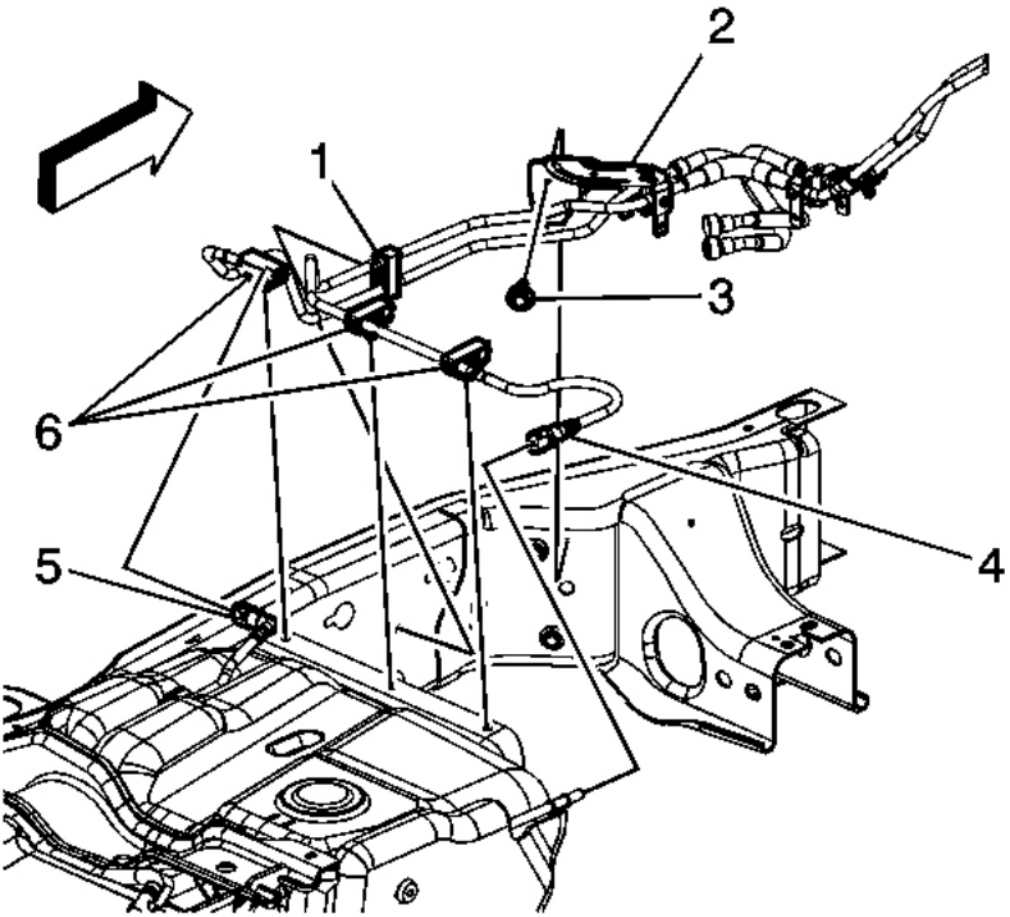

Fig. 511: View Of EVAP Lines, Fuel Feed Lines & Fittings
Courtesy of GENERAL MOTORS CORP.

10. Remove the fuel line bracket bolt (3).
11. Disconnect the chassis EVAP line quick connect fitting (4) from the fuel tank line. Refer to **Quick Connect Fitting Service - Plastic Collar**.
12. Disconnect the fuel tank fuel feed line quick connect fitting (5) from the chassis line. Refer to **Quick Connect Fitting Service - Plastic Collar**.
13. Cap the fuel and EVAP lines in order to prevent possible fuel and/or EVAP system contamination.
14. Remove the fuel/EVAP line clips from the frame and crossmember.
15. Remove the fuel line bracket locator tab from the frame.
16. Remove the fuel/EVAP lines from the vehicle.

cardiagn.com

Installation Procedure

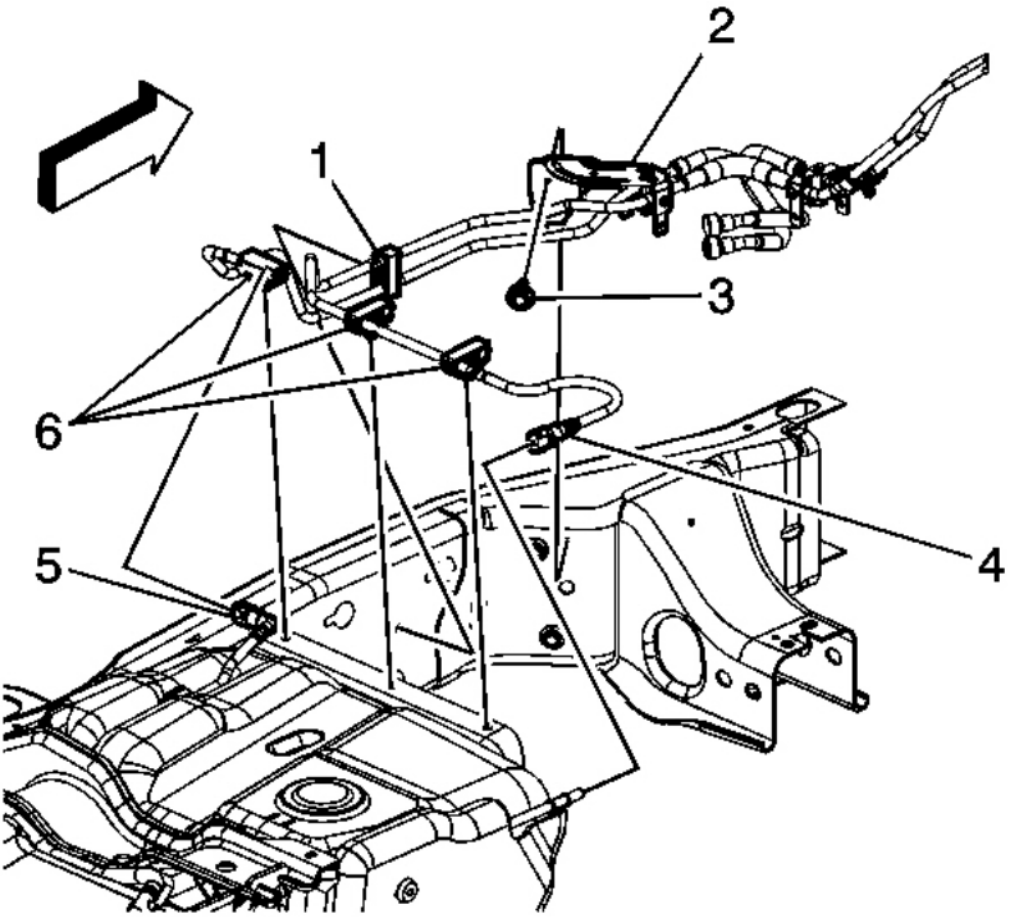

Fig. 512: View Of EVAP Lines, Fuel Feed Lines & Fittings
Courtesy of GENERAL MOTORS CORP.

1. Install the fuel/EVAP lines to the vehicle.
2. Install the fuel line bracket locator tab to the frame.
3. Install the fuel/EVAP line clips to the frame and crossmember.

NOTE: **Refer to Fastener Notice .**

4. Install the fuel line bracket bolt (3).

Tighten: Tighten the bolt to 12 N.m (106 lb in).

cardiagn.com

5. Remove the caps from the fuel and EVAP lines.
6. Connect the chassis EVAP line quick connect fitting (4) to the fuel tank line. Refer to **Quick Connect Fitting Service - Plastic Collar**.
7. Connect the fuel tank fuel feed line quick connect fitting (5) to the chassis line. Refer to **Quick Connect Fitting Service - Plastic Collar**.

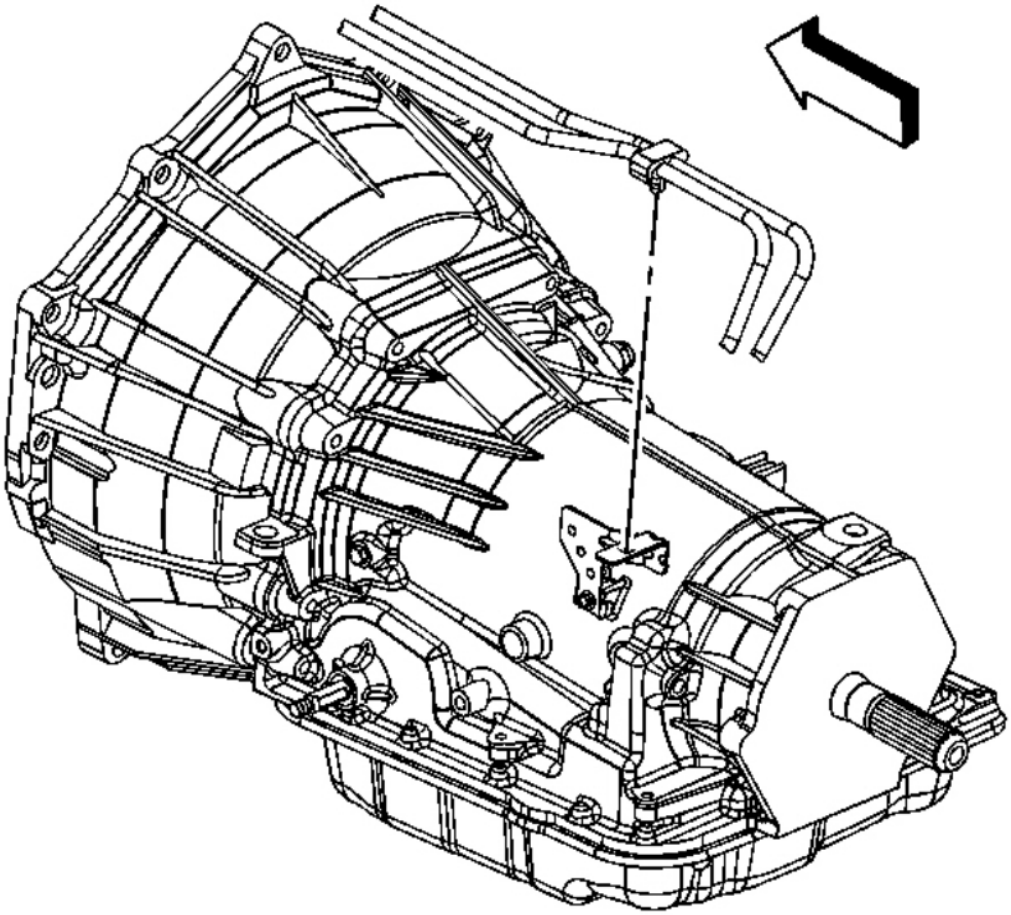

Fig. 513: View Of Fuel Line Clip At Bracket
Courtesy of GENERAL MOTORS CORP.

8. If equipped with 4WD, install the fuel hose/pipe clip to the bracket on the transfer case.
9. Install the fuel line clip to the bracket on the automatic transmission.

cardiagn.com

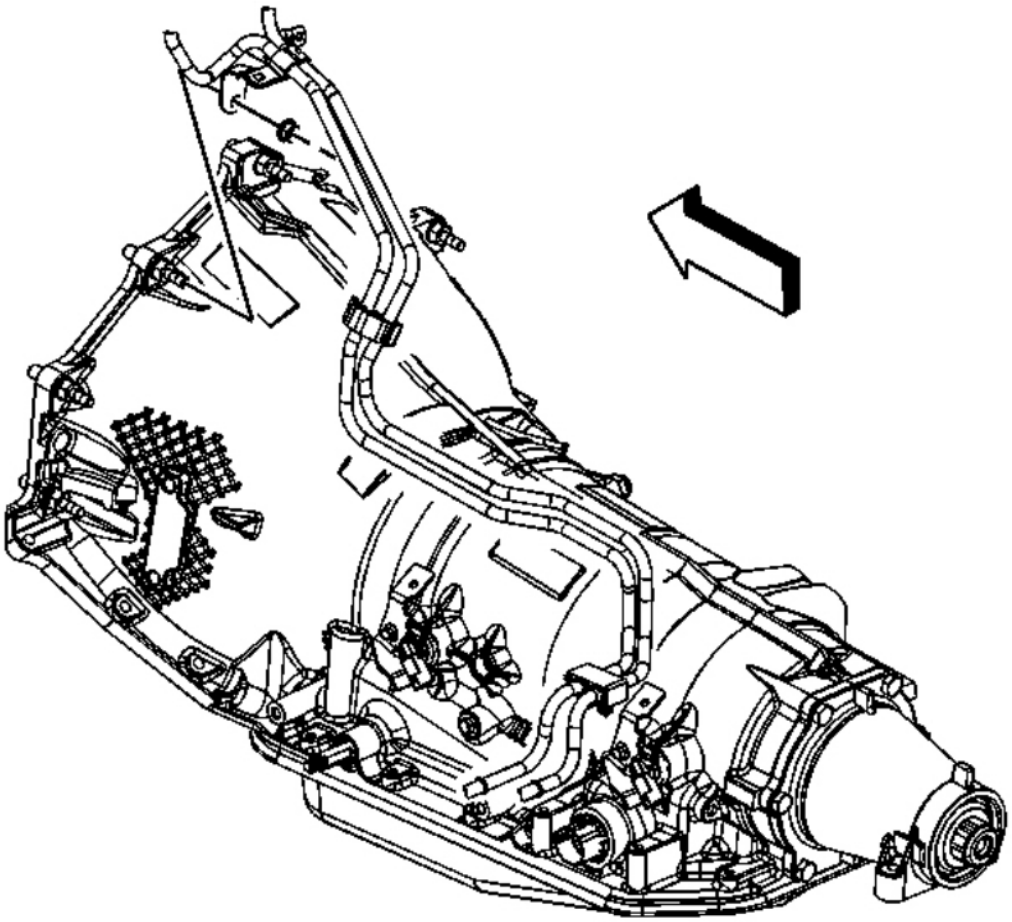

Fig. 514: View Of Fuel/Evaporative Emission Pipe & Bracket
Courtesy of GENERAL MOTORS CORP.

10. Install the fuel pipe bracket nut to the bellhousing stud.

    Tighten: Tighten the nut to 20 N.m (15 lb ft).

11. Position and install the front propeller shaft. Refer to **Front Propeller Shaft Replacement** .
12. Lower the vehicle.

cardiagn.com

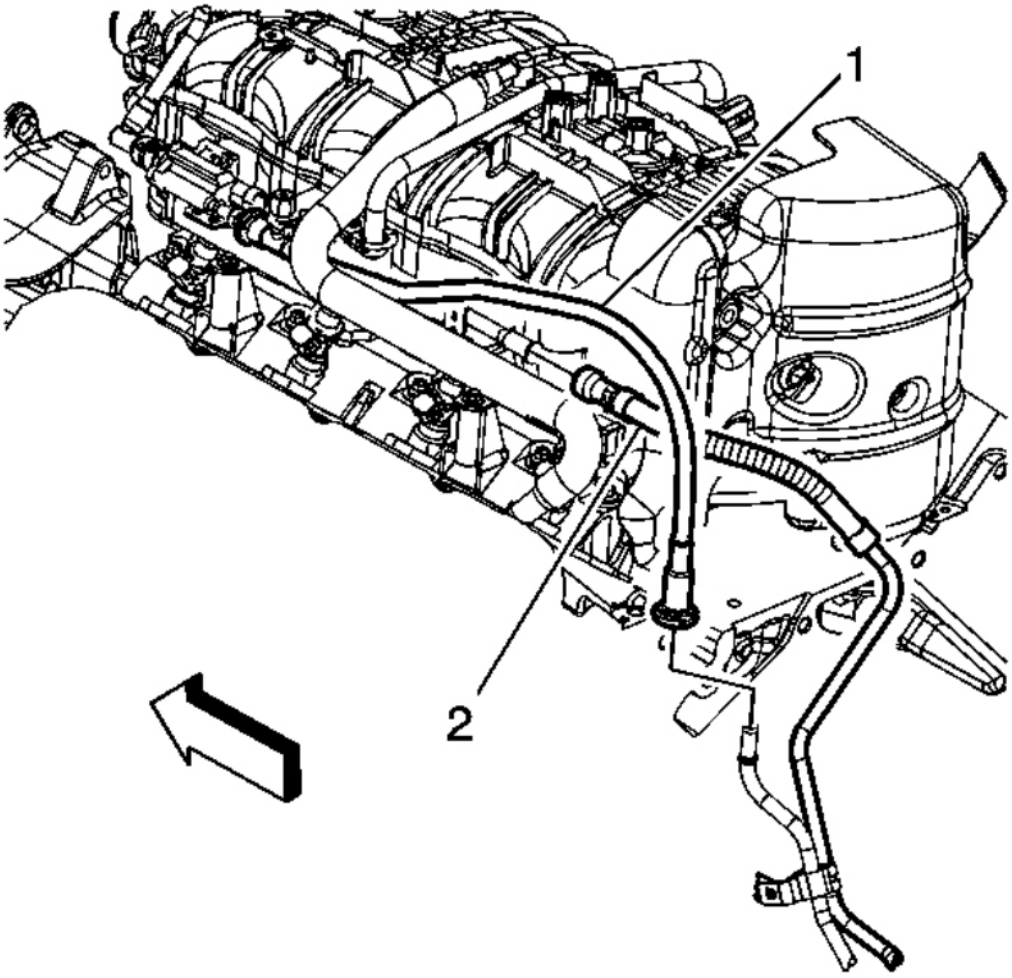

Fig. 515: View Of EVAP Canister Purge Tube & Quick Connect Fitting
Courtesy of GENERAL MOTORS CORP.

13. Remove the caps from the fuel rail and EVAP line.
14. Disconnect the EVAP line (1) quick connect fitting from the chassis EVAP line. Refer to **Quick Connect Fitting Service - Plastic Collar**.
15. Disconnect the fuel feed line quick connect fitting (2) from the fuel rail. Refer to **Quick Connect Fitting Service - Metal Collar**.
16. Install the fuel fill cap.
17. Connect the negative battery cable. Refer to **Battery Negative Cable Disconnection and Connection** .
18. Use the following procedure in order to inspect for leaks:

cardiagn.com

1. Turn the ignition ON, with the engine OFF, for 2 seconds.
2. Turn the ignition OFF for 10 seconds.
3. Turn the ignition ON, with the engine OFF.
4. Inspect for fuel leaks.

19. Install the intake manifold sight shield. Refer to **Upper Intake Manifold Sight Shield Replacement** .

EVAPORATIVE EMISSION HOSES/PIPES REPLACEMENT - CHASSIS (2500 SERIES)

Removal Procedure

IMPORTANT: Clean all fuel and evaporative emission (EVAP) line connections and surrounding areas prior to disconnecting the lines in order to avoid possible fuel and/or EVAP system contamination.

cardiagn.com

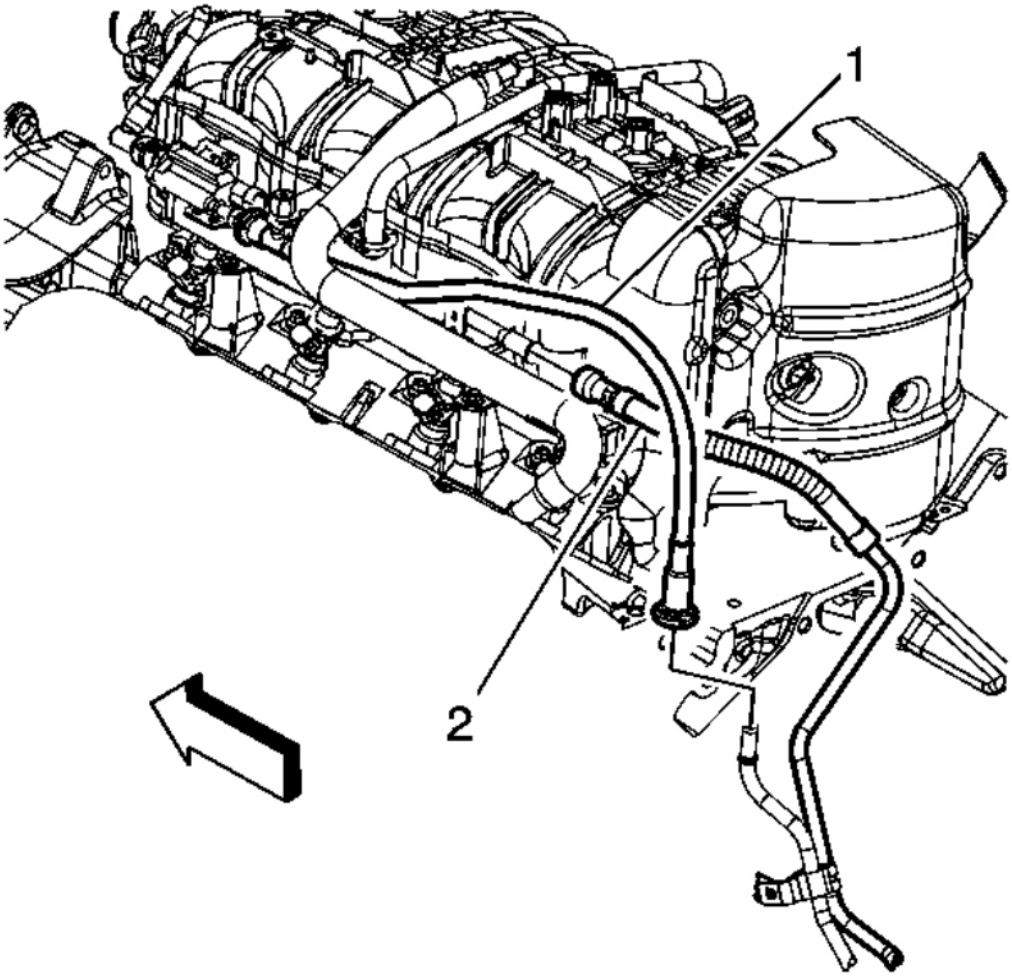

Fig. 516: View Of EVAP Canister Purge Tube & Quick Connect Fitting
Courtesy of GENERAL MOTORS CORP.

1. Relieve the fuel system pressure. Refer to **Fuel Pressure Relief**.
2. Disconnect the fuel feed pipe (2) quick connect fitting at the fuel rail. Refer to **Quick Connect Fitting Service - Metal Collar**.
3. Disconnect the EVAP line (1) quick connect fitting from the chassis line. Refer to **Quick Connect Fitting Service - Plastic Collar**.
4. Cap the fuel rail and EVAP line in order to prevent fuel/EVAP system contamination.
5. Raise and support the vehicle. Refer to **Lifting and Jacking the Vehicle** .

cardiagn.com

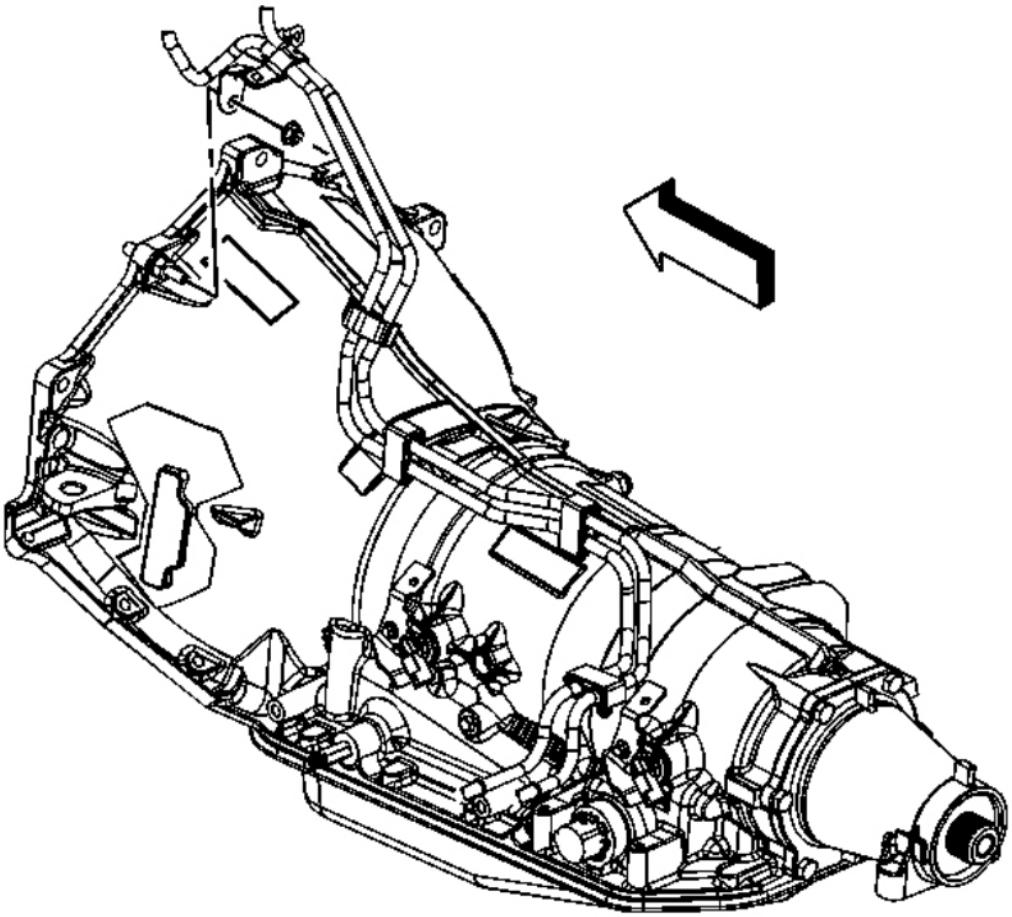

Fig. 517: View Of Fuel Pipe Bracket & Nut At Bellhousing
Courtesy of GENERAL MOTORS CORP.

6. Remove the fuel pipe bracket nut.
7. Remove the fuel pipe bracket from the bellhousing stud.

cardiagn.com

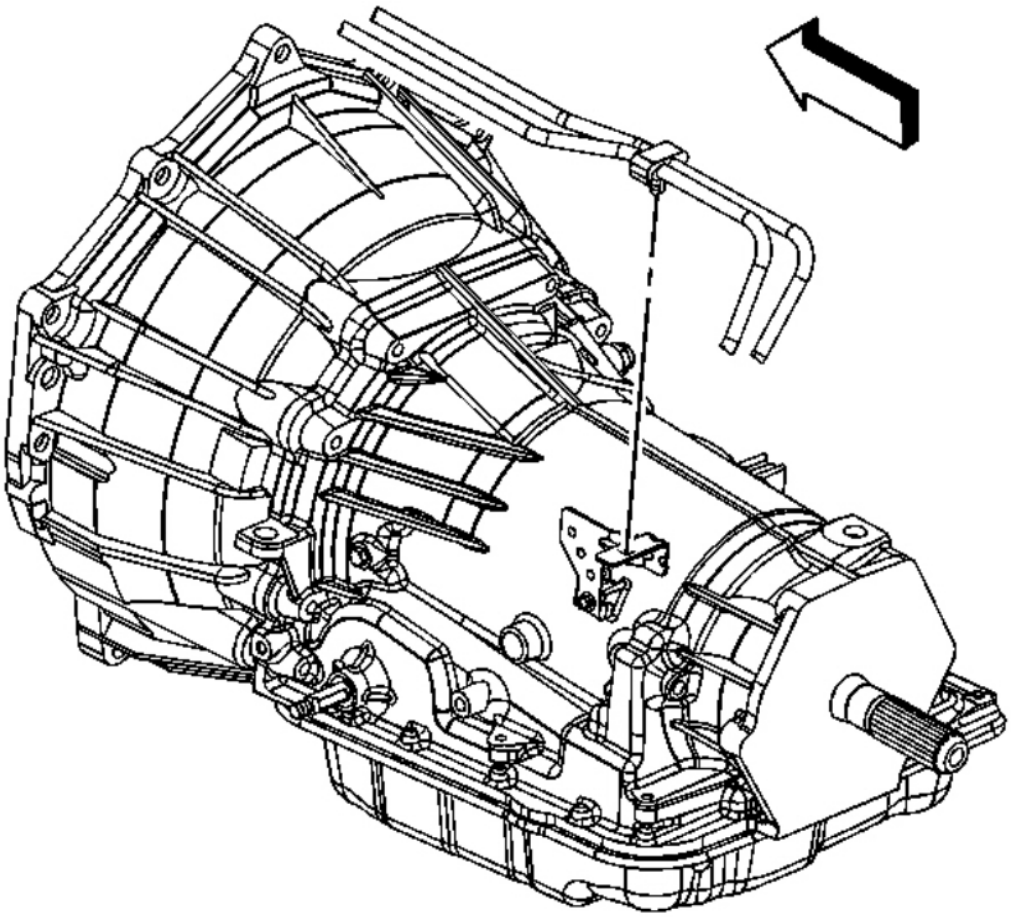

Fig. 518: View Of Fuel Line Clip At Bracket
Courtesy of GENERAL MOTORS CORP.

8. Remove the fuel line clip from the bracket on the automatic transmission.
9. If equipped with 4-wheel drive (4WD), remove the fuel hose/pipe clip from the bracket on the transfer case.

cardiagn.com

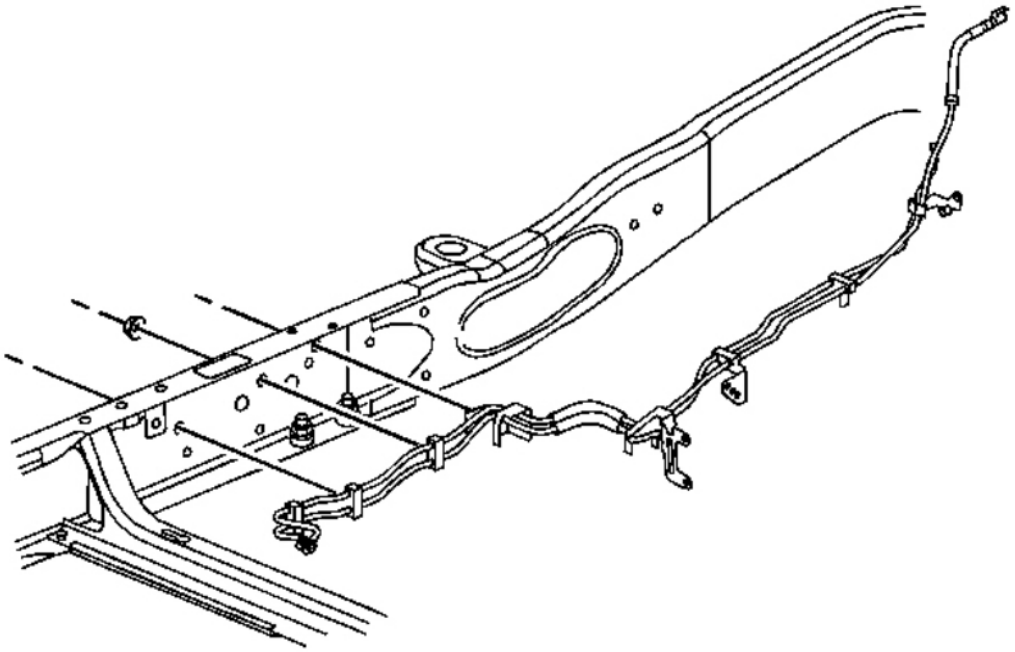

Fig. 519: View Of Fuel/EVAP Line Bundle
Courtesy of GENERAL MOTORS CORP.

10. Remove the fuel line bracket nuts.
11. Remove the fuel/EVAP line bundle.

Installation Procedure

cardiagn.com

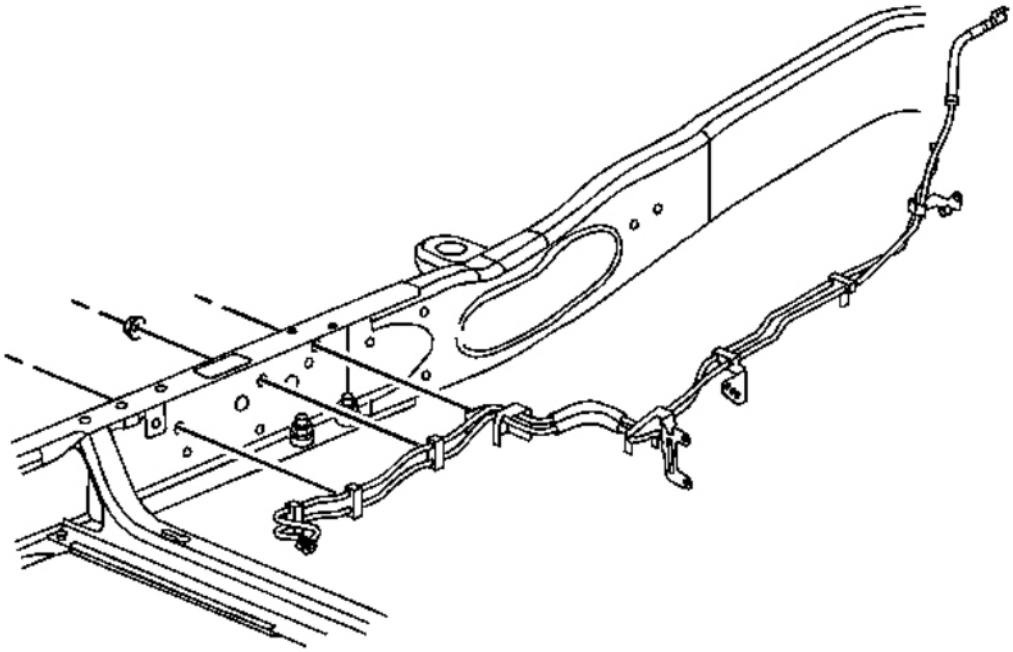

Fig. 520: View Of Fuel/EVAP Line Bundle
Courtesy of GENERAL MOTORS CORP.

1. Install the fuel/EVAP line bundle.

   NOTE: **Refer to Fastener Notice .**

2. Install the fuel line bracket nuts.

   Tighten: Tighten the bolt to 18 N.m (13 lb ft).

cardiagn.com

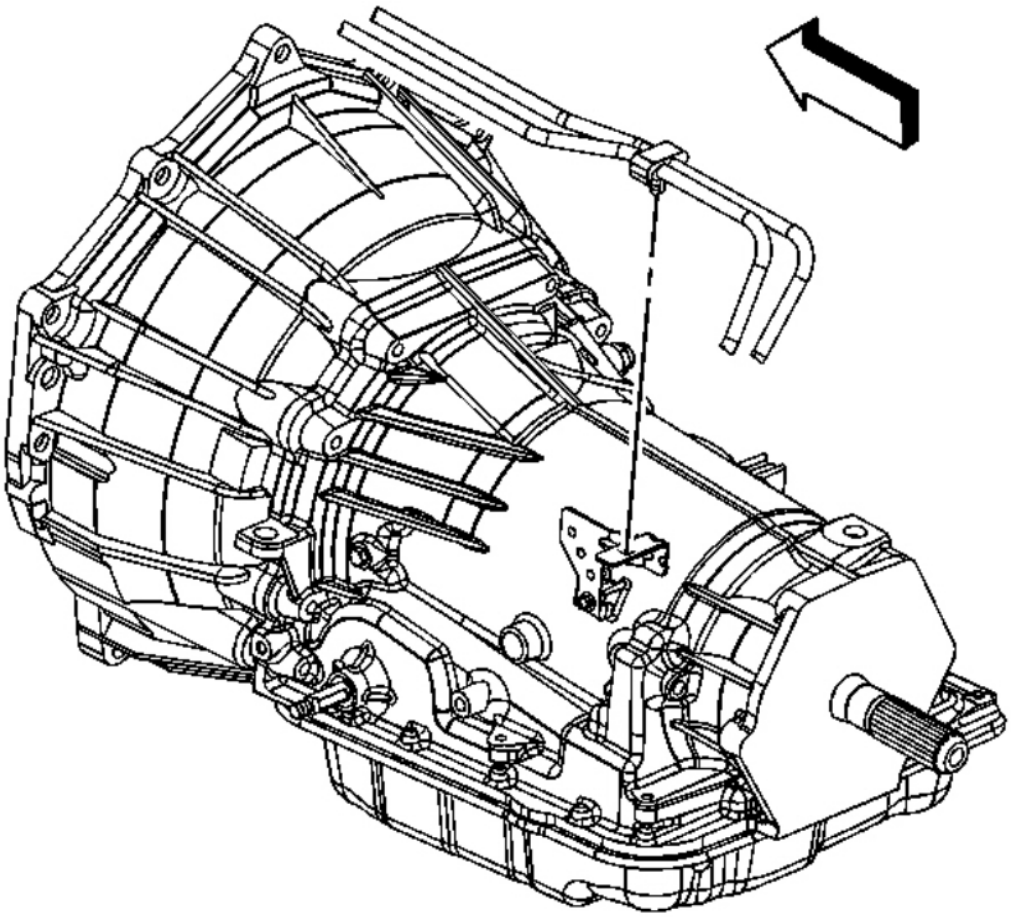

Fig. 521: View Of Fuel Line Clip At Bracket
Courtesy of GENERAL MOTORS CORP.

3. If equipped with 4WD, install the fuel hose/pipe clip to the bracket on the transfer case.
4. Install the fuel line clip to the bracket on the automatic transmission.

cardiagn.com

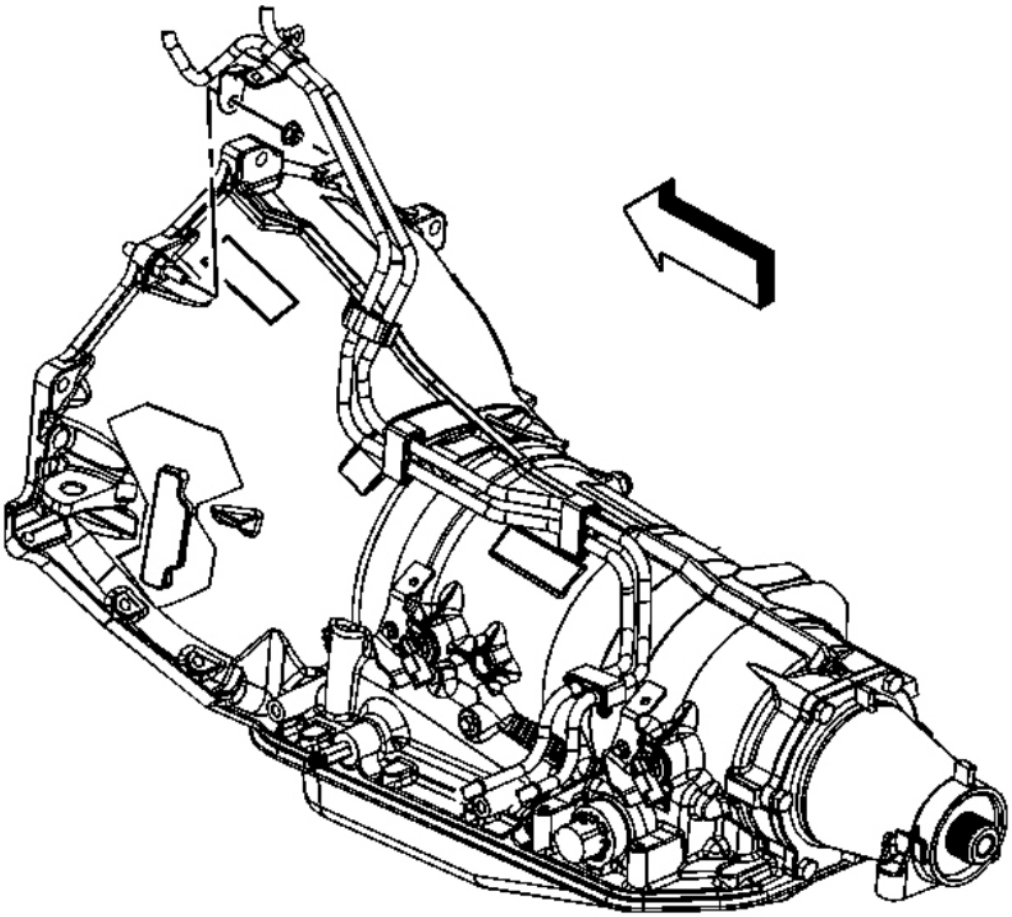

Fig. 522: View Of Fuel Pipe Bracket & Nut At Bellhousing
Courtesy of GENERAL MOTORS CORP.

5. Install the fuel pipe bracket to the bellhousing stud.
6. Install the fuel pipe bracket nut.

   Tighten: Tighten the nut to 20 N.m (15 lb ft).

7. Lower the vehicle.

cardiagn.com

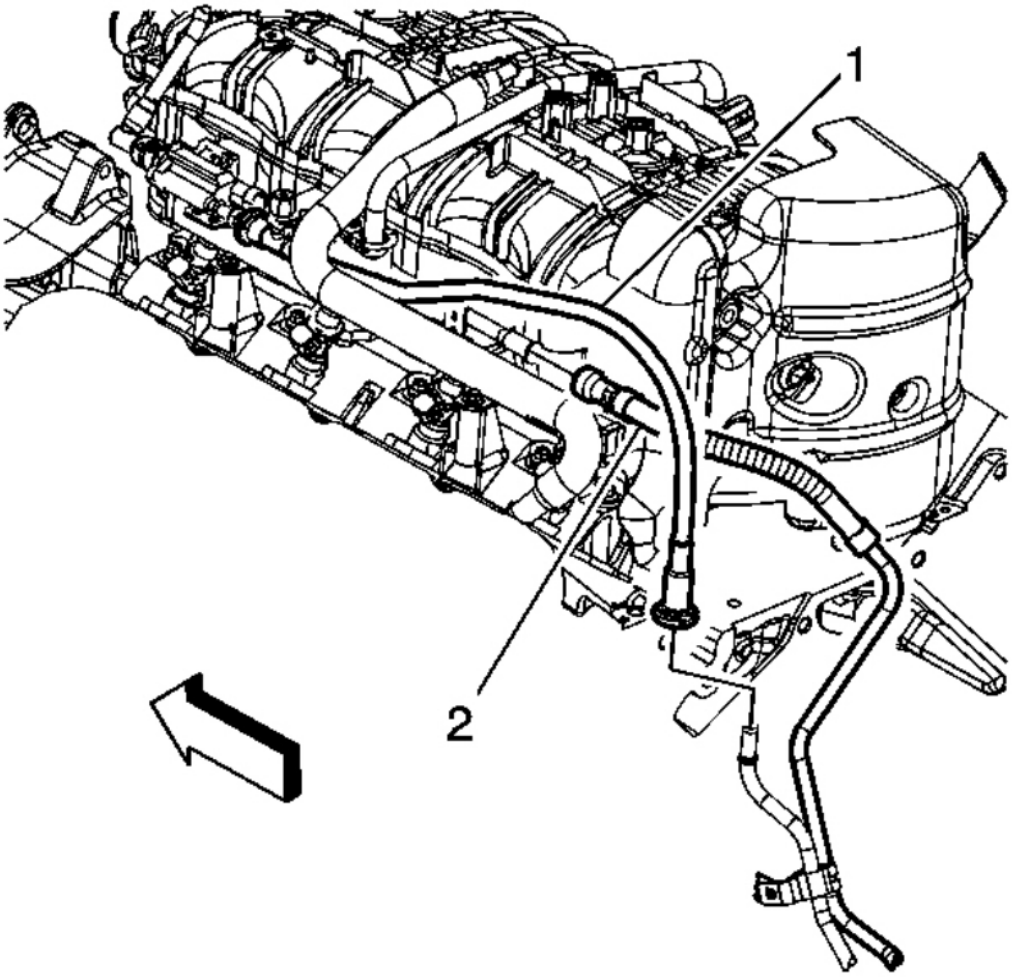

Fig. 523: View Of EVAP Canister Purge Tube & Quick Connect Fitting
Courtesy of GENERAL MOTORS CORP.

8. Remove the caps from the fuel rail and EVAP line.
9. Connect the EVAP line (1) quick connect fitting to the chassis line. Refer to **Quick Connect Fitting Service - Plastic Collar**.
10. Connect the fuel feed line (2) quick connect fitting to the fuel rail. Refer to **Quick Connect Fitting Service - Metal Collar**.
11. Install the fuel fill cap.
12. Connect the negative battery cable. Refer to **Battery Negative Cable Disconnection and Connection** .
13. Use the following procedure in order to inspect for leaks:

cardiagn.com

1. Turn the ignition ON, with the engine OFF, for 2 seconds.
2. Turn the ignition OFF for 10 seconds.
3. Turn the ignition ON, with the engine OFF.
4. Inspect for fuel leaks.

14. Install the intake manifold sight shield. Refer to **Upper Intake Manifold Sight Shield Replacement** .

EVAPORATIVE EMISSION HOSES/PIPES REPLACEMENT - CANISTER/FUEL TANK (1500 LWB - 117.3L (31 GAL) TANK)

Removal Procedure

IMPORTANT: Clean the evaporative emission (EVAP) line connections and surrounding areas prior to disconnecting the fittings in order to avoid possible EVAP system contamination.

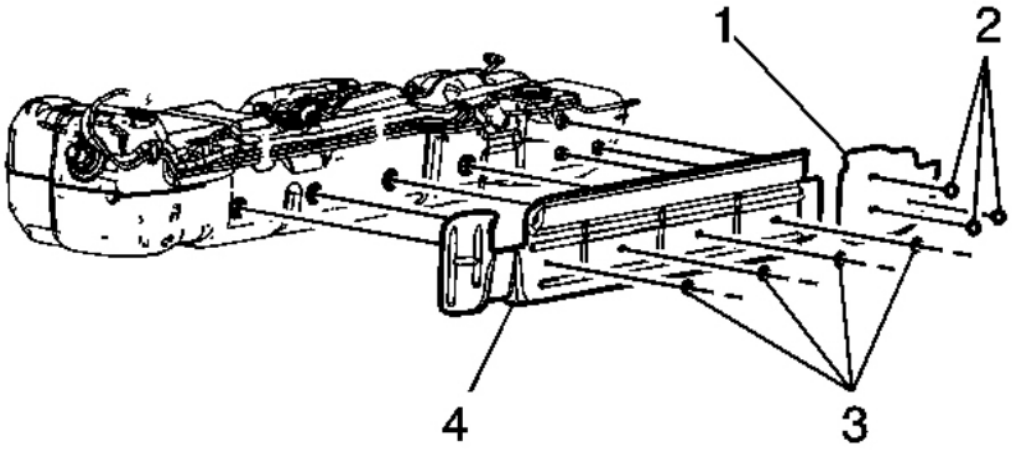

Fig. 524: View Of Fuel Tank Shields & Retainers
Courtesy of GENERAL MOTORS CORP.

1. Remove the fuel tank. Refer to **Fuel Tank Replacement (1500 LWB - 117.3L (31 gal) Tank)** or **Fuel Tank Replacement (1500 LWB - 117.3L (31 gal) Tank + E85)** or **Fuel Tank Replacement (1500 SWB - 98.4L (26 gal) Tank)** or **Fuel Tank Replacement (1500 SWB - 98.4L (26 gal) Tank + E85)** or **Fuel Tank Replacement (2500 LWB - 43.5L (11.5 gal) Tank-Rear)** or **Fuel Tank Replacement (2500 LWB - 98.4L (26 gal) Tank-Front)**.
2. Remove the fuel tank shield retainers (2, and 3) and shields (1, and 4).

cardiagn.com

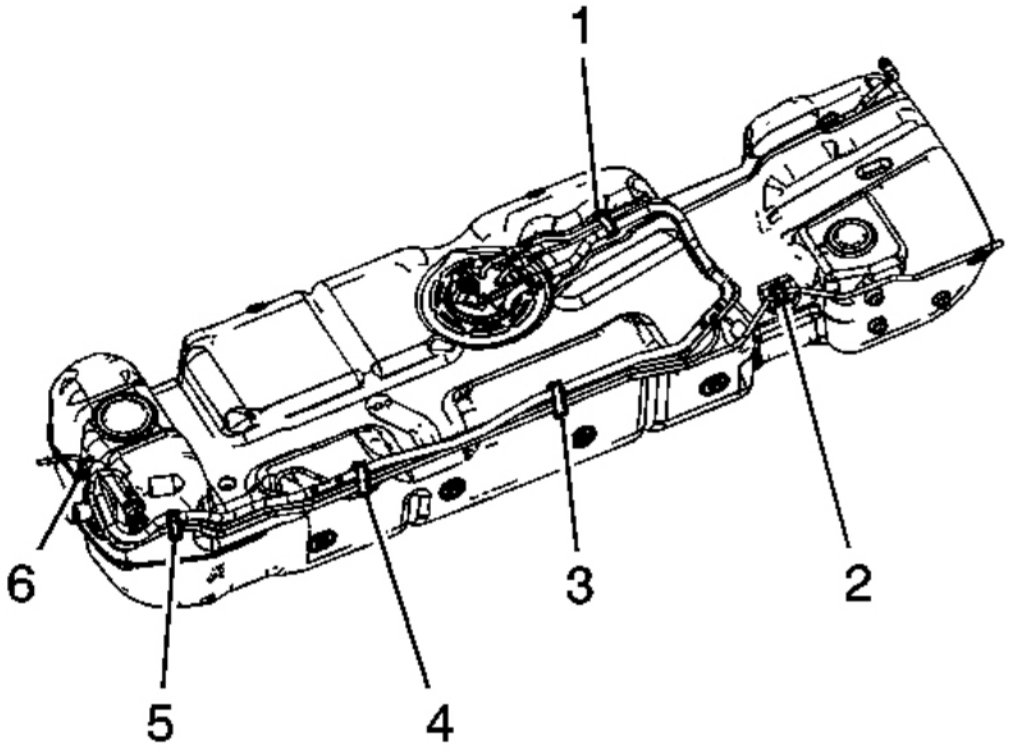

Fig. 525: View Of Fuel Tank Clips
Courtesy of GENERAL MOTORS CORP.

3. Remove the EVAP line from the fuel tank clips (2, and 6).
4. Open the fuel tank clips (1, 3, 4, and 5) and remove the EVAP lines from the clips.
5. Disconnect the EVAP line quick connect fittings at the fuel tank module and vent valve. Refer to **Quick Connect Fitting Service - Plastic Collar**.

cardiagn.com

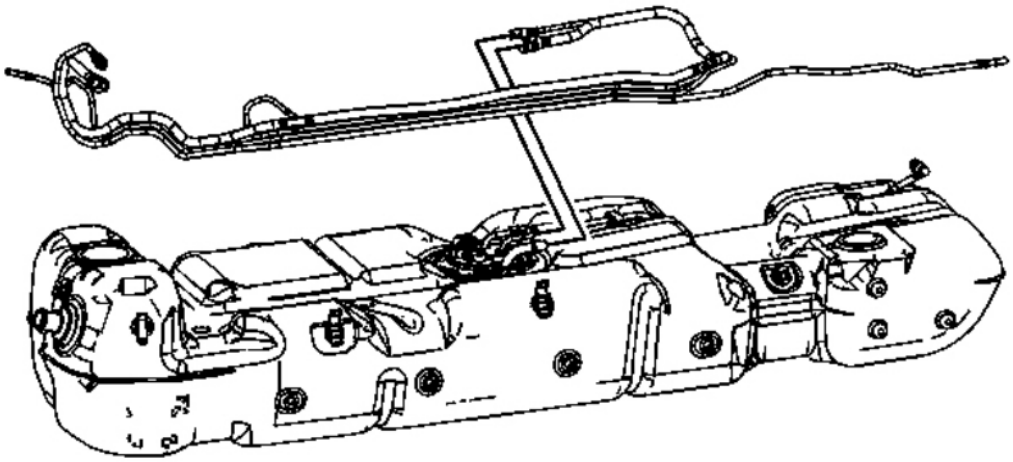

Fig. 526: View Of EVAP Lines
Courtesy of GENERAL MOTORS CORP.

6. Remove the EVAP lines from the fuel tank.

Installation Procedure

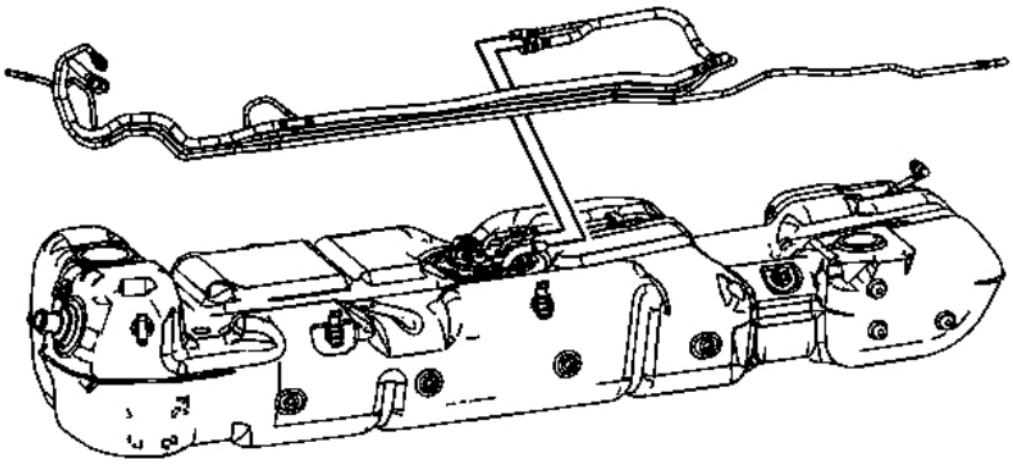

Fig. 527: View Of EVAP Lines

cardiagn.com

Courtesy of GENERAL MOTORS CORP.

1. Install the EVAP lines to the fuel tank.

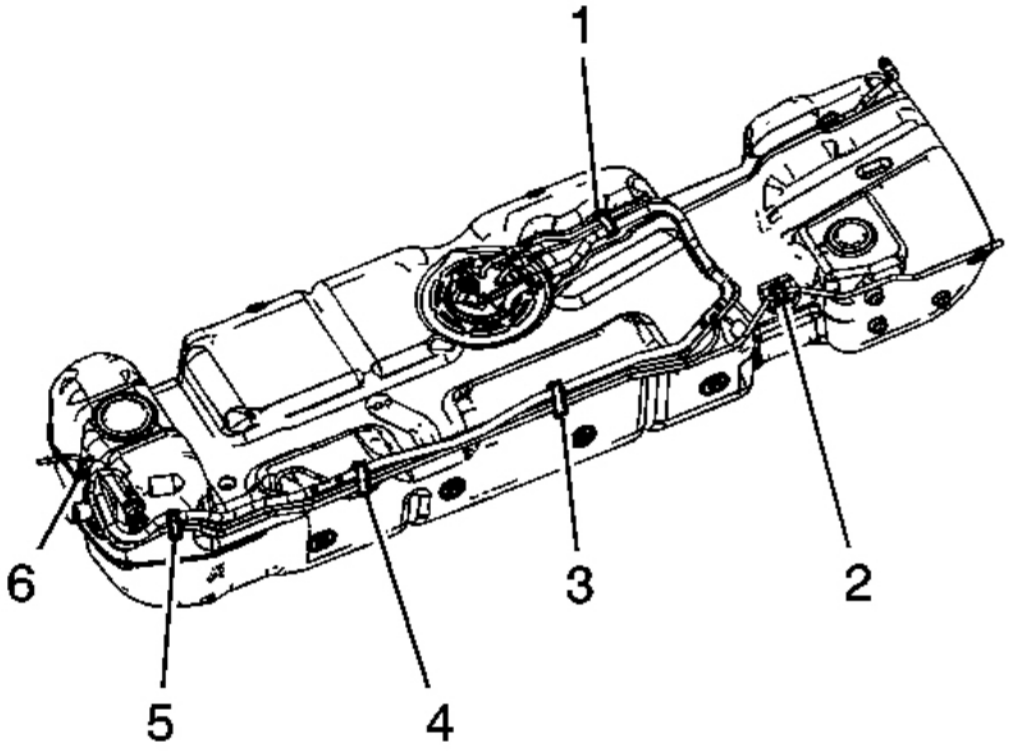

Fig. 528: View Of Fuel Tank Clips
Courtesy of GENERAL MOTORS CORP.

2. Connect the EVAP line quick connect fittings at the fuel tank module and vent valve. Refer to **Quick Connect Fitting Service - Plastic Collar**.
3. Install the EVAP lines to the fuel tank clips (1, 3, 4, and 5) and close the clips.
4. Install the EVAP line to the fuel tank clips (2, and 6).

cardiagn.com

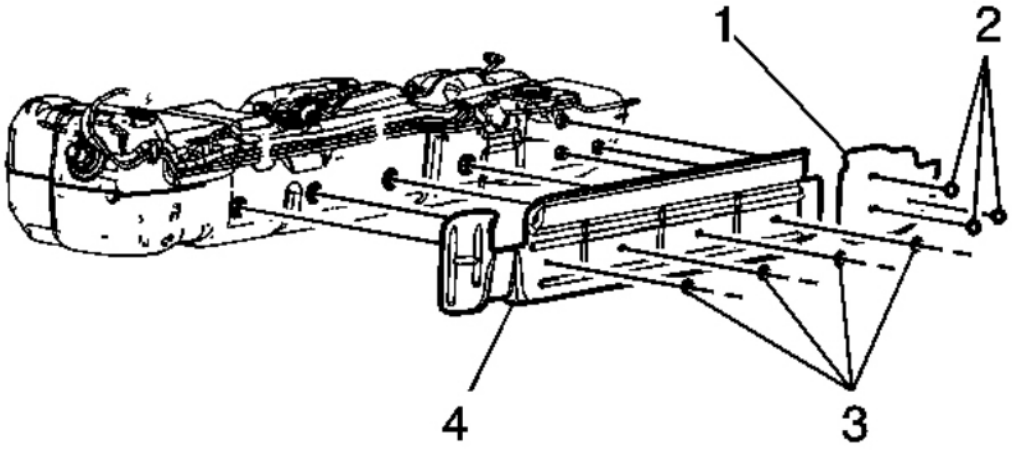

Fig. 529: View Of Fuel Tank Shields & Retainers
Courtesy of GENERAL MOTORS CORP.

5. Install the fuel tank shields (1, and 4) and retainers (2, and 3).
6. Install the fuel tank. Refer to **Fuel Tank Replacement (1500 LWB - 117.3L (31 gal) Tank)** or **Fuel Tank Replacement (1500 LWB - 117.3L (31 gal) Tank + E85)** or **Fuel Tank Replacement (1500 SWB - 98.4L (26 gal) Tank)** or **Fuel Tank Replacement (1500 SWB - 98.4L (26 gal) Tank + E85)** or **Fuel Tank Replacement (2500 LWB - 43.5L (11.5 gal) Tank-Rear)** or **Fuel Tank Replacement (2500 LWB - 98.4L (26 gal) Tank-Front)**.

EVAPORATIVE EMISSION HOSES/PIPES REPLACEMENT - CANISTER/FUEL TANK (1500 LWB - 117.3L (31 GAL) TANK W/E85)

Removal Procedure

IMPORTANT: Clean the evaporative emission (EVAP) line connections and surrounding areas prior to disconnecting the fittings in order to avoid possible EVAP system contamination.

cardiagn.com

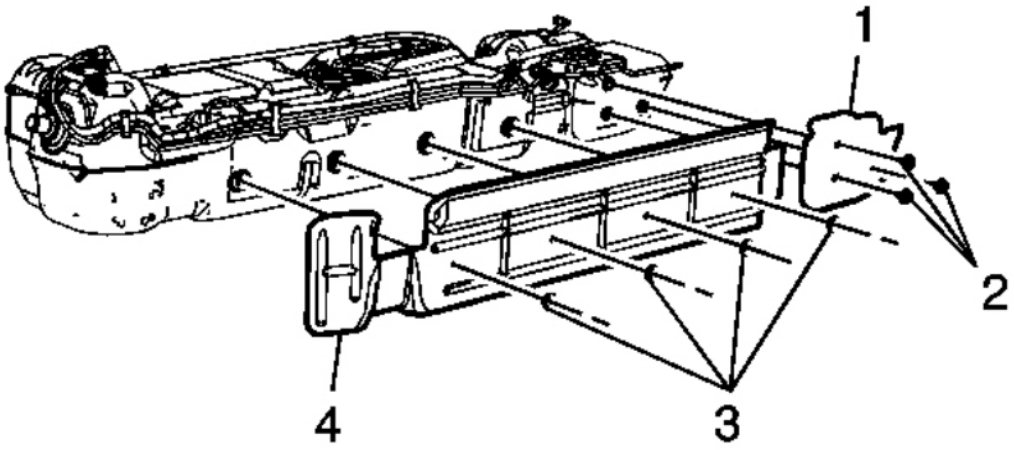

Fig. 530: View Of Fuel Tank Shields & Retainers
Courtesy of GENERAL MOTORS CORP.

1. Remove the fuel tank. Refer to **Fuel Tank Replacement (1500 LWB - 117.3L (31 gal) Tank)** or **Fuel Tank Replacement (1500 LWB - 117.3L (31 gal) Tank + E85)** or **Fuel Tank Replacement (1500 SWB - 98.4L (26 gal) Tank)** or **Fuel Tank Replacement (1500 SWB - 98.4L (26 gal) Tank + E85)** or **Fuel Tank Replacement (2500 LWB - 43.5L (11.5 gal) Tank-Rear)** or **Fuel Tank Replacement (2500 LWB - 98.4L (26 gal) Tank-Front)**.
2. Remove the fuel tank shield retainers (2, and 3) and shields (1, and 4).

cardiagn.com

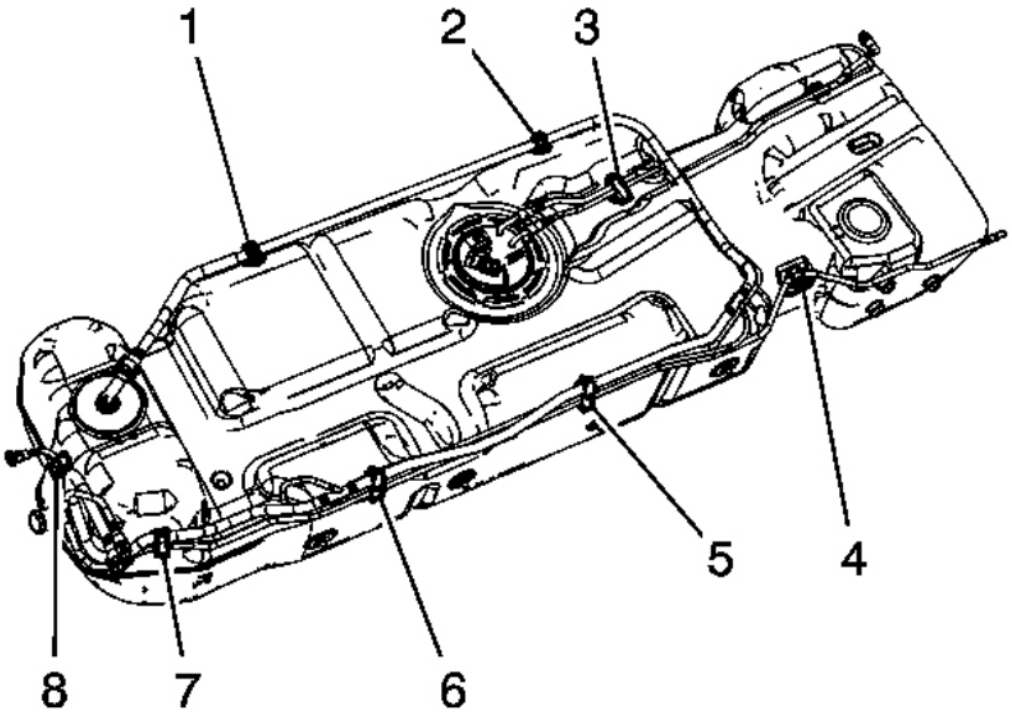

Fig. 531: View Of Fuel Tank Clips
Courtesy of GENERAL MOTORS CORP.

3. Remove the EVAP lines from the fuel tank clips (1, 2, 4 and 8).
4. Open the fuel tank clips (3, 5, 6, and 7) and remove the EVAP lines from the clips.
5. Disconnect the EVAP line quick connect fittings at the fuel tank module and vent valve. Refer to **Quick Connect Fitting Service - Plastic Collar**.

cardiagn.com

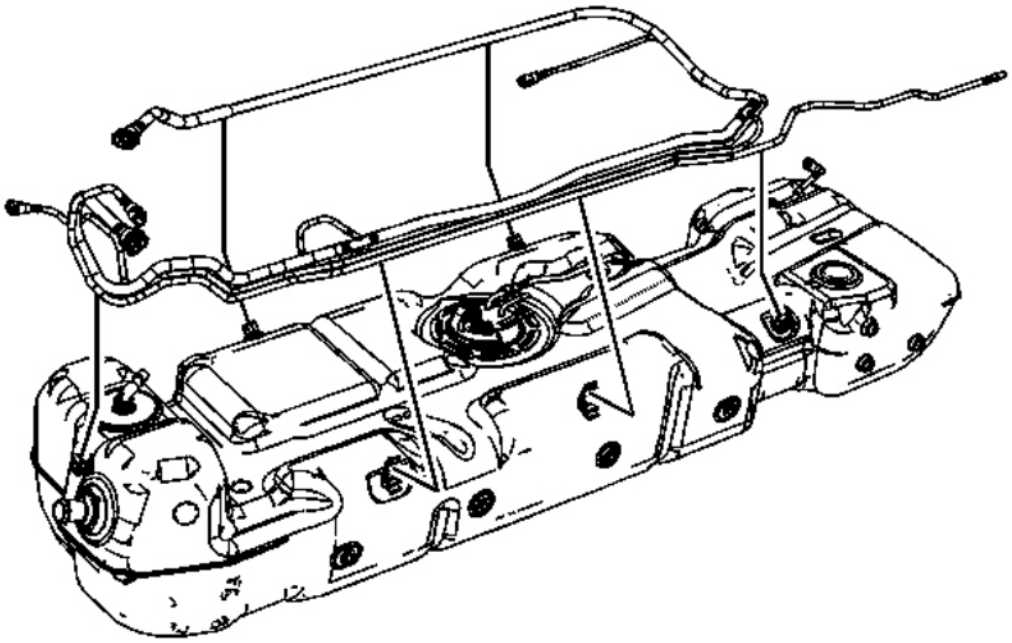

Fig. 532: View Of EVAP Lines
Courtesy of GENERAL MOTORS CORP.

6. Remove the EVAP lines from the fuel tank.

Installation Procedure

cardiagn.com

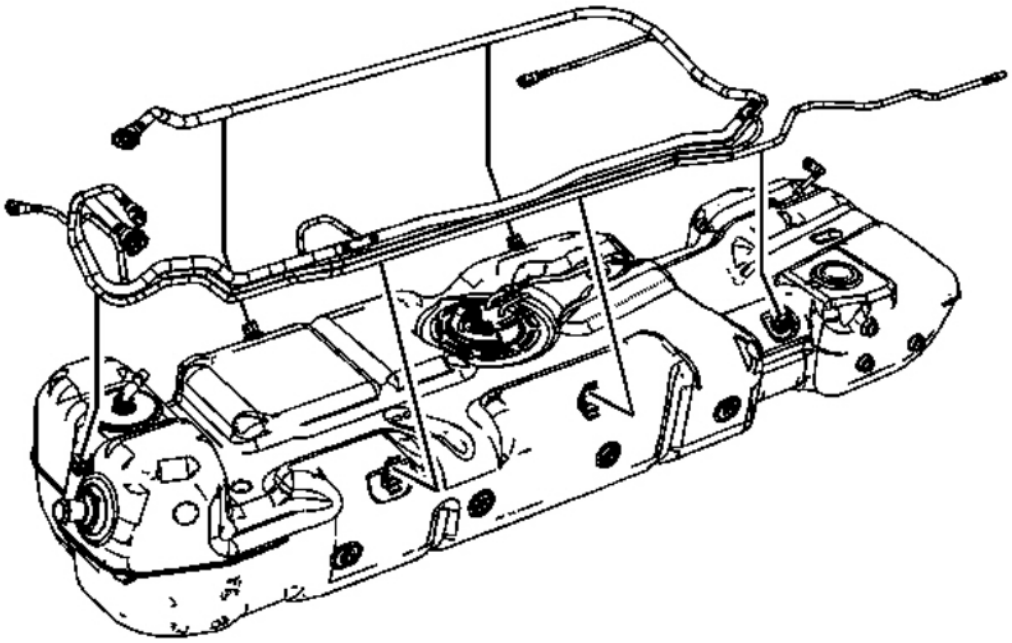

Fig. 533: View Of EVAP Lines
Courtesy of GENERAL MOTORS CORP.

1. Install the EVAP lines to the fuel tank.

cardiagn.com

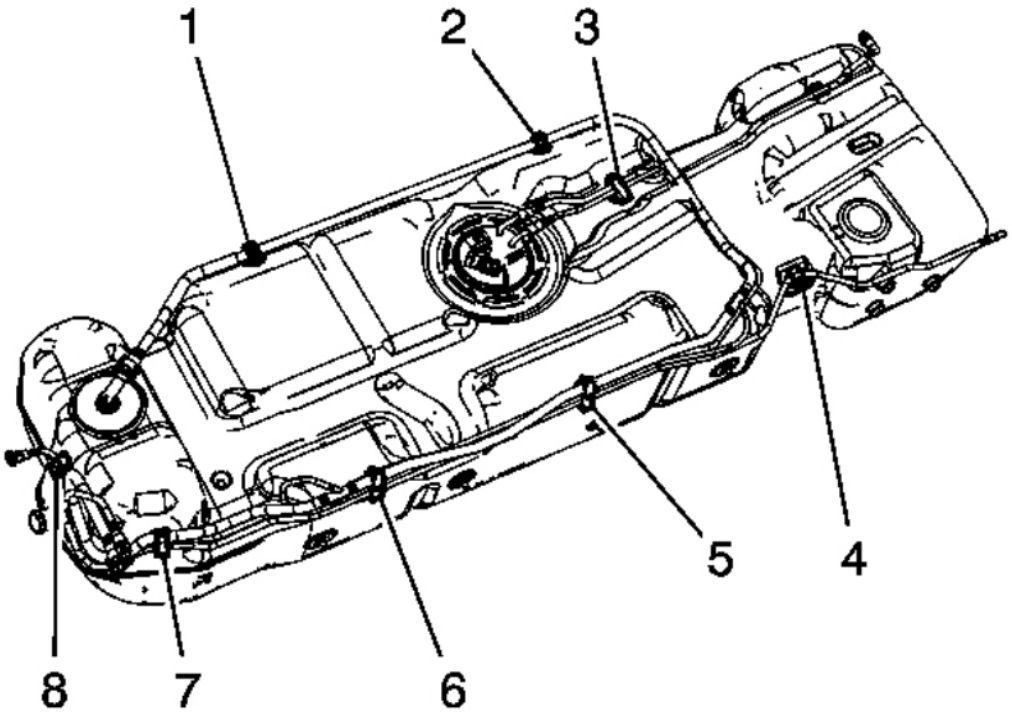

Fig. 534: View Of Fuel Tank Clips
Courtesy of GENERAL MOTORS CORP.

2. Connect the EVAP line quick connect fittings at the fuel tank module and vent valve. Refer to **Quick Connect Fitting Service - Plastic Collar**.
3. Install the EVAP lines to the fuel tank clips (3, 5, 6, and 7) and close the clips.
4. Install the EVAP lines to the fuel tank clips (1, 2, 4 and 8).

cardiagn.com

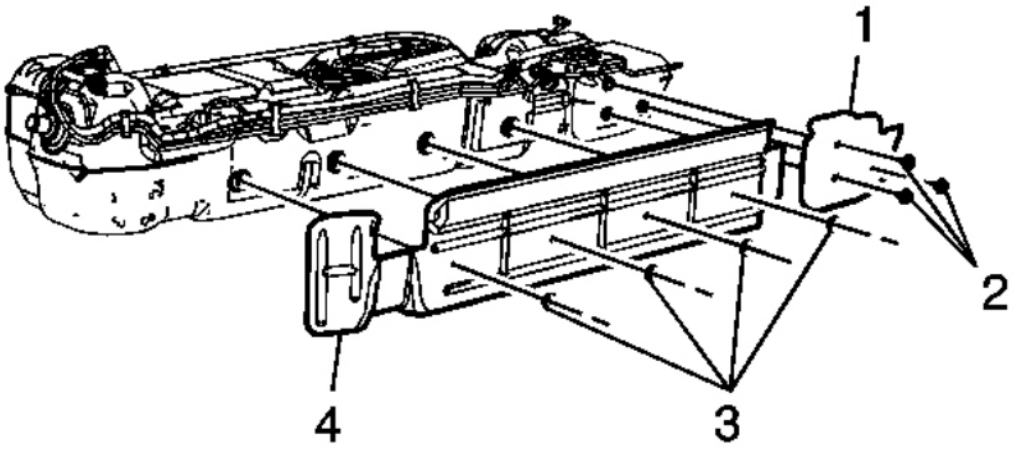

Fig. 535: View Of Fuel Tank Shields & Retainers
Courtesy of GENERAL MOTORS CORP.

5. Install the fuel tank shields (1, and 4) and retainers (2, and 3).
6. Install the fuel tank. Refer to **Fuel Tank Replacement (1500 LWB - 117.3L (31 gal) Tank)** or **Fuel Tank Replacement (1500 LWB - 117.3L (31 gal) Tank + E85)** or **Fuel Tank Replacement (1500 SWB - 98.4L (26 gal) Tank)** or **Fuel Tank Replacement (1500 SWB - 98.4L (26 gal) Tank + E85)** or **Fuel Tank Replacement (2500 LWB - 43.5L (11.5 gal) Tank-Rear)** or **Fuel Tank Replacement (2500 LWB - 98.4L (26 gal) Tank-Front)**.

EVAPORATIVE EMISSION HOSES/PIPES REPLACEMENT - CANISTER/FUEL TANK (1500 SWB - 98.4L (26 GAL) TANK)

Removal Procedure

IMPORTANT: Clean the evaporative emission (EVAP) line connections and surrounding areas prior to disconnecting the fittings in order to avoid possible EVAP system contamination.

cardiagn.com

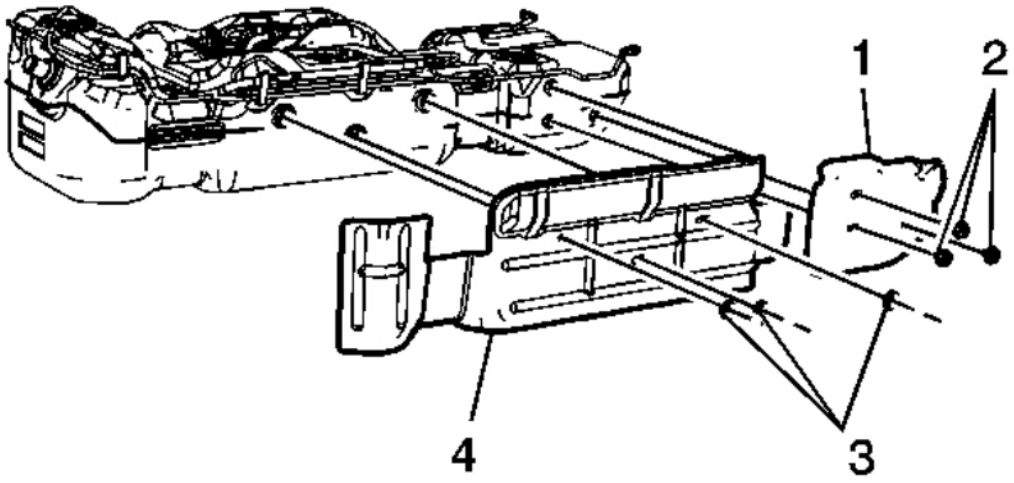

Fig. 536: View Of Fuel Tank Shield & Retainers
Courtesy of GENERAL MOTORS CORP.

1. Remove the fuel tank. Refer to **Fuel Tank Replacement (1500 LWB - 117.3L (31 gal) Tank)** or **Fuel Tank Replacement (1500 LWB - 117.3L (31 gal) Tank + E85)** or **Fuel Tank Replacement (1500 SWB - 98.4L (26 gal) Tank)** or **Fuel Tank Replacement (1500 SWB - 98.4L (26 gal) Tank + E85)** or **Fuel Tank Replacement (2500 LWB - 43.5L (11.5 gal) Tank-Rear)** or **Fuel Tank Replacement (2500 LWB - 98.4L (26 gal) Tank-Front)**.
2. Remove the fuel tank shield retainers (2, and 3) and shields (1, and 4).

cardiagn.com

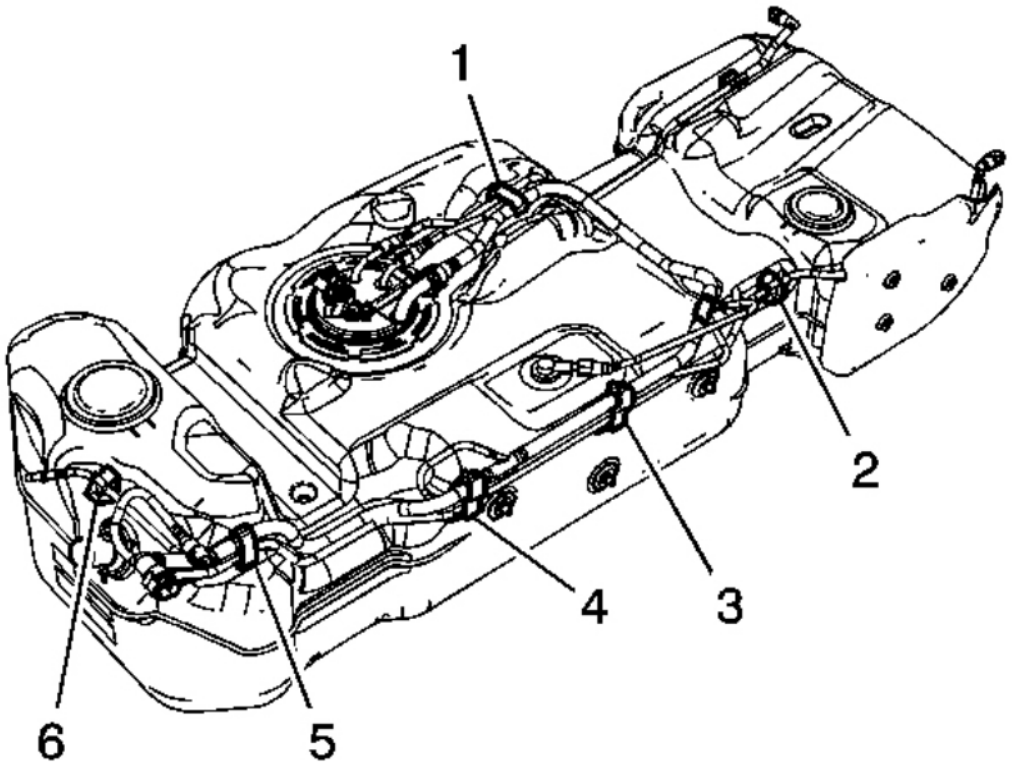

Fig. 537: View Of Fuel Tank Clips
Courtesy of GENERAL MOTORS CORP.

3. Remove the EVAP lines from the fuel tank clips (2, and 6).
4. Open the fuel tank clips (1, 3, 4, and 5) and remove the EVAP lines from the clips.
5. Disconnect the EVAP line quick connect fittings at the fuel tank module and vent valve. Refer to **Quick Connect Fitting Service - Plastic Collar**.

cardiagn.com

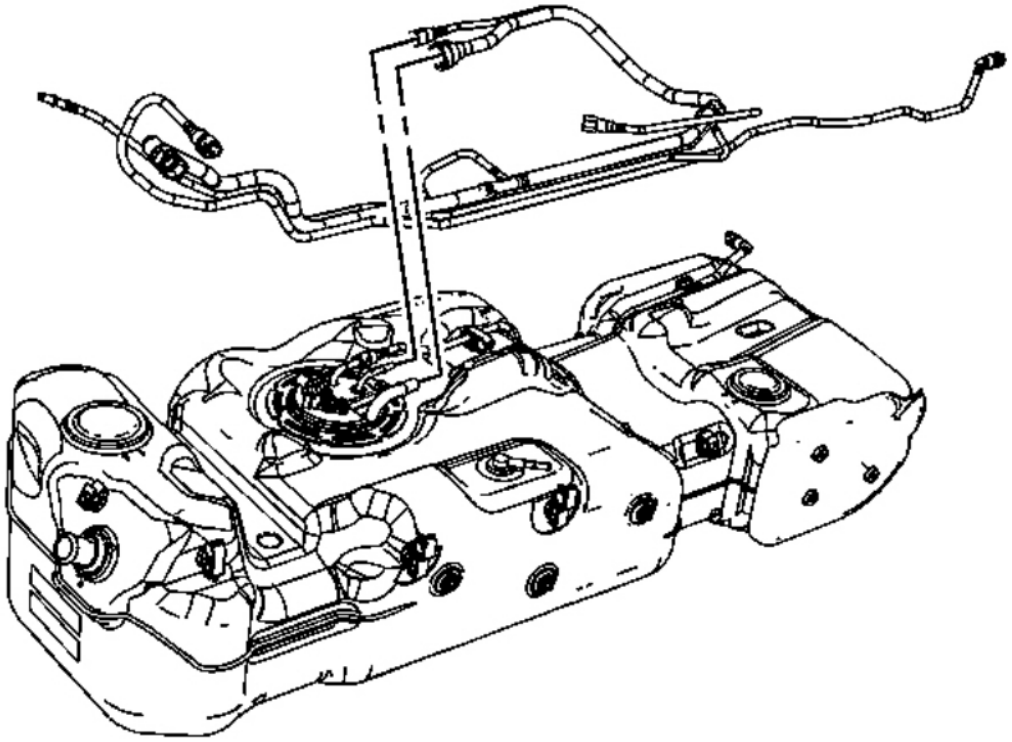

Fig. 538: View Of Fuel Tank EVAP Lines
Courtesy of GENERAL MOTORS CORP.

6. Remove the EVAP lines from the fuel tank.

Installation Procedure

cardiagn.com

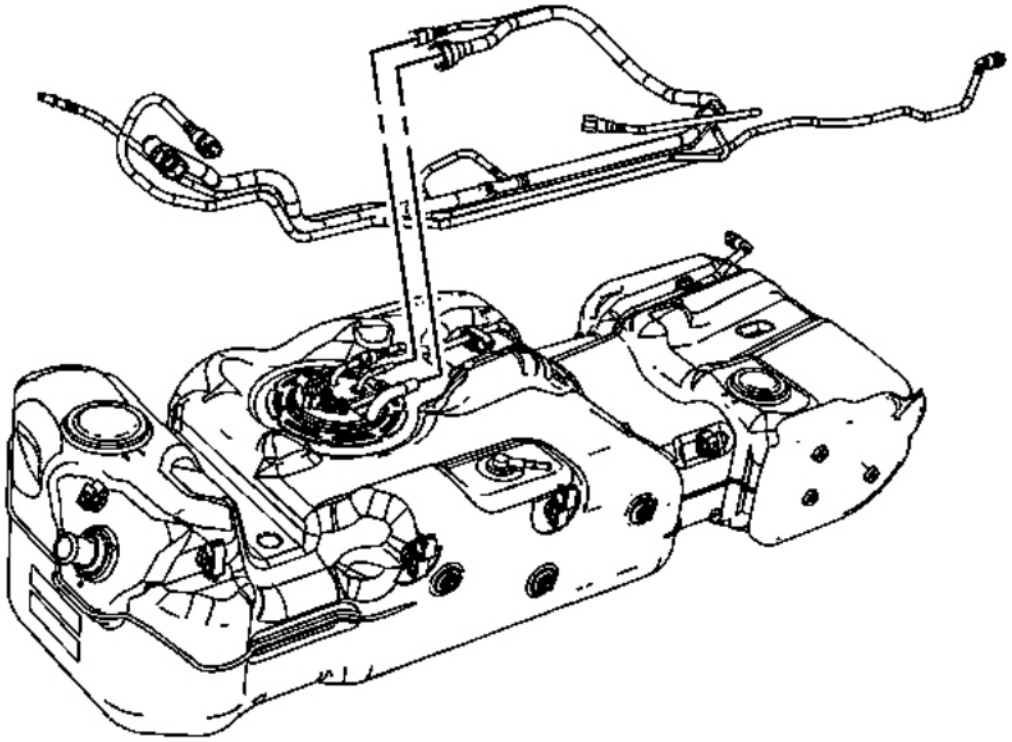

Fig. 539: View Of Fuel Tank EVAP Lines
Courtesy of GENERAL MOTORS CORP.

1. Install the EVAP lines to the fuel tank.

cardiagn.com

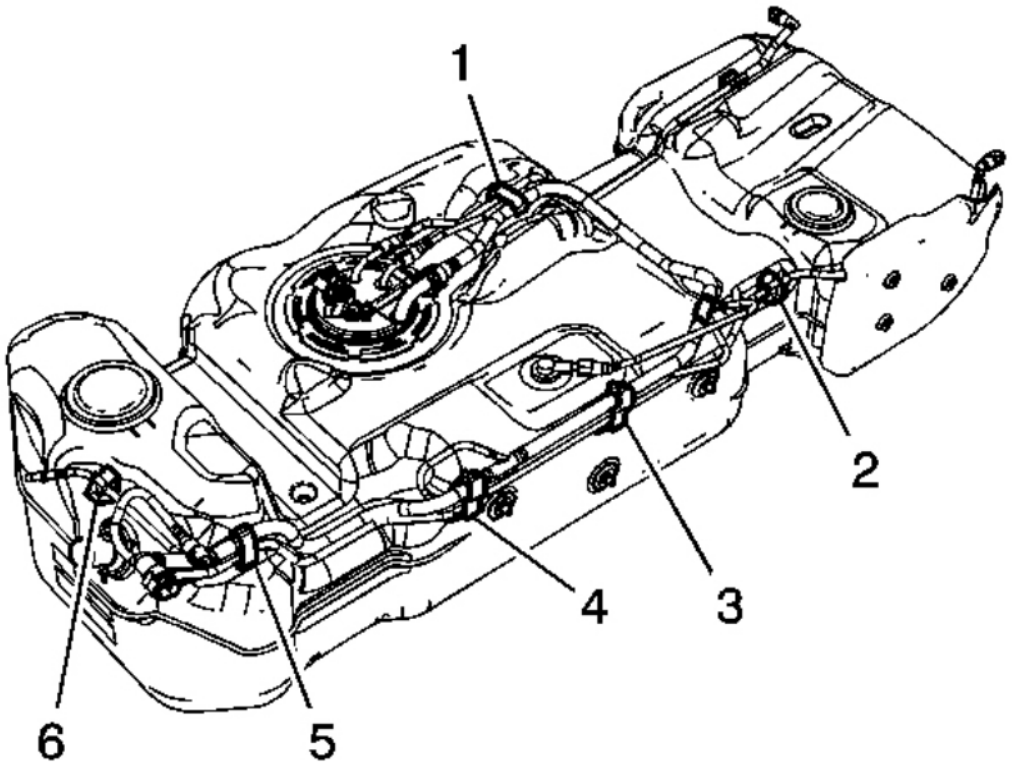

Fig. 540: View Of Fuel Tank Clips
Courtesy of GENERAL MOTORS CORP.

2. Connect the EVAP line quick connect fittings at the fuel tank module and vent valve. Refer to **Quick Connect Fitting Service - Plastic Collar**.
3. Install the EVAP lines to the fuel tank clips (1, 3, 4, and 5) and close the clips.
4. Install the EVAP lines to the fuel tank clips (2, and 6).

cardiagn.com

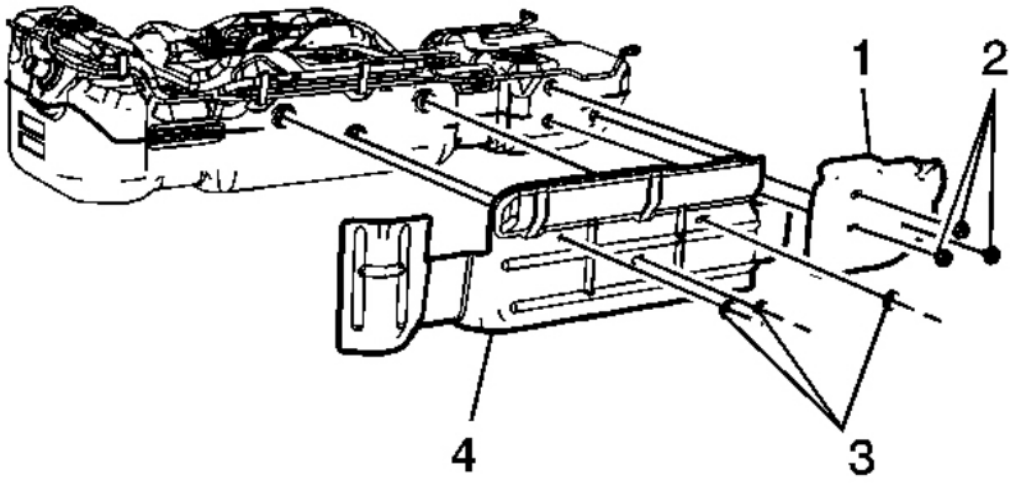

Fig. 541: View Of Fuel Tank Shield & Retainers
Courtesy of GENERAL MOTORS CORP.

5. Install the fuel tank shields (1, and 4) and retainers (2, and 3).
6. Install the fuel tank. Refer to **Fuel Tank Replacement (1500 LWB - 117.3L (31 gal) Tank)** or **Fuel Tank Replacement (1500 LWB - 117.3L (31 gal) Tank + E85)** or **Fuel Tank Replacement (1500 SWB - 98.4L (26 gal) Tank)** or **Fuel Tank Replacement (1500 SWB - 98.4L (26 gal) Tank + E85)** or **Fuel Tank Replacement (2500 LWB - 43.5L (11.5 gal) Tank-Rear)** or **Fuel Tank Replacement (2500 LWB - 98.4L (26 gal) Tank-Front)**.

EVAPORATIVE EMISSION HOSES/PIPES REPLACEMENT - CANISTER/FUEL TANK (1500 LWB - 98.4L (26 GAL) TANK W/E85)

Removal Procedure

IMPORTANT: Clean the evaporative emission (EVAP) line connections and surrounding areas prior to disconnecting the fittings in order to avoid possible EVAP system contamination.

cardiagn.com

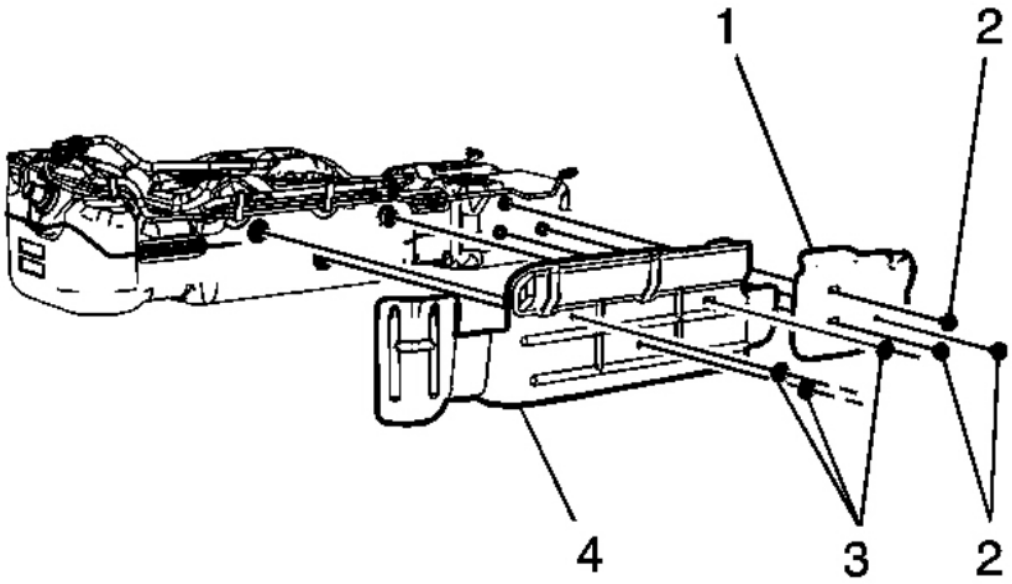

Fig. 542: View Of Fuel Tank Shields & Retainers
Courtesy of GENERAL MOTORS CORP.

1. Remove the fuel tank. Refer to **Fuel Tank Replacement (1500 LWB - 117.3L (31 gal) Tank)** or **Fuel Tank Replacement (1500 LWB - 117.3L (31 gal) Tank + E85)** or **Fuel Tank Replacement (1500 SWB - 98.4L (26 gal) Tank)** or **Fuel Tank Replacement (1500 SWB - 98.4L (26 gal) Tank + E85)** or **Fuel Tank Replacement (2500 LWB - 43.5L (11.5 gal) Tank-Rear)** or **Fuel Tank Replacement (2500 LWB - 98.4L (26 gal) Tank-Front)**.
2. Remove the fuel tank shield retainers (2, and 3) and shields (1, and 4).

cardiagn.com

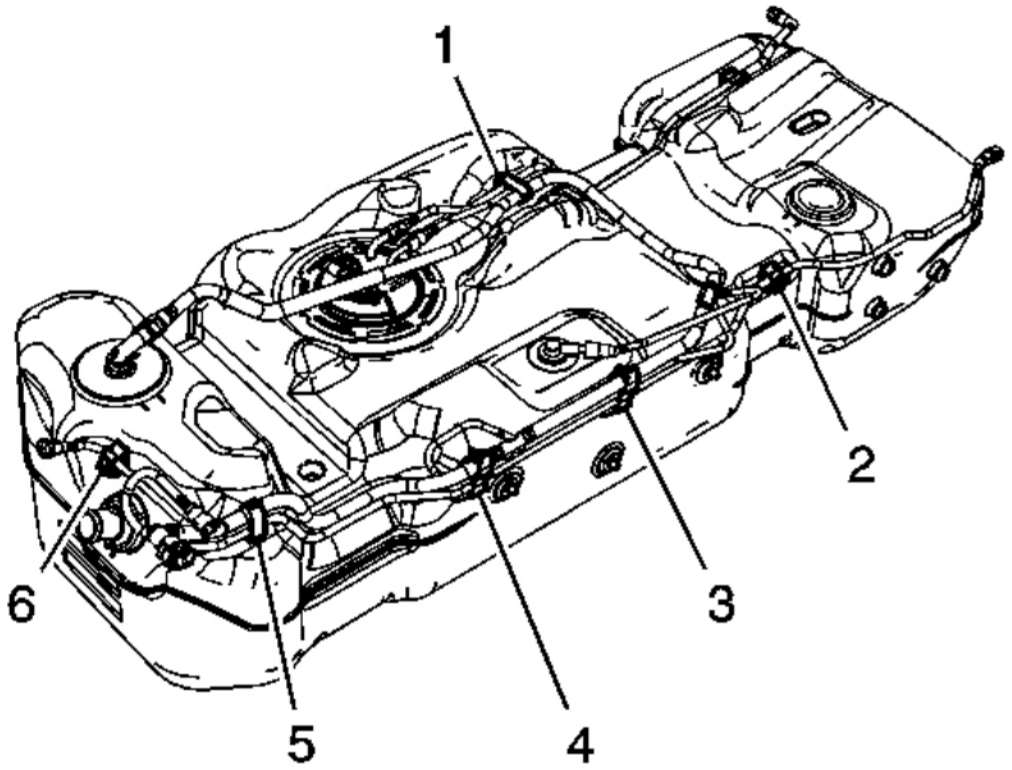

Fig. 543: View Of Fuel Tank Clips
Courtesy of GENERAL MOTORS CORP.

3. Remove the EVAP lines from the fuel tank clips (2, and 6).
4. Open the fuel tank clips (1, 3, 4, and 5) and remove the EVAP lines from the clips.
5. Disconnect the EVAP line quick connect fittings at the fuel tank module and vent valves. Refer to **Quick Connect Fitting Service - Plastic Collar**.

cardiagn.com

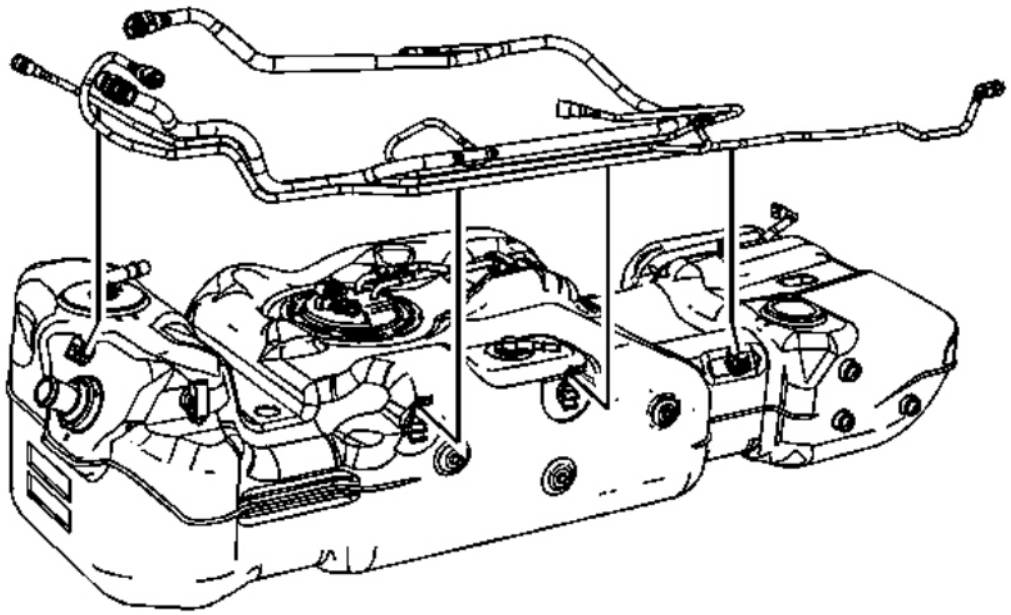

Fig. 544: View Of Fuel Tank EVAP Lines
Courtesy of GENERAL MOTORS CORP.

6. Remove the EVAP lines from the fuel tank.

Installation Procedure

cardiagn.com

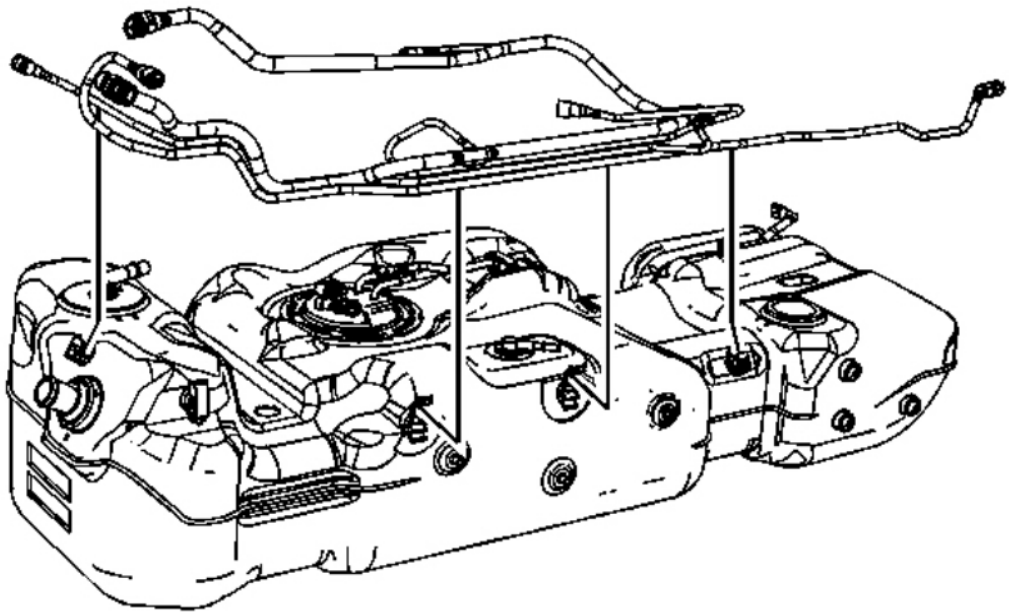

Fig. 545: View Of Fuel Tank EVAP Lines
Courtesy of GENERAL MOTORS CORP.

1. Install the EVAP lines from the fuel tank.

cardiagn.com

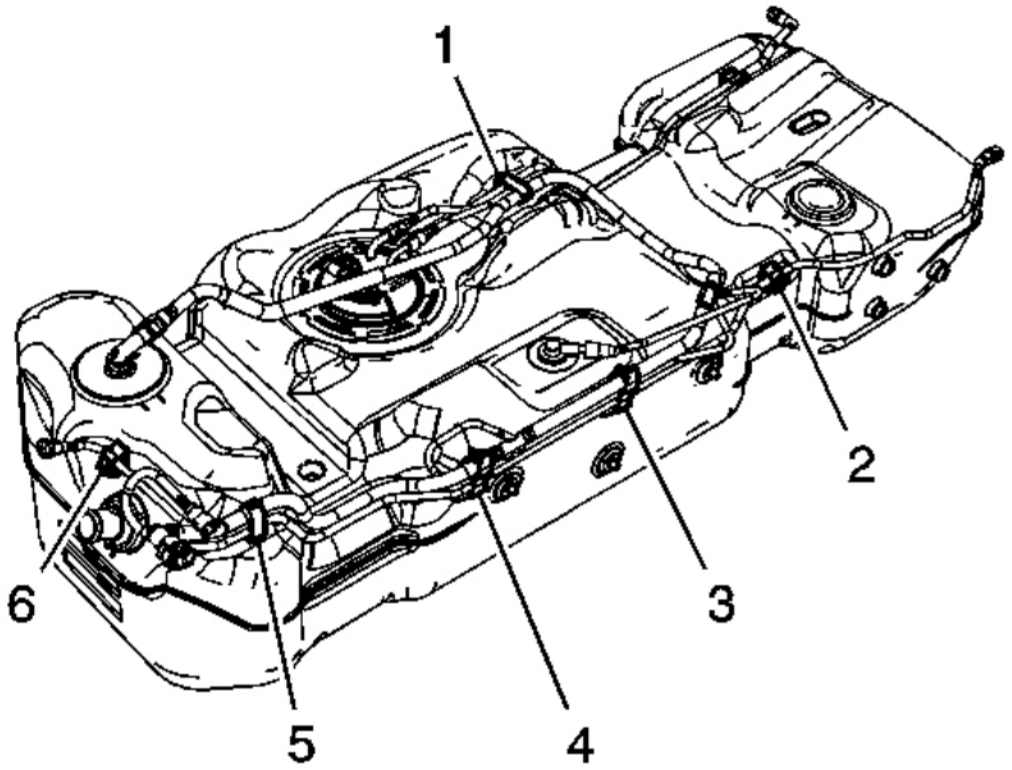

Fig. 546: View Of Fuel Tank Clips
Courtesy of GENERAL MOTORS CORP.

2. Connect the EVAP line quick connect fittings at the fuel tank module and vent valves. Refer to **Quick Connect Fitting Service - Plastic Collar**.
3. Install the EVAP lines to the fuel tank clips (1, 3, 4, and 5) and close the clips.
4. Install the EVAP lines to the fuel tank clips (2, and 6).

cardiagn.com

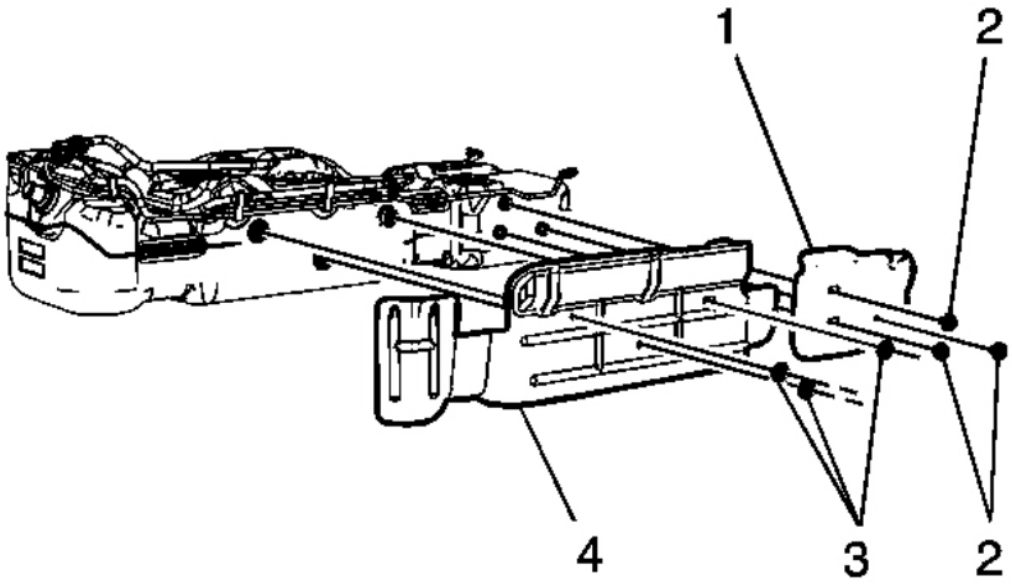

Fig. 547: View Of Fuel Tank Shields & Retainers
Courtesy of GENERAL MOTORS CORP.

5. Install the fuel tank shields (1, and 4) and retainers (2, and 3).
6. Install the fuel tank. Refer to **Fuel Tank Replacement (1500 LWB - 117.3L (31 gal) Tank)** or **Fuel Tank Replacement (1500 LWB - 117.3L (31 gal) Tank + E85)** or **Fuel Tank Replacement (1500 SWB - 98.4L (26 gal) Tank)** or **Fuel Tank Replacement (1500 SWB - 98.4L (26 gal) Tank + E85)** or **Fuel Tank Replacement (2500 LWB - 43.5L (11.5 gal) Tank-Rear)** or **Fuel Tank Replacement (2500 LWB - 98.4L (26 gal) Tank-Front)**.

EVAPORATIVE EMISSION HOSES/PIPES REPLACEMENT - CANISTER/FUEL TANK (2500 LWB - 43.5L (11.5 GAL) TANK-REAR)

Removal Procedure

IMPORTANT: Clean the evaporative emission (EVAP) line connections and surrounding areas prior to disconnecting the fittings in order to avoid possible EVAP system contamination.

cardiagn.com

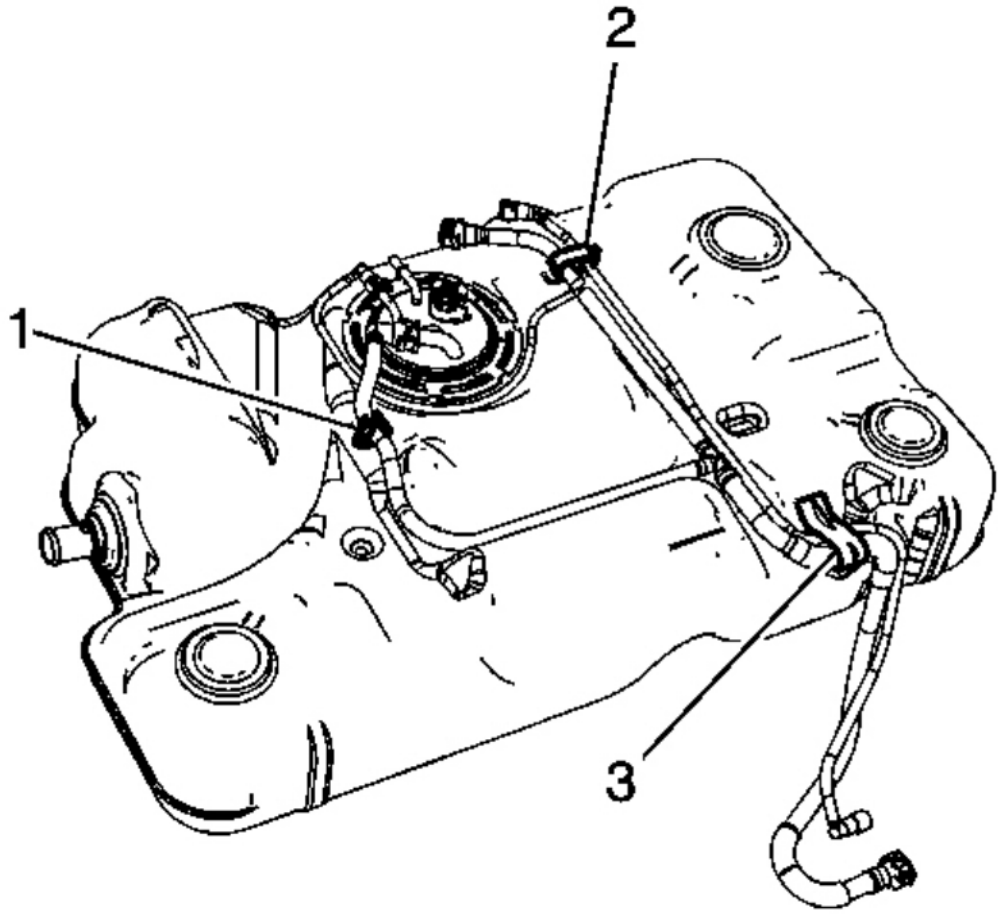

Fig. 548: View Of EVAP Line Clips
Courtesy of GENERAL MOTORS CORP.

1. Remove the rear fuel tank. Refer to **Fuel Tank Replacement (1500 LWB - 117.3L (31 gal) Tank)** or **Fuel Tank Replacement (1500 LWB - 117.3L (31 gal) Tank + E85)** or **Fuel Tank Replacement (1500 SWB - 98.4L (26 gal) Tank)** or **Fuel Tank Replacement (1500 SWB - 98.4L (26 gal) Tank + E85)** or **Fuel Tank Replacement (2500 LWB - 43.5L (11.5 gal) Tank-Rear)** or **Fuel Tank Replacement (2500 LWB - 98.4L (26 gal) Tank-Front)**.
2. Remove the EVAP line from the clip (1) on the fuel tank.
3. Open the EVAP line clip (2) and remove the EVAP line from the clip.
4. Remove the EVAP lines from the clip (3).
5. Disconnect the EVAP line quick connect fittings from the fuel tank module. Refer to **Quick Connect Fitting Service - Plastic Collar**.

cardiagn.com

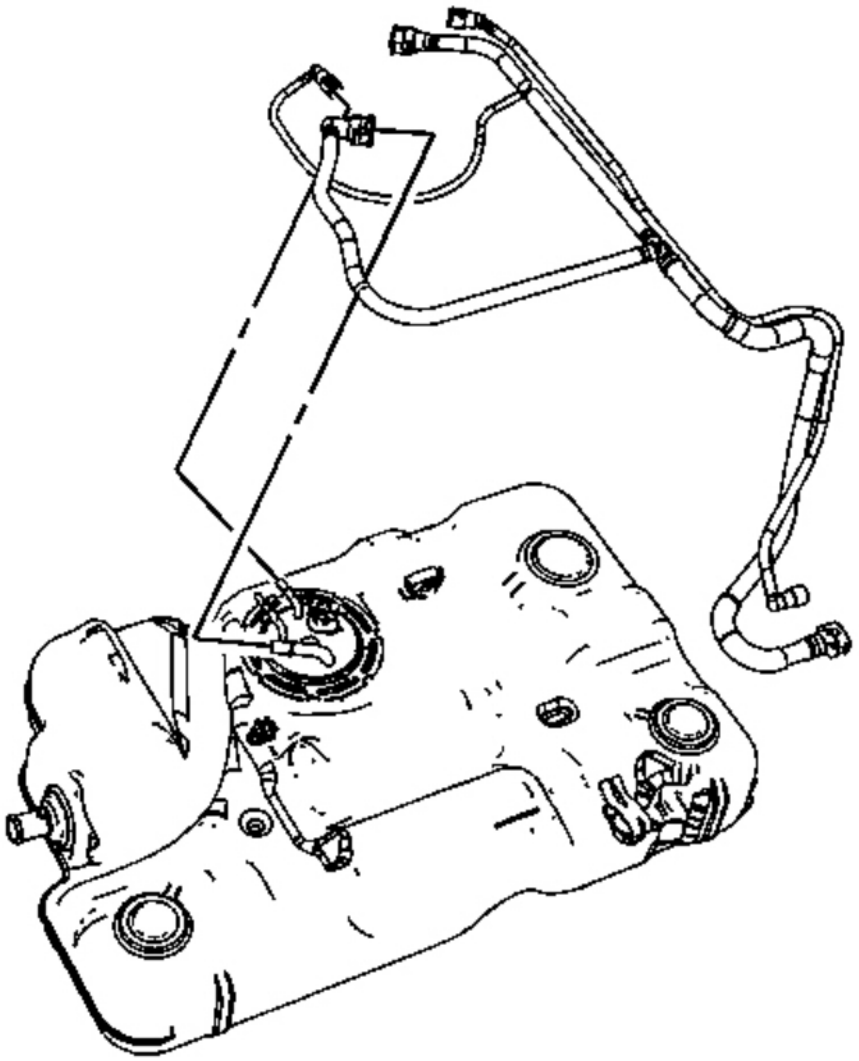

Fig. 549: View Of Fuel Tank EVAP Lines
Courtesy of GENERAL MOTORS CORP.

6. Remove the EVAP lines from the fuel tank.

Installation Procedure

cardiagn.com

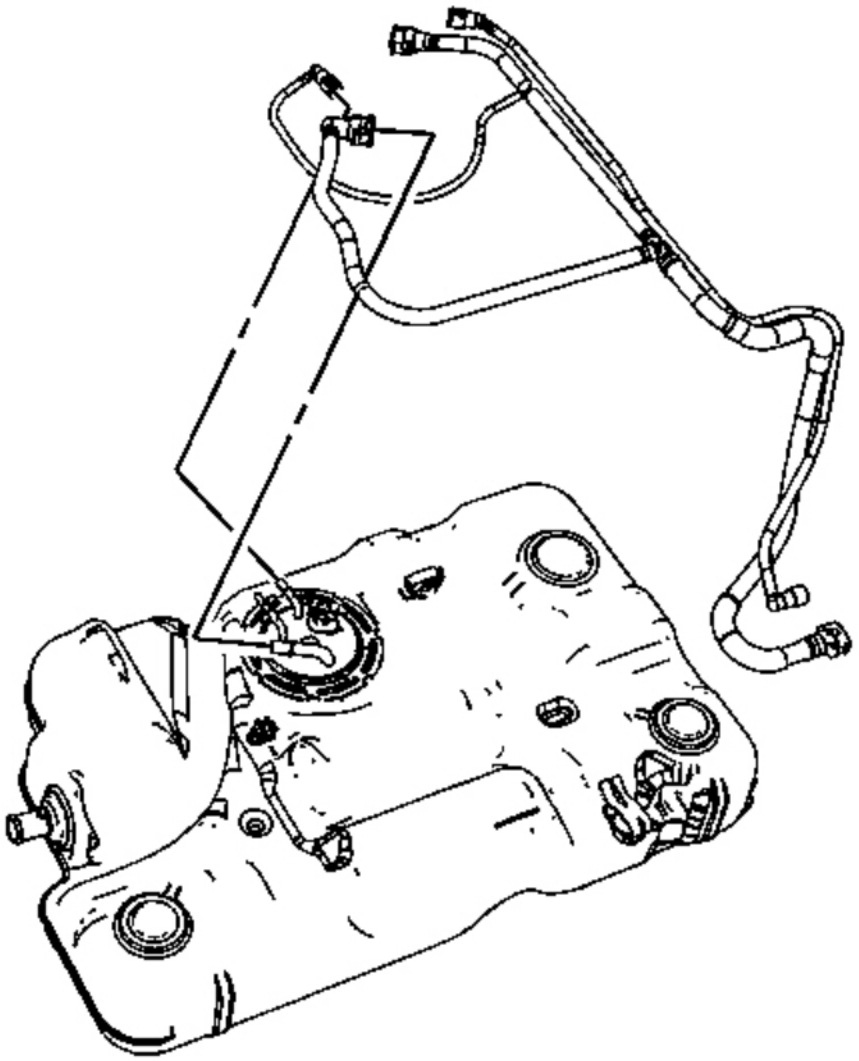

Fig. 550: View Of Fuel Tank EVAP Lines
Courtesy of GENERAL MOTORS CORP.

1. Install the EVAP lines to the fuel tank.

cardiagn.com

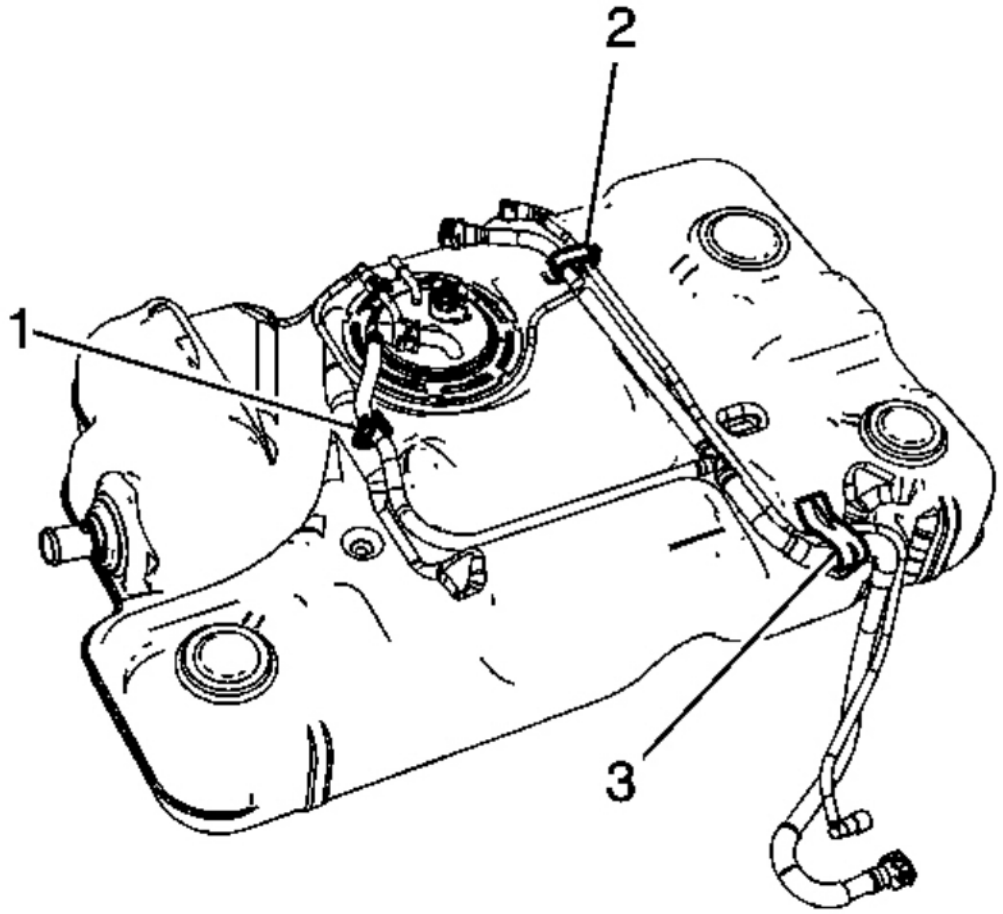

Fig. 551: View Of EVAP Line Clips
Courtesy of GENERAL MOTORS CORP.

2. Connect the EVAP line quick connect fittings to the fuel tank module. Refer to **Quick Connect Fitting Service - Plastic Collar**.
3. Install the EVAP lines to the clip (3).
4. Install the EVAP line to the clip (2) and close the clip.
5. Install the EVAP line to the clip (1) on the fuel tank.
6. Install the rear fuel tank. Refer to **Fuel Tank Replacement (1500 LWB - 117.3L (31 gal) Tank)** or **Fuel Tank Replacement (1500 LWB - 117.3L (31 gal) Tank + E85)** or **Fuel Tank Replacement (1500 SWB - 98.4L (26 gal) Tank)** or **Fuel Tank Replacement (1500 SWB - 98.4L (26 gal) Tank + E85)** or **Fuel Tank Replacement (2500 LWB - 43.5L (11.5 gal) Tank-Rear)** or **Fuel Tank Replacement (2500 LWB - 98.4L (26 gal) Tank-Front)**.

cardiagn.com

EVAPORATIVE EMISSION CANISTER REPLACEMENT (1500 SERIES)

Removal Procedure

IMPORTANT: Clean all evaporative emission (EVAP) line connections and surrounding areas prior to disconnecting, in order to avoid possible EVAP system contamination.

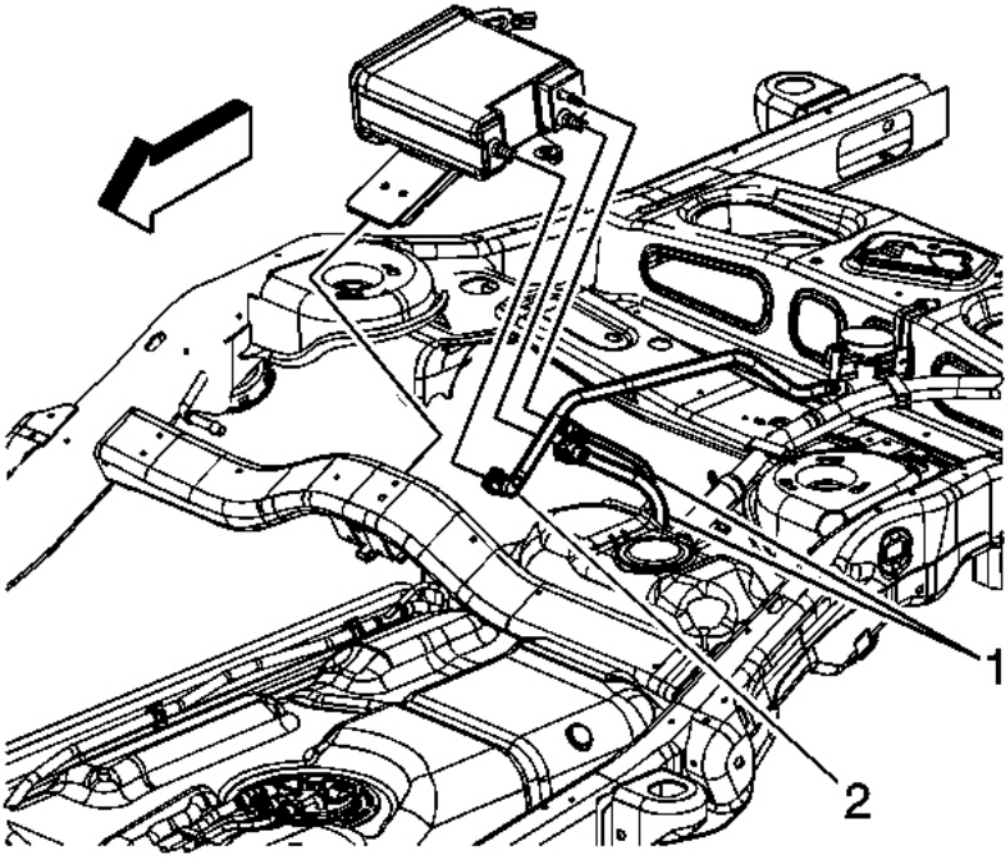

Fig. 552: View Of Fuel Tank EVAP Lines & Canister
Courtesy of GENERAL MOTORS CORP.

1. Raise and support the vehicle. Refer to **Lifting and Jacking the Vehicle** .
2. Remove the EVAP canister bracket bolts and lower the EVAP canister.
3. Disconnect the fuel tank EVAP line quick connect fittings (1) from the EVAP canister. Refer to **Quick Connect Fitting Service - Plastic Collar**.

cardiagn.com

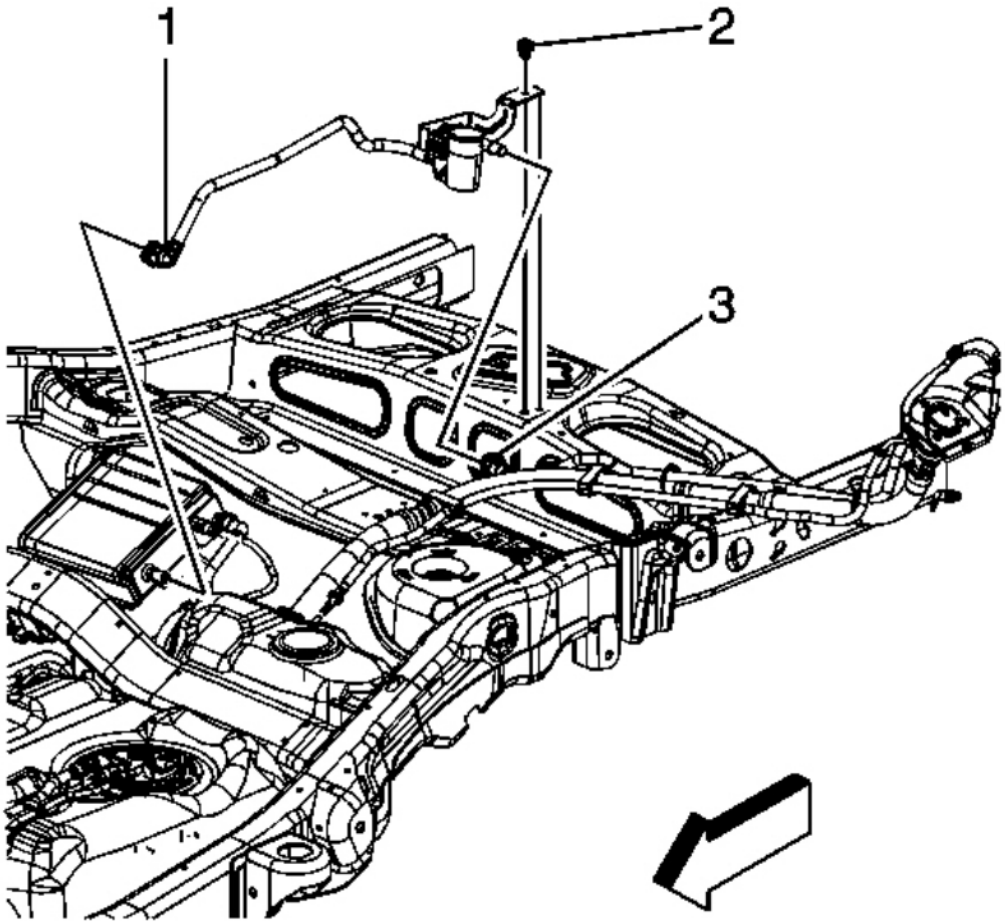

Fig. 553: View Of Quick Connect Fittings
Courtesy of GENERAL MOTORS CORP.

4. Disconnect the EVAP canister vent solenoid quick connecting fitting (1) from the EVAP canister. Refer to **Quick Connect Fitting Service - Plastic Collar**.

cardiagn.com

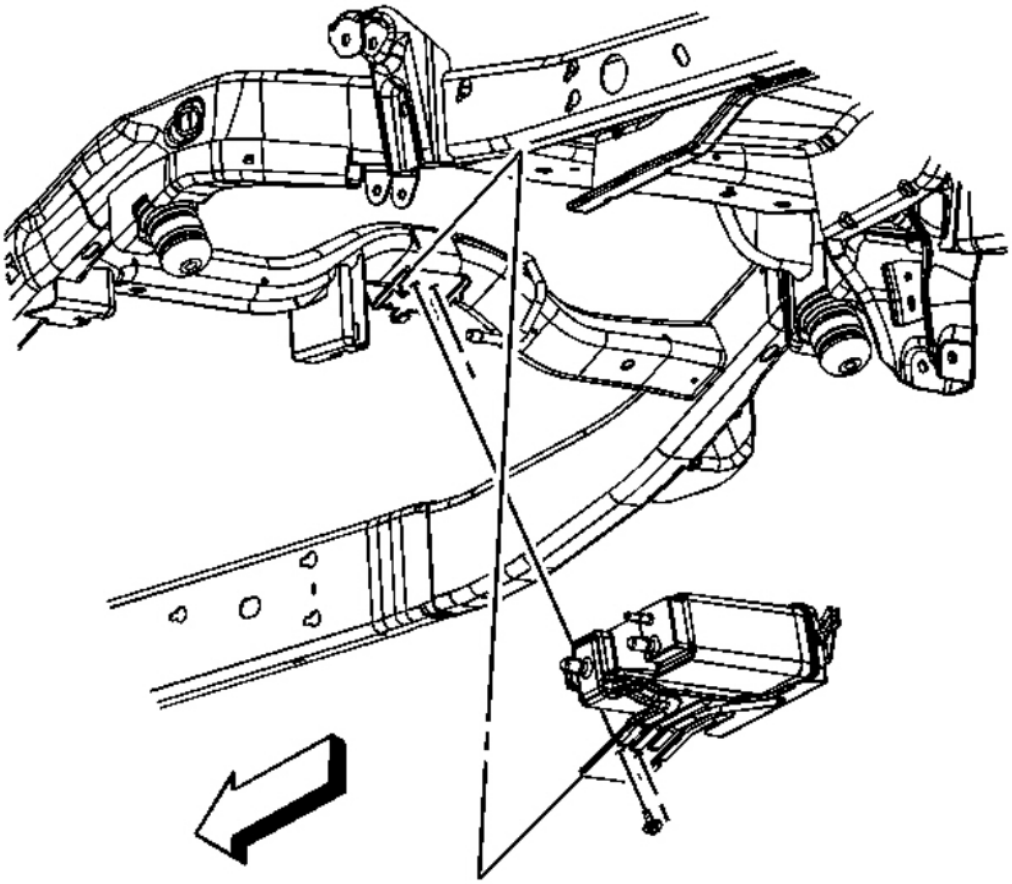

Fig. 554: View Of EVAP Canister, Bracket & Bolts
Courtesy of GENERAL MOTORS CORP.

5. Remove the EVAP canister.
6. If necessary, remove the EVAP canister to bracket bolt.
7. If necessary, remove the EVAP canister from the bracket.

Installation Procedure

cardiagn.com

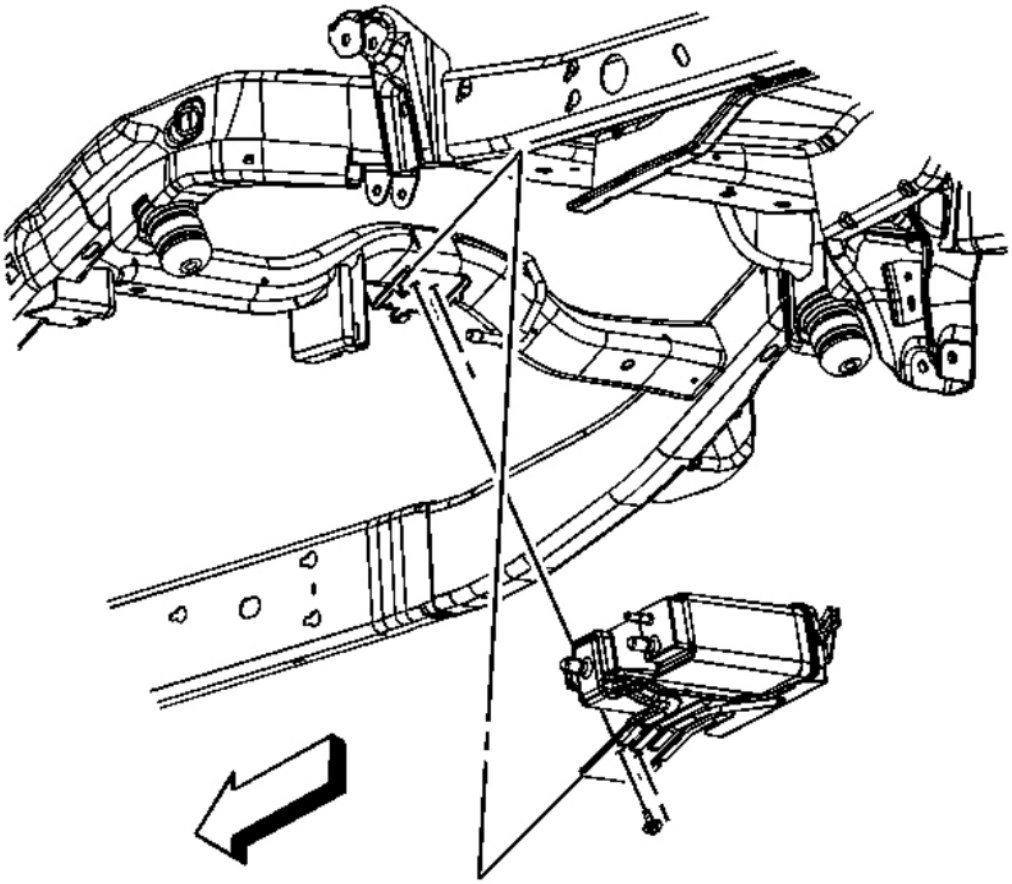

Fig. 555: View Of EVAP Canister, Bracket & Bolts
Courtesy of GENERAL MOTORS CORP.

1. If necessary, install the EVAP canister to the bracket.

   NOTE: **Refer to Fastener Notice .**

2. If necessary, install the EVAP canister to bracket bolt.

   Tighten: Tighten the bolt to 25 N.m (18 lb ft).

3. Position the EVAP canister.

cardiagn.com

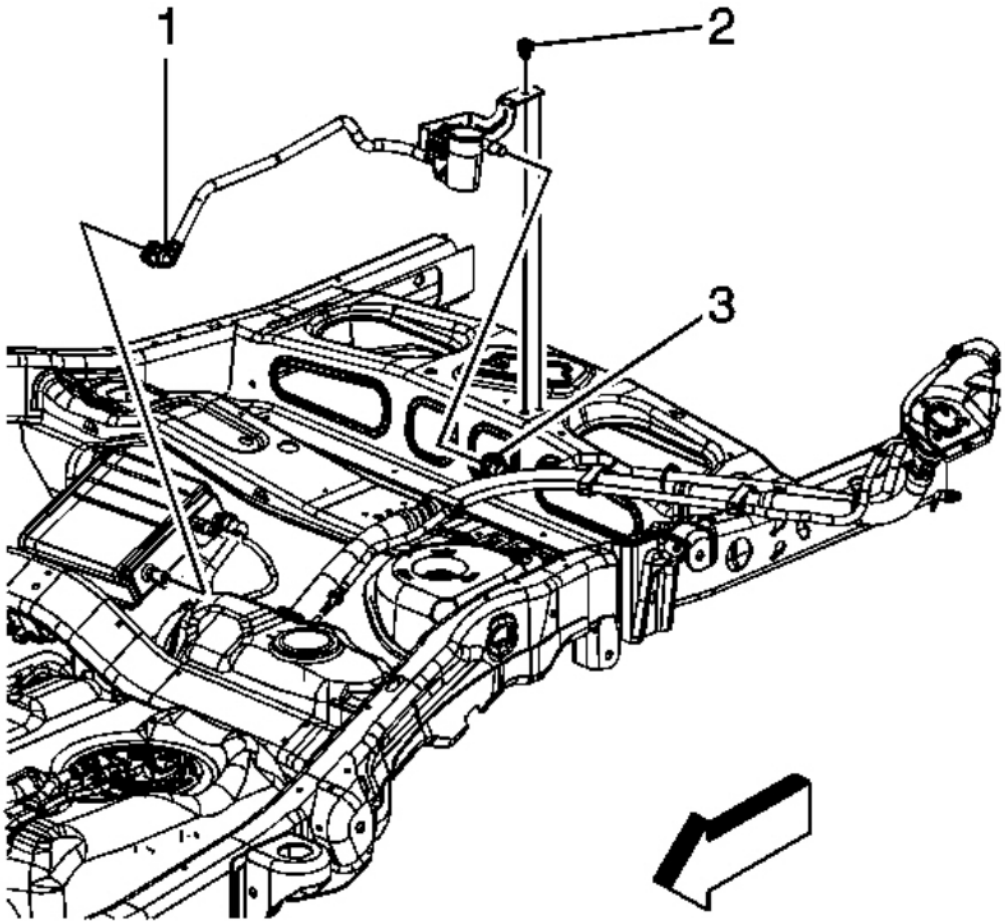

Fig. 556: View Of Quick Connect Fittings
Courtesy of GENERAL MOTORS CORP.

4. Connect the EVAP canister vent solenoid quick connecting fitting (1) to the EVAP canister. Refer to **Quick Connect Fitting Service - Plastic Collar**.

cardiagn.com

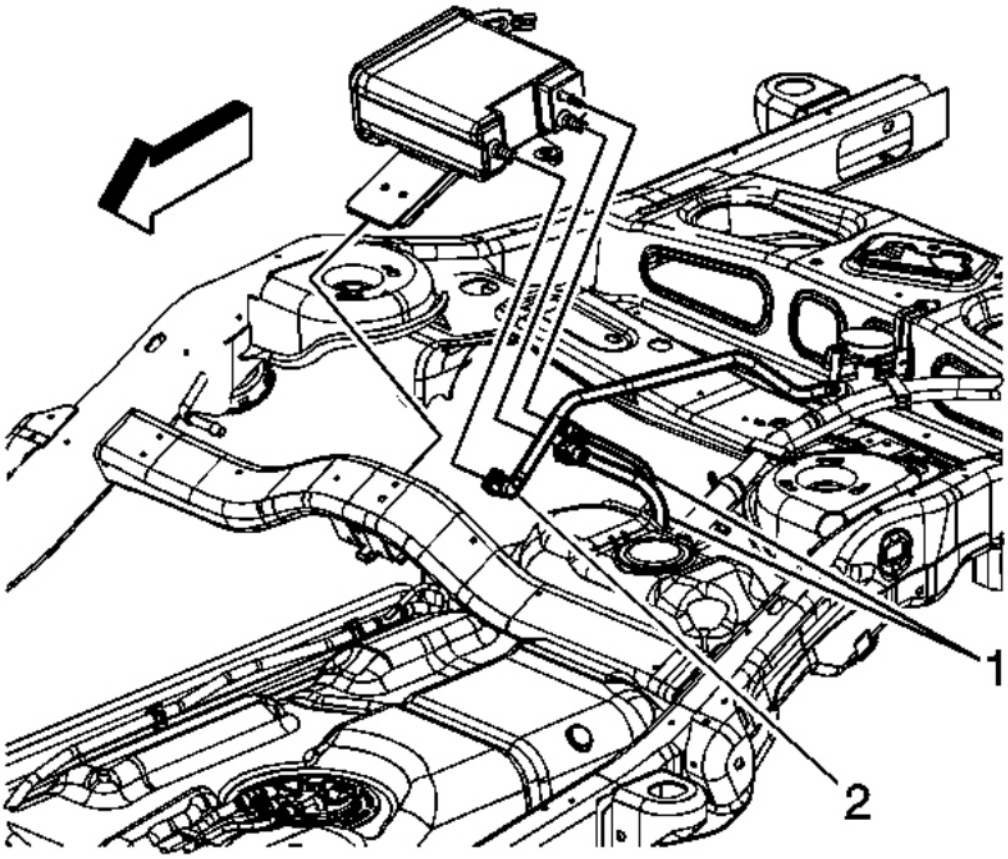

Fig. 557: View Of Fuel Tank EVAP Lines & Canister
Courtesy of GENERAL MOTORS CORP.

5. Connect the fuel tank EVAP line quick connect fittings (1) to the EVAP canister. Refer to **Quick Connect Fitting Service - Plastic Collar**.
6. Install the EVAP canister bracket bolts.

   Tighten: Tighten the bolts to 25 N.m (18 lb ft).

7. Lower the vehicle.

EVAPORATIVE EMISSION CANISTER REPLACEMENT (2500 SERIES)

Removal Procedure

cardiagn.com

IMPORTANT: Clean all evaporative emission (EVAP) line connections and surrounding areas prior to disconnecting, in order to avoid possible EVAP system contamination.

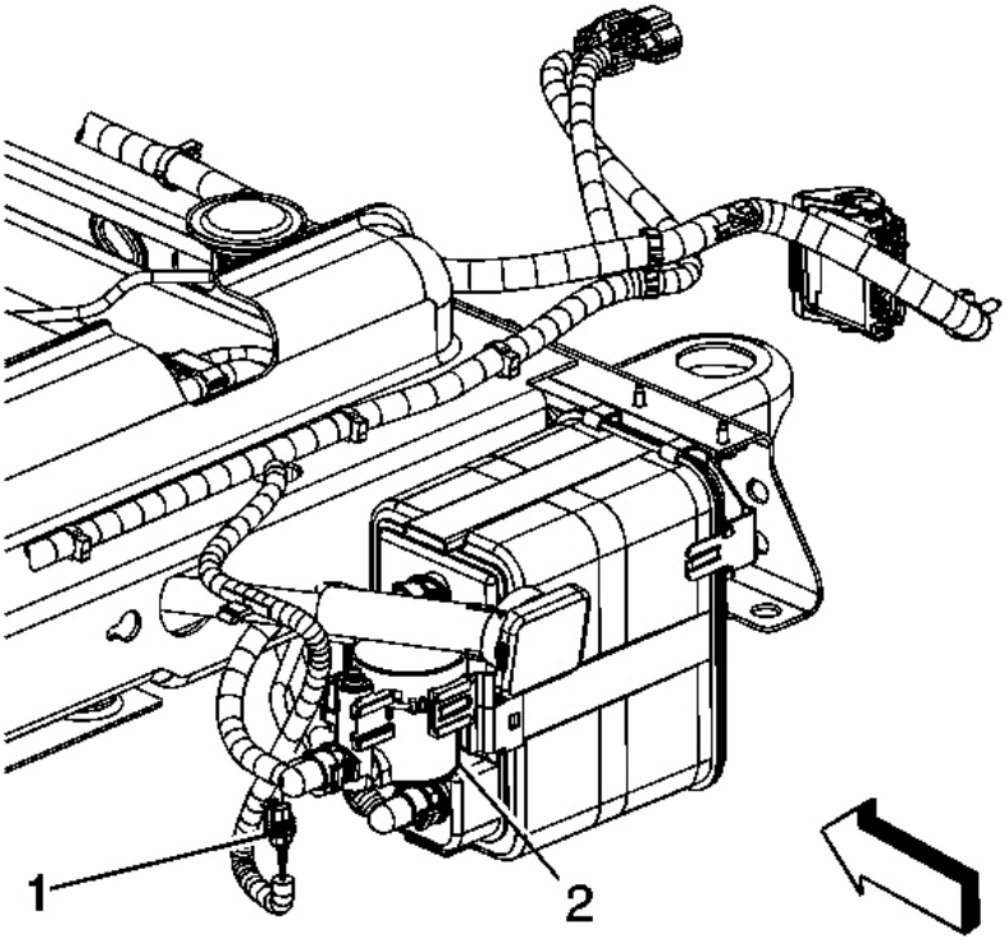

Fig. 558: View Of EVAP CVS Electrical Connector & CVS Bracket
Courtesy of GENERAL MOTORS CORP.

1. Remove the right side, rear bumper step pad. Refer to **Step Pad Replacement - Side Rear Bumper (Avalanche, Cadillac EXT)** .
2. Raise and support the vehicle. Refer to **Lifting and Jacking the Vehicle** .
3. Disconnect the chassis wiring harness electrical connector (1) from the EVAP canister vent solenoid.

cardiagn.com

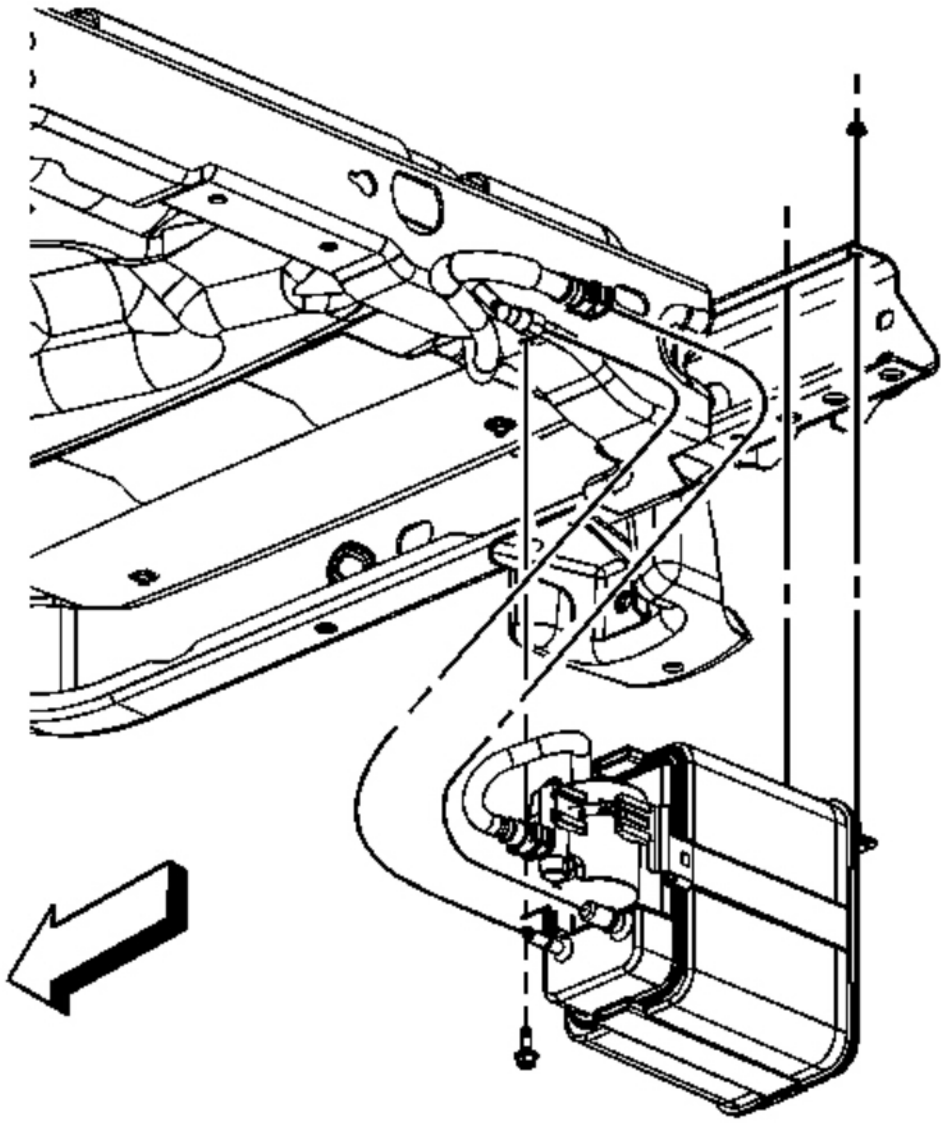

Fig. 559: View Of EVAP Canister & Quick Connect Fittings
Courtesy of GENERAL MOTORS CORP.

4. Disconnect the rear fuel tank EVAP canister quick connect fittings from the EVAP canister. Refer to **Quick Connect Fitting Service - Plastic Collar**.
5. Remove the EVAP canister bolt.
6. Lower the vehicle half way.

cardiagn.com

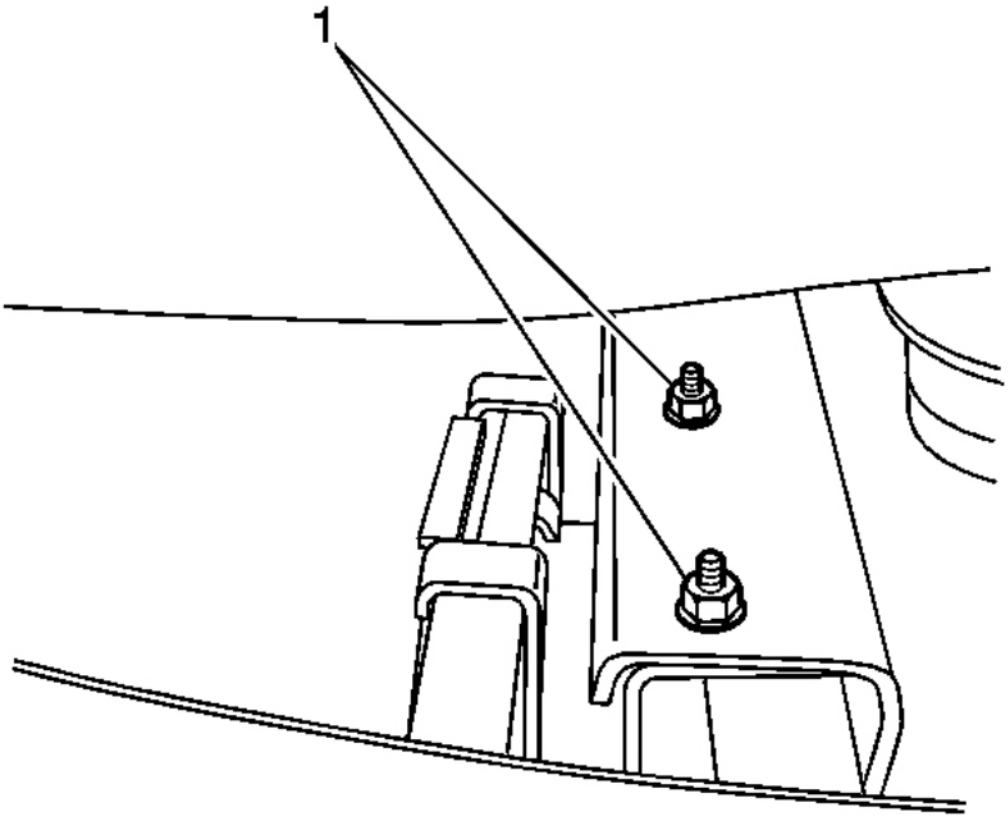

Fig. 560: View Of EVAP Canister Bracket Nuts
Courtesy of GENERAL MOTORS CORP.

7. Loosen the EVAP canister bracket nuts (1).

cardiagn.com

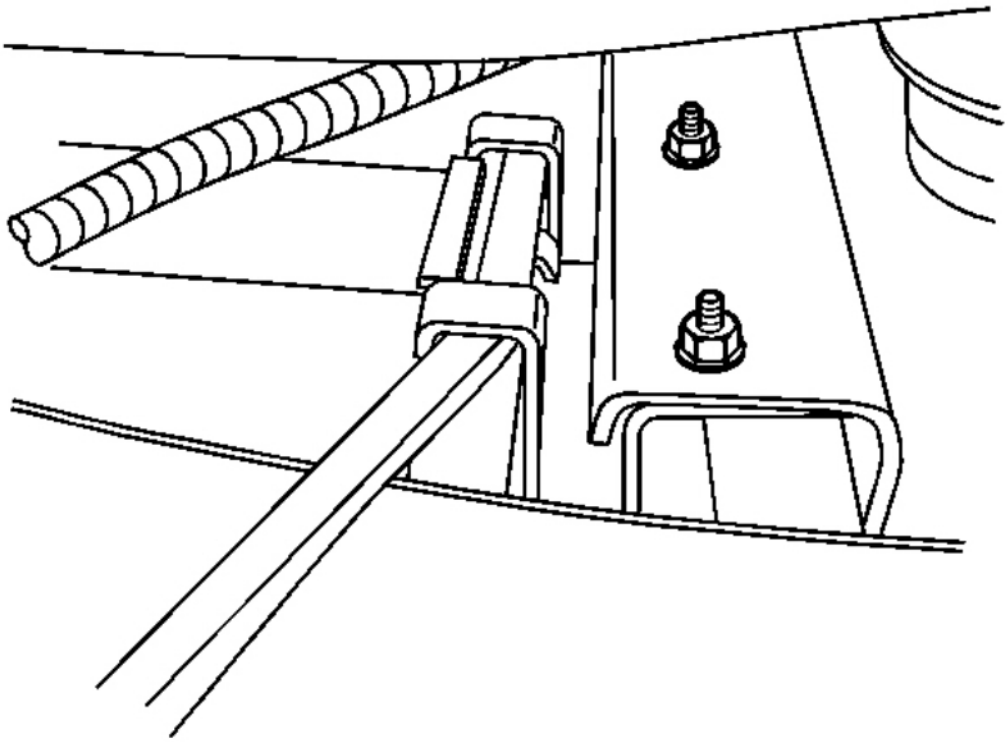

Fig. 561: View Of Front Bracket Clip
Courtesy of GENERAL MOTORS CORP.

8. Using a flat bladed screwdriver, disengage the front bracket clip.

cardiagn.com

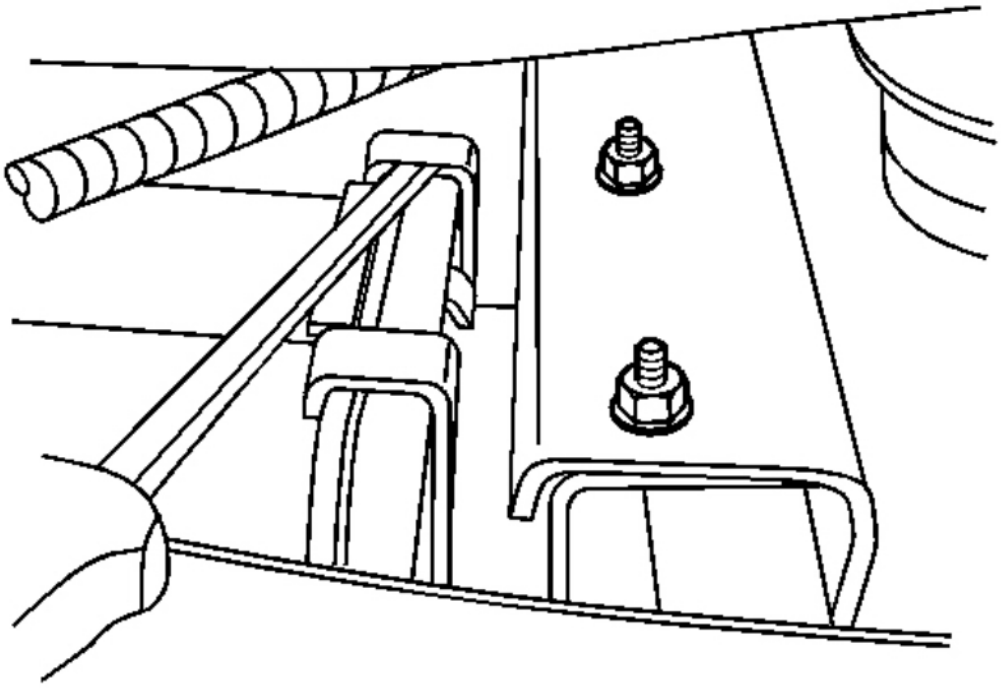

Fig. 562: View Of Rear Bracket Clip
Courtesy of GENERAL MOTORS CORP.

9. Using a flat bladed screwdriver, disengage the rear bracket clip.
10. Remove the EVAP canister.
11. Cap the EVAP lines in order to prevent possible EVAP system contamination.

cardiagn.com

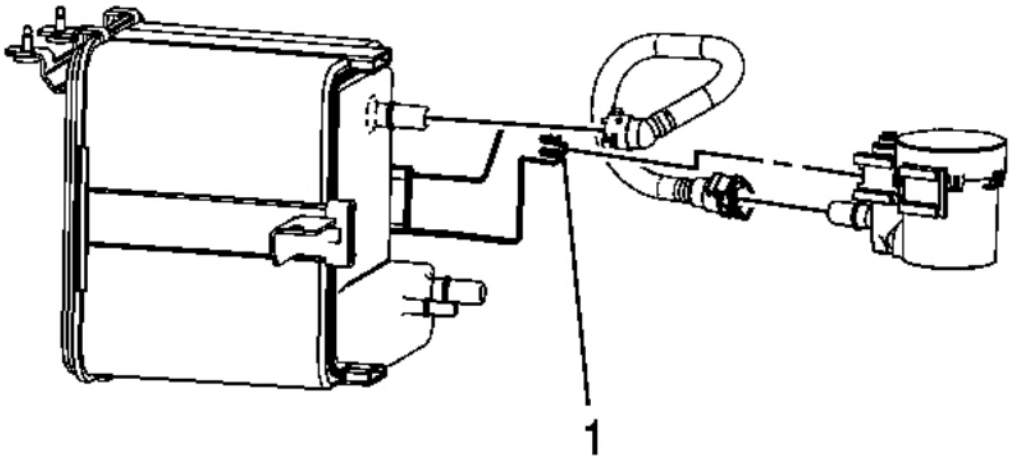

Fig. 563: View Of EVAP Canister Vent Solenoid Retainer
Courtesy of GENERAL MOTORS CORP.

12. Disconnect the EVAP canister vent solenoid line (1) quick connect fitting at the EVAP canister. Refer to **Quick Connect Fitting Service - Plastic Collar**.

Installation Procedure

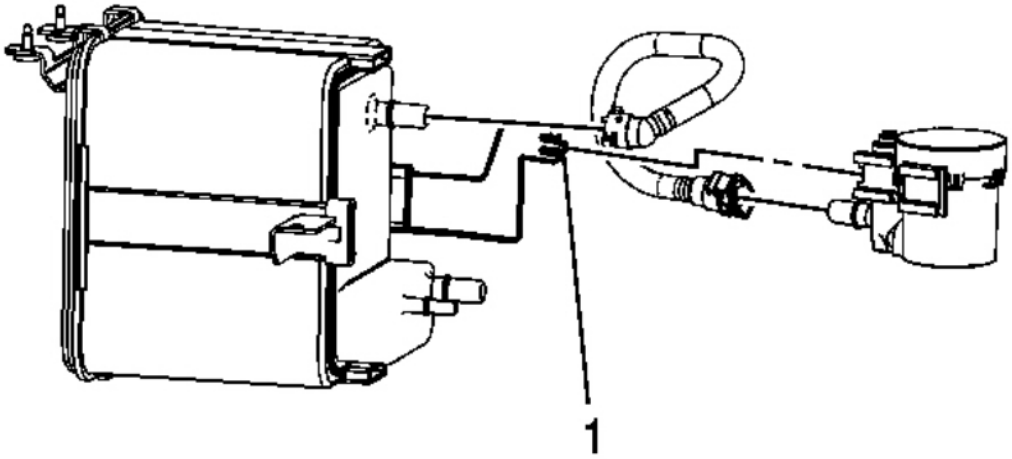

cardiagn.com

Fig. 564: View Of EVAP Canister Vent Solenoid Retainer
Courtesy of GENERAL MOTORS CORP.

1. Connect the EVAP canister vent solenoid line (1) quick connect fitting at the EVAP canister. Refer to **Quick Connect Fitting Service - Plastic Collar**.

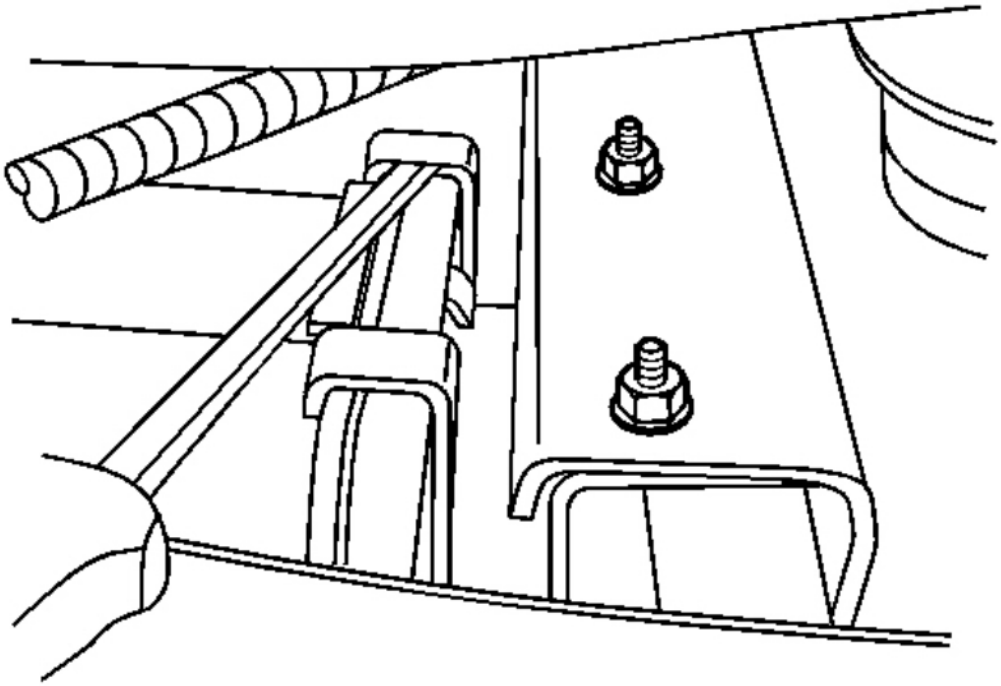

Fig. 565: View Of Rear Bracket Clip
Courtesy of GENERAL MOTORS CORP.

2. Remove the caps from the EVAP lines.
3. Install the EVAP canister.
4. Using a flat bladed screwdriver, engage the rear bracket clip.

cardiagn.com

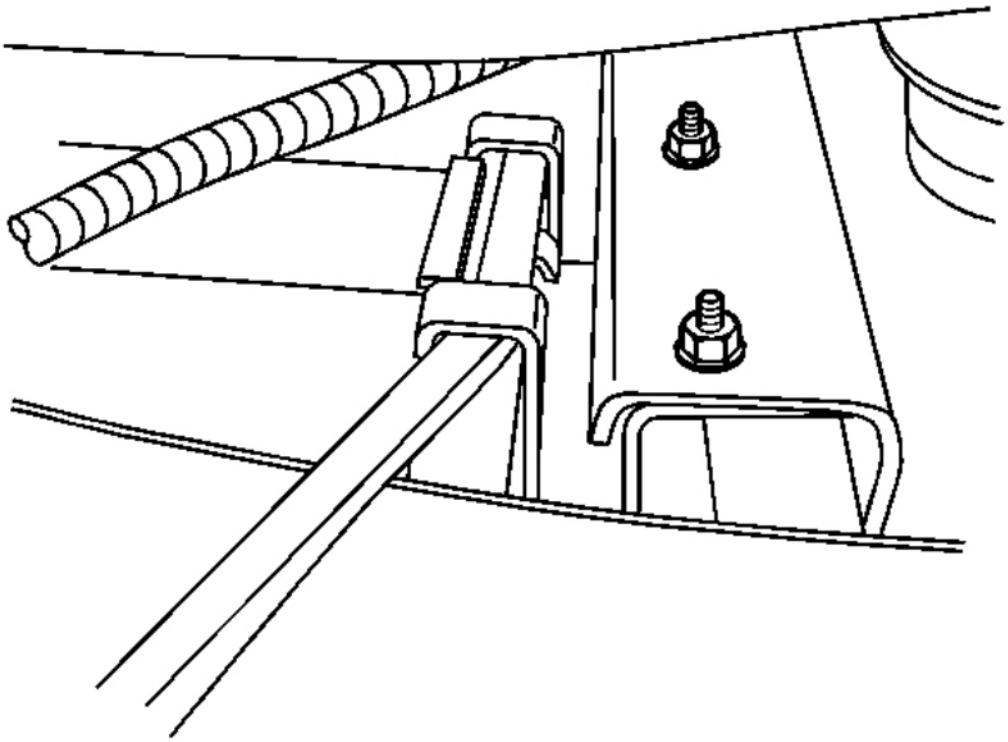

Fig. 566: View Of Front Bracket Clip
Courtesy of GENERAL MOTORS CORP.

5. Using a flat bladed screwdriver, engage the front bracket clip.

cardiagn.com

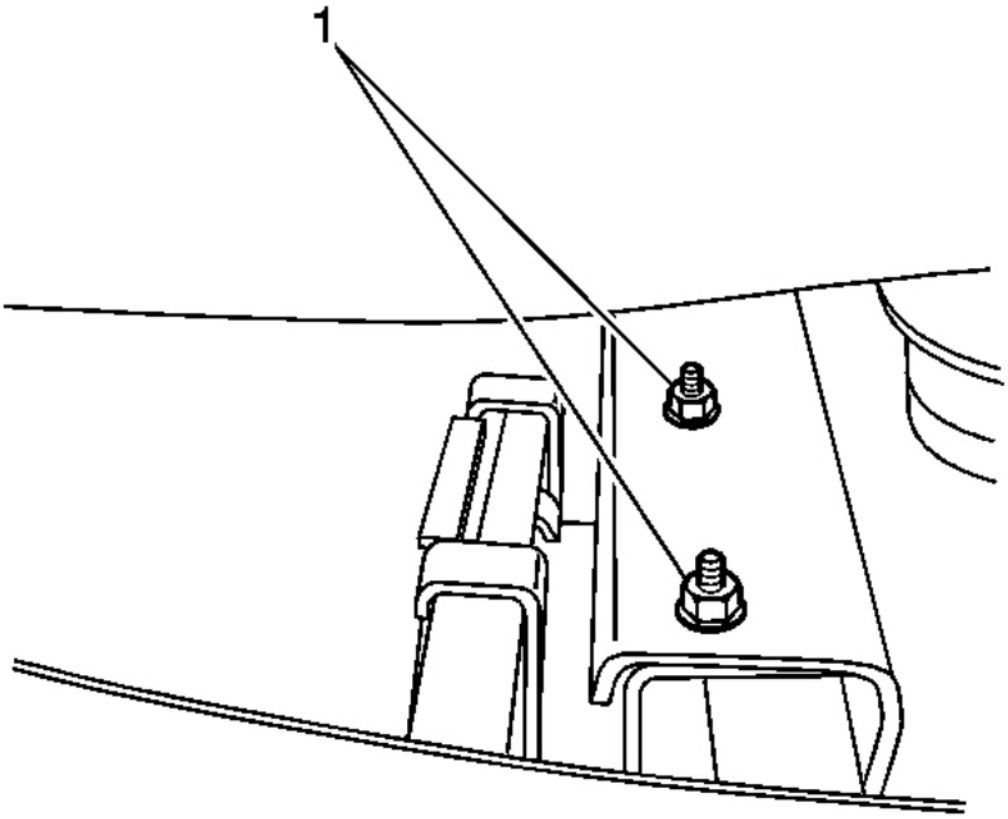

Fig. 567: View Of EVAP Canister Bracket Nuts
Courtesy of GENERAL MOTORS CORP.

NOTE: **Refer to Fastener Notice .**

6. Tighten the EVAP canister bracket nuts (1).

   Tighten: Tighten the nuts to 25 N.m (18 lb ft).

cardiagn.com

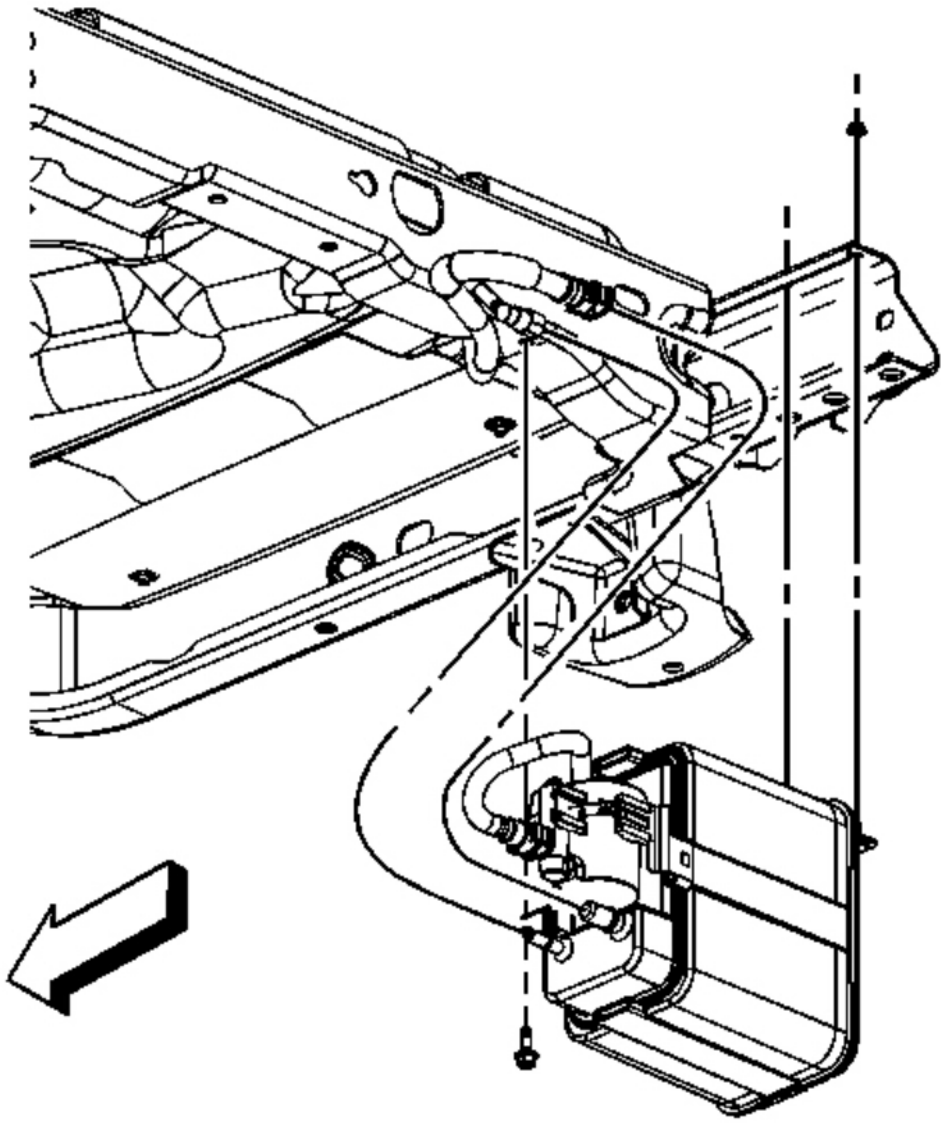

Fig. 568: View Of EVAP Canister & Quick Connect Fittings
Courtesy of GENERAL MOTORS CORP.

7. Raise the vehicle.
8. Install the EVAP canister bolt.

Tighten: Tighten the nuts to 25 N.m (18 lb ft).

cardiagn.com

9. Connect the rear fuel tank EVAP canister quick connect fittings to the EVAP canister. Refer to **Quick Connect Fitting Service - Plastic Collar**.

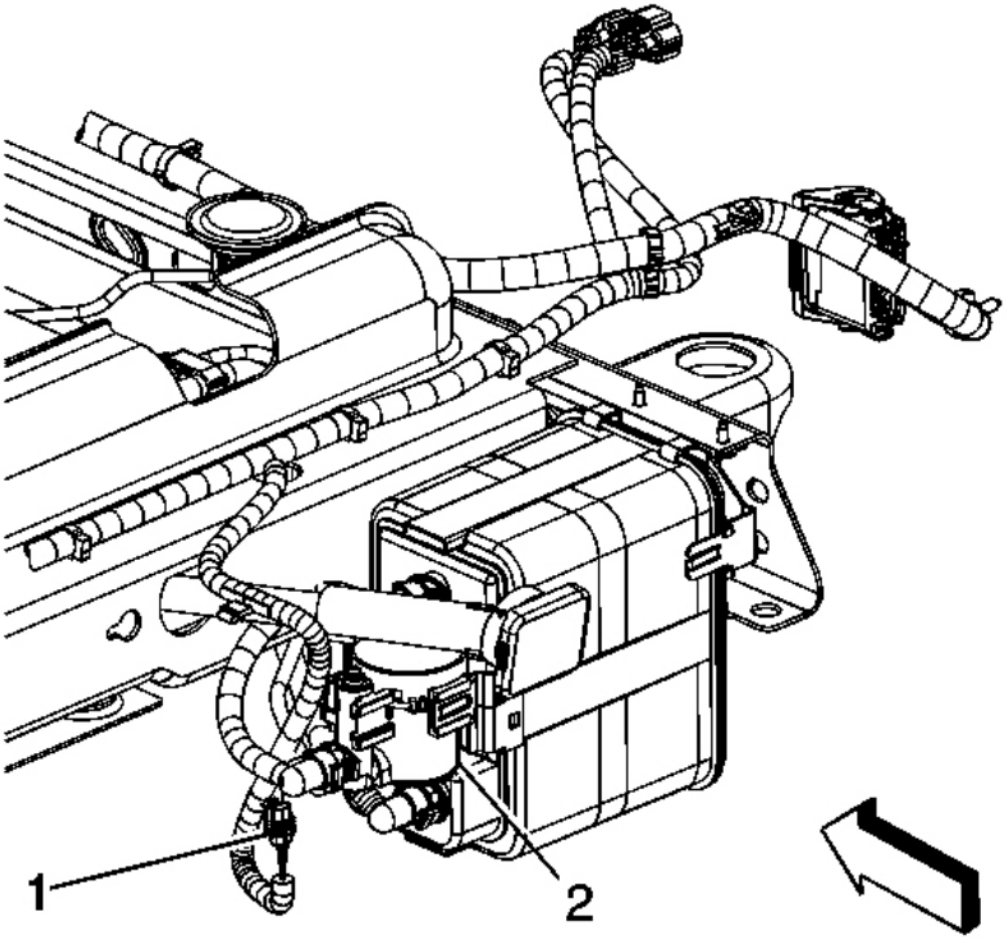

Fig. 569: View Of EVAP CVS Electrical Connector & CVS Bracket
Courtesy of GENERAL MOTORS CORP.

10. Connect the EVAP canister vent solenoid (CVS) electrical connector (1).
11. Lower the vehicle.
12. Install the right side, rear bumper step pad. Refer to **Step Pad Replacement - Side Rear Bumper (Avalanche, Cadillac EXT)** .

EVAPORATIVE EMISSION SYSTEM CLEANING

cardiagn.com

Tools Required

J 41413-200 Evaporative Emissions System Tester (EEST). See **Special Tools**.

Inspection Procedure

IMPORTANT: Do not perform this procedure unless instructed by an evaporative emission (EVAP) diagnostic.

1. Turn OFF the ignition.
2. Remove the EVAP canister purge solenoid valve. Refer to **Evaporative Emission Canister Purge Solenoid Valve Replacement**.
3. Lightly tap the EVAP canister purge solenoid valve on a clean hard surface.
4. Inspect for carbon particles exiting either of the vacuum ports.
   - If no carbon particles are found reinstall the EVAP canister purge solenoid valve and continue with the EVAP cleaning procedure. Refer to **Evaporative Emission Canister Purge Solenoid Valve Replacement**.
   - If carbon particles are found during the inspection procedure, replace the EVAP canister purge solenoid valve and continue with the EVAP cleaning procedure. Refer to **Evaporative Emission Canister Purge Solenoid Valve Replacement**.
   - If you were instructed to replace the EVAP canister purge solenoid valve, and no carbon particles are found, return to the EVAP diagnostic procedure. Do not perform the EVAP cleaning procedure.

EVAP Cleaning Procedure

1. Remove the EVAP canister. Refer to **Evaporative Emission Canister Replacement (1500 Series)** or **Evaporative Emission Canister Replacement (2500 Series)**.
2. Turn OFF the main valve on the **J 41413-200** . See **Special Tools**.
3. Disconnect the hose from the diagnostic station pressure regulator.
4. Using a section of vacuum hose, connect one end to the diagnostic station pressure regulator.
5. Connect the other end of the vacuum hose to the canister side of the purge pipe.
6. Turn ON the main nitrogen cylinder valve and continue to discharge nitrogen for 15 seconds.
7. If the nitrogen does not dislodge the carbon particles, replace the purge pipe.
8. Return the EVAP pressure/purge diagnostic station to the stations original condition.
9. Install a new EVAP canister. Refer to **Evaporative Emission Canister Replacement (1500 Series)** or **Evaporative Emission Canister Replacement (2500 Series)**.
10. Connect all previously disconnected EVAP pipe connectors.
11. Lower the vehicle.
12. Continue with the published service manual diagnostic DTC procedure.

IGNITION COIL REPLACEMENT

Removal Procedure

cardiagn.com

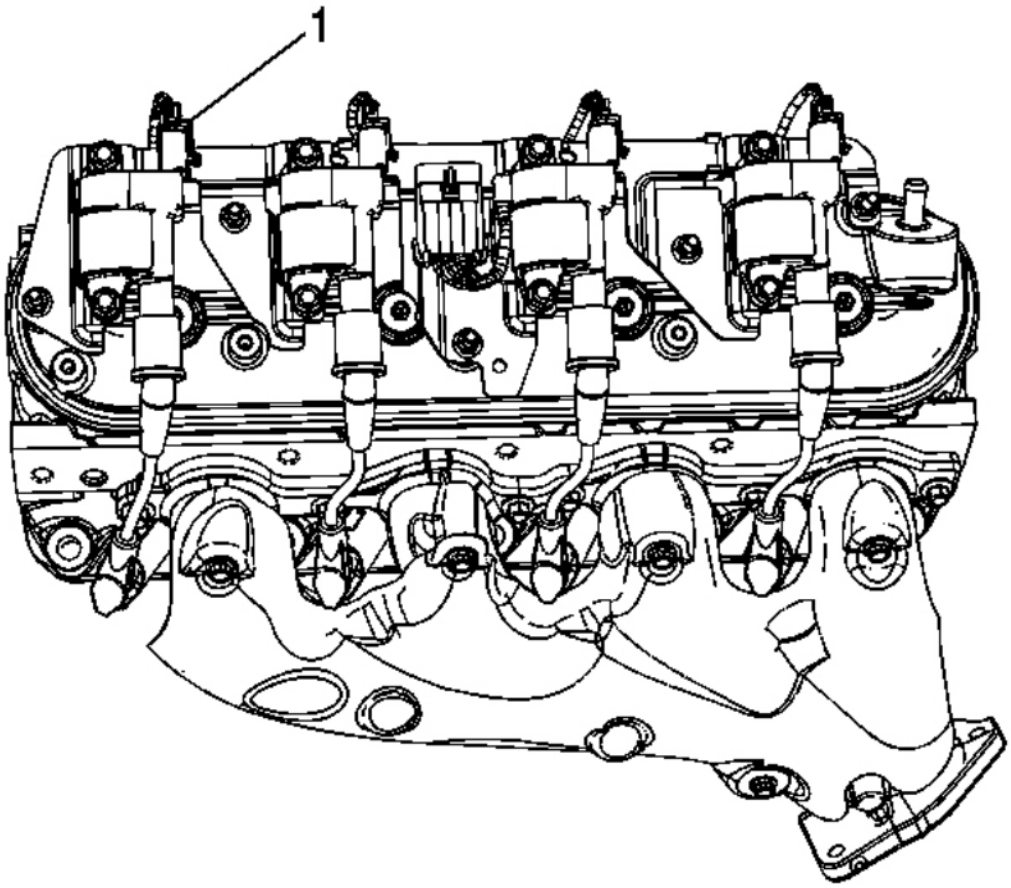

Fig. 570: View Of Ignition Coil Wiring Harness Electrical Connector
Courtesy of GENERAL MOTORS CORP.

1. Remove the intake manifold sight shield. Refer to **Upper Intake Manifold Sight Shield Replacement** .
2. Disconnect the ignition coil wiring harness electrical connector (1) from the ignition coil.

cardiagn.com

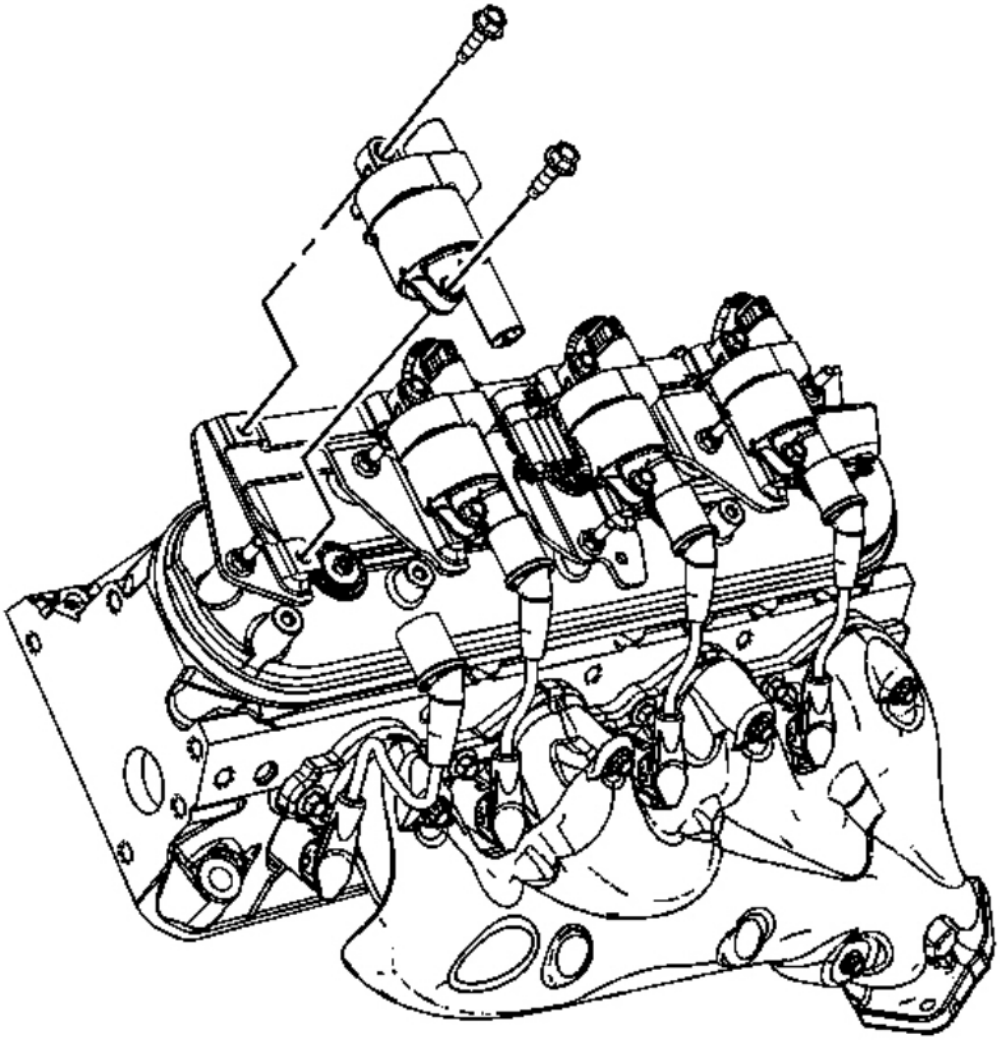

Fig. 571: View Of Ignition Coil & Bracket
Courtesy of GENERAL MOTORS CORP.

3. Remove the spark plug wire from the ignition coil.
   - Twist the spark plug wire boot a 1/2 turn.
   - Pull only on the boot in order to remove the wire from the ignition coil.
4. Remove the ignition coil bolts.
5. Remove the ignition coil from the bracket. (left side shown, right side similar).
6. There are 2 different manufacturers for the ignition coils and coil brackets. They are as follows:

cardiagn.com

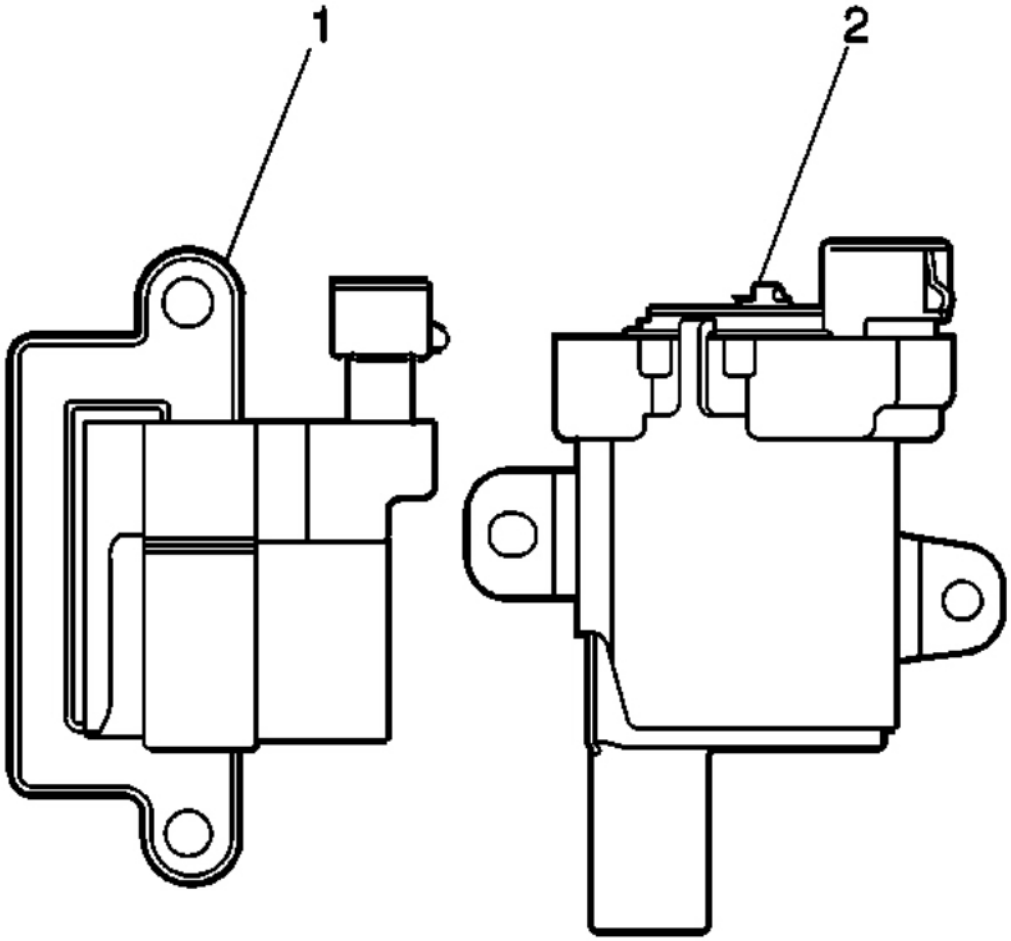

Fig. 572: Melco(R) & Delphi(R) Ignition Coil
Courtesy of GENERAL MOTORS CORP.

7. The Melco® (1) ignition coil is a square design.
8. The Delphi® (2) ignition coil is a round design.

cardiagn.com

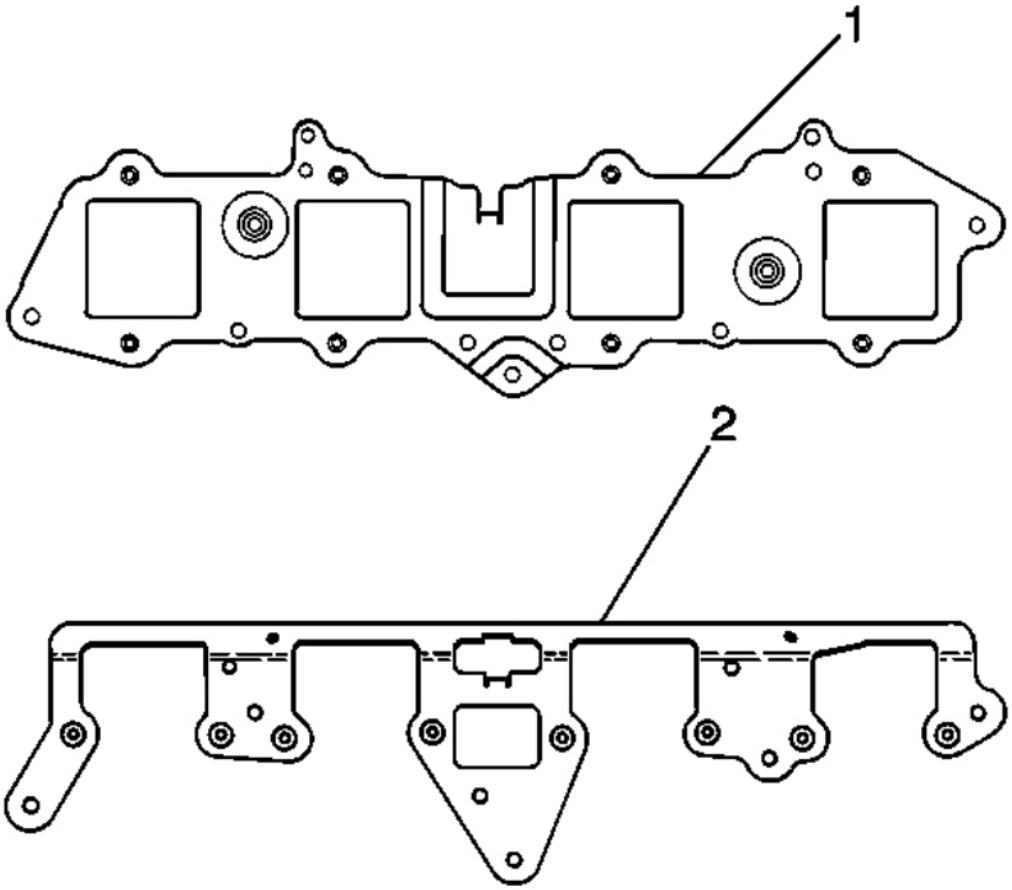

Fig. 573: Melco(R) & Delphi(R) Ignition Coil Bracket
Courtesy of GENERAL MOTORS CORP.

9. The Melco® ignition coil bracket (1) is a square design.
10. The Delphi® ignition coil bracket (2) is a round design.

Installation Procedure

cardiagn.com

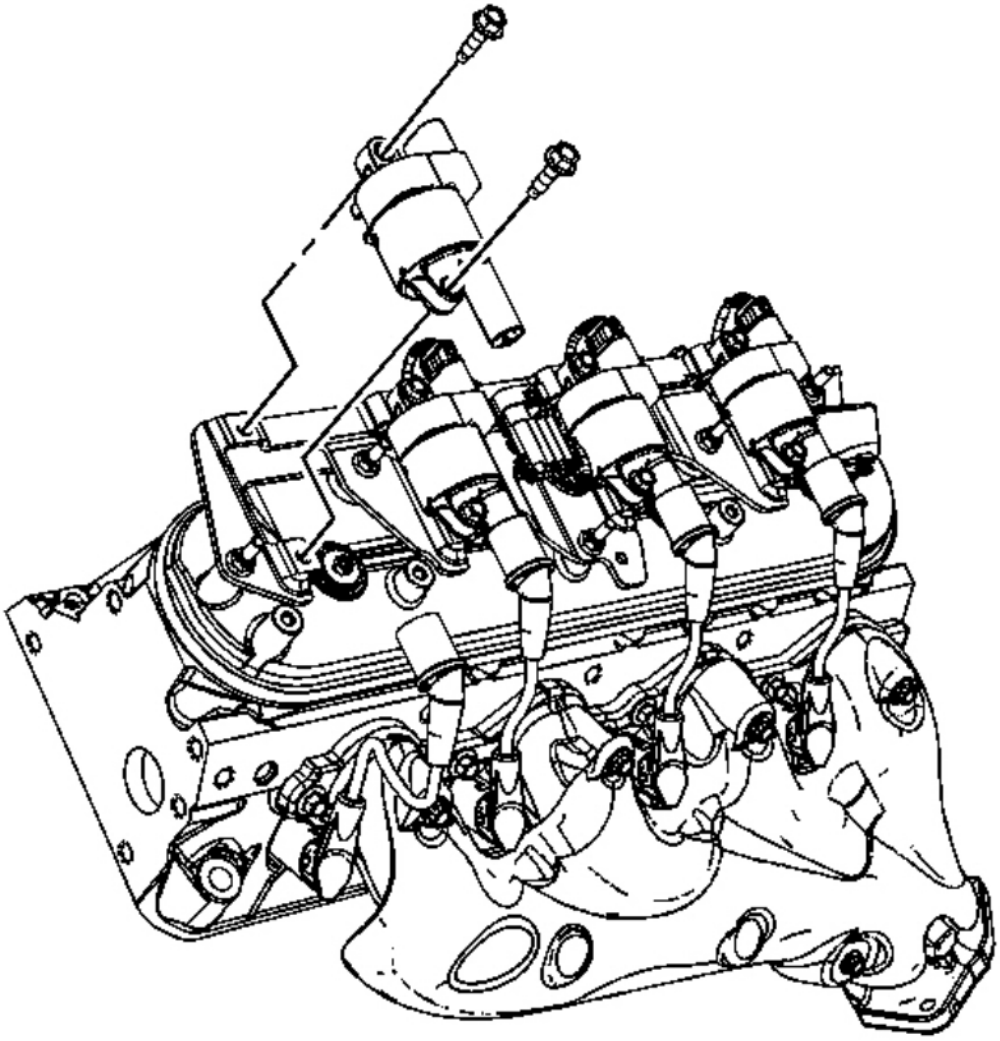

Fig. 574: View Of Ignition Coil & Bracket
Courtesy of GENERAL MOTORS CORP.

1. Position the ignition coil to the ignition coil bracket. (left side shown, right side similar).

   NOTE: **Refer to Fastener Notice .**

2. Install the ignition coil bolts.

   Tighten: Tighten the bolts to 10 N.m (89 lb in).

cardiagn.com

3. Install the spark plug wire to the ignition coil.
4. Inspect the spark plug wire for proper installation:
   - Push sideways on each boot in order the inspect the seating.
   - Reinstall any loose boot.

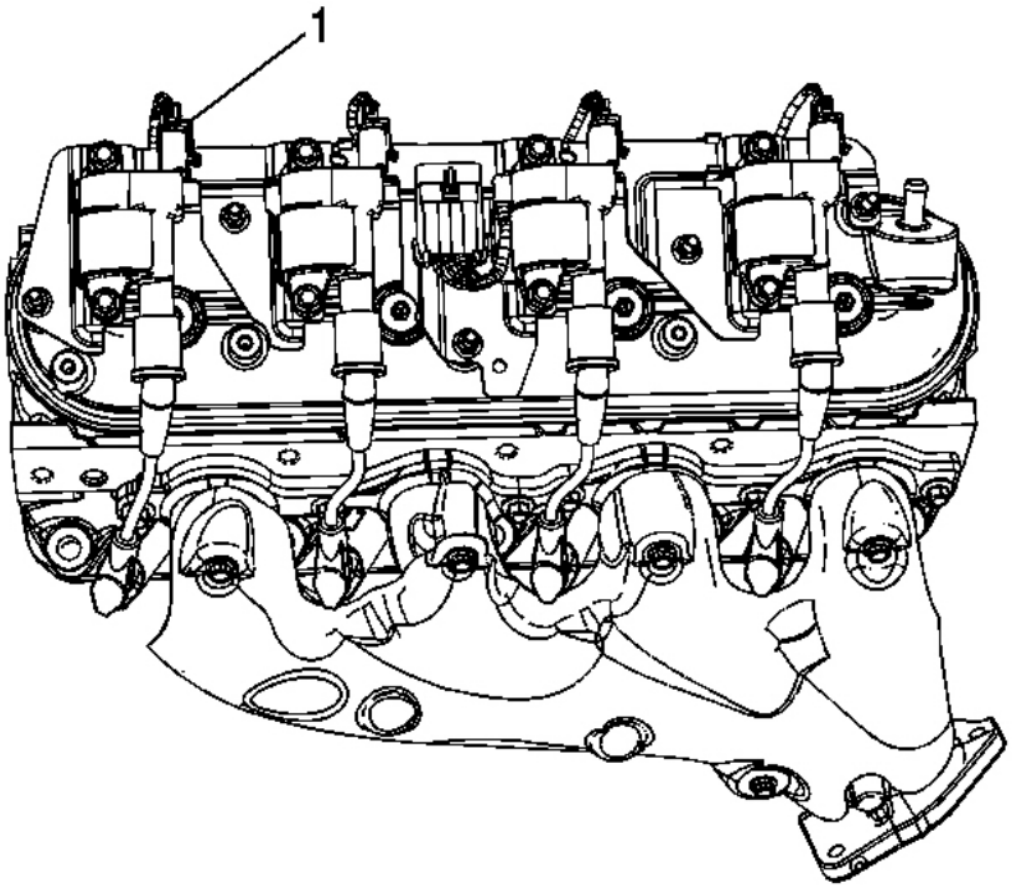

Fig. 575: View Of Ignition Coil Wiring Harness Electrical Connector
Courtesy of GENERAL MOTORS CORP.

5. Connect the ignition coil wiring harness electrical connector (1) to the ignition coil.
6. Install the intake manifold sight shield. Refer to **Upper Intake Manifold Sight Shield Replacement** .

SPARK PLUG WIRE INSPECTION

Spark plug wire integrity is vital for proper engine operation. A thorough inspection is necessary to accurately

cardiagn.com

identify conditions that may affect engine operation. Inspect for the following conditions:

1. Correct routing of the spark plug wires, Incorrect routing may cause cross firing.
2. Any signs of cracks or splits in the wires.
3. Inspect each boot for any of the following conditions:
    - Tearing
    - Piercing
    - Arcing
    - Carbon tracking
    - Corroded terminal

If corrosion, carbon tracking or arcing are indicated on a spark plug wire boot or terminal, replace the wire and the component connected to the wire.

SPARK PLUG WIRE REPLACEMENT

Removal Procedure

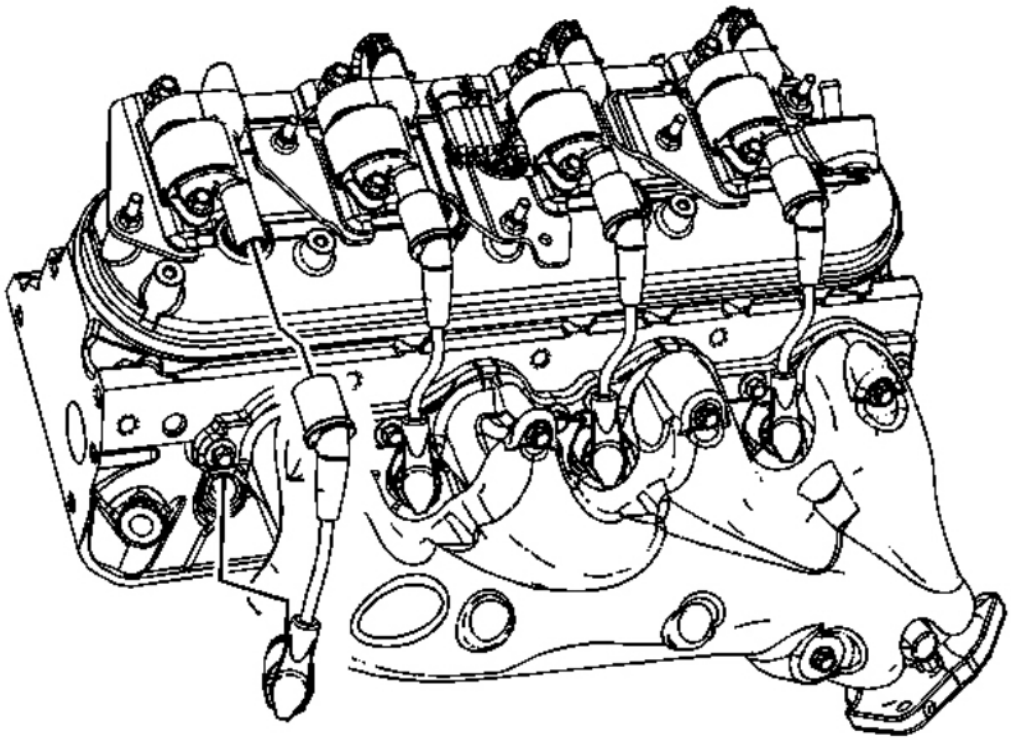

cardiagn.com

Fig. 576: View Of Spark Plug Wires
Courtesy of GENERAL MOTORS CORP.

1. Remove the spark plug wire from the spark plug.
    1. Twist the spark plug wire boot a 1/2 turn.
    2. Pull only on the boot in order to remove the wire from the spark plug.
2. Remove the spark plug wire from the ignition coil.
    1. Twist the spark plug wire boot a 1/2 turn.
    2. Pull only on the boot in order to remove the wire from the ignition coil.

Installation Procedure

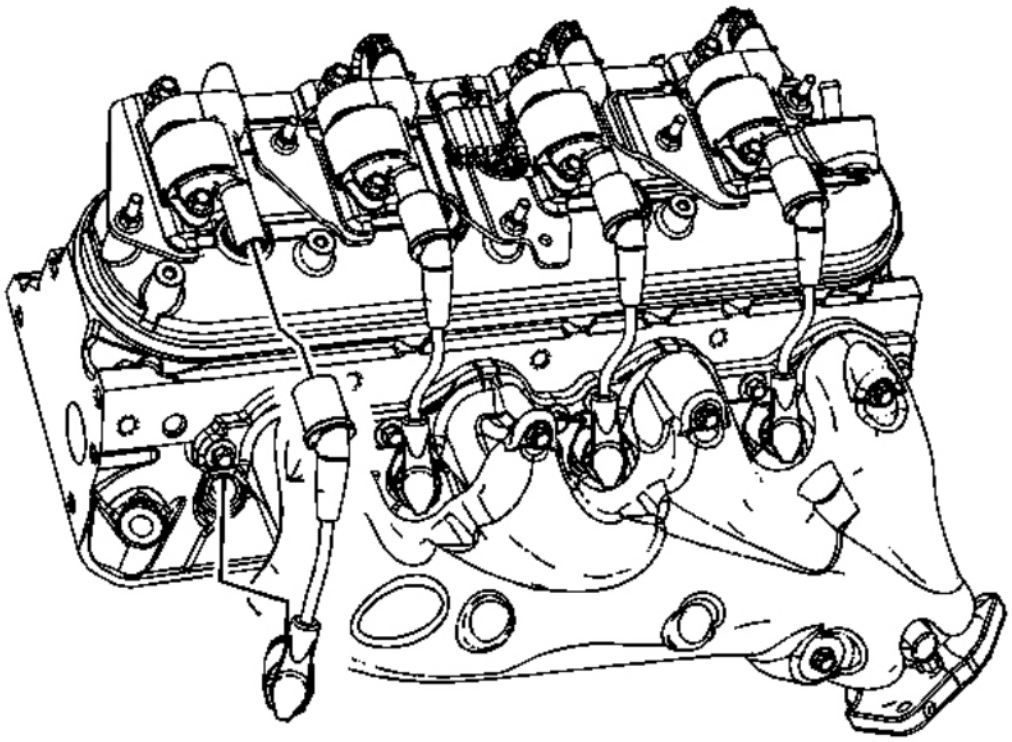

Fig. 577: View of Spark Plug Wires
Courtesy of GENERAL MOTORS CORP.

1. Install the spark plug wire to the ignition coil.
2. Install the spark plug wire to the spark plug.
3. Inspect the spark plug wire for proper installation:

cardiagn.com

1. Push sideways on each boot in order to inspect the seating.
2. Reinstall any loose boot.

SPARK PLUG INSPECTION

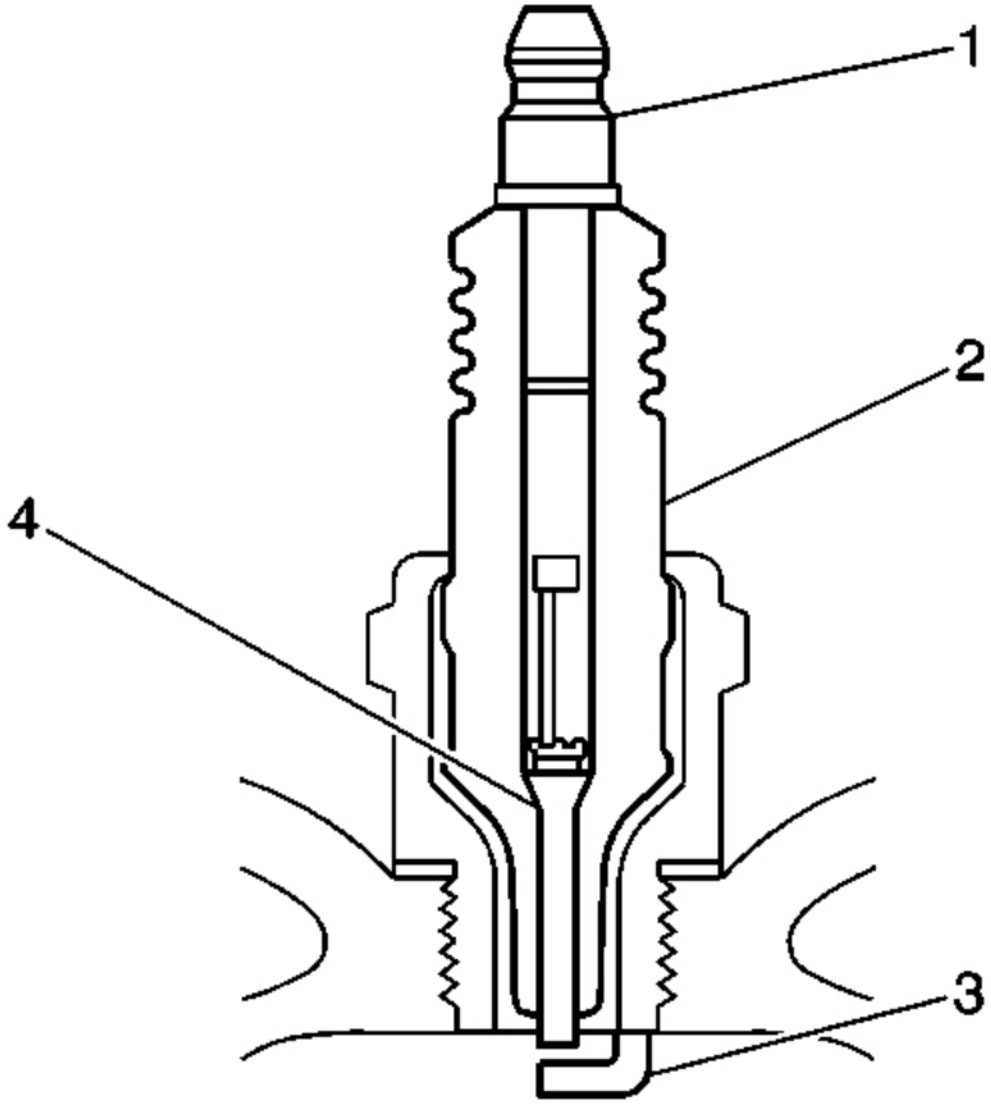

Fig. 578: Cross Sectional View Of Spark Plug
Courtesy of GENERAL MOTORS CORP.

cardiagn.com

- Verify that the correct spark plug is installed. An incorrect spark plug causes driveability conditions. Refer to **Ignition System Specifications** for the correct spark plug.
- Ensure that the spark plug has the correct heat range. An incorrect heat range causes the following conditions:
  - Spark plug fouling, replace with a colder plug
  - Pre-ignition causing spark plug and/or engine damage , replace with a hotter plug
- Inspect the terminal post (1) for damage.
  - Inspect for a bent or broken terminal post (1).
  - Test for a loose terminal post (1) by twisting and pulling the post. The terminal post (1) should not move.

cardiagn.com

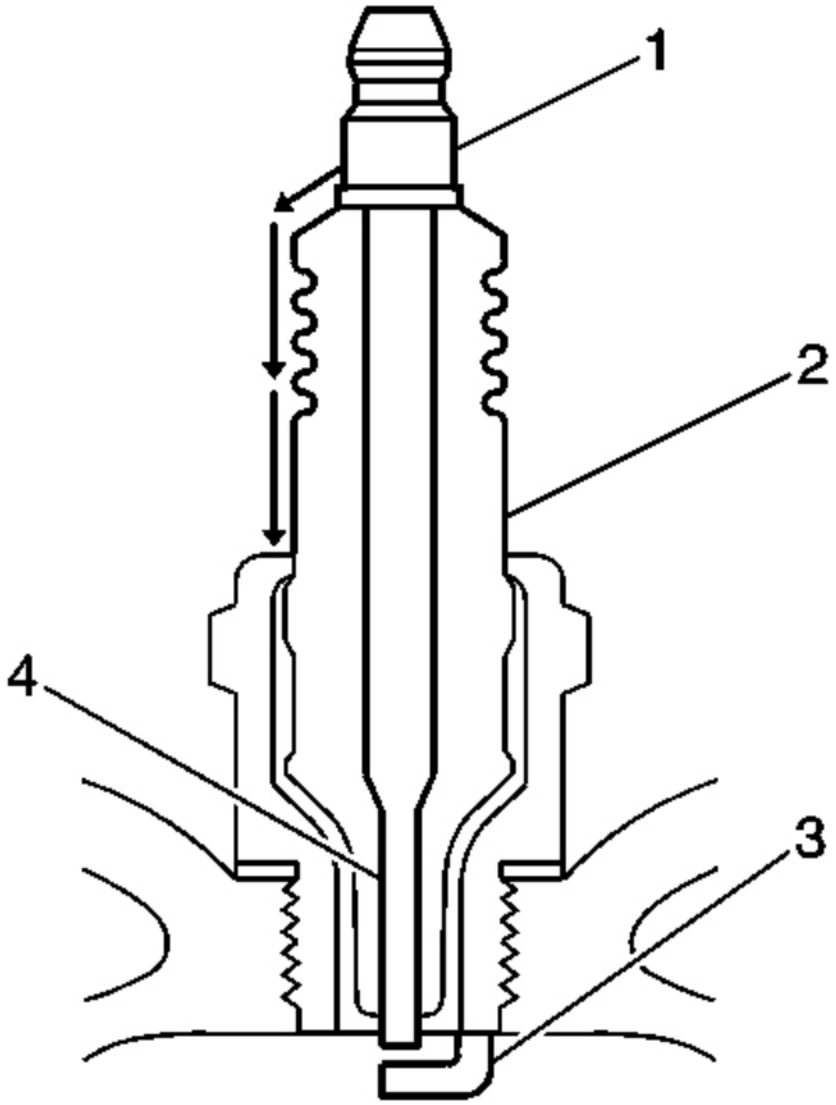

Fig. 579: Identifying Points For Inspecting Spark Plug For Flashover Or Carbon Tracking Soot
Courtesy of GENERAL MOTORS CORP.

- Inspect the insulator (2) for flashover or carbon tracking, or soot. This is caused by the electrical charge traveling across the insulator (2) between the terminal post (1) and ground. Inspect for the following conditions:
  - Inspect the spark plug boot for damage.
  - Inspect the spark plug recess area of the cylinder head for moisture, such as oil, coolant, or water. A

cardiagn.com

spark plug boot that is saturated will cause arcing to ground.

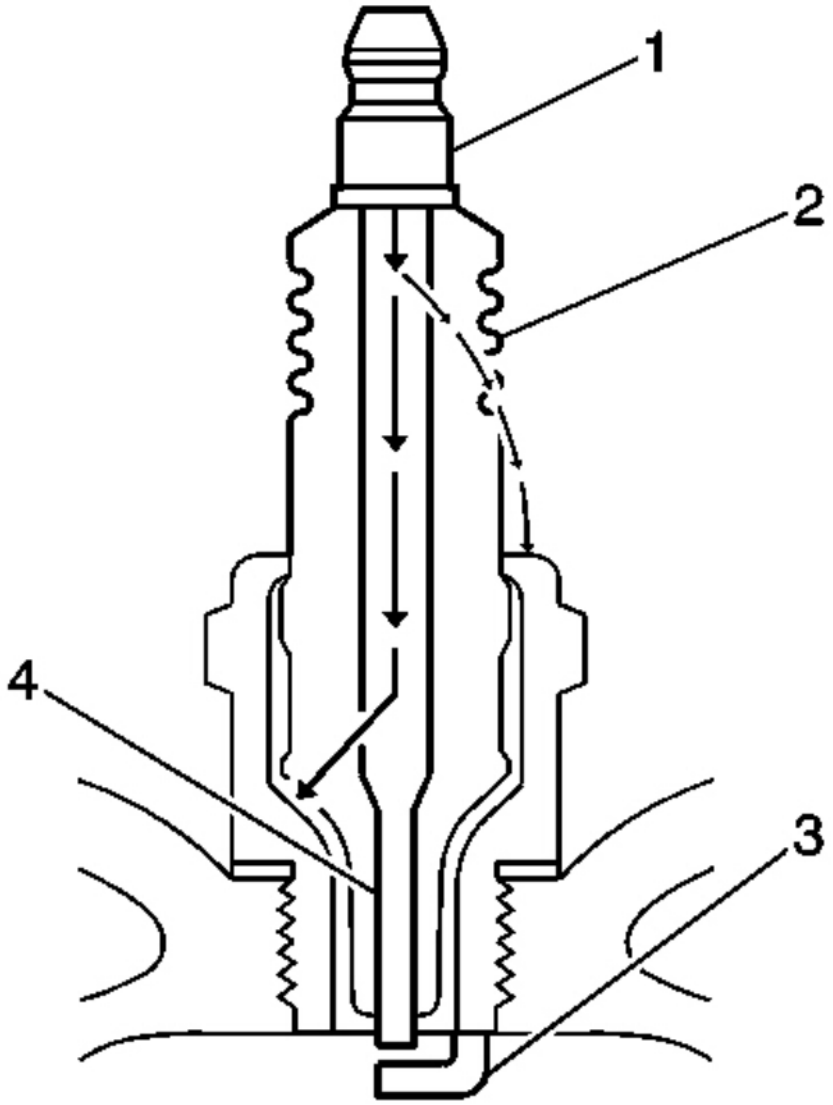

Fig. 580: Inspecting Spark Plug Insulator
Courtesy of GENERAL MOTORS CORP.

- Inspect the insulator (2) for cracks. All or part of the electrical charge may arc through the crack instead of the electrodes (3, 4).

cardiagn.com

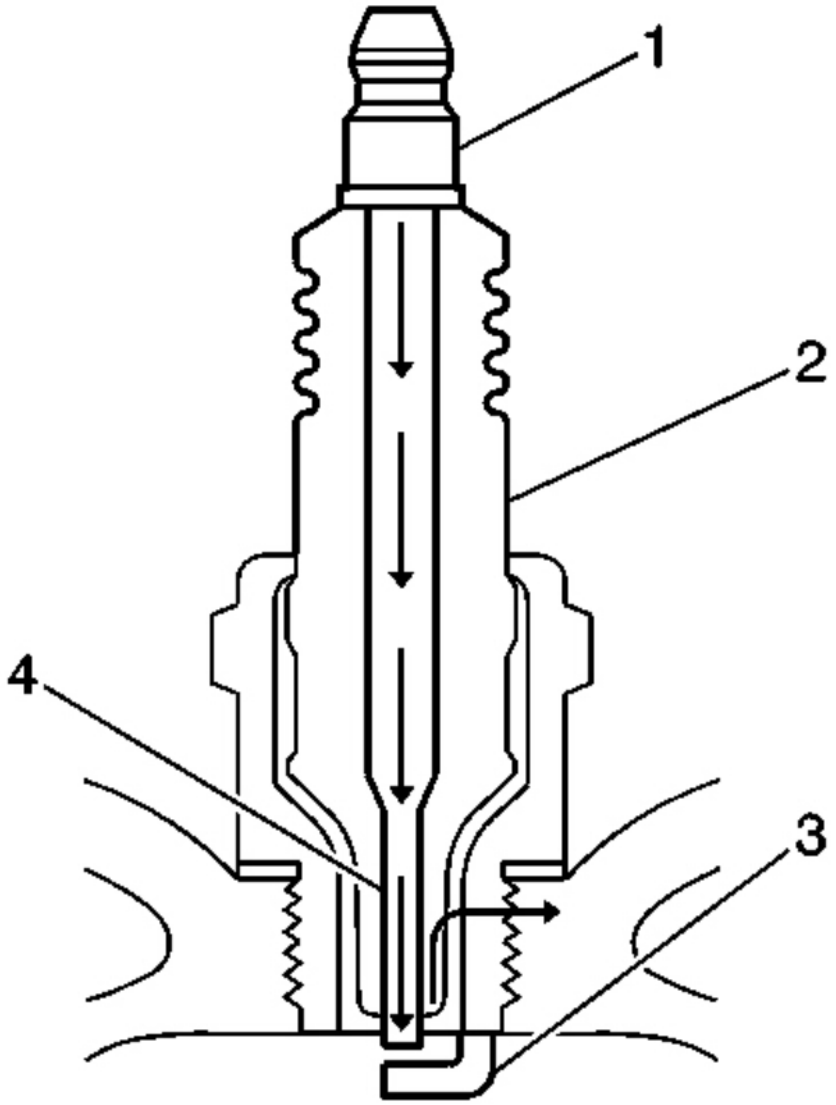

Fig. 581: Cutaway/Description View Of Spark Plug
Courtesy of GENERAL MOTORS CORP.

- Inspect for evidence of improper arcing.
  - Measure the gap between the center electrode (4) and the side electrode (3). Refer to **Ignition System Specifications**. An excessively wide electrode gap can prevent correct spark plug operation.
  - Inspect for the correct spark plug torque. Refer to **Ignition System Specifications**. Insufficient

cardiagn.com

torque can prevent correct spark plug operation. An over torqued spark plug, causes the insulator (2) to crack.
  - Inspect for signs of tracking that occurred near the insulator tip instead of the center electrode (4).
  - Inspect for a broken or worn side electrode (3).
  - Inspect for a broken, worn, or loose center electrode (4) by shaking the spark plug.
    - A rattling sound indicates internal damage.
    - A loose center electrode (4) reduces the spark intensity.
  - Inspect for bridged electrodes (3, 4). Deposits on the electrodes (3, 4) reduce or eliminates the gap.
  - Inspect for worn or missing platinum pads on the electrodes (3, 4), if equipped.
  - Inspect for excessive fouling.
- Inspect the spark plug recess area of the cylinder head for debris. Dirty or damaged threads can cause the spark plug not to seat correctly during installation.

Visual Inspection

- Normal operation - Brown to grayish-tan with small amounts of white powdery deposits are normal combustion by-products from fuels with additives.
- Carbon fouled - Dry, fluffy black carbon, or soot caused by the following conditions:
  - Rich fuel mixtures
    - Leaking fuel injectors
    - Excessive fuel pressure
    - Restricted air filter element
    - Incorrect combustion
  - Reduced ignition system voltage output
    - Weak ignition coils
    - Worn ignition wires
    - Incorrect spark plug gap
  - Excessive idling or slow speeds under light loads can keep spark plug temperatures so low that normal combustion deposits may not burn off.
- Deposit fouling - Oil, coolant, or additives that include substances such as silicone, very white coating, reduces the spark plug intensity. Most powdery deposits will not affect spark plug intensity unless they form into a glazing over the electrode.

SPARK PLUG REPLACEMENT

Removal Procedure

cardiagn.com

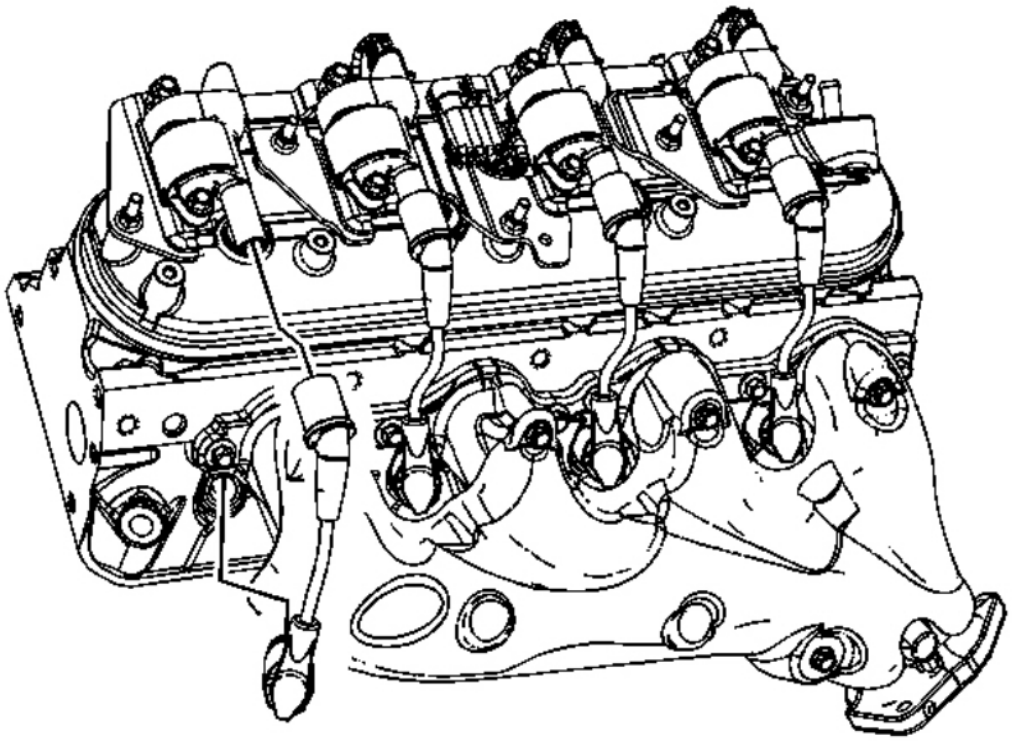

Fig. 582: View Of Spark Plug Wires
Courtesy of GENERAL MOTORS CORP.

1. Remove the spark plug wire from the spark plug.
    1. Twist the spark plug wire boot a 1/2 turn.
    2. Pull only on the boot in order to remove the wire from the spark plug.

cardiagn.com

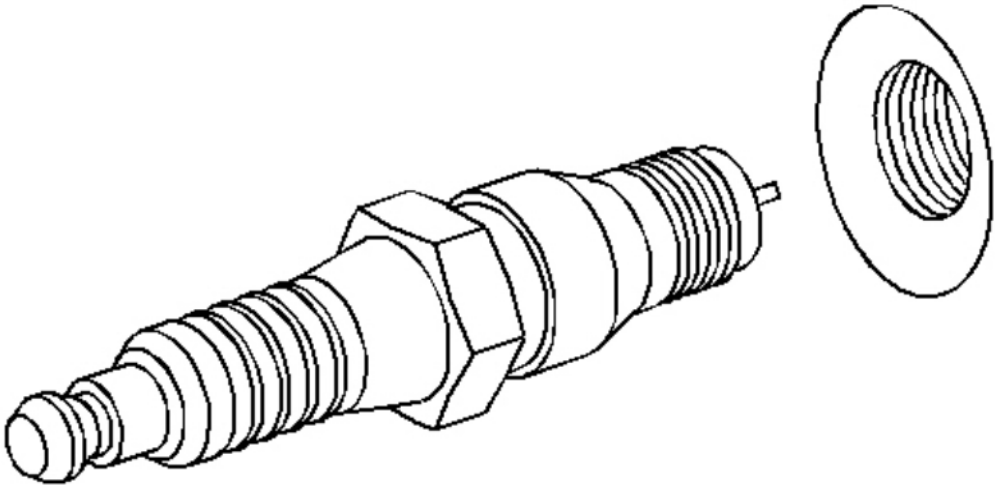

Fig. 583: View Of Spark Plug & Spark Plug Seat
Courtesy of GENERAL MOTORS CORP.

2. Brush or using compressed air, blow away any dirt from around the spark plug.
3. Remove the spark plug.

   If removing more than one plug, place each plug in a tray marked with the corresponding cylinder number.

Installation Procedure

cardiagn.com

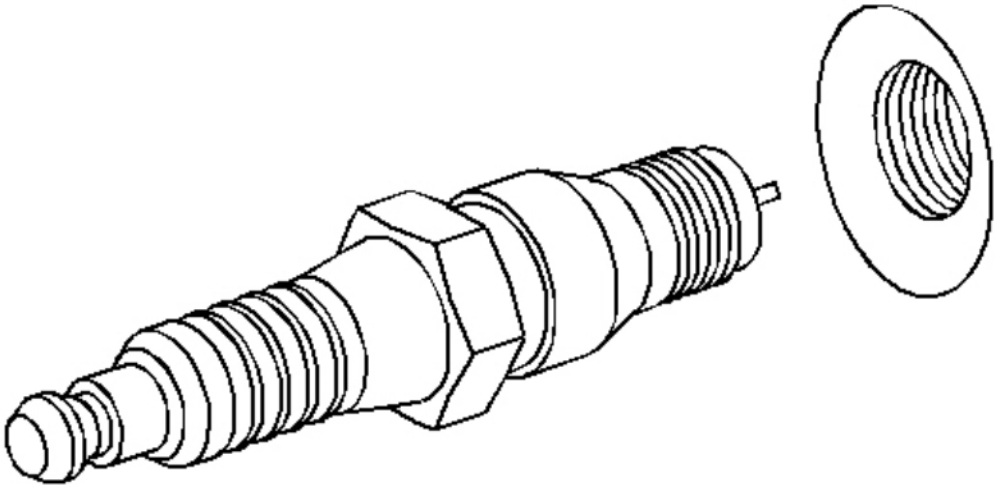

Fig. 584: View Of Spark Plug & Spark Plug Seat
Courtesy of GENERAL MOTORS CORP.

1. Correctly position the spark plug washer.
2. Inspect the spark plug gap. Adjust the gap as needed. Refer to **Ignition System Specifications**
3. Hand start the spark plug in the corresponding cylinder.

NOTE: **Refer to Fastener Notice .**

4. Tighten the spark plug.

   Tighten: Tighten the plug to 15 N.m (11 lb ft).

cardiagn.com

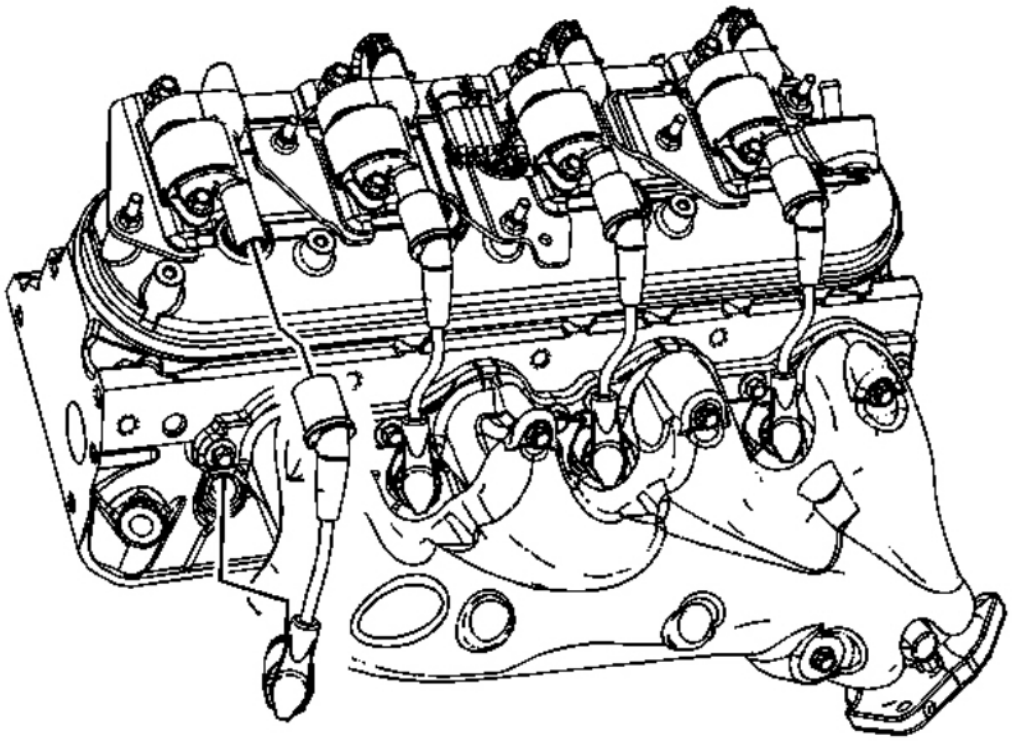

Fig. 585: View Of Spark Plug Wires
Courtesy of GENERAL MOTORS CORP.

5. Install the spark plug wire to the spark plug.
6. Inspect the spark plug wire for proper installation:
    1. Push sideways on each boot in order to inspect the seating.
    2. Reinstall any loose boot.

CRANKSHAFT POSITION SENSOR REPLACEMENT

Removal Procedure

IMPORTANT: Perform the Crankshaft Position System Variation Learn whenever the crankshaft position sensor is removed or replaced.

cardiagn.com

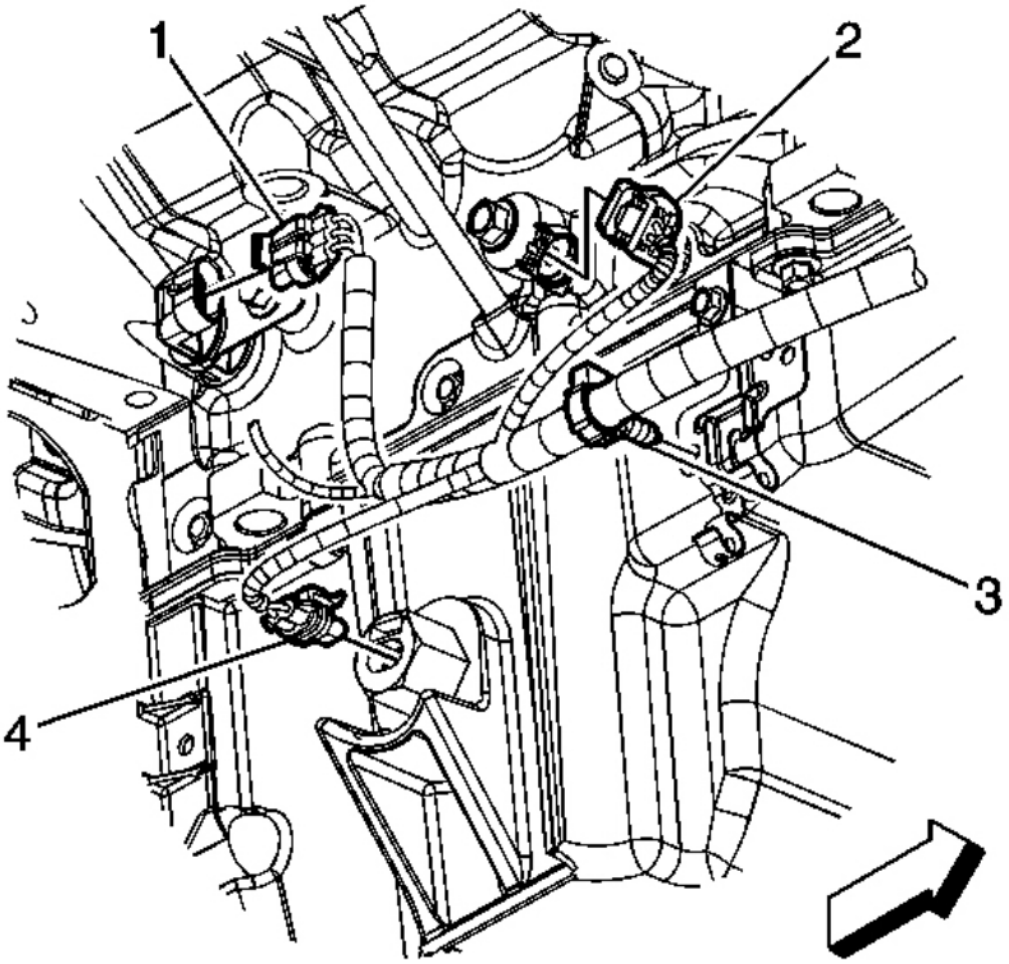

Fig. 586: View Of Electrical Connectors & Clips
Courtesy of GENERAL MOTORS CORP.

1. Remove the starter. Refer to **Starter Motor Replacement** .
2. Working through the wheel well opening, disconnect the engine wiring harness electrical connector (1) from the crankshaft position (CKP) sensor.

cardiagn.com

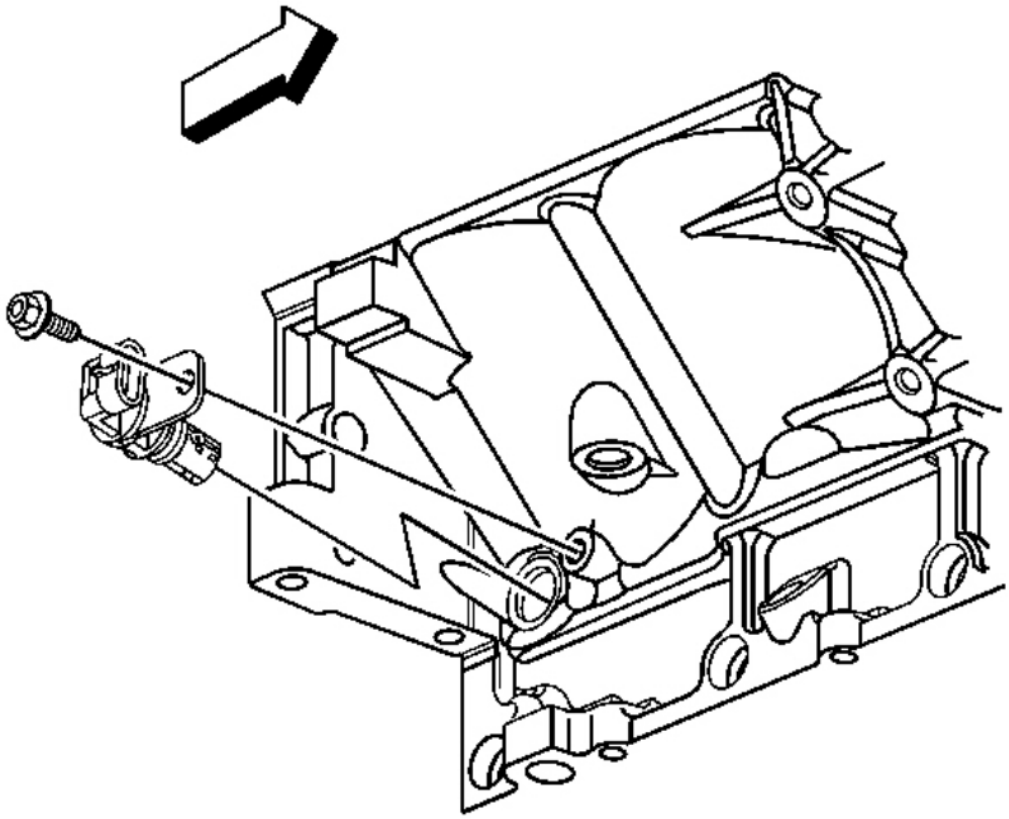

Fig. 587: CKP Sensor & Bolt
Courtesy of GENERAL MOTORS CORP.

3. Clean the area around the CKP sensor before removal in order to avoid debris from entering the engine.
4. Remove the CKP sensor bolt.
5. Remove the CKP sensor.

Installation Procedure

cardiagn.com

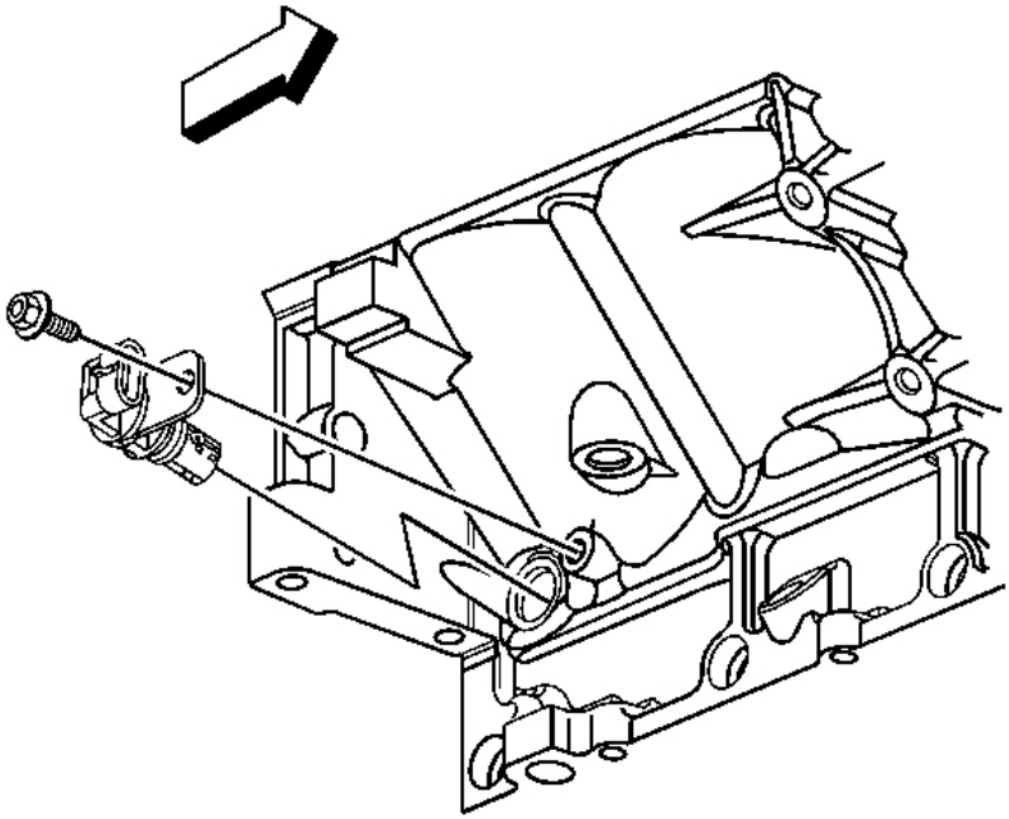

Fig. 588: CKP Sensor & Bolt
Courtesy of GENERAL MOTORS CORP.

1. Install the CKP sensor.

   NOTE: **Refer to Fastener Notice .**

2. Install the CKP sensor bolt.

   Tighten: Tighten the bolt to 25 N.m (18 lb ft).

cardiagn.com

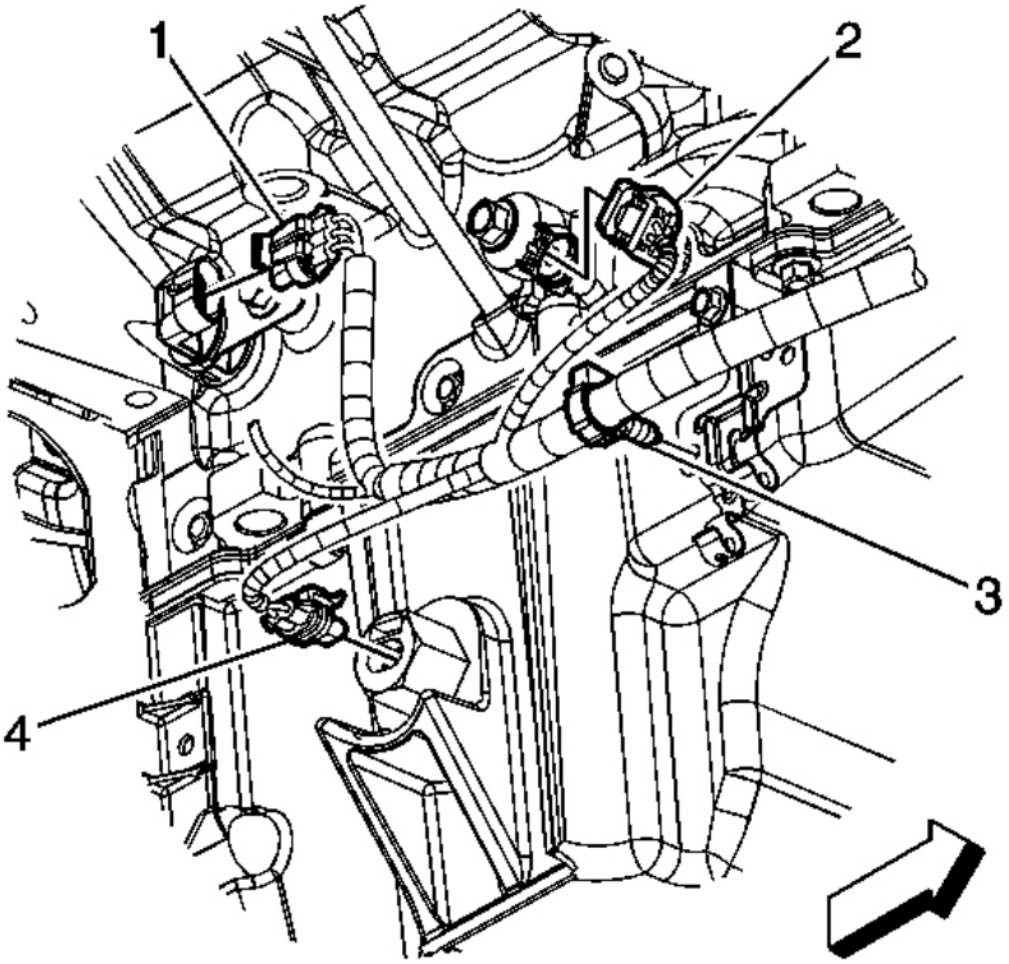

Fig. 589: View Of Electrical Connectors & Clips
Courtesy of GENERAL MOTORS CORP.

3. Connect the engine wiring harness electrical connector (1) to the CKP sensor.
4. Install the starter. Refer to **Starter Motor Replacement** .
5. Perform the CKP system variation learn procedure. Refer to **Crankshaft Position System Variation Learn**.

CAMSHAFT POSITION SENSOR REPLACEMENT (RPOS LY2/LC9/LY5/LMG)

Removal Procedure

cardiagn.com

IMPORTANT: Clean the area around the camshaft position (CMP) sensor before removal in order to prevent debris from entering the engine.

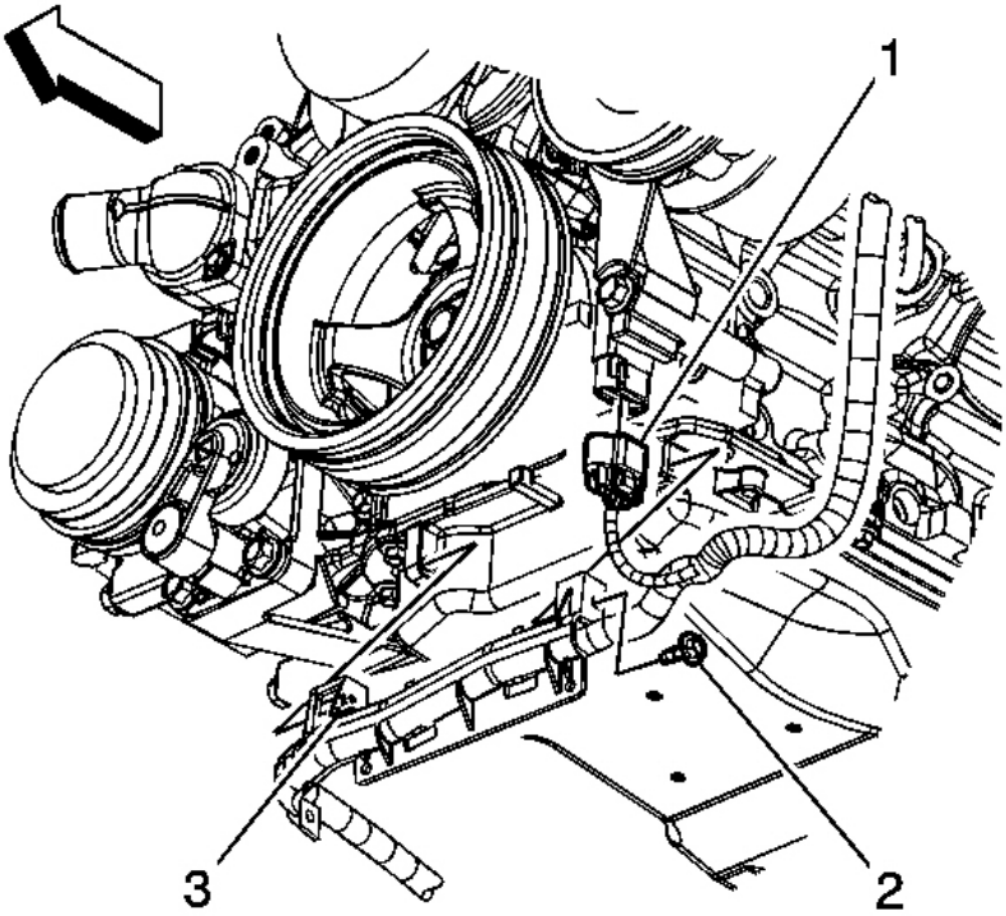

Fig. 590: View Of Electrical Connector, Cable Channel Bolt & Pin
Courtesy of GENERAL MOTORS CORP.

1. Raise and support the vehicle. Refer to **Lifting and Jacking the Vehicle** .
2. Disconnect the engine wiring harness electrical connector (1) from the CMP sensor wire harness.

cardiagn.com

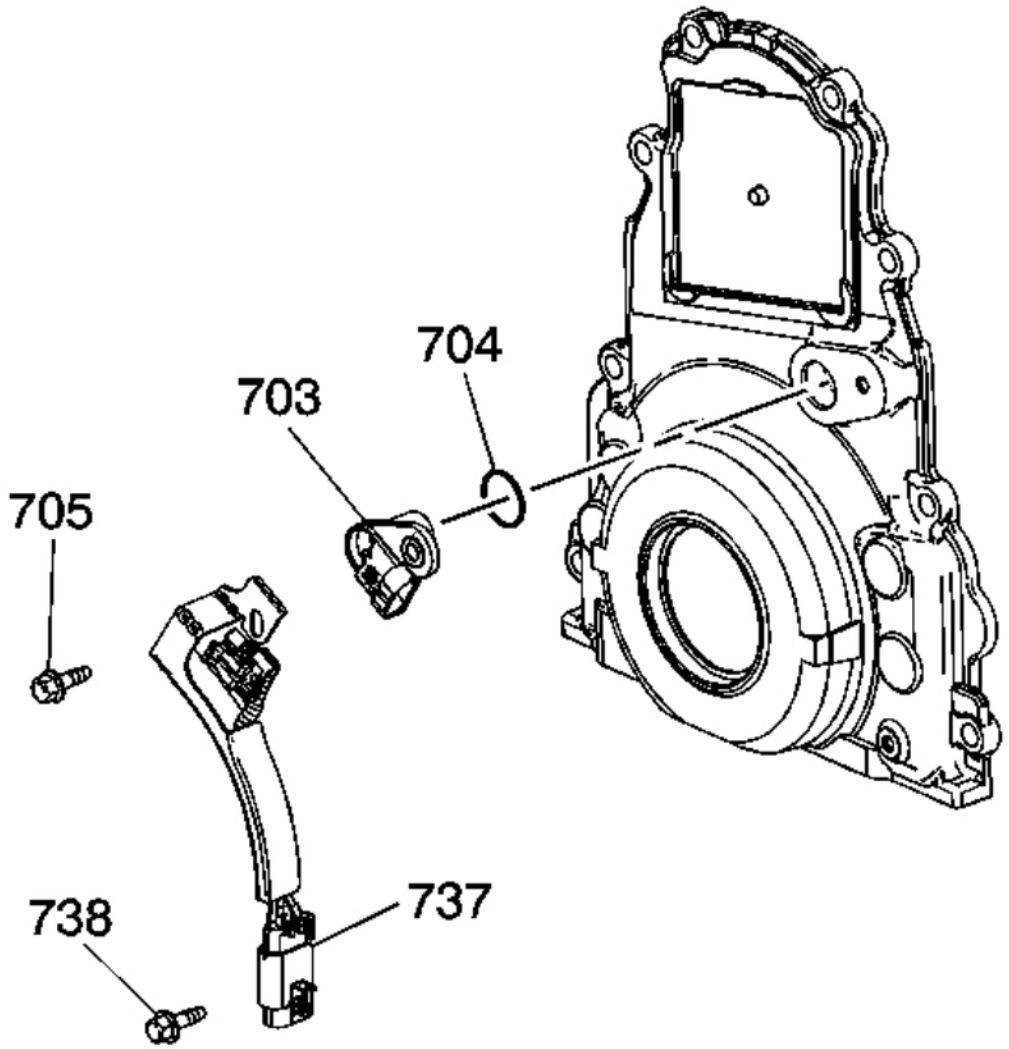

Fig. 591: O-Ring Seal, Sensor, Wire Harness & Bolts
Courtesy of GENERAL MOTORS CORP.

3. Remove the CMP sensor wire harness bolts (705, and 738).
4. Remove the CMP sensor wire harness (737).
5. Remove the CMP sensor (703) and O-ring seal (704).

Installation Procedure

cardiagn.com

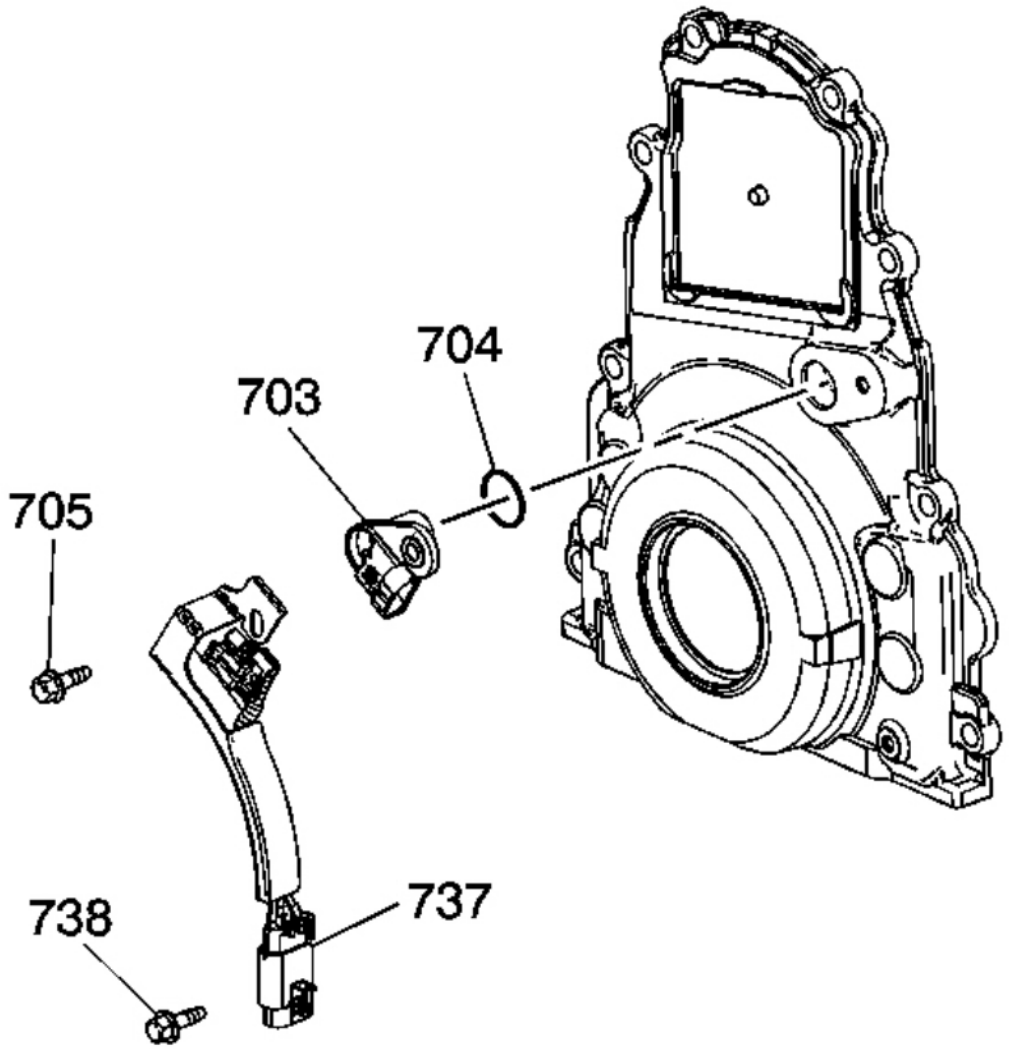

Fig. 592: O-Ring Seal, Sensor, Wire Harness & Bolts
Courtesy of GENERAL MOTORS CORP.

1. Inspect the CMP O-ring seal for cuts or damage. If the seal is not cut or damaged, it may be used again.
2. Lubricate the O-ring seal with clean engine oil.
3. Install the O-ring seal (704) onto the sensor.
4. Instal the CMP sensor (703) to the front cover.
5. Install the CMP sensor wire harness (737).

cardiagn.com

NOTE: **Refer to Fastener Notice .**

6. Install the CMP sensor wire harness bolts (705, and 738).

   Tighten: Tighten the bolts to 12 N.m (106 lb in).

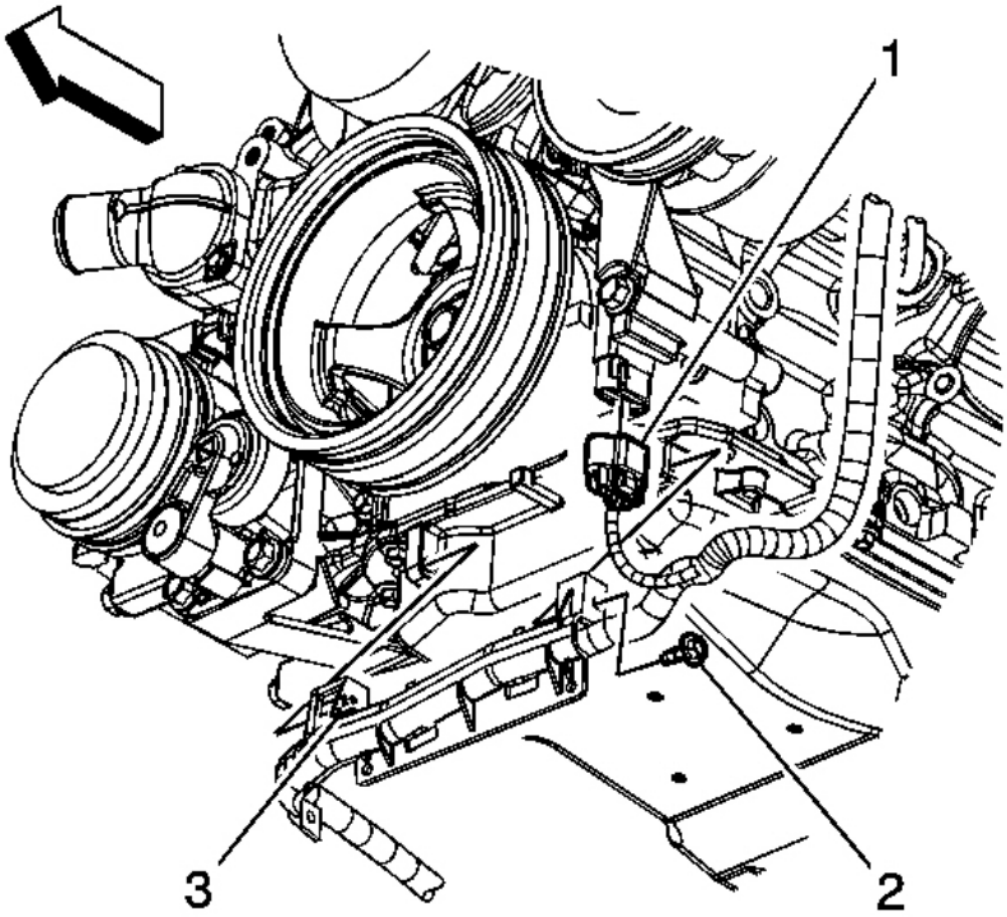

Fig. 593: View Of Electrical Connector, Cable Channel Bolt & Pin
Courtesy of GENERAL MOTORS CORP.

7. Connect the engine wiring harness electrical connector (1) to the CMP sensor wire harness.
8. Lower the vehicle.

CAMSHAFT POSITION SENSOR REPLACEMENT (RPOS LY6/L76/L92)

cardiagn.com

Removal Procedure

IMPORTANT: Clean the area around the camshaft position (CMP) sensor before removal in order to prevent debris from entering the engine.

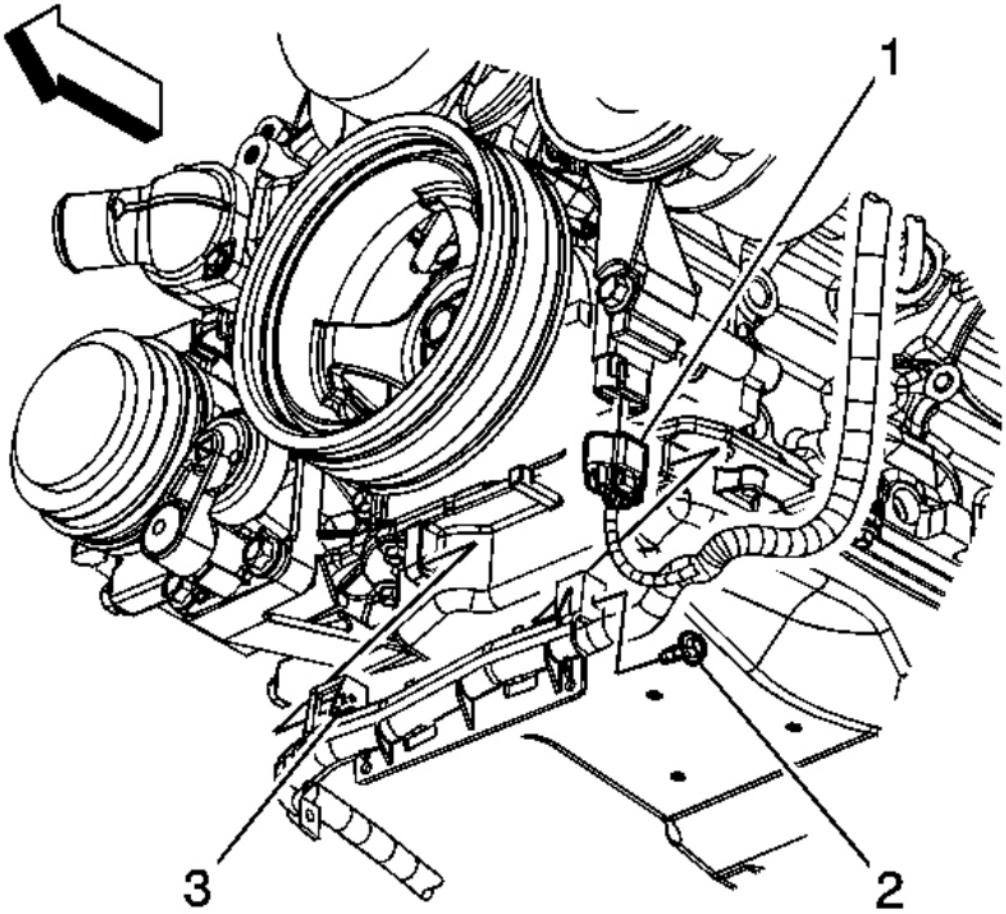

Fig. 594: View Of Electrical Connector, Cable Channel Bolt & Pin
Courtesy of GENERAL MOTORS CORP.

1. Raise and support the vehicle. Refer to **Lifting and Jacking the Vehicle** .
2. Disconnect the engine wiring harness electrical connector (1) from the CMP sensor wire harness.

cardiagn.com

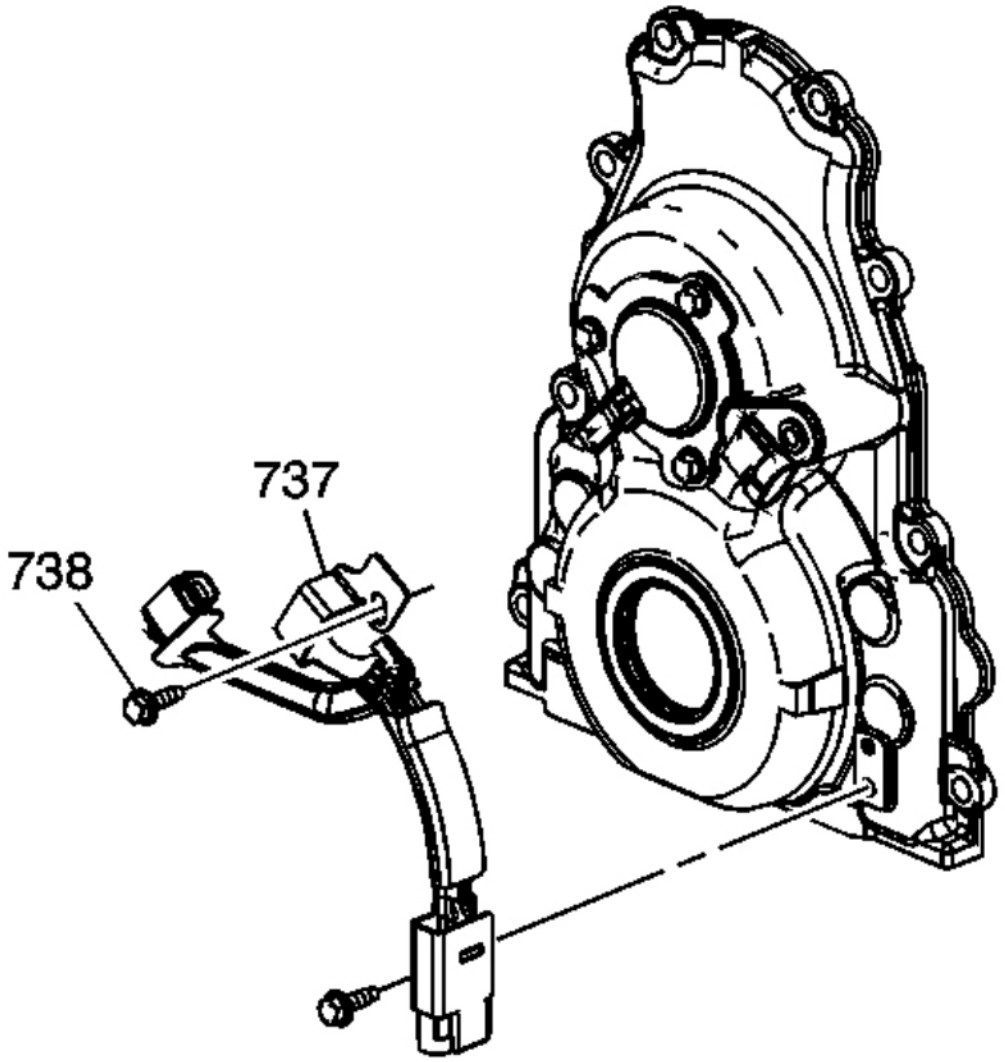

Fig. 595: View Of CMP Sensor Wire Harness & Bolts
Courtesy of GENERAL MOTORS CORP.

3. Remove the 3 CMP sensor wire harness bolts (738).
4. Disconnect the CMP sensor wire harness electrical connectors from the CMP sensor and the CMP actuator magnet.
5. Remove the CMP sensor wire harness (737).

cardiagn.com

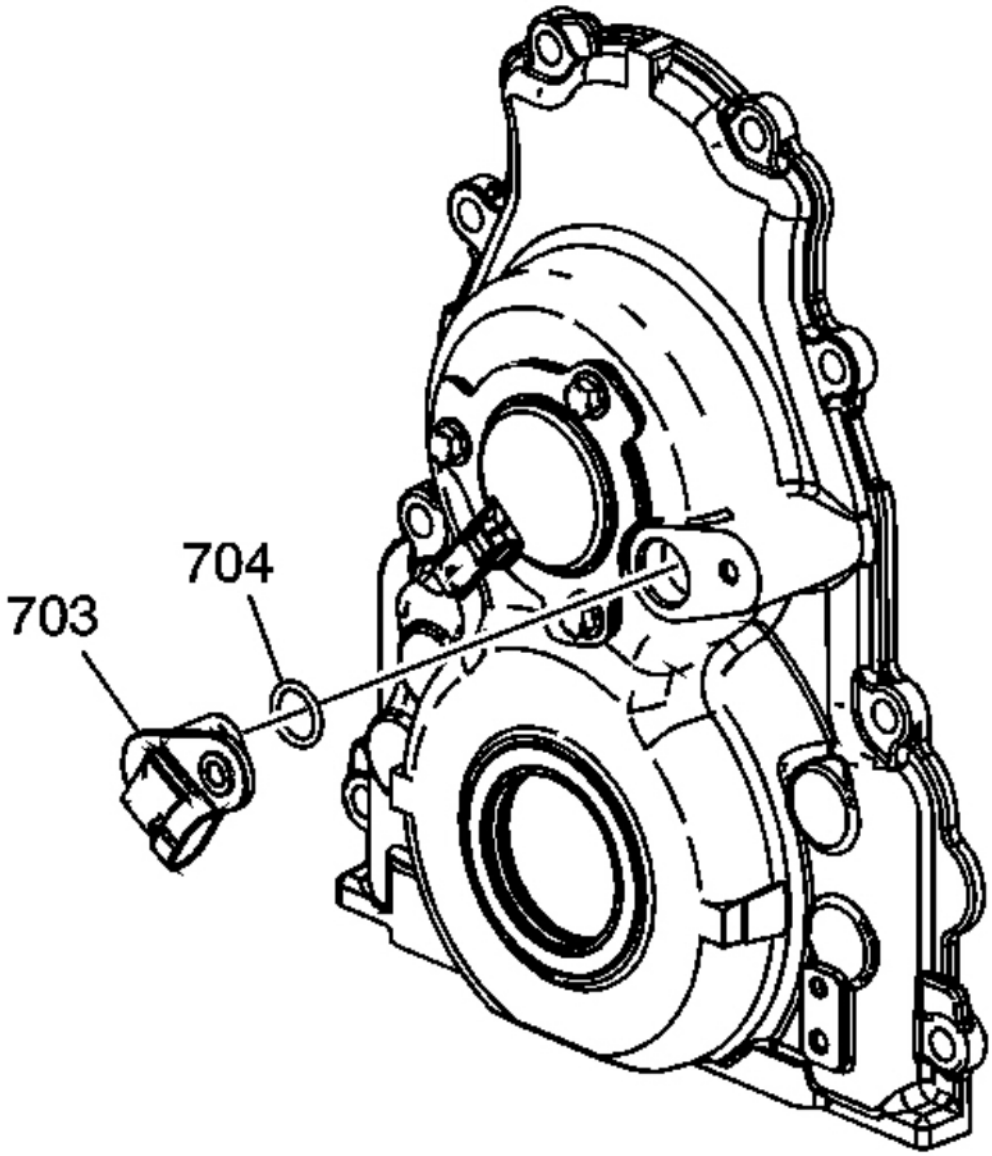

Fig. 596: View Of CMP Sensor & O-Ring
Courtesy of GENERAL MOTORS CORP.

6. Remove the CMP sensor (703) and O-ring seal (704).

Installation Procedure

cardiagn.com

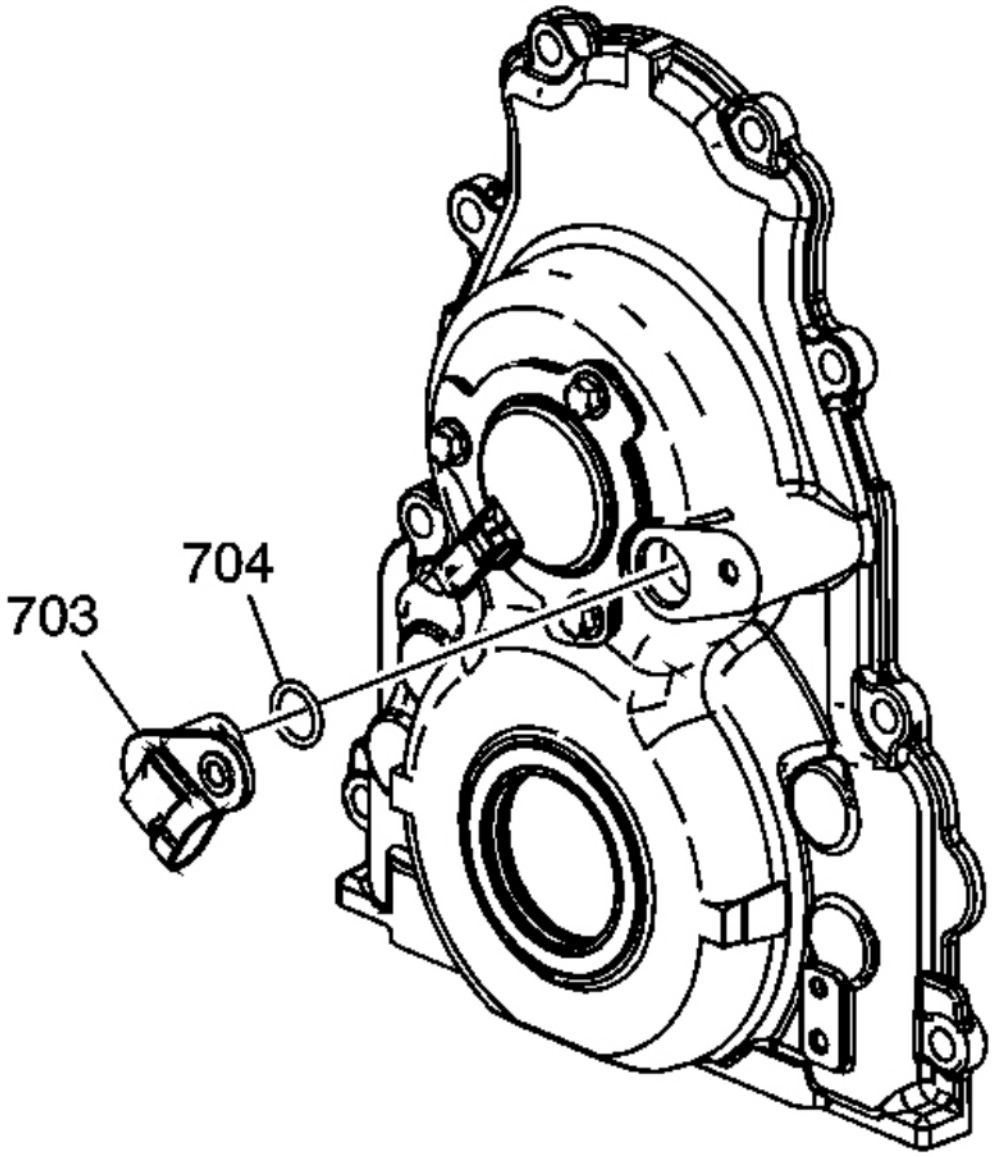

Fig. 597: View Of CMP Sensor & O-Ring
Courtesy of GENERAL MOTORS CORP.

1. Inspect the CMP O-ring seal for cuts or damage. If the seal is not cut or damaged, it may be used again.
2. Lubricate the O-ring seal with clean engine oil.
3. Install the O-ring seal (704) onto the sensor.

cardiagn.com

4. Instal the CMP sensor (703) to the front cover.

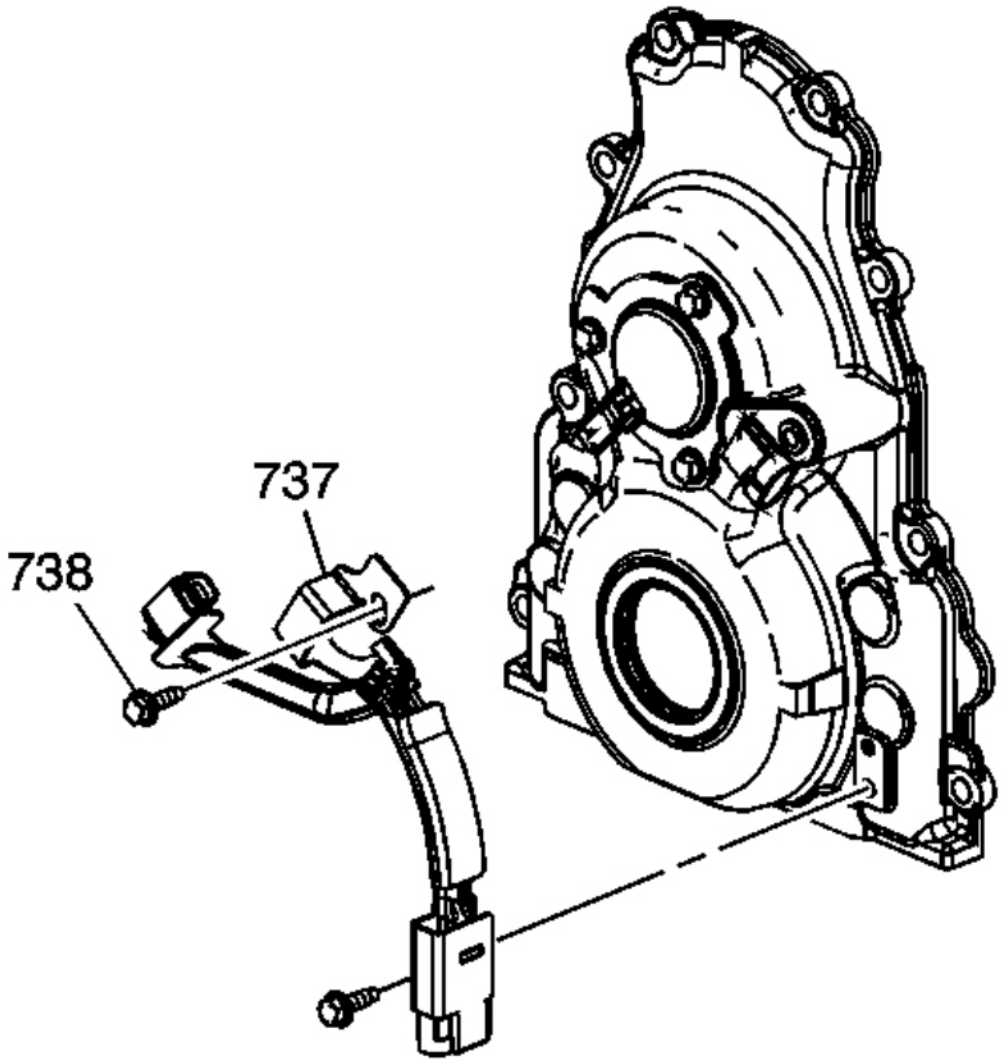

Fig. 598: View Of CMP Sensor Wire Harness & Bolts
Courtesy of GENERAL MOTORS CORP.

5. Install the CMP sensor wire harness (737).
6. Connect the CMP sensor wire harness electrical connectors to the CMP sensor and the CMP actuator magnet.

cardiagn.com

NOTE: **Refer to Fastener Notice .**

7. Install the 3 CMP sensor wire harness bolts (738).

   Tighten: Tighten the bolts to 12 N.m (106 lb in).

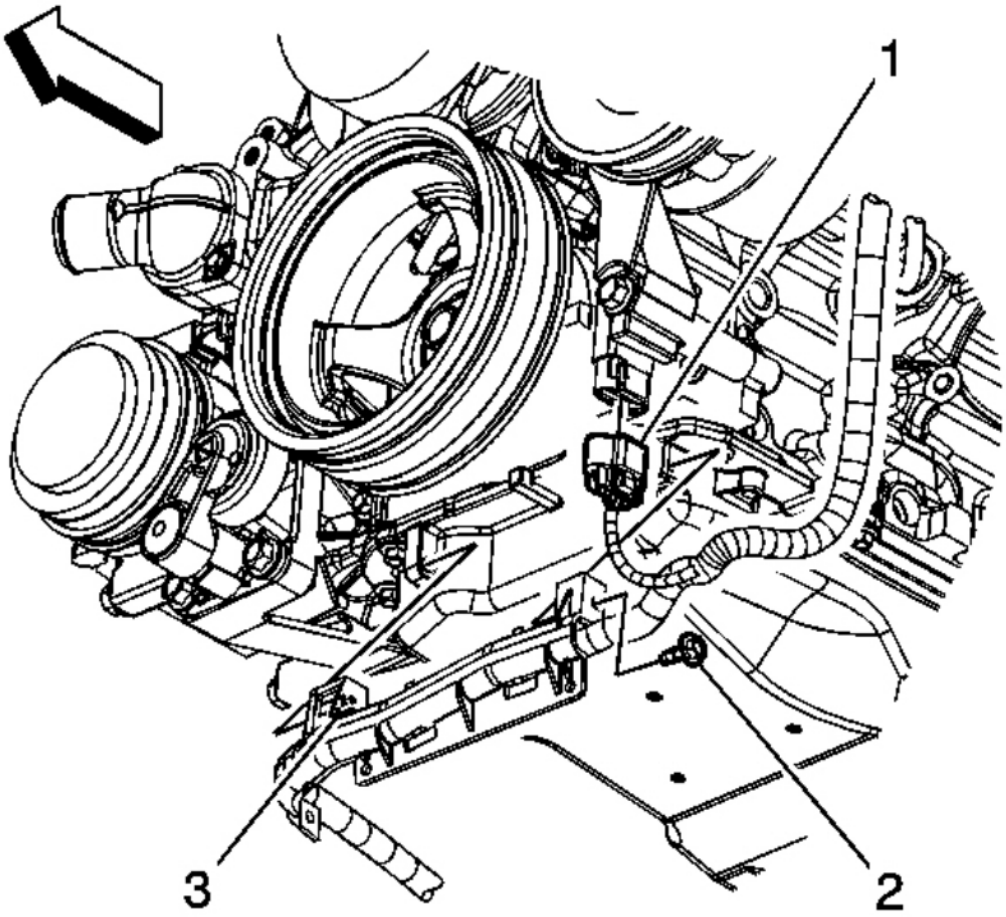

Fig. 599: View Of Electrical Connector, Cable Channel Bolt & Pin
Courtesy of GENERAL MOTORS CORP.

8. Connect the engine wiring harness electrical connector (1) to the CMP sensor wire harness.
9. Lower the vehicle.

KNOCK SENSOR 1 REPLACEMENT

cardiagn.com

Removal Procedure

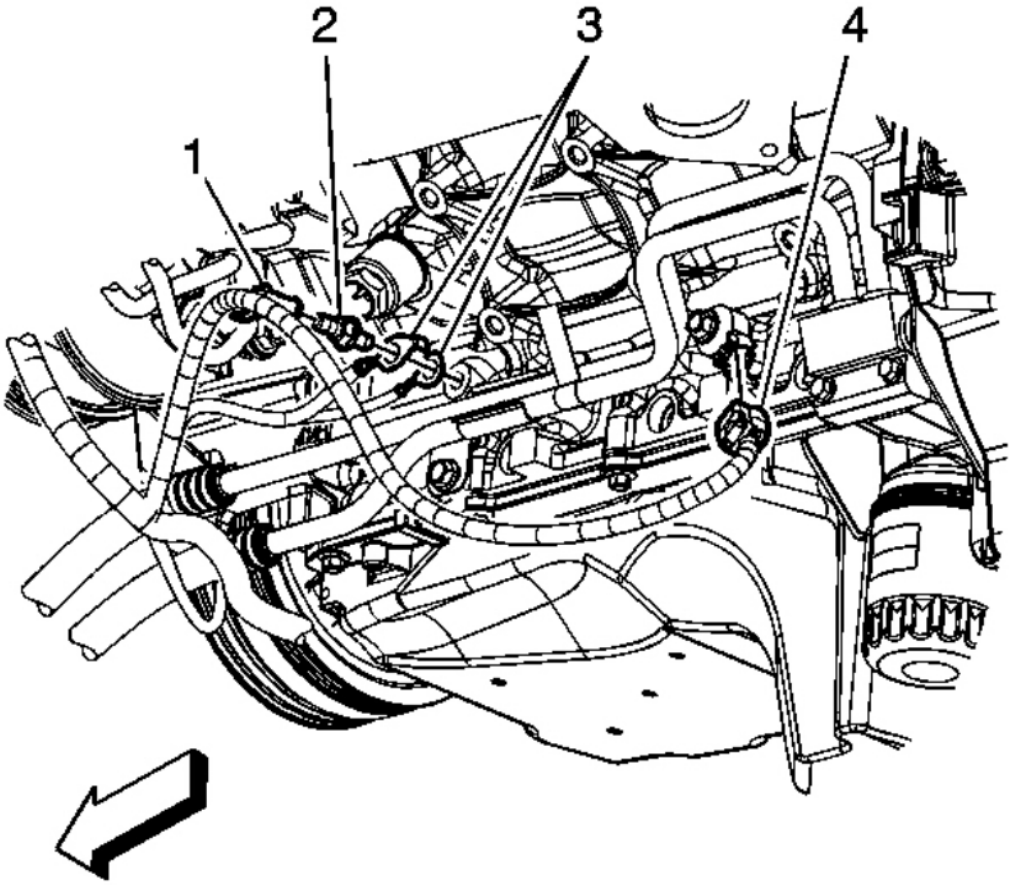

Fig. 600: View Of Engine Harness Components
Courtesy of GENERAL MOTORS CORP.

1. Remove the left front wheel and tire. Refer to **Tire and Wheel Removal and Installation** .
2. Working through the wheel well opening, disconnect the engine wiring harness electrical connector (4) from knock sensor.

cardiagn.com

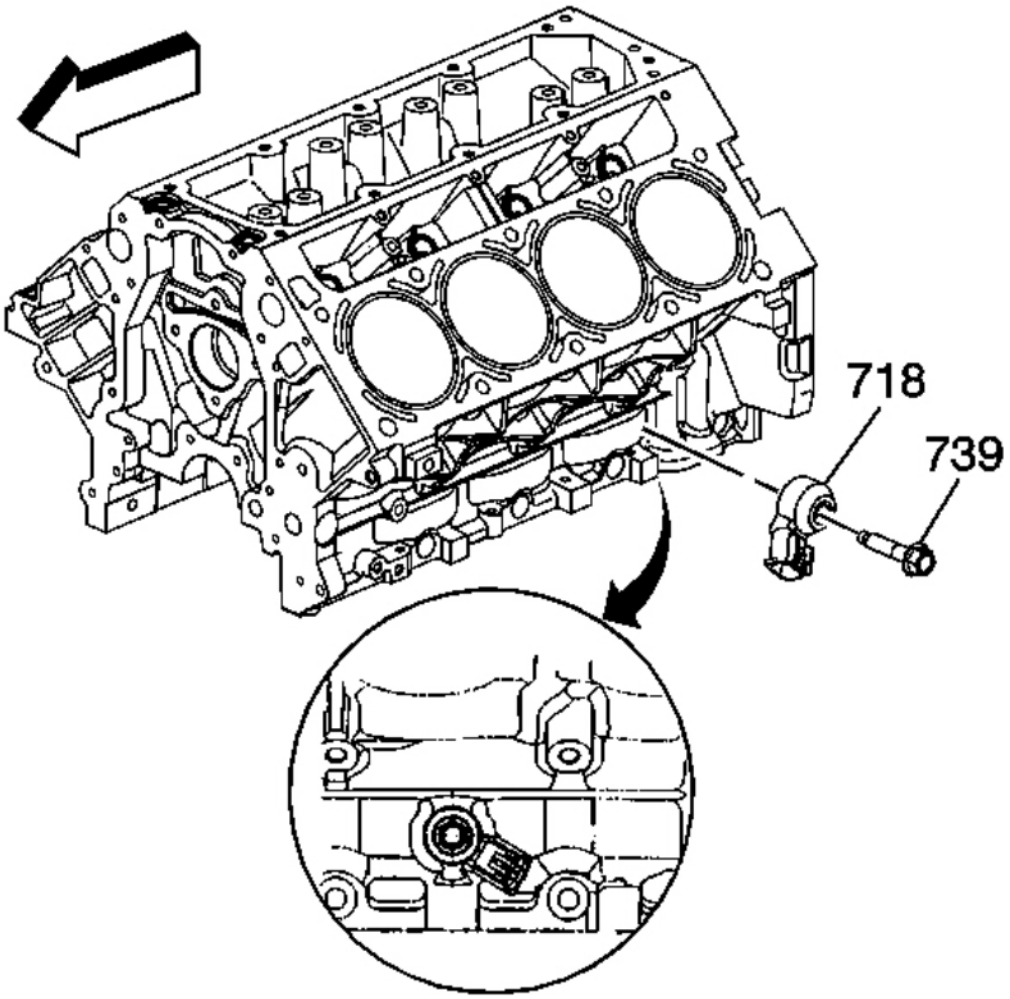

Fig. 601: Left Side Knock Sensor & Bolt
Courtesy of GENERAL MOTORS CORP.

3. Remove the knock sensor bolt (739) and knock sensor (718).

Installation Procedure

cardiagn.com

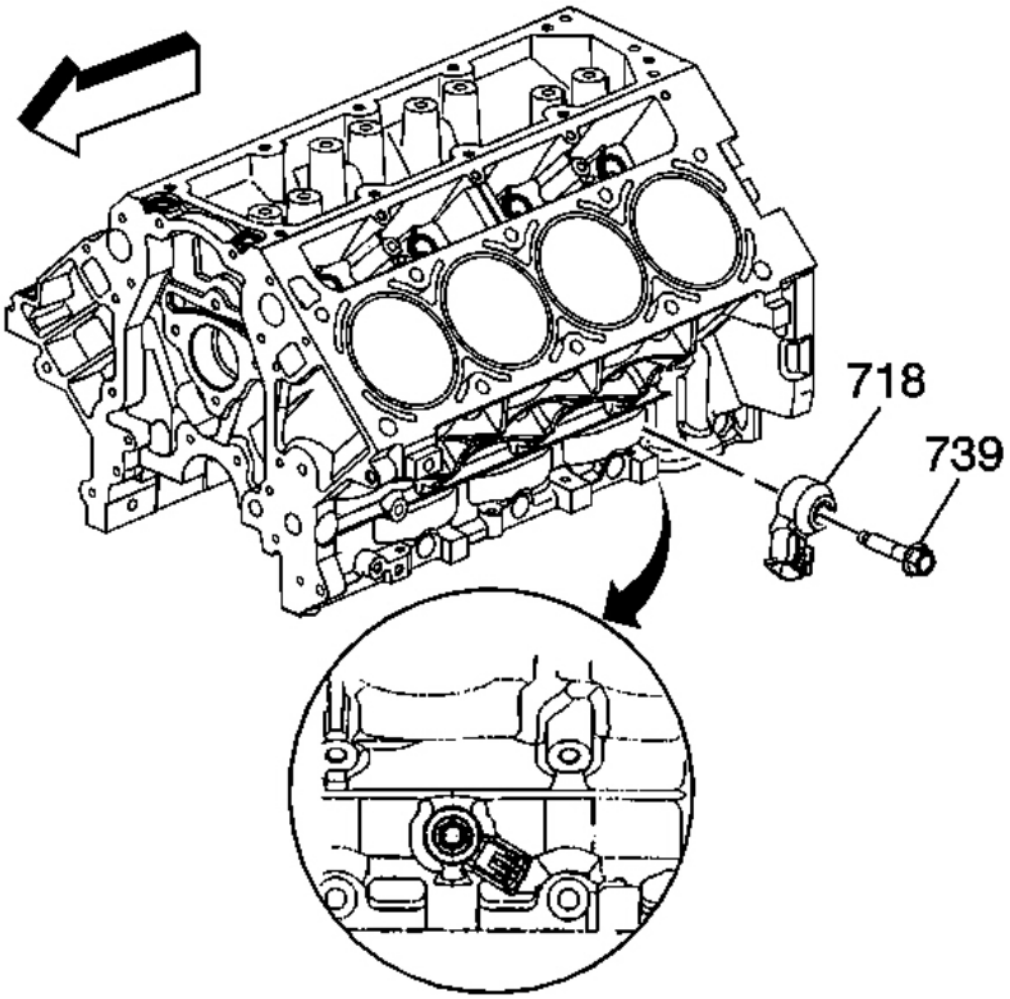

Fig. 602: Left Side Knock Sensor & Bolt
Courtesy of GENERAL MOTORS CORP.

NOTE: **Refer to Fastener Notice .**

1. Position the knock sensor (718) to the engine block and install the knock sensor bolt (739).

   Tighten: Tighten the bolt to 25 N.m (18 lb ft).

cardiagn.com

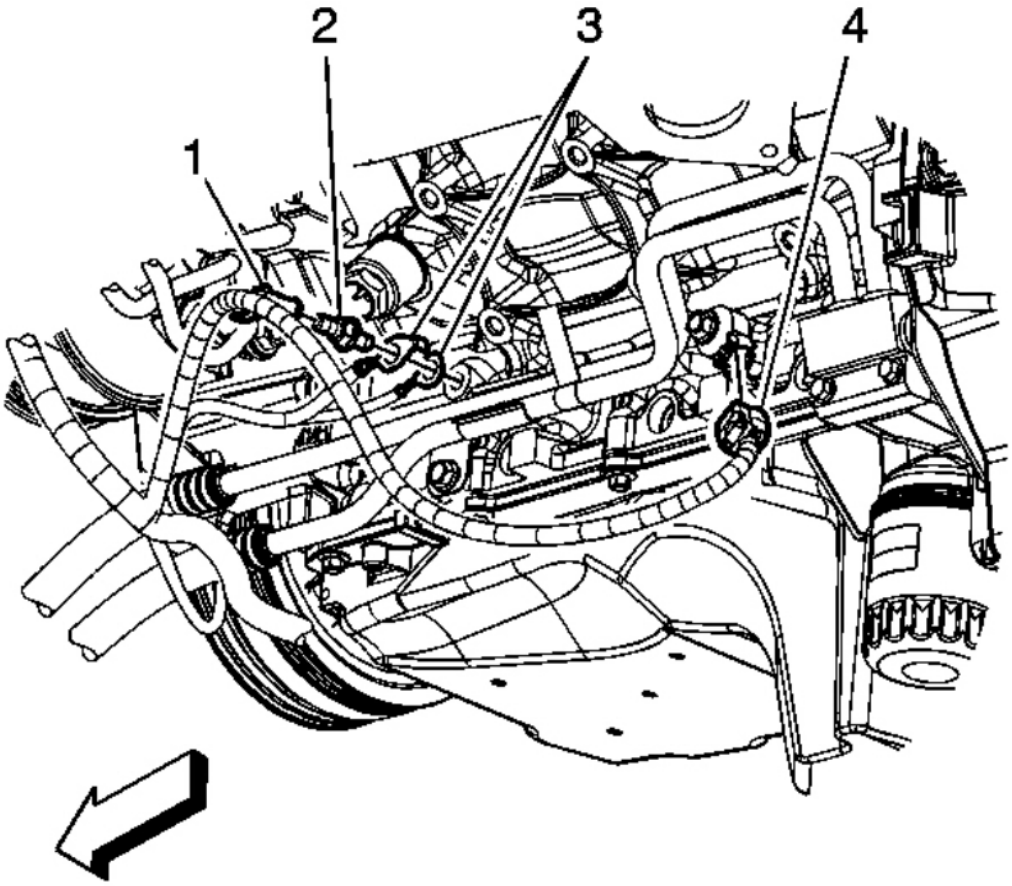

Fig. 603: View Of Engine Harness Components
Courtesy of GENERAL MOTORS CORP.

2. Connect the engine wiring harness electrical connector (4) to knock sensor.
3. Install the left front wheel and tire. Refer to **Tire and Wheel Removal and Installation** .

KNOCK SENSOR 2 REPLACEMENT

Removal Procedure

cardiagn.com

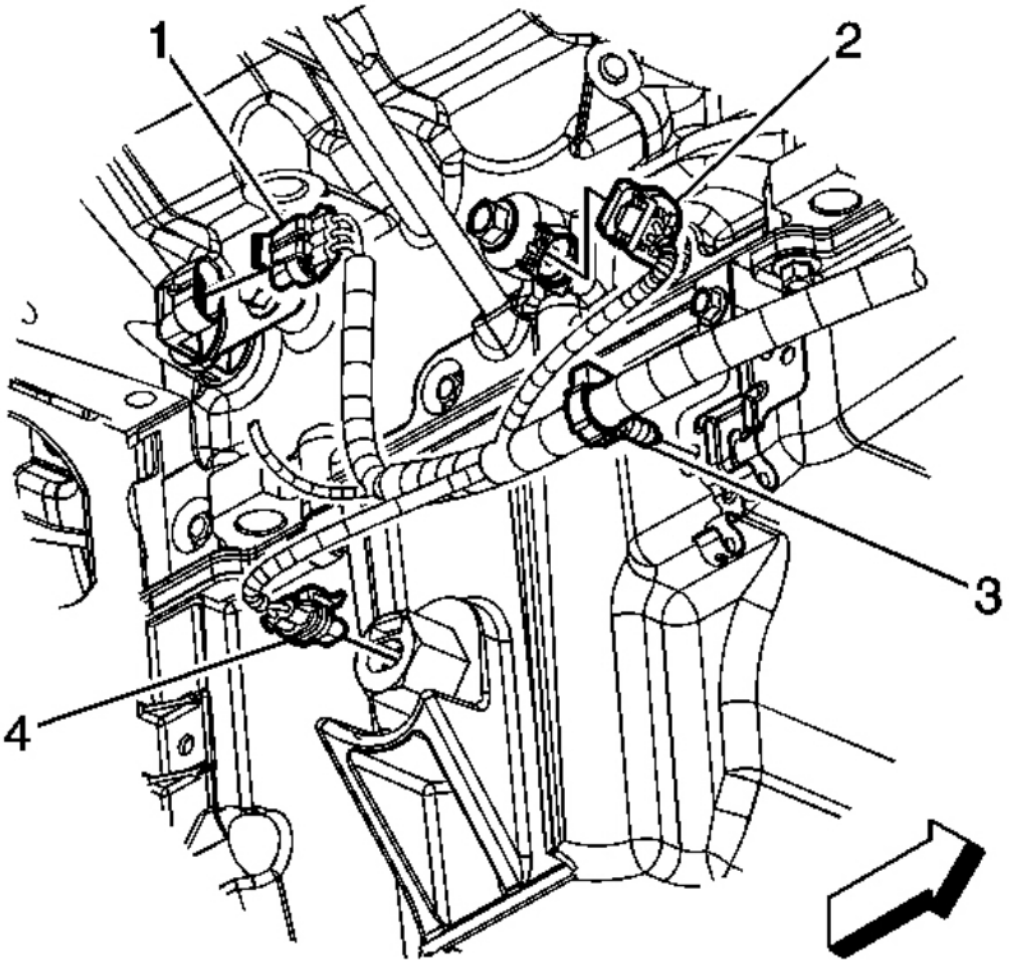

Fig. 604: View Of Electrical Connectors & Clips
Courtesy of GENERAL MOTORS CORP.

1. Remove the right front wheel and tire. Refer to **Tire and Wheel Removal and Installation** .
2. Working throughout the wheel well opening, disconnect the engine wiring harness electrical connector (2) from knock sensor.

cardiagn.com

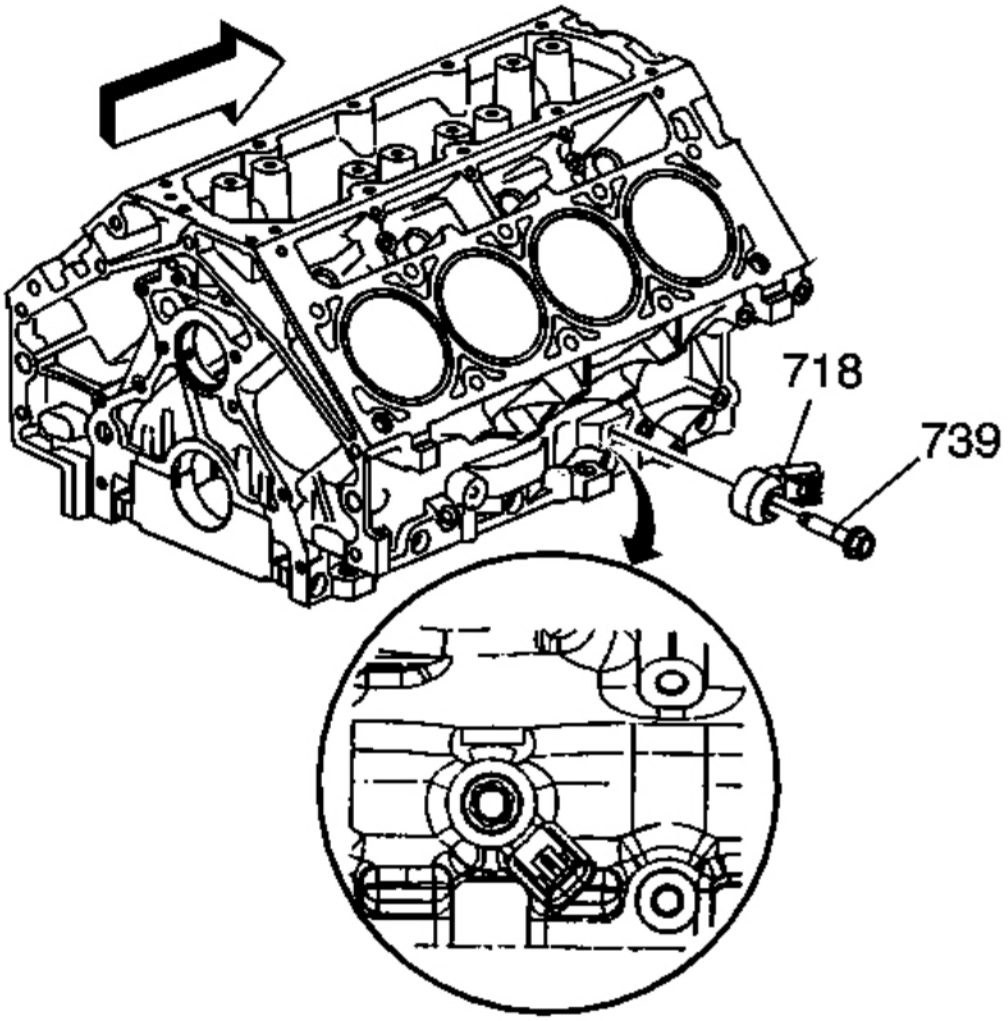

Fig. 605: Right Side Knock Sensor & Bolt
Courtesy of GENERAL MOTORS CORP.

3. Remove the knock sensor bolt (739) and knock sensor (718).

Installation Procedure

cardiagn.com

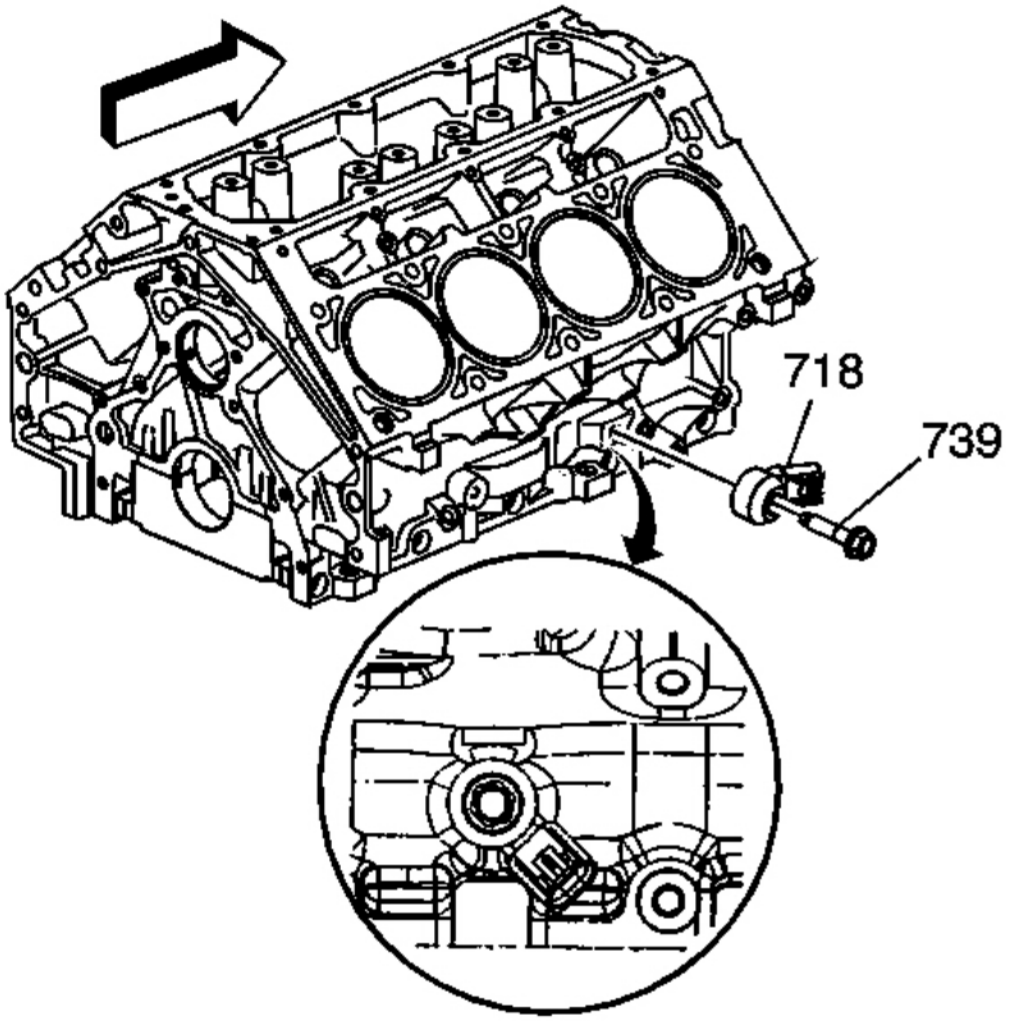

Fig. 606: Right Side Knock Sensor & Bolt
Courtesy of GENERAL MOTORS CORP.

NOTE: **Refer to Fastener Notice .**

1. Position the knock sensor (718) to the engine block and install the knock sensor bolt (739).

   Tighten: Tighten the bolt to 25 N.m (18 lb ft).

cardiagn.com

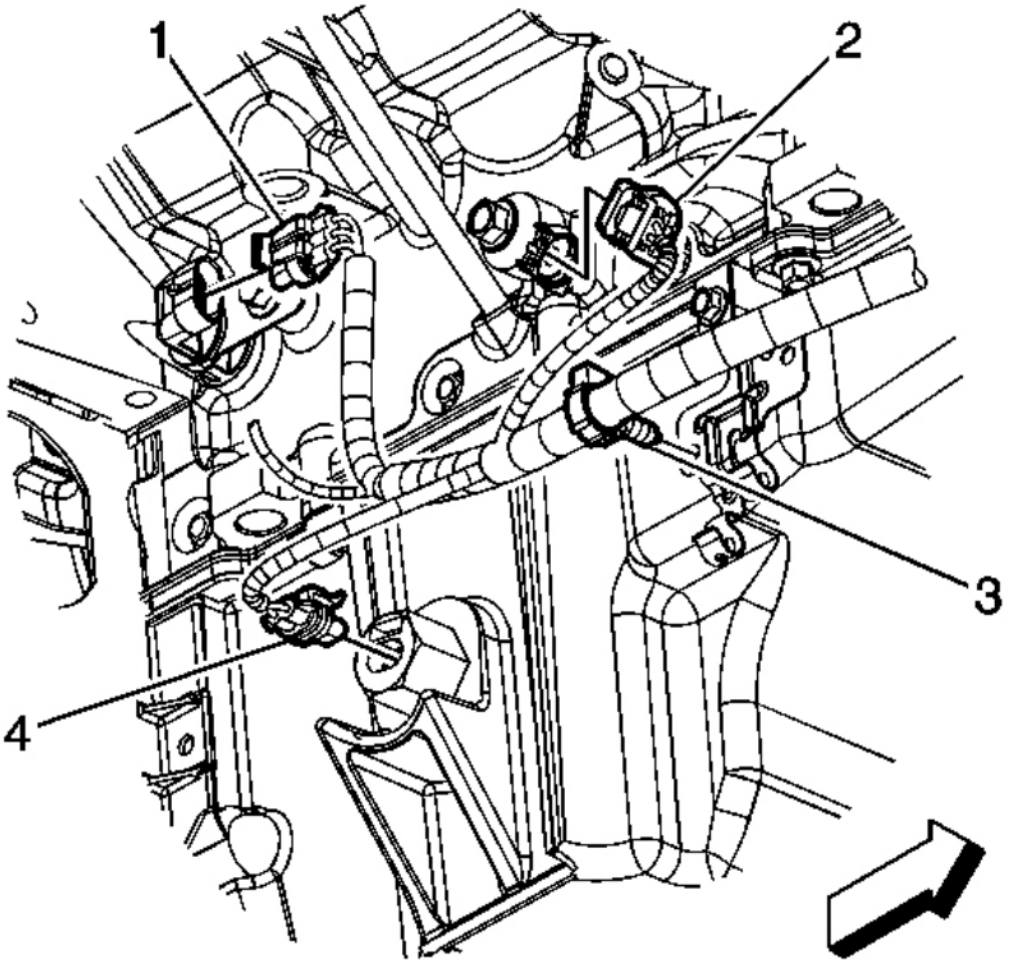

Fig. 607: View Of Electrical Connectors & Clips
Courtesy of GENERAL MOTORS CORP.

2. Connect the engine wiring harness electrical connector (2) to knock sensor.
3. Install the right front wheel and tire. Refer to **Tire and Wheel Removal and Installation** .

AIR CLEANER ELEMENT REPLACEMENT

Removal Procedure

cardiagn.com

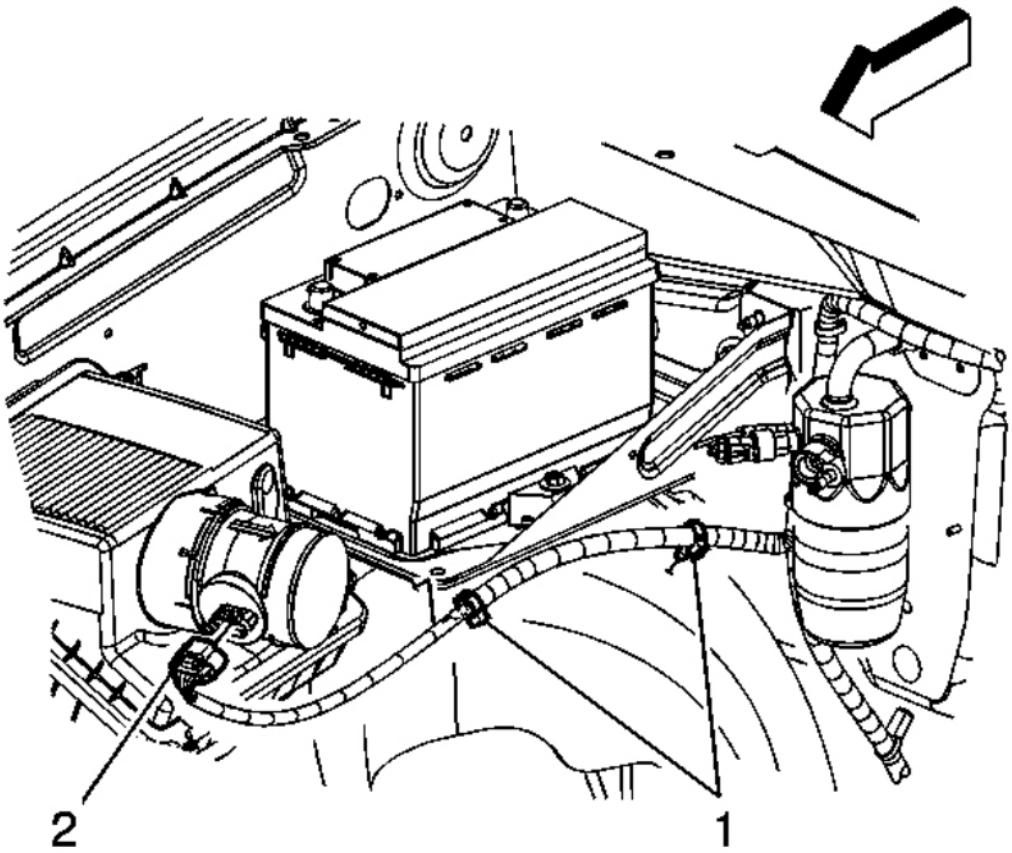

Fig. 608: View Of Throttle Body Heater Hose & Retainers
Courtesy of GENERAL MOTORS CORP.

1. Remove the air cleaner outlet duct. Refer to **Air Cleaner Resonator Outlet Duct Replacement**.
2. Disconnect the engine wiring harness electrical connector (2) from the mass air flow (MAF)/intake air temperature (IAT) sensor.

cardiagn.com

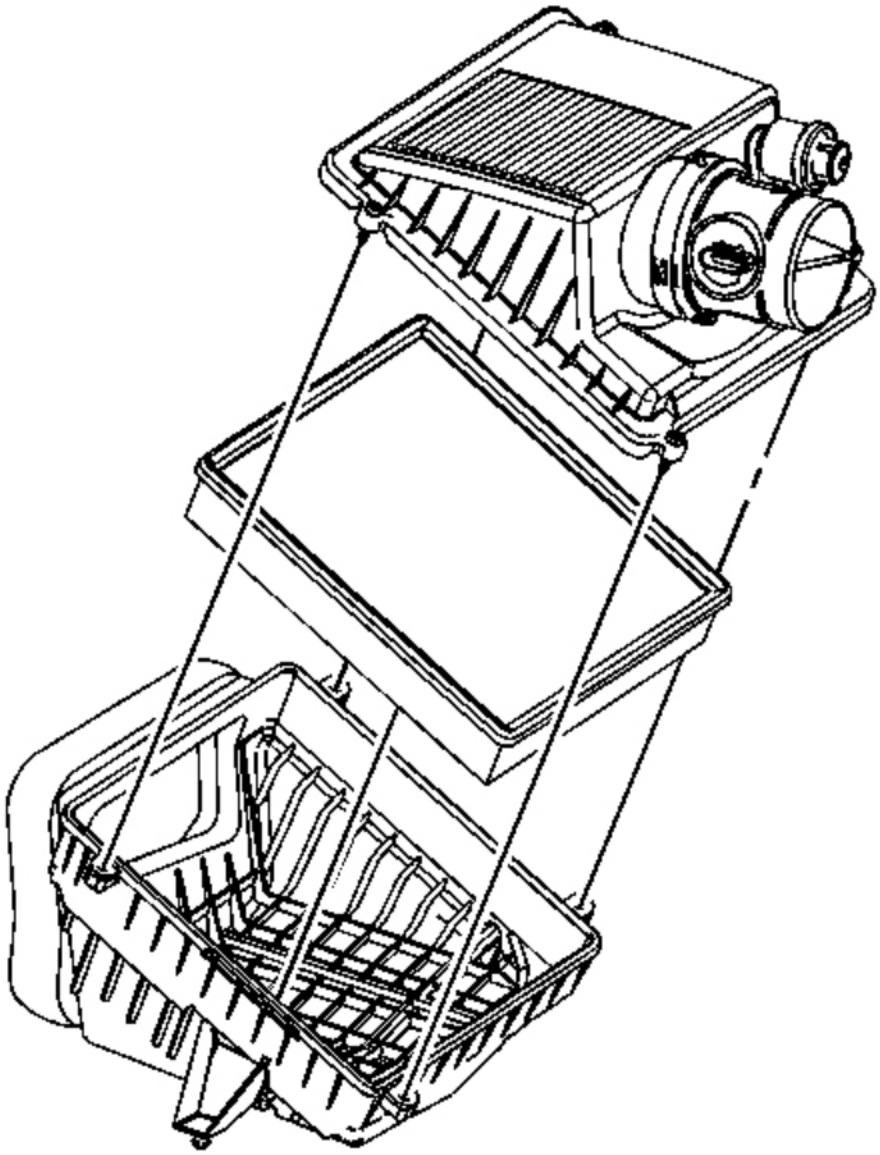

Fig. 609: View Of Air Cleaner Components
Courtesy of GENERAL MOTORS CORP.

3. Loosen the air cleaner housing screws.
4. Lift up the air cleaner housing cover.
5. Remove the air filter element.

cardiagn.com

Installation Procedure

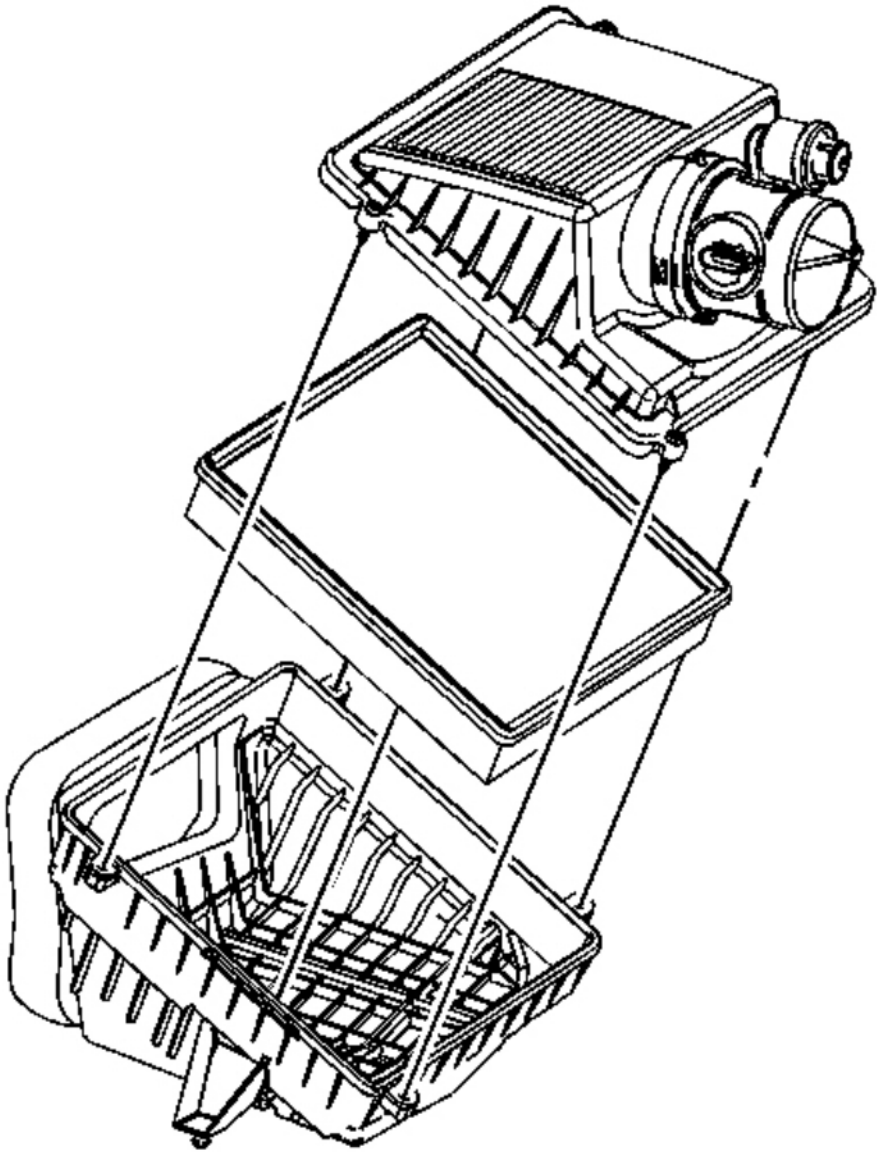

Fig. 610: View Of Air Cleaner Components
Courtesy of GENERAL MOTORS CORP.

1. Install the NEW air filter element.

cardiagn.com

2. Install the air cleaner housing cover.

NOTE: **Refer to Fastener Notice .**

3. Tighten the air cleaner housing screws.

Tighten: Tighten the screws to 3 N.m (27 lb in).

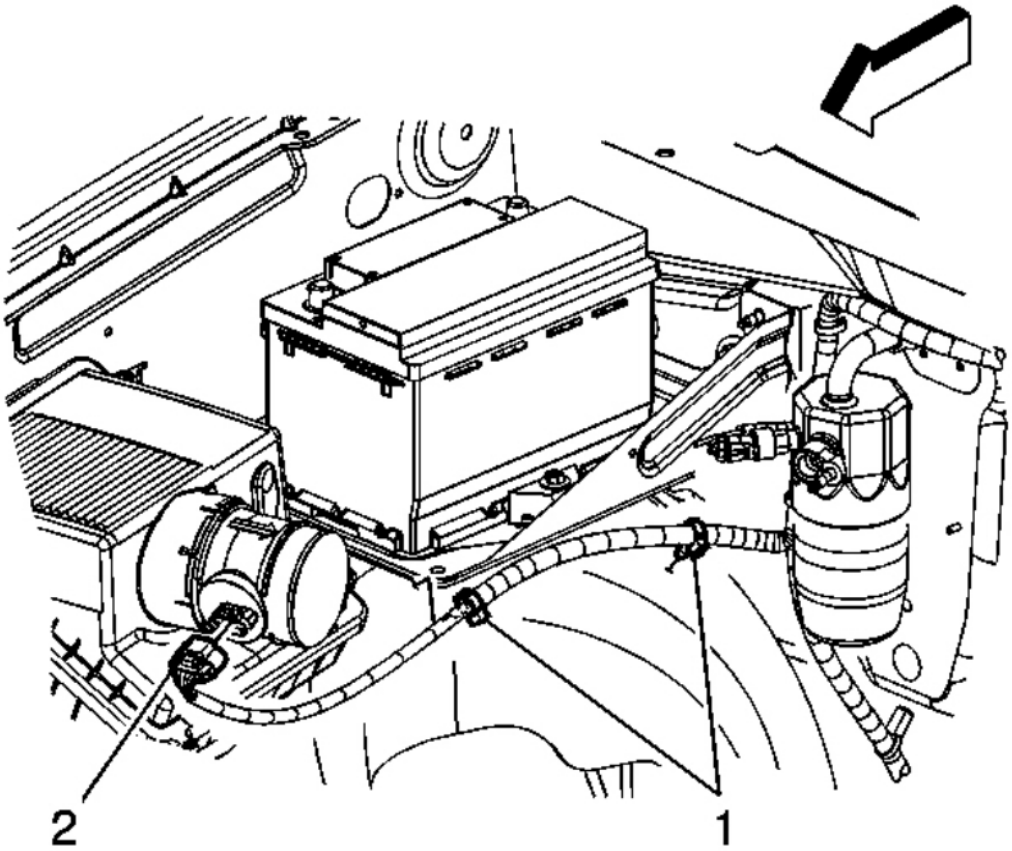

Fig. 611: View Of Throttle Body Heater Hose & Retainers
Courtesy of GENERAL MOTORS CORP.

4. Connect the engine harness electrical connector (2) to the MAF/IAT sensor.
5. Install the air cleaner outlet duct. Refer to **Air Cleaner Resonator Outlet Duct Replacement**.

AIR CLEANER ASSEMBLY REPLACEMENT

cardiagn.com

Removal Procedure

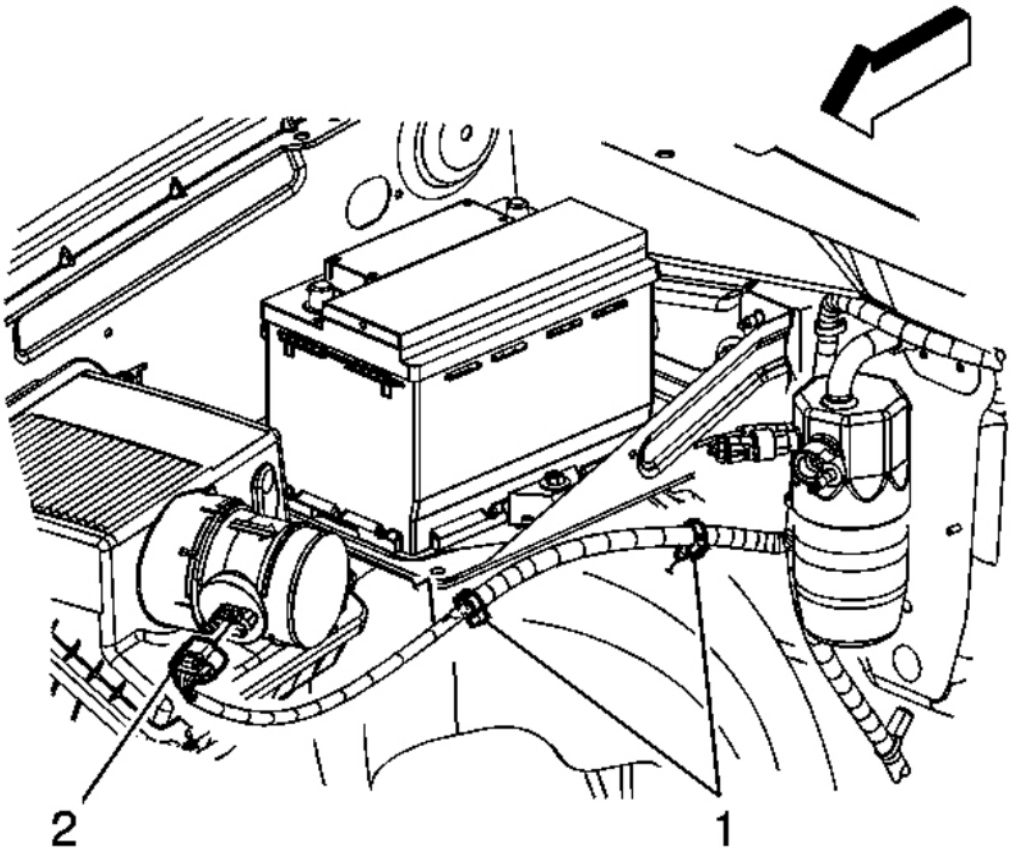

Fig. 612: View Of Throttle Body Heater Hose & Retainers
Courtesy of GENERAL MOTORS CORP.

1. Remove the air cleaner outlet duct. Refer to **Air Cleaner Resonator Outlet Duct Replacement**.
2. Disconnect the engine wiring harness electrical connector (2) from the mass air flow (MAF)/intake air temperature (IAT) sensor.

cardiagn.com

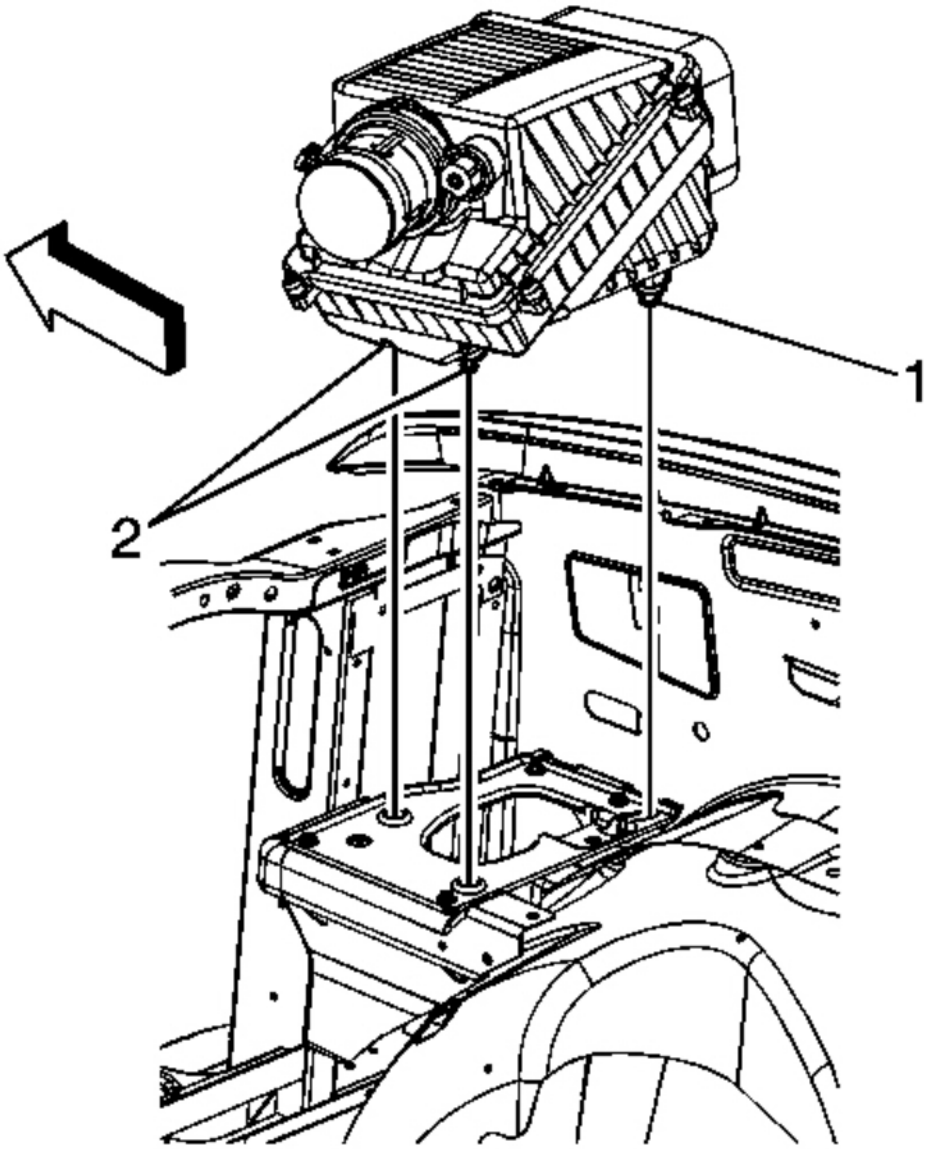

Fig. 613: View Of Air Cleaner Assembly & Mounting Components
Courtesy of GENERAL MOTORS CORP.

3. Pull up on the front of the air cleaner assembly in order to release the retainers (2) from the air cleaner adapter.
4. Slide the air cleaner assembly forward disengaging the locator (1) from the adapter.

cardiagn.com

5. Remove the air cleaner assembly.
6. If replacing the air cleaner assembly proceed to the following step otherwise proceed to step 5 in the installation procedure.

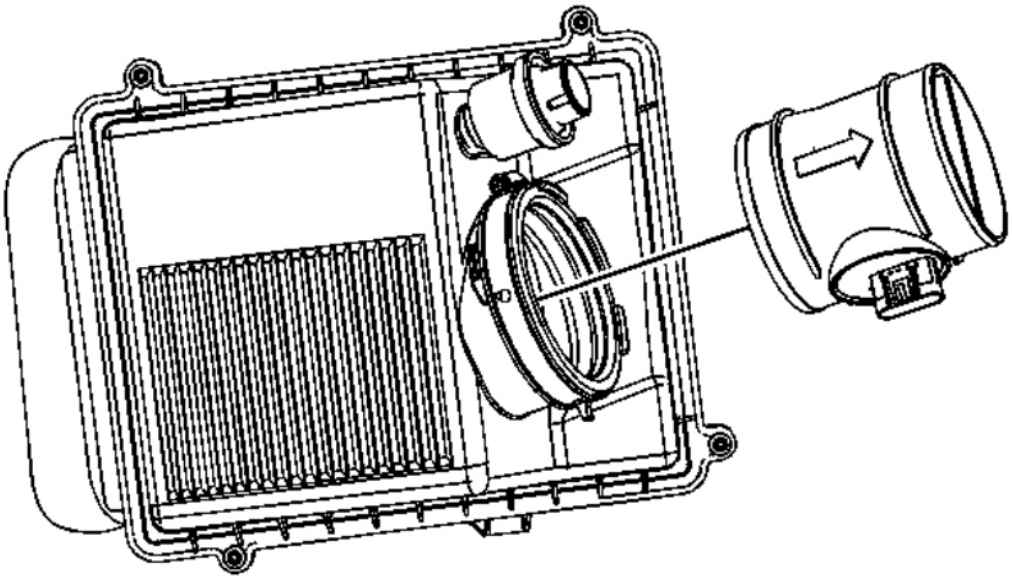

Fig. 614: View Of MAF/IAT Sensor Adapter & Clamp
Courtesy of GENERAL MOTORS CORP.

7. Loosen the MAF/IAT sensor adapter clamp.
8. Remove the MAF/IAT sensor and adapter.

Installation Procedure

IMPORTANT: If the MAF/IAT sensor is installed backwards, the fuel system goes rich. An arrow cast into the plastic portion of the sensor indicates proper air flow direction. The arrow must point toward the engine.

cardiagn.com

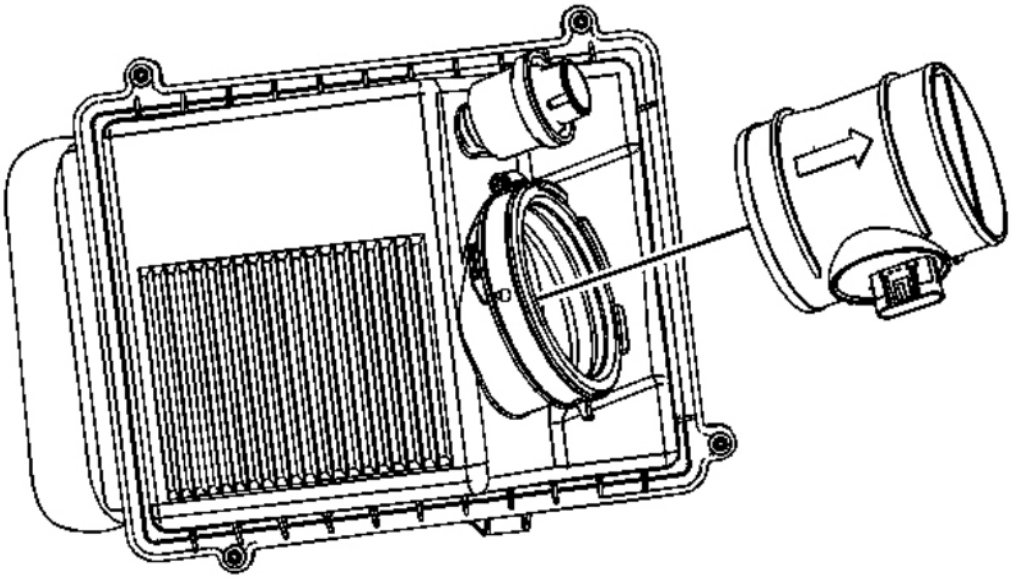

Fig. 615: View Of MAF/IAT Sensor Adapter & Clamp
Courtesy of GENERAL MOTORS CORP.

1. If the air cleaner assembly was replaced proceed to the following step otherwise proceed to step 5.
2. Install the MAF/IAT sensor adapter clamp to the air cleaner assembly.
3. Install the MAF/IAT sensor

NOTE: **Refer to Fastener Notice .**

4. Tighten the MAF/IAT sensor adapter clamp.

Tighten: Tighten the clamp to 4 N.m (35 lb in).

cardiagn.com

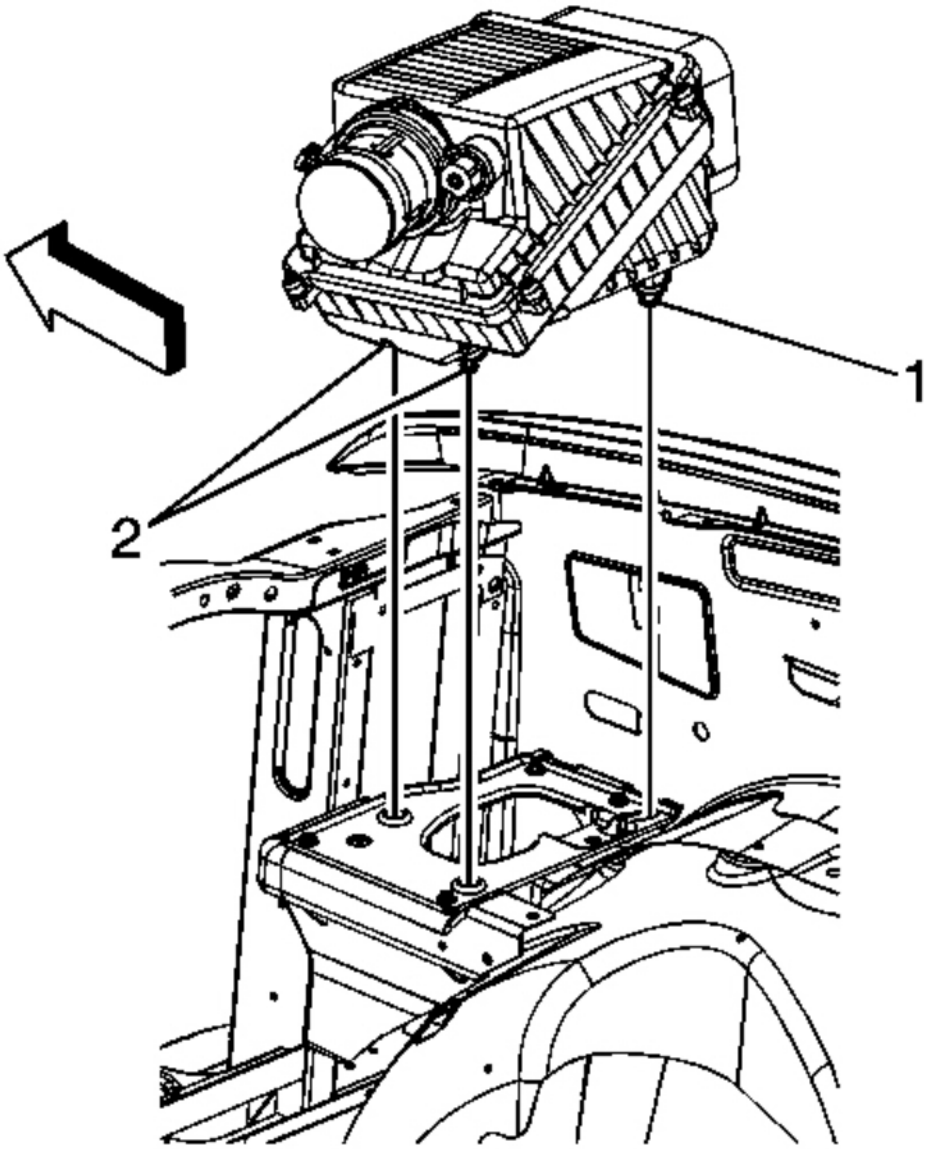

Fig. 616: View Of Air Cleaner Assembly & Mounting Components
Courtesy of GENERAL MOTORS CORP.

5. Install the air cleaner assembly.
    1. Insert the locator (1) on the right rear of the air cleaner into the inboard side of the slot in the adapter bracket.

cardiagn.com

2. Slide the air cleaner towards the fender to engage the adapter.
3. Push down on the air cleaner in order to install the retainers (2) into the adapter bracket.

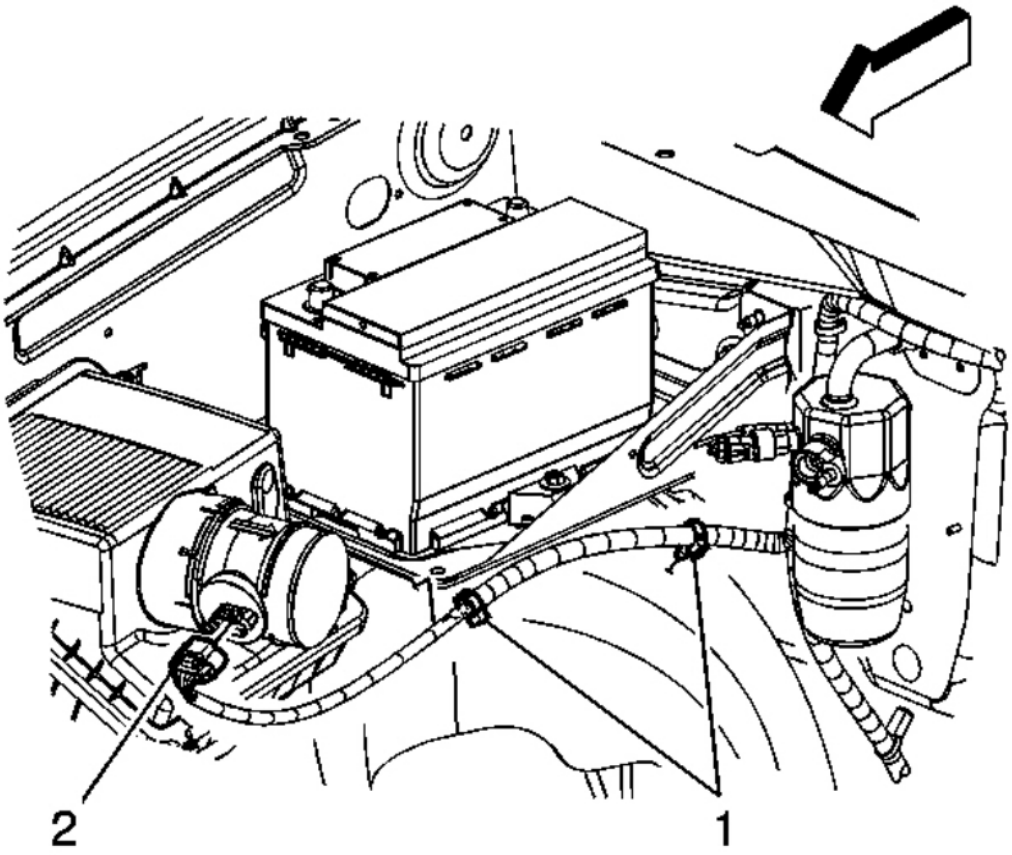

Fig. 617: View Of Throttle Body Heater Hose & Retainers
Courtesy of GENERAL MOTORS CORP.

6. Connect the engine wiring harness electrical connector (2) to the MAF/IAT sensor.
7. Install the air cleaner outlet duct. Refer to **Air Cleaner Resonator Outlet Duct Replacement**.

AIR CLEANER RESONATOR OUTLET DUCT REPLACEMENT

Removal Procedure

cardiagn.com

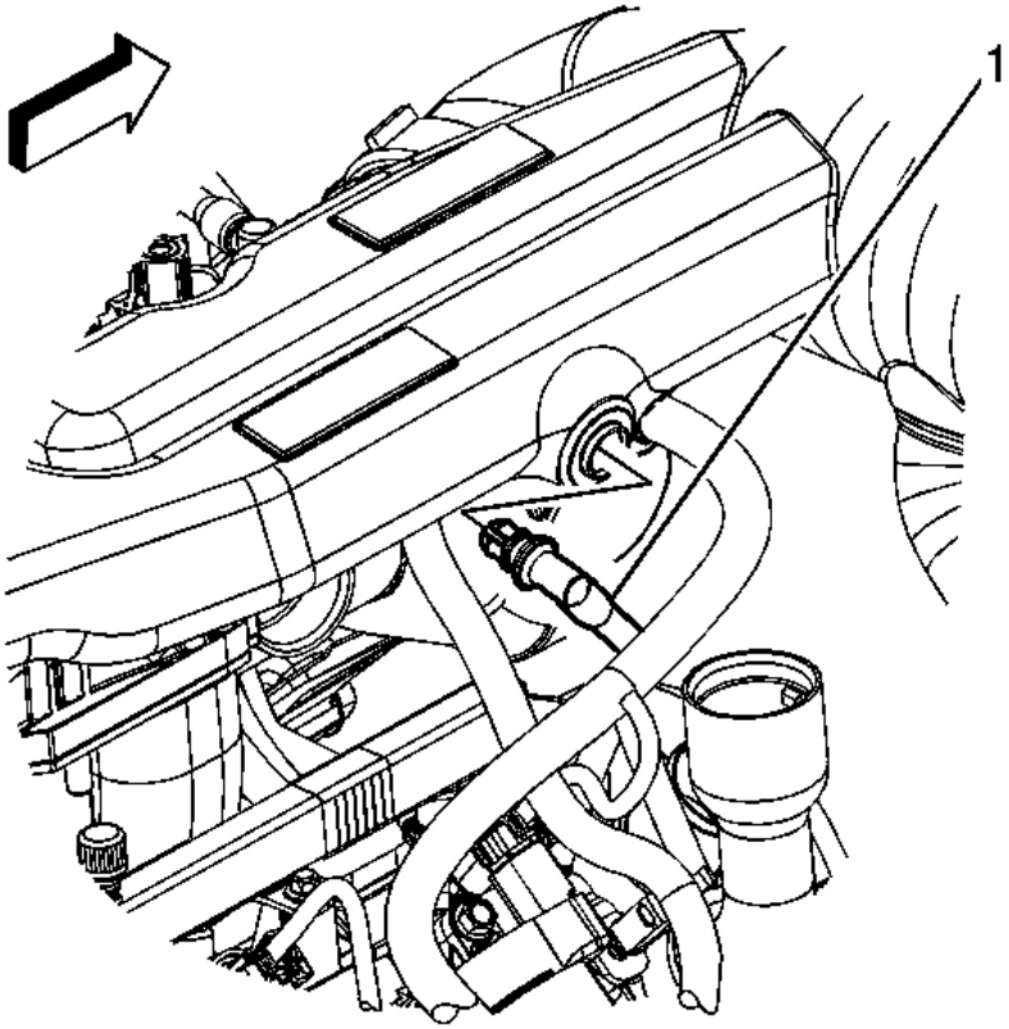

Fig. 618: View Of PCV Tube
Courtesy of GENERAL MOTORS CORP.

1. Remove the intake manifold sight shield. Refer to **Upper Intake Manifold Sight Shield Replacement** .
2. Remove the positive crankcase ventilation (PCV) line (1) from the air cleaner outlet duct.

cardiagn.com

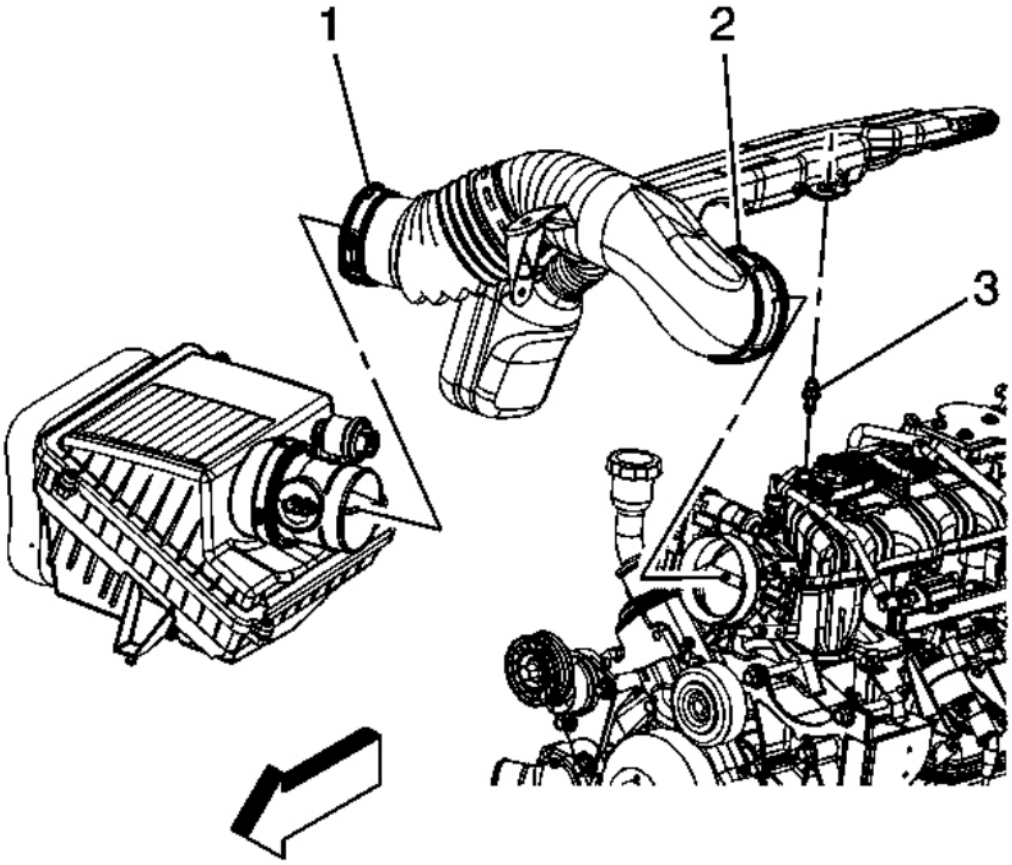

Fig. 619: View Of Air Cleaner Outlet Ducts
Courtesy of GENERAL MOTORS CORP.

3. Remove the radiator inlet hose clamp retainer from the outlet duct.
4. Remove the radiator vent inlet hose retainer from the outlet duct.
5. Loosen the air cleaner outlet duct clamp (1) at the mass air flow (MAF)/intake air temperature (IAT) sensor.
6. Loosen the air cleaner outlet duct clamp (2) at the throttle body.
7. Lift up the air cleaner outlet duct at the resonator tab in order to separate the resonator from the stud on the intake manifold.
8. Remove the air cleaner outlet duct from the throttle body and MAF/IAT sensor.

Installation Procedure

cardiagn.com

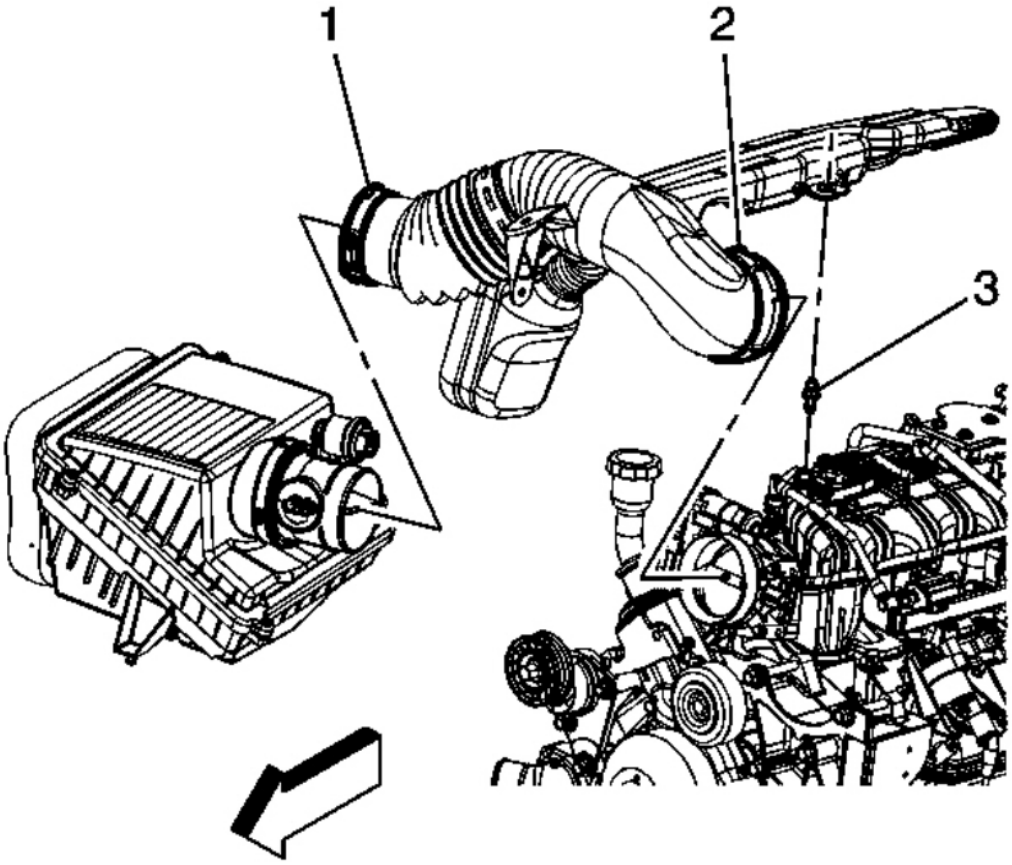

Fig. 620: View Of Air Cleaner Outlet Ducts
Courtesy of GENERAL MOTORS CORP.

1. Install the air cleaner outlet duct to the throttle body and MAF/IAT sensor. Ensure that the resonator tab aligns with the stud on the intake manifold.
2. Push down on the air cleaner outlet duct resonator directly over the resonator tab in order to secure the resonator to the stud on the intake manifold.
3. Tighten the air cleaner outlet duct clamp (2) at the throttle body.

NOTE: **Refer to Fastener Notice .**

4. Tighten the air cleaner outlet duct clamp (1) at the MAF/IAT sensor.

Tighten: Tighten the clamps to 4 N.m (35 lb in).

cardiagn.com

5. Install the radiator vent inlet hose retainer to the outlet duct.
6. Install the radiator inlet hose clamp retainer to the outlet duct.

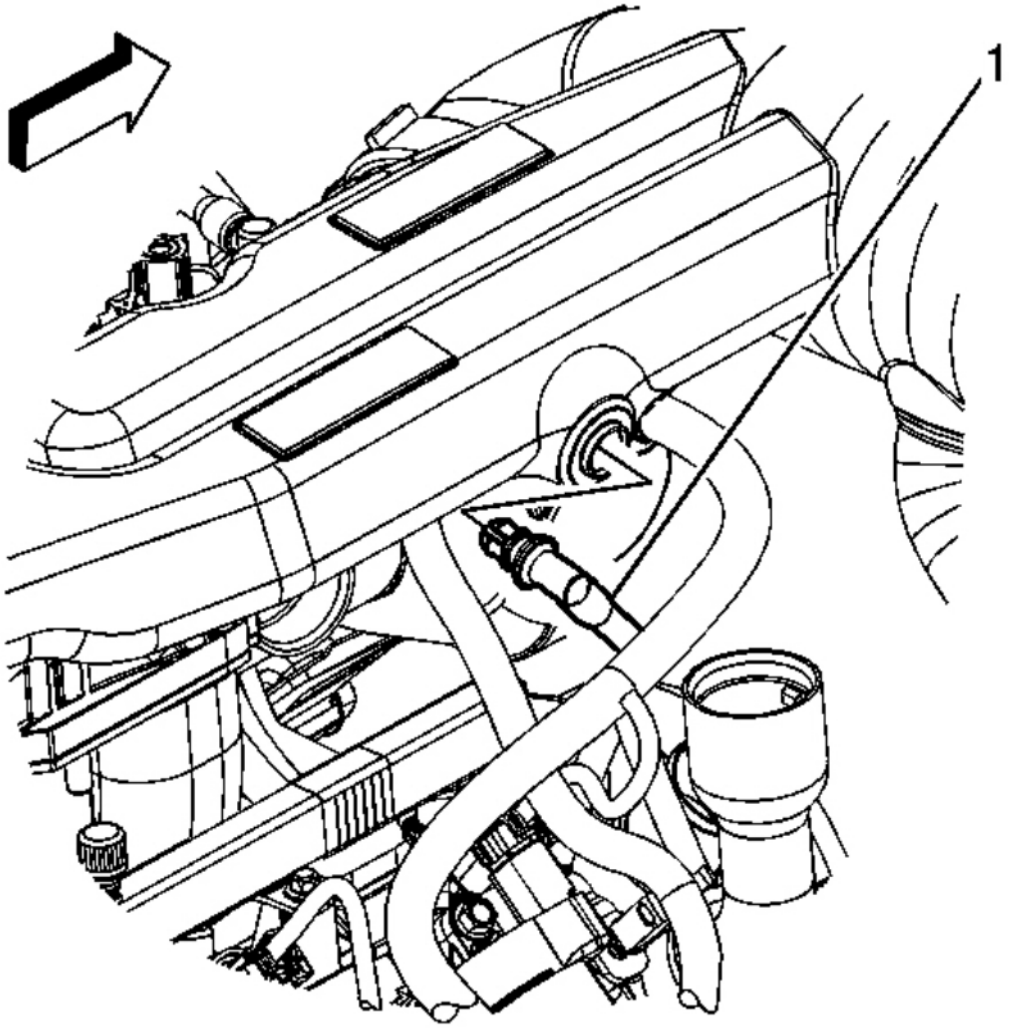

Fig. 621: View Of PCV Tube
Courtesy of GENERAL MOTORS CORP.

7. Install the PCV line (1) to the air cleaner outlet duct.
8. Install the intake manifold sight shield. Refer to **Upper Intake Manifold Sight Shield Replacement** .

DESCRIPTION AND OPERATION

cardiagn.com

ENGINE CONTROL MODULE DESCRIPTION

The powertrain has electronic controls to reduce exhaust emissions while maintaining excellent driveability and fuel economy. The engine control module (ECM) is the control center of this system. The ECM monitors numerous engine and vehicle functions. The ECM constantly monitors the information from various sensors and other inputs, and controls the systems that affect vehicle performance and emissions. The ECM also performs the diagnostic tests on various parts of the system. The ECM can recognize operational problems and alert the driver via the malfunction indicator lamp (MIL). When the ECM detects a malfunction, the ECM stores a diagnostic trouble code (DTC). The problem area is identified by the particular DTC that is set. The control module supplies a buffered voltage to various sensors and switches. Review the components and wiring diagrams in order to determine which systems are controlled by the ECM.

Malfunction Indicator Lamp (MIL) Operation

The malfunction indicator lamp (MIL) is located in the instrument panel cluster. The MIL will display as either SERVICE ENGINE SOON or one of the following symbols when commanded ON:

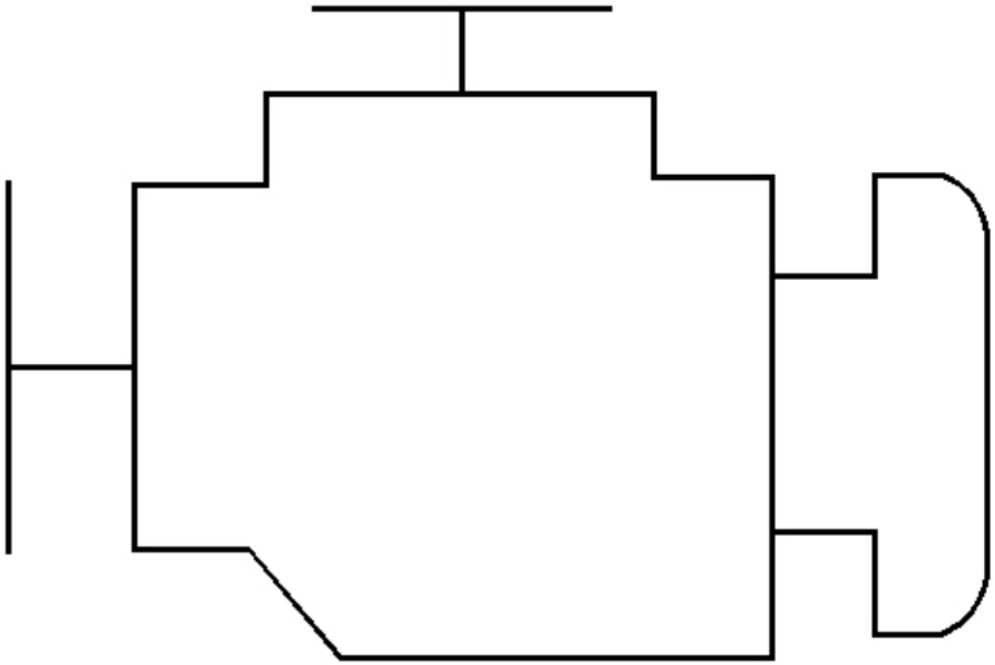

Fig. 622: MIL Symbol On Instrument Cluster
Courtesy of GENERAL MOTORS CORP.

cardiagn.com

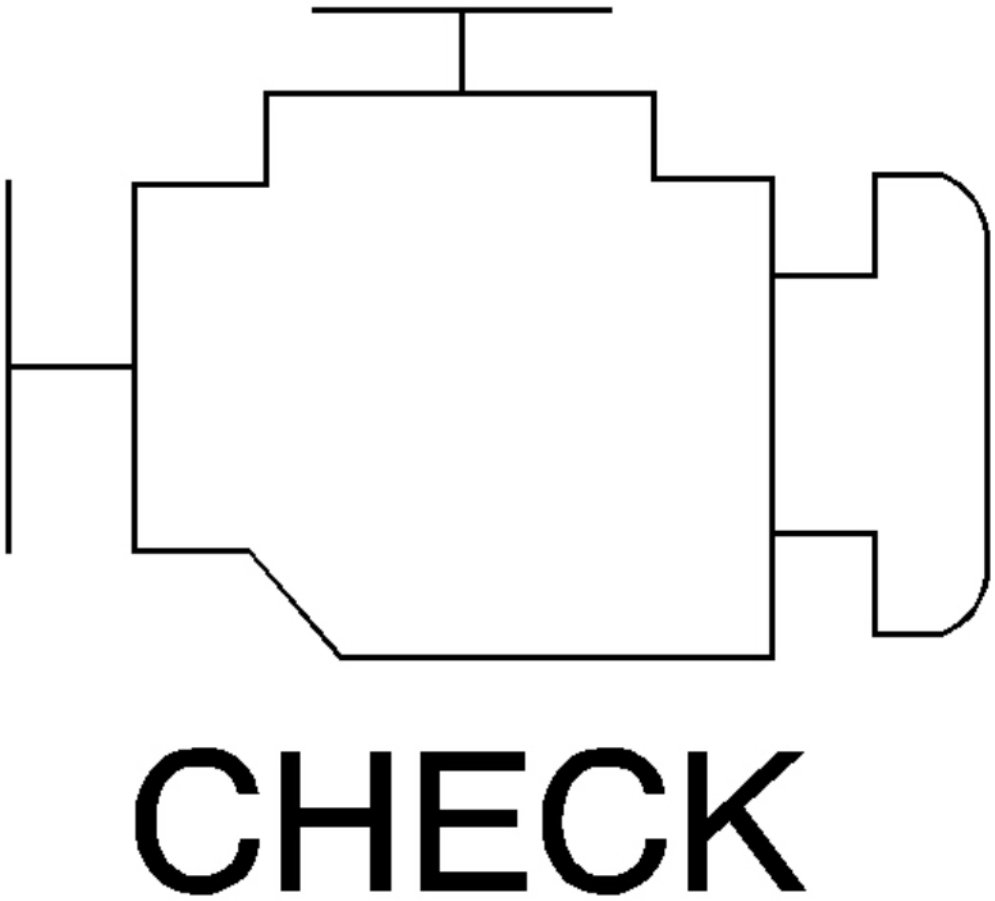

Fig. 623: Check Engine Light Symbol
Courtesy of GENERAL MOTORS CORP.

The MIL indicates that an emissions related fault has occurred and vehicle service is required.

The following is a list of the modes of operation for the MIL:

- The MIL illuminates when the ignition is turned ON, with the engine OFF. This is a bulb test to ensure the MIL is able to illuminate.
- The MIL turns OFF after the engine is started if a diagnostic fault is not present.
- The MIL remains illuminated after the engine is started if the control module detects a fault. A diagnostic trouble code (DTC) is stored any time the control module illuminates the MIL due to an emissions related fault. The MIL turns OFF after three consecutive ignition cycles in which a Test Passed has been reported for the diagnostic test that originally caused the MIL to illuminate.

cardiagn.com

- The MIL flashes if the control module detects a misfire condition which could damage the catalytic converter.
- When the MIL is illuminated and the engine stalls, the MIL will remain illuminated as long as the ignition is ON.
- When the MIL is not illuminated and the engine stalls, the MIL will not illuminate until the ignition is cycled OFF and then ON.

CYLINDER DEACTIVATION (ACTIVE FUEL MANAGEMENT) SYSTEM DESCRIPTION

To provide maximum fuel economy under light load driving conditions, the engine control module (ECM) will command the cylinder deactivation system ON to deactivate engine cylinders 1 and 7 on the left bank, and cylinders 4 and 6 on the right bank, switching to a V4 mode. The engine will operate on 8 cylinders, or V8 mode, during engine starting, engine idling, and medium to heavy throttle applications.

When commanded ON, the ECM will determine what cylinder is firing, and begin deactivation on the next closest deactivated cylinder in firing order sequence. The Gen IV engine has a firing order of 1-8-7-2-6-5-4-3. If cylinder number 1 is on its combustion event when cylinder deactivation is commanded ON, the next cylinder in the firing order sequence that can be deactivated is cylinder number 7. If cylinder number 5 is on its combustion event when cylinder deactivation is commanded ON, then the next cylinder in the firing order sequence that can be deactivated is cylinder number 4.

Cylinder deactivation is accomplished by not allowing the intake and exhaust valves to open on the selected cylinders by using special valve lifters. The deactivation lifters contain spring loaded locking pins that connect the internal pin housing of the lifter to the outer housing. The pin housing contains the lifter plunger and pushrod seat which interfaces with the pushrod. The outer housing contacts the camshaft lobe through a roller. During V8 mode, the locking pins are pushed outward by spring force, locking the pin housing and outer housing together causing the lifter to function as a normal lifter. When V4 mode is commanded ON, the locking pins are pushed inward with engine oil pressure directed from the valve lifter oil manifold (VLOM) assembly solenoids. When the lifter pin housing is unlocked from the outer housing, the internal pin housing will remain stationary, while the outer housing will move with the profile of the camshaft lobe, which results in the valve remaining closed. One VLOM solenoid controls both the intake and exhaust valves for each deactivating cylinder. There are 2 distinct oil passages going to each cylinder deactivation lifter bore, one for the hydraulic lash-adjusting feature of the lifter, and one for controlling the locking pins used for cylinder deactivation.

Although both intake and exhaust valve lifters are controlled by the same solenoid in the VLOM, the intake and exhaust valves do not become deactivated at the same time. Cylinder deactivation is timed so that the cylinder is on an intake event. During an intake event, the intake cam lobe is pushing the valve lifter upwards to open the intake valve against the force of the valve spring. The force exerted by the valve spring is acting on the side of the lifter locking pins, preventing them from moving until the intake valve has closed. When the intake valve lifter reaches the base circle of the camshaft lobe, the valve spring force is reduced, allowing the locking pins to move, deactivating the intake valve. However, when cylinder deactivation is commanded ON, the exhaust valve for the deactivated cylinder is in the closed position, allowing the locking pins on the valve lifter to move immediately, and deactivate the exhaust valve.

By deactivating the exhaust valve first, this allows the capture of a burnt air/fuel charge or exhaust gas charge in the combustion chamber. The capture of exhaust gases in the combustion chamber will contribute to a reduction in oil consumption, noise and vibration levels, and exhaust emissions when operating in V4 mode. During the

cardiagn.com

transition from V8 to V4 mode, the fuel injectors will be turned OFF on the deactivated cylinders. The ignition system secondary voltage or spark is still present across the spark plug electrodes on the deactivated cylinders. If all enabling conditions are met and maintained for cylinder deactivation operation, the ECM calibrations will limit cylinder deactivation to a cycle time of 10 minutes in V4 mode, and then return to V8 mode for 1 minute.

Switching between V8 and V4 mode is accomplished in less than 250 milliseconds, making the transitions seamless and transparent to the vehicle operator. The 250 milliseconds includes the time for the ECM to sequence the transitions, the response time for the VLOM solenoids to energize, and the time for the valve lifters to deactivate, all within 2 revolutions of the engine crankshaft.

The cylinder deactivation system consists of the following components:

- The VLOM assembly
- Eight special valve lifters, 2 per deactivating cylinder
- The engine oil pressure regulator valve for cylinder deactivation operation
- Gen IV cylinder deactivation engine block
- The ECM

Valve Lifter Oil Manifold (VLOM) Assembly

The cylinder deactivation system uses an electro-hydraulic actuator device called the valve lifter oil manifold (VLOM) assembly. The VLOM is bolted to the top of the engine valley, below the intake manifold assembly. The VLOM consists of 4 electrically operated Normally Closed Solenoids. Each solenoid controls the application of engine oil pressure to the intake and exhaust valve lifters on the cylinders selected to deactivate. Engine oil pressure is routed to the VLOM assembly from a passage on the rear of the cylinder block.

All 4 VLOM solenoids are connected in parallel to a fused ignition 1 voltage circuit, supplied by the powertrain relay. The ground or control circuit for each solenoid is connected to the engine control module (ECM).

When all enabling conditions are met for cylinder deactivation, the ECM will ground each solenoid control circuit in firing order sequence, allowing current to flow through the solenoid windings. With the coil windings energized, the solenoid valve opens, redirecting engine oil pressure through the VLOM into 8 separate vertical passages in the engine lifter valley. The 8 vertical passages, 2 per cylinder, are connected to the valve lifter bores of the cylinders to be deactivated. When vehicle-operating conditions require a return to V8 mode, the ECM will turn OFF the control circuit for the solenoids, allowing the solenoid valves to close. With the solenoid valves closed, engine oil pressure in the control ports is exhausted through the body of the solenoids into the engine block lifter valley. The housing of the VLOM incorporates several bleeds in the oil passages to purge any air trapped in the VLOM or engine block.

To control any contamination to the hydraulic circuits, a small replaceable oil screen is located in the VLOM oil inlet passage, below the oil pressure sensor. The oil pressure sensor is a 3-wire sensor which provides oil pressure information to the ECM.

During service, use extreme care in keeping the VLOM assembly free of any contamination or foreign material.

Engine Control Module (ECM)

cardiagn.com

The engine control module (ECM) is responsible for the management and control of all engine functions. Each ECM comes equipped with a specific set of software/calibrations designed for that engine and vehicle application. The ECM will determine engine operating parameters, based upon information from a network of switches, sensors, modules and communication with other controllers located throughout vehicle. Internal to the ECM is an integrated circuit device called a low-side driver. The low-side driver is designed to operate internally, like an electronic switch. An individual low-side driver controls each valve lifter oil manifold (VLOM) solenoid. When enabling conditions for V4 mode are met, the ECM will command the low-side driver to ground each VLOM solenoid control circuit, in firing order sequence. Internal to the low-side driver is a fault detection circuit, which monitors the solenoid control circuit for an incorrect voltage level. If an incorrect voltage level, such as an open, high resistance, or short to ground, is detected, the low-side driver, along with the fault detection circuit, will communicate the condition to the central processor in the ECM. The ECM will then command a return to V8 mode, set a corresponding DTC, and illuminate the malfunction indicator lamp (MIL) on the instrument panel.

Cylinder Deactivation Inhibit Reasons

Listed below are the powertrain conditions that will inhibit V4 mode, while operating under light load driving conditions:

- Engine manifold vacuum low
- Brake booster vacuum pressure low
- Accelerator pedal position rate of increase too high, electronic throttle control
- Accelerator pedal position too high, electronic throttle control
- Ignition voltage out of range
- Engine oil pressure out of range
- Engine oil temperature out of range
- Engine RPM out of range
- Transmission gear incorrect
- Transmission range incorrect
- Transmission gear shift in progress
- All cylinders activated via scan tool output control
- Minimum time in V8 mode not met
- Maximum V4 mode time exceeded
- Engine oil aeration present
- Decel fuel cutoff active
- Fuel shut-off timer active
- Minimum heater temp low, HVAC system
- Reduced engine power active, electronic throttle control
- Brake torque management active
- Axle torque limiting active
- Engine metal over temperature protection active

cardiagn.com

- Catalytic converter over temperature protection active
- Piston protection active, knock detected
- Hot coolant mode active
- Engine over speed protection active
- Fault Active or Fault Pending-cylinder deactivation is disabled for the following faults:
  - Manifold Absolute Pressure Sensor
  - Engine Oil Pressure Sensor
  - Engine Coolant Temperature Sensor
  - Vehicle Speed Sensor
  - Crankshaft Position Sensor
  - Engine Misfire Detected
  - Cylinder Deactivation Solenoid Driver Circuit

The scan tool output control is used to deactivate half of the engine cylinders, V4 mode, by commanding all of the solenoids ON, or deactivate one cylinder switching to a V7 mode, by commanding ON one solenoid. Listed below are the powertrain conditions that will inhibit V4 mode, or V7 mode, with the engine running, while using the scan tool output control function:

- Engine speed out of range
- Manifold absolute pressure (MAP) sensor fault
- Accelerator pedal position too high, electronic throttle control
- Piston protection active, knock detected
- Engine oil temperature out of range
- Engine oil pressure out of range
- Engine oil aeration present
- Engine metal over temperature protection active
- Accelerator pedal position rate of increase too high, electronic throttle control
- Cylinder deactivation solenoid driver circuit fault
- Engine coolant temperature sensor fault
- Catalytic converter over temperature protection active
- Brake booster vacuum pressure low
- Axle torque limiting active
- Brake torque management active
- Vehicle speed sensor fault
- Engine coolant temperature too high
- Engine not running
- Vehicle speed not zero
- Engine coolant temperature low
- Reduced Engine Power Active, electronic throttle control

cardiagn.com

- Transmission gear incorrect
- Transmission range incorrect
- Ignition voltage out of range
- Maximum V4 mode time exceeded

Listed below are the powertrain conditions that will inhibit a cylinder deactivation solenoid from being energized, with the ignition ON and the engine OFF, while using the scan tool output control function:

- Engine speed not zero
- Vehicle speed not zero
- Transmission not in park or neutral
- Ignition voltage out of range

For the system description covering the hydraulic/mechanical system of cylinder deactivation, refer to **Cylinder Deactivation (Active Fuel Management) System Diagnosis** .

THROTTLE ACTUATOR CONTROL (TAC) SYSTEM DESCRIPTION

Purpose

The throttle actuator control (TAC) system delivers improved throttle response and greater reliability and eliminates the need for mechanical cable. The TAC system performs the following functions:

- Accelerator pedal position sensing
- Throttle positioning to meet driver and engine demands
- Throttle position sensing
- Internal diagnostics
- Cruise control functions
- Manage TAC electrical power consumption

The TAC system includes the following components:

- The accelerator pedal position (APP) sensors
- The throttle body assembly
- The engine control module (ECM)

Accelerator Pedal Position (APP) Sensor

The accelerator pedal contains 2 individual APP sensors within the assembly. The Accelerator Pedal Position (APP) sensors 1 and 2 are potentiometer type sensors each with 3 circuits:

- A 5-volt reference circuit
- A low reference circuit

cardiagn.com

- A signal circuit

The APP sensors are used to determine the pedal angle. The engine control module (ECM) provides each APP sensor a 5-volt reference circuit and a low reference circuit. The APP sensors provide the ECM with signal voltage proportional to the pedal movement. The APP sensor 1 signal voltage at rest position is less than 1 volt and increases to above 4 volts as the pedal is actuated. The APP sensor 2 signal voltage at rest position is near 0.5 volt and increases to more than 2 volts as the pedal is actuated.

Throttle Body Assembly

The throttle assembly contains the following components:

- The throttle blade
- The throttle actuator motor
- The throttle position (TP) sensor 1 and 2

The throttle body functions similar to a conventional throttle body with the following exceptions:

- An electric motor opens and closes the throttle valve.
- The throttle blade is spring loaded in both directions and the default position is slightly open.
- There are 2 individual TP sensors within the throttle body assembly.

The TP sensors are used to determine the throttle plate angle. The TP sensors provide the engine control module (ECM) with a signal voltage proportional to throttle plate movement. The TP sensor 1 signal voltage at closed throttle is above 4 volts and decreases as the throttle plate is opened. The TP sensor 2 signal voltage at closed throttle is below 1 volt and increases as the throttle plate is opened.

Engine Control Module

The engine control module (ECM) is the control center for the throttle actuator control (TAC) system. The ECM determines the drivers intent and then calculates the appropriate throttle response. The ECM achieves throttle positioning by providing a pulse width modulated voltage to the TAC motor.

Modes of Operation

Normal Mode

During the operation of the throttle actuator control (TAC) system, several modes or functions are considered normal. The following modes may be entered during normal operation:

- Minimum pedal value-At key-up the engine control module (ECM) updates the learned minimum pedal value.
- Minimum throttle position (TP) values-At key-up the ECM updates the learned minimum TP value. In order to learn the minimum TP value, the throttle blade is moved to the closed position.
- Ice break mode-If the throttle is not able to reach a predetermined minimum throttle position, the ice break mode is entered. During the ice break mode, the ECM commands the maximum pulse width several

cardiagn.com

times to the throttle actuator motor in the closing direction.

- Battery saver mode-After a predetermined time without engine RPM, the ECM commands the battery saver mode. During the battery saver mode, the TAC module removes the voltage from the motor control circuits, which removes the current draw used to maintain the idle position and allows the throttle to return to the spring loaded default position.

Reduced Engine Power Mode

When the ECM detects a condition with the TAC system, the ECM may enter a reduced engine power mode. Reduced engine power may cause one or more of the following conditions:

- Acceleration limiting-The ECM will continue to use the accelerator pedal for throttle control; however, the vehicle acceleration is limited.
- Limited throttle mode-The ECM will continue to use the accelerator pedal for throttle control; however, the maximum throttle opening is limited.
- Throttle default mode-The ECM will turn off the throttle actuator motor and the throttle will return to the spring loaded default position.
- Forced idle mode-The ECM will perform the following actions:
  - Limit engine speed to idle by positioning the throttle position, or by controlling the fuel and spark if the throttle is turned off.
  - Ignore the accelerator pedal input.
- Engine shutdown mode-The ECM will disable fuel and de-energize the throttle actuator.

CAMSHAFT ACTUATOR SYSTEM DESCRIPTION

Camshaft Position (CMP) Actuator System

The camshaft (CMP) actuator system is an electro-hydraulic operated device used for a variety of engine performance and operational enhancements. These enhancements include lower emission output through exhaust gas dilution of the intake charge in the combustion chamber, a broader engine torque range, and improved fuel economy. The CMP actuator system accomplishes this by, changing the angle or timing of the camshaft, relative to the crankshaft position. The CMP actuator simply allows earlier or later intake and exhaust valve opening, during the four stroke engine cycle. The CMP actuator cannot vary the duration of valve opening, or the valve lift.

During engine OFF, engine idling conditions, and engine shutdown, the camshaft actuator is held in the park position. Internal to the CMP actuator assembly is a return spring and a locking pin. During non-phasing modes of the camshaft, the return spring rotates the camshaft back to the park position, and the locking pin retains the CMP actuator sprocket to the camshaft. For the Gen IV small block engines, the park position for the CMP actuator and camshaft is, 8.5 degrees before top dead center (BTDC), which is equal to 17 crankshaft degrees BTDC, to the next cylinder in firing order. The engine control module (ECM) can only command the CMP actuator to retard the valve timing from the park position, or advance the valve timing back to the park position. The total range of valve timing authority is 31 degrees of camshaft rotation, which is equal to 62 degrees of crankshaft rotation. The control range is from the park position of 8.5 degrees camshaft, or 17 degrees of crankshaft BTDC, to 22.5 degrees camshaft, or 45 degrees crankshaft, after top dead center (ATDC).

cardiagn.com

CMP Actuator System Operation

The camshaft position (CMP) actuator system is controlled by the engine control module (ECM). The ECM sends a pulse width modulated, 12-volt signal to the CMP actuator solenoid to control the amount of pressurized engine oil, into the CMP actuator. A low reference circuit, or ground wire between the CMP actuator solenoid and the ECM completes the electrical circuit. The frequency of the pulse width modulated signal is fixed at 150 Hz. To regulate the pressurized engine oil into the CMP actuator, the solenoid uses electromagnetic force on the solenoid pintle to pulse the oil control spool valve. The pressurized engine oil is sent to unseat the locking pin, and to the vane and rotor assembly of the CMP actuator, to either retard or advance the valve timing. The ECM will control the amount of ON time applied to the solenoid, through the 12-volt signal from the ECM.

The ECM uses the following inputs before assuming control of the CMP actuator, and to calculate the optimum valve timing.

- Engine speed
- Manifold absolute pressure (MAP)
- Throttle position angle
- Camshaft position sensor (CMP)
- Crankshaft position sensor (CKP)
- Crankshaft/camshaft correlation
- Engine coolant temperature (ECT)
- Closed loop fuel control
- Engine oil pressure (EOP)
- Engine oil level
- CMP actuator solenoid circuit state

CMP Actuator Solenoid Circuit Diagnostics

The engine control module (ECM) monitors the control circuit of the camshaft position (CMP) actuator solenoid for electrical faults. The control module has the ability to determine if a control circuit is open, shorted high, or shorted low. If the control module detects a fault with the CMP actuator solenoid control circuit, DTC P0010 will set.

CMP Actuator System Performance Diagnostic

The engine control module (ECM) monitors the performance of the camshaft position (CMP) actuator system by monitoring the calibrated desired position, and the actual position of the camshaft, through the 4X signal of the CMP sensor. If the difference between the actual and desired position is greater than a calibrated angle, for more than a calibrated amount of time, DTC P0011 will set.

For the system descriptions covering the hydraulic/mechanical part of the CMP actuator refer to **Camshaft Position (CMP) Actuator and Solenoid Valve Description** .

FUEL SYSTEM DESCRIPTION

cardiagn.com

Fuel System Overview

The Fuel System is a returnless on-demand design. The fuel pressure regulator is a part of the fuel sender assembly, eliminating the need for a return pipe from the engine. A returnless fuel system reduces the internal temperature of the fuel tank by not returning hot fuel from the engine to the fuel tank. Reducing the internal temperature of the fuel tank results in lower evaporative emissions.

An electric turbine style fuel pump attaches to the fuel sender assembly inside the fuel tank. The fuel pump supplies high pressure fuel through the fuel filter and the fuel feed pipe to the fuel injection system. The fuel pump provides fuel at a higher rate of flow than is needed by the fuel injection system. The fuel pump also supplies fuel to a venturi pump located on the bottom of the fuel sender assembly. The function of the venturi pump is to fill the fuel sender assembly reservoir. The fuel pressure regulator, a part of the fuel sender assembly, maintains the correct fuel pressure to the fuel injection system. The fuel pump and sender assembly contains a reverse flow check valve. The check valve and the fuel pressure regulator maintain fuel pressure in the fuel feed pipe and the fuel rail in order to prevent long cranking times.

E85 Flex Fuel Description

E85 compatible vehicles no longer use an alcohol sensor to determine and adjust for the alcohol content of the fuel in the tank. Instead, the vehicle calculates the alcohol content of the fuel through measured adjustments.

The ethanol calculation occurs with the engine running after a refueling event has been detected via a measured change in the fuel level sender output. The virtual flex fuel sensor (V-FFS) algorithm temporarily closes the canister purge valve for a few seconds and monitors information from the closed loop fuel trim system to calculate the ethanol content. This logic executes several times until the ethanol calculation is deemed to be stable. This may take several minutes under low fuel flow conditions such as idle, or a shorter time during higher fuel flow, off-idle conditions.

Air-fuel ratios and the corresponding ethanol percentage are updated following each purge-off sequence. the fuel alcohol content percentage value can be read on a scan tool.

When an E85 compatible vehicle is built, an ECM or PCM replaced, or if the learned alcohol content has been reset with a scan tool the fuel system will need to contain ASTM gasoline with 10 percent or less ethanol content.

A minimum of 7.5 Liters (2 gallons) must be put in the tank in order for the vehicle to recognize a re-fueling event. It is not necessary to turn the ignition off in order to have the re-fueling event recognized; however local safety regulations should be followed.

After the re-fueling event, the system registers the amount of fuel that was added, relative to the amount that was in the tank. Reading fuel trim and O2 sensor activity, the system determines if the fuel added was either ASTM Gasoline or ASTM E85. Based on that determination, the system adjusts to the expected alcohol mix in the fuel tank, and then the fuel trim and O2 sensor activity fine tunes the adjustments. The system must remain in closed loop in order for this adjustment to occur. Numerous short trips after switching from gasoline to E85, or E85 to gasoline, can result in driveability symptoms due to the inability of the system to adjust for fuel composition by not attaining closed loop operation.

Switching Between Gasoline and E85

cardiagn.com

No special precautions need to be taken when switching back and forth between gasoline and E85 other than re-fueling events must be 7.5 Liters (2 gallons) or greater, and the vehicle must remain in closed loop long enough, usually by the time the engine has maintained full operating temperature, to calculate the composition of the new blend in the tank.

Fuel Tanks

The fuel tanks store the fuel supply. The front fuel tank is located on the left side of the vehicle. On dual-tank applications, the secondary fuel tank is located in the rear of the vehicle above the spare tire. The fuel tanks are each held in place by 2 metal straps that attach to the frame. The fuel tanks are molded from high density polyethylene.

Fuel Fill Pipe

The fuel fill pipe has a built-in restrictor in order to prevent refueling with leaded fuel. When refueling dual tank applications, fuel is dispensed to both the front and rear fuel tanks at the same time. Once the fill vent is obstructed, fuel backs up the fill pipe and trips the dispensing nozzle. The front fuel tank vent runs into the rear tank to the top of the filler pipe assembly, which in turn vents to atmosphere. The fuel tank vent valves are connected and route to the canister to collect hydrocarbon emissions during operation of the vehicle.

Fuel Filler Cap

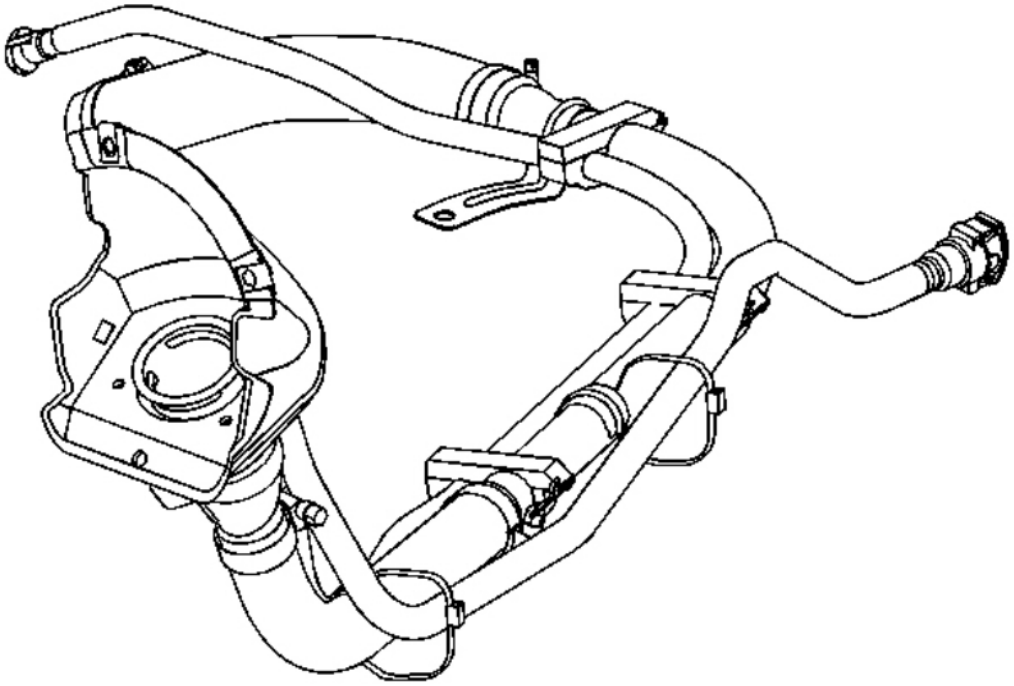

cardiagn.com

Fig. 624: View Of Fuel Fill Pipe
Courtesy of GENERAL MOTORS CORP.

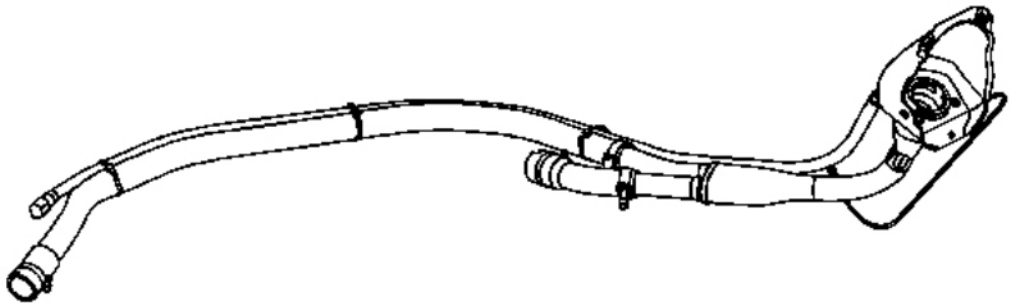

Fig. 625: Rear Fuel Fill Pipe
Courtesy of GENERAL MOTORS CORP.

cardiagn.com

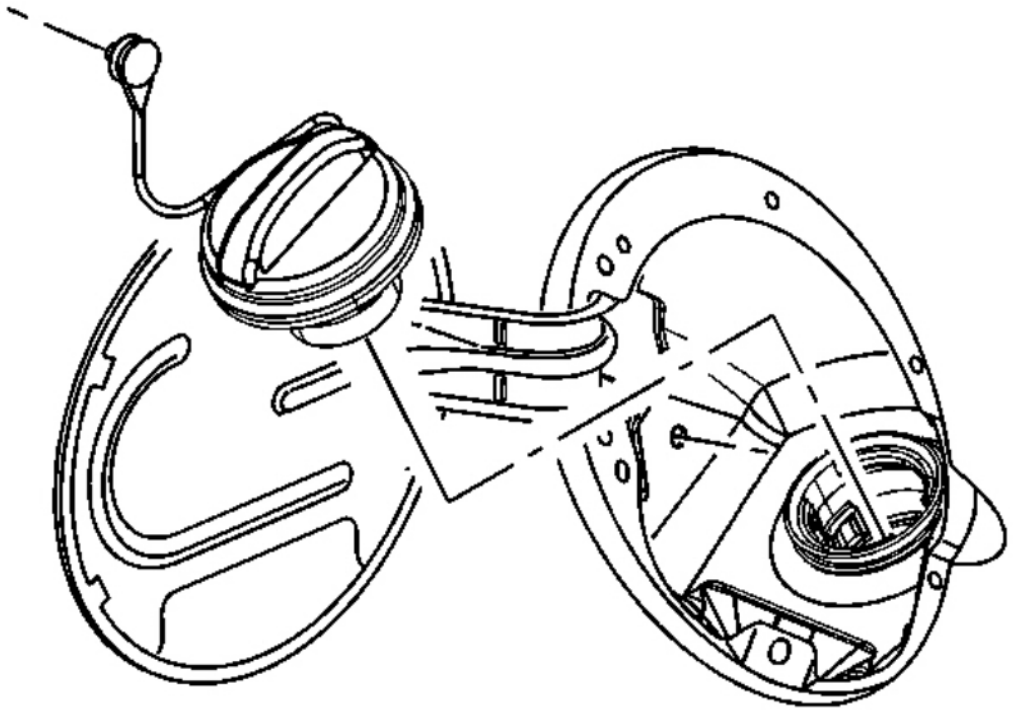

Fig. 626: View Of Filler Door & Tethered Fuel Filler Cap
Courtesy of GENERAL MOTORS CORP.

The fuel fill pipe has a tethered fuel filler cap. A torque-limiting device prevents the cap from being over tightened. To install the cap, turn the cap clockwise until you hear clicks. This indicates that the cap is correctly torqued and fully seated. A built-in device indicates that the fuel filler cap is fully seated. A fuel filler cap that is not fully seated may cause a malfunction in the emission system.

Fuel Sender Assembly

cardiagn.com

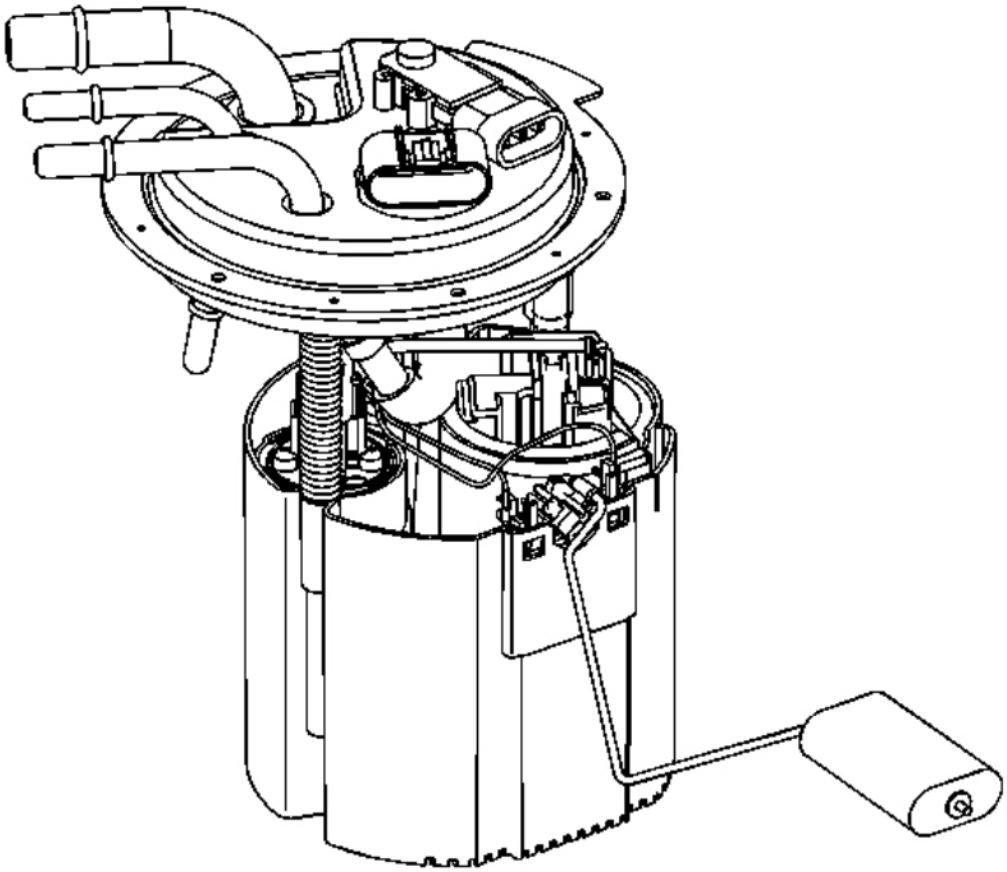

Fig. 627: Identifying Fuel Sender Assembly
Courtesy of GENERAL MOTORS CORP.

The front fuel sender on dual tank applications consists of the following major components:

- The fuel level sensor
- The fuel tank fuel pump module
- The fuel strainer
- The fuel filter

cardiagn.com

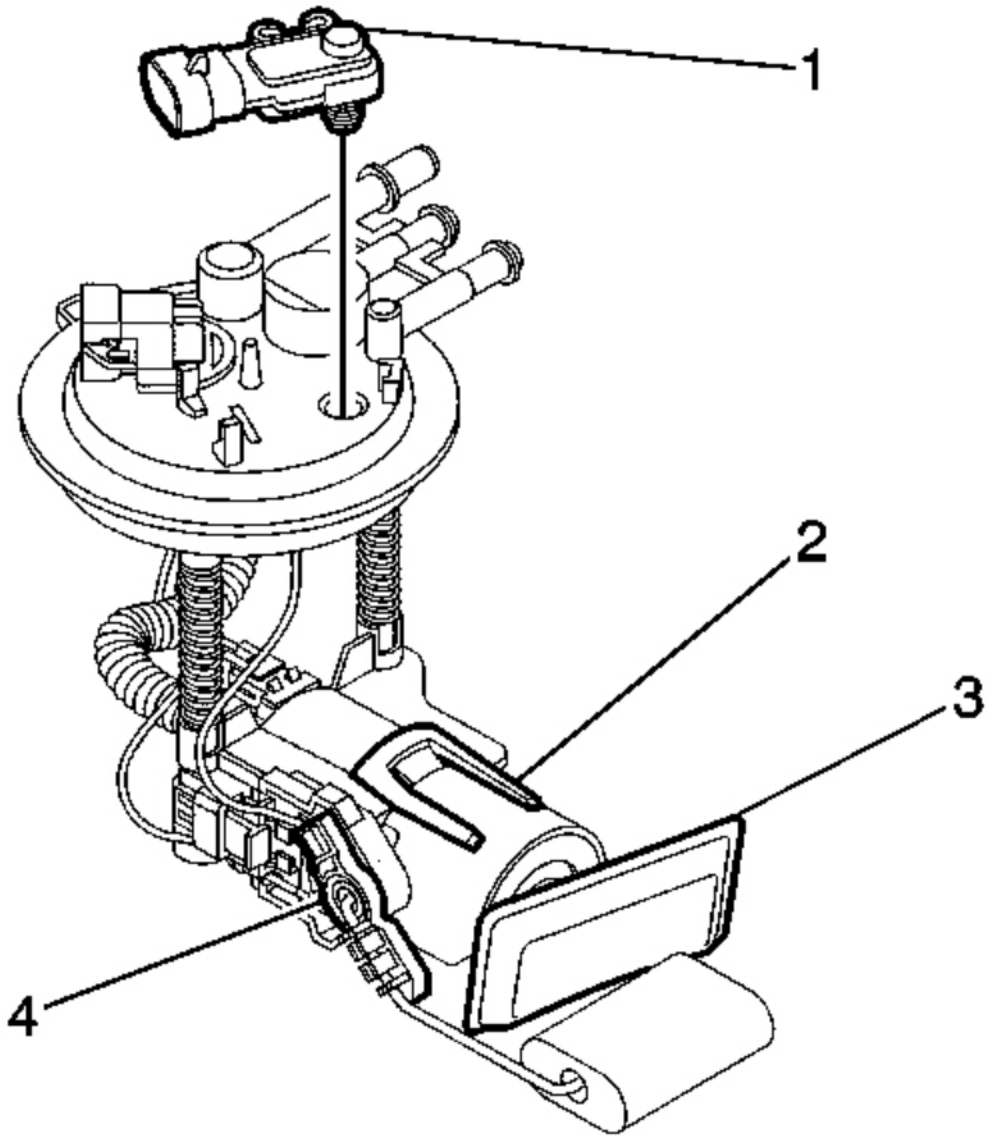

Fig. 628: Rear Fuel Sender Assembly
Courtesy of GENERAL MOTORS CORP.

The rear fuel sender on dual tank applications consists of the following major components:

- The fuel level sensor (4)
- The FTP sensor (1)

cardiagn.com

- The rear fuel pump (2)

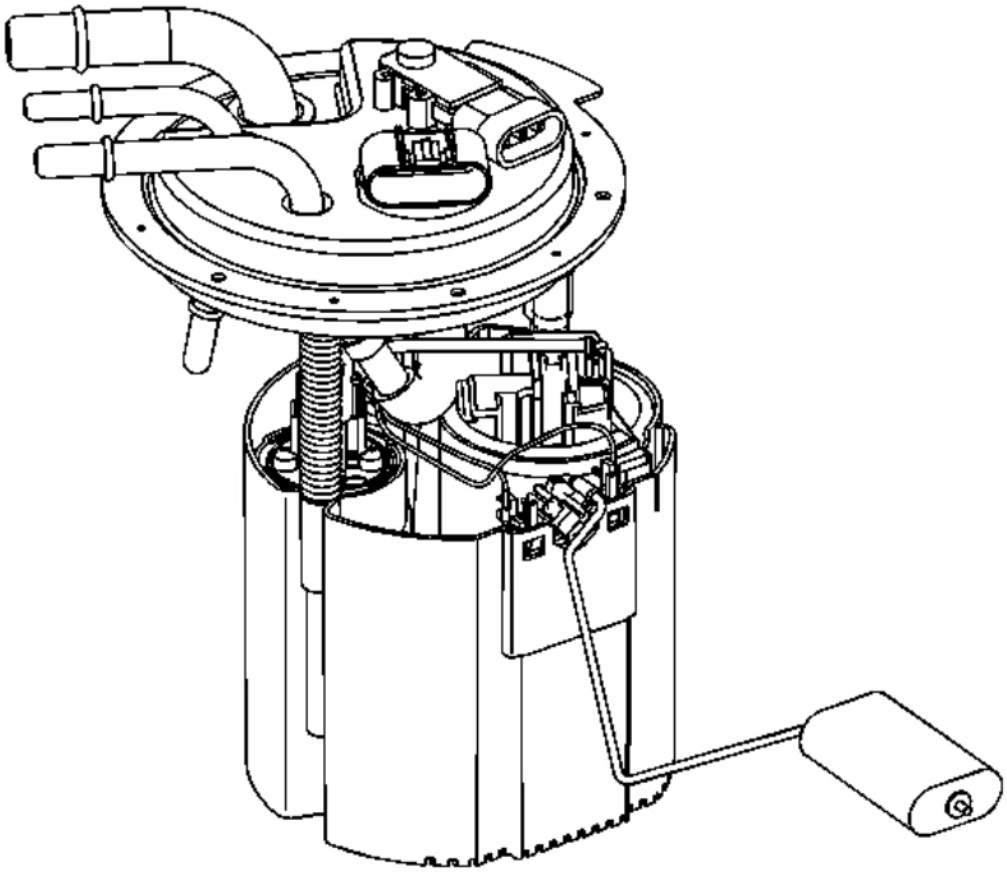

Fig. 629: Identifying Fuel Sender Assembly
Courtesy of GENERAL MOTORS CORP.

The fuel sender assembly on single tank applications consists of the following major components:

- The fuel level sensor
- The fuel tank pressure (FTP) sensor
- The fuel tank fuel pump module
- The fuel strainer
- The fuel filter

Fuel Level Sensor

cardiagn.com

The fuel level sensor consists of a float, a wire float arm, and a ceramic resistor cord. The position of the float arm indicates the fuel level. The fuel level sensor contains a variable resistor, which changes resistance in correspondence to the amount of fuel in the fuel tank. The engine control module (ECM) sends the fuel level information via the class 2 circuit to the instrument panel (I/P) cluster. This information is used for the I/P fuel gage and the low fuel warning indicator, if applicable. The ECM also monitors the fuel level input for various diagnostics.

Fuel Pump

The fuel pump is mounted in the fuel sender assembly reservoir. The fuel pump is an electric high pressure pump. Fuel is pumped to the fuel rail at a specified flow and pressure. The fuel pump delivers a constant flow of fuel to the engine during low fuel conditions and aggressive vehicle maneuvers. The engine control module (ECM) controls the electric fuel pump operation through a fuel pump relay. The fuel pump flex pipe acts to dampen the fuel pulses and noise generated by the fuel pump.

Rear Fuel Pump (Dual Tank Applications Only)

On dual tank applications, the rear fuel pump is located in the rear fuel tank. The rear fuel pump is powered by a secondary fuel pump relay when the fuel level drops below a predetermined value. Fuel is transferred from the rear fuel tank to the front fuel tank in order to ensure all of the usable fuel volume is available to the front fuel pump. The secondary fuel pump relay supply voltage is received from the primary fuel pump relay when the front fuel pump is energized.

Fuel Strainer

The fuel strainer attaches to the lower end of the fuel sender. The fuel strainer is made of woven plastic. The functions of the fuel strainer are to filter contaminants and to wick fuel. Fuel stoppage at this point indicates that the fuel tank contains an abnormal amount of sediment.

Fuel Filter

The fuel filter is contained in the fuel sender assembly inside the fuel tank. the paper filter element of the fuel filter traps particles in the fuel that may damage the fuel injection system. The fuel filter housing is made to withstand maximum fuel system pressure, exposure to fuel additives, and changes in temperature. There is no service interval for fuel filter replacement.

Nylon Fuel Pipes

CAUTION: Refer to Fuel and Evaporative Emission Pipe Caution .

Nylon pipes are constructed to withstand maximum fuel system pressure, exposure to fuel additives, and changes in temperature. There are 3 sizes of nylon pipes used: 9.5 mm (3/8 in) ID for the fuel supply, 7.6 mm (5/16 in) ID for the fuel return, and 12.7 mm (1/2 in) ID for the vent. Heat resistant rubber hose or corrugated plastic conduit protects the sections of the pipes that are exposed to chafing, to high temperatures, or to vibration.

cardiagn.com

Nylon fuel pipes are somewhat flexible and can be formed around gradual turns under the vehicle. However, if nylon fuel pipes are forced into sharp bends, the pipes kink and restrict the fuel flow. Also, once exposed to fuel, nylon pipes may become stiffer and are more likely to kink if bent too far. Take special care when working on a vehicle with nylon fuel pipes.

Quick-Connect Fittings

Quick-connect fittings provide a simplified means of installing and connecting fuel system components. The fittings consist of a unique female connector and a compatible male pipe end. O-rings, located inside the female connector, provide the fuel seal. Integral locking tabs inside the female connector hold the fittings together.

On-Board Refueling Vapor Recovery System (ORVR)

The On-Board Refueling Vapor Recovery System (ORVR) is an on-board vehicle system designed to recover fuel vapors during the vehicle refueling operation. The flow of liquid fuel down the fuel filler pipe provides a liquid seal which prevents vapor from leaving the fuel filler pipe. An evaporative emission (EVAP) pipe transports the fuel vapor to the EVAP canister for use by the engine.

Fuel Pipe O-Rings

O-rings seal the threaded connections in the fuel system. Fuel system O-ring seals are made of special material. Service the O-ring seals with the correct service part.

Fuel Rail Assembly

cardiagn.com

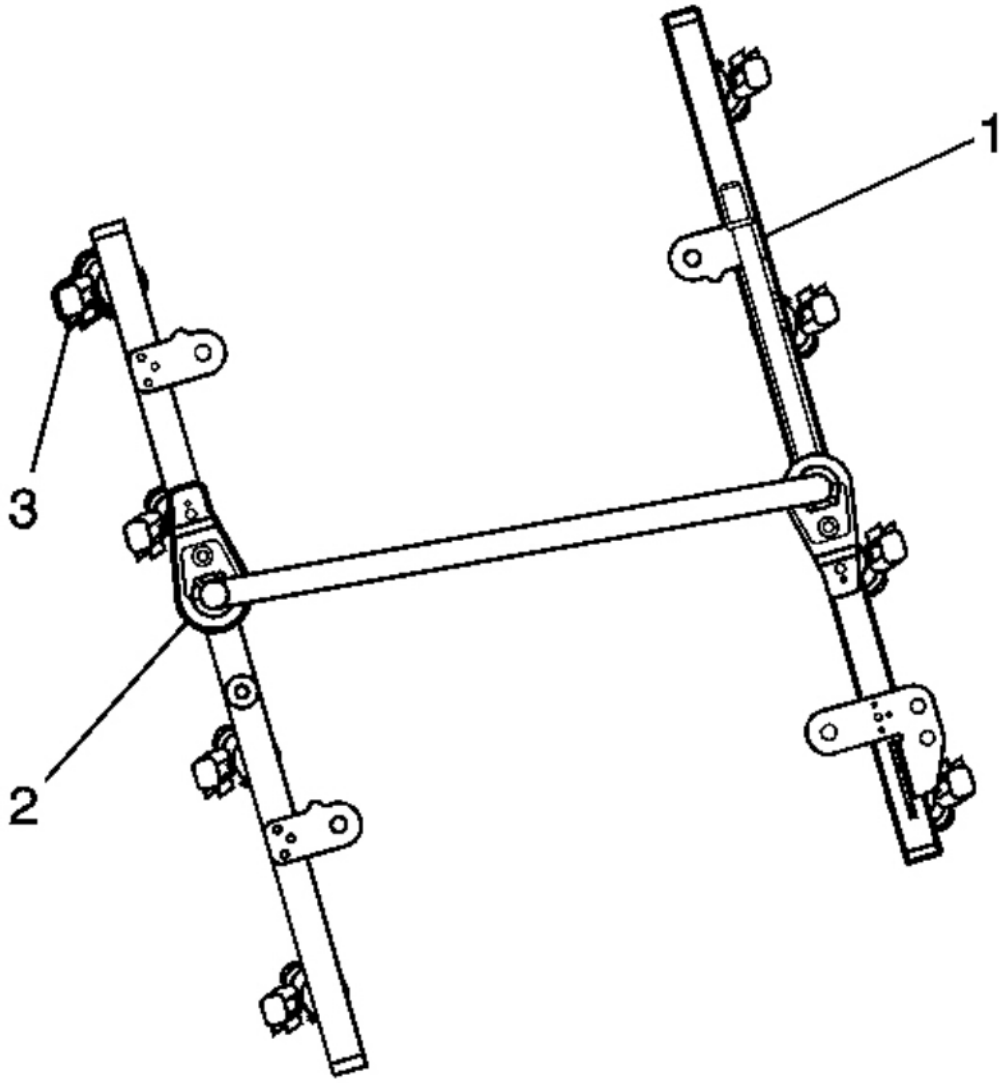

Fig. 630: View Of Fuel Rail Assembly
Courtesy of GENERAL MOTORS CORP.

The fuel rail assembly attaches to the engine intake manifold. The fuel rail assembly performs the following functions:

- Positions the injectors (3) in the intake manifold
- Distributes fuel evenly to the injectors (2)
- Fuel rail feed pipe (1)

cardiagn.com

Fuel Injectors

The fuel injector assembly is a solenoid device controlled by the engine control module (ECM) that meters pressurized fuel to a single engine cylinder. The ECM energizes the injector solenoid to open a normally closed ball valve. This allows the fuel to flow into the top of the injector, past the ball valve, and through a director plate at the injector outlet. The director plate has machined holes that control the fuel flow, generating a spray of finely atomized fuel at the injector tip. Fuel from the injector tip is directed at the intake valve, causing the fuel to become further atomized and vaporized before entering the combustion chamber. This fine atomization improves fuel economy and emissions.

Fuel Pressure Regulator

The fuel pressure regulator is contained in the fuel sender assembly.

Fuel Metering Modes of Operation

The engine control module (ECM) monitors voltages from several sensors in order to determine how much fuel to give the engine. The ECM controls the amount of fuel delivered to the engine by changing the fuel injector pulse width. The fuel is delivered under one of several modes.

Starting Mode

When the ignition is first turned ON, the ECM energizes the fuel pump relay for 2 seconds. This allows the fuel pump to build pressure in the fuel system. The ECM calculates the air/fuel ratio based on inputs from the engine coolant temperature (ECT), mass air flow (MAF), manifold absolute pressure (MAP), and throttle position (TP) sensors. The system stays in starting mode until the engine speed reaches a predetermined RPM.

Clear Flood Mode

If the engine floods, clear the engine by pressing the accelerator pedal down to the floor and then crank the engine. When the TP sensor is at wide open throttle (WOT), the ECM reduces the fuel injector pulse width in order to increase the air to fuel ratio. The ECM holds this injector rate as long as the throttle stays wide open and the engine speed is below a predetermined RPM. If the throttle is not held wide open, the ECM returns to the starting mode.

Run Mode

The run mode has 2 conditions called Open Loop and Closed Loop. When the engine is first started and the engine speed is above a predetermined RPM, the system begins Open Loop operation. The ECM ignores the signal from the heated oxygen sensors (HO2S). The ECM calculates the air/fuel ratio based on inputs from the ECT, MAF, MAP, and TP sensors. The system stays in Open Loop until meeting the following conditions:

- Both front HO2S have varying voltage output, showing that both HO2S are hot enough to operate properly.
- The ECT sensor is above a specified temperature.
- A specific amount of time has elapsed after starting the engine.

cardiagn.com

Specific values for the above conditions exist for each different engine, and are stored in the electrically erasable programmable read-only memory (EEPROM). The system begins Closed Loop operation after reaching these values. In Closed Loop, the ECM calculates the air/fuel ratio, injector ON time, based upon the signal from various sensors, but mainly from the HO2S. This allows the air/fuel ratio to stay very close to 14.7:1.

Acceleration Mode

When the driver pushes on the accelerator pedal, air flow into the cylinders increases rapidly. To prevent possible hesitation, the ECM increases the pulse width to the injectors to provide extra fuel during acceleration. This is also known as power enrichment. The ECM determines the amount of fuel required based upon the TP, the ECT, the MAP, the MAF, and the engine speed.

Deceleration Mode

When the driver releases the accelerator pedal, air flow into the engine is reduced. The ECM monitors the corresponding changes in the TP, the MAP, and the MAF. The ECM shuts OFF fuel completely if the deceleration is very rapid, or for long periods, such as long, closed-throttle coast-down. The fuel shuts OFF in order to prevent damage to the catalytic converters.

Battery Voltage Correction Mode

When the battery voltage is low, the ECM compensates for the weak spark delivered by the ignition system in the following ways:

- Increasing the amount of fuel delivered
- Increasing the idle RPM
- Increasing the ignition dwell time

Fuel Cutoff Mode

The ECM cuts OFF fuel from the fuel injectors when the following conditions are met in order to protect the powertrain from damage and improve driveability:

- The ignition is OFF. This prevents engine run-on.
- The ignition is ON but there is no ignition reference signal. This prevents flooding or backfiring.
- The engine speed is too high, above red line.
- The vehicle speed is too high, above rated tire speed.
- During an extended, high speed, closed throttle coast down-This reduces emissions and increases engine braking.
- During extended deceleration, in order to prevent damage to the catalytic converters

Fuel Trim

The engine control module (ECM) controls the air/fuel metering system in order to provide the best possible combination of driveability, fuel economy, and emission control. The ECM monitors the heated oxygen sensor

cardiagn.com

(HO2S) signal voltage while in Closed Loop and regulates the fuel delivery by adjusting the pulse width of the fuel injectors based on this signal. The ideal fuel trim values are around 0 percent for both short term and long term fuel trim. A positive fuel trim value indicates the ECM is adding fuel in order to compensate for a lean condition by increasing the pulse width. A negative fuel trim value indicates that the ECM is reducing the amount of fuel in order to compensate for a rich condition by decreasing the pulse width. A change made to the fuel delivery changes the short term and long term fuel trim values. The short term fuel trim values change rapidly in response to the HO2S signal voltage. These changes fine tune the engine fueling. The long term fuel trim makes coarse adjustments to the fueling in order to re-center and restore control to short term fuel trim. A scan tool can be used to monitor the short term and long term fuel trim values. The long term fuel trim diagnostic is based on an average of several of the long term speed load learn cells. The ECM selects the cells based on the engine speed and engine load. If the ECM detects an excessive lean or rich condition, the ECM will set a fuel trim diagnostic trouble code (DTC).

EVAPORATIVE EMISSION CONTROL SYSTEM DESCRIPTION

EVAP System Operation

The evaporative emission (EVAP) control system limits fuel vapors from escaping into the atmosphere. Fuel tank vapors are allowed to move from the fuel tank, due to pressure in the tank, through the vapor pipe, into the EVAP canister. Carbon in the canister absorbs and stores the fuel vapors. Excess pressure is vented through the vent line and EVAP vent solenoid valve to the atmosphere. The EVAP canister stores the fuel vapors until the engine is able to use them. At an appropriate time, the control module will command the EVAP purge solenoid valve ON, allowing engine vacuum to be applied to the EVAP canister. With the EVAP vent solenoid valve OFF, fresh air is drawn through the vent solenoid valve and the vent line to the EVAP canister. Fresh air is drawn through the canister, pulling fuel vapors from the carbon. The air/fuel vapor mixture continues through the EVAP purge pipe and EVAP purge solenoid valve into the intake manifold to be consumed during normal combustion. The control module uses several tests to determine if the EVAP system is leaking.

Large Leak Test

This tests for large leaks and blockages in the evaporative emission (EVAP) system. The control module commands the EVAP vent solenoid valve ON and commands the EVAP purge solenoid valve ON, with the engine running, allowing engine vacuum into the EVAP system. The control module monitors the fuel tank pressure (FTP) sensor voltage to verify that the system is able to reach a predetermined level of vacuum within a set amount of time. The control module then commands the EVAP purge solenoid valve OFF, sealing the system, and monitors the vacuum level for decay. If the control module does not detect that the predetermined vacuum level was achieved, or the vacuum decay rate is more than a calibrated level on 2 consecutive tests, DTC P0455 will set.

Small Leak Test

The engine off natural vacuum (EONV) diagnostic is the small-leak detection diagnostic for the evaporative emission (EVAP) system. While previous leak detection methods were performed with the engine running, the EONV diagnostic monitors the EVAP system pressure or vacuum with the ignition OFF. Because of this, it may be normal for the control module to remain active for up to 40 minutes after the ignition is turned OFF. This is important to remember when performing a parasitic draw test on vehicles equipped with EONV.

The EONV utilizes the temperature changes in the fuel tank immediately following a drive cycle to use the

cardiagn.com

naturally occurring vacuum or pressure in the fuel tank. When the vehicle is driven, the temperature rises in the tank. After the vehicle is parked, the temperature in the tank continues to rise for a period of time, then starts to drop. The EONV diagnostic relies on this temperature change and the corresponding pressure change in a sealed system, to determine if an EVAP system leak is present.

The EONV diagnostic is designed to detect leaks as small as 0.51 mm (0.020 in). The diagnostic can determine if a small leak is present based on vacuum or pressure readings in the EVAP system. When the system is sealed, a finite amount of pressure or vacuum will be observed. When a 0.51 mm (0.020 in) leak is present, often little or no pressure or vacuum is observed. If the test reports a failing value, DTC P0442 will set.

Canister Vent Restriction Test

If the evaporative emission (EVAP) vent system is restricted, fuel vapors will not be properly purged from the EVAP canister. The control module tests this by commanding the EVAP purge solenoid valve ON, commanding the EVAP vent solenoid valve OFF, and monitoring the fuel tank pressure (FTP) sensor for an increase in vacuum. If the vacuum increases more than a calibrated value, DTC P0446 will set.

Purge Solenoid Valve Leak Test

If the evaporative emission (EVAP) purge solenoid valve does not seal properly fuel vapors could enter the engine at an undesired time, causing driveability concerns. The control module tests for this by commanding the EVAP purge solenoid valve OFF and the vent solenoid valve ON, sealing the system, and monitors the fuel tank pressure (FTP) for an increase in vacuum. If the control module detects that the EVAP system vacuum increases above a calibrated value, DTC P0496 will set.

Check Gas Cap Message

The powertrain control module (PCM) sends a class 2 message to the driver information center (DIC) illuminating the Check Gas Cap message when any of the following occur:

- A malfunction in the evaporative emission (EVAP) system and a large leak test fails
- A malfunction in the EVAP system and a small leak test fails

EVAP System Components

The evaporative emission (EVAP) system consists of the following components:

EVAP Canister

The canister is filled with carbon pellets used to absorb and store fuel vapors. Fuel vapor is stored in the canister until the control module determines that the vapor can be consumed in the normal combustion process.

EVAP Purge Solenoid Valve

The EVAP purge solenoid valve controls the flow of vapors from the EVAP system to the intake manifold. The purge solenoid valve opens when commanded ON by the control module. This normally closed valve is pulse width modulated (PWM) by the control module to precisely control the flow of fuel vapor to the engine. The valve will also be opened during some portions of the EVAP testing, allowing engine vacuum to enter the

cardiagn.com

EVAP system.

EVAP Vent Solenoid Valve

The EVAP vent solenoid valve controls fresh airflow into the EVAP canister. The valve is normally open. The control module commands the valve ON, closing the valve during some EVAP tests, allowing the system to be tested for leaks.

Fuel Tank Pressure Sensor

The fuel tank pressure (FTP) sensor measures the difference between the pressure or vacuum in the fuel tank and outside air pressure. The control module provides a 5-volt reference and a ground to the FTP sensor. The FTP sensor provides a signal voltage back to the control module that can vary between 0.1-4.9 volts. A high FTP sensor voltage indicates a low fuel tank pressure or vacuum. A low FTP sensor voltage indicates a high fuel tank pressure.

ELECTRONIC IGNITION (EI) SYSTEM DESCRIPTION

The electronic ignition (EI) system is responsible for producing and controlling a high energy secondary spark. This spark is used to ignite the compressed air/fuel mixture at precisely the correct time. This provides optimal performance, fuel economy, and control of exhaust emissions. This ignition system consists of a separate ignition coil connected to each spark plug by a short secondary wire. The driver modules within each coil assembly are commanded ON/OFF by the engine control module (ECM). The ECM primarily uses engine speed and position information from the crankshaft and camshaft position (CMP) sensors to control the sequence, dwell, and timing of the spark event. The EI system consists of the following components:

Crankshaft Reluctor Wheel

The crankshaft reluctor wheel is part of the crankshaft. The reluctor wheel consists of 58 teeth and a reference gap. Each tooth on the reluctor wheel is spaced at 6 degrees apart from each other, for a total of 60-tooth spacing around the circumference of the wheel. The crankshaft reluctor wheel is missing 2 of the 60 teeth. The 2 missing teeth are used to create 12 degrees of spacing, which is used for the reference or sync pulse. The sync pulse is used by the engine control module (ECM) to synchronize the coil firing with the crankshaft position, while the other teeth provide cylinder location during each crankshaft revolution.

Crankshaft Position (CKP) Sensor

The crankshaft position (CKP) sensor is a 3-wire sensor that provides a digital output signal. The wire circuits consist of an engine control module (ECM) supplied 5-volt reference circuit, a low reference circuit between the CKP sensor and the ECM, and an output signal circuit from the CKP sensor to the ECM. The CKP sensor detects magnetic flux changes of the teeth and slots of the 58-tooth reluctor on the crankshaft. The CKP sensor provides an ON/OFF DC voltage of varying frequency, with 58 output pulses per each crankshaft revolution. The frequency of the CKP sensor output signal depends on the speed of the crankshaft. The CKP sensor sends a digital square wave signal, which represents an image of the teeth on the reluctor wheel, to the ECM. The 12 degree reference gap on the reluctor wheel is used to identify crankshaft position. The CKP information, along with the camshaft position (CMP) sensor information is used to determine the correct time and sequence for fuel injection, ignition spark events, detect cylinder misfire, and the camshaft to crankshaft relative position.

cardiagn.com

Camshaft Reluctor Wheel

The camshaft reluctor wheel is part of the camshaft gear. The reluctor wheel contains a pattern of 2 narrow teeth, and 2 wide teeth around the circumference of the wheel. The falling or trailing edges of the 4 teeth are evenly spaced at 90 degrees apart. The engine control module (ECM) recognizes the narrow and wide tooth patterns to identify camshaft position, or which cylinder is in compression, and which is in exhaust. The ECM also uses the reluctor wheel information to determine the camshaft relative position to the crankshaft position.

Camshaft Position (CMP) Sensor

The camshaft position (CMP) sensor is a 3-wire sensor that provides a digital output signal. The wire circuits consist of an engine control module (ECM) supplied 5-volt reference circuit, a low reference circuit between the CMP sensor and the ECM, and an output signal circuit from the CMP sensor to the ECM. The CMP sensor detects magnetic flux changes between the teeth and slots on the 4-tooth reluctor wheel. The CMP sensor provides a digital ON/OFF DC voltage of varying frequency, with 4 varying width output pulses, per each camshaft revolution. The frequency of the CMP sensor output signal depends on the speed of the camshaft. The ECM will recognize the narrow and wide tooth patterns to identify camshaft position, or which cylinder is in compression and which is in exhaust. The information is then used to determine the correct time and sequence for fuel injection and ignition spark events. The ECM also uses the CMP sensor output signal to determine the camshaft relative position to the crankshaft position.

Ignition Coils

Each ignition coil has an ignition 1 voltage feed and a ground circuit. The engine control module (ECM) supplies a low reference and an ignition control (IC) circuit. Each ignition coil contains a solid state driver module. The ECM will command the IC circuit ON, which allows the current to flow through the primary coil windings for the appropriate time or dwell. When the ECM commands the IC circuit OFF, this will interrupt current flow through the primary coil windings. The magnetic field created by the primary coil windings will collapse across the secondary coil windings, which induces a high voltage across the spark plug electrodes. The primary coils are current limited to prevent overloading if the IC circuit is held ON for an extended time. The spark plugs are connected to their respective coils by a short secondary wire. The spark plugs are tipped with iridium for long life and efficiency.

Engine Control Module (ECM)

The engine control module (ECM) controls all ignition system functions, and constantly corrects the basic spark timing. The ECM monitors information from various sensor inputs that include the following:

- The throttle position (TP) sensor
- The engine coolant temperature (ECT) sensor
- The mass air flow (MAF) sensor
- The intake air temperature (IAT) sensor
- The vehicle speed sensor (VSS)
- The transmission gear position or range information sensors
- The engine knock sensors (KS)

cardiagn.com

Modes of Operation

There is one normal mode of operation, with the spark under engine control module (ECM) control. If the crankshaft position (CKP) pulses are lost, the engine will not run. The loss of a camshaft position (CMP) signal may result in a longer crank time, since the ECM cannot determine which stroke the pistons are on. Diagnostic trouble codes are available to accurately diagnose the ignition system with a scan tool.

KNOCK SENSOR (KS) SYSTEM DESCRIPTION

Purpose

The knock sensor (KS) system enables the control module to control the ignition timing for the best possible performance while protecting the engine from potentially damaging levels of detonation. The control module uses the KS system to test for abnormal engine noise that may indicate detonation, also known as spark knock.

Sensor Description

This knock sensor (KS) system uses one or 2 flat response 2-wire sensors. The sensor uses piezo-electric crystal technology that produces an AC voltage signal of varying amplitude and frequency based on the engine vibration or noise level. The control module receives the KS signal through a signal circuit. The KS ground is supplied by the control module through a low reference circuit.

The control module learns a minimum noise level, or background noise, at idle from the KS and uses calibrated values for the rest of the RPM range. The control module uses the minimum noise level to calculate a noise channel. A normal KS signal will ride within the noise channel. As engine speed and load change, the noise channel upper and lower parameters will change to accommodate the normal KS signal, keeping the signal within the channel. In order to determine which cylinders are knocking, the control module only uses KS signal information when each cylinder is near top dead center (TDC) of the firing stroke. If knock is present, the signal will range outside of the noise channel.

If the control module has determined that knock is present, it will retard the ignition timing to attempt to eliminate the knock. The control module will always try to work back to a zero compensation level, or no spark retard. An abnormal KS signal will stay outside of the noise channel or will not be present. KS diagnostics are calibrated to detect faults with the KS circuitry inside the control module, the KS wiring, or the KS voltage output. Some diagnostics are also calibrated to detect constant noise from an outside influence such as a loose/damaged component or excessive engine mechanical noise.

SPECIAL TOOLS AND EQUIPMENT

SPECIAL TOOLS

Special Tools

Illustration	Tool Number/Description
	GE 41415-50 Fuel Tank Cap Adapter

cardiagn.com

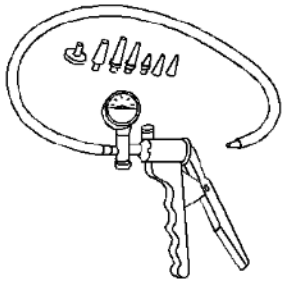	J 23738-A Mityvac
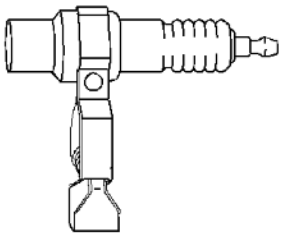	J 26792 HEI Spark Tester
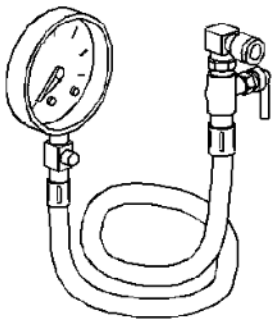	J 34730-1A Fuel Pressure Gage

cardiagn.com

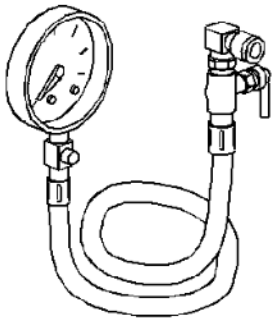	J 34730-FF Fuel Pressure Gage-Flex Fuel
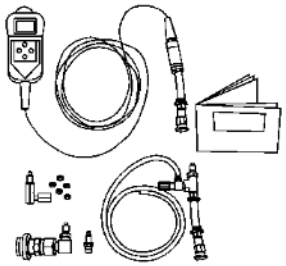	CH-48027 Digital Pressure Gauge
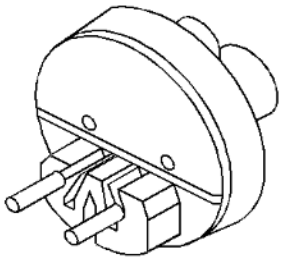	J 34730-405 Injector Test Lamp
	J 35616-A GM-Approved Terminal Test Kit

cardiagn.com

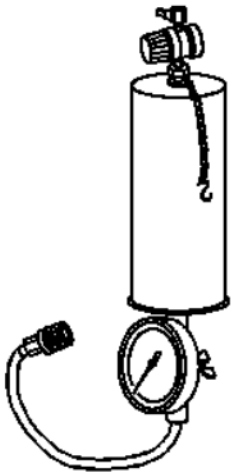	J 35800 Fuel Injector Cleaner
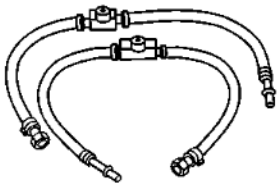	J 37287 Fuel Line Shutoff Adapters
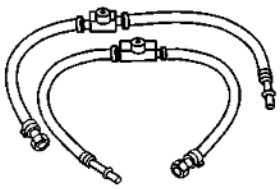	J 37287-FF Fuel Line Shutoff Adapters
	J 38522 Variable Signal Generator

cardiagn.com

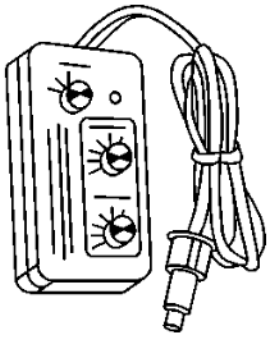	
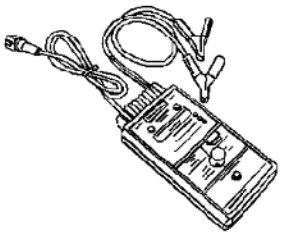	J 39021 Fuel Injector Coil and Balance Tester
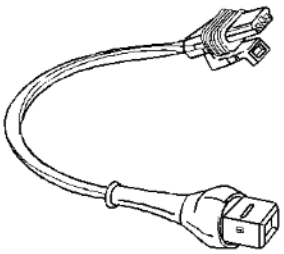	J 39021-380 Injector Tester Adapter
	J 41413-200 Evaporative Emissions System Tester (EEST)

cardiagn.com

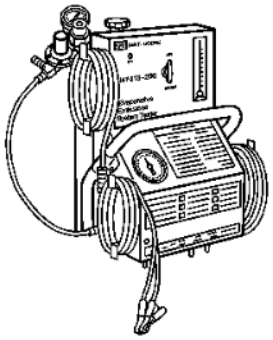	
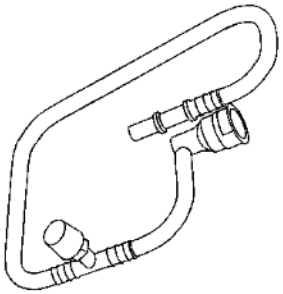	CH-48096 EVAP Service Access Port Tool
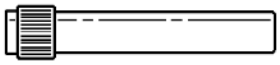	J 41413-VLV EVAP Service Port Vent Fitting
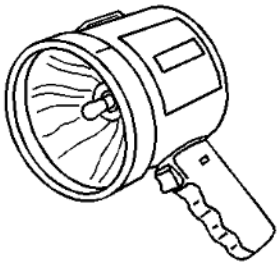	J 41413-SPT High Intensity White Light
	J 41415-40 Fuel Tank Cap Adapter

cardiagn.com

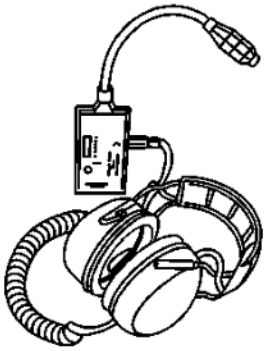	J 41416 Ultrasonic Leak Detector
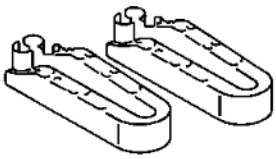	J 41769 Fuel Line Disconnect Tool Set
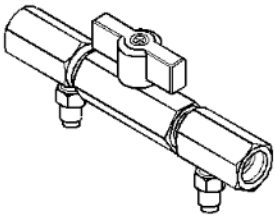	J 42873-1 3/8 Fuel Line Shutoff Valve
	J 42873-2 5/16 Return Pipe Shutoff Valve

cardiagn.com

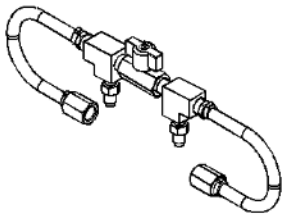	
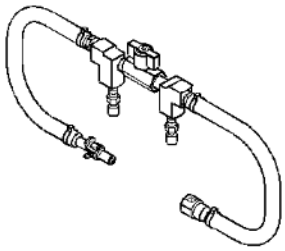	J 42964-1 3/8 Fuel Pipe Shutoff Valve
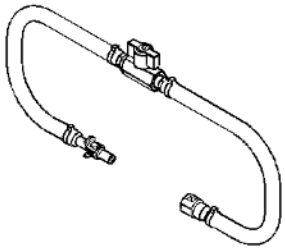	J 42964-2 5/16 Fuel Pipe Shutoff Valve
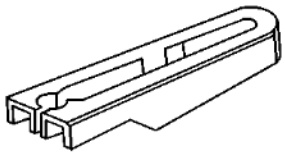	J 43178 Fuel Line Disconnect Tool
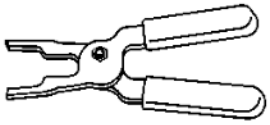	J 43244 Relay Puller Pliers

cardiagn.com

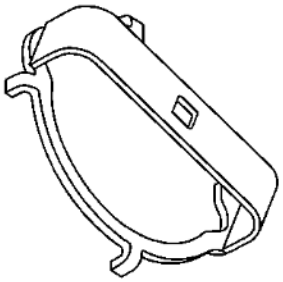	J 44402 Fuel Tank Sending Unit Wrench
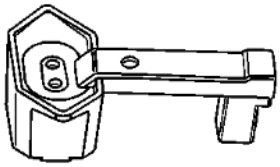	J 44175 Fuel Composition Tester
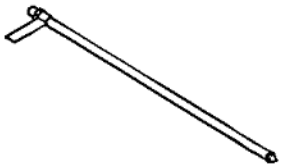	J 45004 Fuel Tank Drain Hose
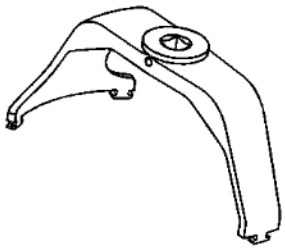	J 45722 Fuel Sender Lock Ring Wrench

cardiagn.com