CHECKING THE HANDBRAKE STROKE

1. Move the control lever to the third - fourth click on the toothed sector, with the lever in this position check that the wheels are locked.
2. If not, tighten the adjustment screw until the wheels are locked.

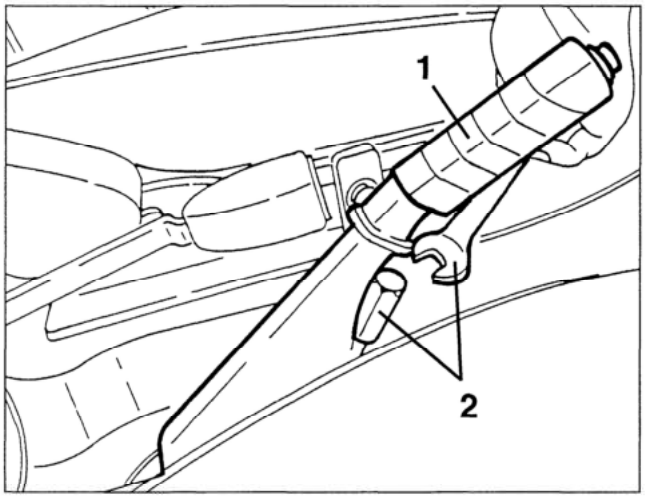

- Exerting a force of appr. 30 kg on the control lever check that there are 3 clicks on the toothed sector.
- Check the wheels are free when the lever is in the rest position.

CHECKING THE POWER STEERING OIL LEVEL

- With the engine stationary, clean the power steering tank cover and the areas surrounding it.
1. Disconnect the breather pipe from the cover on the tank.
2. Remove the cover checking that the level reaches the upper notch on the dipstick.

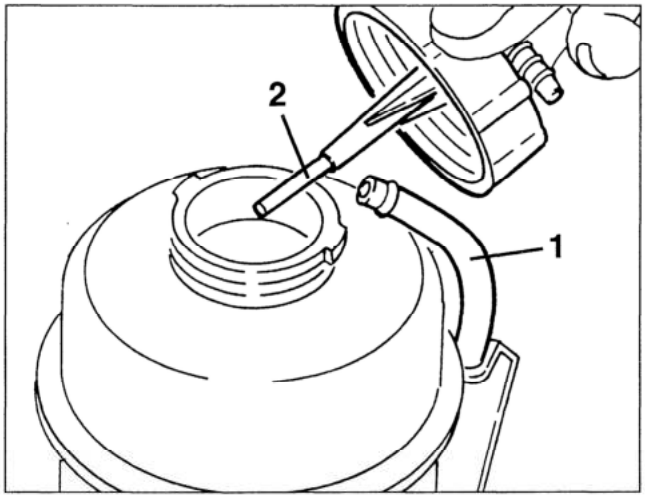

- If necessary top up with the specified oil proceeding as follows:
• Start the engine and wait for the level of the oil in the tank to stabilize.
• With the engine running, turn the steering wheel completely to the right and left a few times.
• Top up to the "MAX" level then refit the cover and insert the breather pipe.

Alfawiki.nl

Changing the oil

- Set the car on a lift.
1. Remove the filler cap (1a), the reversing light switch (1b) and the drain cap (1c).

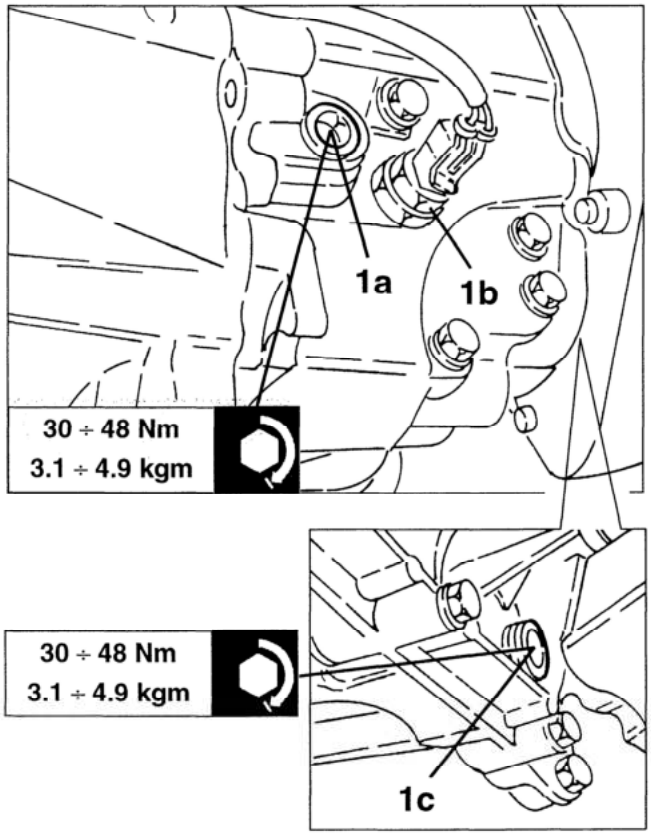

- Allow the oil to drain off completely.
- Clean the drain cap and screw it back on.
- Fill with oil of the specified type and quantity, through the filler hole.
- When the correct level has been reached (see previous paragraph) screw the filler cap and reversing light switch back on and reconnect the electrical connection.

Specific for 2959 c.c.

Checking the oil level

1. With the engine cold remove the gearbox/differential oil dipstick. Clean the dipstick with a lintfree cloth and insert it completely in its housing.
- Remove the dipstick again and check that the oil level coincides with the reference on the dipstick.
- If necessary fill with oil of the specified type to the correct level.
- Insert the dipstick completely in its housing.

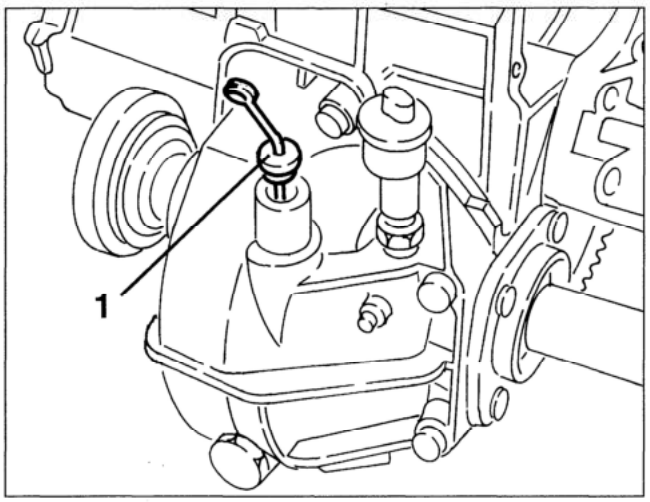

Changing the oil

- Set the car on a lift.
1. Remove the oil dipstick.
2. Raise the car and slacken the differential drain cap.
3. Remove the gearbox drain cap and allow the oil to drain off completely.
- Clean the caps and refit them.
- Fill with oil of the type and quantity specified, through the dipstick hole.
- Check that the correct level has been reached (see previous paragraph) and refit the dipstick.

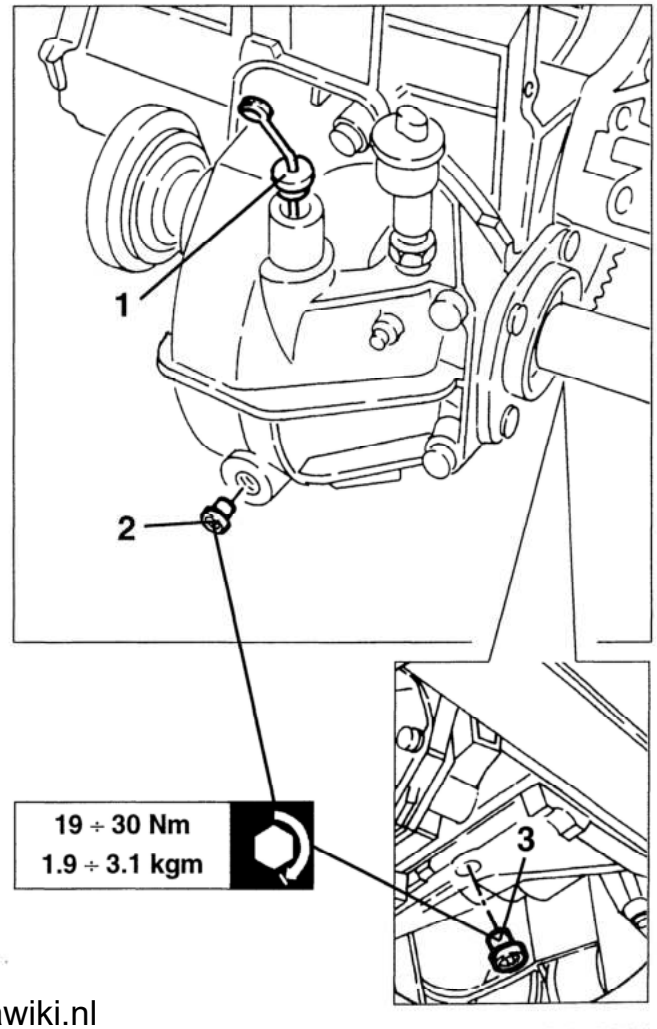

Alfawiki.nl

MAINTENANCE OF MECHANICAL UNITS

CHANGING THE BRAKE - CLUTCH FLUID

- Set the car on a lift.
1. Connect a hose to the clutch control cylinder relief screw, slacken the screw, and pumping on the pedal, drain the fluid into a suitable recipient.

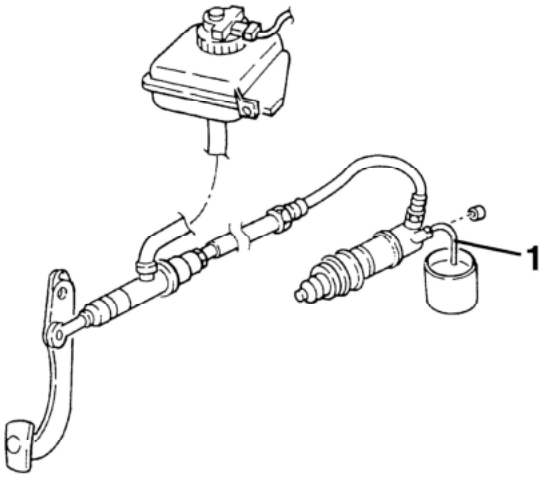

- Raise the car and, if necessary, remove the wheels.
1. Connect a hose to the relief screws on the brake calipers.
2. Slacken the relief screws and, pumping on the pedal, drain the fluid into a suitable recipient.

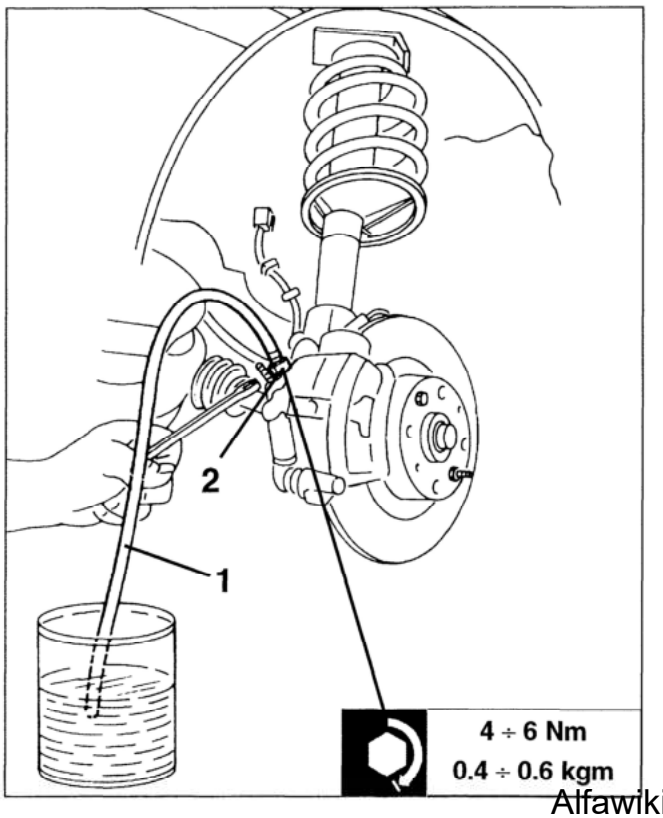

- Refill the brake - clutch system with the specified fluid.
- Bleed the clutch hydraulic system keeping the hose connected to the relief screw on the cylinder and the opposite end dipped in a recipient containing the same fluid as the circuit.
- Loosen the relief screw and at the same time press the clutch pedal letting it return slowly: repeat this operation until all the air trapped in the circuit has been eliminated.
- With the pedal fully depressed, tighten the relief screw and remove the hose.

When relieving the air from the circuit always keep the level of the fluid in the reservoir above the "MIN" mark.
Do not re-use the hydraulic fluid drained during the air relieving procedure. Brake/clutch fluid can harm the paintwork.

- Relieve the air from the braking system as described in GROUP 33 - Brakes.
- Top up the level of the fluid in the reservoir and refit the cap.
- Check that the clutch disengages and the gears engage correctly and that the braking system is in efficient conditions.

CHECKING THE LEVEL AND CHANGING GEARBOX/DIFERENTIAL OIL Specific for 1970 c.c.

Checking the oil level

- Set the car on a lift.
1. Disconnect and unscrew the reversing light switch and check that the level of the oil reaches the lower edge of the filler hole.
2. If necessary, remove the filler cap and top up.
- Refit the filler cap and the switch.
- Reconnect the electrical connection.

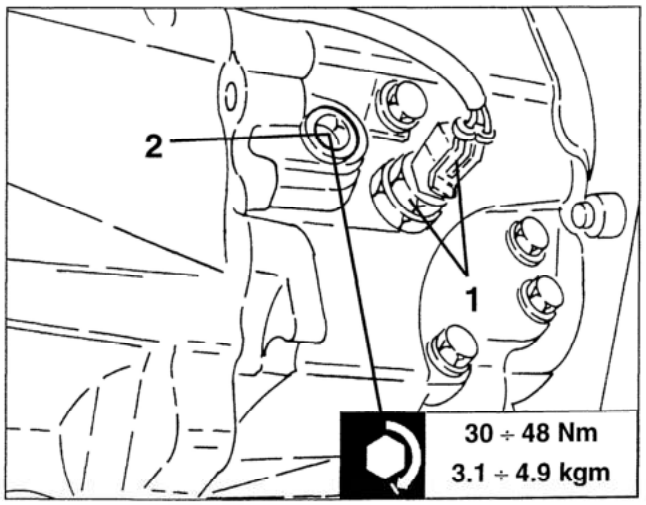

Alfawiki.nl

- With the engine cold, remove the spark plugs, firstly blowing inside the spark plug openings to remove any impurities and traces of dirt.
- Check the spark plugs for dirt and the ceramic insulation for breaks. In this case replace the spark plugs.

WARNING:
The use of spark plugs with different characteristics or sizes than those specified can cause serious damage to the engine and change the level of harmful emission at the exhaust.

WARNING:
A dirty or worn out spark plug is often the sign of a failure in the engine supply system.
For example:
- **Traces of carbon dust: incorrect mixture, air cleaner very dirty.**
- **Spots of oil: oil leaking from the piston rings.**
- **Formation of ash: presence of aluminium materials, contained in the oil.**
- **Burnt electrodes: overheating due to unsuitable fuel, defects in the valves.**
- **High electrode wear: harmful additives in the fuel or in the oil, pinging in the cylinder head.**
- **Etc.**

- When installing, lubricate the thread with engine oil and tighten the spark plugs to the following torque:

25 ÷ 34 Nm 2.5 ÷ 3.5 kgm

CHECKING THE LEVEL AND CHANGING THE ENGINE COOLANT FLUID

Checking

- With the engine cold, check that the level in the coolant in the header tank is between the MIN and MAX marks.

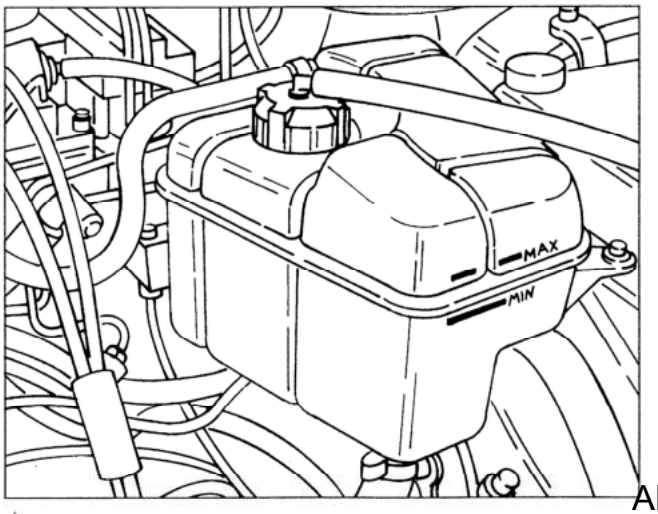

Draining and replenishing

- Set the car on a lift.
- Slacken and remove the header tank plug.

WARNING:
Absolutely never remove the header tank plug when the engine is hot!

1. Raise the car, slacken the radiator outlet hose and drain the coolant into a suitable recipient.

WARNING:
The anti-freeze mixture used as coolant can harm the paintwork: therefore avoid any contact with painted components.

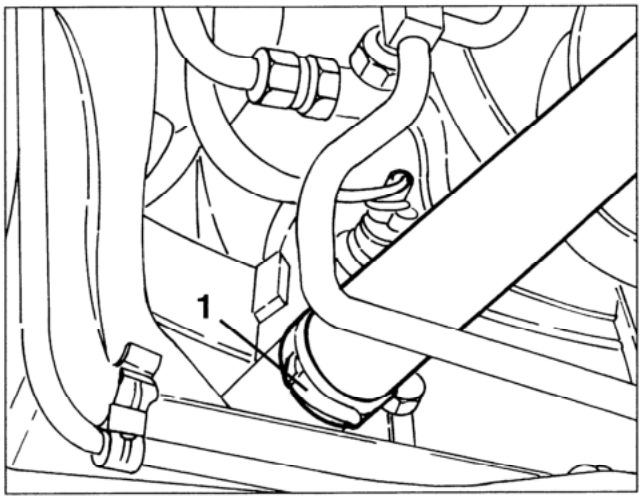

- Reconnect the sleeve to the radiator and any disconnected pipes, checking that all the clamps are firmly tightened.
- Fill the header tank to the MAX mark with fluid of the specified type and quantity.
- Start the engine and bring it to normal operating temperature so that the thermostat opens to release the amount of residual air in the circuit.
- With the engine cold, top up to the MAX mark on the header tank.
- Retighten the pressurised cap on the header tank.

WARNING:
It is unwise to mix anti-freeze fluids of different types or brands!
Never use antirust additives: they might not be compatible with the anti-freeze in use!

Alfawiki.nl

CHANGING THE AIR CLEANER CARTRIDGE

WARNING:
Any filter cleaning operation might damage it, thereby adversely affecting the correct operation of the engine.

- Disconnect the battery (-) terminal.
1. Slacken the fastening clamp and disconnect the corrugated sleeve from the air cleaner cover, then move it to one side.
2. Disconnect the electrical connection from the air-flow meter.

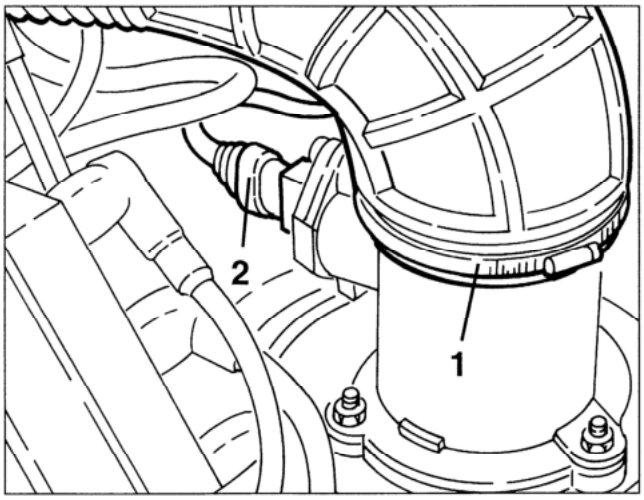

1. Slacken the fastening clamps and remove the air cleaner cover complete with air-flow meter.
2. Remove the filtering element.

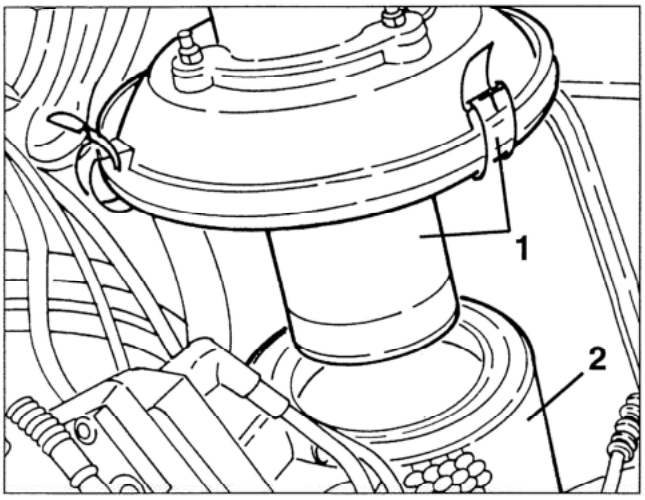

CHANGING THE FUEL FILTER

- Set the car on a lift and raise it.
1. Disconnect the fuel inlet hose connection from the filter.
2. Disconnect the fuel outlet hose connection from the filter.
3. Slacken the fastening clamp and remove the fuel filter.

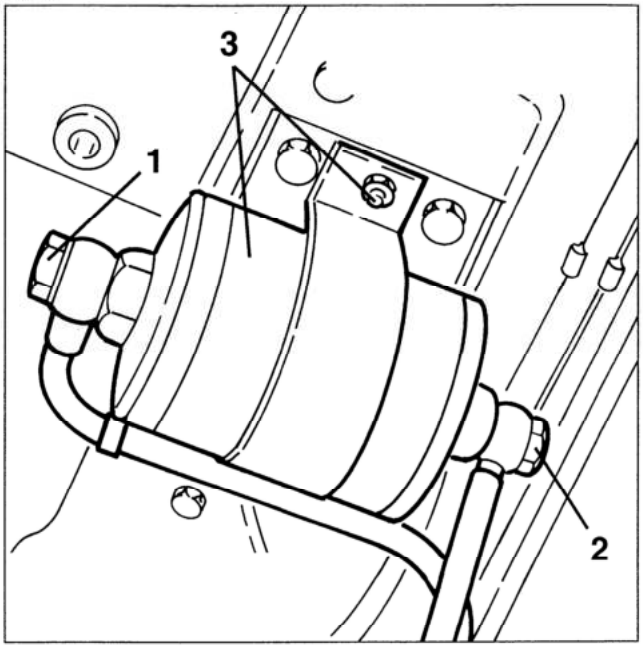

- Install the new filter reversing the sequence followed for removal and taking care to:
• change the copper gaskets of the connections;
• assemble the filter with the arrow stamped on it pointing in the direction of the flow of fuel.

CHECKING AND CHANGING SPARK PLUGS

The standard spark plugs are of the surface discharge type with one point and a centre electrode.
In order to operate correctly, the gap between the peripheral points and the centre electrode must be correct.

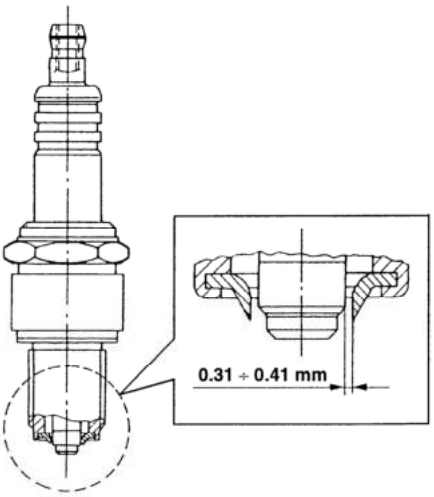

Spark plugs	LODGE 25 HL

Alfawiki.nl

- Check that the values measured using the special tool are within the specified limits.

Tensioning of power steering pump Poly-V drive belt	
At assembly	420 ÷ 550 N
Retensioning	240 ÷ 360 N

NOTE: The belt may be retensioned after a brief running-in period, as follows:
- bring the engine to normal operating temperature;
- turn off the engine and wait for it to cool down;
- retension the belt to the specified value.

- If the belt tensioning values are incorrect, proceed as follows:
1. Working from the engine compartment, slacken the three screws fastening the power steering pump support bracket.
2. Slacken the locknut, then turn the micrometric tensioner screw until the specified belt tension is obtained.
- Tighten the micrometric belt tensioner locknut and the three screws fastening the power steering pump support bracket.

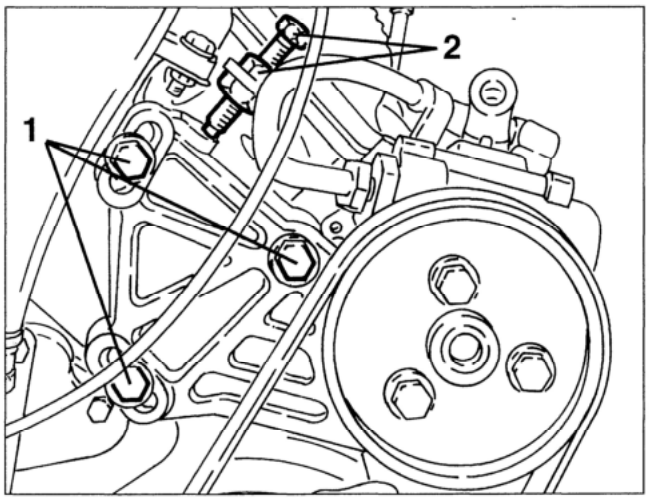

- To change the power steering pump drive belt, adapt the above-mentioned procedure appropriately.

Alternator - water pump drive belt

Checking and tensioning

- Set the car on a lift and raise it.
1. Proceeding as illustrated, measure the tension of the belt using tool no. 1.824.018.000 (C.2.0131).

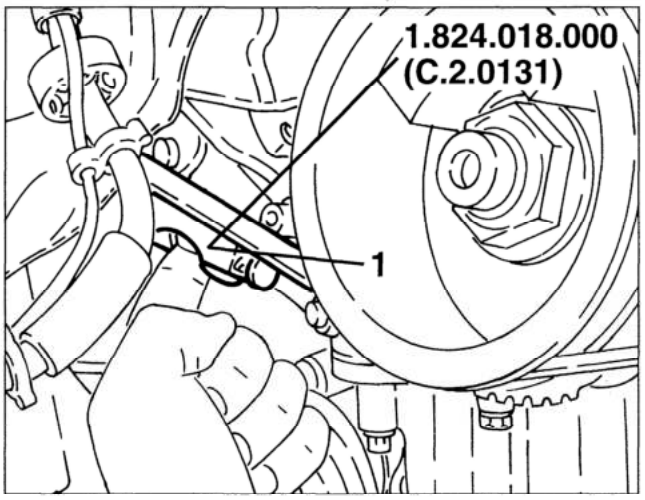

- Check that the values measured using the special tool are within the specified limits.

Tensioning of alternator - water pump Poly-V drive belt	
At assembly	520 ÷ 670 N
Retensioning	300 ÷ 450 N

NOTE: The belt may be retensioned after a brief running-in period, as follows:
- bring the engine to normal operating temperature;
- turn off the engine and wait for it to cool down;
- retension the belt to the specified value.

- If the belt tensioning values are incorrect, proceed as follows:
1. Slacken the two bolts fastening the alternator to the support brackets.
2. Slacken the locknut, then turn the micrometric tensioner screw until the specified belt tension is obtained.
- Tighten the micrometric belt tensioner locknut and the two bolts fastening the alternator.

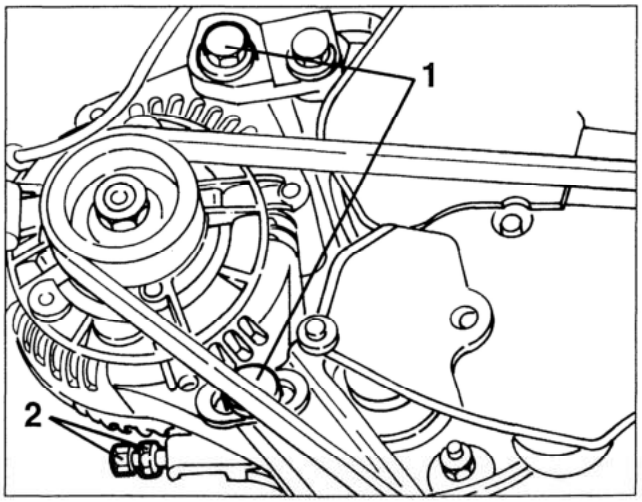

- To change the alternator - water pump drive belt, adapt the above-mentioned procedure appropriately.

Alfawiki.nl

When ckecking the belt tension, also check that the actual belt is intact and for:
- cuts
- cracks
- material surface wear (smooth and shiny)
- dried or stiff parts (lack of adherence)

If one of the above defects is found, change the belt.

WARNING:
The contact of the belts with oil or solvents can damage the elasticity of the actual belt rubber and reduce its adherence.

Conditioner compressor drive belt

Checking and tensioning

- Set the car on a lift and raise it.

1. Proceeding as illustrated, measure the tension of the belt using tool no. 1.824.018.000 (C.2.0131).

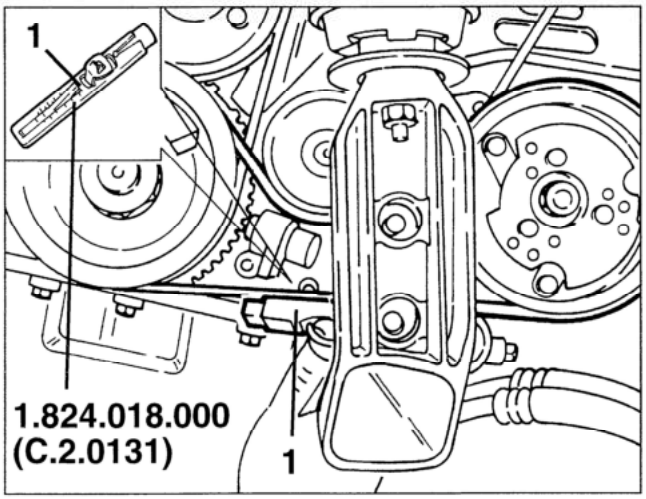

- Check that the values measured using the special tool are within the specified limits.

Tensioning of conditioner compressor Poly-V drive belt	
At assembly	630 ÷ 800 N
Retensioning	360 ÷ 520 N

NOTE: The belt should be tensioned after a brief running-in period, as follows:
- bring the engine to normal operating temperature;
- turn off the engine and wait for it to cool down;
- retension the belt to the specified value.

- If the belt tensioning values are incorrect, proceed as follows:

1. Slacken the two screws fastening the belt tensioner guide.
2. Slacken the locknut, then turn the micrometric tensioner screw until the specified belt tension is obtained.

- Tighten the micrometric tensioner locknut and the two screws fastening the belt tensioner.

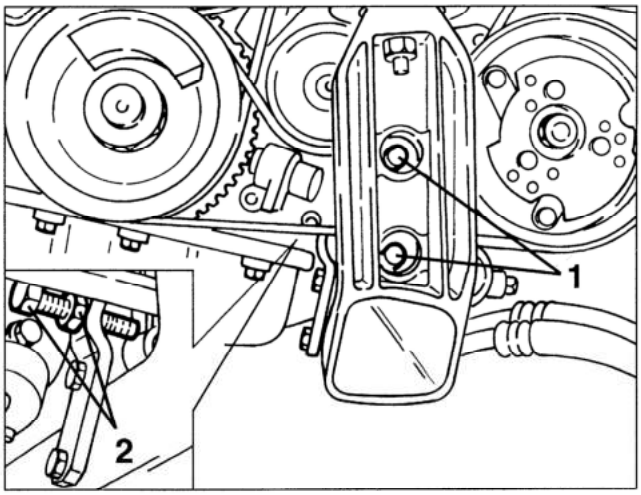

- To replace the conditioner compressor drive belt, adapt the above-mentioned procedure appropriately.

Power steering drive belt

Checking and tensioning

- Set the car on a lift and raise it.

1. Proceeding as illustrated, measure the tension of the belt using tool no. 1.824.018.000 (C.2.0131).

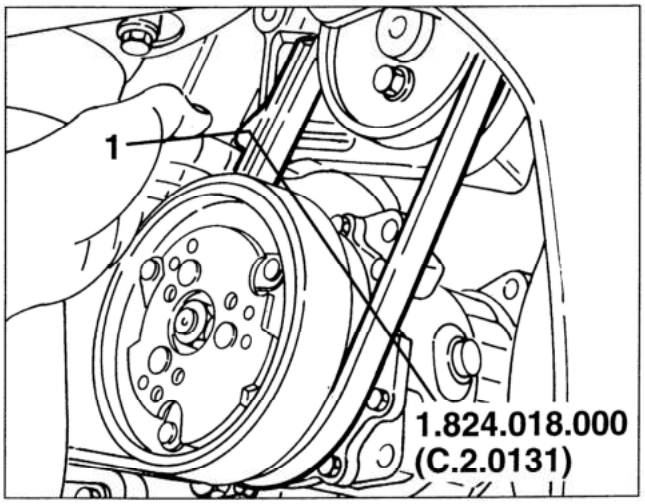

Alfawiki.nl

1. Raise the car and check the alignment of the notch on the phonic wheel with the reference pin on the front crankcase cover.

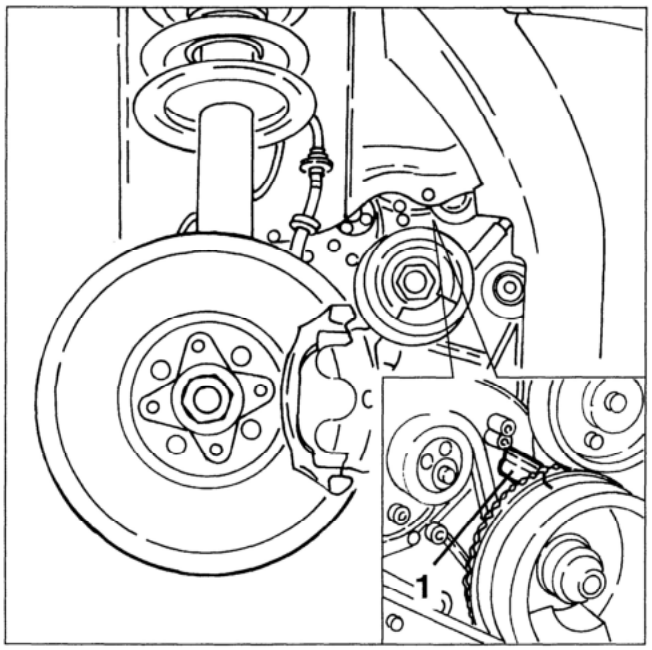

1. Slacken the two nuts fastening the timing belt tensioner, then position the latter in the slack belt position: stud "a" as illustrated, then tighten the two belt tensioner fastening nuts locking them lightly.

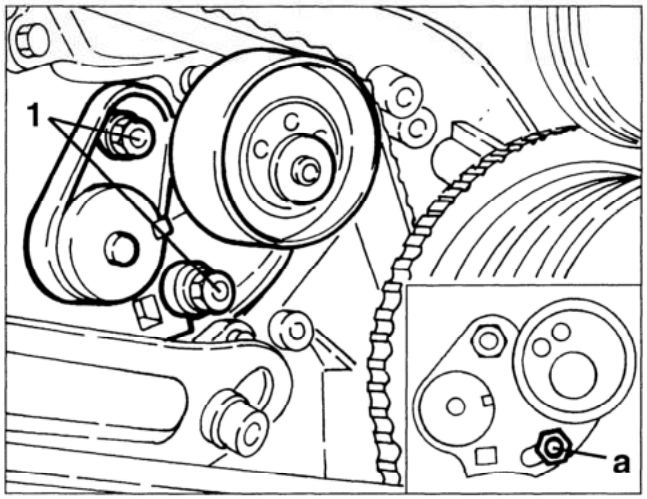

- Lower the car, then remove the timing belt from the pulleys.
- Raise the car and remove the timing belt.
- Install a new belt on the pulleys starting from the driving pulley and continue counter-clockwise.
1. Slacken the two belt tensioner fastening nuts.
2. Insert the 10 mm square of tensioning lever "b" (3/8" ratchet) in the hole of the belt tensioner, then turn it counter-clockwise so that the pointer moves 2 ÷ 3 mm with respect to the notch "d", then turn clockwise until they coincide; tighten the two belt tensioner fastening nuts without locking them.
- Turn the crankshaft twice in its normal direction of rotation until the piston of the 1st cylinder reaches the T.D.C. in the bursting stroke, checking that the timing references coincide.
- Check that the pointer "c" coincides with notch "d" and tighten the two belt tensioner fastening nuts to the specified torque.
- Remove the tensioning lever "b" from the belt tensioner.

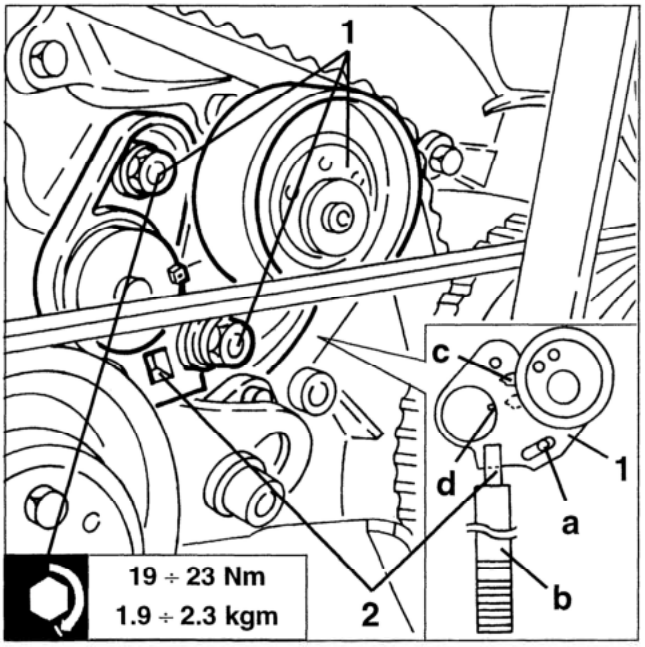

AUXILIARY COMPONENT BELTS

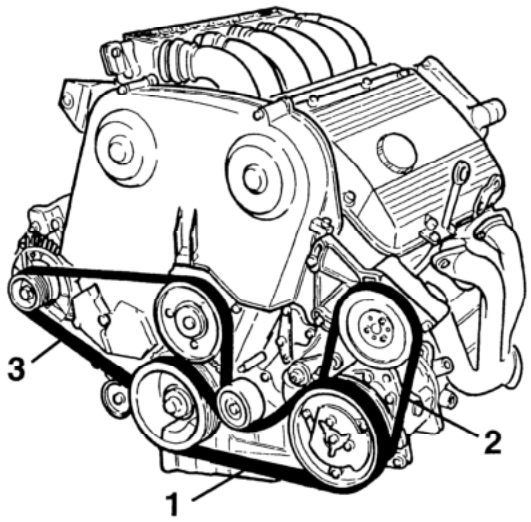

1. Conditioner compressor driving belt
2. Power steering pump driving belt
3. Alternator water pump driving belt

Alfawiki.nl

- Before refitting, position the camshafts correctly as follows:
1. Install tool no. 1.825.013.000 (C.6.0183), fitted with dial gauge, in the seat of the 1st cylinder park plug.
- Turn the crankshaft until the piston of the 1st cylinder is at the T.D.C. in the bursting stroke.
2. Check the alignment of the notches on the camshafts with those on the corresponding caps.

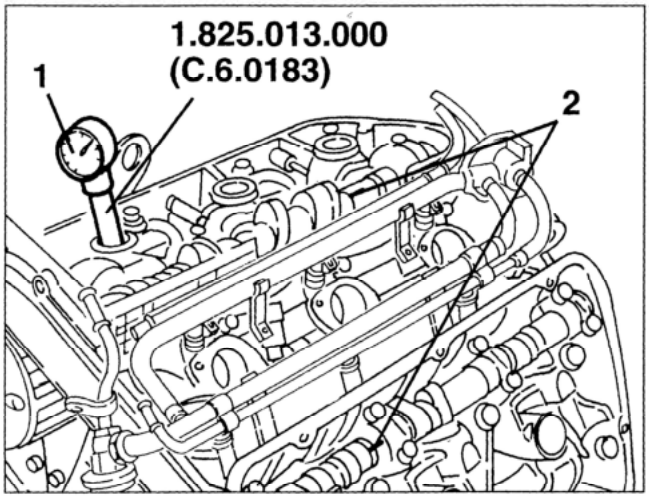

1. Check the alignment of the notch on the phonic wheel with the reference pin on the front crankcase cover.

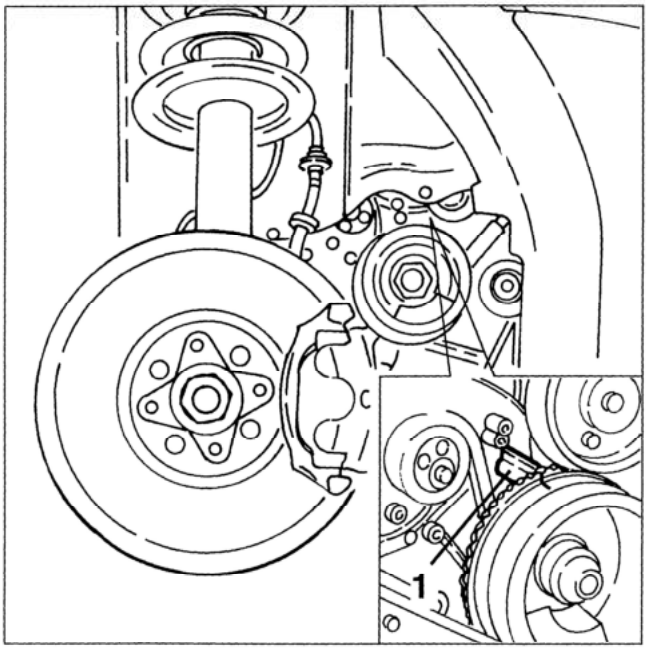

- Complete re-assembly reversing the sequence followed for removal.

CHANGING THE TIMING BELT

- Proceed as described in "CHECKING AND ADJUSTING VALVE CLEARANCES" up to removal of the timing gear covers from the cylinder heads.
- Remove the right front wheel and mud flap.
- Raise the car, slacken the fastening screws and remove the timing belt tensioner guard.
- Remove the conditioner compressor drive belt and the alternator-water pump drive belt (see specific paragraphs).
1. Slacken the fastening screws and remove the water pump pulley.
2. Slacken the two screws and remove the timing belt lower cover.
3. Slacken the fastening screws, then remove the rpm and timing sensor complete with support.

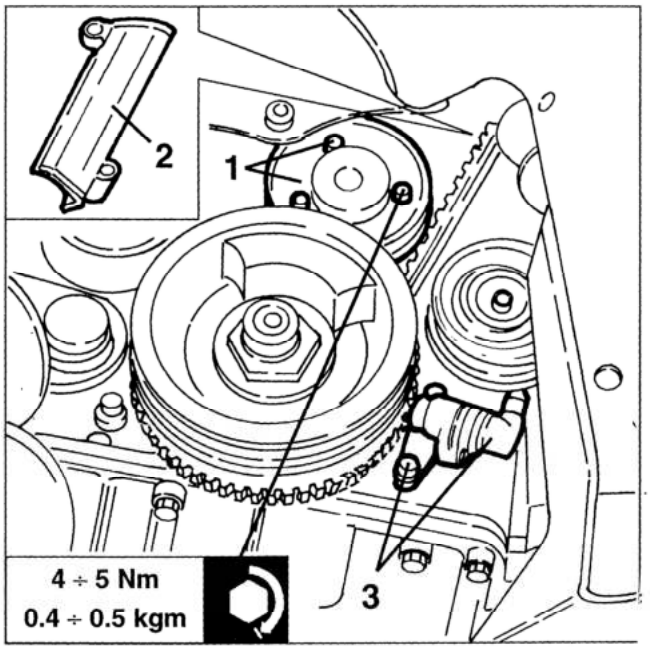

1. Lower the car and turn the crankshaft until the notches on the camshafts coincide with those on the corresponding caps.

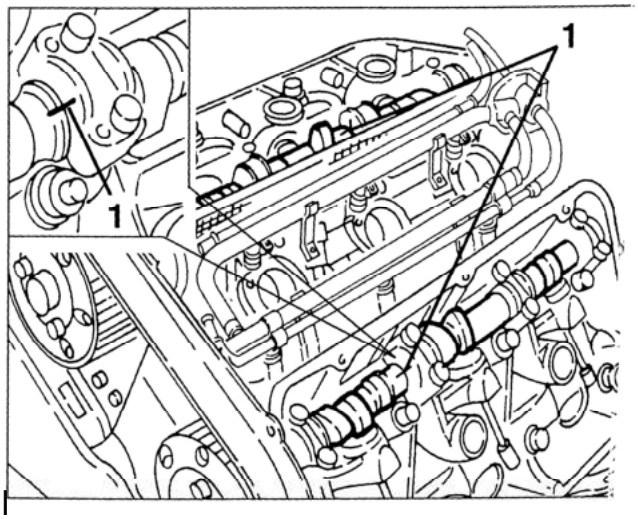

Alfawiki.nl

1. Install tool no. 1.820.232.000 on the timing pulley screwing the three screws to the support hub.
2. Tighten the nut of tool no. 1.820.232.000 and locking the pulley with tools no. 1.822.151.000 and no. 1.822.146.000, move the pulley and hub forwards until they are released from the camshaft.

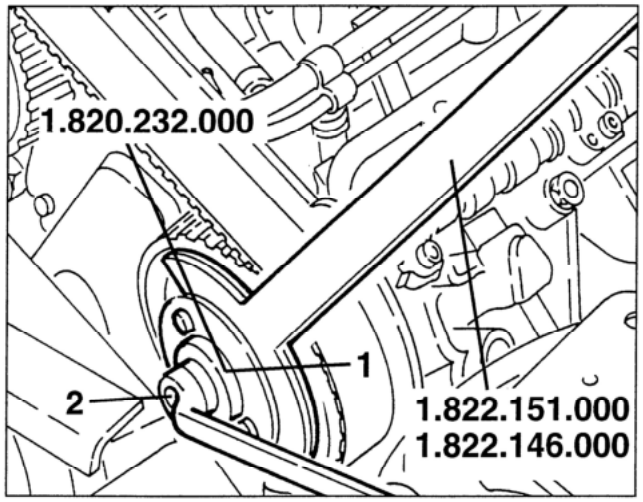

- Slacken the fastening nuts and remove the camshaft caps.
1. Remove the camshaft raising it from the rear.
2. Remove a cup and the corresponding valve clearance adjustment cap.

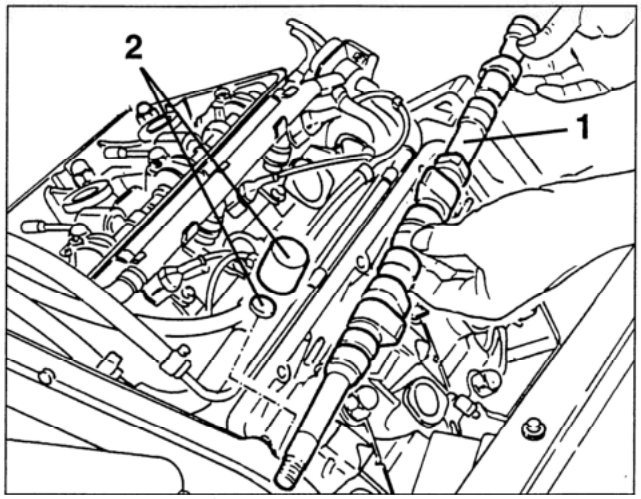

1. Measure the thickness of the caps with the specific dial gauge no. 1.824.034.000 then, according to the difference with respect to the values measured previously, choose from set no. 1.820.150.000 (R.9.0001) the suitable ones to restore the correct clearance of each valve.

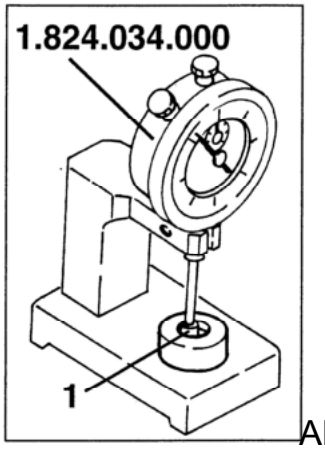

- Fit the new cap and the valve cup after lubricating with engine oil.
- Proceed in the same way for the remaining pairs of cups and caps.
1. Remove the centre part of tool no 1.820.232.000.
2. Assemble the camshaft checking through the hole of the tool that the key is positioned correctly.
- Push the timing gear driving pulley into the initial assembly position, then remove tool no. 1.820.232.000.
3. Tighten to the specified torque the three pulley fastening screws and the hub fastening screw levering with tools no. 1.822.151.000 and no. 1.822.146.000.
4. Fit the camshaft caps and tighten the fastening nuts to the specified torque.

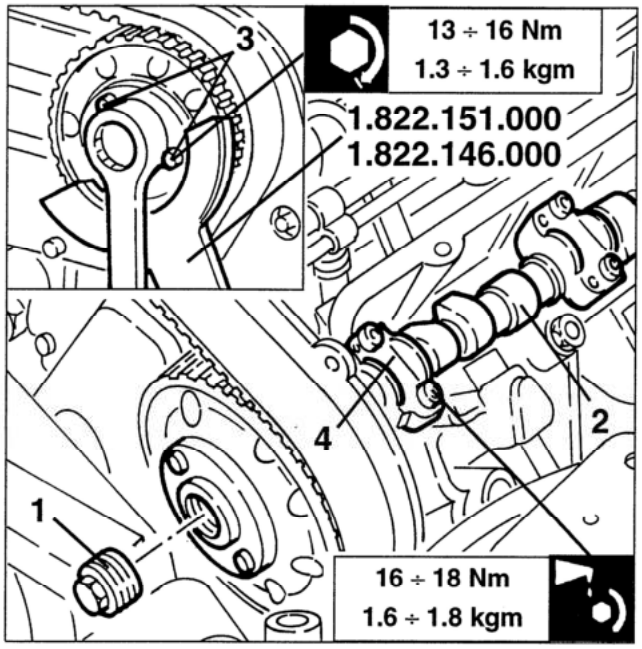

Adjusting exhaust valve clearance

1. Using tool no. 1.822.016.000 (A.5.0220) slacken the locknut of the adjustment screw working on the intermediate lever of the tool.
2. Still using the same tool, act on the adjustment screw until the specified valve clearance is obtained.
- Tighten the locknut and check the valve clearance again.

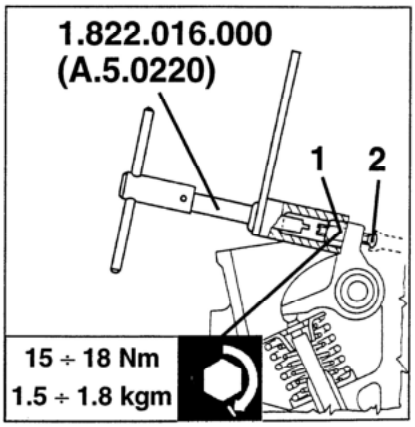

Alfawiki.nl

1. With the engine cold, check that the clearance between the lowered radius of the cams and the crown of the cups is within the specified limits.

Valve clearance on intake side "Ga"	0.475 ÷ 0.500 mm
Valve clearance on exhaust side "Gs"	0.225 ÷ 0.250 mm

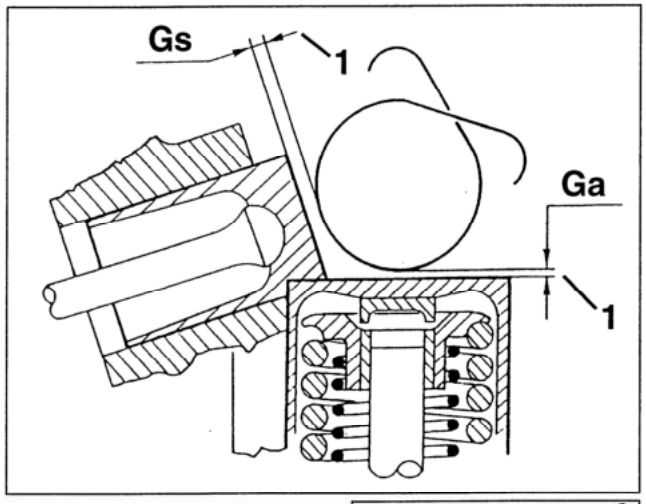

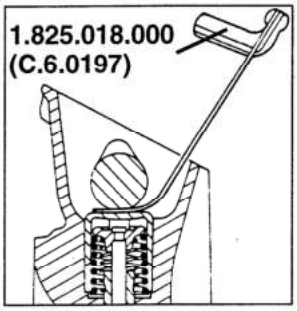

NOTE: To measure the intake valve clearance use thickness gauge no. 1.825.018.000 (C.6.0197).

- If the valve clearance is not within the specified limits, adjust as described below.

Intake valve clearance adjustment

1. Turn the crankshaft until the notches etched on the camshafts coincides with those on the corresponding caps.

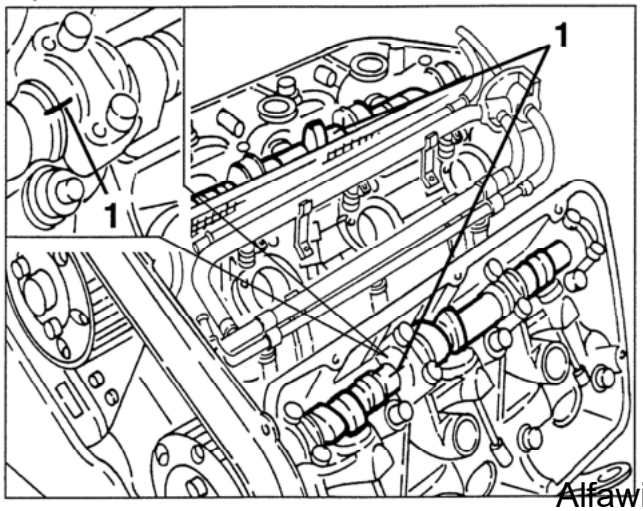

- Remove the right front wheel and mud flap.
- Slacken the fastening screws and remove the timing belt tensioner guard.

1. Check the alignment of the notch on the phonic wheel with the reference pin on the front crankcase cover.

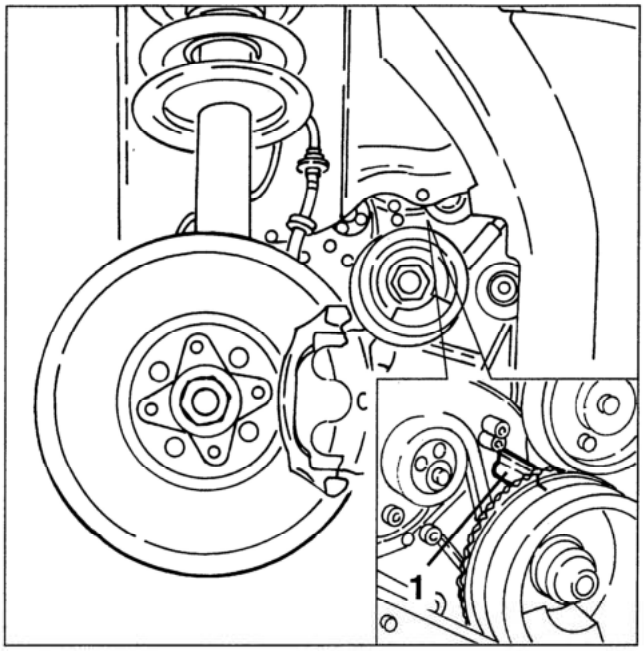

1. Slacken the screws fastening the pulley to the support hub.
2. Levering with tool no. 1.822.151.000 complete with tool no. 1.822.146.000, release and remove the hub fastening nut.

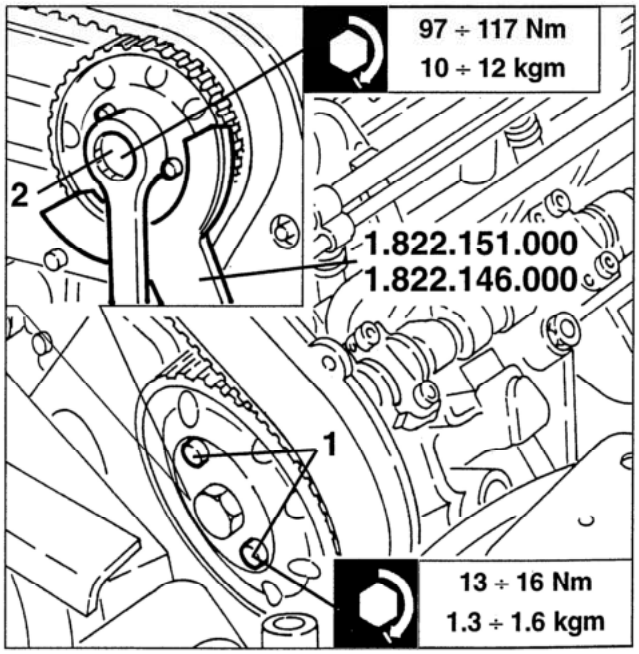

- Slacken and remove the screws fastening the timing pulley to the hub slackened previously.

Alfawiki.nl

CHECKING AND ADJUSTING THE VALVE CLEARANCE

- Remove the intake box (see specific paragraph).
1. Slacken the four fastening screws and remove the left- hand cylinder head.

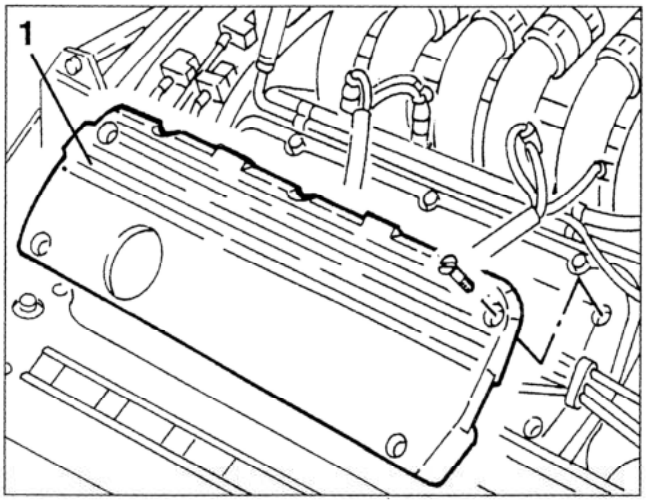

1. Disconnect the high voltage cables from the spark plugs.

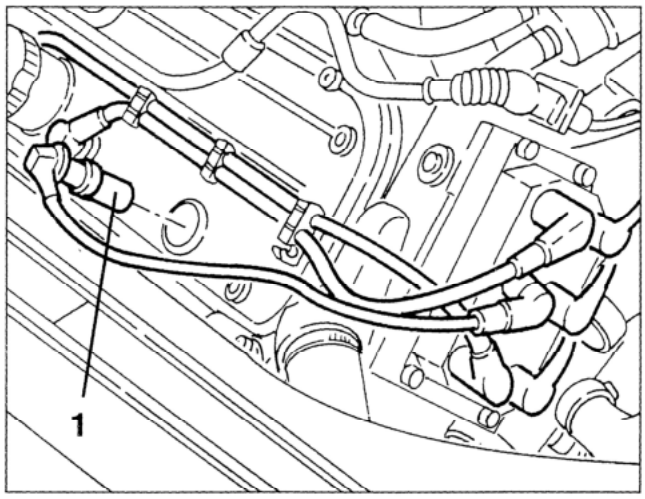

1. Disconnect the connections of the timing sensor (1a) knock sensor (1b) and rpm and timing sensor (1c), then move the wiring to one side.

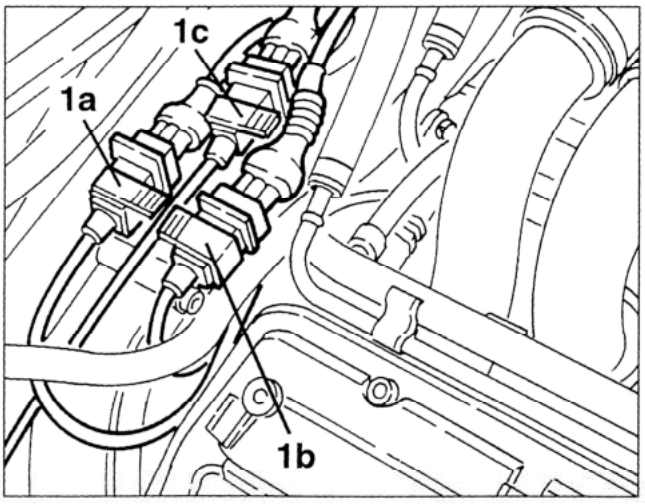

1. Slacken the fastening screws and remove the timing belt cover.

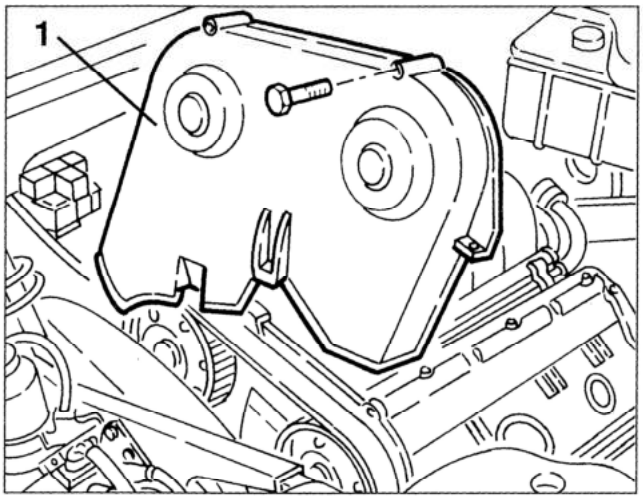

1. Slacken the fastening screws and remove the intake manifolds.

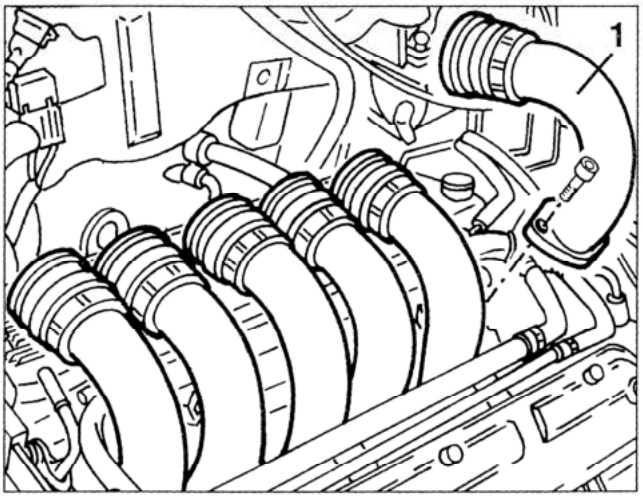

1. Slacken the fastening screws and remove the timing gear covers from the cylinder heads.

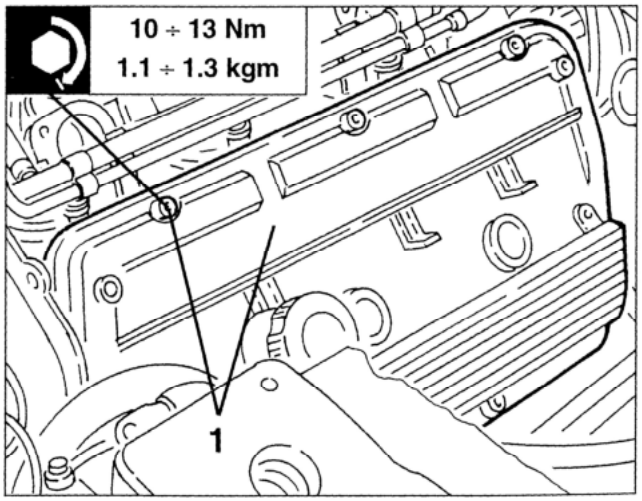

- Withdraw the oil from the wells and put it in the sump.

Alfawiki.nl

MAINTENANCE FOR 2929 c.c. ENGINE

CHANGING THE ENGINE OIL AND FILTER

WARNING:
Engine oil is harmful to the skin: minimise contact of the oil with the skin; if this does occur, wash with soap and water.

1. With the engine warm, remove the filler cap.
2. Withdraw the dipstick.

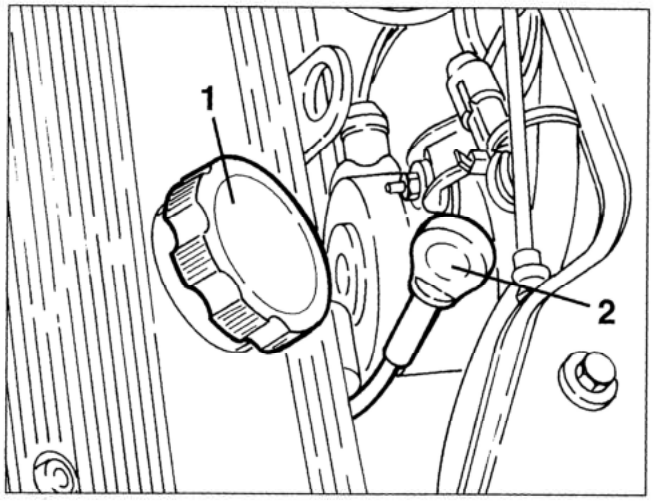

- Raise the car.
1. Remove the drain plug and drain off all the oil into a suitable recipient.

WARNING:
Be very careful when removing the drain plug; the oil might be very hot.

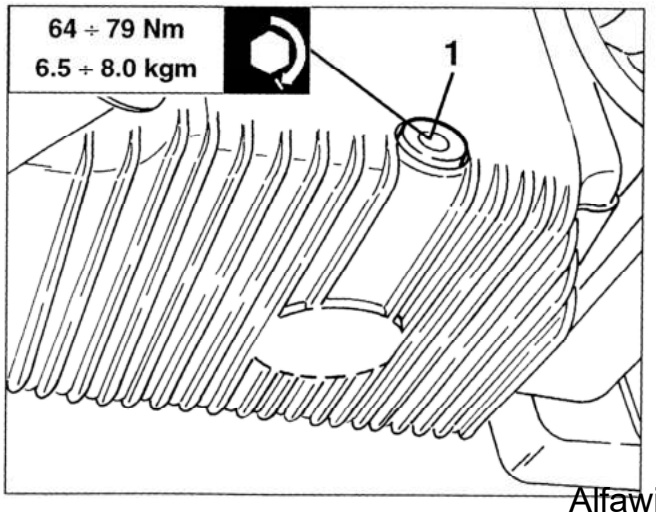

WARNING:
Never discard the oil in the environment, as indiscriminate dumping causes pollution.

1. Working from underneath the car with the appropriate wrench, release the oil filter and remove it.

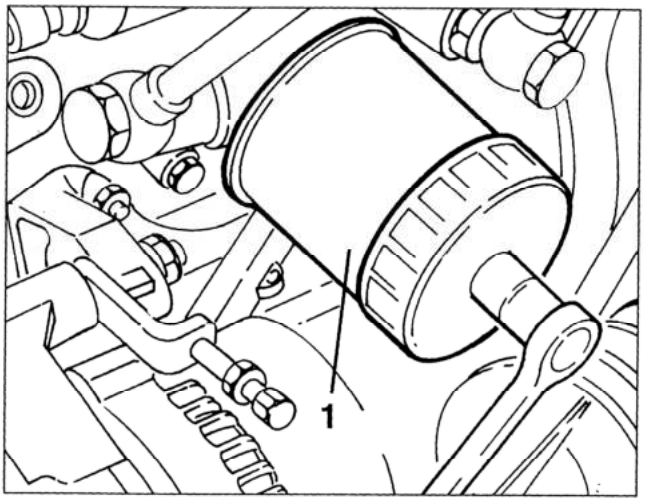

- Clean the drain plug and tighten it with the seal to the specified torque.
- Moisten the seal of the new filter with oil and screw it on tightening fully by hand.
- Lower the car.
- Replenish the engine with oil of the type and in the quantity specified.
- Check that the oil level is correct with the dipstick.

WARNING:
The oil level should be checked with the car on level ground.
The oil level above the MAX mark can cause the oil to evaporate and loss of pressure.

- Refit the filler cap, run the engine for appr. 2 minutes at idle speed, turn off the engine and wait for a few minutes.
- Check the oil level and make sure there are no leaks

WARNING:
When topping up the oil take care not to accidentally drip engine oil into the alternator ventilation slits which could cause serious damage and the hazard of fire.

Alfawiki.nl

- **Fuse electrodes: overheating due to unsuitable fuel, faulty tappets.**
- **High electrode wear: harmful additives in the fuel or oil, knock, overheating.**
- **Etc.**

- When refitting, lubricate the threading with engine oil and torque the spark plugs as follows:

Central spark plugs (large)	25 ÷ 35 Nm 2.5 ÷ 3.6 kgm
Side spark plugs (small)	10 ÷ 12 Nm 1 ÷ 1.2 kgm

ENGINE COOLANT LEVEL CHECK AND REPLACEMENT

Check

- Visually check whether the coolant level in the expansion reservoir is included between the MIN and MAX marks.

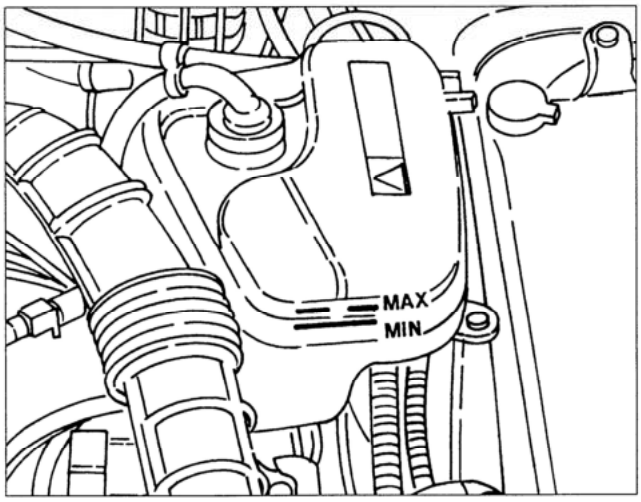

Replacement

- Position the vehicle on a shop jack.
- Loosen and remove the expansion reservoir cap.

IMPORTANT:
Never remove the expansion reservoir cap when the engine is hot!

- Lift the vehicle.
1. Drain the coolant by disconnecting the radiator outlet sleeve. Collect the coolant in a suitable container.

IMPORTANT:
The anti-freeze mixture used for engine cooling is a hazard for paintwork: avoid all contacts with painted parts.

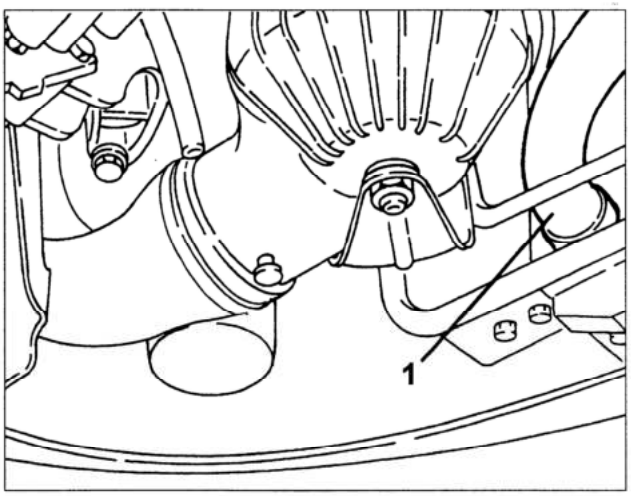

- Reconnect the radiator sleeve and all the disconnected pipes. Check clip torque.
- Refill with fluid of the prescribed and amount to reach the MAX mark on the expansion reservoir.
- Start the engine at take it to running temperature so to open the thermostat and bleed the residual air from the circuit.
- When the engine is cold, top-up to the MAX mark on the expansion reservoir.
- Close the expansion reservoir pressurised cap.

IMPORTANT:
Do not mix anti-freeze fluids of different type and make!
Do not use anti-rust additives: they may not be compatible with the anti-freeze used!

Alfawiki.nl

1. Loosen the fastening screws and remove the air cleaner cover and flow meter.
2. Remove the filtering element.

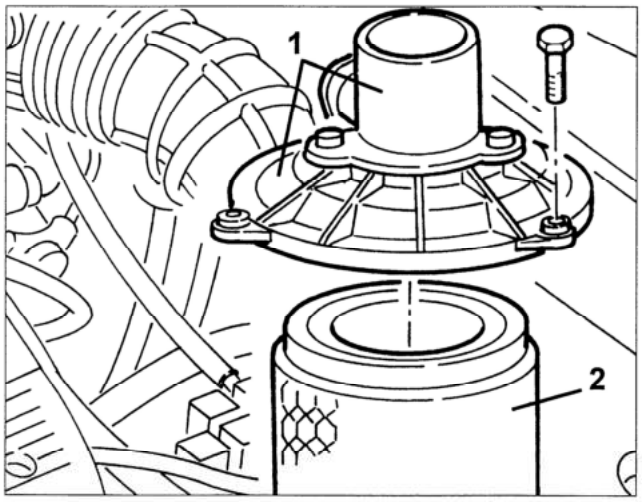

FUEL FILTER REPLACEMENT

NOTE: In '98 models with M1.5.5 injection, the fuel filter is built into the fuel pump and cannot be replaced.

- Position the vehicle on a shop jack and lift it.
1. Disconnect the fuel inlet pipe fitting from the filter.
2. Disconnect the fuel outlet pipe fitting from the filter.
3. Loosen the fastening clip and remove the fuel filter.

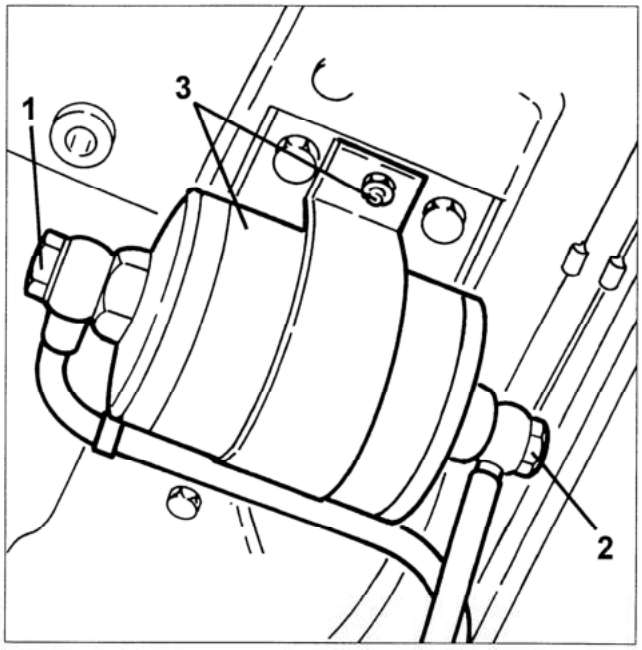

- Refit the new filter by reversing the removal sequence. Attain to the following precautions:
• replaces the copper fitting washers;
• refit the filter so that the arrow printed on it is directed according to fuel flow.

SPARK PLUG CHECK AND REPLACEMENT

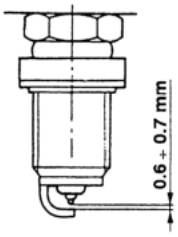

The standard fitted spark plugs are of the surface discharge type with one tip and one central electrode. In order for this type of spark plug to work correctly, a certain electrode gap is required.
The spark plugs are positioned asymmetrically in the firing chamber. Their size is different, as shown in the following diagram.

LARGE CENTRAL SPARK PLUGS - M14

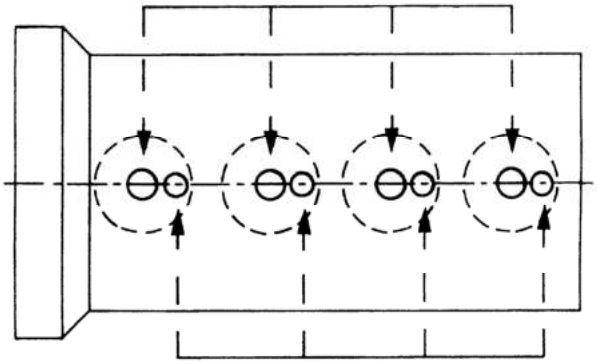

SMALL SIDE SPARK PLUGS - M10

NOTE: See specific paragraph for the type of spark plugs to be used.

- When the engine is cold, remove the spark plugs. Before removing, blow air in the respective seats to remove impurities and dirt.
- Check cleanness and intactness of the ceramic insulation. If required, replace the spark plugs.

IMPORTANT:
The use of spark plugs with different features or dimensions with respect to prescriptions can cause severe damage to the engine and effect the level of harmful emission in exhaust.

IMPORTANT:
A dirty or burned spark plug is often the symptom of a faulty engine feed system.
For example:
• Traces of carbon: incorrect mixture, air cleaner very dirty.
• Oil stains: oil infiltration through the piston gas rings.
• Ash: presence of aluminium material especially in the oil.

- Install the counter-rotating shafts control belt proceeding as described in GROUP 10 - ENGINE OVERHAULING paragraph "Assembly of counter-rotating shafts control belt and timing".
- Complete re-assembly reversing the sequence followed for removal.

AUXILIARY COMPONENT BELT

The auxiliary components of the engine are driven by a single Poly V belt.
This belt is tensioned by an automatic tensioner: therefore checking the tension is unnecessary.

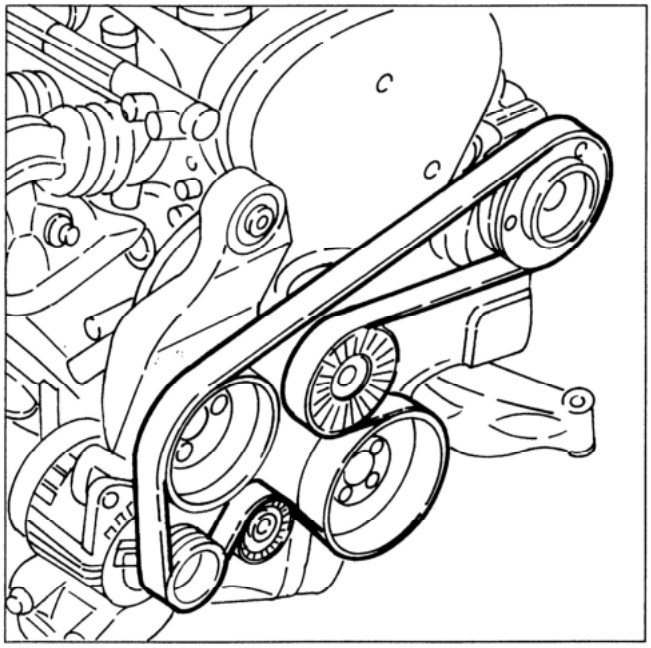

Replacement

- Set the car on a lift.
- Remove the right front wheel and mud flap.

- Check visually that the belt is intact and that it is free of:
• cuts
• cracks
• material surface wear (smooth and shiny)
• dry or stiff parts (lack of adherence).

In the event of one of the above defects, change the belt.

WARNING:
The contact of the belt with oil or solvents can damage the elasticity of the actual belt rubber and reduce its adherence.

1. Proceeding as illustrated on the guide pulley, slacken the tension of the auxiliary components drive belt and remove it.

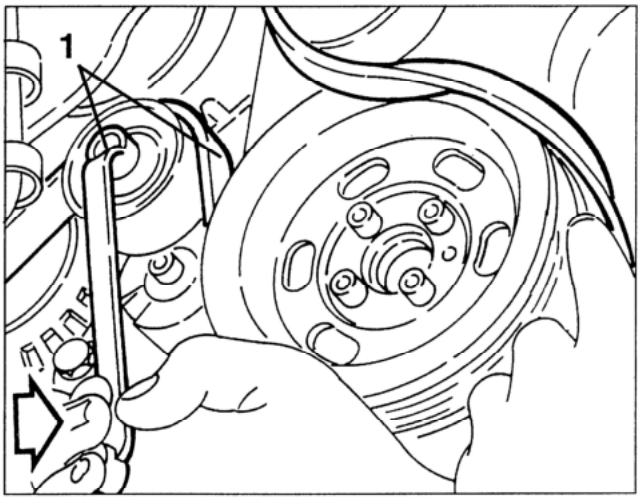

- Install a new belt reversing the sequence followed for removal.

CHANGING THE AIR CLEANER CARTRIDGE

WARNING:
Any filter cleaning operation might damage it, thereby adversely affecting the correct operation of the engine.

- Disconnect the battery (-) terminal.
1. Slacken the fastening clamp and disconnect the corrugated sleeve from the air cleaner cover, then move it to one side.
2. Disconnect the electrical connection from the airflow meter.

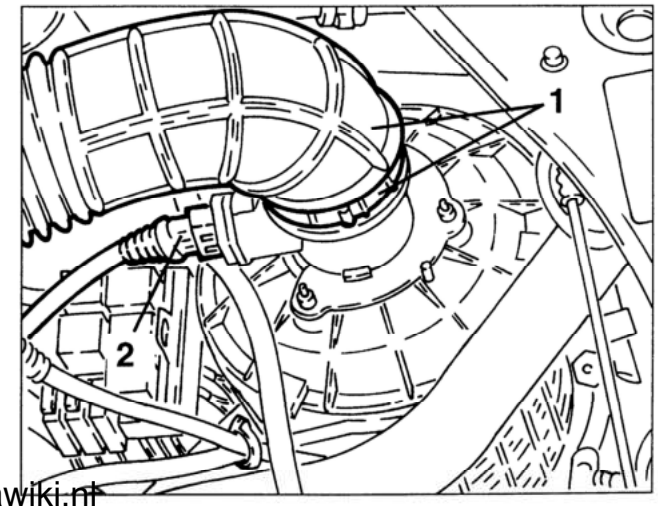

Alfawiki.nl

1. Slacken the fastening screws and remove the cover of the ignition coils.
2. Disconnect the electrical connections from the ignition coils.

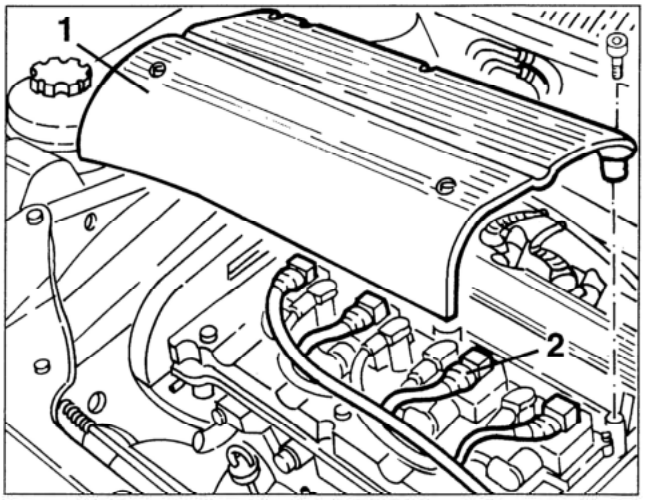

1. Slacken the fastening screws and remove the ignition coils.
2. Slacken the fastening screws and remove the ignition coils support bracket.

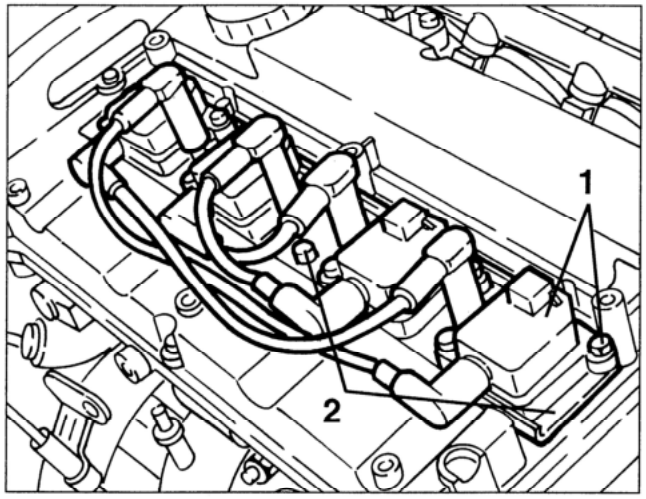

1. Slacken the fastening screws and remove the cylinder head cover complete with seal.

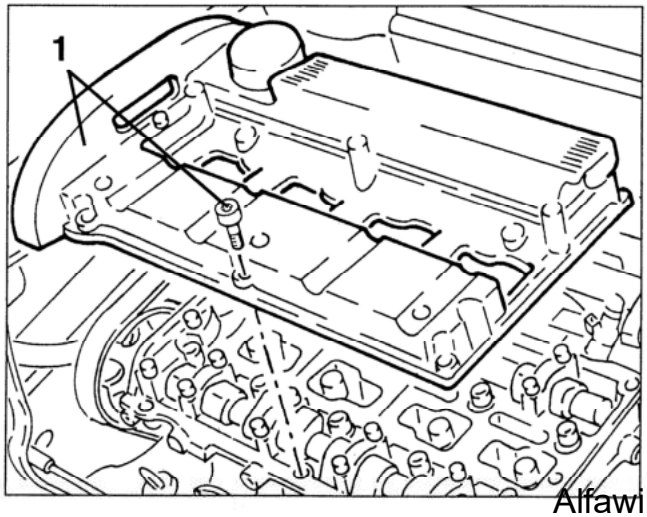

- Install tool no. 1.825.013.000 (C.6.0183) fitted with dial gauge in the seat of the first cylinder spark plug.
- Turn the crankshaft in its direction of rotation, until the piston of the 1st cylinder reaches the T.D.C. in the bursting stroke.
1. Working on the timing belt tensioner slacken the tension of the belt, then remove it.

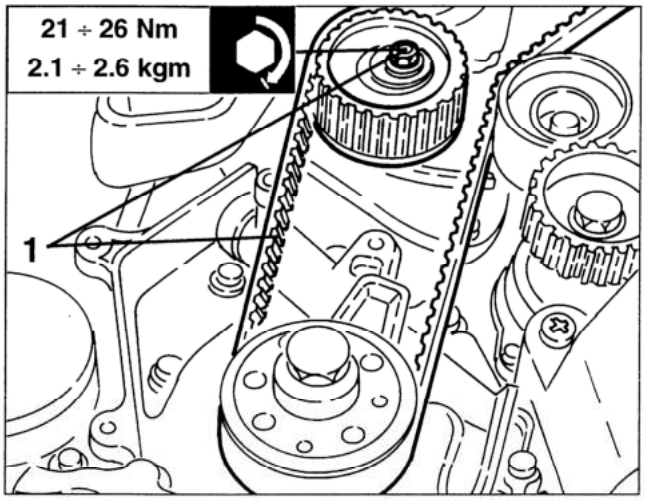

1. Remove the camshaft caps illustrated and in their place install templates no. 1.825.041.000 tightening the fastening screws to a maximum torque of 10 Nm (1 kgm) and ensuring correct coupling with the cams.
2. Slacken the four screws fastening the camshaft pulley on the intake side.
3. Slacken the screw fastening the timing pulley on the exhaust side with tools no. 1.822.146.000 and no. 1.822.156.000.

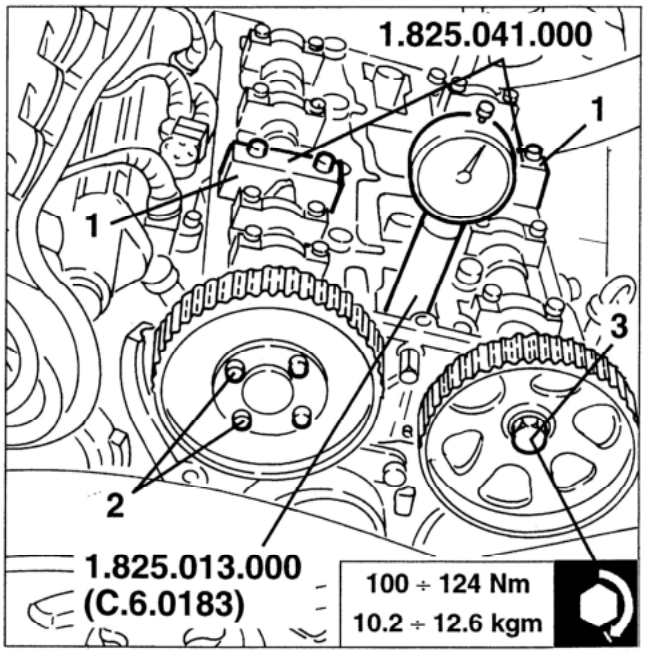

- Install a new timing belt proceeding as described in GROUP 10 - ENGINE OVERHAULING paragraph "Assembly of timing belt and checking timing".

Alfawiki.nl

CHANGING THE TIMING GEAR BELT

- Set the car on a lift.
- Disconnect the battery (-) terminal.
- Remove the right front wheel and mud flap.

1. Working as illustrated on the guide pulley, slacken the tension of the auxiliary components control belt and remove it.
2. Slacken the four fastening screws and remove the auxiliary components control belt.

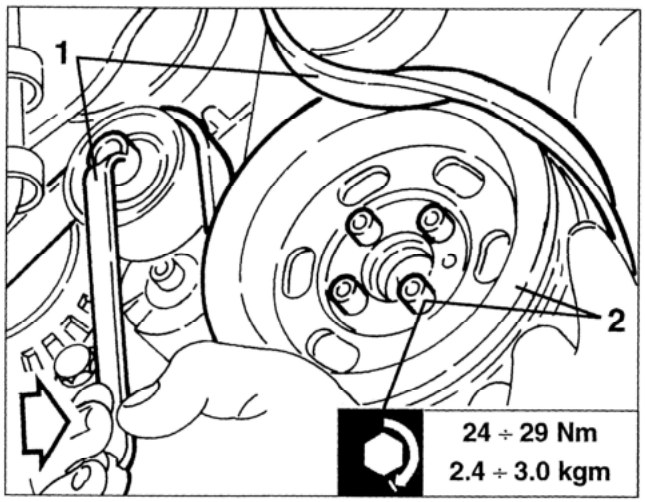

1. Slacken the fastening screw and remove the auxiliary components control belt guide pulley.
2. Slacken the fastening screw and remove the auxiliary components belt tensioner.
3. Slacken the fastening screws and remove the timing belts and counter-rotating shafts lower guard.

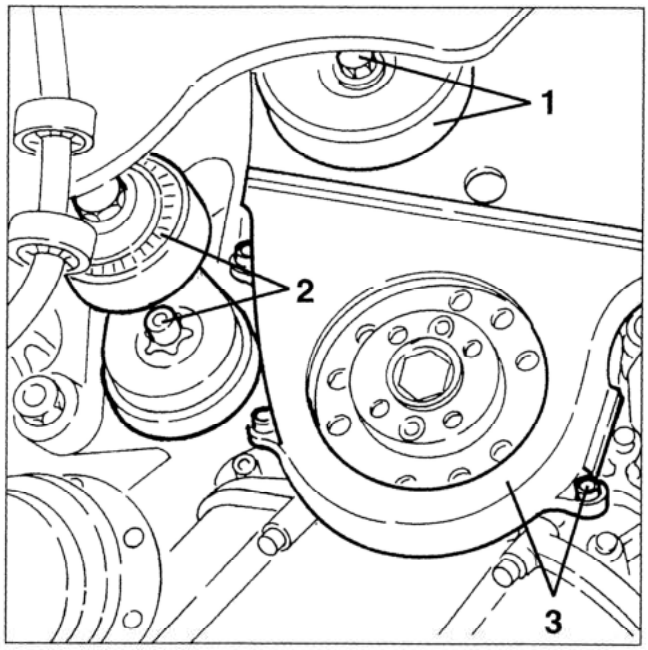

- Slacken the lower screws of the timing belts and counter- rotating shafts upper guard.

1. Lower the car, slackening the remaining fastening screws and remove the upper guard.

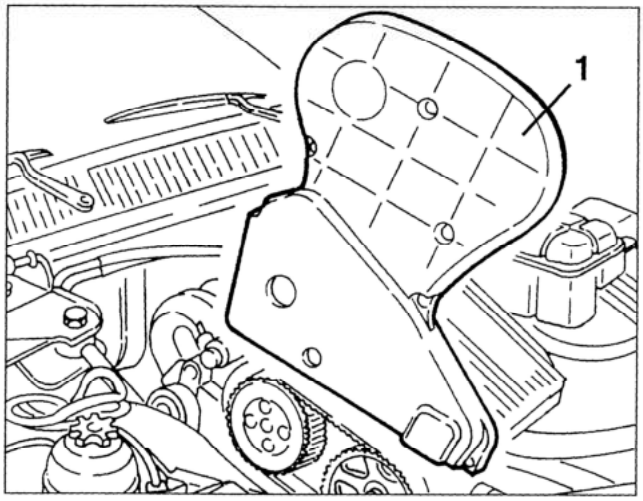

1. Slacken the tension of the counter-rotating shafts belt loosening the nut fastening the corresponding belt tensioner, then remove the belt.

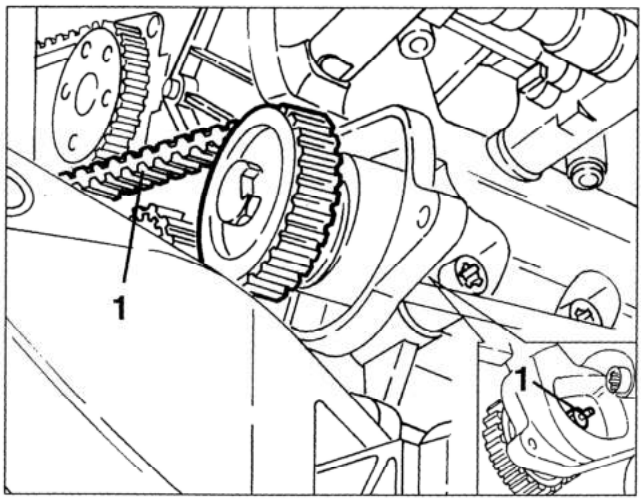

1. Slacken the two fastening screws and remove the counter- rotating shafts driving pulley.

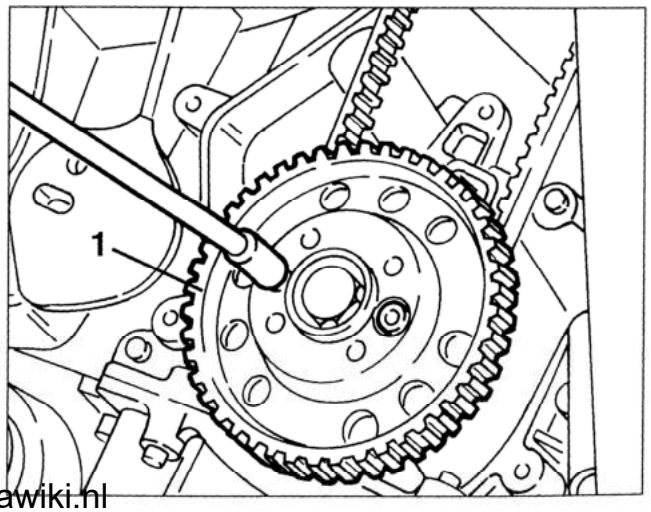

Alfawiki.nl

MAINTENANCE FOR 1970 c.c. ENGINE

CHANGING THE ENGINE OIL AND FILTER

WARNING:
Engine oil is harmful to the skin: minimise contact of the oil with the skin; if this does occur wash with soap and water.

1. With the engine warm, remove the filler cap.
2. Withdraw the dipstick.

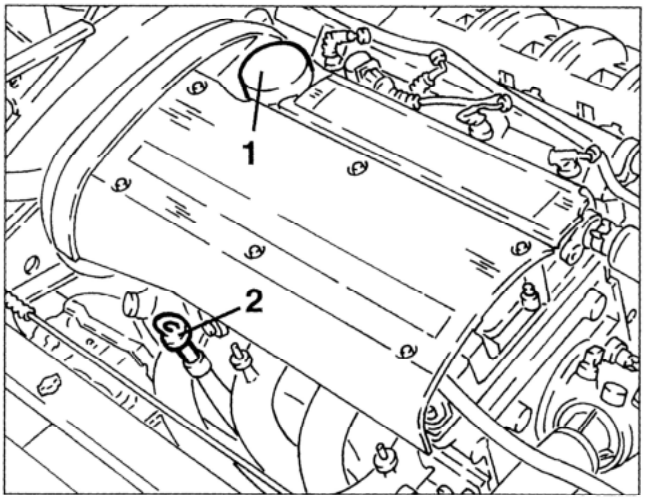

- Raise the car.
1. Remove the drain plug and drain off all the oil into a suitable recipient.

WARNING:
Be very careful when removing the drain plug; the oil might be very hot.

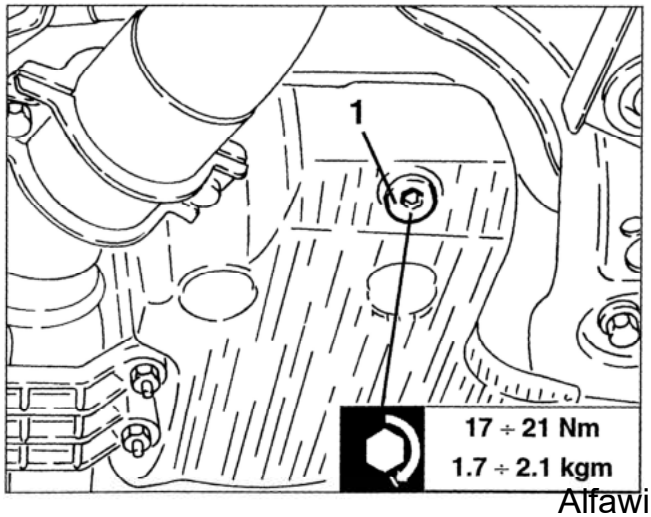

WARNING:
Never discard the oil in the environment as indiscriminate dumping causes pollution.

1. Working from underneath the car with the appropriate wrench, release the oil filter and remove it.

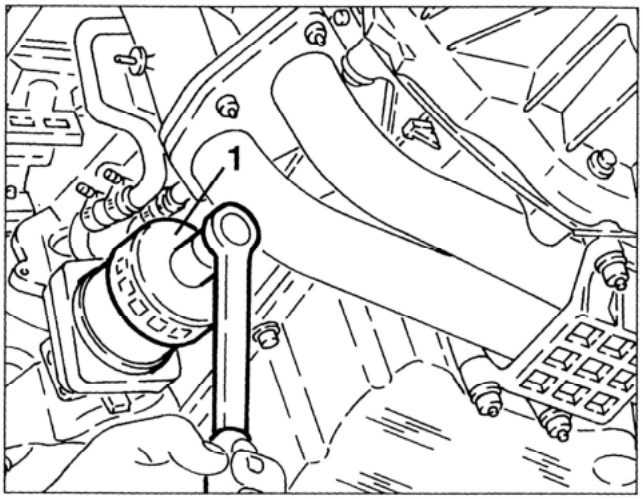

- Clean the drain plug and tighten it with the seal to the specified torque.
- Moisten the seal of the new filter and screw it on tightening fully by hand.
- Lower the car.
- Replenish the engine with oil of the type and in the quantity specified.
- Check that the oil level is correct with the dipstick.

WARNING:
The oil level should be checked with the car on level ground.
The oil level above the MAX mark car cause the oil to evaporate and loss o pressure.

- Refit the filler cap, run the engine for appr. 2 minute at idle speed, turn off the engine and wait for a fe minutes.
- Check the oil level and make sure there are no leak

WARNING:
When refilling with oil, great care shou be taken to prevent engine oil drippi into the alternator ventilation holes, this could seriously damage the alterr tor and may cause fire.

Alfawiki.nl

IMPORTANT:
Perfect operation and long working life of a car is strictly related to its good use and, above all, to the care with which regular service is performed. Considering product evolution, new service schedules have been adopted. The scheduled service coupons are planned at 20,000 km. It is, however, important to note that the car requires ordinary precautions, such as systematic fluid checks and topping up, tyre pressure checks, etc. In any case, remember that the correct car maintenance is certainly the best way to ensure performance, safety, environmental friendliness and low running costs in time.

Additional operations
The following precautions are required in addition to the operations shown in the Service Schedule to ensure good operation of the car:
Every 1000 km or before long trips, check and top up if required:
- engine oil
- engine coolant
- brake/clutch fluid
- power steering fluid
- battery electrolyte
- tyre pressure
- windscreen washer fluid.

Engine oil
If the car is mainly used in one of the following especially demanding conditions:
- towing trailers
- dusty roads
- short, repeated trips (less than 7-8 km) with temperature below zero degrees centigrade
- engine frequently idling or long distances at slow speed (or after a long storage period)

we recommend changing the engine oil more frequently than shown in the Service Schedule.

Air cleaner
Replace the air cleaner more frequently than prescribed if the car is mainly used on dusty roads.

Brake pads
The brake pads are subject to different use and wear, according to conditions of use and to driving style. Have the pad thickness checked at an Alfa Romeo Dealership as soon as the front brake pad warning light comes on. As the car is equipped with front brake pad wear sensors only, check the rear pads when the front pads are replaced. According to the car use, the rear brake pads may not need to be replaced immediately. We recommend in this case to check them later.

Brake/clutch fluid
Brake fluid is hygroscopic, i.e. it absorbs moisture. To prevent faulty braking, change the brake fluid every two years, regardless of the mileage (see the Service Schedule).

Battery
Check the battery charge status, preferably at the beginning of winter, to prevent the electrolyte from freezing. Perform this check more frequently if the car is mainly used for short trips or if permanent intake devices also running when the key is removed are fitted, especially those fitted after market.

Climate control system
To keep the system in perfect shape, simply turn it on every fortnight - also in winter - and run the compressor for a few minutes. Furthermore, we recommend having the system checked before the summer, when the system will be used.

Dust/pollen filter (cars with climate control only)
Have the filter checked once a year, preferably at the beginning of summer, by an Alfa Romeo Dealership. If the car is frequently used in dusty or very polluted environments, we recommend you have the filtering element checked more frequently than shown in the Service Schedule. The filter should be replaced in particular if decreased air intake into the passenger compartment is noticed.

Anti-freeze
We recommend topping up with Climafluid Super Permanent -40°C Alfa Romeo to preserve the protective features of the mixture.

Rubber hoses
The rubber hoses in the brake, power steering, fuel feed lines, etc. should be carefully checked at the frequency shown in the Service Schedule.

Wheels
Periodically and before long trips, check the pressure of each tyre, including the spare. Check pressure on cold tyres.
Periodically check that the depth of the tread complies with the minimum legal prescriptions. Periodically check that the tyres are not cut, swollen or present irregular wear. If this is so, go to an Alfa Romeo Dealership.
If a tyre is punctured, stop immediately and replace it to prevent damage to the tyre, the rim, the suspension and the steering.
The factory fitted wheels (rims and tyres) are suited to the features of the car and ensure maximum safety and comfort in all normal conditions of use. Before replacing the rims or tyre fitted on the car, check the allowed type table. However, attain to the rim-tyre coupling of the original fitting. Always fit new tyres. Avoid tyres from unknown sources.

'98 MODELS

Operations to be performed at the indicated km	Km x 1.000								
	20	40	60	80	100	120	140	160	180
Check tyre conditions and wear	●	●	●	●	●	●	●	●	●
Check front disc brake pad wear warning light operation	●	●	●	●	●	●	●	●	●
Check rear disc brake pad wear		●		●		●		●	
Check intactness of drive shaft bellows, power steering, joint caps and tightness of fuel and brake lines	●	●	●	●	●	●	●	●	●
Inspect conditions of: external bodywork and underbody protection (exhaust - fuel feed - brakes); rubber parts (boots - sleeves - bushings - etc.)	●	●	●	●	●	●	●	●	●
Inspect conditions of accessory drive Poly-V belt		●							●
Check handbrake lever travel		●		●		●		●	
Check exhaust emissions		●		●		●		●	
Check evaporation system operation				●				●	
Replace air cleaner cartridge		●		●		●		●	
Check fluids and top up if required (brakes, hydraulic clutch, power steering, windscreen washer, battery, engine coolant, etc.)	●	●	●	●	●	●	●	●	●
Replace timing belt and accessory drive Poly-V belt						●			
Replace counter-rotating shaft drive belt (2.0 T. SPARK version only)						●			
Replace spark plugs (3.0 V6 version only)		●		●		●		●	
Replace spark plugs (1.8 - 2.0 T. SPARK versions only)					●				
Check engine control system operation (via diagnostic socket)		●		●		●		●	
Check gearbox and differential oil level				●				●	
Change engine oil and filter (*)	●	●	●	●	●	●	●	●	●
Change brake fluid (or every 24 months)			●			●			●
Check dust/pollen filter	●	●	●	●	●	●	●	●	●
Spider only Interventions on hood: - check open/close operation, inspect seals, check tightness of windows to hood seal and adjust if required (or every 18 months)	●	●	●	●	●	●	●	●	●
Spider only - version with automatic hood: check oil pump level and top-up if required (or every 12 months)	●	●	●	●	●	●	●	●	●

(*): Or every 18 months for lower mileage.

Alfawiki.nl

WARNINGS

To keep the car in good operating conditions, the following recommendations should be adhered to carefully:

Every 500 kms (or when refuelling) check:
- the engine oil level;
- the level of the fluid in the coolant circuit;
- the level of the brake/clutch fluid;
- the level of the fluid in the windscreen wiper/washer system.

Engine oil and filter

To be changed at the specified intervals.
At all events, they must be changed once a year.

Air cleaner

If the car is habitually used on dusty roads, the air cleaner should be changed more often than specified.

Brake pads

Wear of the front brake pads is indicated by the turning on of a warning light on the instrument cluster.
When changing the front pads, also check the rear ones.
However, depending on the use of the car, the rear pads might not need to be changed immediately, in which case, you are recommended to check them at a later stage.

Brake and clutch fluid

The brake fluid is hygroscopic, i.e. it absorbs moisture.
To avoid faulty braking, change the brake fluid every two years, regardless of the mileage driven.

Battery

During hot weather, check the electrolyte level frequently.

Dust and/or pollen filter (if fitted)

Once a year, preferably at the beginning of summer, check the conditions of the dust and/or pollen filter.
If the car is mostly used for town/motorway driving or on dusty roads, it is wise to check more often than indicated.
Failure to change the filter can considerably reduce the performance of the air conditioner system.

Anti-freeze

It is advisable to top up with Alfa Romeo Climafluid Super Permanent -40°C to conserve the protective properties of the mixture.

Notes

Under special driving conditions (e.g. on roads sprinkled with antifreeze salt and/or corrosive substances, rough road surfaces, etc.) often check the boots of the axle shafts and steering box, and clean and lubricate joints, hinges, door catches, bonnet catch, etc.)
When forced to use fuel, lubricants and/or fluids in general with characteristics other than those specified by the manufacturer (in emergencies), replace the fluids and corresponding filters at the earliest opportunity.

Alfawiki.nl

MAINTENANCE OPERATIONS

The maintenance operations comprise checking and restoring the efficiency of certain parts of the vehicle on which wear and phase displacement are foreseeable after normal use.
The following table gives the list of maintenance operations to be carried out at the specified mileage intervals.

WARNINGS:
Precautions to be taken before maintenance operations. The engine compartment contains many moving parts, high temperature components and high voltage cables that can be dangerous.
Carefully follow the precautions given below:
- Turn the engine off and allow it to cool down.
Do not smoke or use naked flames. The presence of fuel can cause a fire hazard.
- Always work with a fire extinguisher handy.

Operations to have done at the mileage shown		km x 1.000									
		20	40	60	80	100	120	140	160	180	200
Change engine oil and filter (at all events once a years) and checking lubrication circuit for leaks		●	●	●	●	●	●	●	●	●	●
Checking valves clearance (except engines with hydraulic tappets)			●		●		●		●		●
Changing timing belts							●				
Checking conditions of trapezoidal belts			●		●		●		●		●
Checking conditions of Poly V belts					●				●		
Changing air cleaner cartridge			●		●		●		●		●
Changing fuel filter cartridge					●				●		
Checking operation of exhaust gas oxygen sensor (lambda probe)					●				●		
Changing spark plugs	1970 T. SPARK 16V					●					●
	2959 V6		●		●		●		●		●
Changing anti-freeze mixture					●				●		
Checking level of gearbox and differential oil					●				●		
Checking conditions of protective bellows for axle shafts, power steering and steering knuckle caps			●		●		●		●		●
Checking brake and fuel system piping for leaks			●		●		●		●		●
Checking handbrake travel			●		●		●		●		●
Checking power steering (if fitted) oil level			●		●		●		●		●

Alfawiki.nl

Group 70 - Body

1.820.628.000	Telescopic prep pre-loading tool
1.822.132.000	Ratchet wrench for removal/refitting sun roof electric motor
1.822.136.000	Set of inserts for removal/refitting sun roof electric motor
1.823.009.000	Blade for cutting glass sealant
1.823.010.000	Blade for cutting glass sealant
1.823.014.000	Knife for removing plastic parts
1.823.015.000	Knife for removing plastic buttons
1.823.019.000	Blade for cutting glass sealant
1.823.025.000	Inserts for removing plastic buttons
1.823.029.000	Blade for cutting glass sealant

Alfawiki.nl

Group 44 - Front suspension

1.820.047.002	Plate for removing inner bearing race from wheel hub
1.820.089.000	Tool for compressing front suspension spring
1.820.223.000	Half rings for removing inner bearing race from wheel hub
1.820.238.000	Plate for compressing front suspension spring
1.820.608.000	Blocks for compressing front suspension spring
1.820.622.000	Tool for front hub nut angle tightening
1.821.037.000	Tool for removing inner bearing race from wheel hub (2959 c.c.)
1.821.045.000	Tool for removing bearing outer race on wheel upright (1970 c.c.)
1.821.051.000	Tool for: - removing wheel hub from upright - removing bearing inner race from wheel hub
1.821.099.000	Tool for removing bearing outer race on wheel upright (2959 c.c.)
1.821.149.000	Support for removing bearing outer race from wheel upright (1970 c.c.)
1.821.169.000 (A.3.0633)	Tool for disconnecting track rod ball joint from wheel upright
1.821.209.000	Tool for: - installing bearing in wheel upright - installing hub in wheel upright
1.821.217.000	Tool for front wheel upright bearing (2959 c.c.)
1.821.220.000	Support for removing bearing outer race from wheel upright (2959 c.c.)
1.822.117.000	Wrench for slackening and tightening front shock absorber fastening nut
1.860.978.000	Tool for removing suspension crossmember

Group 44 - Rear suspension

1.820.625.000	Tool for removal/refitting rear suspension frame

Group 50 - Climate control unit

1.822.111.000	Socket wrench for Freon pipe fittings
1.822.112.000	Claw box wrench for Freon pipe fittings
1.822.113.000	Square wrench for Freon pipe fittings
1.822.115.000	Pin wrench for Freon pipe fittings
1.822.132.000	Ratchet wrench for removal/refitting outside air/recirculation port control motor
1.822.136.000	Set of inserts for removal/refitting outside air/recirculation port control motor
1.826.004.000	Emptying and recharging station for R134a

Alfawiki.nl

(CONTINUED)

1.820.239.000	Supports for engine gearbox (to be used with 1.820.581.000 and 1.820.226.000)
1.820.581.000	Horizontal engine support crossmember (to be used with 1.820.239.000 and 1.820.226.000)
1.821.034.000	Puller tool for differential bearings
1.821.047.000	Installing tool for 1st
1.821.049.000	Half plate for removing/installing front and rear transmission shaft bearings
1.821.092.000	Installing tool for: - transmission shaft front and rear bearings - secondary shaft rear bearing - secondary shaft 4th speed driven gear
1.821.161.000	Mallet per removing differential flange (to be used with 1.820.229.000)
1.821.169.000	Puller tool for track rod pin
1.821.170.000	Keying tool for installing differential cover oil seals (to be used with 1.821.171.000)
1.821.171.000	Grip (to be used with 1.821.170.000)
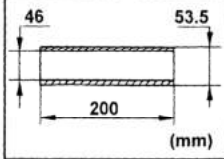	Installing tool for: - secondary shaft front bearing - secondary shaft 1st and 2nd speed engagement hub-sliding sleeve - - secondary shaft 3rd speed driven gear
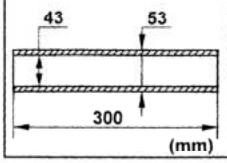	Installing tool for differential bearings

Group 27 - Axle shafts

1.820.082.000	Pincer for installing joint protection boot fastening clamps
1.820.084.000	Pincer for installing joint protection boot fastening clamps
1.821.161.000	Mallet
1.821.165.000	Puller tool for C.V. joint

Group 33 - Brakes

1.820.248.000	Tool for adjusting position of front brake caliper piston
1.822.108.000	Tool for moving back rear brake caliper piston

Group 41 - Steering system

1.821.105.000	Puller tool for removing steering wheel from steering column
1.821.169.000	Puller tool for track rod pin

Alfawiki.nl

(CONTINUED)

1.821.117.000	Puller tool for disassembling secondary shaft and transmission shaft front bearing inner race
1.821.161.000	Mallet per removing differential flange
1.821.170.000	Installing tool differential carrier oil seal gearbox side
1.821.171.000	Grip for installing tools
1.821.225.000	Installing tool for differential carrier oil seal engine side
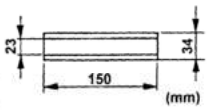	Installing tool for : transmission shaft front bearing inner race
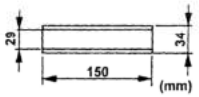	Installing tool for: transmission and secondary shaft rear bearing
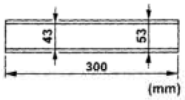	Installing tool for: synchronizer hub and secondary shaft 2nd and 3rd speed gears

Group 21 - Gearbox - Differential 2959 V6

1.820.018.000	Half rings for: - removing transmission shaft rear bearing - removing transmission shaft 4th speed driving gear
1.820.023.000	Half plate for: removing secondary shaft front bearing
1.820.024.000	Half rings support plate (to be used with 1.820.018.000)
1.820.043.000	Half rings for: - removing secondary shaft 4th speed driven gear - removing secondary shaft rear bearing
1.820.046.000	Half rings for: - removing secondary shaft 2nd and 3rd speed driven gears - removing secondary shaft 2nd speed synchronizer - removing secondary shaft 1st speed driven gear hub-sliding sleeve
1.820.047.001	Half ring support plate (to be used with 1.820.043.000)
1.820.047.003	Half ring support plate (to be used with 1.820.046.000)
1.820.085.000	Tool for measuring thickness of differential carrier bearing adjustment ring
1.820.125.000	Spindle for checking differential backlash
1.820.146.000	Gearbox support plate on revolving stand
1.820.208.000	Support for removal/refitting gearbox (to be used with 1.820.230.000)
1.820.226.000	Engine support (to be used with 1.820.239.000 and 1.820.581.000)
1.820.229.000	Flange (to be used with 1.821.161.000)
1.820.230.000	Brackets for removal/refitting gearbox (to be used with 1.820.208.000)

(CONTINUE

Alfawiki.nl

(CONTINUED)

1.820.277.000	Angle torque dial
1.820.279.000	Cylinder liner retainer
1.821.006.001	Rear main bearing extraction lever
1.821.006.002	Rear main bearing extractor
1.821.150.000	Crankshaft oil seal taker-in
1.822.135.000	Tool for removing the fuel pump assembly fastening screw nut from tank
1.822.146.000	Pulley wrench bracket
1.822.151.000	Timing pulley wrench
1.825.013.000	TDC check tool
1.822.159.000	Tool for removing the fuel level gauge fastening screw nut from tank

Assembly 10 - 2959 V6 engine feed

1.820.079.000	Gap gauge
1.824.011.000	Flow test pad

Assembly 18 - Clutch

1.820.126.000	Clutch plate centring tool
1.820.228.000	Flywheel retainer

Assembly 21 - T. SPARK 16V engine gearbox-differential

1.820.017.000	Half rings for: - extracting primary shaft 4th speed driven gear - primary shaft disassembly
1.820.019.000	Plate for extracting secondary shaft 2nd and 3rd speed driven gears
1.820.022.000	Half plates for introducing primary shaft bearing internal race
1.820.024.000	Half ring support plate for extracting secondary shaft 1st speed driven gear
1.820.085.000	Differential bearing thickness gauge
1.820.146.000	Rotating stand gearbox support plate
1.820.208.000	Gearbox removal/refitting bracket
1.820.226.000	Engine mount
1.820.229.000	Differential flange extraction flange
1.820.239.000	Engine gearbox bracket
1.820.581.000	Engine crossmember
1.820.623.001	Gearbox removal/refitting bracket
1.821.003.000	Differential bracket bearing external race extraction ram
1.821.028.000	Differential bracket bearing external race taker-in
1.821.034.000	Differential bearing extractor
1.821.047.000	1st-3rd-5th speed control rod safety pawl taker-in
1.821.049.000	Primary shaft rear bearing taker-in half plate
1.821.050.000	4th speed driven gear taker-in
1.821.062.000	Differential bearing taker-in
1.821.092.000	1st speed driven gear taker-in

(CONTINUED)

(CONTINUED)

1.825.003.000	Cylinder liner projection check tool
1.825.013.000	TDC check tool
1.825.018.000	Tappet clearance curved thickness gauge

Assembly 10 - T. SPARK 16V engine removal/refitting

1.820.225.000	Engine assembly removal/refitting stand
1.820.277.000	Angle torque dial
1.820.286.000	Counter-rotating shaft pulley torque contrast
1.820.617.000	Crankshaft pulley torque contrast (for post-change engines)
1.820.619.000	Crankshaft rear oil seal centring disc
1.820.623.000	Engine assembly removal/refitting stand
1,820.630.000	Flywheel retainer (for post-change engines)
1.821.175.000	Engine damper silent-block connecting rod extractor/taker-in
1.821.228.000	Camshaft oil seal taker-in, exhaust side
1.821.247.000	Front crankshaft oil seal and counter-rotating shaft oil seal taker-in
1.821.251.000	Counter-rotating shaft oil seal taker-in
1.821.252.000	Camshaft oil seal taker-in, intake side
1.822.144.000	Six-groove wrench for oil sump removal/refitting
1.822.145.000	Six-groove wrench for oil sump removal/refitting
1.822.146.000	Pulley wrench bracket
1.822.155.000	Timing pulley wrench, intake side
1.822.156.000	Timing pulley wrench, exhaust side

Assembly 10 - T. SPARK 16V engine feed

1.806.365.000	Examiner and diagnostic socket interface
1.820.079.000	Gap gauge
1.821.167.000	Tool for loosening/torquing fuel pump screw nut and fuel level gauge
1.822.146.000	Pulley wrench bracket
1.822.156.000	Timing pulley wrench, exhaust side
1.822.161.000	Tachometer sensor removal wrench
1.860.955.000	Pressure gauge
1.860.955.001	Fuel pressure check fitting kit
1.860.955.003	Fuel pressure check fitting kit
1.870.684.000	Fuel system pressure drain quick coupling fitting

Assembly 10 - 2959 V6 engine removal/refitting

1.820.225.000	Engine assembly removal/refitting stand
1.820.228.000	Flywheel retainer
1.820.234.000	Engine assembly removal/refitting bracket

(CONTINUED)

Alfawiki.pl

(CONTINUED)

1.820.050.000 (A.2.0360)	Cylinder head supporting fork
1.820.115.000 (A.4.0195)	Reamer for pulley/oil pump control shaft bushings
1.820.145.000 (R.4.0178)	Engine support brackets for assembly on overhaul stand
1.820.228.000	Flywheel stop
1.820.232.000	Timing shaft pulley extractor
1.820.277.000	Graduated disk to close angle torques
1.820.279.000	Liner stop
1.820.618.000	Adapter for crankshaft rotation
1.821.002.000 (A.3.0113)	Rubber seal inserter on rear main bearing cap
1.821.005.000 (A.3.0134)	Valve guide extractor
1.821.006.001 (A.3.0139/0001)	Lever to remove rear main bearing cap
1.821.006.002 (A.3.0139/0002)	Fork to remove rear main bearing cap
1.821.010.000 (A.3.0178)	Inserter for crankshaft rear oil seal
1.821.016.000 (A.3.0244)	Valve guide oil seal inserter
1.821.018.000 (A.3.0247)	Valve guide oil seal extractor
1.821.058.000 (A.3.0324)	Lever to remove/refit valves
1.821.122.000 (A.3.0520)	Cage for valve removal/refitting
1.821.124.000 (A.3.0522)	Support for valve removal/refitting
1.821.125.000 (A.3.0524)	Crankshaft front oil seal inserter
1.821.126.000 (A.3.0525)	Timing shaft front oil seal inserter
1.821.127.000 (A.3.0526)	Intake valve guide inserter
1.821.128.000 (A.3.0527)	Exhaust valve guide inserter
1.821.129.000 (A.3.0528)	Extracter/inserter for pulley/oil pump control shaft bushings and timing shaft front bushing
1.822.016.000 (A.5.0220)	Wrench to adjust tappets exhaust side
1.822.146.000	Support for pulley wrenches and wrench for oil pump control pulley
1.822.151.000	Wrench for timing pulleys
1.824.034.000	Dial to check valve caps

(CONTINUED)

Alfawiki.nl

(CONTINUED)

1.820.277.000	Graduated disk to close angle torques
1.820.286.000	Counter rotating shaft pulley anti-torque
1.820.618.000	Adapter for crankshaft rotation
1.820.619.000	Disk to centre crankshaft rear oil seal
1.820.624.000	Flywheel stop (for use at the bench)
1.820.626.000	Striker weight coupling
1.821.058.000 (A.3.0324)	Lever for valve removal/refitting
1.821.124.000 (A.3.0522)	Support for valve removal/refitting
1.821.176.000 (A.3.0641)	Valve guide extractor
1.821.205.000	Cage for valve removal/refittng
1.821.206.000	Valve guide oil seal inserter
1.821.208.000	Valve guide oil seal extractor
1.821.228.000	Inserter for timing shaft oil seal exhaust side
1.821.247.000	Inserter for crankshaft front oil seal and counter rotation shaft oil seals
1.821.252.000	Inserter for timing shaft oil seal intake side
1.821.254.000	Valve guide inserter
1.822.146.000	Support for pulley wrenches
1.822.147.000	Phase variator wrench
1.822.149.000	Timing belt tensioning wrench
1.822.154.000	Counter rotation shaft bvelt tensioning wrench
1.822.155.000	Wrench for timing pulley intake side
1.822.156.000	Wrench for timing pulley exhaust side
1.825.013.000 (C.6.0183)	Tool to check T.D.C.
1.825.041.000	Templates for timing shaft phasing
1.840.206.000	Striker weight

Group 10 - Engine Overhaul 2959 V6

1.820.011.000 (A.2.0192)	Valve support fixture
1.820.012.000 (A.2.0195)	Cylinder head support fixture stand
1.820.049.000 (A.2.0359)	Nut for valve support fixture

(CONTINUED)

Alfawiki.nl

General

The special equipment has an important role in the car maintenance, since it is essential to ensure accurate, reliable and quick servicing.
It is important to note that the times for the various operations have been calculated assumung the use of this equipment.
This handbook lists and illustrates the specific equipment prepared especially for the Manufacturer to be used when overhauling, servicing or repairing the car.

The tool code has a new number with 10 digits and an old code of 1 letter and 5:
Example: 1.820.011.000
(A.2.0192)
Newly made tools have only the new number.
The servicing network can supply special tools or fixtures that conform to the procedures already used by the Alfa Romeo Dealers.
A list of the special tools used is given below.

Group 00 - Engine Servicing 1970 T. SPARK 16V

1.825.013.000 (C.6.0183)	Tool to check T.D.C.
1.825.041.000	Templates for timing shaft phasing

Group 00 - Engine Servicing 2959 V6

1.820.150.000 (R.9.0001)	Container for valve clearance caps adgustment
1.820.232.000	Extractor to remove timing shaft pulleys
1.822.016.000 (A.5.0220)	Wrench to adjust exhaust side tappets
1.822.146.000	Support for pulley wrenches
1.822.151.000	Wrench for timing pulley
1.824.018.000 (C.2.0131)	Tool to check belt tensions
1.824.034.000	Dial gauge for checking valve caps
1.825.013.000 (C.6.0183)	Tool to check T.D.C.
1.825.018.000 (C.6.0197)	Curved thickness gauge to check valve clearances

Group 10 - Engine Overhaul T. SPARK 16V

1.820.011.000 (A.2.0192)	Valves support fixture
1.820.012.000 (A.2.0195)	Stand for cylinder head support fixture
1.820.049.000 (A.2.0359)	Nut for valve support fixture
1.820.145.000 (R.4.0178)	Engine support brackets to be assembled on the overhaul stand
1.820.258.000	Cylinder head support stand
1.820.267.000	Spacer for valve removal/refitting

(CONTINUED)

Alfawiki.nl

(CONTINUED)

Part	Nm	kgm
Coupling securing dehydrator/compressor filter pipe on dehydrator filter	40 ÷ 44	4.1 ÷ 4.5
Screws securing inlet and outlet pipes flange on compressor	22 ÷ 24	2.2 ÷ 2.4
End nut securing compressor/condenser pipe on compressor mounting flange	21 ÷ 26	2.2 ÷ 2.7
Coupling securing compressor/condenser pipe on condenser	40 ÷ 44	4.1 ÷ 4.5
Coupling securing condenser/evaporator pipe on condenser	17 ÷ 19	1.7 ÷ 1.9
Coupling securing condenser/evaporator pipe on evaporator	17 ÷ 19	1.7 ÷ 1.9
Intermediate coupling pipe where expansion valve is installed	17 ÷ 19	1.7 ÷ 1.9
Trinary pressure switch mounting	7.5 ÷ 8.5	0.8 ÷ 0.9
Minimum pressure switch mounting	7.5 ÷ 8.5	0.8 ÷ 0.9

Group 55 - Electrical system

Part		Nm	kgm
Spark plugs (1970 c.c)	Central large	25 ÷ 35	2.6 ÷ 3.6
	Side small	10 ÷ 12	1 ÷ 1.2
Spark plugs (2959 c.c)		27 ÷ 34	2.8 ÷ 3.5

Group 70 - Body

Part	Nm	kgm
Front bonnet securing nuts	14 ÷ 16	1.4 ÷ 1.6
Screws securing door hinges to body	29 ÷ 36	3.0 ÷ 3.7
Screws securing pretensioner to seat	34 ÷ 42	3.5 ÷ 4.3
Front seat belt lower mounting screws	34 ÷ 42	3.5 ÷ 4.3
Front seat belt reel securing screws	34 ÷ 42	3.5 ÷ 4.3
Screws of device to adjust front seat belts in height (Gtv)	17 ÷ 21	1.7 ÷ 2.1
Rear seat belt transmission mounting screws (Gtv)	34 ÷ 42	3.5 ÷ 4.3
Rear seat belt reel securing screws (Gtv)	34 ÷ 42	3.5 ÷ 4.3
Rear seat belt whip securing screws (Gtv)	34 ÷ 42	3.5 ÷ 4.3
Damping earth brackets securing screws (Spider)	20 ÷ 25	2.0 ÷ 2.6
Damping earth securing screws (Spider)	25 ÷ 37	2.6 ÷ 3.8
Damping earth anchorage screws (Spider)	35 ÷ 50	3.6 ÷ 5.1

Alfawiki.nl

(CONTINUED)

Part	Nm	kgm
Nut fastening track rod to wheel upright	29 ÷ 37	3.0 ÷ 3.8
Bolt fastening wishbone to wheel upright	67 ÷ 74	6.8 ÷ 7.5
Nut fastening connecting rod to stabilizer bar	43 ÷ 53	4.4 ÷ 5.4
Nut fastening stabilizer bar connecting rod to wishbone	26 ÷ 33	2.7 ÷ 3.3
Screws fastening U-bolts coupling wishbone to crossmember	59 ÷ 72	6.0 ÷ 7.3
Front screws fastening crossmember to body	92 ÷ 113	9.4 ÷ 11.5
Screws fastening reinforcement struts to the body	60 ÷ 73	6.1 ÷ 7.5
Screws fastening upper crossmember connections	92 ÷ 113	9.4 ÷ 11.5
Screws fastening steering box to crossmember	43 ÷ 47	4.4 ÷ 4.8
Nuts fastening stabilizer bar U-bolts to crossmember	29 ÷ 35	3.0 ÷ 3.6
Nut fastening axle shaft to wheel hub (*)	67 ÷ 74 + 62° ± 2°	6.8 ÷ 7.5 + 62° ± 2°

(*) See GROUP 44 - Suspension and wheels

Group 44 - Rear suspension

Part	Nm	kgm
Screws fastening rear suspension frame	79 ÷ 98	8.0 ÷ 10.0
Screw fastening upper shock absorber	59 ÷ 72	6.0 ÷ 7.3
Screw fastening lower shock absorber	79 ÷ 98	8.0 ÷ 10.0
Screw fastening spring holder arm to frame	88 ÷ 98	9.0 ÷ 10.0
Screw fastening shock absorber arm to frame	88 ÷ 98	9.0 ÷ 10.0
Screw fastening spring holder arm to upright	185 ÷ 205	19.0 ÷ 21.0
Screw fastening shock absorber arm to upright	185 ÷ 205	19.0 ÷ 21.0
Nut fastening rear hub	266 ÷ 294	27.0 ÷ 30.0
Adjustment tie-rod nuts	59 ÷ 73	6.0 ÷ 7.4
Screws fastening adjustment arm	47 ÷ 51	4.0 ÷ 5.0
Screws fastening stabilizer bar support	15 ÷ 21	1.5 ÷ 2.1
Screws fastening stabilizer bar	23 ÷ 28	2.4 ÷ 2.9

Group 44 - Wheels

Part	Nm	kgm
Screws fastening wheels (with rims in sheet metal)	83 ÷ 103	8.5 ÷ 10.5
Screws fastening wheels (with rims in alloy)	83 ÷ 103	8.5 ÷ 10.5

Group 50 - Climate control unit

Part	Nm	kgm
Union fastening evaporator/drier filter pipe on evaporator	40 ÷ 44	4.1 ÷ 4.5
Union fastening evaporator/drier filter pipe on drier filter	40 ÷ 44	4.1 ÷ 4.5

(CONTINUED)

Alfawiki.nl

(CONTINUED)

Part			Nm	kgm
Screws fastening rear brake caliper support plates			42 ÷ 51	4.3 ÷ 5.2
Screws fastening front brake calipers (*)	Car version	916 S2	31 ÷ 38	3.2 ÷ 3.9
		916 C2 - 916 S1	22 ÷ 32	2.2 ÷ 3.3
Screws fastening rear brake calipers (*)			31 ÷ 38	3.2 ÷ 3.9
Screws with centering pins for brake disks			5 ÷ 13	0.5 ÷ 1.3
Unions between brake system stiff pipes and hoses			13 ÷ 15	1.3 ÷ 1.5
Hose unions to brake calipers			13 ÷ 15	1.3 ÷ 1.5
Bleed screw on brake calipers			4 ÷ 6	0.4 ÷ 0.6
Screws fastening handbrake lever to support			18 ÷ 29	1.8 ÷ 3.0
Screws fastening braking load proportioning valve to bracket			7 ÷ 8	0.7 ÷ 0.8
Stiff brake pipe unions on braking load proportioning valve			13 ÷ 15	1.3 ÷ 1.5
Screw for braking load proportioning valve adjustment bracket			15 ÷ 19	1.5 ÷ 1.9

(*) Change the brake caliper fastening screws each time they are tightened

Group 41 - Steering system

Part		Nm	kgm
Nut fastening steering wheel to steering column		25 ÷ 31	2.5 ÷ 3.2
Screws fastening power steering box to crossmember		43 ÷ 47	4.4 ÷ 4.8
Nuts fastening steering column support to body		20 ÷ 25	2.0 ÷ 2.5
Screw fastening lower steering column to power steering box pinion		20 ÷ 24	2.0 ÷ 2.4
Nut fastening lower steering column to power steering box pinion		15 ÷ 19	1.5 ÷ 1.9
Union fastening power steering box oil inlet pipe		38 ÷ 42	3.9 ÷ 4.3
Union fastening power steering box oil outlet pipe		29 ÷ 32	2.9 ÷ 3.2
Nut fastening steering tierod ball pin to wheel upright		29 ÷ 36	3 ÷ 3.7
Nuts fastening side steering tierods		10 ÷ 15	1.0 ÷ 1.5
Oil delivery pipe on power steering pump	1970 c.c.	48 ÷ 53	4.9 ÷ 5.4
	2959 c.c.	46 ÷ 50	4.7 ÷ 5.1
Lower nut locking adjustable steering column		14 ÷ 17	1.4 ÷ 1.7
Upper nut locking adjustable steering column		10 ÷ 13	1.0 ÷ 1.3
Nut fastening lower steering strut		18 ÷ 30	1.8 ÷ 3.1

Group 44 - Front suspension

Part		Nm	kgm
Bolts fastening shock absorber to wheel upright	1970 c.c.	66 ÷ 74	6.7 ÷ 7.5
	2959 c.c.	95 ÷ 105	9.7 ÷ 10.7
Centre nut retaining helical spring to shock absorber		95 ÷ 105	9.7 ÷ 10.7
Screws fastening shock absorber to body		25 ÷ 32	2.5 ÷ 3.3

(CONTINUED)

Alfawiki.nl

(CONTINUED)

Part	Nm	kgm
Nut for fastening gear selection cable to gearshift rod	13 ÷ 16	1.3 ÷ 1.6
Screws fastening lower cover to gearbox	24 ÷ 31	2.4 ÷ 3.1
Threaded taper cap for draining gearbox oil	19 ÷ 30	1.9 ÷ 3.1
Threaded cap for draining differential oil	19 ÷ 30	1.9 ÷ 3.1
Screw fastening differential cover to gearbox	24 ÷ 31	2.4 ÷ 3.2
Screw retaining gearshift control rod spring	19 ÷ 30	1.9 ÷ 3.1
Ringnut locking transmission shaft gears	143 ÷ 185	14.6 ÷ 18.9
Ringnut locking secondary shaft gears	143 ÷ 185	14.6 ÷ 18.9
Screw fastening main rear bearing retainer plate	24 ÷ 31	2.5 ÷ 3.2
Screw fastening secondary rear bearing retainer plate	24 ÷ 31	2.5 ÷ 3.2
Self-locking screw fastening 1st & second gear fork	24 ÷ 31	2.5 ÷ 3.2
Self-locking screw fastening 3rd and 4th gear nib	24 ÷ 31	2.5 ÷ 3.2
Self-locking screw fastening 3rd and 4th gear fork	24 ÷ 31	2.5 ÷ 3.2
Self-locking screw fastening 5th gear and reverse gear nib	24 ÷ 31	2.5 ÷ 3.2
Screw fastening reversing lever complete	24 ÷ 31	2.5 ÷ 3.2
Self-locking screw fastening 5th gear fork	24 ÷ 31	2.5 ÷ 3.2
Screw fastening gearbox control shaft bush on box	7 ÷ 9	0.7 ÷ 0.9
Self-locking nut fastening gearshift control lever on inner shaft	24 ÷ 31	2.5 ÷ 3.2
Screw fastening gearshift control lever on outer shaft	24 ÷ 31	2.5 ÷ 3.2
Screw fastening mileage recorder support	8 ÷ 12	0.8 ÷ 1.2
Self-locking screw for fastening crown wheel	81 ÷ 90	8.3 ÷ 9.2

Group 27 - Axle shafts

Part	Nm	kgm
Screws fastening differential side axle shaft joint to flange	40 ÷ 52	4.1 ÷ 5.3
Screws fastening intermediate axle shaft flange	8 ÷ 10	0.8 ÷ 1.0
Nut fastening axle shafts to wheel hub (*)	67 ÷ 74 + 62°± 2°	6.8 ÷ 7.5 + 62° ± 2°

(*) See GROUP 44 - Suspensions and Wheels

Group 33 - Brakes

Part		Nm	kgm
Stiff brake pipe unions on brake pump		13 ÷ 15	1.3 ÷ 1.5
Stiff brake pipe unions on A.B.S. hydraulic unit		13 ÷ 15	1.3 ÷ 1.5
Nut fastening brake pedal		27 ÷ 34	2.8 ÷ 3.5
Nuts fastening servobrake to pedal unit		10 ÷ 16	1 ÷ 1.6
Screws fastening front brake calipers (*)	M10 x 1.25	53 ÷ 59	5.4 ÷ 6.0
	M12 x 1.25	98 ÷ 108	10 ÷ 11

(*): Change the screws each time they are tightened

Alfawiki.nl

(CONTINUED)

Group 21 - Gearbox - Differential 1970 T. SPARK 16V

Part	Nm	Kgm
Screws and nuts fastening gearbox to engine	75 ÷ 92	7.6 ÷ 9.4
Screw fastening engine front mount to body	75 ÷ 92	7.6 ÷ 9.4
Screws fastening gearbox lower cover	42 ÷ 51	4.3 ÷ 5.3
Screws fastening gearbox to engine front mount	42 ÷ 51	4.3 ÷ 5.3
Screw fastening reversing shaft	29 ÷ 36	2.9 ÷ 3.6
Locknut for transmission and secondary shaft for fastening 5th gear	100 ÷ 124	10 ÷ 13
Screw fastening gearshift control forks	15 ÷ 19	1.6 ÷ 1.9
Screw fastening lever on gearshift control shaft	20 ÷ 25	2.0 ÷ 2.5
Screw fastening support for reversing gear control lever	9 ÷ 11	0.9 ÷ 1.1
Screw fastening gearshift control shaft bush	9 ÷ 11	0.9 ÷ 1.1
Screw fastening differential crown wheel	75 ÷ 92	7.6 ÷ 9.4
Screw fastening flange retaining differential carrier to gearbox	21 ÷ 26	2.2 ÷ 2.7
Screw fastening speedometer support	8 ÷ 13	0.8 ÷ 1.3
Magnetic threaded taper cap for draining gearbox oil	30 ÷ 48	3.1 ÷ 4.9
Taper threaded cap for filling gearbox oil	30 ÷ 48	3.1 ÷ 4.9
Screw fastening RH differential shaft support	7 ÷ 11	0.7 ÷ 1.1
Threaded taper plug for 1st and 2nd gearshift rod housing on gearbox	13 ÷ 21	1.3 ÷ 2.1
Front fastening screws for gearshift controls support	16 ÷ 25	1.6 ÷ 2.5
Screw fastening differential side joint to flange	40 ÷ 52	4.1 ÷ 5.3
Reversing light switch screw	20 ÷ 32	2.0 ÷ 3.2
Screw fastening starter motor to gearbox	20 ÷ 25	2.0 ÷ 2.5
Screw fastening earth braid to gearbox	10 ÷ 13	1.0 ÷ 1.3
Screws fastening engine rear mount to body	75 ÷ 92	7.6 ÷ 9.4
Screws fastening engine rear mount to crossmember	32 ÷ 40	3.3 ÷ 4.1
Screws fastening gearshift lever support to body	10 ÷ 16	1.0 ÷ 1.6
Nut for pin fastening intermediate gear	10 ÷ 16	1.0 ÷ 1.6
Nut fastening engagement tie-rod to intermediate lever	10 ÷ 16	1.0 ÷ 1.6
Nut for fastening selection gear on gearbox	10 ÷ 16	1.0 ÷ 1.6

Group 21 - Gearbox - Differential 2959 V6

Part	Nm	kgm
Screws fastening engine rear mount to gearbox	102 ÷ 126	10.4 ÷ 12.8
Screw fastening engine rear mount to body	75 ÷ 92	7.6 ÷ 9.3
Screw fastening gearbox rear support to body	75 ÷ 92	7.6 ÷ 9.3
Nuts fastening gear rear support to gearbox	47 ÷ 57	4.8 ÷ 5.8
Screw fastening gearshift control cable reaction bracket on gearbox	13 ÷ 16	1.3 ÷ 1.6
Screws fastening gearshift control cable lower cover	13 ÷ 16	1.3 ÷ 1.6

Alfawiki.nl

(CONTINUED)

(CONTINUED)

Part	Nm	kgm
Crankshaft front pulley fastening nut (in oil)	235	24
Engine front cover fastening screws	8 ÷ 9	0.8 ÷ 0.9
Flywheel fastening screws (in oil)	138 ÷ 144	14.1 ÷ 14.7
Main bearing fastening nuts (in oil)	84 ÷ 93	8.6 ÷ 9.5
Rear main bearing fastening nuts	25 + 79°	2.5 + 79°
Oil pump return pulley fastening nut	18 ÷ 22	1.8 ÷ 2.3
Camshaft bearing fastening nuts (in oil)	16 ÷ 18	1.6 ÷ 1.8
Tappet clearance adjustment screw lock nuts, exhaust side	15 ÷ 18	1.5 ÷ 1.8
Engine oil minimum pressure warning light sensor	20 ÷ 25	2.1 ÷ 2.6
Starter motor fastening screws	38 ÷ 45	3.9 ÷ 4.6
Oil sump drain cap	64 ÷ 79	6.5 ÷ 8.0
Spark plugs (in oil)	25 ÷ 34	2.5 ÷ 3.5
Filter fuel outlet fitting	21 ÷ 26	2.1 ÷ 2.7
Filter fuel inlet fitting	30 ÷ 37	3.1 ÷ 3.8
Throttle potentiometer fastening screws	1.7 ÷ 1.9	0.17 ÷ 0.19
Lambda sensor	50 ÷ 60	5.1 ÷ 6.1
Thermostat assembly cover fastening screws	14 ÷ 17	1.4 ÷ 1.7
Engine coolant temperature gauge sensor and maximum temperature warning light contact	20 ÷ 25	2.1 ÷ 2.6
Engine coolant temperature sensor (NTC)	12 ÷ 15	1.2 ÷ 1.5
Cylinder head torque		
Fasten all screws at:	25	2.5
Turn all screws at a angle of:	230° ± 2°	

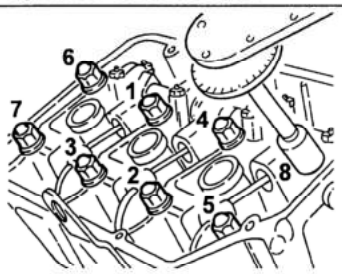

Assembly 18 - Clutch

Part	Nm	kgm
Thrust plate-flywheel fastening screws	20 ÷ 25	2.1 ÷ 2.6
Gearbox bell clutch cylinder bracket fastening screws (2959 cc)	12 ÷ 15	1.2 ÷ 1.5
Gearbox bell clutch cylinder fastening screws	13 ÷ 16	1.3 ÷ 1.6
Clutch pump - pedal board fastening nuts	13 ÷ 21	1.3 ÷ 2.1
Clutch circuit pipe fitting on pump	17 ÷ 19	1.7 ÷ 1.9
Clutch circuit pipe fitting on control cylinder	17 ÷ 19	1.7 ÷ 1.9
Thrust bearing sleeve fastening screws	7 ÷ 9	0.7 ÷ 0.9

Alfawiki.nl

(CONTINUED)

Part		Nm	kgm
Counter-rotating shaft cover fastening screws (1970 cc only)		6 ÷ 7	0.6 ÷ 0.7
Oil sump fastening screw	M6	7 ÷ 9	0.7 ÷ 0.9
	M8	21 ÷ 26	2.1 ÷ 2.7
Oil sump drain cap		17 ÷ 21	1.7 ÷ 2.1
Oil pump fastening screws		6 ÷ 8	0.6 ÷ 0.8
EGR valve fastening screws		17 ÷ 21	1.7 ÷ 2.1
Intake manifold - cylinder head fastening nuts		17 ÷ 21	1.7 ÷ 2.1
Timing pulley fastening screw, exhaust side		100 ÷ 124	10.2 ÷ 12.6
Timing belt take-up fastening nut		21 ÷ 26	2.1 ÷ 2.6
Exhaust manifold - cylinder head fastening nuts		17 ÷ 21	1.7 ÷ 2.1
Thermostat cup - cylinder head fastening screws		17 ÷ 21	1.7 ÷ 2.1
Camshaft bearing fastening screws (in oil)		13 ÷ 16	1.3 ÷ 1.6
Spark plugs	Central large	25 ÷ 35	2.5 ÷ 3.6
	Side small	10 ÷ 12	1.0 ÷ 1.2
Engine coolant temperature gauge sensor and maximum temperature warning light contact		25 ÷ 31	2.5 ÷ 3.2
Engine coolant temperature sensor (NTC)		12 ÷ 15	1.2 ÷ 1.5
Knock sensor fastening screw		19.5 ÷ 20.5	2.0 ÷ 2.1
Cylinder head torque			
Fasten all screws at:	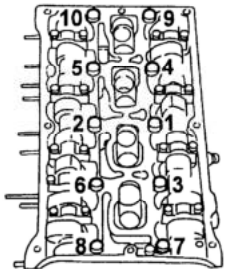	20	2.0
Pre-torque screws at:		40	4.1
Turn all screws at a angle of:		90° + 90° + 90°	

Assembly 10 - 2959 V6 engine

Part	Nm	kgm
Ignition coil fastening screws	6 ÷ 10	0.7 ÷ 1.1
Ignition coil bracket fastening nuts	14 ÷ 17	1.4 ÷ 1.7
Thermostat assembly fastening screws	32 ÷ 39	3.3 ÷ 4.1
Automatic timing belt take-up fastening nuts	19 ÷ 23	1.9 ÷ 2.3
Timing pulley - hub fastening screws	13 ÷ 16	1.3 ÷ 1.6
Timing pulley bracket hub fastening nut	97 ÷ 117	10 ÷ 12
Cylinder head cover fastening screws	10 ÷ 13	1.1 ÷ 1.3
Coolant pump cover fastening screws	6 ÷ 10	0.7 ÷ 1.1
Oil sump fastening screws	9 ÷ 11	0.9 ÷ 1.1
Connecting rod cap fastening screws (in oil)	53 ÷ 59	5.4 ÷ 6.0
Coolant pump pulley fastening screws	4 ÷ 5	0.4 ÷ 0.5
Coolant pump fastening screws	8 ÷ 9	0.8 ÷ 0.9

(CONTINUED)

Alfawiki.nl

Group 00 - Engine Maintenance 1970 T. SPARK 16V

Part		Nm	kgm
Oil sump drain plug		17 ÷ 21	1.7 ÷ 2.1
Auxiliary organs drive belt pulley securing screws		24 ÷ 29	2.4 ÷ 3.0
Timing pulley exhaust side securing screws		100 ÷ 124	10.2 ÷ 12.6
Timing belt tensioner nut		21 ÷ 26	2.1 ÷ 2.6
Spark plugs	Central large	25 ÷ 35	2.5 ÷ 3.6
	Side small	10 ÷ 12	1.0 ÷ 1.2

Group 00 - Engine Maintenance 2959 V6

Part	Nm	kgm
Oil sump drain plug	64 ÷ 79	6.5 ÷ 8.0
Cylinder head cover securing screws	10 ÷ 13	1.1 ÷ 1.3
Timing pulley to support hubs securing screws	13 ÷ 16	1.3 ÷ 1.6
Timing pulley support hub nuts	97 ÷ 117	10 ÷ 12
Timing shaft cap nuts (in oil)	16 ÷ 18	1.6 ÷ 1.8
Exhaust side valve clearance adjustment screw lock nuts	15 ÷ 18	1.5 ÷ 1.8
Water pump pulley securing screws	4 ÷ 5	0.4 ÷ 0.5
Timing belt tensioner nuts	19 ÷ 23	1.9 ÷ 2.3
Spark plugs (in oil)	25 ÷ 34	2.5 ÷ 3.5

Group 00 - Mechanical Groups Maintenance

Part	Nm	kgm
Bleed screws on brake calipers	4 ÷ 6	0.4 ÷ 0.6
Gearbox oil filler plug (1970 c.c)	30 ÷ 48	3.1 ÷ 4.9
Gearbox oil drain plug (1970 c.c)	30 ÷ 48	3.1 ÷ 4.9
Gearbox and differential oil drain plug (2959 c.c)	19 ÷ 30	1.9 ÷ 3.1

Group 10 - Engines T. SPARK 16V

Part	Nm	kgm
Main journals securing screws (in oil)	96 ÷ 119	9.8 ÷ 12.1
Engine flywheel securing screws	121 ÷ 149	12.3 ÷ 15.2
Connecting rod cap securing screws (in oil)	25 + 60°	2.5 + 60°
Auxiliary units drive belt pulley securing screws	24 ÷ 29	2.4 ÷ 3.0
Timing belt control pulley securing screws (left hand)	340 ÷ 378	34.7 ÷ 38.5
Water pump securing screws	17 ÷ 21	1.7 ÷ 2.1
Engine oil minimum pressure sensor	25 ÷ 31	2.5 ÷ 3.2

(CONTINUED)

Alfawiki.nl

COMPRESSOR 1970 T. SPARK 16V

Make	NIPPONDENSO
Type	TV 14 SC
Number of blades	2
Length of blade	72.5 mm
Depth of blade	38.5 mm
Displacement	127 cm^3/rev
Weight	4.05 kg
Quantity of oil (type ND9)	160 ± 20 cm^3
Electromagnetic joint working voltage	12 V
Minimum current absobed by electromagnetic joint	2.2 A
Power absorbed by electromagnetic joint	min. 40 W

COMPRESSOR 2959 V6

Make		SANDEN
Type		SD7 V16
Cylinder diameter		29.3 mm
Stroke	min.	2.2 mm
	max.	34.2 mm
Theoretical capacity	min.	10.4 cm^3/rev
	max.	161.3 cm^3/rev
Number of cylinders		7
Rotation		clockwise
Max. steady running		6000 rpm
Quantity of oil ("PAG" SP10 or equivalent)		240 ± 15 cm^3
Electromagnetic joint working voltage		12 V
Minimum engagement voltage of electromagnetic joint		7.5 V
Power absorbed by electromagnetic joint		48 W

Alfawiki.nl

MINIMUM PRESSURE SWITCH CALIBRATION

Contact open pressure	1.8 ± 0.07 bar
Contact close pressure	3 ÷ 3.5 bar

THREE-LEVEL (TRINARY) PRESSURE SWITCH CALIBRATION

1st level	contact open	2.45 ± 0.25 bar
	contact closed	2.85 ± 0.50 bar
2nd level	contact open	15.2 ± 0.98 bar
	contact closed	11.28 ± 1.99 bar
3rd level	contact open	25 ÷ 30 bar
	contact closed	17 ÷ 26 bar

FOUR-LEVEL PRESSURE SWITCH CALIBRATION

1ST level	contact open	2.45 ± 0.35 bar
	contact closed	max 3.5 bar
2nd level	contact open	15 ± 1 bar
	contact closed	11 ± 2 bar
3rd level	contact open	20 ± 1.2 bar
	contact closed	16 ± 2.2 bar
4th level	contact open	28 ± 2 bar
	contact closed	22 ± 4 bar

EXPANSION VALVE

Calibrated hole diameter	
Brown mesh	1.55 mm
White mesh	1.8 mm

Alfawiki.nl

IGNITION

IGNITION COILS

	T. SPARK 16V	2959 V6
Primary coil resistance	0.3 Ω ± 12%	0.5 Ω
Secondary coil resistance	7 kΩ ± 12%	13.3 kΩ

SPARK PLUGS

	T. SPARK 16V	2959 V6
Type	NGK PFR6B + NGK PMR7A (*) [NGK BKR6EKPA + NGK PMR7A]	LODGE 25 HL

(*): Two spark plugs (one for type) are fitting on each cylinder.
[ ]: Alternative.

STARTING SYSTEM

STARTER MOTOR

			T. SPARK 16V	2959 V6
Nominal voltage		(V)	12	12
Nominal power		(kW)	1.4	1.4
Loaded test	Voltage	(V)	Not available at time of going to press	9
	Intake	(A)		≤ 350
	Rpm			≥ 1500
	Torque	(Nm)		8.5
Unloaded test	Voltage	(V)		-
	Intake	(A)		-
	Rpm			-
Short circuit test	Voltage	(V)		4
	Intake	(A)		≤ 750
	Torque	(Nm)		≥ 15

RECHARGING

BATTERY

Nominal voltage	12V
Capacity (20 hours)	70 A/h
Current intensity (-18°C)	400 A

ALTERNATOR

	T. SPARK 16V	2959 V6
Nominal voltage	14V	14V
Nominal current	100A	90A
Constant maximum speed	18000 rpm	Not available at time of going to press
Inducer coil resistance (measured between rings at 20°C)	2.6 ± 5% Ω	

FRONT SUSPENSIONS

HELICOID SPRINGS

Engine	T. SPARK 16V	2959 V6
Wire diameter	12.9 mm	12.9 mm
Free length	439 mm	442 mm

SHOCK ABSORBERS

Rod diameter	22 mm
Stroke	158 mm

STABILISER BAR

Bar diameter	20 mm

REAR SUSPENSIONS

HELICOID SPRINGS

	916 S2 - 916 S3 - 916 S1	916 C2 - 916 C3
Wire diameter	13.9 mm	13.9 mm
Free length	231 mm	227 mm

SHOCK ABSORBERS

Rod diameter	39 mm
Stroke	94 mm

STABILISER BAR

Bar diameter	18 mm

WHEEL TRIM AND CHARACTERISTIC ANGLES (unladen and filled)

Versions / Features	To '97 versions			'98 versions		
	916 S1	916 S2	916 C2	916 S1	916 S2 916 S3	916 C2 916 C3
Front trim (B - A) (mm)	-36 ± 5	-33 ± 5	-32 ± 5	-46 ± 5	-42 ± 5	-43 ± 5
Rear trim (C - D) (mm)	-74 ± 5	-74 ± 5	-77 ± 5	-72 ± 3	-74 ± 5	-77 ± 3
Front wheel toe-in (D_2 - D_1) (mm)	-1.5 ± 0.5	-1.5 ± 0.5	-1.5 ± 0.5	-2 ± 1	-2 ± 0.5	-2 ± 1
Rear wheel toe-in (D_2 - D_1) (mm)	+2.5 - 0.5	+2.5 - 0.5	+2.5 - 0.5	+3 ± 1	+3 ± 0.5	+3 ± 1
Front wheel camber "α"	-0°39' ± 20'	-0°39' ± 20'	-0°39' ± 20'	-0°56' ± 20'	-0°30' ± 20'	-0°30' ± 20'
Caster "β"	3°8' ± 30'	3°9' ± 30'	3°12' ± 30'	2°45' ± 30'	2°55' ± 30'	2°59' ± 30'
Rear wheel camber "γ"	-1°10' ± 20'	-1°5' ± 20'	-1°8' ± 20'	-0°52' ± 20'	-0°59' ± 20'	-1°14' ± 20'

STEERING

Steering circle	10.8 m
Steering wheel turns (lock to lock)	2.23

Alfawiki.nl

DIFFERENTIAL

Bearing pre-load (not loaded) = 0.12 mm

NOTE: Calibrate bearing pre-load with spare rings from 1.70 mm to 2.60 mm thick in 0.05 mm steps.

	T. SPARK 16V	2959 V6
Planet-satellite play	≤ 0.10 mm	0.07 ÷ 0.20 mm

BRAKES

BRAKE DISCS

		FRONT		REAR
VEHICLE VERSION		916 S2 - 916 S3	916 C2 - 916C3 916 S1	916 S2 - 916 S3 - 916 C2 916 C3 - 916 S1
Diameter	(mm)	257	284	240
Use thickness limit	(mm)	18.2	20.2	9.2
Min. thickness after grinding	(mm)	19.2	21.9	10.1
Nominal thickness	(mm)	20.2	22.1	11

BRAKE PUMP

Type	ISOVAC
Diameter	15/16" (23.8 mm)
Stroke	9/16" (14 + 14 mm)

BRAKE BOOSTER

Type	ISOVAC
Working cylinder diameter	7" + 8" (17.8 + 20.3 cm)

FRONT BRAKE CALLIPERS

VEHICLE VERSION	916 S2 - 916 S3	916 C2 - 916 C3 - 916 S1
Type	ALTECNA	LUCAS
Piston diameter	54 mm	54 mm
Brake pad area	35.8 cm^2	50 cm^2
Pad nominal thickness	17 ± 0.3 mm	18.3 ± 0.2 mm

REAR BRAKE CALLIPERS

Type	LUCAS
Piston diameter	34 mm
Brake pad area	21 cm^2
Pad nominal thickness	14 ÷ 14.4 mm

BRAKE SHOES

	FRONT	REAR
Friction seal use limit thickness	1.5 mm (signalled by brake pad wear sensor)	1.5 mm

INDUCTIVE SENSOR - ABS PHONIC WHEEL GAP

Front wheels	0.3 ÷ 1.05 mm
Rear wheels	0.37 ÷ 0.9 mm

Alfawiki.pl

CLUTCH

		T. SPARK 16V	2959 V6
Clutch plate thickness	New	7.1 ÷ 7.7 mm	7.1 ÷ 7.7 mm
	Wear limit	6.3 mm	6.3 mm
Clutch plate diameter		228.5 mm	235 mm

GEARBOX

RATIOS (specific for 1747 T. SPARK 16V engines)

Axle ratio	Gear engaged	Gear ratio	Total ratio
15/56 1 : 3.733	1st	1 : 3.909	1 : 14.592
	2nd	1 : 2.238	1 : 8.354
	3rd	1 : 1.520	1 : 5.674
	4th	1 : 1.156	1 : 4.315
	5th	1 : 0.946	1 : 3.531
	Reverse	1 : 3.909	1 : 14.592

RATIOS (specific for 1970 T. SPARK 16V engines)

Axle ratio	Gear engaged	Gear ratio	Total ratio
16/57 1 : 3.562	1st	1 : 3.545	1 : 12.627
	2nd	1 : 2.238	1 : 7.972
	3rd	1 : 1.520	1 : 5.414
	4th	1 : 1.156	1 : 4.118
	5th	1 : 0.946	1 : 3.370
	Reverse	1 : 3.909	1 : 13.924

RATIOS (specific for 2959 V6 engines)

	Axle ratio	Gear engaged	Gear ratio	Total ratio
C.503.5.29.22 gearbox	18/56 1 : 3.111	1st	1 : 3.500	1 : 10.888
		2nd	1 : 2.176	1 : 6.769
		3rd	1 : 1.524	1 : 4.741
		4th	1 : 1.156	1 : 3.596
		5th	1 : 0.917	1 : 2.853
		Reverse	1 : 3.545	1 : 11.028
C.530.XX.YY gearbox	18/56 1 : 3.111	1st	1 : 3.500	1 : 10.888
		2nd	1 : 2.235	1 : 6.953
		3rd	1 : 1.524	1 : 4.741
		4th	1 : 1.156	1 : 3.596
		5th	1 : 0.914	1 : 2.843
		Reverse	1 : 3.545	1 : 11.028

Alfawiki.nl

COOLING SYSTEM

THERMOSTAT

	T. SPARK 16V	2959 V6
Opening start temperature	83° ± 2°C	87° ± 2°C

COOLING FAN THERMAL CONTACT (with M2.10.3 injection-ignition system)

Fan on/off temperature		
1st speed	On (contacts closed)	92 ± 2°C
	Off (contacts open)	87 ± 2°C
2nd speed	On (contacts closed)	97 ± 2°C
	Off (contacts open)	92 ± 2°C

COOLANT MAXIMUM TEMPERATURE SENSOR

	T. SPARK 16V	2959 V6
Contacts close temperature	122 ± 2°C (*)	115 ± 3°C
Contacts open temperature	112 ± 3°C (*)	≥ 102°C

(*): Data not available at time of going to press for M1.5.5 ignition-ignition system versions.

Alfawiki.nl

FUEL SUPPLY

FUEL

Unleaded petrol	R.O.N. minimum = 95

FUEL TANK

Full capacity	70 litres
Reserve	~ 9 litres

FUEL SUPPLY PRESSURE CONTROL

	T. SPARK 16V	2959 V6
Fuel pressure when idling	2.8 ÷ 3.2 bar (*)	3 bar
Maximum pressure control	~ 4 bar (*)	~ 4 bar

(*) For engines AR32201 and AR32301: 3.5 ± 0.2 bar.

AIR SUPPLY

FLOW TEST

	2959 V6
Air leak with accelerator throttle in closed position (Solex flow meter)	300 ± 10 Scale N

EXHAUST EMISSION CONTROL

CO at exhaust	≤ 2.2 g x km
HC + NOx at exhaust	0.5 g x km

SENSORS

REV AND PHASE SENSOR AIR GAP

0.5 ÷ 1.5 mm

PHASE SENSOR AIR GAP 2959 V6

0.1 ÷ 1.5 mm

Alfawiki.nl

Equalisers

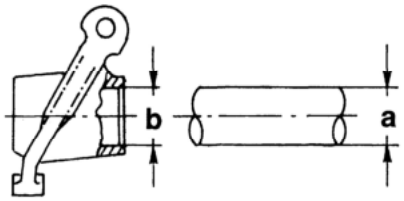

Unit: mm

Equaliser shaft diameter "a"	15.988 ÷ 16.000
Equaliser I.D. "b"	16.010 ÷ 16.028
Radial clearance between equalisers and their shafts	0.010 ÷ 0.040

Valve clearance

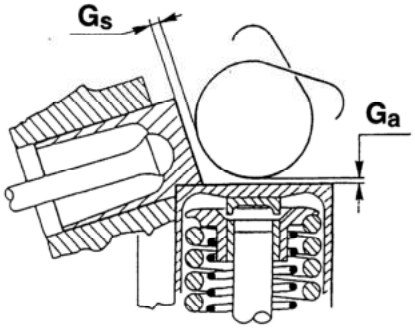

Unit: mm

Valve clearance (with engine cold)	Intake "G_a"	0.475 ÷ 0.500
	Exhaust "G_s"	0.225 ÷ 0.250

TIMING ACTUAL DIAGRAM ANGLE

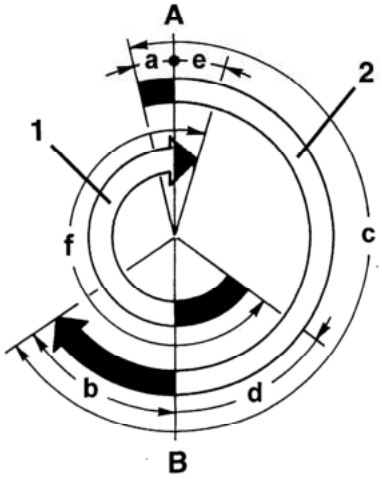

Intake	Opening (before T.D.C.)	"a"	13°
	Closing (after B.D.C.)	"b"	56°
	Intake angle value	"c"	249°
Exhaust	Opening (before B.D.C.)	"d"	53°
	Closing (after T.D.C.)	"e"	16°
	Exhaust angle value	"f"	249°

(1) Exhaust (2) Intake
(A) T.D.C. (B) B.D.C.

Alfawiki.nl

Valve seats

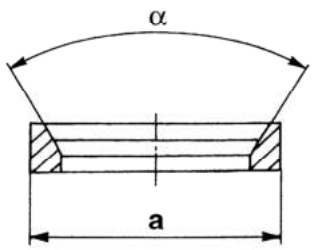

Unit: mm

Outside diameter of valve seats "a"	Intake	45.065 ÷ 45.100 45.365 ÷ 45.400 (1)
	Exhaust	39.095 ÷ 39.111 39.395 ÷ 39.411 (1)
Valve seat taper "α"		90° ± 20'
Interference between valve seats and their seats	Intake	0.040 ÷ 0.100
	Exhaust	0.070 ÷ 0.111
Heating temperature of cylinder heads for fitting valve seats		100 °C

(1) For Spares only

Valves

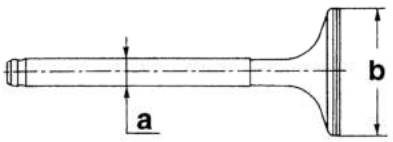

Unit: mm

Diameter of valve stems "a"	Intake	8.925 ÷ 8.960
	Exhaust	8.972 ÷ 8.987
Diameter of valve mushrooms "b"	Intake	43.82 ÷ 43.92
	Exhaust	38.52 ÷ 38.68
Radial clearance between valve stems and valve guides	Intake	0.040 ÷ 0.090
	Exhaust	0.013 ÷ 0.043

Valve springs

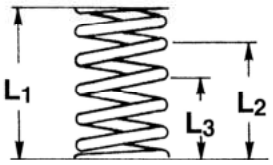

	Inner spring	Outer spring
Free length "L_1"	44.6 mm	44.1 mm
Length with valves closed "L_2"	32.5 mm	30.5 mm
Corresponding load at "L_2"	243 ÷ 252 N (24.8 ÷ 25.7 kg)	126 ÷ 130 N (12.8 ÷ 13.3 kg)
Length with valves open "L_3"	23.5 mm	21.5 mm
Corresponding load at "L_3"	470 ÷ 488 N (47.9 ÷ 49.7 kg)	222 ÷ 231 N (22.7 ÷ 23.5 kg)

Camshafts

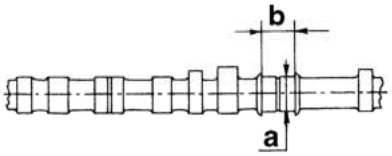

Unit: mm

Diameter of camshaft journals "a"		26.949 ÷ 26.970
Maximum eccentricity between journals		0.03
Width of camshaft shoulders "b"		27.000 ÷ 27.052
Nominal cam lift	Intake	10.4
	Exhaust	9
Clearance between camshaft journals and their seats		0.030 ÷ 0.084
Camshaft end float		0.060 ÷ 0.201

Alfawiki.nl

Connecting rod half bearings

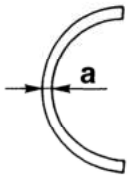

Unit: mm

Thickness of connecting rod half bearings "a"	Class A - Red	1.737 ÷ 1.745
	Class B - Blue	1.741 ÷ 1.749
Operating clearance between rod pins and their half bearings	Class A - Red	0.021 ÷ 0.060
	Class B - Blue	0.023 ÷ 0.062

CYLINDER HEADS

Heads

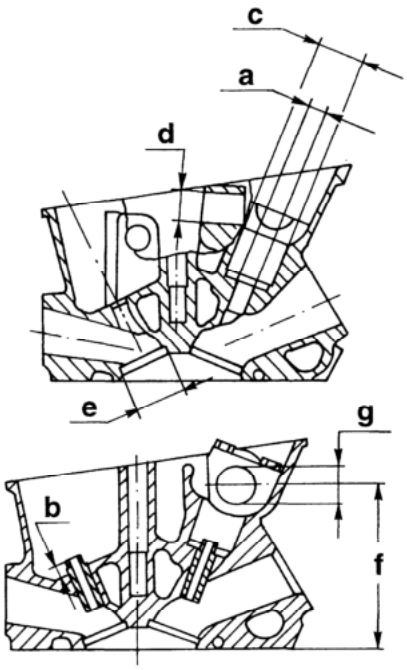

Unit: mm

Diameter of valve guide seats "a"		13.990 ÷ 14.018
Valve guide protrusion "b"		9.7 ÷ 10.1
Diameter of valve cup seats	Intake "c"	35.000 ÷ 35.025
	Exhaust "d"	24.000 ÷ 24.021
Diameter of valve seat housings "e"	Intake	45.000 ÷ 45.025
	Exhaust	39.000 ÷ 39.025
Minimum permissible height of heads after refacing "f"		124.85 ÷ 125.15
Maximum error of flatness of head lower surface		0.05
Diameter of camshaft supports "g"		27.000 ÷ 27.033
Length of camshaft support		26.851 ÷ 26.940
Diameter of camshaft pulley hub bush		32.000 ÷ 32.025
Diameter of oil pump drive shaft hub bush (1)		19.000 ÷ 19.021
Diameter of oil pump driving gear bush (1)		19.000 ÷ 19.021

(1) Specific for right-hand cylinder head

Valve guides

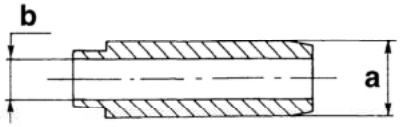

Unit: mm

Outside diameter of valve guides "a"	14.048 ÷ 14.059 14.062 ÷ 14.073 (1)
Inside diameter of valve guides (bore) "b"	9.000 ÷ 9.015
Interference between valve guides and their seats	0.030 ÷ 0.069

(1) For Spares only

Valve cups

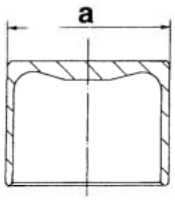

Unit: mm

Diameter of valve cups "a"	Intake	34.973 ÷ 34.989
	Exhaust	23.971 ÷ 23.989
Radial clearance between valve cups and seats	Intake	0.011 ÷ 0.052
	Exhaust	0.011 ÷ 0.050

Alfawiki.nl

CONNECTING ROD - PISTON ASSEMBLY

Piston

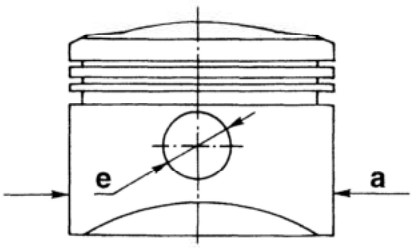

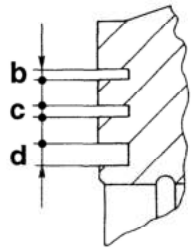

Unit: mm

Diameter of pistons "a" (1)	Class A - Blue	92.925 ÷ 92.935
	Class B - Pink	92.935 ÷ 92.945
	Class C - Green	92.945 ÷ 92.955
Height of seats of first seal ring "b"		1.525 ÷ 1.545
Height of seats of second seal ring "c"		1.525 ÷ 1.545
Height of seats of oil scraper ring "d"		3.515 ÷ 3.535
Diameter of gudgeon pin holes in pistons "e"	Class A - Black	22.003 ÷ 22.006
	Class B - White	22.006 ÷ 22.009
Clearance between liners and pistons		0.050 ÷ 0.069
Difference in weight between pistons		≤ 4 g

(1) To be measured perpendicularly to the gudgeon pin hole at a distance of 14 mm from lower edge of skirt.

Seal rings

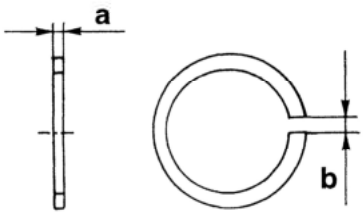

Unit: mm

Thickness of rings "a"	First ring	1.475 ÷ 1.490
	Second ring	1.475 ÷ 1.490
	Oil scraper ring	3.475 ÷ 3.490
Ring gap "b" (1)	First ring	0.40 ÷ 0.65
	Second ring	0.40 ÷ 0.65
	Oil scraper ring	0.30 ÷ 0.60
Axial play between rings and their seats	First ring	0.035 ÷ 0.070
	Second ring	0.035 ÷ 0.070
	Oil scraper ring	0.025 ÷ 0.060

(1) To be measured in the ckeck ring nut or in the cylinder liner

Gudgeon pins

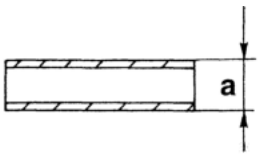

Unit: mm

Outside diameter of gudgeon pins "a"	Class A - Black	21.994 ÷ 21.997
	Class B - White	21.997 ÷ 22.000
Clearance between pins and their housings on pistons		0.006 ÷ 0.012

Connecting rods

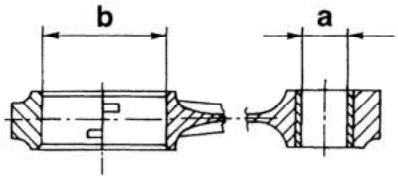

Unit: mm

Diameter of connecting rod bush hole "a"		22.004 ÷ 22.014
Inside diameter of big ends "b"		55.511 ÷ 55.524
Difference in weight between connecting rods		± 4 g
Big end end float		0.2 ÷ 0.3
Clearance between gudgeon pins and small end bushes	Class A - Black	0.007 ÷ 0.020
	Class B - White	0.004 ÷ 0.017

Alfawiki.nl

Main half bearings

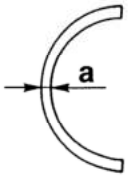

Unit: mm

Thickness of main half bearings "a"	Class A - Red	1.833 ÷ 1.839
	Class B - Blue	1.839 ÷ 1.845
	Class C - Green	1.845 ÷ 1.851
Operating clearance between main journals and half bearings		0.000 ÷ 0.024

Half thrust rings

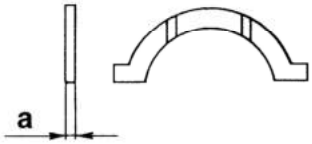

Unit: mm

Thickness of half thrust rings "a"	2.310 ÷ 2.360
Crankshaft end float	0.080 ÷ 0.265

Engine flywheel

Unit: mm

Inside diameter of centre bushing (bore) "a"	35.000 ÷ 35.025
Heating temperature of ring gear for fitting on flywheel	120° ÷ 140 °C

Cylinder liners

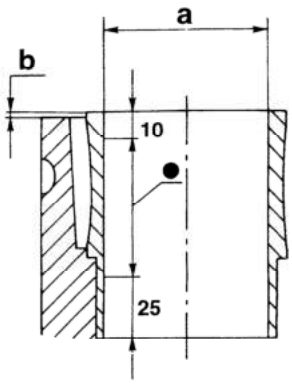

(●) Area for dimensional inspection

Unit: mm

Diameter of cylinder liners "a"	Class A - Blue	92.985 ÷ 92.994
	Class B - Pink	92.995 ÷ 93.004
	Class C - Green	93.005 ÷ 93.014
Protrusion of cylinder liners from crankcase "b"		0.01 ÷ 0.06
Cylinder liner limit of ovalization / taper		0.01

Oil pump

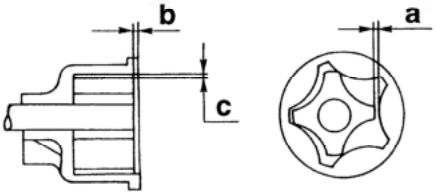

Unit: mm

Clearance between driven gear and inner gear "a"	0.040 ÷ 0.290
End float between pump casing rest surface and upper side of gears "b"	0.025 ÷ 0.075
Clearance between pump casing and driven gear "c"	0.170 ÷ 0.275

Alfawiki.nl

ENGINE TECHNICAL FEATURES

CHARACTERISTIC DATA

Engine		AR 16101
Cycle		Otto, four stroke
Injection / Ignition		Multi - Point Motronic M 3.7.1
Firing order		1 - 4 - 2 - 5 - 3 - 6
Capacity	cm^3	2959
Number of cylinders		6 at V 60°
Bore	mm	93
Stroke	mm	72.6
Maximum power	CV CEE (kW CEE) rpm	192 (141) 5600
Maximum torque	kgm CEE (Nm CEE) rpm	26.6 (260) 4400
Compression ratio		10 : 1
Engine oil pressure - Idling ratio - at 4000 rpm	bar	1 4.5
Idling ratio	rpm	720 ± 50

COMPLETE CRANKCASE

Crankcase

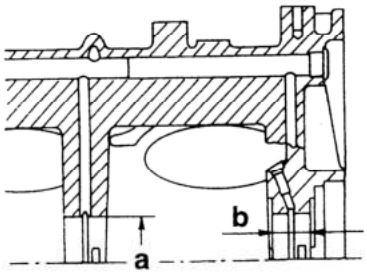

Unit: mm

Main journal diameter "a"	Class A - Red	63.657 ÷ 63.663
	Class B - Blue	63.663 ÷ 63.669
	Class C - Green	63.669 ÷ 63.675
Central main journal shoulder length "b"		26.450 ÷ 26.500

Crankshaft

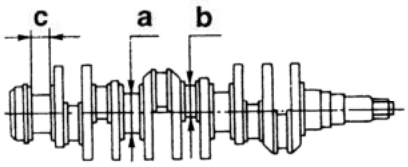

Unit: mm

Main journal diameter "a"	Class A - Red	59.973 ÷ 59.979
	Class B - Blue	59.967 ÷ 59.973
	Class C - Green	59.961 ÷ 59.967
Connecting rod journal diameter "b"	Class A - Red	51.990 ÷ 52.000
	Class B - Blue	51.980 ÷ 51.990
Rear main journal length "c"		31.300 ÷ 31.335
Maximum main journal and connecting rod journal ovality		0.004
Maximum main journal and connecting rod journal taper ratio		0.010
Maximum parallel error between main journals and connecting rod journals		0.015
Main journal maximum eccentricity		0.040

Camshafts

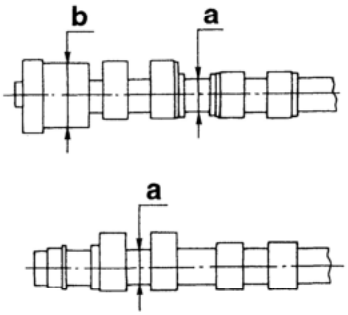

Unit: mm

Camshaft journal diameter "a"		26.000 ÷ 26.015
Phase variator pin diameter "b"		49.985 ÷ 50.000
Nominal cam height	Intake	9.50
	Exhaust	9.50
Camshaft journal and seat play		0.03 ÷ 0.07
Camshaft axial play		0.10 ÷ 0.23

Phase variator half-bearings

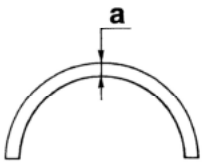

Unit: mm

Phase variator half-bearing thickness "a"	2.992 ÷ 2.998
Phase variator and respective bearing play	0.034 ÷ 0.086

ACTUAL TIMING ANGLE VALUE DIAGRAM

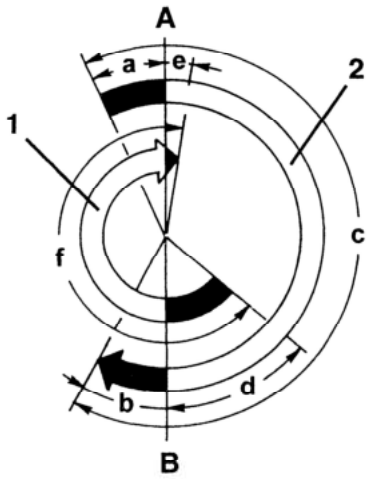

(1) Exhaust (2) Intake
(A) TDC (B) BDC

			AR 16201 engines	AR 32301 engines
Intake	Opens (before TDC)	"a"	0° 25° (*)	3° 22° (*)
	Closes (after BDC)	"b"	55° 30° (*)	51° 26° (*)
	Intake angle value	"c"	235°	228°
Exhaust	Opens (before BDC)	"d"	50°	47°
	Closes (after TDC)	"e"	8°	4°
	Exhaust angle value	"f"	238°	231°

Alfawiki.pl

Valve guides

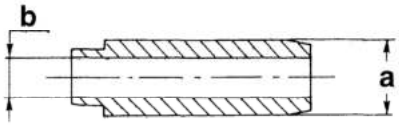

Unit: mm

Outside diameter of valve guides "a"	13.010 ÷ 13.030
	Oversize 0.20
Inside diameter of valve guides (bore) "b"	7.022 ÷ 7.040
Interference between valve guides and their seats	0.033 ÷ 0.080

Valve seats

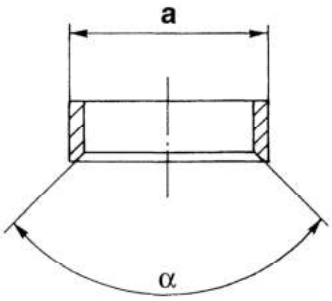

Unit: mm

Outside diameter of valve seats "a"	Intake	35.135 ÷ 35.150
	Exhaust	29.142 ÷ 29.157
Valve contact area taper "α"		90° ± 10'
Interference between valve seats and their housings	Intake	0.121 ÷ 0.146
	Exhaust	0.130 ÷ 0.166
Cylinder head heating temperature for fitting valve seats		80 °C

Valves

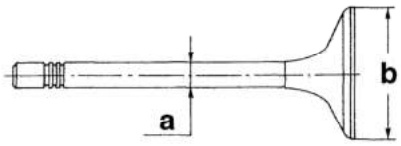

Unit: mm

Diameter of valve stems "a"	Intake	6.975 ÷ 6.990
	Exhaust	6.960 ÷ 6.975
Diameter of valve mushrooms "b"	Intake	33.4 ÷ 33.7
	Exhaust	27.9 ÷ 28.2
Radial clearance between valve stem and guide	Intake	0.032 ÷ 0.065
	Exhaust	0.047 ÷ 0.080

Valve springs

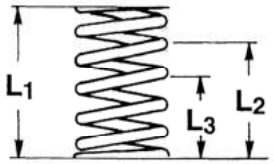

	Outer spring	Inner spring
Free length "L_1"	46 mm	39 mm
Length with valves closed "L_2"	34 mm	29.5 mm
Corresponding load at "L_2"	271 ÷ 294 N (27.6 ÷ 30 kg)	96 ÷ 106 N (9.8 ÷ 10.8 kg)
Length with valves open "L_3"	24,5 mm	20 mm
Corresponding load at "L_3"	485 ÷ 524 N (49.4 ÷ 53.4 kg)	201 ÷ 221 N (20.5 ÷ 22.5 kg)

Hydraulic tappets

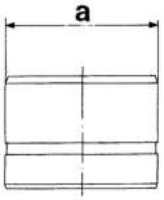

Unit: mm

Outside diameter of hydraulic tappets "a"	32.959 ÷ 32.975
Radial clearance between hydraulic tappets and their seats	0.025 ÷ 0.066

Alfawiki.nl

Connecting rod half bearings

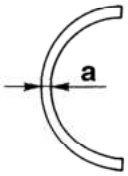

Unit: mm

Thickness of connecting rod half bearings "a"	Class A - Red	1.527 ÷ 1.531
	Class B - Blue	1.530 ÷ 1.534
	Class C - Yellow	1.533 ÷ 1.537
	Undersize 0.127	
Operating clearance connecting rod pins and their half bearings	Class A - Red	0.03 ÷ 0.056
	Class B - Blue	
	Class C - Yellow	

Seal rings

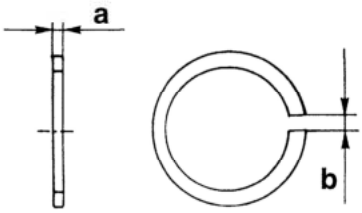

Unit: mm

Thickness of rings "a"	First ring	1.170 ÷ 1.190
		Oversize 0.1
	Second ring	1.475 ÷ 1.490
		Oversize 0.1
	Oil scraper ring	2.975 ÷ 2.990
		Oversize 0.1
Ring gap "b" (1)	First ring	0.25 ÷ 0.50
	Second ring	0.30 ÷ 0.50
	Oil scraper ring	0.25 ÷ 0.45
Axial play between seal rings and seats	First ring	0.030 ÷ 0.070
	Second ring	0.020 ÷ 0.055
	Oil scraper ring	0.020 ÷ 0.055

(1) To be measured in the checking ring nut or in the cylinder

Gudgeon pins

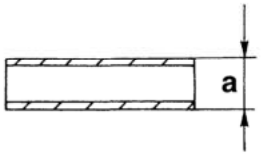

Unit: mm

Outside diameter of gudgeon pins "a"	19.996 ÷ 20.000
Clearance between gudgeon pins and their seats on pistons	0.002 ÷ 0.011

CYLINDER HEAD

Head

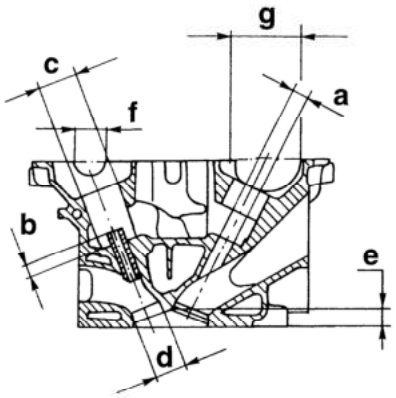

Unit: mm

Diameter of sedi valve guide seats "a"		12.950 ÷ 12.977
Valve guide protrusion "b"		11.25 ÷ 11.75
Diameter of valve cup seats "c"		33.000 ÷ 33.025
Diameter of valve seat housing "d"	Intake	34.989 ÷ 35.014
	Exhaust	28.991 ÷ 29.012
Minimum depth of combustion chamber "e"		13 ± 0.2
Maximum error of flatness of head lower surface		0.1
Diameter of camshaft supports "f"		26.045 ÷ 26.070
Diameter of timing variator support "g"		55.990 ÷ 56.015

Alfawiki.nl

Half thrust rings

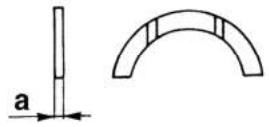

Unit: mm

Thickness of half thrust rings "a"	2.342 ÷ 2.358
	Oversize 0.127
Crankshaft end float	0.059 ÷ 0.221

Engine flywheel

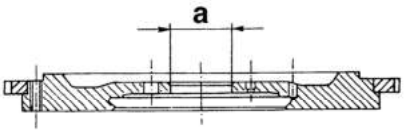

Inside diameter of centre bush (bore) "a"	47.010 ÷ 47.035 mm
Heating temperature of ring gear for assembly on flywheel	80° ÷ 100°C

CONNECTING ROD - PISTON ASSEMBLY

Piston

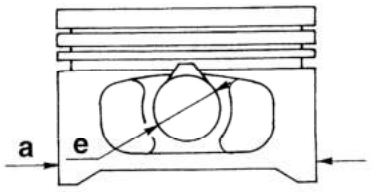

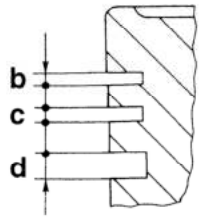

Unit: mm

Diameter of pistons "a" (1)	Class A - Blue	82.952 ÷ 82.962
	Class B - Pink	82.959 ÷ 82.971
	Class C - Green	82.968 ÷ 82.978
Height of first seal ring seats "b"		1.220 ÷ 1.240
Height of second seal ring seats "c"		1.510 ÷ 1.530
Height of oil scraper ring seats "d"		3.010 ÷ 3.030
Diameter of gudgeon pin holes in pistons "e"		20.002 ÷ 20.007
Clearance between cylinders and pistons		0.038 ÷ 0,062
Difference in weight between pistons		± 5 g

(1) To be measured perpendicular to the gudgeon pin hole at a distance of 12.5 mm from lower edge of skirt.

Connecting rods

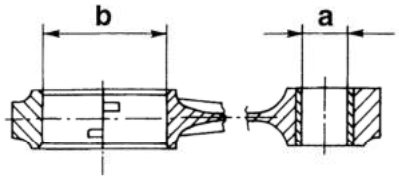

Unit: mm

Diameter of small end bushing bore "a"	20.006 ÷ 20.012
Inside diameter of rod big ends "b"	53.897 ÷ 53.909
Difference in weight between rods	≤ 5 g
Clearance between small end bushings and pins	0.006 ÷ 0.016
Small end end float	0.25 ÷ 0.6

Alfawiki.nl

Crankshaft

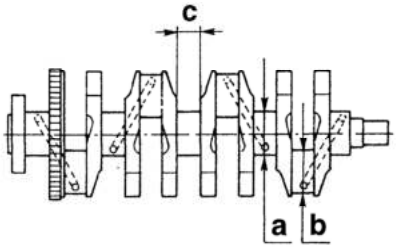

Unit: mm

Diameter of main bearing journals "a"	Class A - Red	52.994 ÷ 53.000
	Class B - Blue	52.988 ÷ 52.994
	Class C - Yellow	52.982 ÷ 52.988
	Undersize 0.127	
Diameter of connecting rod pins "b"	Class A - Red	50.799 ÷ 50.805
	Class B - Blue	50.793 ÷ 50.799
	Class C - Yellow	50.787 ÷ 50.793
	Undersize 0.127	
Length of centre bearing journal "c"		26.575 ÷ 26.625
Maximum taper of main and connecting rod journals		0.0045
Maximum error of concentricity between main journals and connecting rod journals		0.003

Main half bearings

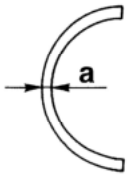

Unit: mm

Thickness of main half bearings "a"	Class A - Red	1.836 ÷ 1.840
	Class B - Blue	1.839 ÷ 1.843
	Class C - Yellow	1.842 ÷ 1.846
	Undersize 0.127	
Operating clearance between main journals and half bearings		0.025 ÷ 0.052

Counter-rotating shafts

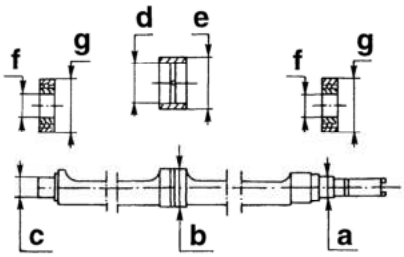

Unit: mm

Diameter of counter-rotating shaft pins	Front "a"	19.980 ÷ 19.993
	Centre "b"	36.945 ÷ 36.960
	Rear "c"	19.990 ÷ 20.010
Diameter of centre bushes	Inside "d"	37.020 ÷ 37.040
	Outside "e"	40.065 ÷ 40.090
Diameter of ball bearings	Inside "f"	19.990 ÷ 20.000
	Outside "g"	46.989 ÷ 47.000
Interference between centre bushes and their seats on crankcase		0.056 ÷ 0.111
Radial clearance between bushes and centre journals		0.060 ÷ 0.095
Clearance / Interference between ball bearings and their seats on crankcase		+0.011 ÷ -0.025
Clearance / Interference between ball bearings and counter-rotating shaft pins	Front	+0.020 ÷ -0.003
	Rear	+ 0.010 ÷ -0.020

Alfawiki.nl

ENGINE TECHNICAL DATA

TECHNICAL DATA

Engine		AR 16201		AR 32301
Cycle		Eight		
Fuel supply / Ignition		Multi-Point Motronic M 2.10.3	Multi-Point Motronic M 2.10.4	Multi-Point Motronic M 1.5.5
Order of ignition		1 - 3 - 4 - 2		
Engine size	cm^3	1970		
Number of cylinders		4 in line		
Bore	mm	83		
Stroke	mm	91		
Maximum power	CV CEE (kW CEE) rpm	150 (110) 6200		155 (114) 6400
Maximum torque	kgm CEE (Nm CEE) rpm	19 (186) 4000		19.1 (187) 3500
Compression ratio		10 : 1		
Engine oil pressure - Idling - At 4000 rpm	bar	≥ 1.5 ≥ 4.5		≥ 1.5 ≥ 4.5
Idling	rpm	800 ± 50	840 ± 50	850 ± 30

COMPLETE CRANK CASE

Crankcase

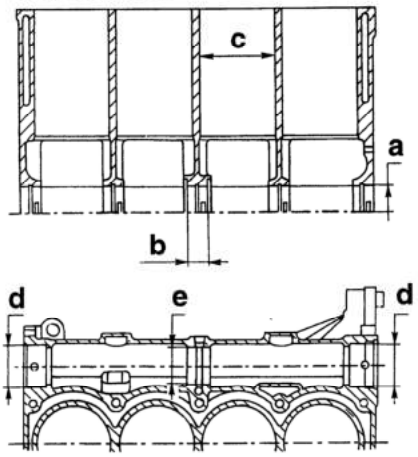

Unit: mm

Main bearing diameter "a"		56.705 ÷ 56.718
Central main bearing shoulder length "b"		21.720 ÷ 21.800
Cylinder diameter "c"	Class A - Blue	83.000 ÷ 83.010
	Class B - Pink	83.010 ÷ 83.020
	Class C - Green	83.020 ÷ 83.030
	Oversizing 0.1	
Counter rotation shaft support siameters	Front and rear "d"	46.975 ÷ 47.000
	Central "e"	39.979 ÷ 40.009

Oil pump

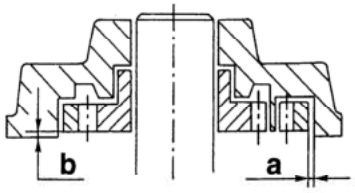

Clearance between pump casing housing and driven gear "a"		0.080 ÷ 0.186 mm
Clearance between pump cover contact surface and upper side of gear "b"		0.025 ÷ 0.070 mm
Engine oil pressure limiting valve spring	Control load	6.4 ÷ 7.2 kg
	Spring length	36 mm

Alfawiki.nl

Timing shafts

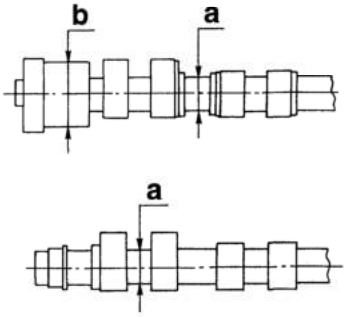

Unit: mm

Diameter of t iming shaft pin "a"		26.000 ÷ 26.015
Diameter of phase variator pin "b"		49.985 ÷ 50.000
Cam nominal lift	Intake	9.50
	Exhaust	9.50
Clearance between timing shaft pins and relevant seats		0.03 ÷ 0.07
Timing shaft axial clearance		0.10 ÷ 0.23

Phase variator half-bearings

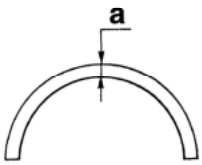

Unit: mm

Thickness of phase variator "a" half-bearings	2.992 ÷ 2.998
Clearance between phase variator and bearings	0.034 ÷ 0.086

TIMING ACTUAL DIAGRAM ANGLE (Obtained with control clearance 0.45 mm)

Intake	Opening (before T.D.C.)	"a"	-3° 22° (*)
	Closing (after B.D.C.)	"b"	51° 26° (*)
	Intake angle value	"c"	228°
Exhaust	Opening (before B.D.C.)	"d"	47°
	Closing (after T.D.C.)	"e"	4°
	Exhaust angle value	"f"	231°

(*): Value obtained with phase variator on.

Alfawiki.nl

Valve guides

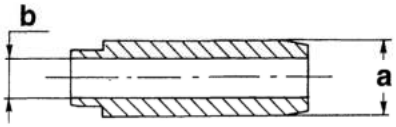

Unit: mm

Valve guide O.D. "a"	13.010 ÷ 13.030
	Oversizing 0.20
Valve guide I.D. (bore) "b"	7.022 ÷ 7.040
Interference between valve guides and their seats	0.033 ÷ 0.080

Valve seats

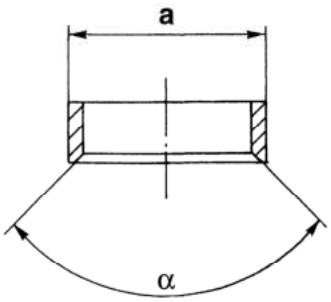

Unit: mm

Valve seat O.D. "a"	Intake	35.135 ÷ 35.150
	Exhaust	29.142 ÷ 29.157
Taper of band in contact with valve "α"		90° ± 10'
Interference between valve seats and the housings	Intake	0.091 ÷ 0.131
	Exhaust	0.100 ÷ 0.136
Cylinder head heating temperature to assemble valve seats		80 °C

Valves

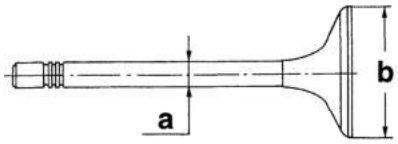

Unit: mm

Valve stem diameter "a"	Intake	6.975 ÷ 6.990
	Discharge	6.960 ÷ 6.975
Valve head diameter "b"	Intake	33.4 ÷ 33.7
	Discharge	27.9 ÷ 28.2
Radial clearance between valve stems and valve guides	Intake	0.032 ÷ 0.065
	Exhaust	0.047 ÷ 0.080

Valve springs

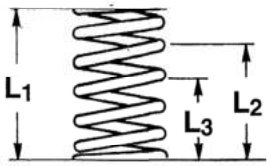

	External spring	Internal spring
Free length "L1"	46 mm	39 mm
Closed valve length "L2"	34 mm	29.5 mm
Load corresponding to "L2"	271 ÷ 294 N (27.6 ÷ 30 kg)	96 ÷ 106 N (9.8 ÷ 10.8 kg)
Open valve length "L3"	24.5 mm	20 mm
Load corresponding to "L3"	485 ÷ 524 N (49.4 ÷ 53.4 kg)	201 ÷ 221 N (20.5 ÷ 22.5 kg)

Hydraulic tappets

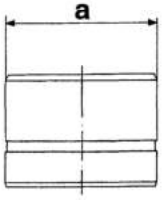

Unit: mm

Hydraulic tappet O.D. "a"	32.959 ÷ 32.975
Radial clearance between hydraulic tappets and their seats	0.025 ÷ 0.066

Alfawiki.nl

Connecting rod half bearings

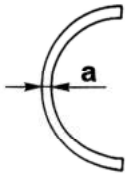

Unit: mm

Connecting rod half-bearings thickness "a"	Class A - Red	1.527 ÷ 1.531
	Class B - Blue	1.531 ÷ 1.535
	Class C - Yellow	1.535 ÷ 1.539
	Undersizing 0.127	
Clearance between connecting rod pinsand half-bearings	Class A - Red	0.026 ÷ 0.056
	Class B - Blue	
	Class C - Yellow	

Seal rings

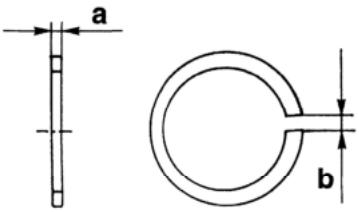

Unit: mm

Ring thickness "a"	First ring	1.470 ÷ 1.490
		Oversizing 0.1
	Second ring	1.475 ÷ 1.490
		Oversizing 0.1
	Oil scraper ring	2.975 ÷ 2.990
		Oversizing 0.1
Ring clearance "b" (1)	First ring	0.25 ÷ 0.50
	Second ring	0.30 ÷ 0.50
	Oil scraper ring	0.25 ÷ 0.50
Axial clearance between seal rings and their seats	First ring	0.030 ÷ 0.070
	Second ring	0.020 ÷ 0.055
	Oil scraper ring	0.020 ÷ 0.055

(1) To find in the control ring nut or in the cylinder.

Piston pins

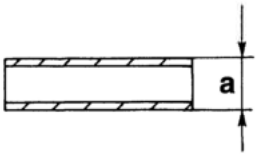

Unit: mm

Piston pin O.D. "a"	19.996 ÷ 20.000
Clearance between piston pins and their seats on the pistons	0.002 ÷ 0.011

CYLINDER HEAD

Head

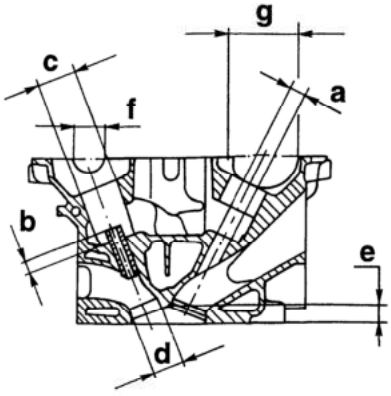

Unit: mm

Valve guide seat diameter "a"		12.950 ÷ 12.977
Valve guide protrusion "b"		11.25 ÷ 11.75
Valve tappet seat diameter "c"		33.000 ÷ 33.025
Valve seat diameter "d"	Intake	35.019 ÷ 35.044
	Exhaust	29.021 ÷ 29.042
Combustion chamber minimum depth "e"		13 ± 0.2
Maximum flatness error on head bottom face		0.1
Timing shafts support diameter "f"		26.045 ÷ 26.070
Phase variator support diameter "g"		55.990 ÷ 56.015

Alfawiki.nl

Engine flywheel

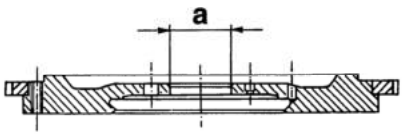

Centre bush I.D. (bore) "a"	47.010 ÷ 47.035 mm
Crown wheel heating temperature for assembly on engine flywheel	80° ÷ 100°C

CONNECTING ROD-PISTON ASSEMBLY

Piston

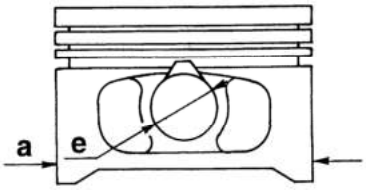

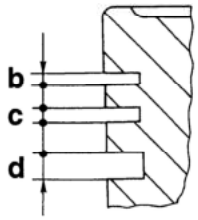

Unit: mm

Piston diameter "a" (1)	Class A - Blue	81.952 ÷ 81.962
	Class B - Pink	81.960 ÷ 81.970
	Class C - Green	81.968 ÷ 81.978
	Oversizing 0.1	
First seal ring seat height "b"		1.520 ÷ 1.540
Secong seal ring seat height "c"		1.510 ÷ 1.530
Oil scraper ring seat height "d"		3.010 ÷ 3.030
Pison pin holes diameter in pistons "e"		20.002 ÷ 20.007
Clearance between cylinders and pistons		0.038 ÷ 0.062
Weight difference between pistons		± 5 g

(1) To be obtained perpendicularly at the piston pin hole, at a distance of 12.5 mm from the skirt lower edge.

Connecting rods

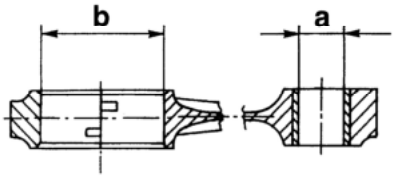

Unit: mm

Diameter of bushing hole on connecting rod small end "a"	20.006 ÷ 20.012
Connecting rod head I.D. "b"	53.897 ÷ 53.909
Weight difference between connecting rods	≤ 5 g
Clearance between piston pins and connecting rod small end bushings	0.006 ÷ 0.016
Connecting rod small end axial clearance	0.25 ÷ 0.6

Alfawiki.nl

Crankshaft

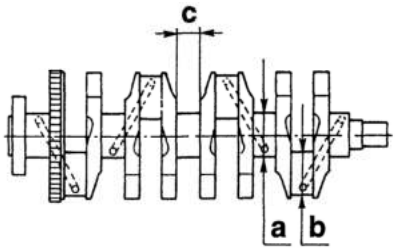

Unit: mm

Crank pin diameter "a"	Class A - Red	52.994 ÷ 53.000
	Class B - Blue	52.988 ÷ 52.994
	Class C - Yellow	52.982 ÷ 52.988
	Undersizing 0.127	
Connecting rod pin diameter "b"	Class A - Red	50.799 ÷ 50.805
	Class B - Blue	50.793 ÷ 50.799
	Class C - Yellow	50.787 ÷ 50.793
	Undersizing 0.127	
Central crank pin diameter "c"		26.575 ÷ 26.625
		Oversizing 0.254
Maximum taper of crank pin and connecting rod pins		0.0045
Maximum taper error between crank and connecting rod pins		0.03

Main half bearings

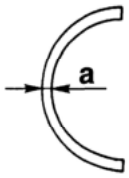

Unit: mm

Side main half bearing thickness "a"	Class A - Red	1.831 ÷ 1.837
	Class B - Blue	1.836 ÷ 1.844
	Class C - Yellow	1.843 ÷ 1.849
	Undersizing 0.127	
Centre main half bearing thickness "a"	Class A - Red	1.826 ÷ 1.832
	Class B - Blue	1.831 ÷ 1.839
	Class C - Yellow	1.838 ÷ 1.844
	Undersizing 0.127	
Clearance between pins pins and main half bearings	Lateral	0.019 ÷ 0.062
	Central	0.029 ÷ 0.072

Thrust half rings

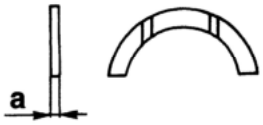

Unit: mm

Thrust half ring thickness "a"	2.342 ÷ 2.358
	Oversizing 0.127
Crankshaft axial clearance	0.059 ÷ 0.221

Alfawiki.nl

ENGINE TECHNICAL FEATURES

CHARACTERISTIC DATA

Engine		AR 32201
Cycle		Otto, four stroke
Injection / Ignition		Multi-Point Motronic M 1.5.5
Firing order		1 - 3 - 4 - 2
Capacity	cm^3	1747
Number of cylinders		4 in line
Bore	mm	82
Stroke	mm	82.7
Maximum power	CV CEE (kW CEE) rpm	144 (106) 6500
Maximum torque	kgm CEE (Nm CEE) rpm	17.2 (169) 3500
Compression ratio		10.3 : 1
Engine oil pressure - Idling ratio - at 4000 rpm	bar	≥ 1.5 ≥ 4.5
Idling ratio	rpm	850 ± 30

COMPLETE CRANKCASE

Crankcase

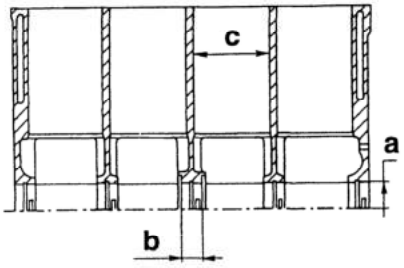

Unit: mm

Main journal diameter "a"		56.705 ÷ 56.718
Central main journal shoulder length "b"		21.720 ÷ 21.800
Cylinder diameter "c"	Class A	82.000 ÷ 82.010
	Class B	82.010 ÷ 82.020
	Class C	82.020 ÷ 82.030
	Oversized by 0.1	

Oil pump

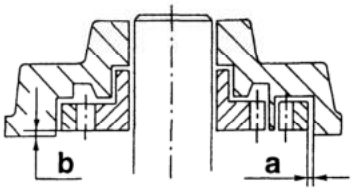

Pump casing - driven gear play "a"		0.080 ÷ 0.186 mm
Pump cover surface - upper gear side play "b"		0.025 ÷ 0.070 mm
Engine oil pressure limiting valve spring	Check load	6.4 ÷ 7.2 kg
	Spring length	36 mm

Alfawiki.nl

JACKING POINTS

With arm hoist or shop jack.

- Position the arms or the jack in the areas shown.

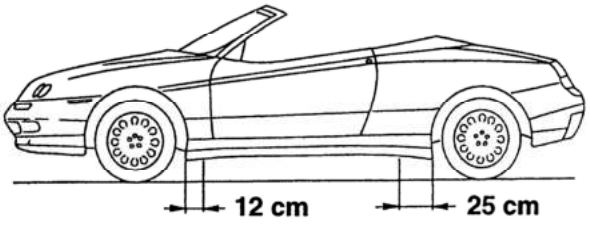

IMPORTANT:
Be very careful when positioning the arms or the jack in the front jacking points to avoid squeezing the brake and fuel lines.

TOWING POINTS

The vehicle is equipped with two threaded attachments - one at the front and the other at the back - where to screw the tow hitch which is provided in the tool bag (in the boot).

Attain scrupulously to the laws regulating towing.

IMPORTANT:
Before towing the vehicle, turn the key to MAR and back to STOP without removing it to prevent the steering wheel from locking.

Consider that while towing, the brake booster system is not running. Consequently, more effort on the brake pedal will be required.

Furthermore, when the engine is not running, the power steering system is neither working. Consequently, more effort on the steering wheel is required.

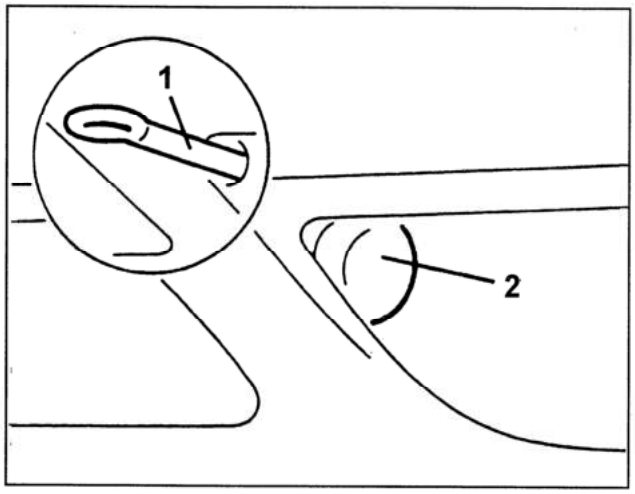

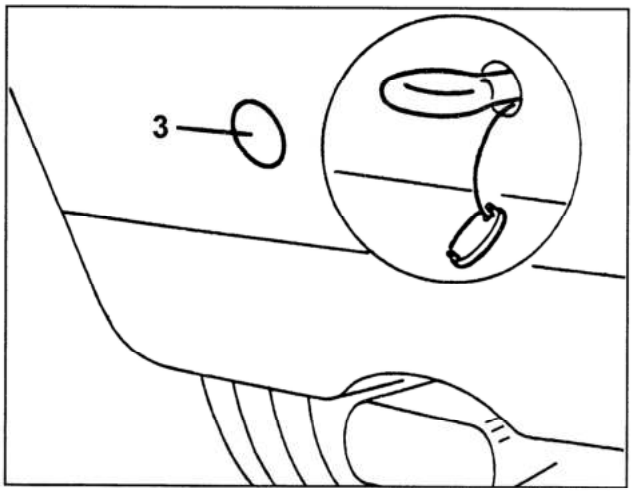

1. Front tow hitch
2. Front bumper slot
3. Rear bumper cover

FLUIDS AND LUBRICANTS (Continued)

Type	Assembl ref.	Application	Classification	Name
GREASE	41 - Steering	Roller bushing seat on steering column	-	SPCA SPAGRAPH ISECO ERGON RUBBER GREASE REINACH SFERUL B2 AR
	44 - Suspensions and wheels	Wishbone brackets	-	GREASE MOLYKOTE 7544 PG54 TUTELA MR3
		Side steering linkage	-	MOLYGUARD SYL 113

INDICATIVE CAPACITIES

Capacit \ Version		916S3	916S2	916C3	916C2	916S1
Fuel tan		70 litres				
Fuel reserve		~ 9 litres				
Engine oil	Total capacity: sump + filter + pipes	5.0 litres				6.8 litres
	Sump + filter (for regular replacement)	4.4 litres				6.0 litres
Gearbox-differential oil		2 litres				
Power steering system oil		1.3 kg				
Brake and clutch circuit oil		0.4 kg				
Engine coolant		8.4 litres				11.7 litres
Climate control compressor oil		290 ± 30 cm^3 (1)				240 ± 15 cm^3
Climate control system fluid		0.650 kg + 0.05 kg (2)/[0.550 kg + 0.05 kg (2)] (3)				

(1): For component replacement:
- the compressor is provided with 160 ± 20 cm^3 of oil
- the drier filter is provided with 130 ± 10 cm^3 of oil.

(2): Additional amount to be computed considering the fluid which remains the recharge device lines.

(3): From June '99

Alfawiki.nl

FLUIDS AND LUBRICANTS

Type	Assembl ref.	Application		Classification	Name
OIL	10 - Engine	Engine (filling)		API SJ CCMCG5 ACEA A3-96 SAE 10W/40	SELENIA 20 K (*)
	21 - Gearbox	Gearbox-differential (filling)		API GL-5	TUTELA ZC 75 SYNTH
	50 - Add. units	Compressor (filling)	4 cyl.	-	NIPPONDENSO ND-9
			6 cyl.	-	SANDEN SP 10 "PAG"
FLUID	10 - Engine	Cooling circuit (filling)		-	ALFA ROMEO CLIMAFLUID SUPER PERMANENT -40°C
	18 - Clutch 33 - Brakes	Hydraulic brake-clutch circuit (filling)		DOT 4 SAE J 1703 F	ALFA ROMEO BRAKE FLUID SUPER DOT 4
	41 - Steering	Power steering (filling)		G.M. DEXRON II	TUTELA GI/A
	50 - Additional units	Climate control system (filling)		-	RIVOIRA: SUVA R134a HOECHST - TAZZETTI: FRIGEN R134a ICI - TAZZETTI: KLEA R134a
GREASE	18 - Clutch	Clutch thrust bearing and lever		-	TUTELA MR3
		Clutch cylinder strut			
	21 - Gearbox	Gear engage rod and ball lever bushings		-	TUTELA ZETA 2 ISECO MOLYKOTE LONGTERM N. 2
	27 - Front axle	Drive shaft CV joints		-	OPTIMOL PU 035 BERUTOX GKN HTB
	33 - Brakes	Pedal board joints and bushing		-	TUTELA ZETA 2
		ABS inductive sensor seats			

(*): For sportier use, we recommend **SELENIA Racing 10W/60** fully synthetic engine oil.

Alfawiki.nl

WHEELS AND TYRES

VEHICLE	RIM - TYRE DIMENSIONS	PRESSURE (bar)	
		FRONT	REAR
916S3	Not available at time of going to press		
916S2	6J x 15" (steel) - 195/60 ZR15"	2.3	2.1
	6.5J x 16" (alloy) - 205/50 ZR16"	2.7	2.5
916C3	Not available at time of going to press		
916C2	6J x 15" (steel) - 195/60 ZR15"	2.3	2.1
	6.5J x 16" (alloy) - 205/50 ZR16"	2.7	2.5
916S1	6.5J x 16" (alloy) - 205/50 ZR16"	2.7	2.5
ALL	SPACE SAVER SPARE WHEEL 4J x 15" (steel) - T125/80 R15 96M	4.2	

Snow chain tyres: snow chains can only be used with 195/55 ZR15" tyres (6J x 15" rims only) or 205/45 ZR16" tyres (with 6.5J x 16" rims).

IMPORTANT: Increase pressure by 0.3 bar in the event of constant driving at top speed.

WHEELS AND TYRES ('98 models)

VEHICLE		RIM - TYRE DIMENSIONS	PRESSURE (bar)	
			FRONT	REAR
916S3 - 916S2		6J x 15" (steel) - 195/60 R15 88W	2.3	2.1
		6.5J x 16" (alloy) - 205/50 R16 87Y	2.7	2.5
916C3	standard	6J x 15" (steel) - 195/60 R15 88W	2.3	2.1
	optional	6.5J x 16" (alloy) - 205/50 R16 87Y	2.7	2.5
		7.5J x 17" (alloy) - 225/45 ZR17 91Y		
916C2	standard	6J x 15" (steel) - 195/60 R15 88W	2.3	2.1
		6.5 x 16" (alloy) - 205/50 R16 87Y	2.7	2.5
	optional	7.5J x 17" (alloy) - 225/45 ZR17 91Y		
916S1		6.5J x 16" (alloy) - 205/50 ZR16"	2.7	2.5
ALL		SPACE SAVER SPARE WHEEL 4J x 15" - T125/80 R15 96M	4.2	

IMPORTANT: Increase pressure by 0.3 bar in the event of constant driving at top speed.

IMPORTANT: Snow chains cannot be fitted on 225/45 ZR17 91Y tyres.

DIMENSIONS
Gtv versions

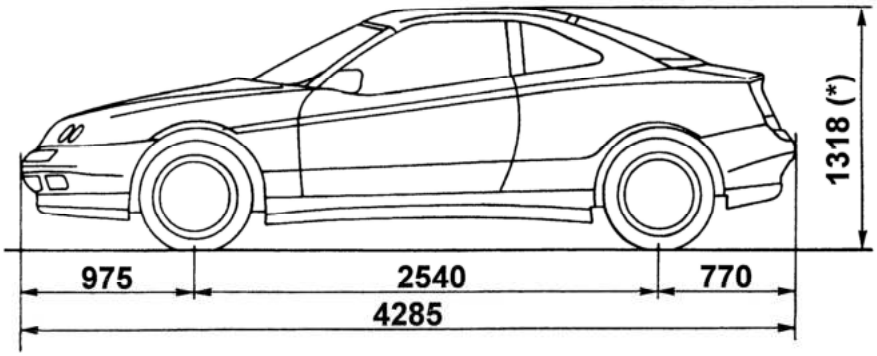

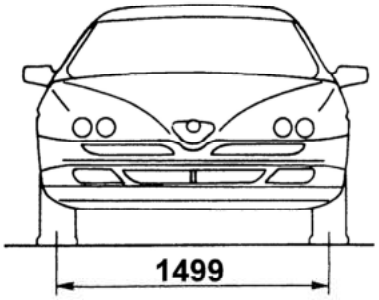

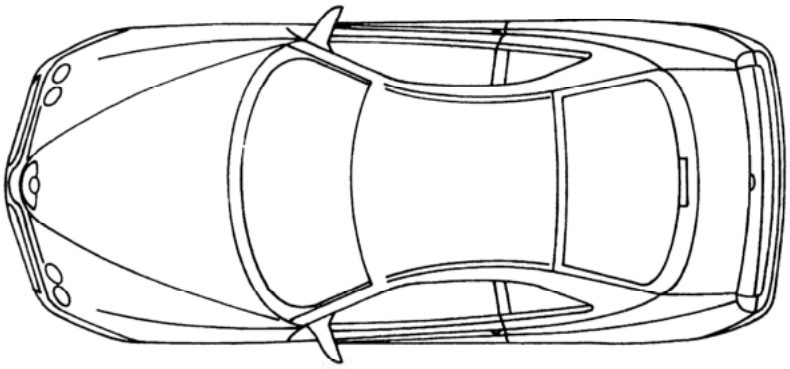

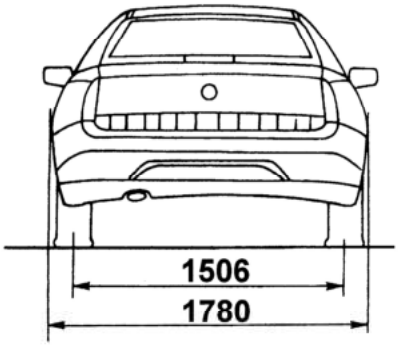

(*): Unladen vehicle

WEIGHTS AND LOADS

Unit: kg

Features \ Versions		916S3	916S2	916C3	916C2	916S1
Kerb weight (without driver)		1350	1370	1350	1370	1420
Maximum admitted load		1610	1630	1760	1780	1680
Load		260	260	410	410	260
Maximum weight allowed on each axle	front	974	974	974	974	1000
	rear	800	800	870	870	800
Towable weight	trailer with brakes	1000	1000	1000	1000	1000
	trailer without brakes	500	500	500	500	500
Maximum load on tow hitch		50	50	50	50	50

IDENTIFICATION DATA PLATE

The plate is applied in the engine compartment on the upper left-hand shock absorber bracket. It contains the following data:

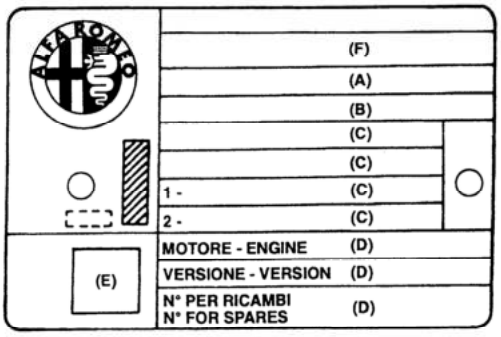

A. National homologation
B. Chassis number punch mark
C. Maximum authorised weights prescribed by national laws, where relevant
D. Version identification (e.g. 916S2) Version identification
E. Smokiness
F. Manufacturer's name punch mark

PAINTWORK IDENTIFICATION PLATE

This plate is applied on the inside of the boot and contains the following data:

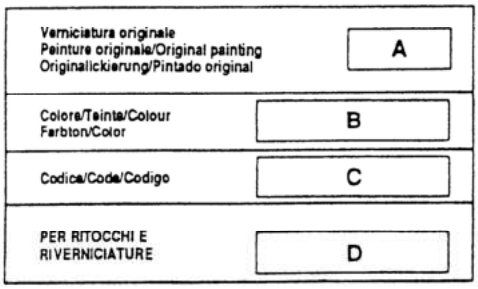

A. Paint manufacturer
B. Colour name
C. Colour code
D. Touch-up and re-spray code

DIMENSIONS
Spider versions

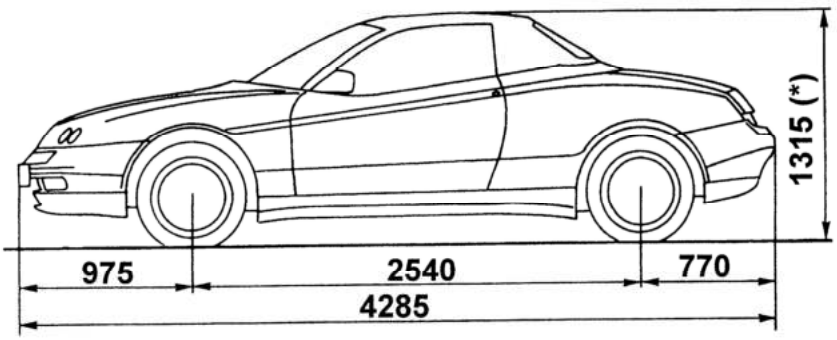

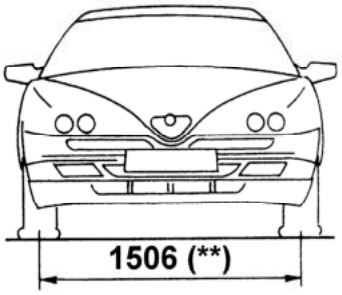

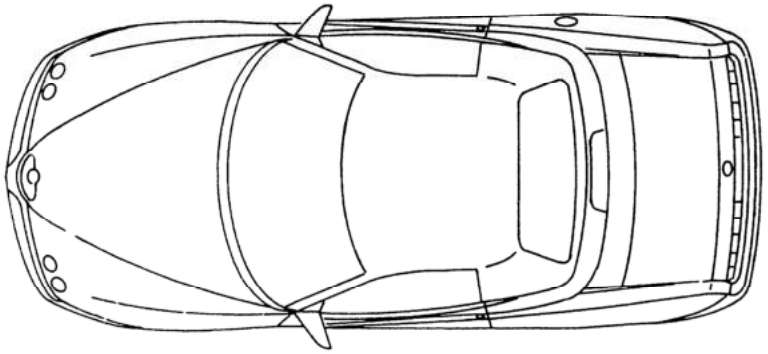

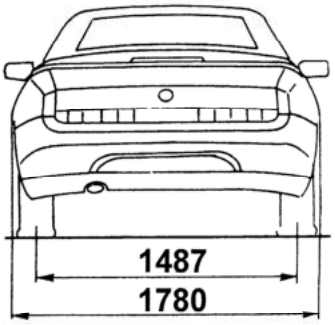

(*): Unladen vehicle (**): With alloy rims

Alfawiki.nl

MODEL IDENTIFICATION

Brand name	Spider 1.8 T. Spark	Spider 2.0 T. Spark	GTV 1.8 T. Spark	GTV 2.0 T. Spark	Spider 3.0 V6
Version	Spider	Spider	Coupé	Coupé	Spider
Version (on identification plate)	916S3	916S2	916C3	916C2	916S1
Chassis (in engine compartment, on upper right-hand shock absorber bracket)	-	-	-	-	-
Progressive chassis number	6000001	6000001	6000001	6000001	6000001
Engine (code)	AR 32201	AR 16201 AR 32301	AR 32201	AR 16201 AR 32301	AR 16101
Engine symbol	1747 T. SPARK 16V	1970 T. SPARK 16V	1747 T. SPARK 16V	1970 T. SPARK 16V	2959 V6
Gearbox (code)	C.510.5.21.17	C.510.5.21.17	C.510.5.21.17	C.510.5.21.17	C.503.5.29.22 C.530.5.XX.YY▲

▲: For MY98 versions

IDENTIFICATION PLATE LOCATION

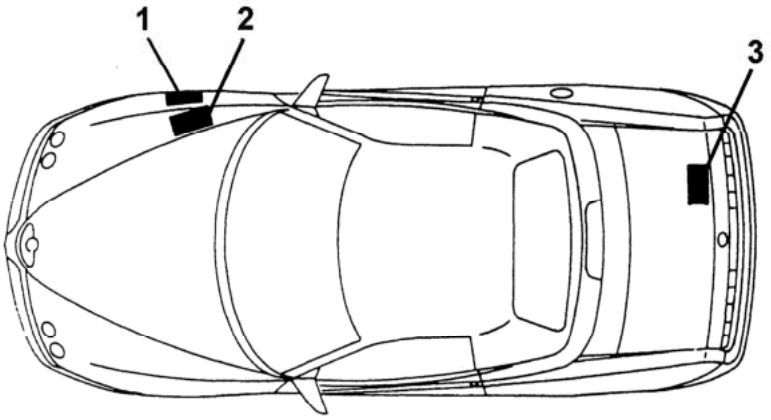

T. Spark 16V engines

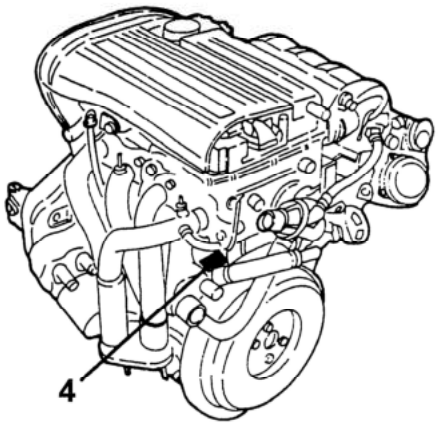

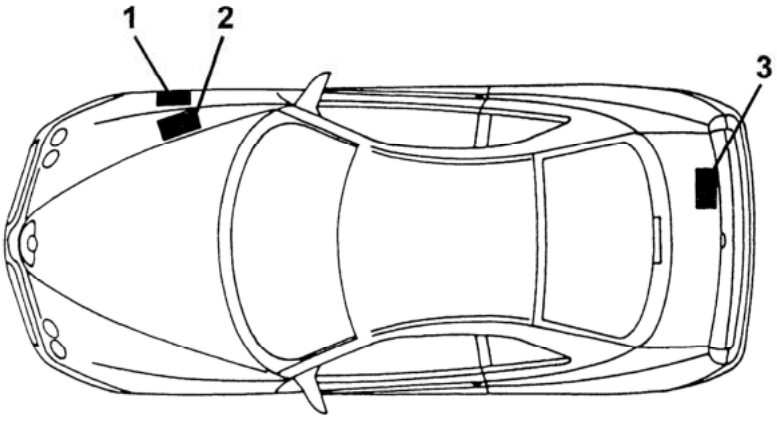

3.0 V6 12V engine

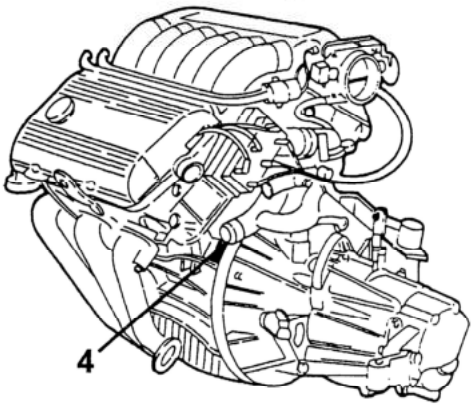

1. Identification data plate
2. Chassis marking
3. Paintwork identification plate
4. Engine marking

INDEX

VEHICLE

- Model identification 1
- Identification plate location 1
- Identification data plate 2
- Bodywork paint identification plate 2
- Dimensions (Spider versions) 2
- Dimensions (GTV versions) 3
- Weights and loads 3
- Wheels and tyres 4
- Fluids and lubricates 5
- Indicative capacities 6
- Vehicle jacking points 7
- Vehicle towing points 7

1747 T. SPARK 16V **ENGINE**

- Technical features 7/1

1970 T. SPARK 16V **ENGINE**

- Technical features 8

2959 V6 **ENGINE**

- Technical features 14

ENGINE SUPPLY - COOLING

- Fuel feed 20
- Air feed 20
- Sensors 20
- Cooling system 21

MECHANICAL GROUPS

- Clutch 22
- Gearbox 22
- Brakes 23
- Front suspensions 24
- Rear suspensions 24
- Wheel trim and characteristic angles 24
- Steering 24

ELECTRICAL SYSTEM

- Ignition 25
- Starting 25
- Recharging 25

HEATING-VENTILATION

- Minimum pressure switch calibration 26
- Three-level (Trinary) pressure switch calibration 26
- Four-level pressure switch calibration 26
- Expansion valve 26
- Compressor (1970 cc) 27
- Compressor (2959 cc) 27

TIGHTENING TORQUES 28

SPECIFIC TOOLS 36

MAINTENANCE

- Maintenance operations 45
- 1970 cc engine maintenance 47
- 2959 cc engine maintenance 53
- Mechanical assembly maintenance 63

FOR INFORMATION ON 1747 T. SPARK 16V ENGINES NOT INCLUDED HERE, REFER TO 1970 T. SPARK 16V ENGINES

Warnings for the operator

All the operations must be carried out with the greatest care to prevent damage occurring to the vehicle or persons.

- The use of Alfa Romeo specific tools are indicated for some procedures. These tools must be used to ensure safety and to avoid damaging parts involved in the procedure.
- To free parts which are solidly stuck together, tap with an aluminium or lead mallet if the parts are of metal. Use a wooden or resin mallet for light alloy parts.
- When dismantling ensure parts are marked correctly if required.
- When refitting lubricate the parts, if necessary, to prevent seizing and binding during the initial period of operation.
- Using adhesive paper or clean rags cover those parts of the engine which, following disassembly, present openings which may allow dust or foreign material to enter.
- When refitting, the tightening torques and adjustment data must be respected.
- When substituting the main component(s) the seal rings, oil seals, flexible washers, safety plates, self-locking nuts and all worn parts must also be replaced.
- Avoid marking the internal coverings in the passenger compartment.

Substitution of groups or disconnected parts must be carried out using original spare parts only. Only in this way can the suitability and perfect operation of each organ be guaranteed.

- The words **CAUTION** and **WARNING** accompany those procedures where particular care should be taken to prevent damage occurring to people or vehicle parts.

CAUTION:
used when insufficient care could cause damage to people

WARNING:
used when insufficient care could cause damage to the vehicle or its component parts.

- The safety regulations applied to workshops should be respected. Where necessary the manual also lists the specific precautions to be taken to prevent dangerous situations from arising.

When using chemical products follow the safety indications given on the safety cards which the supplier is obliged to deliver to the user (in Italy in compliance with D.M. n.46/1992).

NOTE:
It is possible that for certain subjects were not completed in time for printing.
However these subjects are given and highlighted in the indices of the single groups.
It is the duty of the Technical Services to supply documentation regarding these subjects as soon as possible through updates or "Technical Bulletins".

Alfawiki.nl

Symbology

A specific symbology has been used in this manual to permit a rapid identification of the main technical information supplied.

The list of symbols is given below.

- removal/disassembly
- refitting/re-assembly
- tighten to the torque
- caulk nut
- adjustment/regulation
- visual check
- lubricate
- weight difference
- angular value
- pressure
- temperature
- brake system air purge
- surfaces to be treated
- interference
- play
- intake
- exhaust
- Lubricate only with engine oil
- left-hand thread
- torque for tightening in oil
- engine r.p.m.
- ovalization
- taper
- eccentricity
- flatness
- diameter
- linear dimension
- parallelism
- service with grease
- heating temperature
- seal
- service with engine oil
- grease
- CAUTION!
- WARNING!

Alfawiki.nl

INTRODUCTION

The "Spider-Gtv - Repair Instructions" Manual is composed of three volumes as follows:

Volume I - Technical Data;
- Engines;
- Mechanical Groups.

Volume II - Heating-Ventilation;
- Bodywork.

Volume III - Electric system;
- Electrical system diagnosis.

For overhauling engines and mechanical groups refere to the following manuals:

- PA493600000000 REPAIR INSTRUCTIONS - ENGINE OVERHAUL.
- PA494200000000 REPAIR INSTRUCTIONS - OVERHAULING MECHANICAL GROUPS.

In order to facilitate consultation, the structure of the manual mirrors the functional groups already defined for the "Repair Flat-rate Manual" in use by Alfa Romeo Authorized Service Network.

The characteristic data and the tables for vehicles identification are contained in the "Technical Data" at the beginning of Volume I.

The "Model identification" tables should be consulted before carrying out repair work in order to identify the model of the vehicle, the engine size and the groups which form the vehicle.

How to use this manual

The aim of this manual is to supply the Alfa Romeo Service Personnel with a tool enabling them to rapidly identify faults and to render the corrective interventions precise and efficient.

The manual shows the procedures relative to the removal and refitting and dismontling operations and the checks relative to the various groups forming the vehicle.

The procedures are illustrated in detail as are the procedures for using the tools. An appropriate symbology and explanatory texts next to the fundamental technical drawings make a complete and rapid consultation of the manual possible.

The procedures illustrate complete component disassembly procedures and should only be carried out in their entirety when absolutely unavoidable. The procedures for "assembly" and "refitting" are normally obtained by reversing the procedure followed for disassembly or removal in reverse and only the reassembly procedures which are significantly different are illustrated.

For information relative to the electrical systems onboard the vehicle refer to section 55 "ELECTRIC SYSTEM" and to the successive 55 "ELECTRIC SYSTEM DIAGNOSIS" which gives the wiring diagrams and the description of each function, the connector tables, the location of the components, the tables for fault diagnosis and the technical data for checking the components.

All the information contained in this manual is updaded at the time of publication.

Alfa Romeo reserves the right to make any modifications to its products that it deems necessary without warning. However the technical information and updates to this manual will be supplied as soon as possible.

Alfawiki.nl

UPDATE CARD

Spider
Gtv

RIGHT-HAND DRIVE VERSION

REPAIR INSTRUCTIONS

UPDATE CARD				
UPDATE (DATE)	MODEL	SECTION	PAGE	
			SUBST.	ADDED
2 (10/1997)	Spider-Gtv R.H. DRIVE	00	1	
2 (10/1997)	Spider-Gtv R.H. DRIVE	00	3 to 4	
1 (4/1997)	Spider-Gtv R.H. DRIVE	55	2 to 3	
2 (10/1997)	Spider-Gtv R.H. DRIVE	55	Index	
2 (10/1997)	Spider-Gtv R.H. DRIVE	55-2	2 to 3	
2 (10/1997)	Spider-Gtv R.H. DRIVE	55-3		1 to 5
1 (4/1997)	Spider-Gtv R.H. DRIVE	55-8	1 to 4	
1 (4/1997)	Spider-Gtv R.H. DRIVE	55-8		5 to 7
1 (4/1997)	Spider-Gtv R.H. DRIVE	55-14	1 to 2	
1 (4/1997)	Spider-Gtv R.H. DRIVE	55-14		2/1 to 2/2
1 (4/1997)	Spider-Gtv R.H. DRIVE	55-14	4	
1 (4/1997)	Spider-Gtv R.H. DRIVE	55-14		5
1 (4/1997)	Spider-Gtv R.H. DRIVE	55-19	1 to 4	
1 (4/1997)	Spider-Gtv R.H. DRIVE	55-19		5 to 7
1 (4/1997)	Spider-Gtv R.H. DRIVE	55-20	1 to 4	
1 (4/1997)	Spider-Gtv R.H. DRIVE	55-20		5 to 7
2 (10/1997)	Spider-Gtv R.H. DRIVE	55-26		1 to 6
1 (4/1997)	Spider-Gtv R.H. DRIVE	55-A1	2 to 4	
1 (4/1997)	Spider-Gtv R.H. DRIVE	55-A3	3 to 14	
2 (10/1997)	Spider-Gtv R.H. DRIVE	55-A3	15	
1 (10/1997)	Spider-Gtv R.H. DRIVE	55-A3	16 to 20	
2 (10/1997)	Spider-Gtv R.H. DRIVE	55-A3	21	
1 (10/1997)	Spider-Gtv R.H. DRIVE	55-A3	22 to 25	
1 (10/1997)	Spider-Gtv R.H. DRIVE	55-A3		26 to 36
2 (10/1997)	Spider-Gtv R.H. DRIVE	55-A3	37	
1 (10/1997)	Spider-Gtv R.H. DRIVE	55-A3		38
2 (10/1997)	Spider-Gtv R.H. DRIVE	55-A3	39 to 44	
2 (10/1997)	Spider-Gtv R.H. DRIVE	55-A3		45

Alfawiki.nl

UPDATE CARD

Spider Gtv

RIGHT-HAND DRIVE VERSION

REPAIR INSTRUCTIONS

UPDATE CARD				
UPDATE (DATE)	MODEL	SECTION	PAGE	
			SUBST.	ADDED
1 (4/1997)	Spider-Gtv R.H. DRIVE	55	2 to 3	
1 (4/1997)	Spider-Gtv R.H. DRIVE	55-8	1 to 4	
1 (4/1997)	Spider-Gtv R.H. DRIVE	55-8		5 to 7
1 (4/1997)	Spider-Gtv R.H. DRIVE	55-14	1 to 2	
1 (4/1997)	Spider-Gtv R.H. DRIVE	55-14		2/1 to 2/2
1 (4/1997)	Spider-Gtv R.H. DRIVE	55-14	4	
1 (4/1997)	Spider-Gtv R.H. DRIVE	55-14		5
1 (4/1997)	Spider-Gtv R.H. DRIVE	55-19	1 to 4	
1 (4/1997)	Spider-Gtv R.H. DRIVE	55-19		5 to 7
1 (4/1997)	Spider-Gtv R.H. DRIVE	55-20	1 to 4	
1 (4/1997)	Spider-Gtv R.H. DRIVE	55-20		5 to 7
1 (4/1997)	Spider-Gtv R.H. DRIVE	55-A1	2 to 4	
1 (4/1997)	Spider-Gtv R.H. DRIVE	55-A3	3 to 25	
1 (4/1997)	Spider-Gtv R.H. DRIVE	55-A3		26 to 44

Alfawiki.nl

UPDATE CARD

Spider - Gtv

VOLUME I

REPAIR INSTRUCTIONS

UPDATE CARD				
UPDATE (DATE)	MODEL	SECTION	PAGE	
			SUBST.	ADDED
6 (9/1996)	Spider-Gtv	-	Frontespice	
7 (4/1997)	Spider-Gtv	00	1	
6 (9/1996)	Spider-Gtv	00	4	
6 (9/1996)	Spider-Gtv	00	8	
6 (9/1996)	Spider-Gtv	00	19	
7 (4/1997)	Spider-Gtv	00	24	
6 (9/1996)	Spider-Gtv	00	26 to 27	
6 (9/1996)	Spider-Gtv	00	32	
3 (3/1995)	Spider-Gtv	00	33 to 34	
6 (9/1996)	Spider-Gtv	00	35	
6 (9/1996)	Spider-Gtv	00	39	
3 (3/1995)	Spider-Gtv	00	40	
6 (9/1996)	Spider-Gtv	00	43 to 45	
7 (4/1997)	Spider-Gtv	00	49	
6 (9/1996)	Spider-Gtv	00	55	
6 (9/1996)	Spider-Gtv	10 T.S.	Index	
6 (9/1996)	Spider-Gtv	10 T.S.		8/1 to 8/2
6 (9/1996)	Spider-Gtv	10 T.S.	16 to 18	
3 (3/1995)	Spider-Gtv	10 T.S.		18/1
6 (9/1996)	Spider-Gtv	10 T.S.	22	
6 (9/1996)	Spider-Gtv	10 T.S.		24/1 to 24/6
6 (9/1996)	Spider-Gtv	10 T.S.	31	
6 (9/1996)	Spider-Gtv	10 T.S.		36/1 to 36/2
3 (3/1995)	Spider-Gtv	10 T.S.		38/1 to 38/2
3 (3/1995)	Spider-Gtv	10 T.S.	44	
6 (9/1996)	Spider-Gtv	10 T.S.	45 to 46	
3 (3/1995)	Spider-Gtv	10 V6	Index	
3 (3/1995)	Spider-Gtv	10 V6	17	
3 (3/1995)	Spider-Gtv	10 V6	26	
3 (3/1995)	Spider-Gtv	10 V6		26/1 to 26/4
3 (3/1995)	Spider-Gtv	10 V6		39/ to 39/2
6 (9/1996)	Spider-Gtv	21	4	
6 (9/1996)	Spider-Gtv	21	10	
7 (4/1997)	Spider-Gtv	33	Index	
7 (4/1997)	Spider-Gtv	33	1	
7 (4/1997)	Spider-Gtv	33	3 to 4	
7 (4/1997)	Spider-Gtv	33		4/1 to 4/6
7 (4/1997)	Spider-Gtv	33	5	
6 (9/1996)	Spider-Gtv	33	9	
6 (9/1996)	Spider-Gtv	21	10	
7 (4/1997)	Spider-Gtv	41	2	
6 (9/1996)	Spider-Gtv	41	7	
6 (9/1996)	Spider-Gtv	44	5	
3 (3/1995)	Spider-Gtv	44	8	
6 (9/1996)	Spider-Gtv	44	9	
3 (3/1995)	Spider-Gtv	44	11 to 12	
3 (3/1995)	Spider-Gtv	44		12/1 to 12/3
3 (3/1995)	Spider-Gtv	44	18	
6 (9/1996)	Spider-Gtv	44	20	

UPDATE CARD				
UPDATE (DATE)	MODEL	SECTION	PAGE	
			SUBST.	ADDED
7 (4/1997)	Spider-Gtv	44	21	
6 (9/1996)	Spider-Gtv	44	22	
7 (4/1997)	Spider-Gtv	44	23	
3 (3/1995)	Gtv V6TB		Index	
3 (3/1995)	Gtv V6TB	00	1	
1 (3/1994)	Gtv V6TB	00		2 to 3
6 (9/1996)	Gtv V6TB	00	4	
3 (3/1995)	Gtv V6TB	00	5	
1 (3/1994)	Gtv V6TB	00		6 to 11
3 (3/1995)	Gtv V6TB	00	12	
3 (3/1995)	Gtv V6TB	00		12/1 to 12/2
1 (3/1994)	Gtv V6TB	00		13 to 14
7 (4/1997)	Gtv V6TB	00	15	
3 (3/1995)	Gtv V6TB	00		15/1
1 (3/1994)	Gtv V6TB	00		16
3 (3/1995)	Gtv V6TB	00	17 to 19	
3 (3/1995)	Gtv V6TB	00		19/1 to 19/2
1 (3/1994)	Gtv V6TB	00		20
3 (3/1995)	Gtv V6TB	00	21	
3 (3/1995)	Gtv V6TB	00		22 to 31
3 (3/1995)	Gtv V6TB	10	1 to 2	
3 (3/1995)	Gtv V6TB	10		3 to 60
3 (3/1995)	Gtv V6TB	21		1 to 7
3 (3/1995)	Gtv V6TB	44	1	
7 (4/1997)	Gtv V6TB	44	2	
3 (3/1995)	Gtv V6TB	44	3 to 4	
6 (9/1996)	Gtv 3.0V6			Index
6 (9/1996)	Gtv 3.0V6	00		1 to 14
7 (4/1997)	Gtv 3.0V6	00	15 to 16	
6 (9/1996)	Gtv 3.0V6	00		17 to 42
6 (9/1996)	Gtv 3.0V6	10		1 to 71
6 (9/1996)	Gtv 3.0V6	18		1 to 4
6 (9/1996)	Gtv 3.0V6	21		1 to 11
6 (9/1996)	Gtv 3.0V6	33		1 to 4
6 (9/1996)	Gtv 3.0V6	41		1 to 4
6 (9/1996)	Gtv 3.0V6	44		1 to 4

Alfawiki.nl

UPDATE CARD

Spider - Gtv

VOLUME I
REPAIR
INSTRUCTIONS

UPDATE CARD				
UPDATE (DATE)	MODEL	SECTION	PAGE	
			SUBST.	ADDED
6 (9/1996)	Spider-Gtv	-	Frontespice	
6 (9/1996)	Spider-Gtv	00	4	
6 (9/1996)	Spider-Gtv	00	8	
6 (9/1996)	Spider-Gtv	00	19	
6 (9/1996)	Spider-Gtv	00	24	
6 (9/1996)	Spider-Gtv	00	26 to 27	
6 (9/1996)	Spider-Gtv	00	32	
3 (3/1995)	Spider-Gtv	00	33 to 34	
6 (9/1996)	Spider-Gtv	00	35	
6 (9/1996)	Spider-Gtv	00	39	
3 (3/1995)	Spider-Gtv	00	40	
6 (9/1996)	Spider-Gtv	00	43 to 45	
6 (9/1996)	Spider-Gtv	00	55	
6 (9/1996)	Spider-Gtv	10 T.S.		
6 (9/1996)	Spider-Gtv	10 T.S.		8/1 to 8/2
6 (9/1996)	Spider-Gtv	10 T.S.	16 to 18	
3 (3/1995)	Spider-Gtv	10 T.S.		18/1
6 (9/1996)	Spider-Gtv	10 T.S.	22	
6 (9/1996)	Spider-Gtv	10 T.S.		24/1 to 24/6
6 (9/1996)	Spider-Gtv	10 T.S.	31	
6 (9/1996)	Spider-Gtv	10 T.S.		36/1 to 36/2
3 (3/1995)	Spider-Gtv	10 T.S.		38/1 to 38/2
3 (3/1995)	Spider-Gtv	10 T.S.	44	
6 (9/1996)	Spider-Gtv	10 T.S.	45 to 46	
3 (3/1995)	Spider-Gtv	10 V6		
3 (3/1995)	Spider-Gtv	10 V6	17	
3 (3/1995)	Spider-Gtv	10 V6	26	
3 (3/1995)	Spider-Gtv	10 V6		26/1 to 26/4
3 (3/1995)	Spider-Gtv	10 V6		39/ to 39/2
6 (9/1996)	Spider-Gtv	21	4	
6 (9/1996)	Spider-Gtv	21	10	
6 (9/1996)	Spider-Gtv	33		
6 (9/1996)	Spider-Gtv	33		4/1 to 4/2
6 (9/1996)	Spider-Gtv	33	5	
6 (9/1996)	Spider-Gtv	33	9	
6 (9/1996)	Spider-Gtv	21	10	
6 (9/1996)	Spider-Gtv	41	7	
6 (9/1996)	Spider-Gtv	44	5	
3 (3/1995)	Spider-Gtv	44	8	
6 (9/1996)	Spider-Gtv	44	9	
3 (3/1995)	Spider-Gtv	44	11 to 12	
3 (3/1995)	Spider-Gtv	44		12/1 to 12/3
3 (3/1995)	Spider-Gtv	44	18	
6 (9/1996)	Spider-Gtv	44	20 to 23	
3 (3/1995)	Gtv V6TB			
3 (3/1995)	Gtv V6TB	00	1	
1 (3/1994)	Gtv V6TB	00		2 to 3
6 (9/1996)	Gtv V6TB	00	4	

UPDATE CARD				
UPDATE (DATE)	MODEL	SECTION	PAGE	
			SUBST.	ADDED
3 (3/1995)	Gtv V6TB	00	5	
1 (3/1994)	Gtv V6TB	00		6 to 11
3 (3/1995)	Gtv V6TB	00	12	
3 (3/1995)	Gtv V6TB	00		12/1 to 12/2
1 (3/1994)	Gtv V6TB	00		13 to 14
6 (9/1996)	Gtv V6TB	00	15	
3 (3/1995)	Gtv V6TB	00		15/1
1 (3/1994)	Gtv V6TB	00		16
3 (3/1995)	Gtv V6TB	00	17 to 19	
3 (3/1995)	Gtv V6TB	00		19/1 to 19/2
1 (3/1994)	Gtv V6TB	00		20
3 (3/1995)	Gtv V6TB	00	21	
3 (3/1995)	Gtv V6TB	00		22 to 31
3 (3/1995)	Gtv V6TB	10	1 to 2	
3 (3/1995)	Gtv V6TB	10		3 to 60
3 (3/1995)	Gtv V6TB	21		1 to 7
3 (3/1995)	Gtv V6TB	44	1 to 4	
6 (9/1996)	Gtv 3.0V6			
6 (9/1996)	Gtv 3.0V6	00		1 to 42
6 (9/1996)	Gtv 3.0V6	10		1 to 71
6 (9/1996)	Gtv 3.0V6	18		1 to 4
6 (9/1996)	Gtv 3.0V6	21		1 to 11
6 (9/1996)	Gtv 3.0V6	33		1 to 4
6 (9/1996)	Gtv 3.0V6	41		1 to 4
6 (9/1996)	Gtv 3.0V6	44		1 to 4

Alfawiki.nl

Spider Gtv

VOLUME I

REPAIR INSTRUCTIONS

UPDATE CARD

UPDATE CARD				
UPDATE (DATE)	MODEL	SECTION	PAGE	
			SUBST.	ADDED
1 (12/1994)	Spider-Gtv	-	Frontespice	
3 (3/1995)	Spider-Gtv	00	8	
3 (3/1995)	Spider-Gtv	00	24	
3 (3/1995)	Spider-Gtv	00	33 to 34	
3 (3/1995)	Spider-Gtv	00	39 to 40	
3 (3/1995)	Spider-Gtv	00	43 to 44	
3 (3/1995)	Spider-Gtv	10 T.S.	Index	
3 (3/1995)	Spider-Gtv	10 T.S.		18/1
3 (3/1995)	Spider-Gtv	10 T.S.		38/1 to 38/2
3 (3/1995)	Spider-Gtv	10 T.S.	44	
3 (3/1995)	Spider-Gtv	10 V6	Index	
3 (3/1995)	Spider-Gtv	10 V6	17	
3 (3/1995)	Spider-Gtv	10 V6	26	
3 (3/1995)	Spider-Gtv	10 V6		26/1 to 26/4
3 (3/1995)	Spider-Gtv	10 V6		39/1 to 39/2
3 (3/1995)	Spider-Gtv	33	5	
3 (3/1995)	Spider-Gtv	44	8	
3 (3/1995)	Spider-Gtv	44	11 to 12	
3 (3/1995)	Spider-Gtv	44		12/1 to 12/3
3 (3/1995)	Spider-Gtv	44	18	
3 (3/1995)	Spider-Gtv	44	20 to 23	
3 (3/1995)	Gtv V6TB		Index	
3 (3/1995)	Gtv V6TB	00	1	
1 (3/1994)	Gtv V6TB	00		2 to 4
3 (3/1995)	Gtv V6TB	00	5	
1 (3/1994)	Gtv V6TB	00		6 to 11
3 (3/1995)	Gtv V6TB	00	12	
3 (3/1995)	Gtv V6TB	00		12/1 to 12/2
1 (3/1994)	Gtv V6TB	00		13 to 14
3 (3/1995)	Gtv V6TB	00	15	
3 (3/1995)	Gtv V6TB	00		15/1
1 (3/1994)	Gtv V6TB	00		16
3 (3/1995)	Gtv V6TB	00	17 to 19	
3 (3/1995)	Gtv V6TB	00		19/1 to 19/2
1 (3/1994)	Gtv V6TB	00		20
3 (3/1995)	Gtv V6TB	00	21	
3 (3/1995)	Gtv V6TB	00		22 to 31
3 (3/1995)	Gtv V6TB	10	1 to 2	
3 (3/1995)	Gtv V6TB	10		3 to 60
3 (3/1995)	Gtv V6TB	21		1 to 7
3 (3/1995)	Gtv V6TB	44	1 to 4	

Alfawiki.nl

UPDATE CARD

Spider Gtv

VOLUME I

REPAIR INSTRUCTIONS

UPDATE CARD				
UPDATE (DATE)	MODEL	SECTION	PAGE	
			SUBST.	ADDED
1 (12/1994)	Spider-Gtv	-	Frontespice	
1 (12/1994)	Gtv V6 TB	-		Index
1 (12/1994)	Gtv V6 TB	00		1 to 21
1 (12/1994)	Gtv V6 TB	10		1
1 (12/1994)	Gtv V6 TB	10		2
1 (12/1994)	Gtv V6 TB	44		1 to 4

Alfawiki.nl

UPDATE CARD

Spider - Gtv

VOLUME I
REPAIR
INSTRUCTIONS

UPDATE CARD				
UPDATE (DATE)	MODEL	SECTION	PAGE	
			SUBST.	ADDED
8 (3/1998)	Spider-Gtv	-	Frontespice	
8 (3/1998)	Spider-Gtv	00	Index	
8 (3/1998)	Spider-Gtv	00	1	
8 (3/1998)	Spider-Gtv	00	3 to 4	
8 (3/1998)	Spider-Gtv	00	6	
8 (3/1998)	Spider-Gtv	00		7/1 to 7/6
8 (3/1998)	Spider-Gtv	00	8	
6 (9/1996)	Spider-Gtv	00	19	
8 (3/1998)	Spider-Gtv	00	20	
7 (4/1997)	Spider-Gtv	00	24	
6 (9/1996)	Spider-Gtv	00	26 to 27	
8 (3/1998)	Spider-Gtv	00	28 to 30	
6 (9/1996)	Spider-Gtv	00	32	
3 (3/1995)	Spider-Gtv	00	33 to 34	
6 (9/1996)	Spider-Gtv	00	35	
8 (3/1998)	Spider-Gtv	00	36 to 37	
8 (3/1998)	Spider-Gtv	00	39	
3 (3/1995)	Spider-Gtv	00	40	
6 (9/1996)	Spider-Gtv	00	43 to 45	
7 (4/1997)	Spider-Gtv	00	49	
6 (9/1996)	Spider-Gtv	00	55	
8 (3/1998)	Spider-Gtv	10 T.S.	Index I	
8 (3/1998)	Spider-Gtv	10 T.S.		Index II
6 (9/1996)	Spider-Gtv	10 T.S.		8/1 to 8/2
6 (9/1996)	Spider-Gtv	10 T.S.	16 to 18	
3 (3/1995)	Spider-Gtv	10 T.S.		18/1
6 (9/1996)	Spider-Gtv	10 T.S.	22	
6 (9/1996)	Spider-Gtv	10 T.S.		24/1 to 24/6
6 (9/1996)	Spider-Gtv	10 T.S.	31	
6 (9/1996)	Spider-Gtv	10 T.S.		36/1 to 36/2
3 (3/1995)	Spider-Gtv	10 T.S.		38/1 to 38/2
3 (3/1995)	Spider-Gtv	10 T.S.	44	
6 (9/1996)	Spider-Gtv	10 T.S.	45 to 46	
8 (3/1998)	Spider-Gtv	10 T.S.		49 to 60
3 (3/1995)	Spider-Gtv	10 V6	Index I	
3 (3/1995)	Spider-Gtv	10 V6	17	
3 (3/1995)	Spider-Gtv	10 V6	26	
3 (3/1995)	Spider-Gtv	10 V6		26/1 to 26/4
3 (3/1995)	Spider-Gtv	10 V6		39/ to 39/2
6 (9/1996)	Spider-Gtv	21	4	
6 (9/1996)	Spider-Gtv	21	10	
7 (4/1997)	Spider-Gtv	33	Index	
7 (4/1997)	Spider-Gtv	33	1	
7 (4/1997)	Spider-Gtv	33	3 to 4	
7 (4/1997)	Spider-Gtv	33		4/1 to 4/6
7 (4/1997)	Spider-Gtv	33	5	
6 (9/1996)	Spider-Gtv	33	9	
6 (9/1996)	Spider-Gtv	21	10	
7 (4/1997)	Spider-Gtv	41	2	

UPDATE CARD				
UPDATE (DATE)	MODEL	SECTION	PAGE	
			SUBST.	ADDED
6 (9/1996)	Spider-Gtv	41	7	
6 (9/1996)	Spider-Gtv	44	5	
3 (3/1995)	Spider-Gtv	44	8	
6 (9/1996)	Spider-Gtv	44	9	
3 (3/1995)	Spider-Gtv	44	11 to 12	
3 (3/1995)	Spider-Gtv	44		12/1 to 12/3
3 (3/1995)	Spider-Gtv	44	18	
6 (9/1996)	Spider-Gtv	44	20	
7 (4/1997)	Spider-Gtv	44	21	
6 (9/1996)	Spider-Gtv	44	22	
7 (4/1997)	Spider-Gtv	44	23	
3 (3/1995)	Gtv V6TB		Index	
3 (3/1995)	Gtv V6TB	00	1	
1 (3/1994)	Gtv V6TB	00		2 to 3
6 (9/1996)	Gtv V6TB	00	4	
3 (3/1995)	Gtv V6TB	00	5	
1 (3/1994)	Gtv V6TB	00		6
8 (3/1998)	Gtv V6TB	00	7	
1 (3/1994)	Gtv V6TB	00		8 to 11
3 (3/1995)	Gtv V6TB	00	12	
3 (3/1995)	Gtv V6TB	00		12/1 to 12/2
8 (3/1998)	Gtv V6TB	00	13	
1 (3/1994)	Gtv V6TB	00		14
7 (4/1997)	Gtv V6TB	00	15	
3 (3/1995)	Gtv V6TB	00		15/1
1 (3/1994)	Gtv V6TB	00		16
3 (3/1995)	Gtv V6TB	00	17 to 19	
3 (3/1995)	Gtv V6TB	00		19/1 to 19/2
1 (3/1994)	Gtv V6TB	00		20
3 (3/1995)	Gtv V6TB	00	21	
3 (3/1995)	Gtv V6TB	00		22 to 31
3 (3/1995)	Gtv V6TB	10	1 to 2	
3 (3/1995)	Gtv V6TB	10		3 to 60
3 (3/1995)	Gtv V6TB	21		1 to 7
3 (3/1995)	Gtv V6TB	44	1	
7 (4/1997)	Gtv V6TB	44	2	
3 (3/1995)	Gtv V6TB	44	3 to 4	
6 (9/1996)	Gtv 3.0V6			Index
6 (9/1996)	Gtv 3.0V6	00		1 to 14
7 (4/1997)	Gtv 3.0V6	00	15 to 16	
6 (9/1996)	Gtv 3.0V6	00		17 to 42
6 (9/1996)	Gtv 3.0V6	10		1 to 71
6 (9/1996)	Gtv 3.0V6	18		1 to 4
6 (9/1996)	Gtv 3.0V6	21		1 to 11
6 (9/1996)	Gtv 3.0V6	33		1 to 4
6 (9/1996)	Gtv 3.0V6	41		1 to 4
6 (9/1996)	Gtv 3.0V6	44		1 to 4

Alfawiki.nl

VOLUME III

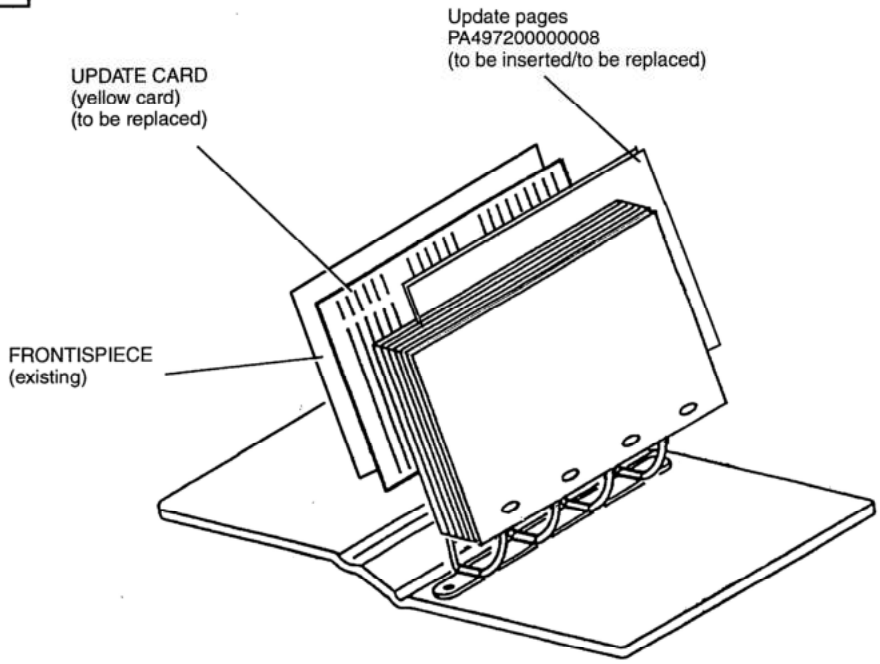

VOLUME III
SECTION II

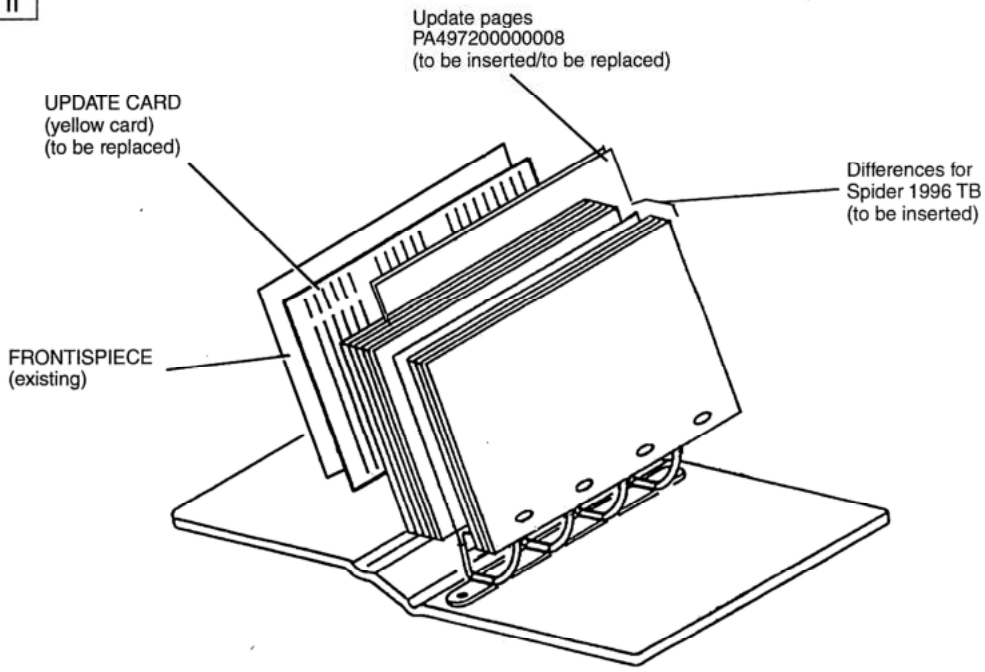

Alfawiki.nl

INSTRUCTIONS FOR INSERTING THE TECHNICAL DOCUMENTATION IN THE FOLDER

Spider
Gtv

REPAIR INSTRUCTIONS

For placing the documentation concerning update PA497200000008 in Volumes "Spider - Gtv - Repair Instructions ", you are recommended to follow the instructions given in the UPDATE CARD (yellow) concerning each volume.
The illustration below schematically shows the composition of the volume.

VOLUME I

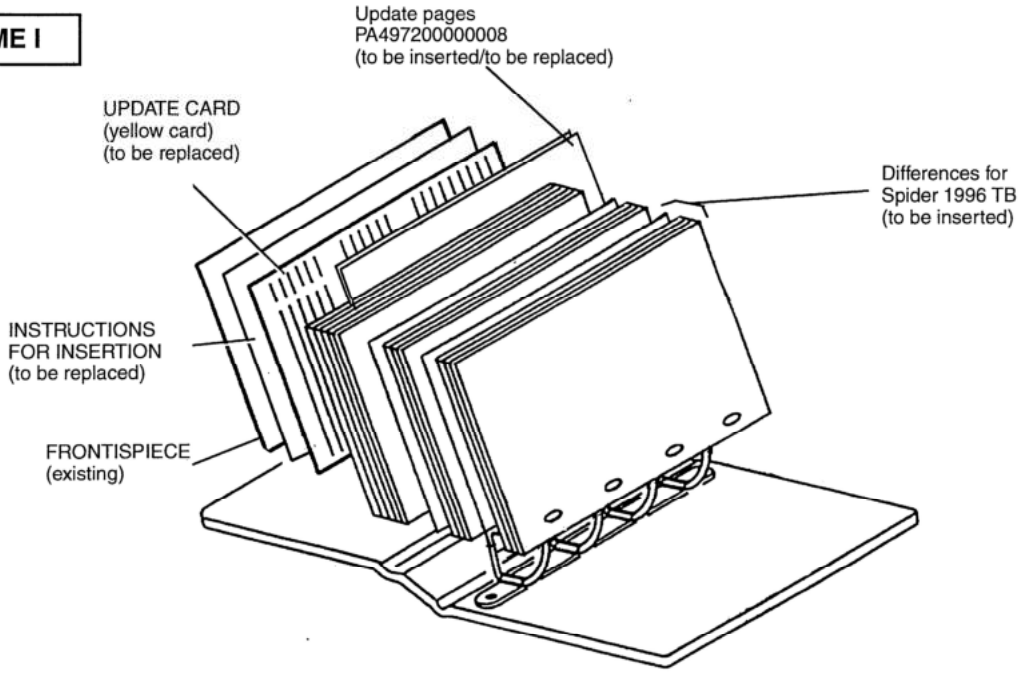

VOLUME II

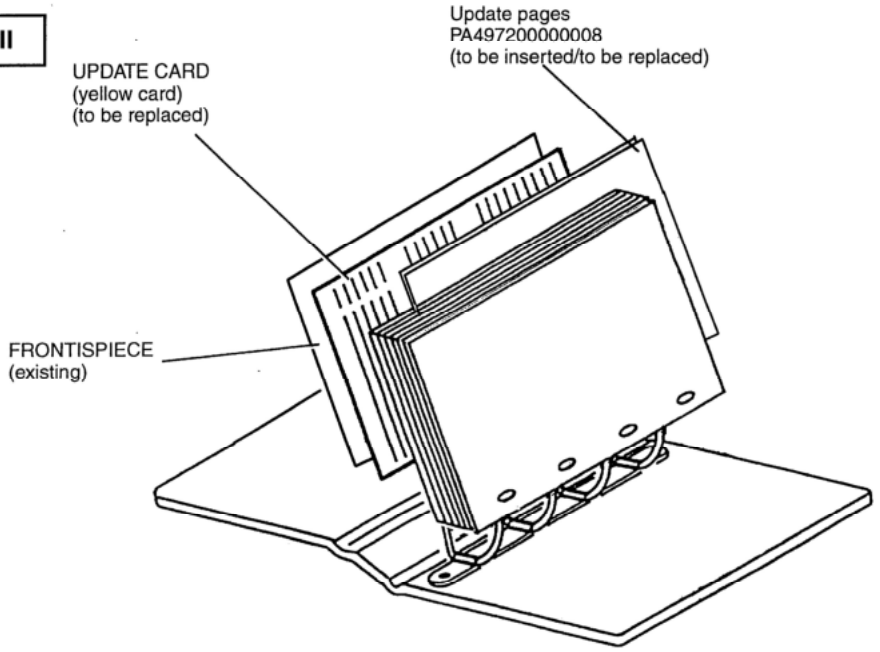

Alfawiki.nl

UPDATE CARD

Spider - Gtv

VOLUME I

REPAIR INSTRUCTIONS

UPDATE CARD				
UPDATE (DATE)	MODEL	SECTION	PAGE	
			SUBST.	ADDED
6 (9/1996)	Gtv 3.024V	00		25 to 42
9 (9/1998)	Gtv 3.024V	00		43 to 53
6 (9/1996)	Gtv 3.024V	10		1 to 28
9 (9/1998)	Gtv 3.024V	10	29	
6 (9/1996)	Gtv 3.024V	10		30
9 (9/1998)	Gtv 3.024V	10	31 to 32	
6 (9/1996)	Gtv 3.024V	10		33 to 38
9 (9/1998)	Gtv 3.024V	10	39 to 41	
9 (9/1998)	Gtv 3.024V	10		41/1 to 41/2
6 (9/1996)	Gtv 3.024V	10		42 to 58
9 (9/1998)	Gtv 3.024V	10	59	
6 (9/1996)	Gtv 3.024V	10		60 to 71
9 (9/1998)	Gtv 3.024V	10		72 to 143
6 (9/1996)	Gtv 3.024V	18		1 to 4
6 (9/1996)	Gtv 3.024V	21		1 to 11
9 (9/1998)	Gtv 3.024V	21		12 to 32
6 (9/1996)	Gtv 3.024V	33		1 to 4
9 (9/1998)	Gtv 3.024V	41	Index	
6 (9/1996)	Gtv 3.024V	41		1 to 4
9 (9/1998)	Gtv 3.024V	44		0/1 to 0/2
9 (9/1998)	Gtv 3.024V	44	1 to 4	
9 (9/1998)	Spider V6TB		Index	
9 (9/1998)	Spider V6TB	00	1 to 4	
9 (9/1998)	Spider V6TB	00		5 to 7

UPDATE CARD				
UPDATE (DATE)	MODEL	SECTION	PAGE	
			SUBST.	ADDED

Alfawiki.nl

UPDATE CARD

Spider - Gtv

VOLUME I

REPAIR INSTRUCTIONS

UPDATE CARD				
UPDATE (DATE)	MODEL	SECTION	PAGE	
			SUBST.	ADDED
8 (3/1998)	Spider-Gtv	-	Frontespice	
9 (9/1998)	Spider-Gtv	00	Index	
8 (3/1998)	Spider-Gtv	00	1	
9 (3/1998)	Spider-Gtv	00	2 to 7	
8 (3/1998)	Spider-Gtv	00		7/1 to 7/6
8 (3/1998)	Spider-Gtv	00	8	
9 (9/1998)	Spider-Gtv	00	13	
6 (9/1996)	Spider-Gtv	00	19	
8 (3/1998)	Spider-Gtv	00	20	
9 (9/1998)	Spider-Gtv	00	21 to 26	
6 (9/1996)	Spider-Gtv	00	27	
8 (3/1998)	Spider-Gtv	00	28	
9 (9/1998)	Spider-Gtv	00	29 to 30	
6 (9/1996)	Spider-Gtv	00	32	
3 (3/1995)	Spider-Gtv	00	33 to 34	
6 (9/1996)	Spider-Gtv	00	35	
8 (3/1998)	Spider-Gtv	00	36 to 37	
9 (9/1998)	Spider-Gtv	00	39 to 40	
6 (9/1996)	Spider-Gtv	00	43 to 45	
9 (9/1998)	Spider-Gtv	00		46/1 to 46/2
7 (4/1997)	Spider-Gtv	00	49	
9 (9/1998)	Spider-Gtv	00	51	
6 (9/1996)	Spider-Gtv	00	55	
9 (9/1998)	Spider-Gtv	10 T.S.	Index I-II	
6 (9/1996)	Spider-Gtv	10 T.S.		8/1 to 8/2
6 (9/1996)	Spider-Gtv	10 T.S.	16 to 18	
3 (3/1995)	Spider-Gtv	10 T.S.		18/1
6 (9/1996)	Spider-Gtv	10 T.S.	22	
6 (9/1996)	Spider-Gtv	10 T.S.		24/1 to 24/6
6 (9/1996)	Spider-Gtv	10 T.S.	31	
6 (9/1996)	Spider-Gtv	10 T.S.		36/1 to 36/2
3 (3/1995)	Spider-Gtv	10 T.S.		38/1 to 38/2
3 (3/1995)	Spider-Gtv	10 T.S.	44	
6 (9/1996)	Spider-Gtv	10 T.S.	45 to 46	
9 (9/1998)	Spider-Gtv	10 T.S.	49 to 60	
9 (9/1998)	Spider-Gtv	10 T.S.		61 to 104
3 (3/1995)	Spider-Gtv	10 V6	Index I	
3 (3/1995)	Spider-Gtv	10 V6	17	
9 (9/1998)	Spider-Gtv	10 V6		18/1 to 18/2
3 (3/1995)	Spider-Gtv	10 V6	26	
3 (3/1995)	Spider-Gtv	10 V6		26/1 to 26/4
3 (3/1995)	Spider-Gtv	10 V6		39/ to 39/2
6 (9/1996)	Spider-Gtv	21	4	
6 (9/1996)	Spider-Gtv	21	10	
7 (4/1997)	Spider-Gtv	33	Index	
7 (4/1997)	Spider-Gtv	33	1	
7 (4/1997)	Spider-Gtv	33	3 to 4	
7 (4/1997)	Spider-Gtv	33		4/1 to 4/6
7 (4/1997)	Spider-Gtv	33	5	

UPDATE CARD				
UPDATE (DATE)	MODEL	SECTION	PAGE	
			SUBST.	ADDED
6 (9/1996)	Spider-Gtv	33	9	
9 (9/1998)	Spider-Gtv	41	Index	
7 (4/1997)	Spider-Gtv	41	2	
9 (9/1998)	Spider-Gtv	41	3 to 4	
9 (9/1998)	Spider-Gtv	41		4/1 to 4/2
9 (9/1998)	Spider-Gtv	41	5	
6 (9/1996)	Spider-Gtv	41	7	
9 (9/1998)	Spider-Gtv	41	11	
6 (9/1996)	Spider-Gtv	44	5	
3 (3/1995)	Spider-Gtv	44	8	
6 (9/1996)	Spider-Gtv	44	9	
3 (3/1995)	Spider-Gtv	44	11 to 12	
3 (3/1995)	Spider-Gtv	44		12/1 to 12/3
3 (3/1995)	Spider-Gtv	44	18	
9 (9/1998)	Spider-Gtv	44	20 to 23	
3 (3/1995)	Gtv V6TB		Index	
9 (9/1998)	Gtv V6TB	00	1 to 5	
1 (3/1994)	Gtv V6TB	00		6
9 (9/1998)	Gtv V6TB	00	7	
1 (3/1994)	Gtv V6TB	00		8 to 11
3 (3/1995)	Gtv V6TB	00	12	
3 (3/1995)	Gtv V6TB	00		12/1 to 12/2
8 (3/1998)	Gtv V6TB	00	13	
1 (3/1994)	Gtv V6TB	00		14
9 (9/1998)	Gtv V6TB	00	15	
3 (3/1995)	Gtv V6TB	00		15/1
1 (3/1994)	Gtv V6TB	00		16
3 (3/1995)	Gtv V6TB	00	17 to 19	
3 (3/1995)	Gtv V6TB	00		19/1 to 19/2
1 (3/1994)	Gtv V6TB	00		20
3 (3/1995)	Gtv V6TB	00	21	
9 (9/1998)	Gtv V6TB	00		21/1 to 21/2
3 (3/1995)	Gtv V6TB	00		22 to 31
3 (3/1995)	Gtv V6TB	10	1 to 2	
3 (3/1995)	Gtv V6TB	10		3 to 60
3 (3/1995)	Gtv V6TB	21		1 to 7
9 (9/1998)	Gtv V6TB	44	1 to 4	
9 (9/1998)	Gtv 3.024V		Index I-II	
9 (9/1998)	Gtv 3.024V	00	1 to 7	
6 (9/1996)	Gtv 3.024V	00		8 to 12
9 (9/1998)	Gtv 3.024V	00	13 to 16	
6 (9/1996)	Gtv 3.024V	00		17 to 18
9 (9/1998)	Gtv 3.024V	00	19 to 20	
6 (9/1996)	Gtv 3.024V	00		21
9 (9/1998)	Gtv 3.024V	00	22	
6 (9/1996)	Gtv 3.024V	00		23
9 (9/1998)	Gtv 3.024V	00	24	
9 (9/1998)	Gtv 3.024V	00		24/1 to 24/2

(continued)

Alfawiki.nl

UPDATE CARD

Spider - Gtv

VOLUME I

REPAIR INSTRUCTIONS

UPDATE CARD				
UPDATE (DATE)	MODEL	SECTION	PAGE	
			SUBST.	ADDED
9 (9/1998)	Gtv 3.024V	00	22	
6 (9/1996)	Gtv 3.024V	00		23
9 (9/1998)	Gtv 3.024V	00	24	
9 (9/1998)	Gtv 3.024V	00		24/1 to 24/2
6 (9/1996)	Gtv 3.024V	00		25 to 42
9 (9/1998)	Gtv 3.024V	00		43 to 53
6 (9/1996)	Gtv 3.024V	10		1 to 28
9 (9/1998)	Gtv 3.024V	10	29	
6 (9/1996)	Gtv 3.024V	10		30
9 (9/1998)	Gtv 3.024V	10	31 to 32	
6 (9/1996)	Gtv 3.024V	10		33 to 38
9 (9/1998)	Gtv 3.024V	10	39 to 41	
9 (9/1998)	Gtv 3.024V	10		41/1 to 41/2
6 (9/1996)	Gtv 3.024V	10		42 to 58
9 (9/1998)	Gtv 3.024V	10	59	
6 (9/1996)	Gtv 3.024V	10		60 to 71
9 (9/1998)	Gtv 3.024V	10		72 to 143
6 (9/1996)	Gtv 3.024V	18		1 to 4
6 (9/1996)	Gtv 3.024V	21		1 to 11
9 (9/1998)	Gtv 3.024V	21		12 to 32
6 (9/1996)	Gtv 3.024V	33		1 to 4
9 (9/1998)	Gtv 3.024V	41	Index	
6 (9/1996)	Gtv 3.024V	41		1 to 4
9 (9/1998)	Gtv 3.024V	44		0/1 to 0/2
9 (9/1998)	Gtv 3.024V	44	1 to 4	
9 (9/1998)	Spider V6TB		Index	
9 (9/1998)	Spider V6TB	00	1 to 4	
9 (9/1998)	Spider V6TB	00		5 to 7

UPDATE CARD				
UPDATE (DATE)	MODEL	SECTION	PAGE	
			SUBST.	ADDED

Alfawiki.nl

UPDATE CARD

Spider - Gtv

VOLUME I

REPAIR INSTRUCTIONS

UPDATE CARD				
UPDATE (DATE)	MODEL	SECTION	PAGE	
			SUBST.	ADDED
8 (3/1998)	Spider-Gtv	-	Frontespice	
9 (9/1998)	Spider-Gtv	00	Index	
8 (3/1998)	Spider-Gtv	00	1	
9 (3/1998)	Spider-Gtv	00	2 to 4	
10 (11/1999)	**Spider-Gtv**	**00**	**5 to 6**	
9 (3/1998)	Spider-Gtv	00	7	
8 (3/1998)	Spider-Gtv	00		7/1 to 7/6
8 (3/1998)	Spider-Gtv	00	8	
9 (9/1998)	Spider-Gtv	00	13	
6 (9/1996)	Spider-Gtv	00	19	
8 (3/1998)	Spider-Gtv	00	20	
9 (9/1998)	Spider-Gtv	00	21 to 26	
6 (9/1996)	Spider-Gtv	00	27	
8 (3/1998)	Spider-Gtv	00	28	
9 (9/1998)	Spider-Gtv	00	29 to 30	
6 (9/1996)	Spider-Gtv	00	32	
3 (3/1995)	Spider-Gtv	00	33 to 34	
6 (9/1996)	Spider-Gtv	00	35	
8 (3/1998)	Spider-Gtv	00	36 to 37	
9 (9/1998)	Spider-Gtv	00	39 to 40	
6 (9/1996)	Spider-Gtv	00	43 to 45	
9 (9/1998)	Spider-Gtv	00		46/1 to 46/2
7 (4/1997)	Spider-Gtv	00	49	
9 (9/1998)	Spider-Gtv	00	51	
6 (9/1996)	Spider-Gtv	00	55	
9 (9/1998)	Spider-Gtv	10 T.S.	Index I-II	
6 (9/1996)	Spider-Gtv	10 T.S.		8/1 to 8/2
6 (9/1996)	Spider-Gtv	10 T.S.	16 to 18	
3 (3/1995)	Spider-Gtv	10 T.S.		18/1
6 (9/1996)	Spider-Gtv	10 T.S.	22	
6 (9/1996)	Spider-Gtv	10 T.S.		24/1 to 24/6
6 (9/1996)	Spider-Gtv	10 T.S.	31	
6 (9/1996)	Spider-Gtv	10 T.S.		36/1 to 36/2
3 (3/1995)	Spider-Gtv	10 T.S.		38/1 to 38/2
3 (3/1995)	Spider-Gtv	10 T.S.	44	
6 (9/1996)	Spider-Gtv	10 T.S.	45 to 46	
9 (9/1998)	Spider-Gtv	10 T.S.	49 to 60	
9 (9/1998)	Spider-Gtv	10 T.S.		61 to 104
3 (3/1995)	Spider-Gtv	10 V6	Index I	
3 (3/1995)	Spider-Gtv	10 V6	17	
9 (9/1998)	Spider-Gtv	10 V6		18/1 to 18/2
3 (3/1995)	Spider-Gtv	10 V6	26	
3 (3/1995)	Spider-Gtv	10 V6		26/1 to 26/4
3 (3/1995)	Spider-Gtv	10 V6		39/ to 39/2
6 (9/1996)	Spider-Gtv	21	4	
6 (9/1996)	Spider-Gtv	21	10	
7 (4/1997)	Spider-Gtv	33	Index	
7 (4/1997)	Spider-Gtv	33	1	
7 (4/1997)	Spider-Gtv	33	3 to 4	

UPDATE CARD				
UPDATE (DATE)	MODEL	SECTION	PAGE	
			SUBST.	ADDED
7 (4/1997)	Spider-Gtv	33		4/1 to 4/2
10 (11/1999)	**Spider-Gtv**	**33**	**4/3 to 4/4**	
7 (4/1997)	Spider-Gtv	33		4/5 to 4/6
7 (4/1997)	Spider-Gtv	33	5	
6 (9/1996)	Spider-Gtv	33	9	
9 (9/1998)	Spider-Gtv	41	Index	
7 (4/1997)	Spider-Gtv	41	2	
9 (9/1998)	Spider-Gtv	41	3 to 4	
9 (9/1998)	Spider-Gtv	41		4/1 to 4/2
9 (9/1998)	Spider-Gtv	41	5	
6 (9/1996)	Spider-Gtv	41	7	
9 (9/1998)	Spider-Gtv	41	11	
6 (9/1996)	Spider-Gtv	44	5	
3 (3/1995)	Spider-Gtv	44	8	
6 (9/1996)	Spider-Gtv	44	9	
3 (3/1995)	Spider-Gtv	44	11 to 12	
3 (3/1995)	Spider-Gtv	44		12/1 to 12/3
3 (3/1995)	Spider-Gtv	44	18	
9 (9/1998)	Spider-Gtv	44	20 to 23	
3 (3/1995)	Gtv V6TB		Index	
9 (9/1998)	Gtv V6TB	00	1 to 5	
1 (3/1994)	Gtv V6TB	00		6
9 (9/1998)	Gtv V6TB	00	7	
1 (3/1994)	Gtv V6TB	00		8 to 11
3 (3/1995)	Gtv V6TB	00	12	
3 (3/1995)	Gtv V6TB	00		12/1 to 12/2
8 (3/1998)	Gtv V6TB	00	13	
1 (3/1994)	Gtv V6TB	00		14
9 (9/1998)	Gtv V6TB	00	15	
3 (3/1995)	Gtv V6TB	00		15/1
1 (3/1994)	Gtv V6TB	00		16
3 (3/1995)	Gtv V6TB	00	17 to 19	
3 (3/1995)	Gtv V6TB	00		19/1 to 19/2
1 (3/1994)	Gtv V6TB	00		20
3 (3/1995)	Gtv V6TB	00	21	
9 (9/1998)	Gtv V6TB	00		21/1 to 21/2
3 (3/1995)	Gtv V6TB	00		22 to 31
3 (3/1995)	Gtv V6TB	10	1 to 2	
3 (3/1995)	Gtv V6TB	10		3 to 60
3 (3/1995)	Gtv V6TB	21		1 to 7
9 (9/1998)	Gtv V6TB	44	1 to 4	
9 (9/1998)	Gtv 3.024V		Index I-II	
9 (9/1998)	Gtv 3.024V	00	1 to 7	
6 (9/1996)	Gtv 3.024V	00		8 to 12
9 (9/1998)	Gtv 3.024V	00	13 to 16	
6 (9/1996)	Gtv 3.024V	00		17 to 18
9 (9/1998)	Gtv 3.024V	00	19 to 20	
6 (9/1996)	Gtv 3.024V	00		21

(continued)

Alfawiki.nl

UPDATE CARD

Spider - Gtv

VOLUME I
REPAIR
INSTRUCTIONS

UPDATE CARD				
UPDATE (DATE)	MODEL	SECTION	PAGE	
			SUBST.	ADDED
9 (9/1998)	Gtv 3.024V	00	13 to 16	
6 (9/1996)	Gtv 3.024V	00		17 to 18
9 (9/1998)	Gtv 3.024V	00	19 to 20	
6 (9/1996)	Gtv 3.024V	00		21
9 (9/1998)	Gtv 3.024V	00	22	
6 (9/1996)	Gtv 3.024V	00		23
9 (9/1998)	Gtv 3.024V	00	24	
9 (9/1998)	Gtv 3.024V	00		24/1 to 24/2
6 (9/1996)	Gtv 3.024V	00		25 to 42
9 (9/1998)	Gtv 3.024V	00		43 to 53
6 (9/1996)	Gtv 3.024V	10		1 to 28
9 (9/1998)	Gtv 3.024V	10	29	
6 (9/1996)	Gtv 3.024V	10		30
9 (9/1998)	Gtv 3.024V	10	31 to 32	
6 (9/1996)	Gtv 3.024V	10		33 to 38
9 (9/1998)	Gtv 3.024V	10	39 to 41	
9 (9/1998)	Gtv 3.024V	10		41/1 to 41/2
6 (9/1996)	Gtv 3.024V	10		42 to 58
9 (9/1998)	Gtv 3.024V	10	59	
6 (9/1996)	Gtv 3.024V	10		60 to 71
9 (9/1998)	Gtv 3.024V	10		72 to 143

UPDATE CARD				
UPDATE (DATE)	MODEL	SECTION	PAGE	
			SUBST.	ADDED
6 (9/1996)	Gtv 3.024V	18		1 to 4
6 (9/1996)	Gtv 3.024V	21		1 to 11
9 (9/1998)	Gtv 3.024V	21		12 to 32
6 (9/1996)	Gtv 3.024V	33		1 to 4
9 (9/1998)	Gtv 3.024V	41	Index	
6 (9/1996)	Gtv 3.024V	41		1 to 4
9 (9/1998)	Gtv 3.024V	44		0/1 to 0/2
9 (9/1998)	Gtv 3.024V	44	1 to 4	
9 (9/1998)	Spider V6TB		Index	
9 (9/1998)	Spider V6TB	00	1 to 4	
9 (9/1998)	Spider V6TB	00		5 to 7
11 (7/2000)	**Spider Gtv T.Spark (Euro 3)**	**00 00**		**Index 1 to 2**
11 (7/2000)	**Spider Gtv 3.024V (Euro 3)**	**00 00**		**Index 1 to 3**

Alfawiki.nl

UPDATE CARD

Spider - Gtv

VOLUME I

REPAIR INSTRUCTIONS

UPDATE CARD				
UPDATE (DATE)	MODEL	SECTION	PAGE	
			SUBST.	ADDED
8 (3/1998)	Spider-Gtv	-	Frontespice	
9 (9/1998)	Spider-Gtv	00	Index	
8 (3/1998)	Spider-Gtv	00	1	
9 (3/1998)	Spider-Gtv	00	2 to 4	
10 (11/1999)	Spider-Gtv	00	5 to 6	
9 (3/1998)	Spider-Gtv	00	7	
8 (3/1998)	Spider-Gtv	00		7/1 to 7/6
8 (3/1998)	Spider-Gtv	00	8	
9 (9/1998)	Spider-Gtv	00	13	
6 (9/1996)	Spider-Gtv	00	19	
8 (3/1998)	Spider-Gtv	00	20	
9 (9/1998)	Spider-Gtv	00	21 to 26	
6 (9/1996)	Spider-Gtv	00	27	
8 (3/1998)	Spider-Gtv	00	28	
9 (9/1998)	Spider-Gtv	00	29 to 30	
6 (9/1996)	Spider-Gtv	00	32	
3 (3/1995)	Spider-Gtv	00	33 to 34	
6 (9/1996)	Spider-Gtv	00	35	
8 (3/1998)	Spider-Gtv	00	36 to 37	
9 (9/1998)	Spider-Gtv	00	39 to 40	
6 (9/1996)	Spider-Gtv	00	43 to 45	
9 (9/1998)	Spider-Gtv	00		46/1 to 46/2
7 (4/1997)	Spider-Gtv	00	49	
9 (9/1998)	Spider-Gtv	00	51	
6 (9/1996)	Spider-Gtv	00	55	
9 (9/1998)	Spider-Gtv	10 T.S.	Index I-II	
6 (9/1996)	Spider-Gtv	10 T.S.		8/1 to 8/2
6 (9/1996)	Spider-Gtv	10 T.S.	16 to 18	
3 (3/1995)	Spider-Gtv	10 T.S.		18/1
6 (9/1996)	Spider-Gtv	10 T.S.	22	
6 (9/1996)	Spider-Gtv	10 T.S.		24/1 to 24/6
6 (9/1996)	Spider-Gtv	10 T.S.	31	
6 (9/1996)	Spider-Gtv	10 T.S.		36/1 to 36/2
3 (3/1995)	Spider-Gtv	10 T.S.		38/1 to 38/2
3 (3/1995)	Spider-Gtv	10 T.S.	44	
6 (9/1996)	Spider-Gtv	10 T.S.	45 to 46	
9 (9/1998)	Spider-Gtv	10 T.S.	49 to 60	
9 (9/1998)	Spider-Gtv	10 T.S.		61 to 104
3 (3/1995)	Spider-Gtv	10 V6	Index I	
3 (3/1995)	Spider-Gtv	10 V6	17	
9 (9/1998)	Spider-Gtv	10 V6		18/1 to 18/2
3 (3/1995)	Spider-Gtv	10 V6	26	
3 (3/1995)	Spider-Gtv	10 V6		26/1 to 26/4
3 (3/1995)	Spider-Gtv	10 V6		39/ to 39/2
6 (9/1996)	Spider-Gtv	21	4	
6 (9/1996)	Spider-Gtv	21	10	
11 (7/2000)	**Spider-Gtv**	**33**	**Index**	
7 (4/1997)	Spider-Gtv	33	1	
7 (4/1997)	Spider-Gtv	33	3 to 4	

UPDATE CARD				
UPDATE (DATE)	MODEL	SECTION	PAGE	
			SUBST.	ADDED
7 (4/1997)	Spider-Gtv	33		4/1 to 4/2
10 (11/1999)	Spider-Gtv	33	4/3 to 4/4	
7 (4/1997)	Spider-Gtv	33		4/5 to 4/6
7 (4/1997)	Spider-Gtv	33	5	
11 (7/2000)	**Spider-Gtv**	**33**		**8/1 a 8/4**
6 (9/1996)	Spider-Gtv	33	9	
9 (9/1998)	Spider-Gtv	41	Index	
7 (4/1997)	Spider-Gtv	41	2	
9 (9/1998)	Spider-Gtv	41	3 to 4	
9 (9/1998)	Spider-Gtv	41		4/1 to 4/2
9 (9/1998)	Spider-Gtv	41	5	
6 (9/1996)	Spider-Gtv	41	7	
9 (9/1998)	Spider-Gtv	41	11	
11 (7/2000)	**Spider-Gtv**	**44**	**Index**	
6 (9/1996)	Spider-Gtv	44	5	
3 (3/1995)	Spider-Gtv	44	8	
6 (9/1996)	Spider-Gtv	44	9	
3 (3/1995)	Spider-Gtv	44	11 to 12	
3 (3/1995)	Spider-Gtv	44		12/1 to 12/3
11 (7/2000)	**Spider-Gtv**	**44**	**18**	
11 (7/2000)	**Spider-Gtv**	**44**		**18/1 to 18/6**
11 (7/2000)	**Spider-Gtv**	**44**	**19**	
9 (9/1998)	Spider-Gtv	44	20 to 23	
3 (3/1995)	Gtv V6TB		Index	
9 (9/1998)	Gtv V6TB	00	1 to 5	
1 (3/1994)	Gtv V6TB	00		6
9 (9/1998)	Gtv V6TB	00	7	
1 (3/1994)	Gtv V6TB	00		8 to 11
3 (3/1995)	Gtv V6TB	00	12	
3 (3/1995)	Gtv V6TB	00		12/1 to 12/2
8 (3/1998)	Gtv V6TB	00	13	
1 (3/1994)	Gtv V6TB	00		14
9 (9/1998)	Gtv V6TB	00	15	
3 (3/1995)	Gtv V6TB	00		15/1
1 (3/1994)	Gtv V6TB	00		16
3 (3/1995)	Gtv V6TB	00	17 to 19	
3 (3/1995)	Gtv V6TB	00		19/1 to 19/2
1 (3/1994)	Gtv V6TB	00		20
3 (3/1995)	Gtv V6TB	00	21	
9 (9/1998)	Gtv V6TB	00		21/1 to 21/2
3 (3/1995)	Gtv V6TB	00		22 to 31
3 (3/1995)	Gtv V6TB	10	1 to 2	
3 (3/1995)	Gtv V6TB	10		3 to 60
3 (3/1995)	Gtv V6TB	21		1 to 7
9 (9/1998)	Gtv V6TB	44	1 to 4	
9 (9/1998)	Gtv 3.024V		Index I-II	
9 (9/1998)	Gtv 3.024V	00	1 to 7	
6 (9/1996)	Gtv 3.024V	00		8 to 12

(continued)

Alfawiki.nl

UPDATE CARD

Spider - Gtv

VOLUME I

REPAIR INSTRUCTIONS

UPDATE CARD				
UPDATE (DATE)	MODEL	SECTION	PAGE	
			SUBST.	ADDED
9 (9/1998)	Gtv 3.024V	00	13 to 16	
6 (9/1996)	Gtv 3.024V	00		17 to 18
9 (9/1998)	Gtv 3.024V	00	19 to 20	
6 (9/1996)	Gtv 3.024V	00		21
9 (9/1998)	Gtv 3.024V	00	22	
6 (9/1996)	Gtv 3.024V	00		23
9 (9/1998)	Gtv 3.024V	00	24	
9 (9/1998)	Gtv 3.024V	00		24/1 to 24/2
6 (9/1996)	Gtv 3.024V	00		25 to 42
9 (9/1998)	Gtv 3.024V	00		43 to 53
6 (9/1996)	Gtv 3.024V	10		1 to 28
9 (9/1998)	Gtv 3.024V	10	29	
6 (9/1996)	Gtv 3.024V	10		30
9 (9/1998)	Gtv 3.024V	10	31 to 32	
6 (9/1996)	Gtv 3.024V	10		33 to 38
9 (9/1998)	Gtv 3.024V	10	39 to 41	
9 (9/1998)	Gtv 3.024V	10		41/1 to 41/2
6 (9/1996)	Gtv 3.024V	10		42 to 58
9 (9/1998)	Gtv 3.024V	10	59	
6 (9/1996)	Gtv 3.024V	10		60 to 71
9 (9/1998)	Gtv 3.024V	10		72 to 143

UPDATE CARD				
UPDATE (DATE)	MODEL	SECTION	PAGE	
			SUBST.	ADDED
6 (9/1996)	Gtv 3.024V	18		1 to 4
6 (9/1996)	Gtv 3.024V	21		1 to 11
9 (9/1998)	Gtv 3.024V	21		12 to 32
6 (9/1996)	Gtv 3.024V	33		1 to 4
9 (9/1998)	Gtv 3.024V	41	Index	
6 (9/1996)	Gtv 3.024V	41		1 to 4
9 (9/1998)	Gtv 3.024V	44		0/1 to 0/2
9 (9/1998)	Gtv 3.024V	44	1 to 4	
9 (9/1998)	Spider V6TB		Index	
9 (9/1998)	Spider V6TB	00	1 to 4	
9 (9/1998)	Spider V6TB	00		5 to 7
11 (7/2000)	Spider Gtv T.Spark (Euro 3)	00		Index
		00		1 to 2
11 (7/2000)	Spider Gtv 3.024V (Euro 3)	00		Index
		00		1 to 3
12 (11/2000)		**10**		**Index**
				1 to 14

Alfawiki.nl

UPDATE CARD

Spider - Gtv

VOLUME I

REPAIR INSTRUCTIONS

UPDATE CARD				
UPDATE (DATE)	MODEL	SECTION	PAGE	
			SUBST.	ADDED
8 (3/1998)	Spider-Gtv	-	Frontespice	
9 (9/1998)	Spider-Gtv	00	Index	
8 (3/1998)	Spider-Gtv	00	1	
9 (3/1998)	Spider-Gtv	00	2 to 4	
10 (11/1999)	Spider-Gtv	00	5 to 6	
9 (3/1998)	Spider-Gtv	00	7	
8 (3/1998)	Spider-Gtv	00		7/1 to 7/6
8 (3/1998)	Spider-Gtv	00	8	
9 (9/1998)	Spider-Gtv	00	13	
6 (9/1996)	Spider-Gtv	00	19	
8 (3/1998)	Spider-Gtv	00	20	
9 (9/1998)	Spider-Gtv	00	21 to 26	
6 (9/1996)	Spider-Gtv	00	27	
8 (3/1998)	Spider-Gtv	00	28	
9 (9/1998)	Spider-Gtv	00	29 to 30	
6 (9/1996)	Spider-Gtv	00	32	
3 (3/1995)	Spider-Gtv	00	33 to 34	
6 (9/1996)	Spider-Gtv	00	35	
8 (3/1998)	Spider-Gtv	00	36 to 37	
9 (9/1998)	Spider-Gtv	00	39 to 40	
6 (9/1996)	Spider-Gtv	00	43 to 45	
9 (9/1998)	Spider-Gtv	00		46/1 to 46/2
7 (4/1997)	Spider-Gtv	00	49	
9 (9/1998)	Spider-Gtv	00	51	
6 (9/1996)	Spider-Gtv	00	55	
9 (9/1998)	Spider-Gtv	10 T.S.	Index I-II	
6 (9/1996)	Spider-Gtv	10 T.S.		8/1 to 8/2
6 (9/1996)	Spider-Gtv	10 T.S.	16 to 18	
3 (3/1995)	Spider-Gtv	10 T.S.		18/1
6 (9/1996)	Spider-Gtv	10 T.S.	22	
6 (9/1996)	Spider-Gtv	10 T.S.		24/1 to 24/6
6 (9/1996)	Spider-Gtv	10 T.S.	31	
6 (9/1996)	Spider-Gtv	10 T.S.		36/1 to 36/2
3 (3/1995)	Spider-Gtv	10 T.S.		38/1 to 38/2
3 (3/1995)	Spider-Gtv	10 T.S.	44	
6 (9/1996)	Spider-Gtv	10 T.S.	45 to 46	
9 (9/1998)	Spider-Gtv	10 T.S.	49 to 60	
9 (9/1998)	Spider-Gtv	10 T.S.		61 to 104
3 (3/1995)	Spider-Gtv	10 V6	Index I	
3 (3/1995)	Spider-Gtv	10 V6	17	
9 (9/1998)	Spider-Gtv	10 V6		18/1 to 18/2
3 (3/1995)	Spider-Gtv	10 V6	26	
3 (3/1995)	Spider-Gtv	10 V6		26/1 to 26/4
3 (3/1995)	Spider-Gtv	10 V6		39/ to 39/2
6 (9/1996)	Spider-Gtv	21	4	
6 (9/1996)	Spider-Gtv	21	10	
11 (7/2000)	Spider-Gtv	33	Index	
7 (4/1997)	Spider-Gtv	33	1	
7 (4/1997)	Spider-Gtv	33	3 to 4	

UPDATE CARD				
UPDATE (DATE)	MODEL	SECTION	PAGE	
			SUBST.	ADDED
7 (4/1997)	Spider-Gtv	33		4/1 to 4/2
10 (11/1999)	Spider-Gtv	33	4/3 to 4/4	
7 (4/1997)	Spider-Gtv	33		4/5 to 4/6
7 (4/1997)	Spider-Gtv	33	5	
11 (7/2000)	Spider-Gtv	33		8/1 a 8/4
6 (9/1996)	Spider-Gtv	33	9	
9 (9/1998)	Spider-Gtv	41	Index	
7 (4/1997)	Spider-Gtv	41	2	
9 (9/1998)	Spider-Gtv	41	3 to 4	
9 (9/1998)	Spider-Gtv	41		4/1 to 4/2
9 (9/1998)	Spider-Gtv	41	5	
6 (9/1996)	Spider-Gtv	41	7	
9 (9/1998)	Spider-Gtv	41	11	
11 (7/2000)	Spider-Gtv	44	Index	
6 (9/1996)	Spider-Gtv	44	5	
3 (3/1995)	Spider-Gtv	44	8	
6 (9/1996)	Spider-Gtv	44	9	
3 (3/1995)	Spider-Gtv	44	11 to 12	
3 (3/1995)	Spider-Gtv	44		12/1 to 12/3
11 (7/2000)	Spider-Gtv	44	18	
11 (7/2000)	Spider-Gtv	44		18/1 to 18/6
11 (7/2000)	Spider-Gtv	44	19	
9 (9/1998)	Spider-Gtv	44	20 to 23	
3 (3/1995)	Gtv V6TB		Index	
9 (9/1998)	Gtv V6TB	00	1 to 5	
1 (3/1994)	Gtv V6TB	00		6
9 (9/1998)	Gtv V6TB	00	7	
1 (3/1994)	Gtv V6TB	00		8 to 11
3 (3/1995)	Gtv V6TB	00	12	
3 (3/1995)	Gtv V6TB	00		12/1 to 12/2
8 (3/1998)	Gtv V6TB	00	13	
1 (3/1994)	Gtv V6TB	00		14
9 (9/1998)	Gtv V6TB	00	15	
3 (3/1995)	Gtv V6TB	00		15/1
1 (3/1994)	Gtv V6TB	00		16
3 (3/1995)	Gtv V6TB	00	17 to 19	
3 (3/1995)	Gtv V6TB	00		19/1 to 19/2
1 (3/1994)	Gtv V6TB	00		20
3 (3/1995)	Gtv V6TB	00	21	
9 (9/1998)	Gtv V6TB	00		21/1 to 21/2
3 (3/1995)	Gtv V6TB	00		22 to 31
3 (3/1995)	Gtv V6TB	10	1 to 2	
3 (3/1995)	Gtv V6TB	10		3 to 60
3 (3/1995)	Gtv V6TB	21		1 to 7
9 (9/1998)	Gtv V6TB	44	1 to 4	
9 (9/1998)	Gtv 3.024V		Index I-II	
9 (9/1998)	Gtv 3.024V	00	1 to 7	
6 (9/1996)	Gtv 3.024V	00		8 to 12

(continued)

Alfawiki.nl

INSTRUCTIONS FOR INSERTING THE TECHNICAL DOCUMENTATION IN THE FOLDER

Spider
Gtv

REPAIR INSTRUCTIONS

For placing the documentation concerning update PA497200000009 in Volumes "Spider - Gtv - Repair Instructions ", you are recommended to follow the instructions given in the UPDATE CARD (yellow) concerning each volume.
The illustration below schematically shows the composition of the volume.

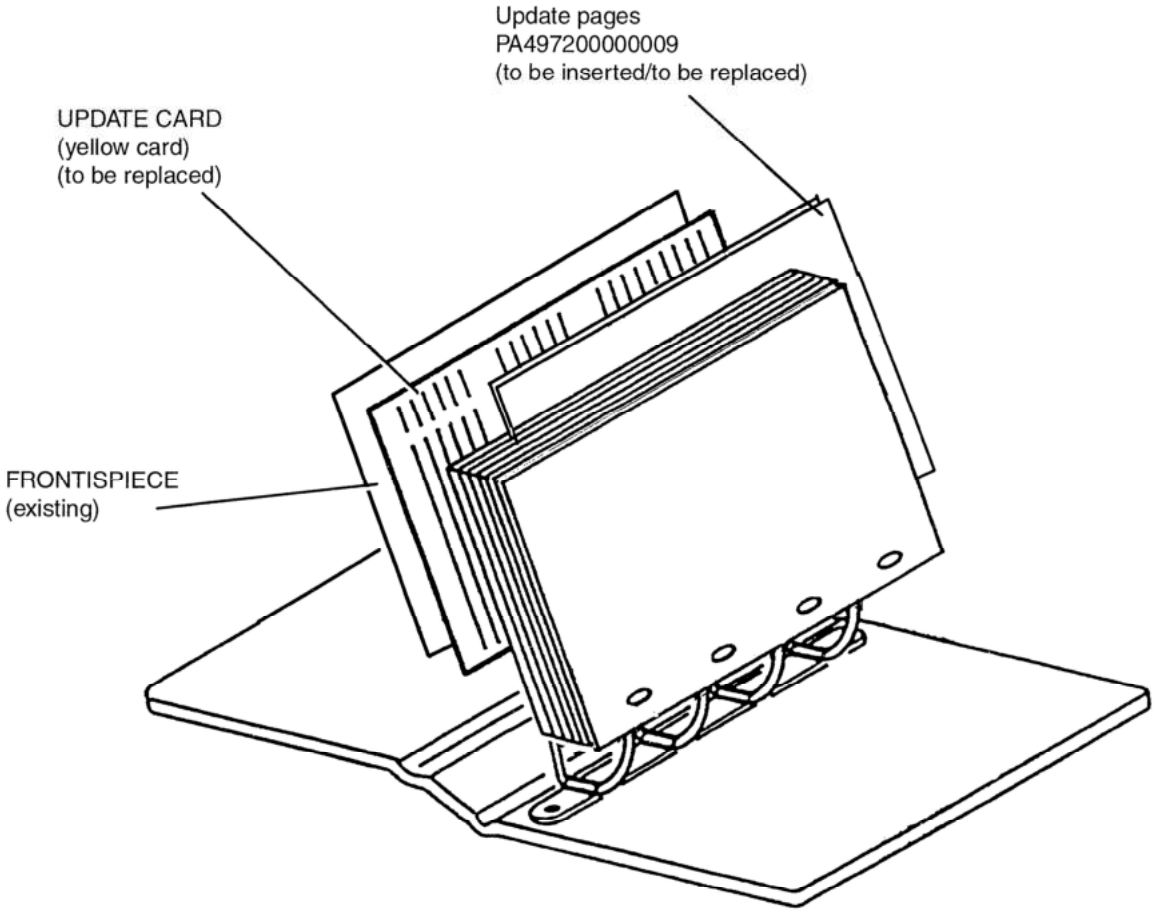

Alfawiki.nl

INSTRUCTIONS FOR INSERTING THE TECHNICAL DOCUMENTATION IN THE FOLDER

Spider
Gtv

REPAIR INSTRUCTIONS

For placing the documentation concerning update PA497200000010 in Volumes "Spider - Gtv - Repair Instructions ", you are recommended to follow the instructions given in the UPDATE CARD (yellow) concerning each volume.
The illustration below schematically shows the composition of the volume.

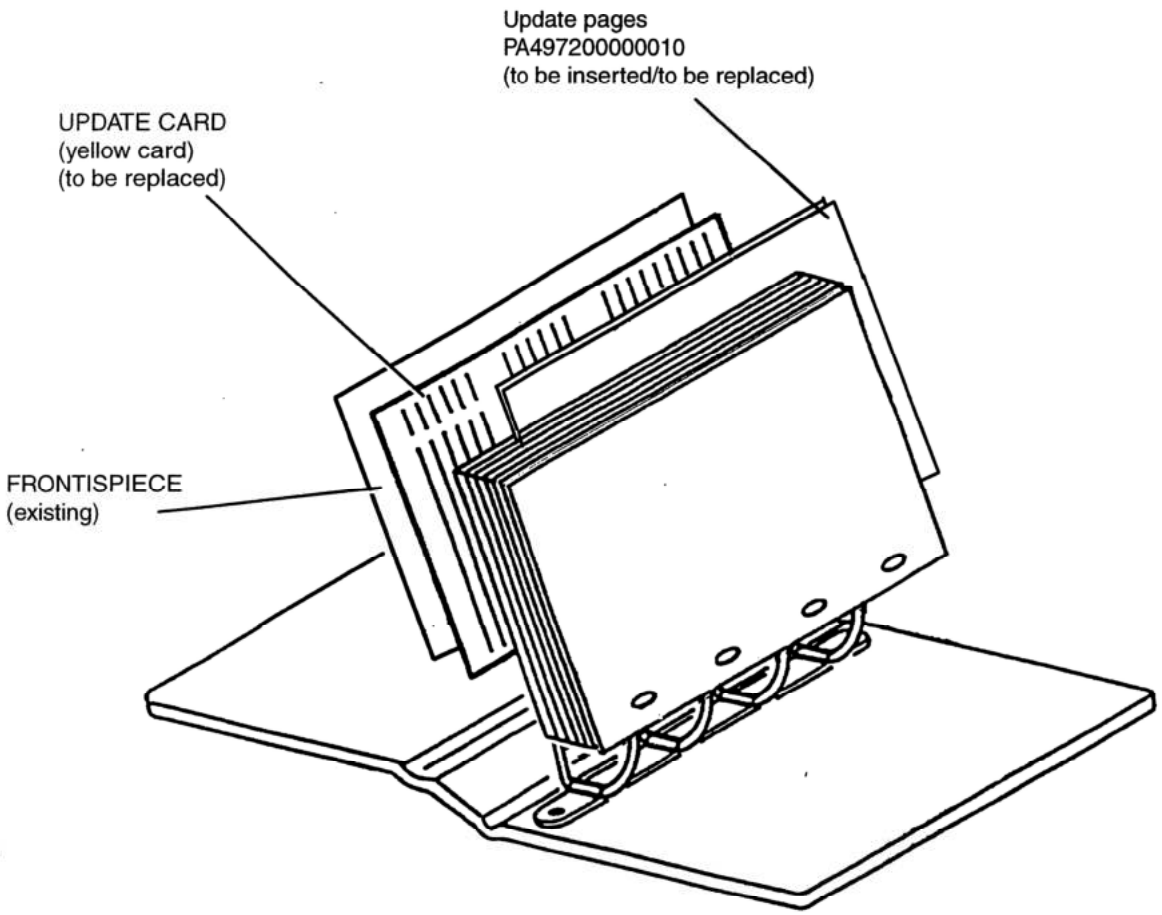

INSTRUCTIONS FOR INSERTING THE TECHNICAL DOCUMENTATION IN THE FOLDER

Spider
Gtv

REPAIR INSTRUCTIONS

For placing the documentation concerning update PA497200000011 in Volumes "Spider - Gtv - Repair Instructions ", you are recommended to follow the instructions given in the UPDATE CARD (yellow) concerning each volume.
The illustration below schematically shows the composition of the volume.

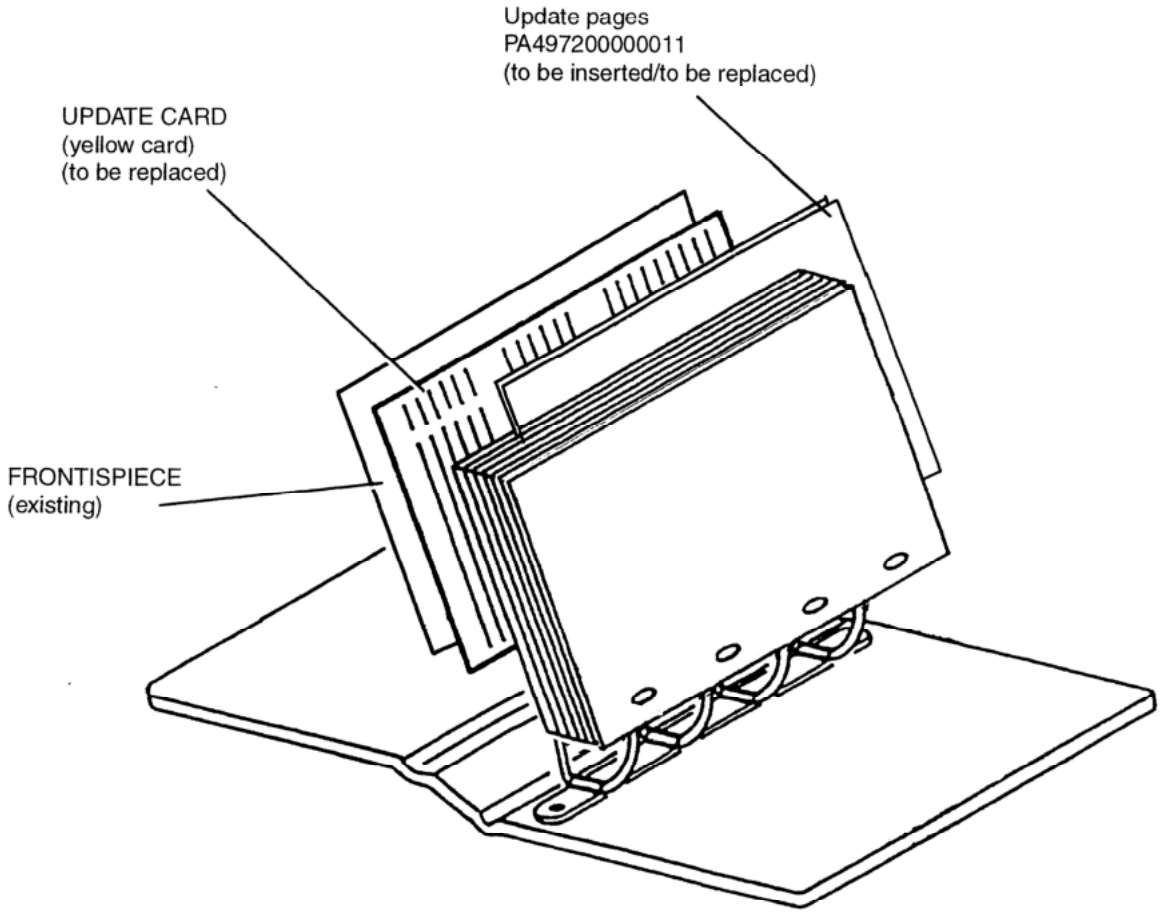

Alfawiki.nl

INSTRUCTIONS FOR INSERTING THE TECHNICAL DOCUMENTATION IN THE FOLDER

Spider
Gtv

REPAIR INSTRUCTIONS

For placing the documentation concerning update PA497200000012 in Volumes "Spider - Gtv - Repair Instructions ", you are recommended to follow the instructions given in the UPDATE CARD (yellow) concerning each volume.
The illustration below schematically shows the composition of the volume.

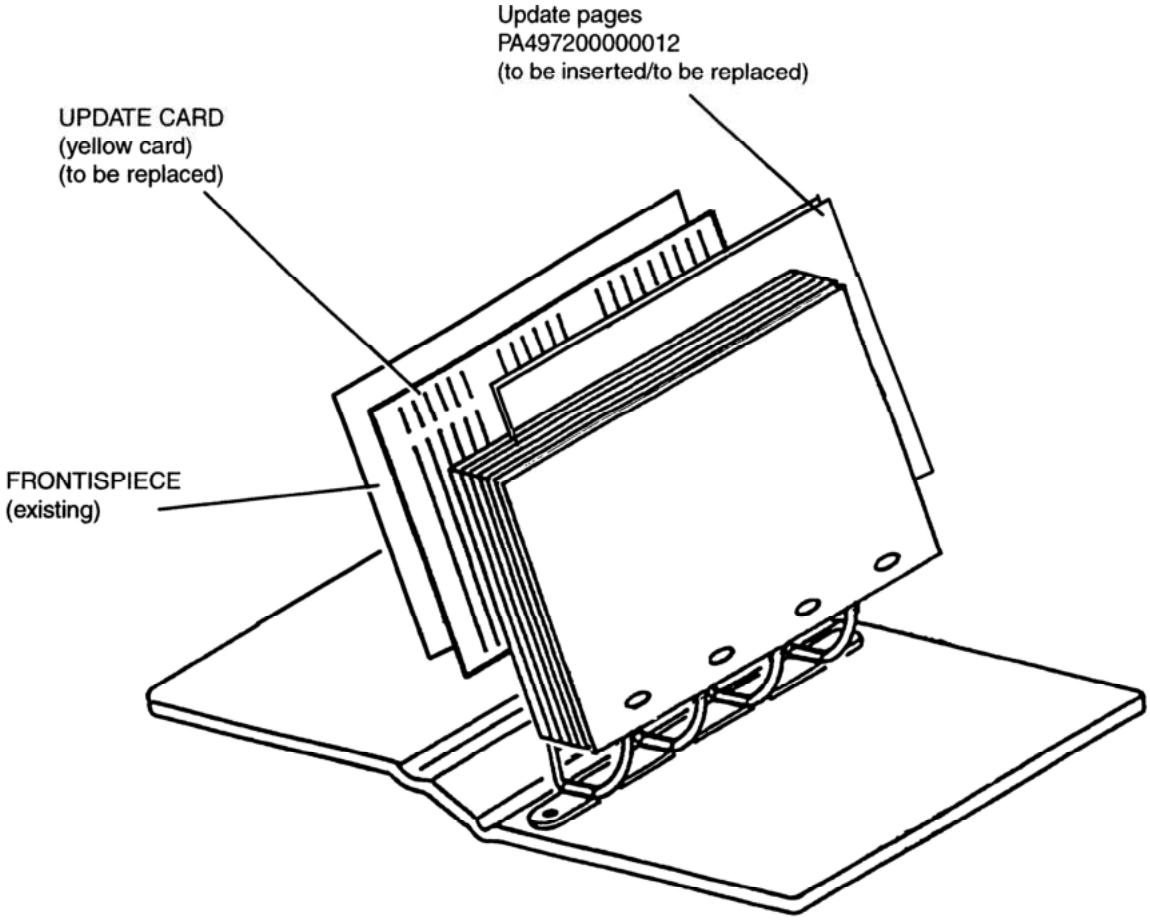

Alfawiki.nl

Spider - Gtv

REPAIR INSTRUCTIONS

UPDATE
PA497200000010
(60468285)

Alfa Romeo

(PAGE NOT TO BE INSERTED IN THE VOLUME)

Alfawiki.nl

Spider - Gtv

REPAIR INSTRUCTIONS

UPDATE
PA497200000011
(60468345)

Alfa Romeo

(PAGE NOT TO BE INSERTED IN THE VOLUME)

Alfawiki.nl

Spider - Gtv

REPAIR INSTRUCTIONS

UPDATE
PA497200000012
(60468359)

Alfa Romeo

(PAGE NOT TO BE INSERTED IN THE VOLUME)

Alfawiki.nl

Spider - Gtv

VOLUME I

REPAIR INSTRUCTIONS

TECHNICAL DATA	00
ENGINE 1747 1970 T.SPARK 16V	10
ENGINE 2959 V6	10
CLUTCH	18
GEARBOX	21
FRONT AXLE	27
BRAKES	33
STEERING	41
SUSPENSION AND WHEELS	44
VARIANTS FOR Gtv 1996 TB	
VARIANTS FOR Gtv 2959 24V	
VARIANTS FOR	

Alfa Romeo

PA497200000006

Alfawiki.nl

9-1996