2003-06 DRIVELINE/AXLE

Driveline/Axle - MDX

SPECIAL TOOLS

Ref. No.	Tool Number	Description	Qty
①	071AF-S3VA100	Ball Joint Thread Protector, 14 mm	1
②	07JAD-PH80101	Oil Seal Driver Attachment	1
③	07LAF-SM40300	Support Base Attachment	1
④	07MAC-SL0A102	Ball Joint Remover, 32 mm	1
⑤	07XAC-001020A	Threaded Adapter, 24 x 1.5 mm	1
⑥	07XAC-001030A	Threaded Adapter, 26 x 1.5 mm	1
⑦	07746-0010300	Attachment, 42 x 47 mm	1
⑧	07749-0010000	Driver	1
⑨	07947-4630100	Fork Seal Driver, 39.2 x 49.5 x 15 mm	1
⑩	07965-SD90100	Support Base	1
⑪	07AAD-S9VA000	Driveshaft Remover	1

COPYRIGHT FIXYOURCAR2009@GMAIL.COM
NOT TO BE COPIED OR RESOLD

cardiagn.com

Fig. 1: Identifying Special Tools
Courtesy of AMERICAN HONDA MOTOR CO., INC.

DRIVESHAFT INSPECTION

1. Check the inboard boot (A) and the outboard boot (B) on the driveshaft (C) for cracks, damage, leaking

grease, and loose boot bands (D). If any damage is found, replace the boot and boot bands.

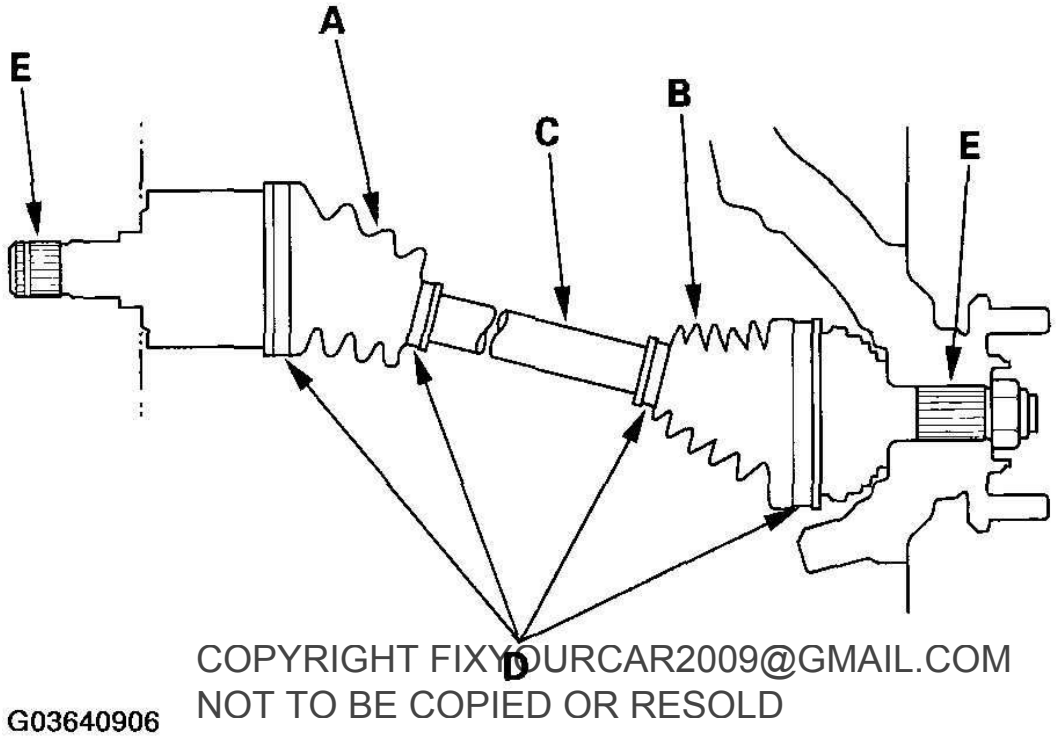

COPYRIGHT FIXYOURCAR2009@GMAIL.COM
NOT TO BE COPIED OR RESOLD

cardiagn.com

Fig. 2: Identifying Driveshaft Components
Courtesy of AMERICAN HONDA MOTOR CO., INC.

2. Turn the driveshaft by hand, and make sure the splines (E) and joint are not excessively loose.
3. Make sure the driveshaft is not twisted, bent, or cracked; if it is, replace it.

FRONT DRIVESHAFT REMOVAL

SPECIAL TOOLS REQUIRED

- Ball joint remover, 32 mm 07MAC-SL0A102
- Ball joint thread protector, 14 mm 071AF-S3VA100

1. Loosen the wheel nuts slightly.
2. Raise the front of the vehicle, and support it with safety stands in the proper locations (see **LIFT AND SUPPORT POINTS**).
3. Remove the wheel nuts and front wheels.

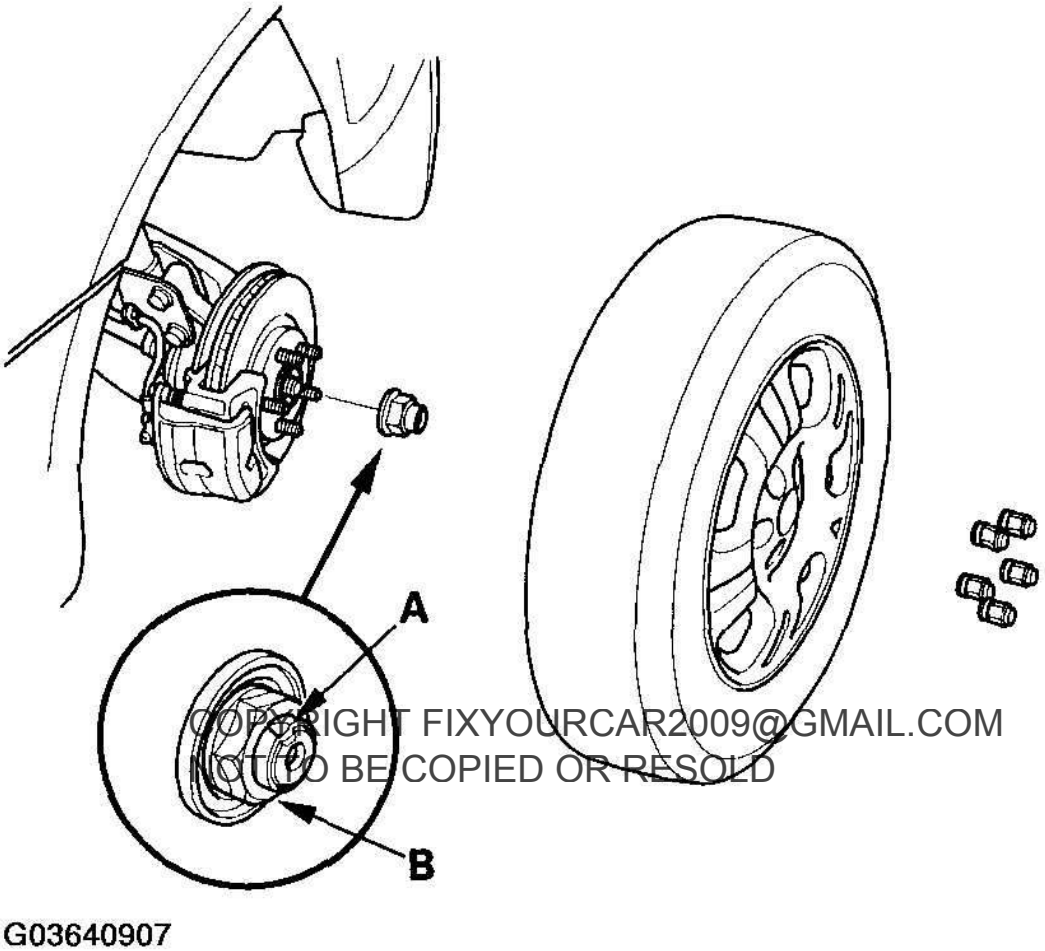

COPYRIGHT FIXYOURCAR2009@GMAIL.COM
NOT TO BE COPIED OR RESOLD

cardiagn.com

Fig. 3: Removing Wheel Nuts And Front Wheels
Courtesy of AMERICAN HONDA MOTOR CO., INC.

4. Lift up the locking tab (A) on the spindle nut (B), then remove, and discard the nut.
5. If the left driveshaft is removed, drain the transmission fluid (see **ATF REPLACEMENT**). It is not necessary to drain the transmission fluid when the right driveshaft is removed.
6. Remove the stabilizer link (A) from the damper (B).

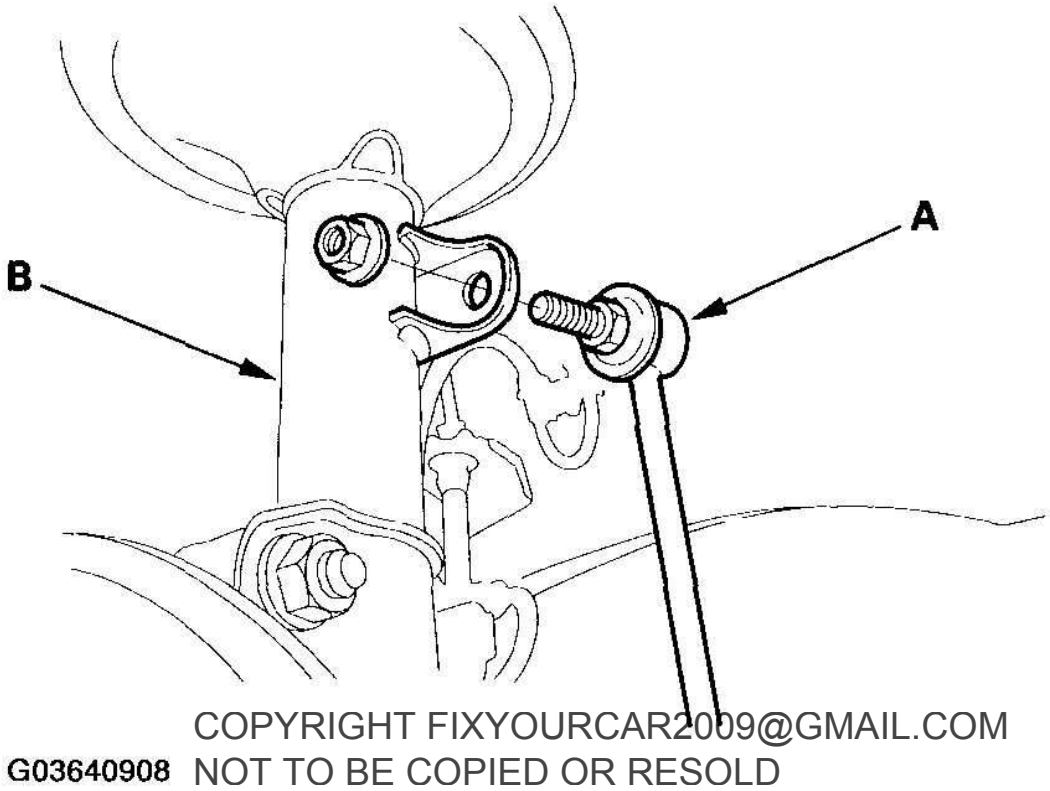

COPYRIGHT FIXYOURCAR2009@GMAIL.COM
NOT TO BE COPIED OR RESOLD

cardiagn.com

Fig. 4: Removing Stabilizer Link From Damper
Courtesy of AMERICAN HONDA MOTOR CO., INC.

7. Remove the lock pin (A) from the lower arm ball joint castle nut (B), and remove the nut.

NOTE:

- **To avoid damaging the ball joint, install ball joint thread protector onto the threads of the ball joint.**
- **Be careful not to damage the ball joint boot when installing the remover.**

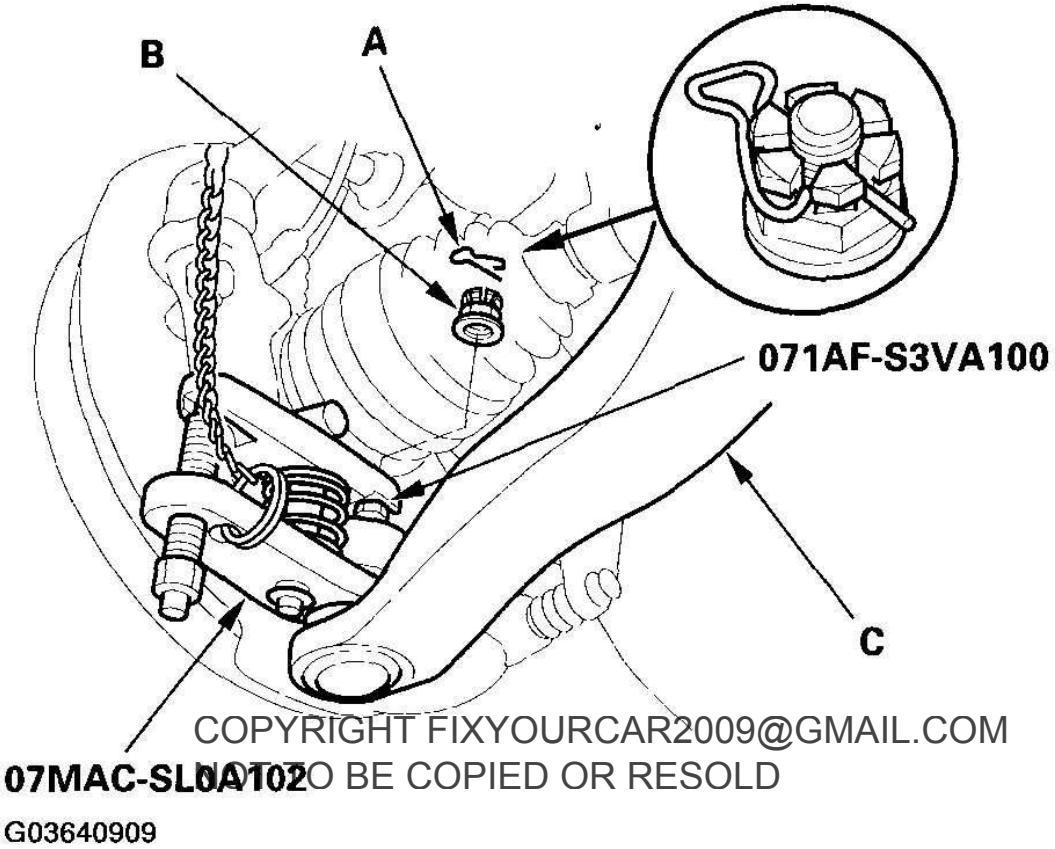

COPYRIGHT FIXYOURCAR2009@GMAIL.COM
NOT TO BE COPIED OR RESOLD

cardiagn.com

Fig. 5: Removing Lower Arm Ball Joint Castle Nut
Courtesy of AMERICAN HONDA MOTOR CO., INC.

8. Separate the ball joint from the lower arm (C) with the special tool (see **BALL JOINT REMOVAL**).
9. Pull the knuckle outward, and remove the driveshaft outboard joint from the front wheel hub using a plastic hammer.

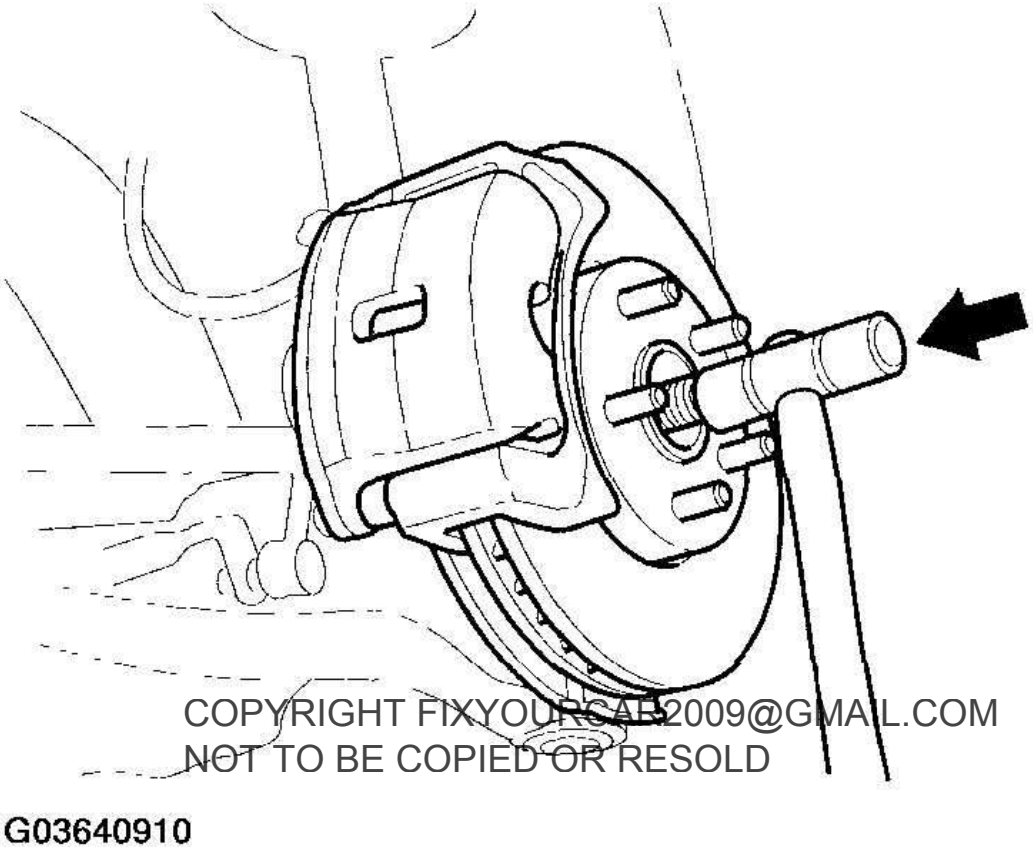

COPYRIGHT FIXYOURCAR2009@GMAIL.COM
NOT TO BE COPIED OR RESOLD

cardiagn.com

Fig. 6: Removing Driveshaft Outboard Joint From Front Wheel Hub Using Plastic Hammer
Courtesy of AMERICAN HONDA MOTOR CO., INC.

10. Pry (left driveshaft)/tap (right driveshaft) the inboard joint (A), and remove the driveshaft from the differential case or bearing support as an assembly. Do not pull on the driveshaft (B); the inboard joint may come apart. Pull the driveshaft straight out to avoid damaging the differential oil seal or the intermediate shaft outer seal.

Left driveshaft

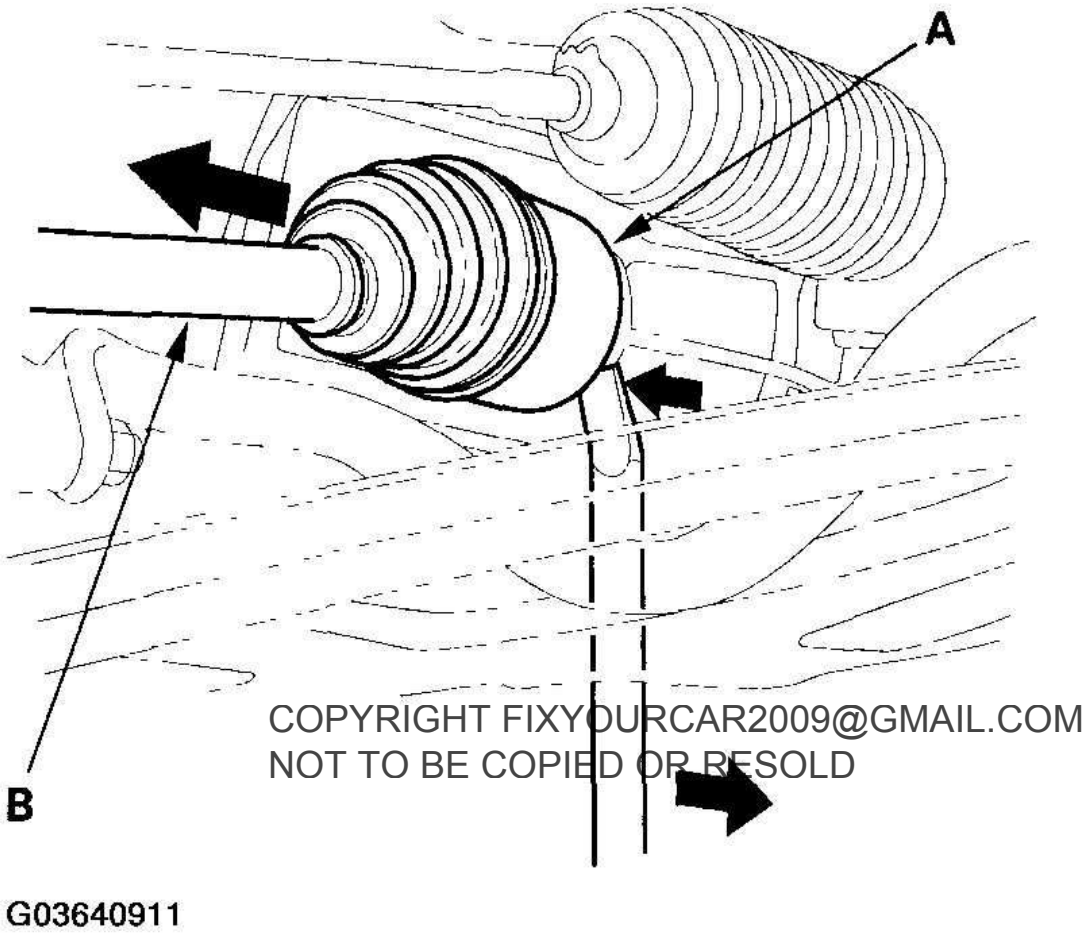

COPYRIGHT FIXYOURCAR2009@GMAIL.COM
NOT TO BE COPIED OR RESOLD

cardiagn.com

Fig. 7: Prying Left Driveshaft
Courtesy of AMERICAN HONDA MOTOR CO., INC.

Right driveshaft

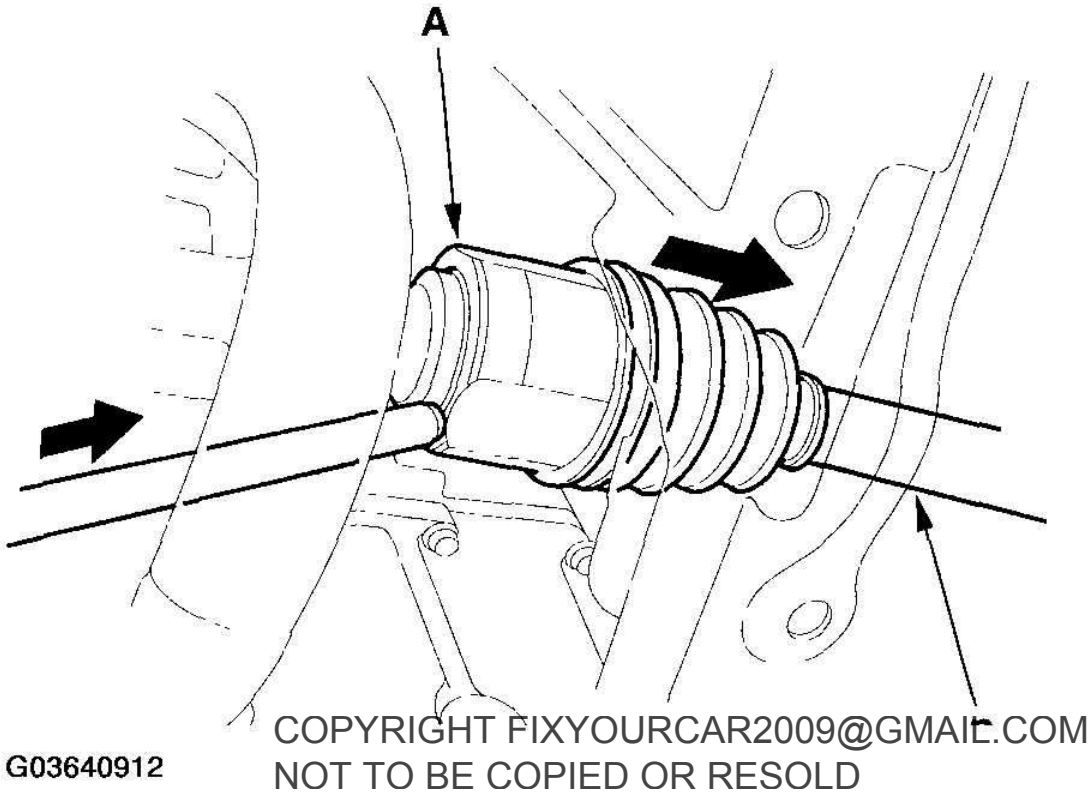

COPYRIGHT FIXYOURCAR2009@GMAIL.COM
NOT TO BE COPIED OR RESOLD

cardiagn.com

Fig. 8: Prying Right Driveshaft
Courtesy of AMERICAN HONDA MOTOR CO., INC.

FRONT DRIVESHAFT DISASSEMBLY

SPECIAL TOOLS REQUIRED

Threaded adapter, 26 x 1.5 mm 07XAC-001030A

INBOARD JOINT SIDE

1. Remove the set ring from the inboard joint (left driveshaft).

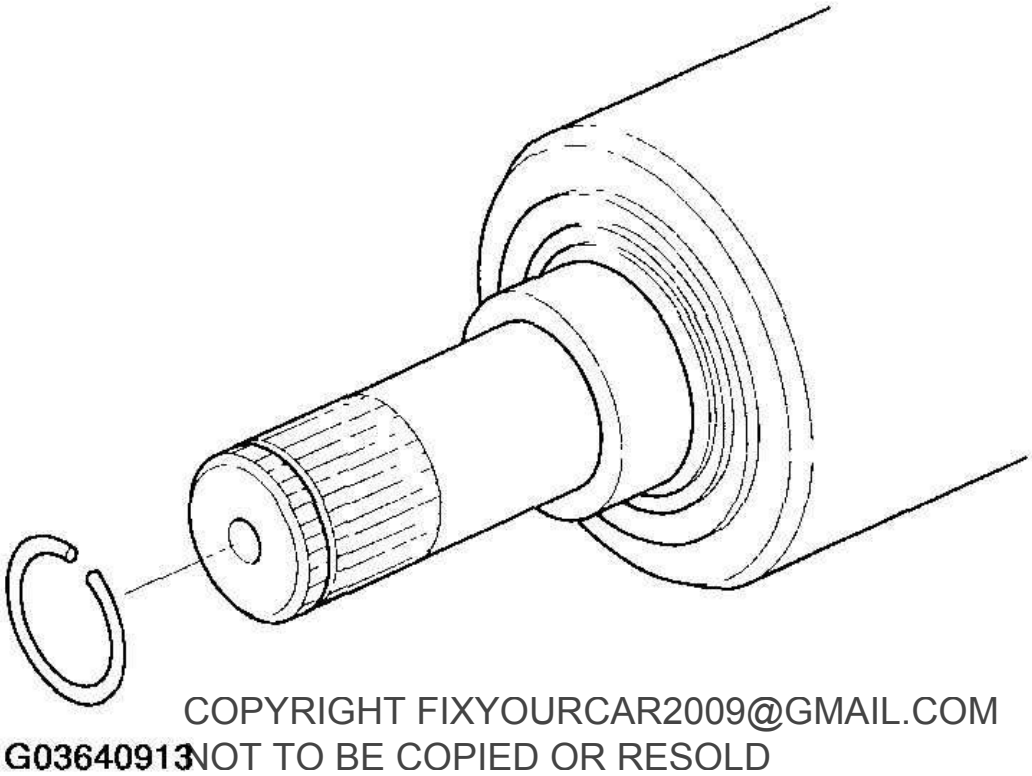

COPYRIGHT FIXYOURCAR2009@GMAIL.COM
NOT TO BE COPIED OR RESOLD

Fig. 9: Removing Set Ring From Inboard Joint (Left Driveshaft)
Courtesy of AMERICAN HONDA MOTOR CO., INC.

2. Remove the boot bands. Be careful not to damage the boot.
   - If the boot band is a locking tab type (A), pry up the locking tab (B) with a screwdriver, and lift up the end of the band.
   - If the boot band is a double loop type (C), lift up the band end (D), and push it into the clip (E).

Locking tab type

cardiagn.com

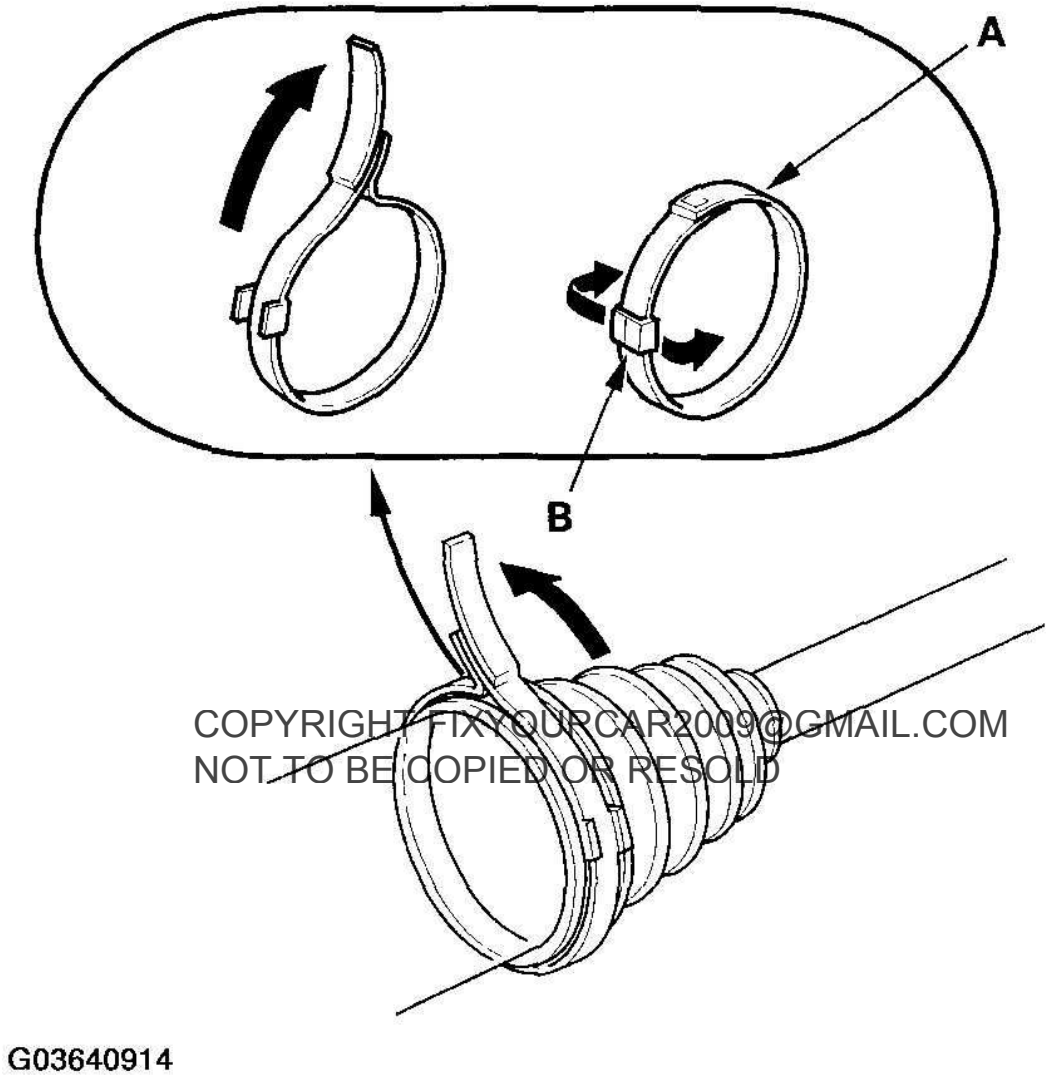

COPYRIGHT FIXYOURCAR2009@GMAIL.COM
NOT TO BE COPIED OR RESOLD

cardiagn.com

Fig. 10: Removing Boot Bands (Locking Tab Type)
Courtesy of AMERICAN HONDA MOTOR CO., INC.

Double loop type

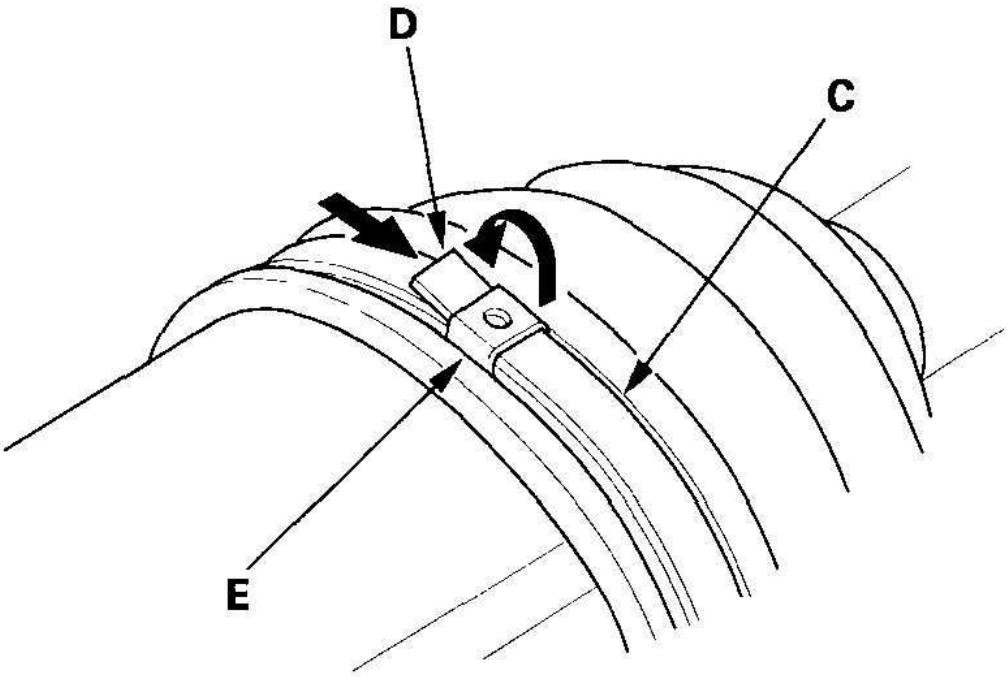

G03640915

COPYRIGHT FIXYOURCAR2009@GMAIL.COM
NOT TO BE COPIED OR RESOLD

Fig. 11: Removing Boot Bands (Double Loop Type)
Courtesy of AMERICAN HONDA MOTOR CO., INC.

3. Make a mark (A) on each roller (B) and inboard joint (C) to identify the locations of rollers and grooves on the inboard joint. Then remove the inboard joint on the shop towel (D). Be careful not to drop the rollers when separating them from the inboard joint.

cardiagn.com

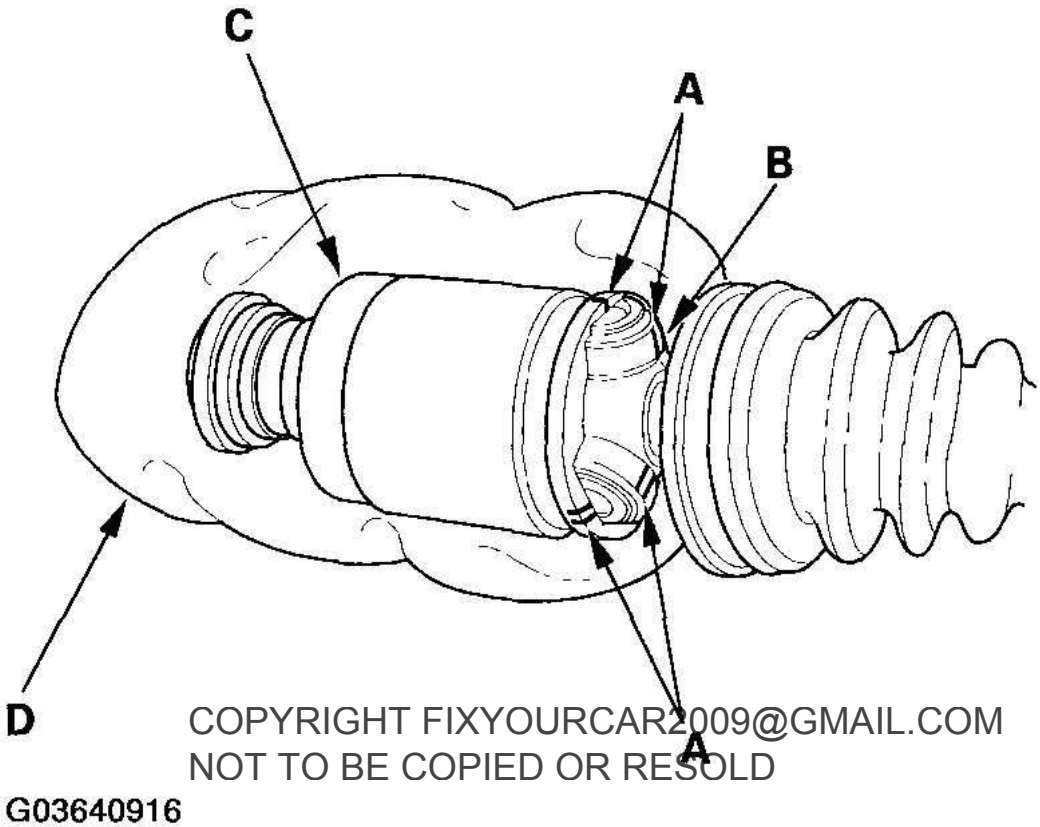

COPYRIGHT FIXYOURCAR2009@GMAIL.COM
NOT TO BE COPIED OR RESOLD

cardiagn.com

Fig. 12: Identifying Mark On Each Roller And Inboard Joint
Courtesy of AMERICAN HONDA MOTOR CO., INC.

4. Make a mark (A) on the rollers (B) and spider (C) to identify the locations of the rollers on the spider, then remove the rollers.

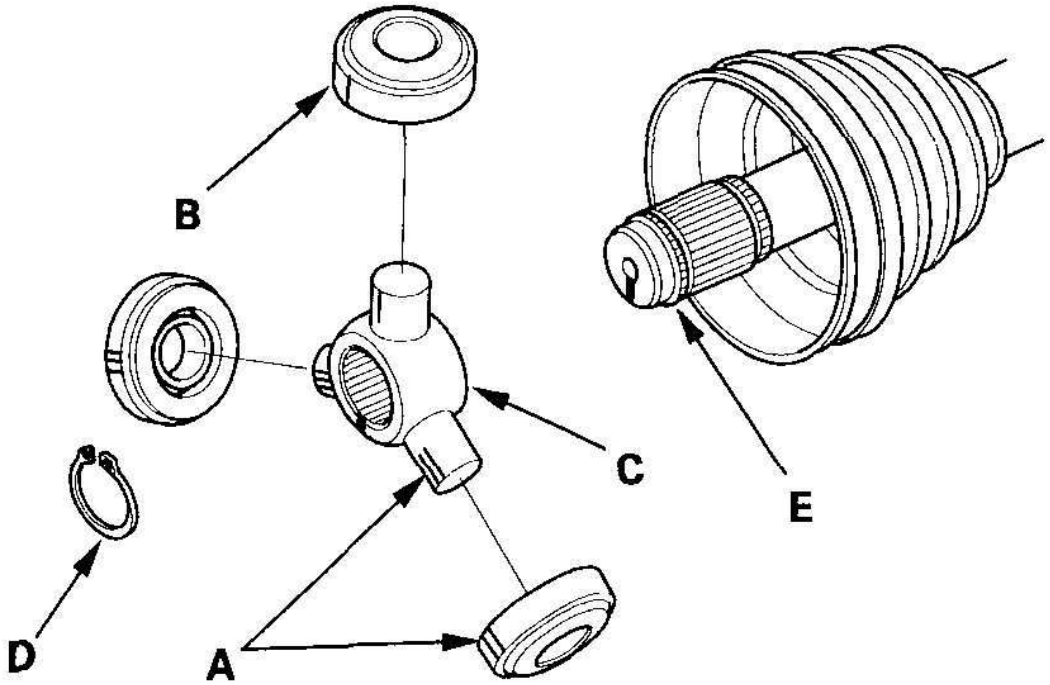

G03640917 COPYRIGHT FIXYOURCAR2009@GMAIL.COM
NOT TO BE COPIED OR RESOLD

Fig. 13: Removing Rollers
Courtesy of AMERICAN HONDA MOTOR CO., INC.

5. Remove the snap ring (D).
6. Mark the spider and driveshaft (E) to identify the position of the spider on the shaft.
7. Remove the spider.
8. Wrap the splines on the driveshaft with vinyl tape (A) to prevent damage to the boot.

Double loop type

cardiagn.com

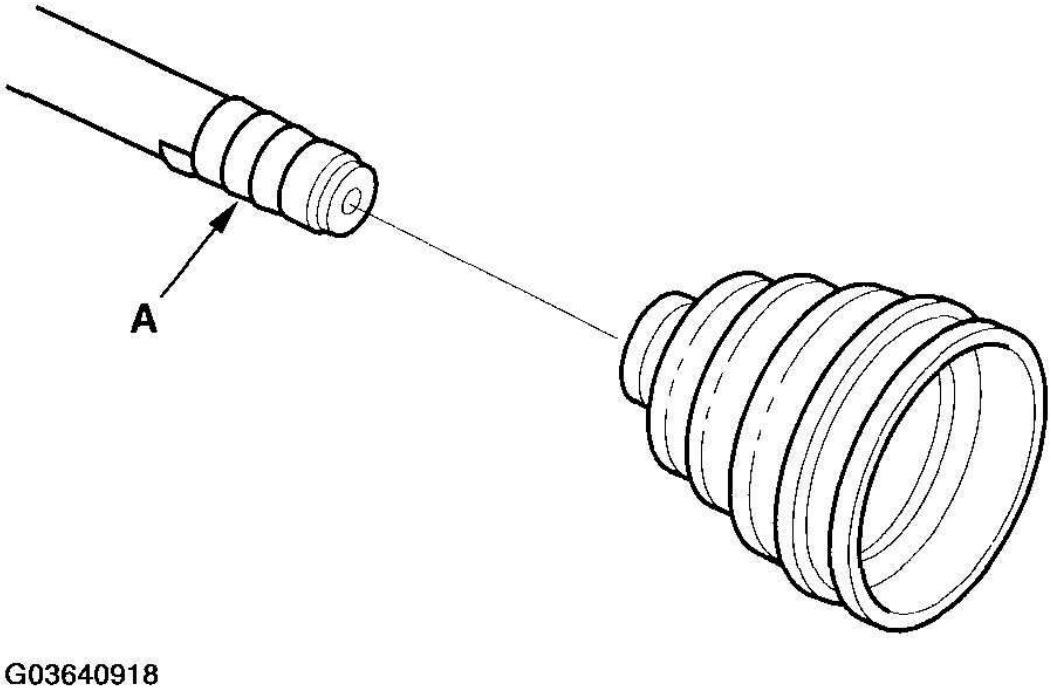

COPYRIGHT FIXYOURCAR2009@GMAIL.COM
NOT TO BE COPIED OR RESOLD

Fig. 14: Wrapping Splines On Driveshaft With Vinyl Tape (Double Loop Type)
Courtesy of AMERICAN HONDA MOTOR CO., INC.

Locking tab type

cardiagn.com

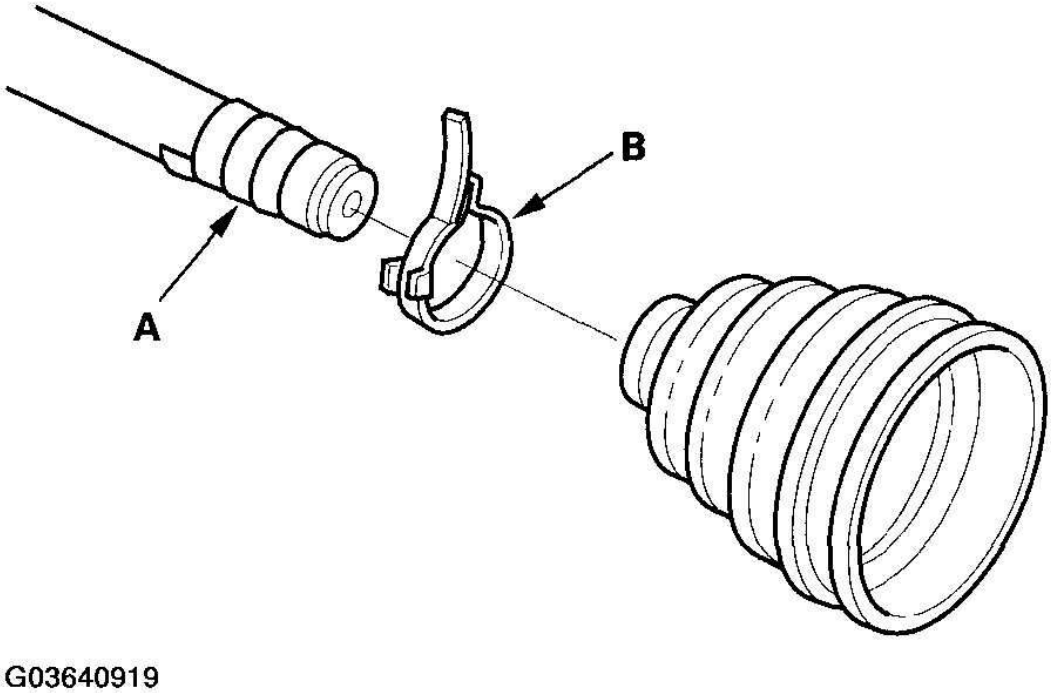

COPYRIGHT FIXYOURCAR2009@GMAIL.COM
NOT TO BE COPIED OR RESOLD

Fig. 15: Removing Inboard Boot And Boot Band
Courtesy of AMERICAN HONDA MOTOR CO., INC.

9. Remove the inboard boot and boot band (B). Be careful not to damage the boot.
10. Remove the vinyl tape.

OUTBOARD JOINT SIDE

1. Remove the boot bands (A). Lift up the three tabs (B) with a screwdriver. Be careful not to damage the boot.

cardiagn.com

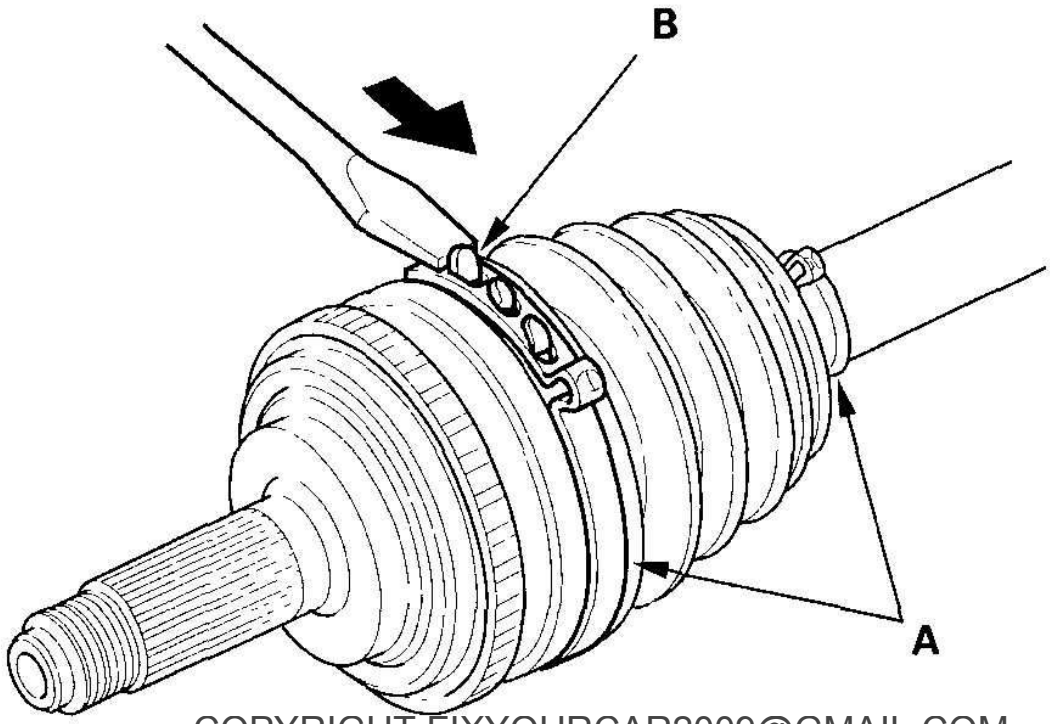

COPYRIGHT FIXYOURCAR2009@GMAIL.COM
NOT TO BE COPIED OR RESOLD

Fig. 16: Removing Boot Bands
Courtesy of AMERICAN HONDA MOTOR CO., INC.

2. Slide the outboard boot (A) partially to the inboard joint side. Be careful not to damage the boot.

cardiagn.com

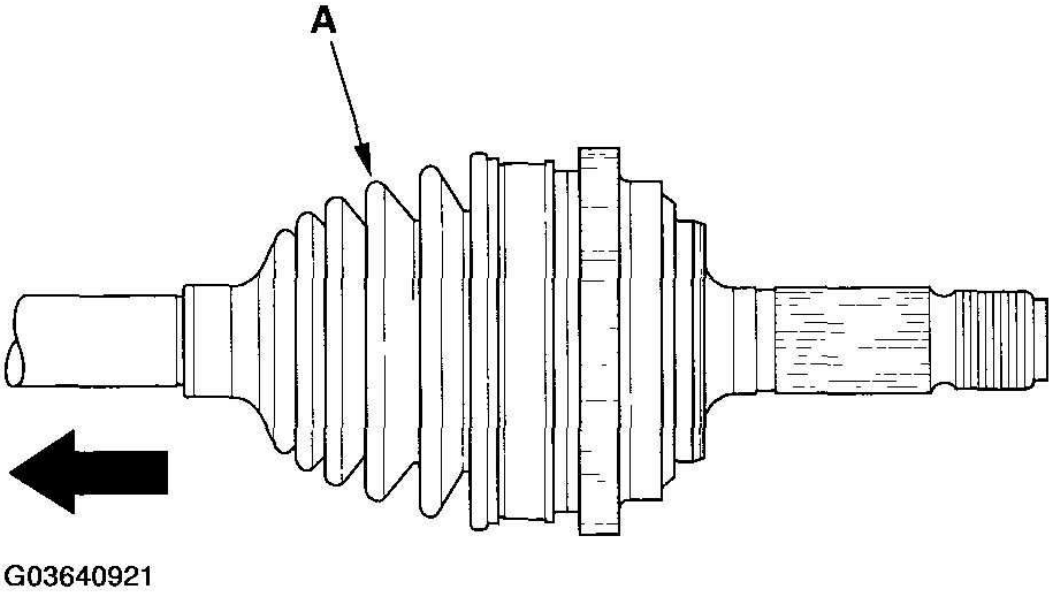

Fig. 17: Sliding Outboard Boot
Courtesy of AMERICAN HONDA MOTOR CO., INC.

COPYRIGHT FIXYOURCAR2009@GMAIL.COM
NOT TO BE COPIED OR RESOLD

3. Wipe off the grease to expose the driveshaft and the outboard joint inner race.
4. Make a mark (A) on the driveshaft (B) at the same position as the outboard joint end (C).

cardiagn.com

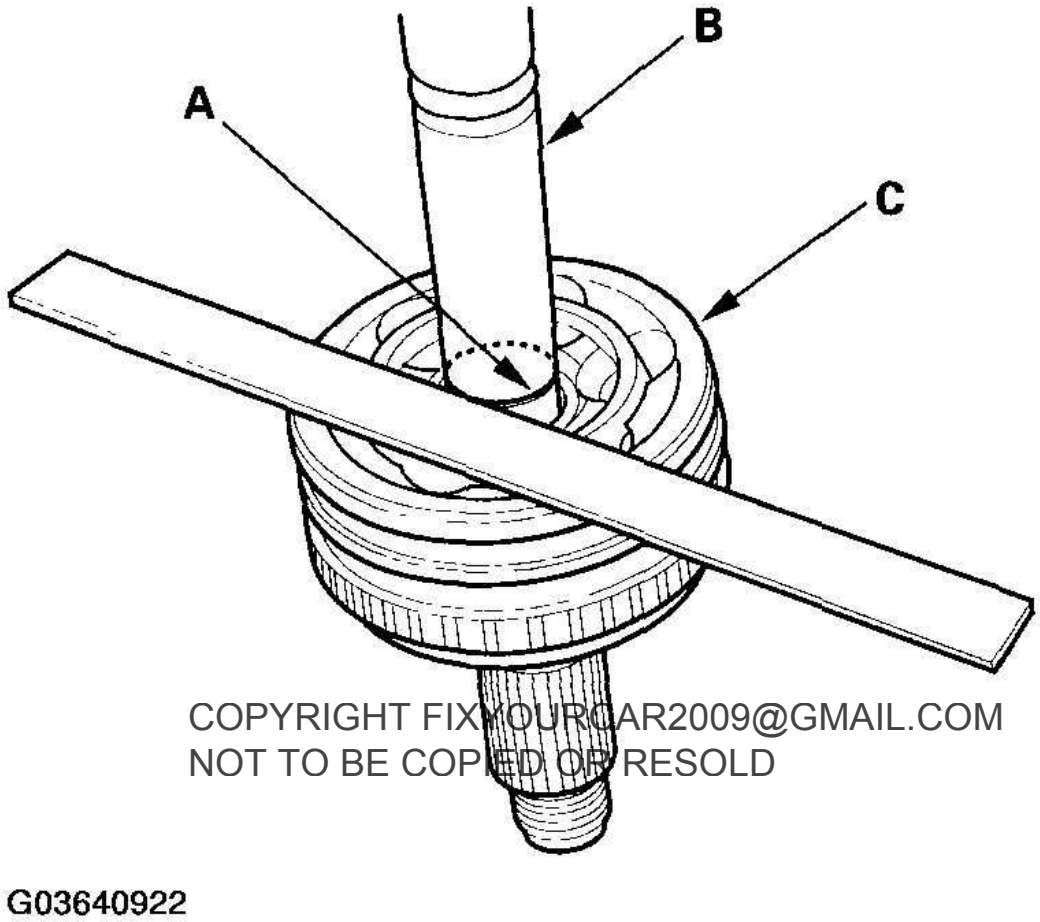

COPYRIGHT FIXYOURCAR2009@GMAIL.COM
NOT TO BE COPIED OR RESOLD

cardiagn.com

Fig. 18: Making Mark On Driveshaft
Courtesy of AMERICAN HONDA MOTOR CO., INC.

5. Carefully clamp the driveshaft in a vise.

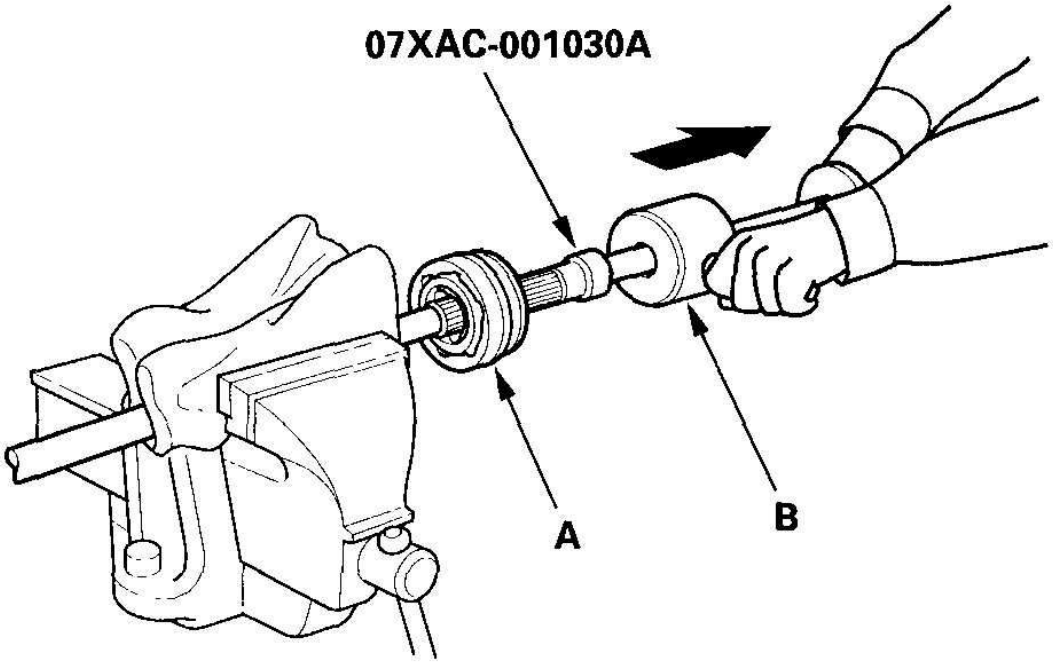

COPYRIGHT FIXYOURCAR2009@GMAIL.COM
NOT TO BE COPIED OR RESOLD

Fig. 19: Clamping Driveshaft In Vise
Courtesy of AMERICAN HONDA MOTOR CO., INC.

6. Remove the outboard joint (A) using the special tool and a commercially available 5/8"-18 UNF slide hammer (B).
7. Remove the driveshaft from the vise.
8. Remove the circlip from the driveshaft.

cardiagn.com

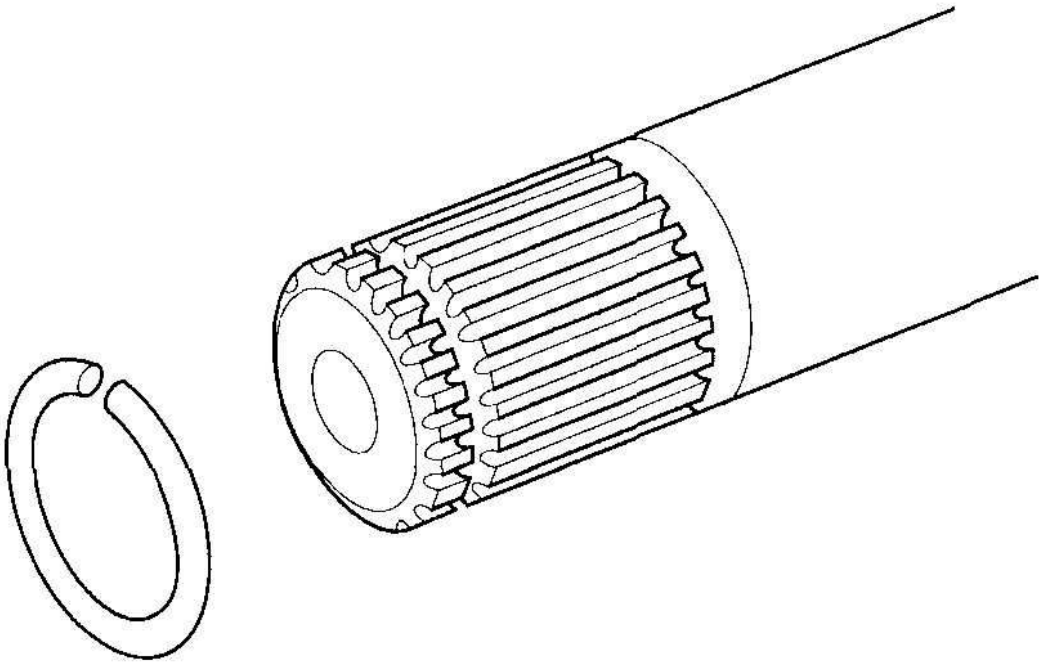

COPYRIGHT FIXYOURCAR2009@GMAIL.COM
NOT TO BE COPIED OR RESOLD

Fig. 20: Removing Circlip From Driveshaft
Courtesy of AMERICAN HONDA MOTOR CO., INC.

9. Wrap the splines on the driveshaft with vinyl tape (A) to prevent damage to the boot.

cardiagn.com

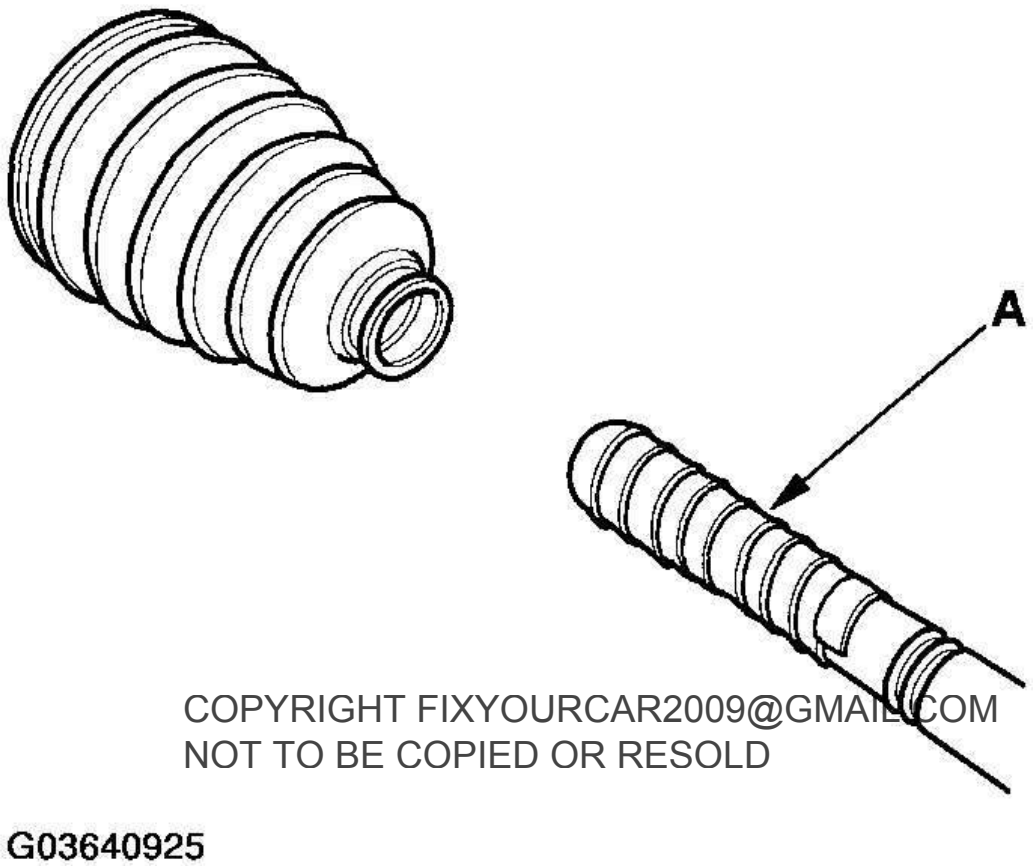

COPYRIGHT FIXYOURCAR2009@GMAIL.COM
NOT TO BE COPIED OR RESOLD

cardiagn.com

Fig. 21: Wrapping Splines On Driveshaft With Vinyl Tape
Courtesy of AMERICAN HONDA MOTOR CO., INC.

10. Remove the outboard boot. Be careful not to damage the boot.
11. Remove the vinyl tape.

FRONT DRIVESHAFT REASSEMBLY

EXPLODED VIEW

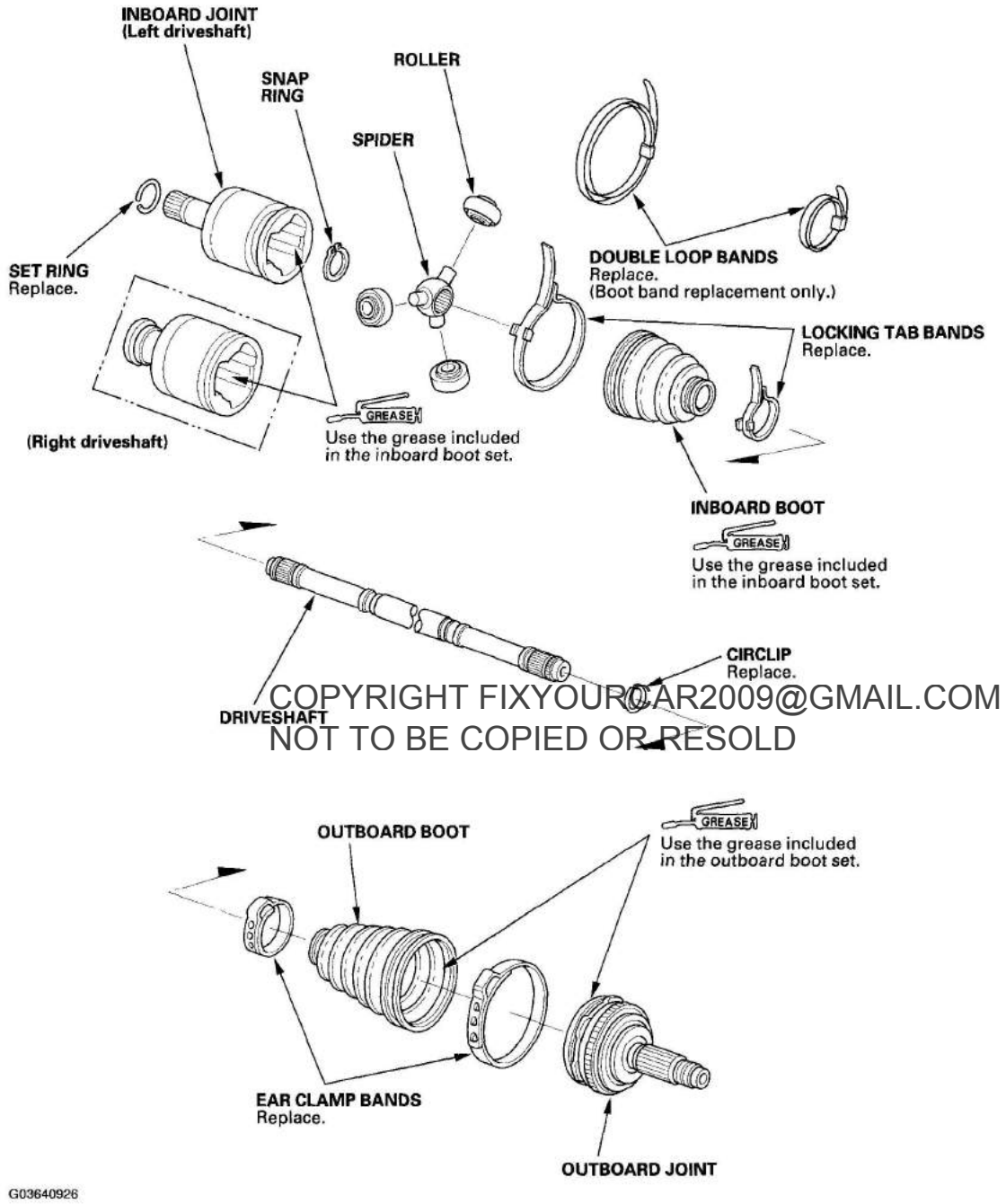

COPYRIGHT FIXYOURCAR2009@GMAIL.COM
NOT TO BE COPIED OR RESOLD

cardiagn.com

Fig. 22: Exploded View Of Front Driveshaft
Courtesy of AMERICAN HONDA MOTOR CO., INC.

Special Tools Required

- Boot band tool, KD-3191 or equivalent, commercially available
- Boot band pincers, Kent-Moore J-35910 or equivalent, commercially available

NOTE: Refer to the Exploded View as needed during this procedure.

INBOARD JOINT SIDE

1. Wrap the splines with vinyl tape (A) to prevent damage to the inboard boot.

Double loop type

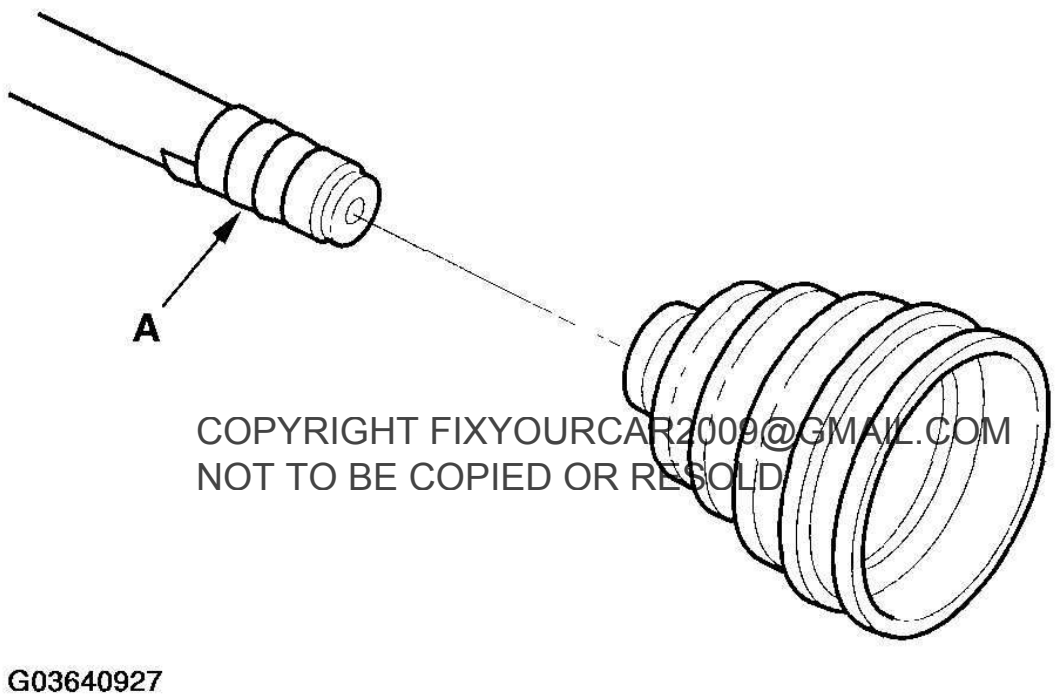

COPYRIGHT FIXYOURCAR2009@GMAIL.COM
NOT TO BE COPIED OR RESOLD

cardiagn.com

Fig. 23: Wrapping Splines With Vinyl Tape
Courtesy of AMERICAN HONDA MOTOR CO., INC.

Locking tab type

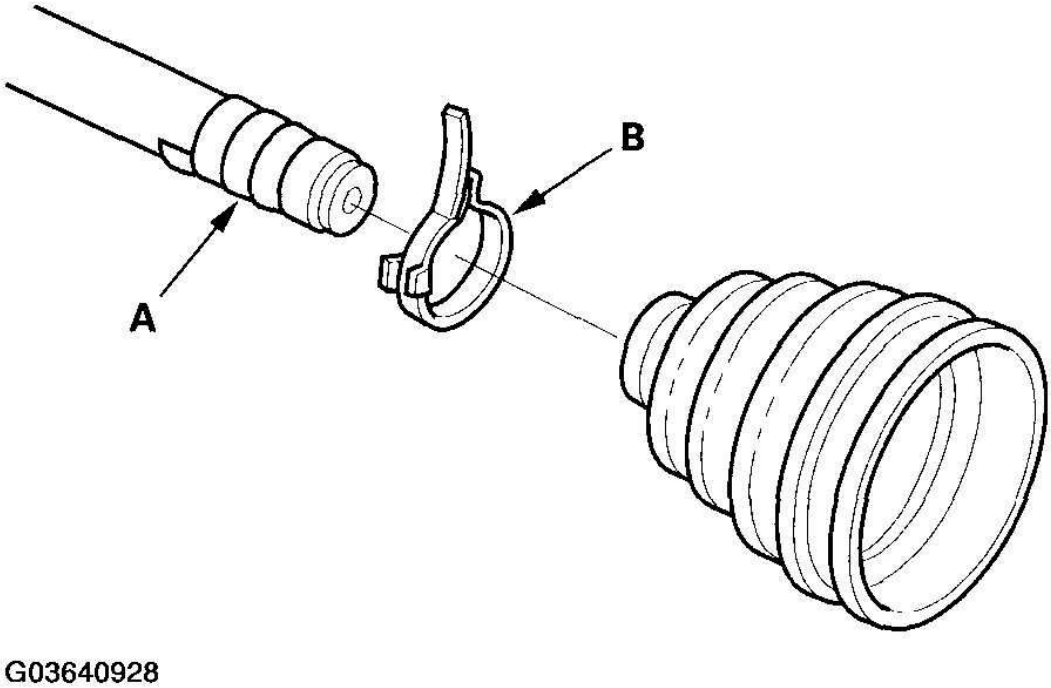

COPYRIGHT FIXYOURCAR2009@GMAIL.COM
NOT TO BE COPIED OR RESOLD

Fig. 24: Installing Inboard Boot And Boot Band On Driveshaft
Courtesy of AMERICAN HONDA MOTOR CO., INC.

2. Install the inboard boot and boot band (B) on the driveshaft, then remove the vinyl tape. Be careful not to damage the inboard boot.
3. Install the spider (A) onto the driveshaft by aligning the marks (B) on the spider and the end of the driveshaft.

cardiagn.com

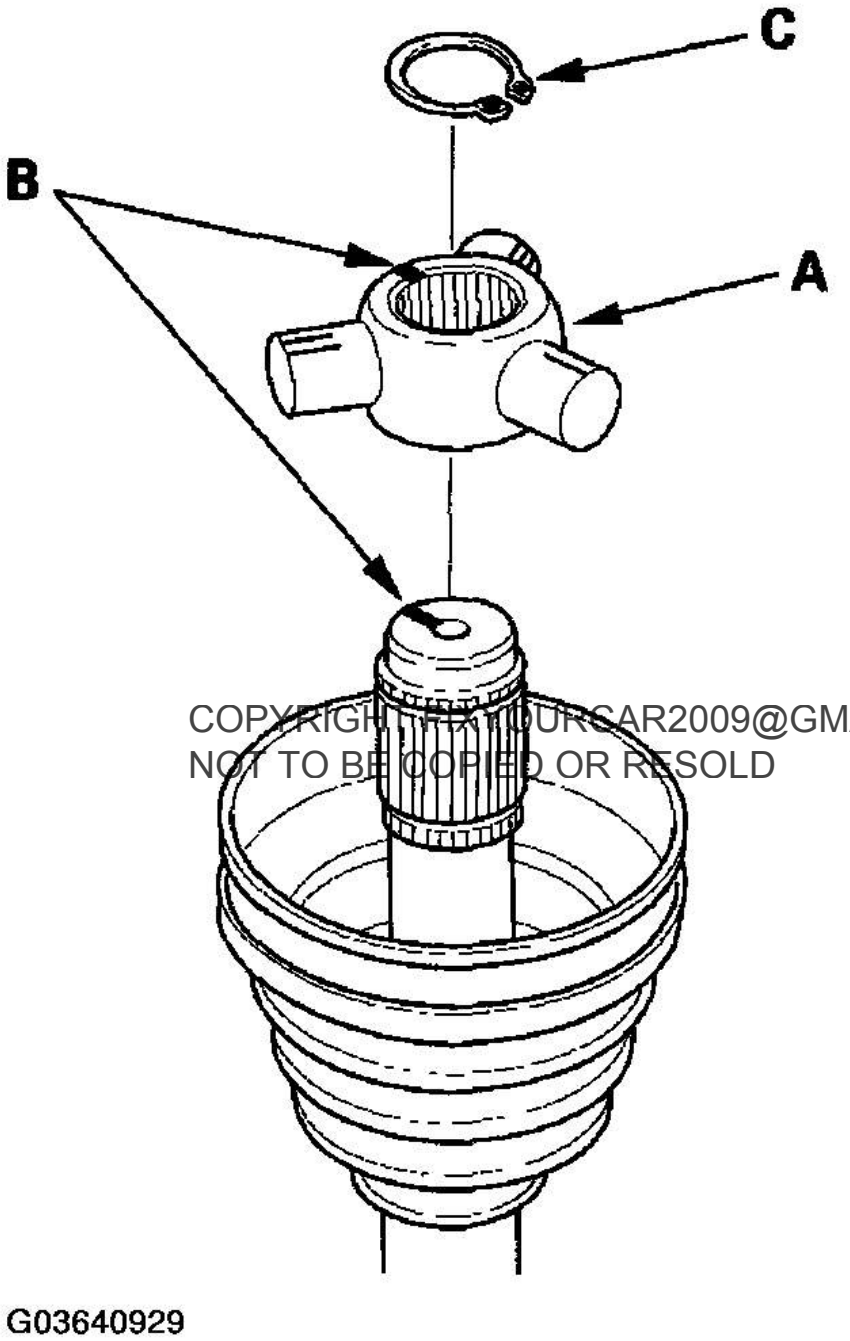

COPYRIGHT: HXYOURCAR2009@GMAIL.COM
NOT TO BE COPIED OR RESOLD

cardiagn.com

Fig. 25: Installing Spider Onto Driveshaft
Courtesy of AMERICAN HONDA MOTOR CO., INC.

4. Fit the snap ring (C) into the driveshaft groove. Always rotate the snap ring in its groove to make sure it

is fully seated.

5. Fit the rollers (A) onto the spider (B) with their high shoulders facing outward, and note these items:
   - Reinstall the rollers in their original positions on the spider by aligning the marks (C).
   - Hold the driveshaft pointed up to prevent the rollers from falling off.1

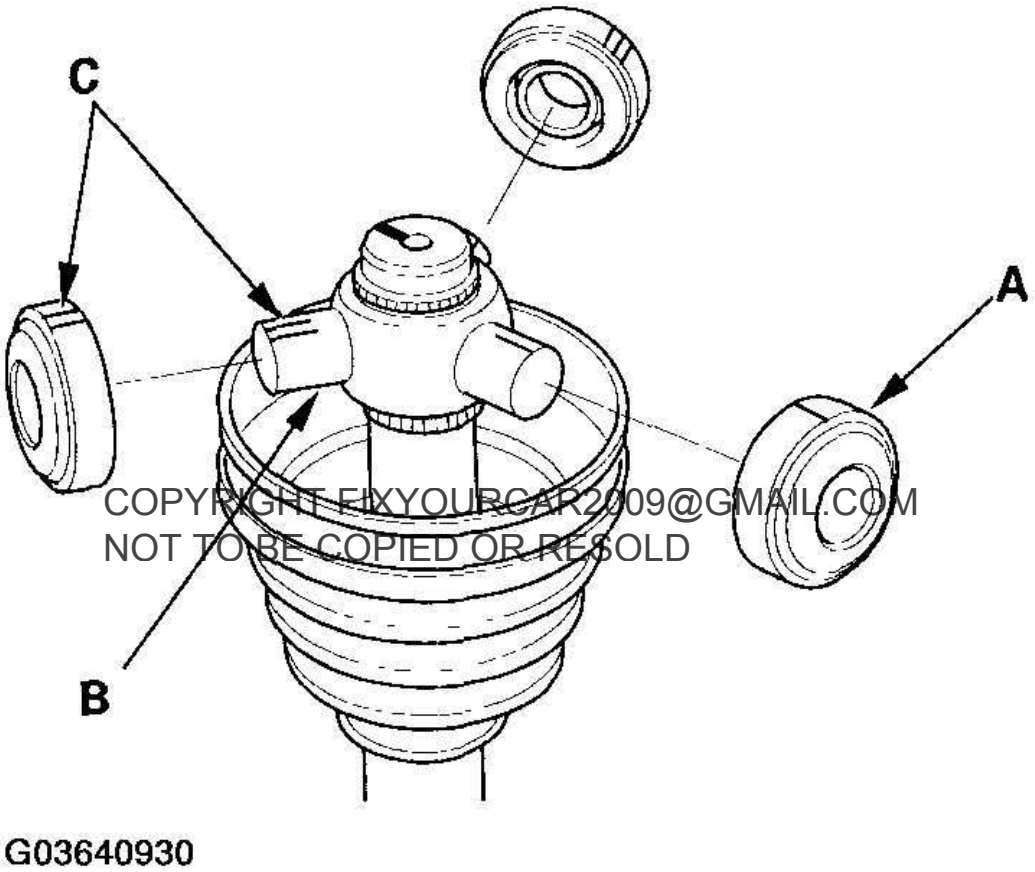

COPYRIGHT FIXYOURCAR2009@GMAIL.COM
NOT TO BE COPIED OR RESOLD

cardiagn.com

Fig. 26: Reinstalling Rollers In Their Original Positions On Spider By Aligning Marks
Courtesy of AMERICAN HONDA MOTOR CO., INC.

6. Pack the inboard joint with the joint grease included in the new driveshaft set.

   Grease quantity

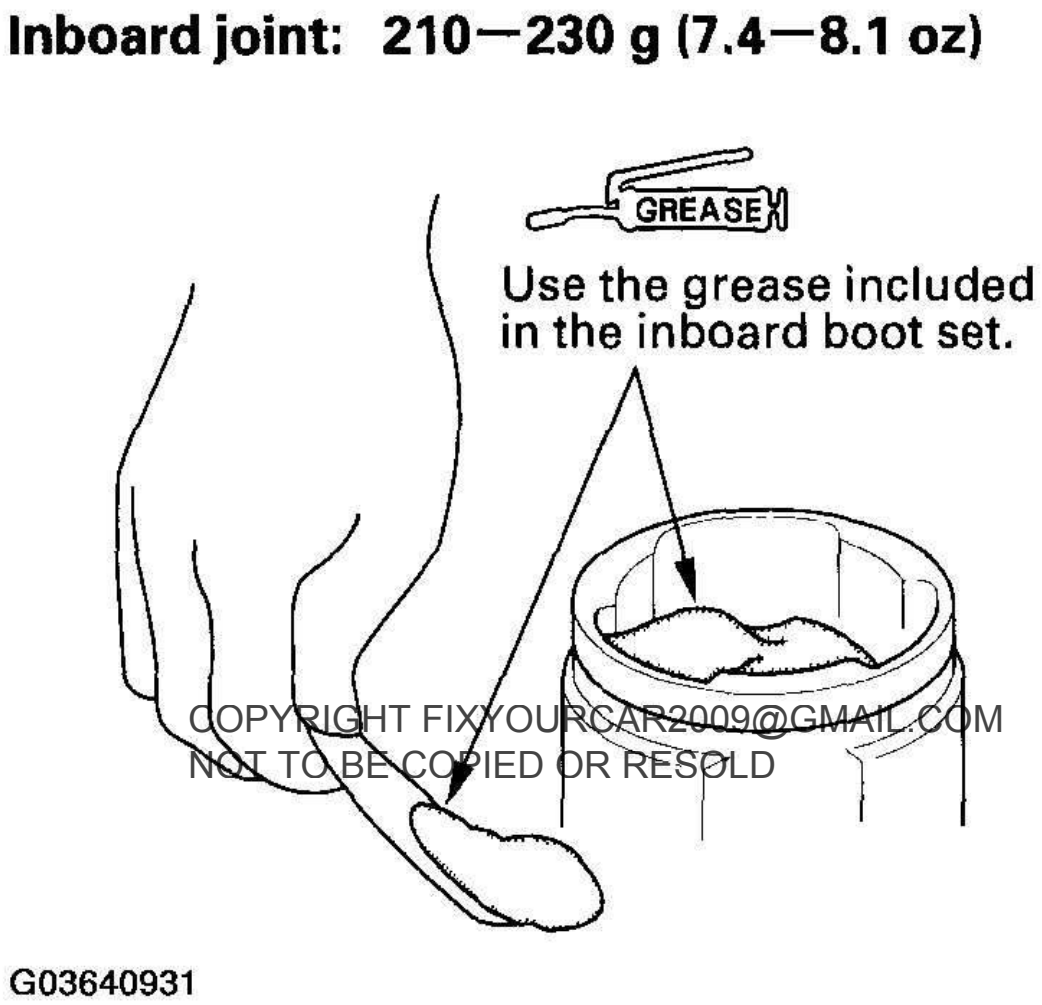

COPYRIGHT FIXYOURCAR2009@GMAIL.COM
NOT TO BE COPIED OR RESOLD

cardiagn.com

Fig. 27: Packing Inboard Joint With Joint Grease
Courtesy of AMERICAN HONDA MOTOR CO., INC.

7. Fit the inboard joint onto the driveshaft, and note these items:
   - Reinstall the inboard joint onto the driveshaft by aligning the marks (A) on the inboard joint and the rollers.
   - Hold the driveshaft so the inboard joint points up to prevent it from falling off.

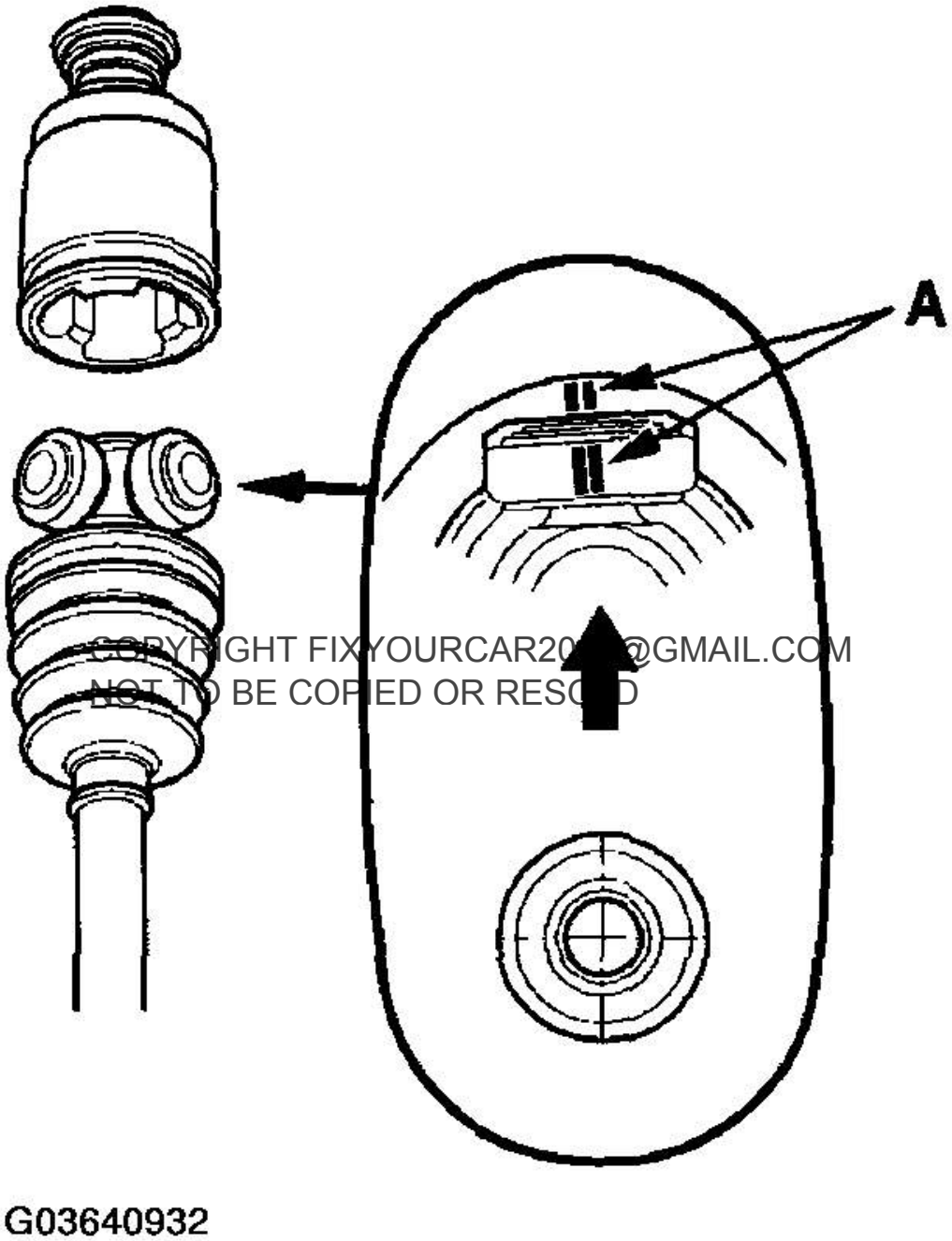

COPYRIGHT FIXYOURCAR20[illegible]@GMAIL.COM
NOT TO BE COPIED OR RESOLD
cardiagn.com

Fig. 28: Fitting Inboard Joint Onto Driveshaft
Courtesy of AMERICAN HONDA MOTOR CO., INC.

8. Install the boot bands.
   - For the double loop type, go to step 9. (Boot band replacement only.
   - For the locking tab type, go to step 18 .
9. Fit the boot ends onto the driveshaft and the inboard joint, then install the new double loop band (A) onto the boot.

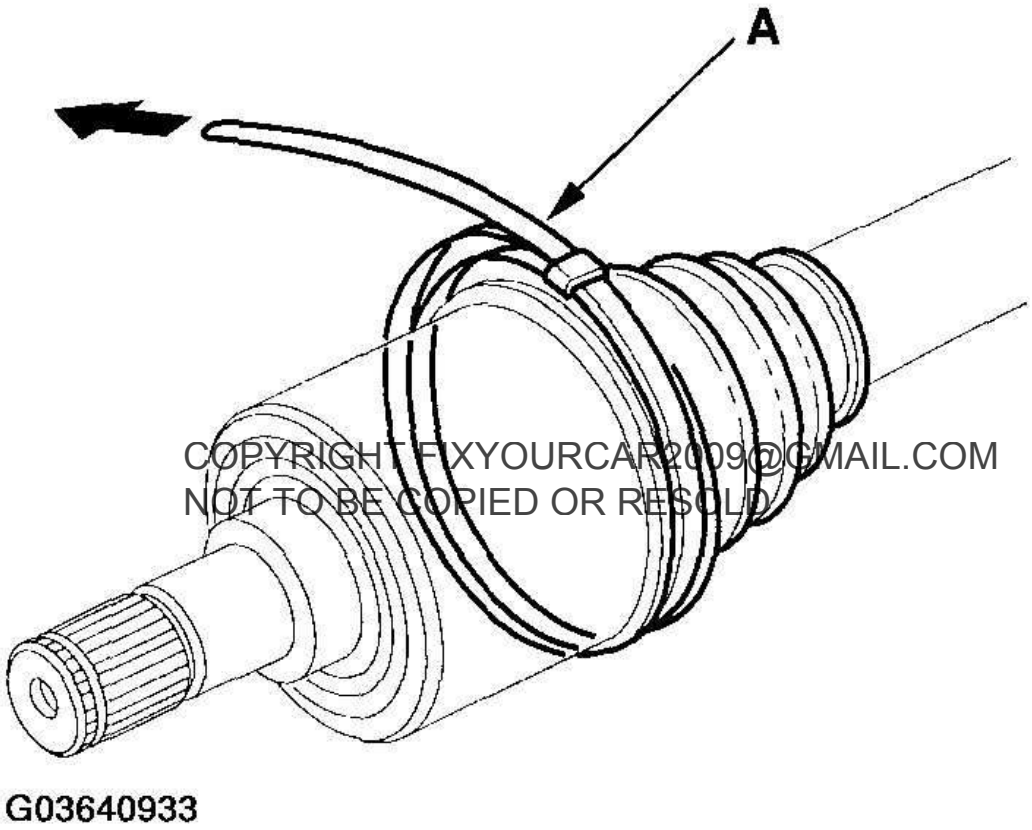

COPYRIGHT FIXYOURCAR2009@GMAIL.COM
NOT TO BE COPIED OR RESOLD

cardiagn.com

Fig. 29: Installing New Double Loop Band Onto Boot
Courtesy of AMERICAN HONDA MOTOR CO., INC.

10. Pull up the slack in the band by hand.
11. Mark a position (A) on the band 10-14 mm (0.4-0.6 in.) from the clip (B).

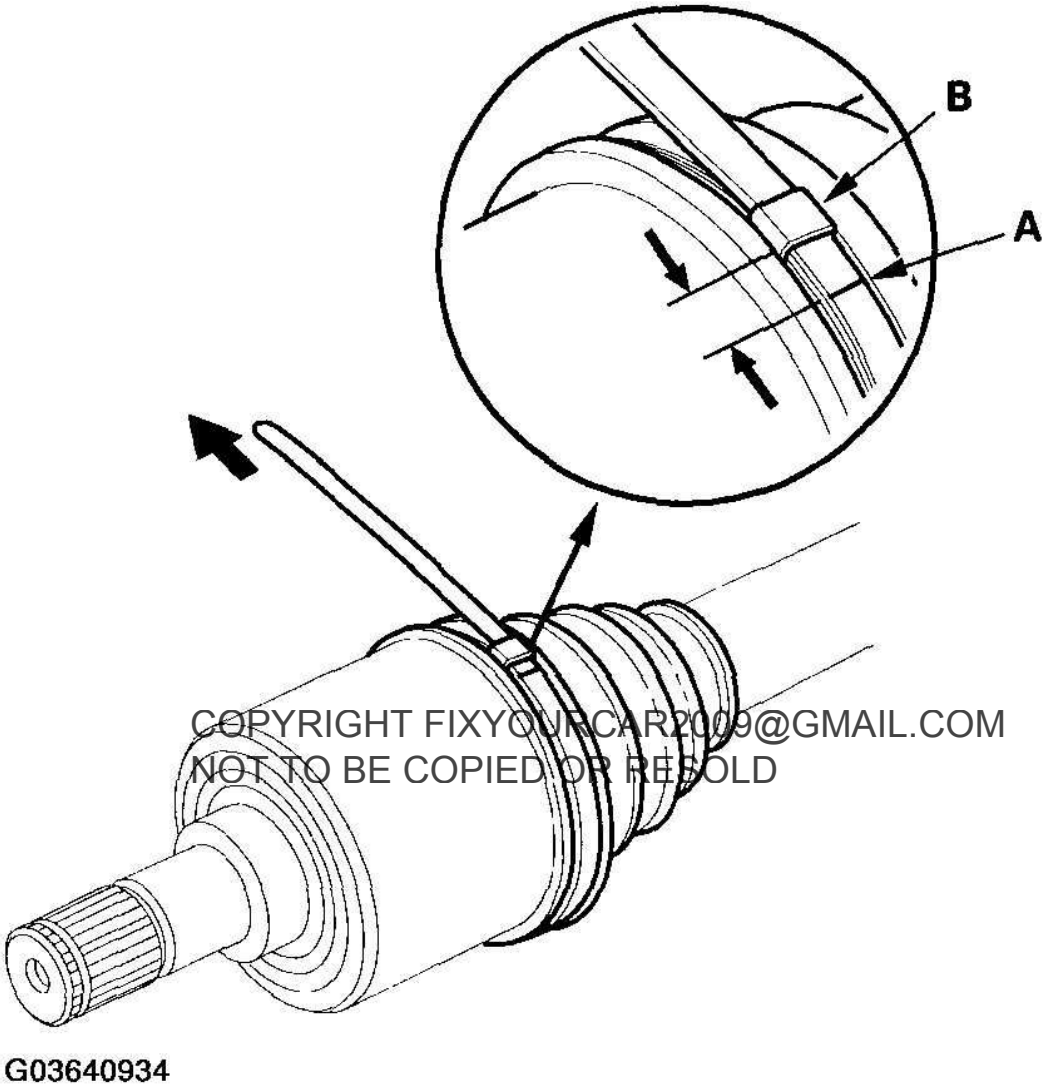

COPYRIGHT FIXYOURCAR2009@GMAIL.COM
NOT TO BE COPIED OR RESOLD

cardiagn.com

Fig. 30: Identifying Marking Position
Courtesy of AMERICAN HONDA MOTOR CO., INC.

12. Thread the free end of the band through the nose section of a commercially available boot band tool KD-3191 or equivalent (A), and into the slot on the winding mandrel (B).

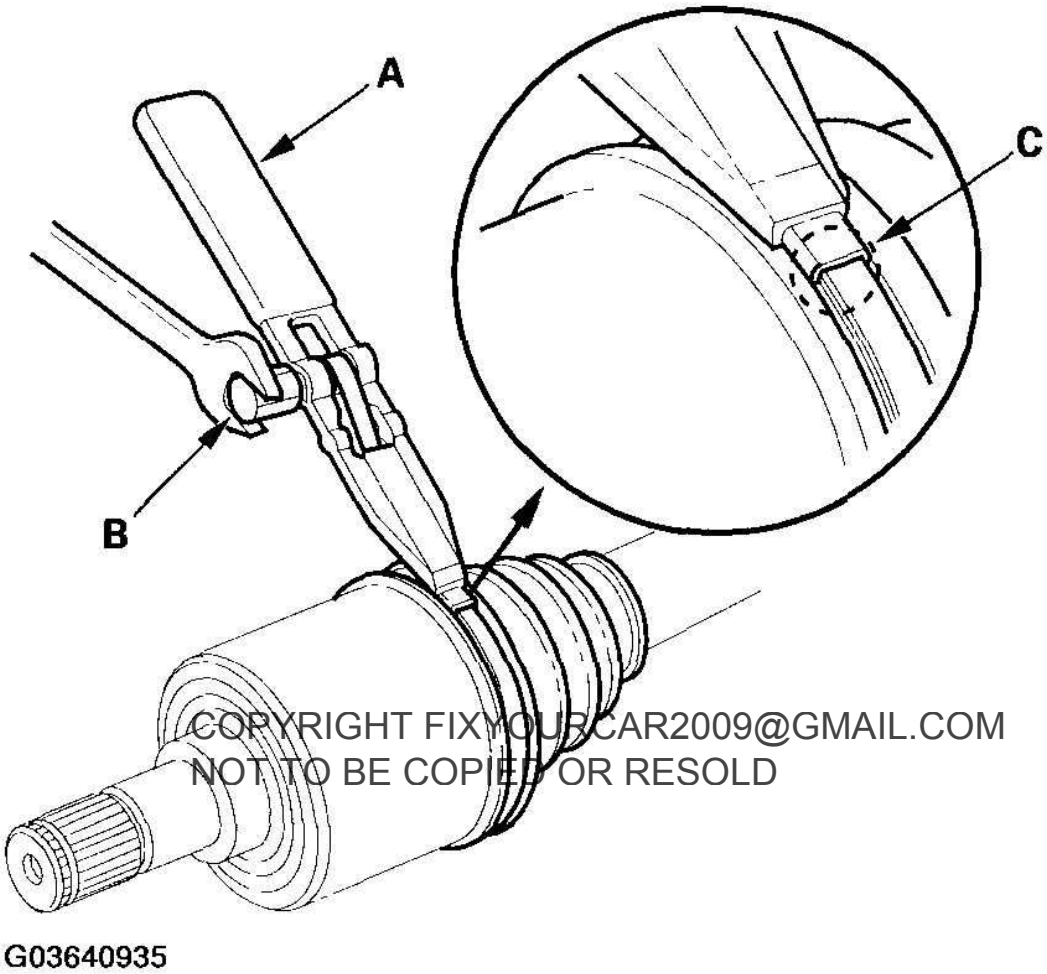

COPYRIGHT FIXYOURCAR2009@GMAIL.COM
NOT TO BE COPIED OR RESOLD

cardiagn.com

Fig. 31: Threading Free End Of Band Through Nose Section Of Boot Band Tool KD-3191 Or Equivalent
Courtesy of AMERICAN HONDA MOTOR CO., INC.

13. Place a wrench on the winding mandrel of the boot band tool, and tighten the band until the marked spot (C) on the band meets the edge of the clip.
14. Lift up the boot band tool to bend the free end of the band 90 degrees to the clip. Center-punch the clip, then fold over the remaining tail onto the clip.

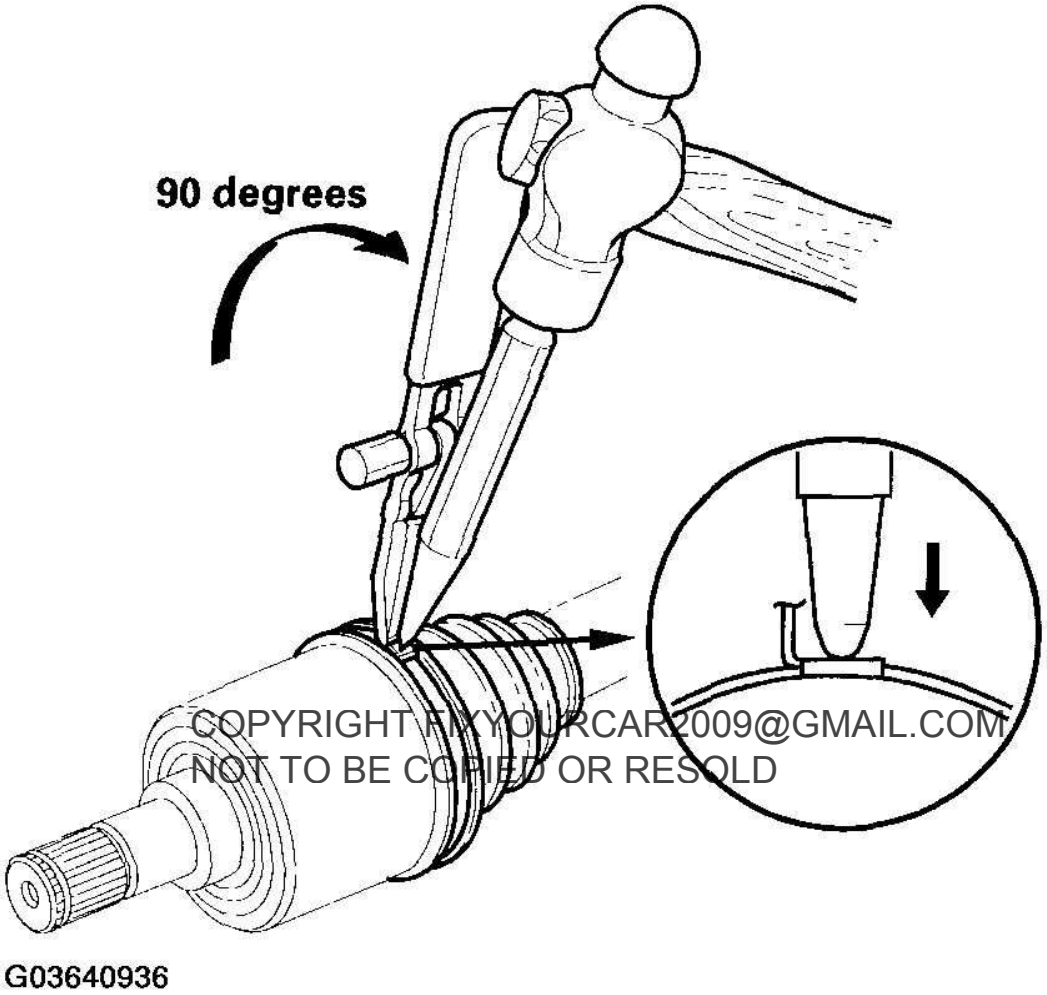

COPYRIGHT FIXYOURCAR2009@GMAIL.COM
NOT TO BE COPIED OR RESOLD

cardiagn.com

Fig. 32: Center-Punching Clip
Courtesy of AMERICAN HONDA MOTOR CO., INC.

15. Unwind the boot band tool, and cut off the excess free end of the band to leave a 5-10 mm (0.2-0.4 in.) tail protruding from the clip.

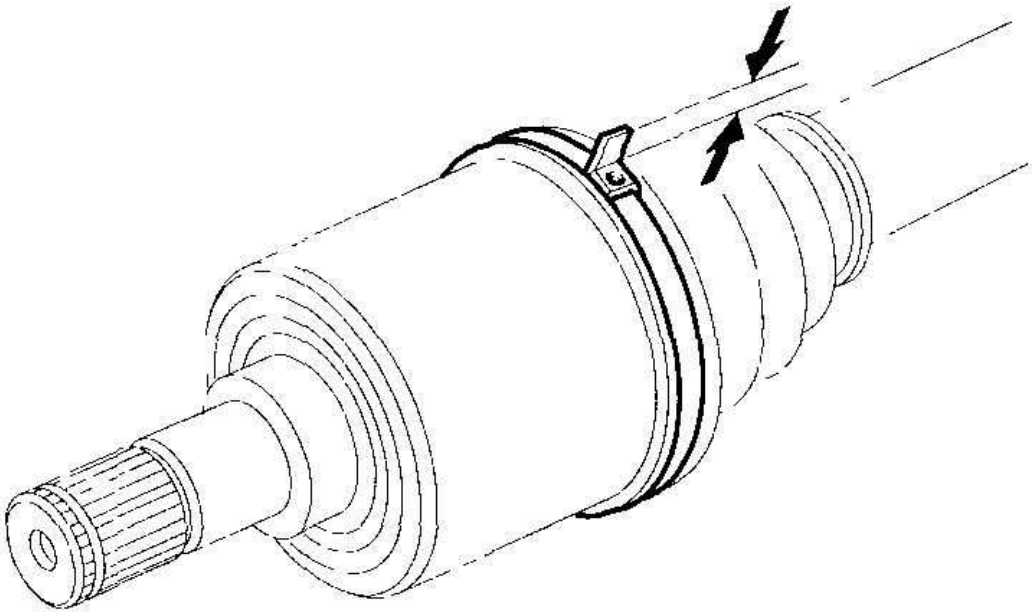

G03640937

COPYRIGHT FIXYOURCAR2009@GMAIL.COM
NOT TO BE COPIED OR RESOLD

Fig. 33: Identifying Excess Free End Of Band
Courtesy of AMERICAN HONDA MOTOR CO., INC.

16. Bend the band end (A) by tapping it down with a hammer.

NOTE:

- **Make sure the band and clip do not interfere with anything, and the band does not move.**
- **Remove any grease remaining on the surrounding surfaces.**

cardiagn.com

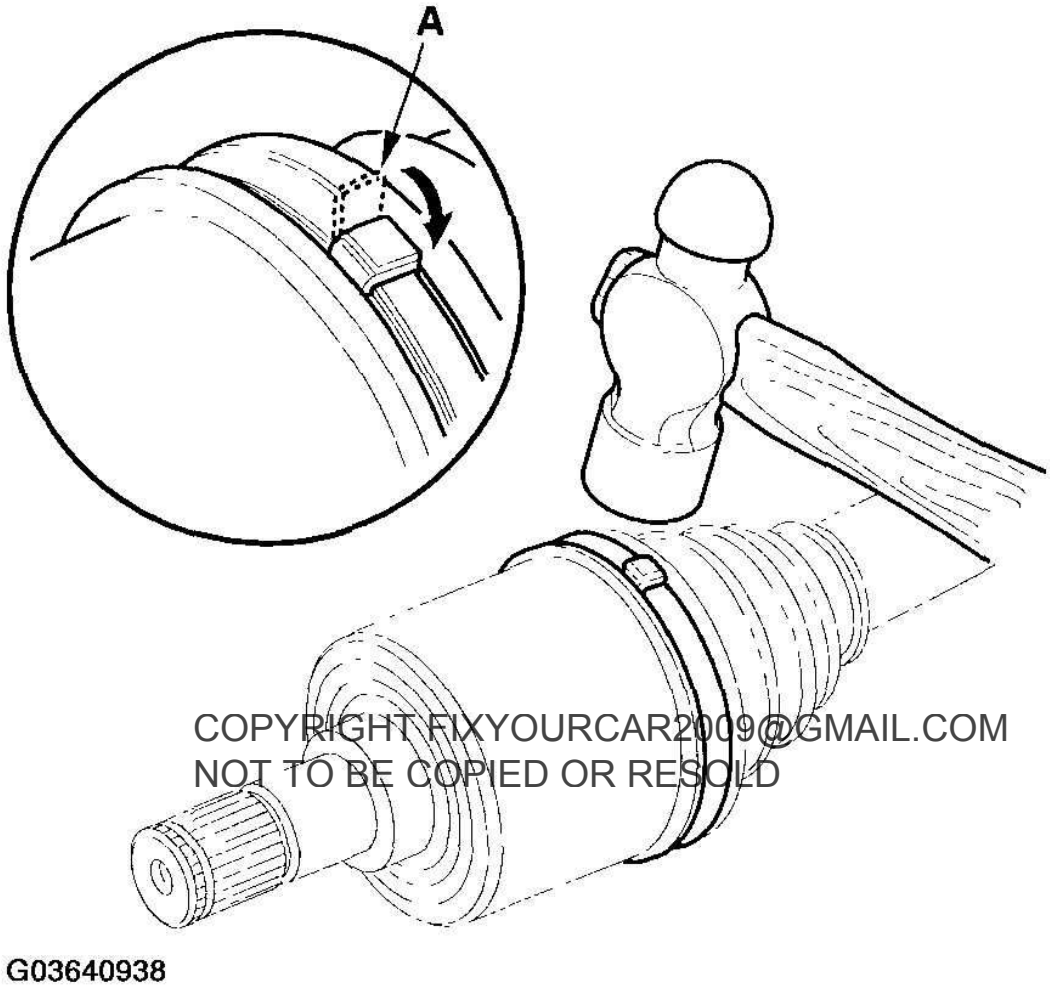

COPYRIGHT FIXYOURCAR2009@GMAIL.COM
NOT TO BE COPIED OR RESOLD

cardiagn.com

Fig. 34: Bending Band End By Tapping It Down Using Hammer
Courtesy of AMERICAN HONDA MOTOR CO., INC.

17. Repeat steps 12. through 16. for the band on the other end of the boot.
18. Install a new locking tab type boot band on the inboard joint side of the inboard boot. Fold down the locking tabs.

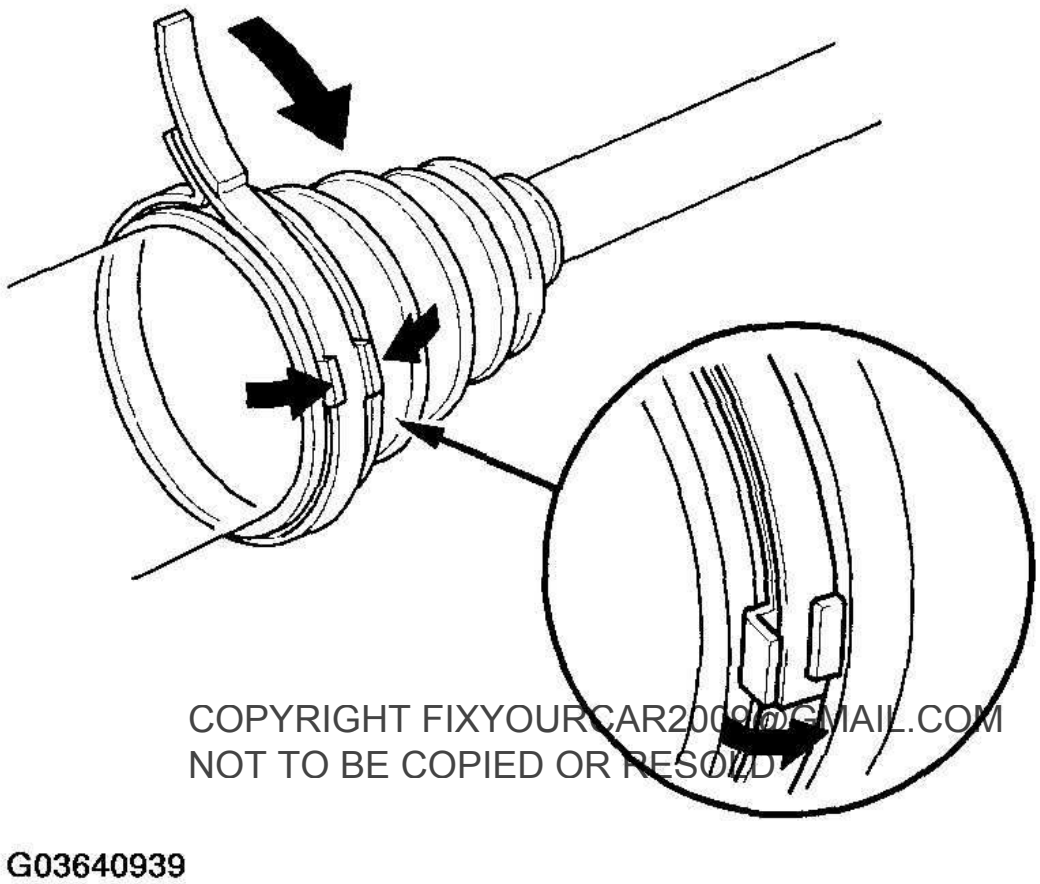

COPYRIGHT FIXYOURCAR2009@GMAIL.COM
NOT TO BE COPIED OR RESOLD

cardiagn.com

Fig. 35: Installing New Locking Tab Type Boot Band On Inboard Joint Side Of Inboard Boot
Courtesy of AMERICAN HONDA MOTOR CO., INC.

19. Lightly tap on the doubled-over portions to reduce their height.
20. Install a new set ring (left driveshaft).

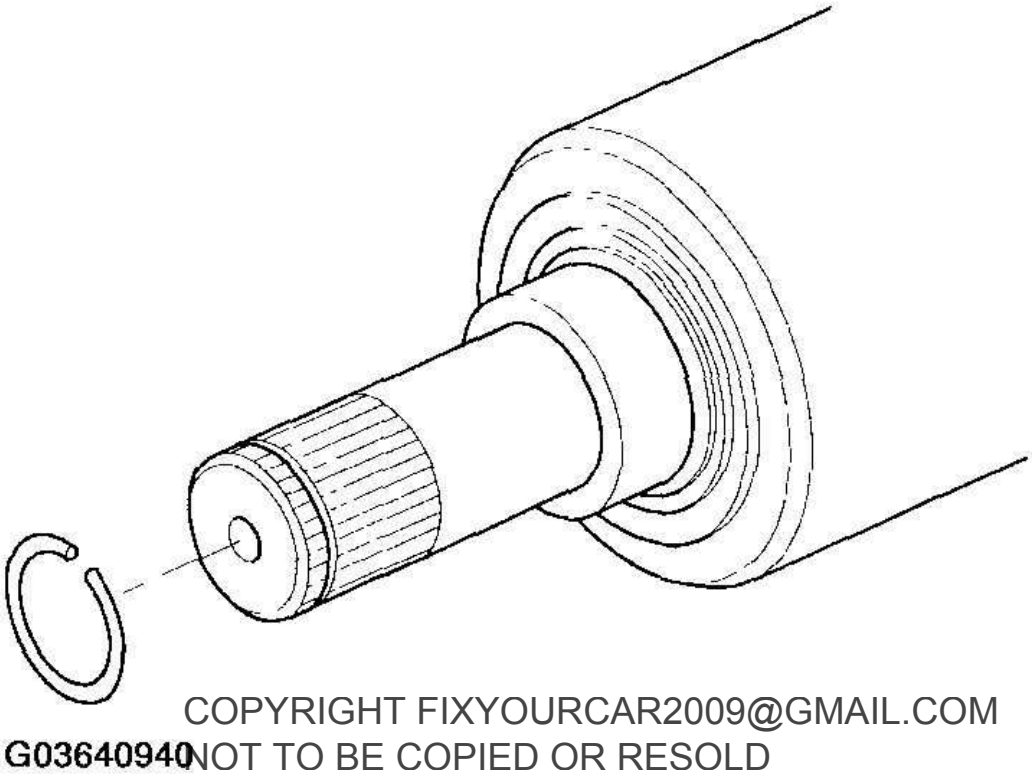

COPYRIGHT FIXYOURCAR2009@GMAIL.COM
NOT TO BE COPIED OR RESOLD

cardiagn.com

Fig. 36: Installing New Set Ring (Left Driveshaft)
Courtesy of AMERICAN HONDA MOTOR CO., INC.

OUTBOARD JOINT SIDE

1. Wrap the splines with vinyl tape (A) to prevent damage to the outboard boot.

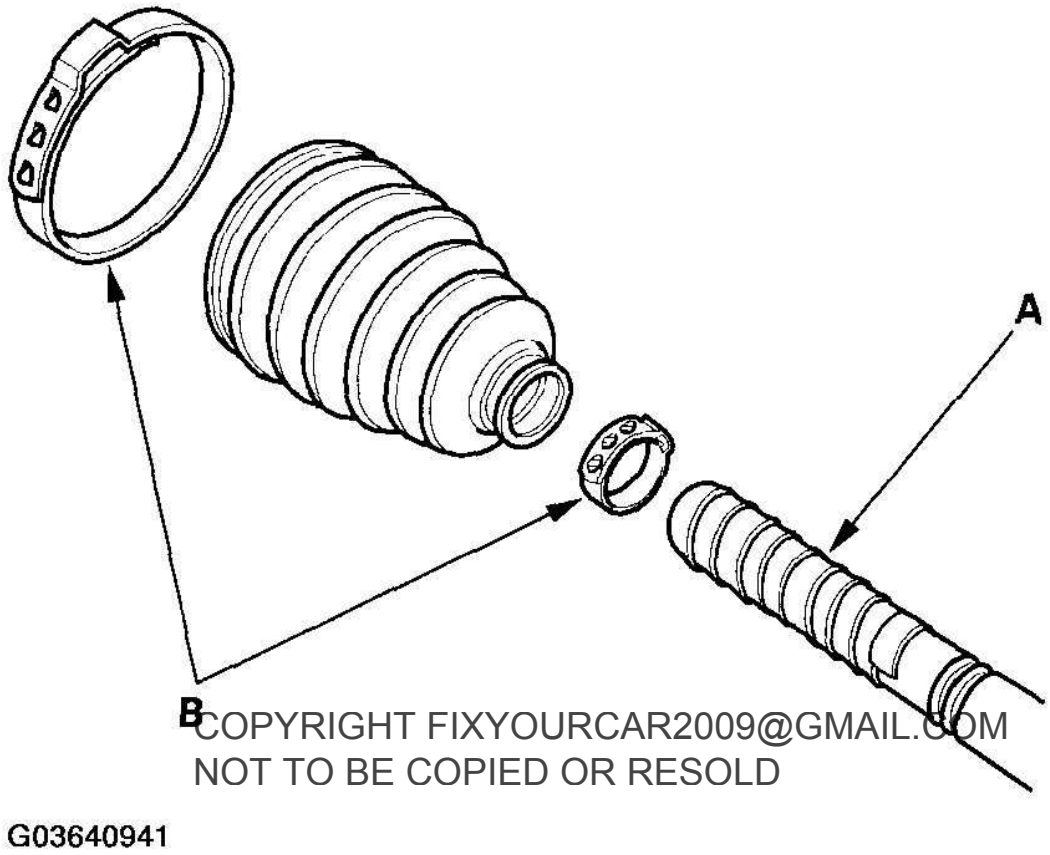

COPYRIGHT FIXYOURCAR2009@GMAIL.COM
NOT TO BE COPIED OR RESOLD

cardiagn.com

Fig. 37: Installing New Ear Clamp Bands And Outboard Boot
Courtesy of AMERICAN HONDA MOTOR CO., INC.

2. Install the new ear clamp bands (B) and outboard boot, then remove the vinyl tape. Be careful not to damage the boot.
3. Install the new circlip in the driveshaft groove (A)

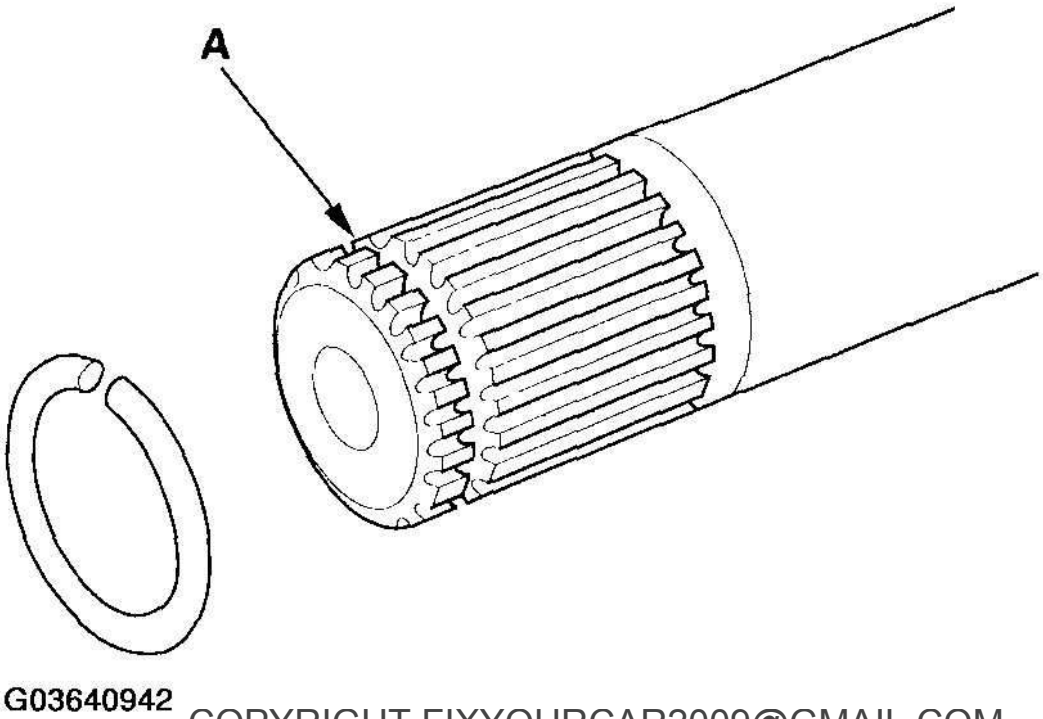

COPYRIGHT FIXYOURCAR2009@GMAIL.COM
NOT TO BE COPIED OR RESOLD

Fig. 38: Installing New Circlip In Driveshaft Groove
Courtesy of AMERICAN HONDA MOTOR CO., INC.

4. Insert the driveshaft (A) into the outboard joint (B) until the circlip (C) is closed.

cardiagn.com

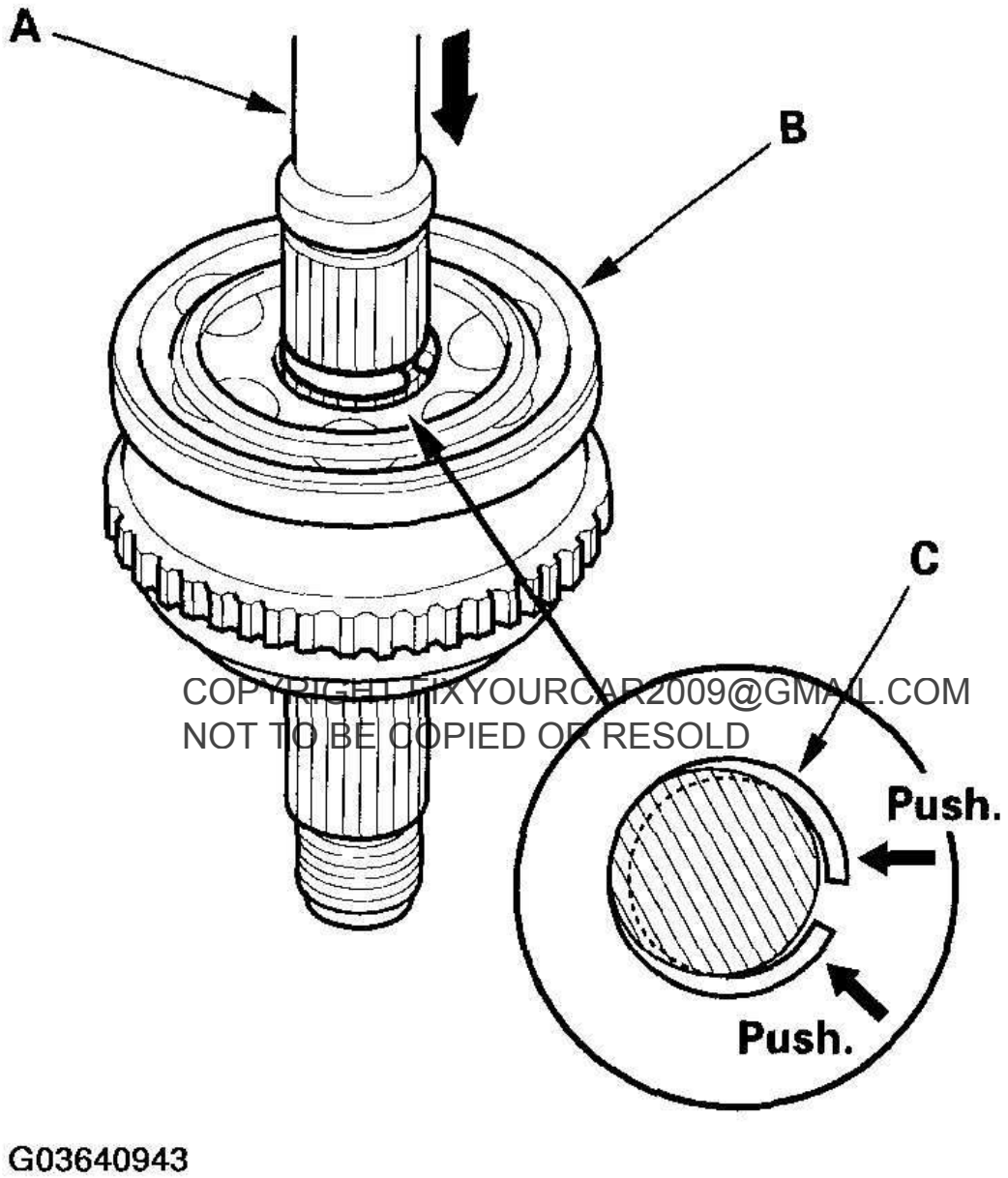

COPYRIGHT FIXYOURCAR2009@GMAIL.COM
NOT TO BE COPIED OR RESOLD

cardiagn.com

Fig. 39: Inserting Driveshaft Into Outboard Joint
Courtesy of AMERICAN HONDA MOTOR CO., INC.

5. To completely seat the outboard joint, pick up the driveshaft and joint, and tap them firmly from about 10 cm (4 in.) onto a hard surface. Do not use a hammer as excessive force may damage the driveshaft. Be careful not to damage the threaded section (A) of the outboard joint.

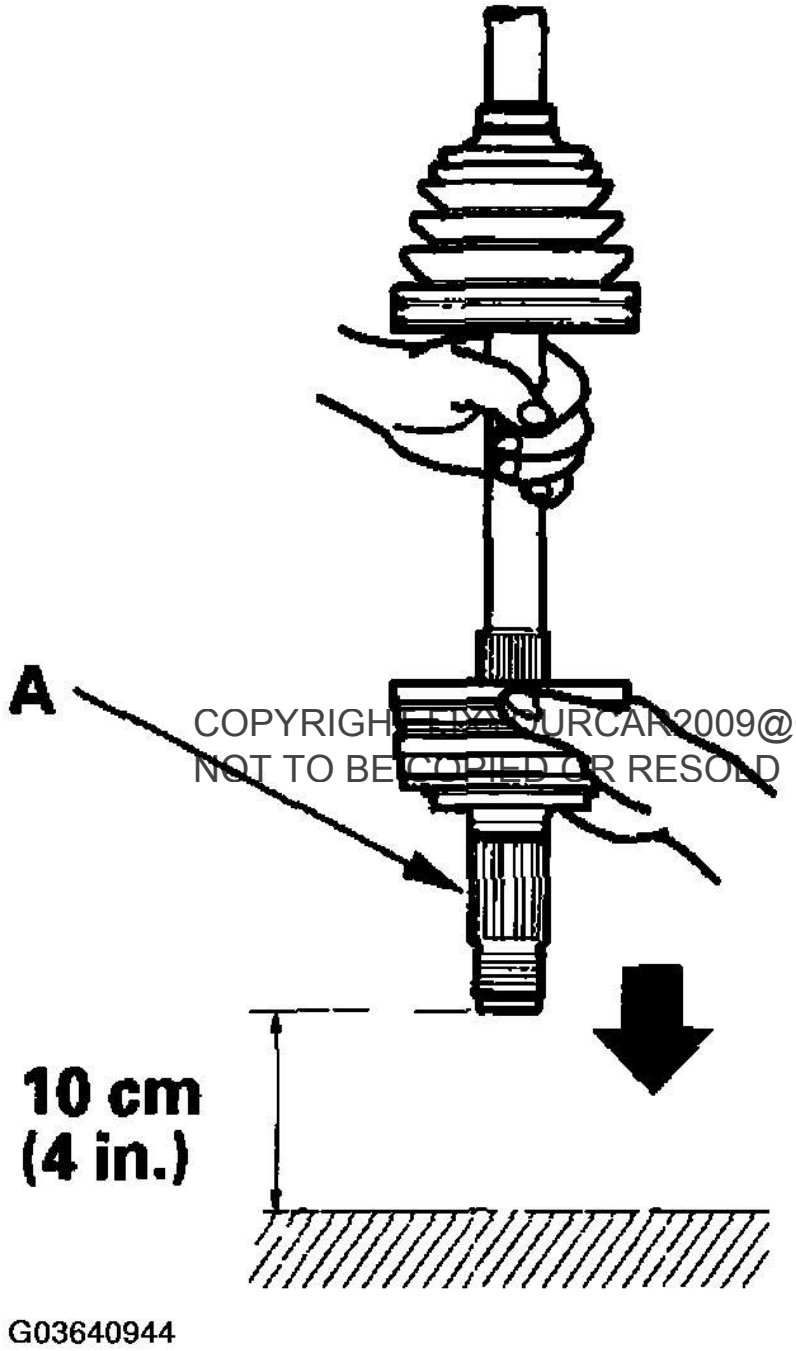

COPYRIGHT LUXCURCAR2009@GMAIL.COM
NOT TO BE COPIED OR RESOLD

cardiagn.com

Fig. 40: Seating Outboard Joint
Courtesy of AMERICAN HONDA MOTOR CO., INC.

6. Check the alignment of the paint mark (A) with the outboard joint end (B).

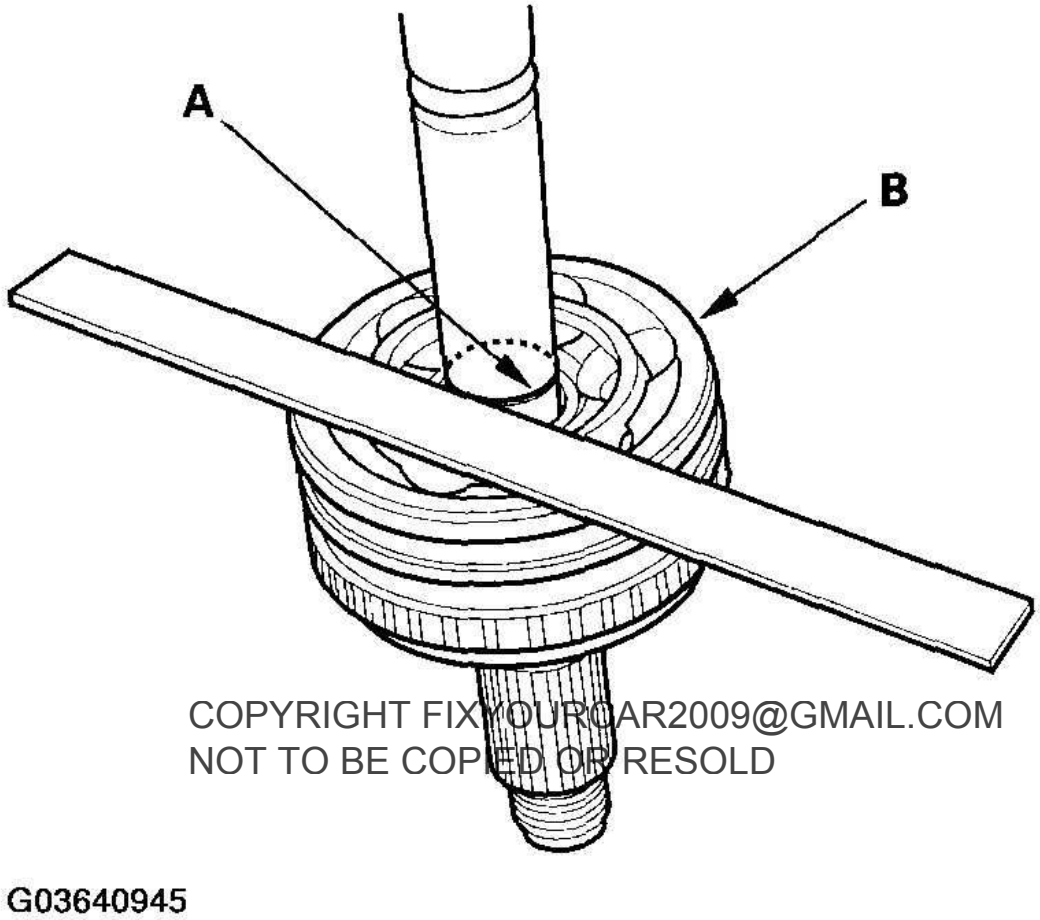

COPYRIGHT FIXYOURCAR2009@GMAIL.COM
NOT TO BE COPIED OR RESOLD

cardiagn.com

Fig. 41: Checking Alignment Of Paint Mark With Outboard Joint End
Courtesy of AMERICAN HONDA MOTOR CO., INC.

7. Pack the outboard joint (A) with the joint grease included in the new joint boot set.

Grease quantity

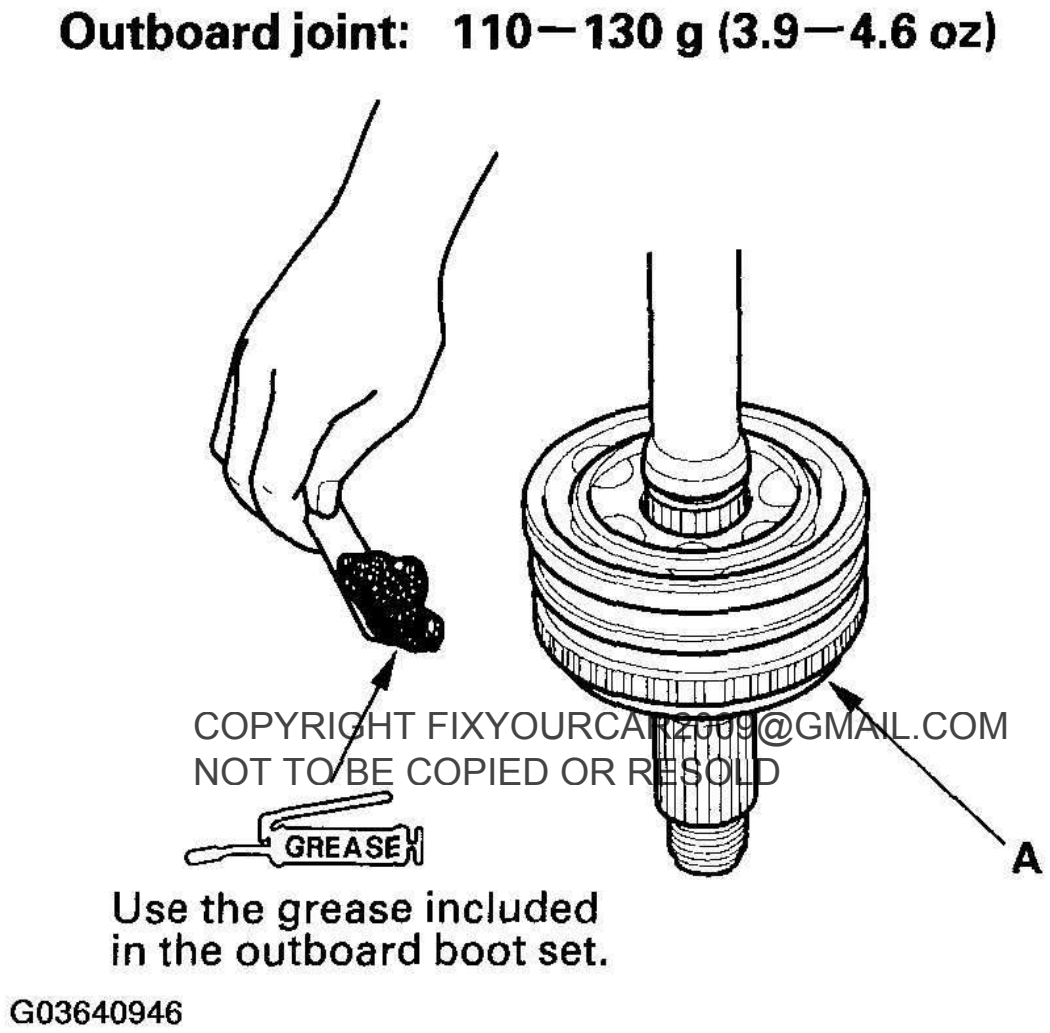

COPYRIGHT FIXYOURCAR2009@GMAIL.COM
NOT TO BE COPIED OR RESOLD

cardiagn.com

Fig. 42: Packing Outboard Joint With Joint Grease
Courtesy of AMERICAN HONDA MOTOR CO., INC.

8. Adjust the length of the driveshaft to these measurements, then adjust the boots to halfway between full compression and full extension. Make sure the ends of the boots seat in the grooves of the driveshaft and joint.

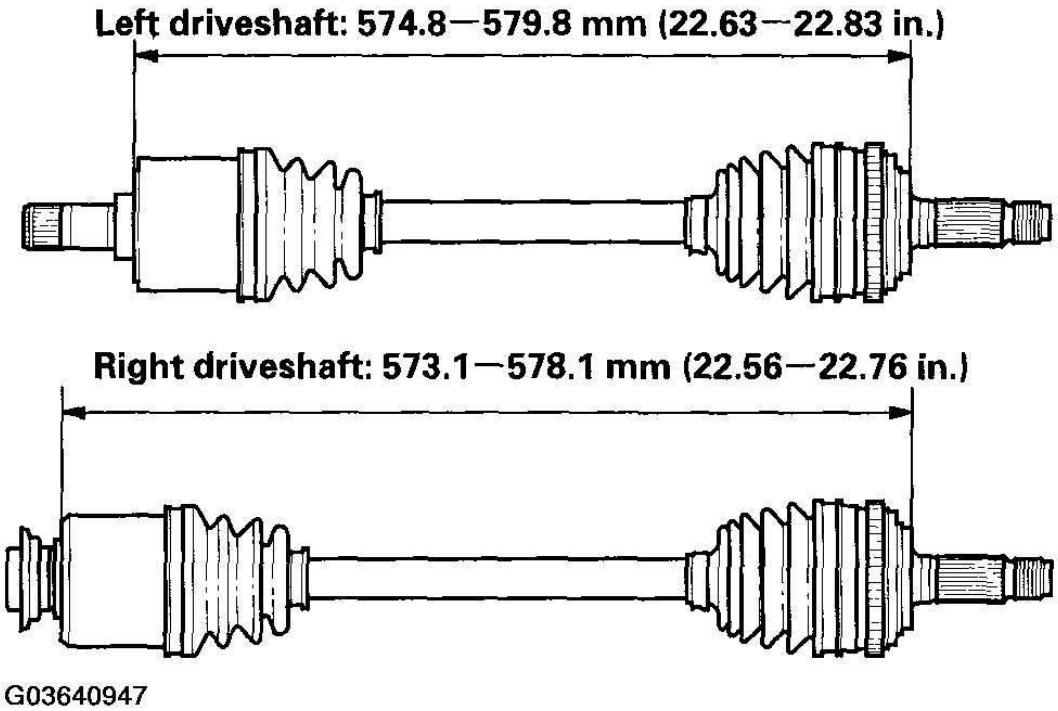

COPYRIGHT FIXYOURCAR2009@GMAIL.COM
NOT TO BE COPIED OR RESOLD

Fig. 43: Identifying Length Of Driveshaft
Courtesy of AMERICAN HONDA MOTOR CO., INC.

9. Fit the boot (A) ends onto the driveshaft (B) and outboard joint (C).

cardiagn.com

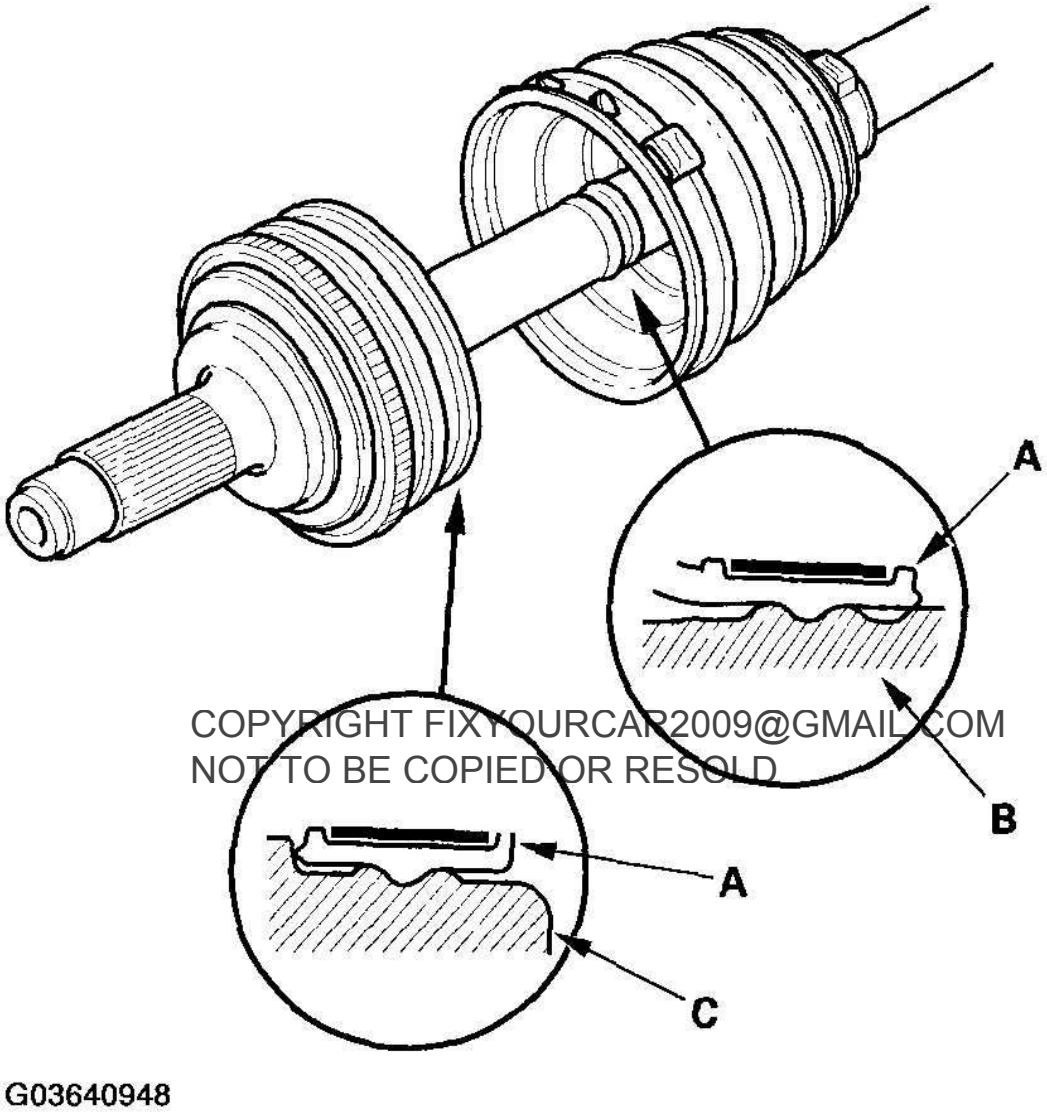

COPYRIGHT FIXYOURCAR2009@GMAIL.COM
NOT TO BE COPIED OR RESOLD

cardiagn.com

Fig. 44: Fitting Boot Ends Onto Driveshaft And Outboard Joint
Courtesy of AMERICAN HONDA MOTOR CO., INC.

10. Close the ear portion (A) of the band with commercially available boot band pincers Kent-Moore J-35910 or equivalent (B).

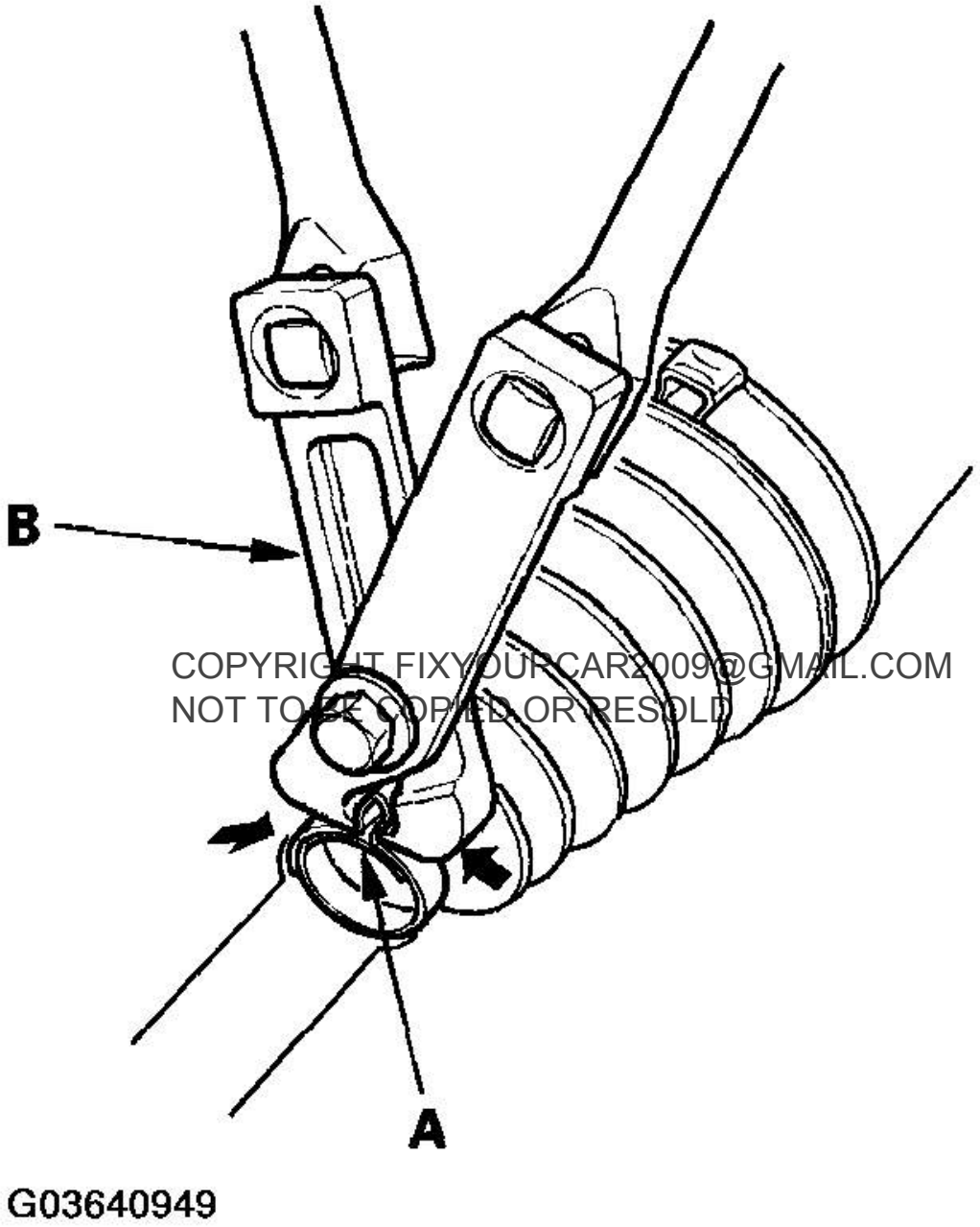

COPYRIGHT FIXYOURCAR2009@GMAIL.COM
NOT TO BE COPIED OR RESOLD

cardiagn.com

Fig. 45: Closing Ear Portion Of Band Using Boot Band Pincers Kent-Moore J-35910
Courtesy of AMERICAN HONDA MOTOR CO., INC.

11. Check the clearance between the closed ear portion of the band. If the clearance is not within the standard, close the ear portion of the band farther.

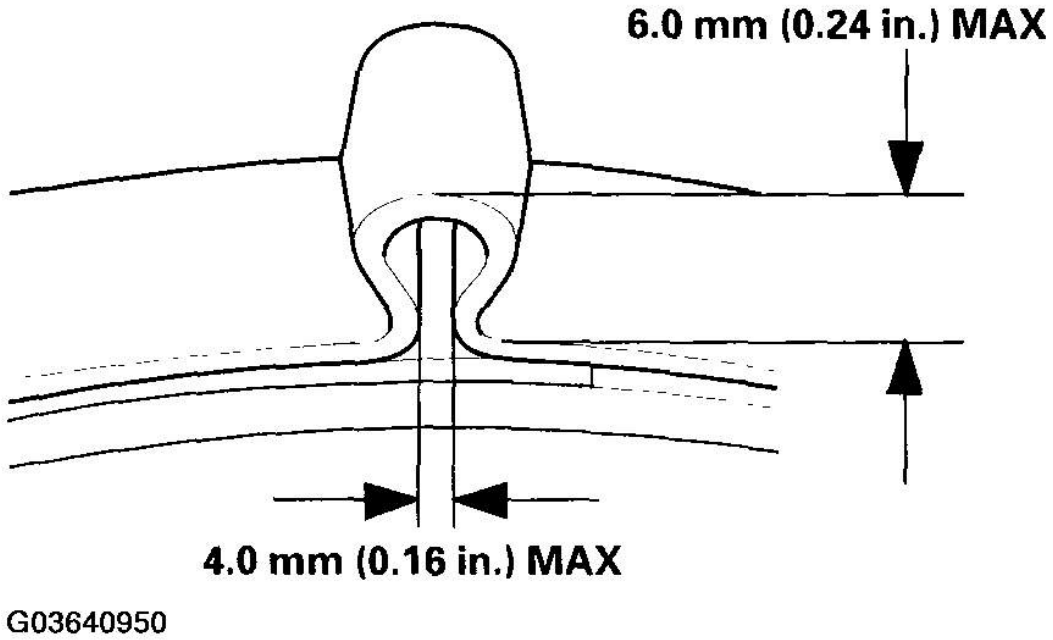

COPYRIGHT FIXYOURCAR2009@GMAIL.COM
NOT TO BE COPIED OR RESOLD

Fig. 46: Identifying Clearance Between Closed Ear Portion Of Band
Courtesy of AMERICAN HONDA MOTOR CO., INC.

12. Repeat steps 10 and 11 for the band on the other end of the boot.

FRONT DRIVESHAFT INSTALLATION

1. Install a new set ring in the set ring groove of the driveshaft (left driveshaft).

cardiagn.com

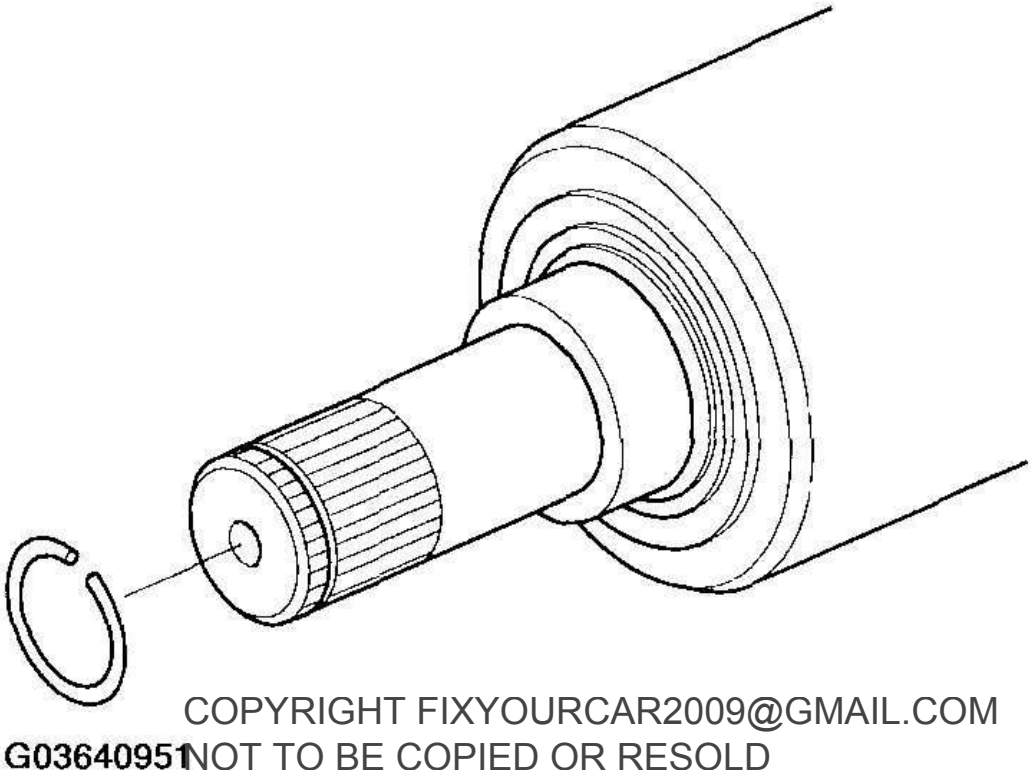

COPYRIGHT FIXYOURCAR2009@GMAIL.COM
NOT TO BE COPIED OR RESOLD

cardiagn.com

Fig. 47: Installing New Set Ring In Set Ring Groove Of Driveshaft
Courtesy of AMERICAN HONDA MOTOR CO., INC.

2. Apply 2.0-3.0 g (0.07-0.10 oz) of grease to the whole splined surface (A) of the right driveshaft. After applying grease, remove the grease from the splined grooves at intervals of 2-3 splines and from the set ring groove (B) so that air can bleed from the intermediate shaft.

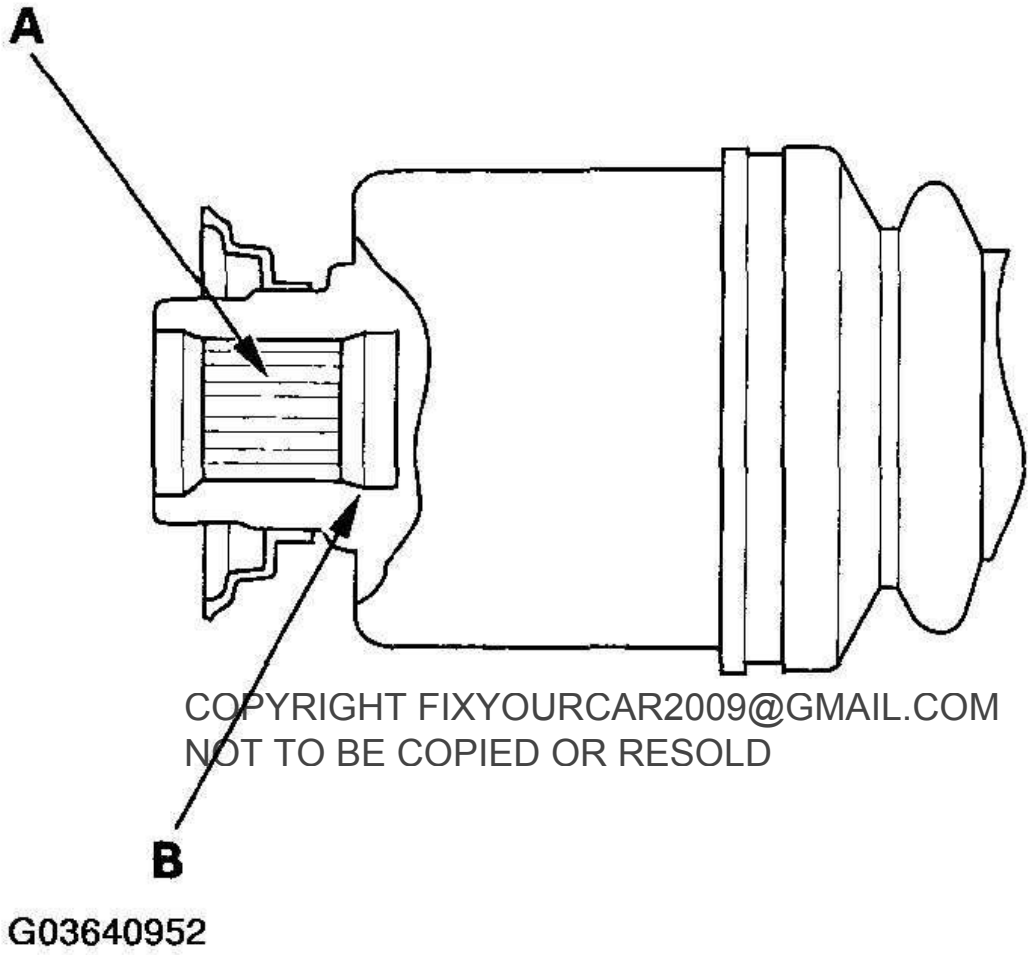

COPYRIGHT FIXYOURCAR2009@GMAIL.COM
NOT TO BE COPIED OR RESOLD

cardiagn.com

Fig. 48: Identifying Splined Surface And Set Ring Groove
Courtesy of AMERICAN HONDA MOTOR CO., INC.

3. Clean the areas where the driveshaft contacts the differential thoroughly with solvent or brake cleaner, and dry with compressed air. Insert the inboard end (A) of the driveshaft into the differential (B) or intermediate shaft (C) until the set ring (D) locks into the groove (E).

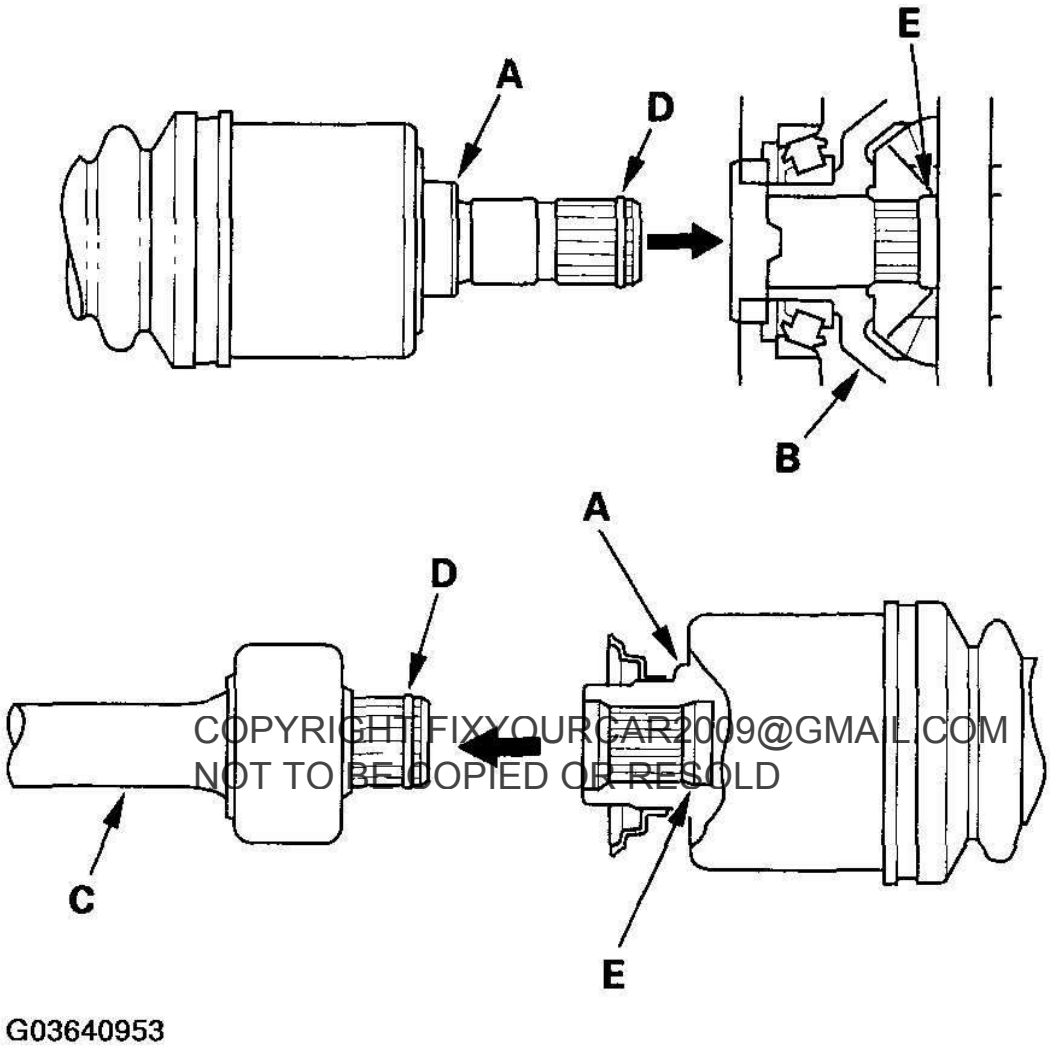

COPYRIGHT FIXYOURCAR2009@GMAIL.COM
NOT TO BE COPIED OR RESOLD

cardiagn.com

Fig. 49: Setting Ring Locks Into Groove
Courtesy of AMERICAN HONDA MOTOR CO., INC.

4. Install the outboard joint (A) into the front hub (B).

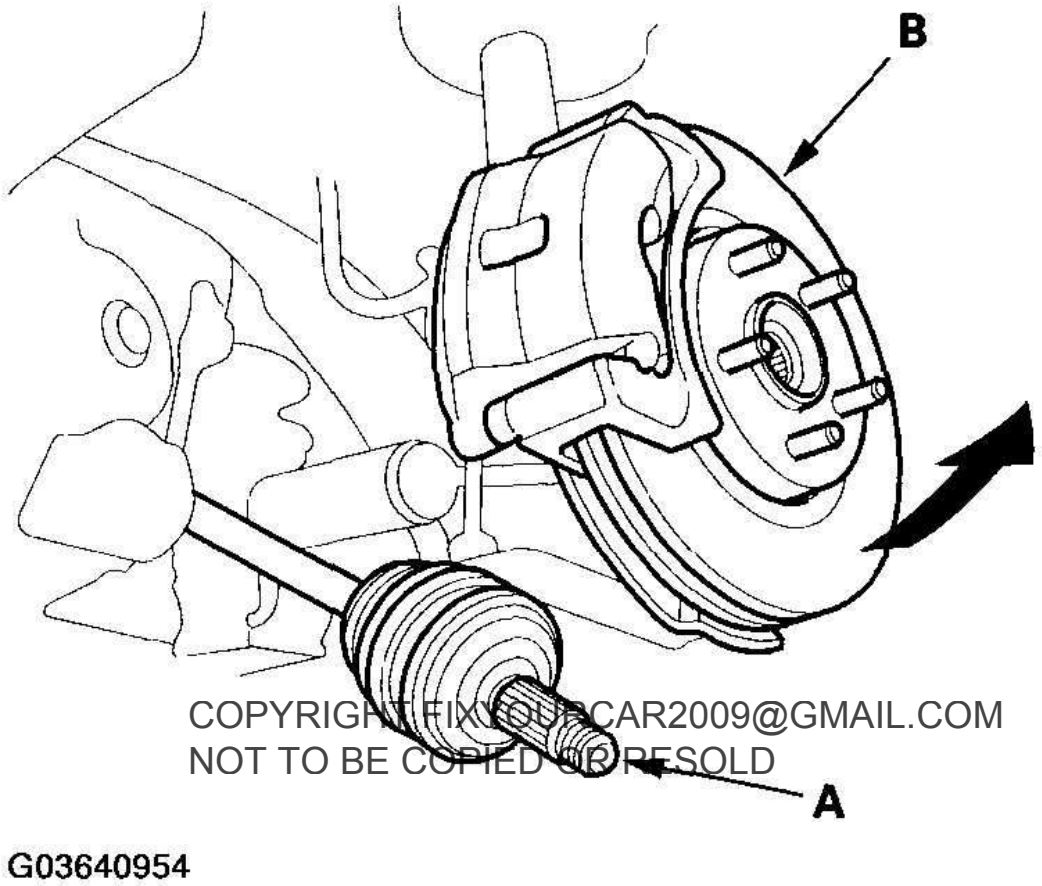

COPYRIGHT FIXYOURCAR2009@GMAIL.COM
NOT TO BE COPIED OR RESOLD

cardiagn.com

Fig. 50: Installing Outboard Joint Into Front Hub
Courtesy of AMERICAN HONDA MOTOR CO., INC.

5. Install the knuckle (A) onto the lower arm (B). Be careful not to damage the ball joint boot (C). Wipe off the grease before tightening the nut at the ball joint. Torque the new castle nut (D) to the lower torque specification, then tighten it only far enough to align the slot with the ball joint pin hole. Do not align the nut by loosening it.

NOTE: Make sure the ball joint boot is not damaged or cracked.

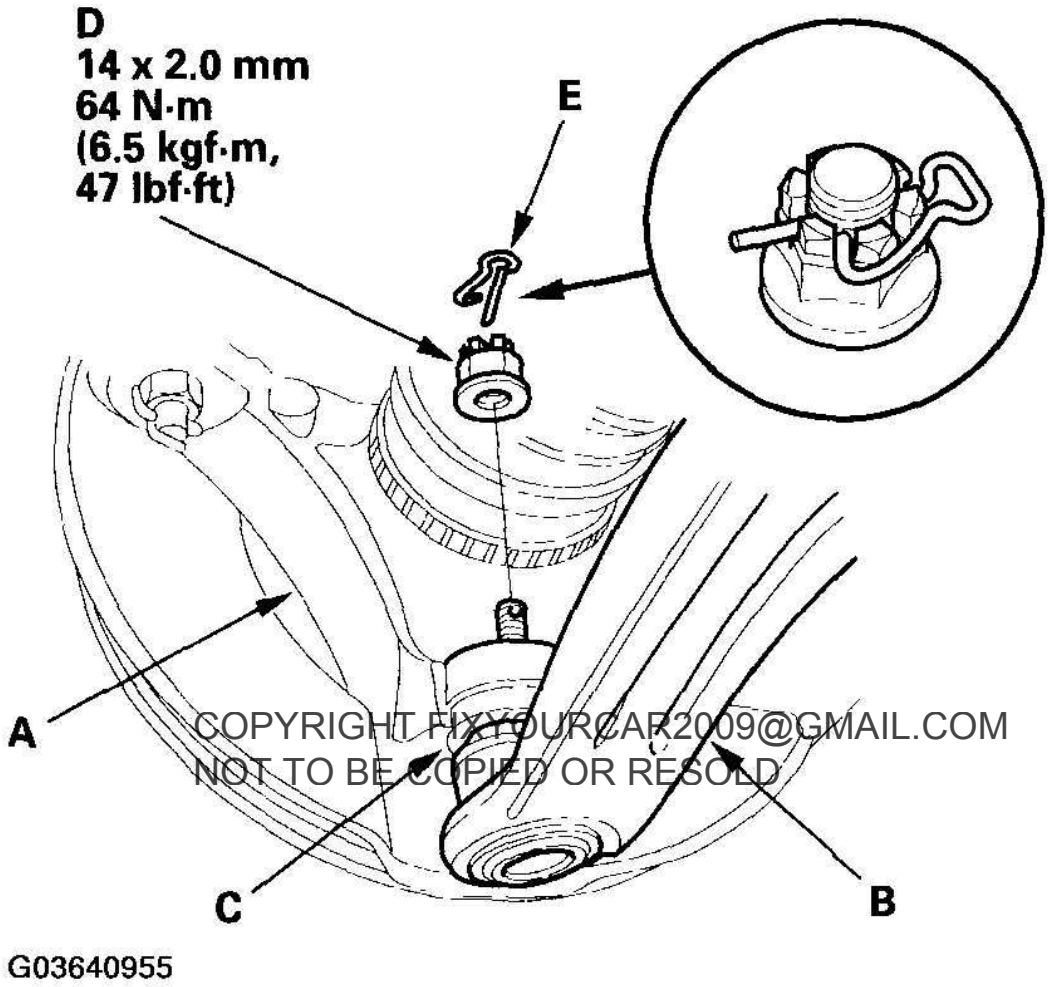

COPYRIGHT FIXYOURCAR2009@GMAIL.COM
NOT TO BE COPIED OR RESOLD

cardiagn.com

Fig. 51: Installing Knuckle Onto Lower Arm
Courtesy of AMERICAN HONDA MOTOR CO., INC.

6. Install the new lock pin (E) into the pin hole as shown.
7. Install the stabilizer link (A) to the damper (B).

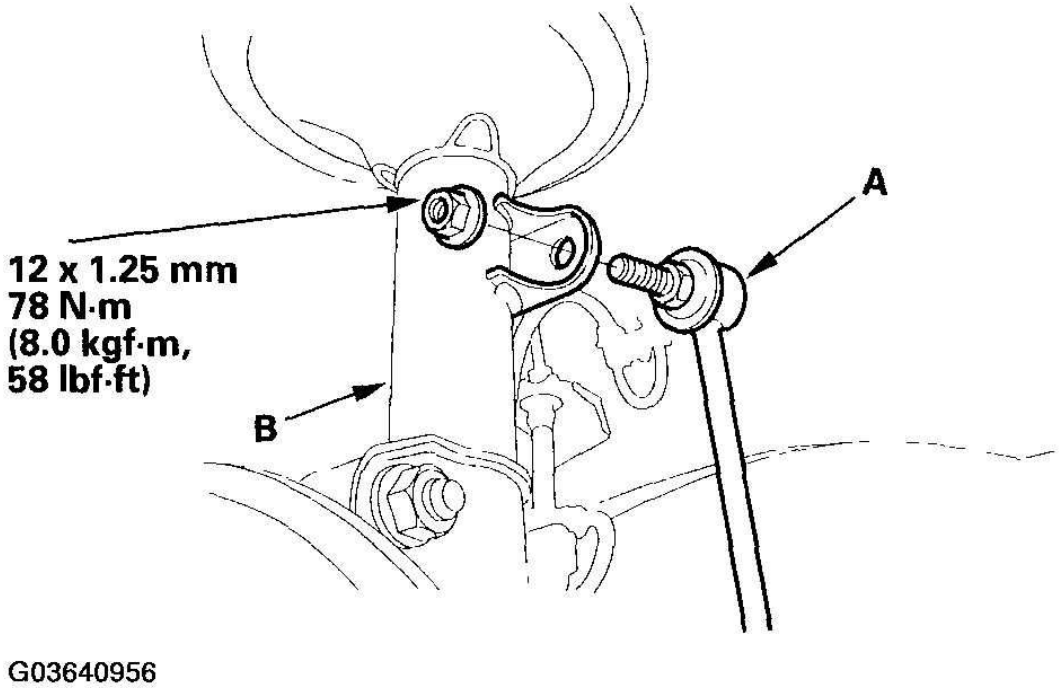

COPYRIGHT FIXYOURCAR2009@GMAIL.COM
NOT TO BE COPIED OR RESOLD

Fig. 52: Installing Stabilizer Link To Damper
Courtesy of AMERICAN HONDA MOTOR CO., INC.

8. Install a new spindle nut (A), then tighten the nut. After tightening, use a drift to stake the spindle nut shoulder (B) against the driveshaft.

cardiagn.com

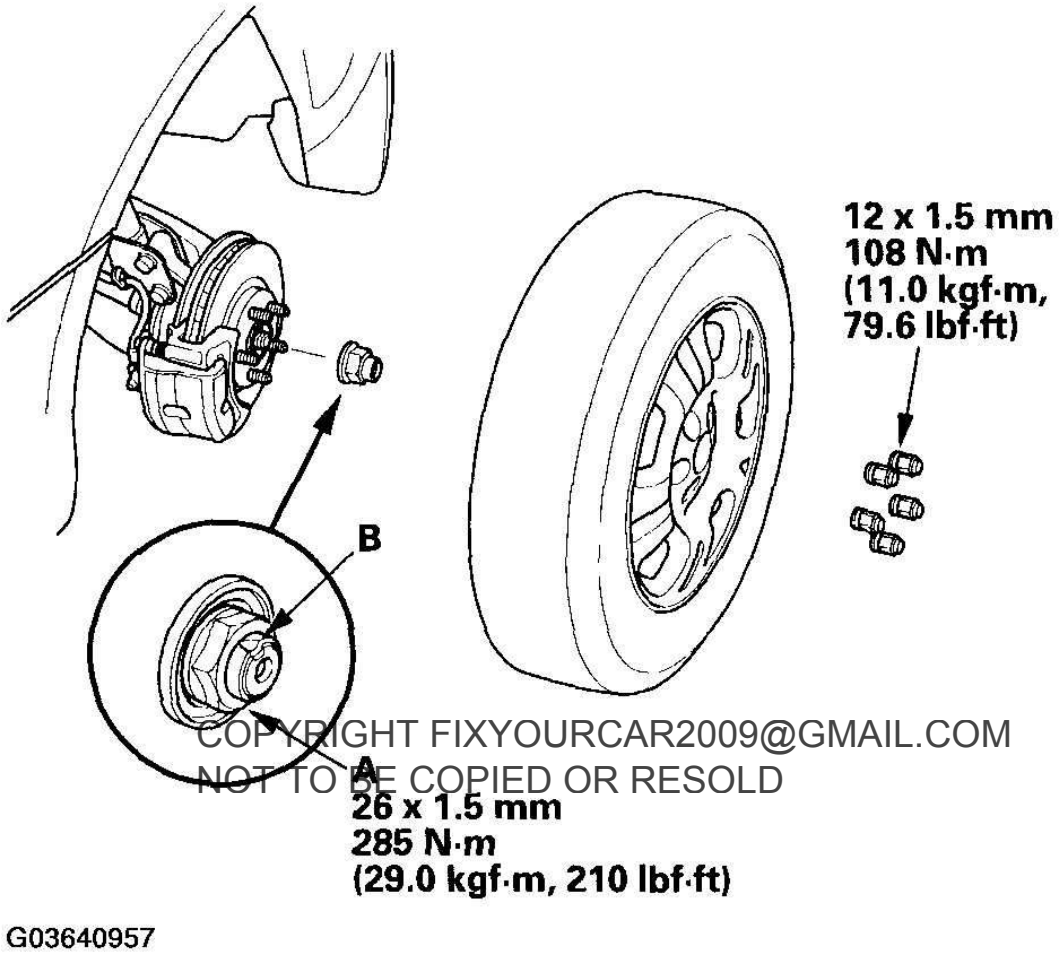

COPYRIGHT FIXYOURCAR2009@GMAIL.COM
NOT TO BE COPIED OR RESOLD

cardiagn.com

Fig. 53: Installing New Spindle Nut
Courtesy of AMERICAN HONDA MOTOR CO., INC.

9. Clean the mating surfaces of the brake disc and the front wheel, then install the front wheel with the wheel nuts.
10. Turn the front wheel by hand, and make sure there is no interference between the driveshaft and surrounding parts.
11. Tighten the flange bolts and the self-locking nut with the vehicle's weight on the damper.
12. Refill the transmission with recommended fluid (see **ATF REPLACEMENT**).
13. Check the front wheel alignment, and adjust it if necessary (see **WHEEL ALIGNMENT**).

INTERMEDIATE SHAFT REMOVAL

1. Drain the transmission fluid (see **ATF REPLACEMENT**).

2. Remove the right driveshaft (see step 10 .).
3. Remove the subframe stiffener (see step 32 in **TRANSMISSION REMOVAL**).
4. Remove the exhaust pipe A (see step 33 in **TRANSMISSION REMOVAL**).
5. Remove the exhaust pipe bracket (A), flange bolt (B), and two dowel bolts (C).

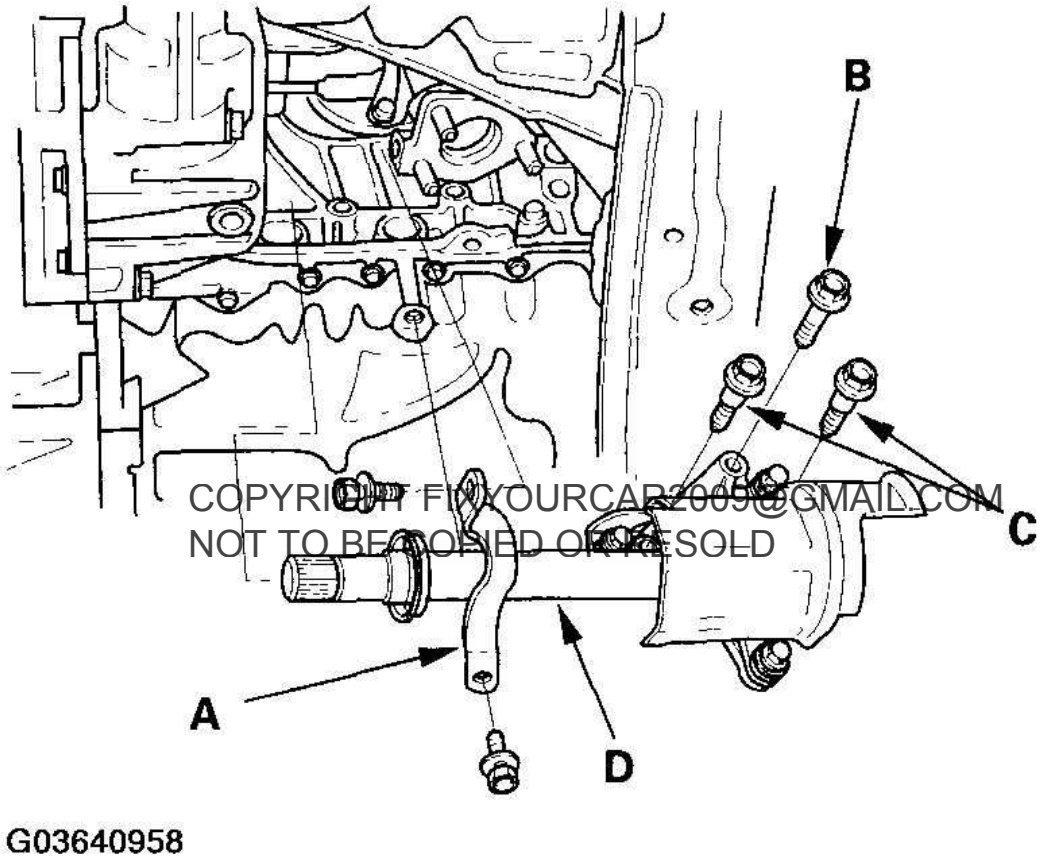

COPYRIGHT FIXYOURCAR2009@GMAIL.COM
NOT TO BE COPIED OR RESOLD

cardiagn.com

Fig. 54: Removing Exhaust Pipe Bracket, Flange Bolt And Two Dowel Bolts
Courtesy of AMERICAN HONDA MOTOR CO., INC.

6. Remove the intermediate shaft (D) from the differential. Hold the intermediate shaft horizontally until it is clear of the differential to prevent damage to the differential oil seal.

INTERMEDIATE SHAFT DISASSEMBLY

Special Tools Required

- Driver 07749-0010000

- Support base attachment 07LAF-SM40300
- Support base 07965-SD90100
- Attachment, 42 x 47 mm 07746-0010300

1. Remove the heat shield.

COPYRIGHT FIXYOURCAR2009@GMAIL.COM
NOT TO BE COPIED OR RESOLD

cardiagn.com

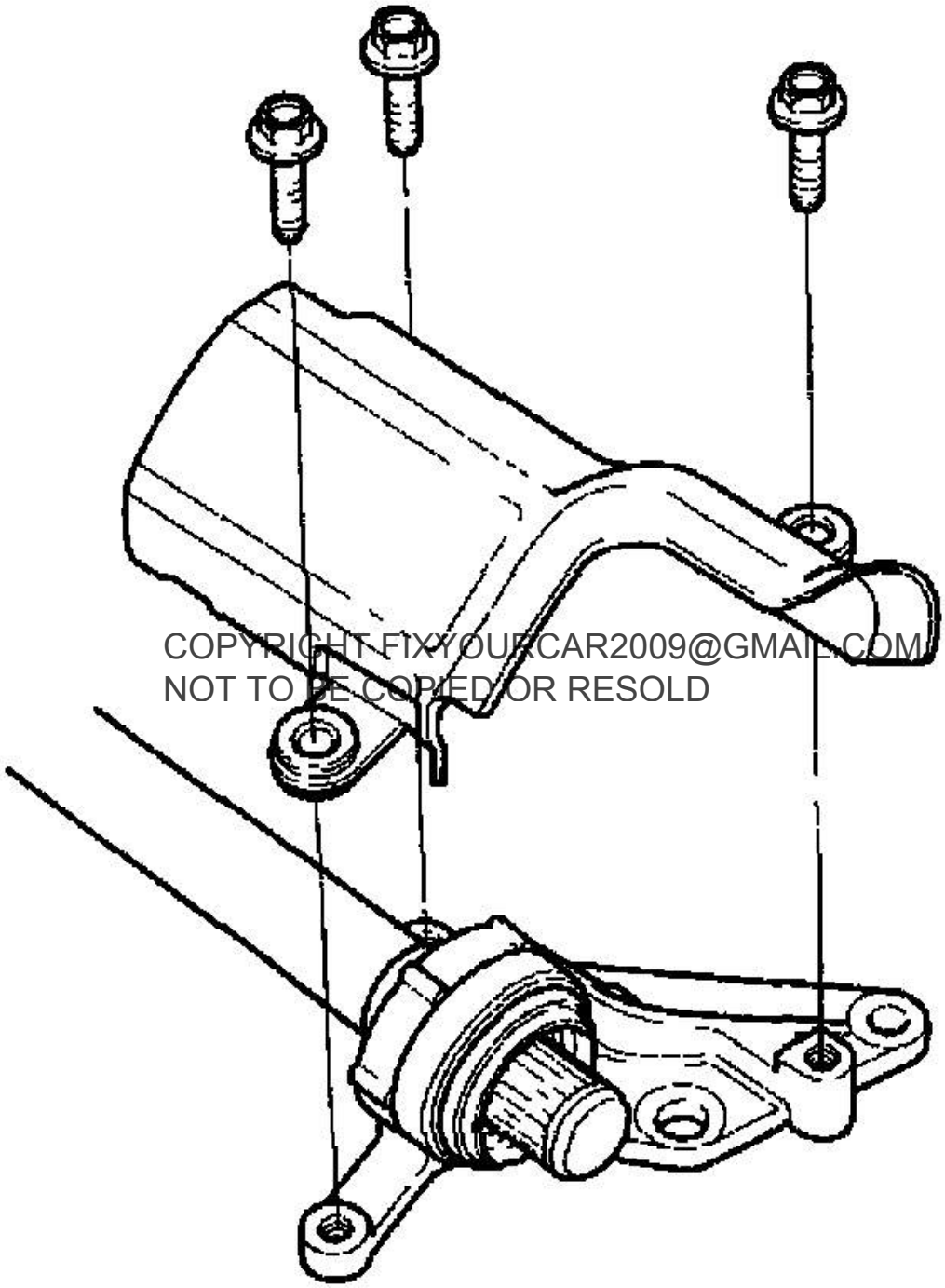

COPYRIGHT FIXYOURCAR2009@GMAIL.COM
NOT TO BE COPIED OR RESOLD

G03640959

cardiagn.com

Fig. 55: Removing Heat Shield
Courtesy of AMERICAN HONDA MOTOR CO., INC.

2. Remove the intermediate shaft outer seal (A) from the bearing support (B).

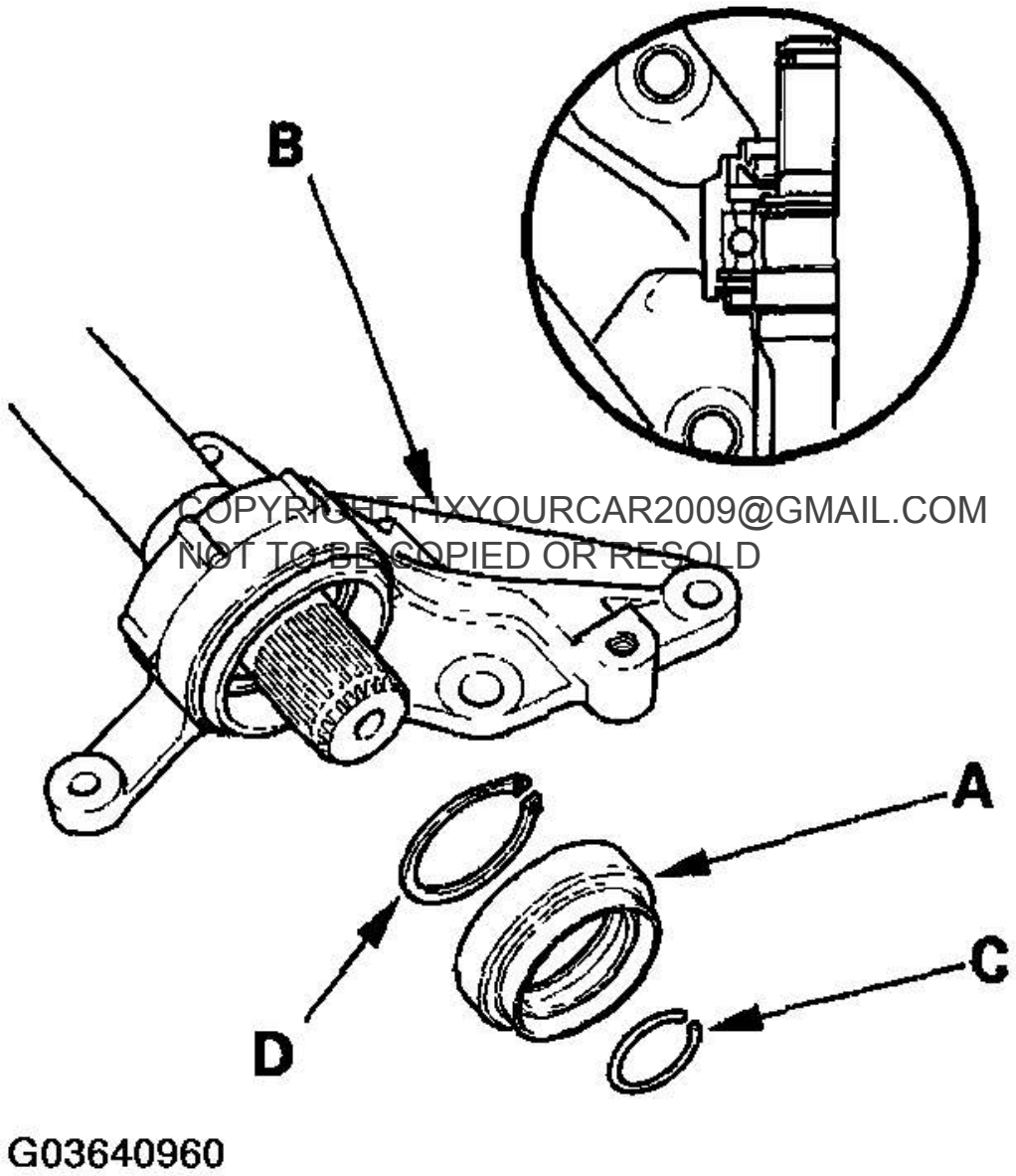

COPYRIGHT FIXYOURCAR2009@GMAIL.COM
NOT TO BE COPIED OR RESOLD

cardiagn.com

Fig. 56: Removing Intermediate Shaft Outer Seal From Bearing Support
Courtesy of AMERICAN HONDA MOTOR CO., INC.

3. Remove the set ring (C) and external snap ring (D).
4. Press the intermediate shaft (A) out of the intermediate shaft bearing (B) using the special tools and a press. Be careful not to damage the metal rings (C) on the intermediate shaft during disassembly.

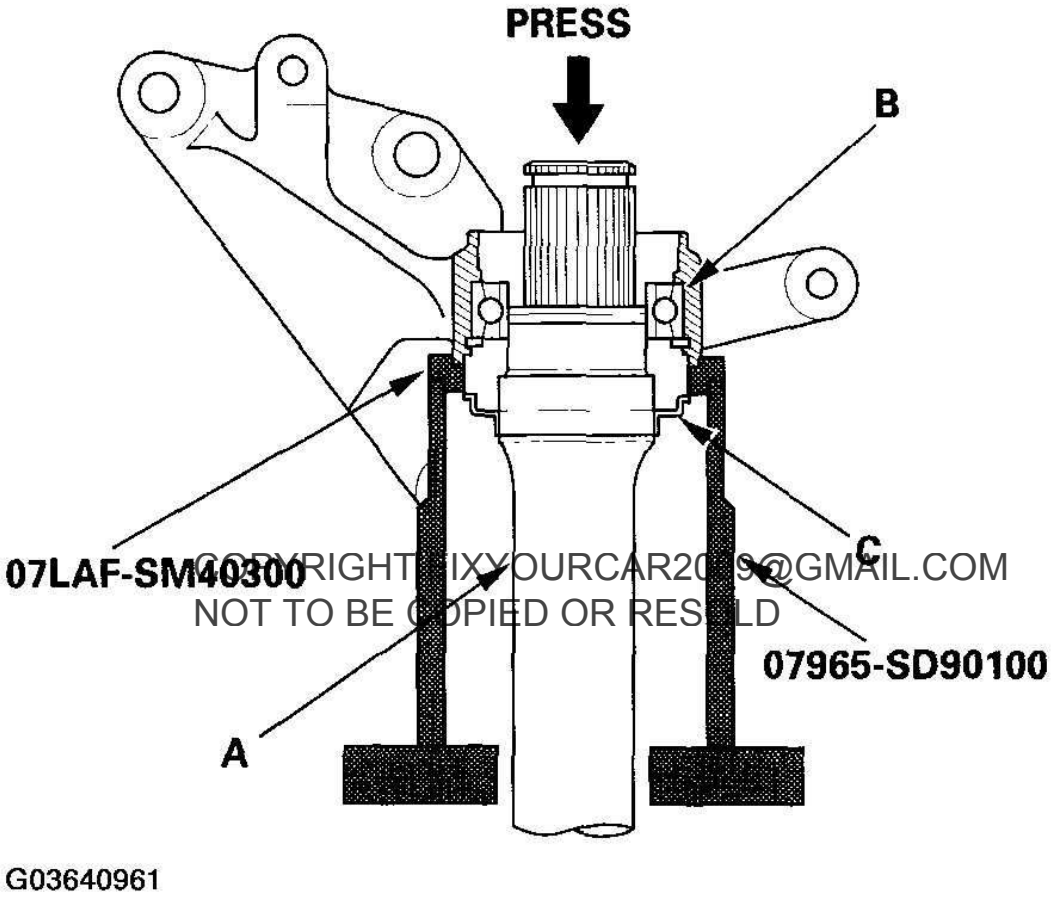

COPYRIGHT FIXYOURCAR2019@GMAIL.COM
NOT TO BE COPIED OR RESOLD

cardiagn.com

Fig. 57: Pressing Intermediate Shaft Out Of Intermediate Shaft Bearing Using Special Tools And Press
Courtesy of AMERICAN HONDA MOTOR CO., INC.

5. Remove the internal snap ring.

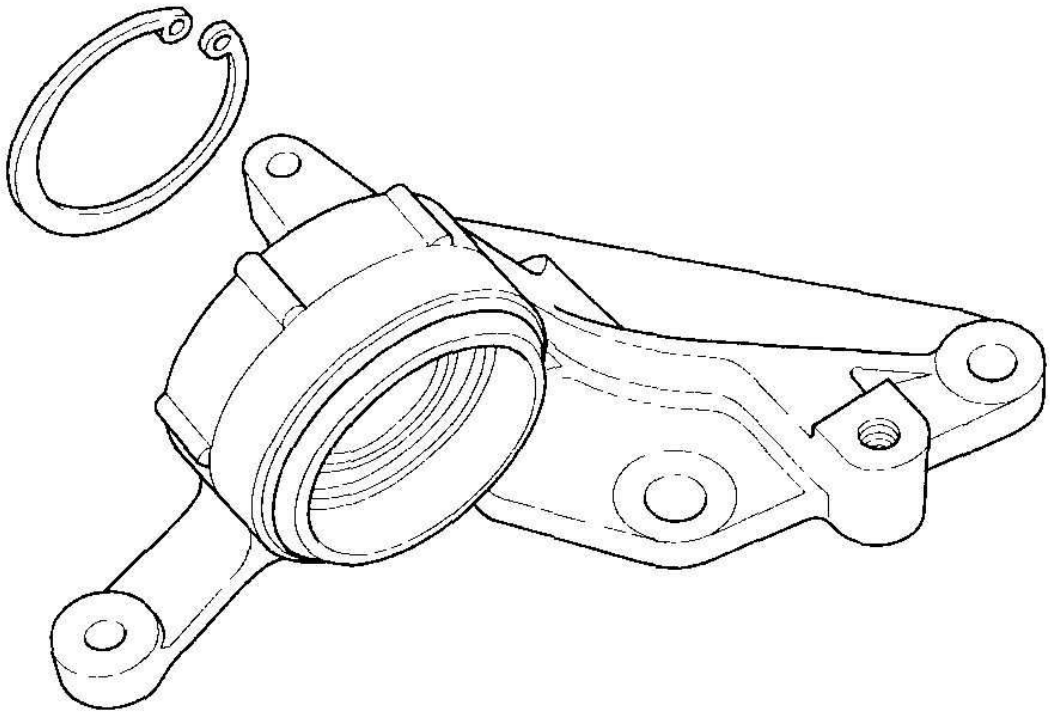

COPYRIGHT FIXYOURCAR2009@GMAIL.COM
NOT TO BE COPIED OR RESOLD

Fig. 58: Removing Internal Snap Ring
Courtesy of AMERICAN HONDA MOTOR CO., INC.

6. Press the intermediate shaft bearing (A) out of the bearing support (B) using the special tools and a press.

cardiagn.com

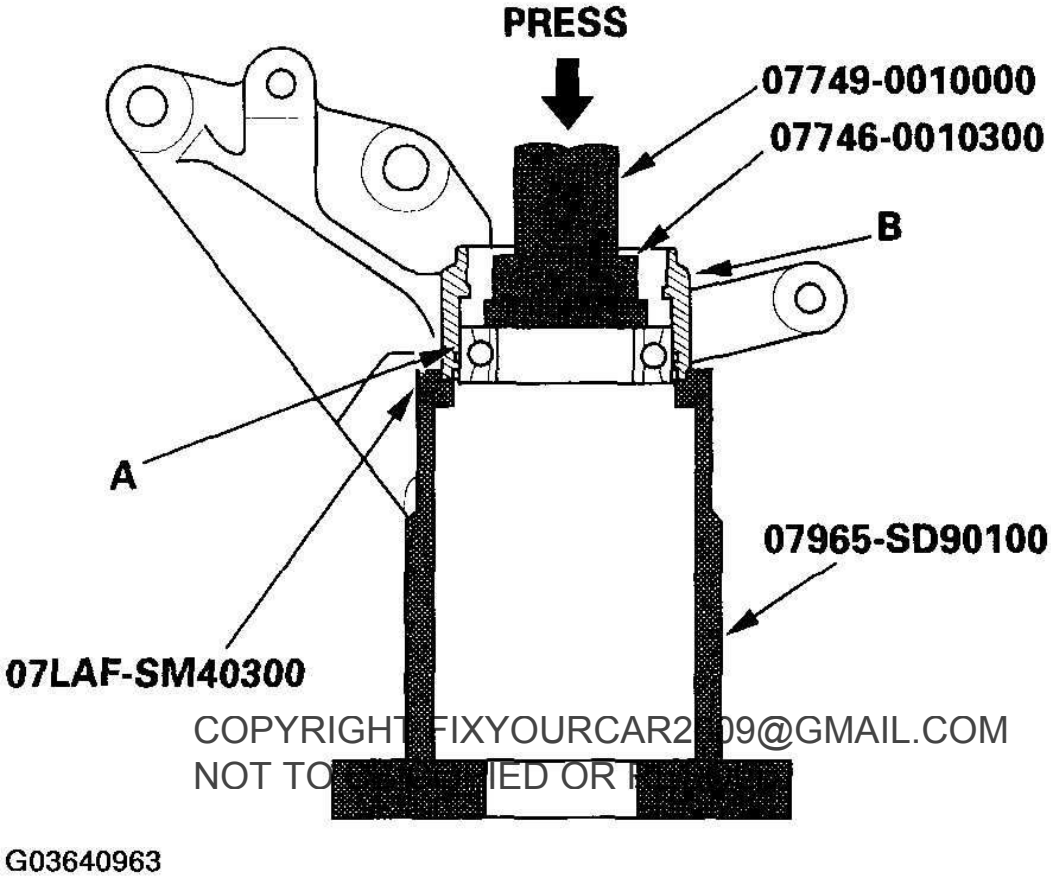

COPYRIGHT FIXYOURCAR2009@GMAIL.COM
NOT TO BE COPIED OR REPRODUCED

cardiagn.com

Fig. 59: Pressing Intermediate Shaft Bearing Out Of Bearing Support Using Special Tools And Press
Courtesy of AMERICAN HONDA MOTOR CO., INC.

INTERMEDIATE SHAFT REASSEMBLY

EXPLODED VIEW

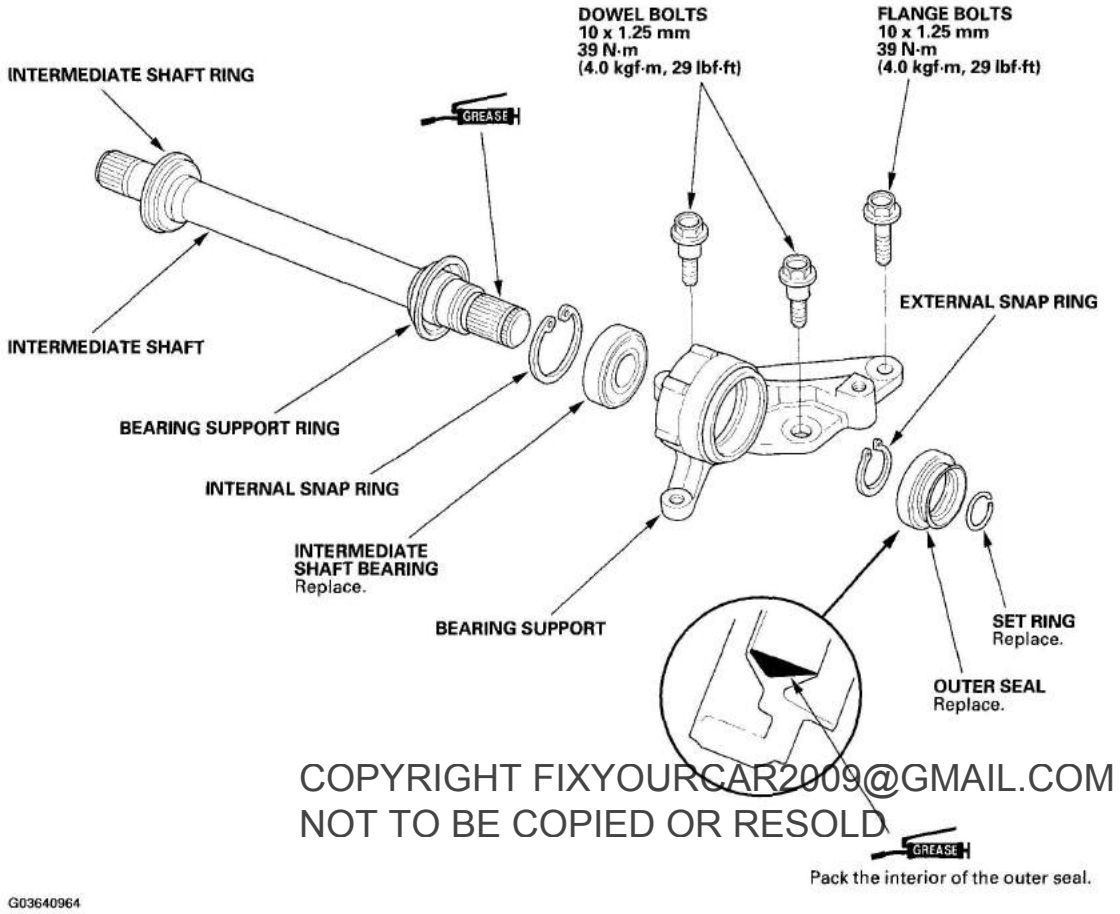

COPYRIGHT FIXYOURCAR2009@GMAIL.COM
NOT TO BE COPIED OR RESOLD

Fig. 60: Exploded View Of Intermediate Shaft
Courtesy of AMERICAN HONDA MOTOR CO., INC.

Special Tools Required

- Driver 07749-0010000
- Support base attachment 07LAF-SM40300
- Support base 07965-SD90100
- Oil seal driver attachment 07JAD-PH80101
- Fork seal driver, 39.2 x 49.5 x 15 mm 07947-4630100

NOTE: Refer to the Exploded View as needed during this procedure.

1. Clean the disassembled parts with solvent, and dry them with compressed air. Do not wash the rubber parts with solvent.
2. Press the intermediate shaft bearing (A) into the bearing support (B) using the special tools and a press.

cardiagn.com

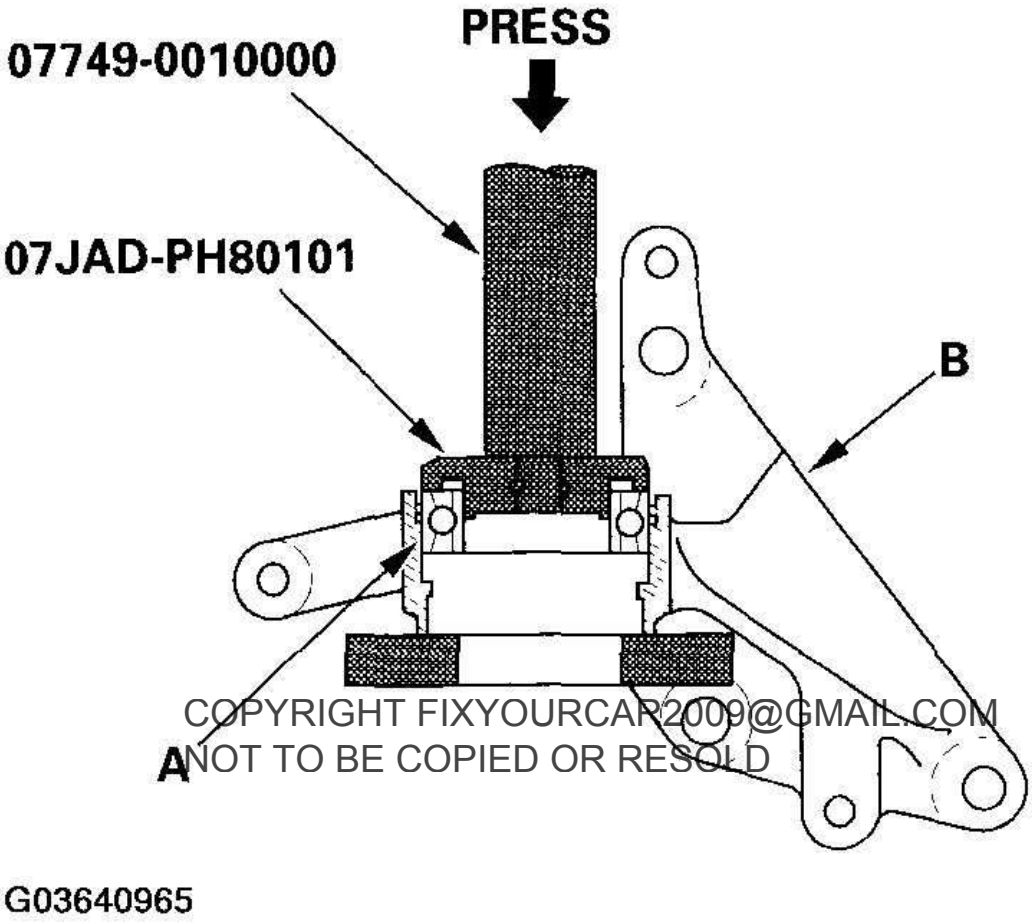

COPYRIGHT FIXYOURCAR2009@GMAIL.COM
NOT TO BE COPIED OR RESOLD

cardiagn.com

Fig. 61: Pressing Intermediate Shaft Bearing Into Bearing Support
Courtesy of AMERICAN HONDA MOTOR CO., INC.

3. Install, then seat the internal snap ring in the groove of the bearing support.

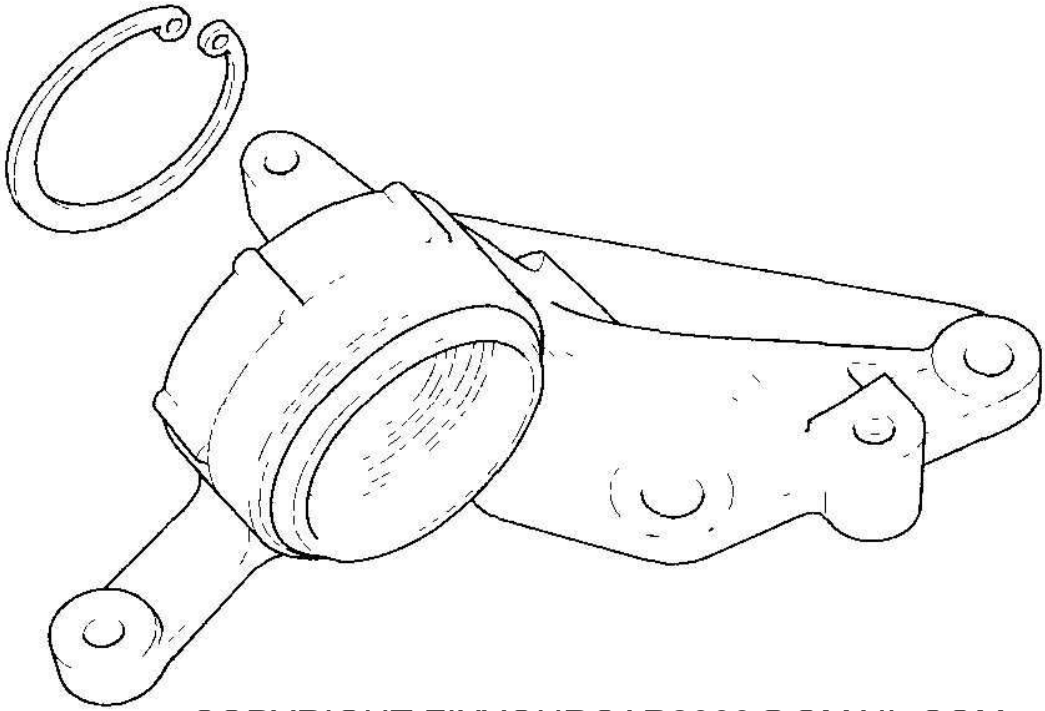

COPYRIGHT FIXYOURCAR2009@GMAIL.COM
NOT TO BE COPIED OR RESOLD

Fig. 62: Installing Internal Snap Ring
Courtesy of AMERICAN HONDA MOTOR CO., INC.

4. Press the intermediate shaft (A) into the shaft bearing (B) using the special tool and a press.

cardiagn.com

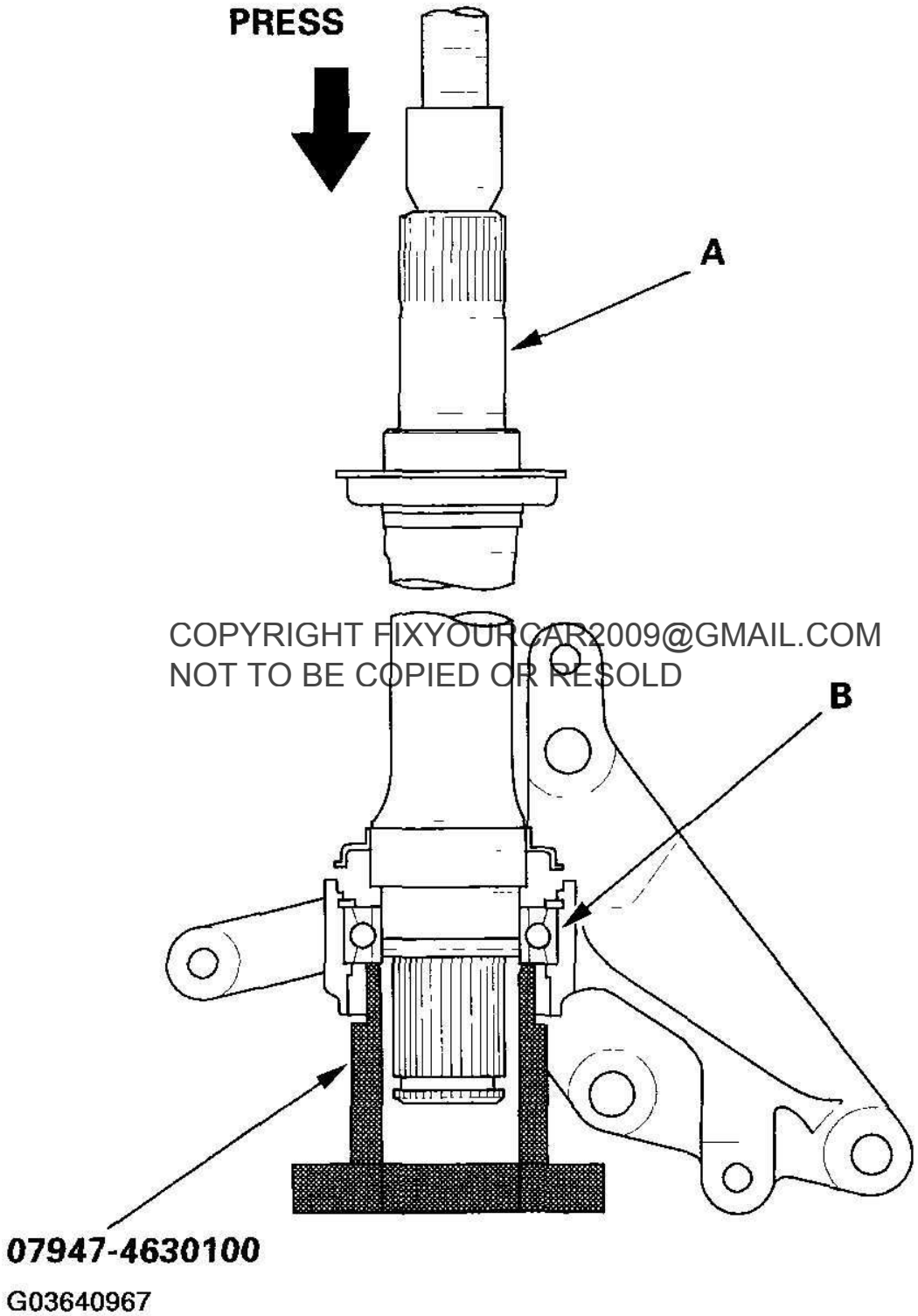

COPYRIGHT FIXYOURCAR2009@GMAIL.COM
NOT TO BE COPIED OR RESOLD
cardiagn.com

Fig. 63: Pressing Intermediate Shaft Into Shaft Bearing
Courtesy of AMERICAN HONDA MOTOR CO., INC.

5. Install, then seat the external snap ring (A) in the groove of the intermediate shaft (B).

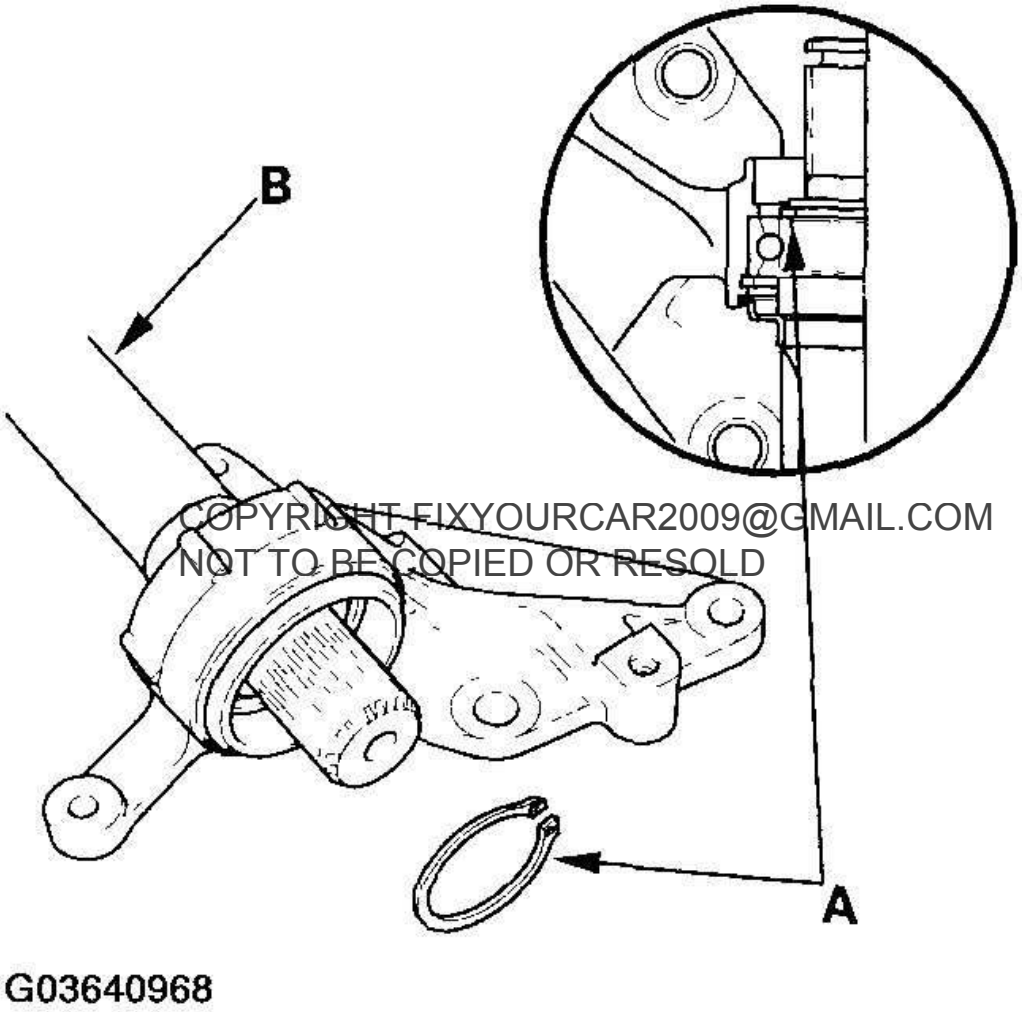

COPYRIGHT FIXYOURCAR2009@GMAIL.COM
NOT TO BE COPIED OR RESOLD

cardiagn.com

Fig. 64: Seating External Snap Ring In Groove Of Intermediate Shaft
Courtesy of AMERICAN HONDA MOTOR CO., INC.

6. Install the outer seal (A) into the bearing support (B) using the special tools and a press.

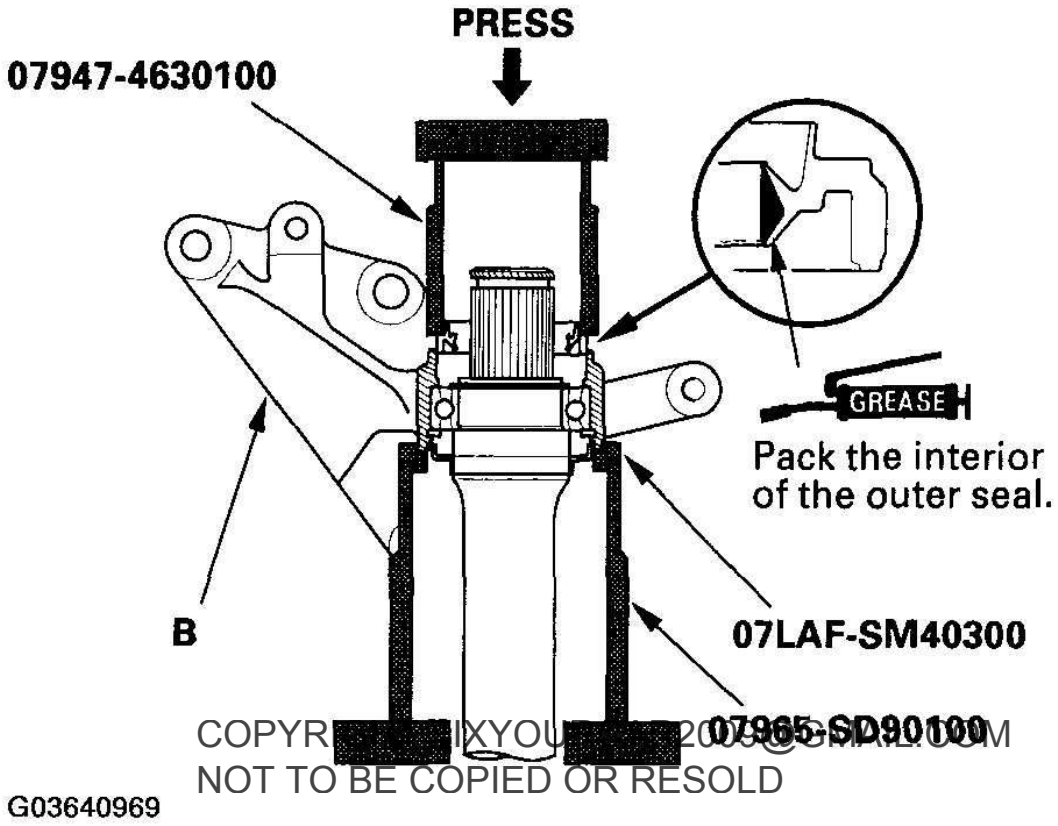

COPYR IXYOU 2009@GMAIL.COM
NOT TO BE COPIED OR RESOLD

Fig. 65: Installing Outer Seal Into Bearing Support
Courtesy of AMERICAN HONDA MOTOR CO., INC.

7. Install the heat shield onto the bearing support.

cardiagn.com

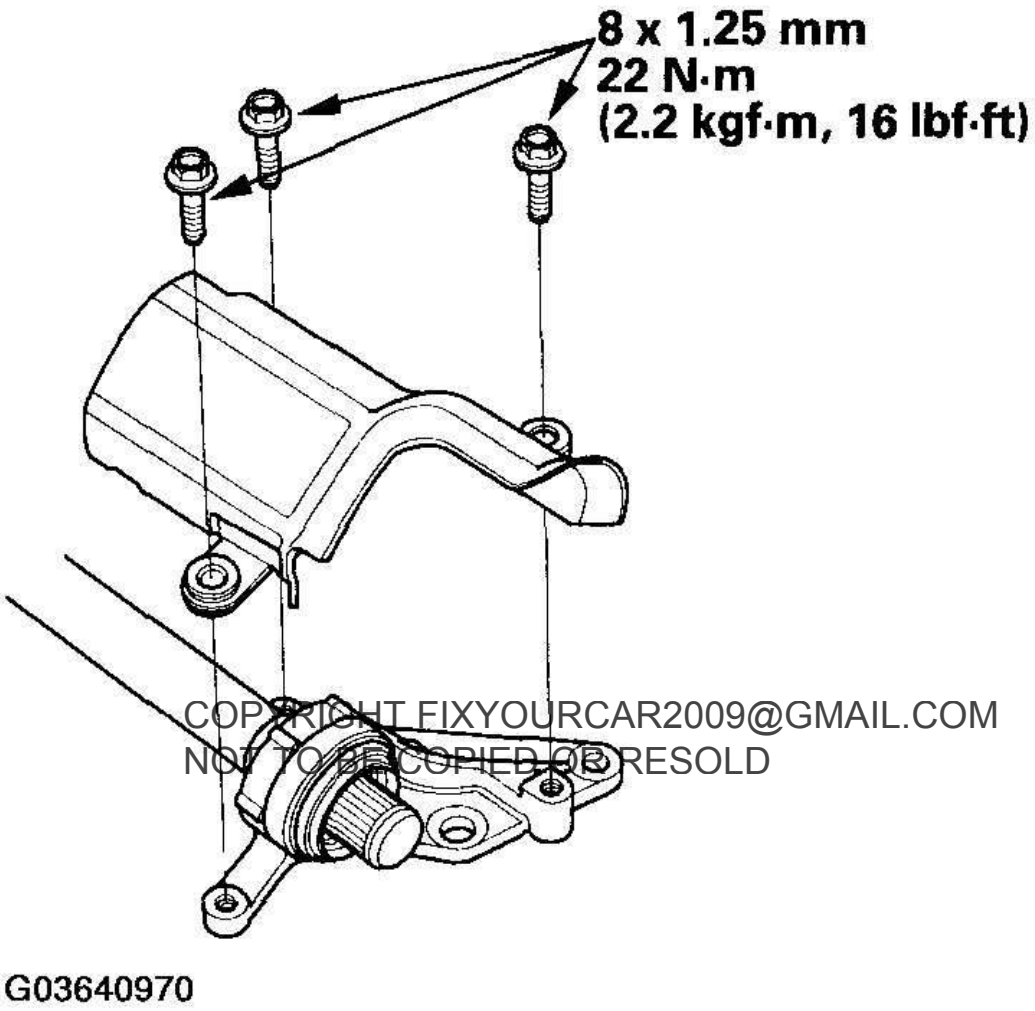

COPYRIGHT FIXYOURCAR2009@GMAIL.COM
NOT TO BE COPIED OR RESOLD

cardiagn.com

Fig. 66: Installing Heat Shield Onto Bearing Support
Courtesy of AMERICAN HONDA MOTOR CO., INC.

8. Install the set ring.

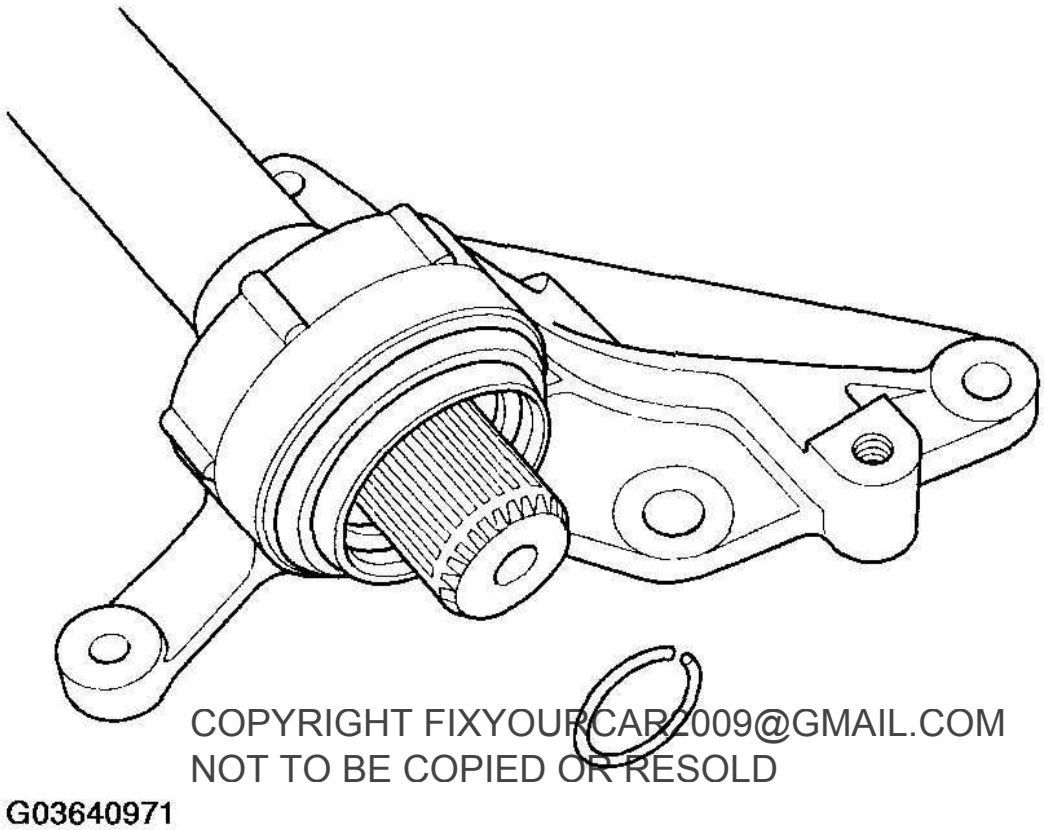

COPYRIGHT FIXYOURCAR2009@GMAIL.COM
NOT TO BE COPIED OR RESOLD

cardiagn.com

Fig. 67: Installing Set Ring
Courtesy of AMERICAN HONDA MOTOR CO., INC.

INTERMEDIATE SHAFT INSTALLATION

1. Use solvent or brake cleaner to thoroughly clean the areas where the intermediate shaft (A) contacts the transmission (differential) and dry with compressed air. Insert the intermediate shaft assembly into the differential. Hold the intermediate shaft horizontally to prevent damage to the differential oil seal.

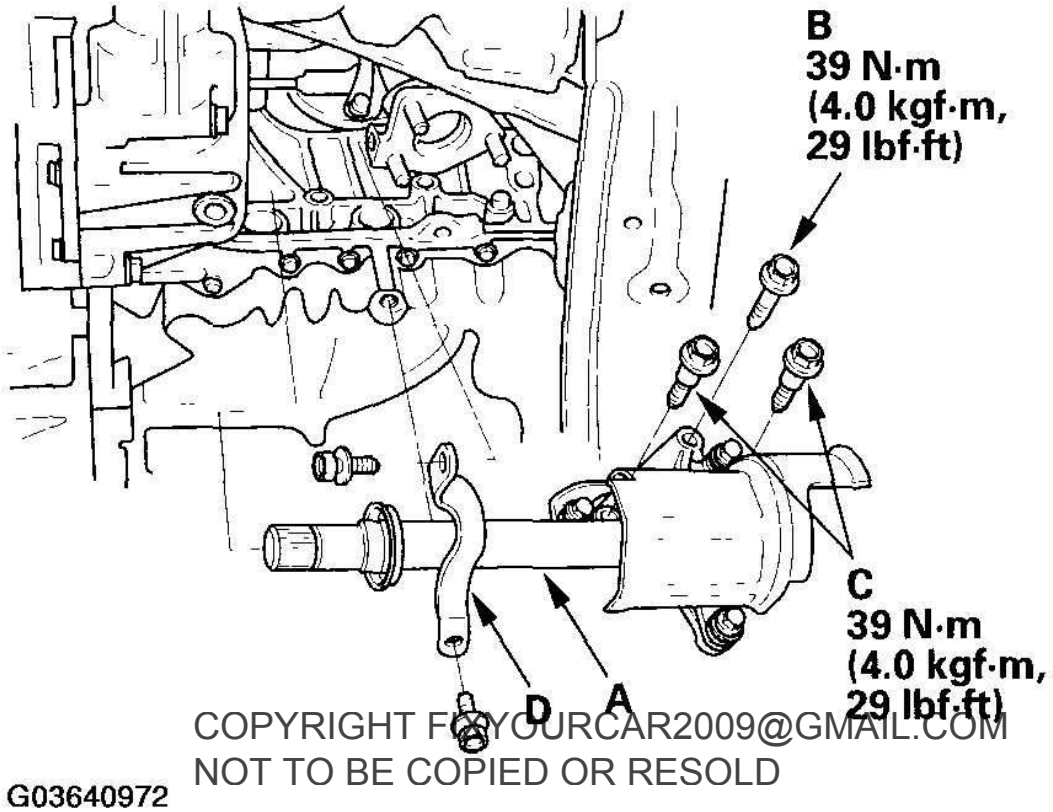

COPYRIGHT FIXYOURCAR2009@GMAIL.COM
NOT TO BE COPIED OR RESOLD

cardiagn.com

Fig. 68: Installing Intermediate Shaft
Courtesy of AMERICAN HONDA MOTOR CO., INC.

2. Install the flange bolt (B), two dowel bolts (C), and exhaust pipe bracket (D).
3. Install the exhaust pipe A (see step 34 **TRANSMISSION INSTALLATION**).
4. Install the subframe stiffener (see step 35 **TRANSMISSION INSTALLATION**).
5. Install the right driveshaft (see **FRONT DRIVESHAFT INSTALLATION**).
6. Refill the transmission with recommended fluid (see **ATF REPLACEMENT**).

REAR DRIVESHAFT REMOVAL

Special Tools Required

Driveshaft remover 07AAD-S9VA000

1. Loosen the wheel nuts slightly.
2. Raise the rear of the vehicle, and support it with safety stands in the proper locations (see **LIFT AND SUPPORT POINTS**).

3. Drain the differential fluid (see **DIFFERENTIAL FLUID INSPECTION AND REPLACEMENT**).
4. Remove the wheel nuts and rear wheels.

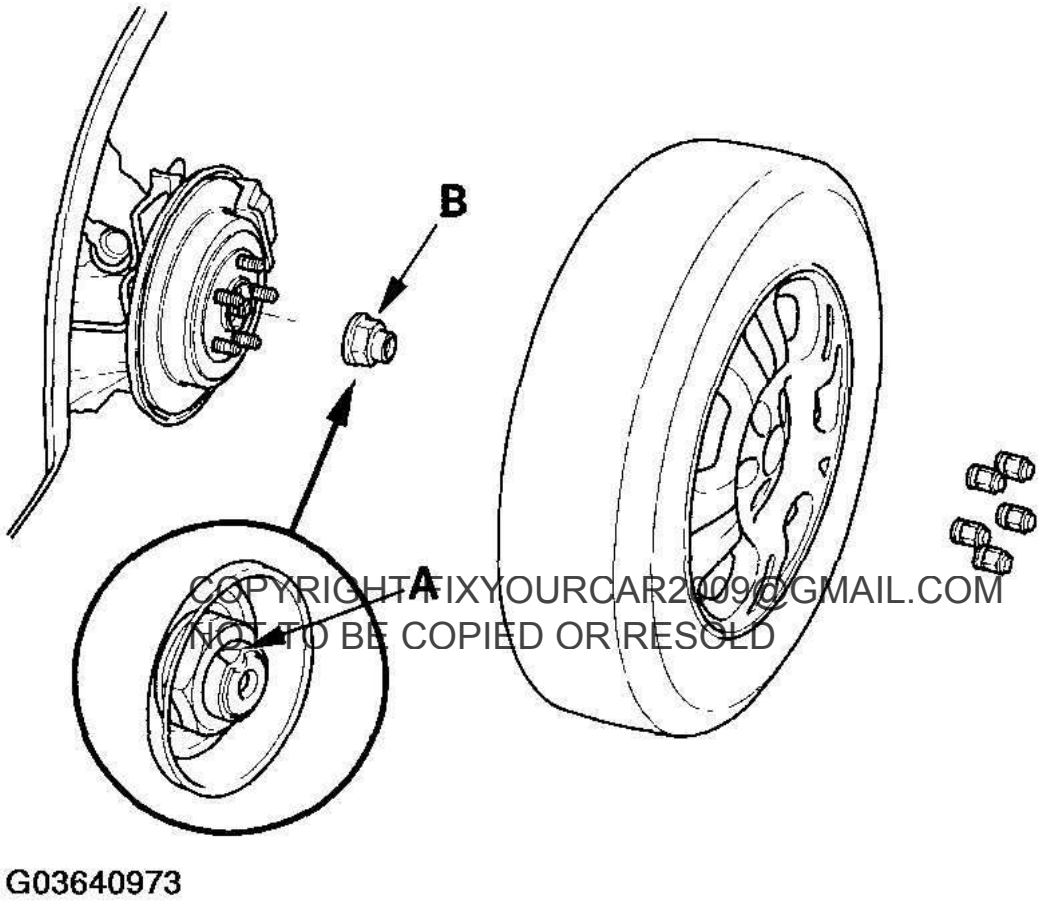

COPYRIGHT:FIXYOURCAR2009@GMAIL.COM
NOT TO BE COPIED OR RESOLD

cardiagn.com

Fig. 69: Removing Wheel Nuts And Rear Wheels
Courtesy of AMERICAN HONDA MOTOR CO., INC.

5. Lift up the locking tab (A) on the spindle nut (B), then remove and discard the nut.
6. Remove the upper arm bolt (see **UPPER ARM REMOVAL/INSTALLATION**).
7. Remove the rear damper (see **DAMPER REMOVAL AND INSTALLATION**).
8. Remove the lower arm B flange bolt (see **LOWER ARM B REMOVAL AND INSTALLATION**).
9. Remove the VSA rear wheel sensor bracket (see **WHEEL SENSOR INSPECTION**).
10. Pull the knuckle outward, and disconnect the rear driveshaft outboard joint from the rear wheel hub using a plastic hammer.

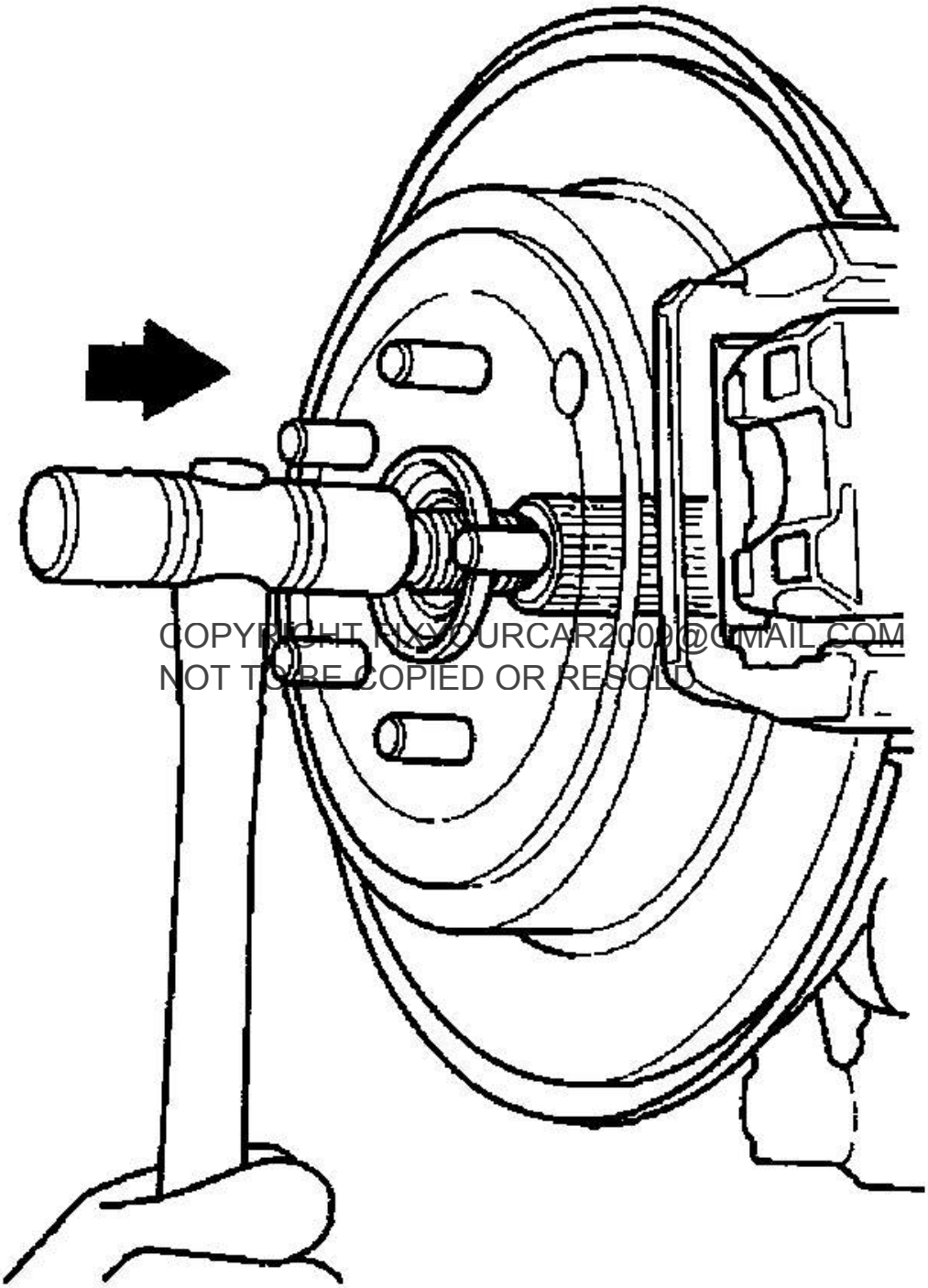

COPYRIGHT FIXYOURCAR2008@GMAIL.COM
NOT TO BE COPIED OR RESOLD

G03640974

cardiagn.com

Fig. 70: Disconnecting Rear Driveshaft Outboard Joint From Rear Wheel Hub Using Plastic Hammer
Courtesy of AMERICAN HONDA MOTOR CO., INC.

11. Remove the rear driveshaft outboard joint.

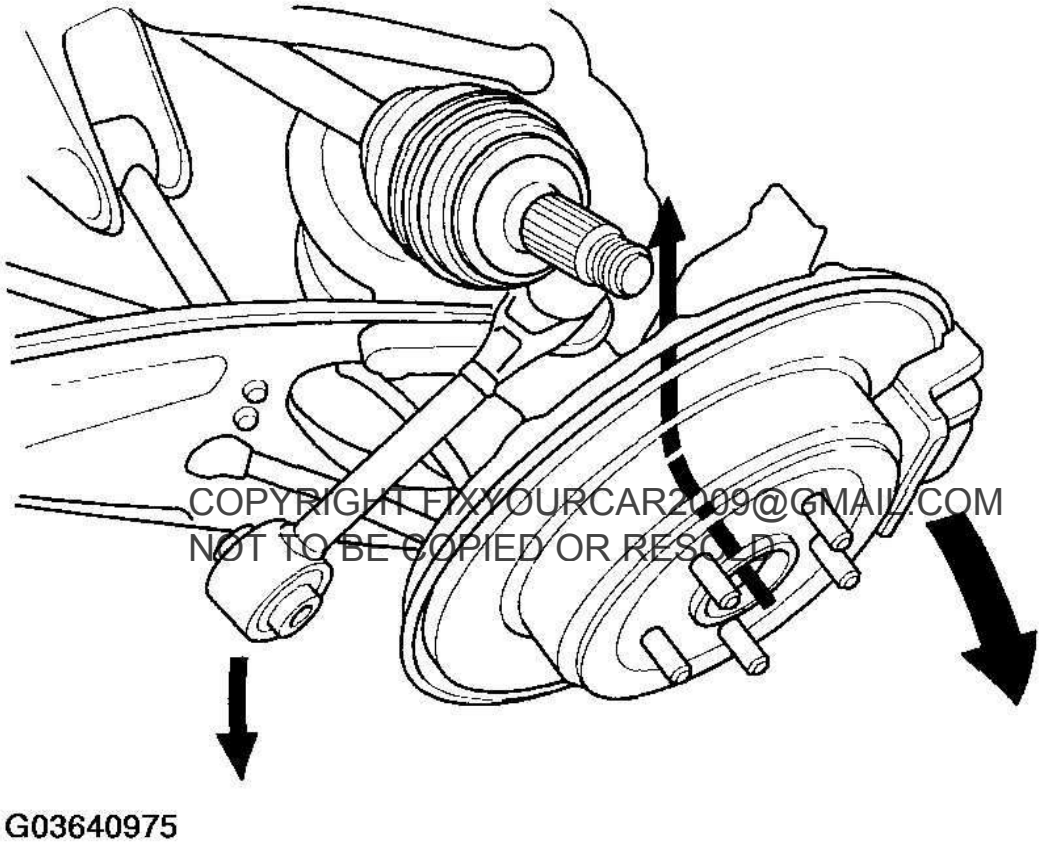

COPYRIGHT FIXYOURCAR2009@GMAIL.COM
NOT TO BE COPIED OR RESOLD

Fig. 71: Removing Rear Driveshaft Outboard Joint
Courtesy of AMERICAN HONDA MOTOR CO., INC.

12. Using the special tool, pry out the inboard joint (A) from the differential (B).

NOTE: **This is a prying tool; do not strike it with a hammer.**

cardiagn.com

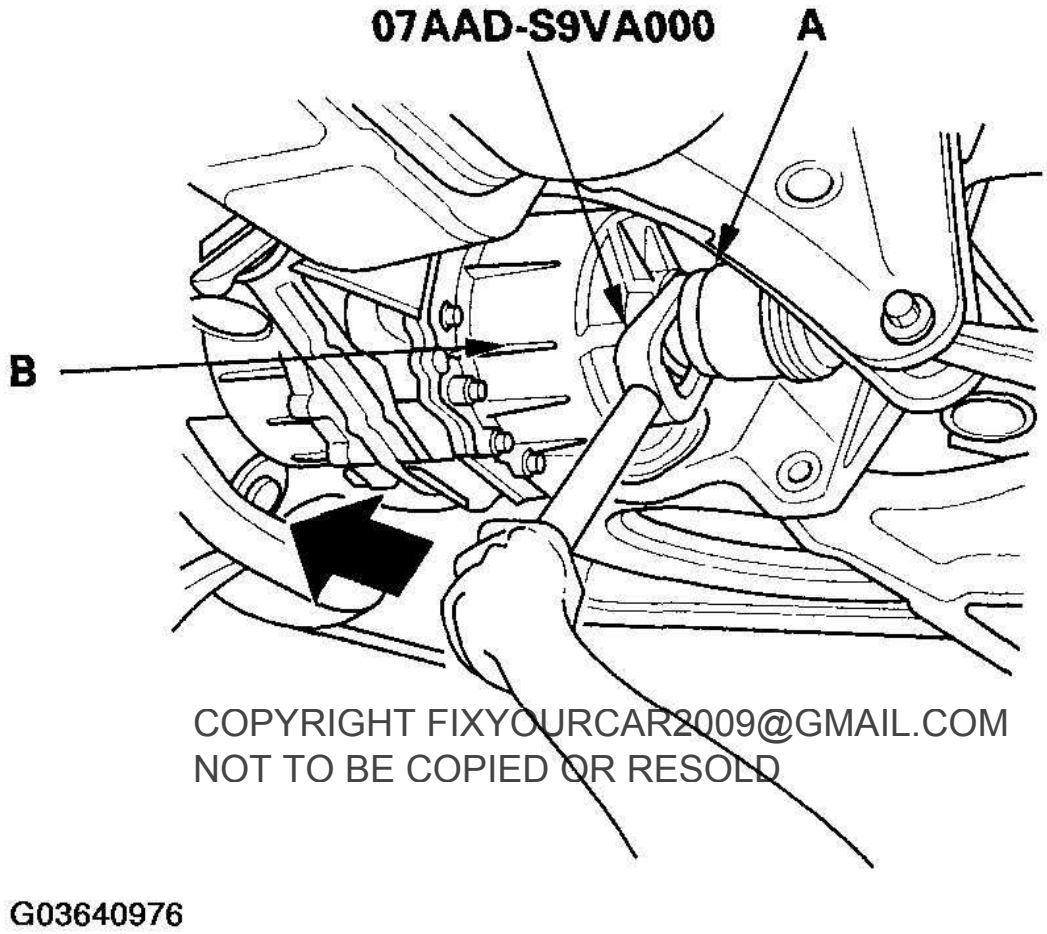

COPYRIGHT FIXYOURCAR2009@GMAIL.COM
NOT TO BE COPIED OR RESOLD

cardiagn.com

Fig. 72: Prying Out Inboard Joint From Differential Using Special Tool
Courtesy of AMERICAN HONDA MOTOR CO., INC.

13. Remove the rear driveshaft.

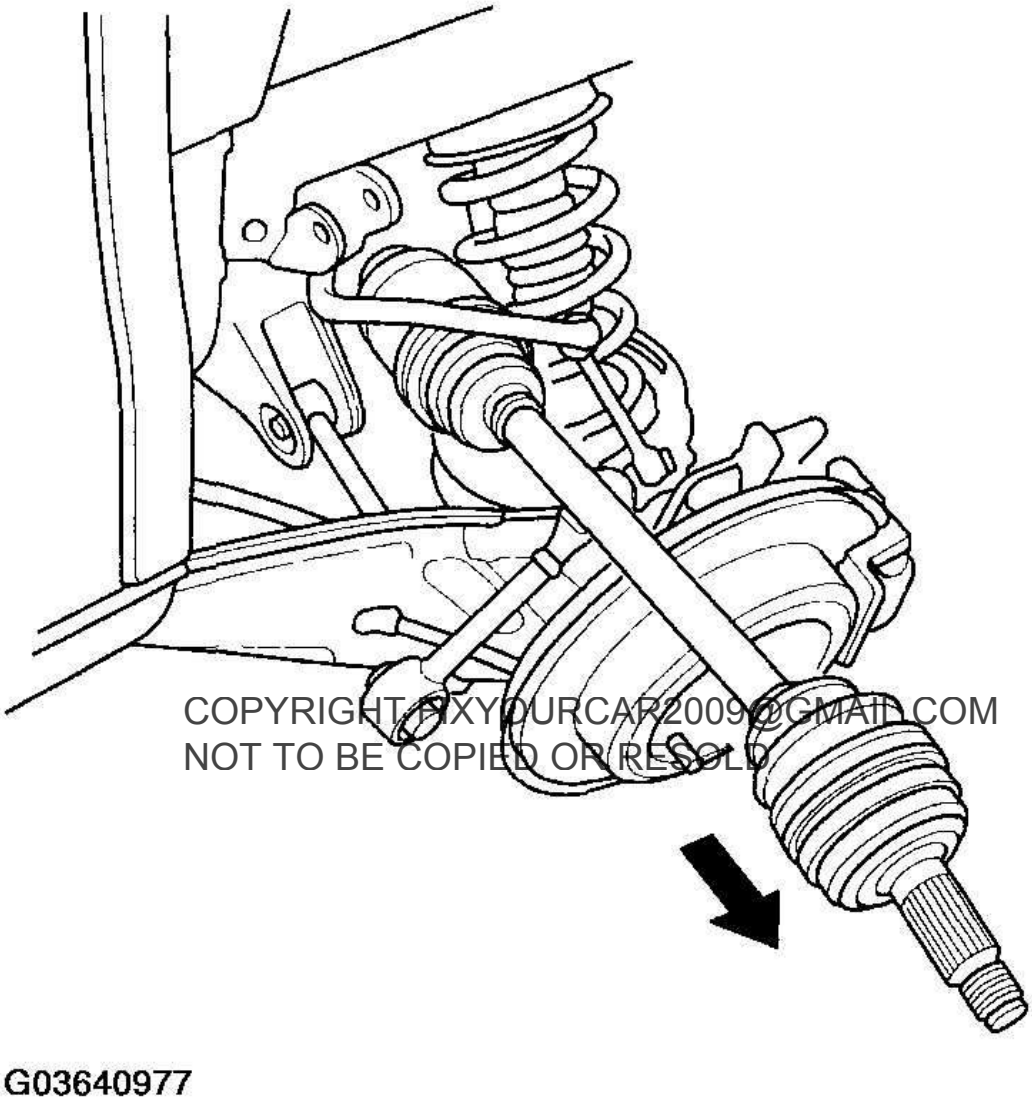

COPYRIGHT FIXYOURCAR2009@GMAIL.COM
NOT TO BE COPIED OR RESOLD

cardiagn.com

Fig. 73: Removing Rear Driveshaft
Courtesy of AMERICAN HONDA MOTOR CO., INC.

REAR DRIVESHAFT DISASSEMBLY

Special Tools Required

Threaded adapter, 24 x 1.5 mm 07XAC-001020A

Inboard Joint Side

1. Remove the boot bands. Be careful not to damage the boot.
   - If the boot band is a locking tab type (A), pry up the locking tab (B) with a screwdriver, and lift up the end of the band.
   - If the boot band is a double loop type (C), lift up the band end (D), and push it into the clip (E).

Locking tab type

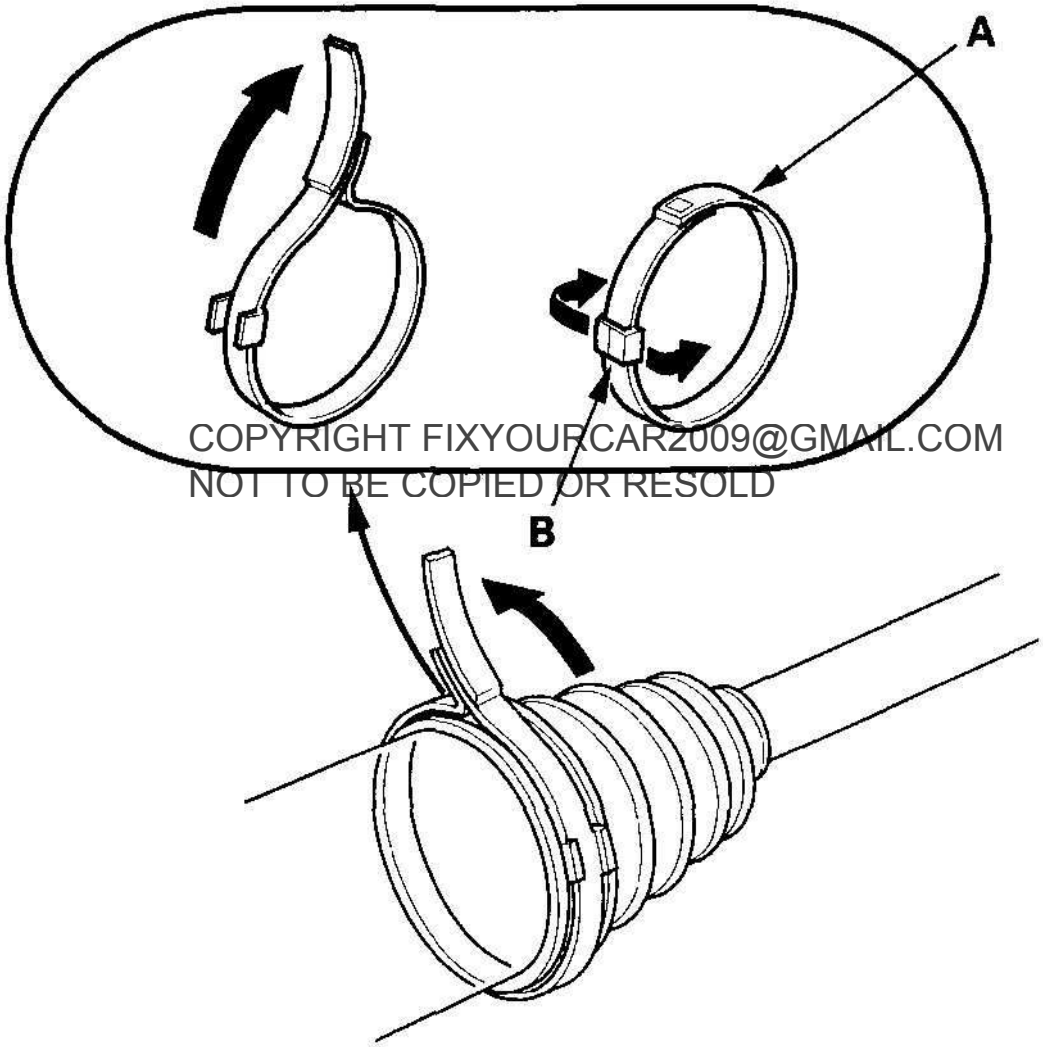

COPYRIGHT FIXYOURCAR2009@GMAIL.COM
NOT TO BE COPIED OR RESOLD

G03640978

Fig. 74: Removing Boot Bands (Locking Tab Type)
Courtesy of AMERICAN HONDA MOTOR CO., INC.

cardiagn.com

Double loop type

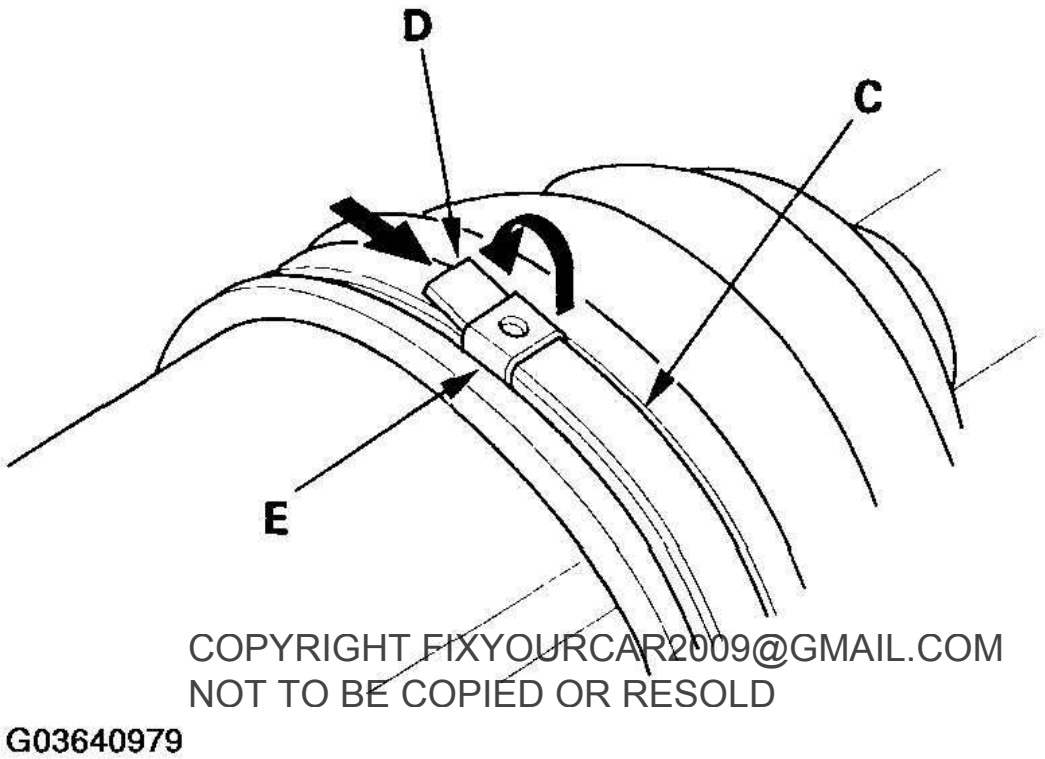

COPYRIGHT FIXYOURCAR2009@GMAIL.COM
NOT TO BE COPIED OR RESOLD

cardiagn.com

Fig. 75: Removing Boot Bands (Double Loop Type)
Courtesy of AMERICAN HONDA MOTOR CO., INC.

2. Remove the circlip (A).

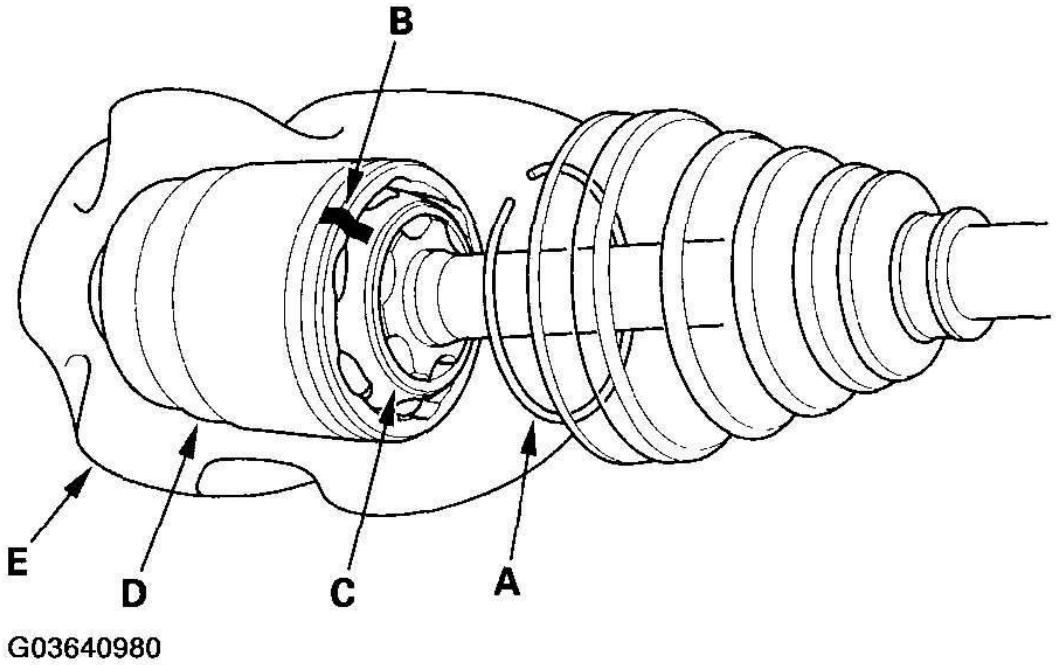

COPYRIGHT FIXYOURCAR2009@GMAIL.COM
NOT TO BE COPIED OR RESOLD

Fig. 76: Identifying Mark On Bearing Retainer And Inboard Joint
Courtesy of AMERICAN HONDA MOTOR CO., INC.

3. Make a mark (B) on the bearing retainer (C) and inboard joint (D) to identify the locations of ball bearings and grooves in the inboard joint. Then remove the inboard joint on the shop towel (E). Be careful not to drop the ball bearings when separating them from the inboard joint.
4. Remove the snap ring (A).

cardiagn.com

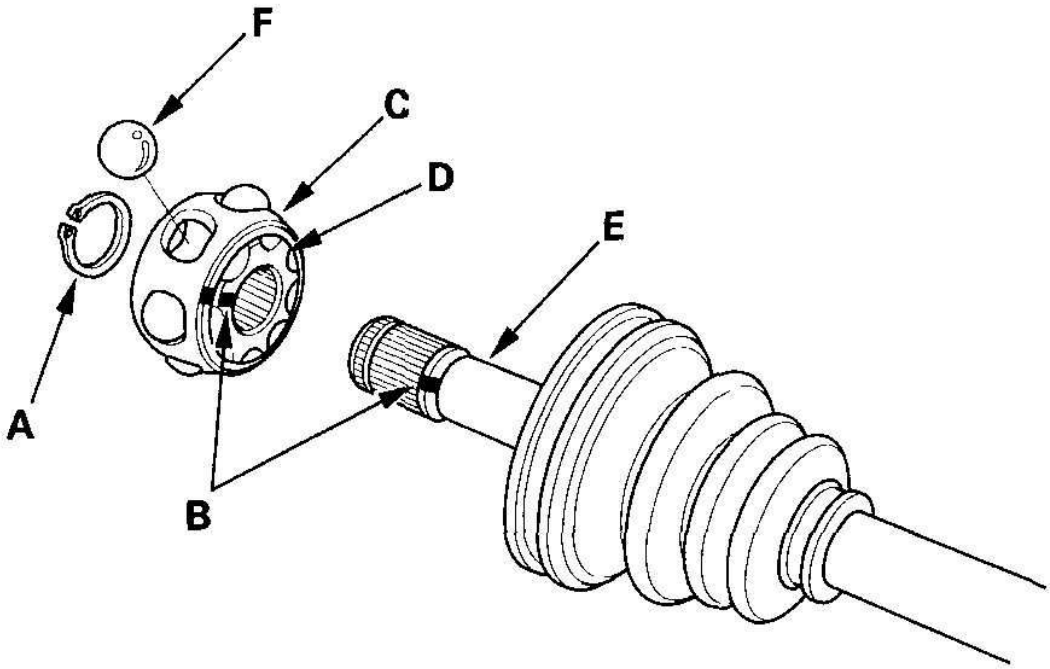

COPYRIGHT FIXYOURCAR2009@GMAIL.COM
NOT TO BE COPIED OR RESOLD

Fig. 77: Removing Snap Ring
Courtesy of AMERICAN HONDA MOTOR CO., INC.

5. Make a mark (B) on the bearing retainer (C), the bearing race (D), and driveshaft (E) to identify the position of the bearing retainer and the bearing race on the shaft.
6. Remove the bearing race and the steel ball bearings (F).
7. Wrap the splines on the driveshaft (A) with vinyl tape (B) to prevent damage to the boot.

cardiagn.com

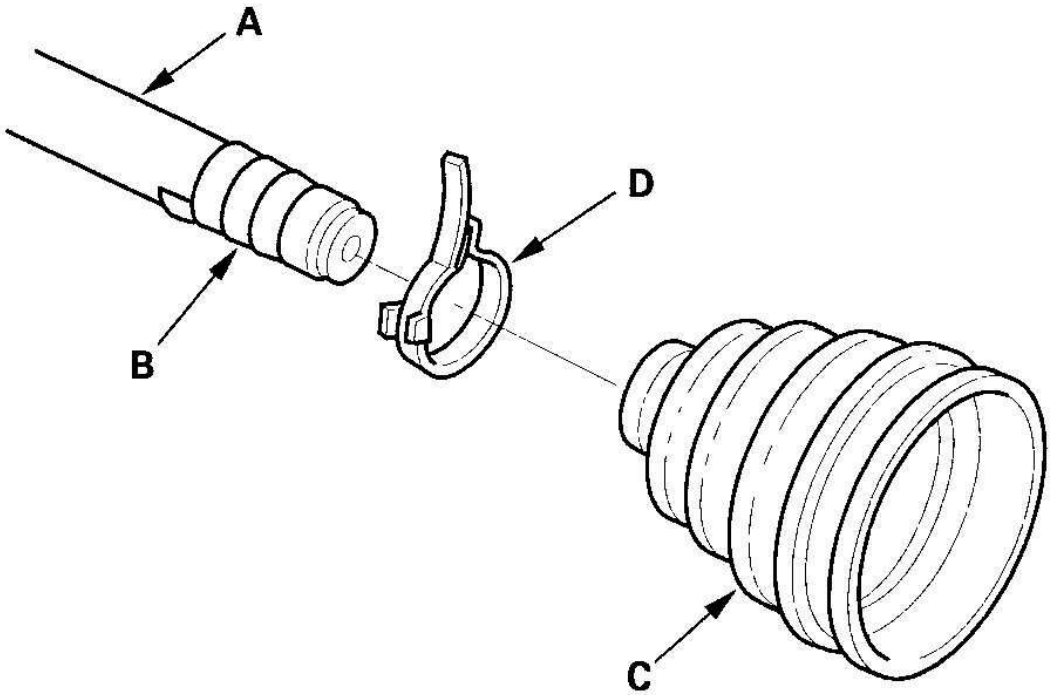

COPYRIGHT FIXYOURCAR2009@GMAIL.COM
NOT TO BE COPIED OR RESOLD

Fig. 78: Removing Inboard Boot And Locking Tab Type Boot Band
Courtesy of AMERICAN HONDA MOTOR CO., INC.

8. Remove the inboard boot (C) and locking tab type boot band (D). Be careful not to damage the boot.
9. Remove the vinyl tape.

OUTBOARD JOINT SIDE

1. Remove the boot bands. Be careful not to damage the boot.
   - If the boot band is a locking tab type (A), pry up the locking tab (B) with a screwdriver, and lift up the end of the band.
   - If the boot band is a double loop type (C), lift up the band end (D), and push it into the clip (E).

   Locking tab type

cardiagn.com

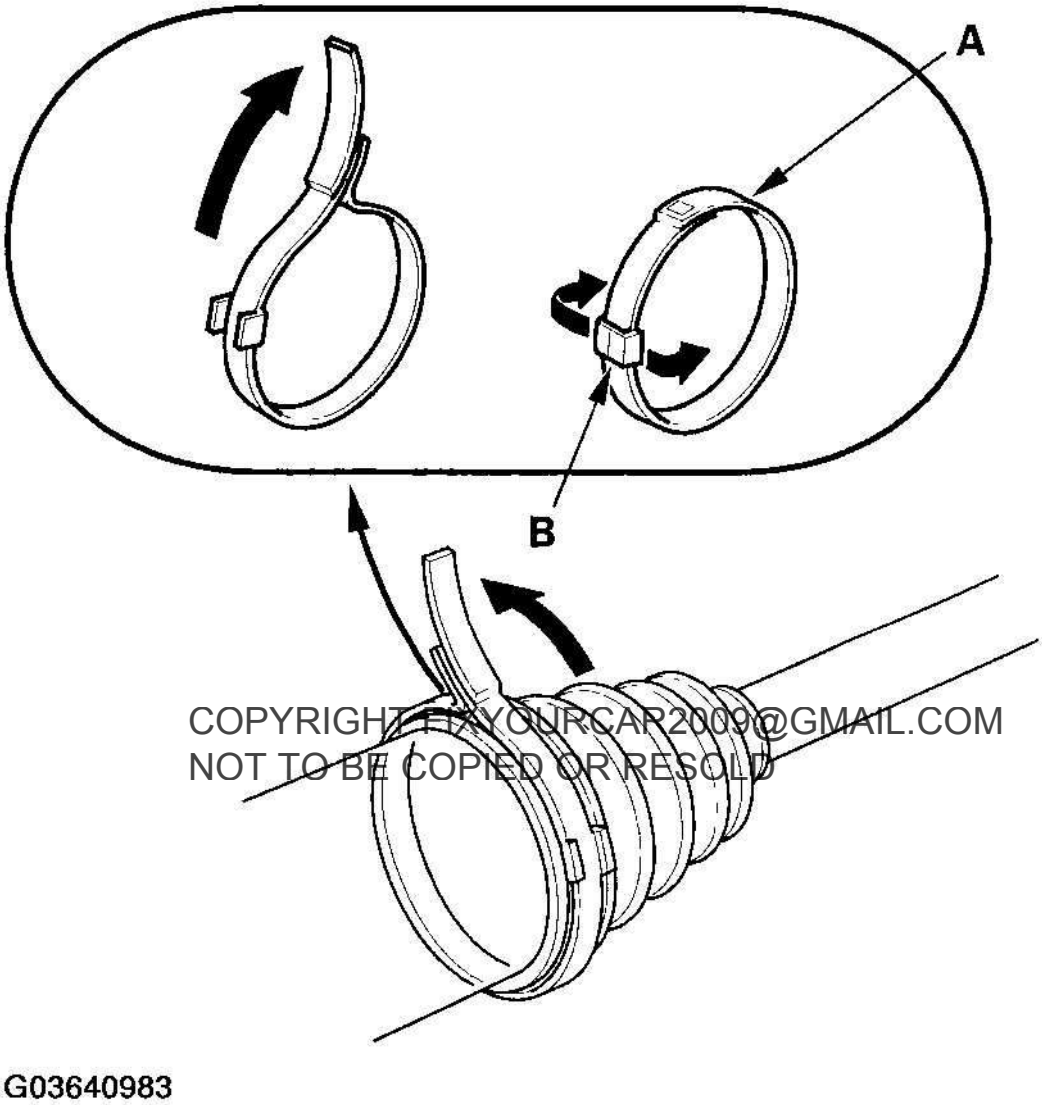

COPYRIGHT FIXYOURCAR2009@GMAIL.COM
NOT TO BE COPIED OR RESOLD

cardiagn.com

Fig. 79: Removing Boot Bands (Locking Tab Type)
Courtesy of AMERICAN HONDA MOTOR CO., INC.

Double loop type

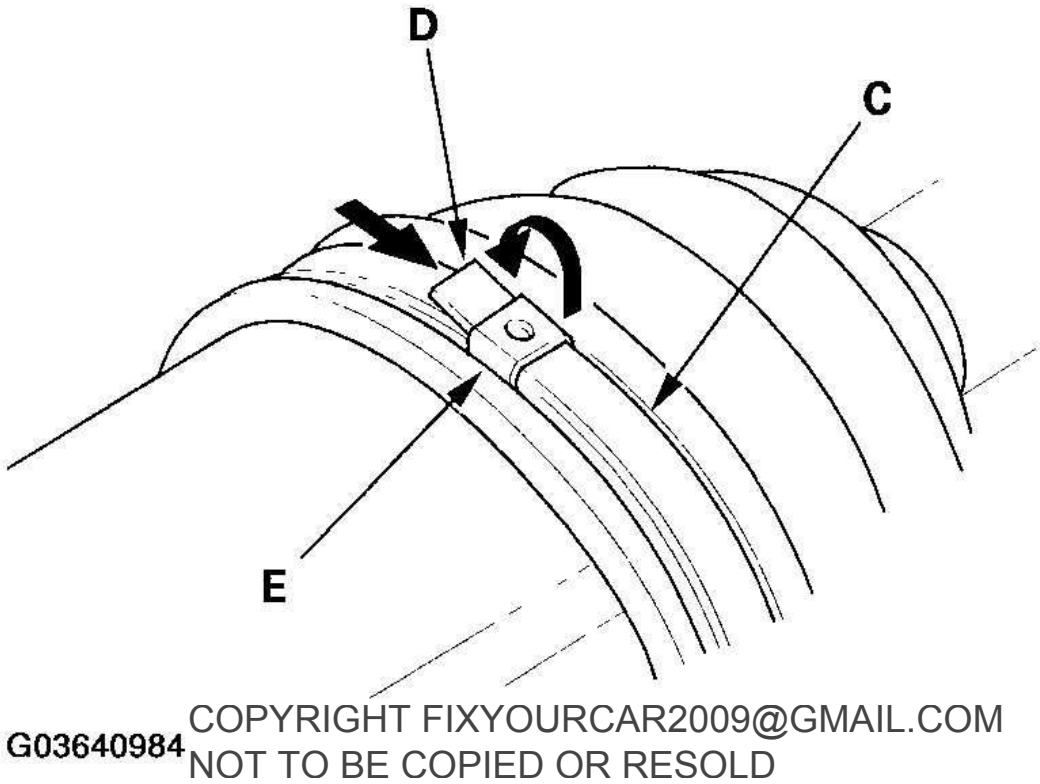

COPYRIGHT FIXYOURCAR2009@GMAIL.COM
NOT TO BE COPIED OR RESOLD

cardiagn.com

Fig. 80: Removing Boot Bands (Double Loop Type)
Courtesy of AMERICAN HONDA MOTOR CO., INC.

2. Slide the outboard boot (A) to the inboard joint side. Be careful not to damage the boot.

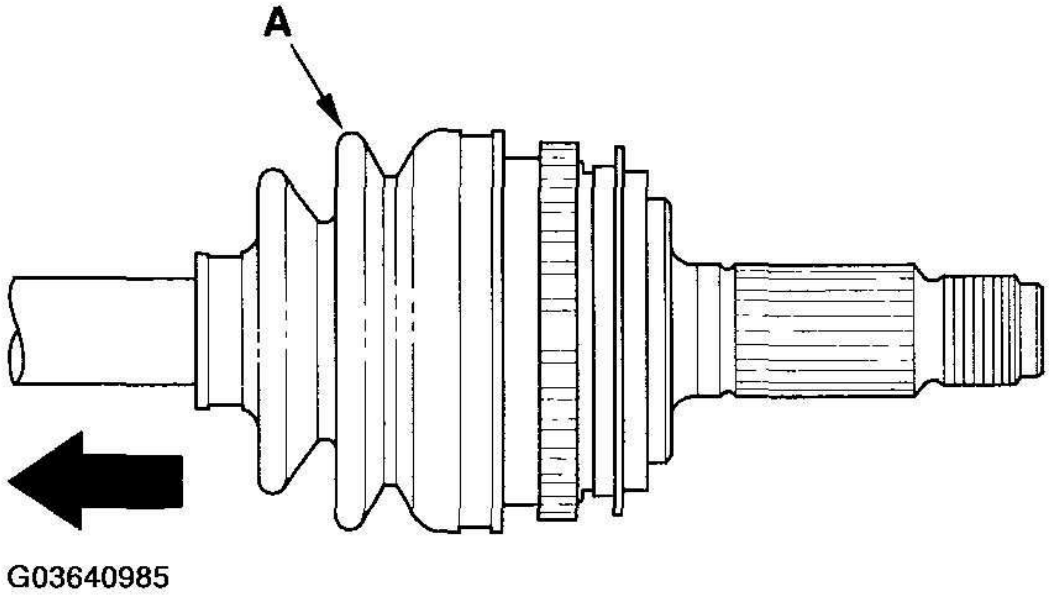

Fig. 81: Sliding Outboard Boot To Inboard Joint Side
Courtesy of AMERICAN HONDA MOTOR CO., INC.

COPYRIGHT FIXYOURCAR2009@GMAIL.COM
NOT TO BE COPIED OR RESOLD

3. Wipe off the grease to expose the driveshaft and the outboard joint inner race.
4. Make a mark (A) on the driveshaft (B) at the same position of the outboard joint end (C).

cardiagn.com

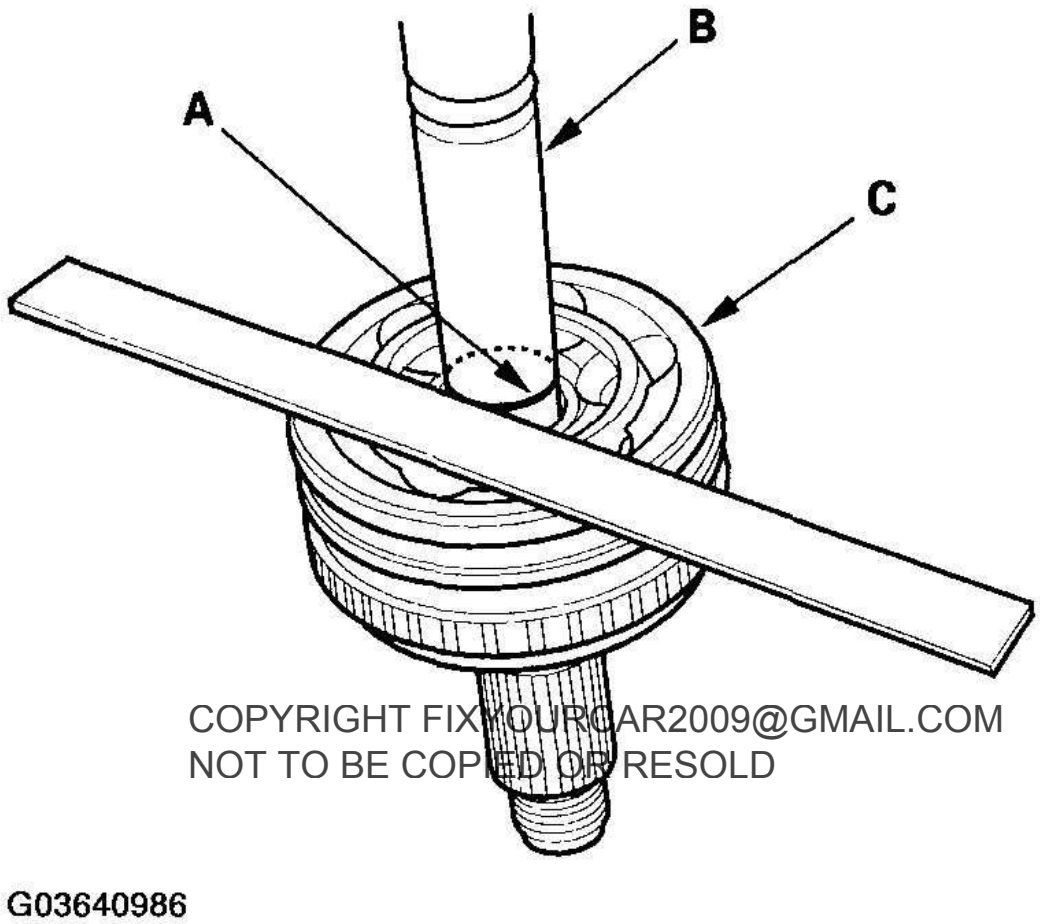

COPYRIGHT FIXYOURCAR2009@GMAIL.COM
NOT TO BE COPIED OR RESOLD

cardiagn.com

Fig. 82: Marking Driveshaft
Courtesy of AMERICAN HONDA MOTOR CO., INC.

5. Carefully clamp the driveshaft in a vise.

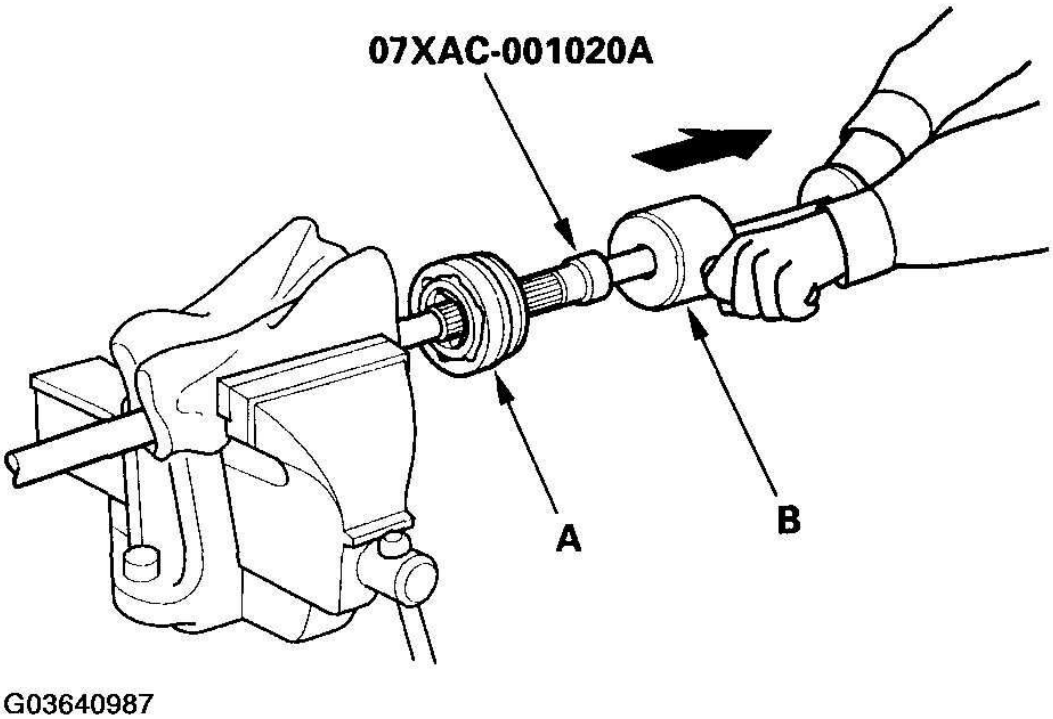

COPYRIGHT FIXYOURCAR2009@GMAIL.COM
NOT TO BE COPIED OR RESOLD

Fig. 83: Clamping Driveshaft In Vise
Courtesy of AMERICAN HONDA MOTOR CO., INC.

6. Remove the outboard joint (A) using the special tool and a commercially available 5/8"-18 UNF slide hammer (B).
7. Remove the driveshaft from the vise.
8. Remove the circlip from the driveshaft.

cardiagn.com

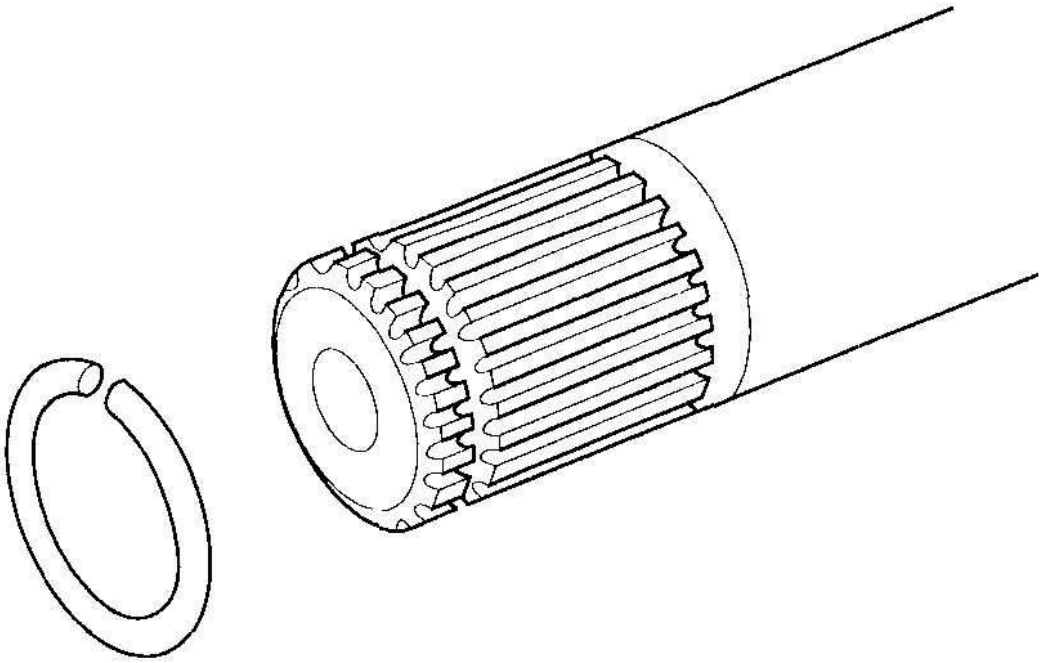

COPYRIGHT FIXYOURCAR2009@GMAIL.COM
NOT TO BE COPIED OR RESOLD

Fig. 84: Removing Circlip From Driveshaft
Courtesy of AMERICAN HONDA MOTOR CO., INC.

REAR DRIVESHAFT REASSEMBLY

EXPLODED VIEW

cardiagn.com

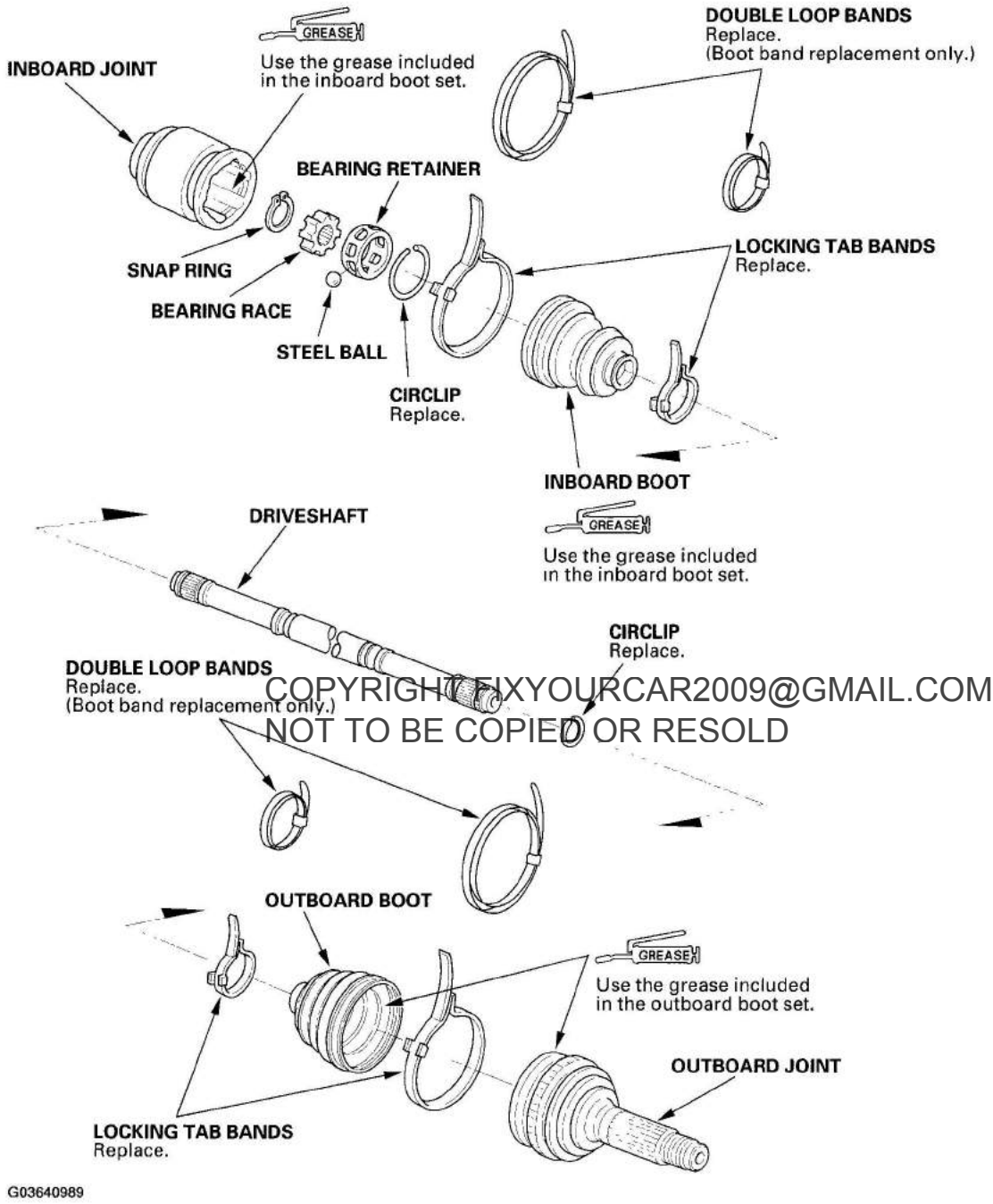

COPYRIGHT FIXYOURCAR2009@GMAIL.COM
NOT TO BE COPIED OR RESOLD

cardiagn.com

Fig. 85: Exploded View Of Rear Driveshaft
Courtesy of AMERICAN HONDA MOTOR CO., INC.

Special Tools Required

Boot band tool, KD-3191 or equivalent, commercially available

NOTE: Refer to the Exploded View as needed during this procedure.

INBOARD JOINT SIDE

1. Wrap the splines with vinyl tape (A) to prevent damage to the inboard boot.

Double loop type

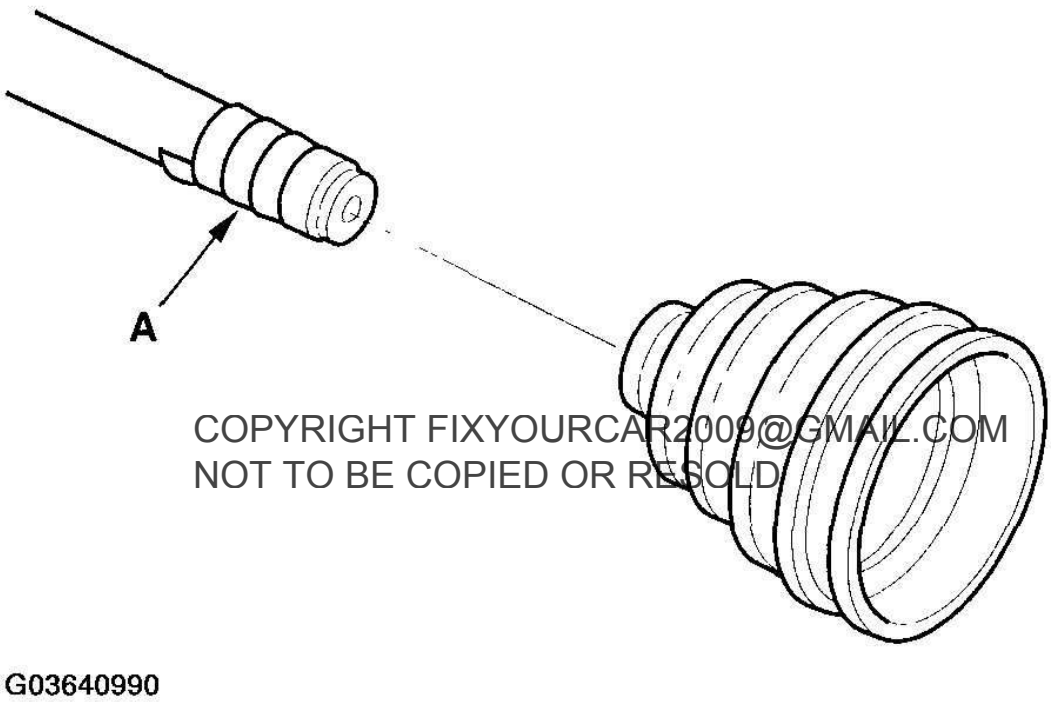

COPYRIGHT FIXYOURCAR2009@GMAIL.COM
NOT TO BE COPIED OR RESOLD

cardiagn.com

Fig. 86: Wrapping Splines With Vinyl Tape
Courtesy of AMERICAN HONDA MOTOR CO., INC.

Locking tab type

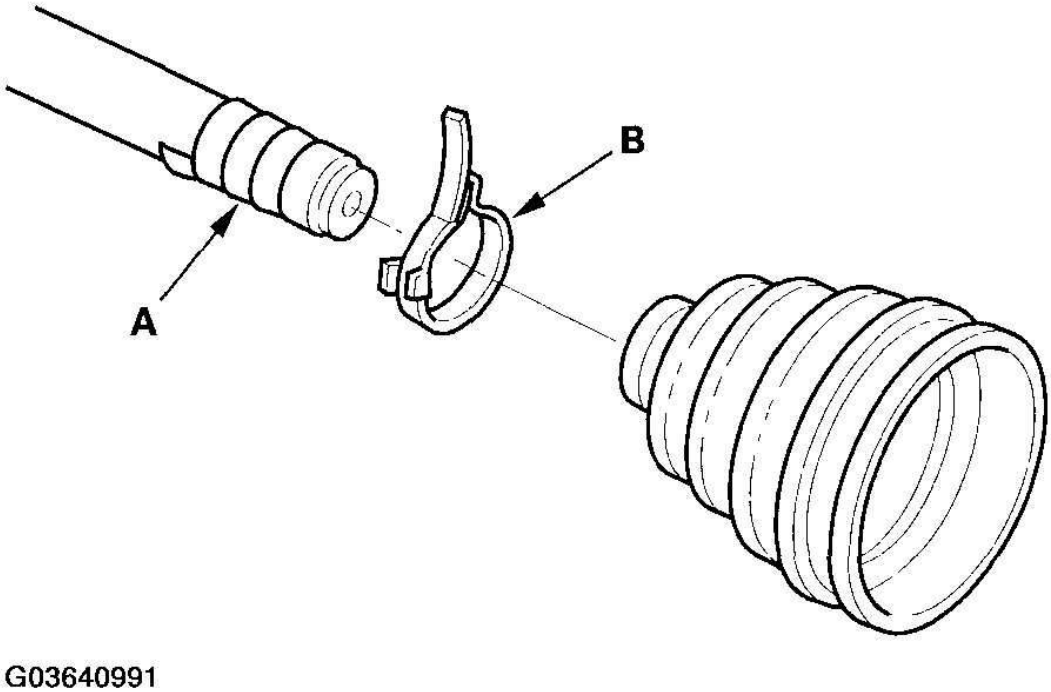

COPYRIGHT FIXYOURCAR2009@GMAIL.COM
NOT TO BE COPIED OR RESOLD

Fig. 87: Installing Inboard Boot And Boot Band On Driveshaft
Courtesy of AMERICAN HONDA MOTOR CO., INC.

2. Install the inboard boot and boot band (B) on the driveshaft, then remove the vinyl tape. Be careful not to damage the inboard boot.
3. Install the steel balls (A) and the bearing retainer (B) onto the bearing race (C) by aligning the marks (D) on the bearing retainer and the bearing race.

cardiagn.com

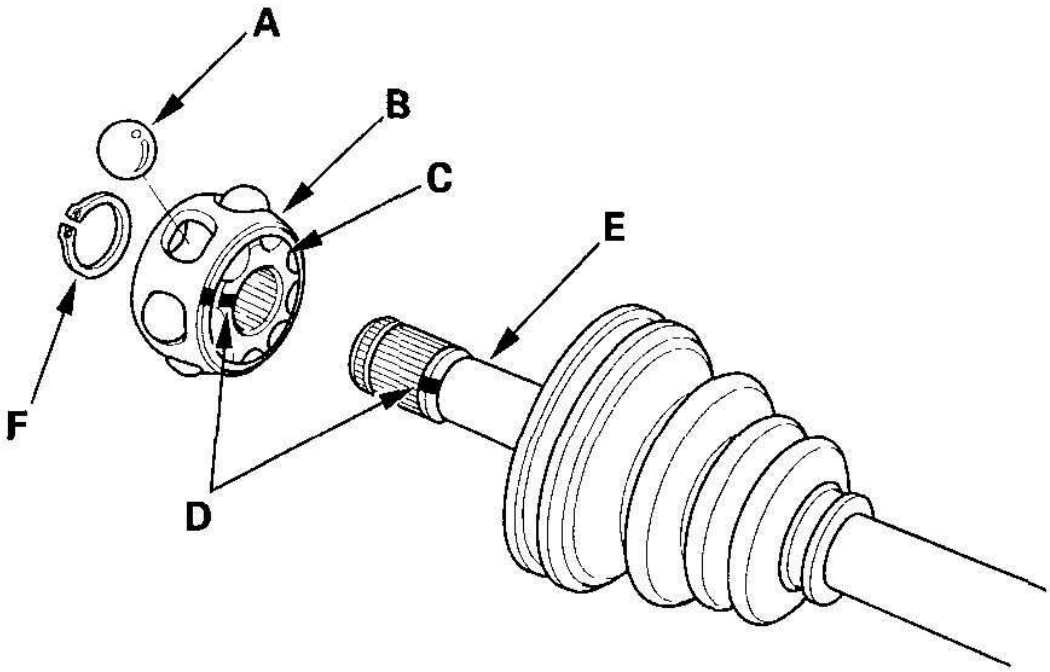

COPYRIGHT FIXYOURCAR2009@GMAIL.COM
NOT TO BE COPIED OR RESOLD

Fig. 88: Installing Steel Balls And Bearing Retainer Onto Bearing Race
Courtesy of AMERICAN HONDA MOTOR CO., INC.

4. Install the bearing onto the driveshaft (E) by aligning the marks on the bearing and the driveshaft.
5. Install the snap ring (F).
6. Pack the inboard joint with the joint grease included in the new driveshaft set.

Grease quantity

cardiagn.com

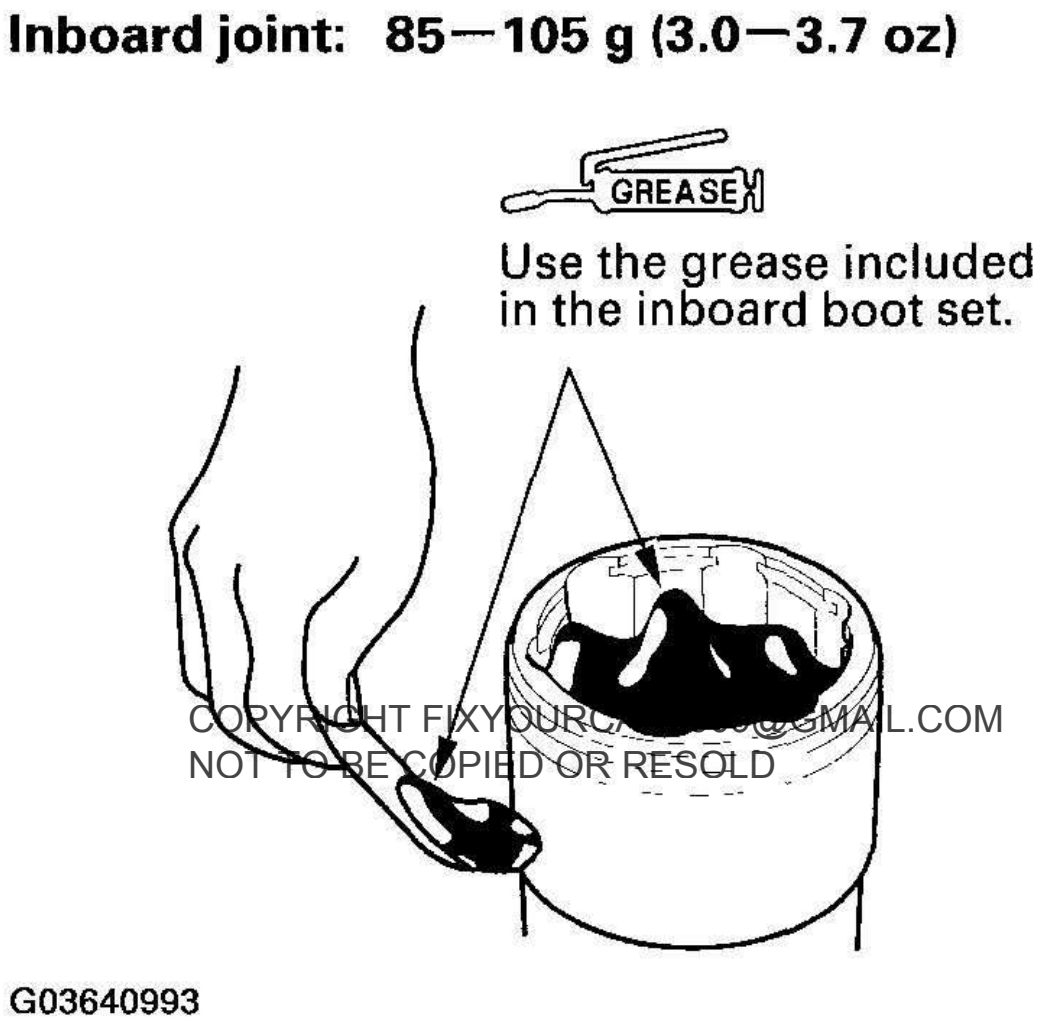

COPYRIGHT FIXYOURC[illegible]@GMAIL.COM
NOT TO BE COPIED OR RESOLD

cardiagn.com

Fig. 89: Packing Inboard Joint With Joint Grease
Courtesy of AMERICAN HONDA MOTOR CO., INC.

7. Install the inboard joint onto the driveshaft by aligning the mark (A) on the inboard joint and driveshaft.

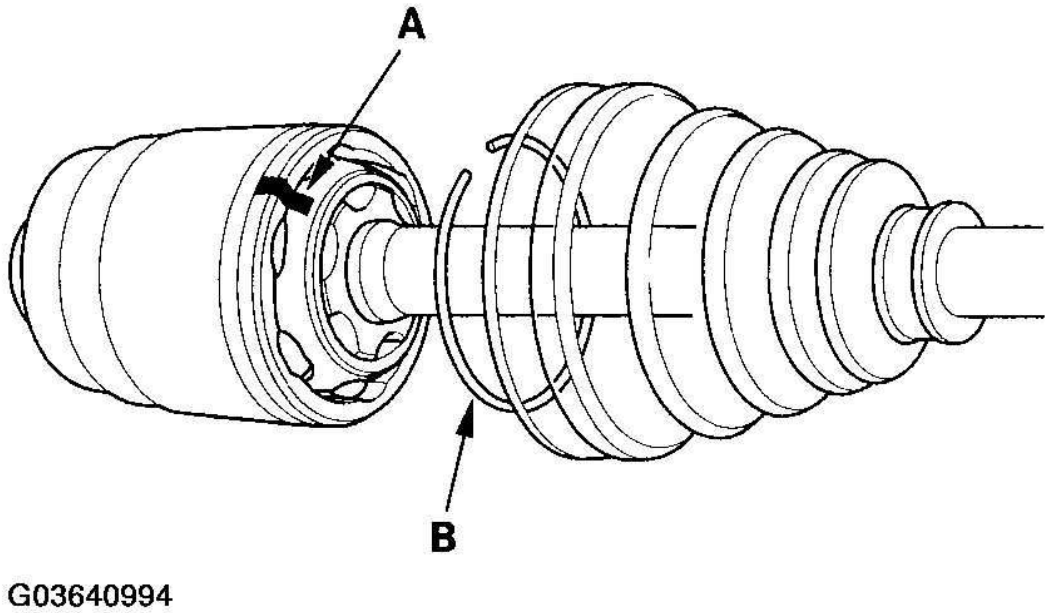

Fig. 90: Installing Inboard Joint Onto Driveshaft By Aligning Mark
Courtesy of AMERICAN HONDA MOTOR CO., INC.

COPYRIGHT FIXYOURCAR2009@GMAIL.COM
NOT TO BE COPIED OR RESOLD

8. Install the circlip (B).
9. Adjust the length of the driveshaft to these measurements, then adjust the boots to halfway between full compression and full extension. Make sure the ends of the boots seat in the grooves of the driveshaft and joint.

Left Driveshaft: 619.1-624.1 mm (24.4-24.6 in.)

Right Driveshaft: 648.1-653.1 mm (25.5-25.7 in.)

cardiagn.com

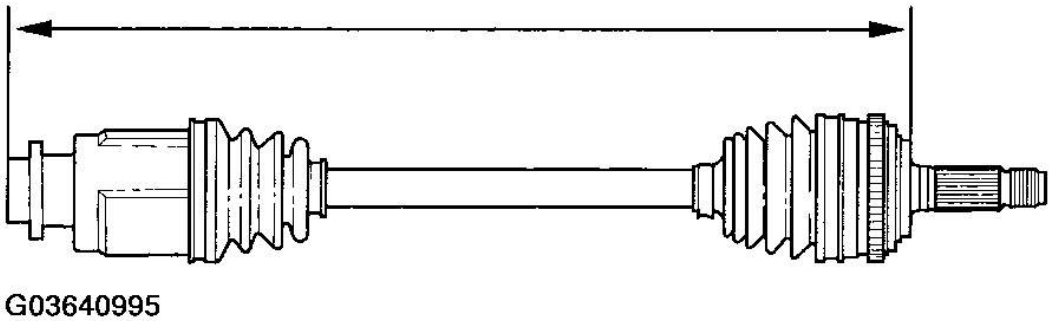

Fig. 91: Identifying Length Of Driveshaft
Courtesy of AMERICAN HONDA MOTOR CO., INC.

10. Fit the boot ends onto the driveshaft and the inboard joint, then install the new double loop band (A) onto the boot.

COPYRIGHT FIXYOURCAR2009@GMAIL.COM
NOT TO BE COPIED OR RESOLD

cardiagn.com

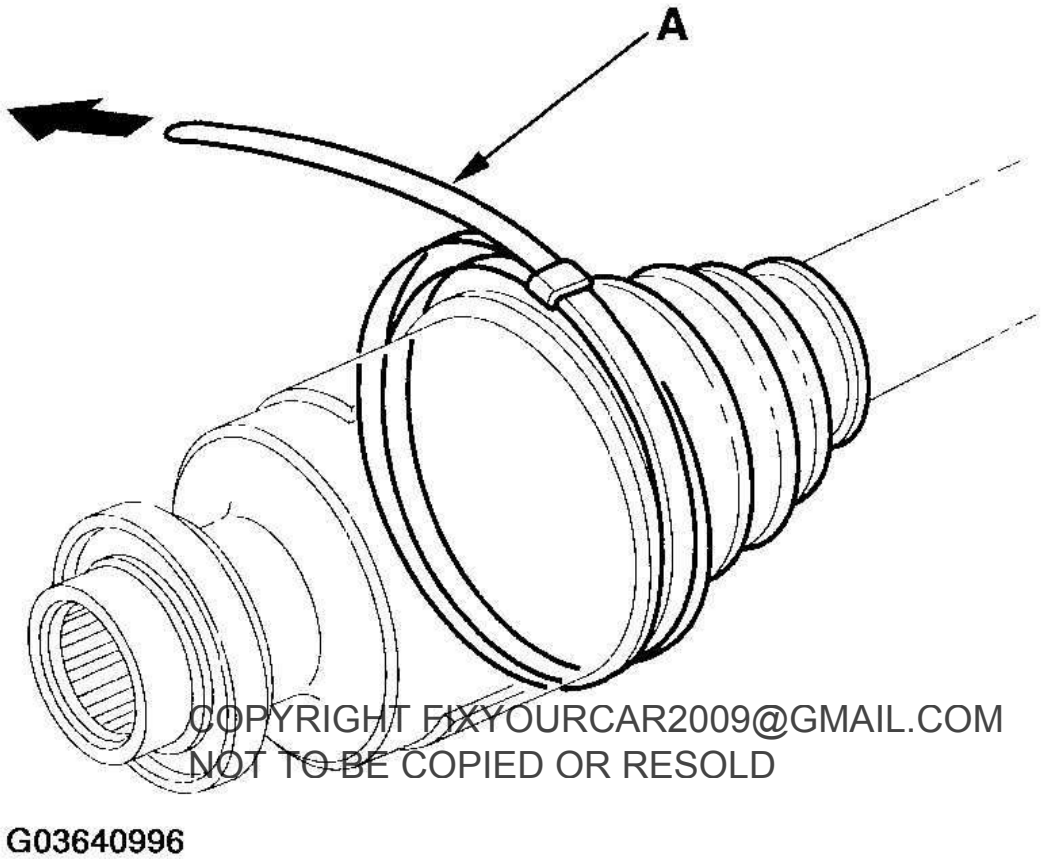

COPYRIGHT FIXYOURCAR2009@GMAIL.COM
NOT TO BE COPIED OR RESOLD

cardiagn.com

Fig. 92: Installing New Double Loop Band Onto Boot
Courtesy of AMERICAN HONDA MOTOR CO., INC.

11. Pull up the slack in the band by hand.
12. Mark a position (A) on the band 10-14 mm (0.4-0.6 in.) from the clip (B).

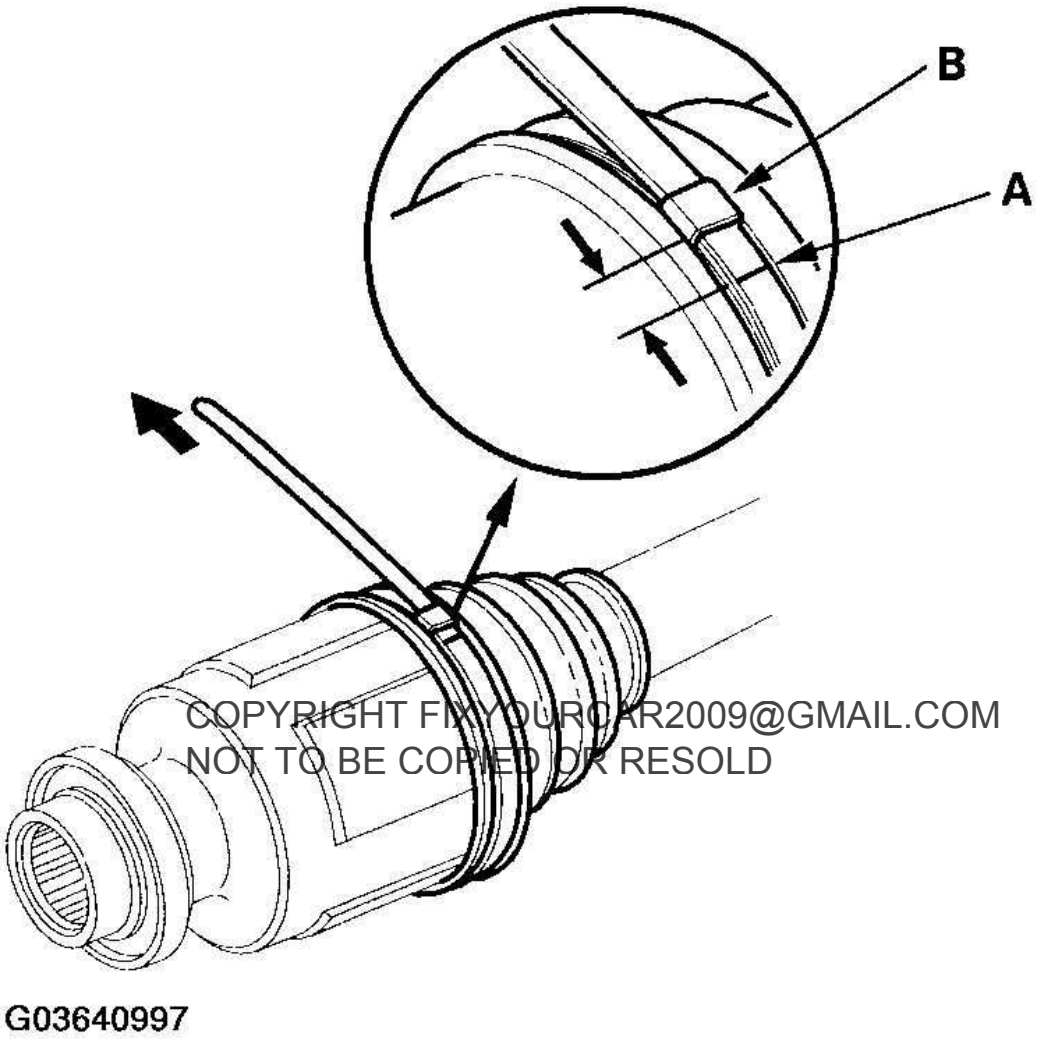

COPYRIGHT FIXYOURCAR2009@GMAIL.COM
NOT TO BE COPIED OR RESOLD

cardiagn.com

Fig. 93: Identifying Marking Position
Courtesy of AMERICAN HONDA MOTOR CO., INC.

13. Thread the free end of the band through the nose section of the commercially available boot band tool KD-3191 or equivalent (A), and into the slot on the winding mandrel (B).

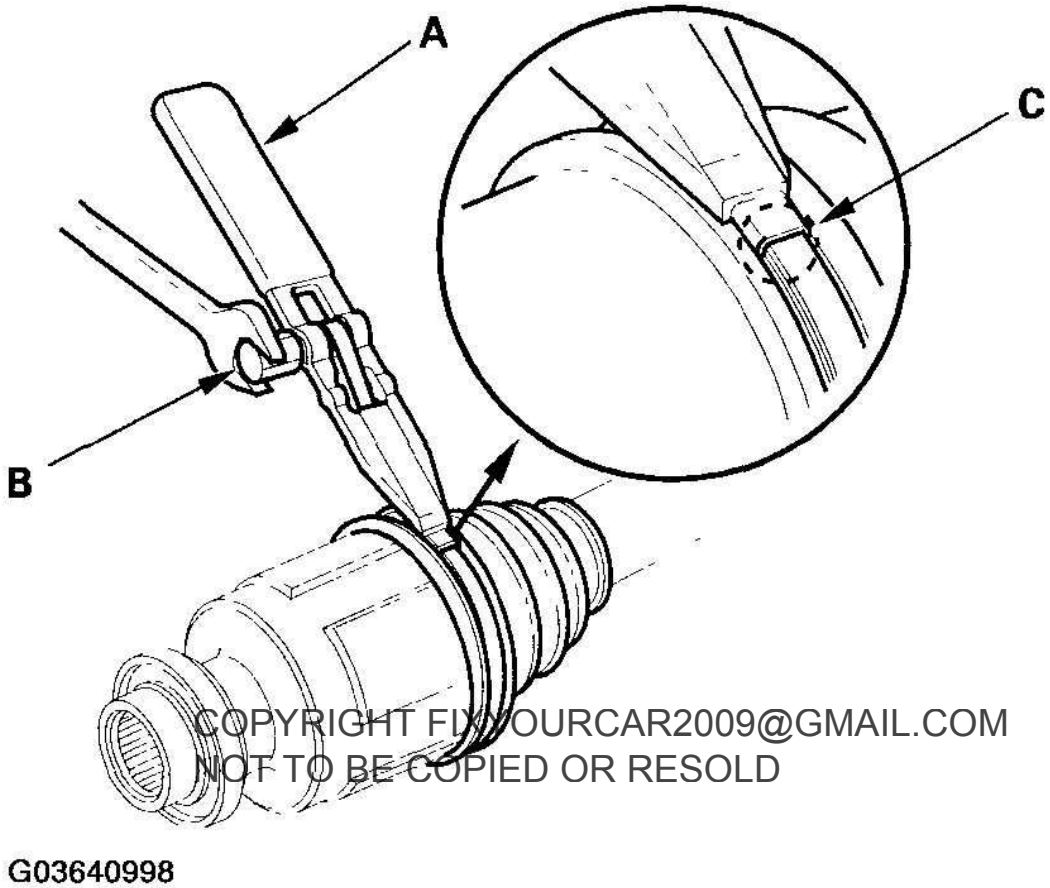

COPYRIGHT FIXYOURCAR2009@GMAIL.COM
NOT TO BE COPIED OR RESOLD

cardiagn.com

Fig. 94: Threading Free End Of Band Through Nose Section Of Boot Band Tool KD-3191
Courtesy of AMERICAN HONDA MOTOR CO., INC.

14. Place a wrench on the winding mandrel of the boot band tool, and tighten the band until the marked spot (C) on the band meets the edge of the clip.
15. Lift up the boot band tool to bend the free end of the band 90 degrees to the clip. Center-punch the clip, then fold over the remaining tail onto the clip.

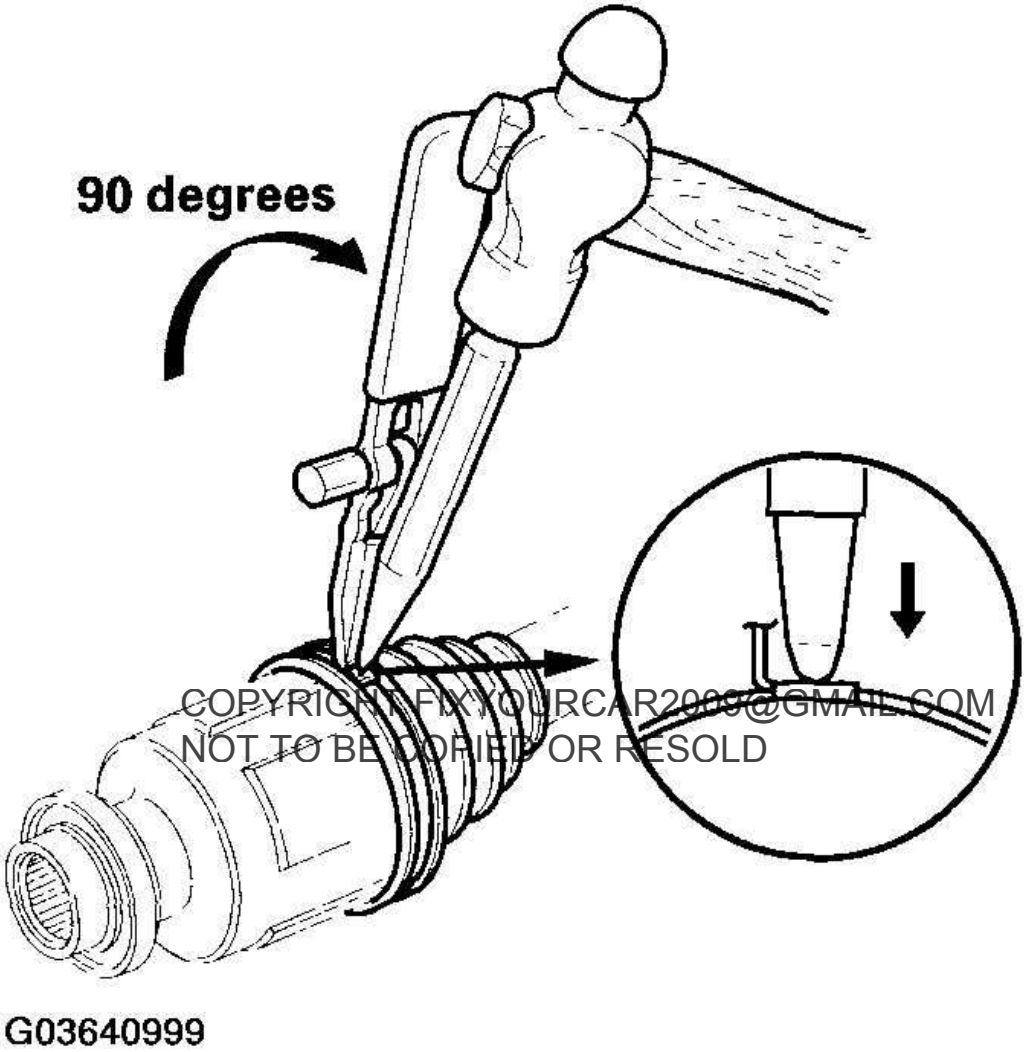

COPYRIGHT FIXYOURCAR2009@GMAIL.COM
NOT TO BE COPIED OR RESOLD

cardiagn.com

Fig. 95: Center-Punching Clip
Courtesy of AMERICAN HONDA MOTOR CO., INC.

16. Unwind the boot band tool, and cut off the excess free end of the band to leave 5-10 mm (0.2-0.4 in.) from the clip.

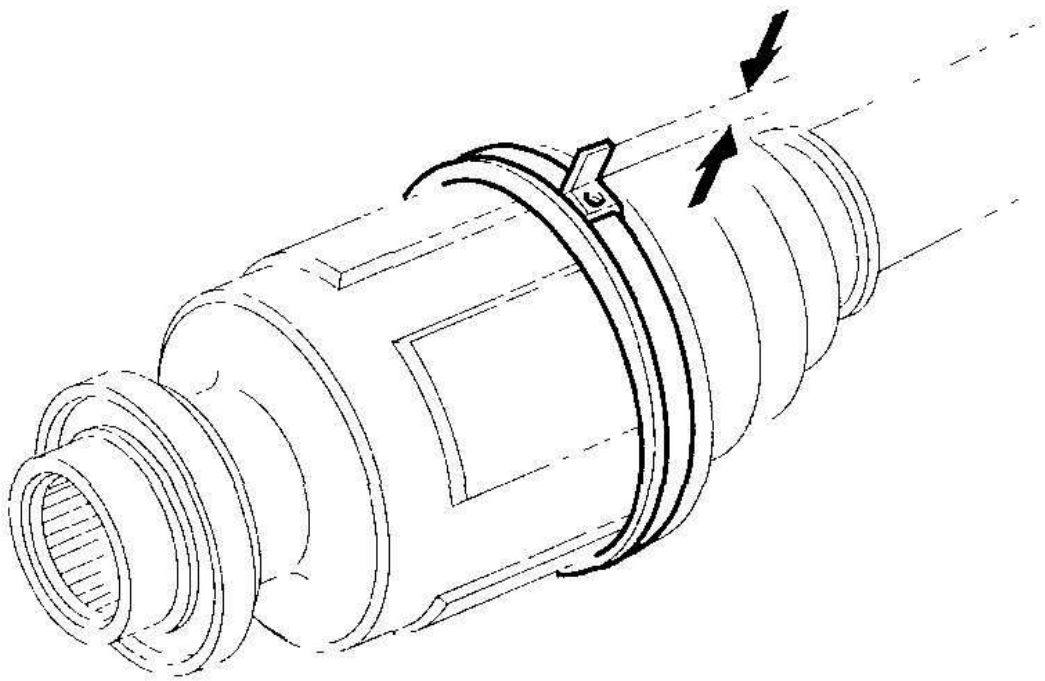

COPYRIGHT FIXYOURCAR2009@GMAIL.COM
NOT TO BE COPIED OR RESOLD

Fig. 96: Identifying Excess Free End Of Band
Courtesy of AMERICAN HONDA MOTOR CO., INC.

17. Bend the band end (A) by tapping it down with a hammer.

NOTE:

- **Make sure the band and clip do not interfere with anything, and the band does not move.**
- **Remove any grease remaining on the surrounding surfaces.**

cardiagn.com

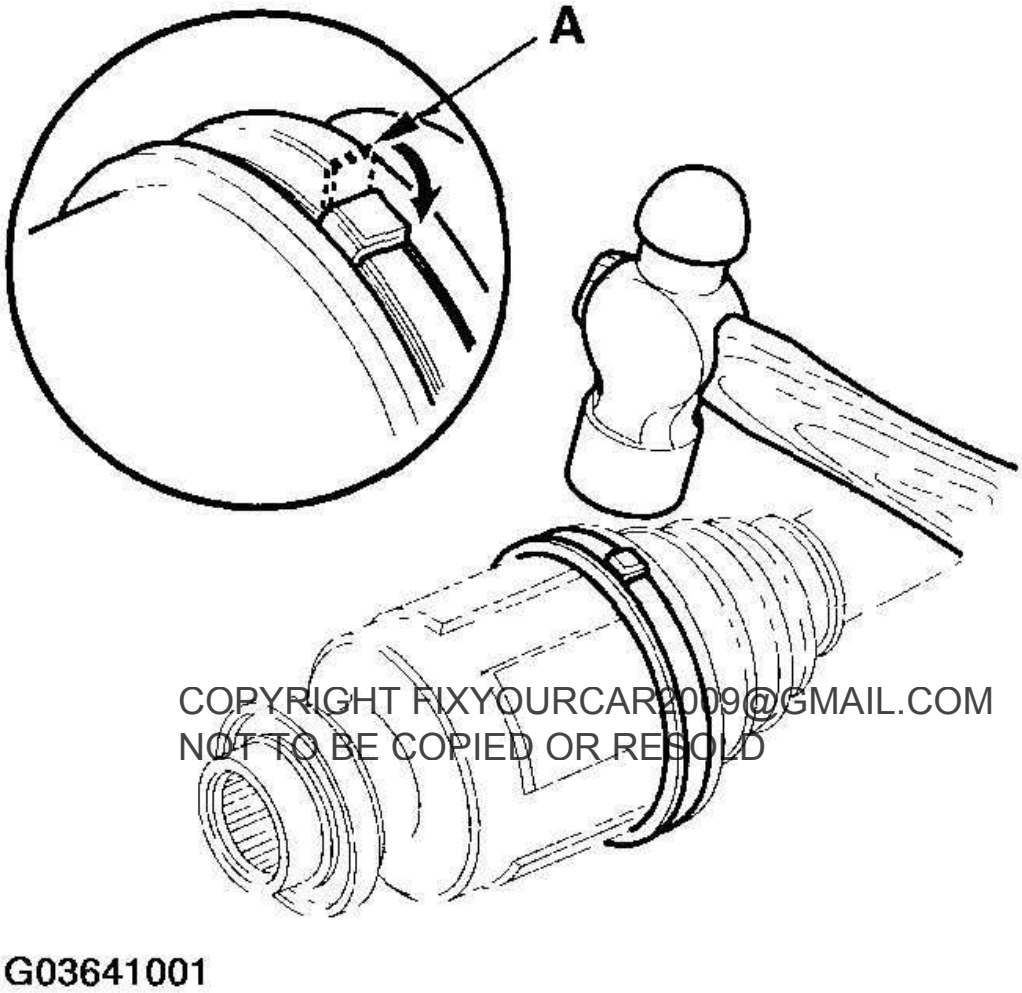

COPYRIGHT FIXYOURCAR2009@GMAIL.COM
NOT TO BE COPIED OR RESOLD

cardiagn.com

Fig. 97: Bending Band End By Tapping It Down Using Hammer
Courtesy of AMERICAN HONDA MOTOR CO., INC.

18. Install the boot band on the other end of the boot, and repeat steps 10 through 17 .
19. Install a new locking tab type boot band on the inboard joint side of the inboard boot. Fold down the locking tabs.

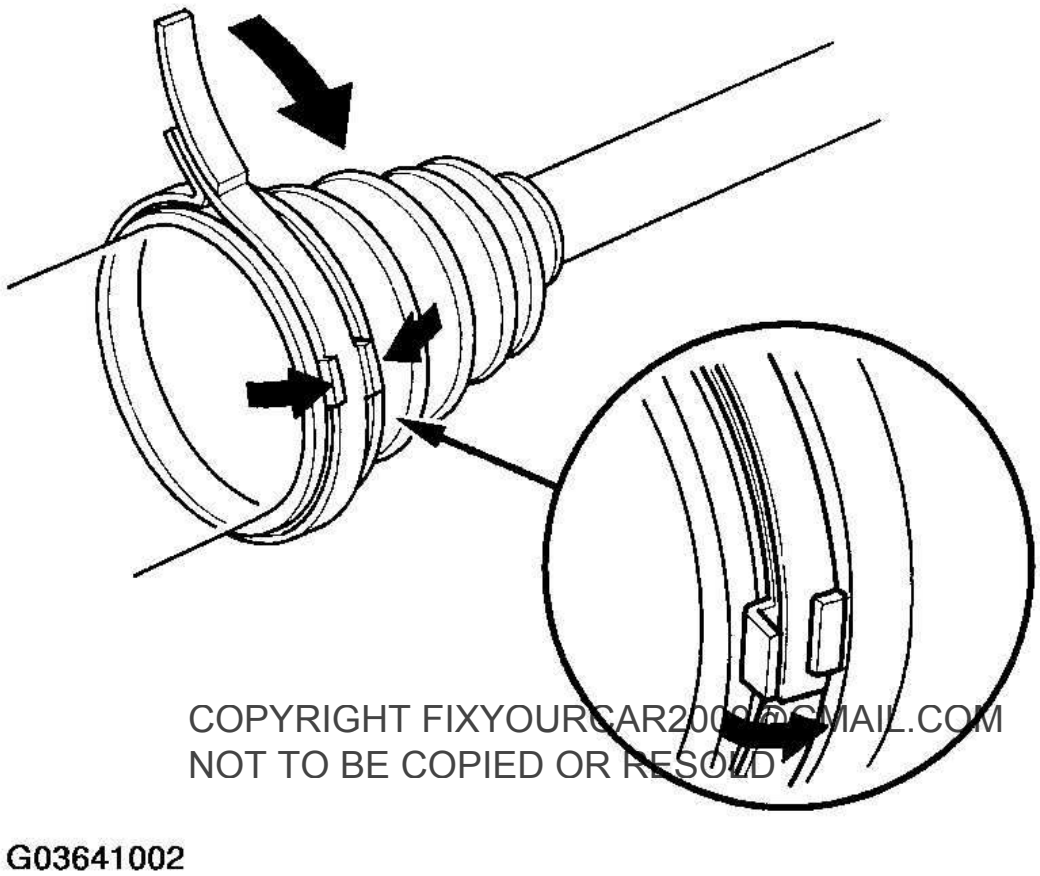

COPYRIGHT FIXYOURCAR2006@GMAIL.COM
NOT TO BE COPIED OR RESOLD

cardiagn.com

Fig. 98: Installing New Locking Tab Type Boot Band
Courtesy of AMERICAN HONDA MOTOR CO., INC.

20. Lightly tap on the doubled-over portions to reduce their height.

OUTBOARD JOINT SIDE

1. Wrap the splines with vinyl tape (A) to prevent damage to the outboard boot.

   Double loop type

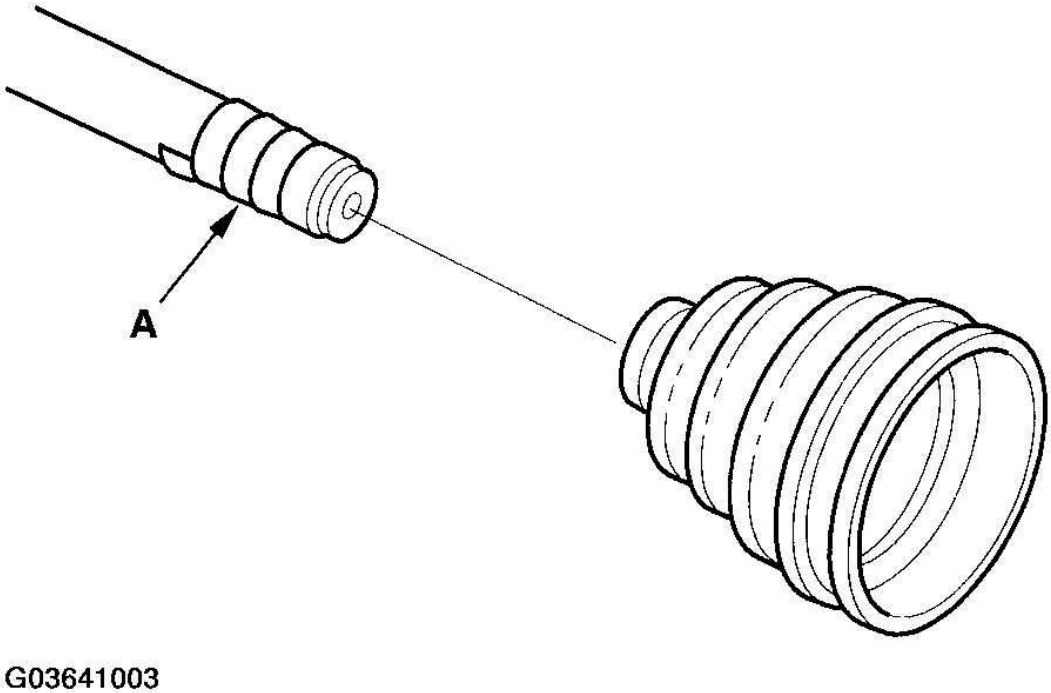

COPYRIGHT FIXYOURCAR2009@GMAIL.COM
NOT TO BE COPIED OR RESOLD

Fig. 99: Wrapping Splines With Vinyl Tape (Double Loop Type)
Courtesy of AMERICAN HONDA MOTOR CO., INC.

Locking tab type

cardiagn.com

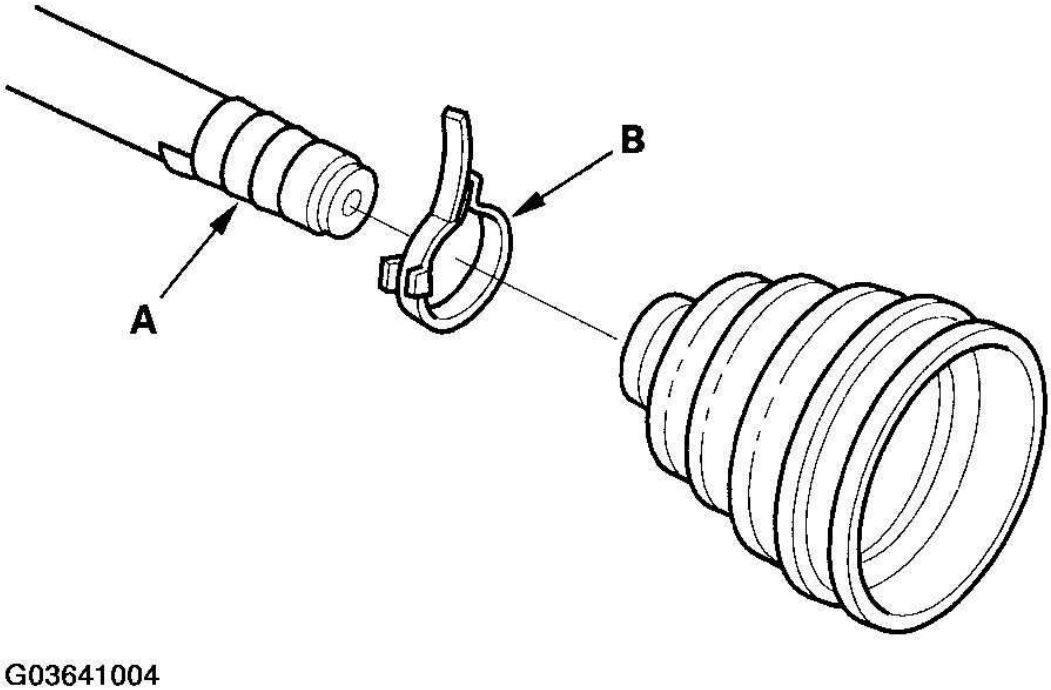

COPYRIGHT FIXYOURCAR2009@GMAIL.COM
NOT TO BE COPIED OR RESOLD

Fig. 100: Wrapping Splines With Vinyl Tape (Locking Tab Type)
Courtesy of AMERICAN HONDA MOTOR CO., INC.

2. Install the outboard boot and boot bands (B) on the driveshaft, then remove the vinyl tape. Be careful not to damage the outboard boot.
3. Install the new circlip in the driveshaft groove (A).

cardiagn.com

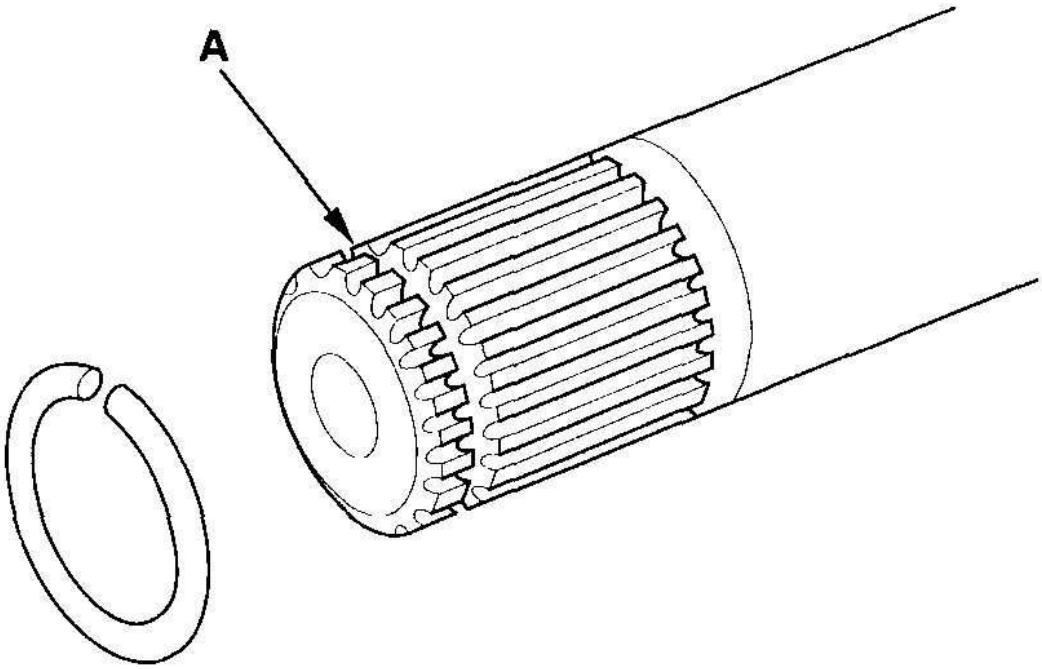

COPYRIGHT FIXYOURCAR2009@GMAIL.COM
NOT TO BE COPIED OR RESOLD

Fig. 101: Installing New Circlip In Driveshaft Groove
Courtesy of AMERICAN HONDA MOTOR CO., INC.

4. Insert the driveshaft (A) into the outboard joint (B) until the circlip (C) is closed.

cardiagn.com

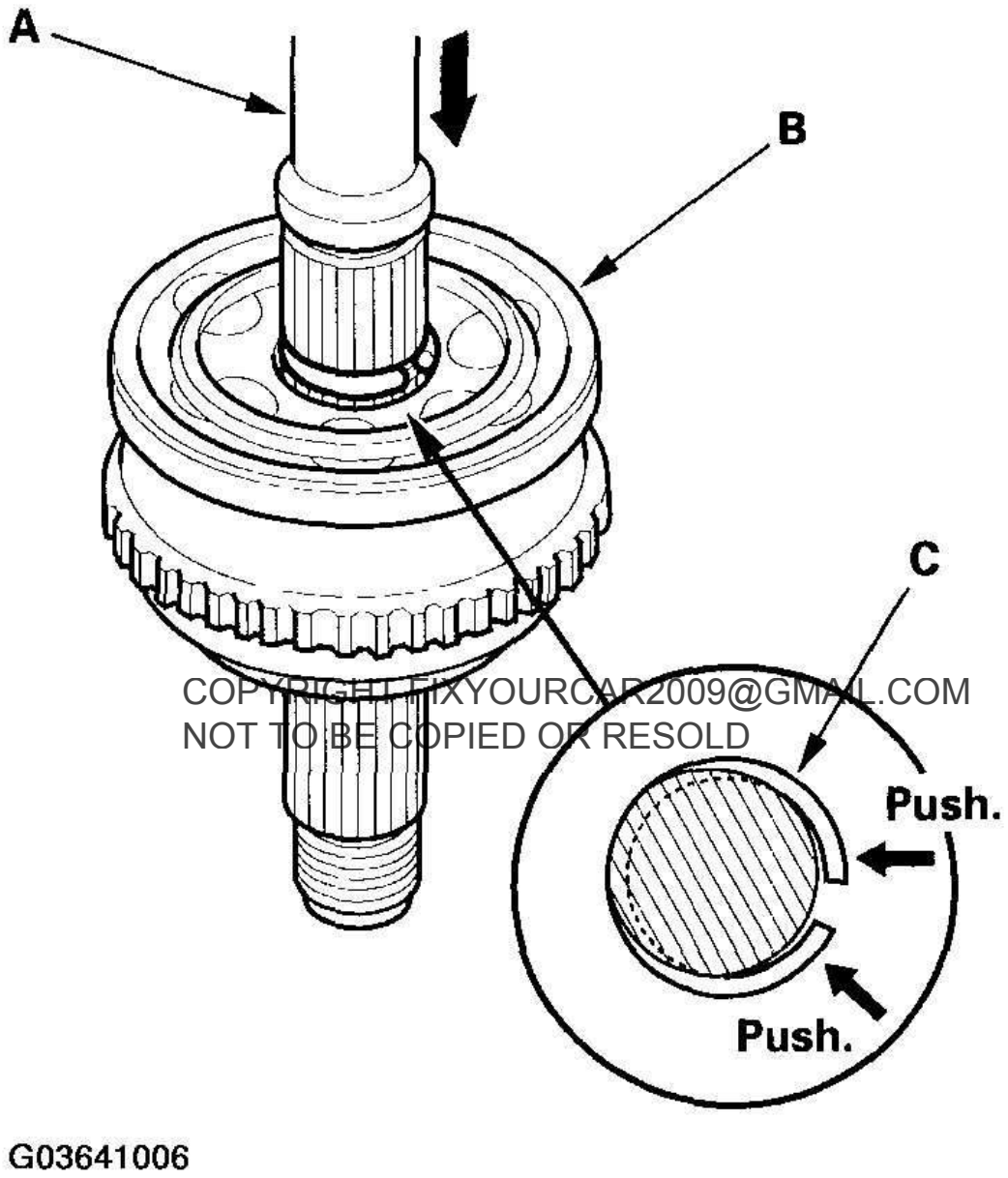

COPYRIGHT: FIXYOURCAR2009@GMAIL.COM
NOT TO BE COPIED OR RESOLD

cardiagn.com

Fig. 102: Inserting Driveshaft Into Outboard Joint
Courtesy of AMERICAN HONDA MOTOR CO., INC.

5. To completely seat the outboard joint, pick up the driveshaft and joint, and tap them firmly from about 10 cm (4 in.) onto a hard surface. Do not use a hammer as excessive force may damage the driveshaft. Be careful not to damage the threaded section (A) of the outboard joint.

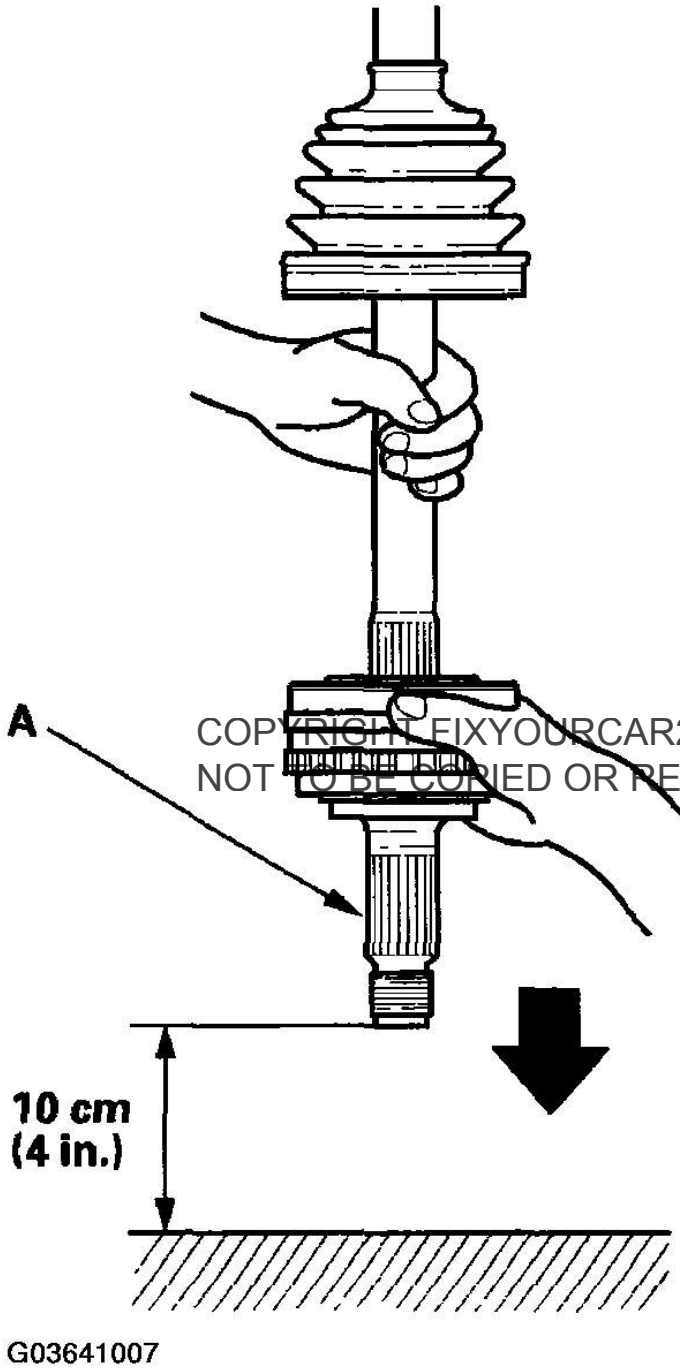

COPYRIGHT FIXYOURCAR2009@GMAIL.COM
NOT TO BE COPIED OR RESOLD

cardiagn.com

Fig. 103: Seating Outboard Joint
Courtesy of AMERICAN HONDA MOTOR CO., INC.

6. Check the alignment of the paint mark (A) with the outboard joint end (B).

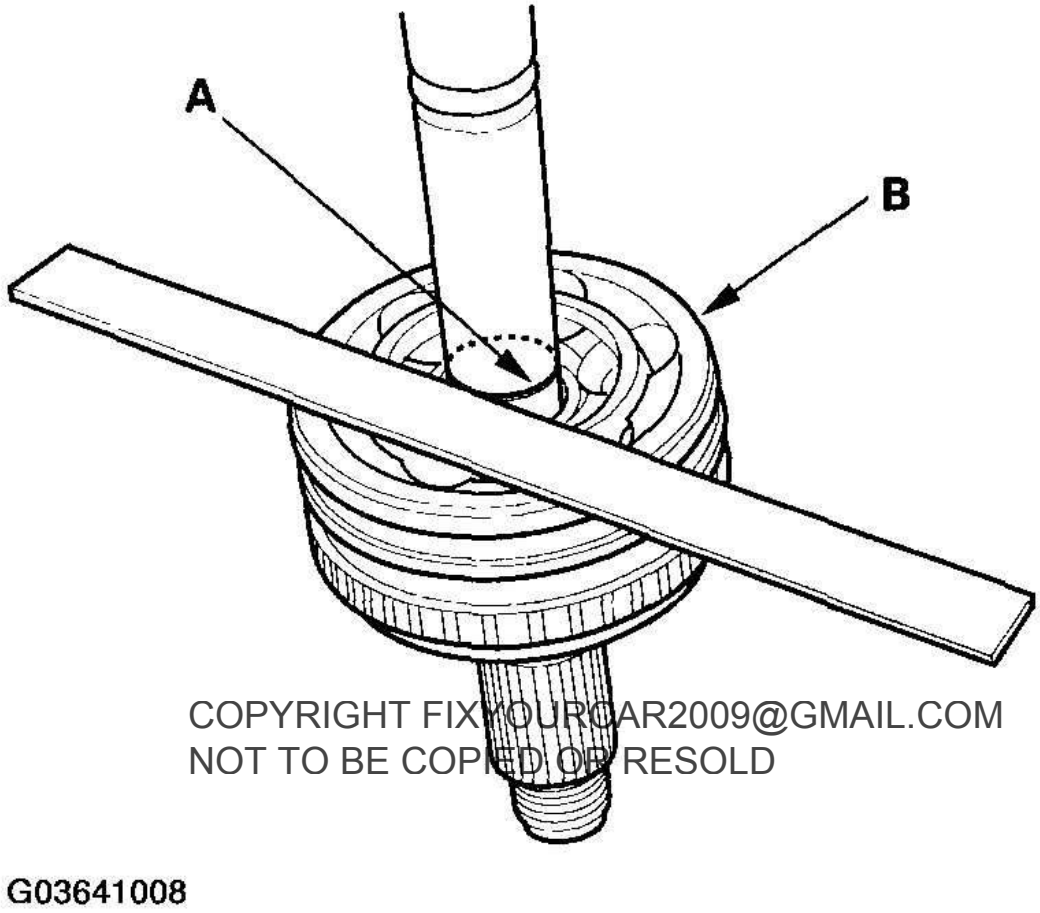

COPYRIGHT FIXYOURCAR2009@GMAIL.COM
NOT TO BE COPIED OR RESOLD

cardiagn.com

Fig. 104: Checking Alignment Of Paint Mark With Outboard Joint End
Courtesy of AMERICAN HONDA MOTOR CO., INC.

7. Pack the outboard joint (A) with the joint grease included in the new joint boot set.

Grease quantity

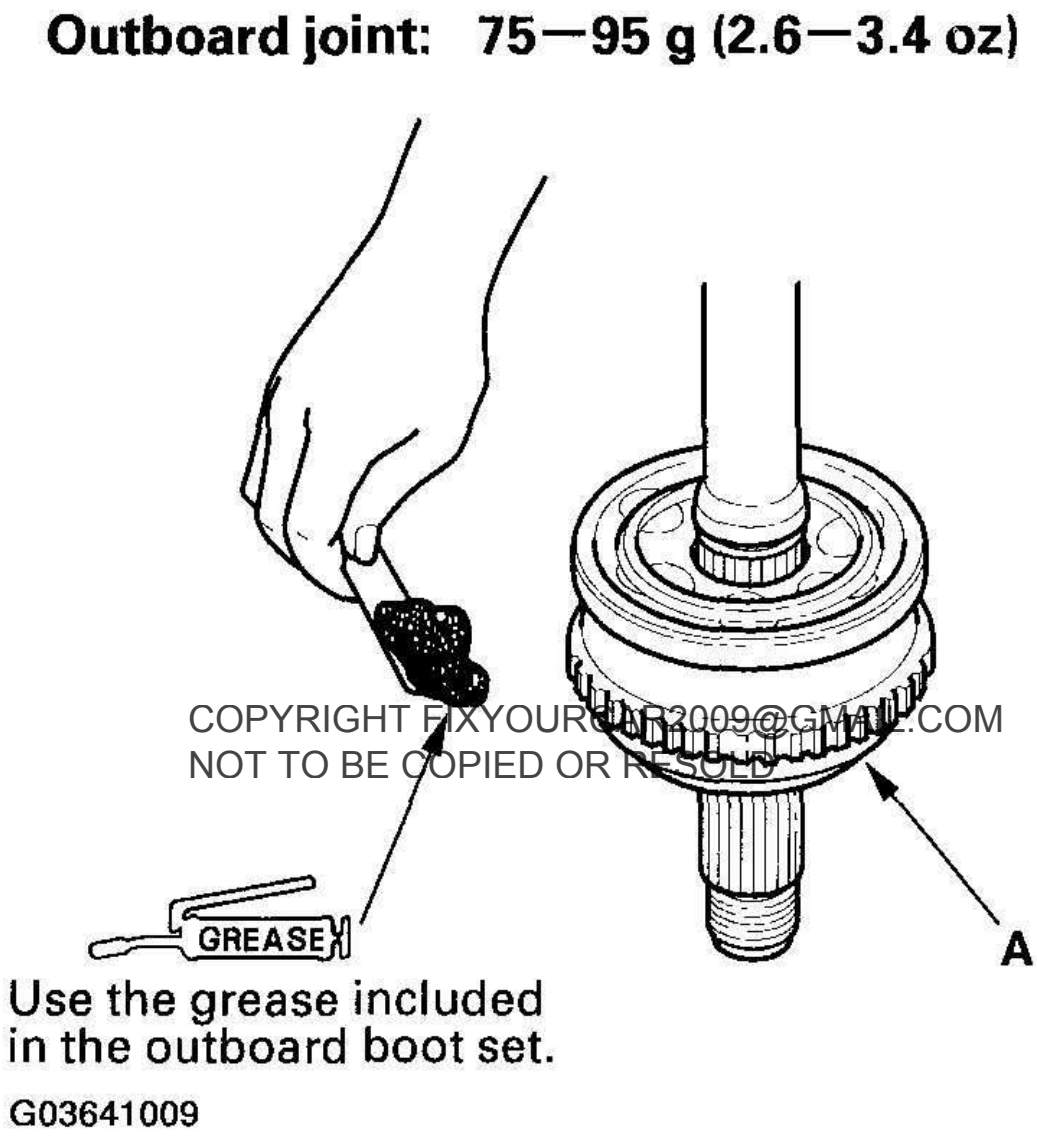

COPYRIGHT FIXYOURCAR3009@GMAIL.COM
NOT TO BE COPIED OR RESOLD

cardiagn.com

Fig. 105: Packing Outboard Joint With Joint Grease
Courtesy of AMERICAN HONDA MOTOR CO., INC.

8. Install a new locking tab type boot band on the outboard joint side of the outboard boot. Fold down the locking tabs.

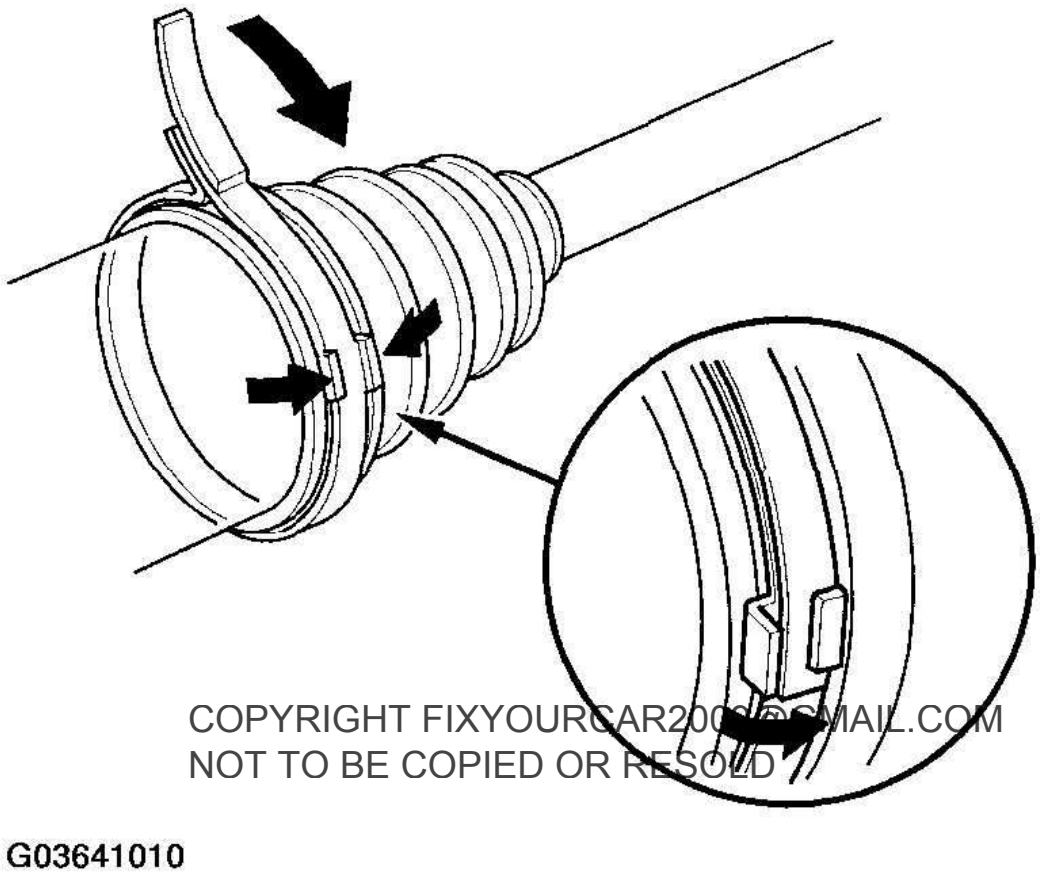

COPYRIGHT FIXYOURCAR2006@GMAIL.COM
NOT TO BE COPIED OR RESOLD

cardiagn.com

Fig. 106: Installing New Locking Tab Type Boot Band
Courtesy of AMERICAN HONDA MOTOR CO., INC.

9. Lightly tap on the doubled-over portions to reduce their height.
10. Install a double loop type boot band on the front driveshaft side of inboard boot (see step 9 .).

REAR DRIVESHAFT INSTALLATION

NOTE: Before starting installation, make sure the mating surfaces of the joint and the splined section are free from dirt or dust.

1. Apply 1.5-2.0 g (0.05-0.07 oz) of grease to the whole splined surface (A). After applying grease, remove the grease from the splined grooves at intervals of 2-3 splines and from the set ring groove (B) so that air can bleed from the differential.

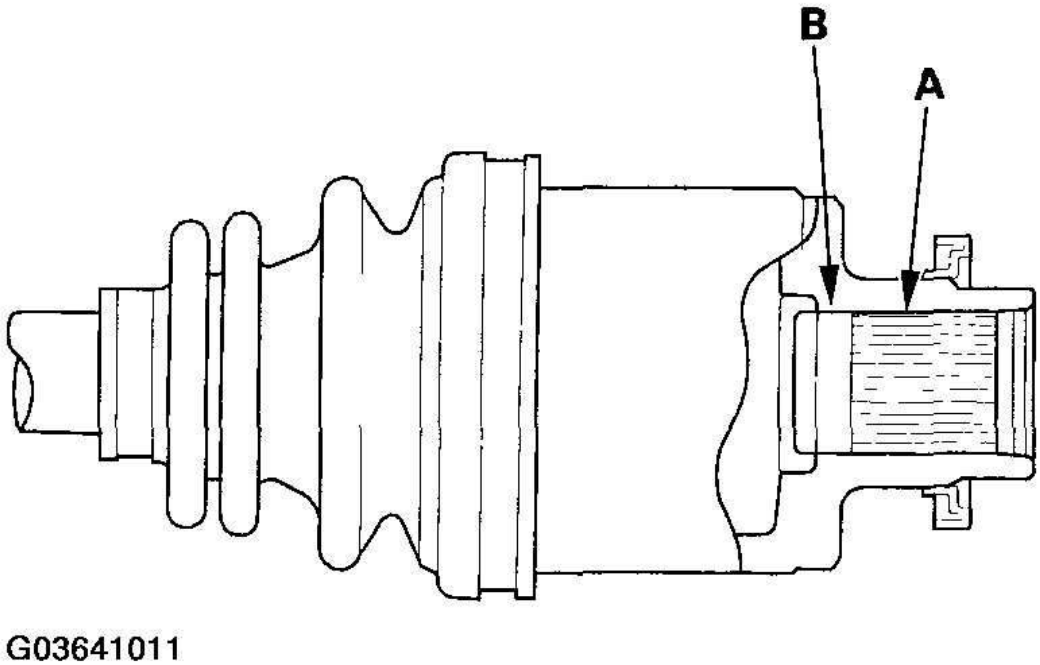

COPYRIGHT FIXYOURCAR2009@GMAIL.COM
NOT TO BE COPIED OR RESOLD

Fig. 107: Identifying Splined Surface And Set Ring Groove
Courtesy of AMERICAN HONDA MOTOR CO., INC.

2. Seat a new set ring in the set ring groove of the differential.
3. Clean the areas where the driveshaft contacts the differential thoroughly with solvent or brake cleaner, and dry with compressed air. Insert the inboard end (A) of the driveshaft into the differential (B) until the set ring (C) locks in the groove (D).

cardiagn.com

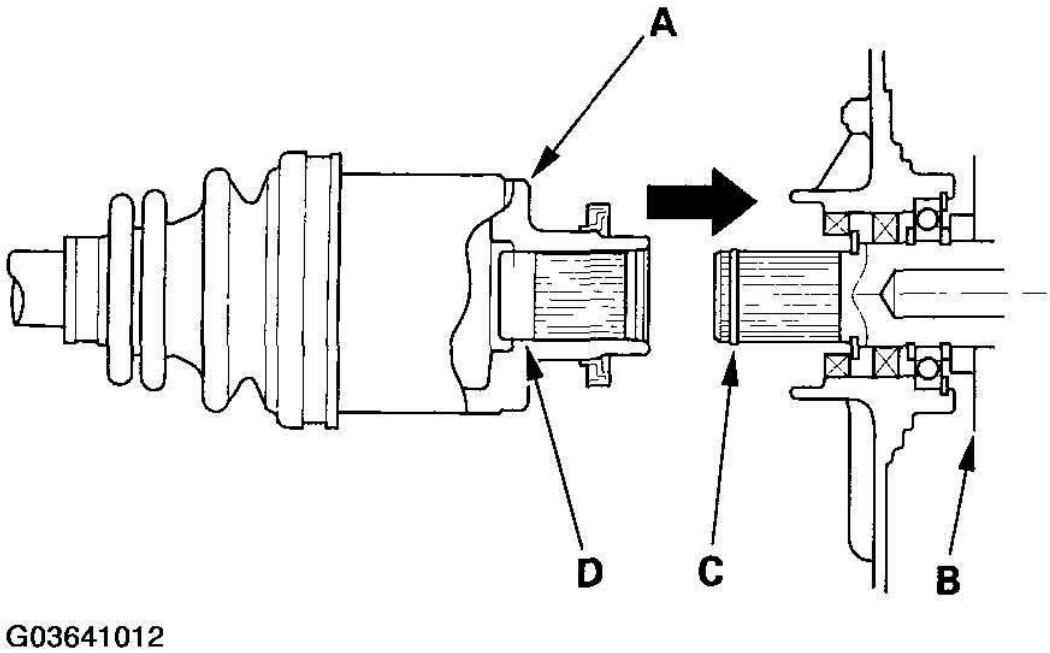

COPYRIGHT FIXYOURCAR2009@GMAIL.COM
NOT TO BE COPIED OR RESOLD

Fig. 108: Inserting Inboard End Of Driveshaft Into Differential
Courtesy of AMERICAN HONDA MOTOR CO., INC.

4. Install the driveshaft.

cardiagn.com

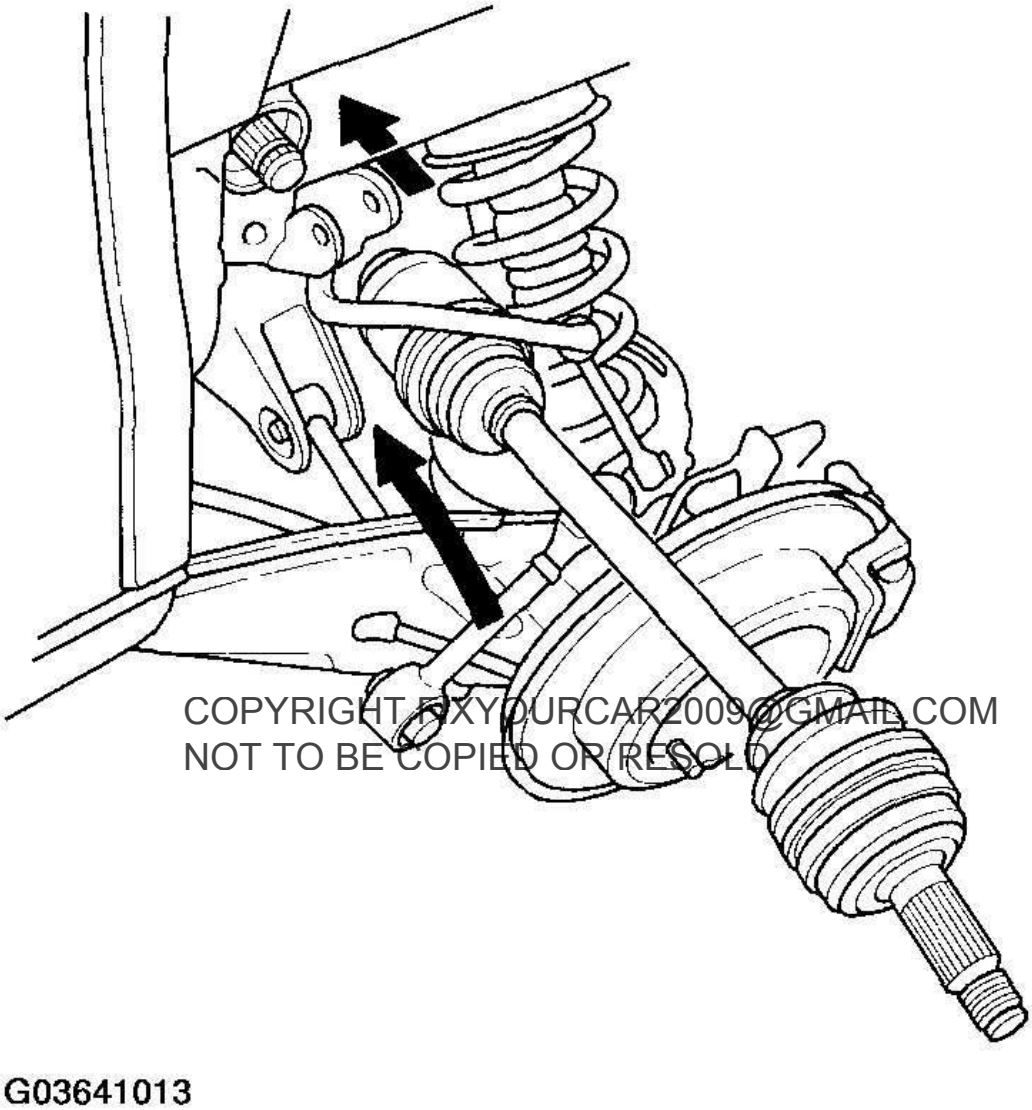

COPYRIGHT FIXYOURCAR2009@GMAIL.COM
NOT TO BE COPIED OR RESOLD

cardiagn.com

Fig. 109: Installing Driveshaft
Courtesy of AMERICAN HONDA MOTOR CO., INC.

5. Install the outboard joint (A) into the rear hub (B).

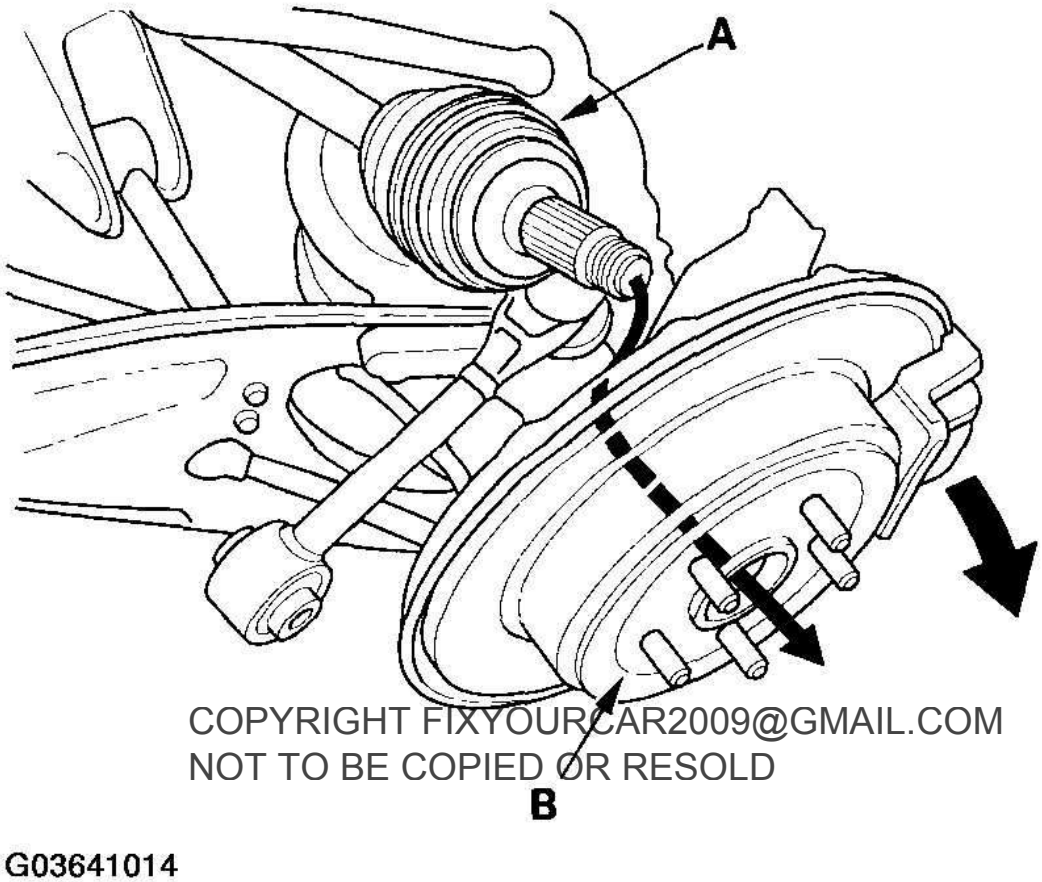

COPYRIGHT FIXYOURCAR2009@GMAIL.COM
NOT TO BE COPIED OR RESOLD

Fig. 110: Installing Outboard Joint Into Rear Hub
Courtesy of AMERICAN HONDA MOTOR CO., INC.

6. Install the VSA rear wheel sensor bracket (see **WHEEL SENSOR INSPECTION**).
7. Install the lower arm B flange bolt (see **LOWER ARM B REMOVAL AND INSTALLATION**).
8. Install the rear damper (see **DAMPER REMOVAL AND INSTALLATION**).
9. Install the upper arm bolt (see **UPPER ARM REMOVAL/INSTALLATION**).
10. Install a new spindle nut (A), then tighten the nut. After tightening, use a drift to stake the spindle nut shoulder (B) against the driveshaft.

cardiagn.com

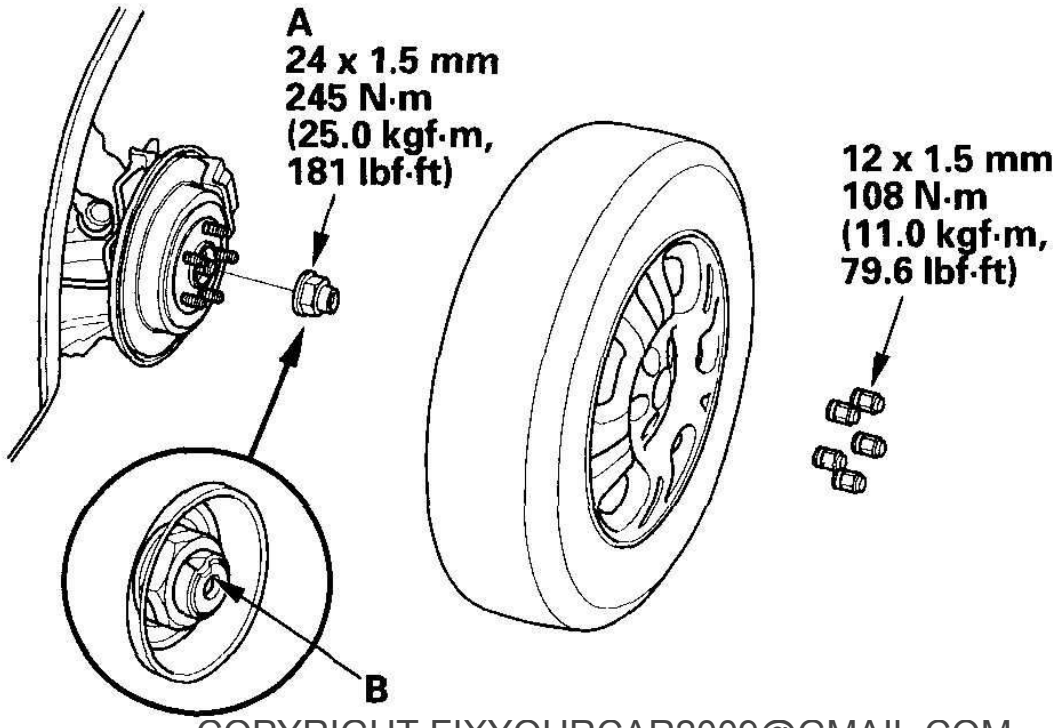

COPYRIGHT FIXYOURCAR2009@GMAIL.COM
NOT TO BE COPIED OR RESOLD

Fig. 111: Installing New Spindle Nut
Courtesy of AMERICAN HONDA MOTOR CO., INC.

11. Clean the mating surfaces of the brake disc and the rear wheel, then install the rear wheel with the wheel nuts.
12. Turn the rear wheel by hand, and make sure there is no interference between the driveshaft and surrounding parts.
13. Refill the differential with recommended fluid (see **DIFFERENTIAL FLUID INSPECTION AND REPLACEMENT**).
14. Check the rear wheel alignment, and adjust it if necessary (see **WHEEL ALIGNMENT**).

PROPELLER SHAFT INSPECTION

Universal Joint and Boots

1. Shift the transmission to the N position.
2. Raise the vehicle off the ground, and support it with safety stands in the proper locations (see **LIFT AND SUPPORT POINTS**).
3. Check the center support bearing (A) for excessive play or rattle. If the center support has excessive play

cardiagn.com

or rattle, replace the propeller shaft assembly.

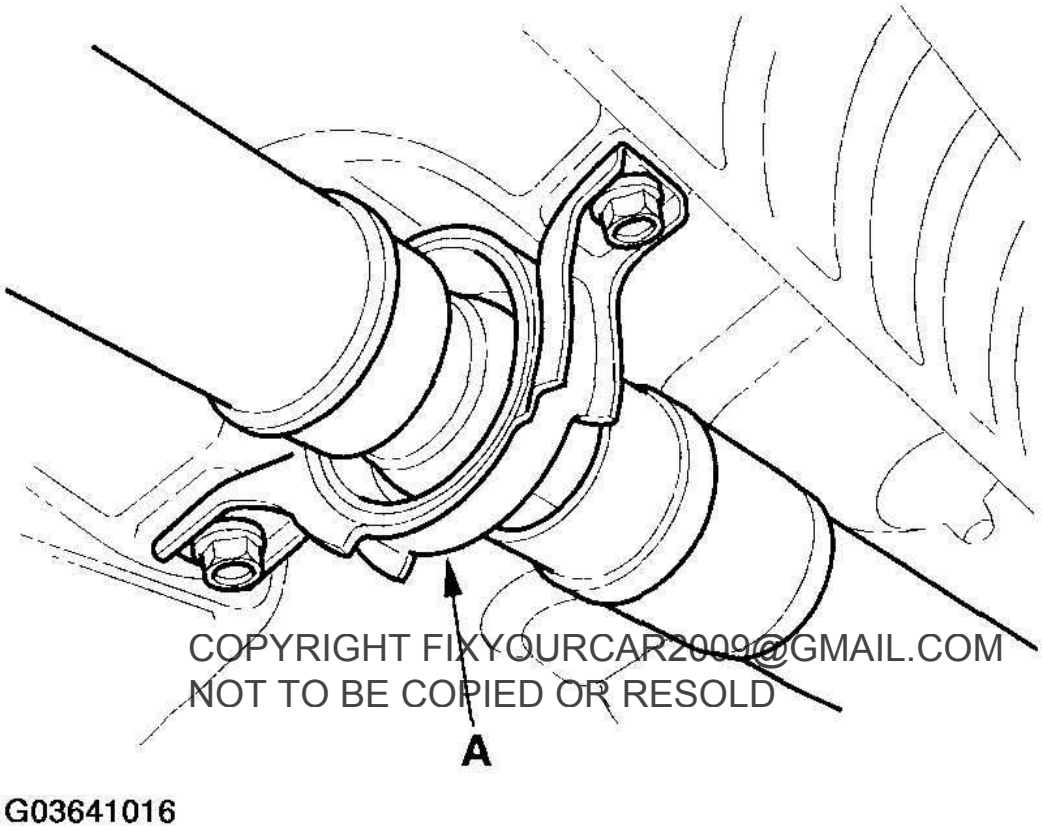

COPYRIGHT FIXYOURCAR2009@GMAIL.COM
NOT TO BE COPIED OR RESOLD

cardiagn.com

Fig. 112: Identifying Center Support Bearing
Courtesy of AMERICAN HONDA MOTOR CO., INC.

4. Check the universal joint boots for damage and deterioration. If the boots are damaged or deteriorated, replace the propeller shaft assembly.
5. Check the universal joints for excessive play or rattle. If the universal joints have excessive play or rattle, replace the propeller shaft assembly.

Propeller Shaft Runout

6. Install a dial indicator with its needle on the center of No. 1 propeller shaft or No. 2 propeller shaft.
7. Turn the other propeller shaft slowly and check the runout. Repeat this procedure for the other propeller shaft.

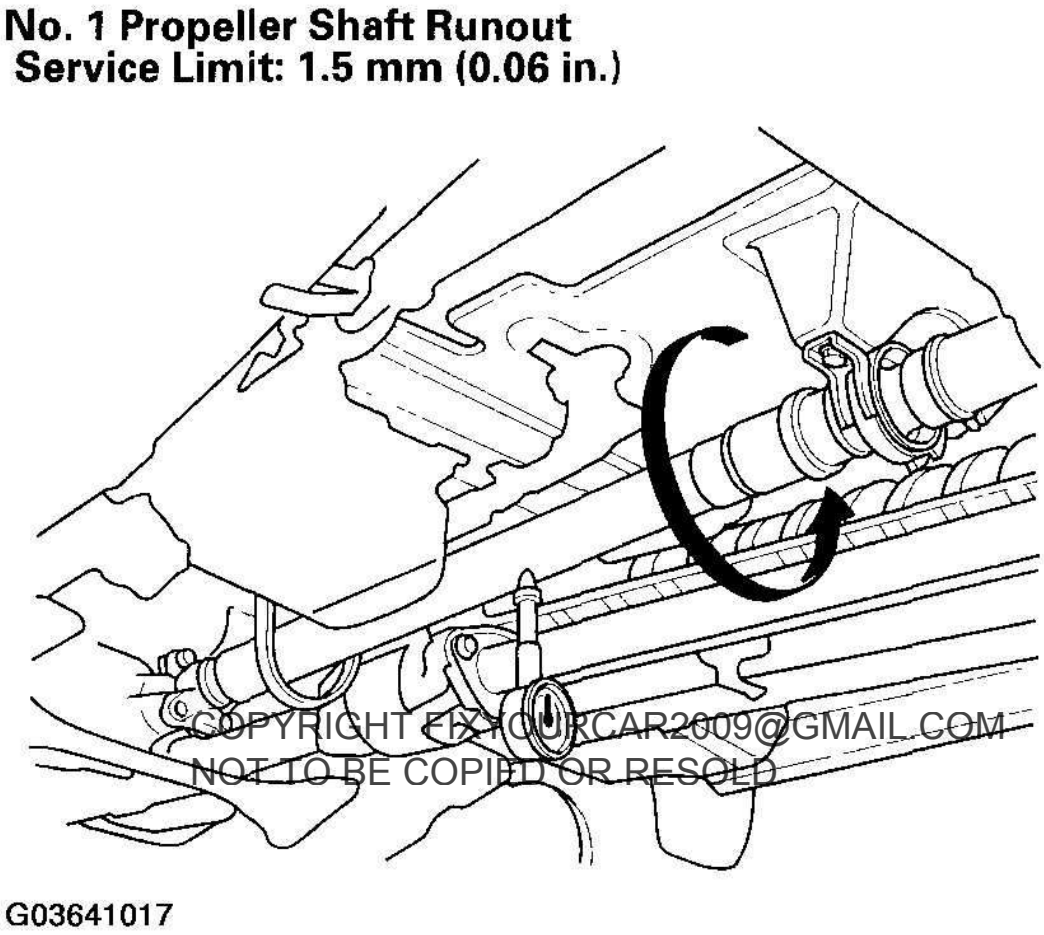

COPYRIGHT FIXYOURCAR2009@GMAIL.COM
NOT TO BE COPIED OR RESOLD

cardiagn.com

Fig. 113: Measuring Propeller Shaft Run Out (1 Of 2)
Courtesy of AMERICAN HONDA MOTOR CO., INC.

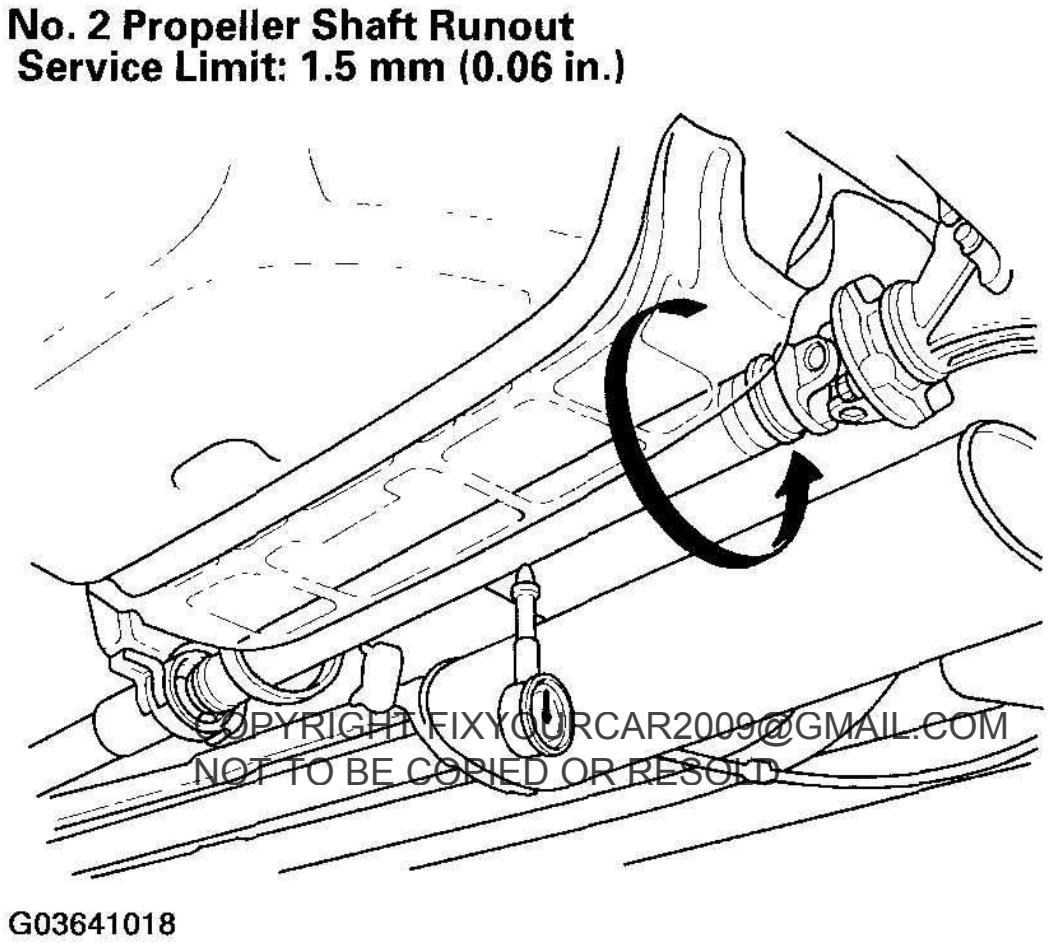

COPYRIGHT FIXYOURCAR2009@GMAIL.COM
NOT TO BE COPIED OR RESOLD

cardiagn.com

Fig. 114: Measuring Propeller Shaft Run Out (2 Of 2)
Courtesy of AMERICAN HONDA MOTOR CO., INC.

8. If the runout on either propeller shaft exceeds the service limit, replace the propeller shaft assembly.

PROPELLER SHAFT REMOVAL

1. Raise the vehicle off the ground, and support it with safety stands in the proper locations (see **LIFT AND SUPPORT POINTS**).
2. Remove the No. 1 propeller shaft protector.

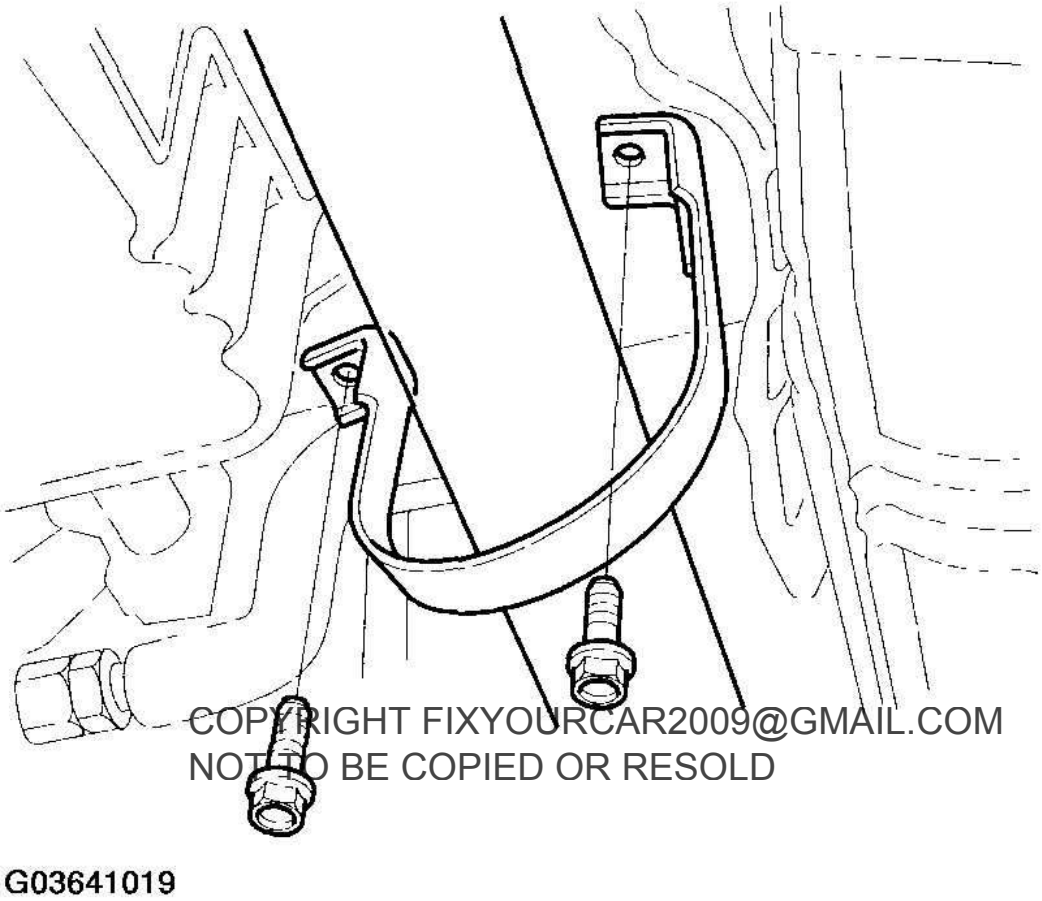

COPYRIGHT FIXYOURCAR2009@GMAIL.COM
NOT TO BE COPIED OR RESOLD

cardiagn.com

Fig. 115: Removing No. 1 Propeller Shaft Protector
Courtesy of AMERICAN HONDA MOTOR CO., INC.

3. Remove the No. 2 propeller shaft protector.

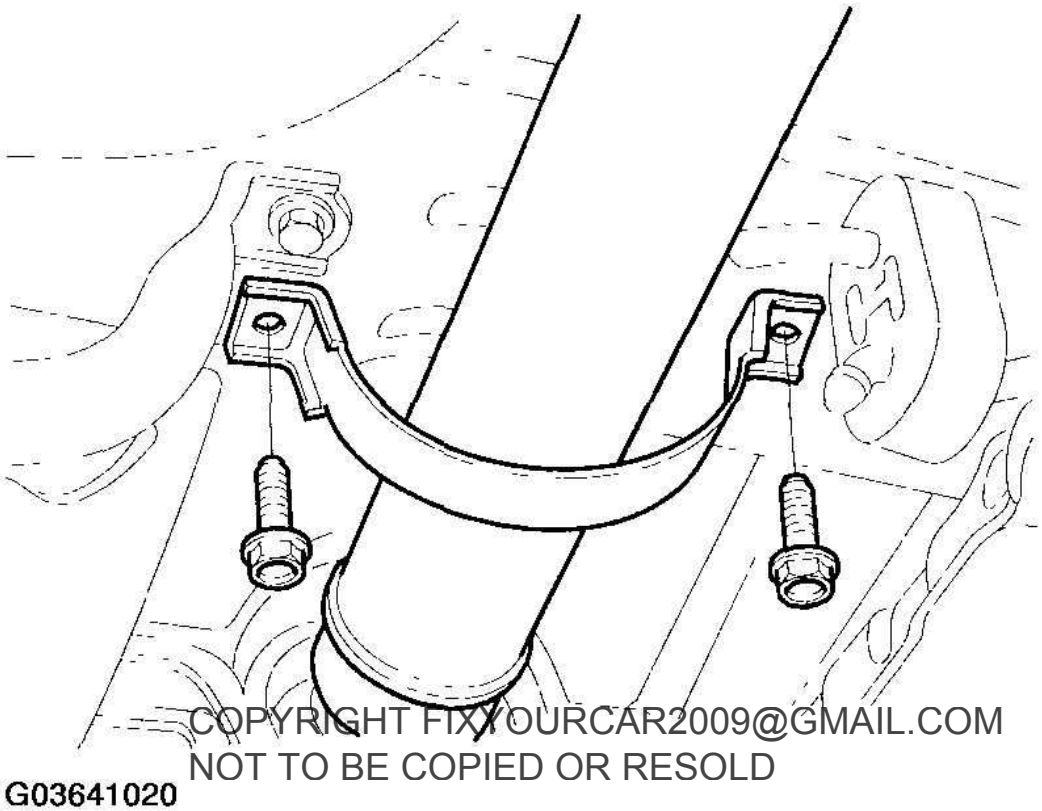

COPYRIGHT FIXYOURCAR2009@GMAIL.COM
NOT TO BE COPIED OR RESOLD

cardiagn.com

Fig. 116: Removing No. 2 Propeller Shaft Protector
Courtesy of AMERICAN HONDA MOTOR CO., INC.

4. Make a reference mark (A) across the propeller shaft (B) and transfer companion flange (C).

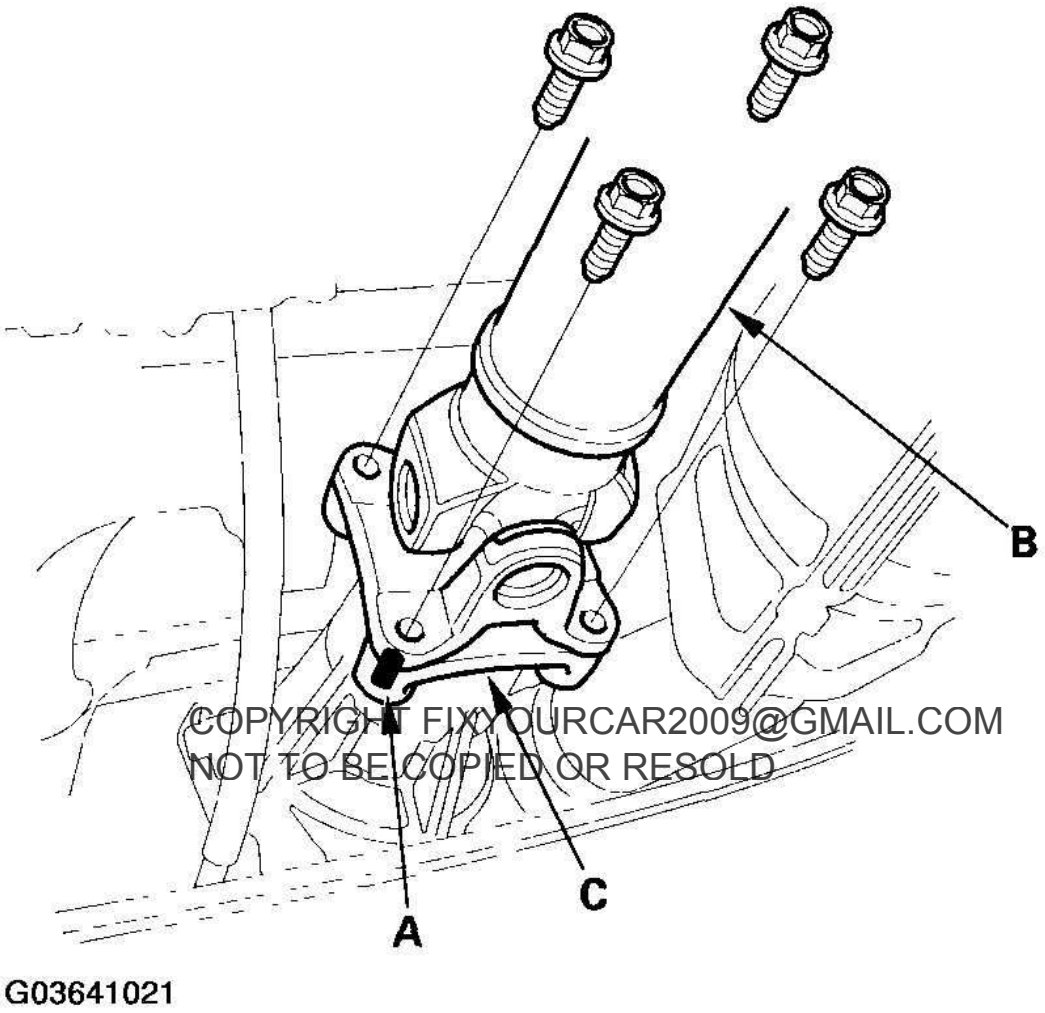

COPYRIGHT FIXYOURCAR2009@GMAIL.COM
NOT TO BE COPIED OR RESOLD

cardiagn.com

Fig. 117: Identifying Reference Mark Across Propeller Shaft And Transfer Companion Flange
Courtesy of AMERICAN HONDA MOTOR CO., INC.

5. Separate the propeller shaft from the transfer assembly.
6. Remove the center support bearing mounting bolts.

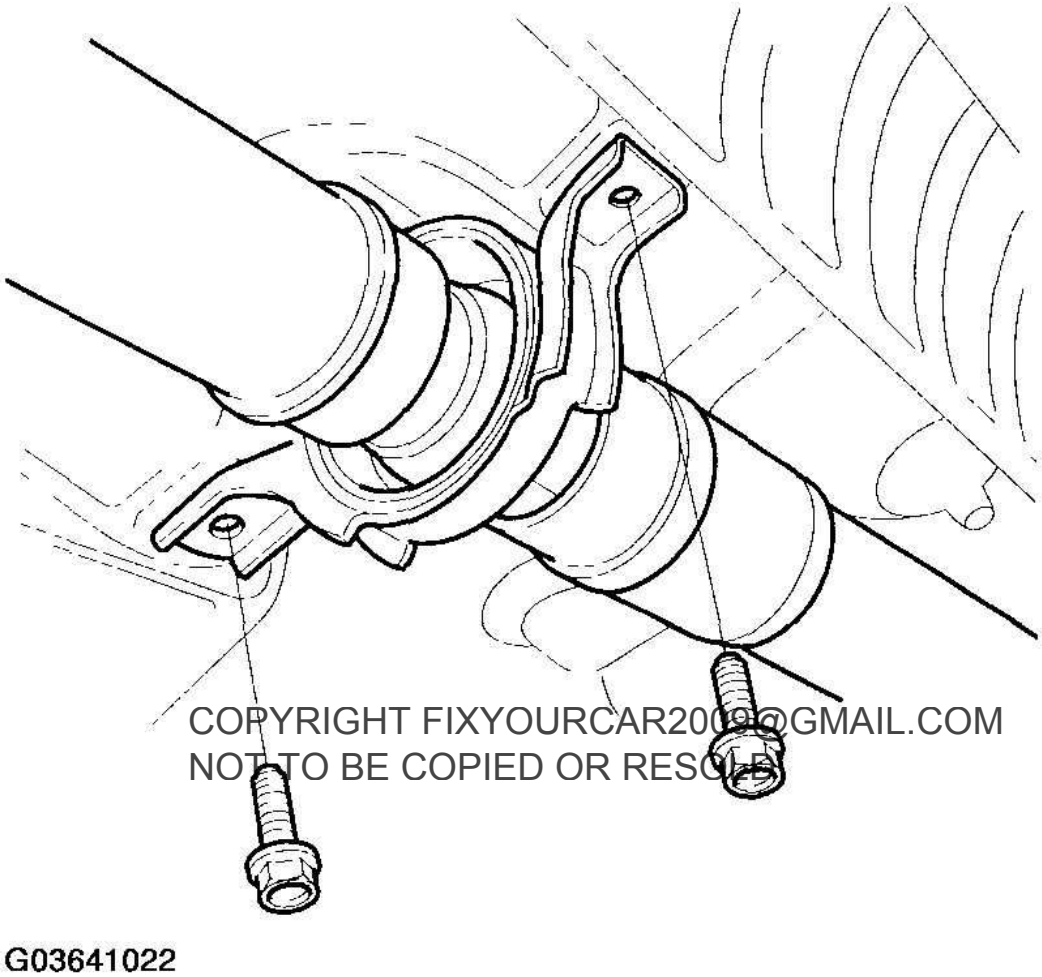

COPYRIGHT FIXYOURCAR2009@GMAIL.COM
NOT TO BE COPIED OR RESOLD

cardiagn.com

Fig. 118: Removing Center Support Bearing Mounting Bolts
Courtesy of AMERICAN HONDA MOTOR CO., INC.

7. Make a reference mark (A) across the propeller shaft (B) and rear differential companion flange (C).

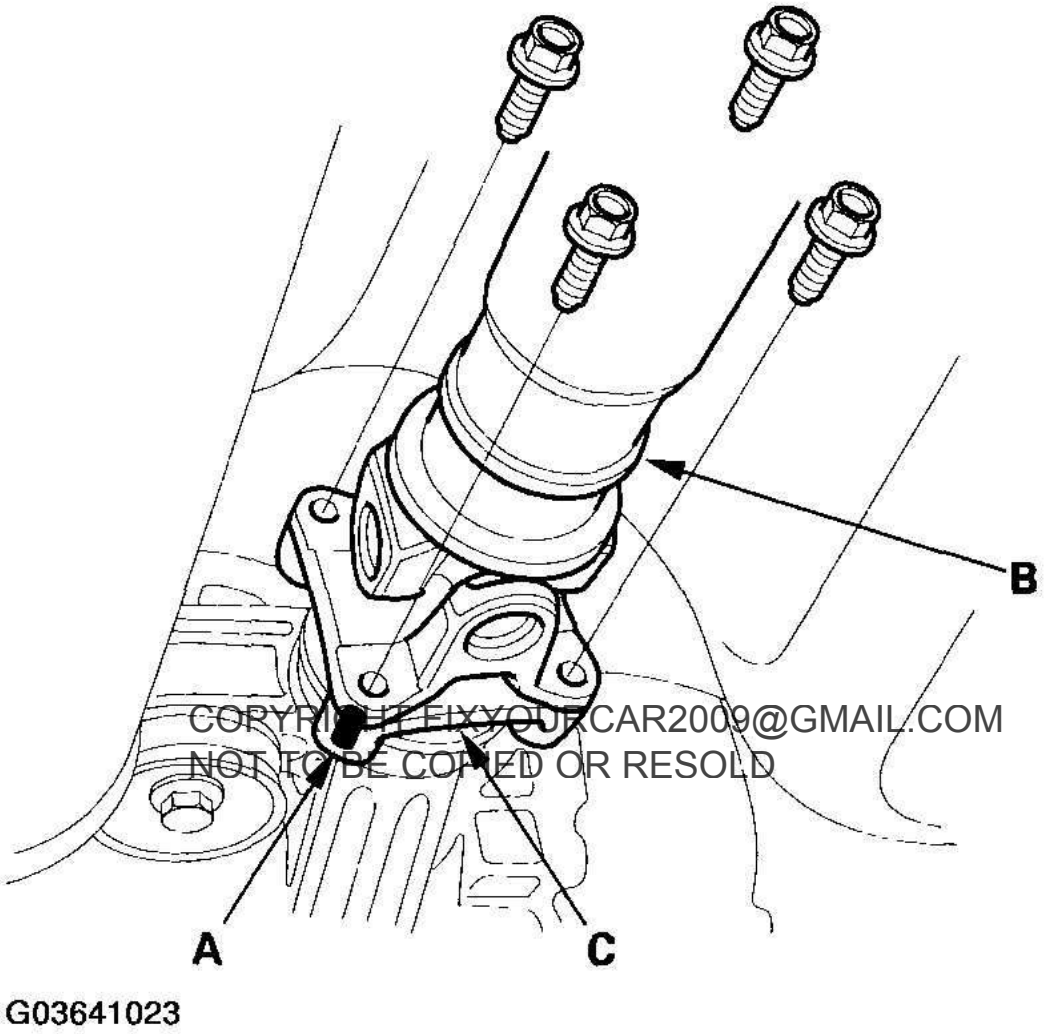

COPYRIGHT FIXYOURCAR2009@GMAIL.COM
NOT TO BE COPIED OR RESOLD

cardiagn.com

Fig. 119: Identifying Reference Mark Across Propeller Shaft And Rear Differential Companion Flange
Courtesy of AMERICAN HONDA MOTOR CO., INC.

8. Separate the propeller shaft from the rear differential, then remove the propeller shaft.

PROPELLER SHAFT INSTALLATION

1. Install the new propeller shaft (A) onto the rear differential (B), by aligning the reference marks (C).

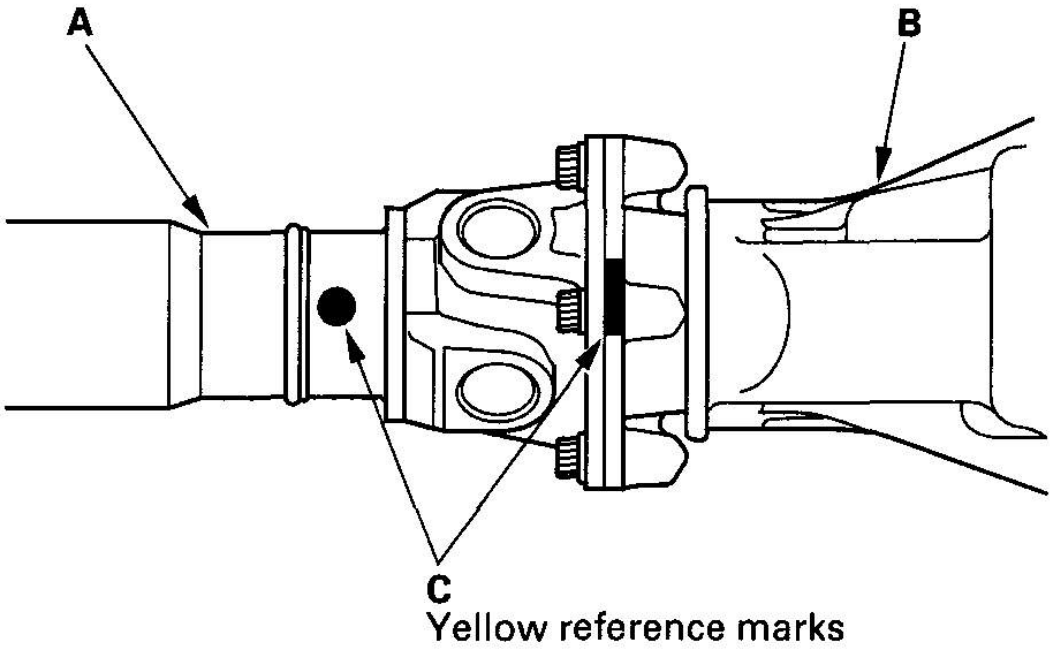

G03641024

COPYRIGHT FIXYOURCAR2009@GMAIL.COM
NOT TO BE COPIED OR RESOLD

Fig. 120: Installing New Propeller Shaft Onto Rear Differential
Courtesy of AMERICAN HONDA MOTOR CO., INC.

2. Attach the propeller shaft (A) to the rear differential (B) with new mounting bolts.

cardiagn.com

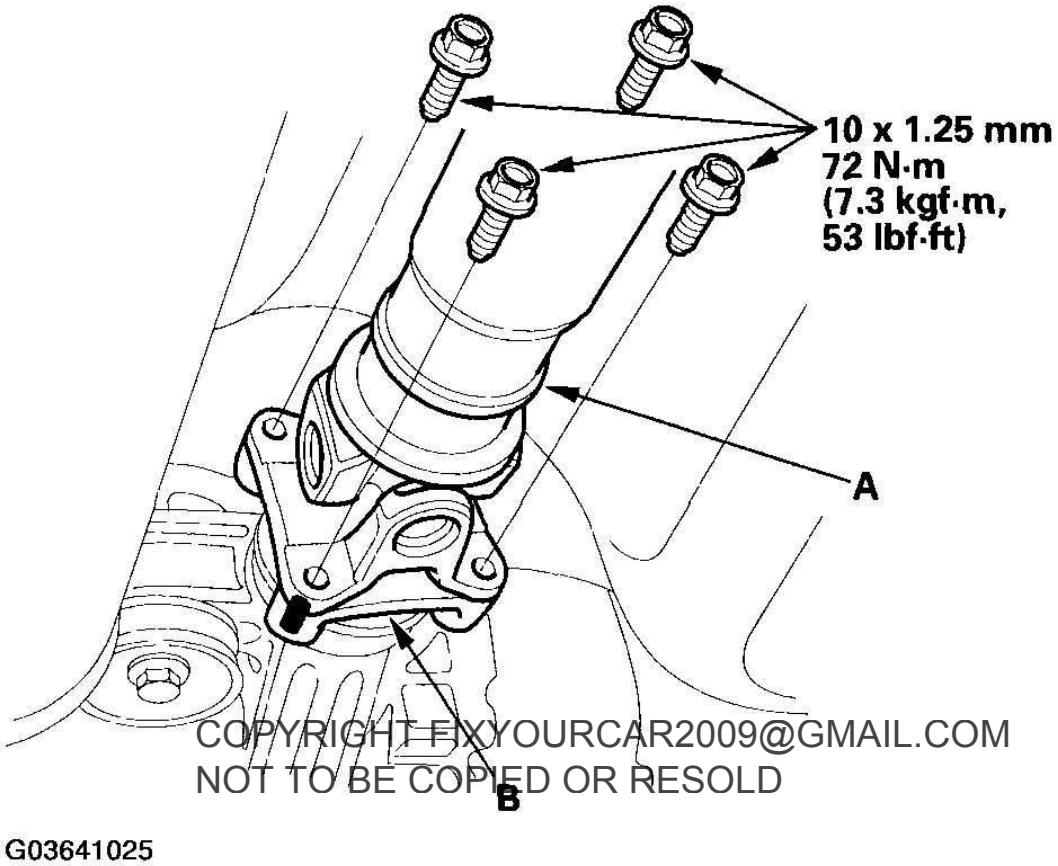

COPYRIGHT FIXYOURCAR2009@GMAIL.COM
NOT TO BE COPIED OR RESOLD

cardiagn.com

Fig. 121: Attaching Propeller Shaft To Rear Differential Using New Mounting Bolts
Courtesy of AMERICAN HONDA MOTOR CO., INC.

3. Install the center support bearing mounting bolts. Make sure you use new bolts.

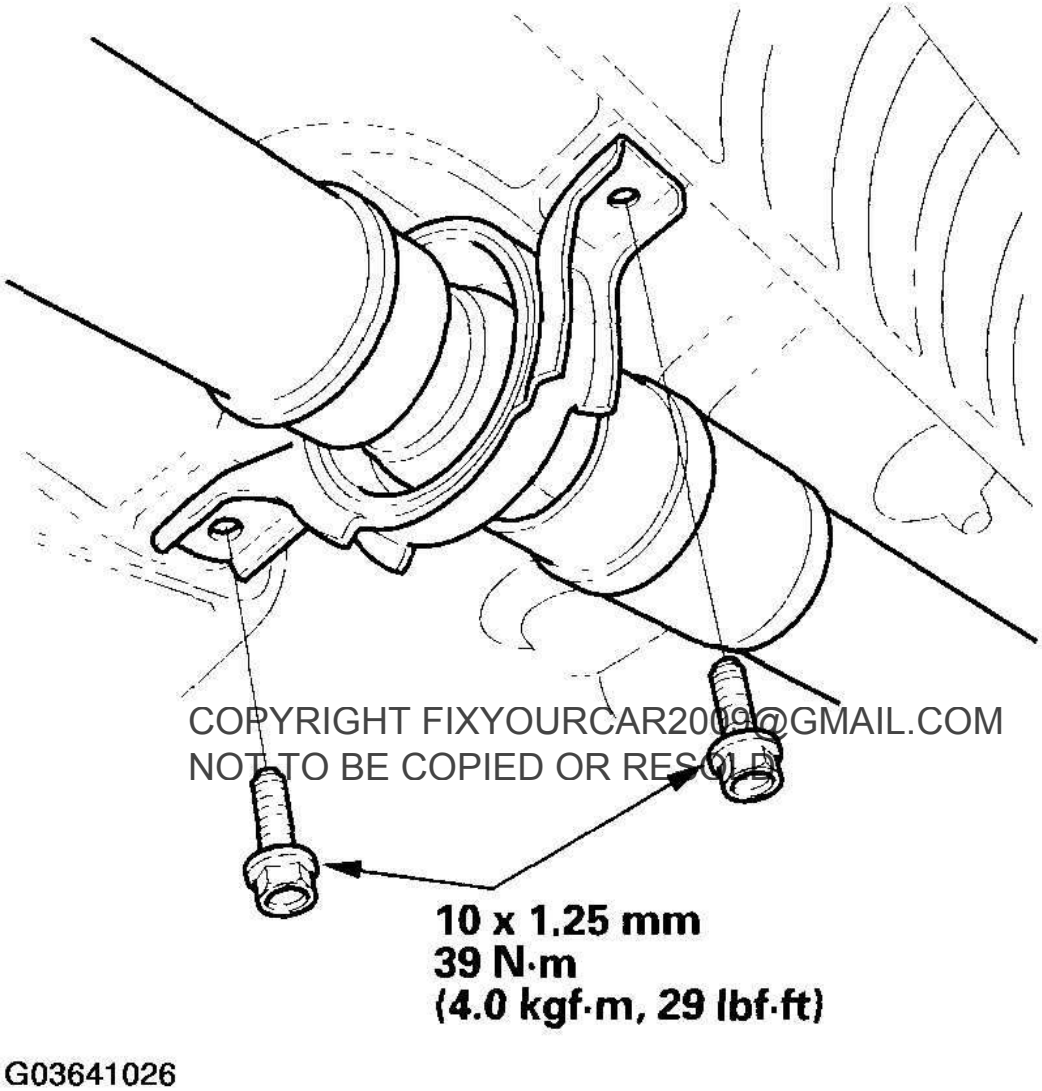

COPYRIGHT FIXYOURCAR2009@GMAIL.COM
NOT TO BE COPIED OR RESOLD

cardiagn.com

Fig. 122: Installing Center Support Bearing Mounting Bolts
Courtesy of AMERICAN HONDA MOTOR CO., INC.

4. Install the propeller shaft (A) onto the transfer companion flange (B) by aligning the reference mark (C). Make sure you use new mounting bolts.

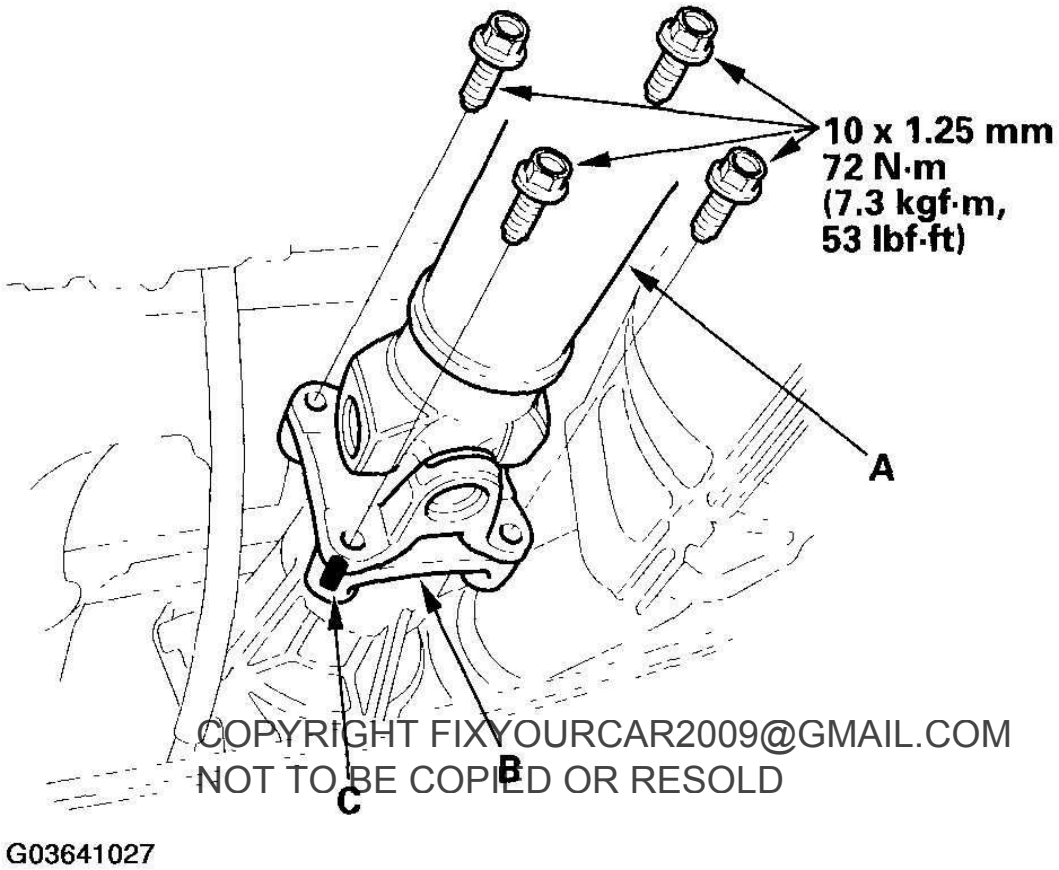

COPYRIGHT FIXYOURCAR2009@GMAIL.COM
NOT TO BE COPIED OR RESOLD

cardiagn.com

Fig. 123: Installing Propeller Shaft Onto Transfer Companion Flange
Courtesy of AMERICAN HONDA MOTOR CO., INC.

5. Install the No. 2 propeller shaft protector.

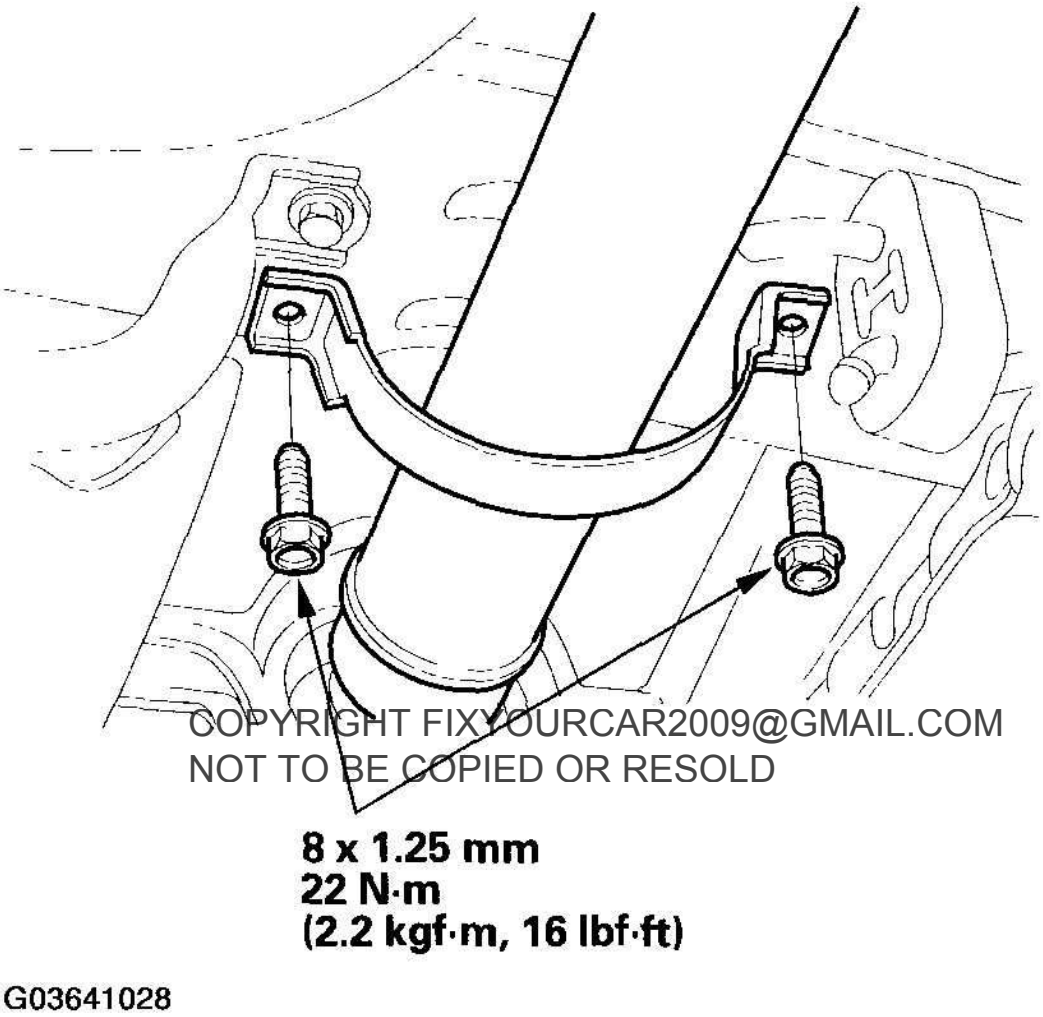

COPYRIGHT FIXYOURCAR2009@GMAIL.COM
NOT TO BE COPIED OR RESOLD

cardiagn.com

Fig. 124: Installing No. 2 Propeller Shaft Protector
Courtesy of AMERICAN HONDA MOTOR CO., INC.

6. Install the No. 1 propeller shaft protector.

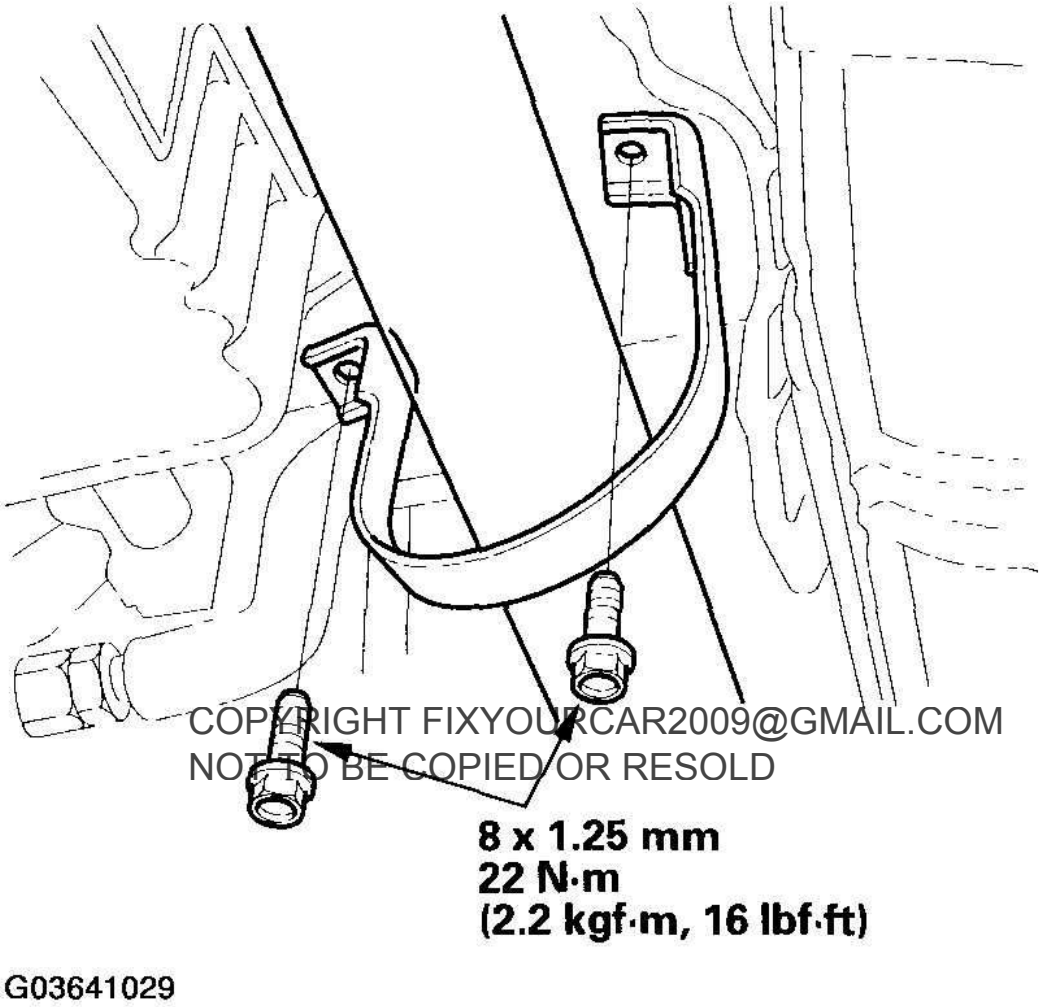

COPYRIGHT FIXYOURCAR2009@GMAIL.COM
NOT TO BE COPIED OR RESOLD

cardiagn.com

Fig. 125: Installing No. 1 Propeller Shaft Protector
Courtesy of AMERICAN HONDA MOTOR CO., INC.

SUPPLEMENTAL RESTRAINT SYSTEM (SRS) (IF STEERING MAINTENANCE IS REQUIRED)

The Acura MDX SRS includes a driver's airbag in the steering wheel hub, a passenger's airbag in the dashboard above the glove box, seat belt tensioners in the front seat belt retractors, side curtain airbags in the sides of the roof, and side airbags in the front seat-backs. Information necessary to safely service the SRS is included in this Service Manual. Items marked with an asterisk (*) on the contents page include or are located near SRS components. Servicing, disassembling, or replacing these items requires special precautions and tools, and should be done only by an authorized Acura dealer.

- To avoid rendering the SRS inoperative, which could lead to personal injury or death in the event of a severe frontal or side collision, all SRS service work must be performed by an authorized Acura dealer.

- Improper service procedures, including incorrect removal and installation of the SRS, could lead to personal injury caused by unintentional deployment of the airbags and/or side airbags.
- Do not bump or impact the SRS unit, front impact sensors, side impact sensors, or roll rate sensor when the ignition switch is ON (II), or for at least 3 minutes after the ignition switch is turned OFF; otherwise, the system may fail in a collision, or the airbags may deploy.
- SRS electrical connectors are identified by yellow color coding. Related components are located in the steering column, front console, dashboard, dashboard lower panel, in the dashboard above the glove box, in the front seats, in the roof side, and around the floor. Do not use electrical test equipment on these circuits.

COPYRIGHT FIXYOURCAR2009@GMAIL.COM
NOT TO BE COPIED OR RESOLD

cardiagn.com