2006 HUMMER H3 Owner Manual

Seats and Restraint Systems 1-1
Front Seats 1-2
Rear Seats 1-8
Safety Belts 1-11
Child Restraints 1-30
Airbag System 1-53
Restraint System Check 1-69

Features and Controls 2-1
Keys 2-2
Doors and Locks 2-7
Windows 2-10
Theft-Deterrent Systems 2-12
Starting and Operating Your Vehicle 2-14
Mirrors 2-33
OnStar® System 2-36
Universal Home Remote System 2-38
Storage Areas 2-43
Sunroof 2-47

Instrument Panel 3-1
Instrument Panel Overview 3-4
Climate Controls 3-21
Warning Lights, Gages, and Indicators 3-24
Driver Information Center (DIC) 3-41
Audio System(s) 3-48

Driving Your Vehicle 4-1
Your Driving, the Road, and Your Vehicle 4-2
Towing 4-56

Service and Appearance Care 5-1
Service 5-3
Fuel 5-5
Checking Things Under the Hood 5-10
Rear Axle 5-44
Four-Wheel Drive 5-44
Front Axle 5-44
Headlamp Aiming 5-45
Bulb Replacement 5-47
Windshield Wiper Blade Replacement 5-50
Tires 5-51
Appearance Care 5-83
Vehicle Identification 5-92
Electrical System 5-93
Capacities and Specifications 5-100

Maintenance Schedule 6-1
Maintenance Schedule 6-2

Customer Assistance and Information 7-1
Customer Assistance and Information 7-2
Reporting Safety Defects 7-14

Index 1

Downloaded from www.Manualslib.com manuals search engine

GENERAL MOTORS, GM, the GM Emblem, and HUMMER are registered trademarks; and H3 is a trademark of General Motors Corporation.

This manual includes the latest information at the time it was printed. We reserve the right to make changes after that time without further notice. For vehicles first sold in Canada, substitute the name “General Motors of Canada Limited” for HUMMER whenever it appears in this manual.

Keep this manual in the vehicle, so it will be there if it is needed while on the road. If the vehicle is sold, leave this manual in the vehicle.

Canadian Owners

A French language copy of this manual can be obtained from your dealer or from:

Helm, Incorporated
P.O. Box 07130
Detroit, MI 48207

How to Use This Manual

Many people read the owner manual from beginning to end when they first receive their new vehicle. If this is done, it can help you learn about the features and controls for the vehicle. Pictures and words work together in the owner manual to explain things.

Index

A good place to quickly locate information about the vehicle is the Index in the back of the manual. It is an alphabetical list of what is in the manual and the page number where it can be found.

Litho in U.S.A.
Part No. 06H3 B Second Printing

©2005 General Motors Corporation. All Rights Reserved.

Downloaded from www.Manualslib.com manuals search engine

Safety Warnings and Symbols

There are a number of safety cautions in this book. We use a box and the word CAUTION to tell about things that could hurt you if you were to ignore the warning.

⚠ CAUTION:

These mean there is something that could hurt you or other people.

In the caution area, we tell you what the hazard is. Then we tell you what to do to help avoid or reduce the hazard. Please read these cautions. If you do not, you or others could be hurt.

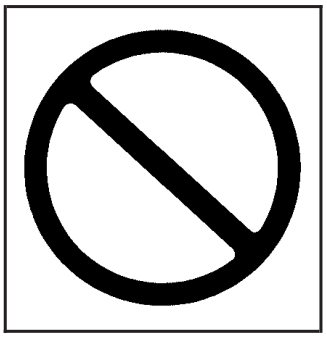

You will also find a circle with a slash through it in this book. This safety symbol means “Do Not,” “Do Not do this” or “Do Not let this happen.”

Downloaded from www.Manualslib.com manuals search engine

Vehicle Damage Warnings

Also, in this manual you will find these notices:

Notice: **These mean there is something that could damage your vehicle.**

A notice tells about something that can damage the vehicle. Many times, this damage would not be covered by your vehicle's warranty, and it could be costly. But the notice will tell what to do to help avoid the damage.

When you read other manuals, you might see CAUTION and NOTICE warnings in different colors or in different words.

There are also warning labels on the vehicle. They use the same words, CAUTION or NOTICE.

Vehicle Symbols

The vehicle has components and labels that use symbols instead of text. Symbols are shown along with the text describing the operation or information relating to a specific component, control, message, gage, or indicator.

If you need help figuring out a specific name of a component, gage, or indicator, reference the following topics:

- Seats and Restraint Systems in Section 1
- Features and Controls in Section 2
- Instrument Panel Overview in Section 3
- Climate Controls in Section 3
- Warning Lights, Gages, and Indicators in Section 3
- Audio System(s) in Section 3
- Engine Compartment Overview in Section 5

Downloaded from www.Manualslib.com manuals search engine

These are some examples of symbols that may be found on the vehicle:

CAUTION POSSIBLE INJURY	LATCH BOTH LAP AND SHOULDER BELTS TO PROTECT OCCUPANT DO NOT TWIST SAFETY BELT WHEN ATTACHING		MASTER LIGHTING SWITCH	ENGINE COOLANT TEMP	TIRE PRESSURE
PROTECT EYES BY SHIELDING	FASTEN SEAT BELTS	AIRBAG	TURN SIGNALS	BATTERY CHARGING SYSTEM	FUSE BOX ACCESS
CAUSTIC BATTERY ACID COULD CAUSE BURNS	MOVE SEAT FULLY REARWARD SECURE CHILD SEAT	DO NOT INSTALL A REAR-FACING CHILD RESTRAINT IN THIS SEATING POSITION	PARKING LAMPS	BRAKE	ENGINE COOLANT FAN
AVOID SPARKS OR FLAMES	PULL BELT OUT COMPLETELY THEN SECURE CHILD SEAT	DO NOT INSTALL A FORWARD-FACING CHILD RESTRAINT IN THIS SEATING POSITION	HAZARD WARNING FLASHER	COOLANT	FUEL
SPARK OR FLAME COULD EXPLODE BATTERY	POWER WINDOW	DOOR LOCK UNLOCK	DAYTIME RUNNING LAMPS	ENGINE OIL PRESSURE	OWNER'S MANUAL
			FOG LAMPS	ANTI-LOCK BRAKES	SERVICE MANUAL

Downloaded from www.Manualslib.com manuals search engine

✍ NOTES

Downloaded from www.Manualslib.com manuals search engine

Section 1 Seats and Restraint Systems

Front Seats 1-2
Manual Seats 1-2
Six-Way Power Seats 1-3
Power Lumbar 1-3
Heated Seats 1-4
Reclining Seatbacks 1-4
Head Restraints 1-7

Rear Seats 1-8
60/40 Split Bench Seat 1-8

Safety Belts 1-11
Safety Belts: They Are for Everyone 1-11
Questions and Answers About Safety Belts 1-15
How to Wear Safety Belts Properly 1-16
Driver Position 1-16
Shoulder Belt Height Adjustment 1-23
Safety Belt Use During Pregnancy 1-24
Right Front Passenger Position 1-24
Rear Seat Passengers 1-24
Rear Safety Belt Comfort Guides 1-27
Safety Belt Pretensioners 1-29
Safety Belt Extender 1-29

Child Restraints 1-30
Older Children 1-30
Infants and Young Children 1-32
Child Restraint Systems 1-36
Where to Put the Restraint 1-40
Lower Anchors and Tethers for Children (LATCH) 1-41
Securing a Child Restraint in a Rear Seat Position 1-47
Securing a Child Restraint in the Right Front Seat Position 1-49

Airbag System 1-53
Where Are the Airbags? 1-56
When Should an Airbag Inflate? 1-59
What Makes an Airbag Inflate? 1-61
How Does an Airbag Restrain? 1-61
What Will You See After an Airbag Inflates? 1-62
Passenger Sensing System 1-63
Servicing Your Airbag-Equipped Vehicle 1-68
Adding Equipment to Your Airbag-Equipped Vehicle 1-68

Restraint System Check 1-69
Checking the Restraint Systems 1-69
Replacing Restraint System Parts After a Crash 1-70

Downloaded from www.Manualslib.com manuals search engine

Front Seats

Manual Seats

⚠ CAUTION:

You can lose control of the vehicle if you try to adjust a manual driver's seat while the vehicle is moving. The sudden movement could startle and confuse you, or make you push a pedal when you do not want to. Adjust the driver's seat only when the vehicle is not moving.

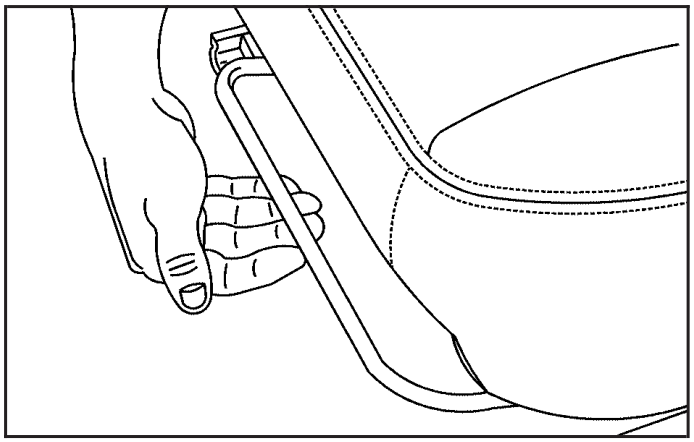

Lift the bar located under the front of the seat to unlock it. Slide the seat to where you want it and release the bar. Try to move the seat with your body to be sure the seat is locked in place.

Downloaded from www.Manualslib.com manuals search engine

Six-Way Power Seats

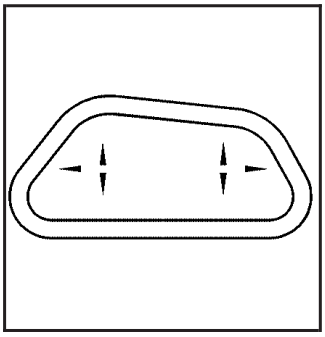

Your vehicle may have this feature. If it does, the six-way power seat control is located on the outboard side of the driver's seat. Your vehicle may also have a passenger's six-way power seat.

- Move the front of the control up or down to adjust the front portion of the cushion up or down.
- Move the rear of the control up or down to adjust the rear portion of the cushion up or down.
- To move the whole seat forward or rearward, slide the control forward or rearward.

Power Lumbar

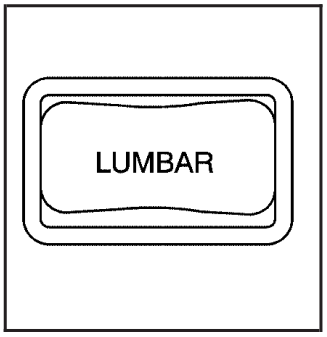

If your vehicle has this feature, the control is located on the outboard side of the seat(s).

Press and hold the front of the control until you have the desired lumbar support. To decrease lumbar support, press and hold the rear of the control.

Downloaded from www.Manualslib.com manuals search engine

Heated Seats

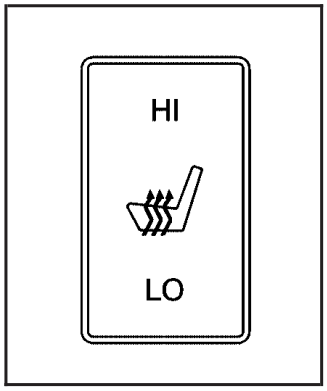

If your vehicle has this feature, the controls are located on the outboard side of the front seats.

This feature will heat the cushion and back of the seats.

Press the top of the switch to turn the heat to the high setting. Press the bottom of the switch to turn the heat to the low setting. Put the switch in the center position to turn the heat off.

The ignition must be on for the heated seat feature to work. The seat will heat to the last setting if the ignition has been turned off and then turned back on.

The passenger's safety belt must be engaged for the heated seat feature to work on the passenger's seat.

Reclining Seatbacks

⚠ CAUTION:

If the seatback is not locked, it could move forward in a sudden stop or crash. That could cause injury to the person sitting there. Always push and pull on the seatback to be sure it is locked.

Your seats have manual reclining seatbacks. The lever used to operate them is located on the outboard side of the seats.

Downloaded from www.Manualslib.com manuals search engine

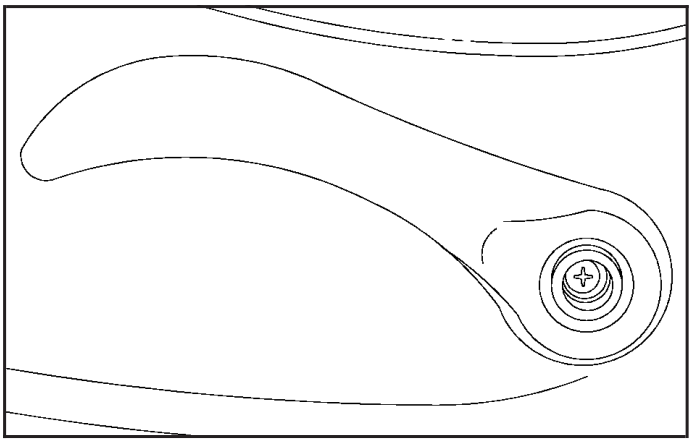

To recline the seatback, do the following:

1. Lift the recline lever.
2. Move the seatback to the desired position, then release the lever to lock the seatback in place.
3. Push and pull on the seatback to make sure it is locked.

To return the seatback to an upright position, do the following:

1. Lift the lever fully without applying pressure to the seatback and the seatback will return to the upright position.

⚠ CAUTION:

If the seatback is not locked, it could move forward in a sudden stop or crash. That could cause injury to the person sitting there. Always push and pull on the seatback to be sure it is locked.

2. Push and pull on the seatback to make sure it is locked.

Downloaded from www.Manualslib.com manuals search engine

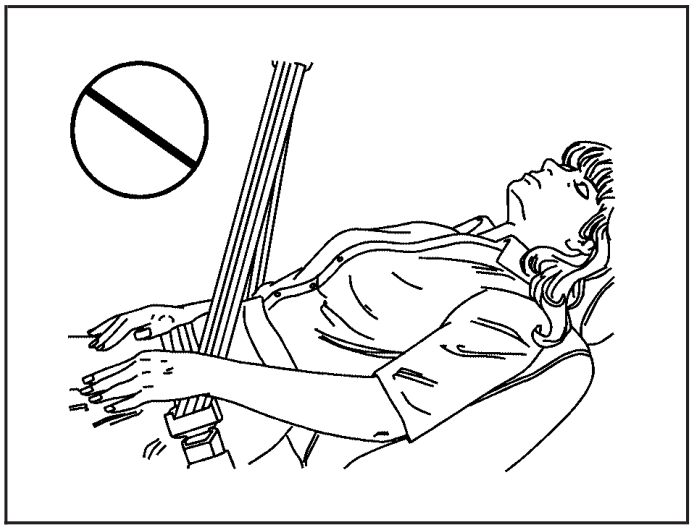

⚠ CAUTION:

Sitting in a reclined position when your vehicle is in motion can be dangerous. Even if you buckle up, your safety belts cannot do their job when you are reclined like this.

The shoulder belt cannot do its job because it will not be against your body. Instead, it will be in front of you. In a crash, you could go into it, receiving neck or other injuries.

The lap belt cannot do its job either. In a crash, the belt could go up over your abdomen. The belt forces would be there, not at your pelvic bones. This could cause serious internal injuries.

For proper protection when the vehicle is in motion, have the seatback upright. Then sit well back in the seat and wear your safety belt properly.

Do not have a seatback reclined if your vehicle is moving.

Downloaded from www.Manualslib.com manuals search engine

Head Restraints

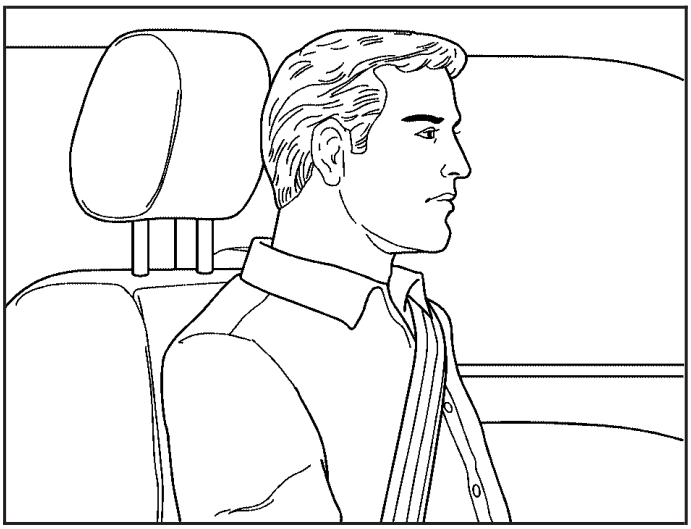

Adjust the head restraint so that the top of the restraint is at the same height as the occupant's head. This position reduces the chance of a neck injury in a crash.

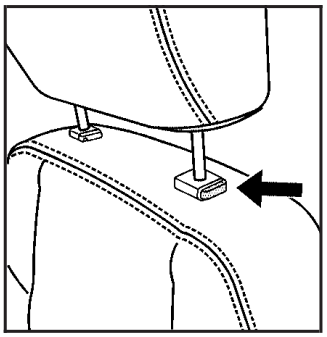

Pull the head restraint up to raise it. To lower the head restraint, press the button, located on the top of the seatback, and push the head restraint down.

Downloaded from www.Manualslib.com manuals search engine

Rear Seats

60/40 Split Bench Seat

The 60/40 split bench seats can be folded to give you more cargo space.

Folding the Seatbacks

To fold the rear seatback(s), do the following:

1. Make sure that nothing is on, under, or in front of the seat.

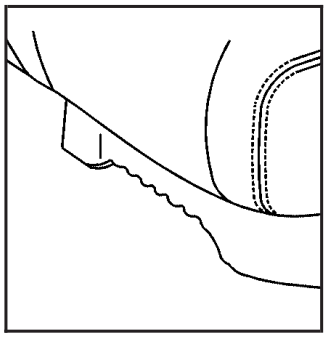

2. Place your hand under the front of the seat cushion and lift the cushion up while moving it forward. There is a label below the seat cushion with instructions to aid in seat operation.

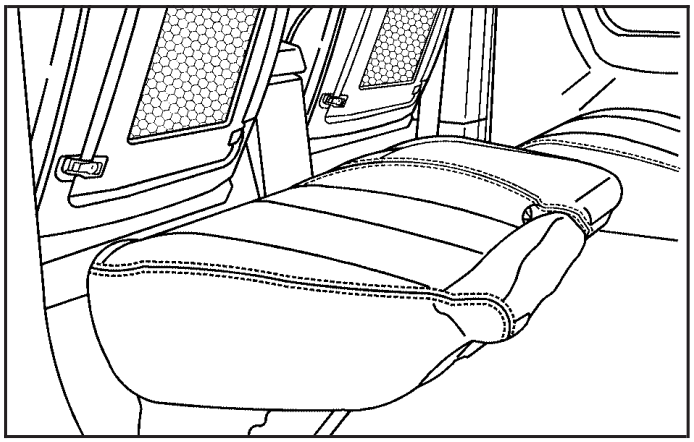

3. Pull the cushion forward until it rests in the footwell.

Notice: **Folding a rear seat with the safety belts still fastened may cause damage to the seat or the safety belts. Always unbuckle the safety belts and return them to their normal stowed position before folding a rear seat.**

Downloaded from www.Manualslib.com manuals search engine

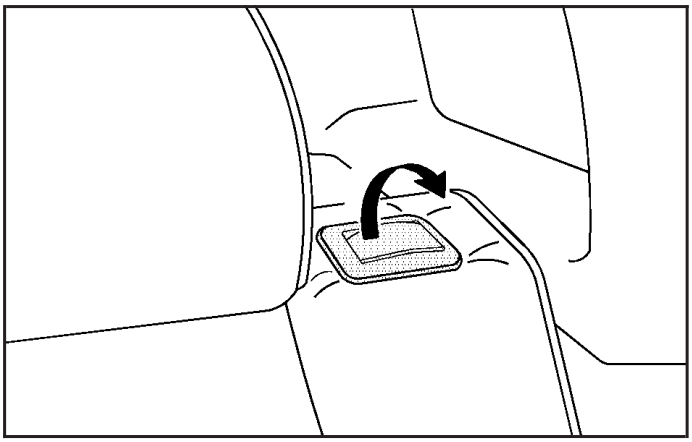

4. Lift the latch on top of the seatback and pull the seatback forward. Fold the seatback down until it is nearly flat.
5. If the seatback will not fold nearly flat, try moving the front seat forward and/or moving the front seatback more upright.
6. Repeat the steps for the other half of the 60/40 split bench seat.

Downloaded from www.Manualslib.com manuals search engine

Returning the Seatbacks to an Upright Position

⚠ CAUTION:

If the seatback is not locked, it could move forward in a sudden stop or crash. That could cause injury to the person sitting there. Always push and pull on the seatback to be sure it is locked.

⚠ CAUTION:

A safety belt that is improperly routed, not properly attached, or twisted will not provide the protection needed in a crash. The person wearing the belt could be seriously injured. After raising the rear seatback, always check to be sure that the safety belts are properly routed and attached, and are not twisted.

To return the seatback(s) to the upright position, do the following:

1. Lift the seatback up and push it rearward all the way.
2. Place your hand under the front of the seat cushion and lift the cushion while moving it rearward until it latches into position.
3. Pull forward on the seatback and push down on the seat cushion to make sure the seat is securely in place.

Downloaded from www.Manualslib.com manuals search engine

Safety Belts

Safety Belts: They Are for Everyone

This part of the manual tells you how to use safety belts properly. It also tells you some things you should not do with safety belts.

⚠ CAUTION:

Do not let anyone ride where he or she cannot wear a safety belt properly. If you are in a crash and you are not wearing a safety belt, your injuries can be much worse. You can hit things inside the vehicle or be ejected from it. You can be seriously injured or killed. In the same crash, you might not be, if you are buckled up. Always fasten your safety belt, and check that your passengers' belts are fastened properly too.

⚠ CAUTION:

It is extremely dangerous to ride in a cargo area, inside or outside of a vehicle. In a collision, people riding in these areas are more likely to be seriously injured or killed. Do not allow people to ride in any area of your vehicle that is not equipped with seats and safety belts. Be sure everyone in your vehicle is in a seat and using a safety belt properly.

Your vehicle has indicators to remind you and your passengers to buckle your safety belts. See *Safety Belt Reminder Light on page 3-27* and *Passenger Safety Belt Reminder Light on page 3-27*.

Downloaded from www.Manualslib.com manuals search engine

In most states and in all Canadian provinces, the law says to wear safety belts. Here is why: *They work*.

You never know if you will be in a crash. If you do have a crash, you do not know if it will be a bad one.

A few crashes are mild, and some crashes can be so serious that even buckled up, a person would not survive. But most crashes are in between. In many of them, people who buckle up can survive and sometimes walk away. Without belts they could have been badly hurt or killed.

After more than 30 years of safety belts in vehicles, the facts are clear. In most crashes buckling up does matter...a lot!

Why Safety Belts Work

When you ride in or on anything, you go as fast as it goes.

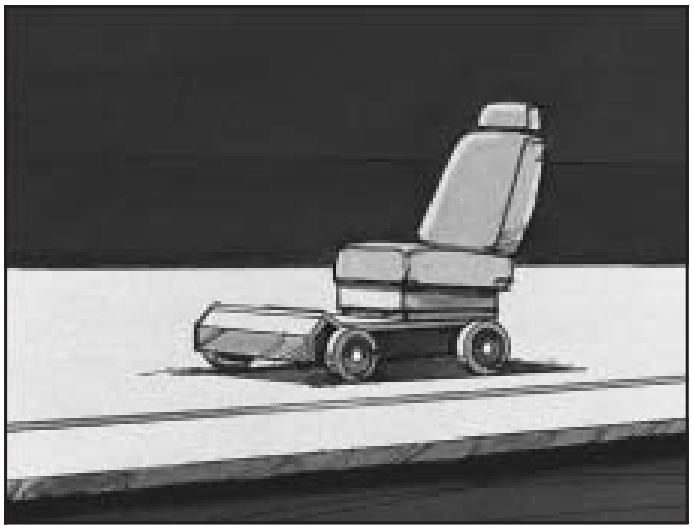

Take the simplest vehicle. Suppose it is just a seat on wheels.

Downloaded from www.Manualslib.com manuals search engine

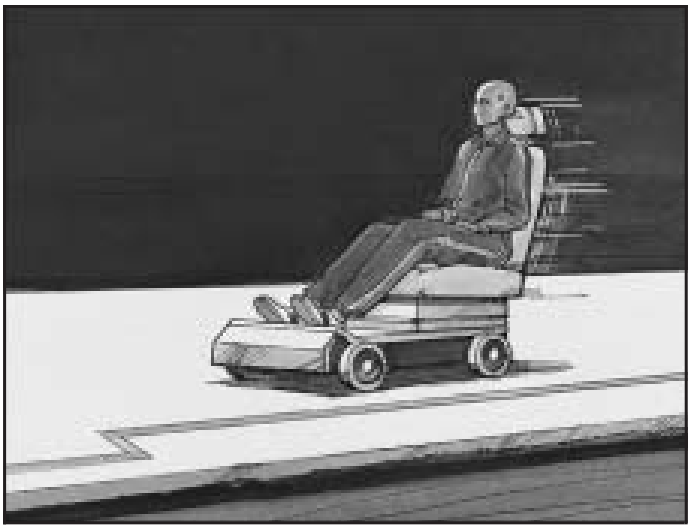

Put someone on it.

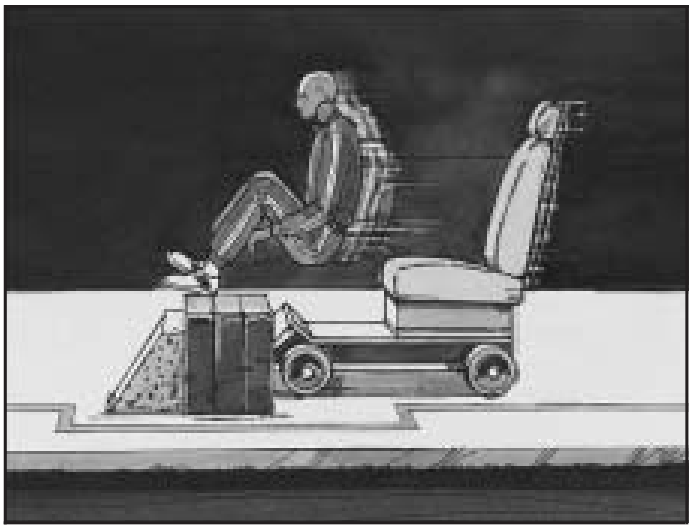

Get it up to speed. Then stop the vehicle. The rider does not stop.

Downloaded from www.Manualslib.com manuals search engine

The person keeps going until stopped by something. In a real vehicle, it could be the windshield...

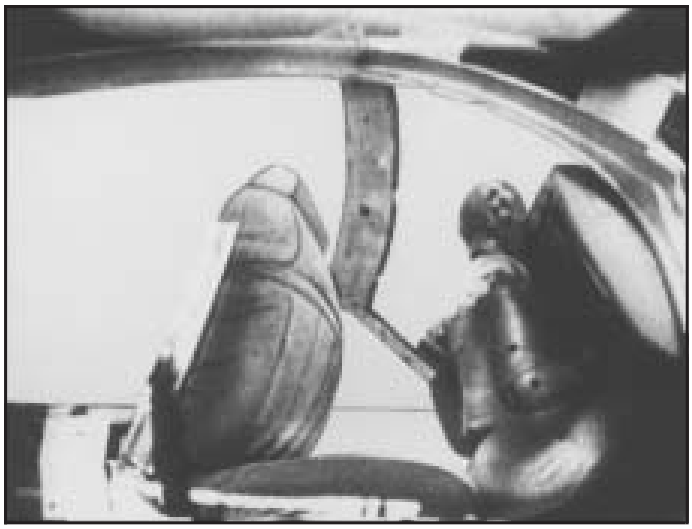

or the instrument panel...

Downloaded from www.Manualslib.com manuals search engine

or the safety belts!

With safety belts, you slow down as the vehicle does. You get more time to stop. You stop over more distance, and your strongest bones take the forces. That is why safety belts make such good sense.

Questions and Answers About Safety Belts

Q: Will I be trapped in the vehicle after an accident if I am wearing a safety belt?

A: You *could* be — whether you are wearing a safety belt or not. But you can unbuckle a safety belt, even if you are upside down. And your chance of being conscious during and after an accident, so you *can* unbuckle and get out, is *much* greater if you are belted.

Q: If my vehicle has airbags, why should I have to wear safety belts?

A: Airbags are in many vehicles today and will be in most of them in the future. But they are supplemental systems only; so they work *with* safety belts — not instead of them. Every airbag system ever offered for sale has required the use of safety belts. Even if you are in a vehicle that has airbags, you still have to buckle up to get the most protection. That is true not only in frontal collisions, but especially in side and other collisions.

Downloaded from www.Manualslib.com manuals search engine

Q: If I am a good driver, and I never drive far from home, why should I wear safety belts?

A: You may be an excellent driver, but if you are in an accident — even one that is not your fault — you and your passengers can be hurt. Being a good driver does not protect you from things beyond your control, such as bad drivers.

Most accidents occur within 25 miles (40 km) of home. And the greatest number of serious injuries and deaths occur at speeds of less than 40 mph (65 km/h).

Safety belts are for everyone.

How to Wear Safety Belts Properly

This part is only for people of adult size.

Be aware that there are special things to know about safety belts and children. And there are different rules for smaller children and babies. If a child will be riding in your vehicle, see *Older Children on page 1-30* or *Infants and Young Children on page 1-32*. Follow those rules for everyone's protection.

First, you will want to know which restraint systems your vehicle has.

We will start with the driver position.

Driver Position

Lap-Shoulder Belt

The driver has a lap-shoulder belt. Here is how to wear it properly.

1. Close and lock the door.
2. Adjust the seat so you can sit up straight. To see how, see "Seats" in the Index.

Downloaded from www.Manualslib.com manuals search engine

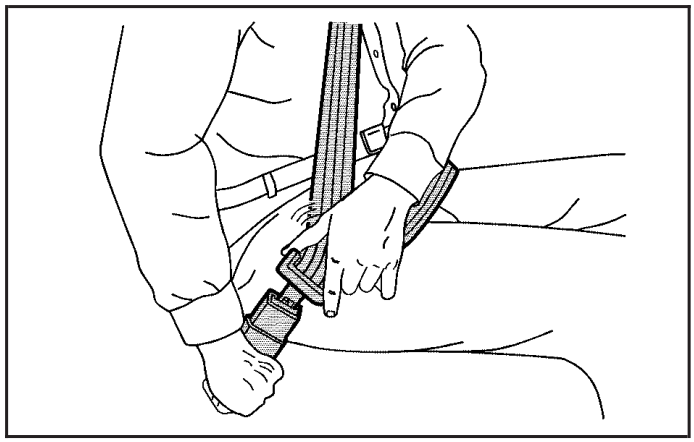

3. Pick up the latch plate and pull the belt across you. Do not let it get twisted.

   The shoulder belt may lock if you pull the belt across you very quickly. If this happens, let the belt go back slightly to unlock it. Then pull the belt across you more slowly.

4. Push the latch plate into the buckle until it clicks.

   Pull up on the latch plate to make sure it is secure. If the belt is not long enough, see *Safety Belt Extender on page 1-29*.

   Make sure the release button on the buckle is positioned so you would be able to unbuckle the safety belt quickly if you ever had to.

5. Move the shoulder belt height adjuster to the height that is right for you. Improper shoulder belt height adjustment could reduce the effectiveness of the safety belt in a crash. See *Shoulder Belt Height Adjustment on page 1-23*.

Downloaded from www.Manualslib.com manuals search engine

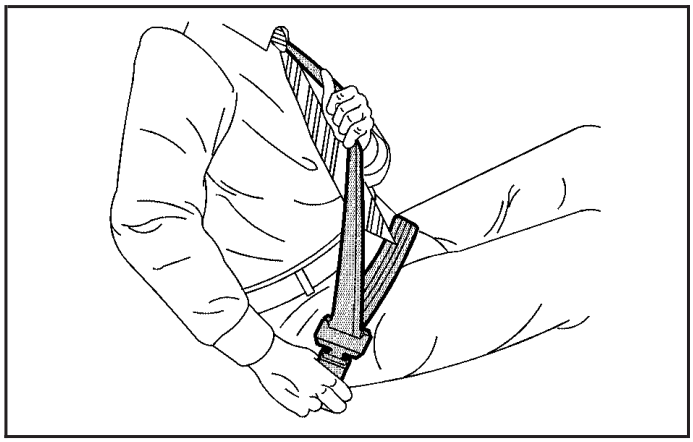

6. To make the lap part tight, pull up on the shoulder belt.

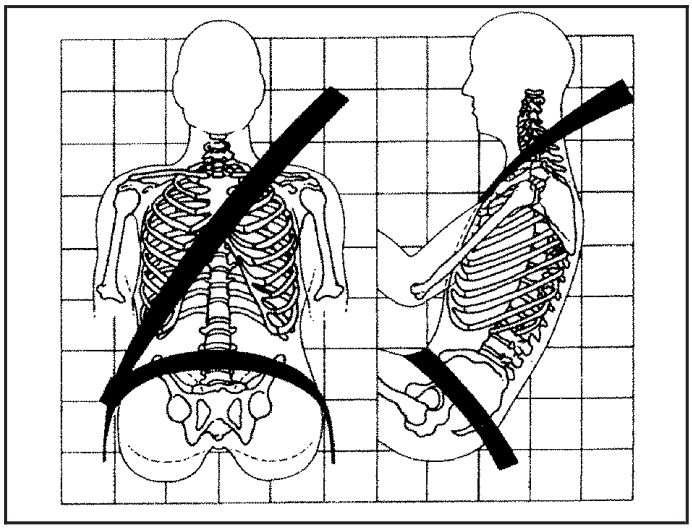

The lap part of the belt should be worn low and snug on the hips, just touching the thighs. In a crash, this applies force to the strong pelvic bones. And you would be less likely to slide under the lap belt. If you slid under it, the belt would apply force at your abdomen. This could cause serious or even fatal injuries. The shoulder belt should go over the shoulder and across the chest. These parts of the body are best able to take belt restraining forces.

The safety belt locks if there is a sudden stop or crash, or if you pull the belt very quickly out of the retractor.

Downloaded from www.Manualslib.com manuals search engine

Q: What is wrong with this?

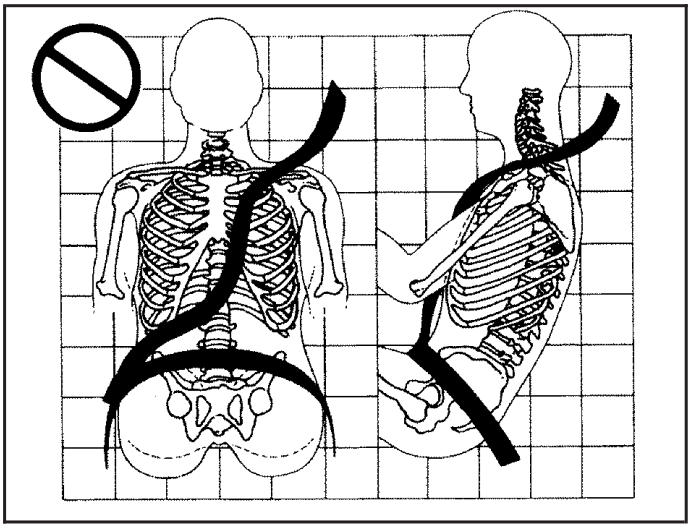

A: The shoulder belt is too loose. It will not give nearly as much protection this way.

⚠ CAUTION:

You can be seriously hurt if your shoulder belt is too loose. In a crash, you would move forward too much, which could increase injury. The shoulder belt should fit against your body.

Downloaded from www.Manualslib.com manuals search engine

Q: What is wrong with this?

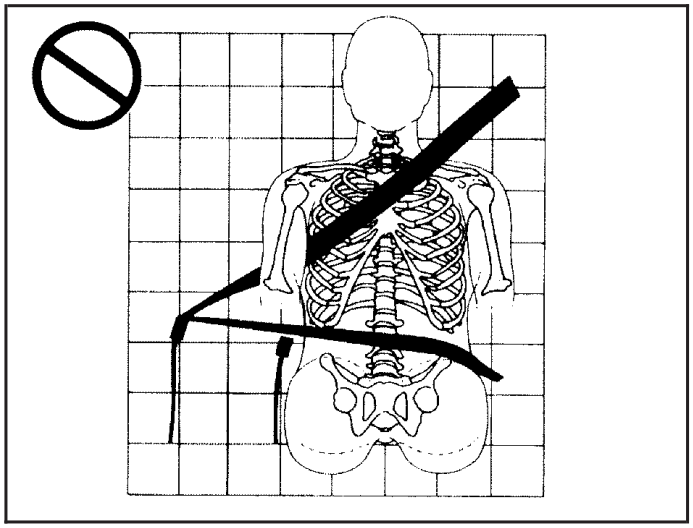

A: The belt is buckled in the wrong place.

⚠ CAUTION:

You can be seriously injured if your belt is buckled in the wrong place like this. In a crash, the belt would go up over your abdomen. The belt forces would be there, not at the pelvic bones. This could cause serious internal injuries. Always buckle your belt into the buckle nearest you.

Downloaded from www.Manualslib.com manuals search engine

Q: What is wrong with this?

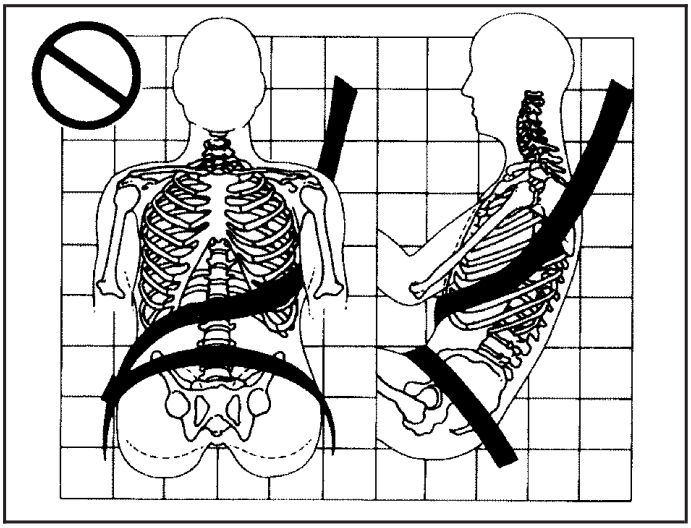

A: The shoulder belt is worn under the arm. It should be worn over the shoulder at all times.

⚠ CAUTION:

You can be seriously injured if you wear the shoulder belt under your arm. In a crash, your body would move too far forward, which would increase the chance of head and neck injury. Also, the belt would apply too much force to the ribs, which are not as strong as shoulder bones. You could also severely injure internal organs like your liver or spleen.

Downloaded from www.Manualslib.com manuals search engine

Q: What is wrong with this?

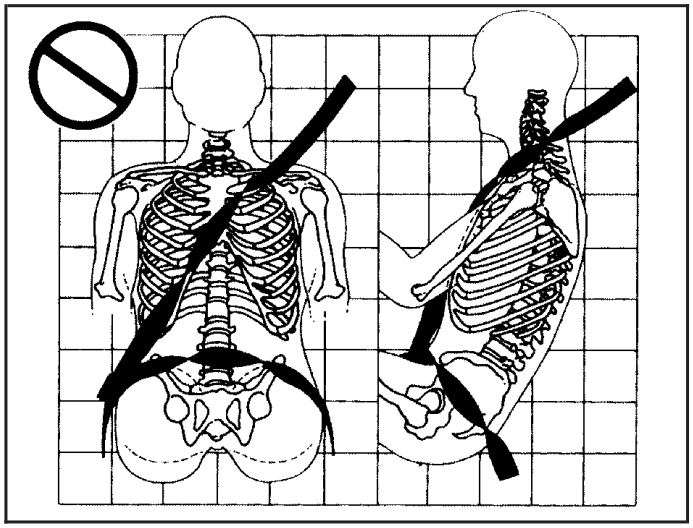

A: The belt is twisted across the body.

⚠ CAUTION:

You can be seriously injured by a twisted belt. In a crash, you would not have the full width of the belt to spread impact forces. If a belt is twisted, make it straight so it can work properly, or ask your dealer to fix it.

Downloaded from www.Manualslib.com manuals search engine

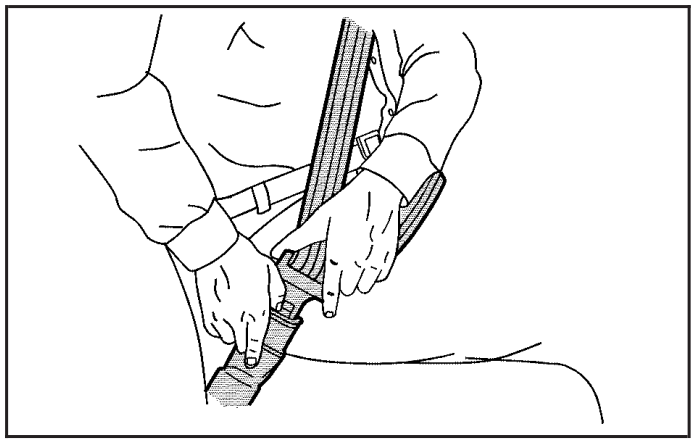

To unlatch the belt, just push the button on the buckle. The belt should go back out of the way. When the safety belt is not in use, slide the latch plate up the safety belt webbing. The latch plate should rest on the stitching on the safety belt, near the guide loop on the side wall.

Before you close the door, be sure the belt is out of the way. If you slam the door on it, you can damage both the belt and your vehicle.

Shoulder Belt Height Adjustment

Before you begin to drive, move the shoulder belt height adjuster to the height that is right for you.

Adjust the height so that the shoulder portion of the belt is centered on your shoulder. The belt should be away from your face and neck, but not falling off your shoulder. Incorrect positioning of the shoulder belt can reduce the effectiveness of the safety belt.

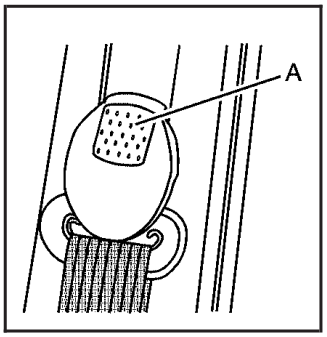

To move it up or down, press the square button (A) in the center of the height adjuster knob and move the height adjuster to the desired position.

After you move the height adjuster to where you want it, try to move it up and down without touching the square button to make sure it has locked into position.

Downloaded from www.Manualslib.com manuals search engine

Safety Belt Use During Pregnancy

Safety belts work for everyone, including pregnant women. Like all occupants, they are more likely to be seriously injured if they do not wear safety belts.

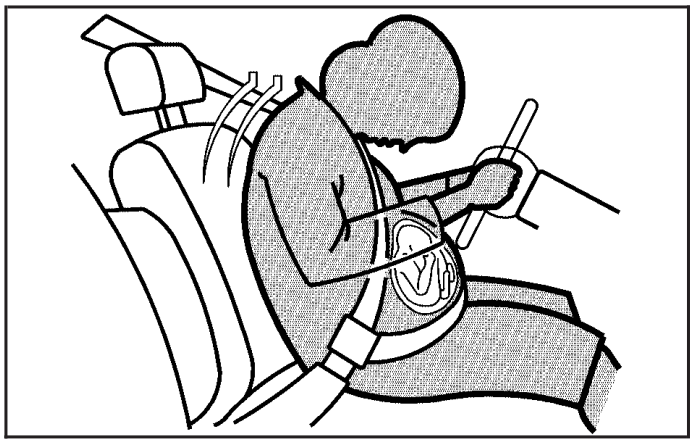

A pregnant woman should wear a lap-shoulder belt, and the lap portion should be worn as low as possible, below the rounding, throughout the pregnancy.

The best way to protect the fetus is to protect the mother. When a safety belt is worn properly, it is more likely that the fetus will not be hurt in a crash. For pregnant women, as for anyone, the key to making safety belts effective is wearing them properly.

Right Front Passenger Position

To learn how to wear the right front passenger's safety belt properly, see *Driver Position on page 1-16*.

The right front passenger's safety belt works the same way as the driver's safety belt — except for one thing. If you ever pull the shoulder portion of the belt out all the way, you will engage the child restraint locking feature. If this happens, just let the belt go back all the way and start again.

Rear Seat Passengers

It is very important for rear seat passengers to buckle up! Accident statistics show that unbelted people in the rear seat are hurt more often in crashes than those who are wearing safety belts.

Rear passengers who are not safety belted can be thrown out of the vehicle in a crash. And they can strike others in the vehicle who are wearing safety belts.

Downloaded from www.Manualslib.com manuals search engine

Lap-Shoulder Belt

All rear seat positions have lap-shoulder belts. Here is how to wear one properly.

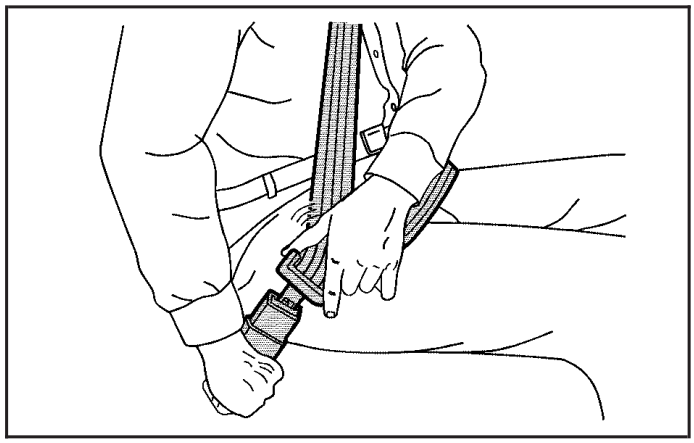

1. Pick up the latch plate and pull the belt across you. Do not let it get twisted.

   The shoulder belt may lock if you pull the belt across you very quickly. If this happens, let the belt go back slightly to unlock it. Then pull the belt across you more slowly.

2. Push the latch plate into the buckle until it clicks.

   Pull up on the latch plate to make sure it is secure.

   When the shoulder belt is pulled out all the way, it will lock. If it does, let it go back all the way and start again.

   If the belt is not long enough, see *Safety Belt Extender on page 1-29*.

   Make sure the release button on the buckle is positioned so you would be able to unbuckle the safety belt quickly if you ever had to.

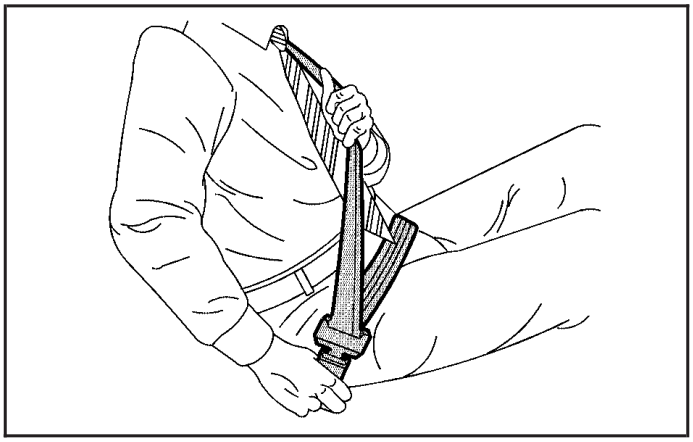

3. To make the lap part tight, pull up on the shoulder part.

Downloaded from www.Manualslib.com manuals search engine

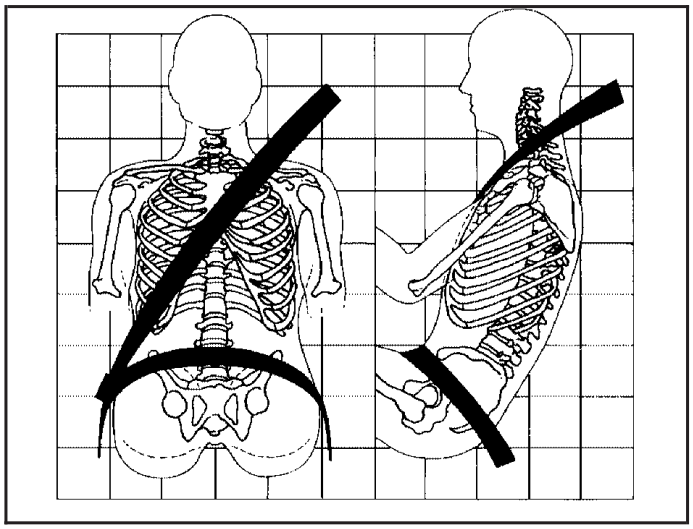

The lap part of the belt should be worn low and snug on the hips, just touching the thighs. In a crash, this applies force to the strong pelvic bones. And you would be less likely to slide under the lap belt. If you slid under it, the belt would apply force at your abdomen. This could cause serious or even fatal injuries. The shoulder belt should go over the shoulder and across the chest. These parts of the body are best able to take belt restraining forces.

The safety belt locks if there is a sudden stop or a crash, or if you pull the belt very quickly out of the retractor.

⚠ CAUTION:

You can be seriously hurt if your shoulder belt is too loose. In a crash, you would move forward too much, which could increase injury. The shoulder belt should fit against your body.

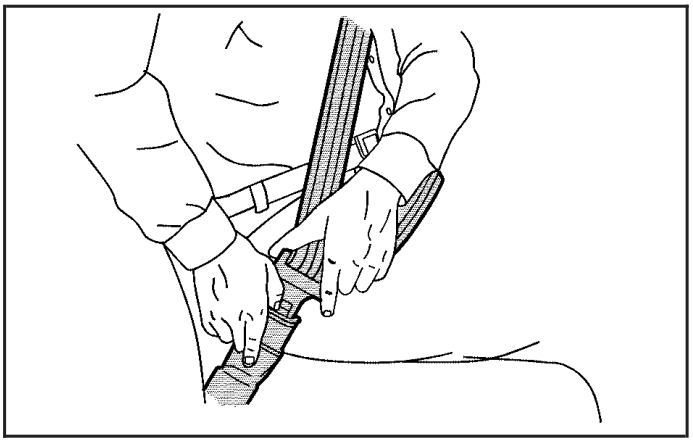

To unlatch the belt, push the button on the buckle.

Downloaded from www.Manualslib.com manuals search engine

Rear Safety Belt Comfort Guides

Rear shoulder belt comfort guides may provide added safety belt comfort for older children who have outgrown booster seats and for some adults. When installed on a shoulder belt, the comfort guide positions the belt away from the neck and head.

Comfort guides are provided for each outboard passenger position in the second row. Here is how to install a comfort guide and use the safety belt:

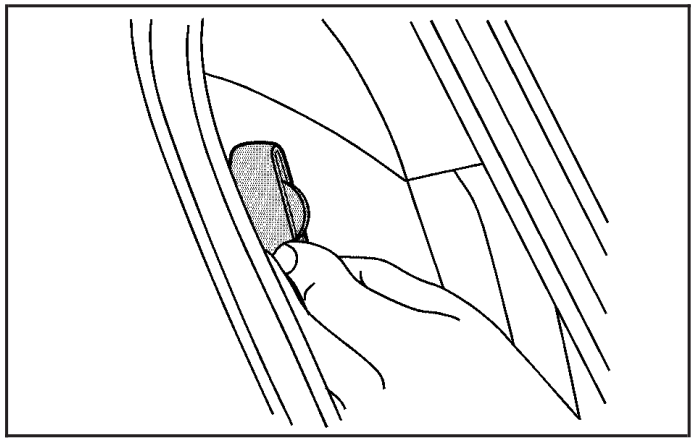

1. Pull the elastic cord out from between the edge of the seatback and the interior body to remove the guide from its storage clip.

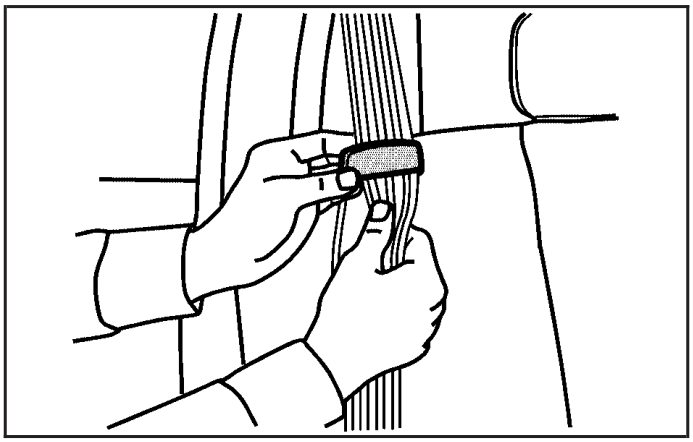

2. Place the guide over the belt and insert the two edges of the belt into the slots of the guide.

Downloaded from www.Manualslib.com manuals search engine

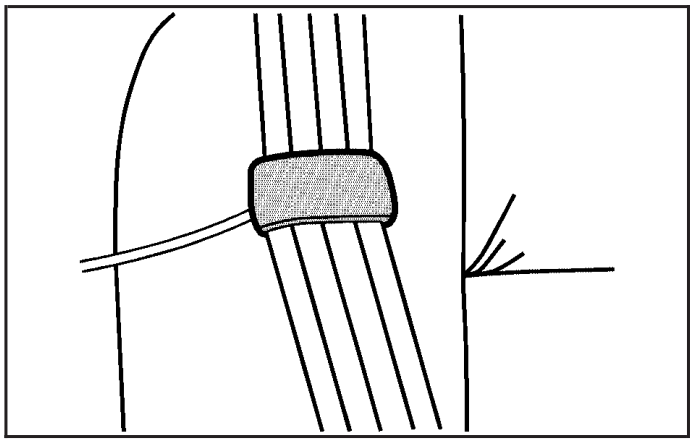

3. Be sure that the belt is not twisted and it lies flat. The guide must be on top of the belt.

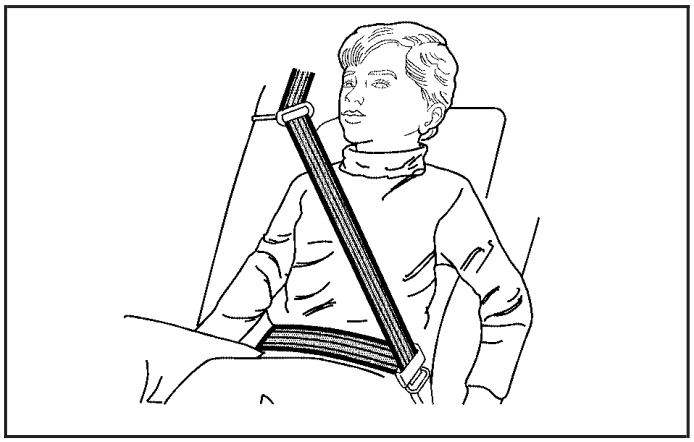

⚠ CAUTION:

A safety belt that is not properly worn may not provide the protection needed in a crash. The person wearing the belt could be seriously injured. The shoulder belt should go over the shoulder and across the chest. These parts of the body are best able to take belt restraining forces.

Downloaded from www.Manualslib.com manuals search engine

4. Buckle, position, and release the safety belt as described in *Rear Seat Passengers on page 1-24*. Make sure that the shoulder belt crosses the shoulder.

To remove and store the comfort guides, squeeze the belt edges together so that you can take them out of the guides. Slide the guide onto its storage clip between the edge of the seatback and the trim panel. Make sure you remove the comfort guide from the belt before you fold a rear seat down.

Safety Belt Pretensioners

Your vehicle has safety belt pretensioners for the driver and right front passenger. Although you cannot see them, they are located on the retractor part of the safety belts. They help the safety belts reduce a person's forward movement in a moderate to severe frontal or near frontal crash.

Pretensioners work only once. If they activate in a crash, you will need to get new ones, and probably other new parts for your safety belt system. See *Replacing Restraint System Parts After a Crash on page 1-70*.

Safety Belt Extender

If the vehicle's safety belt will fasten around you, you should use it.

But if a safety belt is not long enough, your dealer will order you an extender. It is free. When you go in to order it, take the heaviest coat you will wear, so the extender will be long enough for you. To help avoid personal injury, do not let someone else use it, and use it only for the seat it is made to fit. The extender has been designed for adults. Never use it for securing child seats. To wear it, just attach it to the regular safety belt. For more information, see the instruction sheet that comes with the extender.

Downloaded from www.Manualslib.com manuals search engine

Child Restraints

Older Children

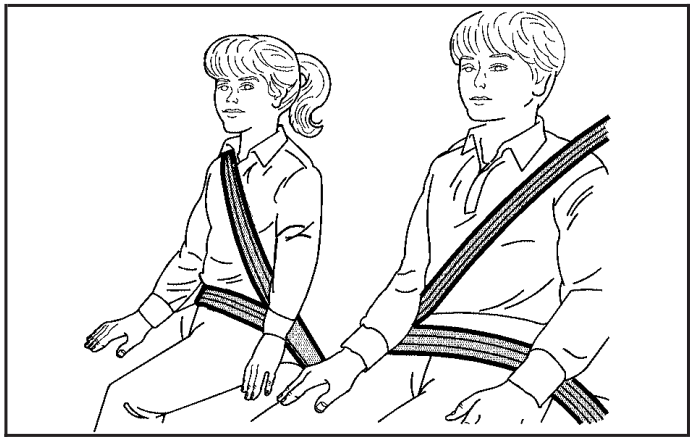

Older children who have outgrown booster seats should wear the vehicle's safety belts.

Q: What is the proper way to wear safety belts?

A: An older child should wear a lap-shoulder belt and get the additional restraint a shoulder belt can provide. The shoulder belt should not cross the face or neck. The lap belt should fit snugly below the hips, just touching the top of the thighs. It should never be worn over the abdomen, which could cause severe or even fatal internal injuries in a crash.

Accident statistics show that children are safer if they are restrained in the rear seat.

In a crash, children who are not buckled up can strike other people who are buckled up, or can be thrown out of the vehicle. Older children need to use safety belts properly.

Downloaded from www.Manualslib.com manuals search engine

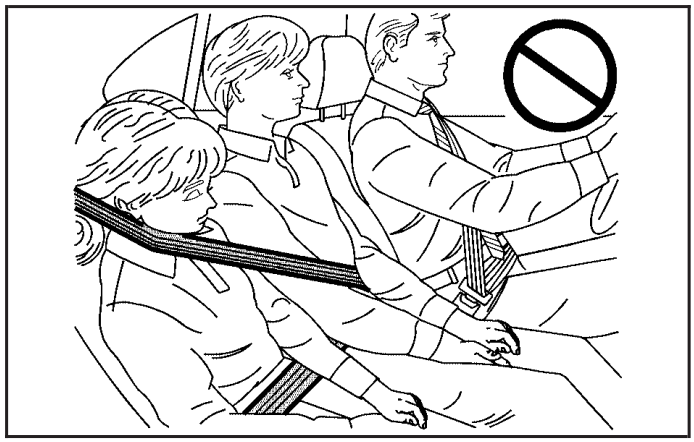

⚠ CAUTION:

Never do this.

Here two children are wearing the same belt. The belt can not properly spread the impact forces. In a crash, the two children can be crushed together and seriously injured. A belt must be used by only one person at a time.

Q: What if a child is wearing a lap-shoulder belt, but the child is so small that the shoulder belt is very close to the child's face or neck?

A: If the child is sitting in a seat next to a window, move the child toward the center of the vehicle. Also see *Rear Safety Belt Comfort Guides on page 1-27*. If the child is sitting in the center rear seat passenger position, move the child toward the safety belt buckle. In either case, be sure that the shoulder belt still is on the child's shoulder, so that in a crash the child's upper body would have the restraint the belts provide.

Downloaded from www.Manualslib.com manuals search engine

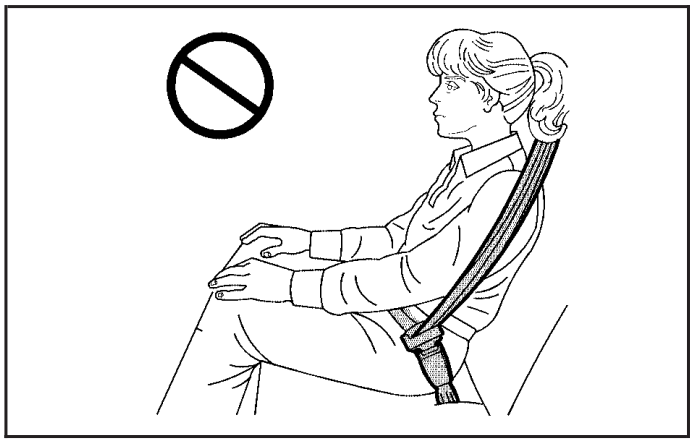

⚠ CAUTION:

Never do this.

Here a child is sitting in a seat that has a lap-shoulder belt, but the shoulder part is behind the child. If the child wears the belt in this way, in a crash the child might slide under the belt. The belt's force would then be applied right on the child's abdomen. That could cause serious or fatal injuries.

Wherever the child sits, the lap portion of the belt should be worn low and snug on the hips, just touching the child's thighs. This applies belt force to the child's pelvic bones in a crash.

Infants and Young Children

Everyone in a vehicle needs protection! This includes infants and all other children. Neither the distance traveled nor the age and size of the traveler changes the need, for everyone, to use safety restraints. In fact, the law in every state in the United States and in every Canadian province says children up to some age must be restrained while in a vehicle.

Downloaded from www.Manualslib.com manuals search engine

⚠ CAUTION:

Children can be seriously injured or strangled if a shoulder belt is wrapped around their neck and the safety belt continues to tighten. Never leave children unattended in a vehicle and never allow children to play with the safety belts.

Every time infants and young children ride in vehicles, they should have the protection provided by appropriate restraints. Young children should not use the vehicle's adult safety belts alone, unless there is no other choice. Instead, they need to use a child restraint.

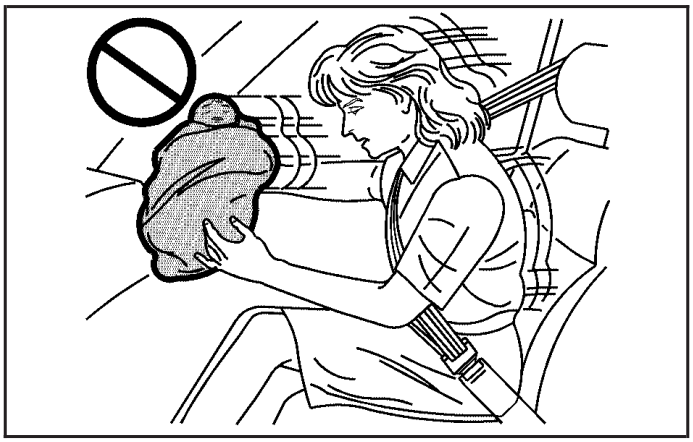

⚠ CAUTION:

People should never hold a baby in their arms while riding in a vehicle. A baby does not weigh much — until a crash. During a crash a baby will become so heavy it is not possible to hold it. For example, in a crash at only 25 mph (40 km/h), a 12 lb (5.5 kg) baby will suddenly become a 240 lb (110 kg) force on a person's arms. A baby should be secured in an appropriate restraint.

Downloaded from www.Manualslib.com manuals search engine

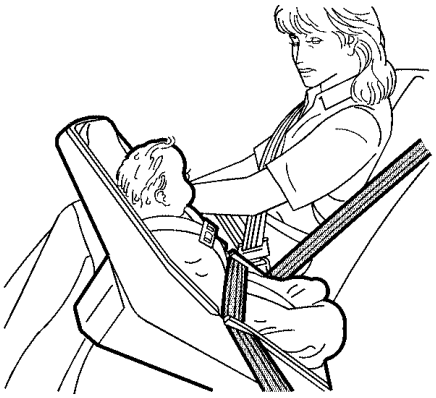

⚠ CAUTION:

Children who are up against, or very close to, any airbag when it inflates can be seriously injured or killed. Airbags plus lap-shoulder belts offer protection for adults and older children, but not for young children and infants. Neither the vehicle's safety belt system nor its airbag system is designed for them. Young children and infants need the protection that a child restraint system can provide.

Q: What are the different types of add-on child restraints?

A: Add-on child restraints, which are purchased by the vehicle's owner, are available in four basic types. Selection of a particular restraint should take into consideration not only the child's weight, height and age but also whether or not the restraint will be compatible with the motor vehicle in which it will be used.

For most basic types of child restraints, there are many different models available. When purchasing a child restraint, be sure it is designed to be used in a motor vehicle. If it is, the restraint will have a label saying that it meets federal motor vehicle safety standards.

The restraint manufacturer's instructions that come with the restraint, state the weight and height limitations for a particular child restraint. In addition, there are many kinds of restraints available for children with special needs.

Downloaded from www.Manualslib.com manuals search engine

⚠ CAUTION:

Newborn infants need complete support, including support for the head and neck. This is necessary because a newborn infant's neck is weak and its head weighs so much compared with the rest of its body. In a crash, an infant in a rear-facing seat settles into the restraint, so the crash forces can be distributed across the strongest part of an infant's body, the back and shoulders. Infants always should be secured in appropriate infant restraints.

⚠ CAUTION:

The body structure of a young child is quite unlike that of an adult or older child, for whom the safety belts are designed. A young child's hip bones are still so small that the vehicle's regular safety belt may not remain low on the hip bones, as it should. Instead, it may settle up around the child's abdomen. In a crash, the belt would apply force on a body area that is unprotected by any bony structure. This alone could cause serious or fatal injuries. Young children always should be secured in appropriate child restraints.

Downloaded from www.Manualslib.com manuals search engine

Child Restraint Systems

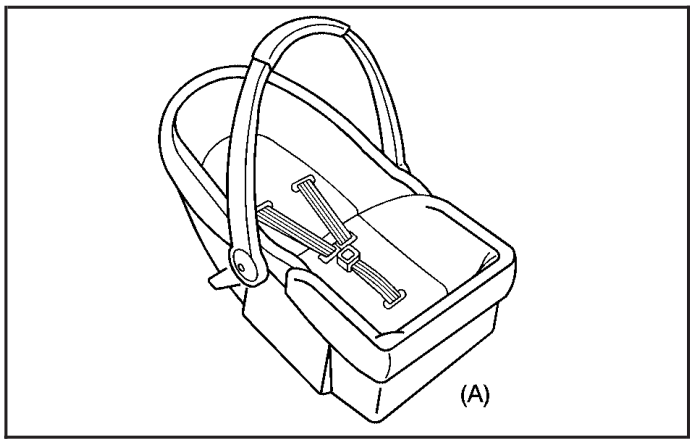

An infant car bed (A), a special bed made for use in a motor vehicle, is an infant restraint system designed to restrain or position a child on a continuous flat surface. Make sure that the infant's head rests toward the center of the vehicle.

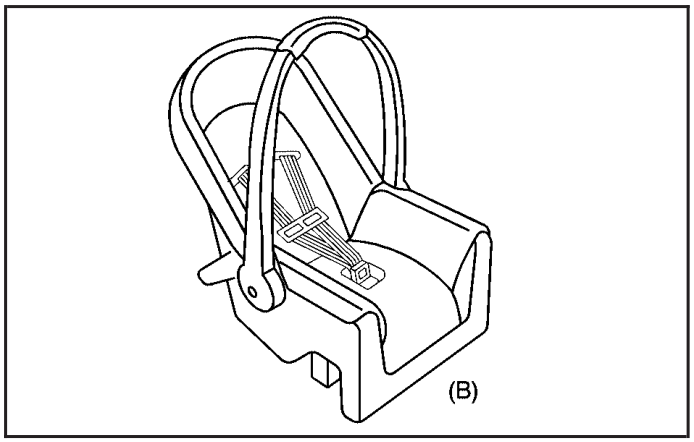

A rear-facing infant seat (B) provides restraint with the seating surface against the back of the infant. The harness system holds the infant in place and, in a crash, acts to keep the infant positioned in the restraint.

Downloaded from www.Manualslib.com manuals search engine

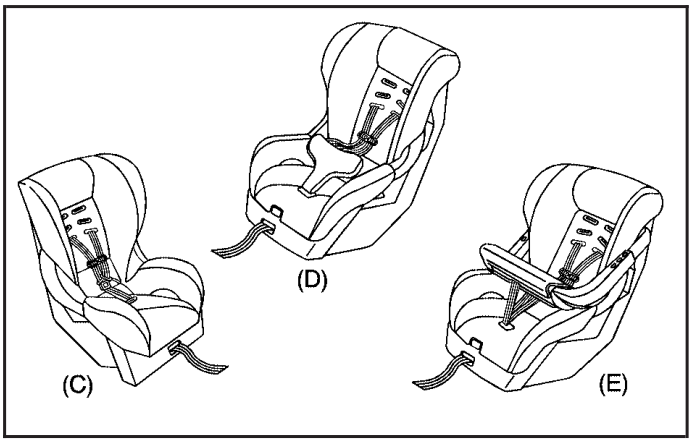

A forward-facing child seat (C-E) provides restraint for the child's body with the harness and also sometimes with surfaces such as T-shaped or shelf-like shields.

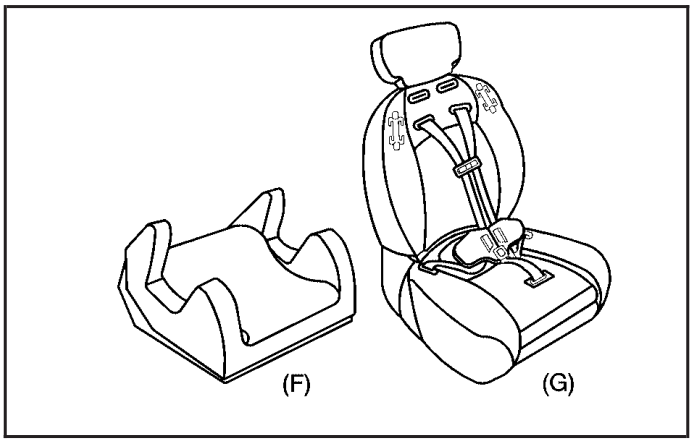

A booster seat (F-G) is a child restraint designed to improve the fit of the vehicle's safety belt system. Some booster seats have a shoulder belt positioner, and some high-back booster seats have a five-point harness. A booster seat can also help a child to see out the window.

Downloaded from www.Manualslib.com manuals search engine

Q: How Should I Use a Child Restraint?

A: A child restraint system is any device designed for use in a motor vehicle to restrain, seat, or position children. A built-in child restraint system is a permanent part of the motor vehicle. An add-on child restraint system is a portable one, which is purchased by the vehicle's owner. To help reduce injuries, an add-on child restraint must be secured in the vehicle. With built-in or add-on child restraints, the child has to be secured within the child restraint.

When choosing an add-on child restraint, be sure the child restraint is designed to be used in a vehicle. If it is, it will have a label saying that it meets federal motor vehicle safety standards. Then follow the instructions for the restraint. You may find these instructions on the restraint itself or in a booklet, or both.

Securing an Add-on Child Restraint in the Vehicle

⚠ CAUTION:

A child can be seriously injured or killed in a crash if the child restraint is not properly secured in the vehicle. Make sure the child restraint is properly installed in the vehicle using the vehicle's safety belt or LATCH system, following the instructions that came with that restraint, and also the instructions in this manual.

To help reduce the chance of injury, the child restraint must be secured in the vehicle. Child restraint systems must be secured in vehicle seats by lap belts or the lap belt portion of a lap-shoulder belt, or by the LATCH system. See *Lower Anchors and Tethers for Children (LATCH) on page 1-41* for more information. A child can be endangered in a crash if the child restraint is not properly secured in the vehicle.

Downloaded from www.Manualslib.com manuals search engine

When securing an add-on child restraint, refer to the instructions that come with the restraint which may be on the restraint itself or in a booklet, or both, and to this manual. The child restraint instructions are important, so if they are not available, obtain a replacement copy from the manufacturer.

Keep in mind that an unsecured child restraint can move around in a collision or sudden stop and injure people in the vehicle. Be sure to properly secure any child restraint in your vehicle — even when no child is in it.

Securing the Child Within the Child Restraint

There are several systems for securing the child within the child restraint. One system, the three-point harness, has straps that come down over each of the infant's shoulders and buckle together at the crotch. The five-point harness system has two shoulder straps, two hip straps, and a crotch strap. A shield may take the place of hip straps. A T-shaped shield has shoulder straps that are attached to a flat pad which rests low against the child's body. A shelf- or armrest-type shield has straps that are attached to a wide, shelf-like shield that swings up or to the side.

⚠ CAUTION:

A child can be seriously injured or killed in a crash if the child is not properly secured in the child restraint. Make sure the child is properly secured, following the instructions that came with that restraint.

Because there are different systems, it is important to refer to the instructions that come with the restraint. A child can be endangered in a crash if the child is not properly secured in the child restraint.

Downloaded from www.Manualslib.com manuals search engine

Where to Put the Restraint

Accident statistics show that children are safer if they are restrained in the rear rather than the front seat. We recommend that child restraints be secured in a rear seat, including an infant riding in a rear-facing infant seat, a child riding in a forward-facing child seat and an older child riding in a booster seat.

Your vehicle has a rear seat that will accommodate a rear-facing child restraint. A label on your sun visor says, “Never put a rear-facing child seat in the front.” This is because the risk to the rear-facing child is so great, if the airbag deploys.

⚠ CAUTION:

A child in a rear-facing child restraint can be seriously injured or killed if the right front passenger’s airbag inflates. This is because the back of the rear-facing child restraint would be very close to the inflating airbag.

CAUTION: (Continued)

CAUTION: (Continued)

Even though the passenger sensing system is designed to turn off the passenger’s frontal airbag if the system detects a rear-facing child restraint, no system is fail-safe, and no one can guarantee that an airbag will not deploy under some unusual circumstance, even though it is turned off. We recommend that rear-facing child restraints be secured in the rear seat, even if the airbag is off.

If you need to secure a forward-facing child restraint in the right front seat, always move the front passenger seat as far back as it will go. It is better to secure the child restraint in a rear seat.

Wherever you install a child restraint, be sure to secure the child restraint properly.

Keep in mind that an unsecured child restraint can move around in a collision or sudden stop and injure people in the vehicle. Be sure to properly secure any child restraint in your vehicle — even when no child is in it.

Downloaded from www.Manualslib.com manuals search engine

Lower Anchors and Tethers for Children (LATCH)

Your vehicle has the LATCH system. The LATCH system holds a child restraint during driving or in a crash. This system is designed to make installation of a child restraint easier. The LATCH system uses anchors in the vehicle and attachments on the child restraint that are made for use with the LATCH system

Make sure that a LATCH-compatible child restraint is properly installed using the anchors, or use the vehicle's safety belts to secure the restraint, following the instructions that came with that restraint, and also the instructions in this manual. When installing a child restraint with a top tether, you must also use either the lower anchors or the safety belts to properly secure the child restraint. A child restraint must never be installed using only the top tether and anchor.

In order to use the LATCH system in your vehicle, you need a child restraint equipped with LATCH attachments. The child restraint manufacturer will provide you with instructions on how to use the child restraint and its attachments. The following explains how to attach a child restraint with these attachments in your vehicle.

Your vehicle has lower anchors and top tether anchors. Your child restraint may have lower attachments and a top tether.

Not all vehicle seating positions or child restraints have lower anchors and attachments or top tether anchors and attachments.

Lower Anchors

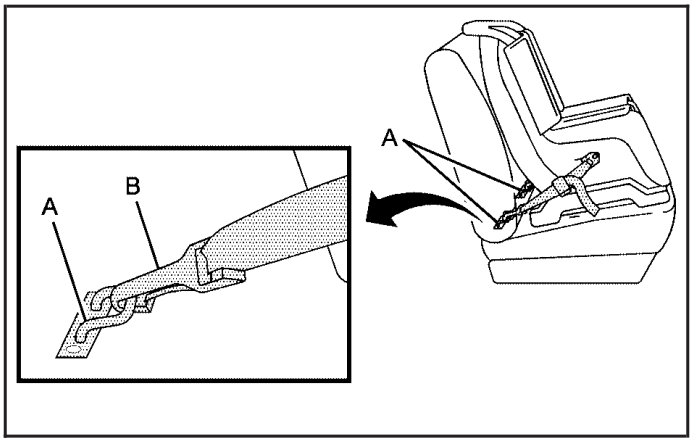

Lower anchors (A) are metal bars built into the vehicle. There are two lower anchors for each LATCH seating position that will accommodate a child restraint with lower attachments (B).

Downloaded from www.Manualslib.com manuals search engine

Top Tether Anchor

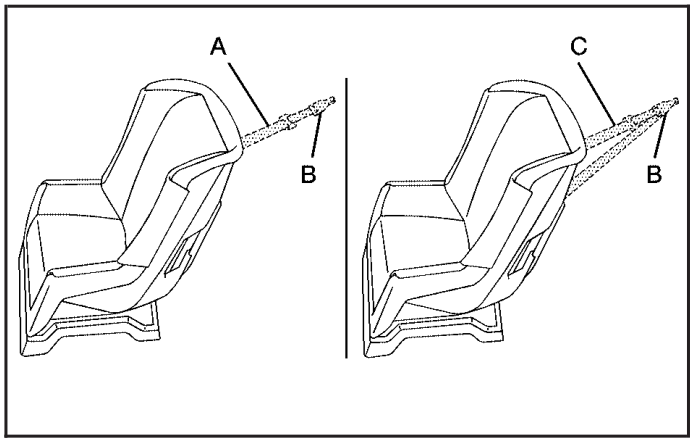

A top tether (A, C) anchors the top of the child restraint to the vehicle. A top tether anchor is built into the vehicle. The top tether attachment (B) on the child restraint connects to the top tether anchor in the vehicle in order to reduce the forward movement and rotation of the child restraint during driving or in a crash.

Your child restraint may have a single tether (A) or a dual tether (C). Either will have a single attachment (B) to secure the top tether to the anchor.

Some top tether-equipped child restraints are designed for use with or without the top tether being attached. Others require the top tether always to be attached. In Canada, the law requires that forward-facing child restraints have a top tether, and that the tether be attached. In the United States, some child restraints also have a top tether. Be sure to read and follow the instructions for your child restraint.

If the child restraint does not have a top tether, one can be obtained, in kit form, for many child restraints. Ask the child restraint manufacturer whether or not a kit is available.

Downloaded from www.Manualslib.com manuals search engine

Lower Anchor and Top Tether Anchor Locations

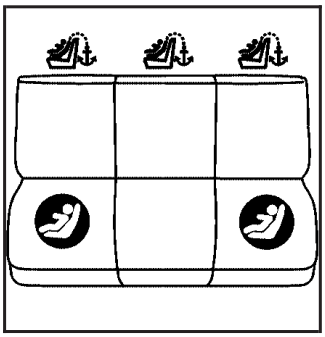

Rear Seat

(Top Tether Anchor): Seating positions with top tether anchors.

(Lower Anchor): Seating positions with two lower anchors.

Each outboard seating position in the rear seat has exposed metal lower anchors in the crease between the seatback and the seat cushion.

The top tether anchors are located on the back of the rear seatbacks. Be sure to use an anchor located on the same side of the vehicle as the seating position where the child restraint will be placed.

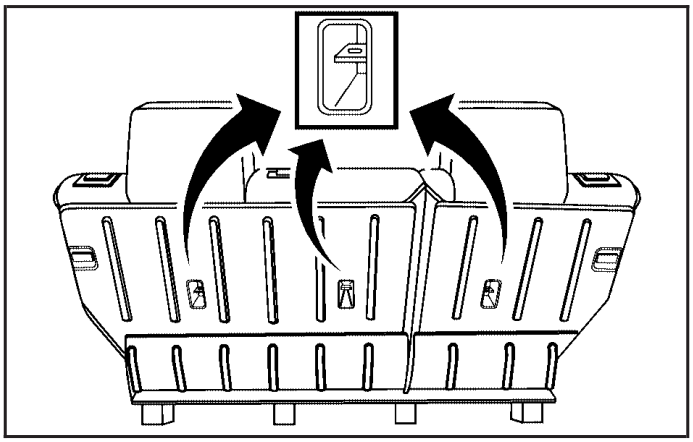

Do not secure a child restraint in the right front passenger's position if a national or local law requires that the top tether be attached, or if the instructions that come with the child restraint say that the top tether must be attached. There is no place to attach the top tether in this position.

Accident statistics show that children are safer if they are restrained in the rear rather than the front seat. See *Where to Put the Restraint on page 1-40* for additional information.

Downloaded from www.Manualslib.com manuals search engine

Securing a Child Restraint Designed for the LATCH System

⚠ CAUTION:

If a LATCH-type child restraint is not attached to anchors, the restraint will not be able to protect the child correctly. In a crash, the child could be seriously injured or killed. Make sure that a LATCH-type child restraint is properly installed using the anchors, or use the vehicle's safety belts to secure the restraint, following the instructions that came with that restraint, and also the instructions in this manual.

⚠ CAUTION:

Each top tether anchor and lower anchor in the vehicle is designed to hold only one child restraint. Attaching more than one child restraint to a single anchor could cause the anchor or attachment to come loose or even break during a crash. A child or others could be injured if this happens. To help prevent injury to people and damage to your vehicle, attach only one child restraint per anchor.

Downloaded from www.Manualslib.com manuals search engine

⚠ CAUTION:

Children can be seriously injured or strangled if a shoulder belt is wrapped around their neck and the safety belt continues to tighten. Secure any unused safety belts behind the child restraint so children cannot reach them. Pull the shoulder belt all the way out of the retractor to set the lock, if your vehicle has one, after the child restraint has been installed. Be sure to follow the instructions of the child restraint manufacturer.

Notice: **Contact between the child restraint or the LATCH attachment parts and the vehicle's safety belt assembly may cause damage to these parts. Make sure when securing unused safety belts behind the child restraint that there is no contact between the child restraint or the LATCH attachment parts and the vehicle's safety belt assembly.**

Folding an empty rear seat with the safety belts secured, may cause damage to the safety belt or the seat. When removing the child restraint, always remember to return the safety belts to their normal position before folding the rear seat.

1. Find the lower anchors, if equipped, for the desired seating position.
2. If the desired seating position does not have lower anchors, see *Securing a Child Restraint in a Rear Seat Position on page 1-47* for instructions on installing the child restraint using the safety belts.
3. Put the child restraint on the seat.
4. Attach and tighten the lower attachments on the child restraint to the lower anchors, if equipped, in the vehicle. The child restraint instructions will show you how.

Downloaded from www.Manualslib.com manuals search engine

5. If the child restraint is forward-facing, attach and tighten the top tether to the top tether anchor. Refer to the child restraint instructions and the following steps:

   5.1. Find the top tether anchor.

   5.2. Route and tighten the top tether according to your child restraint instructions and the following instructions:

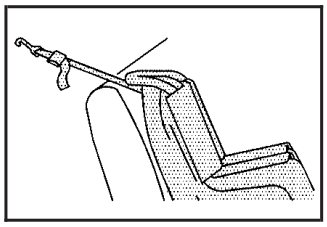

If the position you are using does not have a head restraint and you are using a single tether, route the tether over the seatback.

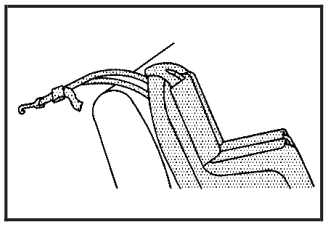

If the position you are using does not have a head restraint and you are using a dual tether, route the tether over the seatback.

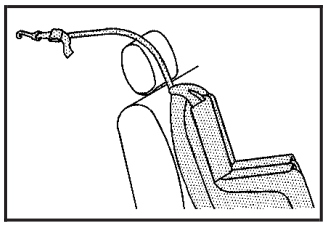

If the position you are using has a fixed head restraint and you are using a single tether, route the tether over the head restraint.

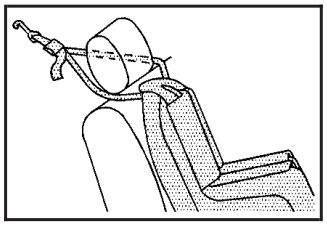

If the position you are using has a fixed head restraint and you are using a dual tether, route the tether around the head restraint.

6. Push and pull the child restraint in different directions to be sure it is secure.

Downloaded from www.Manualslib.com manuals search engine

Securing a Child Restraint in a Rear Seat Position

If your child restraint is equipped with the LATCH system, see *Lower Anchors and Tethers for Children (LATCH) on page 1-41*.

If your child restraint does not have the LATCH system, you will be using the lap-shoulder belt to secure the child restraint in this position. Be sure to follow the instructions that came with the child restraint. Secure the child in the child restraint when and as the instructions say.

1. Put the child restraint on the seat.
2. Pick up the latch plate, and run the lap and shoulder portions of the vehicle's safety belt through or around the restraint. The child restraint instructions will show you how.

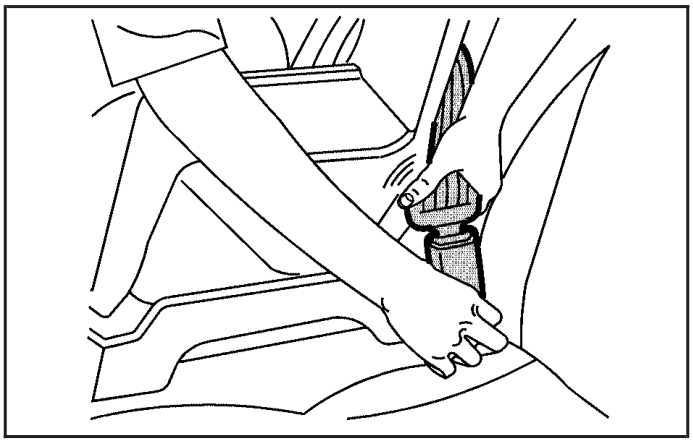

3. Buckle the belt. Make sure the release button is positioned so you would be able to unbuckle the safety belt quickly if you ever had to.

Downloaded from www.Manualslib.com manuals search engine

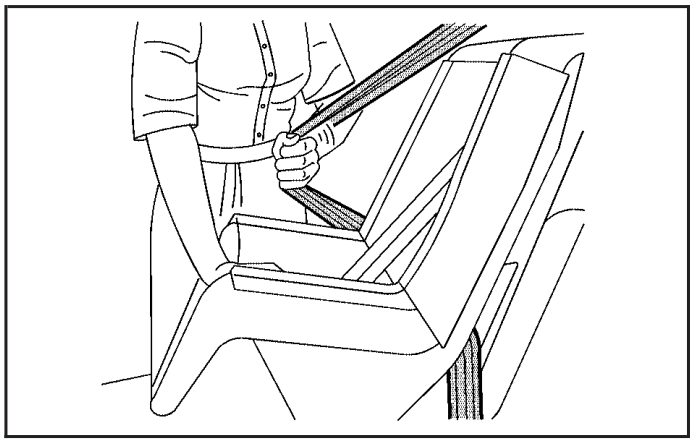

4. Pull the rest of the shoulder belt all the way out of the retractor to set the lock.

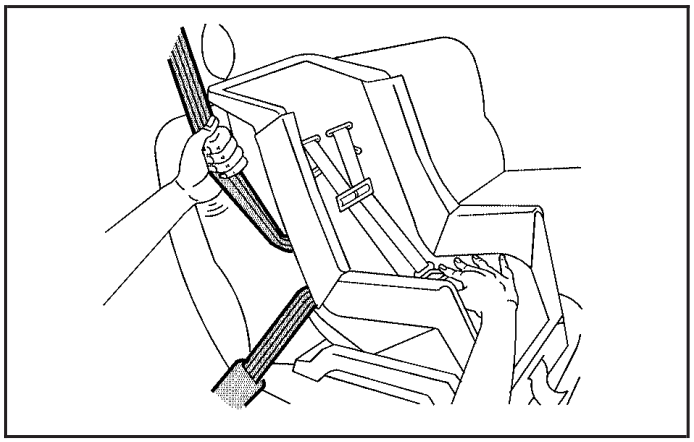

5. To tighten the belt, push down on the child restraint, pull the shoulder portion of the belt to tighten the lap portion of the belt and feed the shoulder belt back into the retractor. If you are using a forward-facing child restraint, you may find it helpful to use your knee to push down on the child restraint as you tighten the belt.

Downloaded from www.Manualslib.com manuals search engine

6. If your child restraint manufacturer recommends using a top tether, attach and tighten the top tether to the top tether anchor. Refer to the instructions that came with the child restraint and see *Lower Anchors and Tethers for Children (LATCH) on page 1-41*.
7. Push and pull the child restraint in different directions to be sure it is secure.

To remove the child restraint, if the top tether is attached to the top tether anchor, disconnect it. Unbuckle the vehicle's safety belt and let it go back all the way. The safety belt will move freely again and be ready to work for an adult or larger child passenger.

Securing a Child Restraint in the Right Front Seat Position

Your vehicle has a right front passenger's airbag. A rear seat is a safer place to secure a forward-facing child restraint. See *Where to Put the Restraint on page 1-40*.

In addition, your vehicle has a passenger sensing system. The passenger sensing system is designed to turn off the right front passenger's frontal airbag when an infant in a rear-facing infant seat or a small child in a forward-facing child restraint or booster seat is detected. See *Passenger Sensing System on page 1-63* and *Passenger Airbag Status Indicator on page 3-29* for more information on this including important safety information.

Downloaded from www.Manualslib.com manuals search engine

A label on your sun visor says, “Never put a rear-facing child seat in the front.” This is because the risk to the rear-facing child is so great, if the airbag deploys.

⚠ CAUTION:

A child in a rear-facing child restraint can be seriously injured or killed if the right front passenger’s airbag inflates. This is because the back of the rear-facing child restraint would be very close to the inflating airbag.

Even though the passenger sensing system is designed to turn off the passenger’s frontal airbag if the system detects a rear-facing child restraint, no system is fail-safe, and no one can guarantee that an airbag will not deploy under some unusual circumstance, even though it is turned off. We recommend that rear-facing child restraints be secured in the rear seat, even if the airbag is off.

If you need to secure a forward-facing child restraint in the right front seat position, move the seat as far back as it will go before securing the forward-facing child restraint. See *Six-Way Power Seats on page 1-3*.

If your child restraint is equipped with the LATCH system, see *Lower Anchors and Tethers for Children (LATCH) on page 1-41*.

There is no top tether anchor in the right front passenger’s position. Do not secure a child restraint in this position if a national or local law requires that the top tether be anchored or if the instructions that come with the child restraint say that the top tether must be anchored. See *Lower Anchors and Tethers for Children (LATCH) on page 1-41* if the child restraint has a top tether.

Downloaded from www.Manualslib.com manuals search engine

You will be using the lap-shoulder belt to secure the child restraint in this position. Be sure to follow the instructions that came with the child restraint. Secure the child in the child restraint when and as the instructions say.

1. Your vehicle has a right front passenger's frontal airbag. See *Passenger Sensing System on page 1-63*. General Motors recommends that rear-facing child restraints be secured in a rear seat, even if the airbag is off. If your child restraint is forward-facing, move the seat as far back as it will go before securing the child restraint in this seat. See *Six-Way Power Seats on page 1-3*.

   When the passenger sensing system has turned off the right front passenger's frontal airbag, the off indicator in the passenger airbag status indicator should light and stay lit when you turn the ignition to ON or START. See *Passenger Airbag Status Indicator on page 3-29*.

2. Put the child restraint on the seat.

3. Pick up the latch plate, and run the lap and shoulder portions of the vehicle's safety belt through or around the restraint. The child restraint instructions will show you how.

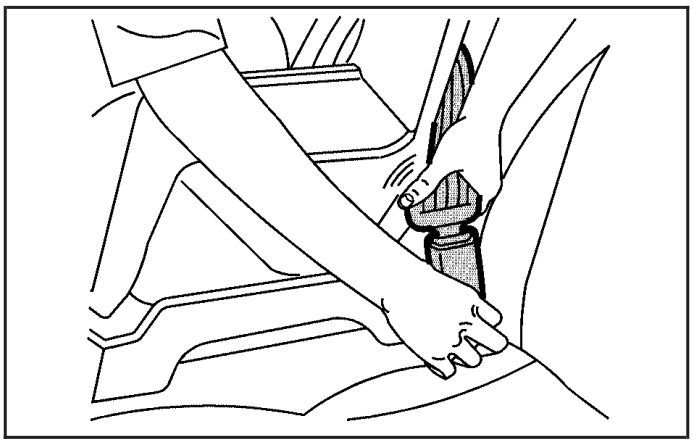

4. Buckle the belt. Make sure the release button is positioned so you would be able to unbuckle the safety belt quickly if you ever had to.

Downloaded from www.Manualslib.com manuals search engine

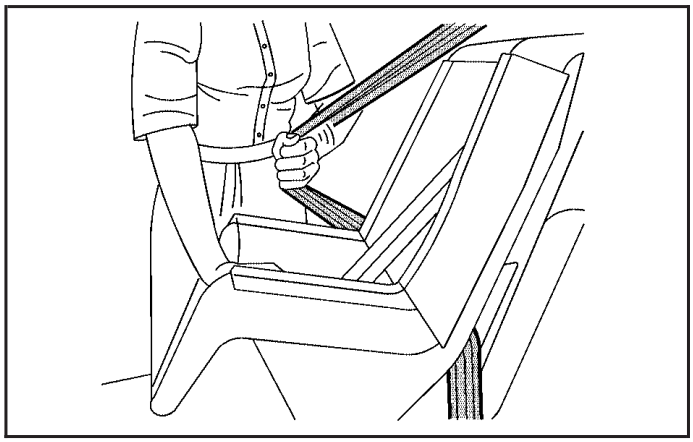

5. Pull the rest of the shoulder belt all the way out of the retractor to set the lock.

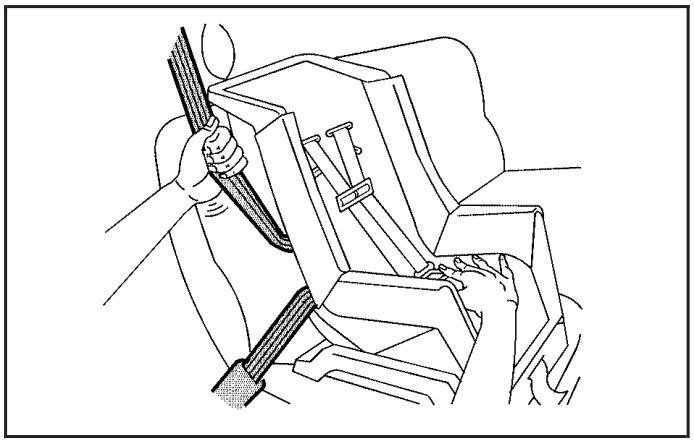

6. To tighten the belt, push down on the child restraint, pull the shoulder portion of the belt to tighten the lap portion of the belt and feed the shoulder belt back into the retractor. If you are using a forward-facing child restraint, you may find it helpful to use your knee to push down on the child restraint as you tighten the belt. You should not be able to pull more of the belt from the retractor once the lock has been set.
7. Push and pull the child restraint in different directions to be sure it is secure.
8. If the airbag is off, the off indicator on the instrument panel will be lit and stay lit when the key is turned to ON or START.

Downloaded from www.Manualslib.com manuals search engine

If a child restraint has been installed and the on indicator is lit, turn the vehicle off. Remove the child restraint from the vehicle and reinstall the child restraint.

If after reinstalling the child restraint and restarting the vehicle, the on indicator is still lit, check to make sure that the vehicle's seatback is not pressing the child restraint into the seat cushion. If this happens, slightly recline the vehicle's seatback and adjust the seat cushion if possible. Also make sure the child restraint is not trapped under the vehicle head restraint. If this happens, adjust the head restraint.

If the on indicator is still lit, secure the child in the child restraint in a rear seat position in the vehicle and check with your dealer.

To remove the child restraint, just unbuckle the vehicle's safety belt and let it go back all the way. The safety belt will move freely again and be ready to work for an adult or larger child passenger. When the safety belt is not in use, slide the latch plate up the safety belt webbing. The latch plate should rest on the stitching on the safety belt, near the guide loop on the side wall.

Airbag System

Your vehicle has a frontal airbag for the driver and a frontal airbag for the right front passenger. Your vehicle may also have roof-mounted side impact airbags designed for either side impact or rollover deployment. Roof-mounted side impact airbags are available for the driver and the passenger seated directly behind the driver and for the right front passenger and the passenger seated directly behind that passenger.

If your vehicle has roof-mounted side impact airbags, the words AIR BAG will appear on the airbag covering on the sidewall trim near the driver's and right front passenger's window.

Frontal airbags are designed to help reduce the risk of injury from the force of an inflating frontal airbag. But these airbags must inflate very quickly to do their job and comply with federal regulations.

Downloaded from www.Manualslib.com manuals search engine

Here are the most important things to know about the airbag system:

⚠ CAUTION:

You can be severely injured or killed in a crash if you are not wearing your safety belt — even if you have airbags. Wearing your safety belt during a crash helps reduce your chance of hitting things inside the vehicle or being ejected from it. Airbags are "supplemental restraints" to the safety belts. All airbags are designed to work with safety belts but do not replace them.

Frontal airbags for the driver and right front passenger are designed to deploy in moderate to severe frontal and near frontal crashes. They are not designed to inflate in rollover, rear crashes, or in many side crashes.

CAUTION: (Continued)

CAUTION: (Continued)

And, for some unrestrained occupants, frontal airbags may provide less protection in frontal crashes than more forceful airbags have provided in the past.

Roof-mounted side impact airbags are designed to inflate in moderate to severe crashes where something hits the side of your vehicle. They are not designed to inflate in frontal or in rear crashes. If the vehicle is equipped with rollover capable airbags, it has been designed to deploy the roof-mounted side impact airbags in the event of a vehicle rollover. Everyone in your vehicle should wear a safety belt properly — whether or not there is an airbag for that person.

Downloaded from www.Manualslib.com manuals search engine

⚠ CAUTION:

Both frontal and roof-mounted side impact airbags inflate with great force, faster than the blink of an eye. If you are too close to an inflating airbag, as you would be if you were leaning forward, it could seriously injure you. Safety belts help keep you in position for airbag inflation before and during a crash. Always wear your safety belt even with frontal airbags. The driver should sit as far back as possible while still maintaining control of the vehicle. Occupants should not lean on or sleep against the door.

⚠ CAUTION:

Anyone who is up against, or very close to, any airbag when it inflates can be seriously injured or killed. Airbags plus lap-shoulder belts offer the best protection for adults, but not for young children and infants. Neither the vehicle's safety belt system nor its airbag system is designed for them. Young children and infants need the protection that a child restraint system can provide. Always secure children properly in your vehicle. To read how, see *Older Children on page 1-30* or *Infants and Young Children on page 1-32*.

Downloaded from www.Manualslib.com manuals search engine

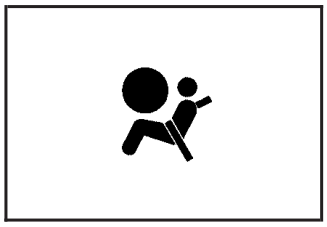

There is an airbag readiness light on the instrument panel cluster, which shows the airbag symbol.

The system checks the airbag electrical system for malfunctions. The light tells you if there is an electrical problem. See *Airbag Readiness Light on page 3-28* for more information.

Where Are the Airbags?

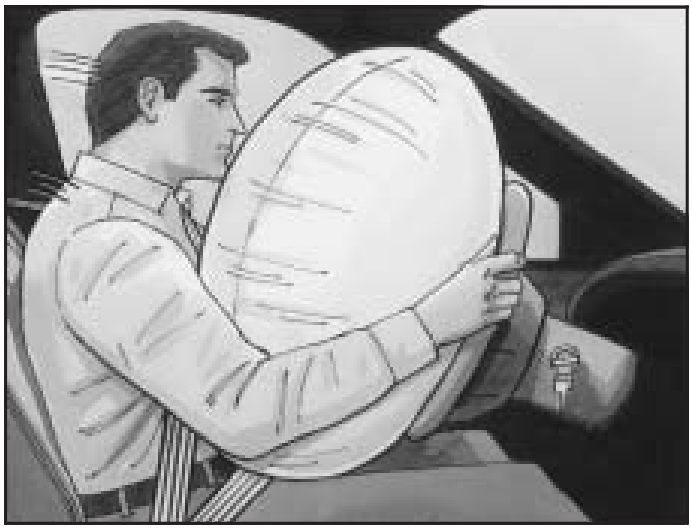

The driver's airbag is in the middle of the steering wheel.

Downloaded from www.Manualslib.com manuals search engine

The right front passenger's airbag is in the instrument panel on the passenger's side.

If your vehicle has a roof-mounted airbag for the driver and the person seated directly behind the driver, it is located in the ceiling above the side windows.

Downloaded from www.Manualslib.com manuals search engine

If your vehicle has a roof-mounted airbag for the right front passenger and the person directly behind that passenger, it is located in the ceiling above the side windows.

⚠ CAUTION:

If something is between an occupant and an airbag, the bag might not inflate properly or it might force the object into that person causing severe injury or even death. The path of an inflating airbag must be kept clear. Do not put anything between an occupant and an airbag, and do not attach or put anything on the steering wheel hub or on or near any other airbag covering. And, if your vehicle has roof-mounted side impact airbags, never secure anything to the roof of your vehicle by routing the rope or tiedown through any door or window opening. If you do, the path of an inflating side impact airbag will be blocked. The path of an inflating airbag must be kept clear.

Downloaded from www.Manualslib.com manuals search engine

When Should an Airbag Inflate?

The driver's and right front passenger's frontal airbags are designed to inflate in moderate to severe frontal or near-frontal crashes. But they are designed to inflate only if the impact exceeds a predetermined deployment threshold. Deployment thresholds take into account a variety of desired deployment and non-deployment events and are used to predict how severe a crash is likely to be in time for the airbags to inflate and help restrain the occupants. Whether your frontal airbags will or should deploy is not based on how fast your vehicle is traveling. It depends largely on what you hit, the direction of the impact and how quickly your vehicle slows down.

In addition, your vehicle has "dual stage" frontal airbags, which adjust the restraint according to crash severity. Your vehicle is equipped with electronic frontal sensors, which help the sensing system distinguish between a moderate frontal impact and a more severe frontal impact. For moderate frontal impacts, these airbags inflate at a level less than full deployment. For more severe frontal impacts, full deployment occurs.

If the front of your vehicle goes straight into a wall that does not move or deform, the threshold level for the reduced deployment is about 11 to 18 mph (17.5 to 28.9 km/h), and the threshold level for a full deployment is about 18 to 23 mph (28.9 to 37 km/h). (The threshold level can vary, however, with specific vehicle design, so that it can be somewhat above or below this range.)

Frontal airbags may inflate at different crash speeds. For example:

- If the vehicle hits a stationary object, the airbags could inflate at a different crash speed than if the object were moving.
- If the vehicle hits an object that deforms, the airbags could inflate at a different crash speed than if the object does not deform.
- If the vehicle hits a narrow object (like a pole) the airbags could inflate at a different crash speed than if the vehicle hits a wide object (like a wall).
- If the vehicle goes into an object at an angle the airbags could inflate at a different crash speed than if the vehicle goes straight into the object.

Downloaded from www.Manualslib.com manuals search engine

The frontal airbags (driver and right front passenger) are not intended to inflate during vehicle rollovers, rear impacts, or in many side impacts.

Your vehicle has seat position sensors which enable the sensing system to monitor the position of the driver's seat and the right front passenger's seat. Seat position sensors provide information that is used to determine if the airbags should deploy at a reduced level or at full deployment.

Your vehicle may or may not have a roof-mounted side impact airbag and rollover sensor. See *Airbag System on page 1-53*. These "rollover capable" airbags are intended to inflate in moderate to severe side crashes or during a rollover. A roof-mounted side impact airbag will inflate if the crash severity is above the system's designed "threshold level." The threshold level can vary with specific vehicle design. Roof-mounted side impact airbags are not intended to inflate in frontal or near-frontal impacts, or rear impacts.

In any particular crash, no one can say whether an airbag should have inflated simply because of the damage to a vehicle or because of what the repair costs were. For frontal airbags, inflation is determined by what the vehicle hits, the angle of the impact, and how quickly the vehicle slows down. For roof-mounted side impact airbags, inflation is determined by the location and severity of the impact.

The airbag system is designed to work properly under a wide range of conditions, including off-road usage. Observe safe driving speeds, especially on rough terrain. As always, wear your safety belt. See *Off-Road Driving on page 4-17* for tips on off-road driving.

Downloaded from www.Manualslib.com manuals search engine

What Makes an Airbag Inflate?

In an impact of sufficient severity, the airbag sensing system detects that the vehicle is in a crash. In the case of a “rollover capable” roof-mounted side impact airbag, the sensing system detects that the vehicle is about to roll over. The sensing system triggers a release of gas from the inflator, which inflates the airbag. The inflator, airbag, and related hardware are all part of the airbag modules inside the steering wheel and in the instrument panel in front of the right front passenger. For vehicles with roof-mounted side impact airbags, the airbag modules are located in the ceiling of the vehicle, near the side windows.

How Does an Airbag Restrain?

In moderate to severe frontal or near frontal collisions, even belted occupants can contact the steering wheel or the instrument panel. In moderate to severe side collisions, even belted occupants can contact the inside of the vehicle. The airbag supplements the protection provided by safety belts. Airbags distribute the force of the impact more evenly over the occupant’s upper body, stopping the occupant more gradually. But the frontal airbags would not help you in many types of collisions, including rollovers, rear impacts, and many side impacts, primarily because an occupant’s motion is not toward the airbag. Roof-mounted side impact airbags would not help you in many types of collisions, including many frontal or near frontal collisions, and rear impacts, primarily because an occupant’s motion is not toward those airbags. Airbags should never be regarded as anything more than a supplement to safety belts, and then only in moderate to severe frontal or near-frontal collisions for the driver’s and right front passenger’s frontal airbags, and only in moderate to severe side collisions or rollovers for the roof-mounted side impact airbags.

Downloaded from www.Manualslib.com manuals search engine

What Will You See After an Airbag Inflates?

After an airbag inflates, it quickly deflates, so quickly that some people may not even realize the airbag inflated. Some components of the airbag module — the steering wheel hub for the driver's airbag, the instrument panel for the right front passenger's bag or the ceiling of your vehicle near the side windows — will be hot for a short time. The parts of the bag that come into contact with you may be warm, but not too hot to touch. There will be some smoke and dust coming from the vents in the deflated airbags. Airbag inflation does not prevent the driver from seeing or being able to steer the vehicle, nor does it stop people from leaving the vehicle.

⚠ CAUTION:

When an airbag inflates, there is dust in the air. This dust could cause breathing problems for people with a history of asthma or other breathing trouble. To avoid this, everyone in the vehicle should get out as soon as it is safe to do so. If you have breathing problems but cannot get out of the vehicle after an airbag inflates, then get fresh air by opening a window or a door. If you experience breathing problems following an airbag deployment, you should seek medical attention.

Your vehicle has a feature that will automatically unlock the doors (if equipped), turn the interior lamps on, and flash the hazard warning flashers when the airbags inflate (if battery power is available). You can lock the doors again, and turn the interior lamps and hazard warning flashers off by using the door lock, and the interior lamp and the hazard warning flasher controls.

Downloaded from www.Manualslib.com manuals search engine

In many crashes severe enough to inflate an airbag, windshields are broken by vehicle deformation. Additional windshield breakage may also occur from the right front passenger airbag.

- Airbags are designed to inflate only once. After an airbag inflates, you will need some new parts for your airbag system. If you do not get them, the airbag system will not be there to help protect you in another crash. A new system will include airbag modules and possibly other parts. The service manual for your vehicle covers the need to replace other parts.
- Your vehicle is equipped with a crash sensing and diagnostic module which records information after a crash. See *Vehicle Data Collection and Event Data Recorders on page 7-9*.
- Let only qualified technicians work on your airbag system. Improper service can mean that your airbag system will not work properly. See your dealer for service.

Passenger Sensing System

Your vehicle has a passenger sensing system for the right front passenger's position. A passenger airbag status indicator on the instrument panel will be visible when you turn your ignition key to ON or START. The words ON and OFF or the symbol for on and off, will be visible on the instrument panel during the system check. When the system check is complete, either the word ON or the word OFF, or the symbol for on or the symbol for off will be visible. See *Passenger Airbag Status Indicator on page 3-29*.

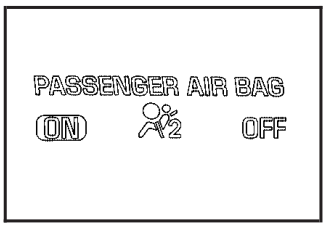

Passenger Airbag Status Indicator – United States

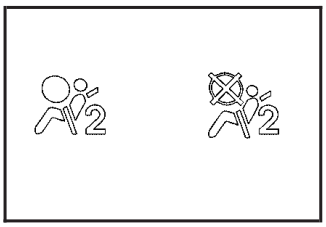

Passenger Airbag Status Indicator – Canada

The passenger sensing system will turn off the right front passenger's frontal airbag under certain conditions. The driver's airbag and the side airbags are not part of the passenger sensing system.

Downloaded from www.Manualslib.com manuals search engine

The passenger sensing system works with sensors that are part of the right front passenger's seat and safety belt. The sensors are designed to detect the presence of a properly-seated occupant and determine if the passenger's frontal airbag should be enabled (may inflate) or not.

Accident statistics show that children are safer if they are restrained in the rear rather than the front seat. General Motors recommends that child restraints be secured in a rear seat, including an infant riding in a rear-facing infant seat, a child riding in a forward-facing child seat and an older child riding in a booster seat.

Your vehicle has a rear seat that will accommodate a rear-facing child restraint. A label on your sun visor says, "Never put a rear-facing child seat in the front." This is because the risk to the rear-facing child is so great, if the airbag deploys.

⚠ CAUTION:

A child in a rear-facing child restraint can be seriously injured or killed if the right front passenger's airbag inflates. This is because the back of the rear-facing child restraint would be very close to the inflating airbag.

Even though the passenger sensing system is designed to turn off the passenger's frontal airbag if the system detects a rear-facing child restraint, no system is fail-safe, and no one can guarantee that an airbag will not deploy under some unusual circumstance, even though it is turned off. We recommend that rear-facing child restraints be secured in the rear seat, even if the airbag is off.

If you need to secure a forward-facing child restraint in the right front seat, always move the front passenger seat as far back as it will go. It is better to secure the child restraint in a rear seat.

Downloaded from www.Manualslib.com manuals search engine

The passenger sensing system is designed to turn off the right front passenger's frontal airbag if:

- the right front passenger seat is unoccupied
- the system determines that an infant is present in a rear-facing infant seat
- the system determines that a small child is present in a forward-facing child restraint
- the system determines that a small child is present in a booster seat
- a right front passenger takes his/her weight off of the seat for a period of time
- the right front passenger seat is occupied by a smaller person, such as a child who has outgrown child restraints
- or if there is a critical problem with the airbag system or the passenger sensing system.

When the passenger sensing system has turned off the passenger's frontal airbag, the off indicator on the instrument panel will light and stay lit to remind you that the airbag is off.

If a child restraint has been installed and the on indicator is lit, turn the vehicle off. Remove the child restraint from the vehicle and reinstall the child restraint following the child restraint manufacturer's directions and refer to *Securing a Child Restraint in the Right Front Seat Position on page 1-49*.

If after reinstalling the child restraint and restarting the vehicle, the on indicator is still lit, check to make sure that the vehicle's seatback is not pressing the child restraint into the seat cushion. If this happens, slightly recline the vehicle's seatback and adjust the seat cushion if possible. Also make sure the child restraint is not trapped under the vehicle head restraint. If this happens, adjust the head restraint.

If the on indicator is still lit, secure the child in the child restraint in a rear seat position in the vehicle and check with your dealer.

The passenger sensing system is designed to enable (may inflate) the right front passenger's frontal airbag anytime the system senses that a person of adult size is sitting properly in the right front passenger's seat. When the passenger sensing system has allowed the airbag to be enabled, the on indicator will light and stay lit to remind you that the airbag is active.

Downloaded from www.Manualslib.com manuals search engine

For some children who have outgrown child restraints and for very small adults, the passenger sensing system may or may not turn off the right front passenger's frontal airbag, depending upon the person's seating posture and body build. Everyone in your vehicle who has outgrown child restraints should wear a safety belt properly — whether or not there is an airbag for that person.

If a person of adult-size is sitting in the right front passenger's seat, but the off indicator is lit, it could be because that person is not sitting properly in the seat. If this happens, turn the vehicle off and ask the person to place the seatback in the fully upright position, then sit upright in the seat, centered on the seat cushion, with the person's legs comfortably extended. Restart the vehicle and have the person remain in this position for about two minutes. This will allow the system to detect that person and then enable the passenger's airbag.

Downloaded from www.Manualslib.com manuals search engine

⚠ CAUTION:

If the airbag readiness light in the instrument panel cluster ever comes on and stays on, it means that something may be wrong with the airbag system. If this ever happens, have the vehicle serviced promptly, because an adult-size person sitting in the right front passenger's seat may not have the protection of the frontal airbag. See *Airbag Readiness Light on page 3-28* for more on this, including important safety information.

Aftermarket equipment, such as seat covers, can affect how well the passenger sensing system operates. You may want to consider not using seat covers or other aftermarket equipment if your vehicle has the passenger sensing system. See *Adding Equipment to Your Airbag-Equipped Vehicle on page 1-68* for more information about modifications that can affect how the system operates.

⚠ CAUTION:

Stowing of articles under the passenger's seat or between the passenger's seat cushion and seatback may interfere with the proper operation of the passenger sensing system.

Downloaded from www.Manualslib.com manuals search engine

Servicing Your Airbag-Equipped Vehicle

Airbags affect how your vehicle should be serviced. There are parts of the airbag system in several places around your vehicle. You do not want the system to inflate while someone is working on your vehicle. Your dealer and the service manual have information about servicing your vehicle and the airbag system. To purchase a service manual, see *Service Publications Ordering Information on page 7-15*.

⚠ CAUTION:

For up to 10 seconds after the ignition key is turned off and the battery is disconnected, an airbag can still inflate during improper service. You can be injured if you are close to an airbag when it inflates. Avoid yellow wires, wires wrapped with yellow tape or yellow connectors. They are probably part of the airbag system. Be sure to follow proper service procedures, and make sure the person performing work for you is qualified to do so.

The airbag system does not need regular maintenance.

Adding Equipment to Your Airbag-Equipped Vehicle

Q: Is there anything I might add to the front or sides of the vehicle that could keep the airbags from working properly?

A: Yes. If you add things that change your vehicle's frame, bumper system, front end or side sheet metal or height, they may keep the airbag system from working properly. Also, the airbag system may not work properly if you relocate any of the airbag sensors. If you have any questions about this, you should contact Customer Assistance before you modify your vehicle. The phone numbers and addresses for Customer Assistance are in Step Two of the Customer Satisfaction Procedure in this manual. See *Customer Satisfaction Procedure on page 7-2*

Downloaded from www.Manualslib.com manuals search engine

Q: Because I have a disability, I have to get my vehicle modified. How can I find out whether this will affect my airbag system?

A: Changing or moving any parts of the front seats, safety belts, the airbag sensing and diagnostic module, or the instrument panel can affect the operation of the airbag system. If you have questions, call Customer Assistance. The phone numbers and addresses for Customer Assistance are in Step Two of the Customer Satisfaction Procedure in this manual. See *Customer Satisfaction Procedure on page 7-2*.

Restraint System Check

Checking the Restraint Systems

Now and then, make sure the safety belt reminder light and all your belts, buckles, latch plates, retractors and anchorages are working properly. Look for any other loose or damaged safety belt system parts. If you see anything that might keep a safety belt system from doing its job, have it repaired.

Torn or frayed safety belts may not protect you in a crash. They can rip apart under impact forces. If a belt is torn or frayed, get a new one right away.

Also look for any opened or broken airbag covers, and have them repaired or replaced. (The airbag system does not need regular maintenance.)

Notice: **If you damage the covering for the driver's or the right front passenger's airbag, or the side impact airbag covering (if equipped) on the ceiling near the side windows, the airbag may not work properly. You may have to replace the airbag module in the steering wheel, both the airbag module and the instrument panel for the right front passenger's airbag, or side impact airbag module and ceiling covering for roof-mounted side impact airbags (if equipped.) Do not open or break the airbag coverings.**

Downloaded from www.Manualslib.com manuals search engine

Replacing Restraint System Parts After a Crash

⚠ CAUTION:

A crash can damage the restraint systems in your vehicle. A damaged restraint system may not properly protect the person using it, resulting in serious injury or even death in a crash. To help make sure your restraint systems are working properly after a crash, have them inspected and any necessary replacements made as soon as possible.

If you have had a crash, do you need new belts or LATCH system parts?

After a very minor collision, nothing may be necessary. But if the belts were stretched, as they would be if worn during a more severe crash, then you need new parts.

If the LATCH system was being used during a more severe crash, you may need new LATCH system parts.

If belts are cut or damaged, replace them. Collision damage also may mean you will need to have LATCH system, safety belt or seat parts repaired or replaced. New parts and repairs may be necessary even if the belt or LATCH system was not being used at the time of the collision.

If an airbag inflates, you will need to replace airbag system parts. See the part on the airbag system earlier in this section.

If the frontal airbags inflate you will also need to replace the driver and front passenger's safety belt retractor assembly. Be sure to do so. Then the new retractor assembly will be there to help protect you in a collision.

After a crash you may need to replace the driver and front passenger's safety belt retractor assemblies, even if the frontal airbags have not deployed. The driver and front passenger's safety belt retractor assemblies contain the safety belt pretensioners. Have your safety belt pretensioners checked if your vehicle has been in a collision, or if your airbag readiness light stays on after you start your vehicle or while you are driving. See *Airbag Readiness Light on page 3-28*.

Downloaded from www.Manualslib.com manuals search engine

Section 2 Features and Controls

Keys 2-2
Remote Keyless Entry System 2-4
Remote Keyless Entry System Operation 2-5

Doors and Locks 2-7
Door Locks 2-7
Power Door Locks 2-8
Programmable Automatic Door Locks 2-8
Lockout Protection 2-8
Swing-gate 2-9

Windows 2-10
Power Windows 2-11
Sun Visors 2-12

Theft-Deterrent Systems 2-12
Content Theft-Deterrent 2-12
Passlock® 2-14

Starting and Operating Your Vehicle 2-14
New Vehicle Break-In 2-14
Ignition Positions 2-15
Retained Accessory Power (RAP) 2-16
Starting the Engine 2-16
Engine Coolant Heater 2-17
Automatic Transmission Operation 2-18
Manual Transmission Operation 2-21
Full-Time Four-Wheel Drive 2-22
Parking Brake 2-27
Shifting Into Park (P) (Automatic Transmission) 2-28
Shifting Out of Park (P) (Automatic Transmission) 2-30
Parking Your Vehicle (Manual Transmission) 2-30
Parking Over Things That Burn 2-31
Engine Exhaust 2-31
Running the Engine While Parked 2-32

Mirrors 2-33
Automatic Dimming Rearview Mirror with Compass and Temperature Display 2-33
Outside Power Mirrors 2-35
Outside Convex Mirror 2-36

OnStar® System 2-36

Universal Home Remote System 2-38
Universal Home Remote System Operation 2-39

Storage Areas 2-43
Glove Box 2-43
Cupholder(s) 2-43
Front Seat Storage Net 2-43
Front Armrest Storage Area 2-43
Luggage Carrier 2-43
Rear Storage Area 2-46
Convenience Net 2-46
Cargo Cover 2-46
Cargo Tie Downs 2-46

Sunroof 2-47

Downloaded from www.Manualslib.com manuals search engine

Keys

⚠ CAUTION:

Leaving children in a vehicle with the ignition key is dangerous for many reasons. They could operate the power windows or other controls or even make the vehicle move. The children or others could be badly injured or even killed. Do not leave the keys in a vehicle with children.

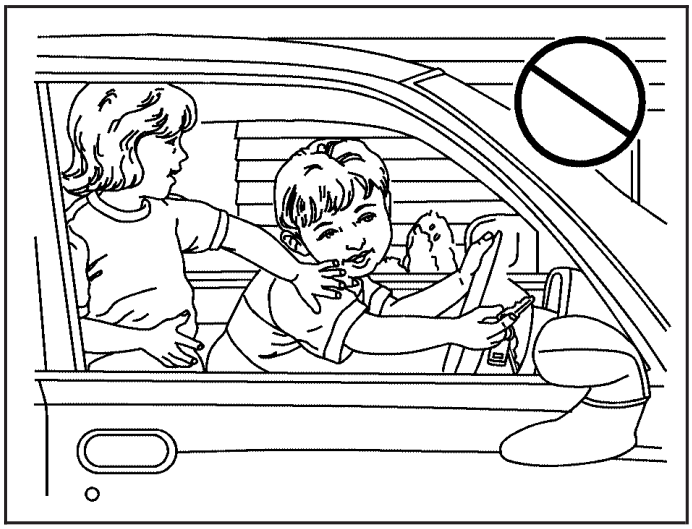

Downloaded from www.Manualslib.com manuals search engine

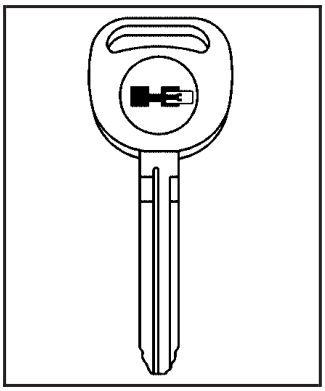

There is one double-sided key for the ignition, and driver's door lock.

When a new vehicle is delivered, the dealer provides the owner with a pair of identical keys and a key code number.

The key code number tells your dealer or a qualified locksmith how to make extra keys. Keep this number in a safe place. If you lose your keys, you will be able to have new ones made easily using this number. Your dealer should also have this number.

Notice: **If you ever lock your keys in your vehicle, you may have to damage the vehicle to get in. Be sure you have spare keys.**

If you ever do get locked out of your vehicle call the GM Roadside Assistance Center. See *Roadside Assistance Program on page 7-6*.

If your vehicle is equipped with the OnStar® system with an active subscription and you lock your keys inside the vehicle, OnStar® may be able to send a command to unlock your vehicle. See *OnStar® System on page 2-36* for more information.

Downloaded from www.Manualslib.com manuals search engine

Remote Keyless Entry System

Your keyless entry system operates on a radio frequency subject to Federal Communications Commission (FCC) Rules and with Industry Canada.

This device complies with Part 15 of the FCC Rules. Operation is subject to the following two conditions:

1. This device may not cause interference.
2. This device must accept any interference received, including interference that may cause undesired operation of the device.

This device complies with RSS-210 of Industry Canada. Operation is subject to the following two conditions:

1. This device may not cause interference.
2. This device must accept any interference received, including interference that may cause undesired operation of the device.

Changes or modifications to this system by other than an authorized service facility could void authorization to use this equipment.

At times you may notice a decrease in operating range. This is normal for any remote keyless entry system. If the transmitter does not work or if you have to stand closer to your vehicle for the transmitter to work, try this:

- Check the distance. You may be too far from your vehicle. You may need to stand closer during rainy or snowy weather.
- Check the location. Other vehicles or objects may be blocking the signal. Take a few steps to the left or right, hold the transmitter higher, and try again.
- Check to determine if battery replacement is necessary. See “Battery Replacement” under *Remote Keyless Entry System Operation on page 2-5*.
- If you are still having trouble, see your dealer or a qualified technician for service.

Downloaded from www.Manualslib.com manuals search engine

Remote Keyless Entry System Operation

You can lock and unlock the vehicle's doors and disarm or arm the theft-deterrent system from about 3 feet (1 m) up to 30 feet (9 m) away using the remote keyless entry transmitter. See *Content Theft-Deterrent on page 2-12* for additional information.

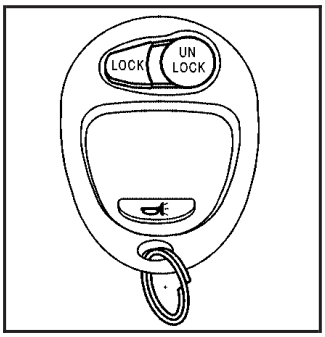

UNLOCK: Press this button to unlock the driver's door and turn on the interior lamps. The parking lamps may also flash, and the horn may chirp, when this button is pressed.

Press the unlock button again within three seconds and all of the doors will unlock.

LOCK: Press this button to lock all the doors. The parking lamps may also flash and the horn may chirp when this button is pressed.

If a door is open or ajar when the lock button is pressed, the doors will lock, but the theft-deterrent system will not arm until the open door is closed.

You can program different feedback modes through the Driver Information Center (DIC). To program the feedback modes, see "Remote Keyless Entry Feedback" under *DIC Controls and Displays on page 3-41*.

(Panic): Press this button to make the horn sound and the headlamps and taillamps flash for up to 30 seconds. To turn them off, do one of these three things: wait for 30 seconds; press the panic button again; or start the vehicle.

Downloaded from www.Manualslib.com manuals search engine

Matching Transmitter(s) to Your Vehicle

Each remote keyless entry transmitter is coded to prevent another transmitter from unlocking your vehicle. If a transmitter is lost or stolen, a replacement can be purchased through your dealer. Remember to bring any remaining transmitters with you when you go to your dealer. When the dealer matches the replacement transmitter to your vehicle, any remaining transmitters must also be matched. Once your dealer has coded the new transmitter, the lost transmitter will not unlock your vehicle. Each vehicle can have a maximum of four transmitters matched to it.

Battery Replacement

Under normal use, the battery in the remote keyless entry transmitter should last about two years.

You can tell the battery is weak if the transmitter will not work at the normal range in any location. If you have to get close to your vehicle before the transmitter works, it is probably time to change the battery.

Notice: **When replacing the battery, use care not to touch any of the circuitry. Static from your body transferred to these surfaces may damage the transmitter.**

To replace the battery, do the following:

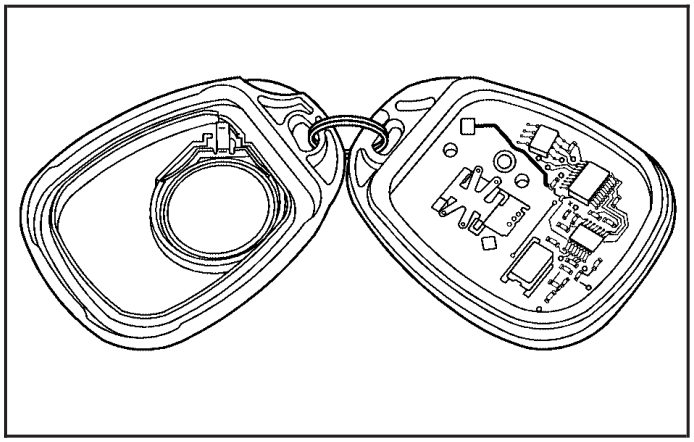

1. Insert a coin, or similar object, in the slot between the covers of the transmitter housing. Gently pry the transmitter apart.
2. Remove and replace the battery with a three-volt CR2032 or equivalent battery.
3. Align the covers and snap them together.
4. Check the operation of the transmitter.

Downloaded from www.Manualslib.com manuals search engine

Doors and Locks

Door Locks

⚠ CAUTION:

Unlocked doors can be dangerous.

- **Passengers — especially children — can easily open the doors and fall out of a moving vehicle. When a door is locked, the handle will not open it. You increase the chance of being thrown out of the vehicle in a crash if the doors are not locked. So, wear safety belts properly and lock the doors whenever you drive.**
- **Young children who get into unlocked vehicles may be unable to get out. A child can be overcome by extreme heat and can suffer permanent injuries or even death from heat stroke. Always lock your vehicle whenever you leave it.**
- **Outsiders can easily enter through an unlocked door when you slow down or stop your vehicle. Locking your doors can help prevent this from happening.**

There are several ways to lock and unlock your vehicle.

From the outside, use the key in the driver's door or use the remote keyless entry transmitter.

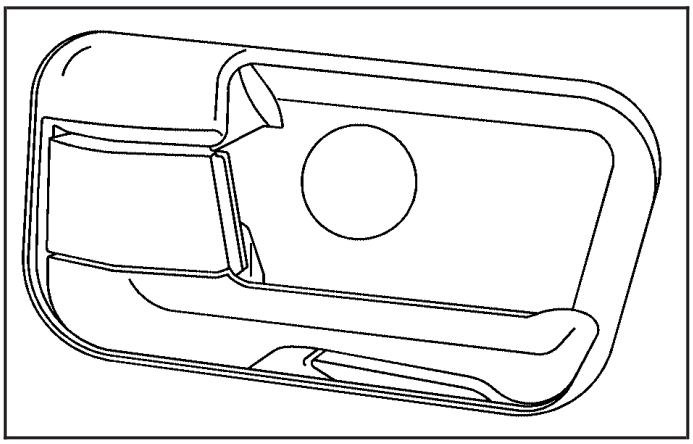

From the inside, use the manual lock levers or power door lock switch.

Downloaded from www.Manualslib.com manuals search engine

Power Door Locks

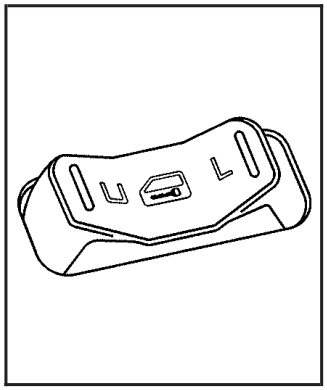

Driver's side shown

The power door lock switches are located on the driver's and the front passenger's armrests.

Press L (lock) to lock all the doors at once. To unlock all the doors, press U (unlock).

Programmable Automatic Door Locks

If your vehicle has an automatic transmission, it is programmed from the factory to lock the doors automatically when the shift lever is moved out of PARK (P). All the doors will unlock when the shift lever is moved back into PARK (P).

If your vehicle has a manual transmission, it is programmed from the factory to lock the doors automatically when the vehicle speed is greater than 15 mph (24 km/h). The doors will unlock when the key is removed from the ignition.

To personalize the automatic door locks, see "Automatic Door Locks" under *DIC Controls and Displays on page 3-41*.

Lockout Protection

This feature protects you from locking your key in the vehicle when the key is in the ignition and a door is open.

If the power door lock switch is pressed when a door is open and the key is in the ignition, all of the doors will lock and then the driver's door will unlock. A chime will sound to indicate that the key has been left in the ignition.

Downloaded from www.Manualslib.com manuals search engine

Swing-gate

To lock or unlock the swing-gate, use the power door lock switch or the remote keyless entry transmitter.

⚠ CAUTION:

Make sure the swing-gate is completely closed. Driving with the swing-gate open could injure pedestrians or damage the vehicle.

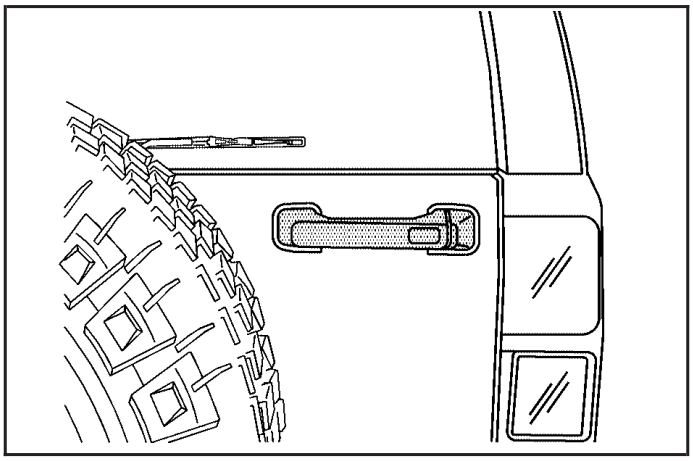

To open the swing-gate, pull the door handle. Pull the swing-gate rearward slightly and it will automatically open.

Downloaded from www.Manualslib.com manuals search engine

Windows

⚠ CAUTION:

Leaving children, helpless adults, or pets in a vehicle with the windows closed is dangerous. They can be overcome by the extreme heat and suffer permanent injuries or even death from heat stroke. Never leave a child, a helpless adult, or a pet alone in a vehicle, especially with the windows closed in warm or hot weather.

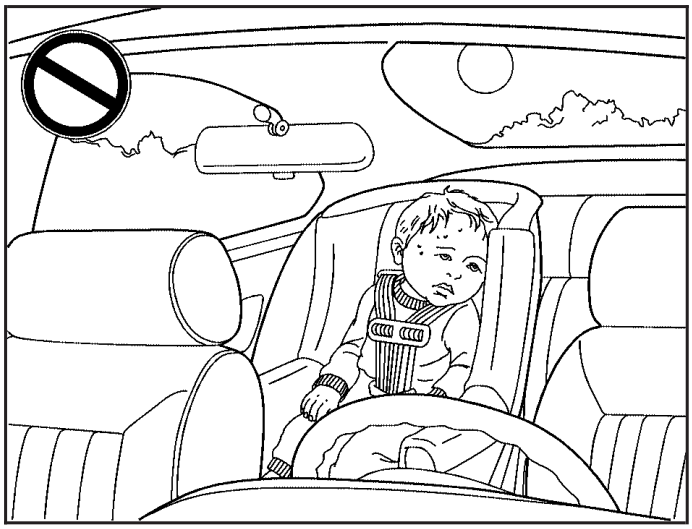

Downloaded from www.Manualslib.com manuals search engine

Power Windows

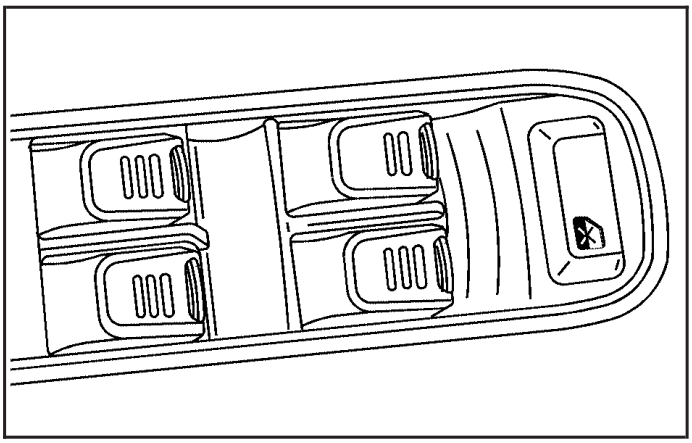

The power window controls are located on the armrest of each door.

The driver's door has switches for the passenger windows as well. Your power windows will work when the ignition is in ACC (Accessory) or ON, or when Retained Accessory Power (RAP) is active. See *Retained Accessory Power (RAP) on page 2-16*.

Pull up the front edge of the control to raise the window.

Press the front edge of the control down to lower the window.

Express-Down Window

The driver's window has an express-down feature that allows you to lower the window without holding the switch. Press the front edge of the switch past the first position to activate the express-down mode. The express-down mode can be canceled at any time by pulling up on the switch. To open the window partway, press the front of the switch to the first position until the window is at the desired level.

Window Lockout

(Window Lockout): The window lockout button is located forward of the window switches. This feature disables the passenger's window switches when the button is pressed. Press the button again to turn the lockout off. A red band on the side of the button can be seen when the windows are not locked out.

Downloaded from www.Manualslib.com manuals search engine

Sun Visors

To block glare, pull the visor down. It can also be detached from the center mount and moved to the side to block glare from that direction. There are extenders that can be pulled out for further coverage.

Visor Vanity Mirror

Your vehicle has a vanity mirror located on the driver's and passenger's visor.

Illuminated Visor Vanity Mirror

Your vehicle may have an illuminated vanity mirror on both visors. Lift the cover on the mirror and the lights will automatically come on.

Theft-Deterrent Systems

Vehicle theft is big business, especially in some cities. Although your vehicle has a number of theft-deterrent features, we know that nothing we put on it can make it impossible to steal.

Content Theft-Deterrent

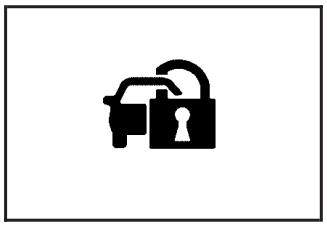

Your vehicle has a content theft-deterrent alarm system.

To activate the content theft-deterrent system, do the following:

1. Close all the doors.
2. Lock the doors with the remote keyless entry transmitter. The security light, located on the instrument panel cluster, will flash.

If the lock button on the remote keyless entry transmitter is pressed, but a door is open, the doors will lock, the lights may flash and the horn may sound. Close the open door and the alarm system will arm.

If a locked door is not opened using the remote keyless entry transmitter, or by OnStar®, the alarm will go off. First, a pre-alarm will sound the horn at reduced intensity for 10 seconds. Then, the front turn signal lamps will flash for two minutes, and the horn will sound for two minutes. The alarm will then turn off to save battery power.

Downloaded from www.Manualslib.com manuals search engine

Starting the engine with the correct key will shut off the pre-alarm or alarm at any time.

Remember, the theft-deterrent system will not activate if you lock the doors with the key, the manual door lock, or power door lock switch. The system can only be activated using the remote keyless entry transmitter, or by OnStar®. See *OnStar® System on page 2-36* for additional information. You should also remember that you can start your vehicle with the correct key if the alarm has been set off.

Here is how to avoid setting off the alarm by accident:

- If you do not want to arm the theft-deterrent system, the vehicle should be locked with the manual door lock lever, the power door lock switch, or the key, after the doors are closed.
- If the content theft-deterrent system is armed, unlock the doors by pressing the unlock button on the remote keyless entry transmitter or by OnStar®. Unlocking a door any other way will activate the alarm.

If you set off the alarm by accident, you can turn it off by pressing unlock on the remote keyless entry transmitter, starting the vehicle with the correct key, or by having OnStar® unlock the doors. The alarm will not stop if you try to unlock a door any other way.

Testing the Alarm

The alarm can be tested by following these steps:

1. From inside the vehicle, activate the system by locking the doors with the remote keyless entry transmitter.
2. Unlock the door with the manual door lock and open the door. This should set off the pre-alarm. Wait 10 seconds for the full alarm to activate.
3. To turn the alarm off, press the unlock button on the remote keyless entry transmitter or start the engine.

If the alarm does not sound when it should but the lights flash, check to see if the horn works. The horn fuse may be blown. To replace the fuse, see *Fuses and Circuit Breakers on page 5-94*.

If the alarm does not sound or the front turn signal lamps do not flash, see your dealer for service.

Downloaded from www.Manualslib.com manuals search engine

Passlock®

Your vehicle has the Passlock® theft-deterrent system.

Passlock® is a passive theft-deterrent system. Passlock® enables fuel if the ignition lock cylinder is turned with a valid key. If an incorrect key is used or the ignition lock cylinder is tampered with, the fuel system is disabled and the vehicle will not start.

During normal operation, the security light will turn off approximately five seconds after the engine is started. See *Security Light on page 3-39*.

If the engine stalls and the security light flashes, wait about 10 minutes until the light stops flashing before trying to restart the engine. Remember to release the key from START as soon as the engine starts.

If the engine does not start after three tries, the vehicle needs service.

If the engine is running and the security light comes on, you will be able to restart the engine if you turn the engine off. However, your Passlock® system is not working properly and must be serviced by your dealer. Your vehicle is not protected by Passlock® at this time. See your dealer for service.

In an emergency, call the Roadside Assistance Center. See *Roadside Assistance Program on page 7-6*.

Starting and Operating Your Vehicle

New Vehicle Break-In

Notice: **Your vehicle does not need an elaborate break-in. But it will perform better in the long run if you follow these guidelines:**

- **Keep your speed at 55 mph (88 km/h) or less for the first 500 miles (805 km).**
- **Do not drive at any one constant speed, fast or slow, for the first 500 miles (805 km). Do not make full-throttle starts. Avoid downshifting to brake, or slow, the vehicle.**
- **Avoid making hard stops for the first 200 miles (322 km) or so. During this time your new brake linings are not yet broken in. Hard stops with new linings can mean premature wear and earlier replacement. Follow this breaking-in guideline every time you get new brake linings.**
- **Do not tow a trailer during break-in. See *Towing a Trailer on page 4-58* for the trailer towing capabilities of your vehicle and more information.**

Following break-in, engine speed and load can be gradually increased.

Downloaded from www.Manualslib.com manuals search engine

Ignition Positions

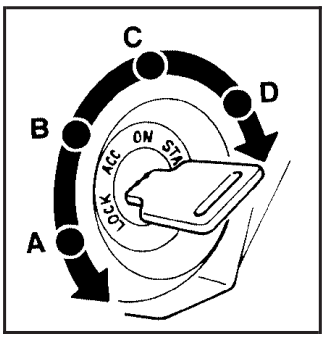

With the key in the ignition switch, you can turn to four different positions.

LOCK (A): This position locks your ignition. It also locks your transmission on automatic transmission vehicles. It will lock your steering wheel on manual transmission vehicles when the key is removed. It is a theft-deterrent feature. You will only be able to remove your key when the ignition is turned to LOCK.

If you have an automatic transmission, the ignition switch cannot be turned to LOCK unless the shift lever is in PARK (P).

Notice: **Using a tool to force the key from the ignition switch could cause damage or break the key. Use the correct key and turn the key only with your hand. Make sure the key is all the way in. If it is, turn the steering wheel left and right while you turn the key hard. If none of this works, then your vehicle needs service.**

ACC (ACCESSORY) (B): This is the position in which you can operate your electrical accessories or items plugged into the accessory power outlets. On automatic transmission vehicles, this position unlocks the ignition. On manual transmission vehicles, it unlocks the ignition and steering wheel. Use this position if your vehicle must be pushed or towed.

ON (C): This is the position that the switch returns to after you start your engine and release the switch. The switch stays in ON when the engine is running. But even when the engine is not running, you can use ON to operate your electrical accessories and to display some instrument panel cluster warning and indicator lights. The transmission is also unlocked in this position on automatic transmission vehicles.

START (D): This is the position that starts the engine. When the engine starts, release the key. The ignition switch will return to ON for normal driving.

When the engine is not running, ACC and ON allow you to operate your electrical accessories, such as the radio or items plugged into the accessory power outlets.

A warning tone will sound if you open the driver's door when the ignition is in ACC or LOCK and the key is in the ignition.

Downloaded from www.Manualslib.com manuals search engine

Retained Accessory Power (RAP)

Your vehicle has Retained Accessory Power (RAP) which will allow certain features of your vehicle to continue working for up to 20 minutes after the ignition key is turned to LOCK.

The radio, front wipers, power windows, and a sunroof if your vehicle has one, will work when the ignition key is in ON or ACC. Once the key is turned from ON to LOCK, these features will continue to work for up to 20 minutes or until a door is opened.

Starting the Engine

Automatic Transmission

Move your shift lever to PARK (P) or NEUTRAL (N). Your engine will not start in any other position — that is a safety feature. To restart when you are already moving, use NEUTRAL (N) only.

Notice: **Do not try to shift to PARK (P) if your vehicle is moving. If you do, you could damage the transmission. Shift to PARK (P) only when your vehicle is stopped.**

Manual Transmission

The gear selector should be in NEUTRAL and the parking brake engaged. Hold the clutch pedal to the floor and start the engine. Your vehicle will not start if the clutch pedal is not all the way down — that is a safety feature.

Starting Your Engine

1. With your foot off the accelerator pedal, turn the ignition key to START. When the engine starts, let go of the key. The idle speed will go down as your engine gets warm.

Notice: **Holding your key in START for longer than 15 seconds at a time will cause your battery to be drained much sooner. And the excessive heat can damage your starter motor. Wait about 15 seconds between each try to help avoid draining your battery or damaging your starter.**

2. If the engine does not start within 10 seconds, push the accelerator pedal all the way to the floor, while you hold the ignition key in START. When the engine starts, let go of the key and let up on the accelerator pedal. Wait about 15 seconds between each try.

Downloaded from www.Manualslib.com manuals search engine

For both the manual and automatic transmissions, when starting the vehicle after it has been sitting idle and the engine is cold, the engine starter may continue cranking the engine up to approximately four seconds after you release the ignition key. This is normal.

When starting your engine in very cold weather (below 0°F or 18°C), do this:

1. With your foot off the accelerator pedal, turn the ignition key to START and hold it there up to 15 seconds. When the engine starts, let go of the key.
2. If your engine still will not start, or starts but then stops, it could be flooded with too much gasoline. Try pushing your accelerator pedal all the way to the floor and holding it there as you hold the key in START for about three seconds. When the engine starts, let go of the key and accelerator. If the vehicle starts briefly but then stops again, do the same thing, but this time keep the pedal down for five or six seconds. This clears the extra gasoline from the engine.

Notice: **Your engine is designed to work with the electronics in your vehicle. If you add electrical parts or accessories, you could change the way the engine operates. Before adding electrical equipment, check with your dealer. If you do not, your engine might not perform properly. Any resulting damage would not be covered by your vehicle's warranty.**

Engine Coolant Heater

Your vehicle may have this feature.

In very cold weather, 0°F (–18°C) or colder, the engine coolant heater can help. You will get easier starting and better fuel economy during engine warm-up. Usually, the coolant heater should be plugged in a minimum of four hours prior to starting your vehicle. At temperatures above 32°F (0°C), use of the coolant heater is not required.

To Use the Engine Coolant Heater

1. Turn off the engine.
2. Open the hood and unwrap the electrical cord. The cord is located in the engine compartment behind the underhood fuse block on the driver's side of the vehicle.

Downloaded from www.Manualslib.com manuals search engine

3. Plug it into a normal, grounded 110-volt AC outlet.

⚠ CAUTION:

Plugging the cord into an ungrounded outlet could cause an electrical shock. Also, the wrong kind of extension cord could overheat and cause a fire. You could be seriously injured. Plug the cord into a properly grounded three-prong 110-volt AC outlet. If the cord will not reach, use a heavy-duty three-prong extension cord rated for at least 15 amps.

4. Before starting the engine, be sure to unplug and store the cord as it was before to keep it away from moving engine parts. If you do not, it could be damaged.

How long should you keep the coolant heater plugged in? The answer depends on the outside temperature, the kind of oil you have, and some other things. Instead of trying to list everything here, we ask that you contact your dealer in the area where you will be parking your vehicle. The dealer can give you the best advice for that particular area.

Automatic Transmission Operation

The automatic transmission has a shift lever on the console.

It features an electronic shift position indicator within the instrument cluster. This display must be powered anytime the shift lever is capable of being moved out of PARK (P). This means that if your key is turned off, but not in LOCK, there will be a small current drain on your battery which could discharge your battery over a period of time. If you need to leave your key in the ignition but not in LOCK for an extended period, it is recommended that you disconnect the battery cable from the battery to prevent discharging your battery.

Downloaded from www.Manualslib.com manuals search engine

There are several different positions for your shift lever.

PARK (P): This position locks your rear wheels. It is the best position to use when you start the engine because your vehicle cannot move easily.

⚠ CAUTION:

It is dangerous to get out of your vehicle if the shift lever is not fully in PARK (P) with the parking brake firmly set. Your vehicle can roll.

Do not leave your vehicle when the engine is running unless you have to. If you have left the engine running, the vehicle can move suddenly. You or others could be injured. To be sure your vehicle will not move, even when you are on fairly level ground, always set your parking brake and move the shift lever to PARK (P). See *Shifting Into Park (P) (Automatic Transmission) on page 2-28*. If you are pulling a trailer, see *Towing a Trailer on page 4-58*.

Make sure the shift lever is fully in PARK (P) before starting the engine. Your vehicle has an automatic transmission shift lock control system. You have to fully apply your regular brakes before you can shift from PARK (P) when the ignition key is in ON. If you cannot shift out of PARK (P), ease pressure on the shift lever by pushing the shift lever all the way into PARK (P) as you maintain brake application. Then move the shift lever into the gear you want. See *Shifting Out of Park (P) (Automatic Transmission) on page 2-30*

REVERSE (R): Use this gear to back up.

Notice: **Shifting to REVERSE (R) while your vehicle is moving forward could damage the transmission. The repairs would not be covered by your warranty. Shift to REVERSE (R) only after your vehicle is stopped.**

To rock your vehicle back and forth to get out of snow, ice, or sand without damaging your transmission, see *If Your Vehicle is Stuck in Sand, Mud, Ice or Snow on page 4-50*

Downloaded from www.Manualslib.com manuals search engine

NEUTRAL (N): In this position, your engine does not connect with the wheels. To restart when you are already moving, use NEUTRAL (N) only.

> **⚠ CAUTION:**
>
> **Shifting into a drive gear while your engine is running at high speed is dangerous. Unless your foot is firmly on the brake pedal, your vehicle could move very rapidly. You could lose control and hit people or objects. Do not shift into a drive gear while your engine is running at high speed.**

Notice: **Shifting out of PARK (P) or NEUTRAL (N) with the engine running at high speed may damage the transmission. The repairs would not be covered by your warranty. Be sure the engine is not running at high speed when shifting your vehicle.**

DRIVE (D): This position is for normal driving. If you need more power for passing, and you are:

- Going less than about 35 mph (55 km/h), push your accelerator pedal about halfway down.
- Going about 35 mph (55 km/h) or more, push the accelerator all the way down.

DRIVE (D) can be used when towing a trailer. You may want to shift the transmission to THIRD (3) or, if necessary, a lower gear if the transmission shifts too often under heavy loads and/or hilly conditions.

THIRD (3): This position is also used for normal driving. However, it offers more power and lower fuel economy than DRIVE (D). You should use THIRD (3) when towing a trailer, carrying a heavy load, driving on steep hills or winding roads or for off-road driving.

SECOND (2): This position gives you more power but lower fuel economy than THIRD (3). You can use SECOND (2) on hills. It can help control your speed as you go down steep mountain roads, but then you would also want to use your brakes off and on.

FIRST (1): This position gives you even more power but lower fuel economy than SECOND (2). You can use it on very steep hills, or in deep snow or mud. If the shift lever is put in FIRST (1) while the vehicle is moving forward, the transmission will not shift into FIRST (1) until the vehicle is going slowly enough.

Notice: **Spinning the tires or holding the vehicle in one place on a hill using only the accelerator pedal may damage the transmission. If you are stuck, do not spin the tires. When stopping on a hill, use the brakes to hold the vehicle in place.**

Downloaded from www.Manualslib.com manuals search engine

Manual Transmission Operation

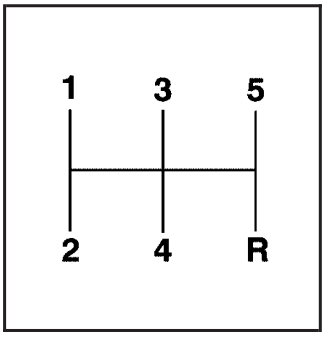

This is your shift pattern.

Here is how to operate your manual transmission:

FIRST (1): Press the clutch pedal and shift into FIRST (1). Then, slowly let up on the clutch pedal as you slowly press down on the accelerator pedal.

You can shift into FIRST (1) when you are going less than 20 mph (30 km/h). If you have come to a complete stop and it is hard to shift into FIRST (1), put the shift lever in NEUTRAL and let up on the clutch. Then press the clutch pedal back down and shift into FIRST (1).

SECOND (2): Press the clutch pedal as you let up on the accelerator pedal and shift into SECOND (2). Then, slowly let up on the clutch pedal as you press the accelerator pedal.

THIRD, FOURTH AND FIFTH (3, 4 and 5): Shift into THIRD (3), FOURTH (4) and FIFTH (5) the same way you do for SECOND (2). Slowly let up on the clutch pedal as you press the accelerator pedal.

To stop, let up on the accelerator pedal and press the brake pedal. Just before the vehicle stops, press the clutch pedal and the brake pedal, and shift to NEUTRAL.

NEUTRAL: Use this position when you start or idle your engine.

REVERSE (R): To back up, press the clutch pedal. After the vehicle stops, shift into REVERSE (R). Slowly let up on the clutch pedal as you press the accelerator pedal. If it is hard to shift, let the shift lever return to NEUTRAL and release the clutch pedal. Then press the clutch again and shift into REVERSE (R). Do not attempt to shift into the fifth gear position prior to shifting into REVERSE (R). Your transmission has a lock out feature which prevents a fifth gear to reverse gear shift.

Notice: **Shifting to REVERSE (R) while your vehicle is moving forward could damage the transmission. The repairs would not be covered by your warranty. Shift to REVERSE (R) only after your vehicle is stopped.**

Use REVERSE (R), along with the parking brake, for parking your vehicle.

Downloaded from www.Manualslib.com manuals search engine

Up-Shift Light

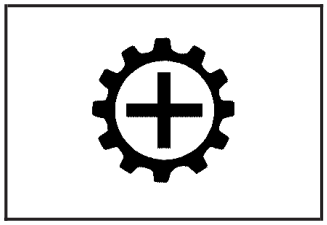

This light will show you when to shift to the next higher gear for best fuel economy.

When this light comes on, you can shift to the next higher gear if weather, road and traffic conditions permit. For the best fuel economy, accelerate slowly and shift when the light comes on.

While you accelerate, it is normal for the light to go on and off if you quickly change the position of the accelerator. Ignore the shift light when you downshift.

If your vehicle has four-wheel drive and has a manual transmission, disregard the shift light when the transfer case is in four-wheel low.

For more information, see *Up-Shift Light (Manual Transmission) on page 3-31*.

Shift Speeds

⚠ CAUTION:

If you skip a gear when you downshift, you could lose control of your vehicle. You could injure yourself or others. Do not shift down more than one gear at a time when you downshift.

Full-Time Four-Wheel Drive

Full-Time Four-Wheel Drive sends your engine's driving power to all four wheels for extra traction. To get the most out of Full-Time Four-Wheel Drive, you must be familiar with its operation.

Downloaded from www.Manualslib.com manuals search engine

Transfer Case Buttons

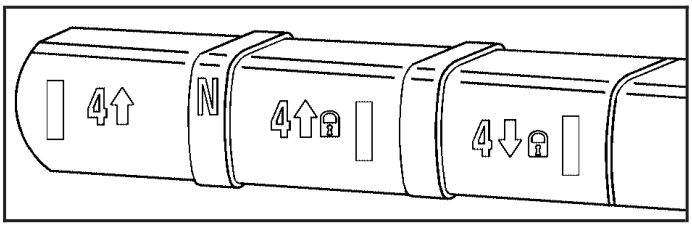

The transfer case buttons are located to the right of the instrument panel cluster. Use these switches to shift into and out of the different Full-Time Four-Wheel Drive modes.

You can choose between four modes:

4 ↑ (Four-Wheel High): This setting is used for driving in most street and highway situations. You can also use this setting for light or variable off-road conditions.

N (NEUTRAL): Shift the vehicle's transfer case to NEUTRAL only when towing your vehicle. See *Recreational Vehicle Towing on page 4-56* or *Towing Your Vehicle on page 4-56* for more information.

Notice: **Driving on pavement in Four-Wheel High Lock or Four Wheel Low Lock for extended periods may cause premature wear on your vehicle's powertrain and tires. Do not drive in Four-Wheel High Lock or Four-Wheel Low Lock on pavement for extended periods.**

4 ↑ 🔒 (Four-Wheel-High Lock): Use this mode when you need extra traction in most off-road situations such as sand, mud, snow or level, rocky trails.

Notice: **Operating your vehicle in Four-Wheel-Low Lock above 30 mph (48 km/h) for any extended period of time could cause damage to the transfer case. Do not operate your vehicle in Four-Wheel-Low Lock above 30 mph (48 km/h) for extended periods.**

4 ↓ 🔒 (Four-Wheel-Low Lock): This mode delivers extra torque to all four wheels and is used for extreme off-road conditions. You might choose 4-Wheel-Low Lock if you are driving in off-road situations, such as, deep sand, mud, or snow and climbing or descending steep hills.

Downloaded from www.Manualslib.com manuals search engine

When in this mode you can also choose to lock the rear axle, if equipped, for additional traction in extreme off-road situations. See *Locking Rear Axle on page 4-10*.

Indicator lights in the buttons show which mode you are in. The indicator lights will come on briefly when you turn on the ignition the mode the vehicle is in will stay on. If the lights do not come on, you should take your vehicle to your dealer for service. An indicator light will flash while shifting the transfer case. It will remain lit when the shift is complete. If for some reason the transfer case cannot make a requested shift, it will return to the last chosen setting.

If the SERV 4WD message stays on, you should take your vehicle to your dealer for service. See Service 4WD message under *DIC Warnings and Messages on page 3-44*.

Shifting between Four-Wheel High and Four-Wheel-High Lock

With the vehicle traveling less than 45 mph (73 km/h), press and release the Four-Wheel High or Four-Wheel-High Lock button. The indicator light will flash while shifting. It will remain lit when the shift is complete.

It may be necessary to drive backwards while turning for a distance of 25 feet (7.5 m) to get the lock feature to disengage.

Shifting into Four-Wheel Low Lock

Notice: **Shifting the transmission into gear before the indicator light stops flashing could cause damage to the transfer case. Always wait until the indicator light stops flashing before putting the transmission back in gear.**

To shift into Four-Wheel-Low Lock, the ignition must be in ON and the vehicle must be stopped or moving less than 3 mph (5 km/h) with the transmission in NEUTRAL (N). The preferred method for shifting into Four-Wheel Low is to have your vehicle moving 1 to 2 mph (1.6 to 3.2 km/h). Press and release the Four-Wheel-Low Lock button. If your vehicle has a manual transmission, the clutch pedal must be pressed to the floor while you press the Four-Wheel-Low Lock button, or the shift will not be completed. You must wait for the Four-Wheel-Low Lock indicator light to stop flashing and remain lit before shifting your transmission in gear.

Downloaded from www.Manualslib.com manuals search engine

It is normal for your vehicle to have engagement noise and bump when shifting between Four-Wheel Low and Four-Wheel High ranges or from NEUTRAL with the engine running.

If the Four-Wheel-Low Lock button is pressed when your vehicle is in gear and/or moving too fast, the Four-Wheel-Low Lock indicator light will flash for 15 seconds and not complete the shift unless your vehicle is moving less than 3 mph (5 km/h) and the transmission is in NEUTRAL (N). After 15 seconds the transfer case will return to the last chosen setting.

Shifting Out of Four-Wheel-Low Lock

Notice: **Shifting the transmission into gear before the indicator light stops flashing could cause damage to the transfer case. Always wait until the indicator light stops flashing before putting the transmission back in gear.**

To shift out of Four-Wheel-Low Lock, your vehicle must be stopped or moving less than 3 mph (5 km/h) with the transmission in NEUTRAL (N) and the ignition in ON. The preferred method for shifting out of Four-Wheel-Low Lock is to have your vehicle moving 1 to 2 mph (1.6 to 3.2 km/h).

Press and release the Four-Wheel High or Four-Wheel-High Lock button. If your vehicle has a manual transmission, the clutch pedal must be pressed to the floor while you press the Four-Wheel High or Four-Wheel-High Lock button, or the shift will not be completed. You must wait for the Four-Wheel High or Four-Wheel-High Lock indicator light to stop flashing and remain lit before shifting your transmission into gear.

It is normal for your vehicle to have engagement noise and bump when shifting between Four-Wheel Low and Four-Wheel High ranges or from NEUTRAL with the engine running.

If the Four-Wheel High or Four-Wheel-High Lock button is pressed when your vehicle is in gear and/or moving too fast, the Four-Wheel High or Four-Wheel-High Lock indicator light will flash for 15 seconds but will not complete the shift unless your vehicle is moving less than 3 mph (5 km/h) and the transmission is in NEUTRAL (N).

Downloaded from www.Manualslib.com manuals search engine

Shifting Into NEUTRAL

To shift the transfer case to NEUTRAL, do the following:

1. Set the parking brake.
2. Start the vehicle by turning the ignition to START.
3. Put the transmission in NEUTRAL (N). If your vehicle has a manual transmission, press and hold the clutch pedal down while you perform Steps 5 through 9.
4. Shift the transfer case to Four-Wheel High.

⚠ CAUTION:

Shifting an all-wheel-drive vehicle's transfer case into NEUTRAL can cause your vehicle to roll even if the automatic transmission is in PARK (P) or the manual transmission is in any gear. You or others could be injured. Make sure the parking brake is firmly set before you shift the transfer case to NEUTRAL.

5. Simultaneously press and hold the Four-Wheel High and Four-Wheel-Low Lock buttons for 10 seconds. The NEUTRAL light will come on when the transfer case shift to NEUTRAL is complete.
6. Press and hold the regular brake pedal and Shift the transmission to REVERSE (R) for one second, then shift the transmission for one second to DRIVE (D) for an automatic transmission, or FIRST (1) for vehicles equipped with a manual transmission and then let out the clutch. This is to ensure the transfer case is in NEUTRAL. If not, repeat this procedure starting at Step 3.
7. Turn the engine off, by turning the key to ACC.
8. Place the transmission shift lever in PARK (P) for an automatic transmission, or FIRST (1) for vehicles equipped with a manual transmission.
9. Turn the ignition to LOCK.

Downloaded from www.Manualslib.com manuals search engine

Shifting Out of NEUTRAL

To shift out of NEUTRAL:

1. Set the parking brake and apply the regular brake pedal.
2. Shift the transmission to NEUTRAL (N) for an automatic transmission, or press the clutch pedal for vehicles equipped with a manual transmission. Then turn the ignition to ON with the engine off.
3. Press the button for the desired transfer case shift position (Four-Wheel High, Four-Wheel-High Lock or Four-Wheel-Low Lock).

   After the transfer case has shifted out of NEUTRAL the light will go out.
4. Release the parking brake.

Notice: **Shifting the transmission into gear before the indicator light stops flashing could cause damage to the transfer case. Always wait until the indicator light stops flashing before putting the transmission back in gear.**

5. You may start the engine and shift the transmission to the desired position.

Parking Brake

The parking brake pedal is located to the left of the regular brake pedal, near the driver's door.

To set the parking brake, hold the regular brake pedal down with your right foot. Push the parking brake pedal down to its fully-applied position with your left foot.

A chime will activate and the brake warning light, located on the instrument panel, will flash when the parking brake is applied and the vehicle is moving at least 3 mph (5 km/h) for at least three seconds. The chime will deactivate and the light will turn off when the parking brake is set and the vehicle is moving below 3 mph (5 km/h). See *Brake System Warning Light on page 3-32*.

Downloaded from www.Manualslib.com manuals search engine

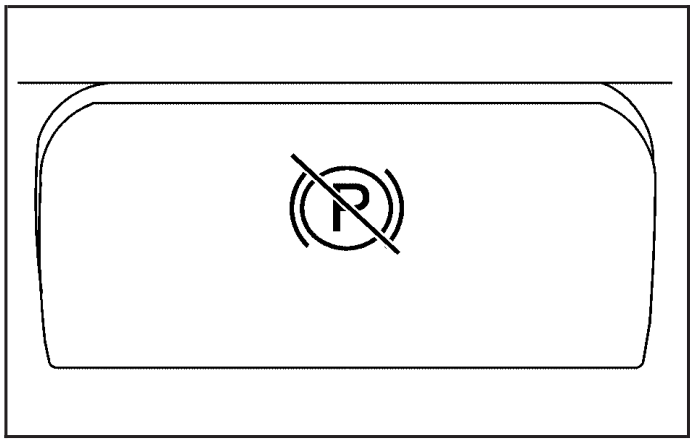

To release the parking brake, hold the regular brake pedal down. Pull the bottom edge of the lever, located above the parking brake pedal, with the parking brake symbol, directly rearward to release the parking brake.

If the ignition is on when the parking brake is released, the brake system warning light will go off.

Notice: **Driving with the parking brake on can overheat the brake system and cause premature wear or damage to brake system parts. Verify that the parking brake is fully released and the brake warning light is off before driving.**

If you are towing a trailer and are parking on any hill, see *Towing a Trailer on page 4-58*.

Shifting Into Park (P) (Automatic Transmission)

⚠ CAUTION:

It can be dangerous to get out of your vehicle if the shift lever is not fully in PARK (P) with the parking brake firmly set. Your vehicle can roll. If you have left the engine running, the vehicle can move suddenly. You or others could be injured. To be sure your vehicle will not move, even when you are on fairly level ground, use the steps that follow. If you are pulling a trailer, see *Towing a Trailer on page 4-58*.

1. Hold the brake pedal down with your right foot and set the parking brake.

Downloaded from www.Manualslib.com manuals search engine

⚠ CAUTION:

With all-wheel drive, your vehicle will be free to roll — even if your shift lever is in PARK (P) — if your transfer case is in NEUTRAL. So, be sure the transfer case is in a drive gear, four-wheel high (4H) or four-wheel low (4L) — not in NEUTRAL.

2. Move the shift lever into PARK (P) by pressing the shift lever button and moving the lever as far forward as it will go.
3. Turn the ignition key to LOCK.
4. Remove the key and take it with you. If you can leave your vehicle with the key, your vehicle is in PARK (P).

Leaving Your Vehicle With the Engine Running (Automatic Transmission)

⚠ CAUTION:

It can be dangerous to leave your vehicle with the engine running. Your vehicle could move suddenly if the shift lever is not fully in PARK (P) with the parking brake firmly set. And, if you leave the vehicle with the engine running, it could overheat and even catch fire. You or others could be injured. Do not leave your vehicle with the engine running.

If you have to leave your vehicle with the engine running, be sure your vehicle is in PARK (P) and your parking brake is firmly set before you leave it. After you have moved the shift lever into PARK (P), hold the regular brake pedal down. Then, see if you can move the shift lever away from PARK (P) without first pressing the shift lever button. If you can, it means that the shift lever was not fully locked into PARK (P).

Downloaded from www.Manualslib.com manuals search engine

Torque Lock (Automatic Transmission)

If you are parking on a hill and you do not shift your transmission into PARK (P) properly, the weight of the vehicle may put too much force on the parking pawl in the transmission. You may find it difficult to pull the shift lever out of PARK (P). This is called “torque lock.” To prevent torque lock, set the parking brake and then shift into PARK (P) properly before you leave the driver’s seat. To find out how, see *Shifting Into Park (P) (Automatic Transmission) on page 2-28*.

When you are ready to drive, move the shift lever out of PARK (P) before you release the parking brake.

If torque lock does occur, you may need to have another vehicle push yours a little uphill to take some of the pressure from the parking pawl in the transmission, so you can pull the shift lever out of PARK (P).

Shifting Out of Park (P) (Automatic Transmission)

Your vehicle has an automatic transmission shift lock control system. You have to apply your regular brake before you can shift from PARK (P) when the ignition is in ON. See *Automatic Transmission Operation on page 2-18*.

If you cannot shift out of PARK (P), ease pressure on the shift lever and push the shift lever all the way into PARK (P) as you maintain brake application. Then move the shift lever into the gear you wish. Press the shift lever button before moving the shift lever.

Parking Your Vehicle (Manual Transmission)

Your vehicle has a manual transmission. Before you get out of your vehicle, move the shift lever into REVERSE (R), and firmly apply the parking brake. Once the shift lever has been placed into REVERSE (R) with the clutch pedal pressed in, turn the ignition key to LOCK, remove the key and release the clutch.

If you are parking on a hill, or if your vehicle is pulling a trailer, see *Towing a Trailer on page 4-58*.

Downloaded from www.Manualslib.com manuals search engine

Parking Over Things That Burn

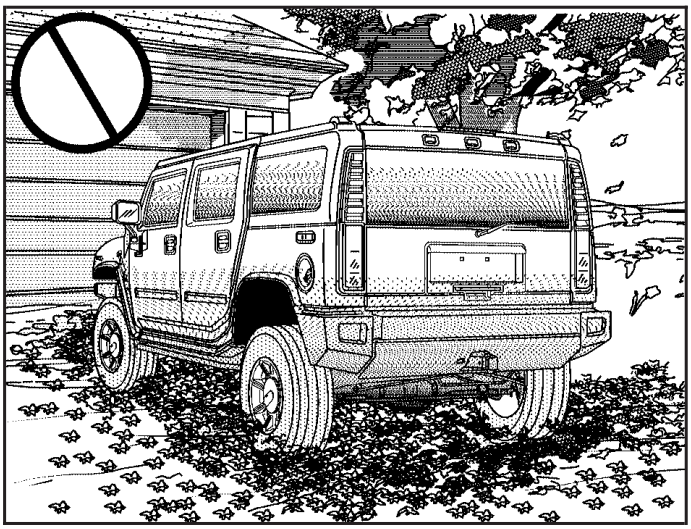

⚠ CAUTION:

Things that can burn could touch hot exhaust parts under your vehicle and ignite. Do not park over papers, leaves, dry grass, or other things that can burn.

Engine Exhaust

⚠ CAUTION:

Engine exhaust can kill. It contains the gas carbon monoxide (CO), which you cannot see or smell. It can cause unconsciousness and death.

You might have exhaust coming in if:

- **Your exhaust system sounds strange or different.**
- **Your vehicle gets rusty underneath.**
- **Your vehicle was damaged in a collision.**
- **Your vehicle was damaged when driving over high points on the road or over road debris.**
- **Repairs were not done correctly.**
- **Your vehicle or exhaust system had been modified improperly.**

If you ever suspect exhaust is coming into your vehicle:

- **Drive it only with all the windows down to blow out any CO; and**
- **Have your vehicle fixed immediately.**

Downloaded from www.Manualslib.com manuals search engine

Running the Engine While Parked

It is better not to park with the engine running. But if you ever have to, here are some things to know.

⚠ CAUTION:

Idling the engine with the climate control system off could allow dangerous exhaust into your vehicle. See the earlier caution under *Engine Exhaust on page 2-31*.

Also, idling in a closed-in place can let deadly carbon monoxide (CO) into your vehicle even if the climate control fan is at the highest setting. One place this can happen is a garage. Exhaust — with CO — can come in easily. NEVER park in a garage with the engine running.

Another closed-in place can be a blizzard. See *Winter Driving on page 4-45*.

⚠ CAUTION:

It can be dangerous to get out of your vehicle if the automatic transmission shift lever is not fully in PARK (P) with the parking brake firmly set. Your vehicle can roll. Do not leave your vehicle when the engine is running unless you have to. If you have left the engine running, the vehicle can move suddenly. You or others could be injured. To be sure your vehicle will not move, even when it is on fairly level ground, always set the parking brake and move the automatic transmission shift lever to PARK (P), or the manual transmission shift lever to NEUTRAL.

Follow the proper steps to be sure your vehicle will not move. See *Shifting Into Park (P) (Automatic Transmission) on page 2-28* and *Parking Your Vehicle (Manual Transmission) on page 2-30*.

If you are pulling a trailer with your vehicle, see *Towing a Trailer on page 4-58*.

Downloaded from www.Manualslib.com manuals search engine

Mirrors

Automatic Dimming Rearview Mirror with Compass and Temperature Display

If the vehicle has an automatic dimming mirror, it will automatically dim to the proper level to minimize glare from lights behind you after dark.

The mirror also includes a display in the upper right corner of the mirror face. The compass reading and the outside temperature will both appear in the display at the same time.

Temperature Display

The temperature can be displayed by pressing the TEMP button. Pressing the TEMP button for approximately four seconds, will toggle the temperature reading from Fahrenheit (°F) to Celsius (°C).

Automatic Dimming Mirror Operation

Press the TEMP button for approximately eight seconds to turn the automatic dimming feature on and off. An indicator light on the bottom of the mirror face will be on when the automatic dimming feature is on.

Compass Operation

Press the COMP button once briefly to turn the compass on or off.

When compass feature is on, the compass will show the direction the vehicle is traveling, with a maximum of two characters.

Compass Calibration

The compass may need calibration from time to time.

In order to calibrate, CAL must be displayed in the mirror compass window. If CAL is not displayed, push in the COMP button for approximately eight seconds or until CAL is displayed.

The compass can be calibrated by driving the vehicle in circles at 5 mph (8 km/h) or less until the display reads a direction, or the word CAL disappears.

Downloaded from www.Manualslib.com manuals search engine

Compass Variance

The mirror is set in zone eight upon leaving the factory. It will be necessary to adjust the compass to compensate for compass variance if you live outside zone eight. Under certain circumstances, as during a long distance cross-country trip, it will be necessary to adjust for compass variance. Compass variance is the difference between earth's magnetic north and true geographic north. If not adjusted to account for compass variance, your compass could give false readings.

To adjust for compass variance:

1. Find your current location and variance zone number on the following zone map.

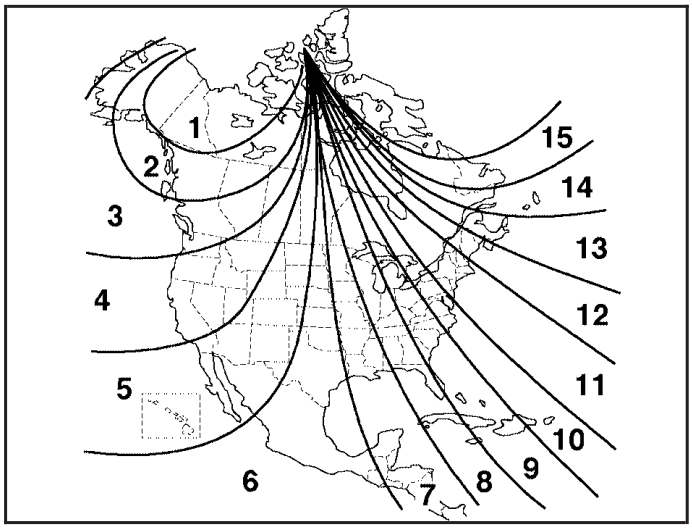

2. Press and hold the COMP button for five seconds until a zone number appears in the display.
3. Press the COMP button on the bottom of the mirror until the new zone number appears in the display. After you stop pressing the button, the display will show a compass direction within a few seconds.

Downloaded from www.Manualslib.com manuals search engine

Cleaning the Mirror

Use a paper towel or similar material dampened with glass cleaner. Do not spray glass cleaner directly on the mirror as that may cause the liquid cleaner to enter the mirror housing.

Outside Power Mirrors

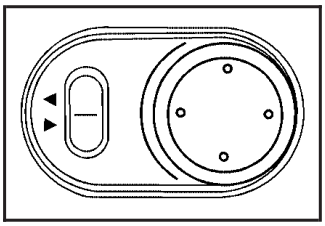

The outside power mirror controls are located on the driver's door armrest.

To adjust the power mirrors, do the following:

1. Press the top of the selector switch to choose the driver's side mirror. Press the bottom of the selector switch to choose the passenger's side mirror.
2. Use the round, four-way control pad to move the mirror in the desired direction.

If the mirror begins making a ratcheting sound, the mirror has reached the end of its travel and can go no farther in that direction. To stop the sound, reverse the mirror direction using the control pad.

The mirrors can be manually folded inward to prevent damage when going through an automatic car wash or confined space. Pull the mirror toward the vehicle to fold. To return the mirror to its original position, push outward. Be sure to return both mirrors to the unfolded position before driving.

Downloaded from www.Manualslib.com manuals search engine

Outside Convex Mirror

Your passenger's outside rearview mirror is convex. A convex mirror's surface is curved so you can see more from the driver's seat.

⚠ CAUTION:

A convex mirror can make things (like other vehicles) look farther away than they really are. If you cut too sharply into the right lane, you could hit a vehicle on your right. Check your inside mirror or glance over your shoulder before changing lanes.

OnStar® System

OnStar® uses global positioning system (GPS) satellite technology, wireless communications, and live advisors to provide you with a wide range of safety, security, information, and convenience services.
If your airbags deploy, the system is designed to make an automatic call to OnStar® Emergency where we can request emergency services be sent to your location. If you lock your keys in the car, call OnStar® at 1-888-4-ONSTAR and they can send a signal to unlock your doors. If you need roadside assistance, press the OnStar® button and they will get you the help you need.

Downloaded from www.Manualslib.com manuals search engine

A complete OnStar® User's Guide and the Terms and Conditions of the OnStar® Subscription Service Agreement are included in the vehicle's glove box literature. For more information, visit www.onstar.com or www.onstar.ca. Contact OnStar® at 1-888-4-ONSTAR (1-888-466-7827), or press the OnStar® button to speak to an OnStar® advisor 24 hours a day, 7 days a week.

Terms and conditions of the Subscription Service Agreement can be found at www.onstar.com or www.onstar.ca.

OnStar® Services

For new vehicles equipped with OnStar®, the Safe and Sound Plan is included for one year from the date of purchase. You can extend this plan beyond the first year, or upgrade to the Directions and Connections® Plan to meet your needs. For more information, press the OnStar® button to speak to an advisor.

Safe and Sound Plan

- Advanced Automatic Collision Notification
- Automatic Notification of Airbag Deployment
- Emergency Services
- Roadside Assistance
- Stolen Vehicle Tracking
- AccidentAssist
- Remote Door Unlock/Vehicle Alert
- Remote Diagnostics
- Online Concierge

Directions and Connections® Plan

- All Safe and Sound Plan Services
- Driving Directions
- RideAssist
- Information and Convenience Services

OnStar® Personal Calling

As an OnStar® subscriber, the Personal Calling capability allows you to make hands-free calls using a wireless system that is integrated into the vehicle. Calls can be placed nationwide using simple voice commands with no additional contracts and no additional roaming charges. To find out more about OnStar® Personal Calling, refer to the OnStar® User's Guide in the vehicle's glove box, visit www.onstar.com or www.onstar.ca, or speak to an OnStar® advisor by pressing the OnStar® button or calling 1-888-4-ONSTAR (1-888-466-7827).

Downloaded from www.Manualslib.com manuals search engine

OnStar® Virtual Advisor

Your vehicle may have Virtual Advisor. It is a feature of OnStar® Personal Calling that uses minutes to access weather, local traffic reports, and stock quotes. By pressing the phone button and giving a few simple voice commands, you can browse through the various topics. Customize your information profile at www.myonstar.com. See the OnStar® User's Guide for more information.

OnStar® Steering Wheel Controls

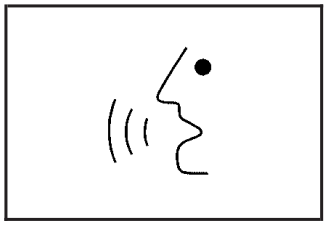

Your vehicle may be equipped with a Talk/Mute button that can be used to interact with the OnStar® when pressed. It is located on the driver's side of the instrument panel.

When calling into voice mail systems, or to dial directory numbers, press the control, wait for the "number please" response", say the number(s) to be dialed, wait for the number(s) to be repeated and then say "dial". See the OnStar® User's Guide for more information.

Universal Home Remote System

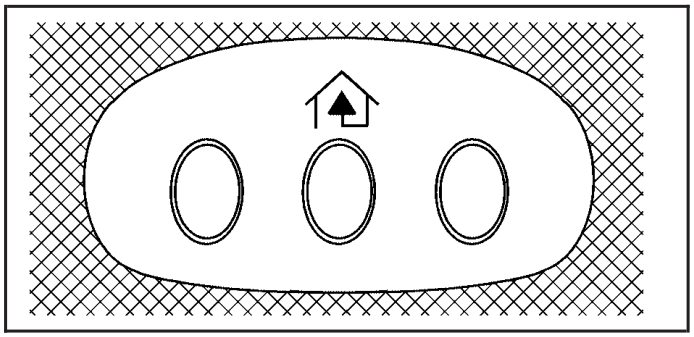

If your vehicle has this feature, the control buttons are located on the driver's sun visor.

The Universal Home Remote System provides a way to replace up to three hand-held radio-frequency (RF) transmitters used to activate devices such as gate operators, garage door openers, entry door locks, security systems, and home lighting.

Downloaded from www.Manualslib.com manuals search engine

This device complies with Part 15 of the FCC Rules. Operation is subject to the following two conditions:

1. This device may not cause harmful interference.
2. This device must accept any interference received, including interference that may cause undesired operation.

This device complies with RSS-210 of Industry Canada. Operation is subject to the following two conditions:

1. This device may not cause interference.
2. This device must accept any interference received, including interference that may cause undesired operation of the device.

Changes or modifications to this system by other than an authorized service facility could void authorization to use this equipment.

Universal Home Remote System Operation

Do not use the Universal Home Remote with any garage door opener that does not have the stop and reverse feature. This includes any garage door opener model manufactured before April 1, 1982. If you have a newer garage door opener with rolling codes, please be sure to follow Steps 6 through 8 to complete the programming of your Universal Home Remote Transmitter.

Read the instructions completely before attempting to program the Universal Home Remote. Because of the steps involved, it may be helpful to have another person available to assist you in the programming steps.

Keep the original hand-held transmitter for use in other vehicles as well as for future Universal Home Remote programming. It is also recommended that upon the sale of the vehicle, the programmed Universal Home Remote buttons should be erased for security purposes. See “Erasing Universal Home Remote Buttons” later in this section or, for assistance, see *Customer Assistance Offices on page 7-4*.

Be sure that people and objects are clear of the garage door or gate operator you are programming. When programming a garage door, it is advised to park outside of the garage.

It is recommended that a new battery be installed in your hand-held transmitter for quicker and more accurate transmission of the radio-frequency signal.

Downloaded from www.Manualslib.com manuals search engine

Programming Universal Home Remote

Follow these steps to program up to three channels:

1. Press and hold down the two outside Universal Home Remote buttons, releasing only when the Universal Home Remote indicator light begins to flash, after 20 seconds. Do not hold down the buttons for longer than 30 seconds and do not repeat this step to program a second and/or third hand-held transmitter to the remaining two Universal Home Remote buttons.
2. Position the end of your hand-held transmitter about 1 to 3 inches (3 to 8 cm) away from the Universal Home Remote buttons while keeping the indicator light in view.
3. Simultaneously press and hold both the desired Universal Home Remote button and the hand-held transmitter button. Do not release the buttons until Step 4 has been completed.

   Some entry gates and garage door openers may require you to substitute Step 3 with the procedure noted in “Gate Operator and Canadian Programming” later in this section.
4. The indicator light will flash slowly at first and then rapidly after Universal Home Remote successfully receives the frequency signal from the hand-held transmitter. Release both buttons.
5. Press and hold the newly-trained Universal Home Remote button and observe the indicator light.

   If the indicator light stays on constantly, programming is complete and your device should activate when the Universal Home Remote button is pressed and released.

   To program the remaining two Universal Home Remote buttons, begin with Step 2 under “Programming Universal Home Remote.” Do not repeat Step 1 as this will erase all of the programmed channels.

   If the indicator light blinks rapidly for two seconds and then turns to a constant light, continue with Steps 6 through 8 following to complete the programming of a rolling-code equipped device, most commonly, a garage door opener.
6. Locate in the garage, the garage door opener receiver (motor-head unit). Locate the “Learn” or “Smart” button. This can usually be found where the hanging antenna wire is attached to the motor-head unit.

Downloaded from www.Manualslib.com manuals search engine

7. Firmly press and release the “Learn” or “Smart” button. The name and color of the button may vary by manufacturer.

   You will have 30 seconds to start Step 8.

8. Return to the vehicle. Firmly press and hold the programmed Universal Home Remote button for two seconds, then release. Repeat the press/hold/release sequence a second time, and depending on the brand of the garage door opener, or other rolling code device, repeat this sequence a third time to complete the programming.

   The Universal Home Remote should now activate your rolling-code equipped device.

To program the remaining two Universal Home Remote buttons, begin with Step 2 of “Programming Universal Home Remote.” You do not want to repeat Step 1, as this will erase all previous programming from the Universal Home Remote buttons.

Gate Operator and Canadian Programming

Canadian radio-frequency laws require transmitter signals to time out or quit after several seconds of transmission. This may not be long enough for Universal Home Remote to pick up the signal during programming. Similarly, some U.S. gate operators are manufactured to time out in the same manner.

If you live in Canada, or you are having difficulty programming a gate operator or garage door opener by using the “Programming Universal Home Remote” procedures, regardless of where you live, replace Step 3 under “Programming Universal Home Remote” with the following:

Continue to press and hold the Universal Home Remote button while you press and release every two seconds (cycle) the hand-held transmitter button until the frequency signal has been successfully accepted by the Universal Home Remote. The Universal Home Remote indicator light will flash slowly at first and then rapidly. Proceed with Step 4 under “Programming Universal Home Remote” to complete.

Downloaded from www.Manualslib.com manuals search engine

Using Universal Home Remote

Press and hold the appropriate Universal Home Remote button for at least half of a second. The indicator light will come on while the signal is being transmitted.

Erasing Universal Home Remote Buttons

To erase programming from the three Universal Home Remote buttons do the following:

1. Press and hold down the two outside buttons until the indicator light begins to flash, after 20 seconds. Do not hold the two outside buttons for longer than 30 seconds.
2. Release both buttons.

The Universal Home Remote is now in the training (learning) mode and can be programmed at any time beginning with Step 2 under “Programming Universal Home Remote” shown earlier in this section.

Individual buttons cannot be erased, but they can be reprogrammed. See “Reprogramming a Single Universal Home Remote Button” following this section.

Reprogramming a Single Universal Home Remote Button

To program a device to Universal Home Remote using a Universal Home Remote button previously trained, follow these steps:

1. Press and hold the desired Universal Home Remote button. Do not release the button.
2. The indicator light will begin to flash after 20 seconds. While still holding the Universal Home Remote button, proceed with Step 2 under “Programming Universal Home Remote” shown earlier in this section.

For additional information on Universal Home Remote, see *Customer Assistance Offices on page 7-4*.

Downloaded from www.Manualslib.com manuals search engine

Storage Areas

Glove Box

Open the glove box by pulling the bottom of the handle upward.

Cupholder(s)

Your vehicle may have two cupholders in front of the front armrest storage area. You may also have a cupholder in the center of the rear bench seat. Pull down on the lid to open the cupholder.

Front Seat Storage Net

Your vehicle is equipped with storage nets located on the back of the front seats. To remove these nets, pull out on each of the four clips located on the net.

Front Armrest Storage Area

Your vehicle is equipped with a front armrest storage area. To open, lift the latch on the front of the armrest and pull up.

Luggage Carrier

If your vehicle has this feature, you can load cargo on your vehicle.

The luggage carrier consists of siderails attached to the roof. The crossrails attach into the siderails and can be moved back and forth to accommodate various cargo sizes.

Notice: **Loading cargo on the luggage carrier that weighs more than 250 lbs. (113 kg) or hangs over the rear or sides of the vehicle may damage your vehicle. Load cargo only on top of the crossrails and tie the cargo down to the crossrail support cargo tie-down loops, making sure to fasten it securely**

Do not exceed the maximum vehicle capacity when loading your vehicle. For more information on vehicle capacity and loading, see *Loading Your Vehicle on page 4-52*.

Downloaded from www.Manualslib.com manuals search engine

Adjusting the Crossrails

Adjust the crossrails to fit your load by doing the following:

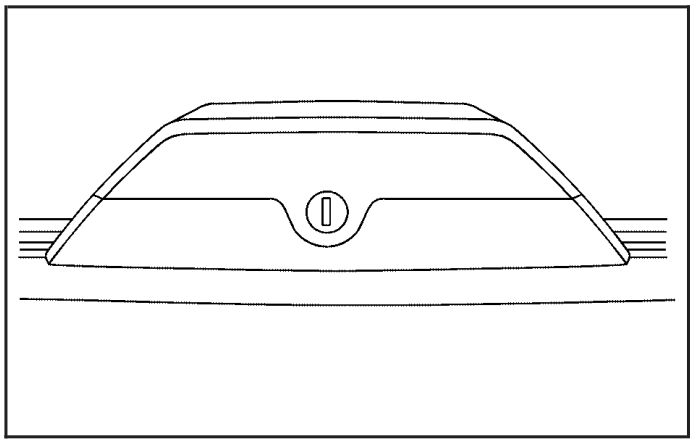

1. Use the provided crossrail key to unlock the crossrail end cap by turning it counterclockwise.

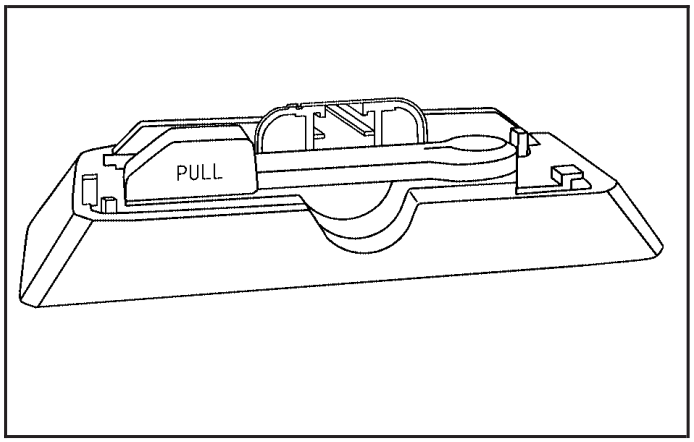

2. Remove the end cap.

Downloaded from www.Manualslib.com manuals search engine

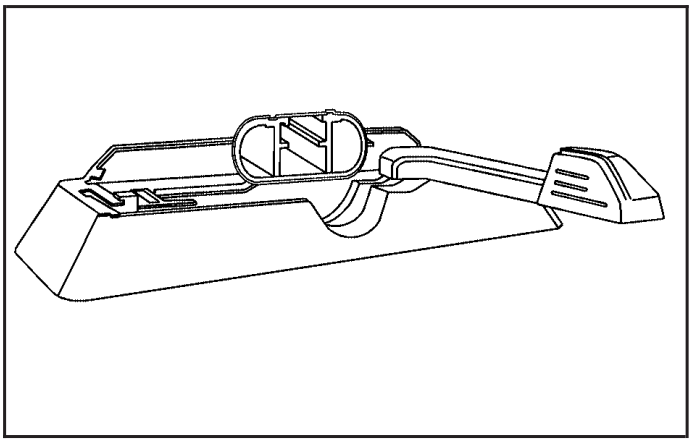

3. Pull the lever labeled “PULL” from left to right to loosen the crossrail.
4. Repeat Steps 1 through 3 to the opposite end of the crossrail.
5. Once both sides of the crossrail are loose, adjust the crossrail to the desired position.
6. Push the lever labeled “PULL” from right to left to lock the crossrail in place.
7. Reinstall end cap and lock by turning the key clockwise.
8. Repeat Steps 5 through 7 to the opposite end of the crossrail.

Stop Tabs

If your vehicle has a sunroof, it will have a crossrail stop tab placed in the siderail. This tab prevents you from moving the crossrails past the opening of the sunroof and loading cargo too far forward.

Your vehicle may be equipped with cargo tie downs. Once you load the cargo onto the crossrails, secure it by tying it down to the cargo tie downs. Do not load cargo directly on the roof of your vehicle. See *Cargo Tie Downs on page 2-46* for more information.

Downloaded from www.Manualslib.com manuals search engine

Rear Storage Area

Your vehicle is equipped with a rear storage area located on the passenger's side of the cargo area. To open, pull the two tabs out and open lid.

Convenience Net

Your vehicle may be equipped with a convenience net in the rear of the vehicle. Put small loads behind the net. The net is not for heavier loads. Store them as far forward as you can.

Cargo Cover

Notice: **If you put items onto the cargo cover, the weight of the items could cause the attachment clips to break. You would no longer be able to attach and use the cargo cover. The repairs would not be covered by your warranty. Never put anything on top of the cargo cover.**

If your vehicle has a cargo cover, you can use it to cover items in the rear of the vehicle. Remove the cover from its pouch and place the loops found on each corner of the cover, over the two pegs in each corner of the rear if the vehicle. When it is not in use, fold up the cover and return it to the pouch.

Cargo Tie Downs

Your vehicle may be equipped with four cargo tie-downs. These tie-downs are located in tracks on the roof of the vehicle. Each tie-down can be moved to anywhere on the track. To loosen, turn the tie-down counterclockwise until it moves freely in the track. To tighten, turn the tie-down clockwise.

Downloaded from www.Manualslib.com manuals search engine

Sunroof

Your vehicle may have a power sliding sunroof. The ignition must be on or in ACC, or Retained Accessory Power (RAP) must be active. See *Retained Accessory Power (RAP) on page 2-16*.

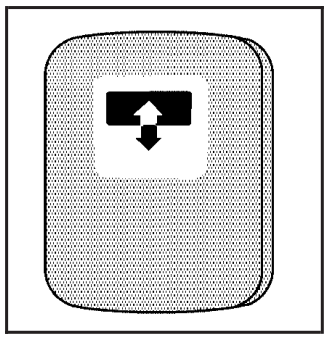

The switch used to operate the sunroof is located in the headliner.

Open/Close: Press and release the back of the switch to open the sunroof. If the sunshade is in the closed position, it will automatically open with the sunroof. To stop the sunroof before it has reached the full open position press and release the front or back of the switch. An air deflector will raise when the sunroof is fully opened.

Press the front of the switch to close the sunroof. To stop the sunroof before it is fully closed, press and release the front or back of the switch.

Vent: Press and hold the back of the switch to vent the sunroof. To stop the sunroof before it reaches its full vent position, release the switch.

Do not keep the sunroof open for long periods of time as debris may collect in the tracks.

Sunshade Operation

The sunshade will open automatically open with the sunroof.

However, it can manually be pulled shut after the sunroof is closed. To adjust the sunshade, push it backward or pull it forward to the desired position. The sunshade cannot be adjusted further than the current closed position of the sunroof.

Anti-Pinch Feature

If an object is in the path of the sunroof when it is closing, the anti-pinch feature will detect the object and stop the sunroof from closing at the point of the obstruction. The sunroof will then return to the full-open or vent position, and the air deflector will raise.

Downloaded from www.Manualslib.com manuals search engine

NOTES

Downloaded from www.Manualslib.com manuals search engine

Section 3 Instrument Panel

Instrument Panel Overview 3-4
Hazard Warning Flashers 3-6
Other Warning Devices 3-6
Horn 3-6
Tilt Wheel 3-6
Turn Signal/Multifunction Lever 3-7
Turn and Lane-Change Signals 3-8
Headlamp High/Low-Beam Changer 3-8
Flash-to-Pass 3-9
Windshield Wipers 3-9
Windshield Washer 3-10
Rear Window Wiper/Washer 3-10
Cruise Control 3-11
Exterior Lamps 3-14
Headlamps on Reminder 3-15
Daytime Running Lamps (DRL) 3-16
Automatic Headlamp System 3-16
Off-Road Lamps 3-17
Fog Lamps 3-18
Instrument Panel Brightness 3-18
Dome Lamp 3-18
Dome Lamp Override 3-19
Exit Lighting 3-19
Reading Lamps 3-19
Battery Run-Down Protection 3-19
Accessory Power Outlet(s) 3-19
Ashtray(s) and Cigarette Lighter 3-20

Climate Controls 3-21
Climate Control System 3-21
Outlet Adjustment 3-23

Warning Lights, Gages, and Indicators 3-24
Instrument Panel Cluster 3-25
Speedometer and Odometer 3-26
Trip Odometer 3-26
Tachometer 3-26
Safety Belt Reminder Light 3-27
Passenger Safety Belt Reminder Light 3-27
Airbag Readiness Light 3-28
Passenger Airbag Status Indicator 3-29
Battery Warning Light 3-31
Up-Shift Light (Manual Transmission) 3-31

Downloaded from www.Manualslib.com manuals search engine

Section 3 Instrument Panel

Brake System Warning Light 3-32
Anti-Lock Brake System Warning Light 3-33
Traction Off Light 3-33
StabiliTrak® Not Ready Light 3-33
Engine Coolant Temperature Gage 3-34
Tire Pressure Light 3-34
Malfunction Indicator Lamp 3-35
Oil Pressure Light 3-38
Security Light 3-39
Cruise Control Light 3-39
Highbeam On Light 3-39
Fuel Gage 3-40

Driver Information Center (DIC) 3-41
DIC Controls and Displays 3-41
DIC Warnings and Messages 3-44

Audio System(s) 3-48
Setting the Time 3-49
Radio with CD 3-50
Radio with Six-Disc CD 3-63
Navigation/Radio System 3-76
Theft-Deterrent Feature 3-76
Radio Reception 3-76
Care of Your CDs 3-77
Care of the CD Player 3-77
Fixed Mast Antenna 3-77
XM™ Satellite Radio Antenna System 3-77

Downloaded from www.Manualslib.com manuals search engine

✍ NOTES

Downloaded from www.Manualslib.com manuals search engine

Instrument Panel Overview

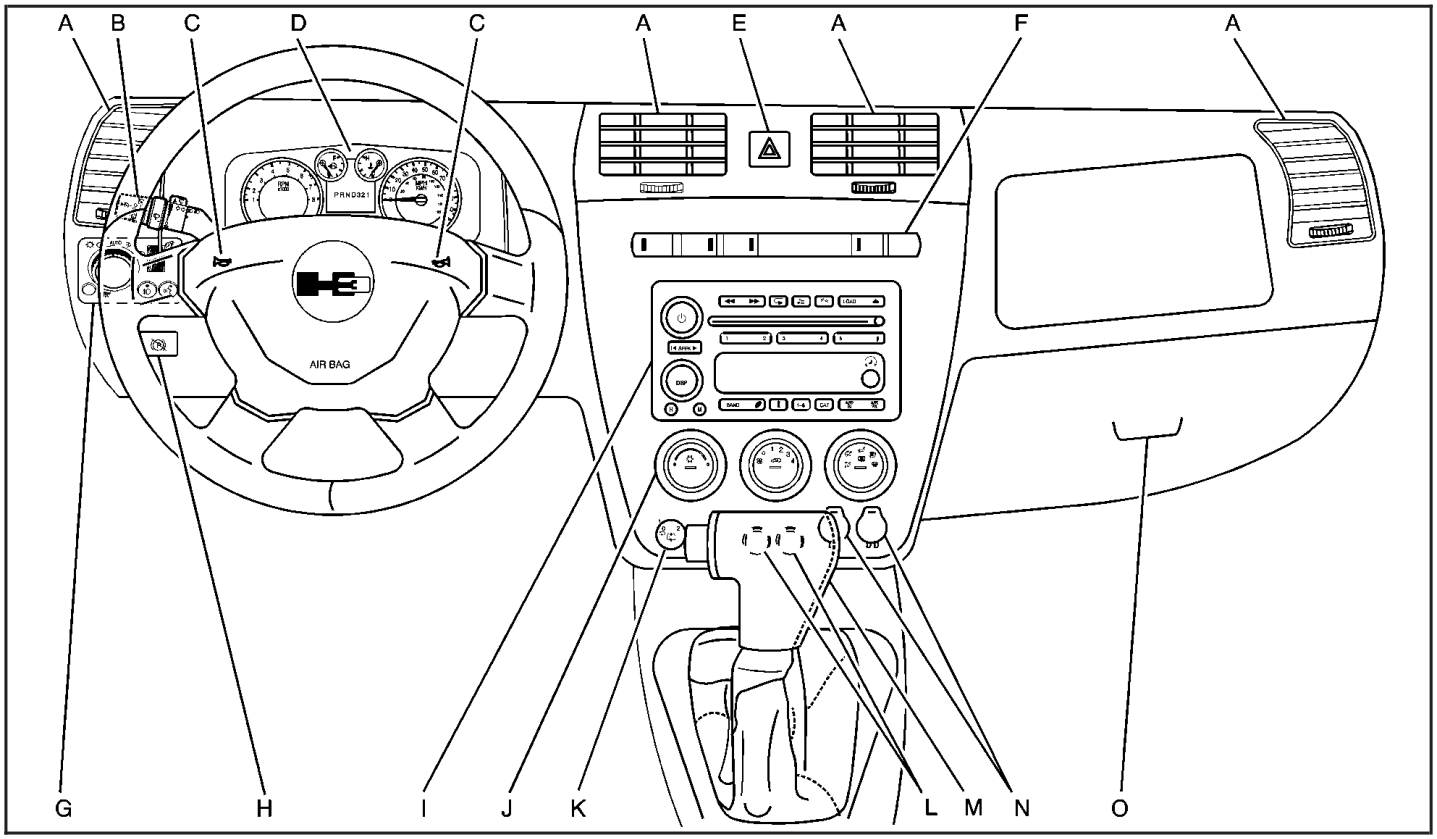

Downloaded from www.Manualslib.com manuals search engine

The main components of your instrument panel are the following:

A. Air Outlets. See *Outlet Adjustment on page 3-23*.

B. Turn Signal/Multifunction Lever. See *Turn Signal/Multifunction Lever on page 3-7*. Windshield Washer/Wiper. See *Windshield Wipers on page 3-9* and *Windshield Washer on page 3-10*. Cruise Controls. See *Cruise Control on page 3-11*.

C. Horn. See *Horn on page 3-6*.

D. Instrument Panel Cluster. See *Instrument Panel Cluster on page 3-25*.

E. Hazard Warning Flasher Button. See *Hazard Warning Flashers on page 3-6*.

F. All-Wheel Drive, Passenger Air Bag Status Indicator, Locking Rear Axle, and Traction Control System/StabiliTrak® Buttons. See *Full-Time Four-Wheel Drive on page 2-22*, *Passenger Airbag Status Indicator on page 3-29*, *Locking Rear Axle on page 4-10*, *Traction Control System (TCS) on page 4-9* and *StabiliTrak® System (Automatic Transmission) on page 4-11*.

G. Exterior Lamps Control, Dome Override Button, Instrument Panel Brightness Control, Fog Lamp Button, and OnStar® Button. See *Exterior Lamps on page 3-14*, *Dome Lamp Override on page 3-19*,*Instrument Panel Brightness on page 3-18*, *Fog Lamps on page 3-18*, and *OnStar® System on page 2-36*.

H. Parking Brake Release. See *Parking Brake on page 2-27*.

I. Audio System. See *Audio System(s) on page 3-48*.

J. Climate Control System. See *Climate Control System on page 3-21*.

K. Rear Washer/Wiper Control. See *Rear Window Wiper/Washer on page 3-10*.

L. Off-Road Lamps Buttons. See *Off-Road Lamps on page 3-17*.

M. Shift Lever. See *Automatic Transmission Operation on page 2-18* or *Manual Transmission Operation on page 2-21*.

N. Accessory Power Outlets. See *Accessory Power Outlet(s) on page 3-19*.

O. Glove Box. See *Glove Box on page 2-43*.

Downloaded from www.Manualslib.com manuals search engine

Hazard Warning Flashers

Your hazard warning flashers let you warn others. They also let police know you have a problem. Your front and rear turn signal lamps will flash on and off.

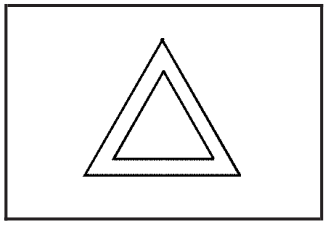

The hazard warning flasher button is located in the center of the instrument panel.

Your hazard warning flashers work no matter what position your key is in, and even if the key is not in the ignition switch.

Press the button to make the front and rear turn signal lamps flash on and off. Press the button again to turn the flashers off.

When the hazard warning flashers are on, your turn signals will not work.

Other Warning Devices

If you carry reflective triangles, you can set one up at the side of the road about 300 feet (100 m) behind your vehicle.

Horn

To sound the horn, press the horn symbol on the steering wheel pad.

Tilt Wheel

A tilt wheel allows you to adjust the steering wheel before you drive. If you have the tilt steering wheel, you can raise it to the highest level to allow more room for the driver to enter and exit the vehicle.

Downloaded from www.Manualslib.com manuals search engine

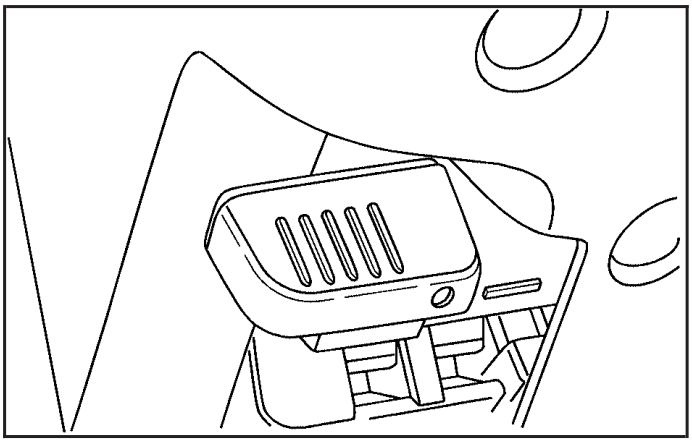

The tilt lever is located on the left side of the steering column, under the turn signal lever.

To tilt, hold the steering wheel and pull the tilt lever toward you. Move the wheel to a comfortable level, then release the tilt lever to lock the wheel in place.

Do not adjust the steering wheel while driving.

Turn Signal/Multifunction Lever

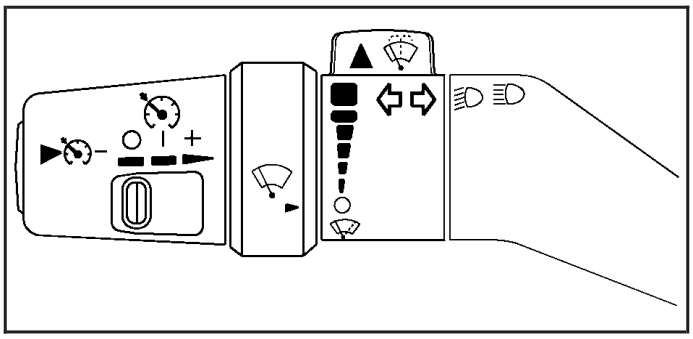

The lever on the left side of the steering column includes the following:

- Turn and Lane Change Signals. See *Turn Signal/Multifunction Lever on page 3-7*.
- Headlamp High/Low-Beam Changer. See *Headlamp High/Low-Beam Changer on page 3-8*.
- Flash-to-Pass. See *Flash-to-Pass on page 3-9*.
- Windshield Wipers. See *Windshield Wipers on page 3-9*.
- Windshield Washer. See *Windshield Washer on page 3-10*.
- Cruise Control. See *Cruise Control on page 3-11*.

Downloaded from www.Manualslib.com manuals search engine

Turn and Lane-Change Signals

The turn signal has one upward (for right) and one downward (for left) positions. These positions allow you to signal a turn or a lane change.

To signal a turn, move the lever all the way up or down. When the turn is finished, the lever will automatically return to the off position.

To signal a lane change, raise or lower the lever until the arrow starts to flash. Hold it there until the change is completed. The lever will return by itself when released.

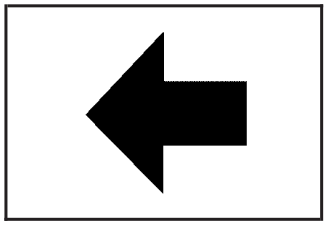

An arrow on the instrument panel cluster will flash in the direction of the turn or lane change.

As you signal a turn or a lane change, if the arrows flash more quickly than normal, a signal bulb may be burned out and other drivers will not see your vehicle's turn signal.

If a bulb is burned out, replace it to help avoid an accident. If the arrows do not go on at all when signaling a turn, check for a burned-out bulb or a blown fuse. For bulb replacement, see *Taillamps, Turn Signal, Stoplamps and Back-up Lamps on page 5-48*. For a blown fuse or circuit breaker, see *Fuses and Circuit Breakers on page 5-94*.

Turn Signal On Chime

If a turn signal is left on for more than 3/4 of a mile (1.2 km), a chime will sound at each flash of the turn signal and the message TURN SIGNAL will also appear in the DIC. To turn the chime and message off, move the turn signal lever to the off position.

See "TURN SIGNAL" under *DIC Warnings and Messages on page 3-44* DIC Warnings and Messages for more information.

Headlamp High/Low-Beam Changer

(Headlamp High/Low Beam Changer): To change the headlamps from low to high beam, push the lever toward the instrument panel. To return to low-beam headlamps, pull the multifunction lever toward you. Then release it.

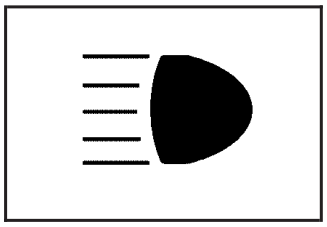

When the high beams are on, this indicator light on the instrument panel cluster will also be on.

Downloaded from www.Manualslib.com manuals search engine

Flash-to-Pass

This feature lets you use your high-beam headlamps to signal a driver in front of you that you want to pass. It works even if your headlamps are in the automatic position.

To use it, pull the turn signal lever toward you, then release it.

If your headlamps are in the automatic position or on low beam, your high-beam headlamps will turn on. They'll stay on as long as you hold the lever toward you. The high-beam indicator on the instrument panel cluster will come on. Release the lever to return to normal operation.

Windshield Wipers

You control the windshield wipers by turning the band with the wiper symbol on it.

(Mist): For a single wiping cycle, turn the band to mist. Hold it there until the wipers start. Then let go. The wipers will stop after one wipe. If you want more wipes, hold the band on mist longer.

(Delay): You can set the wiper speed for a long or short delay between wipes. This can be very useful in light rain or snow. Turn the band to choose the delay time. The closer to the top of the lever, the shorter the delay.

(Low Speed): For steady wiping at low speed, turn the band away from you to the first solid position past the delay settings.

(High Speed): For high-speed wiping, turn the band to the second solid position past the delay settings.

(Off): To stop the wipers, move the band to off.

Be sure to clear ice and snow from the wiper blades before using them. If they're frozen to the windshield, carefully loosen or thaw them. If your blades do become worn or damaged, get new blades or blade inserts.

Windshield wipers will work in all power modes except when set to LOCK. After the engine is turned off, wipers will work in Retained Accessory Power (RAP) mode until a door is opened. See *Retained Accessory Power (RAP) on page 2-16*.

Downloaded from www.Manualslib.com manuals search engine

Windshield Washer

(Washer Fluid): There is a paddle marked with the windshield washer symbol at the top of the multifunction lever. To spray washer fluid on the windshield, push the paddle. The wipers will clear the window and then either stop or return to your preset speed.

⚠ CAUTION:

In freezing weather, do not use your washer until the windshield is warmed. Otherwise the washer fluid can form ice on the windshield, blocking your vision.

Rear Window Wiper/Washer

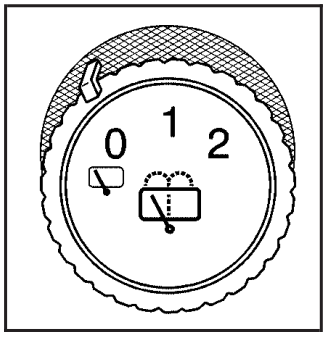

This knob is located on the instrument panel below the climate controls.

(Rear Wiper): To turn the rear wiper on, turn the knob to either 1 or 2. For a slower wiping speed, turn the knob to 1. For a faster wiping speed, turn the knob to 2

0 (Off): To turn the wiper off, turn the knob to this symbol.

(Washer Fluid): To wash and wipe the window, press the button within the knob with this symbol.

The rear window washer uses the same fluid bottle as the windshield washer. However, the rear window washer will run out of fluid before the windshield washer. If you can wash your windshield but not your rear windows, check the fluid level.

Downloaded from www.Manualslib.com manuals search engine

Cruise Control

With cruise control, you can maintain a speed of about 25 mph (40 km/h) or more without keeping your foot on the accelerator. This can really help on long trips. Cruise control does not work at speeds below about 25 mph (40 km/h).

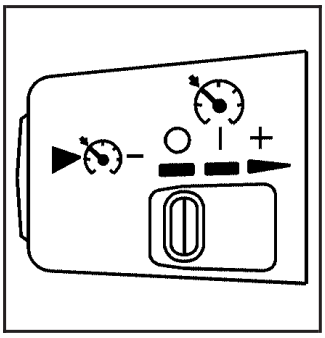

◯ **(Off):** This position turns the system off.

| **(On):** This position activates the system.

+ (Resume/Accelerate): Move the lever to this symbol to make the vehicle accelerate or resume to a previously set speed.

▶ **(Set):** Press this button to set the speed.

Cruise control will not work if your parking brake is set, or if the master cylinder brake fluid level is low.

If you apply your brakes, the cruise control will shut off.

⚠ CAUTION:

Cruise control can be dangerous where you cannot drive safely at a steady speed. So, do not use your cruise control on winding roads or in heavy traffic.

Cruise control can be dangerous on slippery roads. On such roads, fast changes in tire traction can cause excessive wheel slip, and you could lose control. Do not use cruise control on slippery roads.

If your vehicle is in cruise control when the traction control system (if equipped) begins to limit wheel spin, the cruise control will automatically disengage. See *Traction Control System (TCS) on page 4-9*. When road conditions allow you to safely use it again, you may turn cruise control back on.

Downloaded from www.Manualslib.com manuals search engine

Setting Cruise Control

⚠ CAUTION:

If you leave your cruise control on when you are not using cruise, you might hit a button and go into cruise when you do not want to. You could be startled and even lose control. Keep the cruise control switch off until you want to use cruise control.

1. Move the cruise control switch to on.
2. Get up to the speed you want.
3. Press in the set button at the end of the lever and release it.
4. Take your foot off the accelerator pedal.

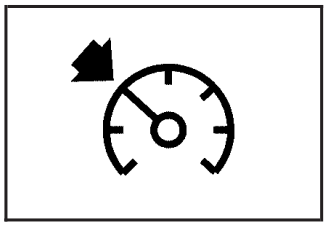

The cruise symbol on the instrument panel will illuminate when the cruise control is engaged.

Resuming a Set Speed

Suppose you set your cruise control at a desired speed and then you apply the brake or step on the clutch. This, of course, disengages the cruise control. But you don't need to reset it.

Once you're going about 25 mph (40 km/h) or more, you can move the cruise control switch briefly from on to resume/accelerate.

You'll go right back up to your chosen speed and stay there.

If you hold the switch at resume/accelerate the vehicle will keep going faster until you release the switch or apply the brake. So unless you want to go faster, don't hold the switch at resume/accelerate.

Downloaded from www.Manualslib.com manuals search engine

Increasing Speed While Using Cruise Control

There are two ways to go to a higher speed:

- Use the accelerator pedal to get to the higher speed. Press the set button at the end of the lever, then release the button and the accelerator pedal. You'll now cruise at the higher speed. If the accelerator pedal is held longer than 60 seconds, cruise control will turn off.
- Move the cruise switch from on to resume/accelerate. Hold it there until you get up to the speed you want, and then release the switch. To increase your speed in very small amounts, move the switch briefly to resume/accelerate. Each time you do this, your vehicle will go about 1 mph (1.6 km/h) faster.

Reducing Speed While Using Cruise Control

- Press and hold the set button until you reach the lower speed you want, then release it.
- To slow down in very small amounts, briefly press the set button. Each time you do this, you'll go about 1 mph (1.6 km/h) slower.

Passing Another Vehicle While Using Cruise Control

Use the accelerator pedal to increase your speed. When you take your foot off the pedal, your vehicle will slow down to the cruise control speed you set earlier.

Using Cruise Control on Hills

How well your cruise control will work on hills depends upon your speed, load and the steepness of the hills. When going up steep hills, you may want to step on the accelerator pedal to maintain your speed. When going downhill, you may have to brake or shift to a lower gear to keep your speed down. Of course, applying the brake takes you out of cruise control. Many drivers find this to be too much trouble and don't use cruise control on steep hills.

Ending Cruise Control

To turn off the cruise control, do one of the following:

- Step lightly on the brake pedal.
- Move the cruise control switch to off.
- Lightly tap or press the clutch, if you have a manual transmission.

Erasing Speed Memory

When you turn off the cruise control or the ignition, your cruise control set speed memory is erased.

Downloaded from www.Manualslib.com manuals search engine

Exterior Lamps

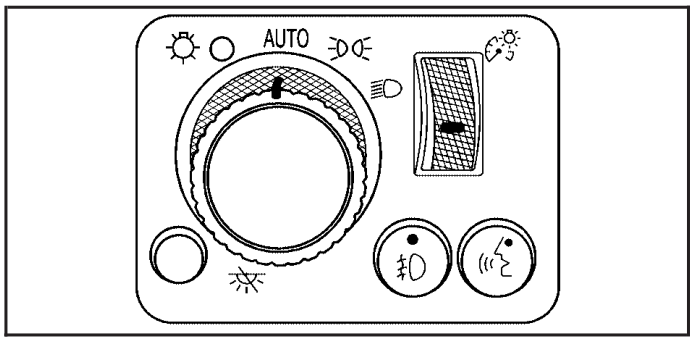

The control on the driver's side of your instrument panel operates the exterior lamps.

(Exterior Lamps): Turn the knob, located to the right of this symbol, to choose one of the four exterior lamp positions.

(Off): Turn the knob to this position to turn off all exterior lamps including the DRL. This is a momentary control that will spring back to AUTO when released. Vehicles first sold in Canada do not have the DRL disable feature available. Vehicles first sold in Canada cannot turn off the DRL unless the following conditions are met:

- The vehicle has an automatic transmission.
- The gear position is in PARK (P).
- The headlamp switch is turned to the Off position.

AUTO (Automatic): Turn the knob to this position to automatically turn on the headlamps at normal brightness, together with the following:

- Sidemarker Lamps
- Taillamps
- Parking Lamps
- Instrument Panel Lights

Due to the momentary switch design, your automatic headlamps may be disabled even if the control is in the AUTO position.

Downloaded from www.Manualslib.com manuals search engine

To enable automatic lighting, do any of the following:

- Turn the headlamp control from AUTO to off and release the control. It will return back to the AUTO position by itself.
- Turn the headlamp control from the parking lamp position to AUTO.
- Turn the headlamp control from the headlamp position to AUTO.

To disable automatic lighting, do any of the following:

- Turn the headlamp control from AUTO to off and release the control. It will return back to the AUTO position by itself.
- Turn the headlamp control from AUTO to the parking lamp position.
- Turn the headlamp control from AUTO to the headlamp position.

See *Automatic Headlamp System on page 3-16* for more information.

Vehicles first sold in Canada with an automatic transmission cannot turn off automatic headlamps unless the gear position is in PARK (P) and the headlamp switch is turned to the Off position. Vehicles first sold in Canada with a manual transmission can turn off the automatic headlamps with the headlamp control; however, the parking lamps will remain on.

(Parking Lamps): Turn the knob to this position to turn on the parking lamps, together with the following:

- Sidemarker Lamps
- Taillamps
- License Plate Lamps
- Instrument Panel Lights

(Headlamps): Turn the knob to this position to turn on the headlamps, together with the previously listed lamps and lights.

You can switch your headlamps from low to high beam by pushing the turn signal/multifunction lever toward the instrument panel.

Headlamps on Reminder

A headlamp reminder chime will sound if the following conditions are met:

- The driver door is open.
- Parking lamps or headlamps are manually turned on.
- The key is either not in the ignition switch, or it is in the LOCK position of the ignition switch.

The headlamp reminder cannot be turned off if the conditions listed above are met.

In the automatic mode, the headlamps turn off once the ignition is in ACC.

Downloaded from www.Manualslib.com manuals search engine

Daytime Running Lamps (DRL)

Daytime Running Lamps (DRL) can make it easier for others to see the front of your vehicle during the day. DRL can be helpful in many different driving conditions, but they can be especially helpful in the short periods after dawn and before sunset. Fully functional daytime running lamps are required on all vehicles first sold in Canada.

The DRL system will come on when the following conditions are met:

- The ignition is on.
- The exterior lamps control is in AUTO.
- The transmission is not in PARK (P) if you have an automatic transmission.
- The light sensor determines it is daytime.

When the DRL are on, only the DRLs will be on. The other lamps will not be on. The instrument panel will not be lit up either. For vehicles first sold in Canada, if parking lamps are manually turned on, DRL will stay on.

When it begins to get dark, the automatic headlamp system will switch from DRL to the headlamps.

As with any vehicle, you should turn on the regular headlamp system when you need it.

To turn off the DRL, see *Exterior Lamps on page 3-14*.

Vehicles first sold in Canada cannot turn off DRL unless certain conditions are met. See *Exterior Lamps on page 3-14*.

Automatic Headlamp System

When it is dark enough outside, your automatic headlamp system will turn on your headlamps at the normal brightness along with other lamps such as the taillamps, sidemarker, parking lamps, roof marker lamps and the instrument panel lights. The radio lights will become more dim when the headlights are off compared to when the headlights are on.

Your vehicle has a light sensor located on the top of the instrument panel. Be sure it is not covered, or the system will be on whenever the ignition is on.

The system may also turn on your headlamps when driving through a parking garage, heavy overcast weather or a tunnel. This is normal.

There is a delay in the transition between the daytime and nighttime operation of the Daytime Running Lamps (DRL) and the automatic headlamp system so that driving under bridges or bright overhead street lights does not affect the system. The DRL and automatic headlamp system will only be affected when the light sensor sees a change in lighting lasting longer than the delay.

If you start your vehicle in a dark garage, the automatic headlamp system will come on immediately. Once you leave the garage, it will take approximately one minute for the automatic headlamp system to change to DRL if it is light outside. During that delay, your instrument panel cluster may not be as bright as usual. Make sure your instrument panel brightness control is in the full bright position. See *Instrument Panel Brightness on page 3-18*.

Downloaded from www.Manualslib.com manuals search engine

Off-Road Lamps

The off-road lamps, if equipped, provide auxiliary lighting when your vehicle is used off road. These lamps are not intended to be used in place of existing vehicle lighting. The lamps are not to be used on any public street or highway and are to be covered when not in use. Check your state and local laws before installing or using any auxiliary lighting. In some states it may be necessary to remove the roof lamps when operating the vehicle on the highway.

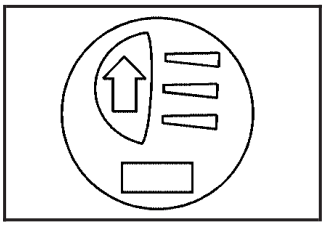

Roof Mounted Off-Road Light Switch

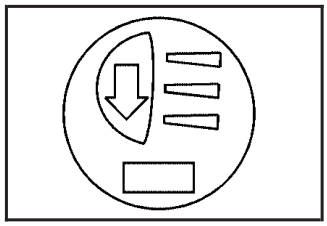

Lower Grille Off-Road Light Switch

The switches for the off-road lamps are located in the center of the instrument panel below climate controls. One switch is used for the front lower-grille mounted off-road lamps, if equipped, and the other switch is used for the roof-mounted off-road lamps, if equipped.

To use the lamps, remove the covers from the lamps and press the switch to turn them on. Press the switch again to turn them off. An indicator light on the switch will turn on when the lamps are on.

Notice: **Turning on the off-road lamps before removing the lamp covers could damage the off-road lamps and the covers. Always remove the covers before turning on the off-road lamps.**

The off-road lamps will remain on even after the ignition is turned off. The off-road lamp switch must be pressed to turn them off.

Downloaded from www.Manualslib.com manuals search engine

Fog Lamps

Your vehicle has fog lamps. You can use them for better vision in foggy or misty conditions. Your parking lamps and/or low-beam headlamps must be on for your fog lamps to work.

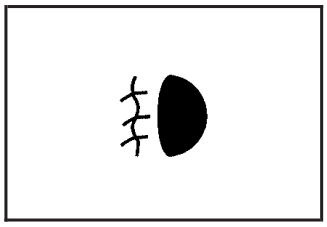

The fog lamp button is located in the exterior lamps control.

Press the button to turn the fog lamps on while the headlamps or parking lamps are on. Press the button again to turn them off. An indicator light will glow in the button when the fog lamps are on.

Remember, fog lamps alone will not give off as much light as your headlamps. Never use your fog lamps in the dark without turning on the headlamps.

The fog lamps will go off whenever your high-beam headlamps come on. When the high beams go off, the fog lamps will come on again.

Some localities have laws that require the headlamps to be on along with the fog lamps.

Instrument Panel Brightness

(Instrument Panel Brightness): This feature controls the brightness of the instrument panel lights.

The thumbwheel for this feature is located next to the exterior lamp control.

Turn the thumbwheel up to brighten or down to dim the instrument panel lights. Turn the thumbwheel all the way up to turn the dome lamps on.

Dome Lamp

The dome and footwell lamps will come on when you open a door. The dome lamps are located in the cargo and front area of the vehicle.

You can also turn the dome and footwell lamps on by turning the thumbwheel, located next to the exterior lamps control, all the way up. In this position, the lamps will remain on whether a door is opened or closed.

Downloaded from www.Manualslib.com manuals search engine

Dome Lamp Override

(Dome Lamp Override): You can use the dome override button, located below the exterior lamps control, to set the dome and footwell lamps to come on automatically when a door is opened, or to remain off. To turn the lamps off, press the button into the in position. With the button in this position, the dome lamps will remain off when the doors are open. To return the lamps to automatic operation, press the button again and return it to the out position. With the button in this position, the dome lamps will come on when you open a door.

Exit Lighting

With exit lighting, the interior lamps will come on when you remove the key from the ignition. The lamps will not come on if the dome override button is pressed in.

Reading Lamps

Your vehicle has reading lamps, press the button located next to the lamp to turn them on or off.

These lamps will not come on with the dome lamps.

Battery Run-Down Protection

This feature shuts off the dome lamp if it is left on for more than 20 minutes when the ignition is in LOCK. This will help prevent your battery from running down.

Accessory Power Outlet(s)

Your vehicle has accessory power outlets.

With accessory power outlets you can plug in auxiliary electrical equipment such as a cellular telephone or CB radio.

Your vehicle has two accessory power outlets located on the lower part of the instrument panel below the climate control system and there may be one located in the rear cargo area. A small cap must be pulled down to access an accessory power outlet. When not using an outlet, be sure to cover it with the protective cap.

Notice: **Leaving electrical equipment on for extended periods will drain the battery. Always turn off electrical equipment when not in use and do not plug in equipment that exceeds the maximum amperage rating.**

Downloaded from www.Manualslib.com manuals search engine

Certain electrical accessories may not be compatible with the accessory power outlet and could result in blown vehicle or adapter fuses. If you experience a problem, see your dealer for additional information on accessory power outlets.

Notice: **Adding any electrical equipment to your vehicle may damage it or keep other components from working as they should. The repairs would not be covered by your warranty. Do not use equipment exceeding maximum amperage rating. Check with your dealer before adding electrical equipment.**

When adding electrical equipment, be sure to follow the proper installation instructions included with the equipment.

Notice: **Improper use of the power outlet can cause damage not covered by your warranty. Do not hang any type of accessory or accessory bracket from the plug because the power outlets are designed for accessory power plugs only.**

Ashtray(s) and Cigarette Lighter

Your vehicle may have an ashtray and cigarette lighter.

Your ashtray is located in your center console area. The ashtray can be removed for cleaning. When the ashtray is removed, this area can also be used as a cupholder.

Notice: **If you put papers, pins, or other flammable items in the ashtray, hot cigarettes or other smoking materials could ignite them and possibly damage your vehicle. Never put flammable items in the ashtray.**

To use the lighter, press it in all the way, and let go. When it's ready, it will pop back out by itself.

Notice: **Holding a cigarette lighter in while it is heating will not allow the lighter to back away from the heating element when it is hot. Damage from overheating may occur to the lighter or heating element, or a fuse could be blown. Do not hold a cigarette lighter in while it is heating.**

Downloaded from www.Manualslib.com manuals search engine

Climate Controls

Climate Control System

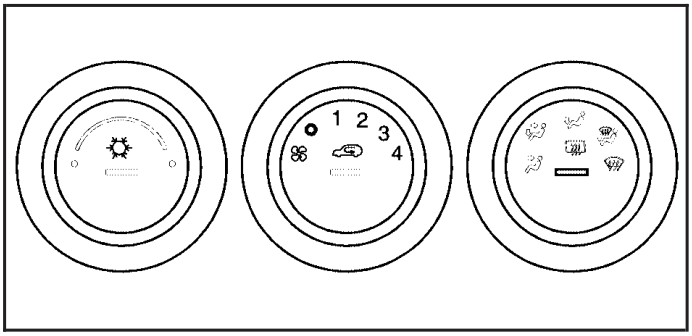

With this system you can control the heating, cooling, and ventilation of your vehicle. In-between modes are available by moving the right control knob between modes with symbols. The in-between mode will be a combination of the two modes that the control is selected between.

Temperature: Turn the left knob on the control panel to adjust the temperature of the air in the vehicle. Turn the knob clockwise or counterclockwise to increase or decrease the temperature.

(Air Conditioning): Press the left knob on the control panel to turn the air conditioning system on or off. An indicator light on the button will come on to let you know the air conditioning is activated. When the system is on, this setting cools and dehumidifies the air entering your vehicle.

The air conditioning will not function if the fan is turned off. If air conditioning is selected with fan off, the indicator will flash three times and then turn off.

You may notice a slight change in engine performance when the air conditioning compressor shuts off and turns on again. This is normal. The system is designed to make adjustments to help with fuel economy while still maintaining the selected temperature.

The air conditioning system removes moisture from the air, so you may sometimes notice a small amount of water dripping underneath your vehicle while idling or after turning off the engine. This is normal.

(Fan): Turn the center knob on the control panel to control the fan speed. Turn the knob clockwise or counterclockwise to increase or decrease the fan speed.

Downloaded from www.Manualslib.com manuals search engine

(Off): Turn the center knob to this position to turn the fan off. With the fan off, you may still experience airflow from the system that increases with vehicle speed depending on the mode and temperature settings. Enable recirculation mode to stop this airflow from occurring.

The right knob on the control panel is used to direct the airflow inside your vehicle. Turn the knob to select one of the following modes:

(Recirculation): Press the center knob on the control panel to recirculate air inside the vehicle and prevent outside air from coming in. It can be used to prevent outside odors from entering your vehicle and cool the air inside your vehicle more quickly. Press this button to turn the recirculation mode on or off. An indicator light on the button will come on to let you know the recirculation mode is activated. This is normal.

Recirculation is available in the bi-level, and vent modes. Recirculation is not available, and the light will not come on, while in floor, floor/defog and defrost mode. If recirculation is selected in these modes, the indicator will flash three times indicating it is not available in that mode.

(Vent): Turn the right knob on the control panel to this mode to direct air to the instrument panel outlets.

(Bi-Level): Turn the right knob on the control panel to this mode to direct air to the instrument panel outlets, and the remaining air to the floor outlets and the defroster and side window outlets. Cooler air is directed to the upper outlets and warmer air to the floor outlets.

(Floor): Turn the right knob on the control panel to this mode to direct air to the floor outlets, side window outlets, and defroster. Recirculation is not available in this mode.

Defogging and Defrosting

Fog on the inside of windows is a result of high humidity (moisture) condensing on the cool window glass. This can be minimized if the climate control system is used properly. There are two modes to clear fog or frost from your windshield and side windows. Use the defog mode to clear the windows of fog or moisture and warm the passengers. Use the defrost mode to remove fog or frost from the windshield more quickly. For best results, clear all snow and ice from the windshield before defrosting.

(Floor/Defog): Turn the right knob on the control panel to this mode to direct the air to the windshield, the side window outlets, and to the floor outlets. When you select this mode, the system runs the air conditioning system unless the outside temperature is near freezing or below. Recirculation is not available in this mode.

Downloaded from www.Manualslib.com manuals search engine

(Defrost): Turn the right knob on the control panel to this mode to direct most of the air to the windshield, and the side window outlets. When you select this mode, the system runs the air conditioning system unless the outside temperature is near or below freezing. Recirculation is not available in this mode.

Do not drive the vehicle until all the windows are clear.

Rear Window Defogger

The rear window defogger uses a warming grid to remove fog or frost from the rear window when the key is in the ignition and turned to ON.

(Rear Defogger): Press the right knob on the control panel to turn the rear window defogger on or off. First press of this button will activate the rear window defogger for 15 minutes and each subsequent activation lasts 7 and one-half minutes.

Notice: **Do not use anything sharp on the inside of the rear window. If you do, you could cut or damage the warming grid, and the repairs would not be covered by your warranty. Do not attach a temporary vehicle license, tape, a decal or anything similar to the defogger grid.**

Outlet Adjustment

Use the air outlets located in the center and on the side of your instrument panel to direct the airflow.

Your vehicle has air outlets that allow you to adjust the direction and amount of airflow inside the vehicle. Move the louvers up or down to change the direction of the airflow. Use the thumbwheel under the outlets to change the direction of the airflow from left to right.

Operation Tips

- Enable recirculation mode for maximum air conditioning performance.
- Clear away any ice, snow or leaves from the air inlets at the base of the windshield that may block the flow of air into your vehicle.
- Use of non-GM approved hood deflectors may adversely affect the performance of the system.
- Keep the path under the front seats clear of objects to help circulate the air inside of your vehicle more effectively.

Downloaded from www.Manualslib.com manuals search engine

Warning Lights, Gages, and Indicators

This part describes the warning lights and gages that may be on your vehicle. The pictures will help you locate them.

Warning lights and gages can signal that something is wrong before it becomes serious enough to cause an expensive repair or replacement. Paying attention to your warning lights and gages could also save you or others from injury.

Warning lights come on when there may be or is a problem with one of your vehicle's functions. As you will see in the details on the next few pages, some warning lights come on briefly when you start the engine just to let you know they are working. If you are familiar with this section, you should not be alarmed when this happens.

Gages can indicate when there may be or is a problem with one of your vehicle's functions. Often gages and warning lights work together to let you know when there is a problem with your vehicle.

When one of the warning lights comes on and stays on when you are driving, or when one of the gages shows there may be a problem, check the section that tells you what to do about it. Please follow this manual's advice. Waiting to do repairs can be costly — and even dangerous. So please get to know your warning lights and gages. They are a big help.

Your vehicle has a DIC that works along with the warning lights and gages. See *Driver Information Center (DIC) on page 3-41* for more information.

Downloaded from www.Manualslib.com manuals search engine

Instrument Panel Cluster

Your instrument panel cluster is designed to let you know at a glance how your vehicle is running. You will know how fast you are going, about how much fuel you have used, and many other things you will need to know to drive safely and economically.

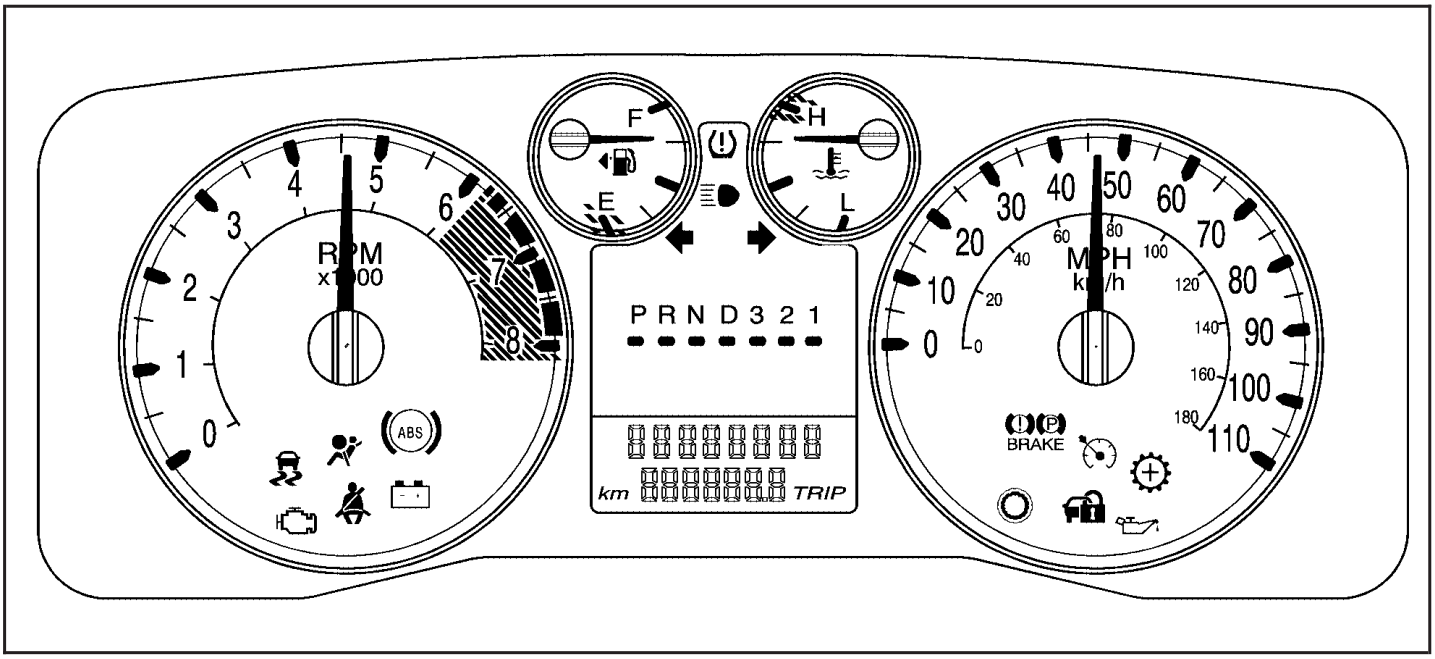

United States Manual Transmission version shown, Canada similar

Downloaded from www.Manualslib.com manuals search engine

Speedometer and Odometer

Your speedometer lets you see your speed in both miles per hour (mph) and kilometers per hour (km/h).

Your odometer shows how far your vehicle has been driven, in either miles or kilometers.

The odometer mileage can be checked with the ignition off. Simply press the trip information stem. See "Odometer" under *DIC Controls and Displays on page 3-41* for more information.

You may wonder what happens if your vehicle needs a new odometer installed. If the new one can be set to the mileage total of the old odometer, then it must be. But if it cannot, then it is set at zero, and a label must be put on the driver's door to show the old mileage reading when the new odometer was installed.

Trip Odometer

Your vehicle has a trip odometer that can tell you how far your vehicle has been driven since you last set the trip odometer to zero.

See "Trip Odometer" under *DIC Controls and Displays on page 3-41* for more information.

Tachometer

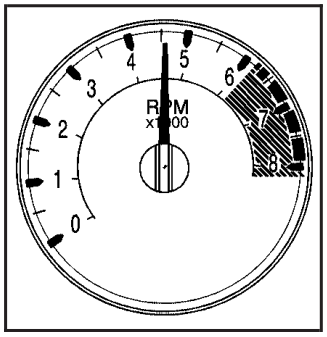

The tachometer displays the engine speed in revolutions per minute (rpm).

Notice: **If you operate the engine with the tachometer in the shaded warning area, your vehicle could be damaged, and the damages would not be covered by your warranty. Do not operate the engine with the tachometer in the shaded warning area.**

Downloaded from www.Manualslib.com manuals search engine

Safety Belt Reminder Light

When the key is turned to ON or START, a chime will be provided for several seconds to remind people to buckle their safety belts. The driver safety belt light will also be provided and stay on for several seconds, then it will flash for several more. You should buckle your seat belt.

This chime and light will be repeated if the driver remains unbuckled and the vehicle is in motion.

If the driver's belt is buckled, neither the chime nor the light will be provided.

Passenger Safety Belt Reminder Light

Several seconds after the key is turned to ON or START, a chime will sound for several seconds to remind the front passenger to buckle their safety belt. This would only occur if the passenger airbag is enabled. See *Passenger Sensing System on page 1-63* for more information. The passenger safety belt light will also come on and stay on for several seconds, then it will flash for several more.

This chime and light will be repeated if the passenger remains unbuckled and the vehicle is in motion.

If the passenger's safety belt is buckled, neither the chime nor the light will come on.

Downloaded from www.Manualslib.com manuals search engine

Airbag Readiness Light

There is an airbag readiness light on the instrument panel, which shows the airbag symbol. The system checks the airbag's electrical system for malfunctions. The light tells you if there is an electrical problem. The system check includes the airbag sensors, the airbag modules, the wiring and the crash sensing and diagnostic module. For more information on the airbag systems, see *Airbag System on page 1-53*.

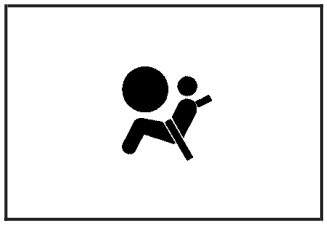

This light will come on when you start your vehicle, and it will flash for a few seconds. Then the light should go out. This means the system is ready.

If the airbag readiness light stays on after you start the vehicle or comes on when you are driving, your airbag system may not work properly. Have your vehicle serviced right away.

⚠ CAUTION:

If the airbag readiness light stays on after you start your vehicle, it means the airbag system may not be working properly. The airbags in your vehicle may not inflate in a crash, or they could even inflate without a crash. To help avoid injury to yourself or others, have your vehicle serviced right away if the airbag readiness light stays on after you start your vehicle.

The airbag readiness light should flash for a few seconds when you turn the ignition key to ON. If the light does not come on then, have it fixed so it will be ready to warn you if there is a problem.

Downloaded from www.Manualslib.com manuals search engine

Passenger Airbag Status Indicator

Your vehicle has the passenger sensing system. Your instrument panel has a passenger airbag status indicator.

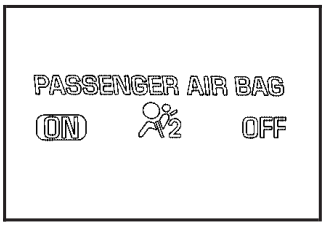

Passenger Airbag Status Indicator – United States

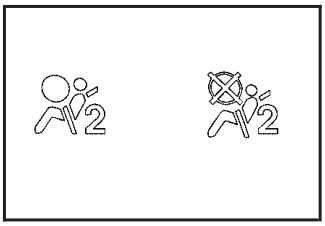

Passenger Airbag Status Indicator – Canada

When the ignition key is turned to ON or START, the passenger airbag status indicator will light ON and OFF, or the symbol for on and off, for several seconds as a system check. Then, after several more seconds, the status indicator will light either ON or OFF, or either the on or off symbol to let you know the status of the right front passenger's frontal airbag.

If the word ON or the on symbol is lit on the passenger airbag status indicator, it means that the right front passenger's frontal airbag is enabled (may inflate).

⚠ CAUTION:

If the on indicator comes on when you have a rear-facing child restraint installed in the right front passenger's seat, it means that the passenger sensing system has not turned off the passenger's frontal airbag. A child in a rear-facing child restraint can be seriously injured or killed if the right front passenger's airbag inflates. This is because the back of the rear-facing child restraint would be very close to the inflating airbag. Do not use a rear-facing child restraint in the right front passenger's seat if the airbag is turned on.

Your vehicle has a rear seat that will accommodate a rear-facing child restraint. A label on your sun visor says, "Never put a rear-facing child seat in the front." This is because the risk to the rear-facing child is so great, if the airbag deploys.

Downloaded from www.Manualslib.com manuals search engine

⚠ CAUTION:

Even though the passenger sensing system is designed to turn off the passenger's frontal airbag if the system detects a rear-facing child restraint, no system is failsafe, and no one can guarantee that an airbag will not deploy under some unusual circumstance, even though it is turned off. We recommend that rear-facing child restraints be secured in the rear seat, even if the airbag is off.

If the word OFF or the off symbol is lit on the airbag status indicator, it means that the passenger sensing system has turned off the right front passenger's frontal airbag. See *Passenger Sensing System on page 1-63* for more on this, including important safety information.

If, after several seconds, all status indicator lights remain on, or if there are no lights at all, there may be a problem with the lights or the passenger sensing system. See your dealer for service.

⚠ CAUTION:

If the off indicator and the airbag readiness light ever come on together, it means that something may be wrong with the airbag system. If this ever happens, have the vehicle serviced promptly, because an adult-size person sitting in the right front passenger seat may not have the protection of the frontal airbag. See *Airbag Readiness Light on page 3-28*.

Downloaded from www.Manualslib.com manuals search engine

Battery Warning Light

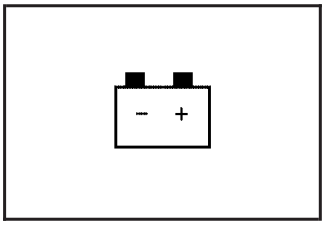

This light will come on briefly when you start the vehicle, as a check to show you it is working; then it should go out.

If it stays on, or comes on while you are driving, you may have a problem with the electrical charging system. Have it checked right away. Driving while this light is on could drain your battery and result in a vehicle that may stall. See *DIC Warnings and Messages on page 3-44* for more information.

If you must drive a short distance with the light on, be certain to turn off all your accessories, such as the radio and climate control system.

Up-Shift Light (Manual Transmission)

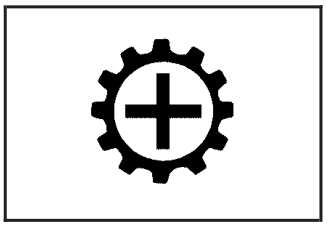

This light appears when you need to shift to the next higher gear on a manual transmission vehicle.

Shifting when the indicator light is on will help you get the best fuel economy. See “Up-Shift Light” under *Manual Transmission Operation on page 2-21* for more information.

Downloaded from www.Manualslib.com manuals search engine

Brake System Warning Light

Your vehicle's hydraulic brake system is divided into two parts. If one part is not working, the other part can still work and stop you. For good braking, though, you need both parts working well.

If the warning light comes on, there could be a brake problem. Have your brake system inspected right away.

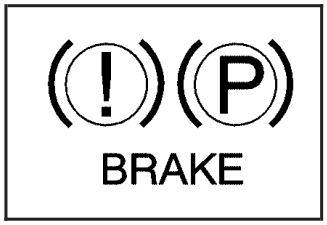

United States

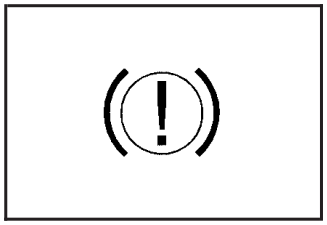

Canada

This light should come on briefly when you turn the ignition key to ON. If it does not come on then, have it fixed so it will be ready to warn you if there is a problem.

When the ignition is on, the brake system warning light will also come on when you set your parking brake. See *Parking Brake on page 2-27* for more information. The light will stay on if your parking brake does not release fully. If it stays on after your parking brake is fully released, it means you have a brake problem.

If the light comes on while you are driving, pull off the road and stop carefully. You may notice that the pedal is harder to push, or the pedal may go closer to the floor. It may take longer to stop. If the light is still on, have the vehicle towed for service. See *Towing Your Vehicle on page 4-56*.

⚠ CAUTION:

Your brake system may not be working properly if the brake system warning light is on. Driving with the brake system warning light on can lead to an accident. If the light is still on after you have pulled off the road and stopped carefully, have the vehicle towed for service.

Downloaded from www.Manualslib.com manuals search engine

Anti-Lock Brake System Warning Light

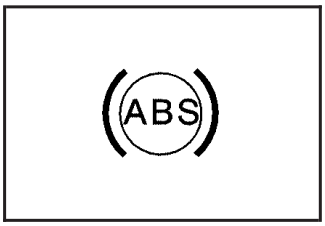

With the anti-lock brake system, this light will come on briefly when you start your engine to show it is working. Then it will turn off. This is normal.

If the light stays on, or comes on when you're driving, your vehicle needs service. If the regular brake system warning light isn't on, you still have brakes, but you don't have anti-lock brakes. If the regular brake system warning light is also on, you don't have anti-lock brakes and there's a problem with your regular brakes. See *Brake System Warning Light on page 3-32*.

The anti-lock brake system warning light should come on briefly when you turn the ignition key to ON. If the light doesn't come on then, have it fixed so it will be ready to warn you if there is a problem.

Traction Off Light

If you have the traction control system, this light will come on when the traction control system has been turned off.

This light will come on briefly when the ignition is turned to ON, if it does not the system may require service.

For more information on the traction off light, see *Traction Control System (TCS) on page 4-9*.

StabiliTrak® Not Ready Light

If you have the StabiliTrak® system, this light will come on when the StabiliTrak® system has been turned off.

This light will come on briefly when the ignition is turned to ON, if it does not the system may require service.

For more information, see *StabiliTrak® System (Automatic Transmission) on page 4-11*.

Downloaded from www.Manualslib.com manuals search engine

Engine Coolant Temperature Gage

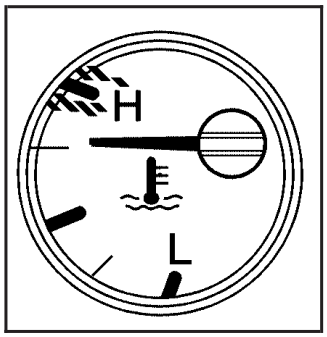

United States

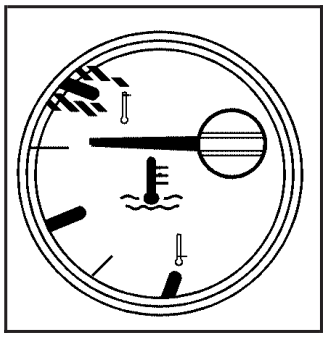

Canada

This gage shows the engine coolant temperature.

If the gage pointer is in the shaded area of the gage, the engine is too hot. It means that your engine coolant has overheated. If you have been operating your vehicle under normal driving conditions, you should pull off the road, stop your vehicle and turn off the engine as soon as possible.

See *Engine Overheating on page 5-27* for more information.

Tire Pressure Light

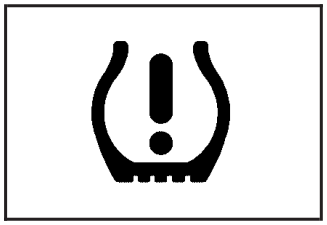

This light should come on briefly when you turn the ignition to ON. It will then come on only when a flat or low tire pressure condition exists.

See *Tire Pressure Monitor System on page 5-59* for more information.

Downloaded from www.Manualslib.com manuals search engine

Malfunction Indicator Lamp

Check Engine Light

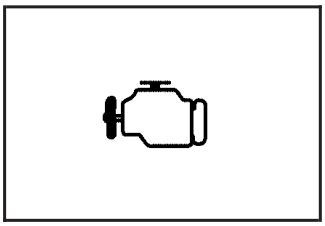

Your vehicle has a computer which monitors operation of the fuel, ignition, and emission control systems.

This system is called OBD II (On-Board Diagnostics-Second Generation) and is intended to assure that emissions are at acceptable levels for the life of the vehicle, helping to produce a cleaner environment. The check engine light comes on to indicate that there is a problem and service is required. Malfunctions often will be indicated by the system before any problem is apparent. This may prevent more serious damage to your vehicle. This system is also designed to assist your service technician in correctly diagnosing any malfunction.

Notice: **If you keep driving your vehicle with this light on, after awhile, your emission controls may not work as well, your fuel economy may not be as good, and your engine may not run as smoothly. This could lead to costly repairs that may not be covered by your warranty.**

Notice: **Modifications made to the engine, transmission, exhaust, intake, or fuel system of your vehicle or the replacement of the original tires with other than those of the same Tire Performance Criteria (TPC) can affect your vehicle's emission controls and may cause this light to come on. Modifications to these systems could lead to costly repairs not covered by your warranty. This may also result in a failure to pass a required Emission Inspection/Maintenance test. See *Accessories and Modifications on page 5-3*.**

This light should come on, as a check to show you it is working, when the ignition is on and the engine is not running. If the light does not come on, have it repaired. This light will also come on during a malfunction in one of two ways:

- **Light Flashing** — A misfire condition has been detected. A misfire increases vehicle emissions and may damage the emission control system on your vehicle. Diagnosis and service may be required.
- **Light On Steady** — An emission control system malfunction has been detected on your vehicle. Diagnosis and service may be required.

Downloaded from www.Manualslib.com manuals search engine

If the Light is Flashing

The following may prevent more serious damage to your vehicle:

- Reducing vehicle speed
- Avoiding hard accelerations
- Avoiding steep uphill grades
- If you are towing a trailer, reduce the amount of cargo being hauled as soon as it is possible

If the light stops flashing and remains on steady, see “If the Light Is On Steady” following.

If the light continues to flash, when it is safe to do so, stop the vehicle. Find a safe place to park your vehicle. Turn the key off, wait at least 10 seconds and restart the engine. If the light remains on steady, see “If the Light Is On Steady” following. If the light is still flashing, follow the previous steps, and see your dealer for service as soon as possible.

If the Light Is On Steady

You may be able to correct the emission system malfunction by considering the following:

Did you recently put fuel into your vehicle?

If so, reinstall the fuel cap, making sure to fully install the cap. See *Filling the Tank on page 5-8*. The diagnostic system can determine if the fuel cap has been left off or improperly installed. A loose or missing fuel cap will allow fuel to evaporate into the atmosphere. A few driving trips with the cap properly installed should turn the light off.

Did you just drive through a deep puddle of water?

If so, your electrical system may be wet. The condition will usually be corrected when the electrical system dries out. A few driving trips should turn the light off.

Downloaded from www.Manualslib.com manuals search engine

Have you recently changed brands of fuel?

If so, be sure to fuel your vehicle with quality fuel. See *Gasoline Octane on page 5-5*. Poor fuel quality will cause your engine not to run as efficiently as designed. You may notice this as stalling after start-up, stalling when you put the vehicle into gear, misfiring, hesitation on acceleration, or stumbling on acceleration. (These conditions may go away once the engine is warmed up.) This will be detected by the system and cause the light to turn on.

If you experience one or more of these conditions, change the fuel brand you use. It will require at least one full tank of the proper fuel to turn the light off.

If none of the above steps have made the light turn off, your dealer can check the vehicle. Your dealer has the proper test equipment and diagnostic tools to fix any mechanical or electrical problems that may have developed.

Emissions Inspection and Maintenance Programs

Some state/provincial and local governments have or may begin programs to inspect the emission control equipment on your vehicle. Failure to pass this inspection could prevent you from getting a vehicle registration.

Here are some things you need to know to help your vehicle pass an inspection:

Your vehicle will not pass this inspection if the check engine light is on or not working properly.

Your vehicle will not pass this inspection if the OBD (on-board diagnostic) system determines that critical emission control systems have not been completely diagnosed by the system. The vehicle would be considered not ready for inspection. This can happen if you have recently replaced your battery or if your battery has run down. The diagnostic system is designed to evaluate critical emission control systems during normal driving. This may take several days of routine driving. If you have done this and your vehicle still does not pass the inspection for lack of OBD system readiness, your GM dealer can prepare the vehicle for inspection.

Downloaded from www.Manualslib.com manuals search engine

Oil Pressure Light

⚠ CAUTION:

Do not keep driving if the oil pressure is low. If you do, your engine can become so hot that it catches fire. You or others could be burned. Check your oil as soon as possible and have your vehicle serviced.

Notice: **Lack of proper engine oil maintenance may damage the engine. The repairs would not be covered by your warranty. Always follow the maintenance schedule in this manual for changing engine oil.**

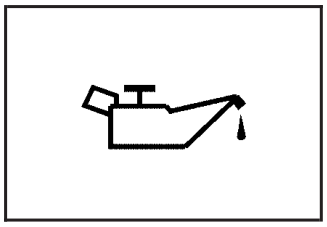

This light tells you if there could be a problem with your engine oil pressure.

The light goes on when you turn your key to ON or START. It goes off once you start your engine. That's a check to be sure the light works. If it doesn't come on, be sure to have it fixed so it will be there to warn you if something goes wrong.

When the light comes on and stays on, it means that oil isn't flowing through your engine properly. You could be low on oil and you might have some other system problem. See *Engine Oil on page 5-13* and "OIL" under *DIC Warnings and Messages on page 3-44* for more information.

Downloaded from www.Manualslib.com manuals search engine

Security Light

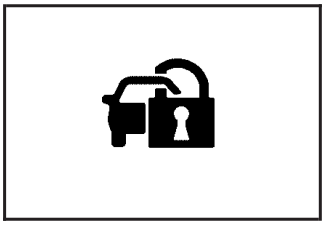

This light will come on briefly when you turn the key to START. The light will stay on until the engine starts.

If the ignition is turned on, and the light flashes, the Passlock® system has entered a tamper mode. If the vehicle fails to start, see *Passlock® on page 2-14*.

If the ignition is turned on, but the engine is not running, the light should be on solid.

If the light comes on continuously while driving and stays on, there may be a problem with the Passlock® system. Your vehicle will not be protected by Passlock®, and you should see your dealer.

Also, see *Content Theft-Deterrent on page 2-12* for additional information regarding the security light.

Cruise Control Light

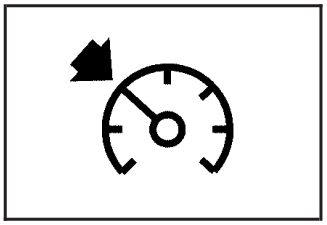

This light comes on whenever you set your cruise control.

The light will go out when the cruise control is turned off. See *Cruise Control on page 3-11* for more information.

Highbeam On Light

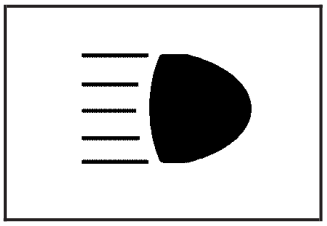

This light comes on whenever the high-beam headlamps are on.

See *Headlamp High/Low-Beam Changer on page 3-8* for more information.

Downloaded from www.Manualslib.com manuals search engine

Fuel Gage

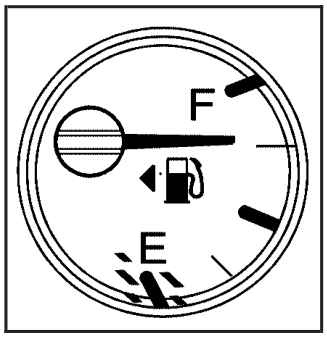

United States

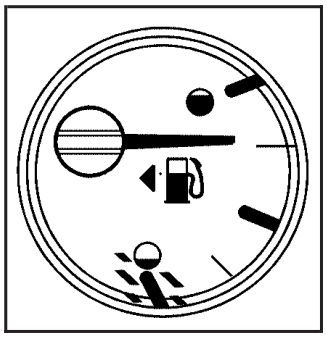

Canada

When the ignition is on, the fuel gage tells you about how much fuel you have remaining in the fuel tank.

Here are three things that some owners ask about. None of these indicate a problem with your fuel gage:

- At the gas station, the gas pump shuts off before the gage reads full.
- It takes a little more or less fuel to fill up than the gage indicated. For example, the gage may have indicated the tank was half full, but it actually took a little more or less than half the tank's capacity to fill the tank.
- The gage moves a little when you turn a corner or speed up.

When the fuel in the fuel tank is low, you will see a LOW FUEL message on the Driver Information Center (DIC) display. See *DIC Warnings and Messages on page 3-44* for more information.

Downloaded from www.Manualslib.com manuals search engine

Driver Information Center (DIC)

The Driver Information Center (DIC) displays information such as the trip odometer, personalization features, and warning messages. The DIC display is located on the instrument panel cluster.

DIC Controls and Displays

The Driver Information Center (DIC) comes on when the ignition is on.

If a problem is detected, a warning message will appear on the display. Pressing and releasing the trip odometer reset stem on the DIC will acknowledge some current warnings or service messages. Some messages will only clear after the required action has been taken.

The DIC has different modes which can be accessed by pressing the trip odometer reset stem on the DIC. These modes are explained in the following section. The DIC trip odometer reset stem is located on the instrument panel cluster next to the DIC display. To scroll through the available functions, press and release the reset stem.

Trip Information

Odometer

The odometer is automatically displayed on the DIC when you start the vehicle. The odometer shows the total distance the vehicle has been driven in either miles for the United States or kilometers for Canada.

Trip Odometer

Press and release the reset stem until TRIP appears on the DIC display. This shows the current distance traveled since the last reset of the trip odometer in either miles for the United States or kilometers for Canada.

Press and hold the reset stem for approximately four seconds to reset the trip odometer.

Downloaded from www.Manualslib.com manuals search engine

Engine Oil Life System

Press the reset stem until OIL LIFE RESET appears — alternating between OIL LIFE and RESET — on the DIC display. The engine oil life system calculates an estimate of the oil's remaining useful life. The CHANGE OIL message will alert you to change your oil on a schedule consistent with your driving conditions. Always reset the OIL LIFE message after an oil change. To reset the message, see *Engine Oil Life System on page 5-16*.

In addition to the engine oil life system monitoring the oil life, additional maintenance is recommended in the Maintenance Schedule in this manual. See *Engine Oil on page 5-13* and *Scheduled Maintenance on page 6-4* for more information.

Language

This feature allows you to choose the language in which the DIC display will show information.

To set your choice for this feature, perform the following steps:

1. With the engine off, turn the key to ON.
2. Close all doors and make sure that the DOORS message is not displayed in the DIC.
3. Press and release the reset stem until the language is shown on the DIC display.
4. To view the next available language, press and hold the reset stem for approximately two seconds. Release the reset stem and press and hold again to view each language. You can choose from English (default), Spanish, or French.
5. Once the desired language is shown on the DIC display, briefly press the reset stem to set your choice.

Automatic Door Locks

This feature allows you to program your door locks to a preferred setting.

To set your choice for this feature, perform the following steps:

1. With the engine off, turn the key to LOCK. Do not remove the key from the ignition.
2. Press and hold the power door lock button for approximately three seconds until the DIC display shows the current door lock mode.
3. To view the next available mode, press and hold the reset stem for approximately two seconds. Release the reset stem and press and hold again to view each mode.
4. Once the desired mode is shown on the DIC display, briefly press the reset stem to set your choice. The DIC display will then clear.

Downloaded from www.Manualslib.com manuals search engine

The following are the available modes:

Lock 1 (default): On vehicles with an automatic transmission, this mode locks all of the doors when the vehicle is shifted out of PARK (P) and unlocks all of the doors when the vehicle is shifted into PARK (P).

On vehicles with a manual transmission, this mode locks all of the doors when the vehicle speed is greater than 15 mph (24 km/h) and unlocks all of the doors when the key is removed from the ignition.

Lock 2: On vehicles with an automatic transmission, this mode locks all of the doors when the vehicle is shifted out of PARK (P) and unlocks the driver's door when the vehicle is shifted into PARK (P).

On vehicles with a manual transmission, this mode locks all of the doors when the vehicle speed is greater than 15 mph (24 km/h) and unlocks the driver's door when the key is removed from the ignition.

Lock 3: On vehicles with an automatic transmission, this mode locks all of the doors when the vehicle is shifted out of PARK (P). The doors will not automatically unlock.

On vehicles with a manual transmission, this mode locks all of the doors when the vehicle speed is greater than 15 mph (24 km/h). The doors will not automatically unlock.

Remote Keyless Entry Feedback

This feature allows you to program your remote keyless entry feedback to a preferred setting.

To set your choice for this feature, perform the following steps:

1. With the engine off, turn the key to LOCK. Do not remove the key from the ignition.
2. Press and hold the lock and unlock buttons on the remote keyless entry transmitter at the same time. Hold both buttons until the DIC display shows the current remote keyless entry feedback mode.
3. To view the next available mode, press and hold the reset stem for approximately two seconds. Release the reset stem and press and hold again to view each mode.
4. Once the desired mode is shown on the DIC display, briefly press the reset stem to set your choice. The DIC display will then clear.

Downloaded from www.Manualslib.com manuals search engine

The following are the available modes:

RFA 1 (default): This mode flashes the parking lamps when you press the lock or unlock buttons on the remote keyless entry transmitter.

RFA 2: This mode flashes the parking lamps and sounds the horn when you press the lock button on the remote keyless entry transmitter. This mode also flashes the parking lamps when you press the unlock button on the remote keyless entry transmitter.

RFA 3: This mode flashes the parking lamps and sounds the horn when you press the lock or unlock buttons on the remote keyless entry transmitter.

RFA 4: This mode disables remote keyless entry feedback. There will be no feedback when you press the lock or unlock buttons on the remote keyless entry transmitter.

DIC Warnings and Messages

Warning messages are displayed on the Driver Information Center (DIC) to notify the driver that the status of the vehicle has changed and that some action may be needed by the driver to correct the condition. More than one message may appear at one time. They will appear one after the other. The messages are displayed for four seconds each. Some messages may not require immediate action but you should press and release the trip odometer reset stem to acknowledge that you received the message and clear it from the display. Each message must be acknowledged individually. Some messages cannot be cleared from the display because they are more urgent. These messages require action before they can be removed from the DIC display. You should take any messages that appear on the display seriously and remember that clearing the messages will only make the messages disappear, not correct the problem. The following are the possible messages that can be displayed and some information about them.

AC (Air Conditioning) OFF

This message will be displayed when the engine coolant temperature is too high and the air conditioning in your vehicle needs to be turned off. See *Engine Overheating on page 5-27* and *Climate Control System on page 3-21* for more information. This message will be displayed along with the ENG HOT message.

Downloaded from www.Manualslib.com manuals search engine

ABS (Anti-Lock Brake System) FAULT

This message will be displayed if there is a problem with the anti-lock brake system. Check the anti-lock brake system as soon as possible and have your vehicle serviced by your GM dealer. See *Brakes on page 5-36* and *Anti-Lock Brake System Warning Light on page 3-33* for more information. Press and release the reset stem to acknowledge the message and clear it from the DIC display.

BATTERY

This message will be displayed when there is a problem with the battery. See *Battery on page 5-39* and *Battery Warning Light on page 3-31* for more information.

BRAKES

This message will be displayed if there is a problem with the brakes. Check the brakes as soon as possible and have your vehicle serviced by your GM dealer. See *Brakes on page 5-36* and *Brake System Warning Light on page 3-32* for more information. Press and release the reset stem to acknowledge the message and clear it from the DIC display.

CHANGE OIL

This message will be displayed when the oil needs to be changed. Check the oil in your vehicle as soon as possible and have your vehicle serviced by your GM dealer. See *Engine Oil on page 5-13* and *Scheduled Maintenance on page 6-4* for more information. Press and release the reset stem to acknowledge the message and clear it from the display.

DOORS

This message will be displayed when one or more of the doors is ajar. You should check all the doors on your vehicle to make sure they are closed. The message will clear from the display after all of the doors are closed.

ENG (Engine) HOT

This message will be displayed when the engine coolant temperature is hot. Check the engine coolant temperature gage. See *Engine Coolant Temperature Gage on page 3-34*. You should have your vehicle serviced by your GM dealer as soon as possible if you suspect the engine is overheating. See *Engine Overheating on page 5-27* for more information.

Downloaded from www.Manualslib.com manuals search engine

FLUID

This message will be displayed if the brake fluid is low. Check the brake fluid as soon as possible and have your vehicle serviced by your GM dealer. See *Brakes on page 5-36* for more information. Press and release the reset stem to acknowledge the message and clear it from the DIC display.

FUEL CAP

This message will be displayed if the vehicle's fuel cap is either off or loose. You should pull over and check to see if your vehicle's fuel cap is secure as soon as possible. You may also see the check engine light on the instrument panel cluster. If the check engine light does come on when your vehicle's fuel cap was loose, it may take a few driving trips before the light turns off. See *Malfunction Indicator Lamp on page 3-35* for more information if the light still remains on. Press and release the reset stem to acknowledge the message and clear it from the display.

LOW FUEL

This message will be displayed if the level of fuel in the vehicle is low. You should also check the fuel gage. See *Fuel Gage on page 3-40* for more information. You should fill your vehicle's fuel tank as soon as possible.

LOW TIRE

This message will be displayed if a low tire pressure is detected in any of the vehicle's tires. Press and release the reset stem to acknowledge the message and clear it from the display. The message will appear at each ignition cycle until the tires are inflated to the correct inflation pressure. See *Tires on page 5-51* and *Inflation - Tire Pressure on page 5-58* for more information on tires and the correct inflation pressures.

OIL

This message will be displayed when the oil pressure is low. See *Oil Pressure Light on page 3-38* and *Engine Oil on page 5-13* for more information.

PARK BRK (Brake)

This message will be displayed when the parking brake is set. See *Parking Brake on page 2-27* and *Brake System Warning Light on page 3-32* for more information. The message will clear from the display after the parking brake is released or by pressing and releasing the reset stem.

Downloaded from www.Manualslib.com manuals search engine

REDUCED POWER

This message will be displayed when the vehicle's engine power is reduced. Reduced engine power can affect the vehicle's ability to accelerate. If this message is on, but there is no reduction in performance, proceed to your destination. The performance may be reduced the next time the vehicle is driven. The vehicle may be driven at a reduced speed while this message is on, but acceleration and speed may be reduced. Anytime this message stays on, the vehicle should be taken to your GM dealer for service as soon as possible. Press and release the reset stem to acknowledge the message and clear it from the display.

SERV (Service) 4WD (Four-Wheel Drive)

This message will be displayed when there is a problem with the transfer case control system. Check the transfer case on your vehicle and have it serviced by your GM dealer. See *Full-Time Four-Wheel Drive on page 2-22* for more information about the transfer case. Press and release the reset stem to acknowledge the message and clear it from the display.

SERVICE STAB (Stability) SYS (System)

If your vehicle has StabiliTrak®, this message will be displayed if there is a problem with the StabiliTrak® system. You should have your vehicle serviced by your GM dealer. See *StabiliTrak® System (Automatic Transmission) on page 4-11* for more information.

SERV (Service) TPM (Tire Pressure Monitor)

This message will be displayed if any of the tire monitor sensors have malfunctioned, if the tire monitor sensors have not been programmed, or if the recommended tire pressures are not programmed. See your GM dealer for service. Press and release the reset stem to acknowledge the message and clear it from the display.

This message will appear at each ignition cycle until the system is serviced. See your GM dealer.

See *Tire Pressure Monitor System on page 5-59* for more information.

SERV (Service) VEH (Vehicle)

This message will be displayed if your vehicle needs service. You should have your vehicle serviced by your GM dealer as soon as possible.

Downloaded from www.Manualslib.com manuals search engine

STAB (Stability) SYS (System) OFF

If your vehicle has StabiliTrak®, this message will be displayed when the StabiliTrak® system is turned off. See *StabiliTrak® System (Automatic Transmission) on page 4-11* for more information.

TRAC (Traction) OFF

This message along with the traction off light will be displayed when the traction control system is turned off by pressing the TCS button. See *Traction Off Light on page 3-33* and *Traction Control System (TCS) on page 4-9* for more information.

TRACTION FAILED

This message will be displayed if there is a problem with the traction control system. Check the traction control system as soon as possible and have your vehicle serviced by your GM dealer. See *Traction Control System (TCS) on page 4-9* for more information. Press and release the reset stem to acknowledge the message and clear it from the display.

TURN SIGNAL

This message will be displayed when the turn signal is on for approximately 0.75 miles (1.2 km) of travel. Press and release the reset stem to acknowledge the message and clear it from the display.

Audio System(s)

Determine which radio your vehicle has and then read the pages following to familiarize yourself with its features.

Driving without distraction is a necessity for a safer driving experience. See *Defensive Driving on page 4-2*. By taking a few moments to read this manual and get familiar with your vehicle's audio system, you can use it with less effort, as well as take advantage of its features. While your vehicle is parked, set up your audio system by presetting your favorite radio stations, setting the tone, and adjusting the speakers. Then, when driving conditions permit, you can tune to your favorite stations using the presets and steering wheel controls if the vehicle has them.

⚠ CAUTION:

This system provides you with a far greater access to audio stations and song listings. Giving extended attention to entertainment tasks while driving can cause a crash and you or others can be injured or killed. Always keep your eyes on the road and your mind on the drive — avoid engaging in extended searching while driving.

Downloaded from www.Manualslib.com manuals search engine

Keeping your mind on the drive is important for safe driving. For more information, see *Defensive Driving on page 4-2*.

Here are some ways in which you can help avoid distraction while driving.

While your vehicle is parked:

- Familiarize yourself with all of its controls.
- Familiarize yourself with its operation.
- Set up your audio system by presetting your favorite radio stations, setting the tone, and adjusting the speakers. Then, when driving conditions permit, you can tune to your favorite radio stations using the presets and steering wheel controls if the vehicle has them.

Notice: **Before adding any sound equipment to your vehicle, such as an audio system, CD player, CB radio, mobile telephone, or two-way radio, make sure that it can be added by checking with your dealer. Also, check federal rules covering mobile radio and telephone units. If sound equipment can be added, it is very important to do it properly. Added sound equipment may interfere with the operation of your vehicle's engine, radio, or other systems, and even damage them. Your vehicle's systems may interfere with the operation of sound equipment that has been added.**

Notice: **The chime signals related to safety belts, parking brake, and other functions of your vehicle operate through the radio/entertainment system. If that equipment is replaced or additional equipment is added to your vehicle, the chimes may not work. Make sure that replacement or additional equipment is compatible with your vehicle before installing it. See *Accessories and Modifications on page 5-3*.**

Your vehicle has a feature called Retained Accessory Power (RAP). With RAP, the audio system can be played even after the ignition is turned off. See *Retained Accessory Power (RAP) on page 2-16* for more information.

Setting the Time

Press and hold H until the correct hour appears on the display. AM or PM will appear on the display (Radio with CD (UpLevel, MP3, and Six-Disc CD)). Press and hold M until the correct minute appears on the display. The time can be set with the ignition on or off.

Downloaded from www.Manualslib.com manuals search engine

Radio with CD

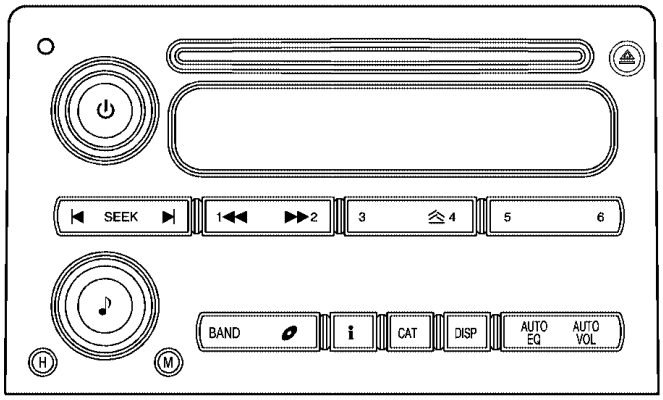

Radio with Single CD shown, Radio with Single CD (MP3) similar

XM™ Satellite Radio Service

XM™ is a satellite radio service that is based in the 48 contiguous United States and in Canada (if available). XM™ offers over 100 coast-to-coast channels including music, news, sports, talk, and children's programming. XM™ provides digital quality audio and text information that includes song title and artist name. A service fee is required in order to receive the XM™ service. For more information, contact XM™ at www.xmradio.com or call 1-800-852-XMXM (9696).

Playing the Radio

⏻ (Power/Volume): Press this knob to turn the system on and off.

Turn this knob to increase or to decrease the volume.

DISP (Display): Press this button to switch the display between the radio station frequency and the time. When the ignition is turned off, press this knob to display the time.

For XM™ (if equipped), press the DISP button while in XM™ mode to retrieve four different categories of information related to the current song or channel: Artist, Song Title, Category or PTY, Channel Number/Channel Name.

To change the default on the display, press the DISP button until you see the display you want, then hold this knob for two seconds. The radio will produce one beep and the selected display will now be the default.

Downloaded from www.Manualslib.com manuals search engine

AUTO VOL (Automatic Volume): With automatic volume, the audio system adjusts automatically to make up for road and wind noise as you drive.

Set the volume at the desired level. Press this button to select LOW, MEDIUM, or HIGH. Each higher setting will allow for more volume compensation at faster vehicle speeds. Then as you drive, automatic volume increases the volume, as necessary, to overcome noise at any speed. The volume level should always sound the same to you as you drive. NONE will appear on the display if the radio cannot determine the vehicle speed. To turn automatic volume off, press this button until AVOL OFF appears on the display.

Finding a Station

BAND: Press this button to switch between FM1, FM2, AM, or XM1 or XM2 (if equipped). The display will show the selection.

♪ (Tune): Turn this knob to select radio stations.

|◀ SEEK ▶| : Press and release the right or the left arrow to go to the next or to the previous station and stay there.

To scan stations, press and hold either arrow for more than two seconds. SCN will appear on the display and the radio will produce one beep. The radio will go to a station, play for a few seconds, then go on to the next station. Press either arrow again or one of the pushbuttons to stop scanning presets.

To scan preset stations, press and hold either arrow for more than four seconds. PSC will appear on the display and the radio will produce two beeps. The radio will go to a preset station, play for a few seconds, then go on to the next preset station. Press either arrow again or one of the pushbuttons to stop scanning presets.

The radio will only seek and scan stations with a strong signal that are in the selected band.

i (Information) (XM™ Satellite Radio Service and MP3 Features): If the current station has a message, the information symbol will appear on the display. Press this button to see the message. The message may display the artist, song title, call in phone numbers, etc.

If the entire message is not displayed, parts of the message will appear every three seconds. To scroll through the message, press and release the information button. A new group of words will appear on the display after every press of this button. Once the complete message has been displayed, the information symbol will disappear from the display until another new message is received. The last message can be displayed by pressing the information button. You can view the last message until a new message is received or a different station is tuned to.

When a message is not available from a station, NO INFO will appear on the display.

Downloaded from www.Manualslib.com manuals search engine

Setting Preset Stations

Up to 30 stations (six FM1, six FM2, and six AM, six XM1 and six XM2 (if equipped)), can be programmed on the six numbered pushbuttons, by performing the following steps:

1. Turn the radio on.
2. Press BAND to select FM1, FM2, AM, or XM1 or XM2.
3. Tune in the desired station.
4. Press EQ to select the equalization.
5. Press and hold one of the six numbered pushbuttons until you hear a beep. Whenever that numbered pushbutton is pressed, the station that was set will return and the equalization that was selected will be stored for that pushbutton.
6. Repeat the steps for each pushbutton.

Setting the Tone (Bass/Treble)

♪ **(Bass/Treble):** Push and release this knob until BAS or TRE appears on the display. Turn this knob to increase or to decrease. The display will show the bass or the treble level. If a station is weak or noisy, decrease the treble.

To adjust the bass and the treble to the middle position, push and hold the tone knob. The radio will produce one beep.

To adjust all tone and speaker controls to the middle position, push and hold the tone knob when no tone or speaker control is displayed. CEN will appear on the display and you will hear a beep.

AUTO EQ (Automatic Equalization): Press this button to select customized equalization settings designed for country/western, jazz, talk, pop, rock, and classical.

To return the bass and treble to the manual mode, push and release the tone knob until MANUAL appears on the display.

Adjusting the Speakers (Balance/Fade)

♪ **(Balance/Fade):** To adjust the balance between the right and the left speakers, push and release this knob until BAL appears on the display. Turn the knob to move the sound toward the right or the left speakers.

To adjust the fade between the front and the rear speakers, push and release the speaker knob until FAD appears on the display. Turn the knob to move the sound toward the front or the rear speakers.

To adjust the balance and the fade to the middle position, push the speaker knob, then push it again and hold it until you hear one beep.

To adjust all tone and speaker controls to the middle position, push and hold the speaker knob when no tone or speaker control is displayed. CEN will appear on the display and you will hear a beep.

Downloaded from www.Manualslib.com manuals search engine

Finding a Category (CAT) Station

To select and find a desired category perform the following:

1. Press the CAT button to activate program type select mode. A category will appear on the display.
2. Press the CAT button to select a category.
3. Once the desired category is displayed, press either SEEK arrow to select and to take you to the categories first station.
4. To go to another station within that category and the category is displayed, press the CAT button once. If the category is not displayed, press the CAT button twice to display the category and then to go to another station.
5. Press CAT to exit program type select mode.

   If CAT times out and is no longer on the display, go back to Step 1.

If the radio cannot find the desired program type, NONE will appear on the display and the radio will return to the last station you were listening to.

BAND (Alternate Frequency): Alternate frequency allows the radio to switch to a stronger station with the same category. To turn alternate frequency on, press and hold BAND for two seconds. AF ON will appear on the display. The radio may switch to stations with a stronger frequency.

To turn alternate frequency off, press and hold BAND again for two seconds. AF OFF will appear on the display. The radio will not switch to other stations.

This function does not apply for XM™ Satellite Radio Service.

Radio Messages

CAL ERR (Calibration Error): The audio system has been calibrated for your vehicle from the factory. If CAL ERR appears on the display it means that the radio has not been configured properly for your vehicle and it must be returned to your GM dealer for service.

LOC (Locked): This message is displayed when the THEFTLOCK® system has locked up. Take your vehicle to your GM dealer for service.

If any error occurs repeatedly or if an error cannot be corrected, contact your GM dealer.

Downloaded from www.Manualslib.com manuals search engine

XM™ Radio Messages

Radio Display Message	Condition	Action Required
XL (Explicit Language Channels)	XL on the radio display, after the channel name, indicates content with explicit language.	These channels, or any others, can be blocked at a customer's request, by calling 1-800-852-XMXM (9696).
Updating	Updating encryption code	The encryption code in the receiver is being updated, and no action is required. This process should take no longer than 30 seconds.
No Signl	Loss of signal	The system is functioning correctly, but the vehicle is in a location that is blocking the XM™ signal. When the vehicle is moved into an open area, the signal should return.
Loading	Acquiring channel audio (after 4 second delay)	The radio system is acquiring and processing audio and text data. No action is needed. This message should disappear shortly.
Off Air	Channel not in service	This channel is not currently in service. Tune to another channel.
CH Unavl	Channel no longer available	This previously assigned channel is no longer assigned. Tune to another station. If this station was one of the presets, choose another station for that preset button.
No Info	Artist Name/Feature not available	No artist information is available at this time on this channel. The system is working properly.
No Info	Song/Program Title not available	No song title information is available at this time on this channel. The system is working properly.

Downloaded from www.Manualslib.com manuals search engine

XM™ Radio Messages (cont'd)

Radio Display Message	Condition	Action Required
No Info	Category Name not available	No category information is available at this time on this channel. The system is working properly.
No Info	No Text/Informational message available	No text or informational messages are available at this time on this channel. The system is working properly.
Not Found	No channel available for the chosen category	There are no channels available for the selected category. The system is working properly.
XM Lock	Theft lock active	The XM™ receiver in your vehicle may have previously been in another vehicle. For security purposes, XM™ receivers cannot be swapped between vehicles. If this message is received after having your vehicle serviced, check with your GM dealer.
Radio ID	Radio ID label (channel 0)	If tuned to channel 0, this message will alternate with the XM™ Radio eight digit radio ID label. This label is needed to activate the service.
Unknown	Radio ID not known (should only be if hardware failure)	If this message is received when tuned to channel 0, there may be a receiver fault. Consult with your GM dealer.
Check XM	Hardware failure	If this message does not clear within a short period of time, the receiver may have a fault. Consult with your GM dealer.

Downloaded from www.Manualslib.com manuals search engine

Playing a CD

Insert a CD partway into the slot, label side up. The player will pull it in and the CD should begin playing. If you want to insert a CD with the ignition off, first press the eject button or the DISP knob.

If the ignition or radio is turned off with a CD in the player it will stay in the player. When the ignition or radio is turned on, the CD will start to play where it stopped, if it was the last selected audio source.

When the CD is inserted, the CD symbol will appear on the display. As each new track starts to play, the track number will appear on the display.

The CD player can play the smaller 3 inch (8 cm) single CDs with an adapter ring. Full-size CDs and the smaller CDs are loaded in the same manner.

If playing a CD-R, the sound quality may be reduced due to CD-R quality, the method of recording, the quality of the music that has been recorded, and the way the CD-R has been handled. There may be an increase in skipping, difficulty in finding tracks, and/or difficulty in loading and ejecting. If these problems occur, check the bottom surface of the CD.

If the surface of the CD is damaged, such as cracked, broken, or scratched, the CD will not play properly. If the surface of the CD is soiled, see *Care of Your CDs on page 3-77* for more information.

If there is no apparent damage, try a known good CD.

Do not add any label to a CD, it could get caught in the CD player. If a CD is recorded on a personal computer and a description label is needed, try labeling the top of the recorded CD with a marking pen instead.

Notice: **If you add any label to a CD, insert more than one CD into the slot at a time, or attempt to play scratched or damaged CDs, you could damage the CD player. When using the CD player, use only CDs in good condition without any label, load one CD at a time, and keep the CD player and the loading slot free of foreign materials, liquids, and debris.**

If an error appears on the display, see “CD Messages” later in this section.

Downloaded from www.Manualslib.com manuals search engine

|◀ SEEK ▶| : Press the left arrow to go to the start of the current or the previous track. Press the right arrow to go to the start of the next track. Pressing either arrow for more than two seconds will search the previous or next tracks at two tracks per second. Release the arrow to stop searching and to play the track.

1 ◀◀ (Previous): Press this pushbutton to go to the start of the current track if more than eight seconds have played. The previous symbol and the track number will appear on the display. If this pushbutton is held or pressed more than once, the player will continue moving backward through the CD.

2 ▶▶ (Next): Press this pushbutton to go to the next track. The next symbol and the track number will appear on the display. If this pushbutton is held or pressed more than once, the player will continue moving forward through the CD.

4 (Random): Press this pushbutton to hear the tracks in random, rather than sequential, order. The random symbol will appear on the display. Press this pushbutton again to turn off random play.

BAND: Press this button to listen to the radio when a CD is playing. The inactive CD will remain safely inside the radio for future listening.

(CD): Press this button to play a CD when listening to the radio. The CD symbol will appear on the display when a CD is loaded.

DISP (Display): Press this button to see how long the current track has been playing. The elapsed time of the track will appear on the display. To change the default on the display, track or elapsed time, press this button until you see the display you want, then hold the button for two seconds. The radio will produce one beep and the selected display will now be the default.

AUTO EQ (Automatic Equalization): Press EQ to select an equalization setting while playing a CD. The equalization will be set whenever a CD is played. See “EQ” listed previously for more information. If you select an EQ setting for your CD, it will be activated each time you play a CD.

(Eject): Press this button to eject a CD. Eject may be activated with either the ignition or radio off. CDs may be loaded with the ignition and radio off if this button is pressed first.

Downloaded from www.Manualslib.com manuals search engine

Using an MP3 CD

MP3 Format

If you burn your own MP3 disc on a personal computer:

- Make sure the MP3 files are recorded on a CD-R disc.
- Do not mix standard audio and MP3 files on one disc.
- Make sure playlists have a .m3u or .wpl extension, other file extensions may not work.
- Files can be recorded with a variety of fixed or variable bit rates. Song title, artist name, and album will be available for display by the radio when recorded using ID3 tags version 1 and 2.
- Create a folder structure that makes it easy to find songs while driving. Organize songs by albums using one folder for each album. Each folder or album should contain 18 songs or less.
- Make sure to finalize the disc when burning an MP3 disc, using multiple sessions. It is usually better to burn the disc all at once.

The player will be able to read and play a maximum of 50 folders, 50 playlists, 10 sessions, and 255 files. Long file names, folder names, or playlist names may use more disc memory space than necessary.

To conserve space on the disc, minimize the length of the file, folder or playlist names. You can also play an MP3 CD that was recorded using no file folders. The system can support up to 11 folders in depth, though, keep the depth of the folders to a minimum in order to keep down the complexity and confusion in trying to locate a particular folder during playback. If a CD contains more than the maximum of 50 folders, 50 playlists, 10 sessions, and 255 files the player will let you access and navigate up to the maximum, but all items over the maximum will be ignored.

Root Directory

The root directory will be treated as a folder. If the root directory has compressed audio files, the directory will be displayed as F1 ROOT. All files contained directly under the root directory will be accessed prior to any root directory folders. However, playlists (Px) will always be accessed before root folders or files.

Empty Directory or Folder

If a root directory or a folder exists somewhere in the file structure that contains only folders/subfolders and no compressed files directly beneath them, the player will advance to the next folder in the file structure that contains compressed audio files and the empty folder will not be displayed or numbered.

Downloaded from www.Manualslib.com manuals search engine

No Folder

When the CD contains only compressed files, the files will be located under the root folder. The next and previous folder functions will have no function on a CD that was recorded without folders or playlists. When displaying the name of the folder the radio will display ROOT.

When the CD contains only playlists and compressed audio files, but no folders, all files will be located under the root folder. The folder down and the folder up buttons will search playlists (Px) first and then go to the root folder. When the radio displays the name of the folder the radio will display ROOT.

Order of Play

Tracks will be played in the following order:

- Play will begin from the first track in the first playlist and will continue sequentially through all tracks in each playlist. When the last track of the last playlist has been played, play will continue from the first track of the first playlist.
- If the CD does not contain any playlists, then play will begin from the first track under the root directory. When all tracks from the root directory have been played, play will continue from files according to their numerical listing. After playing the last track from the last folder, play will begin again at the first track of the first folder or root directory.

When play enters a new folder, the display will not automatically show the new folder name unless you have chosen the folder mode as the default display. See DISP later in this section for more information. The new track name will appear on the display.

File System and Naming

The song name that will be displayed will be the song name that is contained in the ID3 tag. If the song name is not present in the ID3 tag, then the radio will display the file name without the extension (such as .mp3) as the track name.

Track names longer than 32 characters or 4 pages will be shortened. The display will not show parts of words on the last page of text and the extension of the filename will not be displayed.

Preprogrammed Playlists

You can access preprogrammed playlists which were created by WinAmp™, MusicMatch™, or Real Jukebox™ software, however, you will not have editing capability. These playlists will be treated as special folders containing compressed audio song files.

Downloaded from www.Manualslib.com manuals search engine

Playing an MP3

Insert a CD partway into the slot, label side up. The player will pull it in, and READING will appear on the display. The CD should begin playing and the CD symbol will appear on the display. If you want to insert a CD with the ignition off, first press the eject button or the DISP knob.

If the ignition or radio is turned off with a CD in the player it will stay in the player. When the ignition or radio is turned on, the CD will start to play where it stopped, if it was the last selected audio source.

As each new track starts to play, the track number will appear on the display.

The CD player can play the smaller 3 inch (8 cm) single CDs with an adapter ring. Full-size CDs and the smaller CDs are loaded in the same manner.

If playing a CD-R, the sound quality may be reduced due to CD-R quality, the method of recording, the quality of the music that has been recorded, and the way the CD-R has been handled. There may be an increase in skipping, difficulty in finding tracks, and/or difficulty in loading and ejecting. If these problems occur, check the bottom surface of the CD. If the surface of the CD is damaged, such as cracked, broken, or scratched, the CD will not play properly. If the surface of the CD is soiled, see *Care of Your CDs on page 3-77* for more information.

If there is no apparent damage, try a known good CD. Do not add any label to a CD, it could get caught in the CD player. If a CD is recorded on a personal computer and a description label is needed, try labeling the top of the recorded CD with a marking pen instead.

Notice: **If you add any label to a CD, insert more than one CD into the slot at a time, or attempt to play scratched or damaged CDs, you could damage the CD player. When using the CD player, use only CDs in good condition without any label, load one CD at a time, and keep the CD player and the loading slot free of foreign materials, liquids, and debris.**

If an error appears on the display, see “CD Messages” later in this section.

|◀ SEEK ▶| : Press the left arrow to go to the start of the previous track. Press the right arrow to go to the start of the next track. Pressing either arrow for more than two seconds will search the previous or next tracks at two tracks per second. Release the button to stop searching and to play the track.

1 ◀◀ (Rewind): Press this pushbutton to go to the start of the current track if more than eight seconds have played. The previous symbol and the track number will appear on the display. If this pushbutton is held or pressed more than once, the player will continue moving backward through the CD.

Downloaded from www.Manualslib.com manuals search engine

2 ⏩ (Fast Forward): Press this pushbutton to go to the next track. The next symbol and the track number will appear on the display. If this pushbutton is held or pressed more than once, the player will continue moving forward through the CD.

4 (Random): To random the tracks in the current folder or playlist, press and release this pushbutton. FLDR RDM will appear on the display. Once all of the tracks in the current folder or playlist have been played the system will move on to the next folder or playlist and play all of the tracks in random order.

To random all the tracks on the CD, press and hold this pushbutton for two seconds. You will hear a beep and CD RDM will appear on the display. This feature will not work with playlists.

When in random, pressing and releasing either SEEK arrow will take you to the next or previous random track.

Press and release this pushbutton again to turn off random play. NO RDM will appear on the display.

BAND: Press this button to listen to the radio when a CD is playing. The inactive CD will remain safely inside the radio for future listening.

(CD): Press this button to play a CD when listening to the radio. The CD symbol will appear on the display when a CD is loaded.

i (Information) (XM™ Satellite Radio Service and MP3 Features): INFO will appear on the display whenever a current track has ID3 tag information. Press this button to display the artist name and album contained in the tag. INFO will disappear from the display when the information in the ID3 tag has finished.

DISP (Display): Press this knob to switch between track mode, folder/playlist mode, and time of day mode. The display will show only eight characters, but there can be up to four pages of text. If there are more than eight characters in the song, folder, or playlist name, pressing this knob within two seconds will take you to the next page of text. If there are no other pages to be shown, pressing this knob within two seconds will take you to the next display mode.

- Track mode will display the current track number and the ID3 tag song name.
- Folder/playlist mode will display the current folder or playlist number and the folder/playlist name.
- Time of day mode will display the time of day and the ID3 tag song name.

To change the default on the display, press the DISP knob until you see the display you want, then hold this knob for two seconds. The radio will produce one beep and the selected display will now be the default.

Downloaded from www.Manualslib.com manuals search engine

AUTO EQ (Automatic Equalization): Press EQ to select an equalization setting while playing a CD. The equalization will be set whenever a CD is played. See “EQ” listed previously for more information. If you select an EQ setting for your CD, it will be activated each time you play a CD.

⏏ **(Eject):** Press this button to eject a CD. Eject may be activated with either the ignition or radio off. CDs may be loaded with the ignition and radio off if this button is pressed first.

CD Messages

CHECK CD: If this message appears on the display and/or the CD comes out, it could be for one of the following reasons:

- It is very hot. When the temperature returns to normal, the CD should play.
- You are driving on a very rough road. When the road becomes smoother, the CD should play.
- The CD is dirty, scratched, wet, or upside down.
- The air is very humid. If so, wait about an hour and try again.
- The format of the CD may not be compatible. See “MP3 Format” earlier in this section.
- There may have been a problem while burning the CD.
- The label may be caught in the CD player.

If the CD is not playing correctly, for any other reason, try a known good CD.

If any error occurs repeatedly or if an error cannot be corrected, contact your GM dealer. If the radio displays an error message, write it down and provide it to your GM dealer when reporting the problem.

Downloaded from www.Manualslib.com manuals search engine

Radio with Six-Disc CD

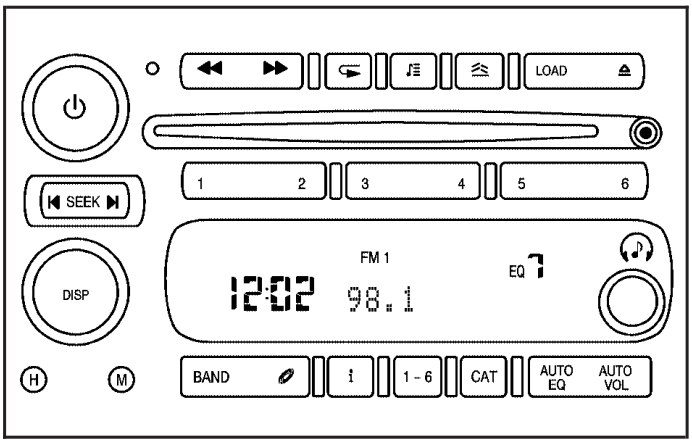

XM™ Satellite Radio Service

XM™ is a satellite radio service that is based in the 48 contiguous Untied States and in Canada (if available). XM™ offers over 100 coast-to-coast channels including music, news, sports, talk, and children's programming. XM™ provides digital quality audio and text information that includes song title and artist name. A service fee is required in order to receive the XM™ service. For more information, contact XM™ at www.xmradio.com or call 1-800-852-XMXM (9696).

Playing the Radio

(Power): Press this knob to turn the system on and off.

Turn this knob to increase or to decrease the volume.

DISP (Display): When the ignition is turned off, press this knob to display the time.

For XM™ (if equipped), press the DISP knob while in XM™ mode to retrieve four different categories of information related to the current song or channel: Artist, Song Title, Category or PTY, Channel Number/Channel Name.

To change the default on the display, press the DISP knob until you see the display you want, then hold this knob for two seconds. The radio will produce one beep and the selected display will now be the default.

Downloaded from www.Manualslib.com manuals search engine

AUTO VOL (Automatic Volume): With automatic volume, the audio system adjusts automatically to make up for road and wind noise as you drive.

Set the volume at the desired level. Press this button to select LOW, MEDIUM, or HIGH. Each higher setting will allow for more volume compensation at faster vehicle speeds. Then as you drive, automatic volume increases the volume, as necessary, to overcome noise at any speed. The volume level should always sound the same to you as you drive. NONE will appear on the display if the radio cannot determine the vehicle speed. To turn automatic volume off, press this button until AVOL OFF appears on the display.

Finding a Station

BAND: Press this button to switch between FM1, FM2, AM, or XM1 or XM2 (if equipped). The display will show the selection.

♪ **(Tune):** Turn this knob to select radio stations.

|◀ **SEEK** ▶| **:** Press and release the right or the left arrow to go to the next or to the previous station and stay there.

The radio will only seek stations with a strong signal that are in the selected band.

Press and hold either arrow for more than two seconds. SCAN will appear on the display and the radio will produce one beep. The radio will go to a station, play for a few seconds, then go on to the next station. Press either arrow again or one of the pushbuttons to stop scanning presets.

The radio will only scan stations with a strong signal that are in the selected band.

Press and hold this button until PSCN will appear on the display and the radio will produce two beeps. The radio will go to a preset station, play for a few seconds, then go on to the next preset station. Press either arrow again or one of the pushbuttons to stop scanning presets.

The radio will only scan preset stations with a strong signal that are in the selected band.

Downloaded from www.Manualslib.com manuals search engine

i (Information) (XM™ Satellite Radio Service): If the current station has a message, the information symbol will appear on the display. Press this button to see the message. The message may display the artist, song title, call in phone numbers, etc.

If the entire message is not displayed, parts of the message will appear every three seconds. To scroll through the message, press and release the INFO button. A new group of words will appear on the display after every press of this button. Once the complete message has been displayed, the information symbol will disappear from the display until another new message is received. The last message can be displayed by pressing the INFO button. You can view the last message until a new message is received or a different station is tuned to.

When a message is not available from a station, No Info will appear on the display.

1-6 (Preset Pushbuttons): Press this button to play stations that are programmed on the radio preset pushbuttons.

The radio will only seek preset stations with a strong signal that are in the selected band.

Setting Preset Stations

Up to 30 stations (six FM1, six FM2, and six AM, six XM1 and six XM2 (if equipped)), can be programmed on the six numbered pushbuttons, by performing the following steps:

1. Turn the radio on.
2. Press BAND to select FM1, FM2, AM, or XM1 or XM2.
3. Tune in the desired station.
4. Press AUTO EQ to select the equalization.
5. Press and hold one of the six numbered pushbuttons until you hear a beep. Whenever that numbered pushbutton is pressed, the station that was set will return and the equalization that was selected will be stored for that pushbutton.
6. Repeat the steps for each pushbutton.

Downloaded from www.Manualslib.com manuals search engine

Setting the Tone (Bass/Treble)

♪ **(Bass/Treble):** Push and release this knob until BASS or TREB appears on the display. Turn this knob to increase or to decrease. The display will show the bass or the treble level. If a station is weak or noisy, decrease the treble.

To adjust the bass and the treble to the middle position, while in bass or treble, push and hold the tone knob. The radio will produce one beep.

To adjust all tone and speaker controls to the middle position, push and hold the tone knob when no tone or speaker control is displayed. ALL CENTERED will appear on the display and you will hear a beep.

AUTO EQ (Automatic Equalization): Press this button to select customized equalization settings designed for country/western, jazz, talk, pop, rock and classical.

The equalization one through seven options are included only if your vehicle is equipped with the Bose® system. Press the AUTO EQ button to select equalization settings designed for equalization one through seven.

To return the bass and treble to the manual mode, push and release the tone knob until BASS and TREB appears on the display.

Adjusting the Speakers (Balance/Fade)

♪ **(Balance/Fade):** To adjust the balance between the right and the left speakers, push and release this knob until BAL appears on the display. Turn the knob to move the sound toward the right or the left speakers.

To adjust the fade between the front and the rear speakers, push and release the tone knob until FADE appears on the display. Turn the knob to move the sound toward the front or the rear speakers.

To adjust the balance and the fade to the middle position, push the tone knob, then push it again and hold it until you hear one beep.

To adjust all tone and speaker controls to the middle position, while in fade or balance, push and hold the tone knob when no tone or speaker control is displayed. ALL CENTERED will appear on the display and you will hear a beep.

Downloaded from www.Manualslib.com manuals search engine

Finding a Category (CAT) Station (XM™ Satellite Radio Service Only)

To select and find a desired category perform the following:

1. Press the CAT button to activate category select mode. The current category will appear on the display.
2. Turn the tune knob to select a category.
3. Once the desired category is displayed, press either SEEK arrow to take you to that category's first station.
4. To go to another station within that category and the category is displayed, press either SEEK arrow again. If CAT times out and is no longer on the display, go back to Step 1.
5. Press CAT to exit category select mode or wait for CAT to time out.

If the radio cannot find the desired category, NOT FOUND will appear on the display and the radio will return to the last station you were listening to.

Radio Messages

CAL ERR (Calibration Error): The audio system has been calibrated for your vehicle from the factory. If CAL ERR appears on the display it means that the radio has not been configured properly for your vehicle and it must be returned to your GM dealer for service.

LOC (Locked): This message is displayed when the THEFTLOCK® system has locked up. Take your vehicle to your GM dealer for service.

If any error occurs repeatedly or if an error cannot be corrected, contact your GM dealer.

Downloaded from www.Manualslib.com manuals search engine

XM™ Radio Messages

Radio Display Message	Condition	Action Required
XL (Explicit Language Channels)	XL on the radio display, after the channel name, indicates content with explicit language.	These channels, or any others, can be blocked at a customer's request, by calling 1-800-852-XMXM (9696).
Updating	Updating encryption code	The encryption code in the receiver is being updated, and no action is required. This process should take no longer than 30 seconds.
No Signl	Loss of signal	The system is functioning correctly, but the vehicle is in a location that is blocking the XM™ signal. When the vehicle is moved into an open area, the signal should return.
Loading	Acquiring channel audio (after four second delay)	The radio system is acquiring and processing audio and text data. No action is needed. This message should disappear shortly.
Off Air	Channel not in service	This channel is not currently in service. Tune to another channel.
CH Unavl	Channel no longer available	This previously assigned channel is no longer assigned. Tune to another station. If this station was one of the presets, choose another station for that preset button.
No Info	Artist Name/Feature not available	No artist information is available at this time on this channel. The system is working properly.
No Info	Song/Program Title not available	No song title information is available at this time on this channel. The system is working properly.

Downloaded from www.Manualslib.com manuals search engine

XM™ Radio Messages (cont'd)

Radio Display Message	Condition	Action Required
No Info	Category Name not available	No category information is available at this time on this channel. The system is working properly.
No Info	No Text/Informational message available	No text or informational messages are available at this time on this channel. The system is working properly.
Not Found	No channel available for the chosen category	There are no channels available for the selected category. The system is working properly.
XM Lock	Theft lock active	The XM™ receiver in your vehicle may have previously been in another vehicle. For security purposes, XM™ receivers cannot be swapped between vehicles. If this message is received after having your vehicle serviced, check with your GM dealer.
Radio ID	Radio ID label (channel 0)	If tuned to channel 0, this message will alternate with the XM™ Radio eight digit radio ID label. This label is needed to activate the service.
Unknown	Radio ID not known (should only be if hardware failure)	If this message is received when tuned to channel 0, there may be a receiver fault. Consult with your GM dealer.
Check XM	Hardware failure	If this message does not clear within a short period of time, the receiver may have a fault. Consult with your GM dealer.

Downloaded from www.Manualslib.com manuals search engine

Playing a CD

If the ignition or radio is turned off, with a CD in the player, it will stay in the player. When the ignition or radio is turned on, the CD will start playing where it stopped, if it was the last selected audio source.

When a CD is inserted, READING and the CD symbol will appear on display. As each new track starts to play, the track number will appear on the display.

The CD player can play the smaller 3 inch (8 cm) single CDs with an adapter ring. Full-size CDs and the smaller CDs are loaded in the same manner.

If playing a CD-R, the sound quality may be reduced due to CD-R quality, the method of recording, the quality of the music that has been recorded, and the way the CD-R has been handled. There may be an increase in skipping, difficulty in finding tracks, and/or difficulty in loading and ejecting. If these problems occur, check the bottom surface of the CD. If the surface of the CD is damaged, such as cracked, broken, or scratched, the CD will not play properly. If the surface of the CD is soiled, see *Care of Your CDs on page 3-77* for more information.

If there is no apparent damage, try a known good CD.

Do not add any label to a CD, it could get caught in the CD player. If a CD is recorded on a personal computer and a description label is needed, try labeling the top of the recorded CD with a marking pen instead.

Notice: **If you add any label to a CD, insert more than one CD into the slot at a time, or attempt to play scratched or damaged CDs, you could damage the CD player. When using the CD player, use only CDs in good condition without any label, load one CD at a time, and keep the CD player and the loading slot free of foreign materials, liquids, and debris.**

If an error appears on the display, see “CD Messages” later in this section.

LOAD: Press this button to load CDs into the CD player. This CD player will hold up to six CDs.

To insert one CD, do the following:

1. Turn the ignition on.
2. Press and release the LOAD button.
3. Wait for the indicator light, located to the right of the slot, to turn green.
4. Load a CD. Insert the CD partway into the slot, label side up. The player will pull the CD in.

Downloaded from www.Manualslib.com manuals search engine

To insert multiple CDs, do the following:

1. Turn the ignition on.
2. Press and hold the LOAD button for two seconds.

   You will hear a beep and the indicator light, located to the right of the slot, will begin to flash and LOAD # will appear on the display.
3. Once the light stops flashing and turns green, INSERT CD # will appear on the display, load a CD. Insert the CD partway into the slot, label side up. The player will pull the CD in.

   Once the CD is loaded, the indicator light will begin flashing again. Once the light stops flashing and turns green, you can load another CD. The CD player takes up to six CDs. Do not try to load more than six.

To load more than one CD but less than six, complete Steps 1 through 3. When finished loading CDs, press the LOAD button to cancel the loading function. The radio will begin to play the last CD loaded.

If more than one CD has been loaded, a number for each CD will appear on the display.

Playing a Specific Loaded CD

For every CD loaded, a number will appear on the display. To play a specific CD, first press the CD button, then press the numbered pushbutton that corresponds to the CD. A small bar will appear under the CD number that is playing and the track number will appear on the display.

If an error appears on the display, see “CD Messages” later in this section.

⏏ **(Eject):** Press this button to eject CD(s).

To eject the CD that is currently playing, press and release this button.

To eject multiple CDs, do the following:

1. Press and hold the CD eject button for five seconds.

   You will hear a beep and the indicator light, located to the right of the slot, will begin to flash and EJECT ALL will appear on the display.
2. Once the light stops flashing and turns green, REMOVE CD # will appear on the display. The CD will eject and can be removed.

   Once the CD is removed, the indicator light will begin flashing again and another CD will eject.

   To stop ejecting the CDs, press the LOAD or the eject button.

Downloaded from www.Manualslib.com manuals search engine

If the CD is not removed, after 25 seconds, the CD will be automatically pulled back into the player. If CD is pushed back into the player, before the 25 second time period is complete, the player will sense an error and will try to eject the CD several times before stopping.

Do not repeatedly press the CD eject button to eject a CD after you have tried to push it in manually. The player's 25-second eject timer will reset at each press of the eject button, causing the player to not eject the CD until the 25-second time period has elapsed.

(Reverse): Press this button to reverse within the track.

(Fast Forward): Press this button to fast forward within the track.

(Repeat): With repeat, one track or an entire CD can be repeated.

To use repeat, do the following:

- To repeat the track you are listening to, press and release the repeat button. RPT ON will appear on the display. Press this button again to turn off repeat play. RPT OFF will appear on the display.
- To repeat the CD you are listening to, press and hold the repeat button for two seconds. RPT ON will appear on the display. Press this button again to turn off repeat play. RPT OFF will appear on the display.

(Random): With random, you can listen to the tracks in random, rather than sequential, order, on one CD or on all of the CDs. To use random, do one of the following:

- To play the tracks on the CD you are listening to in random order, press and release the random button. RANDOM ONE will appear on the display. Press this button again to turn off random play.
- To play the tracks on all of the CDs that are loaded in random order, press and hold this button for more than two seconds. You will hear a beep and RANDOM ALL will appear on the display. Press this button again to turn off random play.

Downloaded from www.Manualslib.com manuals search engine

|◀ SEEK ▶| : Press the left arrow to go to the start of the current track, if more than ten seconds have played. Press the right arrow to go to the next track. If either arrow is held or pressed more than once, the player will continue moving backward or forward through the CD.

To scan one CD, press and hold either arrow for more than two seconds until SCAN appears on the display and you hear a beep. The radio will go to the next track, play for 10 seconds, then go on to the next track. Press either arrow again, to stop scanning.

To scan all loaded CDs, press and hold either arrow for more than four seconds until CD SCAN appears on the display and you hear a beep. Use this feature to listen to 10 seconds of the first track of each loaded CD. Press either arrow again, to stop scanning.

DISP (Display): Press this knob to see how long the current track has been playing. The elapsed time of the track will appear on the display. To change the default on the display, track or elapsed time, press this knob until you see the display you want, then hold the knob for two seconds. The radio will produce one beep and the selected display will now be the default.

BAND: Press this button to listen to the radio when a CD is playing. The inactive CD(s) will remain safely inside the radio for future listening.

(CD): Press this button to play a CD when listening to the radio. The CD symbol will appear on the display when a CD is loaded.

AUTO EQ (Automatic Equalization): Press AUTO EQ to select an equalization setting while playing a CD. The equalization will be set whenever a CD is played. See “AUTO EQ” listed previously for more information. If you select an EQ setting for your CD, it will be activated each time you play a CD.

Downloaded from www.Manualslib.com manuals search engine

Using Song List Mode

(Song List): The six-disc CD changer has a feature called song list. This feature is capable of saving 20 track selections.

To save tracks into the song list feature, perform the following steps:

1. Turn the CD player on and load it with at least one CD. See “LOAD CD” listed previously in this section for more information.
2. Check to see that the CD changer is not in song list mode. S-LIST should not appear on the display. If S-LIST is present, press the song list button to turn it off.
3. Select the desired CD by pressing the numbered pushbutton and then use the SEEK SCAN right arrow to locate the track to be saved. The track will begin to play.
4. Press and hold the song list button to save the track into memory. When the song list button is pressed, one beep will be heard immediately. After two seconds of continuously pressing the song list button, two beeps will sound to confirm the track has been saved.
5. Repeat Steps 3 and 4 for saving other selections.

S-LIST FULL will appear on the display if you try to save more than 20 selections.

To play the song list, press the song list button. One beep will be heard and S-LIST will appear on the display. The recorded tracks will begin to play in the order they were saved.

Seek through the song list by using the SEEK SCAN arrows. Seeking past the last saved track will return to the first saved track.

To delete tracks from the song list, perform the following steps:

1. Turn the CD player on.
2. Press the song list button to turn song list on. S-LIST will appear on the display.
3. Press either SEEK SCAN arrow to select the desired track to be deleted.
4. Press and hold the song list button for two seconds. When the song list button is pressed, one beep will be heard immediately. After two seconds of continuously pressing the song list button, two beeps will be heard to confirm that the track has been deleted.

After a track has been deleted, the remaining tracks are moved up the list. When another track is added to the song list, the track will be added to the end of the list.

Downloaded from www.Manualslib.com manuals search engine

To delete the entire song list, perform the following steps:

1. Turn the CD player on.
2. Press the song list button to turn song list on. S-LIST will appear on the display.
3. Press and hold the song list button for more than four seconds. One beep will be heard, followed by two beeps after two seconds, and a final beep will be heard after four seconds. S-LIST EMPTY will appear on the display indicating the song list has been deleted.

If a CD is ejected, and the song list contains saved tracks from that CD, those tracks are automatically deleted from the song list. Any tracks saved to the song list again are added to the bottom of the list.

To end song list mode, press the song list button. One beep will be heard and S-LIST will be removed from the display.

CD Messages

CHECK CD: If this message appears on the display and/or the CD comes out, it could be for one of the following reasons:

- It is very hot. When the temperature returns to normal, the CD should play.
- You are driving on a very rough road. When the road becomes smoother, the CD should play.
- The CD is dirty, scratched, wet, or upside down.
- The air is very humid. If so, wait about an hour and try again.
- There may have been a problem while burning the CD.
- The label may be caught in the CD player.

If the CD is not playing correctly, for any other reason, try a known good CD.

If any error occurs repeatedly or if an error cannot be corrected, contact your GM dealer. If the radio displays an error message, write it down and provide it to your GM dealer when reporting the problem.

Downloaded from www.Manualslib.com manuals search engine

Navigation/Radio System

Your vehicle may have a navigation radio system.

The navigation system has built-in features intended to minimize driver distraction. Technology alone, no matter how advanced, can never replace your own judgment. See the Navigation System manual for some tips to help you reduce distractions while driving.

Theft-Deterrent Feature

THEFTLOCK® is designed to discourage theft of your vehicle's radio. The feature works automatically by learning a portion of the Vehicle Identification Number (VIN). If the radio is moved to a different vehicle, it will not operate and LOCKED will appear on the display.

When the radio and vehicle are turned off, the blinking red light indicates that THEFTLOCK® is armed.

With THEFTLOCK® activated, the radio will not operate if stolen.

Radio Reception

You may experience frequency interference and static during normal radio reception if items such as cellphone chargers, vehicle convenience accessories, and external electronic devices are plugged into the accessory power outlet. If there is interference or static, unplug the item from the accessory power outlet.

AM

The range for most AM stations is greater than for FM, especially at night. The longer range can cause station frequencies to interfere with each other. For better radio reception, most AM radio stations will boost the power levels during the day, and then reduce these levels during the night. Static can also occur when things like storms and power lines interfere with radio reception. When this happens, try reducing the treble on your radio.

FM Stereo

FM stereo will give the best sound, but FM signals will reach only about 10 to 40 miles (16 to 65 km). Tall buildings or hills can interfere with FM signals, causing the sound to fade in and out.

Downloaded from www.Manualslib.com manuals search engine

XM™ Satellite Radio Service

XM™ Satellite Radio Service gives digital radio reception from coast-to-coast in the 48 contiguous United States, and in Canada (if available). Just as with FM, tall buildings or hills can interfere with satellite radio signals, causing the sound to fade in and out. In addition, traveling or standing under heavy foliage, bridges, garages, or tunnels may cause loss of the XM™ signal for a period of time. The radio may display NO SIGNAL to indicate interference.

Care of Your CDs

Handle CDs carefully. Store them in their original cases or other protective cases and away from direct sunlight and dust. The CD player scans the bottom surface of the disc. If the surface of a CD is damaged, such as cracked, broken, or scratched, the CD will not play properly or not at all. If the surface of a CD is soiled, take a soft, lint free cloth or dampen a clean, soft cloth in a mild, neutral detergent solution mixed with water, and clean it. Make sure the wiping process starts from the center to the edge.

Do not touch the bottom side of a CD while handling it; this could damage the surface. Pick up CDs by grasping the outer edges or the edge of the hole and the outer edge.

Care of the CD Player

The use of CD lens cleaners for CD players is not advised, due to the risk of contaminating the internal lens of the CD optics with lubricants.

Fixed Mast Antenna

The fixed mast antenna can withstand most car washes without being damaged. If the mast should ever become slightly bent, straighten it out by hand. If the mast is badly bent, replace it.

Check occasionally to make sure the mast is still tightened to the fender. If tightening is required, tighten by hand, then with a wrench one quarter turn.

XM™ Satellite Radio Antenna System

The XM™ Satellite Radio antenna is located on the roof of your vehicle. Keep this antenna clear of snow and ice build up for clear radio reception.

If your vehicle has a sunroof, the performance of the XM™ system may be affected if the sunroof is open.

Loading items onto the roof of your vehicle can interfere with the performance of the XM™ system. Make sure the XM™ Satellite Radio antenna is not obstructed.

Downloaded from www.Manualslib.com manuals search engine

NOTES

Downloaded from www.Manualslib.com manuals search engine

Section 4 Driving Your Vehicle

Your Driving, the Road, and Your Vehicle 4-2
Defensive Driving 4-2
Drunken Driving 4-3
Control of a Vehicle 4-5
Braking 4-6
Anti-Lock Brake System (ABS) 4-7
Braking in Emergencies 4-8
Traction Control System (TCS) 4-9
Locking Rear Axle 4-10
StabiliTrak® System (Automatic Transmission) 4-11
Steering 4-12
Off-Road Recovery 4-14
Passing 4-14
Loss of Control 4-16
Off-Road Driving 4-17
Assist Steps 4-35
Driving at Night 4-36
Driving in Rain and on Wet Roads 4-37
City Driving 4-40
Freeway Driving 4-41
Before Leaving on a Long Trip 4-42
Highway Hypnosis 4-43
Hill and Mountain Roads 4-43
Winter Driving 4-45
If Your Vehicle is Stuck in Sand, Mud, Ice or Snow 4-50
Rocking Your Vehicle to Get It Out 4-50
Recovery Loops 4-51
Loading Your Vehicle 4-52
Towing 4-56
Towing Your Vehicle 4-56
Recreational Vehicle Towing 4-56
Towing a Trailer 4-58
Trailer Recommendations 4-69

Downloaded from www.Manualslib.com manuals search engine

Your Driving, the Road, and Your Vehicle

Defensive Driving

The best advice anyone can give about driving is: Drive defensively.

Please start with a very important safety device in your vehicle: Buckle up. See *Safety Belts: They Are for Everyone on page 1-11*.

⚠ CAUTION:

Defensive driving really means "Be ready for anything." On city streets, rural roads, or expressways, it means "Always expect the unexpected." Assume that pedestrians or other drivers are going to be careless and make mistakes. Anticipate what they might do and be ready. Rear-end collisions are about the most preventable of accidents. Yet they are common. Allow enough following distance. Defensive driving requires that a driver concentrate on the driving task. Anything that distracts from the driving task makes proper defensive driving more difficult and can even cause a collision, with resulting injury. Ask a passenger to help do these things, or pull off the road in a safe place to do them. These simple defensive driving techniques could save your life.

Downloaded from www.Manualslib.com manuals search engine

Drunken Driving

Death and injury associated with drinking and driving is a national tragedy. It is the number one contributor to the highway death toll, claiming thousands of victims every year.

Alcohol affects four things that anyone needs to drive a vehicle:

- Judgment
- Muscular Coordination
- Vision
- Attentiveness

Police records show that almost half of all motor vehicle-related deaths involve alcohol. In most cases, these deaths are the result of someone who was drinking and driving. In recent years, more than 16,000 annual motor vehicle-related deaths have been associated with the use of alcohol, with more than 300,000 people injured.

Many adults — by some estimates, nearly half the adult population — choose never to drink alcohol, so they never drive after drinking. For persons under 21, it is against the law in every U.S. state to drink alcohol. There are good medical, psychological, and developmental reasons for these laws.

The obvious way to eliminate the leading highway safety problem is for people never to drink alcohol and then drive. But what if people do? How much is “too much” if someone plans to drive? It is a lot less than many might think. Although it depends on each person and situation, here is some general information on the problem.

The Blood Alcohol Concentration (BAC) of someone who is drinking depends upon four things:

- The amount of alcohol consumed
- The drinker’s body weight
- The amount of food that is consumed before and during drinking
- The length of time it has taken the drinker to consume the alcohol

Downloaded from www.Manualslib.com manuals search engine

According to the American Medical Association, a 180 lb (82 kg) person who drinks three 12 ounce (355 ml) bottles of beer in an hour will end up with a BAC of about 0.06 percent. The person would reach the same BAC by drinking three 4 ounce (120 ml) glasses of wine or three mixed drinks if each had 1-1/2 ounces (45 ml) of liquors like whiskey, gin, or vodka.

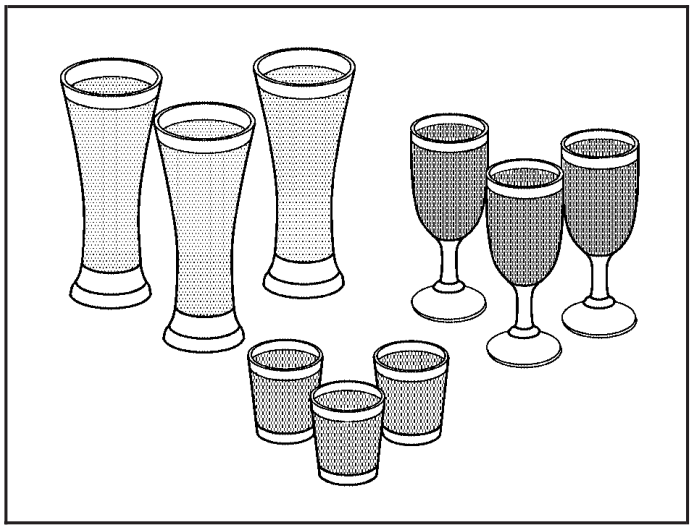

It is the amount of alcohol that counts. For example, if the same person drank three double martinis (3 ounces or 90 ml of liquor each) within an hour, the person's BAC would be close to 0.12 percent. A person who consumes food just before or during drinking will have a somewhat lower BAC level.

There is a gender difference, too. Women generally have a lower relative percentage of body water than men. Since alcohol is carried in body water, this means that a woman generally will reach a higher BAC level than a man of her same body weight will when each has the same number of drinks.

The law in most U.S. states, and throughout Canada, sets the legal limit at 0.08 percent. In some other countries, the limit is even lower. For example, it is 0.05 percent in both France and Germany. The BAC limit for all commercial drivers in the United States is 0.04 percent.

The BAC will be over 0.10 percent after three to six drinks (in one hour). Of course, as we have seen, it depends on how much alcohol is in the drinks, and how quickly the person drinks them.

But the ability to drive is affected well below a BAC of 0.10 percent. Research shows that the driving skills of many people are impaired at a BAC approaching 0.05 percent, and that the effects are worse at night. All drivers are impaired at BAC levels above 0.05 percent.

Downloaded from www.Manualslib.com manuals search engine

Statistics show that the chance of being in a collision increases sharply for drivers who have a BAC of 0.05 percent or above. A driver with a BAC level of 0.06 percent has doubled his or her chance of having a collision. At a BAC level of 0.10 percent, the chance of this driver having a collision is 12 times greater; at a level of 0.15 percent, the chance is 25 times greater!

The body takes about an hour to rid itself of the alcohol in one drink. No amount of coffee or number of cold showers will speed that up. “I will be careful” is not the right answer. What if there is an emergency, a need to take sudden action, as when a child darts into the street? A person with even a moderate BAC might not be able to react quickly enough to avoid the collision.

There is something else about drinking and driving that many people do not know. Medical research shows that alcohol in a person’s system can make crash injuries worse, especially injuries to the brain, spinal cord, or heart. This means that when anyone who has been drinking — driver or passenger — is in a crash, that person’s chance of being killed or permanently disabled is higher than if the person had not been drinking.

⚠ CAUTION:

Drinking and then driving is very dangerous. Your reflexes, perceptions, attentiveness, and judgment can be affected by even a small amount of alcohol. You can have a serious — or even fatal — collision if you drive after drinking. Please do not drink and drive or ride with a driver who has been drinking. Ride home in a cab; or if you are with a group, designate a driver who will not drink.

Control of a Vehicle

You have three systems that make your vehicle go where you want it to go. They are the brakes, the steering, and the accelerator. All three systems have to do their work at the places where the tires meet the road.

Sometimes, as when you are driving on snow or ice, it is easy to ask more of those control systems than the tires and road can provide. That means you can lose control of your vehicle. See *Traction Control System (TCS) on page 4-9*.

Adding non-GM accessories can affect your vehicle’s performance. See *Accessories and Modifications on page 5-3*.

Downloaded from www.Manualslib.com manuals search engine

Braking

See *Brake System Warning Light on page 3-32*.

Braking action involves perception time and reaction time.

First, you have to decide to push on the brake pedal. That is perception time. Then you have to bring up your foot and do it. That is reaction time.

Average reaction time is about three-fourths of a second. But that is only an average. It might be less with one driver and as long as two or three seconds or more with another. Age, physical condition, alertness, coordination, and eyesight all play a part. So do alcohol, drugs, and frustration. But even in three-fourths of a second, a vehicle moving at 60 mph (100 km/h) travels 66 feet (20 m). That could be a lot of distance in an emergency, so keeping enough space between your vehicle and others is important.

And, of course, actual stopping distances vary greatly with the surface of the road, whether it is pavement or gravel; the condition of the road, whether it is wet, dry, or icy; tire tread; the condition of your brakes; the weight of the vehicle; and the amount of brake force applied.

Avoid needless heavy braking. Some people drive in spurts — heavy acceleration followed by heavy braking — rather than keeping pace with traffic. This is a mistake. Your brakes may not have time to cool between hard stops. Your brakes will wear out much faster if you do a lot of heavy braking. If you keep pace with the traffic and allow realistic following distances, you will eliminate a lot of unnecessary braking. That means better braking and longer brake life.

If your vehicle ever loses electrical power while you are driving, brake normally but do not pump your brakes. If you do, the pedal may get harder to push down. If your vehicle loses electrical power, you will still have some power brake assist. But you will use it when you brake. Once the power assist is used up, it may take longer to stop, the brake pedal will be harder to push, and you may experience longer pedal travel.

Adding non-GM accessories can affect your vehicle's performance. See *Accessories and Modifications on page 5-3*

Downloaded from www.Manualslib.com manuals search engine

Anti-Lock Brake System (ABS)

Your vehicle has the Anti-Lock Brake System (ABS), an advanced electronic braking system that will help prevent a braking skid.

When you start your engine and begin to drive away, ABS will check itself. You may hear a momentary motor or clicking noise while this test is going on. This is normal.

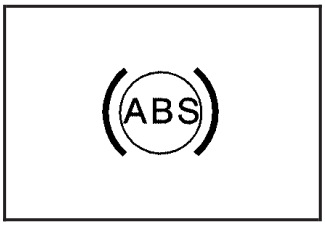

If there is a problem with ABS, this warning light will stay on. See *Anti-Lock Brake System Warning Light on page 3-33*.

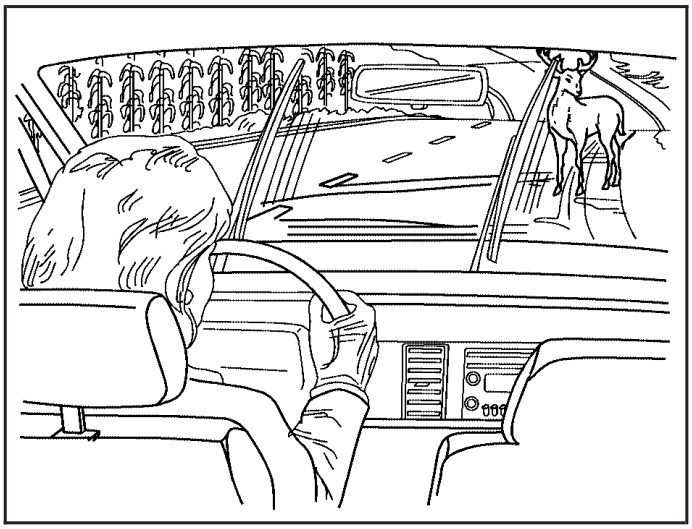

Let us say the road is wet and you are driving safely. Suddenly, an animal jumps out in front of you. You slam on the brakes and continue braking. Here is what happens with ABS:

A computer senses that wheels are slowing down. If one of the wheels is about to stop rolling, the computer will separately work the brakes at each wheel.

Downloaded from www.Manualslib.com manuals search engine

ABS can change the brake pressure faster than any driver could. The computer is programmed to make the most of available tire and road conditions. This can help you steer around the obstacle while braking hard.

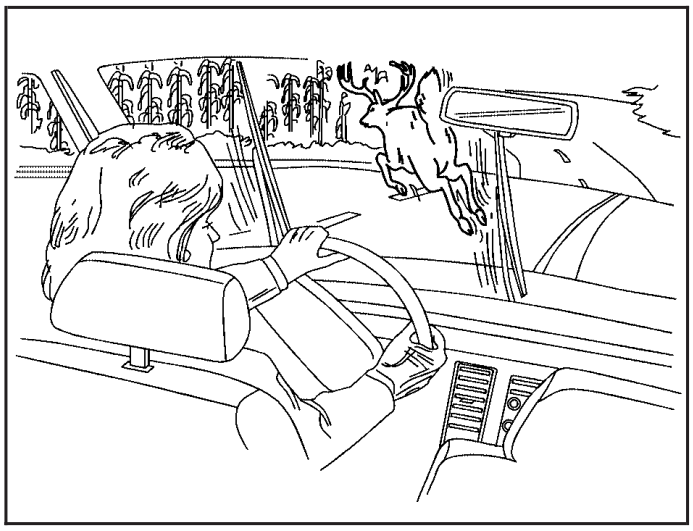

As you brake, your computer keeps receiving updates on wheel speed and controls braking pressure accordingly.

Remember: ABS does not change the time you need to get your foot up to the brake pedal or always decrease stopping distance. If you get too close to the vehicle in front of you, you will not have time to apply your brakes if that vehicle suddenly slows or stops. Always leave enough room up ahead to stop, even though you have ABS.

Using ABS

Do not pump the brakes. Just hold the brake pedal down firmly and let anti-lock work for you. You may feel the brakes vibrate, or you may notice some noise, but this is normal.

Braking in Emergencies

With ABS, you can steer and brake at the same time. In many emergencies, steering can help you more than even the very best braking.

Downloaded from www.Manualslib.com manuals search engine

Traction Control System (TCS)

Your vehicle has a Traction Control System (TCS) that limits wheel spin. This is especially useful in slippery road conditions. The system operates only if it senses that any of the wheels are spinning or beginning to lose traction. When this happens, the system applies the brakes to limit wheel spin and also reduces engine power. You may feel or hear the system working, but this is normal.

The Traction Control System may operate on dry roads under some conditions. When this happens, you may notice a reduction in acceleration or a pumping sound. This is normal and doesn't mean there's a problem with your vehicle. Examples of these conditions include hard acceleration in a turn, an abrupt upshift or downshift of the transmission or driving on rough roads.

If your vehicle is in cruise control when the TCS begins to limit wheel spin, the cruise control will automatically disengage. When road conditions allow you to safely use it again, you may re-engage the cruise control. See *Cruise Control on page 3-11*.

If your vehicle has a Driver information Center (DIC), a TRACTION FAILED message will appear when a Traction Control System or Anti-Lock Brake System problem has been detected and the vehicle needs service. See *DIC Warnings and Messages on page 3-44* for more information.

When this message is on, the system will not limit wheel spin. Adjust your driving accordingly.

The traction control system automatically comes on whenever you start your vehicle. To limit wheel spin, especially in slippery road conditions, you should always leave the system on. But you can turn the traction control system off if you ever need to.

To turn the system off, press and release the TCS button located on the instrument panel.

This light will come on steady when the traction control system has been turned off. This light flashes when TCS is active.

Downloaded from www.Manualslib.com manuals search engine

If you press the TC button once, the traction control system will turn off and a TRAC OFF message will appear on the DIC. Press the TC button again to turn the system back on. The TRAC OFF message will then go off. The traction control system will reset itself at each ignition cycle. If your vehicle also has StabiliTrak®, see *StabiliTrak® System (Automatic Transmission) on page 4-11* for more information.

Adding non-GM accessories can affect your vehicle's performance. See *Accessories and Modifications on page 5-3* for more information.

Locking Rear Axle

Your vehicle may have this feature. The locking rear axle can give your vehicle additional traction from the rear wheels when traveling in off-road situations such as mud, snow, sand, steep hills and uneven terrain.

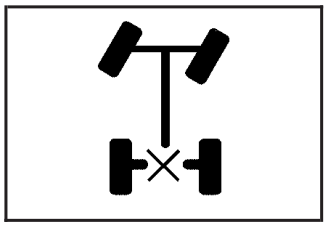

The button used to turn this feature on or off is located to the right of the transfer case buttons on the center of the instrument panel.

To lock the rear axle, do the following:

1. Place the transfer case in the 4LO Lock mode. This is the only mode which will allow the rear axle to lock. See *Full-Time Four-Wheel Drive on page 2-22* for more information regarding the transfer case and 4LO Lock mode.
2. Press the button with the vehicle stopped or moving less than 2 mph (3 km/h).

You must wait for the light in the button to stop flashing and remain illuminated before the rear axle is locked.

Notice: **If you try to lock the rear axle while your vehicle is stuck and the tires are spinning, you could damage your vehicle's drivetrain. The repairs would not be covered by your warranty. Always lock the rear axle before attempting situations and/or navigating terrain which could possibly cause the vehicle to become stuck.**

The locking rear axle will be disengaged when the wheel speed is greater than 20 mph (32 km/h), if the vehicle's battery is low and/or the transfer case is shifted out of 4LO Lock mode.

Notice: **If you lock the rear axle while driving on pavement, you could damage your vehicle's drivetrain. The repairs would not be covered by your warranty. Do not use the locking rear axle on pavement. If you need four-wheel drive when traveling on pavement, use only 4HI.**

Downloaded from www.Manualslib.com manuals search engine

StabiliTrak® System (Automatic Transmission)

Your vehicle may be equipped with a vehicle stability enhancement system called StabiliTrak®. It is an advanced computer controlled system that assists you with directional control of the vehicle in difficult driving conditions.

StabiliTrak® activates when the computer senses a discrepancy between your intended path and the direction the vehicle is actually traveling. StabiliTrak® selectively applies braking pressure at any one of the vehicle's brakes to assist the driver with keeping the vehicle on the intended path.

When you first start your vehicle and begin to drive away, the system performs several diagnostic checks to insure there are no problems. You may hear or feel the system working. This is normal and does not mean there is a problem with your vehicle.

If there is a problem detected with StabiliTrak®, a SERVICE STAB SYS message will be displayed on the Driver Information Center (DIC). See *DIC Warnings and Messages on page 3-44* for more information. When this message is displayed, the system is not operational. Adjust your driving accordingly.

StabiliTrak® comes on automatically whenever you start your vehicle. However, when the transfer case is placed in Four-Wheel-Low Lock mode, StabiliTrak® is automatically disabled. See *Full-Time Four-Wheel Drive on page 2-22* for more information. To help assist you with directional control of the vehicle, you should always leave the system on. You can turn StabiliTrak® off if you ever need to using the TC (traction control) on/off button. If you press and hold the TC button for five seconds, the StabiliTrak® system and the traction control system will turn off. When this is done, the STAB SYS OFF message will be displayed on the DIC. Press the TC button again to turn StabiliTrak® back on. See *Traction Control System (TCS) on page 4-9*.

If your vehicle is in cruise control when the StabiliTrak® activates, the cruise control will automatically disengage. When road conditions allow you to safely use it again, you may reengage the cruise control. See " *Cruise Control on page 3-11* for more information.

Downloaded from www.Manualslib.com manuals search engine

Steering

Power Steering

If you lose power steering assist because the engine stops or the system is not functioning, you can steer but it will take much more effort.

Steering Tips

It is important to take curves at a reasonable speed.

A lot of the “driver lost control” accidents mentioned on the news happen on curves. Here is why:

Experienced driver or beginner, each of us is subject to the same laws of physics when driving on curves. The traction of the tires against the road surface makes it possible for the vehicle to change its path when you turn the front wheels. If there is no traction, inertia will keep the vehicle going in the same direction. If you have ever tried to steer a vehicle on wet ice, you will understand this.

The traction you can get in a curve depends on the condition of your tires and the road surface, the angle at which the curve is banked, and your speed. While you are in a curve, speed is the one factor you can control.

Suppose you are steering through a sharp curve. Then you suddenly accelerate. Both control systems — steering and acceleration — have to do their work where the tires meet the road. Adding the sudden acceleration can demand too much of those places. You can lose control. See *Traction Control System (TCS) on page 4-9* and *StabiliTrak® System (Automatic Transmission) on page 4-11*.

What should you do if this ever happens? Ease up on the accelerator pedal, steer the vehicle the way you want it to go, and slow down.

Speed limit signs near curves warn that you should adjust your speed. Of course, the posted speeds are based on good weather and road conditions. Under less favorable conditions you will want to go slower.

If you need to reduce your speed as you approach a curve, do it before you enter the curve, while your front wheels are straight ahead.

Try to adjust your speed so you can “drive” through the curve. Maintain a reasonable, steady speed. Wait to accelerate until you are out of the curve, and then accelerate gently into the straightaway.

Adding non-GM accessories can affect your vehicle’s performance. See *Accessories and Modifications on page 5-3*.

Downloaded from www.Manualslib.com manuals search engine

Steering in Emergencies

There are times when steering can be more effective than braking. For example, you come over a hill and find a truck stopped in your lane, or a car suddenly pulls out from nowhere, or a child darts out from between parked cars and stops right in front of you. You can avoid these problems by braking — if you can stop in time. But sometimes you cannot; there is not room. That is the time for evasive action — steering around the problem.

Your vehicle can perform very well in emergencies like these. First apply your brakes. See *Braking on page 4-6*. It is better to remove as much speed as you can from a possible collision. Then steer around the problem, to the left or right depending on the space available.

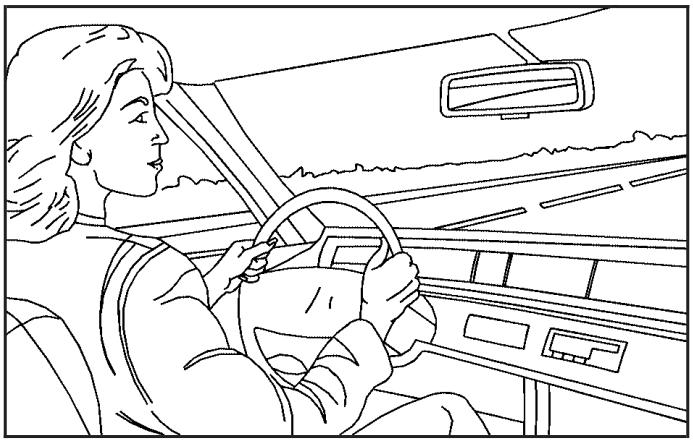

An emergency like this requires close attention and a quick decision. If you are holding the steering wheel at the recommended 9 and 3 o'clock positions, you can turn it a full 180 degrees very quickly without removing either hand. But you have to act fast, steer quickly, and just as quickly straighten the wheel once you have avoided the object.

The fact that such emergency situations are always possible is a good reason to practice defensive driving at all times and wear safety belts properly.

Downloaded from www.Manualslib.com manuals search engine

Off-Road Recovery

You may find that your right wheels have dropped off the edge of a road onto the shoulder while you are driving.

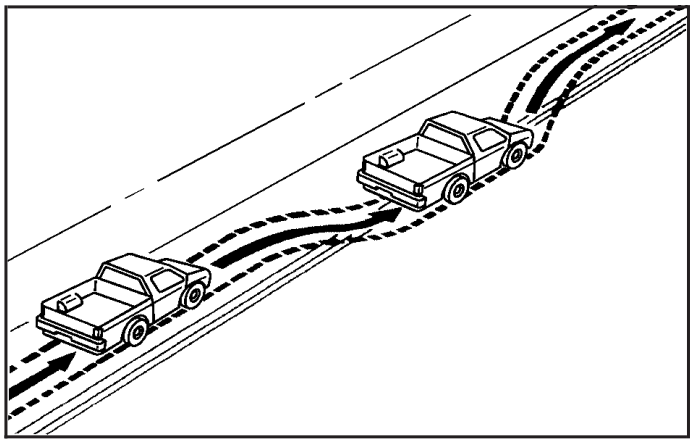

If the level of the shoulder is only slightly below the pavement, recovery should be fairly easy. Ease off the accelerator and then, if there is nothing in the way, steer so that your vehicle straddles the edge of the pavement. You can turn the steering wheel up to one-quarter turn until the right front tire contacts the pavement edge. Then turn your steering wheel to go straight down the roadway.

Passing

The driver of a vehicle about to pass another on a two-lane highway waits for just the right moment, accelerates, moves around the vehicle ahead, then goes back into the right lane again. A simple maneuver?

Not necessarily! Passing another vehicle on a two-lane highway is a potentially dangerous move, since the passing vehicle occupies the same lane as oncoming traffic for several seconds. A miscalculation, an error in judgment, or a brief surrender to frustration or anger can suddenly put the passing driver face to face with the worst of all traffic accidents — the head-on collision.

So here are some tips for passing:

- Drive ahead. Look down the road, to the sides and to crossroads for situations that might affect your passing patterns. If you have any doubt whatsoever about making a successful pass, wait for a better time.
- Watch for traffic signs, pavement markings and lines. If you can see a sign up ahead that might indicate a turn or an intersection, delay your pass. A broken center line usually indicates it is all right to pass, providing the road ahead is clear. Never cross a solid line on your side of the lane or a double solid line, even if the road seems empty of approaching traffic.

Downloaded from www.Manualslib.com manuals search engine

- Do not get too close to the vehicle you want to pass while you are awaiting an opportunity. For one thing, following too closely reduces your area of vision, especially if you are following a larger vehicle. Also, you will not have adequate space if the vehicle ahead suddenly slows or stops. Keep back a reasonable distance.
- When it looks like a chance to pass is coming up, start to accelerate but stay in the right lane and do not get too close. Time your move so you will be increasing speed as the time comes to move into the other lane. If the way is clear to pass, you will have a running start that more than makes up for the distance you would lose by dropping back. And if something happens to cause you to cancel your pass, you need only slow down and drop back again and wait for another opportunity.
- If other vehicles are lined up to pass a slow vehicle, wait your turn. But take care that someone is not trying to pass you as you pull out to pass the slow vehicle. Remember to glance over your shoulder and check the blind spot.
- Check your mirrors, glance over your shoulder and start your left lane change signal before moving out of the right lane to pass. When you are far enough ahead of the passed vehicle to see its front in your inside mirror, activate your right lane change signal and move back into the right lane. Remember that if your passenger side outside mirror is convex, the vehicle you just passed may seem to be farther away from you than it really is.
- Try not to pass more than one vehicle at a time on two-lane roads. Reconsider before passing the next vehicle.
- Do not overtake a slowly moving vehicle too rapidly. Even though the brake lamps are not flashing, it may be slowing down or starting to turn.
- If you are being passed, make it easy for the following driver to get ahead of you. Perhaps you can ease a little to the right.

Downloaded from www.Manualslib.com manuals search engine

Loss of Control

Let us review what driving experts say about what happens when the three control systems — brakes, steering, and acceleration — do not have enough friction where the tires meet the road to do what the driver has asked.

In any emergency, do not give up. Keep trying to steer and constantly seek an escape route or area of less danger.

Skidding

In a skid, a driver can lose control of the vehicle. Defensive drivers avoid most skids by taking reasonable care suited to existing conditions, and by not overdriving those conditions. But skids are always possible.

The three types of skids correspond to your vehicle's three control systems. In the braking skid, your wheels are not rolling. In the steering or cornering skid, too much speed or steering in a curve causes tires to slip and lose cornering force. And in the acceleration skid, too much throttle causes the driving wheels to spin.

A cornering skid is best handled by easing your foot off the accelerator pedal.

Remember: Any traction control system helps avoid only the acceleration skid. If your traction system is off, then an acceleration skid is also best handled by easing your foot off the accelerator pedal. See *Traction Control System (TCS) on page 4-9* and *StabiliTrak® System (Automatic Transmission) on page 4-11*.

If your vehicle starts to slide, ease your foot off the accelerator pedal and quickly steer the way you want the vehicle to go. If you start steering quickly enough, your vehicle may straighten out. Always be ready for a second skid if it occurs.

Of course, traction is reduced when water, snow, ice, gravel, or other material is on the road. For safety, you will want to slow down and adjust your driving to these conditions. It is important to slow down on slippery surfaces because stopping distance will be longer and vehicle control more limited.

While driving on a surface with reduced traction, try your best to avoid sudden steering, acceleration, or braking, including engine braking by shifting to a lower gear. Any sudden changes could cause the tires to slide. You may not realize the surface is slippery until your vehicle is skidding. Learn to recognize warning clues — such as enough water, ice, or packed snow on the road to make a mirrored surface — and slow down when you have any doubt.

Remember: Any Anti-Lock Brake System (ABS) helps avoid only the braking skid.

Downloaded from www.Manualslib.com manuals search engine

Off-Road Driving

This off-road guide is meant to provide advice for when you drive your vehicle off paved roads. Also, see *Braking on page 4-6*.

Off-road driving can be great fun. But it does have some definite hazards. The greatest of these is the terrain itself.

“Off-roading” means you have left the great North American road system behind. Traffic lanes are not marked. Curves are not banked. There are no road signs. Surfaces can be slippery, rough, uphill or downhill. In short, you have gone right back to nature.

Off-road driving involves some new skills. And that is why it is very important that you read this guide. You will find many driving tips and suggestions. These will help make your off-road driving safer and more enjoyable.

Before You Go Off-Roading

There are some things to do before you go out. For example, be sure to have all necessary maintenance and service work done. Check to make sure all underbody shields are properly attached. Make sure any equipment you may need — first aid kit, cell phone, flashlight, etc. — is securely stored in the vehicle.
Be sure you read all the information about your four-wheel-drive vehicle in this manual. Is there enough fuel? Is the spare tire fully inflated? Are the fluid levels up where they should be? What are the local laws that apply to off-roading where you will be driving? If you do not know, you should check with law enforcement people in the area. Will you be on someone’s private land? If so, be sure to get the necessary permission.

Downloaded from www.Manualslib.com manuals search engine

Loading Your Vehicle for Off-Road Driving

⚠ CAUTION:

- **Cargo on the load floor piled higher than the seatbacks can be thrown forward during a sudden stop. You or your passengers could be injured. Keep cargo below the top of the seatbacks.**
- **Unsecured cargo on the load floor can be tossed about when driving over rough terrain. You or your passengers can be struck by flying objects. Secure the cargo properly.**

CAUTION: (Continued)

CAUTION: (Continued)

- **Heavy loads on the roof raise the vehicle's center of gravity, making it more likely to roll over. You can be seriously or fatally injured if the vehicle rolls over. Put heavy loads inside the cargo area, not on the roof. Keep cargo in the cargo area as far forward and low as possible.**

There are some important things to remember about how to load your vehicle.

- The heaviest things should be on the load floor and forward of your rear axle. Put heavier items in the rear area, as far forward as you can.
- Be sure the load is secured properly, so driving on the off-road terrain does not toss things around.

You will find other important information in this manual. See *Loading Your Vehicle on page 4-52* and *Tires on page 5-51*.

Downloaded from www.Manualslib.com manuals search engine

Environmental Concerns

Off-road driving can provide wholesome and satisfying recreation. However, it also raises environmental concerns. We recognize these concerns and urge every off-roader to follow these basic rules for protecting the environment:

- Always use established trails, roads, and areas that have been specially set aside for public off-road recreational driving; obey all posted regulations.
- Avoid any driving practice that could damage the environment — shrubs, flowers, trees, grasses — or disturb wildlife. This includes wheel-spinning, breaking down trees, or unnecessary driving through streams or over soft ground.
- Always carry a litter bag — make sure all refuse is removed from any campsite before leaving.
- Take extreme care with open fires (where permitted), camp stoves, and lanterns.
- Never park your vehicle over dry grass or other combustible materials that could catch fire from the heat of the vehicle's exhaust system.

Traveling to Remote Areas

It makes sense to plan your trip, especially when going to a remote area. Know the terrain and plan your route. You are much less likely to get bad surprises. Get accurate maps of trails and terrain. Try to learn of any blocked or closed roads.

It is also a good idea to travel with at least one other vehicle. If something happens to one of them, the other can help quickly.

Does your vehicle have a winch? If so, be sure to read the winch instructions. In a remote area, a winch can be handy if you get stuck. But you will want to know how to use it properly.

Downloaded from www.Manualslib.com manuals search engine

High Mobility Characteristics

The HUMMER H3 has a 10 inch (25.4 cm) running ground clearance (A) and a 9 inch (22.8 cm) axle to ground clearance (B) while maintaining a low silhouette and a low center of gravity.

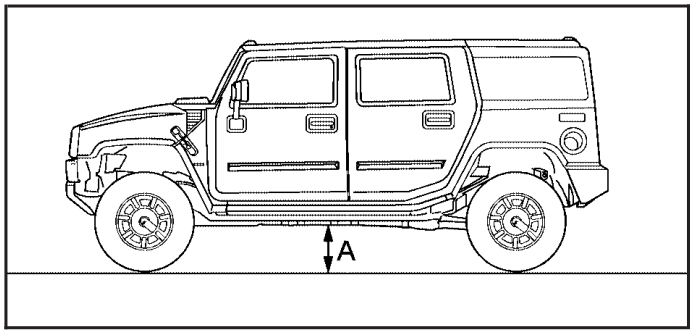

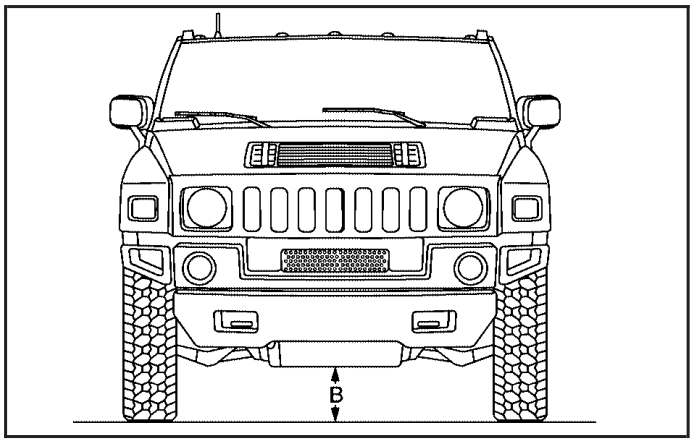

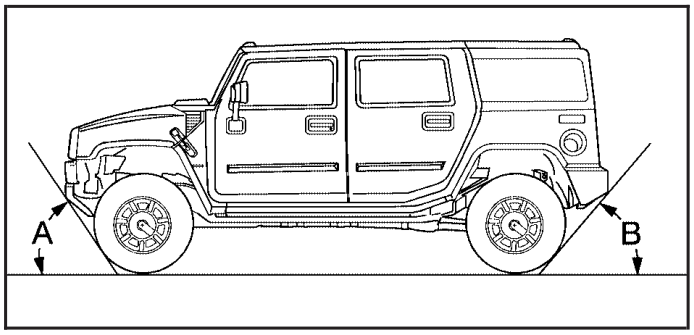

The HUMMER H3 has an approximate approach angle (A) of 37.5 degrees and a departure angle (B) of 35.5 degrees, depending on suspension packages.

Downloaded from www.Manualslib.com manuals search engine

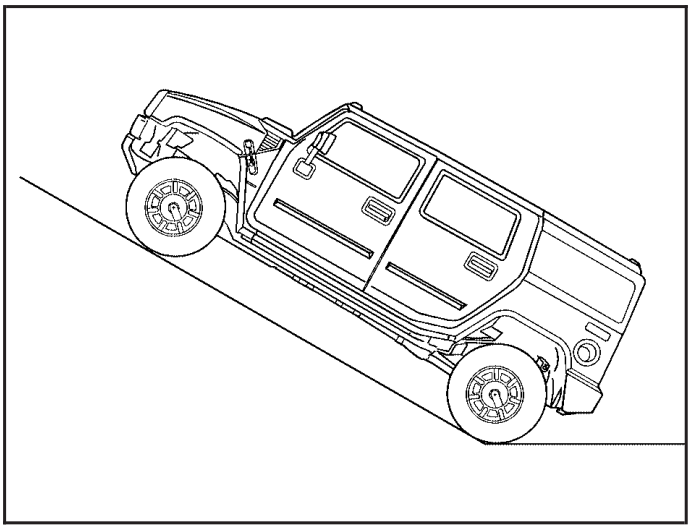

Design specifications required a minimum gradeability of 60% (31 degrees) slope, with the vehicle fully loaded, on high friction surfaces with maximum vehicle speed not to exceed 6 mph (9.7 km/h). The vehicle is expected to traverse this grade only for short durations. Never stop and idle the vehicle or park it on this grade.

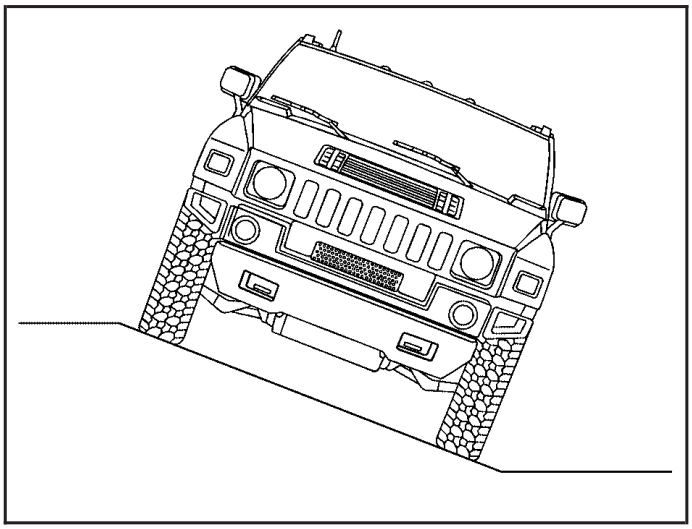

Also, your vehicle should be able to traverse a 40% (22 degrees) side slope at 6 mph (9.7 km/h) while fully loaded on high friction surfaces.

Downloaded from www.Manualslib.com manuals search engine

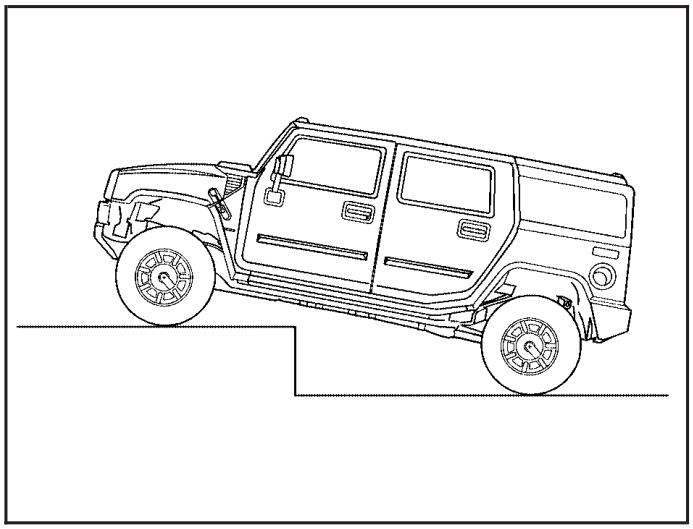

Your vehicle can climb a 16 inch (40.6 cm) vertical step. Step climbing is best done by approaching the step at an angle rather than straight on.

Brake and Accelerator Operation Techniques for Off-Road Driving

For logs, walls, rocks, severe ditches, hills, sand, etc.

1. Bring the vehicle to a complete stop. Do not rev the engine.
2. Select the proper transmission and transfer case gear range; usually FIRST (1) gear, Four-Wheel-Low Lock for such obstacles.
3. If wheel spin is experienced, maintain steady throttle, with your foot off the brake pedal, to allow the Traction Control System (TCS) to control the wheel spin. TCS will not operate if the brakes are applied, even slightly.
4. If wheel spin cannot be controlled by the system, fully press the brake pedal with your left foot so all wheel spin is halted.
5. Back away from the obstacle so that a new approach can be tried.
6. As the first wheel crosses the obstacle, be prepared to alternate the brake and accelerator pedal to maintain control and avoid tire drop-off from obstacles. Repeat this process for the other wheels.

Downloaded from www.Manualslib.com manuals search engine

For mounds, washouts, loose up-hill slopes, ditches, etc.

When wheel spin occurs as the vehicle is moving, the driver may notice a slight shaking or shuddering of the vehicle. This should be stopped as soon as possible to prevent damage to vehicle components. This is the indication that a loss of traction is occurring on this terrain. The operator should:

1. Reduce speed and apply the brakes.
2. Assess the terrain properly and adjust vehicle speed and gear ranges accordingly: Four-Wheel High position for higher speeds and Four-Wheel-Low Lock for more torque and lower speeds. Transmission FIRST (1) gear is generally recommended.
3. Apply slight pressure to the brake when the shaking or shuddering sensation is felt, keeping the vehicle moving in a controlled manner.
4. Be prepared to alternate between braking and accelerating through the adverse terrain.

Getting Familiar with Off-Road Driving

It is a good idea to practice in an area that is safe and close to home before you go into the wilderness. Off-road driving does require some new and different skills. Here is what we mean.

Tune your senses to different kinds of signals. Your eyes, for example, need to constantly sweep the terrain for unexpected obstacles. Your ears need to listen for unusual tire or engine sounds. With your arms, hands, feet and body, you will need to respond to vibrations and vehicle bounce.

Downloaded from www.Manualslib.com manuals search engine

Controlling your vehicle is the key to successful off-road driving. One of the best ways to control your vehicle is to control your speed. Here are some things to keep in mind. At higher speeds:

- You approach things faster and you have less time to scan the terrain for obstacles.
- You have less time to react.
- You have more vehicle bounce when you drive over obstacles.
- You will need more distance for braking, especially since you are on an unpaved surface.

⚠ CAUTION:

When you are driving off-road, bouncing and quick changes in direction can easily throw you out of position. This could cause you to lose control and crash. So, whether you are driving on or off the road, you and your passengers should wear safety belts.

Scanning the Terrain

Off-road driving can take you over many different kinds of terrain. You need to be familiar with the terrain and its many different features. Here are some things to consider.

Surface Conditions: Off-roading can take you over hard-packed dirt, gravel, rocks, grass, sand, mud, snow, or ice. Each of these surfaces affects the steering, acceleration, and braking of your vehicle in different ways. Depending upon the kind of surface you are on, you may experience slipping, sliding, wheel spinning, delayed acceleration, poor traction, and longer braking distances.

Surface Obstacles: Unseen or hidden obstacles can be hazardous. A rock, log, hole, rut, or bump can startle you if you are not prepared for them. Often these obstacles are hidden by grass, bushes, snow, or even the rise and fall of the terrain itself. Here are some things to consider:

- Is the path ahead clear?
- Will the surface texture change abruptly up ahead?
- Does the travel take you uphill or downhill? There is more discussion of these subjects later.
- Will you have to stop suddenly or change direction quickly?

Downloaded from www.Manualslib.com manuals search engine

When you drive over obstacles or rough terrain, keep a firm grip on the steering wheel. Ruts, troughs, or other surface features can jerk the wheel out of your hands if you are not prepared.

When possible, it is a good practice to survey the landscape ahead on foot prior to driving to observe hidden obstacles.

When you drive over bumps, rocks, or other obstacles, your wheels can leave the ground. If this happens, even with one or two wheels, you cannot control the vehicle as well or at all.

Because you will be on an unpaved surface, it is especially important to avoid sudden acceleration, sudden turns, or sudden braking.

In a way, off-road driving requires a different kind of alertness from driving on paved roads and highways. There are no road signs, posted speed limits, or signal lights. You have to use your own good judgment about what is safe and what is not.

Drinking and driving can be very dangerous on any road. And this is certainly true for off-road driving. At the very time you need special alertness and driving skills, your reflexes, perceptions, and judgment can be affected by even a small amount of alcohol. You could have a serious — or even fatal — accident if you drink and drive or ride with a driver who has been drinking. See *Drunken Driving on page 4-3*.

Crossing Obstacles

Approach Angle — a Key to Mobility

If you encounter a large dip in the terrain, do not enter straight on; enter at an angle — 15 degrees minimum approach (A), 75 degrees maximum approach angle (B). For very large dips, ditches, or small washes, coast in, using the engine as a brake (transmission and transfer case lowest gears). Then, use the low ranges in the transmission and transfer case to power out.

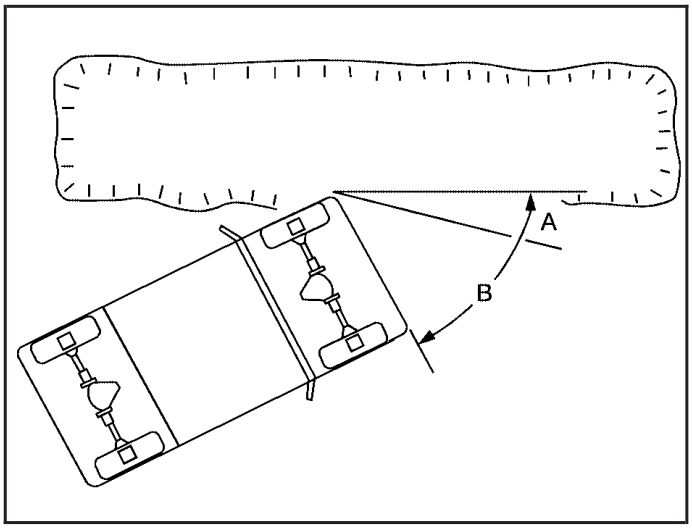

Downloaded from www.Manualslib.com manuals search engine

Roll Your Tires Over Large Rocks

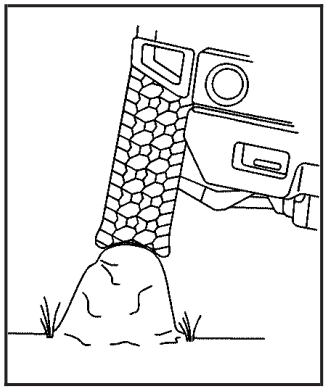

Do not straddle large rocks; drive over them, letting the tire cover the rock. The tread of the tire is thicker and tougher than the sidewall of the tire and is more resilient to impact than underbody components.

Log Crossing

Using the proper technique, your vehicle will cross logs up to 10 inches (25.4 cm) in diameter. Approach the log at approximately a 15 degree angle (A) with the transmission in FIRST (1) and the transfer case in Four-Wheel-Low Lock and “walk” your vehicle over, one tire at a time. It may be necessary to modulate your brake pedal and accelerator to avoid spin-out. Ease the vehicle down from the log with your brake.

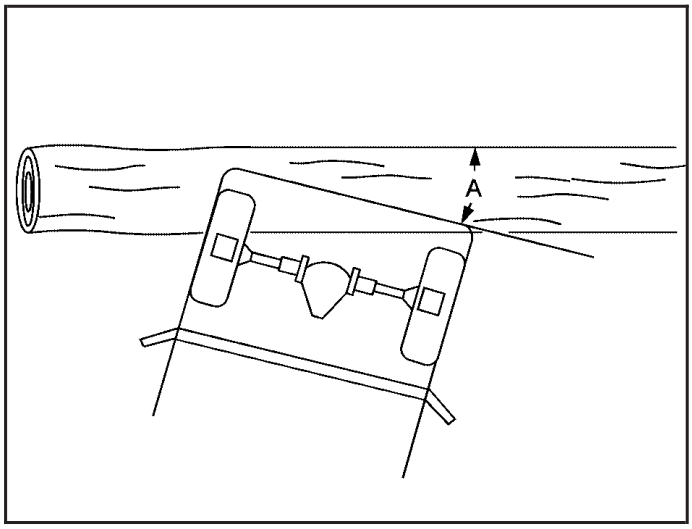

Downloaded from www.Manualslib.com manuals search engine

Driving on Off-Road Hills

Off-road driving often takes you up, down, or across a hill. Driving safely on hills requires good judgment and an understanding of what your vehicle can and cannot do. There are some hills that simply cannot be driven, no matter how well built the vehicle.

⚠ CAUTION:

Many hills are simply too steep for any vehicle. If you drive up them, you will stall. If you drive down them, you cannot control your speed. If you drive across them, you will roll over. You could be seriously injured or killed. If you have any doubt about the steepness, do not drive the hill.

Approaching a Hill

When you approach a hill, you need to decide if it is one of those hills that is just too steep to climb, descend, or cross. Steepness can be hard to judge.

On a very small hill, for example, there may be a smooth, constant incline with only a small change in elevation where you can easily see all the way to the top. On a large hill, the incline may get steeper as you near the top, but you may not see this because the crest of the hill is hidden by bushes, grass, or shrubs.

Here are some other things to consider as you approach a hill:

- Is there a constant incline, or does the hill get sharply steeper in places?
- Is there good traction on the hillside, or will the surface cause tire slipping?
- Is there a straight path up or down the hill so you will not have to make turning maneuvers?
- Are there obstructions on the hill that can block your path, such as boulders, trees, logs, or ruts?
- What is beyond the hill? Is there a cliff, an embankment, a drop-off, a fence? Get out and walk the hill if you do not know. It is the smart way to find out.
- Is the hill simply too rough? Steep hills often have ruts, gullies, troughs and exposed rocks because they are more susceptible to the effects of erosion.

Downloaded from www.Manualslib.com manuals search engine

Driving Uphill

Once you decide you can safely drive up the hill, you need to take some special steps:

- Use transmission and transfer case low gear and get a firm grip on the steering wheel.
- Get a smooth start up the hill and try to maintain your speed. Do not use more power than you need, because you do not want your wheels to start spinning or sliding.
- Let the traction system work to control any wheel slippage. The traction control system allows for moderate wheel spin with some capability to dig in and power up the hill.
- Do not continue if the vehicle shudders or exhibits suspension hopping. This can cause damage to the driveline or suspension components. Improper driving technique is not covered by your vehicle warranty.
- Try to drive straight up the hill if at all possible. If the path twists and turns, you might want to find another route.

⚠ CAUTION:

Turning or driving across steep hills can be dangerous. You could lose traction, slide sideways, and possibly roll over. You could be seriously injured or killed. When driving up hills, always try to go straight up.

- Ease up on your speed as you approach the top of the hill.
- Attach a flag to the vehicle to make you more visible to approaching traffic on trails or hills.
- Sound the horn as you approach the top of the hill to let opposing traffic know you are there.
- Use your headlamps even during the day. They make you more visible to oncoming traffic.

Downloaded from www.Manualslib.com manuals search engine

⚠ CAUTION:

Driving to the top (crest) of a hill at full speed can cause an accident. There could be a drop-off, embankment, cliff, or even another vehicle. You could be seriously injured or killed. As you near the top of a hill, slow down and stay alert.

Q: What should I do if my vehicle stalls, or is about to stall, and I cannot make it up the hill?

A: If this happens, there are some things you should do, and there are some things you must not do. First, here is what you *should* do:

- Push the brake pedal to stop the vehicle and keep it from rolling backwards. Also, apply the parking brake.
- If your engine is still running, shift the transmission to REVERSE (R), release the parking brake, and slowly back down the hill in REVERSE (R).
- If your engine has stopped running, you will need to restart it. With the brake pedal pressed, apply the parking brake. If you have an automatic transmission, shift the transmission to PARK (P). Restart the engine. Then, shift to REVERSE (R), release the parking brake, and slowly back down the hill as straight as possible in REVERSE (R).
- As you are backing down the hill, put your left hand on the steering wheel at the 12 o'clock position. This way, you will be able to tell if your wheels are straight and maneuver as you back down. It is best that you back down the hill with your wheels straight rather than in the left or right direction. Turning the wheel too far to the left or right will increase the possibility of a rollover.

Downloaded from www.Manualslib.com manuals search engine

Here are some things you *must not* do if you stall, or are about to stall, when going up a hill:

- Never attempt to prevent a stall by shifting into NEUTRAL (N) to rev-up the engine and regain forward momentum. This will not work. Your vehicle will roll backwards very quickly and you could go out of control.

  Instead, apply the regular brake to stop the vehicle. Then apply the parking brake. Shift to REVERSE (R), release the parking brake, and slowly back straight down.
- Never attempt to turn around if you are about to stall when going up a hill. If the hill is steep enough to stall your vehicle, it is steep enough to cause you to roll over if you turn around. If you cannot make it up the hill, you must back straight down the hill.

Q: Suppose, after stalling, I try to back down the hill and decide I just cannot do it. What should I do?

A: Set the parking brake. If you have an automatic transmission, shift to PARK (P). Turn off the engine. Leave the vehicle and go get some help. Exit on the uphill side and stay clear of the path the vehicle would take if it rolled downhill. Do not shift the transfer case to NEUTRAL when you leave the vehicle. Leave it in some gear.

⚠ CAUTION:

Shifting the transfer case to NEUTRAL can cause your vehicle to roll even if the transmission is in PARK (P), or, if you have a manual transmission, even if you are in gear. This is because the NEUTRAL position on the transfer case overrides the transmission. You or someone else could be injured.
If you are going to leave your vehicle, set the parking brake and shift the transmission to PARK (P), or, put the manual transmission in FIRST (1). But do not shift the transfer case to NEUTRAL. Leave the transfer case in the Four-Wheel High, Four-Wheel-High Lock, or Four-Wheel-Low Lock position.

Driving Downhill

When off-roading takes you downhill, you will want to consider a number of things:

- How steep is the downhill? Will I be able to maintain vehicle control?
- What is the surface like? Smooth? Rough? Slippery? Hard-packed dirt? Gravel?

Downloaded from www.Manualslib.com manuals search engine

- Are there hidden surface obstacles? Ruts? Logs? Boulders?
- What is at the bottom of the hill? Is there a hidden creek bank or even a river bottom with large rocks?

If you decide you can go down a hill safely, then try to keep your vehicle headed straight down, and use a low gear. This way, engine drag can help your brakes and they will not have to do all the work. Descend slowly, keeping your vehicle under control at all times.

⚠ CAUTION:

Heavy braking when going down a hill can cause your brakes to overheat and fade. This could cause loss of control and a serious accident. Apply the brakes lightly when descending a hill and use a low gear to keep vehicle speed under control.

Q: Are there some things I should not do when driving down a hill?

A: Yes! These are important because if you ignore them you could lose control and have a serious accident:

- When driving downhill, avoid turns that take you across the incline of the hill. A hill that is not too steep to drive down may be too steep to drive across. You could roll over if you do not drive straight down.
- Never go downhill with the transmission in NEUTRAL (N). This is called “free-wheeling.” Your brakes will have to do all the work and could overheat and fade.

Q: Am I likely to stall when going downhill?

A: It is much more likely to happen going uphill. But if it happens going downhill, here is what to do:

1. Stop your vehicle by applying the regular brakes. Apply the parking brake.
2. If you have an automatic transmission, shift to PARK (P). While still braking, restart the engine.
3. Shift back to a low gear, release the parking brake, and drive straight down.
4. If the engine will not start, get out and get help.

Downloaded from www.Manualslib.com manuals search engine

Driving Across an Incline

Sooner or later, an off-road trail will probably go across the incline of a hill. If this happens, you have to decide whether to try to drive across the incline. Here are some things to consider:

- A ill that can be driven straight up or down may be too steep to drive across. When you go straight up or down a hill, the length of the wheel base — the distance from the front wheels to the rear wheels — reduces the likelihood the vehicle will tumble end over end. But when you drive across an incline, the much more narrow track width — the distance between the left and right wheels — may not prevent the vehicle from tilting and rolling over. Also, driving across an incline puts more weight on the downhill wheels. This could cause a downhill slide or a rollover.
- Surface conditions can be a problem when you drive across a hill. Loose gravel, muddy spots, or even wet grass can cause your tires to slip sideways, downhill. If the vehicle slips sideways, it can hit something that will trip it — a rock, a rut, etc. — and roll over.
- Hidden obstacles can make the steepness of the incline even worse. If you drive across a rock with the uphill wheels, or if the downhill wheels drop into a rut or depression, your vehicle can tilt even more.

For reasons like these, you need to decide carefully whether to try to drive across an incline. Just because the trail goes across the incline does not mean you have to drive it. The last vehicle to try it might have rolled over.

⚠ CAUTION:

Driving across an incline that is too steep will make your vehicle roll over. You could be seriously injured or killed. If you have any doubt about the steepness of the incline, do not drive across it. Find another route instead.

Q: What if I am driving across an incline that is not too steep, but I hit some loose gravel and start to slide downhill. What should I do?

A: If you feel your vehicle starting to slide sideways, turn downhill. This should help straighten out the vehicle and prevent the side slipping. However, a much better way to prevent this is to get out and “walk the course” so you know what the surface is like before you drive it.

Downloaded from www.Manualslib.com manuals search engine

Stalling on an Incline

If your vehicle stalls when you are crossing an incline, be sure you, and any passengers, get out on the uphill side, even if the door there is harder to open. If you get out on the downhill side and the vehicle starts to roll over, you will be right in its path.

If you have to walk down the slope, stay out of the path the vehicle will take if it does roll over.

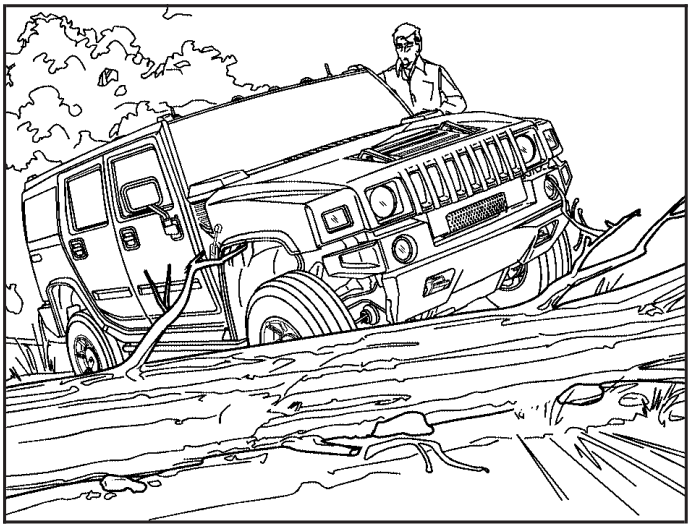

⚠ CAUTION:

Getting out on the downhill (low) side of a vehicle stopped across an incline is dangerous. If the vehicle rolls over, you could be crushed or killed. Always get out on the uphill (high) side of the vehicle and stay well clear of the rollover path.

Driving in Mud, Sand, Snow or Ice

When you drive in mud, snow, or sand, your wheels will not get good traction. You cannot accelerate as quickly, turning is more difficult, and you will need longer braking distances.

It is best to use a low gear when you are in mud — the deeper the mud, the lower the gear. In really deep mud, the idea is to keep your vehicle moving so you do not get stuck. Be careful to keep mud from building up and washing onto the engine cooling system.

Downloaded from www.Manualslib.com manuals search engine

When you drive on sand, you will sense a change in wheel traction. But it will depend upon how loosely packed the sand is. On loosely packed sand, such as on beaches or sand dunes, your tires will tend to sink into the sand. This has an effect on steering, accelerating, and braking. Drive at a reduced speed and avoid sharp turns or abrupt maneuvers.

Hard packed snow and ice offer the worst tire traction. On these surfaces, it is very easy to lose control. On wet ice, for example, the traction is so poor that you will have difficulty accelerating. And if you do get moving, poor steering and difficult braking can cause you to slide out of control.

⚠ CAUTION:

Driving on frozen lakes, ponds, or rivers can be dangerous. Underwater springs, currents under the ice, or sudden thaws can weaken the ice. Your vehicle could fall through the ice and you and your passengers could drown. Drive your vehicle on safe surfaces only.

Driving in Water

Heavy rain can mean flash flooding, and flood waters demand extreme caution.

Find out how deep the water is before you drive through it. If it is deep enough to cover your wheel hubs, axles, or exhaust pipe, do not try it — you probably will not get through. Also, water that deep can damage your axle and other vehicle parts. Your vehicle is capable of depths up to 20 inches. Know how to judge whether the water is deeper than this before proceeding into it.

If the water is not too deep, drive slowly through it. At faster speeds, water splashes on your ignition system and your vehicle can stall. Stalling can also occur if you get your tailpipe under water. And, as long as your tailpipe is under water, you will never be able to start your engine. When you go through water, remember that when your brakes get wet, it may take you longer to stop.

Downloaded from www.Manualslib.com manuals search engine

⚠ CAUTION:

Driving through rushing water can be dangerous. Deep water can sweep your vehicle downstream and you and your passengers could drown. If it is only shallow water, it can still wash away the ground from under your tires, and you could lose traction and roll the vehicle over. Do not drive through rushing water.

See *Driving in Rain and on Wet Roads on page 4-37* for more information on driving through water.

After Off-Road Driving

Remove any brush or debris that has collected on the underbody, chassis, or under the hood. These accumulations can be a fire hazard.

After operation in mud or sand, have the brake linings cleaned and checked. These substances can cause glazing and uneven braking. Check the engine and oil coolers for mud accumulation.

Thoroughly and carefully clean these devices to allow proper cooling. Check the body structure, steering, suspension, underbody shields, wheels, tires, and exhaust system for damage. Also, check the fuel lines and cooling system for any leakage.

Your vehicle will require more frequent service due to off-road use. See the Maintenance Schedule for additional information.

Assist Steps

Your vehicle may be equipped with removable side steps.

Remove the steps prior to off-roading to give your vehicle more ground clearance and to prevent damage to the vehicle from the side steps dragging and/or catching on obstacles.

Notice: **Do not drive off-road with the side steps attached to your vehicle. You can damage the side steps and/or your vehicle's frame if they get caught or drag against an obstacle. This damage would not be covered by your vehicle's warranty. Always remove the side steps prior to any off-road driving.**

Downloaded from www.Manualslib.com manuals search engine

Driving at Night

Night driving is more dangerous than day driving. One reason is that some drivers are likely to be impaired — by alcohol or drugs, with night vision problems, or by fatigue.

Here are some tips on night driving.

- Drive defensively.
- Do not drink and drive.
- Adjust the inside rearview mirror to reduce the glare from headlamps behind you.
- Since you cannot see as well, you may need to slow down and keep more space between you and other vehicles.
- Slow down, especially on higher speed roads. Your vehicle's headlamps can light up only so much road ahead.
- In remote areas, watch for animals.
- If you are tired, pull off the road in a safe place and rest.

No one can see as well at night as in the daytime. But as we get older these differences increase. A 50-year-old driver may require at least twice as much light to see the same thing at night as a 20-year-old.

What you do in the daytime can also affect your night vision. For example, if you spend the day in bright sunshine you are wise to wear sunglasses. Your eyes will have less trouble adjusting to night. But if you are driving, do not wear sunglasses at night. They may cut down on glare from headlamps, but they also make a lot of things invisible.

You can be temporarily blinded by approaching headlamps. It can take a second or two, or even several seconds, for your eyes to re-adjust to the dark. When you are faced with severe glare, as from a driver who does not lower the high beams, or a vehicle with misaimed headlamps, slow down a little. Avoid staring directly into the approaching headlamps.

Downloaded from www.Manualslib.com manuals search engine

Keep the windshield and all the glass on your vehicle clean — inside and out. Glare at night is made much worse by dirt on the glass. Even the inside of the glass can build up a film caused by dust. Dirty glass makes lights dazzle and flash more than clean glass would, making the pupils of your eyes contract repeatedly.

Remember that the headlamps light up far less of a roadway when you are in a turn or curve. Keep your eyes moving; that way, it is easier to pick out dimly lighted objects. Just as the headlamps should be checked regularly for proper aim, so should your eyes be examined regularly. Some drivers suffer from night blindness — the inability to see in dim light — and are not even aware of it.

Driving in Rain and on Wet Roads

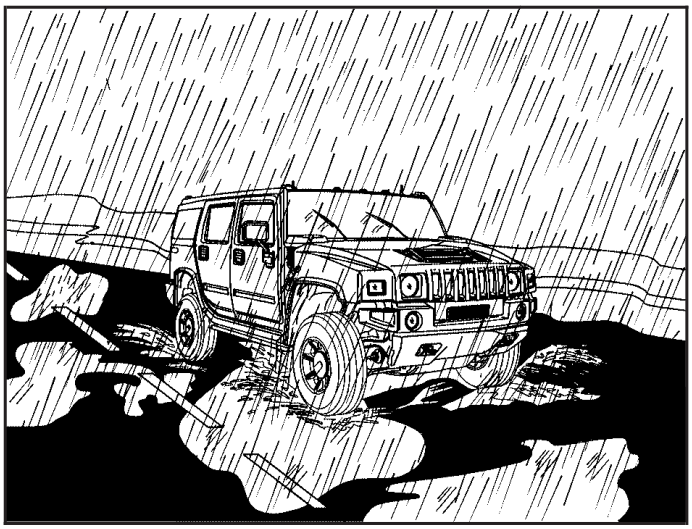

Rain and wet roads can mean driving trouble. On a wet road, you cannot stop, accelerate, or turn as well because your tire-to-road traction is not as good as on dry roads. And, if your tires do not have much tread left, you will get even less traction. It is always wise to go slower and be cautious if rain starts to fall while you are driving. The surface may get wet suddenly when your reflexes are tuned for driving on dry pavement.

Downloaded from www.Manualslib.com manuals search engine

The heavier the rain, the harder it is to see. Even if your windshield wiper blades are in good shape, a heavy rain can make it harder to see road signs and traffic signals, pavement markings, the edge of the road, and even people walking.

It is wise to keep your wiping equipment in good shape and keep your windshield washer fluid reservoir filled with washer fluid. Replace your windshield wiper inserts when they show signs of streaking or missing areas on the windshield, or when strips of rubber start to separate from the inserts.

⚠ CAUTION:

Wet brakes can cause accidents. They will not work as well in a quick stop and may cause pulling to one side. You could lose control of the vehicle.

After driving through a large puddle of water or a car wash, apply your brake pedal lightly until your brakes work normally.

Driving too fast through large water puddles or even going through some car washes can cause problems, too. The water may affect your brakes. Try to avoid puddles. But if you cannot, try to slow down before you hit them.

Downloaded from www.Manualslib.com manuals search engine

Hydroplaning

Hydroplaning is dangerous. So much water can build up under your tires that they can actually ride on the water. This can happen if the road is wet enough and you are going fast enough. When your vehicle is hydroplaning, it has little or no contact with the road.

Hydroplaning does not happen often. But it can if your tires do not have much tread or if the pressure in one or more is low. It can happen if a lot of water is standing on the road. If you can see reflections from trees, telephone poles, or other vehicles, and raindrops dimple the water's surface, there could be hydroplaning.

Hydroplaning usually happens at higher speeds. There just is not a hard and fast rule about hydroplaning. The best advice is to slow down when it is raining.

Driving Through Deep Standing Water

Notice: **If you drive too quickly through deep puddles or standing water, water can come in through your engine's air intake and badly damage your engine. Never drive through water that is slightly lower than the underbody of your vehicle. If you cannot avoid deep puddles or standing water, drive through them very slowly.**

Driving Through Flowing Water

⚠ CAUTION:

Flowing or rushing water creates strong forces. If you try to drive through flowing water, as you might at a low water crossing, your vehicle can be carried away. As little as six inches of flowing water can carry away a smaller vehicle. If this happens, you and other vehicle occupants could drown. Do not ignore police warning signs, and otherwise be very cautious about trying to drive through flowing water.

Some Other Rainy Weather Tips

- Besides slowing down, allow some extra following distance. And be especially careful when you pass another vehicle. Allow yourself more clear room ahead, and be prepared to have your view restricted by road spray.
- Have good tires with proper tread depth. See *Tires on page 5-51*.

Downloaded from www.Manualslib.com manuals search engine

City Driving

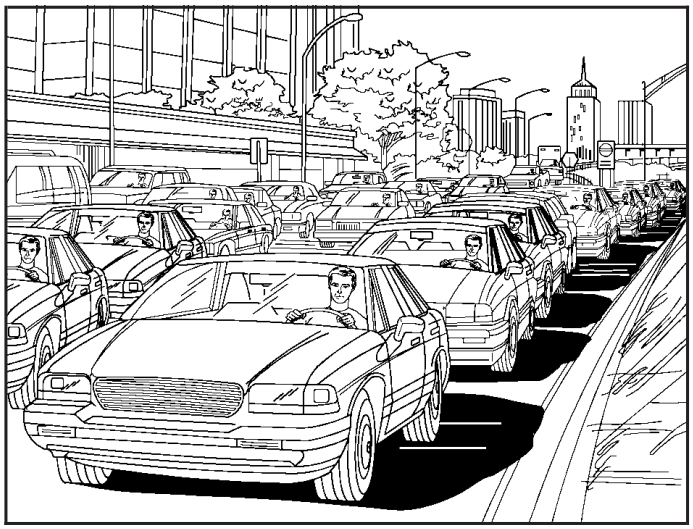

One of the biggest problems with city streets is the amount of traffic on them. You will want to watch out for what the other drivers are doing and pay attention to traffic signals.

Here are ways to increase your safety in city driving:

- Know the best way to get to where you are going. Get a city map and plan your trip into an unknown part of the city just as you would for a cross-country trip.
- Try to use the freeways that rim and crisscross most large cities. You will save time and energy. See *Freeway Driving on page 4-41*.
- Treat a green light as a warning signal. A traffic light is there because the corner is busy enough to need it. When a light turns green, and just before you start to move, check both ways for vehicles that have not cleared the intersection or may be running the red light.

Downloaded from www.Manualslib.com manuals search engine

Freeway Driving

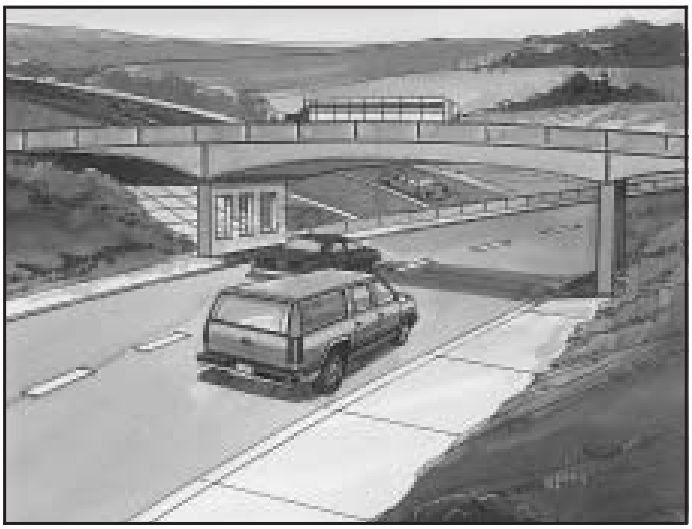

Mile for mile, freeways — also called thruways, parkways, expressways, turnpikes, or superhighways — are the safest of all roads. But they have their own special rules.

The most important advice on freeway driving is: Keep up with traffic and keep to the right. Drive at the same speed most of the other drivers are driving. Too-fast or too-slow driving breaks a smooth traffic flow. Treat the left lane on a freeway as a passing lane.

At the entrance, there is usually a ramp that leads to the freeway. If you have a clear view of the freeway as you drive along the entrance ramp, you should begin to check traffic. Try to determine where you expect to blend with the flow. Try to merge into the gap at close to the prevailing speed. Switch on your turn signal, check your mirrors, and glance over your shoulder as often as necessary. Try to blend smoothly with the traffic flow.

Once you are on the freeway, adjust your speed to the posted limit or to the prevailing rate if it is slower. Stay in the right lane unless you want to pass.

Before changing lanes, check your mirrors. Then use your turn signal.

Just before you leave the lane, glance quickly over your shoulder to make sure there is not another vehicle in your blind spot.

Downloaded from www.Manualslib.com manuals search engine

Once you are moving on the freeway, make certain you allow a reasonable following distance. Expect to move slightly slower at night.

When you want to leave the freeway, move to the proper lane well in advance. If you miss your exit, do not, under any circumstances, stop and back up. Drive on to the next exit.

The exit ramp can be curved, sometimes quite sharply. The exit speed is usually posted.

Reduce your speed according to your speedometer, not to your sense of motion. After driving for any distance at higher speeds, you may tend to think you are going slower than you actually are.

Before Leaving on a Long Trip

Make sure you are ready. Try to be well rested. If you must start when you are not fresh — such as after a day's work — do not plan to make too many miles that first part of the journey. Wear comfortable clothing and shoes you can easily drive in.

Is your vehicle ready for a long trip? If you keep it serviced and maintained, it is ready to go. If it needs service, have it done before starting out. Of course, you will find experienced and able service experts in GM dealerships all across North America. They will be ready and willing to help if you need it.

Here are some things you can check before a trip:

- *Windshield Washer Fluid:* Is the reservoir full? Are all windows clean inside and outside?
- *Wiper Blades:* Are they in good shape?
- *Fuel, Engine Oil, Other Fluids:* Have you checked all levels?
- *Lamps:* Are they all working? Are the lenses clean?
- *Tires:* They are vitally important to a safe, trouble-free trip. Is the tread good enough for long-distance driving? Are the tires all inflated to the recommended pressure?
- *Weather Forecasts:* What is the weather outlook along your route? Should you delay your trip a short time to avoid a major storm system?
- *Maps:* Do you have up-to-date maps?

Downloaded from www.Manualslib.com manuals search engine

Highway Hypnosis

Is there actually such a condition as highway hypnosis? Or is it just plain falling asleep at the wheel? Call it highway hypnosis, lack of awareness, or whatever.

There is something about an easy stretch of road with the same scenery, along with the hum of the tires on the road, the drone of the engine, and the rush of the wind against the vehicle that can make you sleepy. Do not let it happen to you! If it does, your vehicle can leave the road in less than a second, and you could crash and be injured.

What can you do about highway hypnosis? First, be aware that it can happen.

Then here are some tips:

- Make sure your vehicle is well ventilated, with a comfortably cool interior.
- Keep your eyes moving. Scan the road ahead and to the sides. Check your mirrors and your instruments frequently.
- If you get sleepy, pull off the road into a rest, service, or parking area and take a nap, get some exercise, or both. For safety, treat drowsiness on the highway as an emergency.

Hill and Mountain Roads

Driving on steep hills or mountains is different from driving in flat or rolling terrain.

Downloaded from www.Manualslib.com manuals search engine

If you drive regularly in steep country, or if you are planning to visit there, here are some tips that can make your trips safer and more enjoyable. See *Off-Road Driving on page 4-17* for information about driving off-road.

- Keep your vehicle in good shape. Check all fluid levels and also the brakes, tires, cooling system, and transmission. These parts can work hard on mountain roads.

⚠ CAUTION:

If you do not shift down, your brakes could get so hot that they would not work well. You would then have poor braking or even none going down a hill. You could crash. Shift down to let your engine assist your brakes on a steep downhill slope.

⚠ CAUTION:

Coasting downhill in NEUTRAL (N) or with the ignition off is dangerous. Your brakes will have to do all the work of slowing down. They could get so hot that they would not work well. You would then have poor braking or even none going down a hill. You could crash. Always have your engine running and your vehicle in gear when you go downhill.

- Know how to go down hills. The most important thing to know is this: let your engine do some of the slowing down. Shift to a lower gear when you go down a steep or long hill.

Downloaded from www.Manualslib.com manuals search engine

- Know how to go uphill. You may want to shift down to a lower gear. The lower gears help cool your engine and transmission, and you can climb the hill better.
- Stay in your own lane when driving on two-lane roads in hills or mountains. Do not swing wide or cut across the center of the road. Drive at speeds that let you stay in your own lane.
- As you go over the top of a hill, be alert. There could be something in your lane, like a stalled car or an accident.
- You may see highway signs on mountains that warn of special problems. Examples are long grades, passing or no-passing zones, a falling rocks area, or winding roads. Be alert to these and take appropriate action.

Winter Driving

Here are some tips for winter driving:

- Have your vehicle in good shape for winter.
- You may want to put winter emergency supplies in your vehicle.

Also see *Tires on page 5-51*.

Downloaded from www.Manualslib.com manuals search engine

Include an ice scraper, a small brush or broom, a supply of windshield washer fluid, a rag, some winter outer clothing, a small shovel, a flashlight, a red cloth, and a couple of reflective warning triangles. And, if you will be driving under severe conditions, include a small bag of sand, a piece of old carpet, or a couple of burlap bags to help provide traction. Be sure you properly secure these items in your vehicle.

Driving on Snow or Ice

Most of the time, those places where the tires meet the road probably have good traction.

However, if there is snow or ice between the tires and the road, you can have a very slippery situation. You will have a lot less traction, or grip, and will need to be very careful.

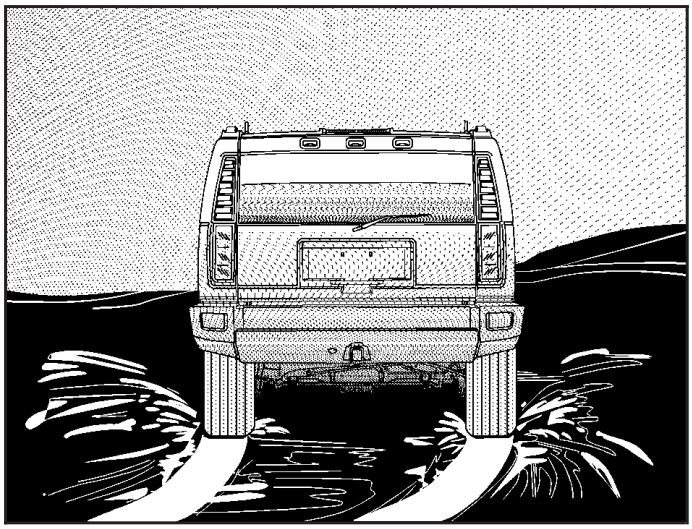

What is the worst time for this? Wet ice. Very cold snow or ice can be slick and hard to drive on. But wet ice can be even more trouble because it may offer the least traction of all. You can get wet ice when it is about freezing, 32°F (0°C), and freezing rain begins to fall. Try to avoid driving on wet ice until salt and sand crews can get there.

Downloaded from www.Manualslib.com manuals search engine

Whatever the condition — smooth ice, packed, blowing, or loose snow — drive with caution.

The Traction Control System (TCS) improves your ability to accelerate when driving on a slippery road. It will improve your ability to accelerate. See *If Your Vehicle is Stuck in Sand, Mud, Ice or Snow on page 4-50*. Even though your vehicle has TCS, you will want to slow down and adjust your driving to the road conditions. Under certain conditions, you may want to turn your traction system off, such as when driving through deep snow and loose gravel, to help maintain vehicle motion at lower speeds. See *Traction Control System (TCS) on page 4-9* and *StabiliTrak® System (Automatic Transmission) on page 4-11*.

Your Anti-Lock Brake System (ABS) improve your vehicle's stability when you make a hard stop on a slippery road. Even though you have ABS, you will want to begin stopping sooner than you would on dry pavement. See *Anti-Lock Brake System (ABS) on page 4-7*.

- Allow greater following distance on any slippery road.
- Watch for slippery spots. The road might be fine until you hit a spot that is covered with ice. On an otherwise clear road, ice patches may appear in shaded areas where the sun cannot reach, such as around clumps of trees, behind buildings, or under bridges. Sometimes the surface of a curve or an overpass may remain icy when the surrounding roads are clear. If you see a patch of ice ahead of you, brake before you are on it. Try not to brake while you are actually on the ice, and avoid sudden steering maneuvers.

Downloaded from www.Manualslib.com manuals search engine

If You Are Caught in a Blizzard

If you are stopped by heavy snow, you could be in a serious situation. You should probably stay with your vehicle unless you know for sure that you are near help and you can hike through the snow. Here are some things to do to summon help and keep yourself and your passengers safe:

- Turn on your hazard flashers.
- Tie a red cloth to your vehicle to alert police that you have been stopped by the snow.
- Put on extra clothing or wrap a blanket around you. If you do not have blankets or extra clothing, make body insulators from newspapers, burlap bags, rags, floor mats — anything you can wrap around yourself or tuck under your clothing to keep warm.

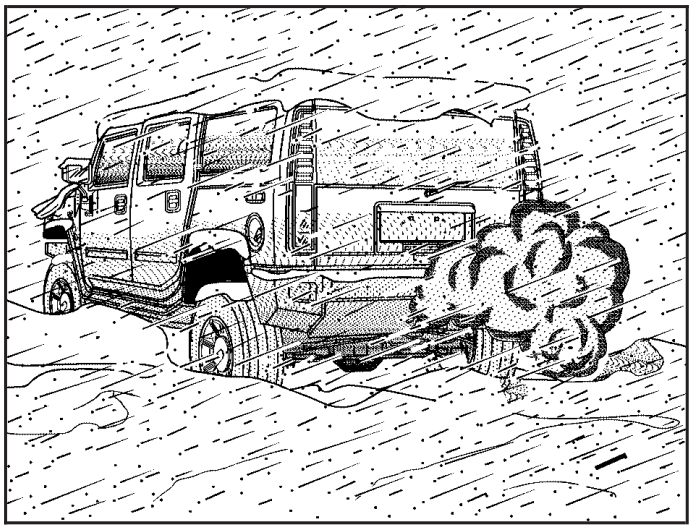

You can run the engine to keep warm, but be careful.

Downloaded from www.Manualslib.com manuals search engine

⚠ CAUTION:

Snow can trap exhaust gases under your vehicle. This can cause deadly CO (carbon monoxide) gas to get inside. CO could overcome you and kill you. You cannot see it or smell it, so you might not know it is in your vehicle. Clear away snow from around the base of your vehicle, especially any that is blocking your exhaust pipe. And check around again from time to time to be sure snow does not collect there.

Open a window just a little on the side of the vehicle that is away from the wind. This will help keep CO out.

Run your engine only as long as you must. This saves fuel. When you run the engine, make it go a little faster than just idle. That is, push the accelerator slightly. This uses less fuel for the heat that you get and it keeps the battery charged. You will need a well-charged battery to restart the vehicle, and possibly for signaling later on with your headlamps. Let the heater run for a while.

Then, shut the engine off and close the window almost all the way to preserve the heat. Start the engine again and repeat this only when you feel really uncomfortable from the cold. But do it as little as possible. Preserve the fuel as long as you can. To help keep warm, you can get out of the vehicle and do some fairly vigorous exercises every half hour or so until help comes.

Downloaded from www.Manualslib.com manuals search engine

If Your Vehicle is Stuck in Sand, Mud, Ice or Snow

In order to free your vehicle when it is stuck, you will need to spin the wheels, but you do not want to spin your wheels too fast. The method known as rocking can help you get out when you are stuck, but you must use caution.

⚠ CAUTION:

If you let your tires spin at high speed, they can explode, and you or others could be injured. And, the transmission or other parts of the vehicle can overheat. That could cause an engine compartment fire or other damage. When you are stuck, spin the wheels as little as possible. Do not spin the wheels above 35 mph (55 km/h) as shown on the speedometer.

Notice: **Spinning your wheels can destroy parts of your vehicle as well as the tires. If you spin the wheels too fast while shifting your transmission back and forth, you can destroy your transmission.**

For more information about using tire chains on your vehicle, see *Tire Chains on page 5-69*.

Rocking Your Vehicle to Get It Out

First, turn your steering wheel left and right. That will clear the area around your front wheels. Your vehicle has a traction control system that will activate when the system senses that the wheels are spinning. See *Traction Control System (TCS) on page 4-9* for more information. Then, with the wheels straight ahead, shift back and forth between REVERSE (R) and a forward gear, or with a manual transmission, between FIRST (1) or SECOND (2) and REVERSE (R), spinning the wheels as little as possible. Release the accelerator pedal while you shift, and press lightly on the accelerator pedal when the transmission is in gear. By slowly spinning your wheels in the forward and reverse directions, you will cause a rocking motion that may free your vehicle. If that does not get you out after a few tries, you may need to be towed out. Or, you can use your recovery loops. If you do need to be towed out, see *Towing Your Vehicle on page 4-56*.

Downloaded from www.Manualslib.com manuals search engine

Recovery Loops

⚠ CAUTION:

These loops, when used, are under a lot of force. Keep people away from the vicinity of the loops and any chains or cables during use. Always pull the vehicle straight out. Never pull on the loops at a sideways angle. The loops could break off and you or others could be injured from the chain or cable snapping back.

Notice: **Never use the recovery loops to tow the vehicle. Your vehicle could be damaged and it would not be covered by warranty.**

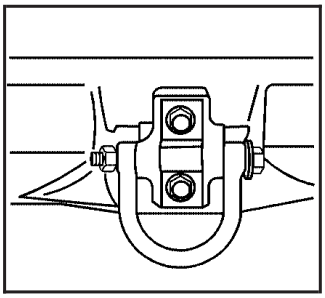

Rear of Vehicle

Your vehicle has two recovery loops at the front of the vehicle and one at the rear of the vehicle. You may need to use them if you are stuck off-road and need to be pulled to some place where you can continue driving.

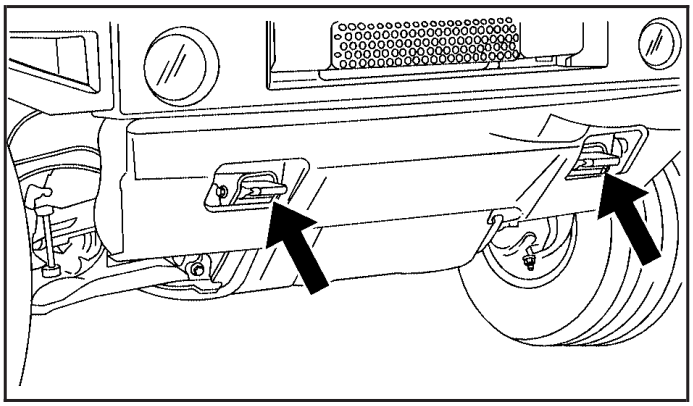

Front of Vehicle

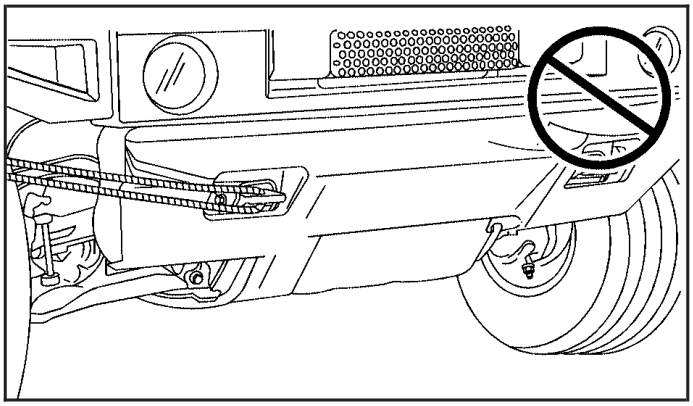

Downloaded from www.Manualslib.com manuals search engine

Loading Your Vehicle

It is very important to know how much weight your vehicle can carry. This weight is called the vehicle capacity weight and includes the weight of all occupants, cargo and all nonfactory-installed options. Two labels on your vehicle show how much weight it may properly carry, the Tire and Loading Information label and the Certification/Tire label.

⚠ CAUTION:

Do not load your vehicle any heavier than the Gross Vehicle Weight Rating (GVWR), or either the maximum front or rear Gross Axle Weight Rating (GAWR). If you do, parts on your vehicle can break, and it can change the way your vehicle handles. These could cause you to lose control and crash. Also, overloading can shorten the life of your vehicle.

Tire and Loading Information Label

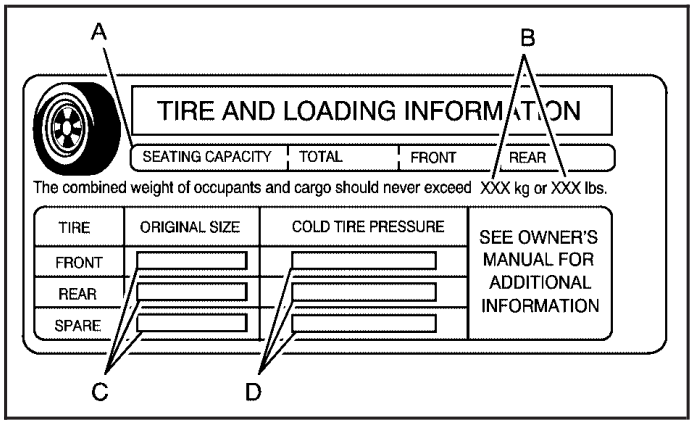

Label Example

A vehicle specific Tire and Loading Information is attached to the vehicle's center pillar (B-pillar). With the driver's door open, you will find the label attached below the door latch post. The tire and loading information label shows the number of occupant seating positions (A), and the maximum vehicle capacity weight (B) in kilograms and pounds.

The Tire and Loading Information label also shows the size of your vehicle's original equipment tires (C) and the recommended cold tire inflation pressures (D). For more information on tires and inflation see *Tires on page 5-51* and *Inflation - Tire Pressure on page 5-58*.

Downloaded from www.Manualslib.com manuals search engine

There is also important information on the Certification/Tire label. It tells you the Gross Vehicle Weight Rating (GVWR) and the Gross Axle Weight Rating (GAWR) for the front and rear axles. See “Certification/Tire Label” later in this section.

Steps for Determining Correct Load Limit

1. Locate the statement “The combined weight of occupants and cargo should never exceed XXX kg or XXX pounds” on your vehicle’s placard.
2. Determine the combined weight of the driver and passengers that will be riding in your vehicle.
3. Subtract the combined weight of the driver and passengers from XXX kilograms or XXX pounds.
4. The resulting figure equals the available amount of cargo and luggage load capacity. For example, if the “XXX” amount equals 1400 lbs and there will be five 150 lb passengers in your vehicle, the amount of available cargo and luggage load capacity is 650 lbs (1400 – 750 (5 x 150) = 650 lbs).
5. Determine the combined weight of luggage and cargo being loaded on the vehicle. That weight may not safely exceed the available cargo and luggage load capacity calculated in Step 4.
6. If your vehicle will be towing a trailer, the load from your trailer will be transferred to your vehicle. Consult this manual to determine how this reduces the available cargo and luggage load capacity of your vehicle.

See *Towing a Trailer on page 4-58* for important information on towing a trailer, towing safety, and trailering tips.

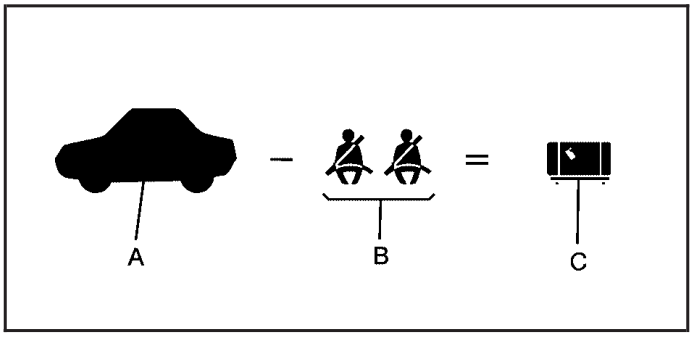

Example 1

Item	Description	Total
A	Vehicle Capacity Weight for Example 1 =	1,000 lbs (453 kg)
B	Subtract Occupant Weight 150 lbs (68 kg) x 2 =	300 lbs (136 kg)
C	Available Cargo Weight =	700 lbs (317 kg)

Downloaded from www.Manualslib.com manuals search engine

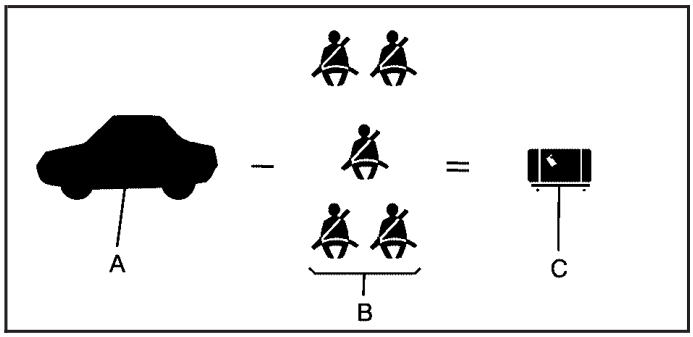

Example 2

Item	Description	Total
A	Vehicle Capacity Weight for Example 2 =	1,000 lbs (453 kg)
B	Subtract Occupant Weight 150 lbs (68 kg) x 5 =	750 lbs (340 kg)
C	Available Cargo Weight =	250 lbs (113 kg)

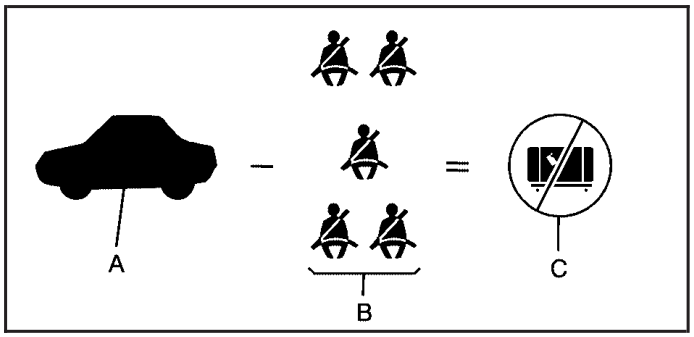

Example 3

Item	Description	Total
A	Vehicle Capacity Weight for Example 3 =	1,000 lbs (453 kg)
B	Subtract Occupant Weight 200 lbs (91 kg) x 5 =	1,000 lbs (453 kg)
C	Available Cargo Weight =	0 lbs (0 kg)

Refer to your vehicle's tire and loading information label for specific information about your vehicle's capacity weight and seating positions. The combined weight of the driver, passengers, cargo and any accessories or equipment added to your vehicle after it left the factory should never exceed your vehicle's capacity weight.

Downloaded from www.Manualslib.com manuals search engine

Certification/Tire Label

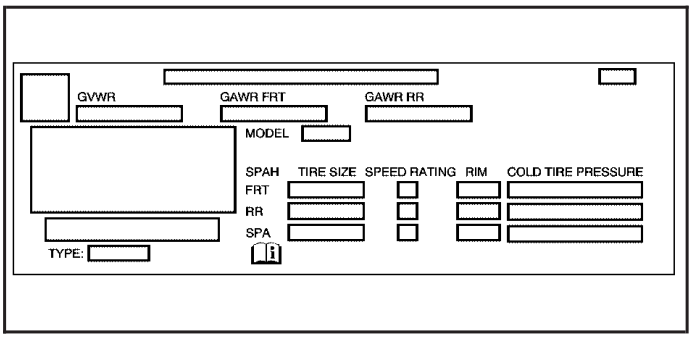

Label Example

A vehicle specific Certification/Tire label is attached to the bottom section of the center pillar (B-pillar), on the driver's side of the vehicle. The label shows the Gross Vehicle Weight Rating (GVWR). The GVWR includes the weight of the vehicle, all occupants, fuel, cargo and trailer tongue weight, if pulling a trailer.

The Certification/Tire label also tells you the maximum weights for the front and rear axles, called Gross Axle Weight Rating (GAWR). To find out the actual loads on your front and rear axles, you need to go to a weigh station and weigh your vehicle. Your dealer can help you with this. Be sure to spread out your load equally on both sides of the centerline.

Never exceed the GVWR for your vehicle, or the GAWR for either the front or rear axle.

If you do have a heavy load, you should spread it out.

Similar appearing vehicles may have different GVWRs and capacity weights. Please note your vehicle's Certification/Tire label or consult your dealer for additional details.

⚠ CAUTION:

Do not load your vehicle any heavier than the Gross Vehicle Weight Rating (GVWR), or either the maximum front or rear Gross Axle Weight Rating (GAWR). If you do, parts on your vehicle can break, and it can change the way your vehicle handles. These could cause you to lose control and crash. Also, overloading can shorten the life of your vehicle.

Using heavier suspension components to get added durability might not change your weight ratings. Ask your dealer to help you load your vehicle the right way.

Notice: **Overloading your vehicle may cause damage. Repairs would not be covered by your warranty. Do not overload your vehicle.**

Downloaded from www.Manualslib.com manuals search engine

If you put things inside your vehicle — like suitcases, tools, packages, or anything else — they will go as fast as the vehicle goes. If you have to stop or turn quickly, or if there is a crash, they will keep going.

⚠ CAUTION:

Things you put inside your vehicle can strike and injure people in a sudden stop or turn, or in a crash.

- **Put things in the cargo area of your vehicle. Try to spread the weight evenly.**
- **Never stack heavier things, like suitcases, inside the vehicle so that some of them are above the tops of the seats.**
- **Do not leave an unsecured child restraint in your vehicle.**
- **When you carry something inside the vehicle, secure it whenever you can.**
- **Do not leave a seat folded down unless you need to.**

There is also important loading information for off-road driving in this manual. See *"Loading Your Vehicle for Off-Road Driving"* under *Off-Road Driving on page 4-17*.

Towing

Towing Your Vehicle

Consult your dealer or a professional towing service if you need to have your disabled vehicle towed. See *Roadside Assistance Program on page 7-6*.

If you want to tow your vehicle behind another vehicle for recreational purposes (such as behind a motorhome), see "Recreational Vehicle Towing" following.

Recreational Vehicle Towing

Recreational vehicle towing means towing your vehicle behind another vehicle — such as behind a motorhome. The two most common types of recreational vehicle towing are known as "dinghy towing" (towing your vehicle with all four wheels on the ground) and "dolly towing" (towing your vehicle with two wheels on the ground and two wheels up on a device known as a "dolly").

With the proper preparation and equipment, many vehicles can be towed in these ways. See "Dinghy Towing" and "Dolly Towing," following.

Downloaded from www.Manualslib.com manuals search engine

Here are some important things to consider before you do recreational vehicle towing:

- What's the towing capacity of the towing vehicle? Be sure you read the tow vehicle manufacturer's recommendations.
- How far will you tow? Some vehicles have restrictions on how far and how long they can tow.
- Do you have the proper towing equipment? See your dealer or trailering professional for additional advice and equipment recommendations.
- Is your vehicle ready to be towed? Just as you would prepare your vehicle for a long trip, you'll want to make sure your vehicle is prepared to be towed. See *Before Leaving on a Long Trip on page 4-42*.

Dinghy Towing

Use the following procedure to tow your vehicle:

1. Shift the transmission to NEUTRAL (N).
2. Turn the engine off, but leave the ignition in ON.
3. Firmly set the parking brake.
4. Securely attach the vehicle being towed to the tow vehicle.

⚠ CAUTION:

Shifting a full-time four-wheel-drive vehicle's transfer case into NEUTRAL can cause your vehicle to roll even if the automatic transmission is in PARK (P) or the manual transmission is in any gear. You or others could be injured. Make sure the parking brake is firmly set before you shift the transfer case to NEUTRAL.

5. Shift the transfer case to NEUTRAL (N). See *Full-Time Four-Wheel Drive on page 2-22* for the proper procedure to select the NEUTRAL position for your vehicle.
6. Put the transmission in PARK (P) for an automatic transmission or in FIRST (1) for a manual transmission.
7. Release the parking brake only after the vehicle being towed is firmly attached to the towing vehicle.
8. Turn the ignition off.

After towing, see "Shifting Out of NEUTRAL" under *Full-Time Four-Wheel Drive on page 2-22*.

Downloaded from www.Manualslib.com manuals search engine

Dolly Towing

Notice: **Dolly towing your vehicle will damage drivetrain components. Do not dolly tow your vehicle.**

Your vehicle cannot be dolly towed. If you must tow your vehicle behind another, use the dinghy towing procedure listed previously.

Towing a Trailer

⚠ CAUTION:

If you do not use the correct equipment and drive properly, you can lose control when you pull a trailer. For example, if the trailer is too heavy, the brakes may not work well — or even at all. You and your passengers could be seriously injured. Pull a trailer only if you have followed all the steps in this section. Ask your dealer for advice and information about towing a trailer with your vehicle.

Notice: **Pulling a trailer improperly can damage your vehicle and result in costly repairs not covered by your warranty. To pull a trailer correctly, follow the advice in this part, and see your dealer for important information about towing a trailer with your vehicle.**

To identify the trailering capacity of your vehicle, you should read the information in “Weight of the Trailer” that appears later in this section.

Trailering is different than just driving your vehicle by itself. Trailering means changes in handling, acceleration, braking, durability and fuel economy. Successful, safe trailering takes correct equipment, and it has to be used properly.

That’s the reason for this part. In it are many time-tested, important trailering tips and safety rules. Many of these are important for your safety and that of your passengers. So please read this section carefully before you pull a trailer.

Downloaded from www.Manualslib.com manuals search engine

If You Do Decide To Pull A Trailer

If you do, here are some important points:

- There are many different laws, including speed limit restrictions, having to do with trailering. Make sure your rig will be legal, not only where you live but also where you'll be driving. A good source for this information can be state or provincial police.
- Consider using a sway control. See "Hitches" later in this section.
- Don't tow a trailer at all during the first 500 miles (800 km) your new vehicle is driven. Your engine, axle or other parts could be damaged.
- Then, during the first 500 miles (800 km) that you tow a trailer, don't drive over 50 mph (80 km/h) and don't make starts at full throttle. This helps your engine and other parts of your vehicle wear in at the heavier loads.
- If you have an automatic transmission, you can tow in DRIVE (D). You may want to shift the transmission to THIRD (3) or, if necessary, a lower gear if the transmission shifts too often under heavy loads and/or hilly conditions. If you have a manual transmission and you are towing a trailer, it is better not to use the highest gear.

Three important considerations have to do with weight:

- the weight of the trailer
- the weight of the trailer tongue
- and the weight on your vehicle's tires

Downloaded from www.Manualslib.com manuals search engine

Weight of the Trailer

How heavy can a trailer safely be?

It depends on how you plan to use your rig. For example, speed, altitude, road grades, outside temperature and how much your vehicle is used to pull a trailer are all important. It can depend on any special equipment that you have on your vehicle, and the amount of tongue weight the vehicle can carry. See “Weight of the Trailer Tongue” later in this section for more information.

Maximum trailer weight is calculated assuming only the driver is in the tow vehicle and it has all the required trailering equipment. The weight of additional optional equipment, passengers and cargo in the tow vehicle must be subtracted from the maximum trailer weight.

Use the following chart to determine how much your vehicle can weigh, based upon your vehicle model and options.

Engine	Axle Ratio	Maximum Trailer Weight	**GCWR
Automatic Transmission	4.56	4,500 lbs (2 041 kg)	9,500 lbs (4 309 kg)
Manual Transmission	4.56	3,000 lbs (1 364 kg)	8,000 lbs (3 629 kg)
**The Gross Combination Weight Rating (GCWR) in the total allowable weight of the completely loaded vehicle and trailer including any passengers, cargo, equipment and conversions. The GCWR for your vehicle should not be exceeded.			

You can ask your dealer for our trailering information or advice, or you can write us at the address listed in your Warranty and Owner Assistance Information Booklet.

In Canada, write to:

General Motors of Canada Limited
Customer Communication Centre, 163-005
1908 Colonel Sam Drive
Oshawa, Ontario L1H 8P7

Downloaded from www.Manualslib.com manuals search engine

Weight of the Trailer Tongue

The tongue load (A) of any trailer is an important weight to measure because it affects the total gross weight of your vehicle. The Gross Vehicle Weight (GVW) includes the curb weight of the vehicle, any cargo you may carry in it, and the people who will be riding in the vehicle. If you have a lot of options, equipment, passengers or cargo in your vehicle, it will reduce the tongue weight your vehicle can carry, which will also reduce the trailer weight your vehicle can tow. If you will tow a trailer, you must add the tongue load to the GVW because your vehicle will be carrying that weight, too. See *Loading Your Vehicle on page 4-52* for more information about your vehicle's maximum load capacity.

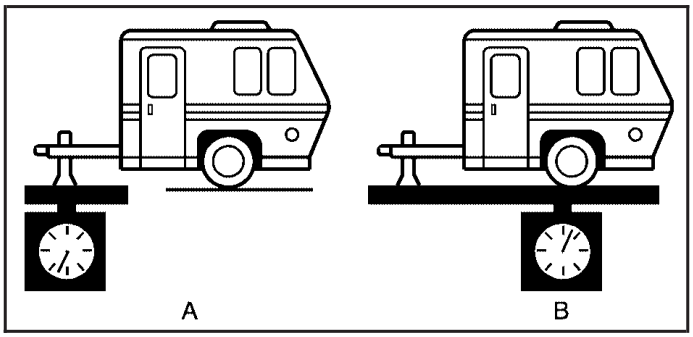

The trailer tongue weight (A) should be 10 percent to 15 percent of the total loaded trailer weight (B), up to a maximum of 500 lbs (227 kg) with a weight carrying hitch or a weight distributing hitch.

Do not exceed the maximum allowable tongue weight for your vehicle. Choose the shortest hitch extension that will position the hitch ball closest to the vehicle. This will help reduce the effect of trailer tongue weight on the rear axle.

Your spare tire carrier is behind the tailgate. If your hitch extension is too short, the spare tire may interfere with trailer coupling or trailer tongue jack operation on some types of trailers.

After you've loaded your trailer, weigh the trailer and then the tongue, separately, to see if the weights are proper. If they aren't, you may be able to get them right simply by moving some items around in the trailer.

Downloaded from www.Manualslib.com manuals search engine

Total Weight on Your Vehicle's Tires

Be sure your vehicle's tires are inflated to the upper limit for cold tires. You'll find these numbers on the Certification label at the rear edge of the driver's door or see *Loading Your Vehicle on page 4-52*. Then be sure you don't go over the GVW limit for your vehicle, or the GAWR, including the weight of the trailer tongue. If you use a weight distributing hitch, make sure you don't go over the rear axle limit before you apply the weight distribution spring bars.

Hitches

It's important to have the correct hitch equipment. Crosswinds, large trucks going by and rough roads are a few reasons why you'll need the right hitch.

Weight-Distributing Hitches and Weight Carrying Hitches

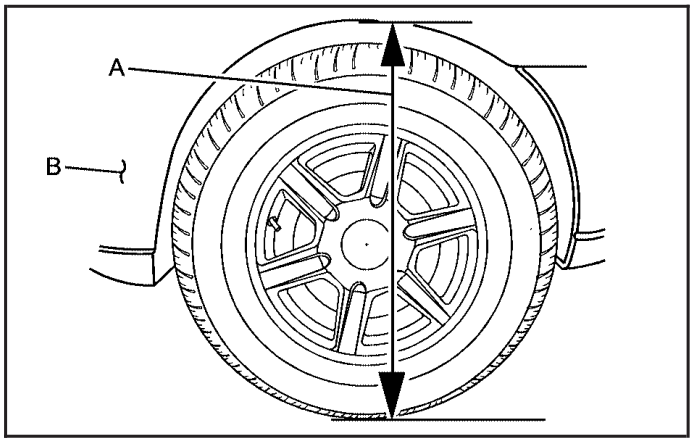

(A) Body-to-Ground Distance (B) Front of Vehicle

When using a weight-distributing hitch, the hitch must be adjusted so that the distance (A) remains the same both before and after coupling the trailer to the tow vehicle.

Downloaded from www.Manualslib.com manuals search engine

Trailering may also be limited by the vehicle's ability to carry tongue weight. Tongue weight cannot cause the vehicle to exceed the GVWR (Gross Vehicle Weight Rating) or the RGAWR (Rear Gross Axle Weight Rating). The effect of additional weight may reduce your trailering capacity more than the total of the additional weight.

Consider the following example:

A vehicle model base weight is 5,500 lbs (2 495 kg); 2,800 lbs (1 270 kg) at the front axle and 2,700 lbs (1 225 kg) at the rear axle. It has a GVWR of 7,200 lbs (3 266 kg), a RGAWR of 4,000 lbs (1 814 kg) and a GCWR (Gross Combination Weight Rating) of 14,000 lbs (6 350 kg). The trailer rating should be:

14,000 lbs (6350 kg)	GCWR
−5,500 lbs (2495 kg)	Vehicle Weight
8,500 lbs (3855 kg)	Trailer Rating

You can expect tongue weight to be at least 10 percent of trailer weight (850 lbs (386 kg)) and because the weight is applied well behind the rear axle, the effect on the rear axle will be greater than just the weight itself, as much as 1.5 times as much. The weight at the rear axle could be 850 lbs (386 kg) X 1.5 = 1,275 lbs (578 kg).

Since the rear axle already weighs 2,700 lbs (1 225 kg), adding 1,275 lbs (578 kg) brings the total to 3,975 lbs (1 803 kg). This is very close to, but within the limit for RGAWR as well. The vehicle is set to trailer up to 8,500 lbs (3 856 kg).

But let's say your specific vehicle is equipped with some of the latest options and you have a front seat passenger and two rear seat passengers with some luggage and gear in the vehicle as well. You may add 300 lbs (136 kg) to the front axle weight and 400 lbs (181 kg) to the rear axle weight. Your vehicle now weighs:

2,800 lbs (1270 kg)	+	300 lbs (136 kg)	Front
2,700 lbs (1225 kg)	+	400 lbs (181 kg)	Rear
6,200 lbs (2812 kg)			Total

Weight is still below 7,200 lbs (3 266 kg) and you may think that you should subtract 700 additional pounds (318 kg) from your trailering capacity to stay within GCWR limits. Your maximum trailer would only be 7,800 lbs (3 538 kg). You may go further and think you must limit tongue weight to less than 1,000 lbs (454 kg) to avoid exceeding GVWR.

Downloaded from www.Manualslib.com manuals search engine

But, you must still consider the effect on the rear axle. Because your rear axle now weighs 3,100 lbs (1 406 kg), you can only put 900 lbs (408 kg) on the rear axle without exceeding RGAWR. The effect of tongue weight is about 1.5 times the actual weight. Dividing the 900 lbs (408 kg) by 1.5 leaves you with being able to handle only 600 lbs (272 kg) of tongue weight. Since tongue weight is usually at least 10 percent of total loaded trailer weight, you can expect that the largest trailer your vehicle can properly handle is 6,000 lbs (2 721 kg).

It is important that you make sure your vehicle does not exceed any of its ratings — GCWR, GVWR, RGAWR, Maximum Trailer Rating or Tongue Weight. The only way to be sure you are not exceeding any of these ratings is to weigh your vehicle and trailer.

Safety Chains

You should always attach chains between your vehicle and your trailer. Cross the safety chains under the tongue of the trailer to help prevent the tongue from contacting the road if it becomes separated from the hitch. Always leave just enough slack so you can turn with your rig. Never allow safety chains to drag on the ground.

Trailer Brakes

If your trailer weighs more than 1,500 lbs (680 kg) loaded, then it needs its own brakes — and they must be adequate. Be sure to read and follow the instructions for the trailer brakes so you'll be able to install, adjust and maintain them properly.

Your trailer brake system can tap into the vehicle's hydraulic brake system only if:

- The trailer parts can withstand 3,000 psi (20 650 kPa) of pressure.
- The trailer's brake system will use less than 0.02 cubic inch (0.3 cc) of fluid from your vehicle's master cylinder. Otherwise, both braking systems won't work well. You could even lose your brakes.

If everything checks out this far, make the brake tap at the port on the master cylinder that sends the fluid to the rear brakes. But don't use copper tubing for this. If you do, it will bend and finally break off. Use steel brake tubing.

Driving with a Trailer

Towing a trailer requires a certain amount of experience. Before setting out for the open road, you'll want to get to know your rig. Acquaint yourself with the feel of handling and braking with the added weight of the trailer.

Downloaded from www.Manualslib.com manuals search engine

And always keep in mind that the vehicle you are driving is now a good deal longer and not nearly as responsive as your vehicle is by itself.

Before you start, check all trailer hitch parts and attachments, safety chains, electrical connector, lamps, tires and mirror adjustment. If the trailer has electric brakes, start your vehicle and trailer moving and then apply the trailer brake controller by hand to be sure the brakes are working. This lets you check your electrical connection at the same time.

During your trip, check occasionally to be sure that the load is secure, and that the lamps and any trailer brakes are still working.

Following Distance

Stay at least twice as far behind the vehicle ahead as you would when driving your vehicle without a trailer. This can help you avoid situations that require heavy braking and sudden turns.

Passing

You'll need more passing distance up ahead when you're towing a trailer. Because you're a good deal longer, you'll need to go much farther beyond the passed vehicle before you can return to your lane.

Backing Up

Hold the bottom of the steering wheel with one hand. Then, to move the trailer to the left, just move that hand to the left. To move the trailer to the right, move your hand to the right. Always back up slowly and, if possible, have someone guide you.

Making Turns

Notice: **Making very sharp turns while trailering could cause the trailer to come in contact with the vehicle. Your vehicle could be damaged. Avoid making very sharp turns while trailering.**

When you're turning with a trailer, make wider turns than normal. Do this so your trailer won't strike soft shoulders, curbs, road signs, trees or other objects. Avoid jerky or sudden maneuvers. Signal well in advance.

Turn Signals When Towing a Trailer

The arrows on your instrument panel will flash whenever you signal a turn or lane change. Properly hooked up, the trailer lamps will also flash, telling other drivers you're about to turn, change lanes or stop.

When towing a trailer, the arrows on your instrument panel will flash for turns even if the bulbs on the trailer are burned out. Thus, you may think drivers behind you are seeing your signal when they are not. It's important to check occasionally to be sure the trailer bulbs are still working.

Downloaded from www.Manualslib.com manuals search engine

Driving On Grades

Reduce speed and shift to a lower gear *before* you start down a long or steep downgrade. If you don't shift down, you might have to use your brakes so much that they would get hot and no longer work well.

If you have an automatic transmission, you can tow in DRIVE (D). You may want to shift the transmission to THIRD (3) or, if necessary, a lower gear selection if the transmission shifts too often under heavy loads and/or hilly conditions.

If you have a manual transmission and you are towing a trailer, it is better not to use the highest gear.

When towing at high altitude on steep uphill grades, consider the following: Engine coolant will boil at a lower temperature than at normal altitudes. If you turn your engine off immediately after towing at high altitude on steep uphill grades, your vehicle may show signs similar to engine overheating. To avoid this, let the engine run while parked, preferably on level ground, with the automatic transmission in PARK (P) for a few minutes before turning the engine off. For manual transmissions, let the engine run while parked, preferably on level ground, with the transmission out of gear and the parking brake applied, for a few minutes before turning the engine off. If you do get the overheat warning, see *Engine Overheating on page 5-27*.

Parking on Hills

⚠ CAUTION:

You really should not park your vehicle, with a trailer attached, on a hill. If something goes wrong, your rig could start to move. People can be injured, and both your vehicle and the trailer can be damaged.

But if you ever have to park your rig on a hill, here's how to do it:

1. Apply your regular brakes, but don't shift into PARK (P) yet for an automatic transmission, or into gear for a manual transmission. Turn your wheels into the curb if facing downhill or into traffic if facing uphill.
2. Have someone place chocks under the trailer wheels.
3. When the wheel chocks are in place, release the regular brakes until the chocks absorb the load.
4. Reapply the regular brakes. Then apply your parking brake and shift into PARK (P) for an automatic transmission or into gear for a manual transmission.
5. Release the regular brakes.

Downloaded from www.Manualslib.com manuals search engine

When You Are Ready to Leave After Parking on a Hill

1. Apply your regular brakes and hold the pedal down while you:
   - start your engine,
   - shift into a gear, and
   - release the parking brake.
2. Let up on the brake pedal.
3. Drive slowly until the trailer is clear of the chocks.
4. Stop and have someone pick up and store the chocks.

Maintenance When Trailer Towing

Your vehicle will need service more often when you're pulling a trailer. See the Maintenance Schedule for more on this. Things that are especially important in trailer operation are automatic transmission fluid, engine oil, axle lubricant, belts, cooling system and brake system. Each of these is covered in this manual, and the Index will help you find them quickly. If you're trailering, it's a good idea to review these sections before you start your trip.

Check periodically to see that all hitch nuts and bolts are tight.

Trailer Wiring Harness

Light-Duty Trailer Wiring Package

If your vehicle is not equipped with a trailer towing package, the chassis harness will contain the following blunt cut circuits:

- Yellow: Left Stop/Turn Signal
- Dark Green: Right Stop/Turn Signal
- White: Ground
- Brown: Tail Lamps

If you want to add on a trailer tow, it should be installed by your dealer or a qualified service center. Also, see *Add-On Electrical Equipment on page 5-93* for more information.

Downloaded from www.Manualslib.com manuals search engine

Heavy-Duty Trailer Wiring Package

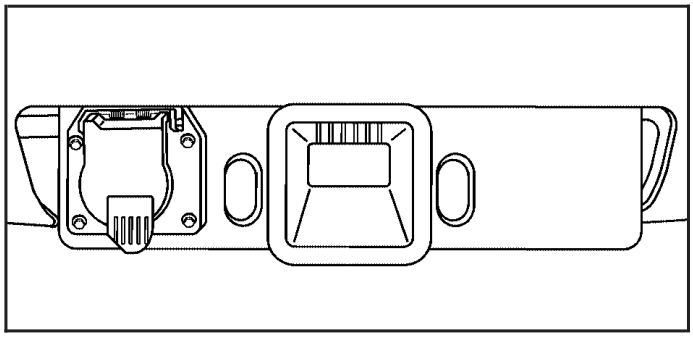

If your vehicle is equipped with a trailer towing package, the rear bumper harness will have a seven-pin universal heavy-duty trailer connector attached to a bracket on the hitch platform.

The trailer towing harness contains the following seven trailer circuits:

- Yellow: Left Stop/Turn Signal
- Dark Green: Right Stop/Turn Signal
- Brown: Taillamps
- White: Ground
- Light Green: Back-up Lamps
- Red: Battery Feed
- Dark Blue: Trailer Brake

Four-Wire Harness Adapter

If you need to tow a light-duty trailer with a standard four-way, flat pin connector, an adapter is available from your dealer.

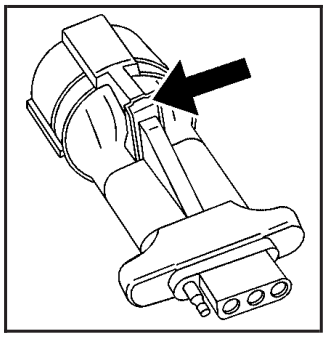

Use this adapter to connect a standard four-way pin connector to the seven-wire harness on your vehicle.

Downloaded from www.Manualslib.com manuals search engine

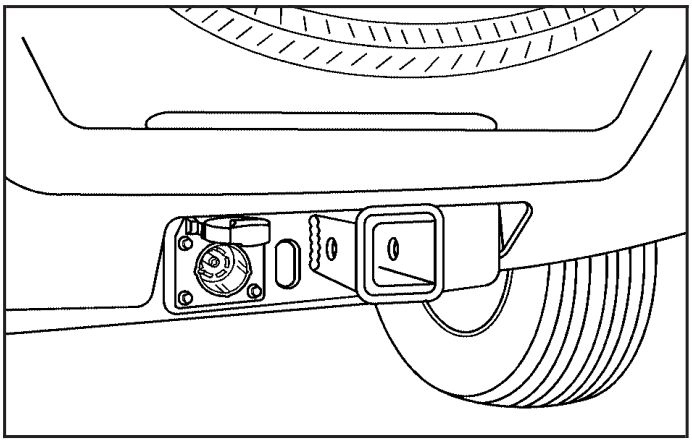

Connect the adapter with the tab pointing up. The flip cap on the vehicle's seven-wire harness will lock onto the tab (see arrow in the previous graphic) and help hold the adapter in place. Plug the four-way pin connector onto the adapter.

Trailer Recommendations

You must subtract your hitch loads from the Cargo Weight Rating (CWR). CWR is the maximum weight of the load your vehicle can carry. It doesn't include the weight of the people inside, but you can figure about 150 lbs. (68 kg) for each seat. The total cargo load must not be more than your vehicles CWR.

Weigh your vehicle with your trailer attached, so that you won't go over the GVWR or GAWR. If you are using a weight-distributing hitch, weigh the vehicle without the spring bars in place.

You'll get the best performance if you spread out the weight of your load the right way, and if you choose the correct hitch and trailer brakes.

For more information see *Towing a Trailer on page 4-58*.

Downloaded from www.Manualslib.com manuals search engine

NOTES

Downloaded from www.Manualslib.com manuals search engine

Section 5 Service and Appearance Care

Service 5-3
Accessories and Modifications 5-3
California Proposition 65 Warning 5-4
Doing Your Own Service Work 5-4
Adding Equipment to the Outside of Your Vehicle 5-5

Fuel 5-5
Gasoline Octane 5-5
Gasoline Specifications 5-5
California Fuel 5-6
Additives 5-6
Fuels in Foreign Countries 5-7
Filling the Tank 5-8
Filling a Portable Fuel Container 5-10

Checking Things Under the Hood 5-10
Hood Release 5-11
Engine Compartment Overview 5-12
Engine Oil 5-13
Engine Oil Life System 5-16
Engine Air Cleaner/Filter 5-18
Automatic Transmission Fluid 5-19
Manual Transmission Fluid 5-21
Hydraulic Clutch 5-23
Engine Coolant 5-24
Radiator Pressure Cap 5-27
Engine Overheating 5-27
Cooling System 5-29
Engine Fan Noise 5-33
Power Steering Fluid 5-34
Windshield Washer Fluid 5-35
Brakes 5-36
Battery 5-39
Jump Starting 5-40

Rear Axle 5-44

Four-Wheel Drive 5-44

Front Axle 5-44

Headlamp Aiming 5-45

Bulb Replacement 5-47
Halogen Bulbs 5-47
Headlamps 5-48
Taillamps, Turn Signal, Stoplamps and Back-up Lamps 5-48
Replacement Bulbs 5-49

Windshield Wiper Blade Replacement 5-50

Downloaded from www.Manualslib.com manuals search engine

Section 5 Service and Appearance Care

Tires 5-51
Tire Sidewall Labeling 5-52
Tire Terminology and Definitions 5-55
Inflation - Tire Pressure 5-58
Tire Pressure Monitor System 5-59
Tire Inspection and Rotation 5-62
When It Is Time for New Tires 5-63
Buying New Tires 5-64
Different Size Tires and Wheels 5-65
Uniform Tire Quality Grading 5-66
Wheel Alignment and Tire Balance 5-67
Wheel Replacement 5-67
Tire Chains 5-69
If a Tire Goes Flat 5-70
Changing a Flat Tire 5-71
Removing the Spare Tire and Tools 5-73
Removing the Flat Tire and Installing the Spare Tire 5-75
Storing a Flat or Spare Tire and Tools 5-80
Spare Tire 5-82

Appearance Care 5-83
Cleaning the Inside of Your Vehicle 5-83
Fabric/Carpet 5-84
Leather 5-85
Instrument Panel, Vinyl, and Other Plastic Surfaces 5-85
Care of Safety Belts 5-86
Weatherstrips 5-86
Washing Your Vehicle 5-86
Cleaning Exterior Lamps/Lenses 5-87
Finish Care 5-87
Windshield, Backglass, and Wiper Blades 5-88
Aluminum or Chrome-Plated Wheels 5-88
Tires 5-89
Sheet Metal Damage 5-89
Finish Damage 5-89
Underbody Maintenance 5-90
Chemical Paint Spotting 5-90
Vehicle Care/Appearance Materials 5-91

Vehicle Identification 5-92
Vehicle Identification Number (VIN) 5-92
Service Parts Identification Label 5-92

Electrical System 5-93
Add-On Electrical Equipment 5-93
Windshield Wiper Fuses 5-93
Power Windows and Other Power Options 5-93
Fuses and Circuit Breakers 5-94
Engine Compartment Fuse Block 5-94

Capacities and Specifications 5-100

Downloaded from www.Manualslib.com manuals search engine

Service

Your dealer knows your vehicle best and wants you to be happy with it. We hope you will go to your dealer for all your service needs. You will get genuine GM parts and GM-trained and supported service people.

We hope you will want to keep your GM vehicle all GM. Genuine GM parts have one of these marks:

ACDelco®

GM® Parts

GM® Goodwrench

GM® Accessories

Accessories and Modifications

When you add non-GM accessories to your vehicle they can affect your vehicle's performance and safety, including such things as, airbags, braking, stability, ride and handling, emissions systems, aerodynamics, durability, and electronic systems like anti-lock brakes, traction control and stability control. Some of these accessories may even cause malfunction or damage not covered by warranty.

GM Accessories are designed to complement and function with other systems on your vehicle. Your GM dealer can accessorize your vehicle using genuine GM Accessories. When you go to your GM dealer and ask for GM Accessories, you will know that GM-trained and supported service technicians will perform the work using genuine GM Accessories.

Downloaded from www.Manualslib.com manuals search engine

California Proposition 65 Warning

Most motor vehicles, including this one, contain and/or emit chemicals known to the State of California to cause cancer and birth defects or other reproductive harm. Engine exhaust, many parts and systems (including some inside the vehicle), many fluids, and some component wear by-products contain and/or emit these chemicals.

Doing Your Own Service Work

⚠ CAUTION:

You can be injured and your vehicle could be damaged if you try to do service work on a vehicle without knowing enough about it.

- **Be sure you have sufficient knowledge, experience, the proper replacement parts, and tools before you attempt any vehicle maintenance task.**
- **Be sure to use the proper nuts, bolts, and other fasteners. English and metric fasteners can be easily confused. If you use the wrong fasteners, parts can later break or fall off. You could be hurt.**

If you want to do some of your own service work, you will want to use the proper service manual. It tells you much more about how to service your vehicle than this manual can. To order the proper service manual, see *Service Publications Ordering Information on page 7-15*.

Your vehicle has an airbag system. Before attempting to do your own service work, see *Servicing Your Airbag-Equipped Vehicle on page 1-68*.

You should keep a record with all parts receipts and list the mileage and the date of any service work you perform. See *Maintenance Record on page 6-15*.

Downloaded from www.Manualslib.com manuals search engine

Adding Equipment to the Outside of Your Vehicle

Things you might add to the outside of your vehicle can affect the airflow around it. This may cause wind noise and affect windshield washer performance. Check with your dealer before adding equipment to the outside of your vehicle.

Fuel

Use of the recommended fuel is an important part of the proper maintenance of your vehicle.

Gasoline Octane

Use regular unleaded gasoline with a posted octane rating of 87 or higher. If the octane rating is less than 87, you may notice an audible knocking noise when you drive, commonly referred to as spark knock. If this occurs, use a gasoline rated at 87 octane or higher as soon as possible. If you are using gasoline rated at 87 octane or higher and you hear heavy knocking, your engine needs service.

Gasoline Specifications

At a minimum, gasoline should meet ASTM specification D 4814 in the United States or CAN/CGSB-3.5 in Canada. Some gasolines may contain an octane-enhancing additive called methylcyclopentadienyl manganese tricarbonyl (MMT). General Motors recommends against the use of gasolines containing MMT. See *Additives on page 5-6* for additional information.

Downloaded from www.Manualslib.com manuals search engine

California Fuel

If your vehicle is certified to meet California Emissions Standards, it is designed to operate on fuels that meet California specifications. See the underhood emission control label. If this fuel is not available in states adopting California emissions standards, your vehicle will operate satisfactorily on fuels meeting federal specifications, but emission control system performance may be affected. The malfunction indicator lamp may turn on and your vehicle may fail a smog-check test. See *Malfunction Indicator Lamp on page 3-35*. If this occurs, return to your authorized GM dealer for diagnosis. If it is determined that the condition is caused by the type of fuel used, repairs may not be covered by your warranty.

Additives

To provide cleaner air, all gasolines in the United States are now required to contain additives that will help prevent engine and fuel system deposits from forming, allowing your emission control system to work properly. In most cases, you should not have to add anything to your fuel. However, some gasolines contain only the minimum amount of additive required to meet U.S. Environmental Protection Agency regulations. To help keep fuel injectors and intake valves clean, or if your vehicle experiences problems due to dirty injectors or valves, look for gasoline that is advertised as TOP TIER Detergent Gasoline. Also, your GM dealer has additives that will help correct and prevent most deposit-related problems.

Gasolines containing oxygenates, such as ethers and ethanol, and reformulated gasolines may be available in your area. General Motors recommends that you use these gasolines if they comply with the specifications described earlier. However, E85 (85% ethanol) and other fuels containing more than 10% ethanol must not be used in vehicles that were not designed for those fuels.

Downloaded from www.Manualslib.com manuals search engine

Notice: **Your vehicle was not designed for fuel that contains methanol. Do not use fuel containing methanol. It can corrode metal parts in your fuel system and also damage the plastic and rubber parts. That damage would not be covered under your warranty.**

Some gasolines that are not reformulated for low emissions may contain an octane-enhancing additive called methylcyclopentadienyl manganese tricarbonyl (MMT); ask the attendant where you buy gasoline whether the fuel contains MMT. General Motors recommends against the use of such gasolines. Fuels containing MMT can reduce the life of spark plugs and the performance of the emission control system may be affected. The malfunction indicator lamp may turn on. If this occurs, return to your authorized GM dealer for service.

Fuels in Foreign Countries

If you plan on driving in another country outside the United States or Canada, the proper fuel may be hard to find. Never use leaded gasoline or any other fuel not recommended in the previous text on fuel. Costly repairs caused by use of improper fuel would not be covered by your warranty.

To check the fuel availability, ask an auto club, or contact a major oil company that does business in the country where you will be driving.

Downloaded from www.Manualslib.com manuals search engine

Filling the Tank

⚠ CAUTION:

Fuel vapor burns violently and a fuel fire can cause bad injuries. To help avoid injuries to you and others, read and follow all the instructions on the pump island. Turn off your engine when you are refueling. Do not smoke if you are near fuel or refueling your vehicle. Keep sparks, flames, and smoking materials away from fuel. Do not leave the fuel pump unattended when refueling your vehicle — this is against the law in some places. Keep children away from the fuel pump; never let children pump fuel.

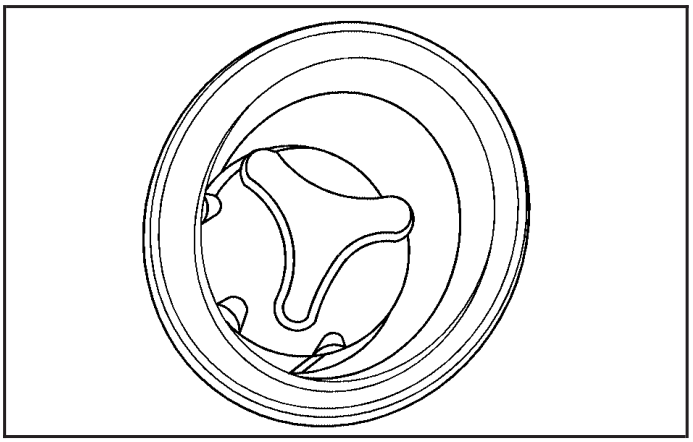

The fuel cap is located on the driver's side of the vehicle.

Some vehicles may be equipped with a fuel door. Open the door to access the fuel cap.

Some vehicles may be equipped with a locking fuel cap. Use the fuel cap key to unlock the fuel cap. If you ever need a replacement key, your dealer can help you get one.

To remove the fuel cap, turn it slowly counterclockwise. While refueling, let the fuel cap hang by the tether, if it has one.

Downloaded from www.Manualslib.com manuals search engine

⚠ CAUTION:

If you spill fuel and then something ignites it, you could be badly burned. Fuel can spray out on you if you open the fuel cap too quickly. This spray can happen if your tank is nearly full, and is more likely in hot weather. Open the fuel cap slowly and wait for any hiss noise to stop. Then unscrew the cap all the way.

Be careful not to spill fuel. Do not top off or overfill the tank and wait a few seconds after you have finished pumping before removing the nozzle. Clean fuel from painted surfaces as soon as possible. See *Washing Your Vehicle on page 5-86*.

When replacing the fuel cap, turn it clockwise until it clicks. Make sure the cap is fully installed. The diagnostic system can determine if the fuel cap has been left off or improperly installed. This would allow fuel to evaporate into the atmosphere. See *Malfunction Indicator Lamp on page 3-35*.

The FUEL CAP message will be displayed on the Driver Information Center (DIC) if the fuel cap is not properly installed. See *DIC Warnings and Messages on page 3-44* for more information.

⚠ CAUTION:

If a fire starts while you are refueling, do not remove the nozzle. Shut off the flow of fuel by shutting off the pump or by notifying the station attendant. Leave the area immediately.

Notice: **If you need a new fuel cap, be sure to get the right type. Your dealer can get one for you. If you get the wrong type, it may not fit properly. This may cause your malfunction indicator lamp to light and may damage your fuel tank and emissions system. See *Malfunction Indicator Lamp on page 3-35*.**

Downloaded from www.Manualslib.com manuals search engine

Filling a Portable Fuel Container

⚠ CAUTION:

Never fill a portable fuel container while it is in your vehicle. Static electricity discharge from the container can ignite the gasoline vapor. You can be badly burned and your vehicle damaged if this occurs. To help avoid injury to you and others:

- **Dispense gasoline only into approved containers.**
- **Do not fill a container while it is inside a vehicle, in a vehicle's trunk, pickup bed, or on any surface other than the ground.**
- **Bring the fill nozzle in contact with the inside of the fill opening before operating the nozzle. Contact should be maintained until the filling is complete.**
- **Do not smoke while pumping gasoline.**

Checking Things Under the Hood

⚠ CAUTION:

An electric fan under the hood can start up and injure you even when the engine is not running. Keep hands, clothing, and tools away from any underhood electric fan.

Downloaded from www.Manualslib.com manuals search engine

⚠ CAUTION:

Things that burn can get on hot engine parts and start a fire. These include liquids like fuel, oil, coolant, brake fluid, windshield washer and other fluids, and plastic or rubber. You or others could be burned. Be careful not to drop or spill things that will burn onto a hot engine.

Hood Release

To open the hood, do the following:

1. Pull the handle with this symbol on it. It is located inside the vehicle on the lower left side of the instrument panel.
2. Release the secondary latch on the hood. It is located below the front center of the hood.
3. Lift the hood.

Before closing the hood, be sure all the filler caps are on properly. Then pull the hood down and close it firmly.

Downloaded from www.Manualslib.com manuals search engine

Engine Compartment Overview

When you open the hood on the engine, here is what you will see:

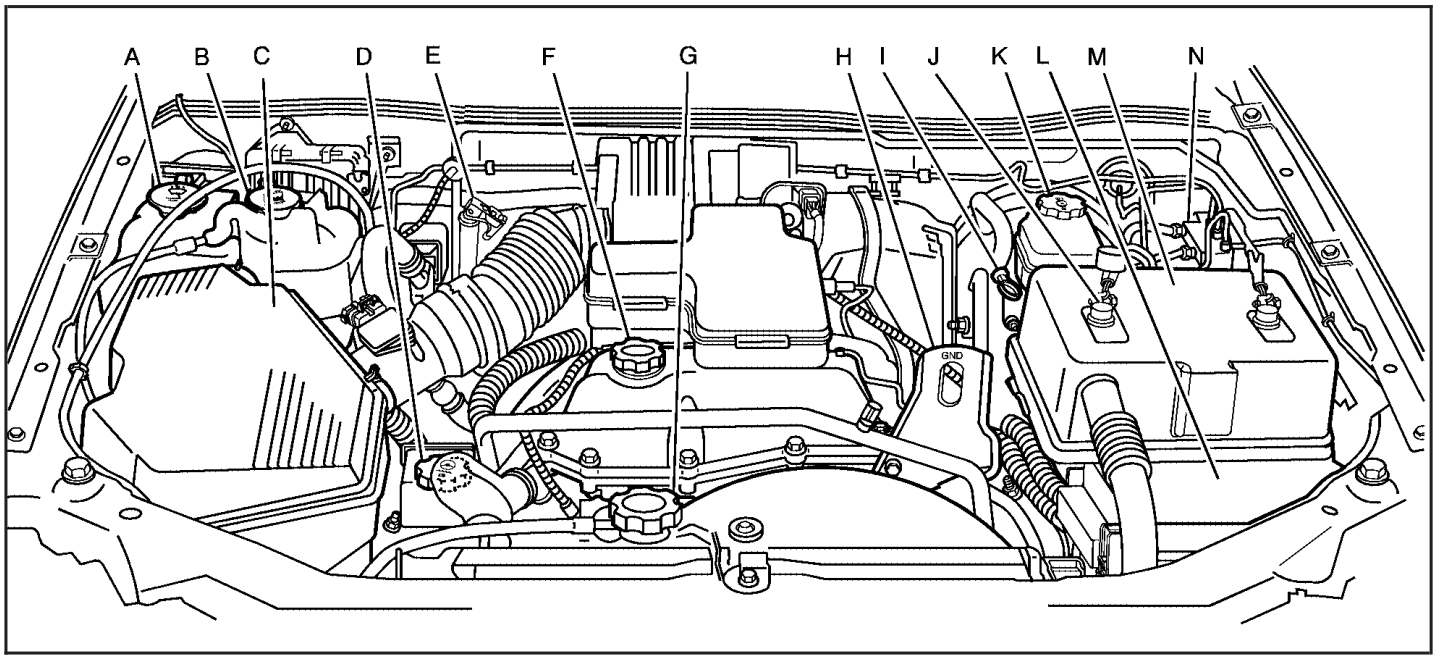

Downloaded from www.Manualslib.com manuals search engine

A. Windshield Washer Fluid Reservoir. See “Adding Washer Fluid” under *Windshield Washer Fluid on page 5-35*.

B. Engine Coolant Recovery Tank. See *Engine Coolant on page 5-24*.

C. Engine Air Cleaner/Filter. See *Engine Air Cleaner/Filter on page 5-18*.

D. Power Steering Fluid Reservoir. See *Power Steering Fluid on page 5-34*.

E. Automatic Transmission Fluid Dipstick (If Equipped). See “Checking the Fluid Level” under *Automatic Transmission Fluid on page 5-19*.

F. Engine Oil Fill Cap. See “When to Add Engine Oil” under *Engine Oil on page 5-13*.

G. Radiator Pressure Cap. See *Cooling System on page 5-29*.

H. Remote Negative (–) Terminal (GND). See *Jump Starting on page 5-40*.

I. Engine Oil Dipstick. See “Checking Engine Oil” under *Engine Oil on page 5-13*.

J. Positive (+) Battery Terminal. See *Jump Starting on page 5-40*.

K. Brake Fluid Reservoir. See “Brake Fluid” under *Brakes on page 5-36*.

L. Engine Compartment Fuse Block. See *Engine Compartment Fuse Block on page 5-94*.

M. Battery. See *Battery on page 5-39*.

N. Hydraulic Clutch Fluid Reservoir (If Equipped). See *Hydraulic Clutch on page 5-23*.

Engine Oil

Checking Engine Oil

It is a good idea to check your engine oil every time you get fuel. In order to get an accurate reading, the oil must be warm and the vehicle must be on level ground.

The engine oil dipstick handle is a yellow loop. See *Engine Compartment Overview on page 5-12* for the location of the engine oil dipstick.

1. Turn off the engine and give the oil several minutes to drain back into the oil pan. If you do not do this, the oil dipstick might not show the actual level.
2. Pull out the dipstick and clean it with a paper towel or cloth, then push it back in all the way. Remove it again, keeping the tip down, and check the level.

Downloaded from www.Manualslib.com manuals search engine

When to Add Engine Oil

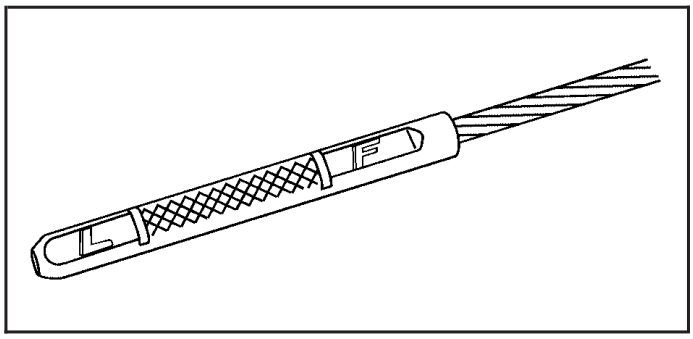

If the oil is below the cross-hatched area (L), you will need to add at least one quart/liter of oil. But you must use the right kind. This section explains what kind of oil to use. For engine oil crankcase capacity, see *Capacities and Specifications on page 5-100*.

Notice: **Do not add too much oil. If the engine has so much oil that the oil level gets above the cross-hatched area that shows the proper operating range, the engine could be damaged.**

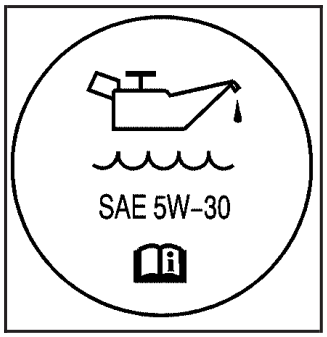

See *Engine Compartment Overview on page 5-12* for the location of the engine oil fill cap.

Be sure to add enough oil to put the level somewhere in the proper operating range. Push the dipstick all the way back in when you are through.

Downloaded from www.Manualslib.com manuals search engine

What Kind of Engine Oil to Use

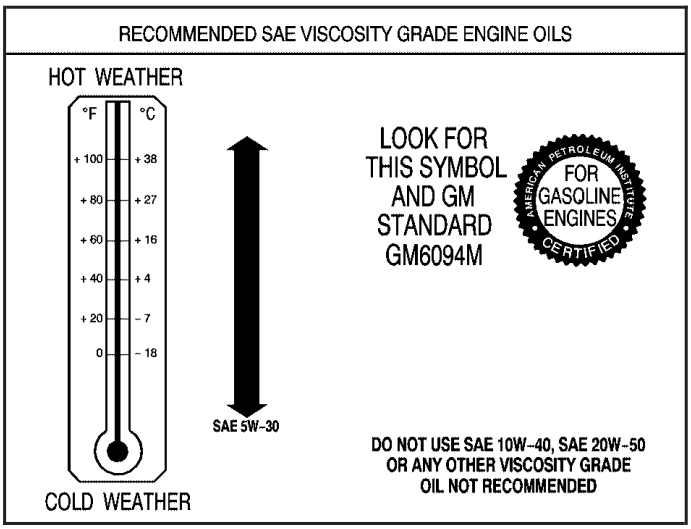

Look for two things:

- GM6094M

  Your vehicle's engine requires oil meeting GM Standard GM6094M. You should look for and use only an oil that meets GM Standard GM6094M.

- SAE 5W-30

  As shown in the viscosity chart, SAE 5W-30 is best for your vehicle.

  These numbers on an oil container show its viscosity, or thickness. Do not use other viscosity oils such as SAE 20W-50.

Oils meeting these requirements should also have the starburst symbol on the container. This symbol indicates that the oil has been certified by the American Petroleum Institute (API).

You should look for this information on the oil container, and use *only* those oils that are identified as meeting GM Standard GM6094M and have the starburst symbol on the front of the oil container.

Notice: **Use only engine oil identified as meeting GM Standard GM6094M and showing the American Petroleum Institute Certified For Gasoline Engines starburst symbol. Failure to use the recommended oil can result in engine damage not covered by your warranty.**

GM Goodwrench® oil meets all the requirements for your vehicle.

Downloaded from www.Manualslib.com manuals search engine

If you are in an area of extreme cold, where the temperature falls below –20°F (–29°C), it is recommended that you use either an SAE 5W-30 synthetic oil or an SAE 0W-30 oil. Both will provide easier cold starting and better protection for your engine at extremely low temperatures.

Engine Oil Additives

Do not add anything to your oil. The recommended oils with the starburst symbol that meet GM Standard GM6094M are all you will need for good performance and engine protection.

Engine Oil Life System

When to Change Engine Oil

Your vehicle has a computer system that lets you know when to change the engine oil and filter. This is based on engine revolutions and engine temperature, and not on mileage. Based on driving conditions, the mileage at which an oil change will be indicated can vary considerably. For the oil life system to work properly, you must reset the system every time the oil is changed.

When the system has calculated that oil life has been diminished, it will indicate that an oil change is necessary. A CHANGE OIL message will come on. See *DIC Warnings and Messages on page 3-44*. Change your oil as soon as possible within the next 600 miles (1 000 km). It is possible that, if you are driving under the best conditions, the oil life system may not indicate that an oil change is necessary for over a year. However, your engine oil and filter must be changed at least once a year and at this time the system must be reset. Your dealer has GM-trained people who will perform this work using genuine GM parts and reset the system. It is also important to check your oil regularly and keep it at the proper level.

If the system is ever reset accidentally, you must change your oil at 3,000 miles (5 000 km) since your last oil change. Remember to reset the oil life system whenever the oil is changed.

Downloaded from www.Manualslib.com manuals search engine

How to Reset the Engine Oil Life System

The Engine Oil Life System calculates when to change your engine oil and filter based on vehicle use. Anytime your oil is changed, reset the system so it can calculate when the next oil change is required. If a situation occurs where you change your oil prior to a CHANGE OIL message being turned on, reset the system.

To reset the Engine Oil Life system, do the following:

1. With the engine off, turn the ignition to ON.
2. Press and release the stem in the lower center of the instrument cluster until the OIL LIFE message is displayed.
3. Once the alternating OIL LIFE and RESET messages appear, press and hold the stem until several beeps sound. This confirms that the oil life system has been reset.
4. Turn the key to LOCK.

If the CHANGE OIL message comes back on when you start your vehicle, the engine oil life system has not reset. Repeat the procedure. See *DIC Warnings and Messages on page 3-44*.

What to Do with Used Oil

Used engine oil contains certain elements that may be unhealthy for your skin and could even cause cancer. Do not let used oil stay on your skin for very long. Clean your skin and nails with soap and water, or a good hand cleaner. Wash or properly dispose of clothing or rags containing used engine oil. See the manufacturer's warnings about the use and disposal of oil products.

Used oil can be a threat to the environment. If you change your own oil, be sure to drain all the oil from the filter before disposal. Never dispose of oil by putting it in the trash, pouring it on the ground, into sewers, or into streams or bodies of water. Instead, recycle it by taking it to a place that collects used oil. If you have a problem properly disposing of your used oil, ask your dealer, a service station, or a local recycling center for help.

Downloaded from www.Manualslib.com manuals search engine

Engine Air Cleaner/Filter

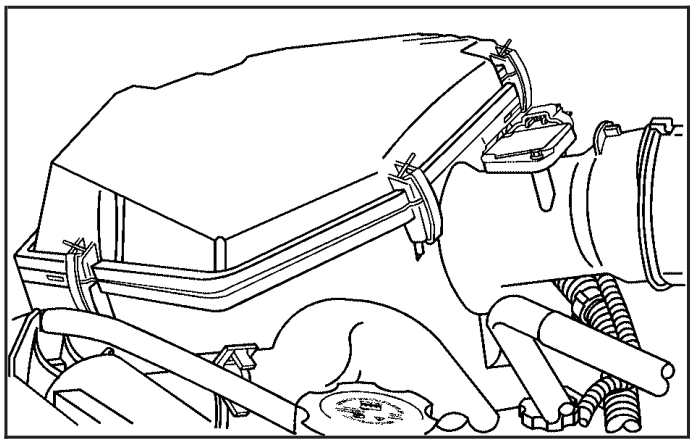

The engine air cleaner/filter is located in the engine compartment on the passenger's side of the vehicle. See *Engine Compartment Overview on page 5-12* for more information on location.

When to Inspect the Engine Air Cleaner/Filter

Inspect the air cleaner/filter at the Maintenance II intervals and replace it at the first oil change after each 50,000 mile (83 000 km) interval. See *Scheduled Maintenance on page 6-4* for more information. If you are driving in dusty/dirty conditions, inspect the filter at each engine oil change.

How to Inspect the Engine Air Cleaner/Filter

To inspect or replace the engine air cleaner/filter, do the following:

1. Unfasten the clips that hold the cover on and remove the cover.
2. Lift out the engine air cleaner/filter.
3. Inspect or replace the air filter. See *Normal Maintenance Replacement Parts on page 6-14* to determine which filter to use.
4. Reinstall the engine air cleaner/filter cover. Fasten the clips to hold the cover in place.

Downloaded from www.Manualslib.com manuals search engine

⚠ CAUTION:

Operating the engine with the air cleaner/filter off can cause you or others to be burned. The air cleaner not only cleans the air; it helps to stop flames if the engine backfires. If it is not there and the engine backfires, you could be burned. Do not drive with it off, and be careful working on the engine with the air cleaner/filter off.

Notice: **If the air cleaner/filter is off, a backfire can cause a damaging engine fire. And, dirt can easily get into your engine, which will damage it. Always have the air cleaner/filter in place when you are driving.**

Automatic Transmission Fluid

When to Check and Change Automatic Transmission Fluid

A good time to check your automatic transmission fluid level is when the engine oil is changed.

Change the fluid and filter at the intervals listed in *Additional Required Services on page 6-6*, and be sure to use the transmission fluid listed in *Recommended Fluids and Lubricants on page 6-12*.

How to Check Automatic Transmission Fluid

Because this operation can be a little difficult, you may choose to have this done at the dealership service department.

If you do it yourself, be sure to follow all the instructions here, or you could get a false reading on the dipstick.

Notice: **Too much or too little fluid can damage your transmission. Too much can mean that some of the fluid could come out and fall on hot engine part or exhaust system parts, starting a fire. Too little fluid could cause the transmission to overheat. Be sure to get an accurate reading if you check your transmission fluid.**

Downloaded from www.Manualslib.com manuals search engine

Wait at least 30 minutes before checking the transmission fluid level if you have been driving:

- When outside temperatures are above 90°F (32°C).
- At high speed for quite a while.
- In heavy traffic — especially in hot weather.
- While pulling a trailer.

To get the right reading, the fluid should be at normal operating temperature, which is 180°F to 200°F (82°C to 93°C).

Get the vehicle warmed up by driving about 15 miles (24 km) when outside temperatures are above 50°F (10°C). If it is colder than 50°F (10°C), drive the vehicle in THIRD (3) until the engine temperature gage moves and then remains steady for 10 minutes.

A cold fluid check can be made after the vehicle has been sitting for eight hours or more with the engine off, but this is used only as a reference. Let the engine run at idle for five minutes if outside temperatures are 50°F (10°C) or more. If it is colder than 50°F (10°C), you may have to idle the engine longer. Should the fluid level be low during this cold check, you must check the fluid hot before adding fluid. Checking the fluid hot will give you a more accurate reading of the fluid level.

Checking the Fluid Level

Prepare your vehicle as follows:

1. Park your vehicle on a level place. Keep the engine running.
2. With the parking brake applied, place the shift lever in PARK (P).
3. With your foot on the brake pedal, move the shift lever through each gear range, pausing for about three seconds in each range. Then, position the shift lever in PARK (P).
4. Let the engine run at idle for three minutes or more.

Then, without shutting off the engine, follow these steps:

1. Flip the handle up and then pull out the dipstick and wipe it with a clean rag or paper towel.

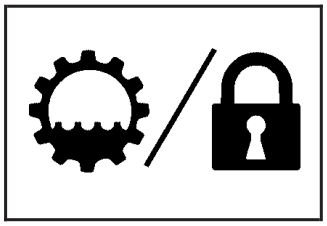

The automatic transmission dipstick handle with this symbol on it is located in the engine compartment on the passenger's side of the vehicle.

See *Engine Compartment Overview on page 5-12* for more information on location.

2. Push it back in all the way, wait three seconds and then pull it back out again.

Downloaded from www.Manualslib.com manuals search engine

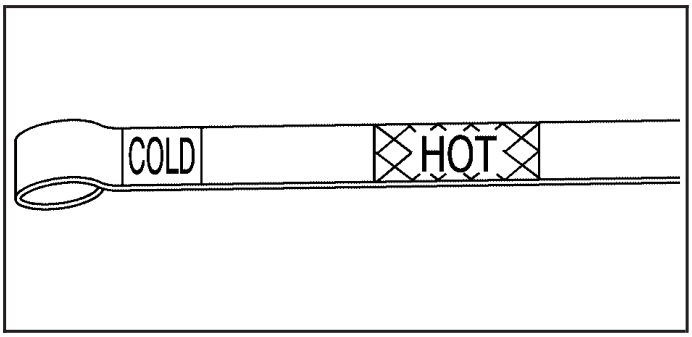

3. Check both sides of the dipstick, and read the lower level. The fluid level must be in the COLD area, below the cross-hatched area, for a cold check or in the HOT or cross-hatched area for a hot check. Be sure to keep the dipstick pointed down to get an accurate reading.
4. If the fluid level is in the acceptable range, push the dipstick back in all the way; then flip the handle down to lock the dipstick in place.

How to Add Automatic Transmission Fluid

Refer to the Maintenance Schedule to determine what kind of transmission fluid to use. See *Recommended Fluids and Lubricants on page 6-12*.

Add fluid only after checking the transmission fluid while it is hot. A cold check is used only as a reference. If the fluid level is low, add only enough of the proper fluid to bring the level up to the HOT area for a hot check. It does not take much fluid, generally less than one pint (0.5 L). Do not overfill.

Notice: **Use of the incorrect automatic transmission fluid may damage your vehicle, and the damages may not be covered by your warranty. Always use the automatic transmission fluid listed in *Recommended Fluids and Lubricants on page 6-12*.**

- After adding fluid, recheck the fluid level as described under “How to Check Automatic Transmission Fluid,” earlier in this section.
- When the correct fluid level is obtained, push the dipstick back in all the way; then flip the handle down to lock the dipstick in place.

Manual Transmission Fluid

When to Check

A good time to have it checked is when the engine oil is changed. However, the fluid in your manual transmission does not require changing.

Downloaded from www.Manualslib.com manuals search engine

How to Check

Because this operation can be a little difficult, you may choose to have this done at your GM dealership service department.

If you do it yourself, be sure to follow all the instructions here, or you could get a false reading.

Notice: **Too much or too little fluid can damage your transmission. Too little fluid could cause the transmission to overheat. Be sure to get an accurate reading if you check your transmission fluid.**

Check the fluid level only when your engine is off, the vehicle is parked on a level place and the transmission is cool enough for you to rest your fingers on the transmission case.

Then, follow these steps:

1. Remove the filler plug.
2. Check that the lubricant level is up to the bottom of the filler plug hole.
3. If the fluid level is good, install the plug and be sure it is fully seated. If the fluid level is low, add more fluid as described in the next steps.

Downloaded from www.Manualslib.com manuals search engine

How to Add Fluid

Here is how to add fluid. Refer to the Maintenance Schedule to determine what kind of fluid to use. See *Recommended Fluids and Lubricants on page 6-12*.

1. Remove the filler plug.
2. Add fluid at the filler plug hole. Add only enough fluid to bring the fluid level up to the bottom of the filler plug hole.
3. Install the filler plug. Be sure the plug is fully seated.

Hydraulic Clutch

The hydraulic clutch linkage in your vehicle is self-adjusting. The clutch master cylinder reservoir is filled with hydraulic clutch fluid.

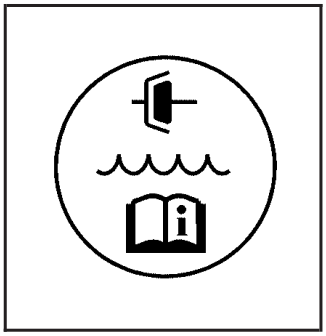

The hydraulic clutch fluid reservoir cap has this symbol on it. See *Engine Compartment Overview on page 5-12* for reservoir location.

It is not necessary to regularly check clutch fluid unless you suspect there is a leak in the system. Adding fluid will not correct a leak.

A fluid loss in this system could indicate a problem. Have the system inspected and repaired.

Downloaded from www.Manualslib.com manuals search engine

When to Check and What to Use

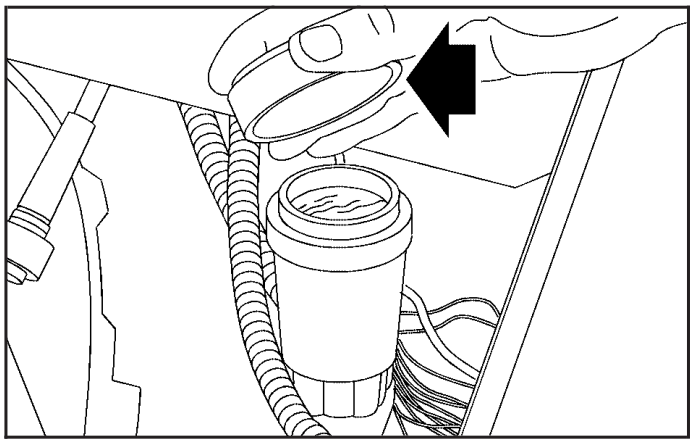

Refer to the Maintenance Schedule to determine how often you should check the fluid level in your clutch master cylinder reservoir and for the proper fluid. See *Recommended Fluids and Lubricants on page 6-12*.

How to Check and Add Fluid

The proper fluid should be added if the level does not reach the bottom of the diaphragm when it is in place in the reservoir. See the instructions on the reservoir cap.

Engine Coolant

The cooling system in your vehicle is filled with DEX-COOL® engine coolant. This coolant is designed to remain in your vehicle for five years or 150,000 miles (240 000 km), whichever occurs first, if you add only DEX-COOL® extended life coolant.

The following explains your cooling system and how to add coolant when it is low. If you have a problem with engine overheating, see *Engine Overheating on page 5-27*.

A 50/50 mixture of clean, drinkable water and DEX-COOL® coolant will:

- Give freezing protection down to –34°F (–37°C).
- Give boiling protection up to 265°F (129°C).
- Protect against rust and corrosion.
- Help keep the proper engine temperature.
- Let the warning lights and gages work as they should.

Notice: **Using coolant other than DEX-COOL® may cause premature engine, heater core, or radiator corrosion. In addition, the engine coolant may require changing sooner, at the first maintenance service after each 30,000 miles (50 000 km) or 24 months, whichever occurs first. Any repairs would not be covered by your warranty. Always use DEX-COOL® (silicate-free) coolant in your vehicle.**

Downloaded from www.Manualslib.com manuals search engine

What to Use

Use a mixture of one-half clean, drinkable water and one-half DEX-COOL® coolant which will not damage aluminum parts. If you use this coolant mixture, you do not need to add anything else.

⚠ CAUTION:

Adding only plain water to your cooling system can be dangerous. Plain water, or some other liquid such as alcohol, can boil before the proper coolant mixture will. Your vehicle's coolant warning system is set for the proper coolant mixture. With plain water or the wrong mixture, your engine could get too hot but you would not get the overheat warning. Your engine could catch fire and you or others could be burned. Use a 50/50 mixture of clean, drinkable water and the proper coolant.

Notice: **If you use an improper coolant mixture, your engine could overheat and be badly damaged. The repair cost would not be covered by your warranty. Too much water in the mixture can freeze and crack the engine, radiator, heater core, and other parts.**

Notice: **If you use extra inhibitors and/or additives in your vehicle's cooling system, you could damage your vehicle. Use only the proper mixture of the engine coolant listed in this manual for the cooling system. See *Recommended Fluids and Lubricants on page 6-12* for more information.**

Checking Coolant

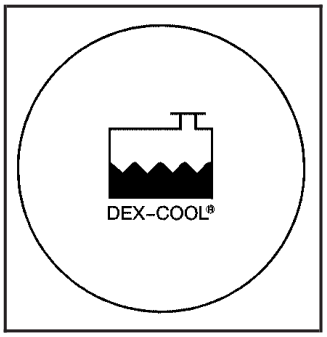

The coolant recovery tank cap has this symbol on it. It is located toward the rear of the engine compartment on the passenger's side of the vehicle. See *Engine Compartment Overview on page 5-12* for more information on location.

The vehicle must be on a level surface. When your engine is cold, the coolant level should be at FULL COLD, or a little higher. When your engine is warm, the level could be above the FULL COLD level.

Downloaded from www.Manualslib.com manuals search engine

Adding Coolant

If you need more coolant, add the proper DEX-COOL® coolant mixture at the coolant recovery tank.

> **⚠ CAUTION:**
>
> **Turning the radiator pressure cap when the engine and radiator are hot can allow steam and scalding liquids to blow out and burn you badly. With the coolant recovery tank, you will almost never have to add coolant at the radiator. Never turn the radiator pressure cap — even a little — when the engine and radiator are hot.**

Add coolant mixture at the recovery tank, but be careful not to spill it.

> **⚠ CAUTION:**
>
> **You can be burned if you spill coolant on hot engine parts. Coolant contains ethylene glycol, and it will burn if the engine parts are hot enough. Do not spill coolant on a hot engine.**

Occasionally check the coolant level in the radiator. For information on how to add coolant to the radiator, see *Cooling System on page 5-29*.

Downloaded from www.Manualslib.com manuals search engine

Radiator Pressure Cap

Notice: **If the pressure cap is not tightly installed, coolant loss and possible engine damage may occur. Be sure the cap is properly and tightly secured.**

See *Engine Compartment Overview on page 5-12* for more information on location.

Engine Overheating

You will find a coolant temperature gage on your vehicle's instrument panel. See *Engine Coolant Temperature Gage on page 3-34*.

Your air conditioning may stop working if your engine is too hot. This is normal and helps cool the engine.

If Steam Is Coming From Your Engine

⚠ CAUTION:

Steam from an overheated engine can burn you badly, even if you just open the hood. Stay away from the engine if you see or hear steam coming from it. Just turn it off and get everyone away from the vehicle until it cools down. Wait until there is no sign of steam or coolant before you open the hood.

If you keep driving when your engine is overheated, the liquids in it can catch fire. You or others could be badly burned. Stop your engine if it overheats, and get out of the vehicle until the engine is cool.

Notice: **If your engine catches fire because you keep driving with no coolant, your vehicle can be badly damaged. The costly repairs would not be covered by your warranty.**

Downloaded from www.Manualslib.com manuals search engine

If No Steam Is Coming From Your Engine

If you get an engine overheat warning but see or hear no steam, the problem may not be too serious. Sometimes the engine can get a little too hot when you:

- Climb a long hill on a hot day.
- Stop after high-speed driving.
- Idle for long periods in traffic.
- Tow a trailer. See “Driving on Grades” under *Towing a Trailer on page 4-58*.

If you get the overheat warning with no sign of steam, try this for a minute or so:

1. In heavy traffic, let the engine idle in NEUTRAL while stopped. If it is safe to do so, pull off the road, shift to PARK (P) or NEUTRAL and let the engine idle.
2. Turn off the air conditioning.
3. Turn on your heater to full hot at the highest fan speed and open the windows as necessary.

If you no longer have the overheat warning, you can drive. Just to be safe, drive slower for about 10 minutes. If the warning does not come back on, you can drive normally.

If the warning continues, pull over, stop, and park your vehicle right away.

If there is still no sign of steam, idle the engine for three minutes while you are parked. Push down the accelerator until the engine speed is about twice as fast as normal idle speed for at least three minutes while you are parked. If you still have the warning, turn off the engine and get everyone out of the vehicle until it cools down.

You may decide not to lift the hood but to get service help right away.

Downloaded from www.Manualslib.com manuals search engine

Cooling System

When you decide it is safe to lift the hood, here is what you will see:

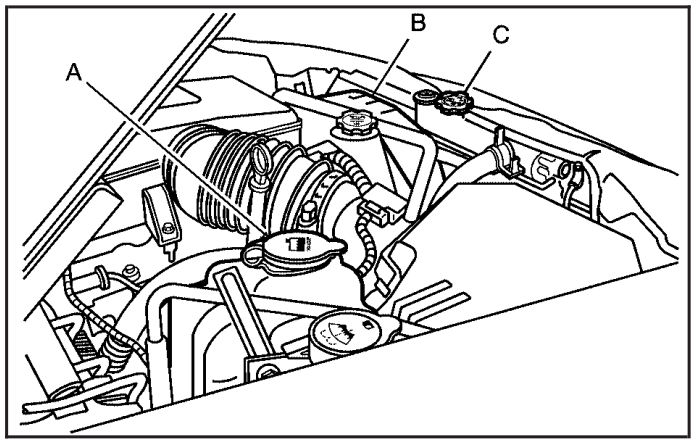

A. Coolant Recovery Tank

B. Engine Cooling Fan

C. Radiator Pressure Cap

If the coolant inside the coolant recovery tank is boiling, do not do anything else until it cools down. The vehicle should be parked on a level surface.

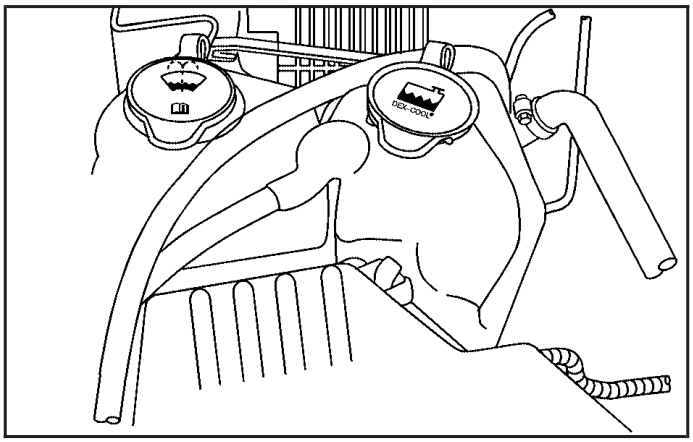

When the engine is cold, the coolant level should be at least up to the FULL COLD mark. If it is not, you may have a leak at the pressure cap or in the radiator hoses, heater hoses, radiator, water pump or somewhere else in the cooling system.

Downloaded from www.Manualslib.com manuals search engine

⚠ CAUTION:

Heater and radiator hoses, and other engine parts, can be very hot. Do not touch them. If you do, you can be burned.

Do not run the engine if there is a leak. If you run the engine, it could lose all coolant. That could cause an engine fire, and you could be burned. Get any leak fixed before you drive the vehicle.

If there seems to be no leak, start the engine again. The engine cooling fan speed should increase when idle speed is doubled by pushing the accelerator pedal down. If it does not, your vehicle needs service. Turn off the engine.

Notice: **Engine damage from running your engine without coolant is not covered by your warranty.**

Notice: **Using coolant other than DEX-COOL® may cause premature engine, heater core or radiator corrosion. In addition, the engine coolant may require changing sooner, at 30,000 miles (50 000 km) or 24 months, whichever occurs first. Any repairs would not be covered by your warranty. Always use DEX-COOL® (silicate-free) coolant in your vehicle.**

How to Add Coolant to the Coolant Recovery Tank

If you have not found a problem yet, but the coolant level is not at the FULL COLD mark, add a 50/50 mixture of clean, drinkable water and DEX-COOL® engine coolant at the coolant recovery tank. See *Engine Coolant on page 5-24* for more information.

⚠ CAUTION:

Adding only plain water to your cooling system can be dangerous. Plain water, or some other liquid such as alcohol, can boil before the proper coolant mixture will. Your vehicle's coolant warning system is set for the proper coolant mixture. With plain water or the wrong mixture, your engine could get too hot but you would not get the overheat warning. Your engine could catch fire and you or others could be burned. Use a 50/50 mixture of clean, drinkable water and DEX-COOL® coolant.

Downloaded from www.Manualslib.com manuals search engine

Notice: **In cold weather, water can freeze and crack the engine, radiator, heater core and other parts. Use the recommended coolant and the proper coolant mixture.**

> **⚠ CAUTION:**
>
> **You can be burned if you spill coolant on hot engine parts. Coolant contains ethylene glycol and it will burn if the engine parts are hot enough. Do not spill coolant on a hot engine.**

When the coolant in the coolant recovery tank is at the FULL COLD mark, start your vehicle.

If the overheat warning continues, there is one more thing you can try. You can add the proper mixture directly to the radiator, but be sure the cooling system is cool before you do it.

> **⚠ CAUTION:**
>
> **Steam and scalding liquids from a hot cooling system can blow out and burn you badly. They are under pressure, and if you turn the radiator pressure cap — even a little — they can come out at high speed. Never turn the cap when the cooling system, including the radiator pressure cap, is hot. Wait for the cooling system and radiator pressure cap to cool if you ever have to turn the pressure cap.**

Downloaded from www.Manualslib.com manuals search engine

How to Add Coolant to the Radiator

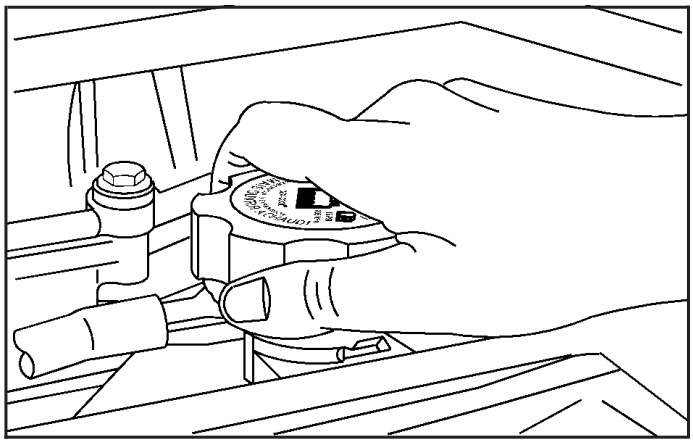

1. You can remove the radiator pressure cap when the cooling system, including the upper radiator hose, is no longer hot. Turn the pressure cap slowly counterclockwise about one full turn.

   If you hear a hiss, wait for that to stop. A hiss means there is still some pressure left.

2. Then keep turning the cap to remove it.

3. Fill the radiator with the proper DEX-COOL® coolant mixture, up to the base of the filler neck. See *Engine Coolant on page 5-24* for more information about the proper coolant mixture.

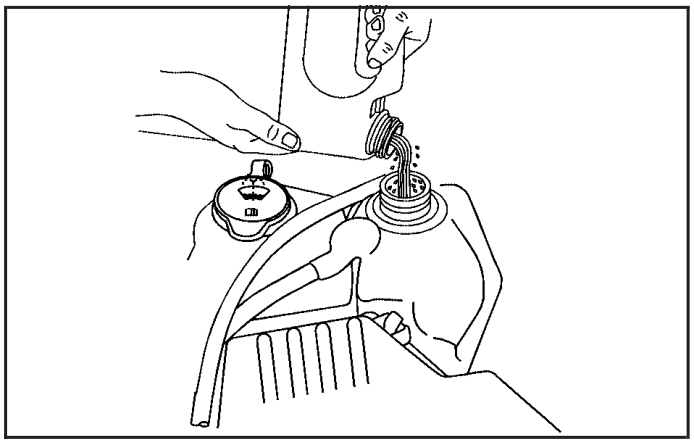

4. Then fill the coolant recovery tank to the FULL COLD mark.

5. Reinstall the cap on the coolant recovery tank, but leave the radiator pressure cap off.

Downloaded from www.Manualslib.com manuals search engine

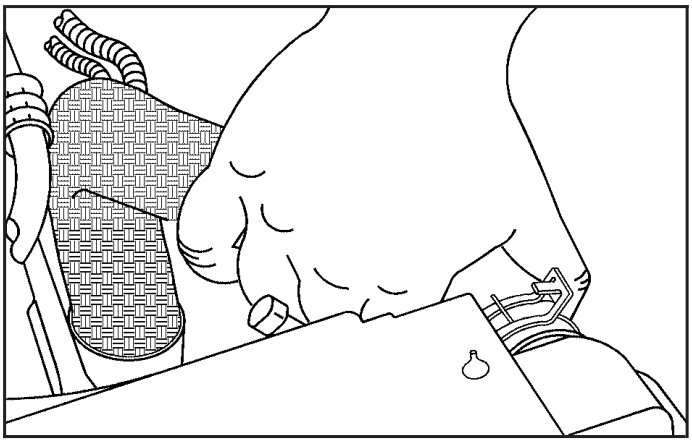

6. Start the engine and let it run until you can feel the upper radiator hose getting hot. Watch out for the engine cooling fan.
7. By this time, the coolant level inside the radiator filler neck may be lower. If the level is lower, add more of the proper DEX-COOL® coolant mixture through the filler neck until the level reaches the base of the filler neck.

   Then replace the pressure cap. At any time during this procedure if coolant begins to flow out of the filler neck, reinstall the pressure cap. Be sure to secure it tightly.

Engine Fan Noise

This vehicle has a clutched engine cooling fan. When the clutch is engaged, the fan spins faster to provide more air to cool the engine. In most everyday driving conditions, the clutch is not engaged. This improves fuel economy and reduces fan noise. Under heavy vehicle loading, trailer towing and/or high outside temperatures, the fan speed increases when the clutch engages. So you may hear an increase in fan noise. This is normal and should not be mistaken as the transmission slipping or making extra shifts. It is merely the cooling system functioning properly. The fan will slow down when additional cooling is not required and the clutch disengages.

You may also hear this fan noise when you start the engine. It will go away as the fan clutch disengages.

Downloaded from www.Manualslib.com manuals search engine

Power Steering Fluid

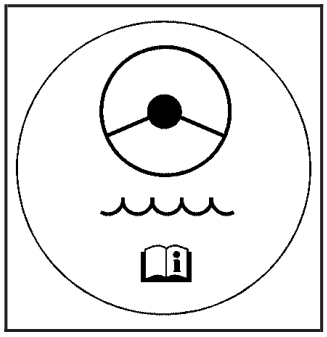

See *Engine Compartment Overview on page 5-12* for reservoir location.

When to Check Power Steering Fluid

It is not necessary to regularly check power steering fluid unless you suspect there is a leak in the system or you hear an unusual noise. A fluid loss in this system could indicate a problem. Have the system inspected and repaired.

How to Check Power Steering Fluid

1. Turn the key off and let the engine compartment cool down.
2. Wipe the cap and the top of the reservoir clean.
3. Unscrew the cap and wipe the dipstick with a clean rag.
4. Replace the cap and completely tighten it.
5. Then remove the cap again and look at the fluid level on the dipstick.

The level should be between the ADD and FULL marks. If necessary, add only enough fluid to bring the level up to the proper range.

What to Use

To determine what kind of fluid to use, see *Recommended Fluids and Lubricants on page 6-12*. Always use the proper fluid. Failure to use the proper fluid can cause leaks and damage hoses and seals.

Downloaded from www.Manualslib.com manuals search engine

Windshield Washer Fluid

What to Use

When you need windshield washer fluid, be sure to read the manufacturer's instructions before use. If you will be operating your vehicle in an area where the temperature may fall below freezing, use a fluid that has sufficient protection against freezing.

Adding Washer Fluid

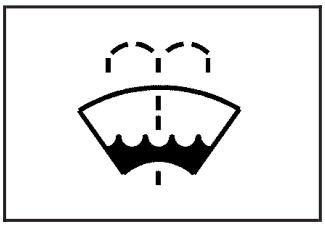

Open the cap with the washer symbol on it. Add washer fluid until the tank is full. See *Engine Compartment Overview on page 5-12* for reservoir location.

Notice:

- **When using concentrated washer fluid, follow the manufacturer's instructions for adding water.**
- **Do not mix water with ready-to-use washer fluid. Water can cause the solution to freeze and damage your washer fluid tank and other parts of the washer system. Also, water does not clean as well as washer fluid.**
- **Fill your washer fluid tank only three-quarters full when it is very cold. This allows for expansion if freezing occurs, which could damage the tank if it is completely full.**
- **Do not use engine coolant (antifreeze) in your windshield washer. It can damage your washer system and paint.**

Downloaded from www.Manualslib.com manuals search engine

Brakes

Brake Fluid

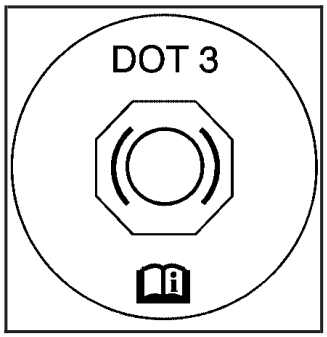

Your brake master cylinder reservoir is filled with DOT-3 brake fluid. See *Engine Compartment Overview on page 5-12* for the location of the reservoir.

There are only two reasons why the brake fluid level in the reservoir might go down. The first is that the brake fluid goes down to an acceptable level during normal brake lining wear. When new linings are put in, the fluid level goes back up. The other reason is that fluid is leaking out of the brake system. If it is, you should have your brake system fixed, since a leak means that sooner or later your brakes will not work well, or will not work at all.

So, it is not a good idea to top off your brake fluid. Adding brake fluid will not correct a leak. If you add fluid when your linings are worn, then you will have too much fluid when you get new brake linings. You should add or remove brake fluid, as necessary, only when work is done on the brake hydraulic system.

⚠ CAUTION:

If you have too much brake fluid, it can spill on the engine. The fluid will burn if the engine is hot enough. You or others could be burned, and your vehicle could be damaged. Add brake fluid only when work is done on the brake hydraulic system. See "Checking Brake Fluid" in this section.

Refer to the Maintenance Schedule to determine when to check your brake fluid. See *Scheduled Maintenance on page 6-4*.

Downloaded from www.Manualslib.com manuals search engine

Checking Brake Fluid

You can check the brake fluid without taking off the cap.

Look at the brake fluid reservoir. The fluid level should be above MIN. If it is not, have your brake system checked to see if there is a leak.

After work is done on the brake hydraulic system, make sure the level is above the MIN but not over the MAX mark.

What to Add

When you do need brake fluid, use only DOT-3 brake fluid. Use new brake fluid from a sealed container only. See *Recommended Fluids and Lubricants on page 6-12*.

Always clean the brake fluid reservoir cap and the area around the cap before removing it. This will help keep dirt from entering the reservoir.

⚠ CAUTION:

With the wrong kind of fluid in your brake system, your brakes may not work well, or they may not even work at all. This could cause a crash. Always use the proper brake fluid.

Notice:

- **Using the wrong fluid can badly damage brake system parts. For example, just a few drops of mineral-based oil, such as engine oil, in your brake system can damage brake system parts so badly that they will have to be replaced. Do not let someone put in the wrong kind of fluid.**
- **If you spill brake fluid on your vehicle's painted surfaces, the paint finish can be damaged. Be careful not to spill brake fluid on your vehicle. If you do, wash it off immediately. See *Washing Your Vehicle on page 5-86*.**

Downloaded from www.Manualslib.com manuals search engine

Brake Wear

Your vehicle has four-wheel disc brakes.

Disc brake pads have built-in wear indicators that make a high-pitched warning sound when the brake pads are worn and new pads are needed. The sound may come and go or be heard all the time your vehicle is moving, except when you are pushing on the brake pedal firmly.

⚠ CAUTION:

The brake wear warning sound means that soon your brakes will not work well. That could lead to an accident. When you hear the brake wear warning sound, have your vehicle serviced.

Notice: **Continuing to drive with worn-out brake pads could result in costly brake repair.**

Some driving conditions or climates may cause a brake squeal when the brakes are first applied or lightly applied. This does not mean something is wrong with your brakes.

Properly torqued wheel nuts are necessary to help prevent brake pulsation. When tires are rotated, inspect brake pads for wear and evenly tighten wheel nuts in the proper sequence to GM torque specifications.

Brake linings should always be replaced as complete axle sets.

Brake Pedal Travel

See your dealer if the brake pedal does not return to normal height, or if there is a rapid increase in pedal travel. This could be a sign of brake trouble.

Brake Adjustment

Every time you make a brake stop, your disc brakes adjust for wear.

Downloaded from www.Manualslib.com manuals search engine

Replacing Brake System Parts

The braking system on a vehicle is complex. Its many parts have to be of top quality and work well together if the vehicle is to have really good braking. Your vehicle was designed and tested with top-quality GM brake parts. When you replace parts of your braking system — for example, when your brake linings wear down and you need new ones put in — be sure you get new approved GM replacement parts. If you do not, your brakes may no longer work properly. For example, if someone puts in brake linings that are wrong for your vehicle, the balance between your front and rear brakes can change — for the worse. The braking performance you have come to expect can change in many other ways if someone puts in the wrong replacement brake parts.

Battery

Your vehicle has a maintenance free battery. When it is time for a new battery, get one that has the replacement number shown on the original battery's label. We recommend an ACDelco® replacement battery. See *Engine Compartment Overview on page 5-12* for battery location.

Warning: Battery posts, terminals, and related accessories contain lead and lead compounds, chemicals known to the State of California to cause cancer and reproductive harm. Wash hands after handling.

Vehicle Storage

If you are not going to drive your vehicle for 25 days or more, remove the black, negative (–) cable from the battery. This will help keep your battery from running down.

⚠ CAUTION:

Batteries have acid that can burn you and gas that can explode. You can be badly hurt if you are not careful. See *Jump Starting on page 5-40* for tips on working around a battery without getting hurt.

Downloaded from www.Manualslib.com manuals search engine

Jump Starting

If your vehicle's battery has run down, you may want to use another vehicle and some jumper cables to start your vehicle. Be sure to use the following steps to do it safely.

⚠ CAUTION:

Batteries can hurt you. They can be dangerous because:

- **They contain acid that can burn you.**
- **They contain gas that can explode or ignite.**
- **They contain enough electricity to burn you.**

If you do not follow these steps exactly, some or all of these things can hurt you.

Notice: **Ignoring these steps could result in costly damage to your vehicle that would not be covered by your warranty.**

Trying to start your vehicle by pushing or pulling it will not work, and it could damage your vehicle.

1. Check the other vehicle. It must have a 12-volt battery with a negative ground system.

Notice: **If the other vehicle's system is not a 12-volt system with a negative ground, both vehicles can be damaged. Only use vehicles with 12-volt systems with negative grounds to jump start your vehicle.**

2. Get the vehicles close enough so the jumper cables can reach, but be sure the vehicles are not touching each other. If they are, it could cause a ground connection you do not want. You would not be able to start your vehicle, and the bad grounding could damage the electrical systems.

   To avoid the possibility of the vehicles rolling, set the parking brake firmly on both vehicles involved in the jump start procedure. Put an automatic transmission in PARK (P) or a manual transmission in NEUTRAL before setting the parking brake. If you have a four-wheel-drive vehicle, be sure the transfer case is not in NEUTRAL.

Notice: **If you leave your radio or other accessories on during the jump starting procedure, they could be damaged. The repairs would not be covered by your warranty. Always turn off your radio and other accessories when jump starting your vehicle.**

3. Turn off the ignition on both vehicles. Unplug unnecessary accessories plugged into the cigarette lighter or the accessory power outlets. Turn off the radio and all lamps that are not needed. This will avoid sparks and help save both batteries. And it could save the radio!

Downloaded from www.Manualslib.com manuals search engine

4. Open the hoods and locate the batteries on both vehicles. You will use the positive (+) battery terminal and the remote negative (–) jump starting terminal to jump start your vehicle. To access the positive (+) battery terminal, open the terminal cover. See *Engine Compartment Overview on page 5-12* for more information on the terminal locations.

⚠ CAUTION:

Using a match near a battery can cause battery gas to explode. People have been hurt doing this, and some have been blinded. Use a flashlight if you need more light.

Be sure the batteries have enough water. You do not need to add water to the ACDelco® battery (or batteries) installed in your new vehicle. But if a battery has filler caps, be sure the right amount of fluid is there. If it is low, add water to take care of that first. If you do not, explosive gas could be present.

Battery fluid contains acid that can burn you. Do not get it on you. If you accidentally get it in your eyes or on your skin, flush the place with water and get medical help immediately.

⚠ CAUTION:

Fans or other moving engine parts can injure you badly. Keep your hands away from moving parts once the engine is running.

5. Check that the jumper cables do not have loose or missing insulation. If they do, you could get a shock. The vehicles could be damaged too.

   Before you connect the cables, here are some basic things you should know. Positive (+) will go to positive (+) or to a remote positive (+) terminal if the vehicle has one. Negative (–) will go to a heavy, unpainted metal engine part or to a remote negative (–) terminal if the vehicle has one.

   Do not connect positive (+) to negative (–) or you will get a short that would damage the battery and maybe other parts too. And do not connect the negative (–) cable to the negative (–) terminal on the dead battery because this can cause sparks.

Downloaded from www.Manualslib.com manuals search engine

6. Connect the red positive (+) cable to the positive (+) terminal of the dead battery. Use a remote positive (+) terminal if the vehicle has one.
7. Do not let the other end touch metal. Connect it to the positive (+) terminal of the good battery. Use a remote positive (+) terminal if the vehicle has one.
8. Now connect the black negative (–) cable to the negative (–) terminal of the good battery. Use a remote negative (–) terminal if the vehicle has one.

   Do not let the other end touch anything until the next step. The other end of the negative (–) cable does not go to the dead battery. It goes to a heavy, unpainted metal engine part, or to a remote negative (–) terminal on the vehicle with the dead battery.
9. Connect the other end of the negative (–) cable at least 18 inches (45 cm) away from the dead battery, but not near engine parts that move. The electrical connection is just as good there, and the chance of sparks getting back to the battery is much less.

   Your vehicle has a remote negative (–) terminal, marked GND (Ground), for this purpose.
10. Now start the vehicle with the good battery and run the engine for a while.
11. Try to start the vehicle that had the dead battery. If it will not start after a few tries, it probably needs service.

Notice: **If the jumper cables are connected or removed in the wrong order, electrical shorting may occur and damage the vehicle. The repairs would not be covered by your warranty. Always connect and remove the jumper cables in the correct order, making sure that the cables do not touch each other or other metal.**

Downloaded from www.Manualslib.com manuals search engine

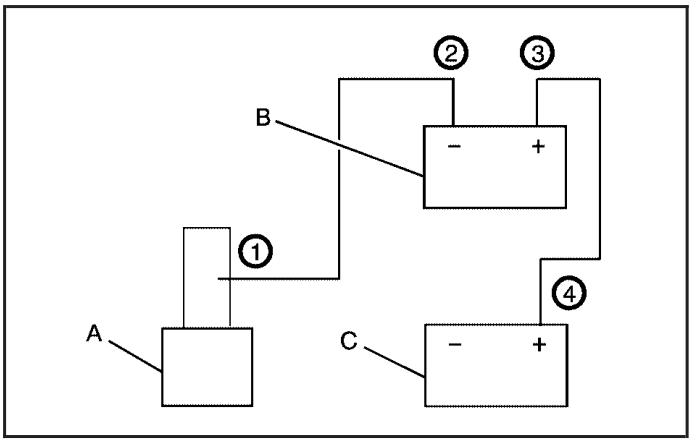

Jumper Cable Removal

A. Heavy, Unpainted Metal Engine Part or Remote Negative (–) Terminal

B. Good Battery or Remote Positive (+) and Remote Negative (–) Terminals

C. Dead Battery or Remote Positive (+) Terminal

To disconnect the jumper cables from both vehicles, do the following:

1. Disconnect the black negative (–) cable from the vehicle that had the dead battery.
2. Disconnect the black negative (–) cable from the vehicle with the good battery.
3. Disconnect the red positive (+) cable from the vehicle with the good battery.
4. Disconnect the red positive (+) cable from the other vehicle.
5. Return the positive (+) battery terminal cover to its original position.

Downloaded from www.Manualslib.com manuals search engine

Rear Axle

When to Check and Change Lubricant

It is not necessary to regularly check rear axle fluid unless you suspect there is a leak or you hear an unusual noise. A fluid loss could indicate a problem. Have it inspected and repaired.

How to Check Lubricant

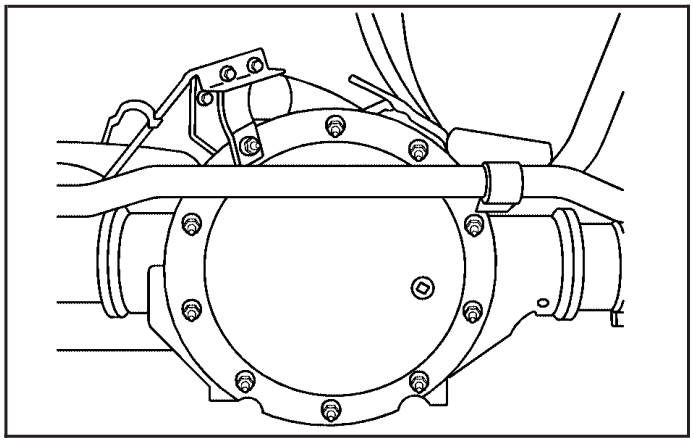

To get an accurate reading, the vehicle should be on a level surface.

If the level is below the bottom of the filler plug hole, located on the rear axle, you will need to add some lubricant. Add enough lubricant to raise the level to the bottom of the filler plug hole.

What to Use

See *Recommended Fluids and Lubricants on page 6-12* to determine which kind of lubricant to use.

Four-Wheel Drive

It is recommended that the four-wheel drive transfer case fluid be checked and filled by your dealer.

Front Axle

It is recommended that the front axle fluid be checked and filled by your dealer.

Downloaded from www.Manualslib.com manuals search engine

Headlamp Aiming

The vehicle has a visual optical headlamp aiming system. The aim has been preset at the factory and should need no further adjustment.

However, if the vehicle is damaged in an accident, the headlamp aim may be affected and adjustment may be necessary.

If oncoming vehicles flash their high beams at you, this may also mean the vertical aim needs to be adjusted.

It is recommended that the vehicle is taken to your dealer for service if the headlamps need to be re-aimed. It is possible however, to re-aim the headlamps as described in the following procedure.

The vehicle should be properly prepared as follows:

- The vehicle should be placed so the headlamps are 25 ft. (7.6 m) from a light colored wall or other flat surface.
- The vehicle must have all four tires on a level surface which is level all the way to the wall or other flat surface.
- The vehicle should be placed so it is perpendicular to the wall or other flat surface.
- The vehicle should not have any snow, ice, or mud on it.
- The vehicle should be fully assembled and all other work stopped while headlamp aiming is being performed.
- The vehicle should be normally loaded with a full tank of fuel and one person or 160 lbs (75 kg) sitting on the driver's seat.
- Tires should be properly inflated.
- The spare tire is in its original location in the vehicle.

Downloaded from www.Manualslib.com manuals search engine

To adjust the vertical aim, do the following:

1. Open the hood. See *Hood Release on page 5-11* for more information.

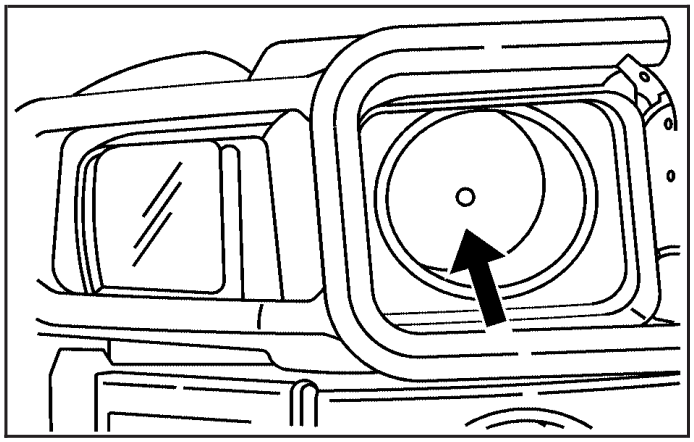

2. Find the aim dot on the lens of the headlamp.
3. Measure the distance from the ground to the aim dot on the headlamp. Record the distance.
4. At the wall or other flat surface, measure from the ground upward the recorded distance from Step 2 and mark it.
5. Draw or tape a horizontal line the width of the vehicle at the wall or other flat surface where it was marked it Step 4.

Notice: **Do not cover a headlamp to improve beam cut-off when aiming. Covering a headlamp may cause excessive heat build-up which may cause damage to the headlamp.**

6. Turn on the headlamps and place a piece of cardboard or equivalent in front of the headlamp not being aimed. This should allow only the beam of light from the headlamp being aimed to be seen on the flat surface.

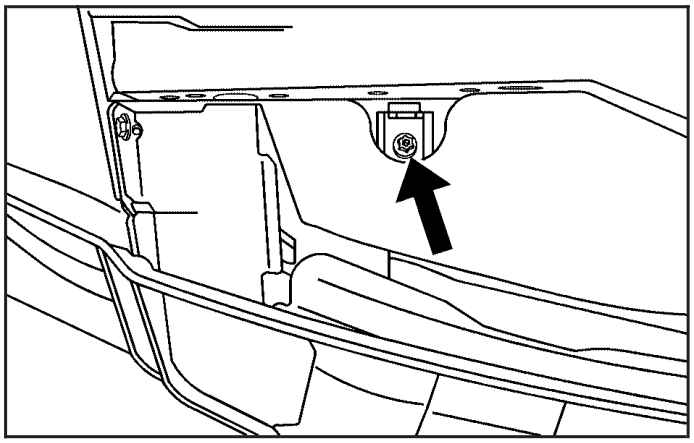

Passenger's Side Shown

7. Locate the vertical headlamp aiming screws, which are under the hood near each headlamp assembly. The adjustment screw can be turned with an E8 Torx® socket or T15 Torx® screwdriver.

Downloaded from www.Manualslib.com manuals search engine

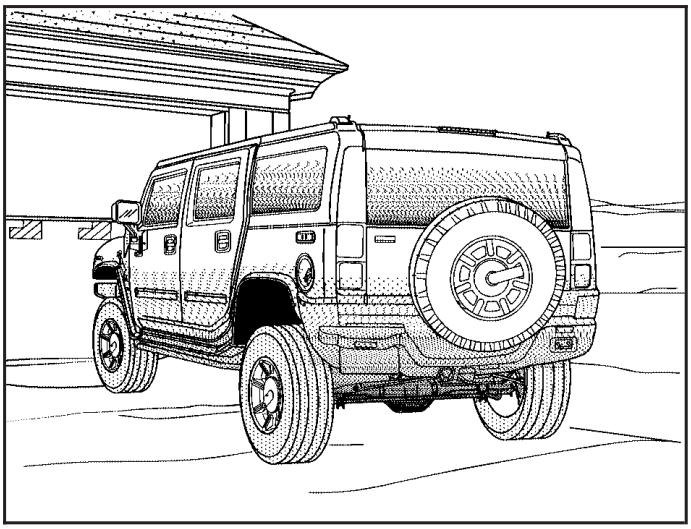

8. Turn the vertical aiming screw until the headlamp beam is aimed to the horizontal tape line. If you turn it clockwise, it will raise the beam and if you turn it counterclockwise, it will lower the beam.

   The top edge of the cut-off should be positioned at the bottom edge of the horizontal tape line.

9. Repeat Steps 7 and 8 for the opposite headlamp.

Bulb Replacement

For the proper type of replacement bulbs, see *Replacement Bulbs on page 5-49*.

For any bulb changing procedure not listed in this section, contact your dealer.

Halogen Bulbs

⚠ CAUTION:

Halogen bulbs have pressurized gas inside and can burst if you drop or scratch the bulb. You or others could be injured. Be sure to read and follow the instructions on the bulb package.

Downloaded from www.Manualslib.com manuals search engine

Headlamps

To replace a headlamp bulb, do the following:

1. Open the hood. See *Hood Release on page 5-11* for more information.
2. Reach in and access the headlamp bulb.

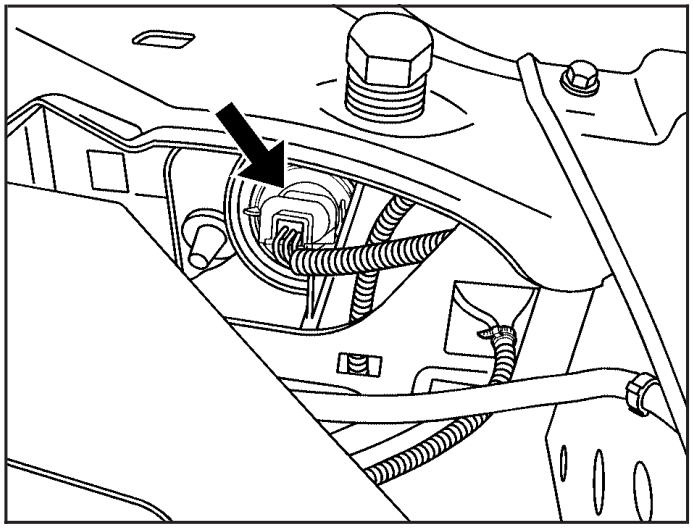

3. Turn the bulb socket counterclockwise to remove it from the headlamp assembly.
4. Unplug the electrical connector by pushing the release tab and pulling the bulb socket out.
5. Replace with a new bulb socket.
6. Reinstall the electrical connector.
7. Reinstall the bulb socket into the headlamp assembly making sure to align the tabs on the bulb socket with the tabs in the headlamp housing.
8. Turn the bulb socket clockwise to secure it.

Taillamps, Turn Signal, Stoplamps and Back-up Lamps

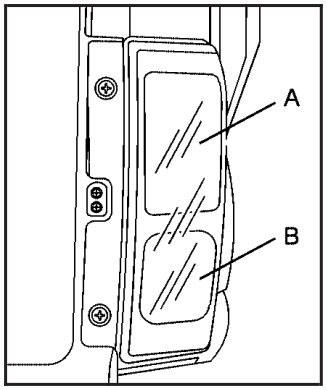

A. Stoplamp, Taillamp and Turn Signal Lamp

B. Back-up Lamp

Downloaded from www.Manualslib.com manuals search engine

To replace one of these bulbs in the taillamp assembly, do the following:

1. Open the swing-gate. See *Swing-gate on page 2-9* for more information.

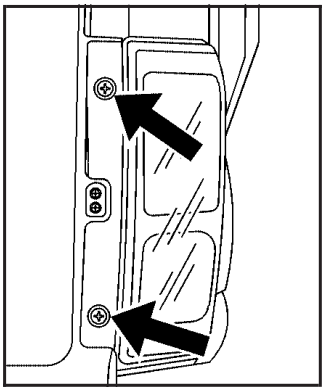

Passenger's Side Shown

2. Remove the two screws from the taillamp assembly.
3. Remove the taillamp assembly by pulling it gently to release the two locator tabs. The locator tabs connect the taillamp assembly to the vehicle's frame.
4. Turn the bulb socket counterclockwise to remove it from the taillamp housing.
5. Replace with a new bulb.
6. Insert the bulb into the taillamp housing and turn it counterclockwise until it is locked into place.
7. Reinstall the rear lamp assembly by lining up the locator tabs with the holes in the vehicle's frame.
8. Reinstall the two screws.

Replacement Bulbs

Exterior Lamp	Bulb Number
Back-up Lamp, Stoplamp, Taillamp and Turn Signal Lamp	3157K
Low-Beam and High-Beam Headlamp	H13

For replacement bulbs not listed here, contact your dealer.

Downloaded from www.Manualslib.com manuals search engine

Windshield Wiper Blade Replacement

Windshield wiper blades should be inspected for wear and cracking. See *Scheduled Maintenance on page 6-4* for more information.

Replacement blades come in different types and are removed in different ways. For proper type and length, see *Normal Maintenance Replacement Parts on page 6-14*.

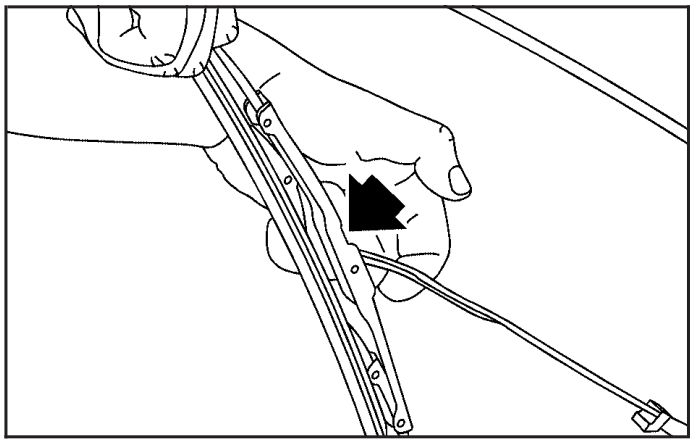

To replace the windshield wiper blade assembly do the following:

1. Lift the wiper arm away from the windshield.

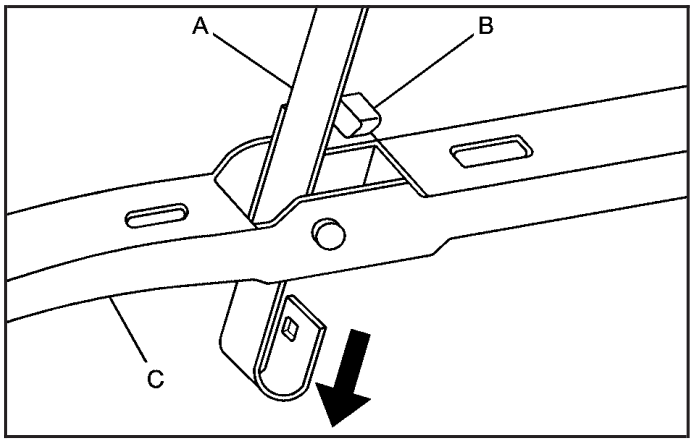

2. Push the release lever (B) to disengage the hook and push the wiper arm (A) out of the blade (C).
3. Push the new wiper blade securely on the wiper arm until you hear the release lever click into place.

To replace the rear wiper blade, follow the steps listed above.

Downloaded from www.Manualslib.com manuals search engine

Tires

Your new vehicle comes with high-quality tires made by a leading tire manufacturer. If you ever have questions about your tire warranty and where to obtain service, see your GM Warranty booklet for details. For additional information refer to the tire manufacturer's booklet included with your vehicle's Owner Manual.

⚠ CAUTION:

Poorly maintained and improperly used tires are dangerous.

- **Overloading your tires can cause overheating as a result of too much friction. You could have an air-out and a serious accident. See *Loading Your Vehicle on page 4-52*.**

CAUTION: (Continued)

CAUTION: (Continued)

- **Underinflated tires pose the same danger as overloaded tires. The resulting accident could cause serious injury. Check all tires frequently to maintain the recommended pressure. Tire pressure should be checked when your tires are cold. See *Inflation - Tire Pressure on page 5-58*.**
- **Overinflated tires are more likely to be cut, punctured, or broken by a sudden impact — such as when you hit a pothole. Keep tires at the recommended pressure.**
- **Worn, old tires can cause accidents. If your tread is badly worn, or if your tires have been damaged, replace them.**

Downloaded from www.Manualslib.com manuals search engine

Tire Sidewall Labeling

Useful information about a tire is molded into the sidewall. The following illustrations are examples of a typical P-Metric and a LT-Metric tire sidewall.

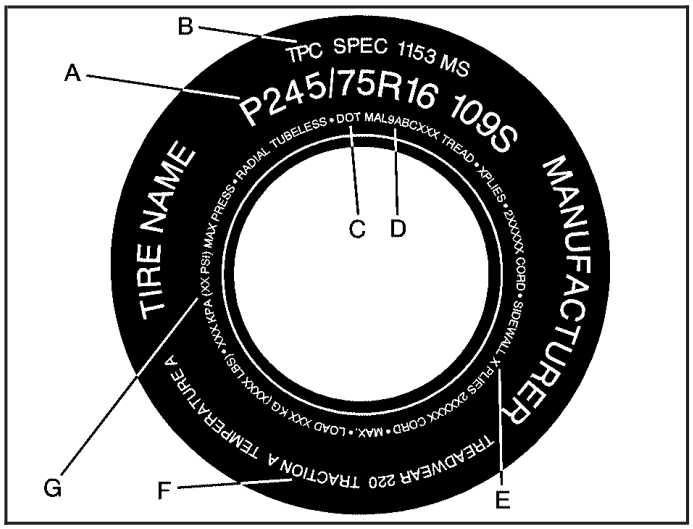

Passenger (P-Metric) Tire

(A) Tire Size: The tire size code is a combination of letters and numbers used to define a particular tire's width, height, aspect ratio, construction type, and service description. See the "Tire Size" illustration later in this section for more detail.

(B) TPC Spec (Tire Performance Criteria Specification): Original equipment tires designed to GM's specific tire performance criteria have a TPC specification code molded onto the sidewall. GM's TPC specifications meet or exceed all federal safety guidelines.

(C) DOT (Department of Transportation): The Department of Transportation (DOT) code indicates that the tire is in compliance with the U.S. Department of Transportation Motor Vehicle Safety Standards.

(D) Tire Identification Number (TIN): The letters and numbers following DOT code are the Tire Identification Number (TIN). The TIN shows the manufacturer and plant code, tire size, and date the tire was manufactured. The TIN is molded onto both sides of the tire, although only one side may have the date of manufacture.

(E) Tire Ply Material: The type of cord and number of plies in the sidewall and under the tread.

(F) Uniform Tire Quality Grading (UTQG): Tire manufacturers are required to grade tires based on three performance factors: treadwear, traction, and temperature resistance. For more information, see *Uniform Tire Quality Grading on page 5-66*.

(G) Maximum Cold Inflation Load Limit: Maximum load that can be carried and the maximum pressure needed to support that load. For information on recommended tire pressure see *Inflation - Tire Pressure on page 5-58* and *Loading Your Vehicle on page 4-52*.

Downloaded from www.Manualslib.com manuals search engine

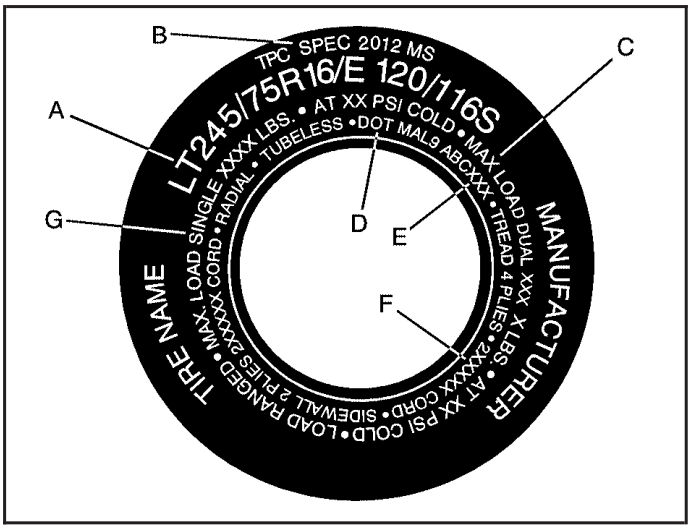

Light Truck (LT-Metric) Tire

(A) Tire Size: The tire size code is a combination of letters and numbers used to define a particular tire's width, height, aspect ratio, construction type, and service description. See the "Tire Size" illustration later in this section for more detail.

(B) TPC Spec (Tire Performance Criteria Specification): Original equipment tires designed to GM's specific tire performance criteria have a TPC specification code molded onto the sidewall. GM's TPC specifications meet or exceed all federal safety guidelines.

(C) Dual Tire Maximum Load: Maximum load that can be carried and the maximum pressure needed to support that load when used in a dual configuration. For information on recommended tire pressure see *Inflation - Tire Pressure on page 5-58* and *Loading Your Vehicle on page 4-52*.

(D) DOT (Department of Transportation): The Department of Transportation (DOT) code indicates that the tire is in compliance with the U.S. Department of Transportation Motor Vehicle Safety Standards.

(E) Tire Identification Number (TIN): The letters and numbers following DOT code are the Tire Identification Number (TIN). The TIN shows the manufacturer and plant code, tire size, and date the tire was manufactured. The TIN is molded onto both sides of the tire, although only one side may have the date of manufacture.

(F) Tire Ply Material: The type of cord and number of plies in the sidewall and under the tread.

(G) Single Tire Maximum Load: Maximum load that can be carried and the maximum pressure needed to support that load when used as a single. For information on recommended tire pressure see *Inflation - Tire Pressure on page 5-58* and *Loading Your Vehicle on page 4-52*.

Downloaded from www.Manualslib.com manuals search engine

Tire Size

The following examples show the different parts of a tire size.

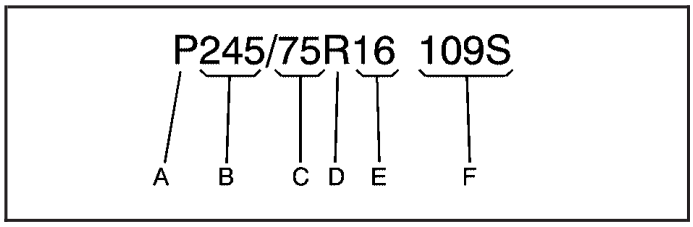

Passenger (P-Metric) Tire

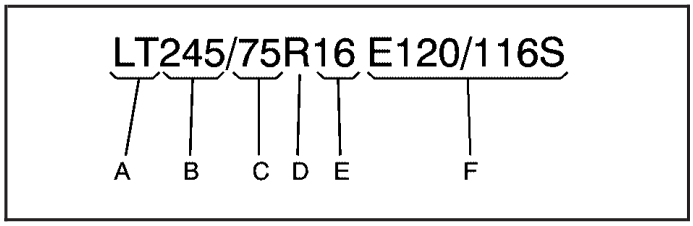

Light Truck (LT-Metric) Tire

(A) Passenger (P-Metric) Tire: The United States version of a metric tire sizing system. The letter P as the first character in the tire size means a passenger vehicle tire engineered to standards set by the U.S. Tire and Rim Association.

(A) Light Truck (LT-Metric) Tire: The United States version of a metric tire sizing system. The letters LT as the first two characters in the tire size means a light truck tire engineered to standards set by the U.S. Tire and Rim Association.

(B) Tire Width: The three-digit number indicates the tire section width in millimeters from sidewall to sidewall.

(C) Aspect Ratio: A two-digit number that indicates the tire height-to-width measurements. For example, if the tire size aspect ratio is 75, as shown in item C of the light truck (LT-Metric) tire illustration, it would mean that the tire's sidewall is 75% as high as it is wide.

(D) Construction Code: A letter code is used to indicate the type of ply construction in the tire. The letter R means radial ply construction; the letter D means diagonal or bias ply construction; and the letter B means belted-bias ply construction.

(E) Rim Diameter: Diameter of the wheel in inches.

(F) Service Description: The service description indicates the load range and speed rating of a tire. The load index can range from 1 to 279. Speed ratings range from A to Z.

Downloaded from www.Manualslib.com manuals search engine

Tire Terminology and Definitions

Air Pressure: The amount of air inside the tire pressing outward on each square inch of the tire. Air pressure is expressed in pounds per square inch (psi) or kilopascal (kPa).

Accessory Weight: This means the combined weight of optional accessories. Some examples of optional accessories are, automatic transmission, power steering, power brakes, power windows, power seats, and air conditioning.

Aspect Ratio: The relationship of a tire's height to its width.

Belt: A rubber coated layer of cords that is located between the plies and the tread. Cords may be made from steel or other reinforcing materials.

Bead: The tire bead contains steel wires wrapped by steel cords that hold the tire onto the rim.

Bias Ply Tire: A pneumatic tire in which the plies are laid at alternate angles less than 90 degrees to the centerline of the tread.

Cold Inflation Pressure: The amount of air pressure in a tire, measured in pounds per square inch (psi) or kilopascals (kPa) before a tire has built up heat from driving. See *Inflation - Tire Pressure on page 5-58*.

Curb Weight: This means the weight of a motor vehicle with standard and optional equipment including the maximum capacity of fuel, oil, and coolant, but without passengers and cargo.

DOT Markings: A code molded into the sidewall of a tire signifying that the tire is in compliance with the U.S. Department of Transportation (DOT) motor vehicle safety standards. The DOT code includes the Tire Identification Number (TIN), an alphanumeric designator which can also identify the tire manufacturer, production plant, brand, and date of production.

GVWR: Gross Vehicle Weight Rating, see *Loading Your Vehicle on page 4-52*.

GAWR FRT: Gross Axle Weight Rating for the front axle, see *Loading Your Vehicle on page 4-52*.

GAWR RR: Gross Axle Weight Rating for the rear axle, see *Loading Your Vehicle on page 4-52*.

Downloaded from www.Manualslib.com manuals search engine

Intended Outboard Sidewall: The side of an asymmetrical tire, that must always face outward when mounted on a vehicle.

Kilopascal (kPa): The metric unit for air pressure.

Light Truck (LT-Metric) Tire: A tire used on light duty trucks and some multipurpose passenger vehicles.

Load Index: An assigned number ranging from 1 to 279 that corresponds to the load carrying capacity of a tire.

Maximum Inflation Pressure: The maximum air pressure to which a cold tire may be inflated. The maximum air pressure is molded onto the sidewall.

Maximum Load Rating: The load rating for a tire at the maximum permissible inflation pressure for that tire.

Maximum Loaded Vehicle Weight: The sum of curb weight; accessory weight; vehicle capacity weight; and production options weight.

Normal Occupant Weight: The number of occupants a vehicle is designed to seat multiplied by 150 lbs (68 kg). See *Loading Your Vehicle on page 4-52*.

Occupant Distribution: Designated seating positions.

Outward Facing Sidewall: The side of an asymmetrical tire that has a particular side that faces outward when mounted on a vehicle. The side of the tire that contains a whitewall, bears white lettering, or bears manufacturer, brand, and/or model name molding that is higher or deeper than the same moldings on the other sidewall of the tire.

Passenger (P-Metric) Tire: A tire used on passenger cars and some light duty trucks and multipurpose vehicles.

Recommended Inflation Pressure: Vehicle manufacturer's recommended tire inflation pressure and shown on the tire placard. See *Inflation - Tire Pressure on page 5-58* and *Loading Your Vehicle on page 4-52*.

Radial Ply Tire: A pneumatic tire in which the ply cords that extend to the beads are laid at 90 degrees to the centerline of the tread.

Rim: A metal support for a tire and upon which the tire beads are seated.

Sidewall: The portion of a tire between the tread and the bead.

Downloaded from www.Manualslib.com manuals search engine

Speed Rating: An alphanumeric code assigned to a tire indicating the maximum speed at which a tire can operate.

Traction: The friction between the tire and the road surface. The amount of grip provided.

Tread: The portion of a tire that comes into contact with the road.

Treadwear Indicators: Narrow bands, sometimes called wear bars, that show across the tread of a tire when only 1/16 inch (1.6 mm) of tread remains. See *When It Is Time for New Tires on page 5-63*.

UTQGS (Uniform Tire Quality Grading Standards): A tire information system that provides consumers with ratings for a tire's traction, temperature, and treadwear. Ratings are determined by tire manufacturers using government testing procedures. The ratings are molded into the sidewall of the tire. See *Uniform Tire Quality Grading on page 5-66*.

Vehicle Capacity Weight: The number of designated seating positions multiplied by 150 lbs (68 kg) plus the rated cargo load. See *Loading Your Vehicle on page 4-52*.

Vehicle Maximum Load on the Tire: Load on an individual tire due to curb weight, accessory weight, occupant weight, and cargo weight.

Vehicle Placard: A label permanently attached to a vehicle showing the vehicle's capacity weight and the original equipment tire size and recommended inflation pressure. See "Tire and Loading Information Label" under *Loading Your Vehicle on page 4-52*.

Downloaded from www.Manualslib.com manuals search engine

Inflation - Tire Pressure

Tires need the correct amount of air pressure to operate effectively.

Notice: **Do not let anyone tell you that under-inflation or over-inflation is all right. It is not. If your tires do not have enough air (under-inflation), you can get the following:**

- **Too much flexing**
- **Too much heat**
- **Tire overloading**
- **Premature or irregular wear**
- **Poor handling**
- **Reduced fuel economy**

If your tires have too much air (over-inflation), you can get the following:

- **Unusual wear**
- **Poor handling**
- **Rough ride**
- **Needless damage from road hazards**

A Tire and Loading Information label is attached to the vehicle's center pillar (B-pillar), below the driver's door latch. This label shows your vehicle's original equipment tires and the correct inflation pressures for your tires when they are cold. The recommended cold tire inflation pressure, shown on the label, is the minimum amount of air pressure needed to support your vehicle's maximum load carrying capacity.

For additional information regarding how much weight your vehicle can carry, and an example of the tire and loading information label, see *Loading Your Vehicle on page 4-52*. How you load your vehicle affects vehicle handling and ride comfort, never load your vehicle with more weight than it was designed to carry.

When to Check

Check your tires once a month or more. Also check the tire pressure of the spare tire. If you have a compact spare tire, it should be at 60 psi (420 kPa). See *Spare Tire on page 5-82* for additional information.

Downloaded from www.Manualslib.com manuals search engine

How to Check

Use a good quality pocket-type gage to check tire pressure. You cannot tell if your tires are properly inflated simply by looking at them. Radial tires may look properly inflated even when they are underinflated. Check the tire's inflation pressure when the tires are cold. Cold means your vehicle has been sitting for at least three hours or driven no more than 1 mile (1.6 km).

Remove the valve cap from the tire valve stem. Press the tire gage firmly onto the valve to get a pressure measurement. If the cold tire inflation pressure matches the recommended pressure on the Tire and Loading Information label, no further adjustment is necessary. If the inflation pressure is low, add air until you reach the recommended amount.

If you overfill the tire, release air by pushing on the metal stem in the center of the tire valve. Recheck the tire pressure with the tire gage.

Be sure to put the valve caps back on the valve stems. They help prevent leaks by keeping out dirt and moisture.

Tire Pressure Monitor System

Your vehicle has a Tire Pressure Monitor System (TPMS). This system uses radio and sensor technology to check tire pressure levels. TPMS sensors are mounted onto each tire and wheel assembly on your vehicle, including the spare tire. The TPMS sensors transmit tire pressure readings to a receiver located in the vehicle.

Each tire, including the spare (if provided), should be checked monthly when cold and inflated to the inflation pressure recommended by the vehicle manufacturer on the vehicle placard or tire inflation pressure label. (If your vehicle has tires of a different size than the size indicated on the vehicle placard or tire inflation pressure label, you should determine the proper inflation pressure for those tires.)

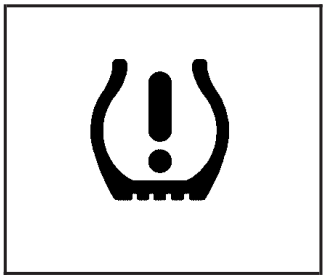

As an added safety feature, your vehicle has been equipped with a tire pressure monitoring system (TPMS) that illuminates a low tire pressure telltale when one or more of your tires is significantly under-inflated.

Downloaded from www.Manualslib.com manuals search engine

Accordingly, when the low tire pressure telltale illuminates, you should stop and check your tires as soon as possible, and inflate them to the proper pressure. Driving on a significantly under-inflated tire causes the tire to overheat and can lead to tire failure. Under-inflation also reduces fuel efficiency and tire tread life, and may affect the vehicle's handling and stopping ability.

Please note that the TPMS is not a substitute for proper tire maintenance, and it is the driver's responsibility to maintain correct tire pressure, even if under-inflation has not reached the level to trigger illumination of the TPMS low tire pressure telltale.

When a low tire pressure condition is detected, the TPMS will illuminate the low tire pressure warning symbol on the instrument panel cluster, and at the same time display the LOW TIRE message on the Driver Information Center (DIC). The message will appear at each ignition cycle until the tires are inflated to the correct inflation pressure. For additional information and details about the DIC operation and displays see *DIC Controls and Displays on page 3-41* and *DIC Warnings and Messages on page 3-44*.

You may notice, during cooler weather conditions, that the low tire pressure warning light and the DIC LOW TIRE message may come on when the vehicle is first started, and then turn off as you start to drive. This may be an early indicator that the air pressure in the tire(s) is getting low and needs to be inflated to the proper pressure.

A Tire and Loading Information label, attached to your vehicle, shows the size of your vehicle's original equipment tires and the correct inflation pressure for your vehicle's tires when they are cold. See *Loading Your Vehicle on page 4-52*, for an example of the tire information label and its location on your vehicle. Also see *Inflation - Tire Pressure on page 5-58* for additional information.

Your vehicle's TPMS can warn you about a low tire pressure condition but it does not replace normal tire maintenance. See *Tire Inspection and Rotation on page 5-62*, *When It Is Time for New Tires on page 5-63*, and *Tires on page 5-51*.

Notice: **Do not use a tire sealant if your vehicle has Tire Pressure Monitors. The liquid sealant can damage the tire pressure monitor sensors.**

The SERV (Service) TPM message is displayed when the TPMS system is malfunctioning. One or more missing or inoperable TPMS sensors will cause the service tire monitor message to be displayed. See your dealer for service.

Downloaded from www.Manualslib.com manuals search engine

TPMS Sensor Identification Codes

Each TPMS sensor has a unique identification code. Any time you rotate your vehicle's tires, install the spare tire onto your vehicle, or replace one or more of the TPMS sensors, the identification codes will need to be matched to the new tire/wheel position. The sensors are matched to the tire/wheel positions in the following order: driver's side front tire, passenger's side front tire, passenger's side rear tire, and driver's side rear tire.

You will have one minute to match the first tire/wheel position, and five minutes overall to match all four tire/wheel positions. If it takes longer than one minute, to match the first tire and wheel, or more than five minutes to match all four tire and wheel positions the matching process stops and you will need to start over.

The TPMS sensor matching procedure is outlined below:

1. Set the parking brake.
2. Turn the ignition switch to ON with the engine off.
3. Turn the exterior lamp switch from AUTO to ON four times within three seconds. A double horn chirp will sound and the TPMS low tire warning light will begin to flash. The double horn chirp and flashing TPMS warning light indicates the TPM matching process has started. The TPMS warning light should continue flashing throughout the matching procedure. The SERV TPM message will be displayed on the Driver Information Center (DIC).
4. Start with the driver's side front tire.
5. Remove the valve cap from the valve cap stem. Activate the TPMS sensor by increasing or decreasing the tire's air pressure for 10 seconds, then stop and listen for a single horn chirp. The single horn chirp should sound within 15 seconds, confirming that the sensor identification code has been matched to this tire and wheel position. If you do not hear the confirming single horn chirp, you will need to start over with step number one. To let air-pressure out of a tire you can use the pointed end of the valve cap, a pencil-style air pressure gage, or a key.
6. Proceed to the passenger's side front tire, and repeat the procedure in Step 5.
7. Proceed to the passenger's side rear tire, and repeat the procedure in Step 5.
8. Proceed to the driver's side rear tire, and repeat the procedure in Step 5.

Downloaded from www.Manualslib.com manuals search engine

9. After hearing the confirming horn chirp for the left rear tire, check to see if the TPMS warning light is still flashing. If it is, turn the ignition switch to LOCK. If the TPMS warning light is not flashing, the five minute time limit has passed and you will need to start the process over beginning with Step 1.
10. Set all four tires to the recommended air pressure level as indicated on the Tire and Loading Information label.
11. Put the valve caps back on the valve stems.

Federal Communications Commission and Industry and Science Canada

The TPMS operates on a radio frequency subject to Federal Communications Commission (FCC) Rules and with Industry and Science Canada.

This device complies with Part 15 of the FCC Rules and with RSS-210 of Industry and Science Canada. Operation is subject to the following two conditions:

1. This device may not cause harmful interference.
2. This device must accept any interference received including interference that may cause undesired operation of the device.

Changes or modifications to this system by other than an authorized service facility could void authorization to use this equipment.

Tire Inspection and Rotation

Tires should be rotated every 5,000 to 8,000 miles (8 000 to 13 000 km).

Any time you notice unusual wear, rotate your tires as soon as possible and check wheel alignment. Also check for damaged tires or wheels. See *When It Is Time for New Tires on page 5-63* and *Wheel Replacement on page 5-67* for more information.

The purpose of regular rotation is to achieve more uniform wear for all tires on the vehicle. The first rotation is the most important, see *Scheduled Maintenance on page 6-4*.

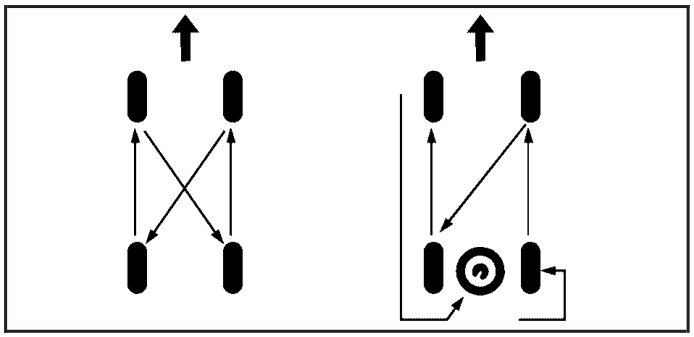

When rotating your vehicle's tires, always use one of the correct rotation patterns shown here.

Downloaded from www.Manualslib.com manuals search engine

After the tires have been rotated, adjust the front and rear inflation pressures as shown on the Tire and Loading Information label. For the location of the tire and loading information label see *Loading Your Vehicle on page 4-52*. Make certain that all wheel nuts are properly tightened, see “Wheel Nut Torque” under *Capacities and Specifications on page 5-100* for the proper wheel nut torque specification.

⚠ CAUTION:

Rust or dirt on a wheel, or on the parts to which it is fastened, can make wheel nuts become loose after a time. The wheel could come off and cause an accident. When you change a wheel, remove any rust or dirt from places where the wheel attaches to the vehicle. In an emergency, you can use a cloth or a paper towel to do this; but be sure to use a scraper or wire brush later, if needed, to get all the rust or dirt off. See *Changing a Flat Tire on page 5-71*.

Any time you rotate the vehicle’s tires the Tire Pressure Monitor System (TPMS) will need to be reset. The TPMS identification codes will need to be matched to tire and wheel position. See “TPMS Sensor Identification Codes” under *Tire Pressure Monitor System on page 5-59*.

When It Is Time for New Tires

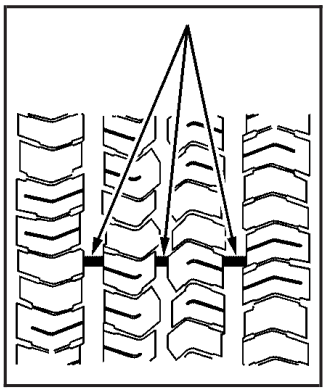

One way to tell when it is time for new tires is to check the treadwear indicators, which will appear when your tires have only 1/16 inch (1.6 mm) or less of tread remaining. Some commercial truck tires may not have treadwear indicators.

You need a new tire if any of the following statements are true:

- You can see the indicators at three or more places around the tire.
- You can see cord or fabric showing through the tire’s rubber.
- The tread or sidewall is cracked, cut or snagged deep enough to show cord or fabric.
- The tire has a bump, bulge, or split.
- The tire has a puncture, cut, or other damage that cannot be repaired well because of the size or location of the damage.

Downloaded from www.Manualslib.com manuals search engine

Buying New Tires

GM has developed and matched specific tires for your vehicle. The original equipment tires installed on your vehicle, when it was new, were designed to meet General Motors Tire Performance Criteria Specification (TPC spec) system rating. If you need replacement tires, GM strongly recommends that you get tires with the same TPC Spec rating. This way, your vehicle will continue to have tires that are designed to give the same performance and vehicle safety, during normal use, as the original tires.

GM's exclusive TPC Spec system considers over a dozen critical specifications that impact the overall performance of your vehicle, including brake system performance, ride and handling, traction control, and tire pressure monitoring performance. GM's TPC Spec number is molded onto the tire's sidewall by the tire manufacturer. If the tires have an all-season tread design, the TPC spec number will be followed by a MS, for mud and snow. See *Tire Sidewall Labeling on page 5-52* for additional information.

⚠ CAUTION:

Mixing tires could cause you to lose control while driving. If you mix tires of different sizes, brands, or types (radial and bias-belted tires) the vehicle may not handle properly, and you could have a crash. Using tires of different sizes, brands, or types may also cause damage to your vehicle. Be sure to use the correct size, brand, and type of tires on your vehicle's wheels.

⚠ CAUTION:

If you use bias-ply tires on your vehicle, the wheel rim flanges could develop cracks after many miles of driving. A tire and/or wheel could fail suddenly, causing a crash. Use only radial-ply tires with the wheels on your vehicle.

Downloaded from www.Manualslib.com manuals search engine

If you must replace your vehicle's tires with those that do not have a TPC Spec number, make sure they are the same size, load range, speed rating, and construction type (radial and bias-belted tires) as your vehicle's original tires.

Vehicles equipped with a tire pressure monitoring system may give an inaccurate low-pressure warning if non-TPC spec rated tires are installed on your vehicle. Non-TPC Spec rated tires may give a low-pressure warning that is higher or lower than the proper warning level you would get with TPC Spec rated tires. See *Tire Pressure Monitor System on page 5-59*.

Your vehicle's original equipment tires are listed on the Tire and Loading Information Label. This label is attached to the vehicle's center pillar (B-pillar). See *Loading Your Vehicle on page 4-52*, for more information about the Tire and Loading Information Label.

Different Size Tires and Wheels

If you add wheels or tires that are a different size than your original equipment wheels and tires, this may affect the way your vehicle performs, including its braking, ride and handling characteristics, stability, and resistance to rollover. Additionally, if your vehicle has electronic systems such as, anti-lock brakes, traction control, and electronic stability control, the performance of these systems can be affected.

⚠ CAUTION:

If you add different sized wheels, your vehicle may not provide an acceptable level of performance and safety if tires not recommended for those wheels are selected. You may increase the chance that you will crash and suffer serious injury. Only use GM specific wheel and tire systems developed for your vehicle, and have them properly installed by a GM certified technician.

See *Buying New Tires on page 5-64* and *Accessories and Modifications on page 5-3* for additional information.

Downloaded from www.Manualslib.com manuals search engine

Uniform Tire Quality Grading

Quality grades can be found where applicable on the tire sidewall between tread shoulder and maximum section width. For example:

Treadwear 200 Traction AA Temperature A

The following information relates to the system developed by the United States National Highway Traffic Safety Administration (NHTSA), which grades tires by treadwear, traction, and temperature performance. This applies only to vehicles sold in the United States. The grades are molded on the sidewalls of most passenger car tires. The Uniform Tire Quality Grading (UTQG) system does not apply to deep tread, winter-type snow tires, space-saver, or temporary use spare tires, tires with nominal rim diameters of 10 to 12 inches (25 to 30 cm), or to some limited-production tires.

While the tires available on General Motors passenger cars and light trucks may vary with respect to these grades, they must also conform to federal safety requirements and additional General Motors Tire Performance Criteria (TPC) standards.

Treadwear

The treadwear grade is a comparative rating based on the wear rate of the tire when tested under controlled conditions on a specified government test course. For example, a tire graded 150 would wear one and a half (1.5) times as well on the government course as a tire graded 100. The relative performance of tires depends upon the actual conditions of their use, however, and may depart significantly from the norm due to variations in driving habits, service practices, and differences in road characteristics and climate.

Traction – AA, A, B, C

The traction grades, from highest to lowest, are AA, A, B, and C. Those grades represent the tire's ability to stop on wet pavement as measured under controlled conditions on specified government test surfaces of asphalt and concrete. A tire marked C may have poor traction performance.

Warning: The traction grade assigned to this tire is based on straight-ahead braking traction tests, and does not include acceleration, cornering, hydroplaning, or peak traction characteristics.

Downloaded from www.Manualslib.com manuals search engine

Temperature – A, B, C

The temperature grades are A (the highest), B, and C, representing the tire's resistance to the generation of heat and its ability to dissipate heat when tested under controlled conditions on a specified indoor laboratory test wheel. Sustained high temperature can cause the material of the tire to degenerate and reduce tire life, and excessive temperature can lead to sudden tire failure. The grade C corresponds to a level of performance which all passenger car tires must meet under the Federal Motor Vehicle Safety Standard No. 109. Grades B and A represent higher levels of performance on the laboratory test wheel than the minimum required by law.

Warning: The temperature grade for this tire is established for a tire that is properly inflated and not overloaded. Excessive speed, underinflation, or excessive loading, either separately or in combination, can cause heat buildup and possible tire failure.

Wheel Alignment and Tire Balance

The tires and wheels on your vehicle were aligned and balanced carefully at the factory to give you the longest tire life and best overall performance. Adjustments to wheel alignment and tire balancing will not be necessary on a regular basis. However, if you notice unusual tire wear or your vehicle pulling to one side or the other, the alignment may need to be checked. If you notice your vehicle vibrating when driving on a smooth road, your tires and wheels may need to be rebalanced. See your dealer for proper diagnosis.

Wheel Replacement

Replace any wheel that is bent, cracked, or badly rusted or corroded. If wheel nuts keep coming loose, the wheel, wheel bolts, and wheel nuts should be replaced. If the wheel leaks air, replace it (except some aluminum wheels, which can sometimes be repaired). See your dealer if any of these conditions exist.

Your dealer will know the kind of wheel you need.

Downloaded from www.Manualslib.com manuals search engine

Each new wheel should have the same load-carrying capacity, diameter, width, offset and be mounted the same way as the one it replaces.

If you need to replace any of your wheels, wheel bolts, or wheel nuts, replace them only with new GM original equipment parts. This way, you will be sure to have the right wheel, wheel bolts, and wheel nuts for your vehicle.

⚠ CAUTION:

Using the wrong replacement wheels, wheel bolts, or wheel nuts on your vehicle can be dangerous. It could affect the braking and handling of your vehicle, make your tires lose air and make you lose control. You could have a collision in which you or others could be injured. Always use the correct wheel, wheel bolts, and wheel nuts for replacement.

Notice: **The wrong wheel can also cause problems with bearing life, brake cooling, speedometer or odometer calibration, headlamp aim, bumper height, vehicle ground clearance, and tire or tire chain clearance to the body and chassis.**

See *Changing a Flat Tire on page 5-71* for more information.

Used Replacement Wheels

⚠ CAUTION:

Putting a used wheel on your vehicle is dangerous. You cannot know how it has been used or how far it has been driven. It could fail suddenly and cause a crash. If you have to replace a wheel, use a new GM original equipment wheel.

Downloaded from www.Manualslib.com manuals search engine

Tire Chains

⚠ CAUTION:

If your vehicle has LT285/75R16 size tires, do not use tire chains. They can damage your vehicle because there is not enough clearance. Tire chains used on a vehicle without the proper amount of clearance can cause damage to the brakes, suspension or other vehicle parts. The area damaged by the tire chains could cause you to lose control of your vehicle and you or others may be injured in a crash.

Use another type of traction device only if its manufacturer recommends it for use on your vehicle and tire size combination and road conditions. Follow that manufacturer's instructions. To help avoid damage to your vehicle, drive slowly, readjust or remove the device if it is contacting your vehicle, and do not spin your vehicle's wheels.

If you do find traction devices that will fit, install them on the rear tires.

Notice: **If your vehicle has a tire size other than LT285/75R16 use tire chains only where legal and only when you must. Use chains that are the proper size for your tires. Install them on the tires of the rear axle. Do not use chains on the tires of the front axle. Tighten them as tightly as possible with the ends securely fastened. Drive slowly and follow the chain manufacturer's instructions. If you can hear the chains contacting your vehicle, stop and retighten them. If the contact continues, slow down until it stops. Driving too fast or spinning the wheels with chains on will damage your vehicle.**

Downloaded from www.Manualslib.com manuals search engine

If a Tire Goes Flat

It is unusual for a tire to blowout while you are driving, especially if you maintain your vehicle's tires properly. If air goes out of a tire, it is much more likely to leak out slowly. But if you should ever have a blowout, here are a few tips about what to expect and what to do:

If a front tire fails, the flat tire will create a drag that pulls the vehicle toward that side. Take your foot off the accelerator pedal and grip the steering wheel firmly. Steer to maintain lane position, and then gently brake to a stop well out of the traffic lane.

A rear blowout, particularly on a curve, acts much like a skid and may require the same correction you would use in a skid. In any rear blowout remove your foot from the accelerator pedal. Get the vehicle under control by steering the way you want the vehicle to go. It may be very bumpy and noisy, but you can still steer. Gently brake to a stop, well off the road if possible.

⚠ CAUTION:

Lifting a vehicle and getting under it to do maintenance or repairs is dangerous without the appropriate safety equipment and training. The jack provided with your vehicle is designed only for changing a flat tire. If it is used for anything else, you or others could be badly injured or killed if the vehicle slips off the jack. Use the jack provided with your vehicle only for changing a flat tire.

If a tire goes flat, the next part shows how to use the jacking equipment to change a flat tire safely.

Downloaded from www.Manualslib.com manuals search engine

Changing a Flat Tire

If a tire goes flat, avoid further tire and wheel damage by driving slowly to a level place. Turn on your hazard warning flashers.

⚠ CAUTION:

Changing a tire can be dangerous. The vehicle can slip off the jack and roll over or fall on you or other people. You and they could be badly injured or even killed. Find a level place to change your tire. To help prevent the vehicle from moving:

1. **Set the parking brake firmly.**
2. **Put an automatic transmission shift lever in PARK (P), or shift a manual transmission to FIRST (1) or REVERSE (R).**

CAUTION: (Continued)

CAUTION: (Continued)

3. **If you have a four-wheel-drive vehicle, be sure the transfer case is in a drive gear — not in NEUTRAL.**
4. **Turn off the engine and do not restart while the vehicle is raised.**
5. **Do not allow passengers to remain in the vehicle.**

To be even more certain the vehicle will not move, put blocks at the front and rear of the tire farthest away from the one being changed. That would be the tire on the other side, at the opposite end of the vehicle.

Downloaded from www.Manualslib.com manuals search engine

When you have a flat tire, you will first need to set up the wheel blocks before changing it. They are located in the tool bag, in the swing-gate. See *Removing the Spare Tire and Tools on page 5-73* for more information.

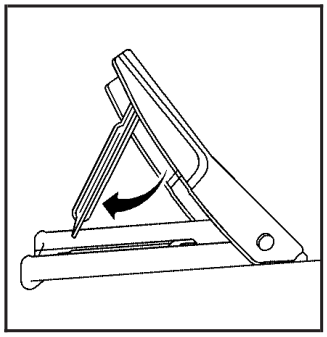

To use the wheel blocks, lift the wheel block as shown and lock into place.

Then, use the following as a guide to assist you in the placement of the wheel blocks.

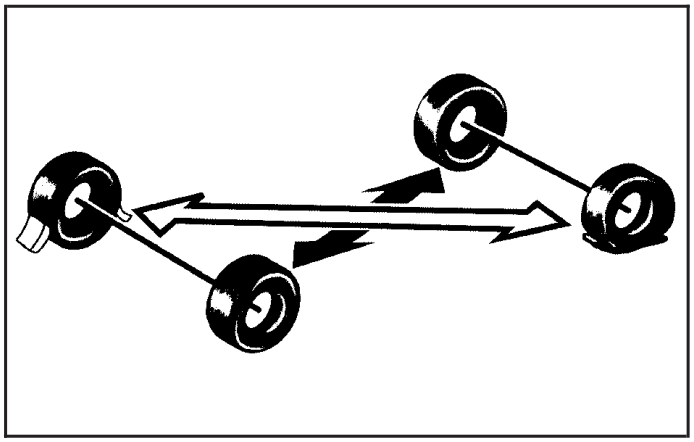

The following information will tell you next how to use the jack and change a tire.

Downloaded from www.Manualslib.com manuals search engine

Removing the Spare Tire and Tools

The equipment you will need is located in the swing-gate, behind a cover. To remove the equipment, do the following:

1. Open the swing-gate. See *Swing-gate on page 2-9* for more information.
2. Remove the cover, located on the inside of the swing-gate, by lifting the two latches.

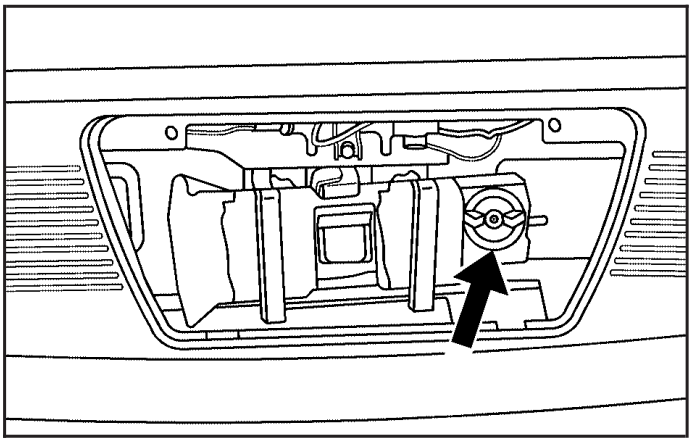

3. Turn the wing nut counterclockwise to release the jack tool bag and jack.
4. Remove the tool bag and jack from its compartment.
5. Undo the straps that secure the jack tool bag to the jack.
6. Open the tool bag and you will find the following tools, which you will use to remove the spare tire and flat tire:

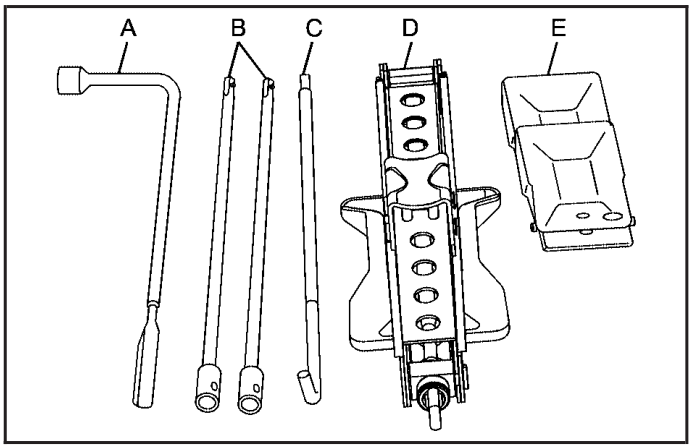

A. Wheel Wrench
B. Jack Handle Extensions
C. Jack Handle
D. Jack
E. Wheel Blocks

Downloaded from www.Manualslib.com manuals search engine

The spare tire is attached to the outside of the swing-gate. To remove the spare tire, do the following:

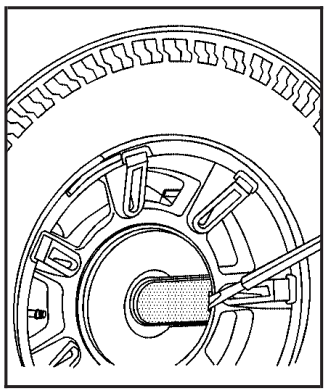

1. Remove the center cap by placing the flat end of the wheel wrench in the slot on the wheel and gently pry the center cap out.

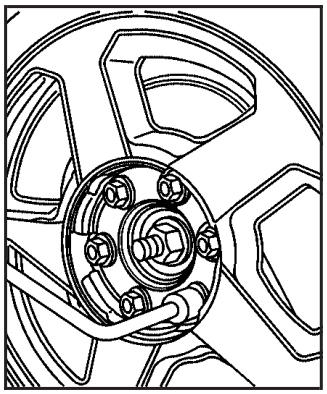

2. Use the wheel wrench to remove the wheel nuts securing the spare tire.

   If your vehicle has locking lug nuts, the key is supplied in the tool bag. Use the key along with the wheel wrench to remove the wheel nuts from the tire.

3. Pull off and gently lower the spare tire to the ground. Set it next to the flat tire.

   In order to remove the spare tire, you may need someone to assist you.

Downloaded from www.Manualslib.com manuals search engine

Removing the Flat Tire and Installing the Spare Tire

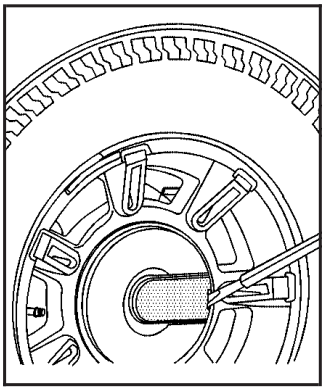

1. Remove the center cap by placing the flat end of the wheel wrench in the slot on the wheel and gently pry the center cap out.

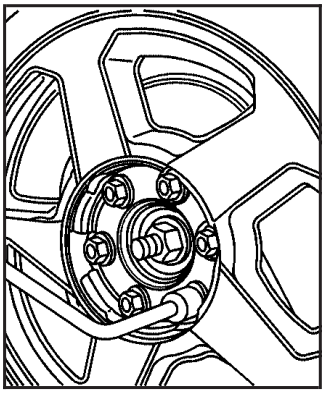

2. Turn the wheel wrench counterclockwise to loosen the wheel nuts. Do not remove them yet.

If your vehicle has locking lug nuts, the key is supplied in the tool bag. Use the key along with the wheel wrench to remove the wheel nuts from the tire.

You will now need to jack up the vehicle using the instructions following.

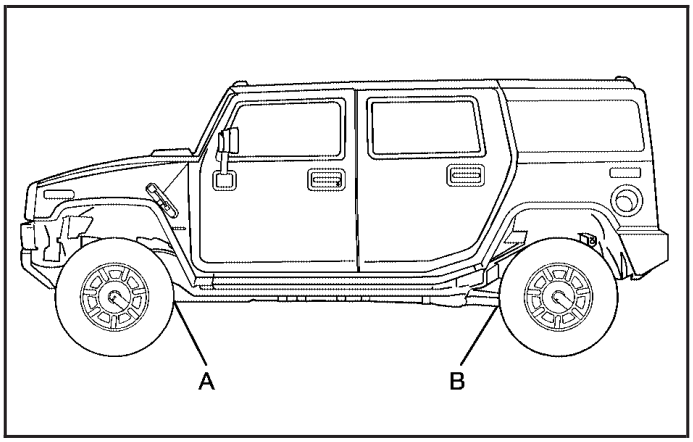

Jacking Locations (Overall View)

A. Front Position — Lower Control Arm

B. Rear Position — Lower Axle

3. Locate the vehicle's jacking positions (A and B).

Downloaded from www.Manualslib.com manuals search engine

4. Assemble the jack and tools as follows:

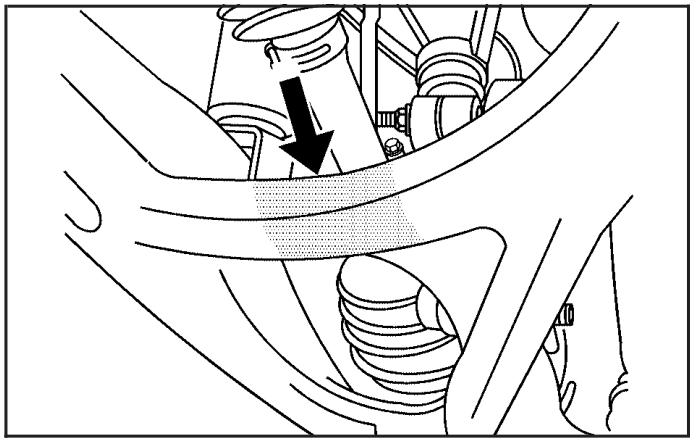

Front Position

Front Tire Flat: If the flat tire is on a front tire of the vehicle, you will need to use the jack handle and both jack handle extensions. Attach the wheel wrench to the jack handle extension. Attach the jack handle to the jack. Position the jack on the front lower control arm along the bar that runs front to back. Turn the wheel wrench clockwise to raise the vehicle. Raise the vehicle far enough off the ground so there is enough room for the spare tire to clear the ground.

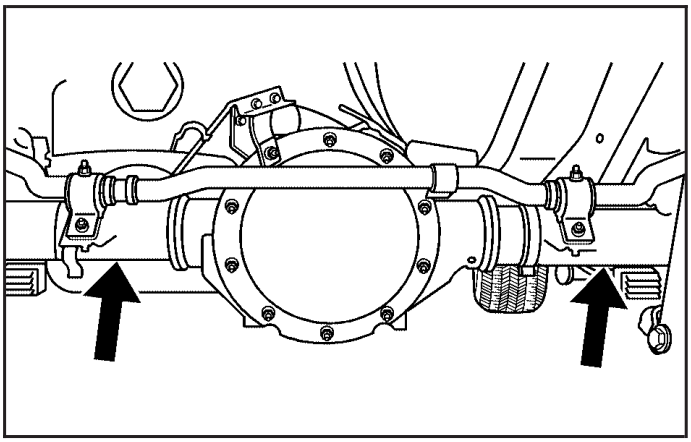

Rear Positions

Refer to the graphic above to locate the placement of the jack if the flat tire is on the rear of the vehicle.

Downloaded from www.Manualslib.com manuals search engine

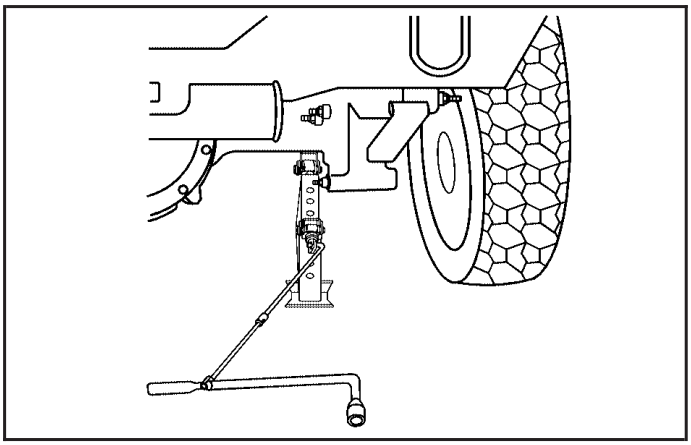

Rear Tire Flat: You will need to use the jack handle and both jack handle extensions. Attach the wheel wrench to the jack extensions. Attach the jack handle to the jack. Align the jack under the rear axle. Turn the wheel wrench clockwise to raise the vehicle. Raise the vehicle far enough off the ground so there is enough room for the spare tire to clear the ground.

5. Turn the wheel wrench clockwise to raise the jack head to the lifting point.

⚠ CAUTION:

Getting under a vehicle when it is jacked up is dangerous. If the vehicle slips off the jack you could be badly injured or killed. Never get under a vehicle when it is supported only by a jack.

⚠ CAUTION:

Raising your vehicle with the jack improperly positioned can damage the vehicle and even make the vehicle fall. To help avoid personal injury and vehicle damage, be sure to fit the jack lift head into the proper location before raising the vehicle.

Downloaded from www.Manualslib.com manuals search engine

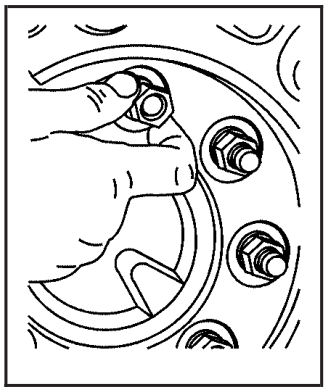

6. Remove all the wheel nuts and take off the flat tire.

⚠ CAUTION:

Rust or dirt on the wheel, or on the parts to which it is fastened, can make the wheel nuts become loose after a time. The wheel could come off and cause an accident. When you change a wheel, remove any rust or dirt from the places where the wheel attaches to the vehicle. In an emergency, you can use a cloth or a paper towel to do this; but be sure to use a scraper or wire brush later, if needed, to get all the rust or dirt off.

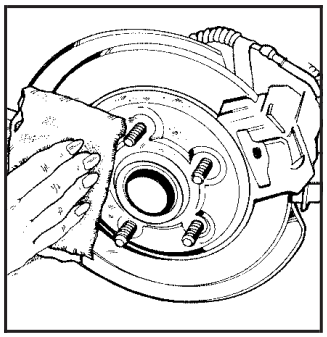

7. Remove any rust or dirt from the wheel bolts, mounting surfaces and spare wheel.

⚠ CAUTION:

Never use oil or grease on studs or nuts. If you do, the nuts might come loose. Your wheel could fall off, causing a serious accident.

8. Put the spare tire on the mounting surface.
9. Put the wheel nuts back on with the rounded end of the nuts toward the wheel after mounting the spare.

Downloaded from www.Manualslib.com manuals search engine

10. Tighten each wheel nut by hand. Then use the wheel wrench to tighten the nuts until the wheel is held against the hub.
11. Turn the wheel wrench counterclockwise to lower the vehicle. Lower the jack completely.

⚠ CAUTION:

Incorrect wheel nuts or improperly tightened wheel nuts can cause the wheel to come loose and even come off. This could lead to an accident. Be sure to use the correct wheel nuts. If you have to replace them, be sure to get new GM original equipment wheel nuts. Stop somewhere as soon as you can and have the nuts tightened with a torque wrench to the proper torque specification. See *Capacities and Specifications on page 5-100* for wheel nut torque specification.

Notice: **Improperly tightened wheel nuts can lead to brake pulsation and rotor damage. To avoid expensive brake repairs, evenly tighten the wheel nuts in the proper sequence and to the proper torque specification. See *Capacities and Specifications on page 5-100* for the wheel nut torque specification.**

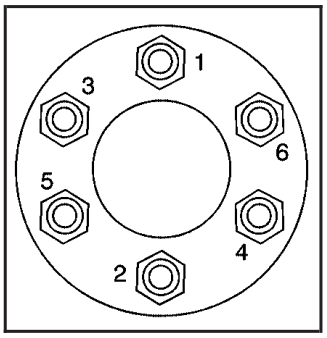

12. Tighten the nuts firmly in a crisscross sequence as shown by turning the wheel wrench clockwise.
13. When you install the wheel and tire, you must also reinstall the center cap. Place the cap on the wheel and tap it into place until it sits flush with the wheel.

Downloaded from www.Manualslib.com manuals search engine

Storing a Flat or Spare Tire and Tools

⚠ CAUTION:

Storing a jack, a tire, or other equipment in the passenger compartment of the vehicle could cause injury. In a sudden stop or collision, loose equipment could strike someone. Store all these in the proper place.

Use the art and text following to help you store the spare or flat tire back into its proper spot when you are done.

To store the flat or spare tire on the spare tire mount, do the following:

1. Slide the flat or spare tire onto the swing-gate.

   In order to store the flat or the spare tire, you may need someone to assist you.
2. Reinstall the nuts to retain the flat or spare tire.
3. Tighten the nuts by hand.

⚠ CAUTION:

Incorrect wheel nuts or improperly tightened wheel nuts can cause the wheel to come loose and even come off. This could lead to an accident. Be sure to use the correct wheel nuts. If you have to replace them, be sure to get new GM original equipment wheel nuts. Stop somewhere as soon as you can and have the nuts tightened with a torque wrench to the proper torque specification. See *Capacities and Specifications on page 5-100* for wheel nut torque specification.

Downloaded from www.Manualslib.com manuals search engine

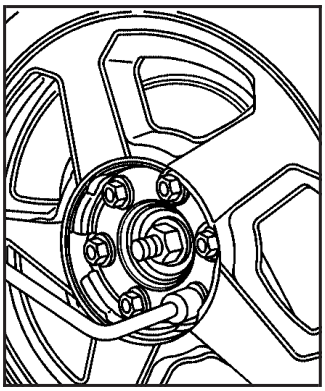

4. Use the wheel wrench to tighten the nuts firmly. Try to move the tire back and forth slightly to be sure it is secure.

5. Reinstall the center tire cover onto the spare or flat tire.

To store the jack tool bag and jack, follow these procedures:

1. Return the tools to the jack tool bag.

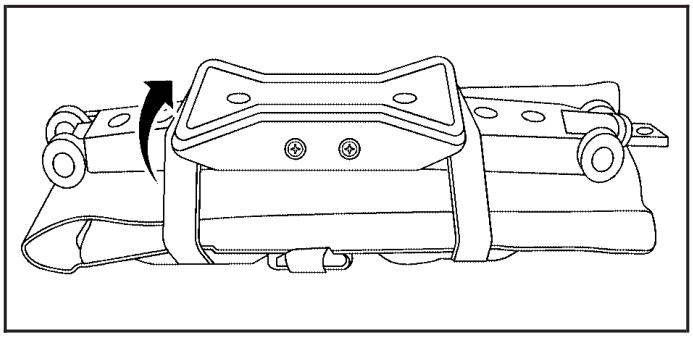

2. Secure the tool bag to the jack by securely wrapping the straps around the jack. Then, slide the straps through the rings on the bag and secure.
3. Position the jack and jack tool bag in the swing-gate.

   When reinstalling the jack and jack tool bag, make sure the jack base is securely seated behind the tabs in the swing-gate.

Downloaded from www.Manualslib.com manuals search engine

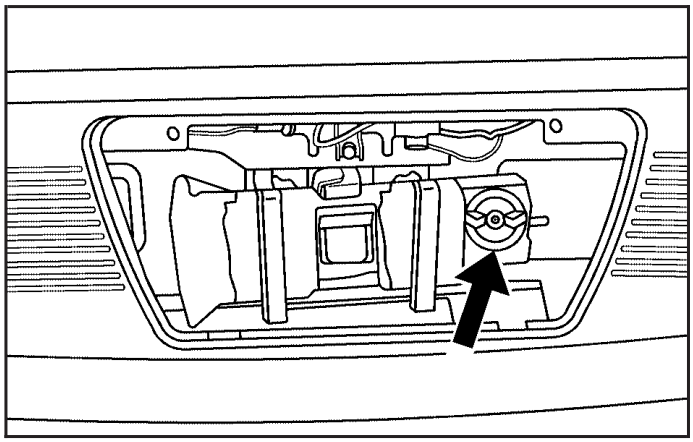

4. Reinstall the wing nut retainer to fasten the jack and tool bag in the storage compartment.

   Make sure that the wing nut passes through the tool bag and the jack before you tighten it.

5. Turn the wing nut retainer clockwise to secure.
6. Reinstall the compartment cover by inserting the locator tabs in the holes in the swing-gate. Push the latches down to secure.

Spare Tire

Your vehicle, when new, had a fully-inflated spare tire. A spare tire may lose air over time, so check its inflation pressure regularly. See *Inflation - Tire Pressure on page 5-58* and *Loading Your Vehicle on page 4-52* for information regarding proper tire inflation and loading your vehicle. For instruction on how to remove, install or store a spare tire, see *Removing the Flat Tire and Installing the Spare Tire on page 5-75* and *Storing a Flat or Spare Tire and Tools on page 5-80*.

After installing the spare tire on your vehicle, you should stop as soon as possible and make sure the spare is correctly inflated. Have the damaged or flat road tire repaired or replaced as soon as you can and installed back onto your vehicle. This way, a spare tire will be available in case you need it again.

Do not mix tires and wheels of different sizes, because they will not fit. Keep your spare tire and its wheel together.

Downloaded from www.Manualslib.com manuals search engine

Appearance Care

Cleaning the Inside of Your Vehicle

Your vehicle's interior will continue to look its best if it is cleaned often. Although not always visible, dust and dirt can accumulate on your upholstery. Dirt can damage carpet, fabric, leather, and plastic surfaces. Regular vacuuming is recommended to remove particles from your upholstery. It is important to keep your upholstery from becoming and remaining heavily soiled. Soils should be removed as quickly as possible. Your vehicle's interior may experience extremes of heat that could cause stains to set rapidly.

Lighter colored interiors may require more frequent cleaning. Use care because newspapers and garments that transfer color to your home furnishings may also transfer color to your vehicle's interior.

When cleaning your vehicle's interior, only use cleaners specifically designed for the surfaces being cleaned. Permanent damage may result from using cleaners on surfaces for which they were not intended. Use glass cleaner only on glass. Remove any accidental over-spray from other surfaces immediately. To prevent over-spray, apply cleaner directly to the cleaning cloth.

Notice: **If you use abrasive cleaners when cleaning glass surfaces on your vehicle, you could scratch the glass and/or cause damage to the rear window defogger. When cleaning the glass on your vehicle, use only a soft cloth and glass cleaner.**

Many cleaners contain solvents that may become concentrated in your vehicle's breathing space. Before using cleaners, read and adhere to all safety instructions on the label. While cleaning your vehicle's interior, maintain adequate ventilation by opening your vehicle's doors and windows.

Dust may be removed from small buttons and knobs using a small brush with soft bristles.

Your GM dealer has a product for cleaning your vehicle's glass. Should it become necessary, you can also obtain a product from your GM dealer to remove odors from your vehicle's upholstery.

Downloaded from www.Manualslib.com manuals search engine

Do not clean your vehicle using the following cleaners or techniques:

- Never use a knife or any other sharp object to remove a soil from any interior surface.
- Never use a stiff brush. It can cause damage to your vehicle's interior surfaces.
- Never apply heavy pressure or rub aggressively with a cleaning cloth. Use of heavy pressure can damage your interior and does not improve the effectiveness of soil removal.
- Use only mild, neutral-pH soaps. Avoid laundry detergents or dishwashing soaps with degreasers. Using too much soap will leave a residue that leaves streaks and attracts dirt. For liquid cleaners, about 20 drops per gallon (3.78 L) of water is a good guide.
- Do not heavily saturate your upholstery while cleaning.
- Damage to your vehicle's interior may result from the use of many organic solvents such as naptha, alcohol, etc.

Fabric/Carpet

Use a vacuum cleaner with a soft brush attachment frequently to remove dust and loose dirt. A canister vacuum with a beater bar in the nozzle may only be used on floor carpet and carpeted floor mats. For soils, always try to remove them first with plain water or club soda. Before cleaning, gently remove as much of the soil as possible using one of the following techniques:

- For liquids: gently blot the remaining soil with a paper towel. Allow the soil to absorb into the paper towel until no more can be removed.
- For solid dry soils: remove as much as possible and then vacuum.

To clean, use the following instructions:

1. Saturate a lint-free, clean white cloth with water or club soda.
2. Wring the cloth to remove excess moisture.
3. Start on the outside edge of the soil and gently rub toward the center. Continue cleaning, using a clean area of the cloth each time it becomes soiled.
4. Continue to gently rub the soiled area until the cleaning cloth remains clean.
5. If the soil is not completely removed, use a mild soap solution and repeat the cleaning process that was used with plain water.

Downloaded from www.Manualslib.com manuals search engine

If any of the soil remains, a commercial fabric cleaner or spot lifter may be necessary. When a commercial upholstery cleaner or spot lifter is to be used, test a small hidden area for colorfastness first. If the locally cleaned area gives any impression that a ring formation may result, clean the entire surface.

After the cleaning process has been completed, a paper towel can be used to blot excess moisture from the fabric or carpet.

Leather

A soft cloth dampened with water may be used to remove dust. If a more thorough cleaning is necessary, a soft cloth dampened with a mild soap solution can be used. Allow the leather to dry naturally. Do not use heat to dry. Never use steam to clean leather. Never use spot lifters or spot removers on leather. Many commercial leather cleaners and coatings that are sold to preserve and protect leather may permanently change the appearance and feel of your leather and are not recommended. Do not use silicone or wax-based products, or those containing organic solvents to clean your vehicle's interior because they can alter the appearance by increasing the gloss in a non-uniform manner. Never use shoe polish on your leather.

Instrument Panel, Vinyl, and Other Plastic Surfaces

A soft cloth dampened with water may be used to remove dust. If a more thorough cleaning is necessary, a clean soft cloth dampened with a mild soap solution can be used to gently remove dust and dirt. Never use spot lifters or removers on plastic surfaces. Many commercial cleaners and coatings that are sold to preserve and protect soft plastic surfaces may permanently change the appearance and feel of your interior and are not recommended. Do not use silicone or wax-based products, or those containing organic solvents to clean your vehicle's interior because they can alter the appearance by increasing the gloss in a non-uniform manner.

Some commercial products may increase gloss on your instrument panel. The increase in gloss may cause annoying reflections in the windshield and even make it difficult to see through the windshield under certain conditions.

Downloaded from www.Manualslib.com manuals search engine

Care of Safety Belts

Keep belts clean and dry.

> ⚠ **CAUTION:**
>
> **Do not bleach or dye safety belts. If you do, it may severely weaken them. In a crash, they might not be able to provide adequate protection. Clean safety belts only with mild soap and lukewarm water.**

Weatherstrips

Silicone grease on weatherstrips will make them last longer, seal better, and not stick or squeak. Apply silicone grease with a clean cloth. During very cold, damp weather frequent application may be required. See *Recommended Fluids and Lubricants on page 6-12*.

Washing Your Vehicle

The paint finish on the vehicle provides beauty, depth of color, gloss retention, and durability.

The best way to preserve the vehicle's finish is to keep it clean by washing it often with lukewarm or cold water.

Do not wash the vehicle in the direct rays of the sun. Use a car washing soap. Do not use strong soaps or chemical detergents. Be sure to rinse the vehicle well, removing all soap residue completely. GM-approved cleaning products can be obtained from your dealer. See *Vehicle Care/Appearance Materials on page 5-91*. Do not use cleaning agents that are petroleum based, or that contain acid or abrasives. All cleaning agents should be flushed promptly and not allowed to dry on the surface, or they could stain. Dry the finish with a soft, clean chamois or an all-cotton towel to avoid surface scratches and water spotting.

High pressure car washes may cause water to enter the vehicle.

Downloaded from www.Manualslib.com manuals search engine

Cleaning Exterior Lamps/Lenses

Use only lukewarm or cold water, a soft cloth and a car washing soap to clean exterior lamps and lenses. Follow instructions under *Washing Your Vehicle on page 5-86*.

Finish Care

Occasional waxing or mild polishing of your vehicle by hand may be necessary to remove residue from the paint finish. You can get GM-approved cleaning products from your dealer. See *Vehicle Care/Appearance Materials on page 5-91*.

If your vehicle has a “basecoat/clearcoat” paint finish, the clearcoat gives more depth and gloss to the colored basecoat. Always use waxes and polishes that are non-abrasive and made for a basecoat/clearcoat paint finish.

Notice: **Machine compounding or aggressive polishing on a basecoat/clearcoat paint finish may damage it. Use only non-abrasive waxes and polishes that are made for a basecoat/clearcoat paint finish on your vehicle.**

Foreign materials such as calcium chloride and other salts, ice melting agents, road oil and tar, tree sap, bird droppings, chemicals from industrial chimneys, etc., can damage your vehicle’s finish if they remain on painted surfaces. Wash the vehicle as soon as possible. If necessary, use non-abrasive cleaners that are marked safe for painted surfaces to remove foreign matter.

Exterior painted surfaces are subject to aging, weather and chemical fallout that can take their toll over a period of years. You can help to keep the paint finish looking new by keeping your vehicle garaged or covered whenever possible.

Protecting Exterior Bright Metal Parts

Bright metal parts should be cleaned regularly to keep their luster. Washing with water is all that is usually needed. However, you may use chrome polish on chrome or stainless steel trim, if necessary.

Use special care with aluminum trim. To avoid damaging protective trim, never use auto or chrome polish, steam or caustic soap to clean aluminum. A coating of wax, rubbed to high polish, is recommended for all bright metal parts.

Downloaded from www.Manualslib.com manuals search engine

Windshield, Backglass, and Wiper Blades

If the windshield is not clear after using the windshield washer, or if the wiper blade chatters when running, wax, sap or other material may be on the blade or windshield.

Clean the outside of the windshield with a full-strength glass cleaning liquid. The windshield is clean if beads do not form when you rinse it with water.

Grime from the windshield will stick to the wiper blades and affect their performance. Clean the blade by wiping vigorously with a cloth soaked in full-strength windshield washer solvent. Then rinse the blade with water.

Check the wiper blades and clean them as necessary; replace blades that look worn.

Aluminum or Chrome-Plated Wheels

Your vehicle may be equipped with either aluminum or chrome-plated wheels.

Keep the wheels clean using a soft clean cloth with mild soap and water. Rinse with clean water. After rinsing thoroughly, dry with a soft clean towel. A wax may then be applied.

Notice: **If you use strong soaps, chemicals, abrasive polishes, cleaners, brushes, or cleaners that contain acid on aluminum or chrome-plated wheels, you could damage the surface of the wheel(s). The repairs would not be covered by your warranty. Use only GM-approved cleaners on aluminum or chrome-plated wheels.**

The surface of these wheels is similar to the painted surface of your vehicle. Do not use strong soaps, chemicals, abrasive polishes, abrasive cleaners, cleaners with acid, or abrasive cleaning brushes on them because you could damage the surface.
Do not use chrome polish on aluminum wheels.

Notice: **Using chrome polish on aluminum wheels could damage the wheels. The repairs would not be covered by your warranty. Use chrome polish on chrome wheels only.**

Downloaded from www.Manualslib.com manuals search engine

Use chrome polish only on chrome-plated wheels, but avoid any painted surface of the wheel, and buff off immediately after application.

Notice: **If you drive your vehicle through an automatic car wash that has silicone carbide tire cleaning brushes, you could damage the aluminum or chrome-plated wheels. The repairs would not be covered by your warranty. Never drive a vehicle equipped with aluminum or chrome-plated wheels through an automatic car wash that uses silicone carbide tire cleaning brushes.**

Do not take your vehicle through an automatic car wash that has silicone carbide tire cleaning brushes. These brushes can also damage the surface of these wheels.

Tires

To clean the tires, use a stiff brush with tire cleaner.

Notice: **Using petroleum-based tire dressing products on your vehicle may damage the paint finish and/or tires. When applying a tire dressing, always wipe off any overspray from all painted surfaces on your vehicle.**

Sheet Metal Damage

If the vehicle is damaged and requires sheet metal repair or replacement, make sure the body repair shop applies anti-corrosion material to parts repaired or replaced to restore corrosion protection.

Original manufacturer replacement parts will provide the corrosion protection while maintaining the warranty.

Finish Damage

Any stone chips, fractures or deep scratches in the finish should be repaired right away. Bare metal will corrode quickly and may develop into major repair expense.

Minor chips and scratches can be repaired with touch-up materials available from your GM dealer. Larger areas of finish damage can be corrected in your GM dealer's body and paint shop.

Downloaded from www.Manualslib.com manuals search engine

Underbody Maintenance

Chemicals used for ice and snow removal and dust control can collect on the underbody. If these are not removed, corrosion and rust can develop on the underbody parts such as fuel lines, frame, floor pan, and exhaust system even though they have corrosion protection.

At least every spring, flush these materials from the underbody with plain water. Clean any areas where mud and debris can collect. Dirt packed in close areas of the frame should be loosened before being flushed. Your dealer or an underbody car washing system can do this for you.

Chemical Paint Spotting

Some weather and atmospheric conditions can create a chemical fallout. Airborne pollutants can fall upon and attack painted surfaces on the vehicle. This damage can take two forms: blotchy, ring-shaped discolorations, and small, irregular dark spots etched into the paint surface.

Although no defect in the paint job causes this, GM will repair, at no charge to the owner, the surfaces of new vehicles damaged by this fallout condition within 12 months or 12,000 miles (20 000 km) of purchase, whichever occurs first.

Downloaded from www.Manualslib.com manuals search engine

Vehicle Care/Appearance Materials

Description	Usage
Polishing Cloth Wax-Treated	Interior and exterior polishing cloth.
Tar and Road Oil Remover	Removes tar, road oil, and asphalt.
Chrome Cleaner and Polish	Use on chrome or stainless steel.
White Sidewall Tire Cleaner	Removes soil and black marks from whitewalls.
Vinyl Cleaner	Cleans vinyl.
Glass Cleaner	Removes dirt, grime, smoke and fingerprints.
Chrome and Wire Wheel Cleaner	Removes dirt and grime from chrome wheels and wire wheel covers.
Finish Enhancer	Removes dust, fingerprints, and surface contaminants. Spray on and wipe off.

Description	Usage
Swirl Remover Polish	Removes swirl marks, fine scratches, and other light surface contamination.
Cleaner Wax	Removes light scratches and protects finish.
Foaming Tire Shine Low Gloss	Cleans, shines, and protects in one step. No wiping necessary.
Wash Wax Concentrate	Medium foaming shampoo. Cleans and lightly waxes. Biodegradable and phosphate free.
Spot Lifter	Quickly removes spots and stains from carpets, vinyl, and cloth upholstery.
Odor Eliminator	Odorless spray odor eliminator used on fabrics, vinyl, leather and carpet.

Downloaded from www.Manualslib.com manuals search engine

Vehicle Identification

Vehicle Identification Number (VIN)

This is the legal identifier for your vehicle. It appears on a plate in the front corner of the instrument panel, on the driver's side. You can see it if you look through the windshield from outside your vehicle. The VIN also appears on the Vehicle Certification and Service Parts labels and the certificates of title and registration.

Engine Identification

The eighth character in the VIN is the engine code. This code will help you identify your vehicle's engine, specifications, and replacement parts.

Service Parts Identification Label

You will find this label on the inside of the glove box. It is very helpful if you ever need to order parts. On this label, you will find the following:

- VIN
- Model designation
- Paint information
- Production options and special equipment

Do not remove this label from the vehicle.

Downloaded from www.Manualslib.com manuals search engine

Electrical System

Add-On Electrical Equipment

Notice: **Don't add anything electrical to your vehicle unless you check with your dealer first. Some electrical equipment can damage your vehicle and the damage wouldn't be covered by your warranty. Some add-on electrical equipment can keep other components from working as they should.**

Your vehicle has an airbag system. Before attempting to add anything electrical to your vehicle, see *Servicing Your Airbag-Equipped Vehicle on page 1-68*.

Windshield Wiper Fuses

The windshield wiper motor is protected by a circuit breaker and a fuse. If the motor overheats due to heavy snow or ice, the wiper will stop until the motor cools. If the overload is caused by some electrical problem, be sure to get it fixed.

Power Windows and Other Power Options

Circuit breakers protect the power windows and other power accessories. When the current load is too heavy, the circuit breaker opens and closes, protecting the circuit until the problem is fixed or goes away.

Power and Heated Seat Circuit Breakers

There is a circuit breaker located underneath the driver's side front seat that controls the power and heated seat functions.

Downloaded from www.Manualslib.com manuals search engine

Fuses and Circuit Breakers

The wiring circuits in your vehicle are protected from short circuits by a combination of fuses and circuit breakers. This greatly reduces the chance of fires caused by electrical problems.

Look at the silver-colored band inside the fuse. If the band is broken or melted, replace the fuse. Be sure you replace a bad fuse with a new one of the identical size and rating.

If you ever have a problem on the road and do not have a spare fuse, you can borrow one that has the same amperage. Just pick some feature of your vehicle that you can get along without — like the radio or cigarette lighter — and use its fuse, if it is the correct amperage. Replace it as soon as you can.

Engine Compartment Fuse Block

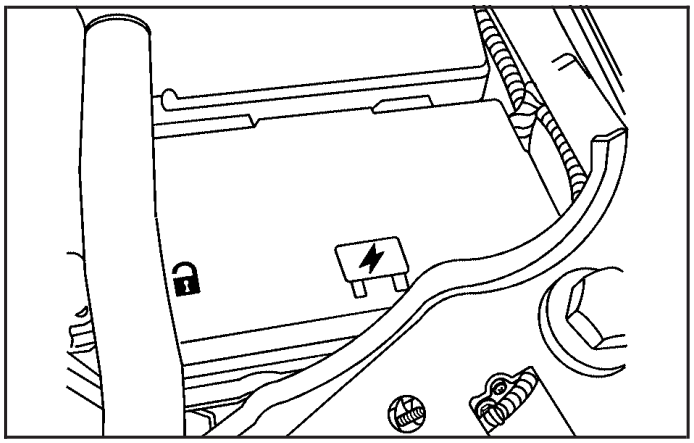

The engine compartment fuse block is located on the driver's side of the engine compartment. See *Engine Compartment Overview on page 5-12* for more information on location.

Downloaded from www.Manualslib.com manuals search engine

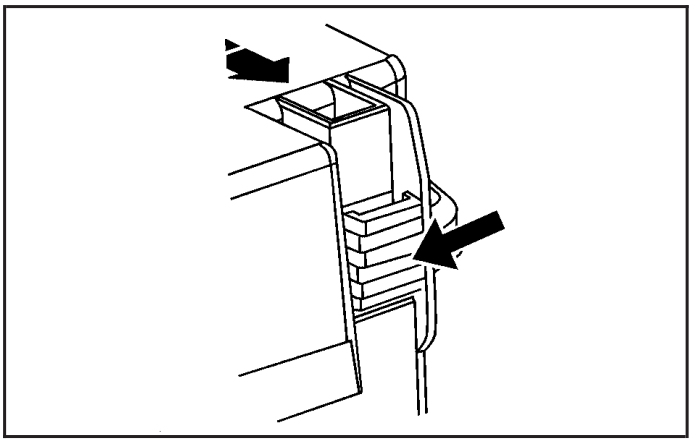

To remove the cover, push in on the tabs at the ends of the cover and lift. To reinstall the cover, line up the tabs and push down on the cover until the tabs clicks into place.

Downloaded from www.Manualslib.com manuals search engine

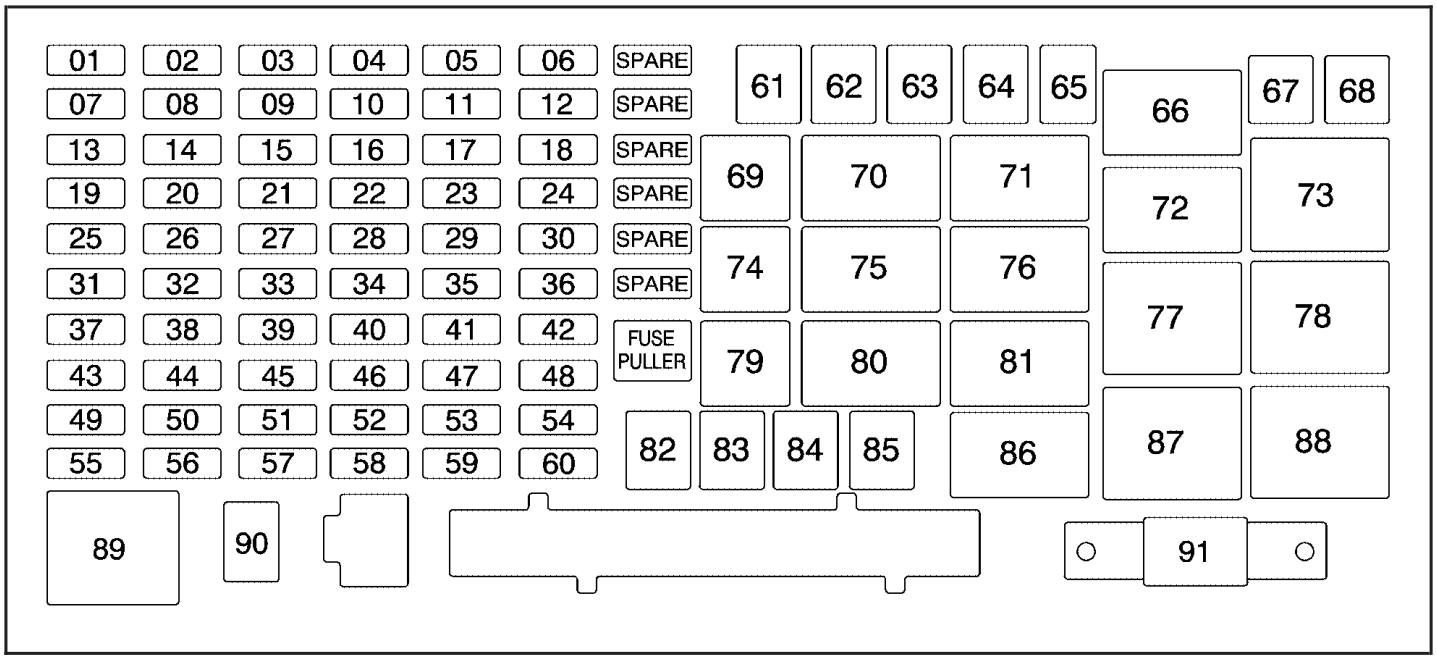

Downloaded from www.Manualslib.com manuals search engine

Fuse	Usage
1	Heated Seats
2	Grille Guard
3	Fuel Pump
4	Roof Lamp
5	Battery Ignition Switch
6	Front Wiper
7	Spare 1
8	Power Locks
9	Sunroof, Front Washer Pump
10	Accessories (SPO)
11	Not Used
12	Transfer Case Control Module
13	Radio, Heating, Ventilation, Air Conditioning Display
14	Body Control Module
15	Rear Wiper Motor
16	Rear Wiper Pump Switch
17	Spare 2

Fuse	Usage
18	Spare 6
19	Cluster
20	Rear Turn Signal, Hazard Signal
21	Powertrain Control Module 1
22	Mass Air Flow Sensor, Purge Solenoid
23	Injector
24	Fog Lamp
25	Powertrain Control Module B
26	Spare 4
27	Airbags
28	Back-up Lamps
29	Anti-lock Brakes, StabiliTrak®
30	Rear Window Defogger
31	Canister Vent
32	Spare 5
33	Ignition 1
34	Transmission

Downloaded from www.Manualslib.com manuals search engine

Fuse	Usage
35	Cruise, Inside Rearview Mirror
36	Horn
37	Driver's Side Rear Park Lamp
38	Amplifier
39	Reduced Intensity Low-Beam Daytime Running Lamps
40	Passenger's Side Headlamp
41	Driver's Side Headlamp
42	Trailer Back-Up Lamp
43	Front Park Lamps
44	Not Used
45	Auxiliary Power 2
46	Electronic Throttle Control
47	Oxygen Sensor
48	Air Conditioning Clutch
49	Passenger's Side Rear Park Lamp
50	XM™ Satellite Radio
51	Auxiliary Power 1

Fuse	Usage
52	StabiliTrak®, Anti-lock Brakes
53	Power Heater Switch
54	Stop
55	Trailer Parking Lamps
56	Front Turn Signal, Hazard Signal
57	Power Sunroof
58	Transfer Case Control Module Switch
59	Climate Control
60	Spare 8
61	Power Seats
62	Air Pump
63	Passenger's Side Power Window
64	Anti-lock Brakes, StabiliTrak® 2 Motor
67	Anti-lock Brakes, StabiliTrak® 1 Solenoid
68	Driver's Side Power Window

Downloaded from www.Manualslib.com manuals search engine

Fuse	Usage
82	Climate Control Fan
83	Electronic Brake Controller
84	Trailer B+ Fuse
85	Starter
91	Megafuse

Relay	Usage
66	Fuel Pump
69	Fog Lamp
70	High, Low Beam Headlamps
71	Rear Defogger
72	Windshield Wiper On/Off
73	Windshield Wiper High/Low
74	Horn
75	Headlamp
76	Air Conditioning Clutch

Relay	Usage
77	Powertrain Control Module
78	Run, Crank
79	Reduced Intensity Low-Beam Daytime Running Lamps
80	Not Used
81	Powertrain (Starter)
86	Spare 2
87	Heating, Ventilation, Air Conditioning
88	Retained Accessory Power
89	Park Lamp

Diode	Usage
65	Wiper Diode
90	Air Conditioning Clutch Diode

Downloaded from www.Manualslib.com manuals search engine

Capacities and Specifications

The following approximate capacities are given in English and metric. Please refer to *Recommended Fluids and Lubricants on page 6-12* for more information.

Capacities and Specifications

Application	Capacities	
	English	Metric
Air Conditioning Refrigerant R134a	1.28 lbs	0.58 kg
Cooling System	10.0 qt	9.5 L
Engine Oil with Filter	6.0 qt	5.7 L
Fuel Tank	23.0 gal	87.1 L
Transfer Case	1.6 qt	1.5 L
Transmission (Drain and Refill)		
Automatic	5.0 qt	4.7 L
Manual	2.5 qt	2.4 L
Wheel Nut Torque	100 lb ft	140 N•m
All capacities are approximate. When adding, be sure to fill to the appropriate level, as recommended in this manual.		

Engine Specifications

Engine	VIN Code	Transmission	Spark Plug Gap
VORTEC™ 3.5L L5	6	Automatic Manual	.042 inches (1.07 mm)

Downloaded from www.Manualslib.com manuals search engine

Section 6 Maintenance Schedule

Maintenance Schedule 6-2
Introduction 6-2
Maintenance Requirements 6-2
Your Vehicle and the Environment 6-2
Using the Maintenance Schedule 6-2
Scheduled Maintenance 6-4
Additional Required Services 6-6
Maintenance Footnotes 6-7
Owner Checks and Services 6-8
At Each Fuel Fill 6-8
At Least Once a Month 6-9
At Least Once a Year 6-9
Recommended Fluids and Lubricants 6-12
Normal Maintenance Replacement Parts 6-14
Maintenance Record 6-15

Downloaded from www.Manualslib.com manuals search engine

Maintenance Schedule

Introduction

Important: Keep engine oil at the proper level and change as recommended.

Have you purchased the GM Protection Plan? The Plan supplements your new vehicle warranties. See your Warranty and Owner Assistance booklet or your dealer for details.

Maintenance Requirements

Notice: **Maintenance intervals, checks, inspections, replacement parts, and recommended fluids and lubricants as prescribed in this manual are necessary to keep your vehicle in good working condition. Any damage caused by failure to follow scheduled maintenance may not be covered by warranty.**

Your Vehicle and the Environment

Proper vehicle maintenance not only helps to keep your vehicle in good working condition, but also helps the environment. All recommended maintenance is important. Improper vehicle maintenance can even affect the quality of the air we breathe. Improper fluid levels or the wrong tire inflation can increase the level of emissions from your vehicle. To help protect our environment, and to keep your vehicle in good condition, be sure to maintain your vehicle properly.

Using the Maintenance Schedule

We at General Motors want to help you keep your vehicle in good working condition. But we do not know exactly how you will drive it. You may drive very short distances only a few times a week. Or you may drive long distances all the time in very hot, dusty weather. You may use your vehicle in making deliveries. Or you may drive it to work, to do errands, or in many other ways.

Downloaded from www.Manualslib.com manuals search engine

Because of all the different ways people use their vehicles, maintenance needs vary. You may need more frequent checks and replacements. So please read the following and note how you drive. If you have any questions on how to keep your vehicle in good condition, see your GM Goodwrench® dealer.

This schedule is for vehicles that:

- carry passengers and cargo within recommended limits. You will find these limits on the tire and loading information label. See *Loading Your Vehicle on page 4-52*.
- are driven on reasonable road surfaces within legal driving limits.
- are driven off-road in the recommended manner. See *Off-Road Driving on page 4-17*.
- use the recommended fuel. See *Gasoline Octane on page 5-5*.

The services in *Scheduled Maintenance on page 6-4* should be performed when indicated. See *Additional Required Services on page 6-6* and *Maintenance Footnotes on page 6-7* for further information.

⚠ CAUTION:

Performing maintenance work on a vehicle can be dangerous. In trying to do some jobs, you can be seriously injured. Do your own maintenance work only if you have the required know-how and the proper tools and equipment for the job. If you have any doubt, see your GM Goodwrench® dealer to have a qualified technician do the work. See *Doing Your Own Service Work on page 5-4*.

Some maintenance services can be complex. So, unless you are technically qualified and have the necessary equipment, you should have your GM Goodwrench® dealer do these jobs.

When you go to your GM Goodwrench® dealer for your service needs, you will know that GM-trained and supported service technicians will perform the work using genuine GM parts.

If you want to purchase service information, see *Service Publications Ordering Information on page 7-15*.

Downloaded from www.Manualslib.com manuals search engine

Owner Checks and Services on page 6-8 tells you what should be checked, when to check it, and what you can easily do to help keep your vehicle in good condition.

The proper replacement parts, fluids, and lubricants to use are listed in *Recommended Fluids and Lubricants on page 6-12* and *Normal Maintenance Replacement Parts on page 6-14*. When your vehicle is serviced, make sure these are used. All parts should be replaced and all necessary repairs done before you or anyone else drives the vehicle. We recommend the use of genuine GM parts.

Scheduled Maintenance

When the CHANGE OIL message in the Driver Information Center (DIC) comes on, it means that service is required for your vehicle. See *DIC Warnings and Messages on page 3-44*. Have your vehicle serviced as soon as possible within the next 600 miles (1 000 km). It is possible that, if you are driving under the best conditions, the engine oil life system may not indicate that vehicle service is necessary for over a year. However, your engine oil and filter must be changed at least once a year and at this time the system must be reset. Your GM Goodwrench® dealer has GM-trained service technicians who will perform this work using genuine GM parts and reset the system.

If the engine oil life system is ever reset accidentally, you must service your vehicle within 3,000 miles (5 000 km) since your last service. Remember to reset the oil life system whenever the oil is changed. See *Engine Oil Life System on page 5-16* for information on the Engine Oil Life System and resetting the system.

When the CHANGE OIL message appears, certain services, checks, and inspections are required. Required services are described in the following for "Maintenance I" and "Maintenance II." Generally, it is recommended that your first service be Maintenance I, your second service be Maintenance II, and that you alternate Maintenance I and Maintenance II thereafter. However, in some cases, Maintenance II may be required more often.

Maintenance I — Use Maintenance I if the CHANGE OIL message comes on within 10 months since the vehicle was purchased or Maintenance II was performed.

Maintenance II — Use Maintenance II if the previous service performed was Maintenance I. Always use Maintenance II whenever the message comes on 10 months or more since the last service or if the message has not come on at all for one year.

Downloaded from www.Manualslib.com manuals search engine

Scheduled Maintenance

Service	Maintenance I	Maintenance II
Change engine oil and filter. See *Engine Oil on page 5-13*. Reset oil life system. See *Engine Oil Life System on page 5-16*. *An Emission Control Service.*	•	•
Lubricate chassis components. *See footnote #.*	•	•
Visually check for any leaks or damage. *See footnote (j).*	•	•
Inspect engine air cleaner filter. If necessary, replace filter. See *Engine Air Cleaner/Filter on page 5-18*.		•
Rotate tires and check inflation pressures and wear. See *Tire Inspection and Rotation on page 5-62* and “Tire Wear Inspection” in *At Least Once a Month on page 6-9*.	•	•
Inspect brake system. *See footnote (a).*	•	•
Check engine coolant and windshield washer fluid levels and add fluid as needed.	•	•
Perform any needed additional services. See “Additional Required Services” in this section.	•	•
Inspect suspension and steering components. *See footnote (b).*		•
Inspect engine cooling system. *See footnote (c).*		•
Inspect wiper blades. *See footnote (d).*		•
Inspect restraint system components. *See footnote (e).*		•
Lubricate body components. *See footnote (f).*		•
Check transmission fluid level and add fluid as needed.		•

Downloaded from www.Manualslib.com manuals search engine

Additional Required Services

The following services should be performed at the first maintenance service (I or II) after the indicated miles (kilometers) shown for each item.

Additional Required Services

Service and Miles (Kilometers)	25,000 (40 000)	50,000 (80 000)	75,000 (120 000)	100,000 (160 000)	125,000 (200 000)	150,000 (240 000)
Inspect fuel system for damage or leaks.	•	•	•	•	•	•
Inspect exhaust system for loose or damaged components.	•	•	•	•	•	•
Replace engine air cleaner filter. See *Engine Air Cleaner/Filter on page 5-18*.		•		•		•
Change automatic transmission fluid and filter (severe service). *See footnote (h).*		•		•		•
Change automatic transmission fluid and filter (normal service).				•		
Change transfer case fluid. *See footnote (g).*		•		•		•
Replace spark plugs and inspect spark plug wires. *An Emission Control Service.*				•		
Engine cooling system service (or every five years, whichever occurs first). *An Emission Control Service. See footnote (i).*						•
Inspect engine accessory drive belt. *An Emission Control Service. See footnote (k).*						•

Downloaded from www.Manualslib.com manuals search engine

Maintenance Footnotes

Lubricate the front suspension, ball joints, steering linkage, transmission shift linkage, and parking brake cable guides. Ball joints should not be lubricated unless their temperature is 10°F (-12°C) or higher, or they could be damaged.

(a) *Visually inspect brake lines and hoses for proper hook-up, binding, leaks, cracks, chafing, etc. Inspect disc brake pads for wear and rotors for surface condition. Inspect other brake parts, including calipers, parking brake, etc.*

(b) *Visually inspect front and rear suspension and steering system for damaged, loose, or missing parts, signs of wear or lack of lubrication. Inspect power steering lines and hoses for proper hook-up, binding, leaks, cracks, chafing, etc. Visually check constant velocity joints, rubber boots and axle seals for leaks. Rotate and inspect U-joints, retainers, and bolts on rear drive shaft for seizing or loosening.*

(c) *Visually inspect hoses and have them replaced if they are cracked, swollen, or deteriorated. Inspect all pipes, fittings, and clamps; replace with genuine GM parts as needed. To help ensure proper operation, a pressure test of the cooling system and pressure cap and cleaning the outside of the radiator and air conditioning condenser is recommended at least once a year.*

(d) *Visually inspect wiper blades for wear or cracking. Replace wiper blades that appear worn or damaged or that streak or miss areas of the windshield.*

(e) *Make sure the safety belt reminder light and all your belts, buckles, latch plates, retractors, and anchorages are working properly. Look for any other loose or damaged safety belt system parts. If you see anything that might keep a safety belt system from doing its job, have it repaired. Have any torn or frayed safety belts replaced. Also look for any opened or broken airbag coverings, and have them repaired or replaced. The airbag system does not need regular maintenance.*

(f) *Lubricate all key lock cylinders, hood latch assembly, secondary latch, pivots, spring anchor, release pawl, rear compartment hinges, outer swing-gate handle pivot points, rear door detent link, roller mechanism, swing-gate handle pivot points, latch bolt, fuel door hinge, locks, and folding seat hardware. More frequent lubrication may be required when exposed to a corrosive environment. Applying silicone grease on weatherstrips with a clean cloth will make them last longer, seal better, and not stick or squeak.*

(g) *Check vent hose at transfer case for kinks and proper installation.*

Downloaded from www.Manualslib.com manuals search engine

(h) *Change automatic transmission fluid and filter if the vehicle is mainly driven under one or more of these conditions:*

- *In heavy city traffic where the outside temperature regularly reaches 90°F (32°C) or higher.*
- *In hilly or mountainous terrain.*
- *When doing frequent trailer towing.*
- *Uses such as found in taxi, police, or delivery service.*

(i) *Drain, flush, and refill cooling system. This service can be complex; you should have your dealer perform this service. See Engine Coolant on page 5-24 for what to use. Inspect hoses. Clean radiator, condenser, pressure cap, and filler neck. Pressure test the cooling system and pressure cap.*

(j) *A fluid loss in any vehicle system could indicate a problem. Have the system inspected and repaired and the fluid level checked. Add fluid if needed.*

(k) *Visually inspect belt for fraying, excessive cracks, or obvious damage. Replace belt if necessary.*

Owner Checks and Services

These owner checks and services should be performed at the intervals specified to help ensure the safety, dependability, and emission control performance of your vehicle. Your GM Goodwrench® dealer can assist you with these checks and services.

Be sure any necessary repairs are completed at once. Whenever any fluids or lubricants are added to your vehicle, make sure they are the proper ones, as shown in *Recommended Fluids and Lubricants on page 6-12*.

At Each Fuel Fill

It is important to perform these underhood checks at each fuel fill.

Engine Oil Level Check

Check the engine oil level and add the proper oil if necessary. See *Engine Oil on page 5-13* for further details.

Notice: **It is important to check your oil regularly and keep it at the proper level. Failure to keep your engine oil at the proper level can cause damage to your engine not covered by your warranty.**

Downloaded from www.Manualslib.com manuals search engine

Engine Coolant Level Check

Check the engine coolant level and add DEX-COOL® coolant mixture if necessary. See *Engine Coolant on page 5-24* for further details.

Windshield Washer Fluid Level Check

Check the windshield washer fluid level in the windshield washer fluid reservoir and add the proper fluid if necessary.

At Least Once a Month

Tire Inflation Check

Visually inspect your vehicle's tires and make sure they are inflated to the correct pressures. Do not forget to check the spare tire. See *Tires on page 5-51* for further details. Check to make sure the spare tire is stored securely. See *Changing a Flat Tire on page 5-71*.

Tire Wear Inspection

Tire rotation may be required for high mileage highway drivers prior to the Engine Oil Life System service notification. Check the tires for wear and, if necessary, rotate the tires. See *Tire Inspection and Rotation on page 5-62*.

At Least Once a Year

Starter Switch Check

⚠ CAUTION:

When you are doing this inspection, the vehicle could move suddenly. If the vehicle moves, you or others could be injured.

1. Before you start, be sure you have enough room around the vehicle.
2. Firmly apply both the parking brake and the regular brake. See *Parking Brake on page 2-27*.
   Do not use the accelerator pedal, and be ready to turn off the engine immediately if it starts.
3. On automatic transmission vehicles, try to start the engine in each gear. The vehicle should start only in PARK (P) or NEUTRAL (N). If the vehicle starts in any other position, contact your GM Goodwrench® dealer for service.
   On manual transmission vehicles, put the shift lever in NEUTRAL (N), push the clutch down halfway, and try to start the engine. The vehicle should start only when the clutch is pushed down all the way to the floor. If the vehicle starts when the clutch is not pushed all the way down, contact your GM Goodwrench® dealer for service.

Downloaded from www.Manualslib.com manuals search engine

Automatic Transmission Shift Lock Control System Check

⚠ CAUTION:

When you are doing this inspection, the vehicle could move suddenly. If the vehicle moves, you or others could be injured.

1. Before you start, be sure you have enough room around the vehicle. It should be parked on a level surface.
2. Firmly apply the parking brake. See *Parking Brake on page 2-27*.

   Be ready to apply the regular brake immediately if the vehicle begins to move.
3. With the engine off, turn the ignition to ON, but do not start the engine. Without applying the regular brake, try to move the shift lever out of PARK (P) with normal effort. If the shift lever moves out of PARK (P), contact your GM Goodwrench® dealer for service.

Ignition Transmission Lock Check

While parked, and with the parking brake set, try to turn the ignition to LOCK in each shift lever position.

- With an automatic transmission, the ignition should turn to LOCK only when the shift lever is in PARK (P). The key should come out only in LOCK.
- With a manual transmission, the key should come out only in LOCK.

Contact your GM Goodwrench® dealer if service is required.

Downloaded from www.Manualslib.com manuals search engine

Parking Brake and Automatic Transmission Park (P) Mechanism Check

⚠ CAUTION:

When you are doing this check, your vehicle could begin to move. You or others could be injured and property could be damaged. Make sure there is room in front of your vehicle in case it begins to roll. Be ready to apply the regular brake at once should the vehicle begin to move.

Park on a fairly steep hill, with the vehicle facing downhill. Keeping your foot on the regular brake, set the parking brake.

- To check the parking brake's holding ability: With the engine running and transmission in NEUTRAL (N), slowly remove foot pressure from the regular brake pedal. Do this until the vehicle is held by the parking brake only.
- To check the PARK (P) mechanism's holding ability: With the engine running, shift to PARK (P). Then release the parking brake followed by the regular brake.

Contact your GM Goodwrench® dealer if service is required.

Underbody Flushing Service

At least every spring, use plain water to flush any corrosive materials from the underbody. Take care to clean thoroughly any areas where mud and other debris can collect.

Downloaded from www.Manualslib.com manuals search engine

Recommended Fluids and Lubricants

Fluids and lubricants identified below by name, part number, or specification may be obtained from your dealer.

Usage	Fluid/Lubricant
Engine Oil	Engine oil which meets GM Standard GM6094M and displays the American Petroleum Institute Certified for Gasoline Engines starburst symbol. GM Goodwrench® oil meets all the requirements for your vehicle. To determine the proper viscosity for your vehicle's engine, see *Engine Oil on page 5-13*.
Engine Coolant	50/50 mixture of clean, drinkable water and use only DEX-COOL® Coolant. See *Engine Coolant on page 5-24*.
Hydraulic Brake System	Delco® Supreme 11 Brake Fluid or equivalent DOT-3 brake fluid.
Windshield Washer	GM Optikleen® Washer Solvent.
Power Steering System	GM Power Steering Fluid (GM Part No. U.S. 89021184, in Canada 89021186).
Automatic Transmission	DEXRON®-VI Automatic Transmission Fluid.
Manual Transmission	Manual Transmission Fluid (GM Part No. U.S. 89021806, in Canada 89021807).
Hydraulic Clutch System	Hydraulic Clutch Fluid (GM Part No. U.S. 12345347, in Canada 10953517) or equivalent DOT-3 brake fluid.
Key Lock Cylinders	Multi-Purpose Lubricant, Superlube (GM Part No. U.S. 12346241, in Canada 10953474).
Chassis Lubrication	Chassis Lubricant (GM Part No. U.S. 12377985, in Canada 88901242) or lubricant meeting requirements of NLGI #2, Category LB or GC-LB.

Downloaded from www.Manualslib.com manuals search engine

Usage	Fluid/Lubricant
Front and Rear Axle	SAE 75W-90 Synthetic Axle Lubricant (GM Part No. U.S. 12378261, in Canada 10953455) meeting GM Specification 9986115.
Transfer Case	DEXRON®-III Automatic Transmission Fluid. Look for "Approved for the H-Specification" on the label.
Front Axle Propshaft Spline	Spline Lubricant, Special Lubricant (GM Part No. U.S. 12345879, in Canada 10953511) or lubricant meeting requirements of GM 9985830.
Hood Hinges	Multi-Purpose Lubricant, Superlube (GM Part No. U.S. 12346241, in Canada 10953474).

Usage	Fluid/Lubricant
Outer Swing-gate Handle Pivot Points	Multi-Purpose Lubricant, Superlube (GM Part No. U.S. 12346241, in Canada 10953474).
Weatherstrip Conditioning	Dielectric Silicone Grease (GM Part No. U.S. 12345579, in Canada 992887).
Weatherstrip Squeaks	Synthetic Grease with Teflon, Superlube (GM Part No. U.S. 12371287, in Canada 10953437).

Downloaded from www.Manualslib.com manuals search engine

Normal Maintenance Replacement Parts

Replacement parts identified below by name, part number or specification can be obtained from your GM dealer.

Part	GM Part Number	ACDelco® Part Number
Automatic Transmission Filter Kit	24225323	—
Engine Air Cleaner/Filter	15202408	A1624C
Engine Oil Filter	89017342	PF61
Spark Plugs	12599232	41-981
Wiper Blades		
Driver – 16.7 inches (42.5 cm)	10389555	—
Passenger – 15.7 inches (40.0 cm)	10389556	—
Rear – 11.8 inches (30.0 cm)	10389557	—

Downloaded from www.Manualslib.com manuals search engine

Maintenance Record

After the scheduled services are performed, record the date, odometer reading, who performed the service, and the type of services performed in the boxes provided. See *Maintenance Requirements on page 6-2*. Any additional information from *Owner Checks and Services on page 6-8* can be added on the following record pages. You should retain all maintenance receipts.

Maintenance Record

Date	Odometer Reading	Serviced By	Maintenance I or Maintenance II	Services Performed

Downloaded from www.Manualslib.com manuals search engine

Maintenance Record (cont'd)

Date	Odometer Reading	Serviced By	Maintenance I or Maintenance II	Services Performed

Downloaded from www.Manualslib.com manuals search engine

Maintenance Record (cont'd)

Date	Odometer Reading	Serviced By	Maintenance I or Maintenance II	Services Performed

Downloaded from www.Manualslib.com manuals search engine

Maintenance Record (cont'd)

Date	Odometer Reading	Serviced By	Maintenance I or Maintenance II	Services Performed

Downloaded from www.Manualslib.com manuals search engine

Section 7 Customer Assistance and Information

Customer Assistance and Information 7-2
Customer Satisfaction Procedure 7-2
Online Owner Center 7-3
Customer Assistance for Text Telephone (TTY) Users 7-4
Customer Assistance Offices 7-4
GM Mobility Reimbursement Program 7-5
Roadside Assistance Program 7-6
Courtesy Transportation 7-7
Vehicle Data Collection and Event Data Recorders 7-9
Collision Damage Repair 7-10

Reporting Safety Defects 7-14
Reporting Safety Defects to the United States Government 7-14
Reporting Safety Defects to the Canadian Government 7-14
Reporting Safety Defects to General Motors 7-15
Service Publications Ordering Information 7-15

Downloaded from www.Manualslib.com manuals search engine

Customer Assistance and Information

Customer Satisfaction Procedure

Your satisfaction and goodwill are important to your dealer and to HUMMER. Normally, any concerns with the sales transaction or the operation of your vehicle will be resolved by your dealer's sales or service departments. Sometimes, however, despite the best intentions of all concerned, misunderstandings can occur. If your concern has not been resolved to your satisfaction, the following steps should be taken:

STEP ONE: Discuss your concern with a member of dealership management. Normally, concerns can be quickly resolved at that level. If the matter has already been reviewed with the sales, service or parts manager, contact the owner of the dealership or the general manager.

STEP TWO: If after contacting a member of dealership management, it appears your concern cannot be resolved by the dealership without further help, contact the HUMMER Consumer Relations Manager by calling 1-866-HUMMER6 (486-6376), Customer Assistance prompt. In Canada, contact GM of Canada Customer Communication Centre in Oshawa by calling 1-800-263-3777 (English) or 1-800-263-7854 (French).

We encourage you to call the toll-free number in order to give your inquiry prompt attention. Please have the following information available to give the Customer Assistance Representative:

- Vehicle Identification Number (This is available from the vehicle registration or title, or the plate at the top left of the instrument panel and visible through the windshield.)
- Dealership name and location
- Vehicle delivery date and present mileage

When contacting HUMMER, please remember that your concern will likely be resolved at a dealer's facility. That is why we suggest you follow Step One first if you have a concern.

STEP THREE: Both General Motors and your dealer are committed to making sure you are completely satisfied with your new vehicle. However, if you continue to remain unsatisfied after following the procedure outlined in Steps One and Two, you should file with the BBB Auto Line Program to enforce any additional rights you may have. Canadian owners refer to your Warranty and Owner Assistance Information booklet for information on the Canadian Motor Vehicle Arbitration Plan (CAMVAP).

Downloaded from www.Manualslib.com manuals search engine

The BBB Auto Line Program is an out of court program administered by the Council of Better Business Bureaus to settle automotive disputes regarding vehicle repairs or the interpretation of the New Vehicle Limited Warranty. Although you may be required to resort to this informal dispute resolution program prior to filing a court action, use of the program is free of charge and your case will generally be heard within 40 days. If you do not agree with the decision given in your case, you may reject it and proceed with any other venue for relief available to you.

Contact the BBB Auto Line Program using the toll-free telephone number or write them at:

BBB Auto Line Program
Council of Better Business Bureaus, Inc.
4200 Wilson Boulevard
Suite 800
Arlington, VA 22203-1838

Telephone: 1-800- 955-5100

This program is available in all 50 states and the District of Columbia. Eligibility is limited by vehicle age, mileage, and other factors. General Motors reserves the right to change eligibility limitations and/or discontinue its participation in this program.

Online Owner Center

The Owner Center is a resource for your GM ownership needs. Specific vehicle information can be found in one place.

The Online Owner Center allows you to:

- Get e-mail service reminders.
- Access information about your specific vehicle, including tips and videos and an electronic version of this owner's manual (United States only).
- Keep track of your vehicle's service history and maintenance schedule.
- Find GM dealers for service nationwide.
- Receive special promotions and privileges only available to members (United States only).

Refer to the web for updated information.

To register your vehicle, visit www.MyGMLink.com (United States) or My GM Canada within www.gmcanada.com (Canada).

Downloaded from www.Manualslib.com manuals search engine

Customer Assistance for Text Telephone (TTY) Users

To assist customers who are deaf, hard of hearing, or speech-impaired and who use Text Telephones (TTYs), HUMMER has TTY equipment available at its Customer Assistance Center. Any TTY user can communicate with HUMMER by dialing: 1-800-833-6537.
(TTY users in Canada can dial 1-800-263-3830.)

Customer Assistance Offices

HUMMER encourages customers to call the toll-free number for assistance. However, if a customer wishes to write or e-mail HUMMER, refer to the addresses below.

United States – Customer Assistance

HUMMER Customer Assistance Center
P.O. Box 33177
Detroit, MI 48232-5177

www.HUMMER.com
1-866-HUMMER6 (1-866-486-6376)
1-800-833-6537 (For Text Telephone devices (TTYs))
Roadside Assistance: 1-866-HUMMER6
(1-866-486-6376)
Fax Number: 313-381-0022

From Puerto Rico:
1-800-496-9992 (English)
1-800-496-9993 (Spanish)
Fax Number: 313-381-0022

From U.S. Virgin Islands:
1-800-496-9994
Fax Number: 313-381-0022

Canada – Customer Assistance

General Motors of Canada Limited
Customer Communication Centre, 163-005
1908 Colonel Sam Drive
Oshawa, Ontario L1H 8P7

1-800-263-3777 (English)
1-800-263-7854 (French)
1-800-263-3830 (For Text Telephone devices (TTYs))
Roadside Assistance: 1-800-268-6800

Downloaded from www.Manualslib.com manuals search engine

Overseas – Customer Assistance

Please contact the local General Motors Business Unit.

Mexico, Central America and Caribbean Islands/Countries (Except Puerto Rico and U.S. Virgin Islands) – Customer Assistance

General Motors de Mexico, S. de R.L. de C.V.
Customer Assistance Center
Paseo de la Reforma # 2740
Col. Lomas de Bezares
C.P. 11910, Mexico, D.F.
01-800-508-0000
Long Distance: 011-52-53 29 0 800

GM Mobility Reimbursement Program

GM MOBILITY℠

This program, available to qualified applicants, can reimburse you up to $1,000 of the cost of eligible aftermarket adaptive equipment required for your vehicle, such as hand controls or a wheelchair/scooter lift.

The offer is available for a very limited period of time from the date of vehicle purchase/lease. For more details, or to determine your vehicle's eligibility, visit gmmobility.com or call the GM Mobility Assistance Center at 1-800-323-9935. Text telephone (TTY) users, call 1-800-833-9935.

GM of Canada also has a Mobility Program.
Call 1-800-GM-DRIVE (463-7483) for details.
TTY users call 1-800-263-3830.

Downloaded from www.Manualslib.com manuals search engine

Roadside Assistance Program

As the owner of a new HUMMER vehicle, you are automatically enrolled in the HUMMER Roadside Assistance program. This value-added service is intended to provide peace of mind as you drive in the city or travel the open road. Call **1-866-HUMMER6 (486-6376)** 24 hours a day, 365 days a year to speak with a HUMMER Roadside Assistance Representative.

We will provide the following services during the Bumper-to-Bumper warranty period, at no expense to you:

- **Fuel Delivery:** Delivery of enough fuel ($5 maximum) for the customer to get to the nearest service station.
- **Lock-out Service (identification required):** Replacement keys or locksmith service will be covered at no charge if you are unable to gain entry into your vehicle. Delivery of the replacement key will be covered within 10 miles (16 km).
- **Emergency Tow:** Tow to the nearest dealership for warranty service or in the event of a vehicle-disabling accident.
- **Flat Tire Change:** Installation of a spare tire will be covered at no charge. The customer is responsible for the repair or replacement of the tire if not covered by a warrantable failure.
- **Jump Start:** No-start occurrences which require a battery jump start will be covered at no charge.
- **Dealer Locator Service** Directions to the nearest dealer.
- **Trip Routing:** A Roadside Assistance Representative can provide specific information regarding this feature.
- **Trip Interruption Expense Benefits:** A Roadside Assistance Representative can provide specific information regarding this feature.

In many instances, mechanical failures are covered under HUMMER's Bumper-to-Bumper warranty. However, when other services are utilized, our Roadside Assistance Representatives will explain any payment obligations you might incur.

Downloaded from www.Manualslib.com manuals search engine

For prompt and efficient assistance when calling, please provide the following to the Roadside Assistance Representative:

- Your name, home address, and home telephone number.
- Telephone number of your location.
- Location of the vehicle.
- Model, year, color, and license plate number of the vehicle.
- Mileage, Vehicle Identification Number (VIN) and delivery date of the vehicle.
- Description of the problem.

While we hope you never have the occasion to use our service, it is added security while traveling for you and your family. Remember, we are only a phone call away. HUMMER Roadside Assistance: **1-866-HUMMER6 (486-6376)**, text telephone (TTY) users, call **1-888-889-2438**.

HUMMER reserves the right to limit services or reimbursement to an owner or driver when, in HUMMER's judgement, the claims become excessive in frequency or type of occurrence.

Roadside Assistance is not part of or included in the coverage provided by the New Vehicle Limited Warranty. HUMMER reserves the right to make any changes or discontinue the Roadside Assistance program at any time without notification.

Canadian Roadside Assistance

Vehicles purchased in Canada have an extensive roadside assistance program accessible from anywhere in Canada or the United States. Please refer to the Warranty and Owner Assistance Information book.

Courtesy Transportation

To enhance your ownership experience, we and our participating dealers are proud to offer Courtesy Transportation, a customer support program for new vehicles.

The Courtesy Transportation program is offered to customers in conjunction with the Bumper-to-Bumper coverage provided by the New Vehicle Limited Warranty. Several transportation options are available when warranty repairs are required. This will reduce your inconvenience during warranty repairs.

Downloaded from www.Manualslib.com manuals search engine

Scheduling Service Appointments

When your vehicle requires warranty service, you should contact your dealer and request an appointment. By scheduling a service appointment and advising your service consultant of your transportation needs, your dealer can help minimize your inconvenience.

If your vehicle cannot be scheduled into the service department immediately, keep driving it until it can be scheduled for service, unless, of course, the problem is safety-related. If it is, please call your dealership, let them know this, and ask for instructions.

If the dealer requests that you simply drop the vehicle off for service, you are urged to do so as early in the work day as possible to allow for the same day repair.

Transportation Options

Warranty service can generally be completed while you wait. However, if you are unable to wait, GM helps to minimize your inconvenience by providing several transportation options. Depending on the circumstances, your dealer can offer you one of the following:

Shuttle Service

Participating dealers can provide you with shuttle service to get you to your destination with minimal interruption of your daily schedule. This includes one-way or round trip shuttle service to a destination up to 10 miles (16 km) from the dealership.

Public Transportation or Fuel Reimbursement

If your vehicle requires warranty repairs, reimbursement of public transportation expenses may be available, for up to a maximum of five days. In addition, should you arrange transportation through a friend or relative, reimbursement for reasonable fuel expenses may be available, up to a five-day maximum. Claim amounts should reflect actual costs and be supported by original receipts.

Courtesy Rental Vehicle

Your dealer may arrange to provide you with a courtesy rental vehicle or reimburse you for a rental vehicle that you obtain if your vehicle is kept for a warranty repair. Reimbursement will be limited to a maximum amount per day and must be supported by receipts. This requires that you sign and complete a rental agreement and meet state, local and rental vehicle provider requirements. Requirements vary and may include minimum age requirements, insurance coverage, credit card, etc. You are responsible for fuel usage charges and may also be responsible for taxes, levies, usage fees, excessive mileage or rental usage beyond the completion of the repair.

Generally it is not possible to provide a like-vehicle as a courtesy rental.

Downloaded from www.Manualslib.com manuals search engine

Additional Program Information

Courtesy Transportation is available during the Bumper-to-Bumper warranty coverage period, but it is not part of the New Vehicle Limited Warranty. A separate booklet entitled *Warranty and Owner Assistance Information* furnished with each new vehicle provides detailed warranty coverage information.

Courtesy Transportation is available only at participating dealers and all program options, such as shuttle service, may not be available at every dealer. Please contact your dealer for specific information about availability. All Courtesy Transportation arrangements will be administered by appropriate dealer personnel.

Canadian Vehicles: For warranty repairs during the Complete Vehicle Coverage period of the General Motors of Canada New Vehicle Limited Warranty, alternative transportation may be available under the Courtesy Transportation Program. Please consult your dealer for details.

General Motors reserves the right to unilaterally modify, change or discontinue Courtesy Transportation at any time and to resolve all questions of claim eligibility pursuant to the terms and conditions described herein at its sole discretion.

Vehicle Data Collection and Event Data Recorders

Your vehicle, like other modern motor vehicles, has a number of sophisticated computer systems that monitor and control several aspects of the vehicle's performance. Your vehicle uses on-board vehicle computers to monitor emission control components to optimize fuel economy, to monitor conditions for airbag deployment and, if so equipped, to provide anti-lock braking and to help the driver control the vehicle in difficult driving situations. Some information may be stored during regular operations to facilitate repair of detected malfunctions; other information is stored only in a crash event by computer systems, such as those commonly called event data recorders (EDR).

In a crash event, computer systems, such as the Airbag Sensing and Diagnostic Module (SDM) in your vehicle may record information about the condition of the vehicle and how it was operated, such as data related to engine speed, brake application, throttle position, vehicle speed, safety belt usage, airbag readiness, airbag performance, and the severity of a collision. If your vehicle is equipped with StabiliTrak®, steering performance, including yaw rate, steering wheel angle, and lateral acceleration, is also recorded. This information has been used to improve vehicle crash performance and may be used to improve crash performance of future vehicles and driving safety.

Downloaded from www.Manualslib.com manuals search engine

Unlike the data recorders on many airplanes, these on-board systems do not record sounds, such as conversation of vehicle occupants.

To read this information, special equipment is needed and access to the vehicle or the device that stores the data is required. GM will not access information about a crash event or share it with others other than:

- with the consent of the vehicle owner or, if the vehicle is leased, with the consent of the lessee,
- in response to an official request of police or similar government office,
- as part of GM's defense of litigation through the discovery process, or
- as required by law.

In addition, once GM collects or receives data, GM may:

- use the data for GM research needs,
- make it available for research where appropriate confidentiality is to be maintained and need is shown, or
- share summary data which is not tied to a specific vehicle with non-GM organizations for research purposes.

Others, such as law enforcement, may have access to the special equipment that can read the information if they have access to the vehicle or the device that stores the data.

If your vehicle is equipped with OnStar®, please check the OnStar® subscription service agreement or manual for information on its operations and data collection.

Collision Damage Repair

If your vehicle is involved in a collision and it is damaged, have the damage repaired by a qualified technician using the proper equipment and quality replacement parts. Poorly performed collision repairs will diminish your vehicle's resale value, and safety performance can be compromised in subsequent collisions.

Collision Parts

Genuine GM Collision parts are new parts made with the same materials and construction methods as the parts with which your vehicle was originally built. Genuine GM Collision parts are your best choice to assure that your vehicle's designed appearance, durability and safety are preserved. The use of Genuine GM parts can help maintain your GM New Vehicle Warranty.

Downloaded from www.Manualslib.com manuals search engine

Recycled original equipment parts may also be used for repair. These parts are typically removed from vehicles that were total losses in prior accidents. In most cases, the parts being recycled are from undamaged sections of the vehicle. A recycled original equipment GM part, may be an acceptable choice to maintain your vehicle's originally designed appearance and safety performance, however, the history of these parts is not known. Such parts are not covered by your GM New Vehicle Limited Warranty, and any related failures are not covered by that warranty.

Aftermarket collision parts are also available. These are made by companies other than GM and may not have been tested for your vehicle. As a result, these parts may fit poorly, exhibit premature durability/corrosion problems, and may not perform properly in subsequent collisions. Aftermarket parts are not covered by your GM New Vehicle Limited Warranty, and any vehicle failure related to such parts are not covered by that warranty.

Repair Facility

GM also recommends that you choose a collision repair facility that meets your needs before you ever need collision repairs. Your GM dealer may have a collision repair center with GM-trained technicians and state of the art equipment, or be able to recommend a collision repair center that has GM-trained technicians and comparable equipment.

Insuring Your Vehicle

Protect your investment in your GM vehicle with comprehensive and collision insurance coverage. There are significant differences in the quality of coverage afforded by various insurance policy terms. Many insurance policies provide reduced protection to your GM vehicle by limiting compensation for damage repairs by using aftermarket collision parts. Some insurance companies will not specify aftermarket collision parts. When purchasing insurance, we recommend that you assure your vehicle will be repaired with GM original equipment collision parts. If such insurance coverage is not available from your current insurance carrier, consider switching to another insurance carrier.

If your vehicle is leased, the leasing company may require you to have insurance that assures repairs with Genuine GM Original Equipment Manufacturer (OEM) parts or Genuine Manufacturer replacement parts. Read your lease carefully, as you may be charged at the end of your lease for poor quality repairs.

Downloaded from www.Manualslib.com manuals search engine

If an Accident Occurs

Here is what to do if you are involved in an accident.

- Try to relax and then check to make sure you are all right. If you are uninjured, make sure that no one else in your vehicle, or the other vehicle, is injured.
- If there has been an injury, call 911 for help. Do not leave the scene of an accident until all matters have been taken care of. Move your vehicle only if its position puts you in danger or you are instructed to move it by a police officer.
- Give only the necessary and requested information to police and other parties involved in the accident. Do not discuss your personal condition, mental frame of mind, or anything unrelated to the accident. This will help guard against post-accident legal action.
- If you need roadside assistance, call GM Roadside Assistance. See *Roadside Assistance Program on page 7-6* for more information.
- If your vehicle cannot be driven, know where the towing service will be taking it. Get a card from the tow truck operator or write down the driver's name, the service's name, and the phone number.
- Remove any valuables from your vehicle before it is towed away. Make sure this includes your insurance information and registration if you keep these items in your vehicle.
- Gather the important information you will need from the other driver. Things like name, address, phone number, driver's license number, vehicle license plate, vehicle make, model and model year, Vehicle Identification Number (VIN), insurance company and policy number, and a general description of the damage to the other vehicle.
- If possible, call your insurance company from the scene of the accident. They will walk you through the information they will need. If they ask for a police report, phone or go to the police department headquarters the next day and you can get a copy of the report for a nominal fee. In some states with "no fault" insurance laws, a report may not be necessary. This is especially true if there are no injuries and both vehicles are driveable.

Downloaded from www.Manualslib.com manuals search engine

- Choose a reputable collision repair facility for your vehicle. Whether you select a GM dealer or a private collision repair facility to fix the damage, make sure you are comfortable with them. Remember, you will have to feel comfortable with their work for a long time.
- Once you have an estimate, read it carefully and make sure you understand what work will be performed on your vehicle. If you have a question, ask for an explanation. Reputable shops welcome this opportunity.

Managing the Vehicle Damage Repair Process

In the event that your vehicle requires damage repairs, GM recommends that you take an active role in its repair. If you have a pre-determined repair facility of choice, take your vehicle there, or have it towed there. Specify to the facility that any required replacement collision parts be original equipment parts, either new Genuine GM parts or recycled original GM parts. Remember, recycled parts will not be covered by your GM vehicle warranty.

Insurance pays the bill for the repair, but you must live with the repair. Depending on your policy limits, your insurance company may initially value the repair using aftermarket parts. Discuss this with your repair professional, and insist on Genuine GM parts. Remember if your vehicle is leased you may be obligated to have the vehicle repaired with Genuine GM parts, even if your insurance coverage does not pay the full cost.

If another party's insurance company is paying for the repairs, you are not obligated to accept a repair valuation based on that insurance company's collision policy repair limits, as you have no contractual limits with that company. In such cases, you can have control of the repair and parts choices as long as cost stays within reasonable limits.

Downloaded from www.Manualslib.com manuals search engine

Reporting Safety Defects

Reporting Safety Defects to the United States Government

If you believe that your vehicle has a defect which could cause a crash or could cause injury or death, you should immediately inform the National Highway Traffic Safety Administration (NHTSA), in addition to notifying General Motors.

If NHTSA receives similar complaints, it may open an investigation, and if it finds that a safety defect exists in a group of vehicles, it may order a recall and remedy campaign. However, NHTSA cannot become involved in individual problems between you, your dealer, or General Motors.

To contact NHTSA, you may call the Vehicle Safety Hotline toll-free at 1-888-327-4236 (TTY: 1-800-424-9153); go to http://www.safercar.gov; or write to:

Administrator, NHTSA
400 Seventh Street, SW.
Washington, D.C. 20590

You can also obtain other information about motor vehicle safety from http://www.safercar.gov.

Reporting Safety Defects to the Canadian Government

If you live in Canada, and you believe that your vehicle has a safety defect, you should immediately notify Transport Canada, in addition to notifying General Motors of Canada Limited. You may call them at 1-800-333-0510 or write to:

Transport Canada
Place de Ville Tower C
330 Sparks Street
Ottawa, Ontario K1A 0N5

Downloaded from www.Manualslib.com manuals search engine

Reporting Safety Defects to General Motors

In addition to notifying NHTSA (or Transport Canada) in a situation like this, we certainly hope you'll notify us. Please call us at 1-866-HUMMER6 (486-6376), or write:

HUMMER Customer Assistance Center
P.O. Box 33177
Detroit, MI 48232-5177

In Canada, please call us at 1-800-263-3777 (English) or 1-800-263-7854 (French). Or, write:

General Motors of Canada Limited
Customer Communication Centre 163-005
1908 Colonel Sam Drive
Oshawa, Ontario L1H 8P7

Service Publications Ordering Information

Service Manuals

Service Manuals have the diagnosis and repair information on engines, transmission, axle suspension, brakes, electrical, steering, body, etc.

Transmission, Transaxle, Transfer Case Unit Repair Manual

This manual provides information on unit repair service procedures, adjustments, and specifications for GM transmissions, transaxles, and transfer cases.

Service Bulletins

Service Bulletins give technical service information needed to knowledgeably service General Motors cars and trucks. Each bulletin contains instructions to assist in the diagnosis and service of your vehicle.

In Canada, information pertaining to Product Service Bulletins can be obtained by contacting your General Motors dealer or by calling 1-800-GM-DRIVE (1-800-463-7483).

Downloaded from www.Manualslib.com manuals search engine

Owner's Information

Owner publications are written specifically for owners and intended to provide basic operational information about the vehicle. The owner's manual will include the Maintenance Schedule for all models.

In-Portfolio: Includes a Portfolio, Owner's Manual, and Warranty Booklet.

RETAIL SELL PRICE: $35.00

Without Portfolio: Owner's Manual only.

RETAIL SELL PRICE: $25.00

Current and Past Model Order Forms

Service Publications are available for current and past model GM vehicles. To request an order form, please specify year and model name of the vehicle.

ORDER TOLL FREE: 1-800-551-4123
Monday-Friday 8:00 AM - 6:00 PM
Eastern Time

For Credit Card Orders Only
(VISA-MasterCard-Discover), visit Helm, Inc.
on the World Wide Web at: www.helminc.com

Or you can write to:

Helm, Incorporated
P.O. Box 07130
Detroit, MI 48207

Prices are subject to change without notice and without incurring obligation. Allow ample time for delivery.

Note to Canadian Customers: All listed prices are quoted in U.S. funds. Canadian residents are to make checks payable in U.S. funds.

Downloaded from www.Manualslib.com manuals search engine

A

Accessories and Modifications 5-3
Accessory Power Outlet(s) 3-19
Adding Equipment to Your Airbag-Equipped
  Vehicle 1-68
Additives, Fuel 5-6
Add-On Electrical Equipment 5-93
Air Cleaner/Filter, Engine 5-18
Air Conditioning 3-21
Airbag
  Passenger Status Indicator 3-29
  Readiness Light 3-28
Airbag Sensing and Diagnostic Module (SDM) 7-9
Airbag System 1-53
  Adding Equipment to Your Airbag-Equipped
    Vehicle 1-68
  How Does an Airbag Restrain? 1-61
  Passenger Sensing System 1-63
  Servicing Your Airbag-Equipped Vehicle 1-68
  What Makes an Airbag Inflate? 1-61
  What Will You See After an Airbag Inflates? 1-62
  When Should an Airbag Inflate? 1-59
  Where Are the Airbags? 1-56
Antenna, Fixed Mast 3-77
Antenna, XM™ Satellite Radio
  Antenna System 3-77
Anti-Lock Brake System (ABS) 4-7
Anti-Lock Brake, System Warning Light 3-33
Appearance Care
  Aluminum or Chrome-Plated Wheels 5-88
  Care of Safety Belts 5-86
  Chemical Paint Spotting 5-90
  Cleaning Exterior Lamps/Lenses 5-87
  Cleaning the Inside of Your Vehicle 5-83
  Fabric/Carpet 5-84
  Finish Care 5-87
  Finish Damage 5-89
  Instrument Panel, Vinyl, and Other Plastic
    Surfaces 5-85
  Leather 5-85
  Sheet Metal Damage 5-89
  Tires 5-89
  Underbody Maintenance 5-90
  Vehicle Care/Appearance Materials 5-91
  Washing Your Vehicle 5-86
  Weatherstrips 5-86
  Windshield, Backglass, and Wiper Blades 5-88

Downloaded from www.Manualslib.com manuals search engine

Ashtray(s) 3-20
Assist Step 4-35
Audio System(s) 3-48
Care of Your CD Player 3-77
Care of Your CDs 3-77
Fixed Mast Antenna 3-77
Navigation/Radio System, see Navigation Manual 3-76
Radio with CD 3-50
Radio with Six-Disc CD 3-63
Setting the Time 3-49
Theft-Deterrent Feature 3-76
Understanding Radio Reception 3-76
XM™ Satellite Radio Antenna System 3-77
Automatic Headlamp System 3-16
Automatic Transmission
Fluid 5-19
Operation 2-18

B

Battery 5-39
Run-Down Protection 3-19
Battery Warning Light 3-31
Before Leaving on a Long Trip 4-42
Bench Seat, Split (60/40) 1-8
Brake
Anti-Lock Brake System (ABS) 4-7
Emergencies 4-8
Parking 2-27
System Warning Light 3-32
Brakes 5-36
Braking 4-6
Braking in Emergencies 4-8
Break-In, New Vehicle 2-14
Bulb Replacement 5-47
Halogen Bulbs 5-47
Headlamp Aiming 5-45
Headlamps 5-48
Replacement Bulbs 5-49
Taillamps, Turn Signal, Stoplamps and Back-up Lamps 5-48
Buying New Tires 5-64

Downloaded from www.Manualslib.com manuals search engine

C

California Fuel 5-6
California Proposition 65 Warning 5-4
Canadian Owners ii
Capacities and Specifications 5-100
Carbon Monoxide 2-9, 2-31, 4-45, 4-58
Care of
  Safety Belts 5-86
  Your CD Player 3-77
  Your CDs 3-77
Cargo Cover 2-46
Cargo Tie Downs 2-46
Chains, Tire 5-69
Check
  Engine Light 3-35
Checking Things Under the Hood 5-10
Chemical Paint Spotting 5-90
Child Restraints
  Child Restraint Systems 1-36
  Infants and Young Children 1-32
  Lower Anchors and Tethers for Children 1-41
  Older Children 1-30
  Securing a Child Restraint in a Rear Seat Position 1-47
  Securing a Child Restraint in the Right Front Seat Position 1-49
  Where to Put the Restraint 1-40
Cigarette Lighter 3-20
Cleaning
  Aluminum or Chrome-Plated Wheels 5-88
  Exterior Lamps/Lenses 5-87
  Fabric/Carpet 5-84
  Finish Care 5-87
  Inside of Your Vehicle 5-83
  Instrument Panel, Vinyl, and Other Plastic Surfaces 5-85
  Leather 5-85
  Tires 5-89
  Underbody Maintenance 5-90
  Washing Your Vehicle 5-86
  Weatherstrips 5-86
  Windshield, Backglass, and Wiper Blades 5-88
Climate Control System 3-21
  Outlet Adjustment 3-23
Clutch, Hydraulic 5-23
Collision Damage Repair 7-10
Comfort Guides, Rear Safety Belt 1-27
Content Theft-Deterrent 2-12
Control of a Vehicle 4-5
Convenience Net 2-46
Coolant
  Engine Temperature Gage 3-34
  Heater, Engine 2-17
Cooling System 5-29
Cruise Control 3-11

Downloaded from www.Manualslib.com manuals search engine

Cruise Control Light 3-39
Cupholder(s) 2-43
Customer Assistance Information
Courtesy Transportation 7-7
Customer Assistance for Text Telephone (TTY) Users 7-4
Customer Assistance Offices 7-4
Customer Satisfaction Procedure 7-2
GM Mobility Reimbursement Program 7-5
Reporting Safety Defects to General Motors 7-15
Reporting Safety Defects to the Canadian Government 7-14
Reporting Safety Defects to the United States Government 7-14
Roadside Assistance Program 7-6
Service Publications Ordering Information 7-15

D

Daytime Running Lamps 3-16
Defensive Driving 4-2
Doing Your Own Service Work 5-4
Dome Lamp 3-18
Dome Lamp Override 3-19
Door
Locks 2-7
Power Door Locks 2-8
Programmable Automatic Door Locks 2-8
Driver
Position, Safety Belt 1-16
Driver Information Center (DIC) 3-41
DIC Controls and Displays 3-41
DIC Warnings and Messages 3-44
Driving
At Night 4-36
City 4-40
Defensive 4-2
Drunken 4-3
Freeway 4-41
Hill and Mountain Roads 4-43
In Rain and on Wet Roads 4-37
Off-Road 4-17
Recovery Loops 4-51
Rocking Your Vehicle to Get it Out 4-50
Winter 4-45

Downloaded from www.Manualslib.com manuals search engine

E

Electrical System
- Add-On Equipment 5-93
- Engine Compartment Fuse Block 5-94
- Fuses and Circuit Breakers 5-94
- Power Windows and Other Power Options 5-93
- Windshield Wiper Fuses 5-93

Engine
- Air Cleaner/Filter 5-18
- Battery 5-39
- Check and Service Engine Soon Light 3-35
- Coolant 5-24
- Coolant Heater 2-17
- Coolant Temperature Gage 3-34
- Engine Compartment Overview 5-12
- Exhaust 2-31
- Fan Noise 5-33
- Oil 5-13
- Oil Life System 5-16
- Overheating 5-27
- Starting 2-16

Event Data Recorders (EDR) 7-9
Exit Lighting 3-19
Extender, Safety Belt 1-29
Exterior Lamps 3-14

F

Filter
- Engine Air Cleaner 5-18

Finish Damage 5-89
Fixed Mast Antenna 3-77
Flashers, Hazard Warning 3-6
Flash-to-Pass 3-9
Flat Tire 5-70
Flat Tire, Changing 5-71
Flat Tire, Storing 5-80

Fluid
- Automatic Transmission 5-19
- Manual Transmission 5-21
- Power Steering 5-34
- Windshield Washer 5-35

Fog Lamps 3-18
Four-Wheel Drive 5-44
Four-Wheel Drive, Full-Time 2-22
Front Armrest Storage Area 2-43
Front Axle 5-44
Front Seat Storage Net 2-43

Downloaded from www.Manualslib.com manuals search engine

Fuel 5-5
Additives 5-6
California Fuel 5-6
Filling a Portable Fuel Container 5-10
Filling Your Tank 5-8
Fuels in Foreign Countries 5-7
Gage 3-40
Gasoline Octane 5-5
Gasoline Specifications 5-5
Fuses
Engine Compartment Fuse Block 5-94
Fuses and Circuit Breakers 5-94
Windshield Wiper 5-93

G

Gage
Engine Coolant Temperature 3-34
Fuel 3-40
Speedometer 3-26
Tachometer 3-26
Garage Door Opener 2-38
Gasoline
Octane 5-5
Specifications 5-5
Glove Box 2-43
GM Mobility Reimbursement Program 7-5

H

Hazard Warning Flashers 3-6
Head Restraints 1-7
Headlamp
Aiming 5-45
Headlamps 5-48
Automatic Headlamp System 3-16
Bulb Replacement 5-47
Daytime Running Lamps 3-16
Flash-to-Pass 3-9
Halogen Bulbs 5-47
High/Low Beam Changer 3-8
On Reminder 3-15
Heated Seats 1-4
Heater 3-21
Highbeam On Light 3-39
Highway Hypnosis 4-43
Hill and Mountain Roads 4-43
Hood
Checking Things Under 5-10
Release 5-11
Horn 3-6
How to Use This Manual ii
How to Wear Safety Belts Properly 1-16
Hydraulic Clutch 5-23

Downloaded from www.Manualslib.com manuals search engine

I

Ignition Positions 2-15
Infants and Young Children, Restraints 1-32
Inflation - Tire Pressure 5-58
Instrument Panel
  Overview 3-4
Instrument Panel (I/P)
  Brightness 3-18
  Cluster 3-25

J

Jump Starting 5-40

K

Keyless Entry System 2-4
Keys 2-2

L

Labeling, Tire Sidewall 5-52
Lamps
  Battery Run-Down Protection 3-19
  Dome 3-18
  Dome Lamp Override 3-19
  Exterior 3-14
  Fog 3-18
  Off-Road 3-17
  Reading 3-19
LATCH System
  Child Restraints 1-41
Light
  Airbag Readiness 3-28
  Anti-Lock Brake System Warning 3-33
  Battery Warning 3-31
  Brake System Warning 3-32
  Cruise Control 3-39
  Highbeam On 3-39
  Malfunction Indicator 3-35
  Oil Pressure 3-38
  Passenger Airbag Status Indicator 3-29
  Passenger Safety Belt Reminder 3-27
  Safety Belt Reminder 3-27
  Security 3-39

Downloaded from www.Manualslib.com manuals search engine

Light (cont.)
StabiliTrak® Not Ready 3-33
Tire Pressure 3-34
Traction Off 3-33
Up-Shift 3-31
Lighting
Exit 3-19
Loading Your Vehicle 4-52
Locking Rear Axle 4-10
Lockout Protection 2-8
Locks
Door 2-7
Lockout Protection 2-8
Power Door 2-8
Programmable Automatic Door Locks 2-8
Loss of Control 4-16
Luggage Carrier 2-43
Lumbar
Power Controls 1-3

M

Maintenance Schedule
Additional Required Services 6-6
At Each Fuel Fill 6-8
At Least Once a Month 6-9
At Least Once a Year 6-9
Maintenance Schedule (cont.)
Introduction 6-2
Maintenance Footnotes 6-7
Maintenance Record 6-15
Maintenance Requirements 6-2
Normal Maintenance Replacement Parts 6-14
Owner Checks and Services 6-8
Recommended Fluids and Lubricants 6-12
Scheduled Maintenance 6-4
Using 6-2
Your Vehicle and the Environment 6-2
Malfunction Indicator Light 3-35
Manual Seats 1-2
Manual Transmission
Fluid 5-21
Operation 2-21
Message
DIC Warnings and Messages 3-44
Mirrors
Automatic Dimming Rearview with Compass and Temperature Display 2-33
Outside Convex Mirror 2-36
Outside Power Mirrors 2-35
MyGMLink.com 7-3

Downloaded from www.Manualslib.com manuals search engine

N

Navigation/Radio System, see Navigation Manual 3-76
New Vehicle Break-In 2-14
Normal Maintenance Replacement Parts 6-14

O

Odometer 3-26
Odometer, Trip 3-26
Off-Road Driving 4-17
Off-Road Lamps 3-17
Off-Road Recovery 4-14
Oil
  Engine 5-13
  Pressure Light 3-38
Oil, Engine Oil Life System 5-16
Older Children, Restraints 1-30
Online Owner Center 7-3
OnStar® System, see OnStar® Manual 2-36
Other Warning Devices 3-6
Outlet Adjustment 3-23
Outlet(s), Accessory Power 3-19
Outside
  Convex Mirror 2-36
  Power Mirrors 2-35
Owner Checks and Services 6-8
Owners, Canadian ii

P

Paint, Damage 5-89
Park (P)
  Shifting Into 2-28
  Shifting Out of 2-30
Parking
  Brake 2-27
  Over Things That Burn 2-31
Parking Your Vehicle 2-30
Passenger Airbag Status Indicator 3-29
Passenger Sensing System 1-63
Passing 4-14
Passlock® 2-14
Power
  Accessory Outlet(s) 3-19
  Door Locks 2-8
  Electrical System 5-93

Downloaded from www.Manualslib.com manuals search engine

Power (cont.)
Lumbar Controls 1-3
Retained Accessory (RAP) 2-16
Six-Way Seats 1-3
Steering Fluid 5-34
Windows 2-11
Pretensioners, Safety Belt 1-29
Programmable Automatic Door Locks 2-8

Q

Questions and Answers About Safety Belts 1-15

R

Radiator Pressure Cap 5-27
Radios 3-48
Care of Your CD Player 3-77
Care of Your CDs 3-77
Navigation/Radio System, see Navigation Manual 3-76
Radio with CD 3-50
Radio with Six-Disc CD 3-63
Setting the Time 3-49
Theft-Deterrent 3-76
Understanding Reception 3-76
Reading Lamps 3-19
Rear Axle 5-44
Locking 4-10
Rear Safety Belt Comfort Guides 1-27
Rear Seat Passengers, Safety Belts 1-24
Rear Storage Area 2-46
Rear Windshield Washer/Wiper 3-10
Rearview Mirror, Automatic Dimming with Compass and Temperature Display 2-33
Reclining Seatbacks 1-4
Recommended Fluids and Lubricants 6-12
Recovery Loops 4-51
Recreational Vehicle Towing 4-56
Remote Keyless Entry System 2-4
Remote Keyless Entry System, Operation 2-5
Removing the Flat Tire and Installing the Spare Tire 5-75
Removing the Spare Tire and Tools 5-73
Replacement Bulbs 5-49
Reporting Safety Defects
Canadian Government 7-14
General Motors 7-15
United States Government 7-14
Restraint System Check
Checking the Restraint Systems 1-69
Replacing Restraint System Parts After a Crash 1-70

Downloaded from www.Manualslib.com manuals search engine

Retained Accessory Power (RAP) 2-16
Right Front Passenger Position, Safety Belts 1-24
Roadside
  Assistance Program 7-6
Rocking Your Vehicle to Get it Out 4-50
Running the Engine While Parked 2-32

S

Safety Belt
  Passenger Reminder Light 3-27
  Pretensioners 1-29
  Reminder Light 3-27
Safety Belts
  Care of 5-86
  Driver Position 1-16
  How to Wear Safety Belts Properly 1-16
  Questions and Answers About Safety Belts 1-15
  Rear Safety Belt Comfort Guides 1-27
  Rear Seat Passengers 1-24
  Right Front Passenger Position 1-24
  Safety Belt Extender 1-29
  Safety Belt Use During Pregnancy 1-24
  Safety Belts Are for Everyone 1-11
  Shoulder Belt Height Adjuster 1-23
Safety Warnings and Symbols iii
Scheduled Maintenance 6-4
Seats
  60/40 Split Bench Seat 1-8
  Head Restraints 1-7
  Heated Seats 1-4
  Manual 1-2
  Power Lumbar 1-3
  Reclining Seatbacks 1-4
  Six-Way Power Seats 1-3
Securing a Child Restraint
  Rear Seat Position 1-47
  Right Front Seat Position 1-49
Security Light 3-39
Service 5-3
  Accessories and Modifications 5-3
  Adding Equipment to the Outside of Your
    Vehicle 5-5
  California Proposition 65 Warning 5-4
  Doing Your Own Work 5-4
  Engine Soon Light 3-35
  Publications Ordering Information 7-15
Servicing Your Airbag-Equipped Vehicle 1-68
Setting the Time 3-49
Sheet Metal Damage 5-89
Shifting Into Park (P) 2-28
Shifting Out of Park (P) 2-30
Shoulder Belt Height Adjuster 1-23
Side Steps 4-35

Downloaded from www.Manualslib.com manuals search engine

Signals, Turn and Lane-Change 3-8
Spare Tire 5-82
Installing 5-75
Removing 5-73
Storing 5-80
Specifications, Capacities 5-100
Speedometer 3-26
Split Bench Seat (60/40) 1-8
StabiliTrak® System 4-11
StabiliTrak® Not Ready Light 3-33
Starting Your Engine 2-16
Steering 4-12
Steering Wheel, Tilt Wheel 3-6
Storage Areas
Convenience Net 2-46
Cupholder(s) 2-43
Front Armrest Storage Area 2-43
Front Seat Storage Net 2-43
Glove Box 2-43
Luggage Carrier 2-43
Rear Storage Area 2-46
Stuck in Sand, Mud, Ice or Snow 4-50
Sun Visors 2-12
Sunroof 2-47
Swing-gate 2-9

T

Tachometer 3-26
Taillamps
Turn Signal, Stoplamps and Back-up Lamps 5-48
Theft-Deterrent, Radio 3-76
Theft-Deterrent Systems 2-12
Content Theft-Deterrent 2-12
Passlock® 2-14
Tilt Wheel 3-6
Tire
Pressure Light 3-34
Tires 5-51
Aluminum or Chrome-Plated Wheels,
Cleaning 5-88
Buying New Tires 5-64
Chains 5-69
Changing a Flat Tire 5-71
Cleaning 5-89
Different Size 5-65
If a Tire Goes Flat 5-70
Inflation - Tire Pressure 5-58
Inspection and Rotation 5-62
Installing the Spare Tire 5-75
Pressure Monitor System 5-59
Removing the Flat Tire 5-75
Removing the Spare Tire and Tools 5-73

Downloaded from www.Manualslib.com manuals search engine

Tires (cont.)
Spare Tire 5-82
Storing a Flat or Spare Tire and Tools 5-80
Tire Sidewall Labeling 5-52
Tire Terminology and Definitions 5-55
Uniform Tire Quality Grading 5-66
Wheel Alignment and Tire Balance 5-67
Wheel Replacement 5-67
When It Is Time for New Tires 5-63
Towing
Recreational Vehicle 4-56
Towing a Trailer 4-58
Your Vehicle 4-56
Traction
Control System (TCS) 4-9
Off Light 3-33
StabiliTrak® System 4-11
Trailer
Recommendations 4-69
Transmission
Fluid, Automatic 5-19
Fluid, Manual 5-21
Up-Shift Light 3-31
Transmission Operation, Automatic 2-18
Transmission Operation, Manual 2-21
Trip Odometer 3-26
Turn and Lane-Change Signals 3-8
Turn Signal/Multifunction Lever 3-7

U

Understanding Radio Reception 3-76
Uniform Tire Quality Grading 5-66
Universal Home Remote System 2-38
Operation 2-39
Up-Shift Light 3-31

V

Vehicle
Control 4-5
Damage Warnings iv
Loading 4-52
Parking Your 2-30
Symbols iv
Vehicle Data Collection and Event Data
Recorders 7-9
Vehicle Identification
Number (VIN) 5-92
Service Parts Identification Label 5-92
Ventilation Adjustment 3-23
Visors 2-12

Downloaded from www.Manualslib.com manuals search engine

W

Warning Lights, Gages and Indicators 3-24
Warnings
  DIC Warnings and Messages 3-44
  Hazard Warning Flashers 3-6
  Other Warning Devices 3-6
  Safety and Symbols iii
  Vehicle Damage iv
Wheels
  Alignment and Tire Balance 5-67
  Different Size 5-65
  Replacement 5-67
Where to Put the Restraint 1-40
Windows 2-10
  Power 2-11
Windshield
  Backglass, and Wiper Blades, Cleaning 5-88
  Washer 3-10
  Washer Fluid 5-35
  Wiper Blade Replacement 5-50
  Wiper Fuses 5-93
  Wipers 3-9
Windshield, Rear Washer/Wiper 3-10
Winter Driving 4-45

X

XM™ Satellite Radio Antenna System 3-77

Y

Your Vehicle and the Environment 6-2

Downloaded from www.Manualslib.com manuals search engine