Workshop Manual

Audi A4 2015 ➤
Audi A4 China 2016 ➤
Audi A5 2016 ➤

4-cylinder direct injection engine (2.0 ltr. 4-valve TFSI, EA 888 Gen. III, B cycle)									
Engine ID	CVKB	DBPA	CWNA	CVLA	DEMA	DHDA	DKUA	DKUB	DKYA
	DLVA	DLVB	CVKC	DEMB	DTAA	DTAB			

Edition 01.2020

Protected by copyright. Copying for private or commercial purposes, in part or in whole, is not permitted unless authorised by AUDI AG. AUDI AG does not guarantee or accept any liability with respect to the correctness of information in this document. Copyright by AUDI AG.

List of Workshop Manual Repair Groups

Repair Group

00 - Technical data
10 - Removing and installing engine
13 - Crankshaft group
15 - Cylinder head, valve gear
17 - Lubrication
19 - Cooling
21 - Turbocharging/supercharging
24 - Mixture preparation - injection
26 - Exhaust system
28 - Ignition system

Protected by copying for private or commercial purposes, in part or in whole, is not permitted unless authorised by AUDI AG. AUDI AG does not guarantee or accept any liability with respect to the correctness of information in this document. Copyright by AUDI AG.

Technical information should always be available to the foremen and mechanics, because their careful and constant adherence to the instructions is essential to ensure vehicle road-worthiness and safety. In addition, the normal basic safety precautions for working on motor vehicles must, as a matter of course, be observed.

All rights reserved.
No reproduction without prior agreement from publisher.

Copyright © 2019 Audi AG, Ingolstadt

Contents

00 - Technical data 1
1 Identification 1
2 Safety precautions 2
2.1 Safety precautions when working on vehicles with natural gas systems 2
2.2 Safety precautions for all vehicles 2
3 Repair instructions 3

10 - Removing and installing engine 4
1 Removing and installing engine 4
1.1 Removing engine 4
1.2 Securing engine to engine and gearbox support 54
1.3 Installing engine 54
2 Assembly mountings 59
2.1 Exploded view - assembly mountings 59
2.2 Supporting engine in installation position 62
2.3 Removing and installing engine mountings 63
2.4 Removing and installing gearbox mounting 68
3 Engine cover panel 69

13 - Crankshaft group 70
1 Cylinder block (pulley end) 70
1.1 Exploded view - cylinder block (pulley end) 70
1.2 Removing and installing poly V-belt 70
1.3 Removing and installing poly V-belt tensioner 70
1.4 Removing and installing vibration damper 70
1.5 Removing and installing bracket for ancillaries 70
1.6 Removing and installing engine support 71
2 Cylinder block (gearbox end) 74
3 Crankshaft 75
4 Balance shaft 76
5 Pistons and conrods 77

15 - Cylinder head, valve gear 78
1 Timing chain cover 78
1.1 Exploded view - timing chain cover 78
1.2 Removing and installing timing chain cover 78
2 Chain drive 79
3 Cylinder head 80
3.1 Exploded view - cylinder head 80
3.2 Removing and installing cylinder head 80
3.3 Checking compression 85
4 Valve gear 86
4.1 Exploded view - valve gear 86
4.2 Removing and installing camshaft 86
4.3 Installing ball for slider 87
4.4 Removing and installing actuators for camshaft adjustment 87
4.5 Removing and installing camshaft control valve 1 N205 87
4.6 Removing and installing valve stem oil seals 88
5 Inlet and exhaust valves 89

17 - Lubrication 90

Protected by copyright. Copying for private or commercial purposes, in part or in whole, is not permitted unless authorised by AUDI AG. AUDI AG does not guarantee or accept any liability with respect to the correctness of information in this document. Copyright by AUDI AG.

1 Sump/oil pump ... 90
1.1 Exploded view - sump/oil pump ... 90
1.2 Engine oil ... 90
1.3 Removing and installing sump (bottom section) ... 90
1.4 Removing and installing oil pump ... 92
1.5 Removing and installing sump (top section) ... 92
1.6 Removing and installing oil level and oil temperature sender G266 ... 92
2 Engine oil cooler ... 93
3 Crankcase breather ... 94
4 Oil filter/oil pressure switches ... 95
4.1 Exploded view - oil filter ... 95
4.2 Exploded view - oil pressure switches/oil pressure control ... 95
4.3 Removing and installing oil pressure switch F22 ... 95
4.4 Removing and installing oil pressure switch for reduced oil pressure F378 ... 95
4.5 Removing and installing stage 3 oil pressure switch F447 ... 95
4.6 Removing and installing valve for oil pressure control N428 ... 97
4.7 Removing and installing piston cooling jet control valve N522 ... 97
4.8 Checking oil pressure ... 97

19 - Cooling ... 98
1 Cooling system/coolant ... 98
1.1 Connection diagram - coolant hoses ... 98
1.2 Checking cooling system for leaks ... 102
1.3 Draining and filling cooling system ... 102
2 Coolant pump/thermostat assembly ... 109
2.1 Exploded view - coolant pump/thermostat ... 109
2.2 Exploded view - electric coolant pump ... 109
2.3 Exploded view - coolant temperature senders ... 111
2.4 Removing and installing electric coolant pump ... 111
2.5 Removing and installing coolant pump ... 119
2.6 Removing and installing toothed belt for coolant pump ... 120
2.7 Removing and installing actuator for engine temperature regulation N493 ... 122
2.8 Removing and installing coolant temperature sender G62 ... 123
2.9 Removing and installing radiator outlet coolant temperature sender G83 ... 124
3 Coolant pipes ... 127
3.1 Exploded view - coolant pipes ... 127
3.2 Removing and installing coolant pipes ... 129
3.3 Removing and installing coolant pipes for gearbox ... 136
4 Radiator/radiator fan ... 140
4.1 Exploded view - radiator/radiator fan ... 140
4.2 Removing and installing radiator ... 144
4.3 Removing and installing radiator blind ... 149
4.4 Removing and installing radiator blind control motor ... 150
4.5 Removing and installing radiator cowl ... 151
4.6 Removing and installing radiator fan V7 ... 153

21 - Turbocharging/supercharging ... 154
1 Turbocharger ... 154
1.1 Exploded view - turbocharger ... 154
1.2 Removing and installing turbocharger ... 154
2 Charge air system ... 157
2.1 Exploded view - charge air system ... 157
2.2 Exploded view - hose connections for charge air system ... 158
2.3 Removing and installing charge air cooler ... 158

Protected by copyright. Copying for private or commercial purposes, in part or in whole, is not permitted unless authorised by AUDI AG. AUDI AG does not guarantee or accept any liability with respect to the correctness of information in this document. Copyright by AUDI AG.

2.4 Removing and installing charge pressure sender G31 . . . 159
2.5 Checking charge air system for leaks . . . 160

24 - Mixture preparation - injection . . . 164

1 Injection system . . . 164
1.1 Overview of fitting locations - injection system . . . 164
2 Air cleaner . . . 177
2.1 Exploded view - air cleaner housing . . . 177
2.2 Removing and installing air cleaner housing . . . 178
3 Intake manifold . . . 181
3.1 Exploded view - intake manifold . . . 181
3.2 Removing and installing intake manifold . . . 181
3.3 Removing and installing throttle valve module GX3 . . . 185
4 Injectors . . . 186
4.1 Exploded view - fuel rail with injectors . . . 186
4.2 Removing and installing fuel rail . . . 186
4.3 Removing and installing injectors . . . 186
4.4 Cleaning injectors . . . 188
5 Gas injection valves . . . 189
5.1 Exploded view - gas rail . . . 189
5.2 Removing and installing gas rail with gas injection valve N366 / N367 / N368 / N369 . . . 190
5.3 Removing and installing gas injection valve . . . 193
6 Gas pressure regulator . . . 194
6.1 Exploded view - gas pressure regulator . . . 194
6.2 Removing and installing gas pressure regulator . . . 195
7 Senders and sensors . . . 199
7.1 Removing and installing intake air temperature sender G42 / intake manifold pressure sender G71 . . . 199
7.2 Removing and installing air mass meter G70 . . . 200
7.3 Removing and installing fuel pressure sender G247 . . . 200
7.4 Checking fuel pressure sender G247 . . . 201
7.5 Removing and installing fuel pressure sender for low pressure G410 . . . 201
7.6 Removing and installing gas rail temperature and pressure sensor GX21 . . . 202
7.7 Removing and installing sensor module GX23 . . . 203
8 High-pressure pump . . . 206
8.1 Exploded view - high-pressure pump . . . 206
8.2 Removing and installing high-pressure pump . . . 208
9 Lambda probe . . . 209
10 Engine control unit . . . 210
10.1 Exploded view - engine control unit . . . 210
10.2 Removing and installing engine/motor control unit J623 . . . 211

26 - Exhaust system . . . 213

1 Exhaust pipes/silencers . . . 213
1.1 Exploded view - silencers . . . 213
1.2 Removing and installing front exhaust pipe . . . 221
1.3 Separating exhaust pipes/silencers . . . 222
1.4 Removing and installing front silencers . . . 223
1.5 Removing and installing silencers . . . 226
1.6 Stress-free alignment of exhaust system . . . 228
1.7 Checking exhaust system for leaks . . . 229
2 Emission control system . . . 230

28 - Ignition system . . . 231

Protected by copyright. Copying for private or commercial purposes, in part or in whole, is not permitted unless authorised by AUDI AG. AUDI AG does not guarantee or accept any liability with respect to the correctness of information in this document. Copyright by AUDI AG.

1 Ignition system 231

Protected by copyright. Copying for private or commercial purposes, in part or in whole, is not permitted unless authorised by AUDI AG. AUDI AG does not guarantee or accept any liability with respect to the correctness of information in this document. Copyright by AUDI AG.

00 – Technical data

1 Identification

(ARL006806; Edition 01.2020)

All information can be found in ⇒ Servicing 4-cylinder engine, 2.0 ltr. 4-valve TFSI; Rep. gr. 00 ; Identification .

Protected by copyright. Copying for private or commercial purposes, in part or in whole, is not permitted unless authorised by AUDI AG. AUDI AG does not guarantee or accept any liability with respect to the correctness of information in this document. Copyright by AUDI AG.

2 Safety precautions

⇒ “2.1 Safety precautions when working on vehicles with natural gas systems”, page 2

⇒ “2.2 Safety precautions for all vehicles”, page 2

2.1 Safety precautions when working on vehicles with natural gas systems

Risk of explosion due to uncontrolled gas escape in connection with ignition sources and electrostatic discharge - risk of death!

Danger of severe or fatal injuries due to explosion.

- Never drive a vehicle with a natural gas system into the workshop if you can clearly hear gas escaping. Instead, park the vehicle outside and set up a protected area ⇒ Natural gas engines - General information; Rep. gr. 20 ; Fuel tanks; Setting up and marking a protected area .
- Work on natural gas systems may only be performed by specially trained persons ⇒ Natural gas engines - General information; Rep. gr. 00 ; Safety briefing/employee qualification .
- Gas tank must be closed manually on vehicles with natural gas systems if gas can be heard escaping and smelt ⇒ Fuel supply system - g-tron; Rep. gr. 20 ; Fuel tanks; Closing fuel tank shut-off valves mechanically .

Protected by copyright. Copying for private or commercial purposes, in part or in whole, is not permitted unless authorised by AUDI AG. AUDI AG does not guarantee or accept any liability with respect to the correctness of information in this document. Copyright by AUDI AG.

Risk of explosion due to flammable natural gas - risk of death!

Risk of explosion due to static discharge near natural gas systems - risk of death! Escaping natural gas may ignite and cause an explosion. Danger of severe or fatal injuries due to explosion.

- Wear protective clothing consisting of at least 35% cotton.
- Wear protective gloves consisting of at least 35% cotton.
- Wear safety shoes with ESD protection.

Risk of injury due to high pressure

Uncontrolled gas escape may occur under high pressure. Danger of frostbite to hands and other parts of the body.

- Dissipate high pressure in natural gas system before performing work on natural gas system ⇒ Fuel supply system - g-tron; Rep. gr. 20 ; Fuel tanks; Dissipating pressure in natural gas high-pressure pipe .
- Check for leaks after performing work on the natural gas system.

2.2 Safety precautions for all vehicles

All information can be found in ⇒ Servicing 4-cylinder engine, 2.0 ltr. 4-valve TFSI; Rep. gr. 00 ; Safety precautions .

3 Repair instructions

All information can be found in ⇒ Servicing 4-cylinder engine, 2.0 ltr. 4-valve TFSI; Rep. gr. 00 ; Repair instructions .

Protected by copyright. Copying for private or commercial purposes, in part or in whole, is not permitted unless authorised by AUDI AG. AUDI AG does not guarantee or accept any liability with respect to the correctness of information in this document. Copyright by AUDI AG.

10 – Removing and installing engine

1 Removing and installing engine

⇒ “1.1 Removing engine”, page 4

⇒ “1.2 Securing engine to engine and gearbox support”, page 54

⇒ “1.3 Installing engine”, page 54

1.1 Removing engine

⇒ “1.1.1 Removing engine - vehicles without particulate filter”, page 4

⇒ “1.1.2 Removing engine - vehicles with particulate filter”, page 20

⇒ “1.1.3 Removing engine - vehicles with natural gas system”, page 38

1.1.1 Removing engine - vehicles without particulate filter

Protected by copyright. Copying for private or commercial purposes, in part or in whole, is not permitted unless authorised by AUDI AG. AUDI AG does not guarantee or accept any liability with respect to the correctness of information in this document. Copyright by AUDI AG.

Special tools and workshop equipment required

- Support bracket - 10-222A-

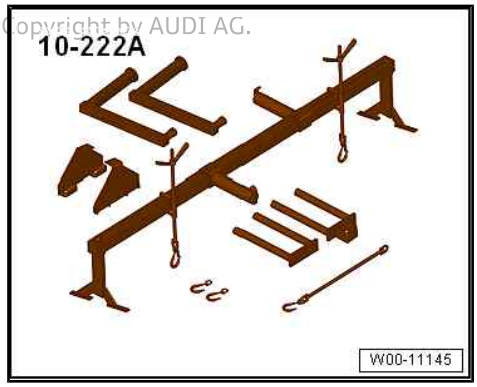

- Lifting tackle - 2024A-

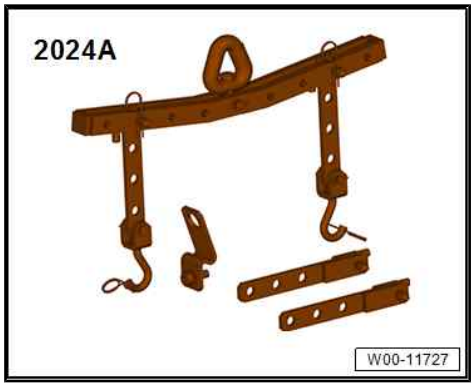

- Gearbox support - 3147-

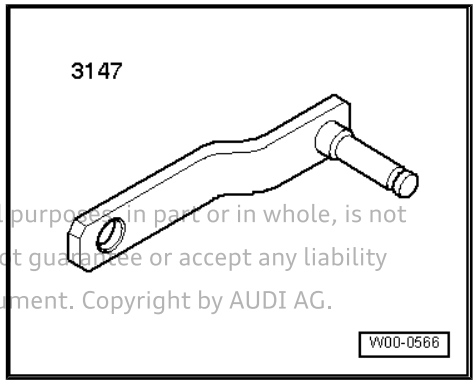

Protected by copyright. Copying for private or commercial purposes, in part or in whole, is not permitted unless authorised by AUDI AG. AUDI AG does not guarantee or accept any liability with respect to the correctness of information in this document. Copyright by AUDI AG.

- Lambda probe open ring spanner set - 3337-

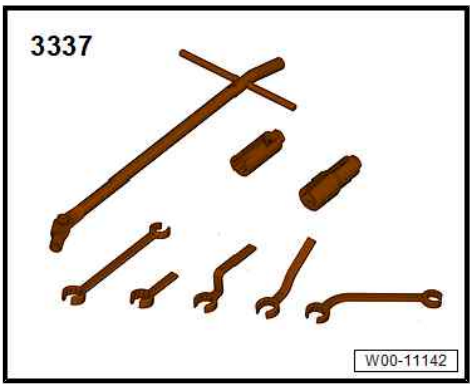

- Ring spanner insert AF 16 - V.A.G 1332/14-

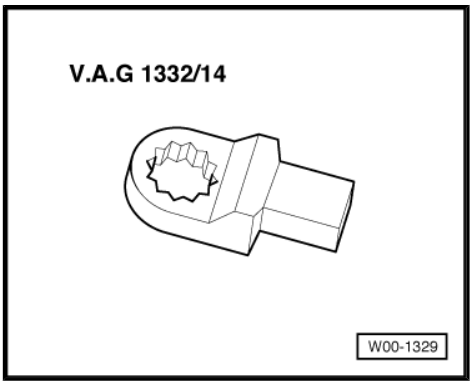

- Workshop hoist - VAS 6100-

- Engine bung set - VAS 6122-

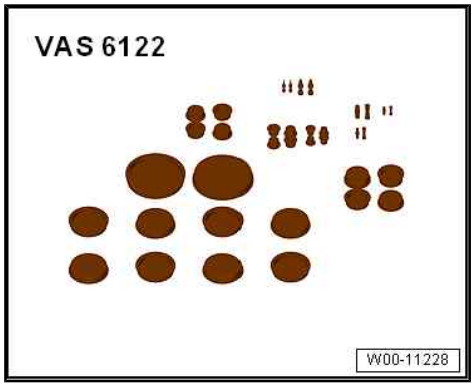

- Coolant collecting system - VAS 5014- or drip tray for workshop hoist - VAS 6208-

- Hose clip pliers - VAS 6362-

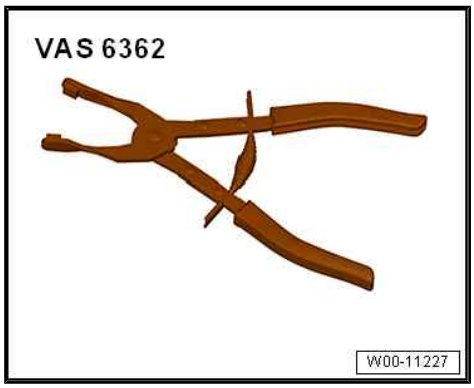

- Adapter - VAS 6948-

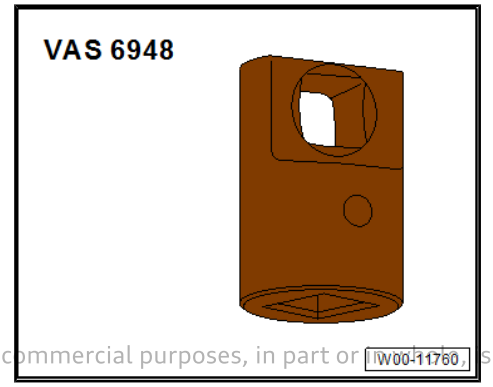

Protected by copyright. Copying for private or commercial purposes, in part or whole, is not permitted unless authorised by AUDI AG. AUDI AG does not guarantee or accept any liability with respect to the correctness of information in this document. Copyright by AUDI AG.

- Locking pin - T10060A-

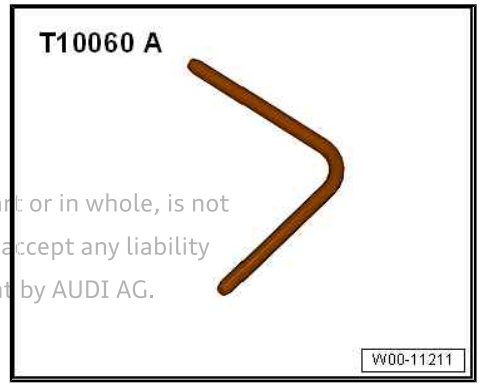

Protected by copyright. Copying for private or commercial purposes, in part or in whole, is not permitted unless authorised by AUDI AG. AUDI AG does not guarantee or accept any liability with respect to the correctness of information in this document. Copyright by AUDI AG.

- -T40093/6- from engine support supplementary set - T40093-

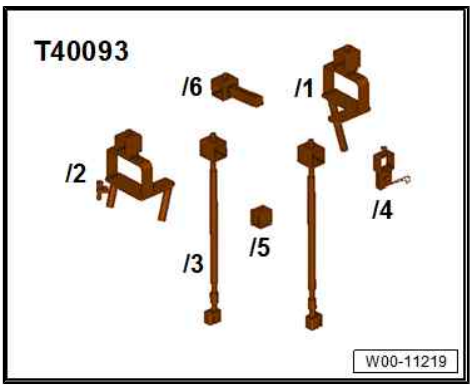

- Ratchet wrench (21 mm) - T40263-

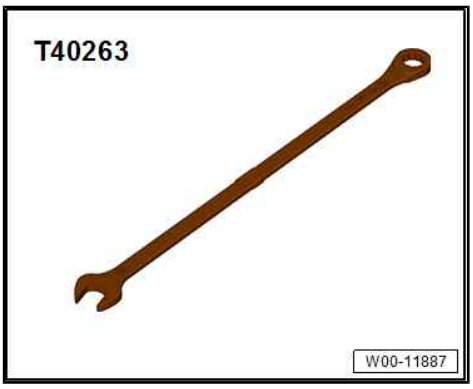

- Adapter - T40314-

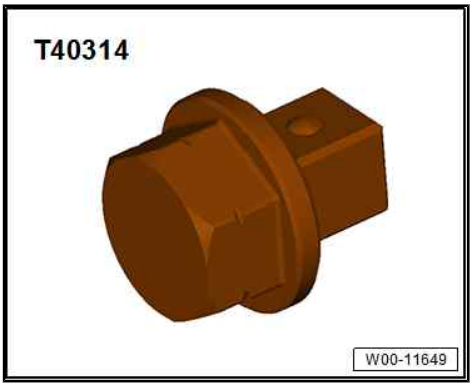

- Protective gloves
- Safety goggles

Procedure

Note

- *The engine is removed upwards without gearbox.*
- *Re-install all cable ties in original positions.*

– Disconnect battery ⇒ Electrical system; Rep. gr. 27 ; Battery; Disconnecting and connecting battery .

– On vehicle versions with manual gearbox: Select 4th gear.

– Carefully pull engine cover panel off retaining pins one after another -arrows-. Do not jerk engine cover panel away, and do not try to pull on one side only.

WARNING

The cooling system is under pressure when the power unit is hot. Risk of scalding due to hot steam and hot coolant.

Danger of scalding skin and other parts of the body.

- ***Put on protective gloves.***
- ***Put on safety goggles.***
- ***Cover filler cap on expansion tank with a cloth and open carefully to release pressure.***

– Release fastener -arrow- and open filler cap -1- on coolant expansion tank.

– Remove front wheels ⇒ Running gear, axles, steering; Rep. gr. 44 ; Wheels, tyres .

– Remove noise insulation panels ⇒ General body repairs, exterior; Rep. gr. 66 ; Noise insulation; Removing and installing noise insulation .

– Remove wheel spoiler (left and right) as well as wheel housing liner (front right) ⇒ General body repairs, exterior; Rep. gr. 66 ; Wheel housing liners; Exploded view - wheel housing liner (front) .

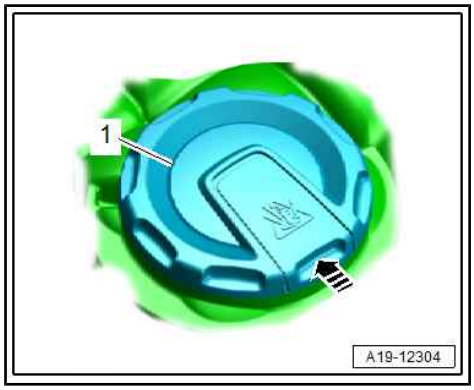

Protected by copyright. Copying for private or commercial purposes, in part or in whole, is not permitted unless authorised by AUDI AG. AUDI AG does not guarantee or accept any liability with respect to the correctness of information in this document. Copyright by AUDI AG.

– On relevant equipment version: Unplug electrical connector -2- for variable intake manifold changeover valve - N335- and pull water drain -1- off downwards -arrow-.
– Remove lock carrier cover ⇒ General body repairs, exterior; Rep. gr. 63 ; Bumper (front); Exploded view - bumper cover .

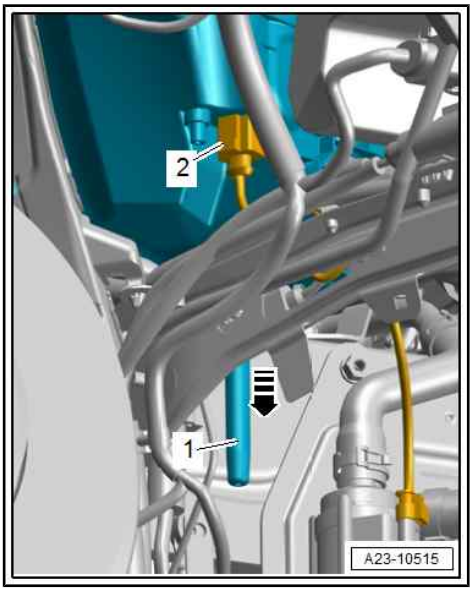

Vehicles with starter-alternator:

Remove air intake grille (left and right) and closure plate at bumper cover ⇒ General body repairs, exterior; Rep. gr. 63 ; Bumper (front); Exploded view - bumper cover .

All vehicles (continued):

– Remove bolts -arrows- and detach air duct -2-.

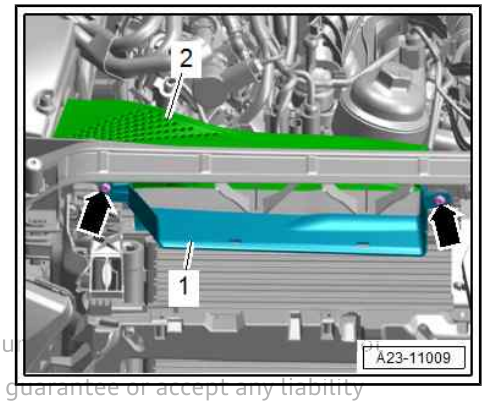

Protected by copyright. Copying for private or commercial pu
permitted unless authorised by AUDI AG. AUDI AG does not guarantee or accept any liability
with respect to the correctness of information in this docume

– Unplug electrical connector -2- for air mass meter - G70- .
– Disconnect vacuum hose -3-.
– Release hose clip -4- and disconnect air hose.
– Lift off air cleaner housing -1-.
– Seal off turbocharger connection with sealing plug (thoroughly cleaned) from engine bung set - VAS 6122- .

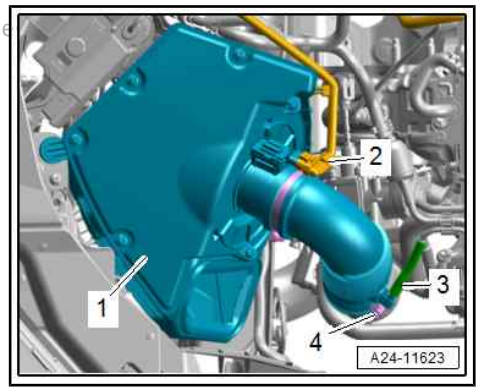

– Release catch -arrow B- and open electronics box -1- -arrow A-.
– Remove nut -2- and move B+ wire clear.
– Move wiring duct (top) clear.

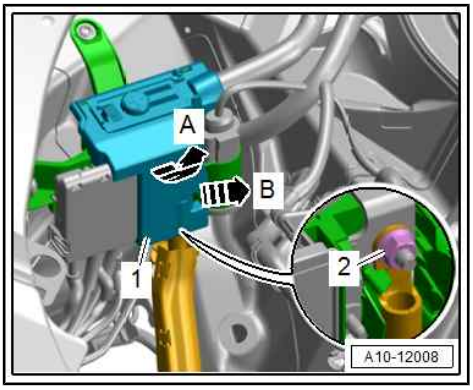

– Remove nuts -1- (accessible from above) for front silencer.

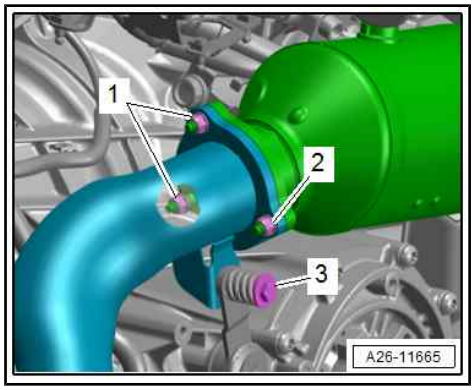

Note

The nut -2- and bolt -3- are removed at a later stage.

– Unplug electrical connector -1- for charge pressure sender - G31- .
– Loosen screw-type clip -2- and detach air pipe from throttle valve module - GX3- .

Protected by copyright. Copying for private or commerc
permitted unless authorised by AUDI AG. AUDI AG does
with respect to the correctness of information in this d

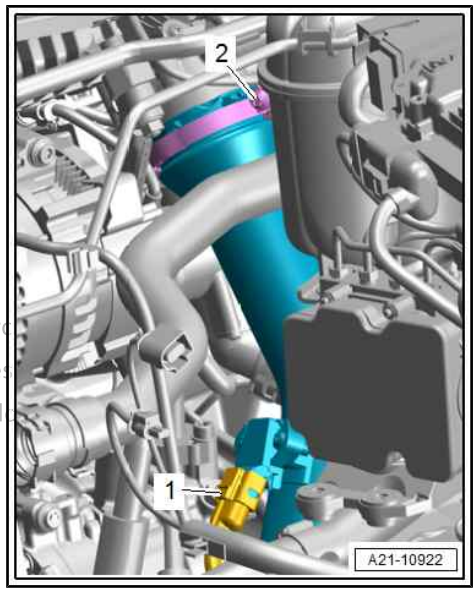

– Place collector tank from coolant collecting system -VAS 5014- or drip tray for workshop hoist - VAS 6208- underneath.
– Lift retaining clip -2-, disconnect coolant hose from radiator (bottom right) and drain off coolant.
– Unfasten front section of wheel housing liner (front left) and press slightly towards rear ⇒ General body repairs, exterior; Rep. gr. 66 ; Wheel housing liners; Exploded view - wheel housing liner (front) .

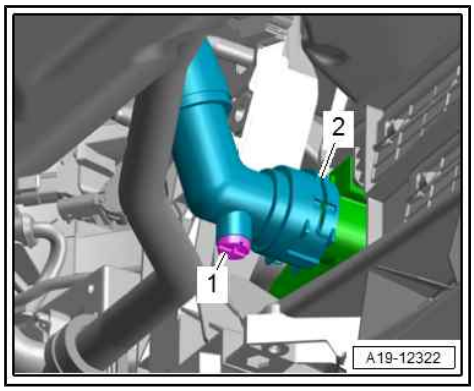

– Release hose clip -1-, disconnect air hose and detach it downwards.

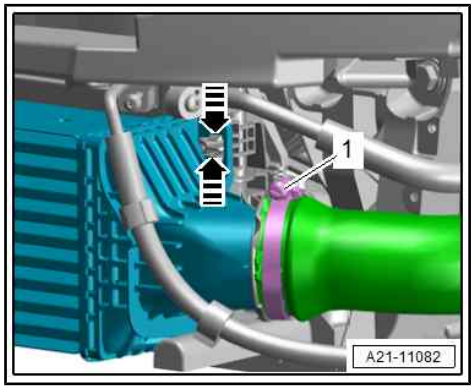

Vehicles without belt-driven starter-alternator:

Caution

Running a used poly V-belt in the opposite direction could cause irreparable damage.

- *Before removing the poly V-belt, mark the direction of rotation with chalk or a felt-tip pen for re-installation.*

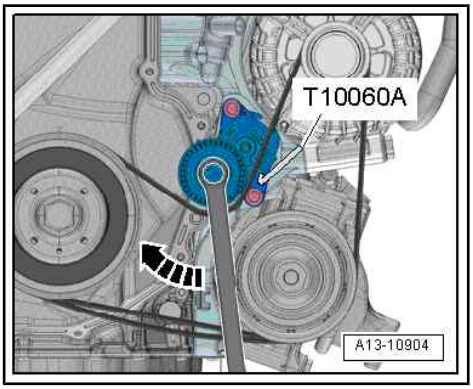

– To slacken poly V-belt turn tensioner in direction of -arrow-.
– Lock tensioner with locking pin - T10060A- .
– Take off poly V-belt.

Vehicles with belt-driven starter-alternator:

Caution

Running a used poly V-belt in the opposite direction could cause irreparable damage.

- *Before removing the poly V-belt, mark the direction of rotation with chalk or a felt-tip pen for re-installation.*

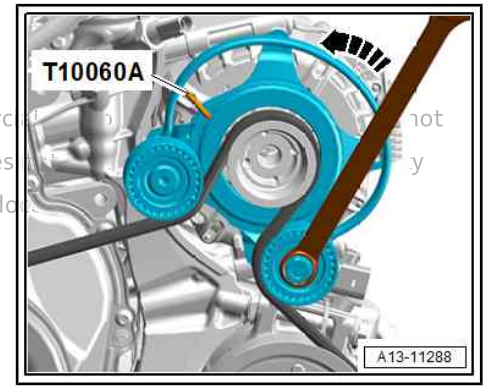

Protected by copyright. Copying for private or commercial purposes, in part, is not permitted unless authorised by AUDI AG. AUDI AG does not guarantee or accept any liability with respect to the correctness of information in this document.

– To slacken poly V-belt turn tensioner in direction of -arrow-.
– Lock tensioner with locking pin - T10060A- .
– Take off poly V-belt.

All vehicles (continued):

– Remove air conditioner compressor from bracket ⇒ Heating, air conditioning; Rep. gr. 87 ; Air conditioner compressor; Detaching and attaching air conditioner compressor at bracket .

– Unscrew bolt -arrow-, detach wiring duct -1- from sump (top section) towards front and press it downwards.

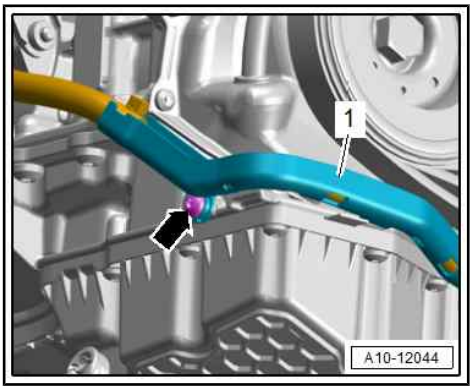

– Release hose clip -arrow- and detach air hose (right-side) from turbocharger.

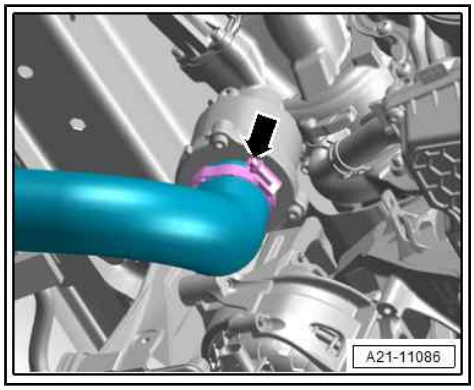

– Detach electrical connector -2- from bracket and unplug.
– Release fasteners -arrows- and move wiring duct -1- clear.
– Move clear electrical wiring harness leading to engine.

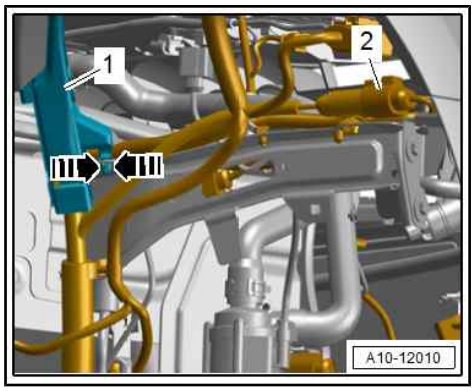

– Remove nut -arrow- and move earth wire clear.

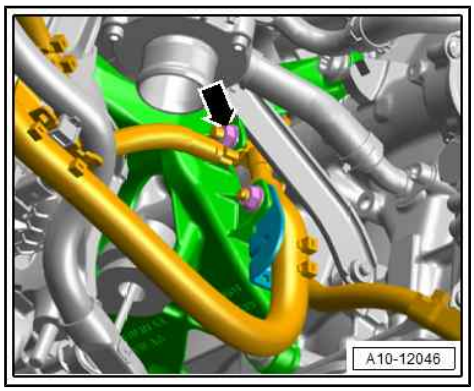

– If fitted, remove bolt -1- for support mounting on both sides.

Protected by copyright. Copying for private or commercial purposes, ... of
permitted unless authorised by AUDI AG. AUDI AG does not guarant...
with respect to the correctness of information in this document. Cop...

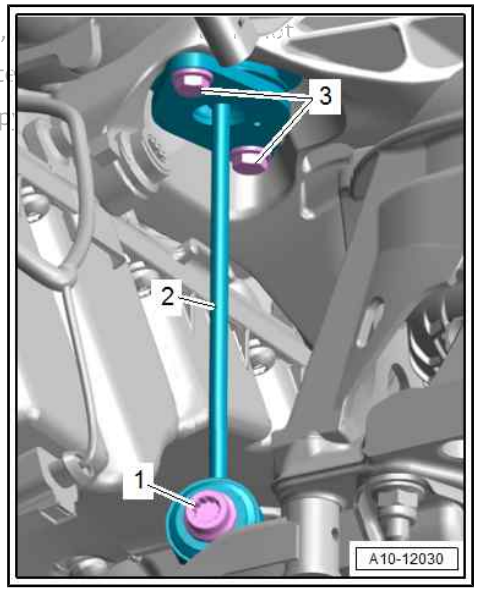

Vehicles with belt-driven starter-alternator:

– Release catches -arrow- and detach air ducts -1, 3-.

– Unclip air duct -2-.

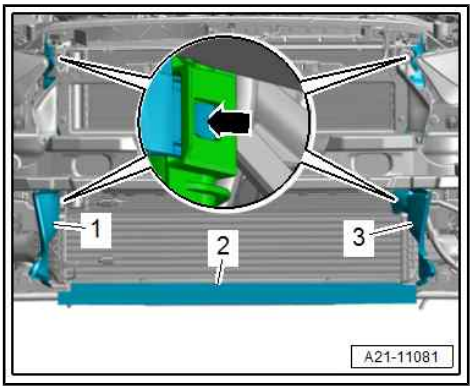

– Detach air duct (top) -arrow-.

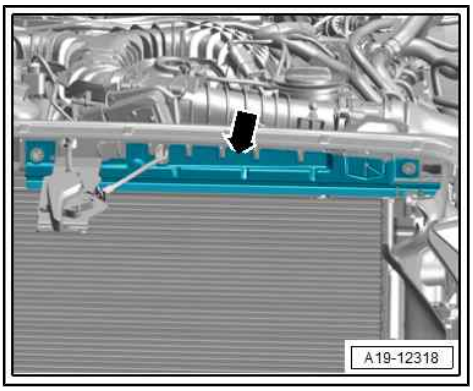

– Remove bolt -2- on both sides and press radiator bracket -1- with radiator towards front -arrow-.

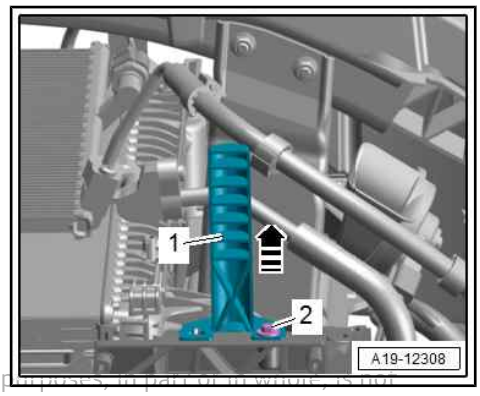

Protected by copyright. Copying for private or commercial purposes, in part or in whole, is not
permitted unless authorized by AUDI AG. Audi AG does not guarantee or accept any liability
with respect to the correctness of information in this document. Copyright

– Release fasteners -arrows- on both sides and pull retaining pins -1- for radiator out upwards.

– Push radiator slightly forwards.

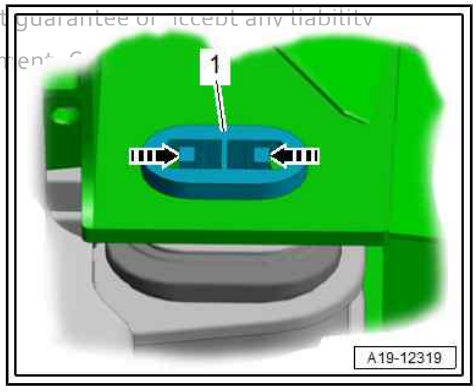

All vehicles (continued):

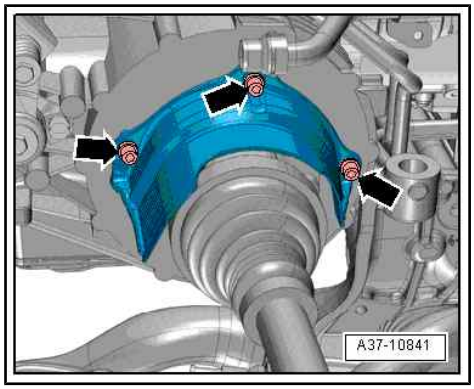

– Remove bolts -arrows- and detach heat shield for drive shaft (right-side).

– Unbolt drive shaft (left and right) from gearbox ⇒ Running gear, axles, steering; Rep. gr. 40 ; Drive shaft; Removing and installing drive shaft .

– Remove nut -2- and bolt -3- for front silencer.

Protected by copyright. Copying for private or commercial purposes
permitted unless authorised by AUDI AG. AUDI AG does not guaran
with respect to the correctness of information in this document. Co

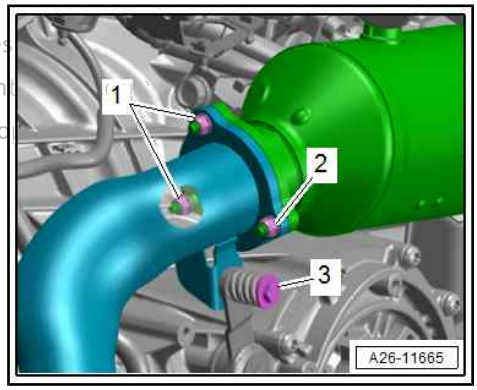

Note

-Item 1- is already removed.

Caution

Risk of damage to flexible joints in front silencer.

- ***Do NOT bend the flexible joints in the front silencer more than 10°.***

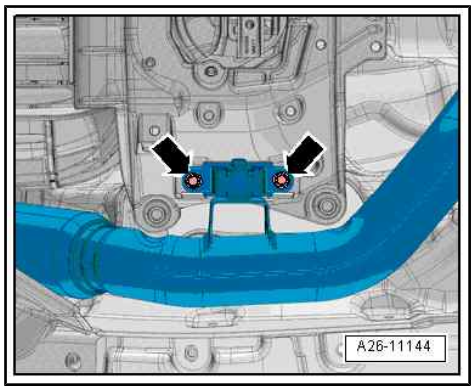

– Remove bolts -arrows-.

– Loosen clamp -arrows- and push towards rear.

– Detach front silencer.

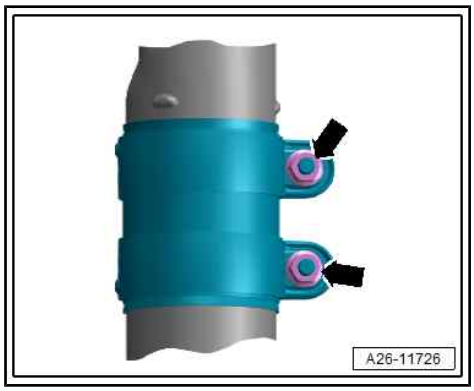

– Remove nut -2- for catalytic converter.

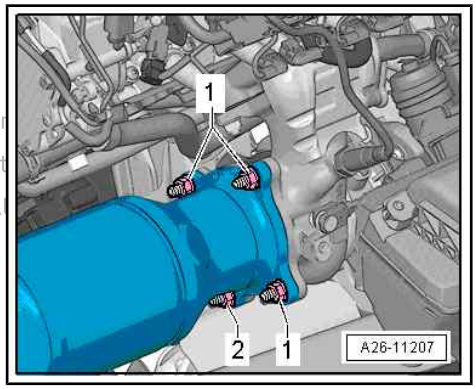

Note

The nuts -1- are removed at a later stage.

Protected by copyright. Copying for private or commercial purposes, in part or in
permitted without the prior written consent of AUDI AG. AUDI AG does not guarantee or accept
with respect to the correctness of information in this document. Copyright by AU

– Detach bottom cover -1- from gearbox -arrow-.

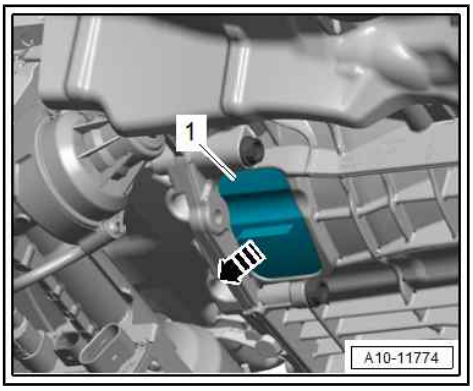

– Counterhold crankshaft using ratchet wrench, 21 mm - T40263- and adapter -T40314- when slackening bolts for flywheel.

Caution

Irreparable engine damage can be caused if the camshaft timing chain slips.

- ***Only turn crankshaft in direction of engine rotation.***

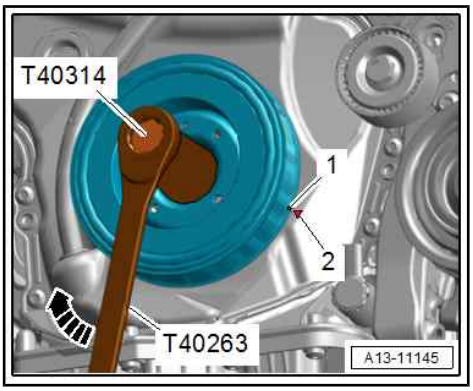

– Then turn crankshaft in steps of 120° in direction of engine rotation -arrow-.

– Remove 3 bolts -arrow- for flywheel -1-.

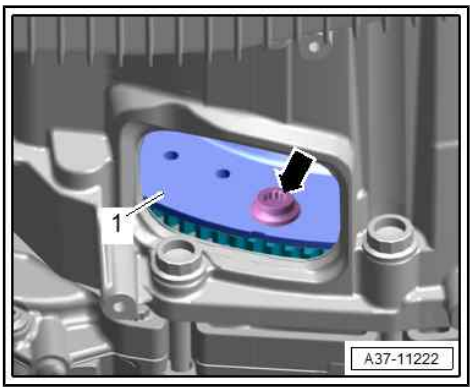

Vehicles with manual gearbox:

– Unscrew bolt -1- using ring spanner insert, 16 mm - V.A.G 1332/14- and adapter - VAS 6948- .

– Remove bolts -6 ... 10- securing gearbox to engine.

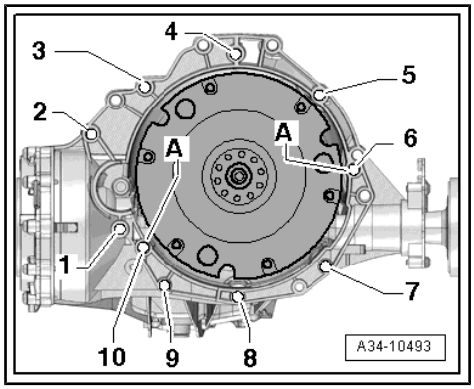

Vehicles with dual clutch gearbox:

– Unscrew bolt -1- using ring spanner insert, 16 mm - V.A.G 1332/14- and adapter - VAS 6948- .

– Remove bolts -6 ... 10- securing gearbox to engine.

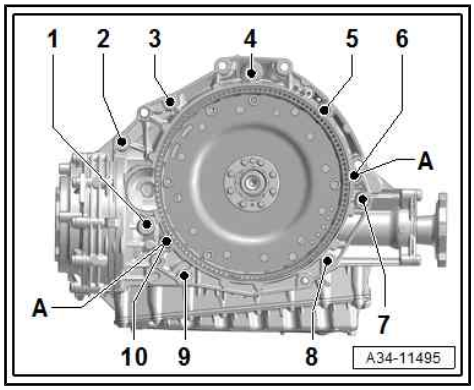

All vehicles (continued):

– Remove bolt -2- for engine mounting on both sides.

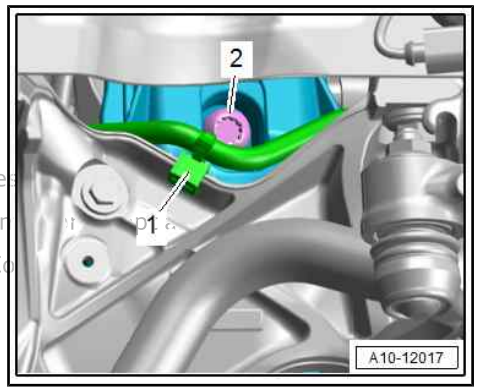

Protected by copyright. Copying for private or commercial purpose
permitted unless authorised by AUDI AG. AUDI AG does not guaran
with respect to the correctness of information in this document. C

– Unplug electrical connector -1- for Lambda probe 1 after catalytic converter - GX7- -item 2- and move wiring clear. (Installation position varies.)

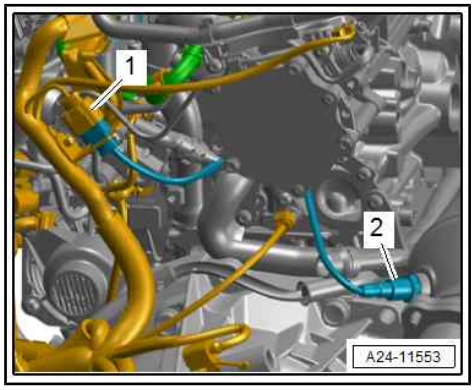

– Unplug electrical connector -1- for Lambda probe 1 before catalytic converter - GX10- -item 2-. (Installation position varies.)
– Unscrew Lambda probe 1 before catalytic converter - GX10- -item 2- using a tool from Lambda probe open ring spanner set - 3337- .

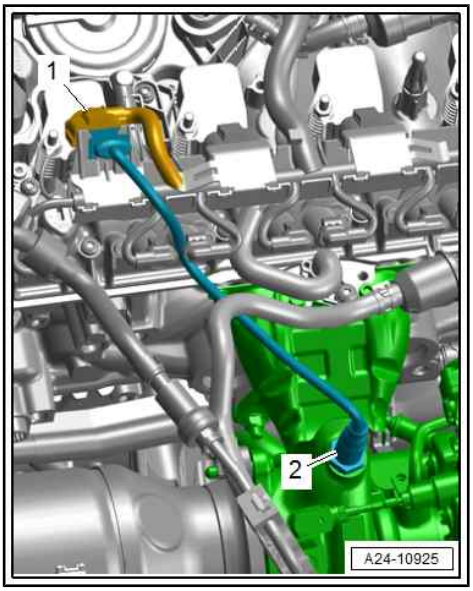

– Unscrew nuts -1- and detach catalytic converter upwards.

Protected by copyright. Copying for private or commercial purposes, permitted unless authorised by AUDI AG. AUDI AG does not guarante with respect to the correctness of information in this document. Cop

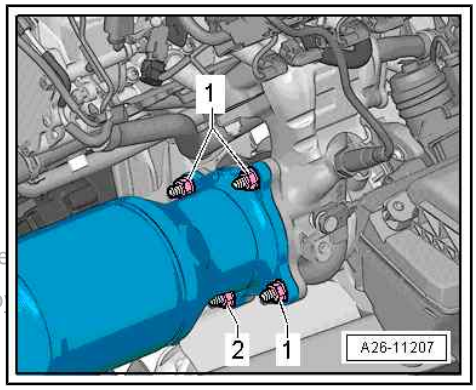

– Disconnect fuel hose -1- ⇒ Fuel supply system; Rep. gr. 20 ; Plug-in connectors; Disconnecting plug-in connectors .
– Release hose clip -2- and disconnect hose for activated charcoal filter system. (Different versions.)

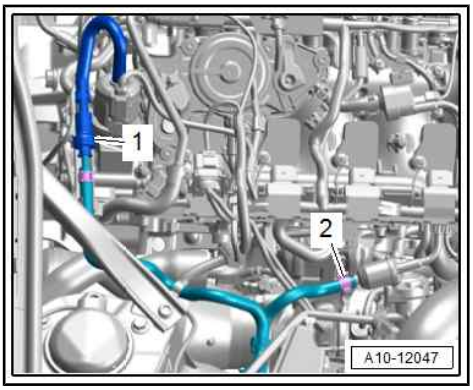

– Lift retaining clip -arrow- and disconnect coolant hose.

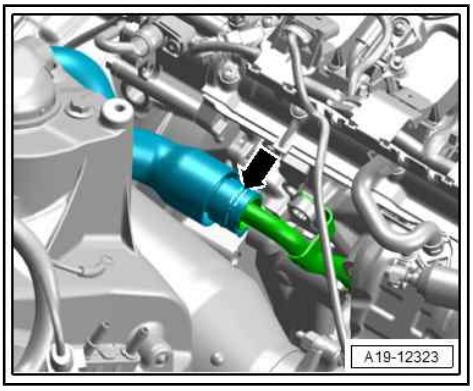

– Lift retaining clips -arrows-, disconnect coolant hoses and move them clear.
– Unplug electrical connector -1- for coolant shortage indicator switch - F66- .
– Unscrew bolt -2- and detach coolant expansion tank -3-.

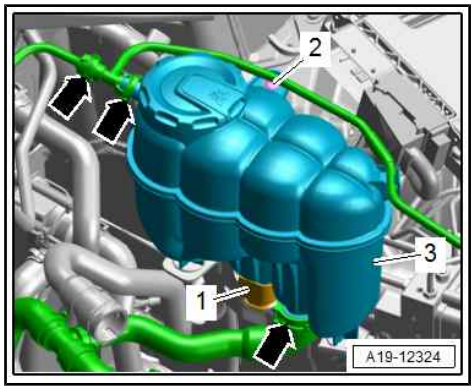

– Lift retaining clips -1, 3- and disconnect coolant hoses.

Vehicles with dual clutch gearbox:

– Lift retaining clip -2- and disconnect coolant hose.

Protected by copyright. Copying for private or commercial purp
permitted unless authorised by AUDI AG. AUDI AG does not gu
with respect to the correctness of information in this documer

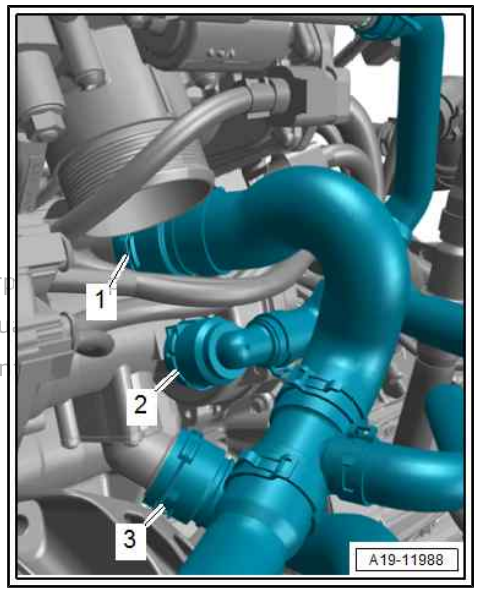

– Release hose clip -arrow- on coolant pipe (left-side) and detach coolant hose.

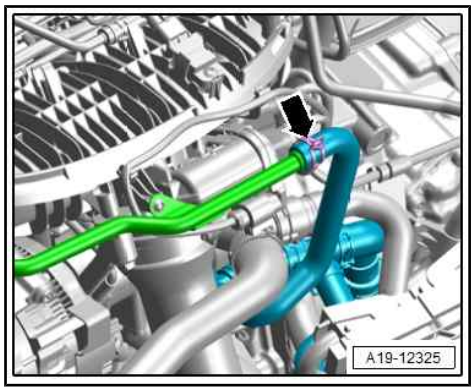

Vehicles with manual gearbox:

– Lift retaining clip -1- and disconnect coolant hose.

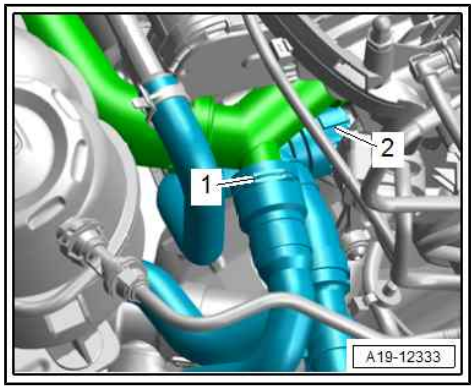

All vehicles (continued):

– Detach electrical connector -2- from bracket and unplug.
– Unplug electrical connector -1- at engine control unit.
– Move electrical wiring harness clear and place on engine.

Protected by copyright. Copying for private or commercial purposes, in part or
permitted unless authorised by AUDI AG. AUDI AG does not guarantee or acce
with respect to the correctness of information in this document. Copyright by

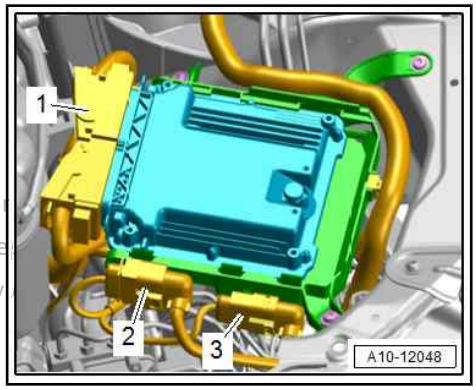

– Release catch -arrow- and disconnect vacuum hose -1-.

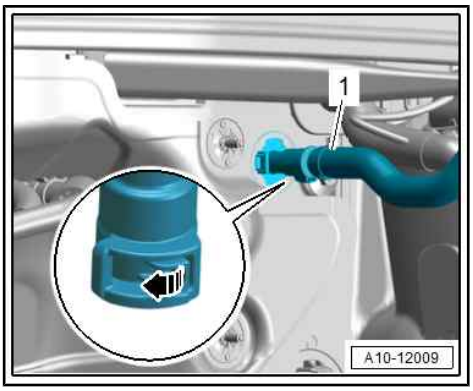

Vehicles with manual gearbox:

– Remove bolts -2 ... 5- (accessible from above) securing engine to gearbox.
– Separate starter slightly from gearbox and leave in position.

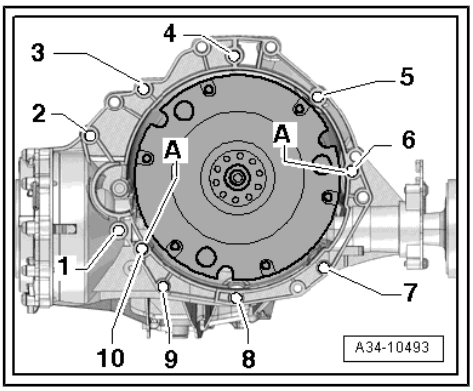

Vehicles with dual clutch gearbox:

– Remove bolts -2 ... 5- (accessible from above) securing engine to gearbox.

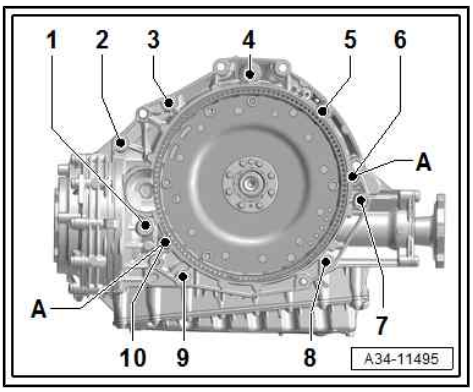

All vehicles (continued):

– Set up support bracket - 10-222A- with adapters -10-222A/22- on bolted flanges of wing panels (left and right) as illustrated.

– Use gearbox support - 10-222A/11- to hook spindle - 3147- onto gearbox.

– Take up weight of gearbox with spindle.

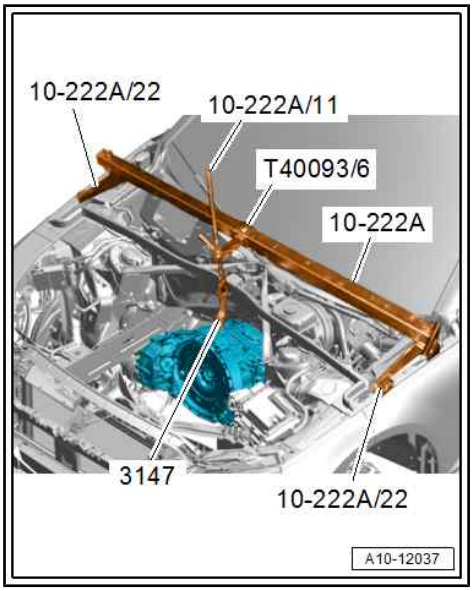

Note

Shown in illustration with engine removed.

– Attach lifting tackle - 2024A- to engine and workshop hoist - VAS 6100- as shown in illustration.

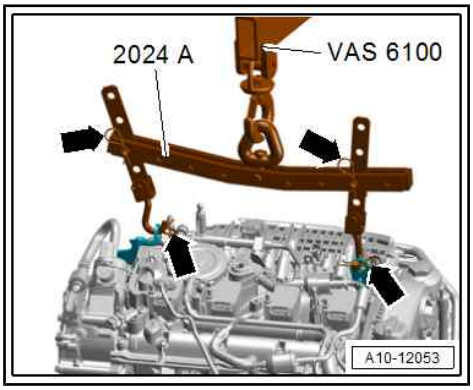

WARNING

Risk of accident.

- ***The support hooks and retaining pins on the lifting tackle must be secured with locking pins -arrows-.***

– Raise engine until engine mountings are clear.

– Tighten spindle - 10-222A/11- further.

Caution

Danger of damage to hoses, pipes and wiring connections and to engine compartment.

- ***Check that all hoses and wiring connections between engine, gearbox, subframe and body have been detached.***
- ***Carefully guide engine out of engine compartment when lifting out.***

– Separate engine from gearbox and lift engine out of engine compartment.

1.1.2 Removing engine - vehicles with particulate filter

Special tools and workshop equipment required

Protected by copyright. Copying for private or commercial purposes, in part or in whole, is not permitted unless authorised by AUDI AG. AUDI AG does not guarantee or accept any liability with respect to the correctness of information in this document. Copyright by AUDI AG.

- Support bracket - 10-222A-

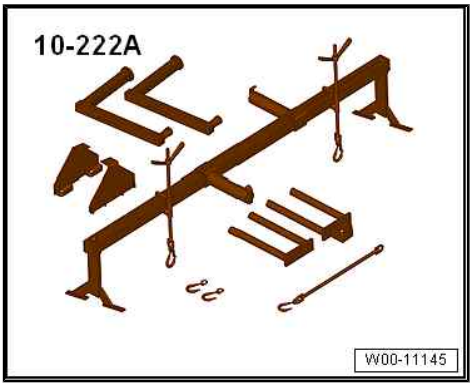

- Lifting tackle - 2024A-

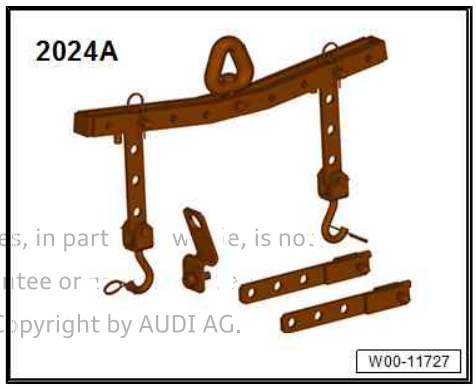

Protected by copyright. Copying for private or commercial purposes, in part or whole, is not permitted unless authorised by AUDI AG. AUDI AG does not guarantee or accept any liability with respect to the correctness of information in this document. Copyright by AUDI AG.

- Gearbox support - 3147-

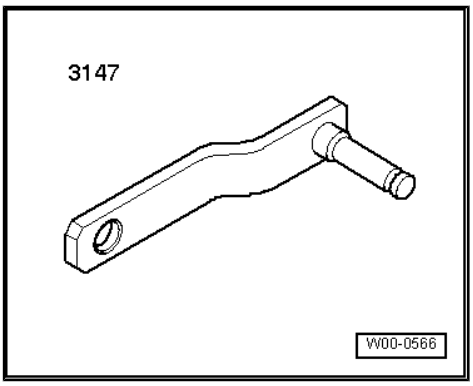

- Lambda probe open ring spanner set - 3337-

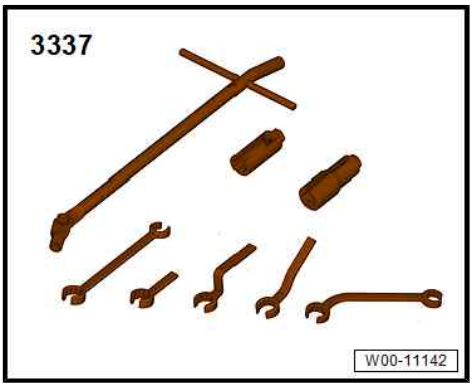

- Ring spanner insert AF 16 - V.A.G 1332/14-

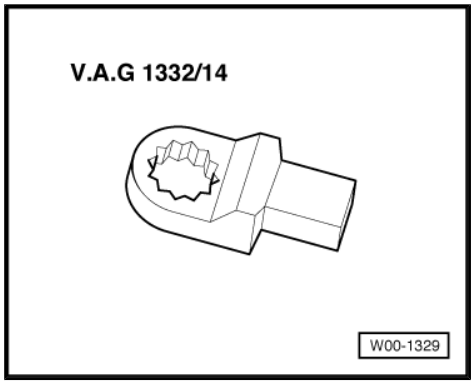

- Workshop hoist - VAS 6100-

- Engine bung set - VAS 6122-

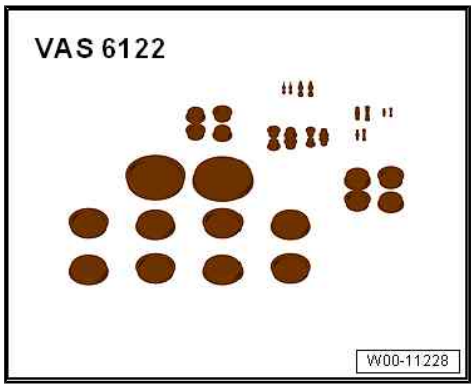

- Coolant collecting system - VAS 5014- or drip tray for workshop hoist - VAS 6208-

Protected by copyright. Copying for private or commercial purposes, in part or in whole, is not permitted unless authorised by AUDI AG. AUDI AG does not guarantee or accept any liability with respect to the correctness of information in this document. Copyright by AU...

- Hose clip pliers - VAS 6362-

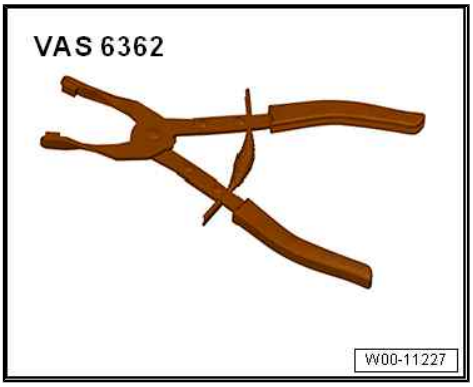

- Adapter - VAS 6948-

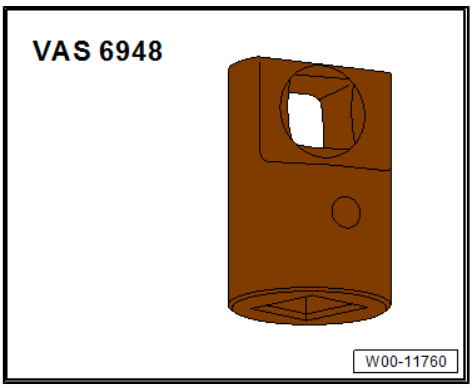

- Locking pin - T10060A-

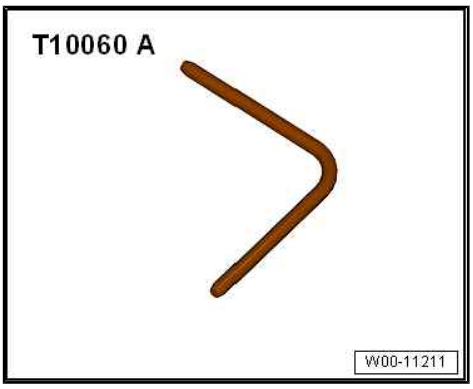

- -T40093/6- from engine support supplementary set - T40093-

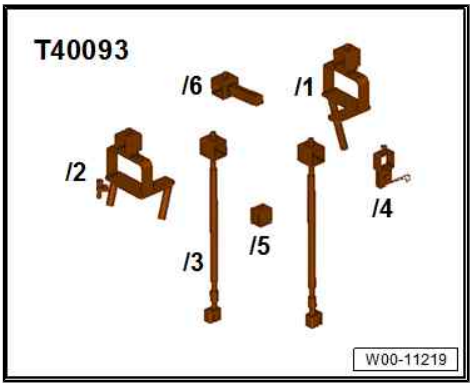

Protected by copyright. Copying for private or commercial purposes, in part or in whole, is not permitted unless authorised by AUDI AG. AUDI AG does not guarantee or accept any liability with respect to the correctness of information in this document. Copyright by AUDI AG.

- Ratchet wrench (21 mm) - T40263-

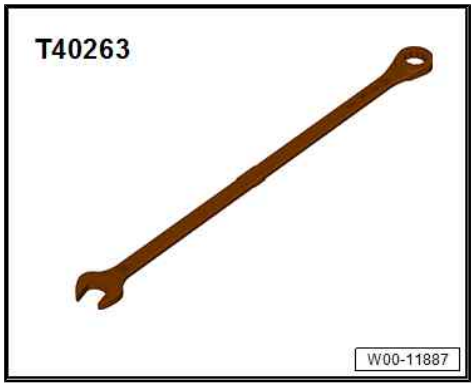

- Adapter - T40314-

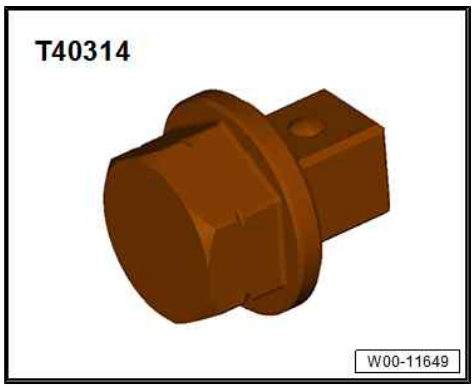

Protected by copyright. Copying for private or commercial purposes, in part or in whole, is not permitted unless authorised by AUDI AG. AUDI AG does not guarantee or accept any liability with respect to the correctness of information in this document. Copyright by AUDI AG.

- Protective gloves
- Safety goggles

Procedure

Note

- *The engine is removed upwards without gearbox.*
- *Re-install all cable ties in original positions.*

– Disconnect battery ⇒ Electrical system; Rep. gr. 27 ; Battery; Disconnecting and connecting battery .

– On vehicle versions with manual gearbox: Select 4th gear.

– Carefully pull engine cover panel off retaining pins one after another -arrows-. Do not jerk engine cover panel away, and do not try to pull on one side only.

WARNING

The cooling system is under pressure when the power unit is hot. Risk of scalding due to hot steam and hot coolant.

Danger of scalding skin and other parts of the body.

- ***Put on protective gloves.***
- ***Put on safety goggles.***
- ***Cover filler cap on expansion tank with a cloth and open carefully to release pressure.***

– Release fastener -arrow- and open filler cap -1- on coolant expansion tank.

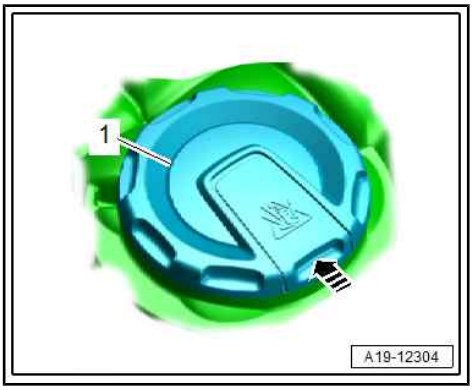

– Remove front wheels ⇒ Running gear, axles, steering; Rep. gr. 44 ; Wheels, tyres .
– Remove noise insulation panels ⇒ General body repairs, exterior; Rep. gr. 66 ; Noise insulation; Removing and installing noise insulation .
– Remove wheel spoiler (left and right) as well as wheel housing liner (front right) ⇒ General body repairs, exterior; Rep. gr. 66 ; Wheel housing liners; Exploded view - wheel housing liner (front) .
– Remove plenum chamber partition panel ⇒ General body repairs, exterior; Rep. gr. 50 ; Bulkhead; Removing and installing plenum chamber partition panel .
– Remove lock carrier cover, air intake grille (left and right) and closure plate at bumper cover ⇒ General body repairs, exterior; Rep. gr. 63 ; Bumper (front); Exploded view - bumper cover .
– Remove bolts -arrows- and detach air ducts -1, 2-.

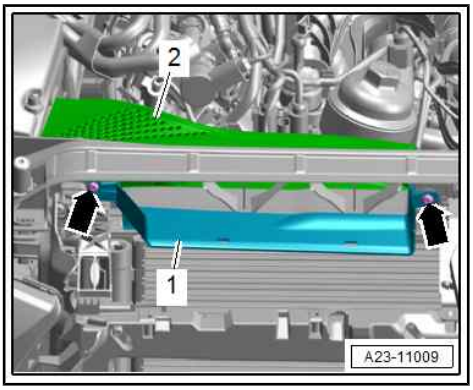

– Unplug electrical connector -2- for air mass meter - G70- .
– Disconnect vacuum hose -3-.
– Release hose clip -4- and disconnect air hose.
– Lift off air cleaner housing -1-.
– Seal off turbocharger connection with sealing plug (thoroughly cleaned) from engine bung set - VAS 6122- .

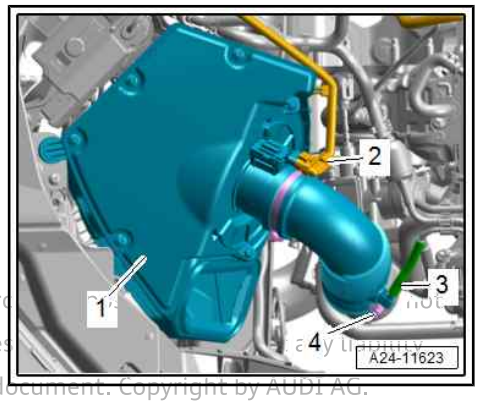

Protected by copyright. Copying for private or commerc not
permitted unless authorised by AUDI AG. AUDI AG does a y liability
with respect to the correctness of information in this document. Copyright by AUDI AG.

– Release catch -arrow B- and open electronics box -1- -arrow A-.
– Remove nut -2- and move B+ wire clear.
– Move wiring duct (top) clear.

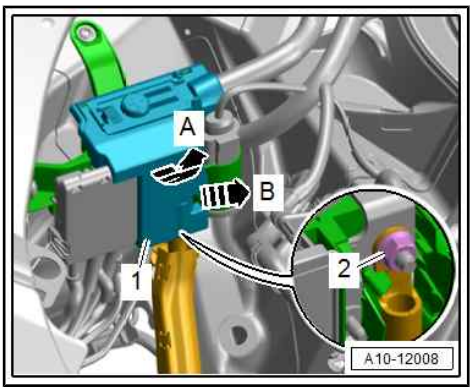

Caution

Running a used poly V-belt in the opposite direction could cause irreparable damage.

- *Before removing the poly V-belt, mark the direction of rotation with chalk or a felt-tip pen for re-installation.*

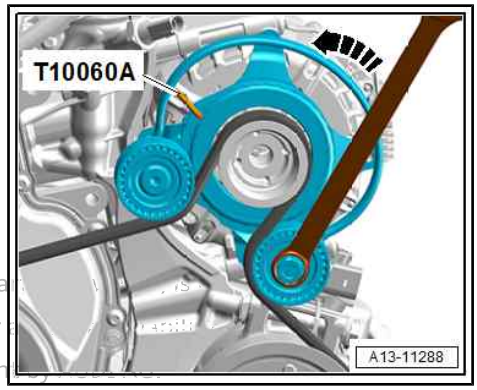

Protected by copyright. Copying for private or commercial purposes, in pa
permitted unless authorised by AUDI AG. AUDI AG does not guarantee or
with respect to the correctness of information in this document. Copyrigh

– To slacken poly V-belt turn tensioner in direction of -arrow-.
– Lock tensioner with locking pin - T10060A- .
– Take off poly V-belt.

– Unplug electrical connector -1- for charge pressure sender - G31- .
– Loosen screw-type clip -2- and detach air pipe from throttle valve module - GX3- .
– Unfasten front section of wheel housing liner (front left) and press slightly towards rear ⇒ General body repairs, exterior; Rep. gr. 66 ; Wheel housing liners; Exploded view - wheel housing liner (front) .

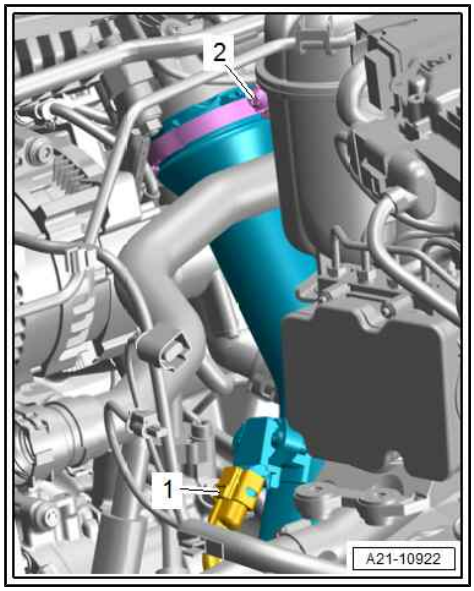

– Release hose clip -1-, disconnect air hose and detach it downwards.

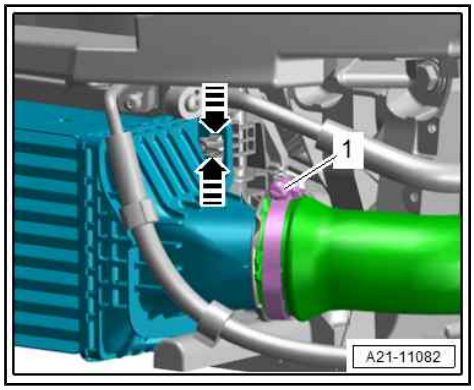

– Place collector tank from coolant collecting system -VAS 5014- or drip tray for workshop hoist - VAS 6208- underneath.
– Lift retaining clip -2-, disconnect coolant hose from radiator (bottom right) and drain off coolant.

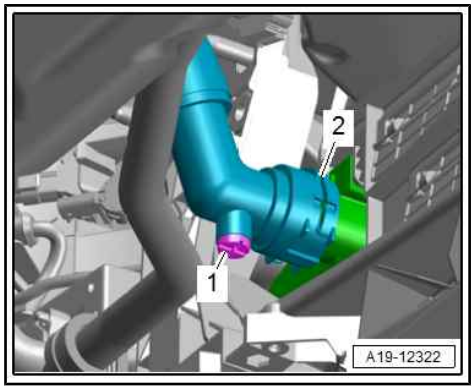

– Remove bolts -arrows- and press wiring duct -1- downwards.
– Remove air conditioner compressor from bracket ⇒ Heating, air conditioning; Rep. gr. 87 ; Air conditioner compressor; Detaching and attaching air conditioner compressor at bracket .

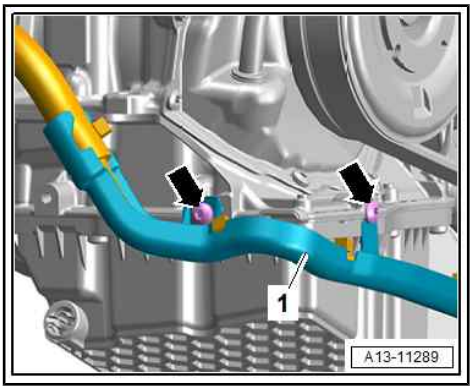

– Release hose clip -arrow- and detach air hose (right-side) from turbocharger.

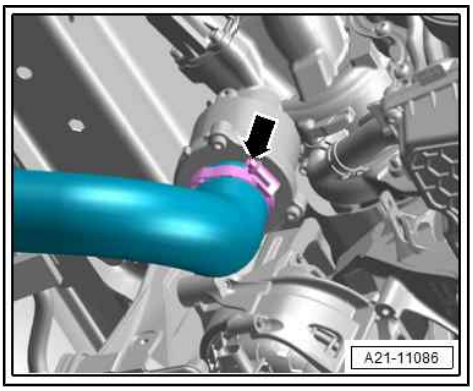

– Detach electrical connector -2- from bracket and unplug.
– Release fasteners -arrows- and move wiring duct -1- clear.
– Move clear electrical wiring harness leading to engine.

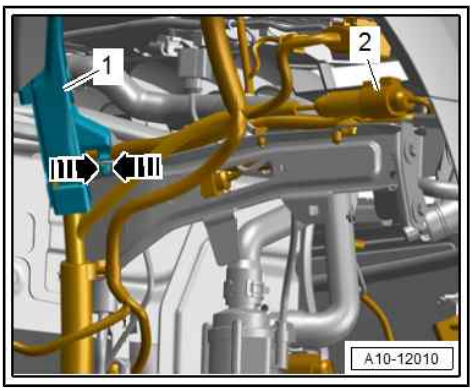

– Remove nut -arrow- and move earth wire clear.

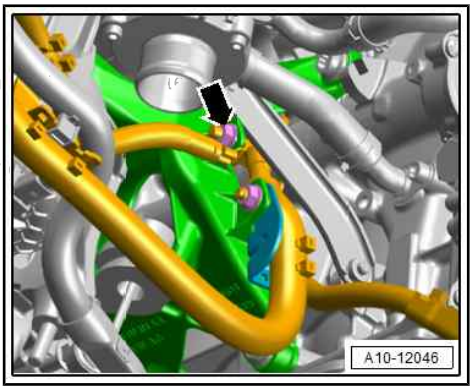

Protected by copyright. Copying for private or commercial purposes, in
permitted unless authorised by AUDI AG. AUDI AG does not guarantee
with respect to the correctness of information in this document. Copyr

– Remove bolt -1- on both sides.

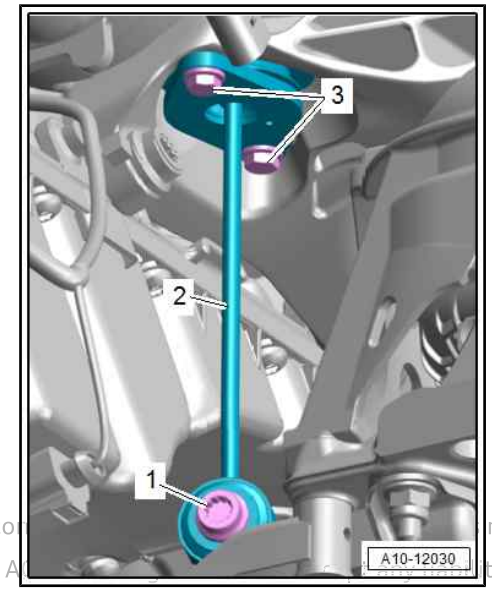

Protected by copyright. Copying for private or co not permitted unless authorised by AUDI AG. AUDI A ty with respect to the correctness of information in this document. Copyright by AUDI AG

– Release catches -arrow- and detach air ducts -1, 3-.
– Unclip air duct -2-.

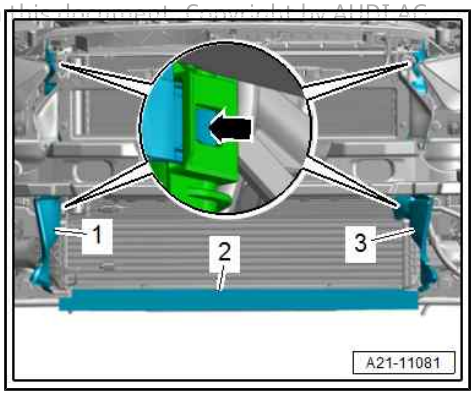

– Detach air duct (top) -arrow-.

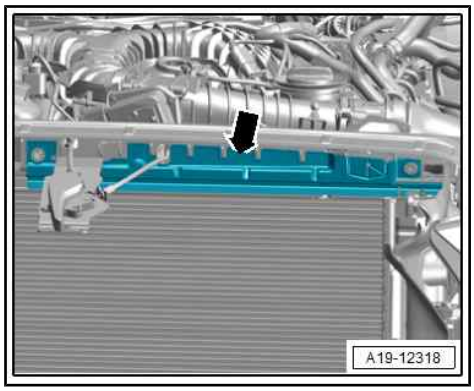

– Remove bolt -2- on both sides and press radiator bracket -1- with radiator towards front -arrow-.

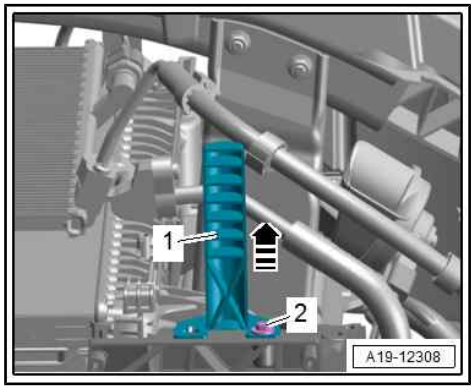

– Release fasteners -arrows- on both sides and pull retaining pins -1- for radiator out upwards.
– Push radiator slightly forwards.

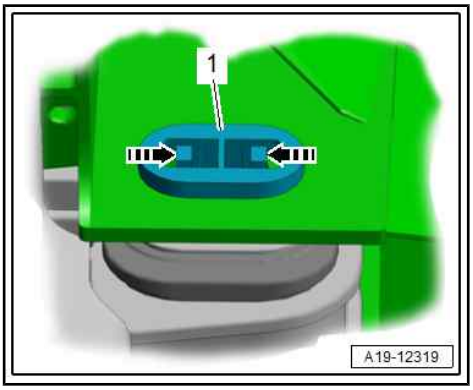

– Remove bolts -arrows- and detach heat shield for drive shaft (right-side).
– Unbolt drive shaft (left and right) from gearbox ⇒ Running gear, axles, steering; Rep. gr. 40 ; Drive shaft; Removing and installing drive shaft .
– Detach intermediate steering shaft from steering rack and move clear by telescoping together ⇒ Running gear, axles, steering; Rep. gr. 48 ; Steering column; Removing and installing intermediate steering shaft .

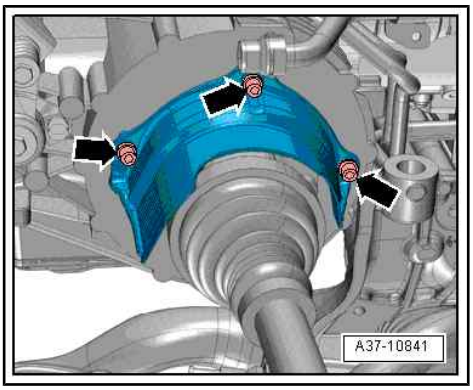

– Unscrew nuts -arrows- for front silencer.

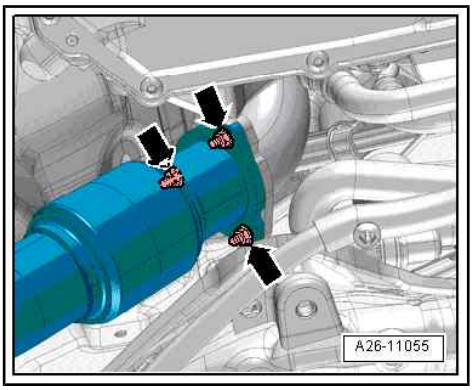

Protected by copyright. Copying for private or commercial purposes, in pa
be used unless authorised by AUDI AG. AUDI AG does not guarantee or
with respect to the correctness of information in this document. Copyrigh

Caution

Risk of damage to flexible joints in front silencer.

- ***Do NOT bend the flexible joints in the front silencer more than 10°.***

– Unscrew bolts -arrows- (shown on right side).

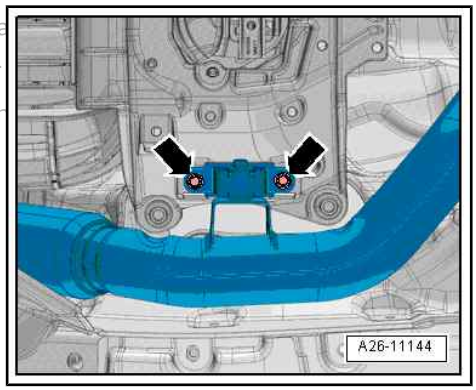

– Loosen clamp -arrows- and push towards rear.
– Detach front silencer.

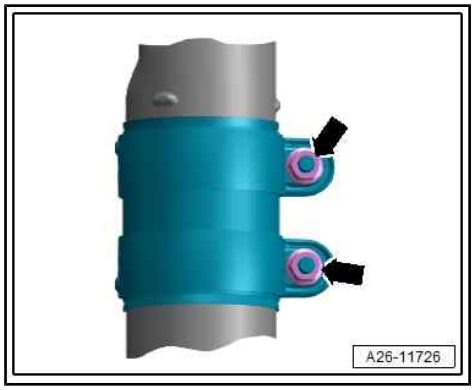

– Remove bolt -arrow- on bracket for particulate filter.

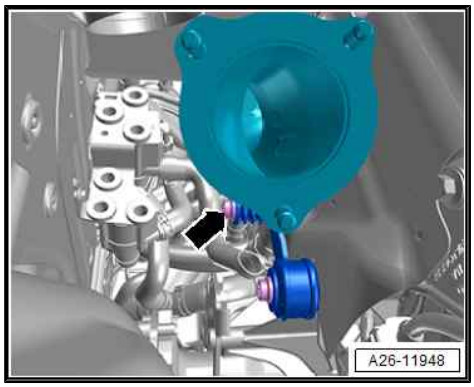

– Remove bolt -arrow- on bracket for catalytic converter.

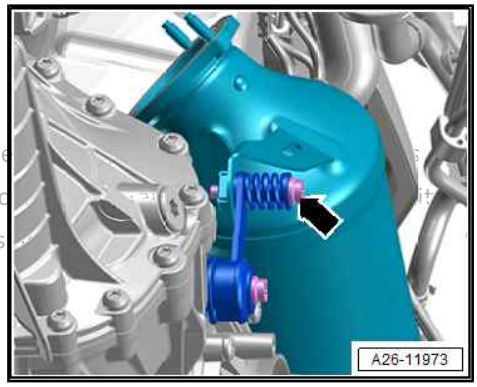

Protected by copyright. Copying for private or comme
permitted unless authorised by AUDI AG. AUDI AG do
with respect to the correctness of information in this

– Remove nut -2- for catalytic converter.

Note

The nuts -1- are removed at a later stage.

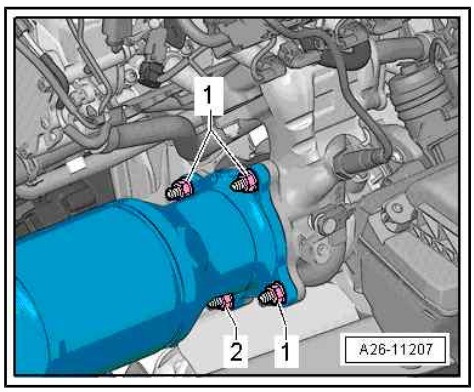

– Detach bottom cover -1- from gearbox -arrow-.

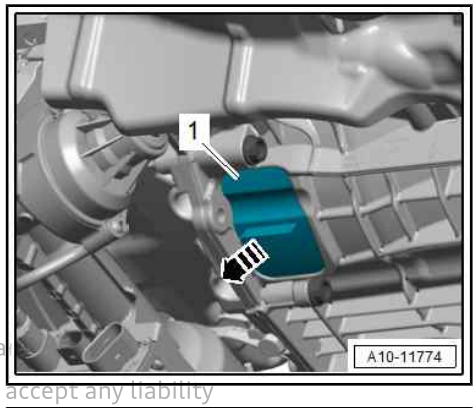

Protected by copyright. Copying for private or commercial purposes, in pa
permitted unless authorised by AUDI AG. AUDI AG does not guarantee or accept any liability
with respect to the correctness of information in this document. Copyrigh

– Counterhold crankshaft using ratchet wrench, 21 mm - T40263- and adapter -T40314- when slackening bolts for flywheel.

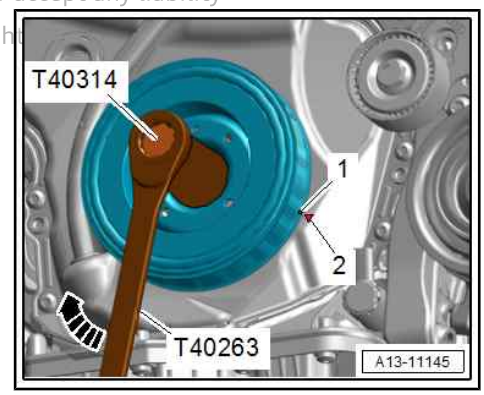

Caution

Irreparable engine damage can be caused if the camshaft timing chain slips.

- ***Only turn crankshaft in direction of engine rotation.***

– Then turn crankshaft in steps of 120° in direction of engine rotation -arrow-.

– Remove 3 bolts -arrow- for flywheel -1-.

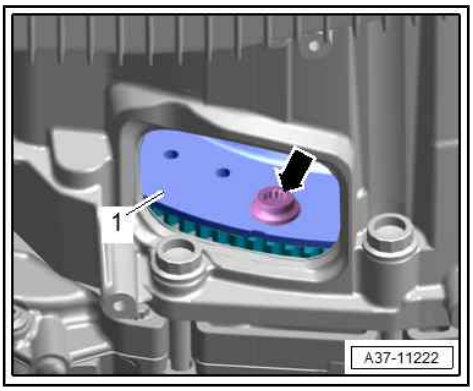

Vehicles with manual gearbox:

– Unscrew bolt -1- using ring spanner insert, 16 mm - V.A.G 1332/14- and adapter - VAS 6948- .

– Remove bolts -6 ... 10- securing gearbox to engine.

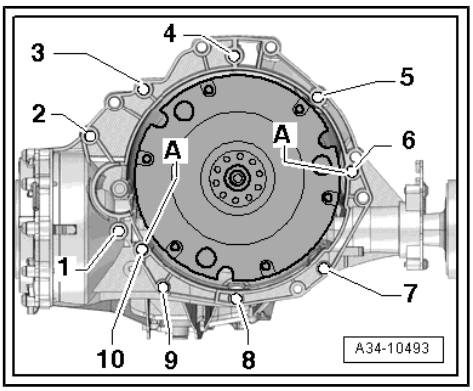

Vehicles with dual clutch gearbox:

– Unscrew bolt -1- using ring spanner insert, 16 mm - V.A.G 1332/14- and adapter - VAS 6948- .

– Remove bolts -6 ... 10- securing gearbox to engine.

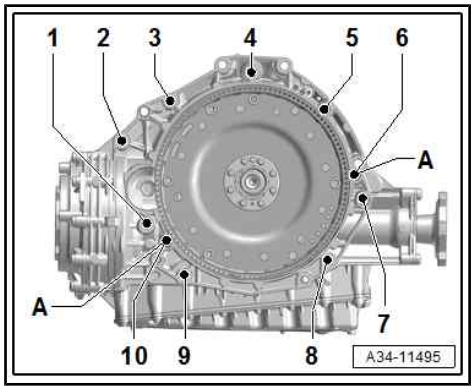

All vehicles (continued):

– Remove bolt -2- for engine mounting on both sides.

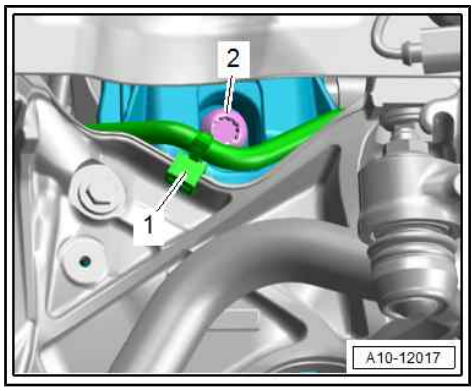

– Unplug electrical connector -1- for exhaust gas temperature sender 3 - G495- and move wiring clear.

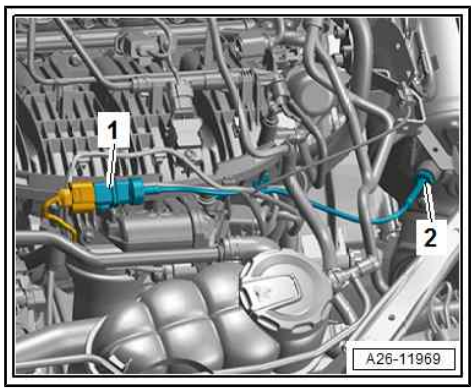

– Remove nuts -arrows- and press particulate filter -1- to rear.

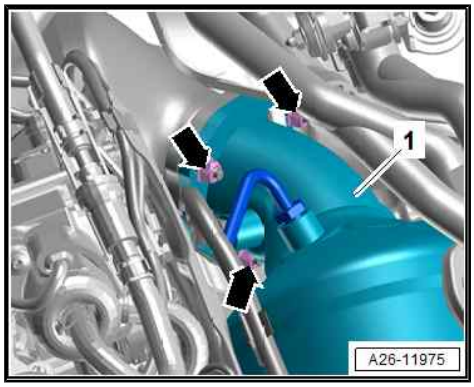

Protected by copyright. Copying for private or commercial purposes, in part or in whole, is not permitted unless authorised by AUDI AG. AUDI AG does not guarantee or accept any liability with respect to the correctness of information in this document. Copyright by AUDI AG.

Pressure differential sender for particulate filter - G1037- - version 1:

– Unplug electrical connector -1- for pressure differential sender for particulate filter - G1037- .

– Unclip bracket with pressure differential sender from intake manifold -arrow- and move clear.

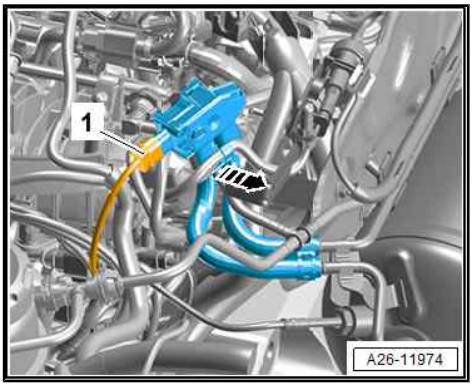

– Unplug electrical connector -1- for vacuum sender - G608- -item 2-.

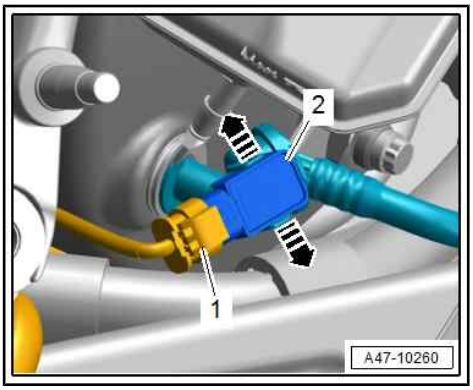

Pressure differential sender for particulate filter - G1037- - version 2:

– Unplug electrical connector -3-.

– Remove bolt -1- and move pressure differential sender for particulate filter - G1037- clear.

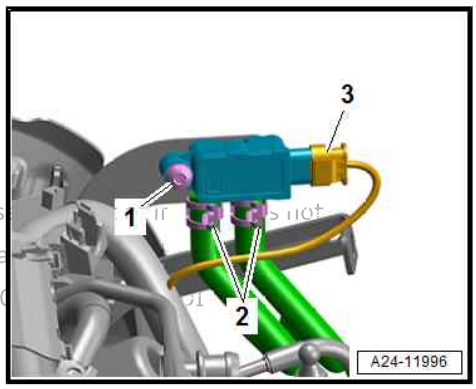

Protected by copyright. Copying for private or commercial purpos
permitted unless authorised by AUDI AG. AUDI AG does not guara
with respect to the correctness of information in this document.

– Move electrical wiring clear at heat shield -1-.

– Remove nuts -arrows- and bolt -2- and detach heat shield (shown with particulate filter removed).

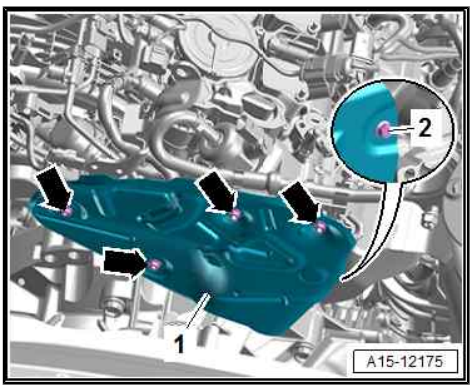

Protected by copyright. Copying for private or commercial purposes, in
permitted unless authorised by AUDI AG. AUDI AG does not guarantee
with respect to the correctness of information in this document. Copyr

– Release retaining clip -3- and move vacuum hose clear.
– Remove bolt -1- and push bracket to one side. (Different versions.)

All versions (continued):

– Take electrical connector -2- for exhaust gas temperature sender 3 - G495- out of bracket and unplug.
– Detach particulate filter.

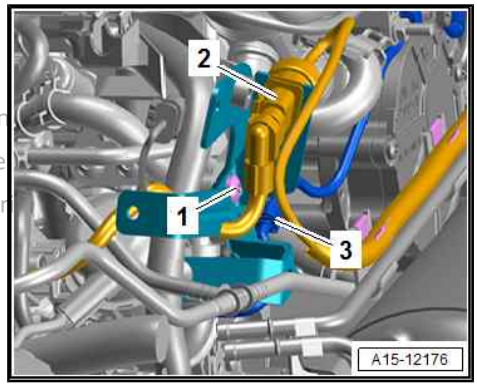

– Unplug electrical connector -2- for Lambda probe 1 after catalytic converter - GX7- -item 1- and move wiring clear.

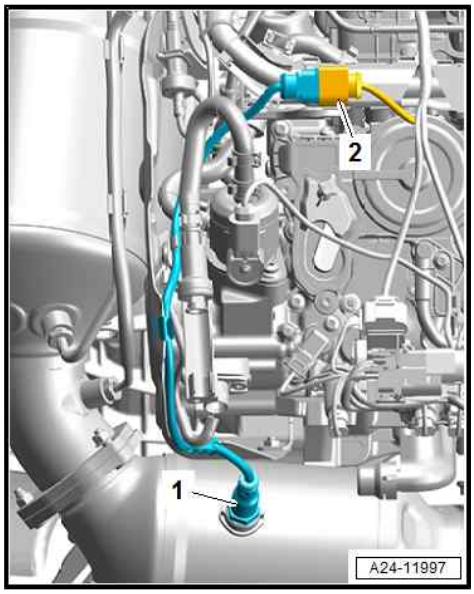

– Unplug electrical connector -1- for Lambda probe 1 before catalytic converter - GX10- -item 2-.
– Move electrical wiring harness clear at engine and tie up to left side.

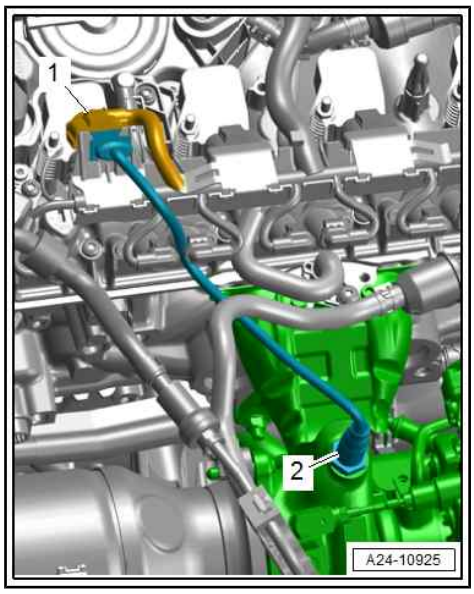

– Unscrew nuts -1- and detach catalytic converter upwards towards rear.

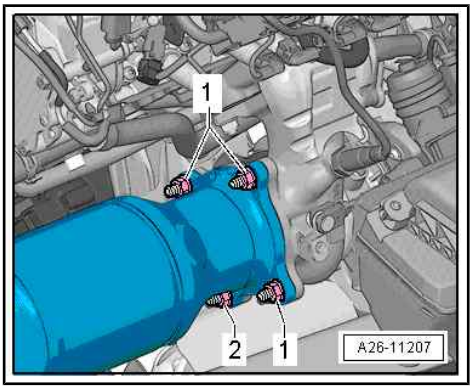

– Disconnect fuel hose -1- ⇒ Fuel supply system; Rep. gr. 20 ; Plug-in connectors; Disconnecting plug-in connectors .
– Release hose clip -2- and disconnect hose for activated charcoal filter system.

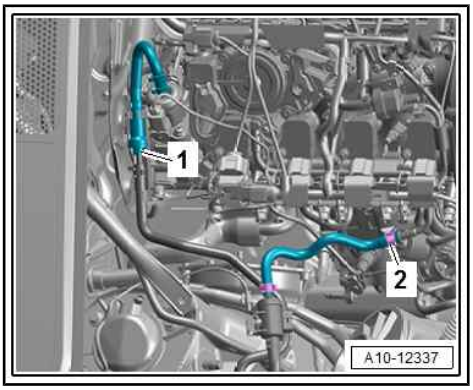

Protected by copyright. Copying for private or commercial purposes, in part or in whole, is not
permitted unless authorised by AUDI AG. AUDI AG does not guarantee
with respect to the correctness of information in this document. Copyr

– Lift retaining clip -arrow- and disconnect coolant hose.

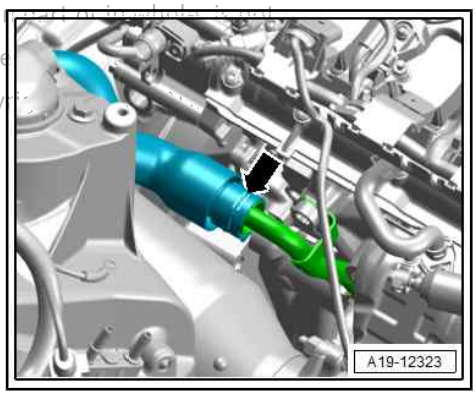

– Lift retaining clips -arrows-, disconnect coolant hoses and move them clear.
– Unplug electrical connector -1- for coolant shortage indicator switch - F66- .
– Unscrew bolt -2- and detach coolant expansion tank -3-.

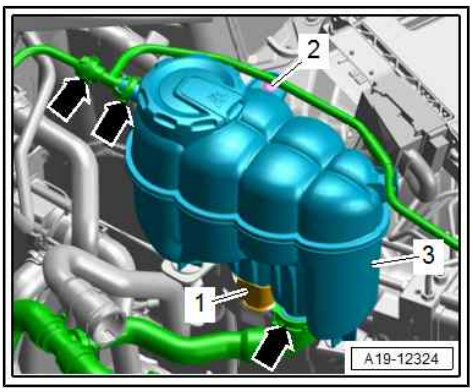

– Lift retaining clips -1, 3- and disconnect coolant hoses.

Vehicles with dual clutch gearbox:

– Lift retaining clip -2- and disconnect coolant hose.

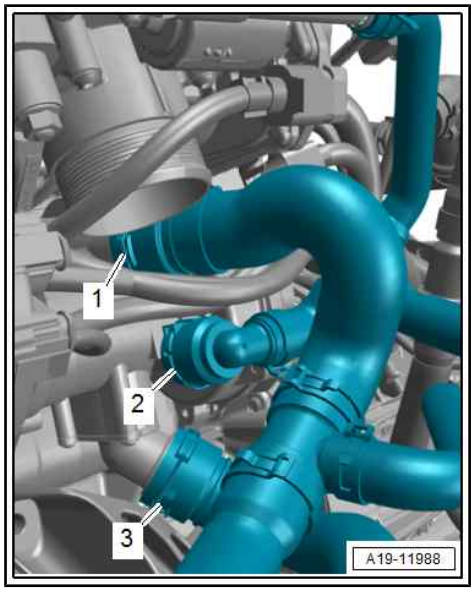

– Release hose clip -arrow- on coolant pipe (left-side) and detach coolant hose.

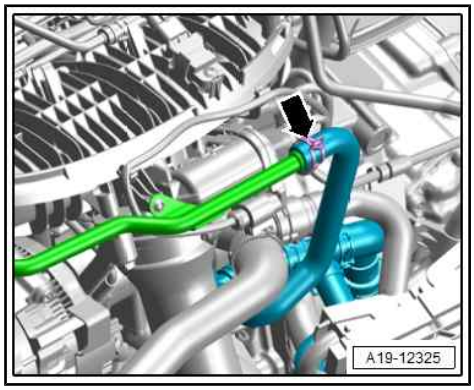

Vehicles with manual gearbox:

– Lift retaining clip -1- and disconnect coolant hose.

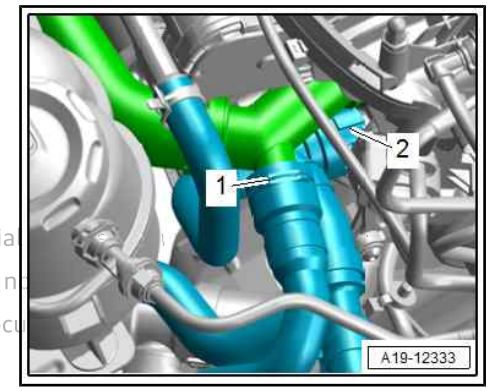

Protected by copyright. Copying for private or commercial
permitted unless authorised by AUDI AG. AUDI AG does n
with respect to the correctness of information in this docu

All vehicles (continued):

– Detach electrical connector -2- from bracket and unplug.
– Unplug electrical connector -1- at engine control unit.
– Move electrical wiring harness clear and place on engine.

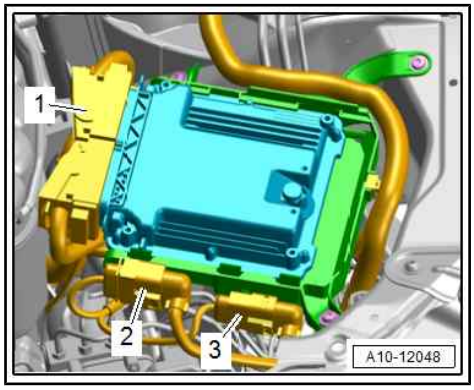

– Unplug electrical connector -arrow- for starter-alternator.

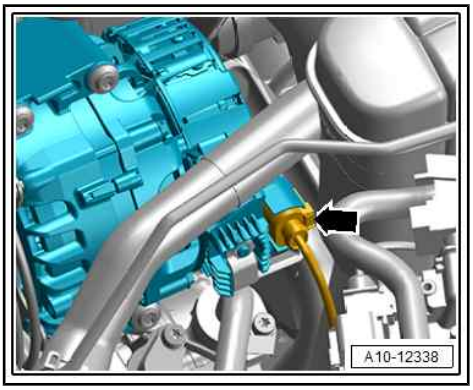

– Release catch -arrow- and disconnect vacuum hose -1-.

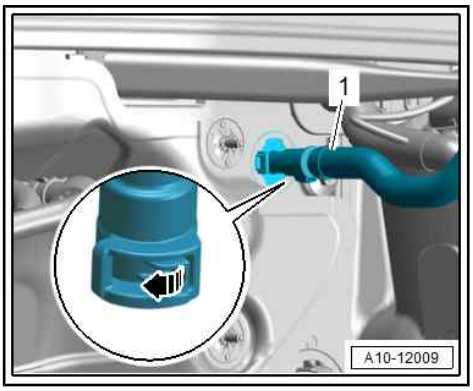

Vehicles with manual gearbox:

– Remove bolts -2 ... 5- (accessible from above) securing engine to gearbox.

– Separate starter slightly from gearbox and leave in position.

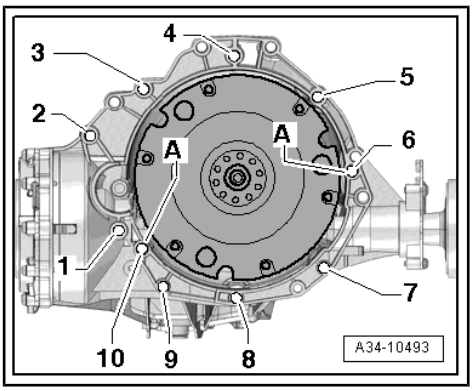

Vehicles with dual clutch gearbox:

– Remove bolts -2 ... 5- (accessible from above) securing engine to gearbox.

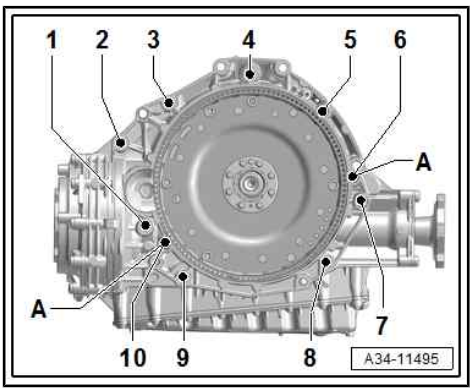

Protected by copyright. Copying for private or commercial purposes, in part or in whole, is not permitted unless authorised by AUDI AG. AUDI AG does not guarantee or accept any liability with respect to the correctness of information in this document. Copyright by AUDI AG.

All vehicles (continued):

– Set up support bracket - 10-222A- with adapters -10-222A/22- on bolted flanges of wing panels (left and right) as illustrated.

– Use gearbox support - 10-222A/11- to hook spindle - 3147- onto gearbox.

– Take up weight of gearbox with spindle.

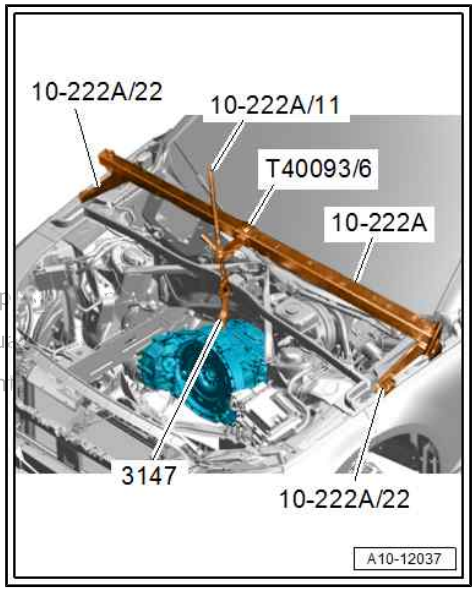

Note

Protected by copyright. Copying for private or commercial purp
permitted unless authorised by AUDI AG. AUDI AG does not gu
with respect to the correctness of information in this documen

Shown in illustration with engine removed.

– Attach lifting tackle - 2024A- to engine and workshop hoist - VAS 6100- as shown in illustration.

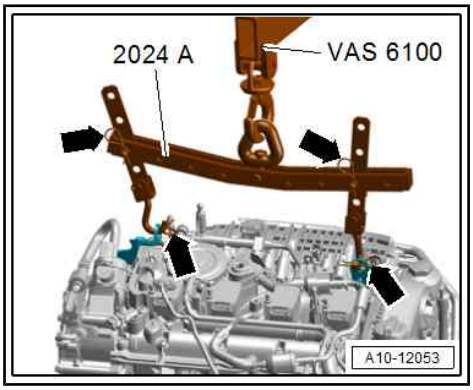

WARNING

Risk of accident.

- *The support hooks and retaining pins on the lifting tackle must be secured with locking pins -arrows-.*

– Raise engine until engine mountings are clear.

– Tighten spindle - 10-222A/11- further.

Caution

Danger of damage to hoses, pipes and wiring connections and to engine compartment.

- *Check that all hoses and wiring connections between engine, gearbox, subframe and body have been detached.*
- *Carefully guide engine out of engine compartment when lifting out.*

– Separate engine from gearbox and lift engine out of engine compartment.

1.1.3 Removing engine - vehicles with natural gas system

Special tools and workshop equipment required

- Support bracket - 10-222A-

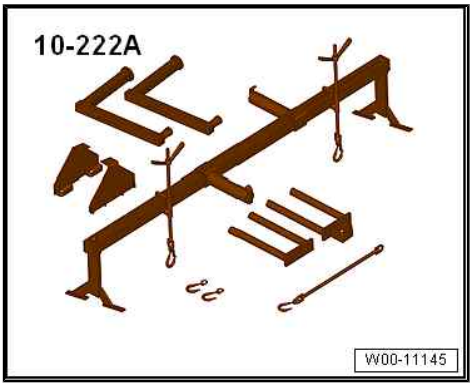

- Lifting tackle - 2024A-

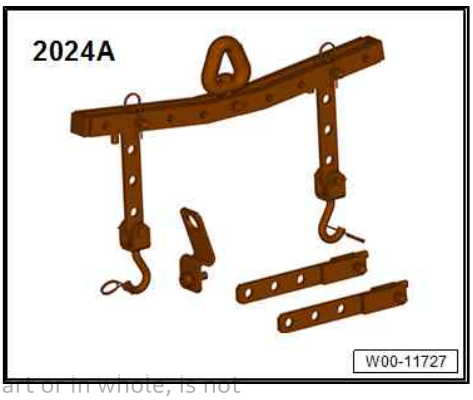

Protected by copyright. Copying for private or commercial purposes, in part or in whole, is not permitted unless authorised by AUDI AG. AUDI AG does not guarantee or accept any liability with respect to the correctness of information in this document. Copyright by AUDI AG.

- Gearbox support - 3147-

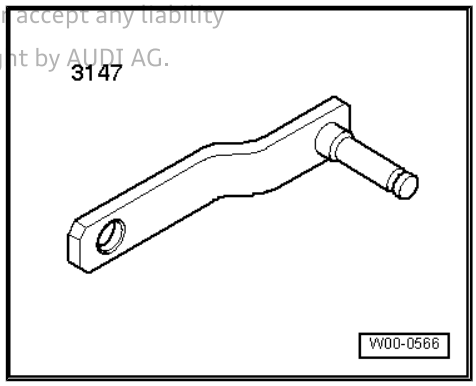

- Lambda probe open ring spanner set - 3337-

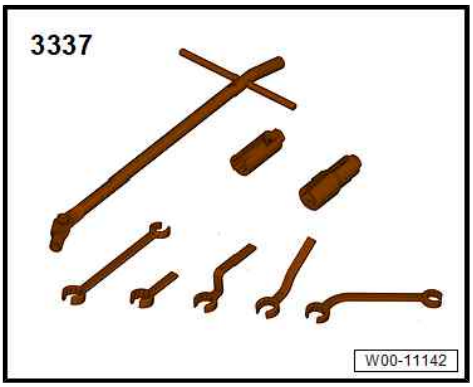

Protected by copyright. Copying for private or commercial purposes, in part or in whole, is not permitted unless authorised by AUDI AG. AUDI AG does not guarantee or accept any liability with respect to the correctness of information in this document. Copyright by AUDI AG.

- Ring spanner insert AF 16 - V.A.G 1332/14-

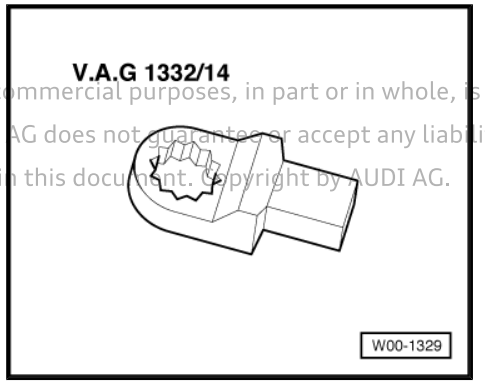

- Workshop hoist - VAS 6100-

- Engine bung set - VAS 6122-

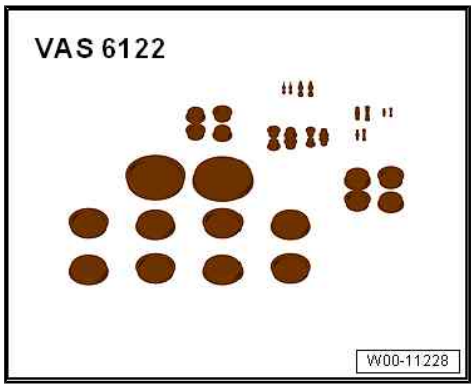

- Coolant collecting system - VAS 5014- or drip tray for workshop hoist - VAS 6208-

- Hose clip pliers - VAS 6362-

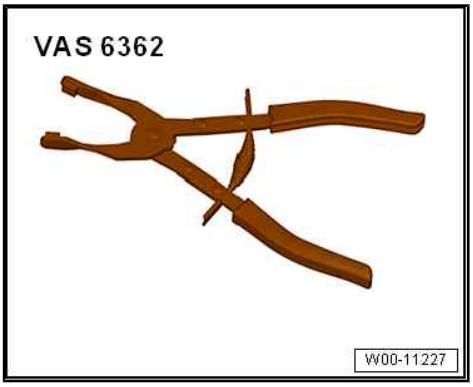

- Adapter - VAS 6948-

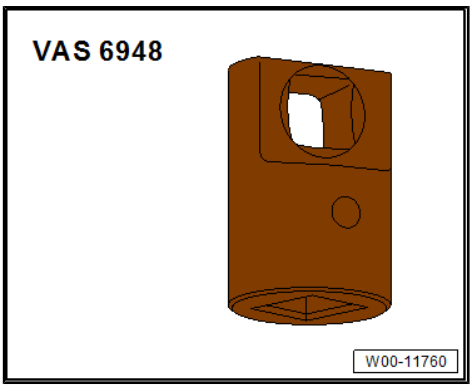

- Locking pin - T10060A-

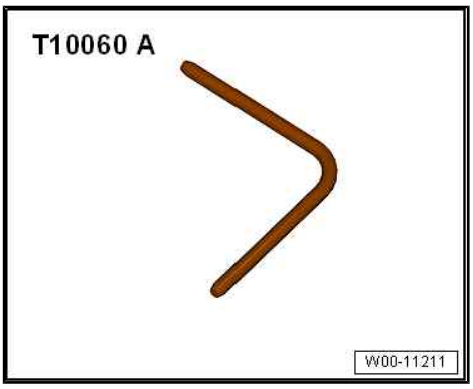

- -T40093/6- from engine support supplementary set - T40093-

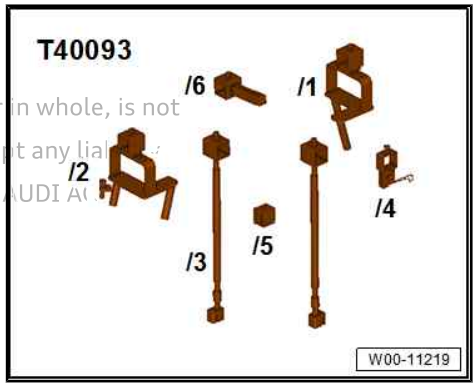

Protected by copyright. Copying for private or commercial purposes, in part or in whole, is not permitted unless authorised by AUDI AG. AUDI AG does not guarantee or accept any liability with respect to the correctness of information in this document. Copyright by AUDI AG

- Ratchet wrench (21 mm) - T40263-

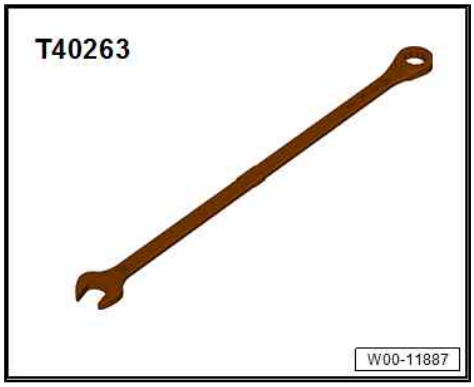

- Adapter - T40314-

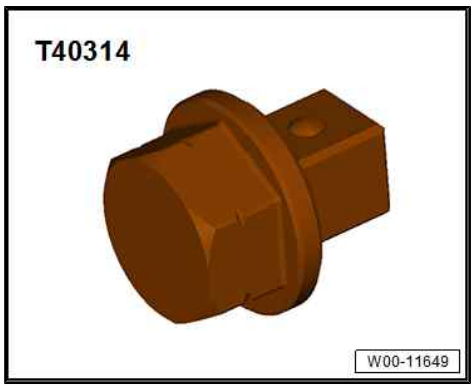

- Protective gloves
- Safety goggles

Procedure

Note

- *The engine is removed upwards without gearbox.*
- *Re-install all cable ties in original positions.*

– Observe safety precautions ⇒ Servicing 4-cylinder engine, 2.0 ltr. 4-valve TFSI; Rep. gr. 00 ; Safety precautions .

– Observe safety precautions when working on the natural gas system ⇒ page 2 .

– Observe rules for cleanliness ⇒ Servicing 4-cylinder engine, 2.0 ltr. 4-valve TFSI; Rep. gr. 00 ; Repair notes; Rules for cleanliness .

WARNING

Risk of explosion due to escaping natural gas - risk of death! Uncontrolled escape of natural gas may occur if the manual fuel tank shut-off valve is defective. In addition, third parties may activate the natural gas system unintentionally.

Danger of severe or fatal injuries due to explosion.

- ***Pressure in natural gas high-pressure pipe must be dissipated by a specially instructed person.***
- ***Shut off natural gas fuel tanks electrically and manually.***

Protected by copyright. Copying for private or commercial purposes, in part or in whole, is not permitted unless authorised by AUDI AG. AUDI AG does not guarantee or accept any liability with respect to the correctness of information in this document. Copyright by AUDI AG.

– Dissipate pressure in natural gas high-pressure pipe ⇒ Fuel supply system - g-tron; Rep. gr. 20 ; Fuel tanks; Dissipating fuel pressure in high-pressure section .
– Switch off ignition and remove ignition key.
– Detach electrical connectors -2- from bracket and unplug.
– Release catches -arrows- and detach engine control unit - J623- -item 3-.
– Unplug electrical connectors -1-.
– Move electrical wiring harness clear and place on engine.
– Remove battery tray ⇒ Electrical system; Rep. gr. 27 ; Battery; Removing and installing battery tray .
– On vehicle versions with manual gearbox: Select 4th gear.

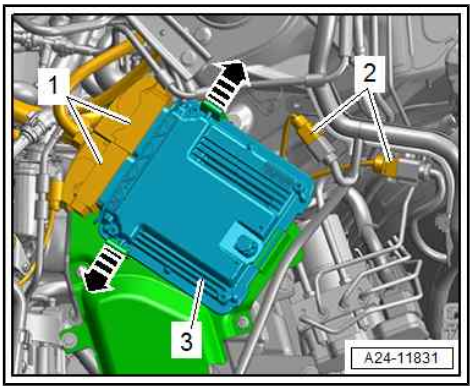

– Carefully pull engine cover panel off retaining pins one after another -arrows-. Do not jerk engine cover panel away, and do not try to pull on one side only.

– Release catches -arrows B- and open cover -1- -arrow A-.

WARNING

The cooling system is under pressure when the power unit is hot. Risk of scalding due to hot steam and hot coolant.

Danger of scalding skin and other parts of the body.

- ***Put on protective gloves.***
- ***Put on safety goggles.***
- ***Cover filler cap on expansion tank with a cloth and open carefully to release pressure.***

Protected by copyright. Copying for private or commercial
permitted unless authorised by AUDI AG. AUDI AG does n
with respect to the correctness of information in this docu

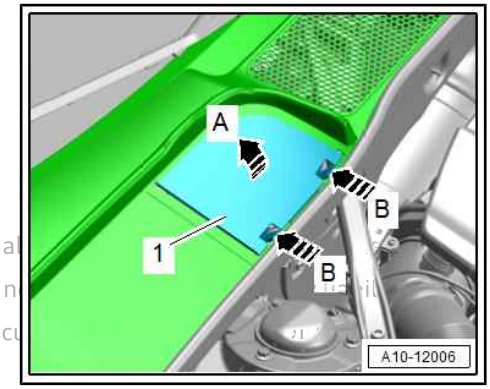

– Release fastener -arrow- and open filler cap -1- on coolant expansion tank.
– Remove front wheels ⇒ Running gear, axles, steering; Rep. gr. 44 ; Wheels, tyres .
– Remove noise insulation panels ⇒ General body repairs, exterior; Rep. gr. 66 ; Noise insulation; Removing and installing noise insulation .
– Remove wheel spoiler (left and right) as well as wheel housing liner (front right) ⇒ General body repairs, exterior; Rep. gr. 66 ; Wheel housing liners; Exploded view - wheel housing liner (front) .

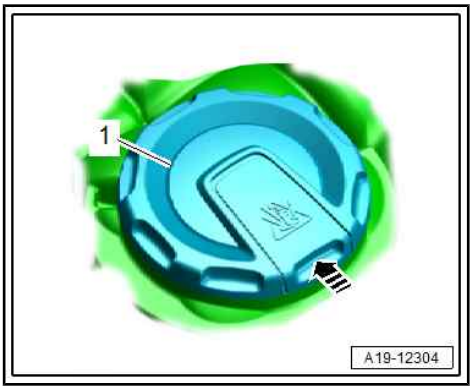

– Remove lock carrier cover ⇒ General body repairs, exterior; Rep. gr. 63 ; Bumper (front); Exploded view - bumper cover .
– Remove bolts -arrows- and detach air duct -2-.

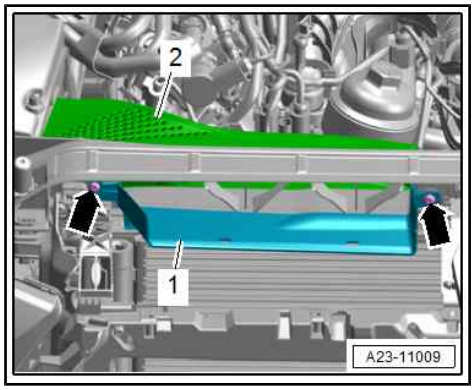

– Unplug electrical connector -2- for air mass meter - G70- and move connector clear.
– Disconnect vacuum hose -3-.
– Release hose clip -4- and disconnect air hose.
– Lift off air cleaner housing -1-.
– Seal off turbocharger connection with sealing plug (thoroughly cleaned) from engine bung set - VAS 6122- .

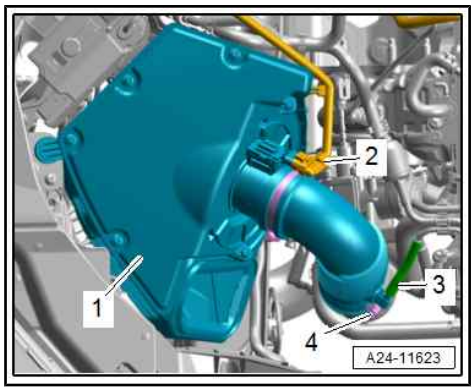

– Release catch -arrow B- and open electronics box -1- -arrow A-.
– Remove nut -2- and move B+ wire clear.
– Move wiring duct (top) clear.

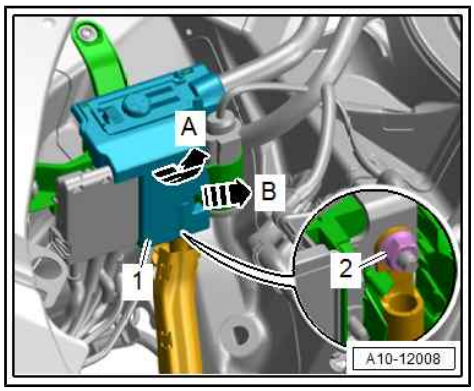

– Remove nuts -1- (accessible from above) for front silencer.

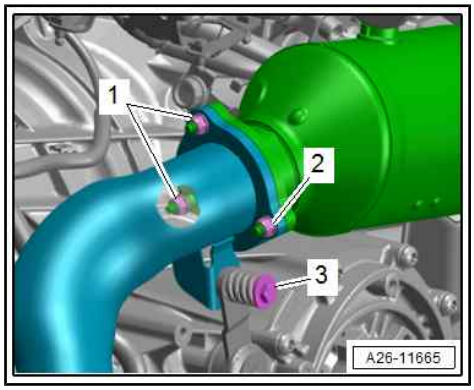

Note

The nut -2- and bolt -3- are removed at a later stage.

Protected by copyright. Copying for private or commercial purposes, in part or in whole, is not permitted unless authorised by AUDI AG. AUDI AG does not guarantee or accept any liability with respect to the correctness of information in this document. Copyright by AUDI AG.

– Release hose clip -arrow- and detach air hose downwards from throttle valve module - GX3- .

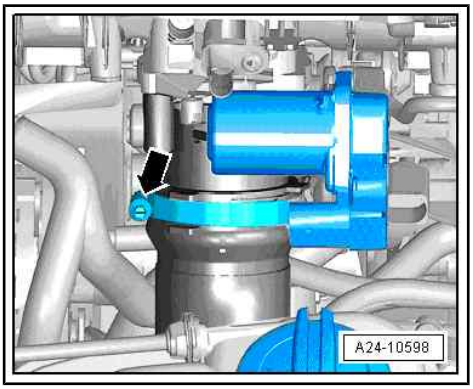

– Place collector tank from coolant collecting system -VAS 5014- or drip tray for workshop hoist - VAS 6208- underneath.
– Lift retaining clip -2-, disconnect coolant hose from radiator (bottom right) and drain off coolant.

Protected by copyright. Copying for private or commercial purposes, in part or in
permitted unless authorised by AUDI AG. AUDI AG does not guarantee or accept
with respect to the correctness of information in this document. Copyright by AU

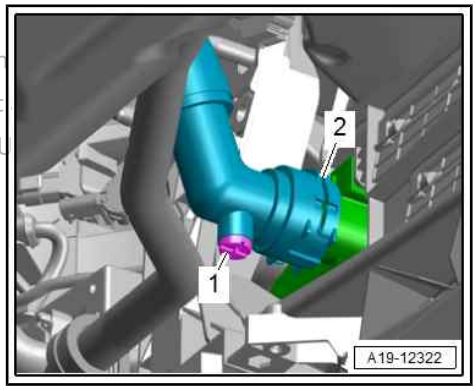

– Release hose clip -2- and detach from coolant pipe -1-.
– Unscrew bolt -3- on both sides and tie up coolant pipe to side.

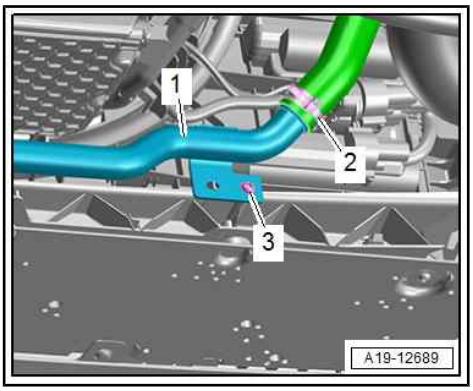

– Unplug electrical connector -1- for charge pressure sender - G31- .
– Release hose clip -2-, disconnect air hose and detach it downwards.

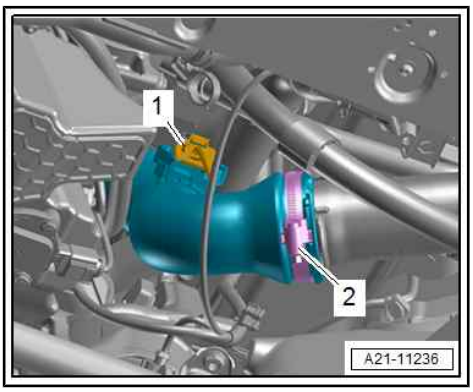

Note

- *Running a used poly V-belt in the opposite direction could cause irreparable damage.*
- *Before removing the poly V-belt, mark the direction of rotation with chalk or a felt-tip pen for re-installation.*

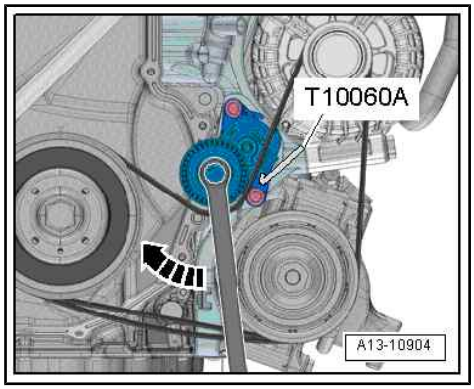

– To slacken poly V-belt turn tensioner in direction of -arrow-.
– Lock tensioner with locking pin - T10060A- .
– Take off poly V-belt.
– Remove air conditioner compressor from bracket ⇒ Heating, air conditioning; Rep. gr. 87 ; Air conditioner compressor; Detaching and attaching air conditioner compressor at bracket .

– Remove bolt -1- for support mounting -2- (both sides).

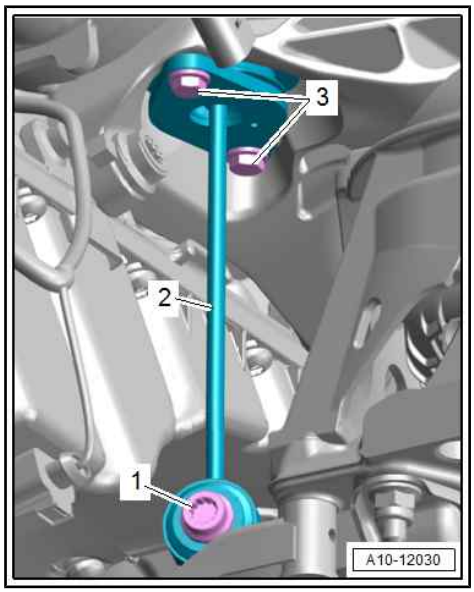

– Unscrew bolt -arrow-, detach wiring duct -1- from sump (top section) towards front and press it downwards.

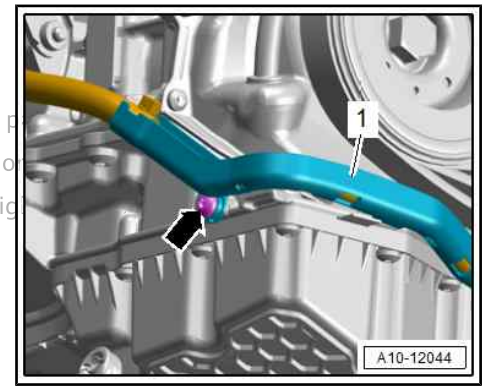

Protected by copyright. Copying for private or commercial purposes, in p
permitted unless authorised by AUDI AG. AUDI AG does not guarantee o
with respect to the correctness of information in this document. Copyrig

– Release hose clip -arrow- and detach air hose (right-side) from turbocharger.

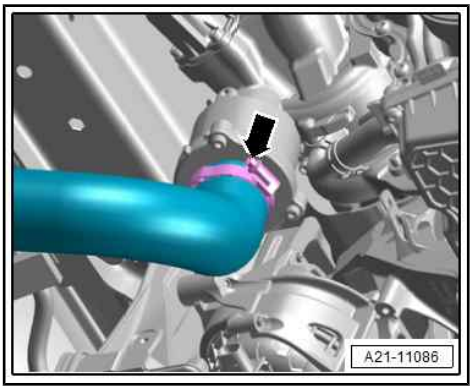

– Detach electrical connector -2- from bracket and unplug.
– Release fasteners -arrows- and move wiring duct -1- clear.
– Move clear electrical wiring harness leading to engine.

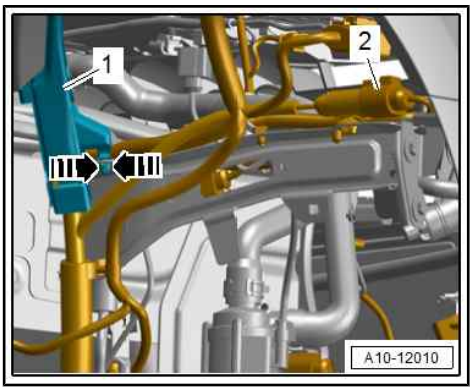

– Remove nut -arrow- and move earth wire clear.
– Remove heat shield for drive shaft (right-side) ⇒ Running gear, axles, steering; Rep. gr. 40 ; Drive shaft; Removing and installing heat shield for drive shaft .
– Unbolt drive shaft (left and right) from gearbox ⇒ Running gear, axles, steering; Rep. gr. 40 ; Drive shaft; Removing and installing drive shaft .

Protected by copyright. Copying for private or commercial purp
permitted unless authorised by AUDI AG. AUDI AG does not gua
with respect to the correctness of information in this document

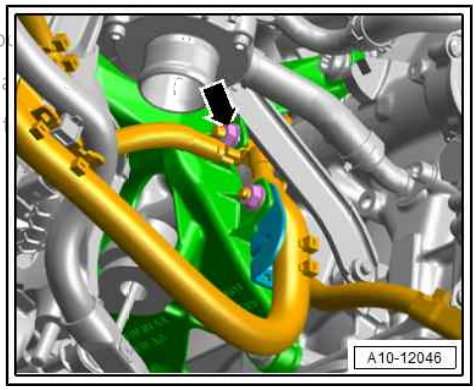

– Remove nut -2- and bolt -3- for front silencer.

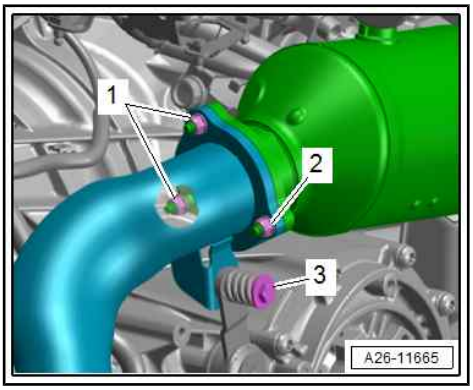

Caution

Avoid damage to flexible joints.

- *Do not bend flexible joints more than 10°.*

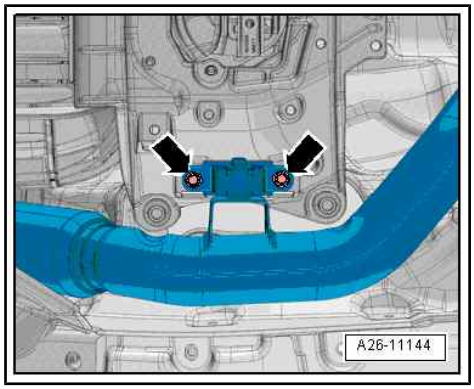

– Remove bolts -arrows-.

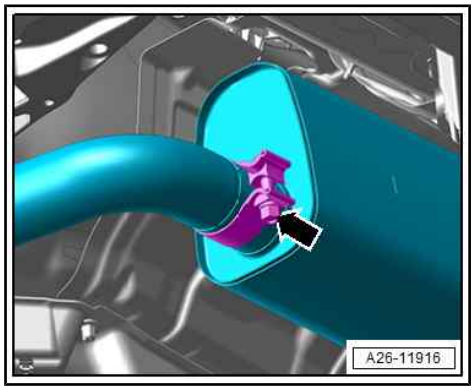

– Loosen clamp -arrow-.
– Detach front exhaust pipe from front silencer and remove.

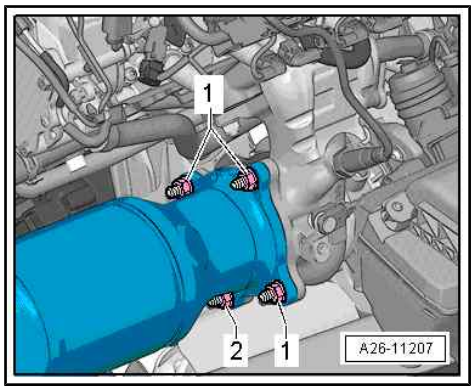

– Remove nut -2- for catalytic converter.

Note

The nuts -1- are removed at a later stage.

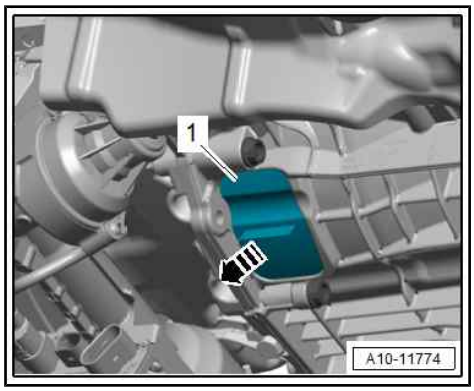

– Detach bottom cover -1- from gearbox -arrow-.

Protected by copyright. Copying for private or commercial purposes, in part or in whole, is not permitted unless authorised by AUDI AG. AUDI AG does not guarantee or accept any liability with respect to the correctness of information in this document. Copyright by AUDI AG.

– Counterhold crankshaft using ratchet wrench, 21 mm - T40263- and adapter -T40314- when slackening bolts for flywheel.

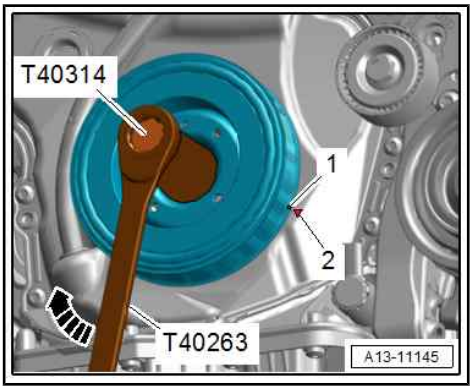

Caution

Irreparable engine damage can be caused if the camshaft timing chain slips.

- ***Only turn crankshaft in direction of engine rotation.***

– Then turn crankshaft in steps of 120° in direction of engine rotation -arrow-.

– Remove 3 bolts -arrow- for flywheel -1-.

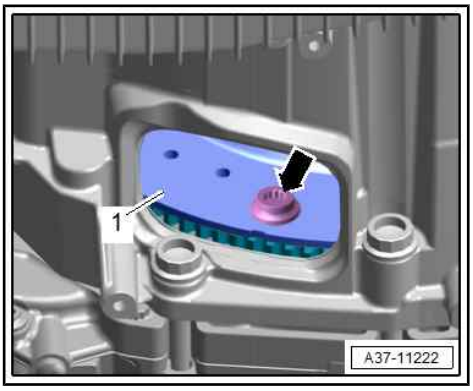

Vehicles with manual gearbox:

– Unscrew bolt -1- using ring spanner insert, 16 mm - V.A.G 1332/14- and adapter - VAS 6948- .

– Remove bolts -6 ... 11- securing gearbox to engine.

Protected by copyright. Copying for private or commercial purposes, in part or in whole, is not permitted unless authorised by AUDI AG. AUDI AG does not guarantee or accept any liability with respect to the correctness of information in this document. Copyright by AUDI AG.

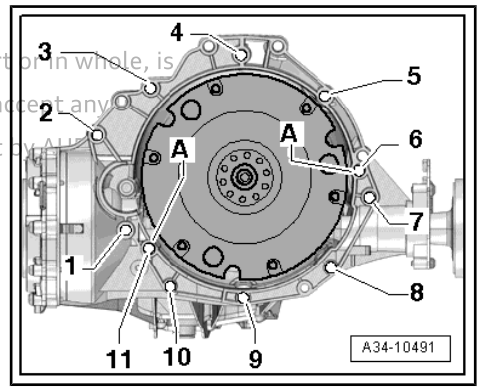

Vehicles with dual clutch gearbox:

– Unscrew bolt -1- using ring spanner insert, 16 mm - V.A.G 1332/14- and adapter - VAS 6948- .

– Remove bolts -6 ... 10- securing gearbox to engine.

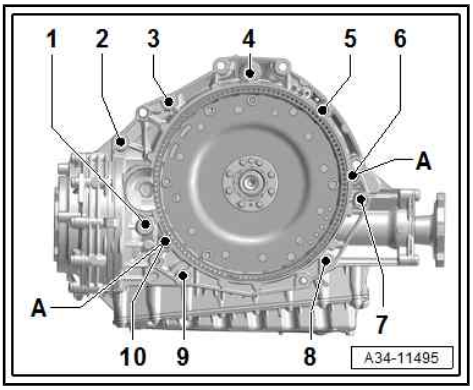

All vehicles (continued):

– Remove bolt -2- for engine mounting on both sides.

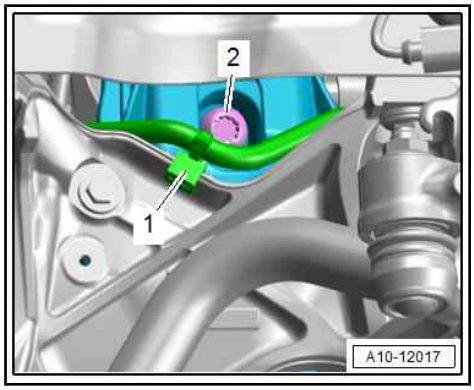

– Unplug electrical connector -2- for Lambda probe 1 after catalytic converter - GX7- -item 1- and move wiring clear.

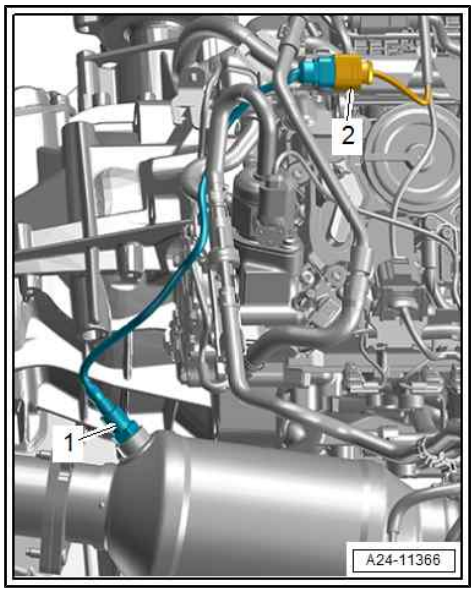

– Unplug electrical connector -1- for Lambda probe 1 before catalytic converter - GX10- -item 2-. (Installation position varies.)

– Unscrew Lambda probe 1 before catalytic converter - GX10- -item 2- using a tool from Lambda probe open ring spanner set - 3337- .

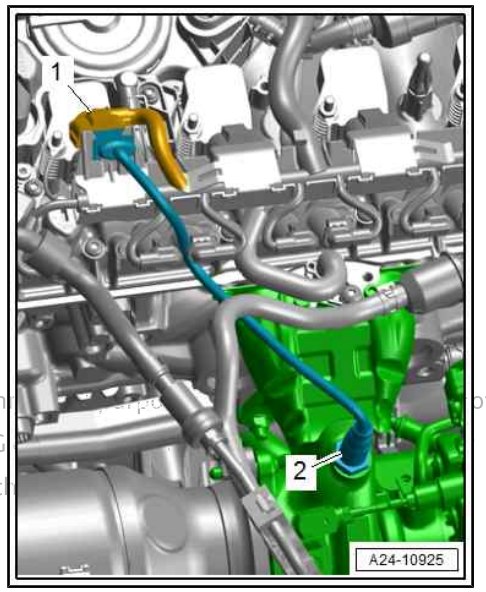

Protected by copyright. Copying for private or com ot
permitted unless authorised by AUDI AG. AUDI AG
with respect to the correctness of information in t

– Unscrew nuts -1- and detach catalytic converter upwards.

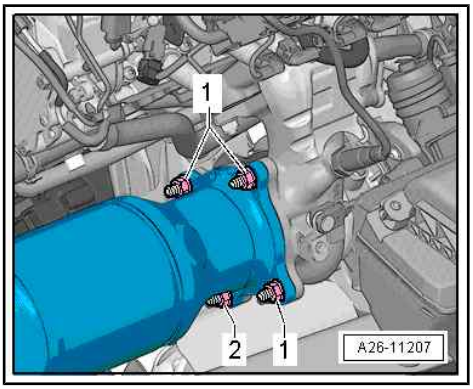

WARNING

The fuel system is pressurised.

Risk of injury as fuel may spray out.

- *Put on safety goggles.*
- *Put on protective gloves.*
- *Release pressure (wrap a clean cloth around connection and open connection carefully).*

– Release hose clip -1- and detach fuel hose.

– Release hose clip -2- and disconnect hose for activated charcoal filter system.

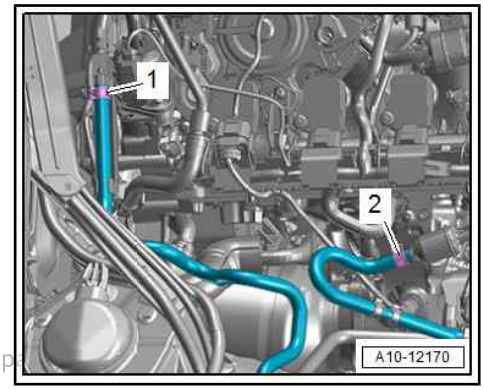

Protected by copyright. Copying for private or commercial purposes, in p
permitted unless authorised by AUDI AG. AUDI AG does not guarantee or accept any liability
with respect to the correctness of information in this document. Copyrig

– Lift retaining clip -2- and disconnect coolant hose.

– Release hose clip -1- on rear coolant pipe and detach coolant hose.

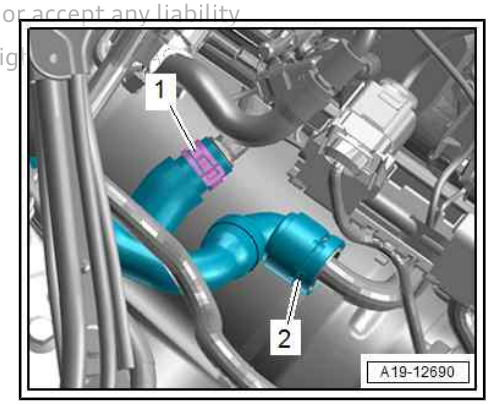

– Lift retaining clips -1, 2- and disconnect coolant hoses.

– Move coolant hose -3- clear and move it to right side.

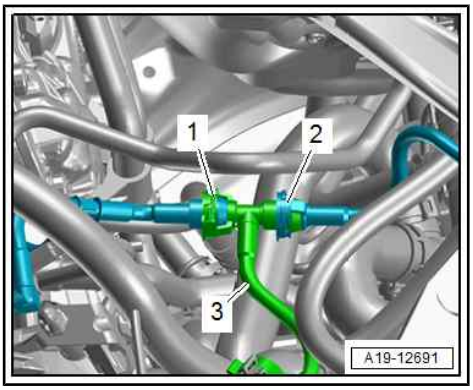

– Lift retaining clips -1, 3- and disconnect coolant hoses.

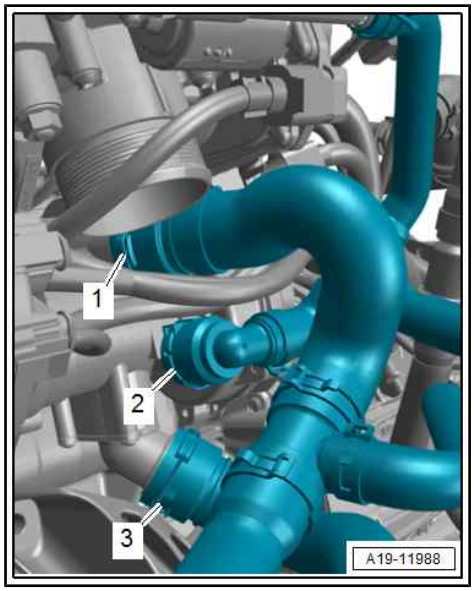

Vehicles with dual clutch gearbox:

– Lift retaining clip -2- and disconnect coolant hose.

– Release hose clip -arrow- on coolant pipe (left-side) and detach coolant hose.

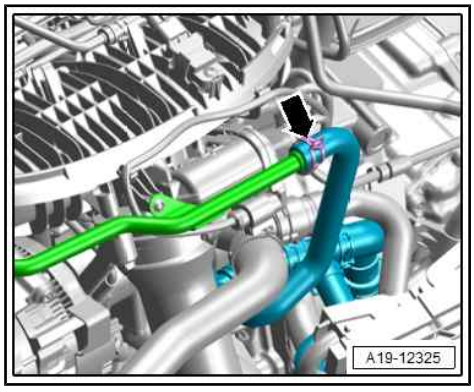

Vehicles with manual gearbox:

– Lift retaining clip -1- and disconnect coolant hose.

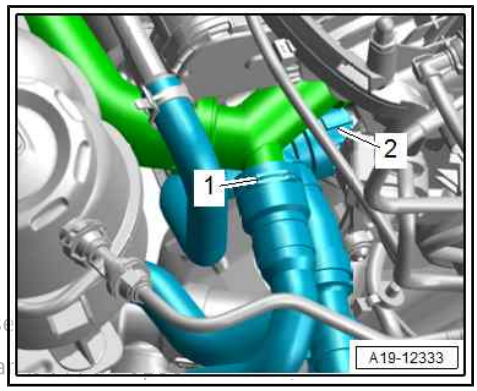

Protected by copyright. Copying for private or commercial purpose
permitted unless authorised by AUDI AG. AUDI AG does not guara
with respect to the correctness of information in this document. Copyright by AUDI AG.

All vehicles (continued):

– Unscrew natural gas low-pressure pipe -1- from gas rail; to do so, counterhold at connection with a suitable tool.

– Seal off open lines and connections with plugs (thoroughly cleaned) from engine bung set - VAS 6122- .

– Release hose clip -2- on rear coolant pipe and detach coolant hose.

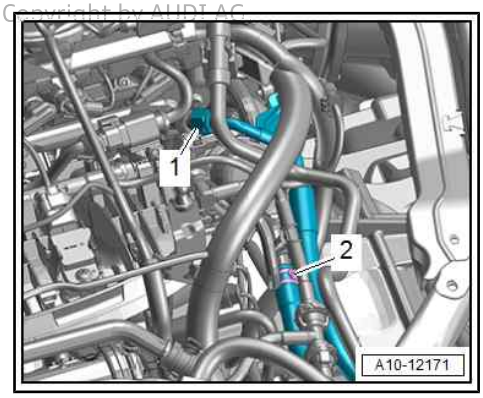

– Release catch -arrow- and disconnect vacuum hose -1-.

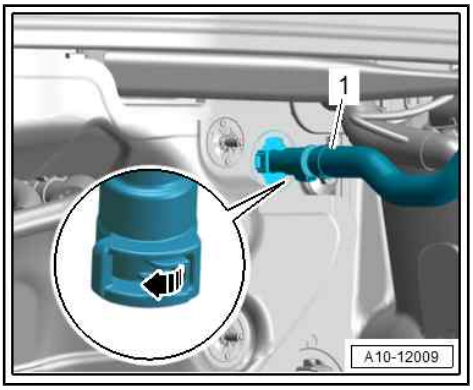

Vehicles with manual gearbox:

– Remove bolts -2 ... 5- (accessible from above) securing engine to gearbox.

– Separate starter slightly from gearbox and leave in position.

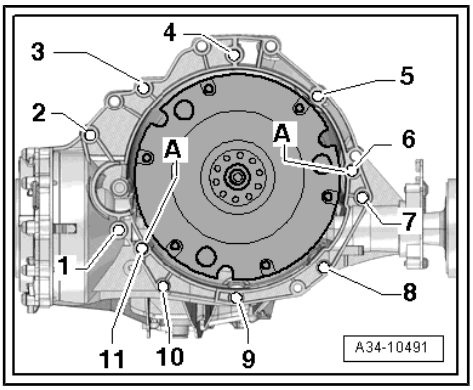

Vehicles with dual clutch gearbox:

– Remove bolts -2 ... 5- (accessible from above) securing engine to gearbox.

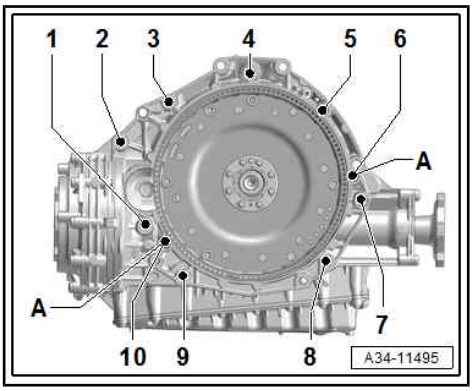

Protected by copyright. Copying for private or commercial purposes, in part or in whole, is not permitted unless authorised by AUDI AG. AUDI AG does not guarantee or accept any liability with respect to the correctness of information in this document. Copyright by AUDI AG.

All vehicles (continued):

– Set up support bracket - 10-222A- with adapters -10-222A/22- on bolted flanges of wing panels (left and right) as illustrated.

– Use gearbox support - 10-222A/11- to hook spindle - 3147- onto gearbox.

– Take up weight of gearbox with spindle.

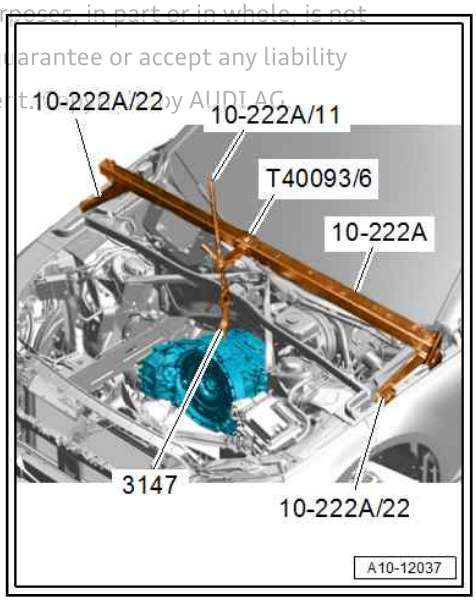

Note

Shown in illustration with engine removed.

– Attach lifting tackle - 2024A- to engine and workshop hoist - VAS 6100- as shown in illustration.

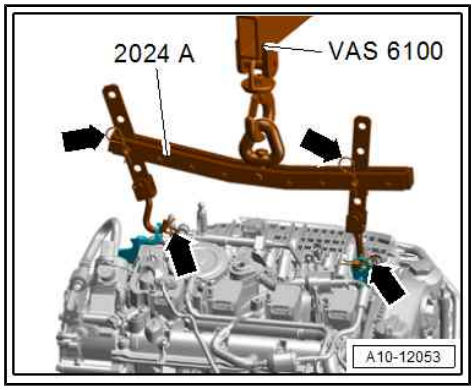

WARNING

Risk of accident.

- *The support hooks and retaining pins on the lifting tackle must be secured with locking pins -arrows-.*

– Raise engine until engine mountings are clear.

– Tighten spindle - 10-222A/11- further.

Caution

Danger of damage to hoses, pipes and wiring connections and to engine compartment.

- *Check that all hoses and wiring connections between engine, gearbox, subframe and body have been detached.*
- *Carefully guide engine out of engine compartment when lifting out.*

Protected by copyright. Copying for private or commercial purposes, in part or in whole, is not permitted unless authorised by AUDI AG. AUDI AG does not guarantee or accept any liability with respect to the correctness of information in this document. Copyright by AUDI AG.

– Separate engine from gearbox and lift engine out of engine compartment.

1.2 Securing engine to engine and gearbox support

All procedures are described in ⇒ Servicing 4-cylinder engine, 2.0 ltr. 4-valve TFSI; Rep. gr. 10 ; Removing and installing engine; Securing engine to engine and gearbox support .

1.3 Installing engine

Special tools and workshop equipment required

- All special tools specified in removal procedure

Tightening torques

Note

- *Tightening torques apply only to lightly greased, oiled, phosphated or black-finished nuts and bolts.*
- *Additional lubricants such as engine or gear oil may be used, but do not use lubricants containing graphite.*
- *Do not use degreased parts.*
- *Tolerance for tightening torques: ± 15 %*

Component		Nm
Bolts/nuts	M6	9
	M7	15
	M8	20
	M10	40
	M12	65

- ⇒ “2.1 Exploded view - assembly mountings”, page 59
- Bolts securing engine to gearbox ⇒ Gearbox; Rep. gr. 34 ; Removing and installing gearbox; Tightening torques for gearbox

Procedure

Note

- *After removing, renew bolts tightened with specified tightening angle.*
- *Renew self-locking nuts and bolts as well as seals, gaskets and O-rings after removal.*
- *On vehicles with manual gearbox, a needle bearing must be fitted in the drive plate ⇒ Servicing 4-cylinder engine, 2.0 ltr. 4-valve TFSI; Rep. gr. 13 ; Cylinder block (gearbox end); Renewing needle bearing in drive plate .*
- *Hose connections and hoses for charge air system must be free of oil and grease prior to fitting.*
- *Secure all hose connections with correct type of hose clips (as original equipment) ⇒ Electronic parts catalogue .*
- *If you intend to secure the charge air hoses at their connections with used hose clips, spray rust remover onto the worm threads before installing.*
- *Re-install all cable ties in original positions.*

Protected by copyright. Copying for private or commercial purposes, in part or in whole, is not permitted unless authorised by AUDI AG. AUDI AG does not guarantee or accept any liability with respect to the correctness of information in this document. Copyright by AUDI AG.

– Attach engine to gearbox, but do not yet tighten gearbox/engine connecting bolts ⇒ Gearbox; Rep. gr. 34 ; Removing and installing gearbox; Installing gearbox .
– Slacken spindle - 10-222A/11- .
– Lower workshop hoist and place engine/gearbox assembly onto engine mountings.

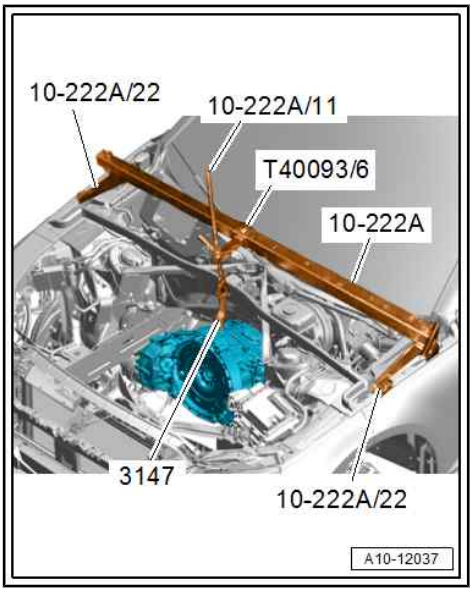

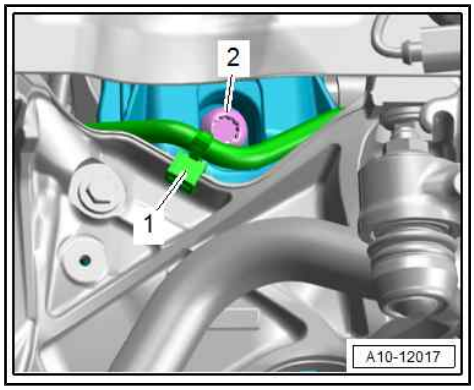

- Tighten bolts -2- (left and right) for engine mounting.
- Detach workshop hoist - VAS 6100- and lifting tackle - 2024A- .
- Tighten gearbox/engine connecting bolts ⇒ Gearbox; Rep. gr. 34 ; Removing and installing gearbox; Tightening torques for gearbox .

Remaining installation steps are carried out in reverse sequence; note the following:

- Connect fuel hose ⇒ Fuel supply system; Rep. gr. 20 ; Plug-in connectors; Disconnecting plug-in connectors .
- Vehicles with natural gas system: Secure natural gas low-pressure pipe to gas rail ⇒ page 189 (counterhold at connection with a suitable tool).
- Install Lambda probe 1 before catalytic converter - GX10- ⇒ Servicing 4-cylinder engine, 2.0 ltr. 4-valve TFSI; Rep. gr. 24 ; Lambda probe; Removing and installing Lambda probe .
- If removed previously, install intermediate steering shaft ⇒ Running gear, axles, steering; Rep. gr. 48 ; Steering column; Removing and installing intermediate steering shaft .
- Secure drive shaft with bolts ⇒ Running gear, axles, steering; Rep. gr. 40 ; Drive shaft; Removing and installing drive shaft .
- Install heat shield for drive shaft ⇒ Running gear, axles, steering; Rep. gr. 40 ; Drive shaft; Removing and installing heat shield for drive shaft .
- If unfastened previously, bolt on radiator ⇒ page 140 .
- Install air conditioner compressor ⇒ Heating, air conditioning; Rep. gr. 87 ; Air conditioner compressor; Detaching and attaching air conditioner compressor at bracket .
- Install poly V-belt ⇒ Servicing 4-cylinder engine, 2.0 ltr. 4-valve TFSI; Rep. gr. 13 ; Cylinder block (pulley end); Removing and installing poly V-belt tensioner .
- If removed previously, install plenum chamber partition panel ⇒ General body repairs, exterior; Rep. gr. 50 ; Bulkhead; Exploded view - plenum chamber partition panel .
- Install air cleaner housing ⇒ page 178 .
- Install lock carrier cover, air intake grille (left and right) and closure plate at bumper cover ⇒ General body repairs, exterior; Rep. gr. 63 ; Bumper (front); Exploded view - bumper cover .
- Electrical connections and routing ⇒ Current flow diagrams, Electrical fault finding and Fitting locations.
- Install catalytic converter ⇒ Servicing 4-cylinder engine, 2.0 ltr. 4-valve TFSI; Rep. gr. 26 ; Emission control system; Removing and installing catalytic converter .
- Align the exhaust system so it is free of stress ⇒ page 228 .
- Fill up with engine oil (⇒ Maintenance ; Booklet 830 ; Maintenance; Engine oil: filling up), and check oil level (⇒ Maintenance ; Booklet 830 ; Maintenance; Engine oil: checking oil level and correcting if necessary).
- Observe steps required after re-connecting battery ⇒ Electrical system; Rep. gr. 27 ; Battery; Disconnecting and connecting battery .

Copyright by AUDI AG.
Any unauthorized use, distribution or reproduction for commercial purposes, in part or in whole, is not permitted. Use only by authorized Audi dealers. AUDI AG does not guarantee or accept any liability with respect to the correctness of information in this document. Copyright by AUDI AG.

Caution

Risk of irreparable damage to control units because of excessive voltage.

- ***Never use battery charging equipment for boost starting.***

– If engine was renewed, perform adaptions listed in Guided Function “01 - Functions, engine mechanics” ⇒ Vehicle diagnostic tester.

Caution

Risk of damage to components.

- ***Only perform additional adaptions for those components which were renewed after removal.***

– Connect coolant hose with plug-in connector ⇒ page 142 .

Note

Do not reuse coolant.

– Fill up with coolant ⇒ page 102 .

– Install engine cover panel ⇒ Servicing 4-cylinder engine, 2.0 ltr. 4-valve TFSI; Rep. gr. 10 ; Engine cover panel; Removing and installing engine cover panel .

– Install wheel housing liners and wheel spoiler ⇒ General body repairs, exterior; Rep. gr. 66 ; Wheel housing liners; Exploded view - wheel housing liner (front) .

– Fit front wheels ⇒ Running gear, axles, steering; Rep. gr. 44 ; Wheels, tyres .

– Install noise insulation panels ⇒ General body repairs, exterior; Rep. gr. 66 ; Noise insulation; Exploded view - noise insulation .

Protected by copyright. Copying for private or commercial purposes, in part or in whole, is not permitted unless authorised by AUDI AG. AUDI AG does not guarantee or accept any liability with respect to the correctness of information in this document. Copyright by AUDI AG.

Vehicles with natural gas system:

WARNING

Risk of explosion due to uncontrolled gas escape in connection with ignition sources and electrostatic discharge - risk of death!

Danger of severe or fatal injuries due to explosion.

- *Natural gas system must be re-started by a specially instructed person.*

– Open manual shut-off mechanisms of mechanical tank shut-off valves using extension -T40333- and hand wheel -T50026- , and plug in electrical connectors if necessary.

WARNING

Risk of explosion due to escaping natural gas - risk of death! Leaks in the natural gas system can cause uncontrolled escape of natural gas.

Danger of severe or fatal injuries due to explosion.

- *Check natural gas system for leaks.*

– Perform leak test on low-pressure section of natural gas system ⇒ Natural gas engines - General information; Rep. gr. 00 ; Checking natural gas system .

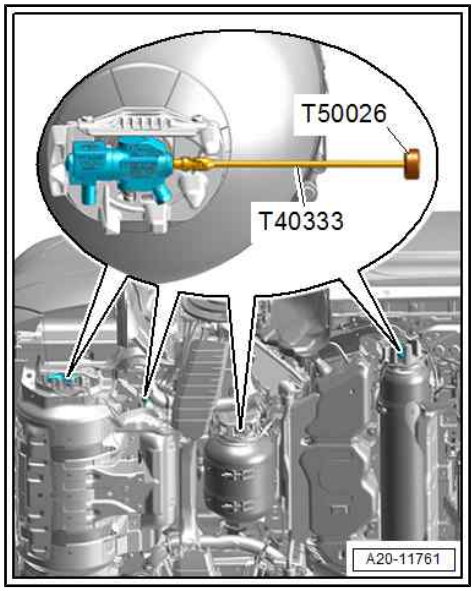

Protected by copyright. Copying for private or commercial purposes, in part or in whole, is not permitted unless authorised by AUDI AG. AUDI AG does not guarantee or accept any liability with respect to the correctness of information in this document. Copyright by AUDI AG.

2 Assembly mountings

⇒ "2.1 Exploded view - assembly mountings", page 59
⇒ "2.2 Supporting engine in installation position", page 62
⇒ "2.3 Removing and installing engine mountings", page 63
⇒ "2.4 Removing and installing gearbox mounting", page 68

2.1 Exploded view - assembly mountings

♦ Exploded view - engine mounting ⇒ page 59
♦ Exploded view - gearbox mounting for manual gearbox ⇒ page 60
♦ Exploded view - gearbox mounting for dual clutch gearbox ⇒ page 61

Protected by copyright. Copying for private or commercial purposes, in part or in whole, is not permitted unless authorised by AUDI AG. AUDI AG does not guarantee or accept any liability with respect to the correctness of information in this document. Copyright by AUDI AG.

Exploded view - engine mounting

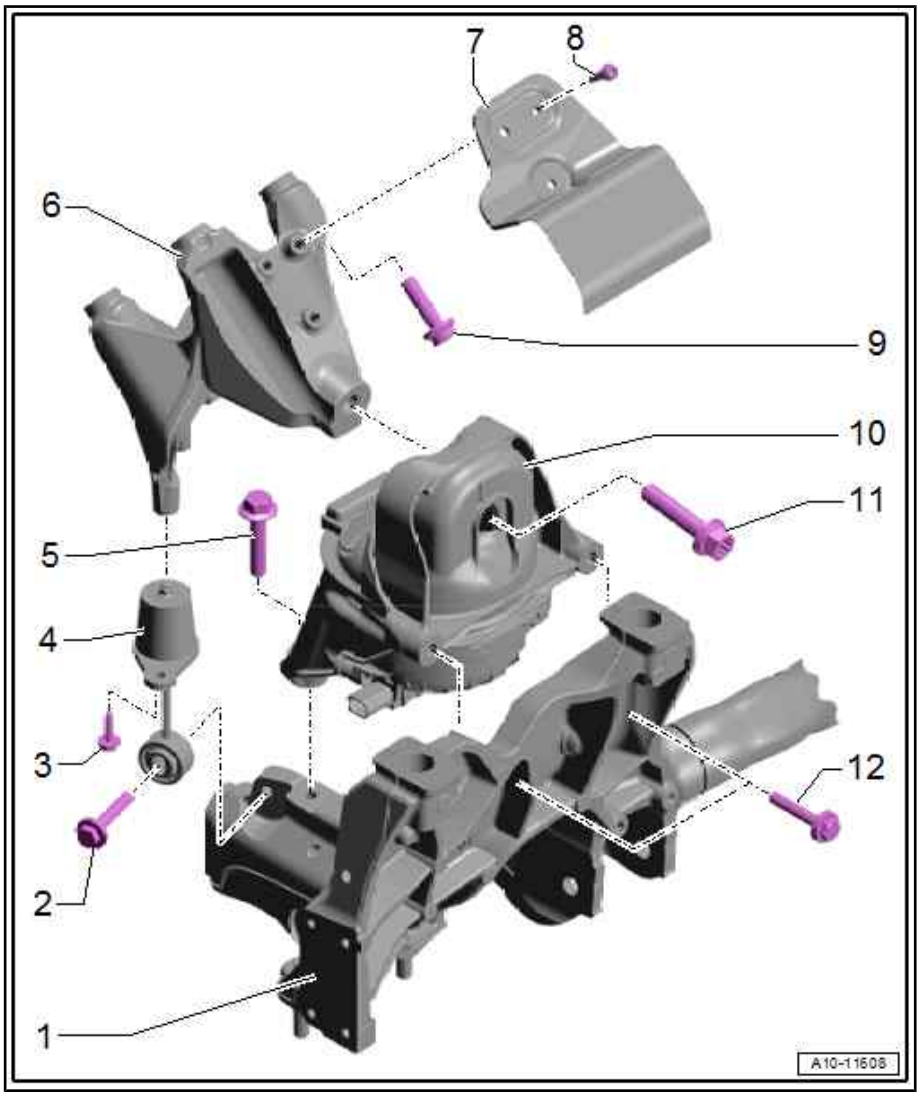

1 - Subframe

2 - Bolt

- ❑ For vehicles with support mounting
- ❑ 20 Nm

3 - Bolt

- ❑ For vehicles with support mounting
- ❑ 10 Nm

4 - Support mounting

- ❑ Depending on equipment version; for correct type refer to ⇒ Electronic parts catalogue
- ❑ Removing and installing ⇒ page 67
- ❑ Installation position ⇒ page 60

5 - Bolt

- ❑ 55 Nm

6 - Engine support

- ❑ Different versions available; for allocation refer to ⇒ Electronic parts catalogue
- ❑ Removing and installing ⇒ page 71

7 - Heat shield

8 - Bolt

- ❑ 10 Nm

9 - Bolt

- ❑ 55 Nm

10 - Engine mounting

- ❑ Equipment version with:

♦ Left electrohydraulic engine mounting solenoid valve - N144-

- Right electrohydraulic engine mounting solenoid valve - N145-
  - ❑ Solenoid valve integrated in engine mounting; cannot be renewed separately if defective
  - ❑ Removing and installing ⇒ page 63

11 - Bolt

- ❑ Renew after removing
- ❑ 90 Nm +90°

12 - Bolt

- ❑ 30 Nm

Installation position of support mounting

- Projection -2- on engine support must engage in recess -1- on support mounting.

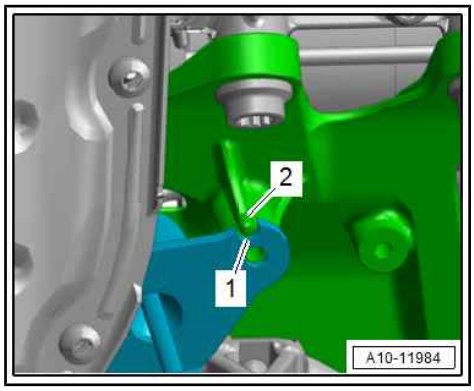

Exploded view - gearbox mounting for manual gearbox

Protected by copyright. Copying for private or commercial purposes, in part or in whole, is not permitted unless authorised by AUDI AG. AUDI AG does not guarantee or accept any liability with respect to the correctness of information in this document. Copyright by AUDI AG.

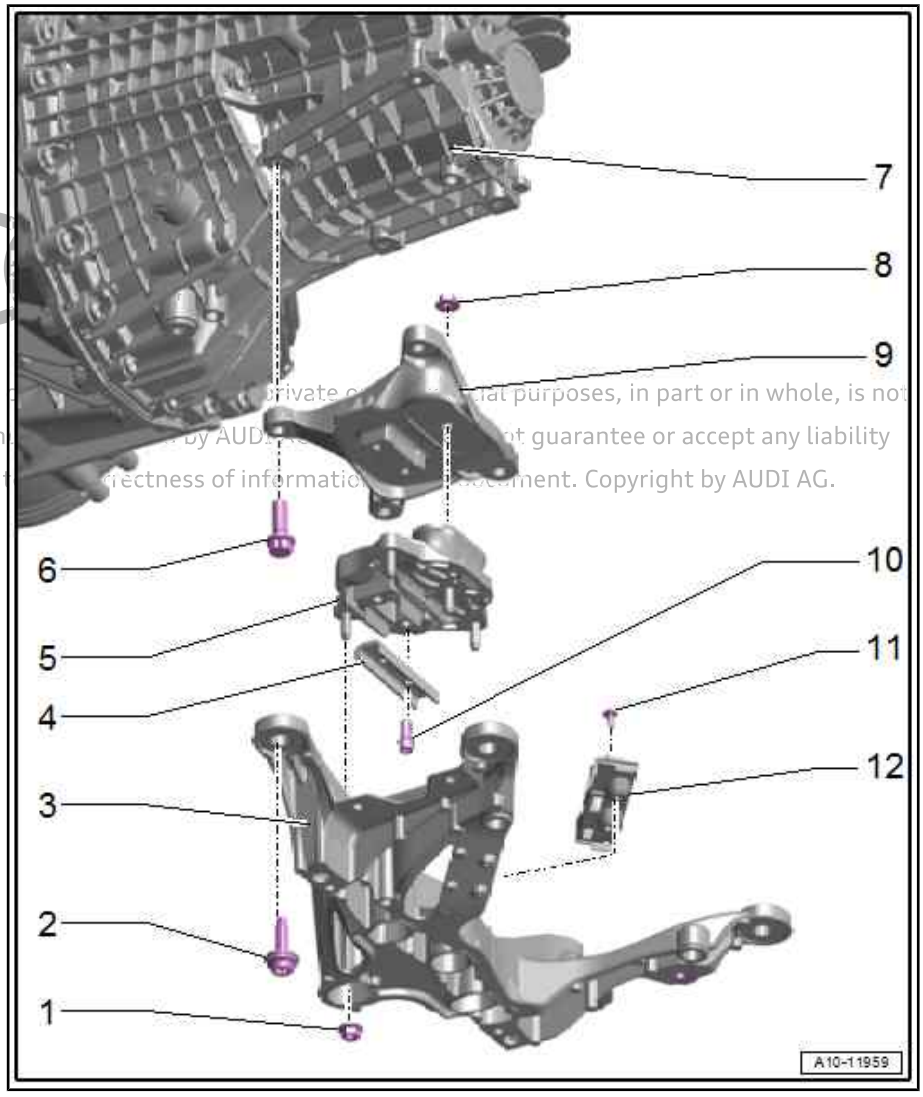

1 - Nut

- ❑ Only remove if detaching gearbox mounting from gearbox support
- ❑ Tightening torques ⇒ 6-speed manual gearbox; Rep. gr. 34 ; Assembly mountings; Exploded view - assembly mountings

2 - Bolt

- ❑ Tightening torques ⇒ 6-speed manual gearbox; Rep. gr. 34 ; Assembly mountings; Exploded view - assembly mountings

3 - Tunnel cross member

- ❑ Removing and installing ⇒ 6-speed manual gearbox; Rep. gr. 34 ; Assembly mountings; Exploded view - assembly mountings

4 - Stop plate

- ❑ For gearbox mounting

5 - Gearbox mounting

- ❑ Removing and installing ⇒ page 68

6 - Bolt

- ❑ Tightening torques ⇒ 6-speed manual gearbox; Rep. gr. 34 ; Assembly mountings; Exploded view - assembly mountings

7 - Final drive

8 - Nut

- ❑ Only remove if detaching gearbox mounting from gearbox support
- ❑ Tightening torques ⇒ 6-speed manual gearbox; Rep. gr. 34 ; Assembly mountings; Exploded view - assembly mountings

9 - Gearbox support

- ❑ Removing and installing ⇒ “2.4 Removing and installing gearbox mounting”, page 68

10 - Bolt

- ❑ Tightening torques ⇒ 6-speed manual gearbox; Rep. gr. 34 ; Assembly mountings; Exploded view - assembly mountings

11 - Bolt

- ❑ 9 Nm

12 - Bracket

- ❑ For electrical connector

Exploded view - gearbox mounting for dual clutch gearbox

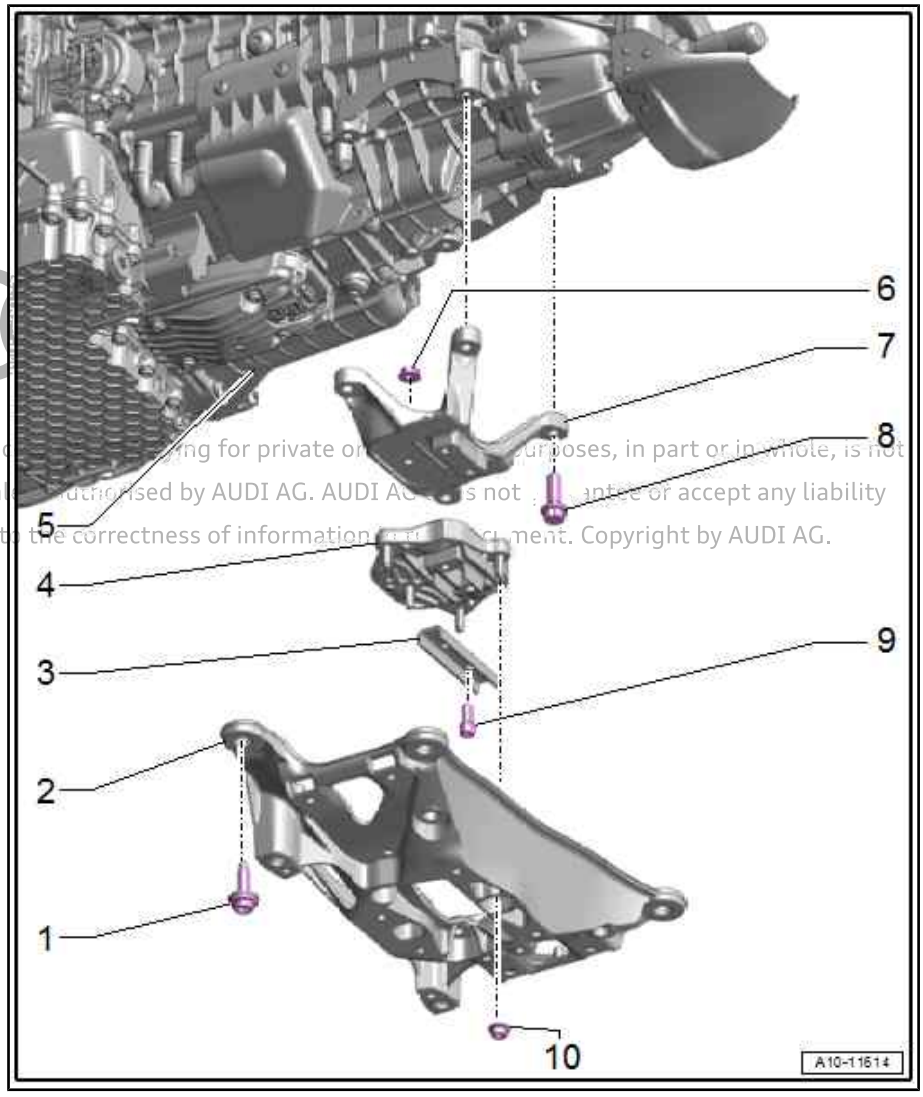

1 - Bolt

- ❑ Tightening torques ⇒ 7-speed dual clutch gearbox; Rep. gr. 34 ; Assembly mountings; Exploded view - assembly mountings

2 - Tunnel cross member

- ❑ Removing and installing ⇒ 7-speed dual clutch gearbox; Rep. gr. 34 ; Assembly mountings; Exploded view - assembly mountings

3 - Stop plate

- ❑ For gearbox mounting

4 - Gearbox mounting

- ❑ Removing and installing ⇒ page 68

5 - Final drive

6 - Nut

- ❑ Only remove if detaching gearbox mounting from gearbox support
- ❑ Tightening torques ⇒ 7-speed dual clutch gearbox; Rep. gr. 34 ; Assembly mountings; Exploded view - assembly mountings

7 - Gearbox support

- ❑ Removing and installing ⇒ “2.4 Removing and installing gearbox mounting”, page 68

8 - Bolt

- ❑ Tightening torques ⇒ 7-speed dual clutch gearbox; Rep. gr. 34 ; Assembly mountings; Exploded view - assembly mountings

9 - Bolt

- ❑ Only remove if detaching gearbox mounting from gearbox support
- ❑ Tightening torques ⇒ 7-speed dual clutch gearbox; Rep. gr. 34 ; Assembly mountings; Exploded view - assembly mountings

10 - Nut

- ❑ Only remove if detaching gearbox mounting from gearbox support
- ❑ Tightening torques ⇒ 7-speed dual clutch gearbox; Rep. gr. 34 ; Assembly mountings; Exploded view - assembly mountings

Protected by copyright. Copying for private or commercial purposes, in part or in whole, is not permitted unless authorised by AUDI AG. AUDI AG does not guarantee or accept any liability with respect to the correctness of information in this document. Copyright by AUDI AG.

2.2 Supporting engine in installation position

Special tools and workshop equipment required

♦ Support bracket - 10-222A-

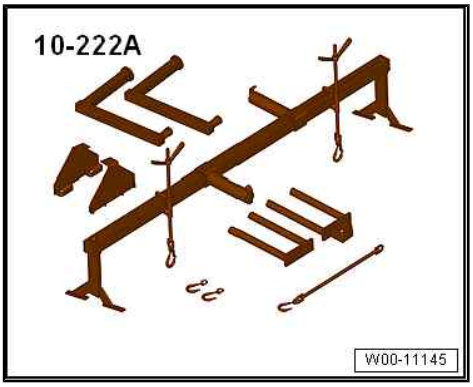

Procedure

– Remove engine cover panel ⇒ Servicing 4-cylinder engine, 2.0 ltr. 4-valve TFSI; Rep. gr. 10 ; Engine cover panel; Removing and installing engine cover panel .

– Set up support bracket - 10-222A- on upper wheel housing longitudinal members (left and right), as shown.

– Attach spindles -10-222A/11- to engine lifting eyes.

– Take up weight of engine with spindles, but do not lift.

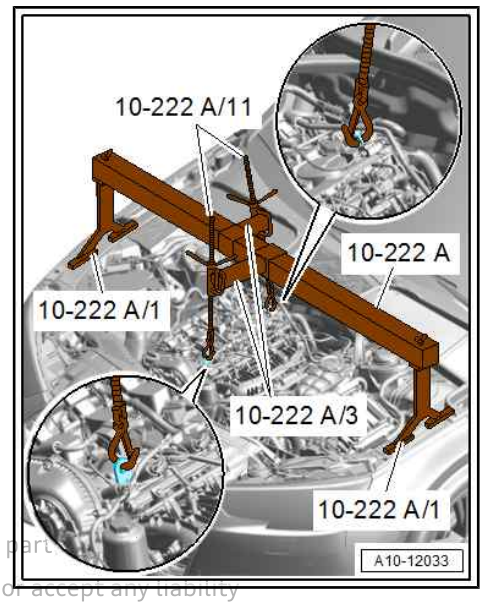

Assembling

Assembly is carried out in reverse sequence; note the following.

– Install engine cover panel ⇒ Servicing 4-cylinder engine, 2.0 ltr. 4-valve TFSI; Rep. gr. 10 ; Engine cover panel; Removing and installing engine cover panel .

Protected by copyright. Copying for private or commercial purposes, in part, is not permitted unless authorised by AUDI AG. AUDI AG does not guarantee or accept any liability with respect to the correctness of information in this document. Copyright by AUDI AG.

2.3 Removing and installing engine mountings

⇒ “2.3.1 Removing and installing engine mountings - vehicles without natural gas system”, page 63

⇒ “2.3.2 Removing and installing engine mountings - vehicles with natural gas system”, page 65

⇒ “2.3.3 Removing and installing support mounting”, page 67

2.3.1 Removing and installing engine mountings - vehicles without natural gas system

Removing

– Remove noise insulation (front) ⇒ General body repairs, exterior; Rep. gr. 66 ; Noise insulation; Removing and installing noise insulation .

– Remove wheel spoiler (front) ⇒ General body repairs, exterior; Rep. gr. 66 ; Wheel housing liners; Exploded view - wheel housing liner (front) .

– Unplug electrical connector -2- for electrohydraulic engine mounting solenoid valve.

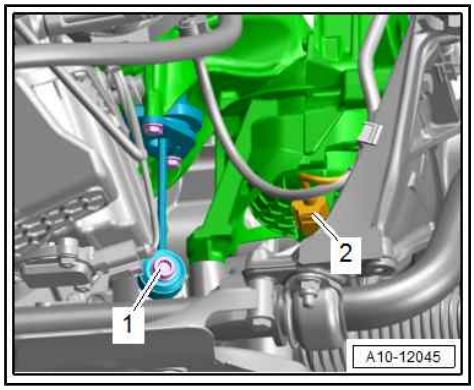

Engine mounting (left-side):

– If fitted, unscrew bolt -1- for support mounting.

Engine mounting (right-side):

– If fitted, remove support mounting (right-side) ⇒ page 67 .

– Release hose clip -arrow- and detach air hose.

Protected by copyright. Copying for private or commercial pu
permitted unless authorised by AUDI AG. AUDI AG does not
with respect to the correctness of information in this docum

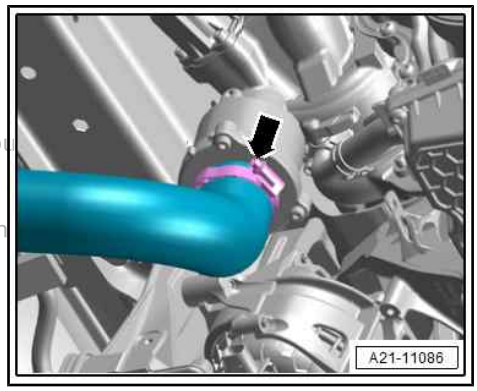

– Remove nut -arrow- and move earth wire clear.

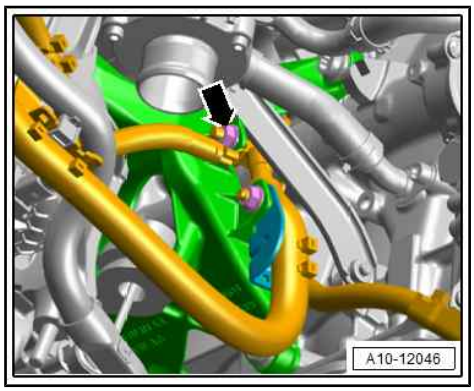

– Remove bolt -arrow- and move bracket -1- clear with electrical wiring harness.

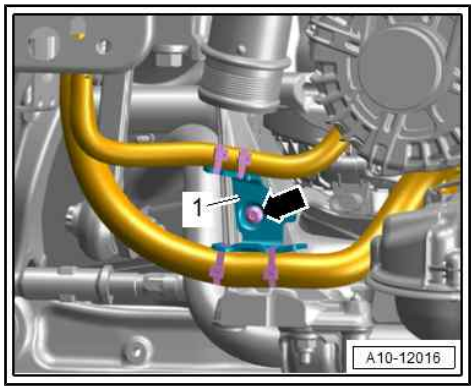

Both sides (continued):

Caution

Risk of damage to drive shafts.

- ***When lifting the engine, the drive shafts must not make contact with the suspension struts.***

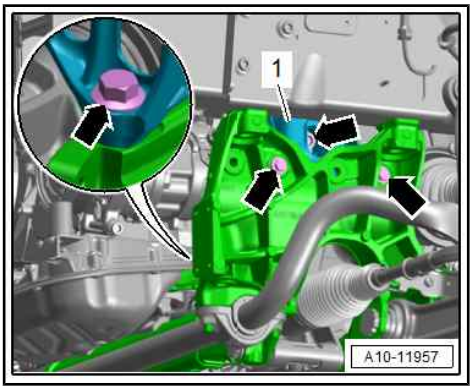

– Support engine in installation position ⇒ page 62 and take up weight with spindles -10-222A/11- until load on engine mounting is relieved.

– Remove bolts -arrows- and detach engine mounting -1-.

Installing

Installation is carried out in reverse order; note the following:

Note

After removing, renew bolts tightened with specified tightening angle.

– Electrical connections and routing ⇒ Current flow diagrams, Electrical fault finding and Fitting locations.

Tightening torques

- ⇒ “2.1 Exploded view - assembly mountings”, page 59
- ⇒ Servicing 4-cylinder engine, 2.0 ltr. 4-valve TFSI; Rep. gr. 21 ; Charge air system; Exploded view - hose connections for charge air system
- ⇒ General body repairs, exterior; Rep. gr. 66 ; Wheel housing liners; Exploded view - wheel housing liner (front)
- ⇒ General body repairs, exterior; Rep. gr. 66 ; Noise insulation; Exploded view - noise insulation

2.3.2 Removing and installing engine mountings - vehicles with natural gas system

Removing

– Remove noise insulation (front) ⇒ General body repairs, exterior; Rep. gr. 66 ; Noise insulation; Removing and installing noise insulation .

– Remove wheel spoiler (front) ⇒ General body repairs, exterior; Rep. gr. 66 ; Wheel housing liners; Exploded view - wheel housing liner (front) .

– Release hose clip -arrow- and detach air hose downwards from throttle valve module - GX3- .

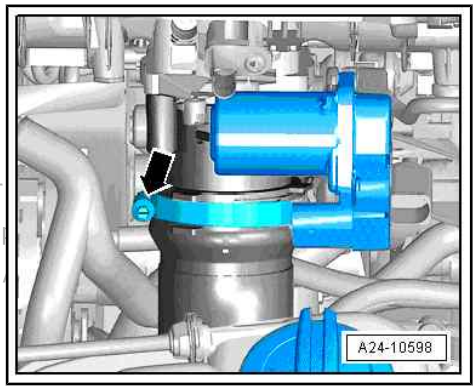

Protected by copyright. Copying for private or commercial purposes, in part or
permitted unless authorised by AUDI AG. AUDI AG does not guarantee or accep
with respect to the correctness of information in this document. Copyright by

– Unplug electrical connector -1- for charge pressure sender -G31- .

– Release hose clip -2-, disconnect air hose and detach it downwards.

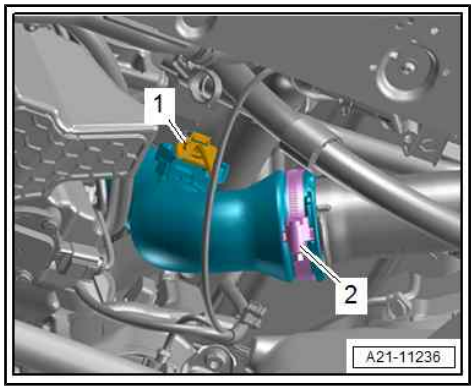

– Unplug electrical connector -2- for electrohydraulic engine mounting solenoid valve.

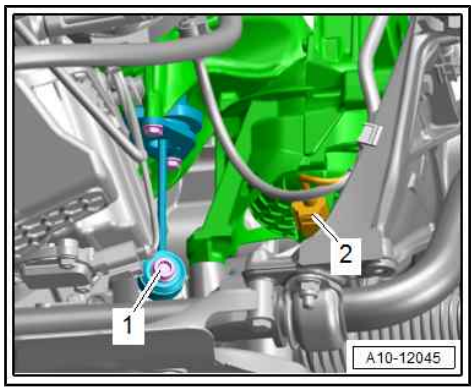

Engine mounting (left-side):

– Remove bolt -1- for support mounting.

Engine mounting (right-side):

– Remove support mounting (right-side) ⇒ page 67 .

– Release hose clip -arrow- and detach air hose.

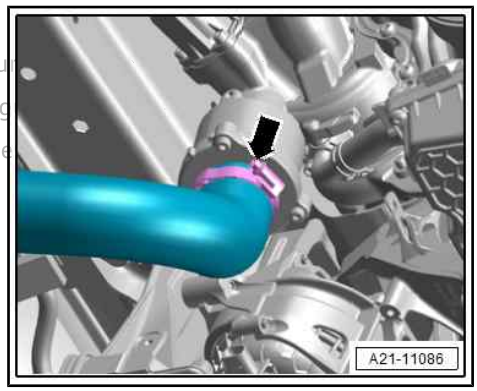

– Remove nut -arrow- and move earth wire clear.

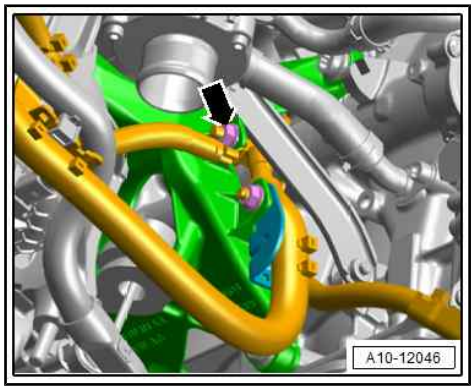

Protected by copyright. Copying for private or commercial pu
permitted unless authorised by AUDI AG. AUDI AG does not g
with respect to the correctness of information in this docume

– Remove bolt -arrow- and move bracket -1- clear with electrical wiring harness.

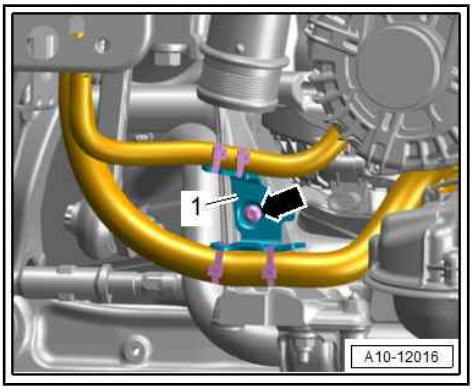

Both sides (continued):

Caution

Risk of damage to drive shafts.

- ***When lifting the engine, the drive shafts must not make contact with the suspension struts.***

– Support engine in installation position ⇒ page 62 and take up weight with spindles -10-222A/11- until load on engine mounting is relieved.

– Remove bolts -arrows- and detach engine mounting -1-.

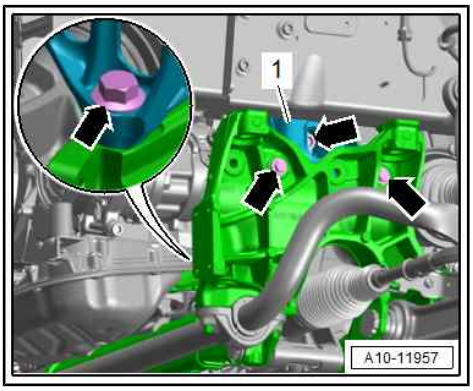

Installing

Installation is carried out in reverse order; note the following:

Note

After removing, renew bolts tightened with specified tightening angle.

– Install support mountings ⇒ page 67 .

– Electrical connections and routing ⇒ Current flow diagrams, Electrical fault finding and Fitting locations.

Tightening torques

- ⇒ “2.1 Exploded view - assembly mountings”, page 59
- ⇒ Servicing 4-cylinder engine, 2.0 ltr. 4-valve TFSI; Rep. gr. 21 ; Charge air system; Exploded view - hose connections for charge air system
- ⇒ General body repairs, exterior; Rep. gr. 66 ; Wheel housing liners; Exploded view - wheel housing liner (front)
- ⇒ General body repairs, exterior; Rep. gr. 66 ; Noise insulation; Exploded view - noise insulation

2.3.3 Removing and installing support mounting

Removing

– Remove noise insulation (front) ⇒ General body repairs, exterior; Rep. gr. 66 ; Noise insulation; Removing and installing noise insulation .

Protected by copyright. Copying for private or commercial purposes, in part or in whole, is not permitted unless authorised by AUDI AG. AUDI AG does not guarantee or accept any liability with respect to the correctness of information in this document. Copyright by AUDI AG.

– Unscrew bolts -1, 3- and detach support mounting -2-.

Installing

Installation is carried out in reverse order; note the following:

Note

After removing, renew bolts tightened with specified tightening angle.

– Observe correct installation position ⇒ page 60 .

Tightening torques

- ⇒ “2.1 Exploded view - assembly mountings”, page 59
- ⇒ General body repairs, exterior; Rep. gr. 66 ; Noise insulation; Exploded view - noise insulation

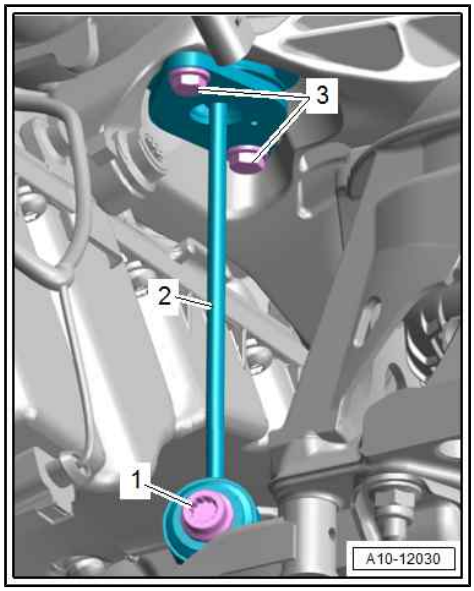

2.4 Removing and installing gearbox mounting

Removing gearbox support with gearbox mounting

– Remove tunnel cross member ⇒ Gearbox; Rep. gr. 34 ; Assembly mountings; Exploded view - assembly mountings .

– Remove bolts -arrows- and detach gearbox support and gearbox mounting from gearbox.

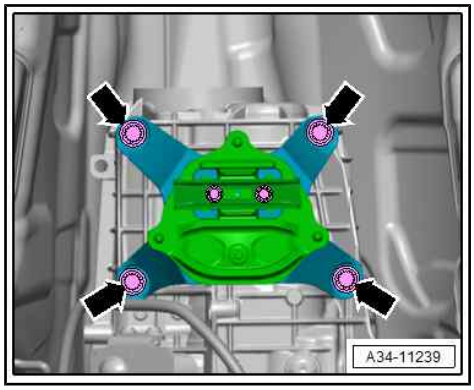

Removing gearbox mounting

– Unscrew bolts -1- and detach stop -2- for gearbox mounting.

– Remove nut -5- and detach gearbox mounting -3- from gearbox support -4-.

Installing

– Tighten nut -5- hand-tight initially.

– Tighten bolts -1- and then nut -5-.

The remaining installation steps are carried out in the reverse sequence.

Tightening torques

- ⇒ Gearbox; Rep. gr. 34 ; Assembly mountings; Exploded view - assembly mountings

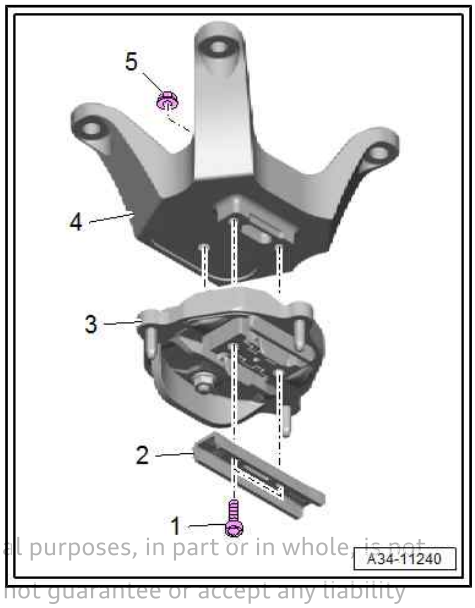

Protected by copyright. Copying for private or commercial purposes, in part or in whole, is not permitted unless authorised by AUDI AG. AUDI AG does not guarantee or accept any liability with respect to the correctness of information in this document. Copyright by AUDI AG.

3 Engine cover panel

All procedures can be found in ⇒ Servicing 4-cylinder engine, 2.0 ltr. 4-valve TFSI; Rep. gr. 10 ; Engine cover panel .

Protected by copyright. Copying for private or commercial purposes, in part or in whole, is not permitted unless authorised by AUDI AG. AUDI AG does not guarantee or accept any liability with respect to the correctness of information in this document. Copyright by AUDI AG.

13 – Crankshaft group

1 Cylinder block (pulley end)

⇒ “1.1 Exploded view - cylinder block (pulley end)”, page 70

⇒ “1.2 Removing and installing poly V-belt”, page 70

⇒ “1.3 Removing and installing poly V-belt tensioner”, page 70

⇒ “1.4 Removing and installing vibration damper”, page 70

⇒ “1.5 Removing and installing bracket for ancillaries”, page 70

⇒ “1.6 Removing and installing engine support”, page 71

1.1 Exploded view - cylinder block (pulley end)

All components are described in ⇒ Servicing 4-cylinder engine, 2.0 ltr. 4-valve TFSI; Rep. gr. 13 ; Cylinder block (pulley end); Exploded view - cylinder block (pulley end) .

1.2 Removing and installing poly V-belt

All procedures are described in ⇒ Servicing 4-cylinder engine, 2.0 ltr. 4-valve TFSI; Rep. gr. 13 ; Cylinder block (pulley end); Removing and installing poly V-belt .

1.3 Removing and installing poly V-belt tensioner

All procedures are described in ⇒ Servicing 4-cylinder engine, 2.0 ltr. 4-valve TFSI; Rep. gr. 13 ; Cylinder block (pulley end); Removing and installing poly V-belt tensioner .

1.4 Removing and installing vibration damper

Removing

– Remove radiator cowl ⇒ page 151 .

– Vehicles with natural gas system: Unscrew bolt -3- on both sides and press coolant pipe towards rear.

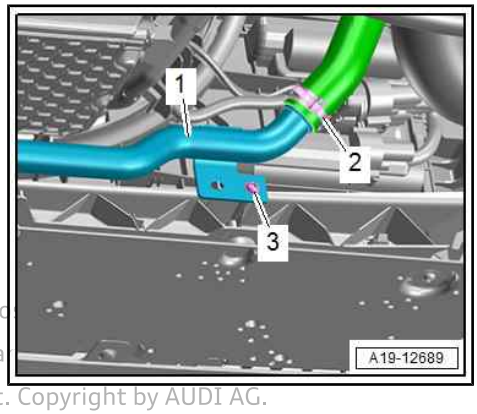

All further procedures are described in ⇒ Servicing 4-cylinder engine, 2.0 ltr. 4-valve TFSI; Rep. gr. 13 ; Cylinder block (pulley end); Removing and installing vibration damper .

Installing

Additional work:

– Install radiator cowl ⇒ page 151 .

Tightening torques

◆ ⇒ “3.1 Exploded view - coolant pipes”, page 127

Protected by copyright. Copying for private or commercial purpo
permitted unless authorised by AUDI AG. AUDI AG does not gua
with respect to the correctness of information in this document. Copyright by AUDI AG.

1.5 Removing and installing bracket for ancillaries

All procedures are described in ⇒ Servicing 4-cylinder engine, 2.0 ltr. 4-valve TFSI; Rep. gr. 13 ; Cylinder block (pulley end); Removing and installing bracket for ancillaries .

1.6 Removing and installing engine support

⇒ "1.6.1 Removing and installing engine support (left-side) - vehicles without natural gas system", page 71

⇒ "1.6.2 Removing and installing engine support (left-side) - vehicles with natural gas system", page 72

⇒ "1.6.3 Removing and installing engine support (right-side)", page 73

1.6.1 Removing and installing engine support (left-side) - vehicles without natural gas system

Removing

– Remove engine cover panel ⇒ Servicing 4-cylinder engine, 2.0 ltr. 4-valve TFSI; Rep. gr. 10 ; Engine cover panel; Removing and installing engine cover panel .

– Lift retaining clip -3-, disconnect coolant hose and move it clear.

– Unplug electrical connector -1- for coolant shortage indicator switch - F66- .

– Remove bolt -4- and push coolant expansion tank -2- to one side.

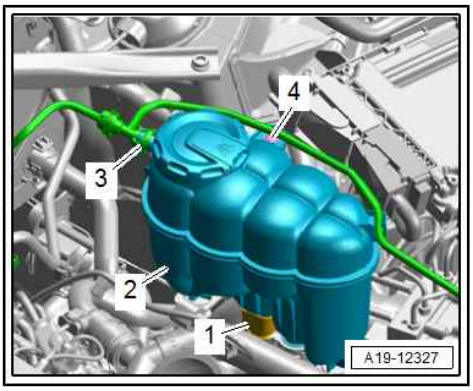

– Remove top bolts -2- for engine support -1-.

Protected by copyright. Copying for private or commer
permitted unless authorised by AUDI AG. AUDI AG doe
with respect to the correctness of information in this d

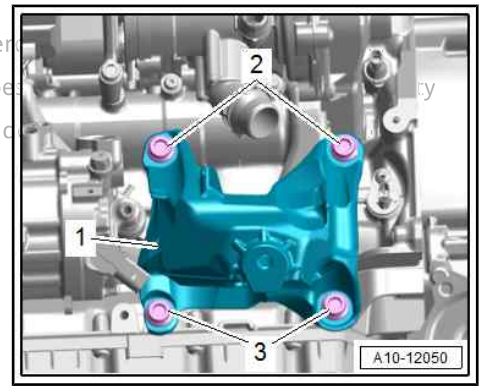

Note

- *Shown in illustration with engine removed.*
- *Bolts -3- are removed at a later stage.*

– If fitted, remove support mounting (left-side) ⇒ page 67 .

– Remove engine mounting (left-side) ⇒ page 63 .

– Unplug electrical connector -arrow- at air conditioner compressor.

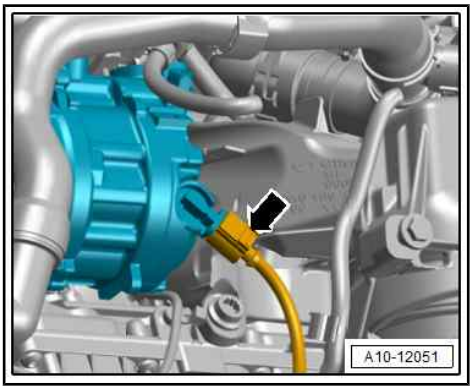

– Unscrew bottom bolts -3- and detach engine support (left-side) -1-.

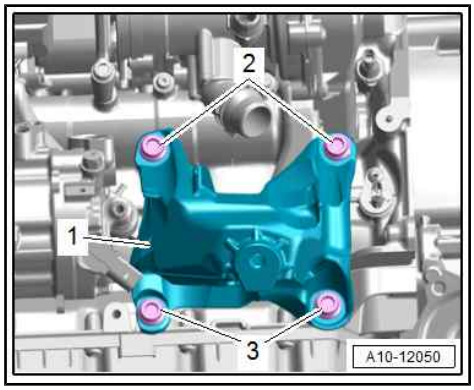

Note

Shown in illustration with engine removed.

Installing

Installation is carried out in reverse order; note the following:

Note

After removing, renew bolts tightened with specified tightening angle.

– Connect coolant hose with plug-in connector ⇒ page 142 .
– Install engine mountings ⇒ page 63 .
– If removed previously, install support mounting ⇒ page 67 .
– Install engine cover panel ⇒ Servicing 4-cylinder engine, 2.0 ltr. 4-valve TFSI; Rep. gr. 10 ; Engine cover panel; Removing and installing engine cover panel .

Tightening torques

◆ ⇒ “2.1 Exploded view - assembly mountings”, page 59

1.6.2 Removing and installing engine support (left-side) - vehicles with natural gas system

Removing

– Remove support mounting (left-side) ⇒ page 67 .
– Remove engine mounting (left-side) ⇒ page 65 .
– Remove poly V-belt ⇒ Servicing 4-cylinder engine, 2.0 ltr. 4-valve TFSI; Rep. gr. 13 ; Cylinder block (pulley end); Removing and installing poly V-belt .
– Remove air conditioner compressor from bracket ⇒ Heating, air conditioning; Rep. gr. 87 ; Air conditioner compressor; Detaching and attaching air conditioner compressor at bracket .

Protected by copyright. Copying for private or commercial purposes, in part or in whole, is not permitted unless authorised by AUDI AG. AUDI AG does not guarantee or accept any liability with respect to the correctness of information in this document. Copyright by AUDI AG.

– Unscrew bolts -2, 3- and detach engine support (left-side) -1-. (Engine has been removed in illustration).

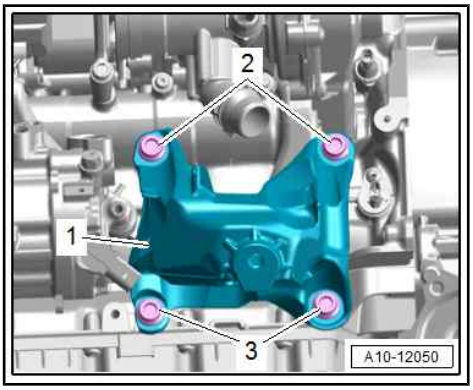

Installing

Installation is carried out in reverse order; note the following:

Note

After removing, renew bolts tightened with specified tightening angle.

– Install air conditioner compressor ⇒ Heating, air conditioning; Rep. gr. 87 ; Air conditioner compressor; Detaching and attaching air conditioner compressor at bracket .
– Install poly V-belt ⇒ Servicing 4-cylinder engine, 2.0 ltr. 4-valve TFSI; Rep. gr. 13 ; Cylinder block (pulley end); Removing and installing poly V-belt .
– Install engine mountings ⇒ page 65 .
– Install support mountings ⇒ page 67 .

Tightening torques

♦ ⇒ “2.1 Exploded view - assembly mountings”, page 59

Protected by copyright. Copying for private or commercial purposes, in part or in whole, is not permitted unless authorised by AUDI AG. AUDI AG does not guarantee or accept any liability with respect to the correctness of information in this document. Copyright by AUDI AG.

1.6.3 Removing and installing engine support (right-side)

Removing

– Disconnect battery ⇒ Electrical system; Rep. gr. 27 ; Battery; Disconnecting and connecting battery .
– Remove engine mounting (right-side) ⇒ page 63 .
– Remove nut -2- and move bracket with electrical wiring clear.
– Remove bolts -arrows- and detach engine support -1- (right-side).

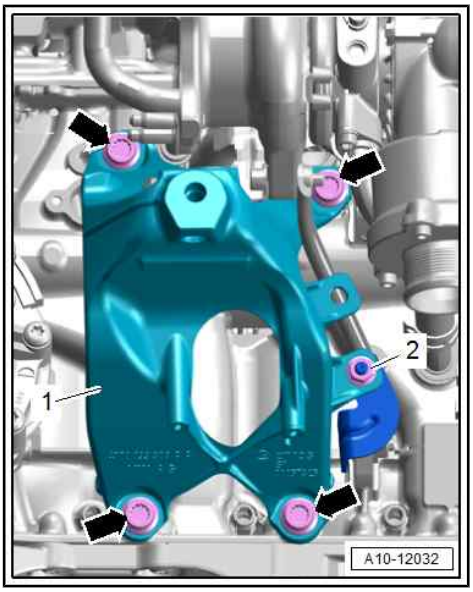

Note

Shown in illustration with engine removed.

Installing

Installation is carried out in reverse order; note the following:

Note

After removing, renew bolts tightened with specified tightening angle.

– Install engine mountings ⇒ page 63 .
– Observe steps required after re-connecting battery ⇒ Electrical system; Rep. gr. 27 ; Battery; Disconnecting and connecting battery .

Tightening torques

♦ ⇒ “2.1 Exploded view - assembly mountings”, page 59

2 Cylinder block (gearbox end)

All procedures and components can be found in ⇒ Servicing 4-cylinder engine, 2.0 ltr. 4-valve TFSI; Rep. gr. 13 ; Cylinder block (gearbox end) .

Protected by copyright. Copying for private or commercial purposes, in part or in whole, is not permitted unless authorised by AUDI AG. AUDI AG does not guarantee or accept any liability with respect to the correctness of information in this document. Copyright by AUDI AG.

3 Crankshaft

Protected by copyright. Copying for private or commercial purposes, in part or in whole, is not permitted unless authorised by AUDI AG. AUDI AG does not guarantee or accept any liability with respect to the correctness of information in this document. Copyright by AUDI AG.

All procedures and components can be found in ⇒ Servicing 4-cylinder engine, 2.0 ltr. 4-valve TFSI; Rep. gr. 13 ; Crankshaft .

4 Balance shaft

All procedures and components can be found in ⇒ Servicing 4-cylinder engine, 2.0 ltr. 4-valve TFSI; Rep. gr. 13 ; Balance shaft .

Protected by copyright. Copying for private or commercial purposes, in part or in whole, is not permitted unless authorised by AUDI AG. AUDI AG does not guarantee or accept any liability with respect to the correctness of information in this document. Copyright by AUDI AG.

5 Pistons and conrods

All procedures and components can be found in ⇒ Servicing 4-cylinder engine, 2.0 ltr. 4-valve TFSI; Rep. gr. 13 ; Pistons and conrods .

Protected by copyright. Copying for private or commercial purposes, in part or in whole, is not permitted unless authorised by AUDI AG. AUDI AG does not guarantee or accept any liability with respect to the correctness of information in this document. Copyright by AUDI AG.

15 – Cylinder head, valve gear

1 Timing chain cover

⇒ “1.1 Exploded view - timing chain cover”, page 78

⇒ “1.2 Removing and installing timing chain cover”, page 78

1.1 Exploded view - timing chain cover

All components are described in ⇒ Servicing 4-cylinder engine, 2.0 ltr. 4-valve TFSI; Rep. gr. 15 ; Timing chain cover; Exploded view - timing chain cover .

1.2 Removing and installing timing chain cover

⇒ “1.2.1 Removing and installing timing chain cover (top)”, page 78

⇒ “1.2.2 Renewing timing chain cover (bottom)”, page 78

1.2.1 Removing and installing timing chain cover (top)

Removing

– Remove lock carrier cover ⇒ General body repairs, exterior; Rep. gr. 63 ; Bumper (front); Exploded view - bumper cover .

– Remove bolts -arrows- and detach air duct -2-.

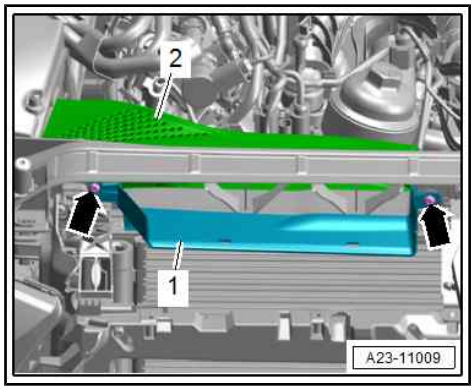

All further procedures are described in ⇒ Servicing 4-cylinder engine, 2.0 ltr. 4-valve TFSI; Rep. gr. 15 ; Timing chain cover; Removing and installing timing chain cover .

Installing

Additional work:

– Install lock carrier cover ⇒ General body repairs, exterior; Rep. gr. 63 ; Bumper (front); Exploded view - bumper cover .

Tightening torques

◆ ⇒ “2.1 Exploded view - air cleaner housing”, page 177

1.2.2 Renewing timing chain cover (bottom)

All procedures are described in ⇒ Servicing 4-cylinder engine, 2.0 ltr. 4-valve TFSI; Rep. gr. 15 ; Timing chain cover; Removing and installing timing chain cover .

Protected by copyright. Copying for private or commercial purposes, in part or in whole, is not permitted unless authorised by AUDI AG. AUDI AG does not guarantee or accept any liability with respect to the correctness of information in this document. Copyright by AUDI AG.

2 Chain drive

All procedures and components can be found in ⇒ Servicing 4-cylinder engine, 2.0 ltr. 4-valve TFSI; Rep. gr. 15 ; Chain drive .

Protected by copyright. Copying for private or commercial purposes, in part or in whole, is not permitted unless authorised by AUDI AG. AUDI AG does not guarantee or accept any liability with respect to the correctness of information in this document. Copyright by AUDI AG.

3 Cylinder head

⇒ “3.1 Exploded view - cylinder head”, page 80

⇒ “3.2 Removing and installing cylinder head”, page 80

⇒ “3.3 Checking compression”, page 85

3.1 Exploded view - cylinder head

All components are described in ⇒ Servicing 4-cylinder engine, 2.0 ltr. 4-valve TFSI; Rep. gr. 15 ; Cylinder head; Exploded view - cylinder head .

3.2 Removing and installing cylinder head

⇒ “3.2.1 Removing and installing cylinder head - vehicles without particulate filter”, page 80

⇒ “3.2.2 Removing and installing cylinder head - vehicles with particulate filter”, page 81

⇒ “3.2.3 Removing and installing cylinder head - vehicles with natural gas system”, page 82

3.2.1 Removing and installing cylinder head - vehicles without particulate filter

Removing

– Unscrew bolts -arrows- for front silencer.

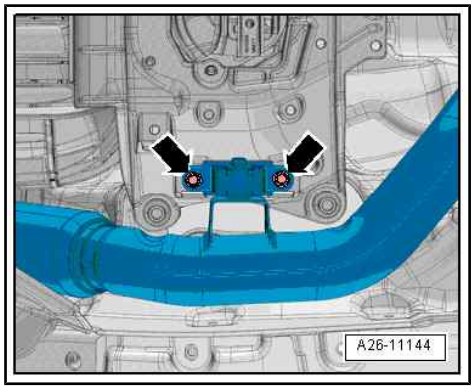

– Loosen bolted connections -arrows- and push clamp towards rear.

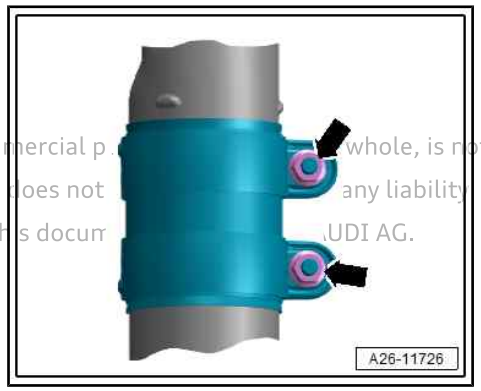

Protected by copyright. Copying for private or commercial p whole, is not permitted unless authorised by AUDI AG. AUDI AG oes not any liability with respect to the correctness of information in th s docum UDI AG.

Protected by copyright. Copying for private or commercial purposes, in part or
permitted unless authorised by AUDI AG. AUDI AG does not guarantee or accep
with respect to the correctness of information in this document. Copyright by A

Caution

Avoid damage to flexible joints.

- ***Do not bend flexible joints more than 10°.***

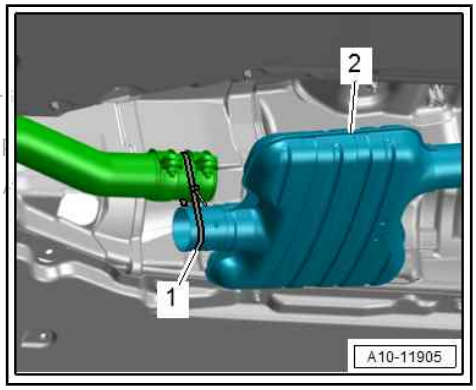

– Lower front silencer -2- slightly and secure it with a cable tie -1-, as shown.

– Unplug electrical connectors and move wiring clear:

1 - For oil pressure switch - F22- -item 2-

3 - For oil pressure switch for reduced oil pressure - F378- -item 4-

5 - For piston cooling jet control valve - N522- -item 7-

All further procedures are described in ⇒ Servicing 4-cylinder engine, 2.0 ltr. 4-valve TFSI; Rep. gr. 15 ; Cylinder head; Removing and installing cylinder head .

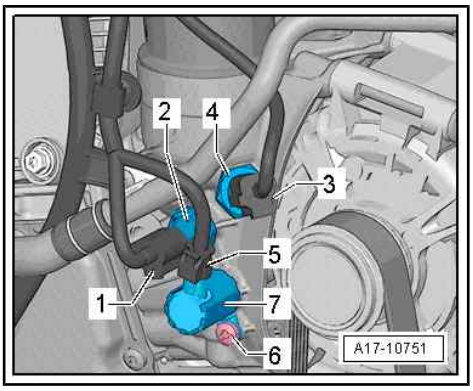

Tightening torques

- ⇒ “1.1 Exploded view - silencers”, page 213

3.2.2 Removing and installing cylinder head - vehicles with particulate filter

Removing

– Remove engine cover panel ⇒ Servicing 4-cylinder engine, 2.0 ltr. 4-valve TFSI; Rep. gr. 10 ; Engine cover panel; Removing and installing engine cover panel .

– Remove front silencer ⇒ page 223 .

– Remove bolt -arrow- on bracket for particulate filter.

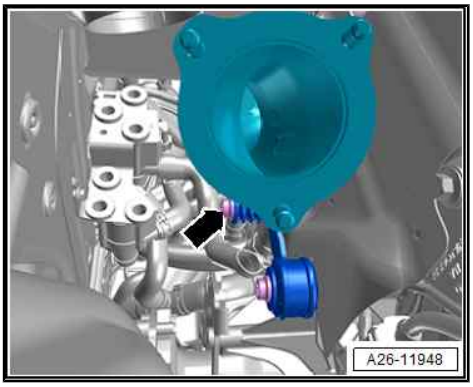

– Remove bolt -arrow- on bracket for catalytic converter.

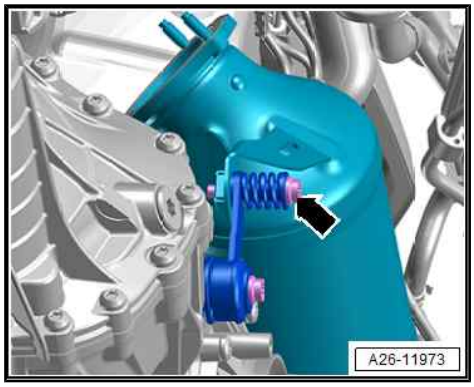

Pressure differential sender for particulate filter - G1037- - version 1:

– Unplug electrical connector -1- for pressure differential sender for particulate filter - G1037- .

– Move bracket with pressure differential sender clear at intake manifold -arrow-.

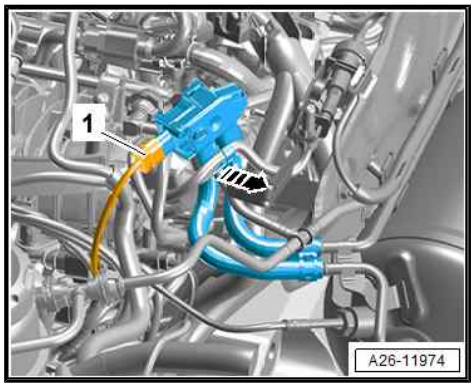

All further procedures are described in ⇒ Servicing 4-cylinder engine, 2.0 ltr. 4-valve TFSI; Rep. gr. 15 ; Cylinder head; Removing and installing cylinder head .

Installing

Additional work:

– Install front silencers ⇒ page 223 .

– Install engine cover panel ⇒ Servicing 4-cylinder engine, 2.0 ltr. 4-valve TFSI; Rep. gr. 10 ; Engine cover panel; Removing and installing engine cover panel .

Tightening torques

- ⇒ “1.1 Exploded view - silencers”, page 213
- ⇒ Servicing 4-cylinder engine, 2.0 ltr. 4-valve TFSI; Rep. gr. 26 ; Emission control system; Exploded view - emission control system

Protected by copyright. Copying for private or commercial purposes, in part or in whole, is not permitted unless authorised by AUDI AG. AUDI AG does not guarantee or accept any liability with respect to the correctness of information in this document. Copyright by AUDI AG.

3.2.3 Removing and installing cylinder head - vehicles with natural gas system

Special tools and workshop equipment required

- Engine bung set - VAS 6122-

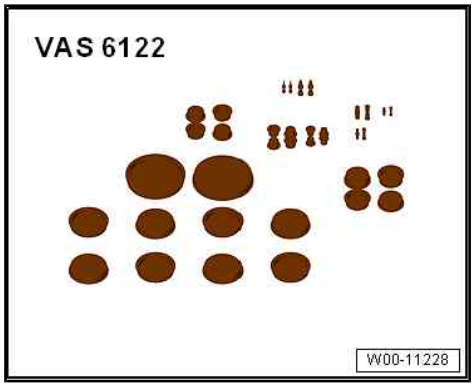

Removing

– Observe safety precautions ⇒ Servicing 4-cylinder engine, 2.0 ltr. 4-valve TFSI; Rep. gr. 00 ; Safety precautions .

– Observe safety precautions when working on the natural gas system ⇒ page 2 .

– Observe rules for cleanliness ⇒ Servicing 4-cylinder engine, 2.0 ltr. 4-valve TFSI; Rep. gr. 00 ; Repair notes; Rules for cleanliness .

WARNING

Risk of explosion due to escaping natural gas - risk of death! Uncontrolled escape of natural gas may occur if the manual fuel tank shut-off valve is defective. In addition, third parties may activate the natural gas system unintentionally.

Danger of severe or fatal injuries due to explosion.

- ***Pressure in natural gas high-pressure pipe must be dissipated by a specially instructed person.***
- ***Shut off natural gas fuel tanks electrically and manually.***

– Dissipate pressure in natural gas high-pressure pipe ⇒ Fuel supply system - g-tron; Rep. gr. 20 ; Fuel tanks; Dissipating fuel pressure in high-pressure section .

– Switch off ignition and remove ignition key.

– Unbolt coolant pipes (rear) and press towards rear ⇒ page 135 .

– Unscrew natural gas low-pressure pipe -1- from gas rail; to do so, counterhold at connection with a suitable tool.

– Seal off open lines and connections with plugs (thoroughly cleaned) from engine bung set - VAS 6122- .

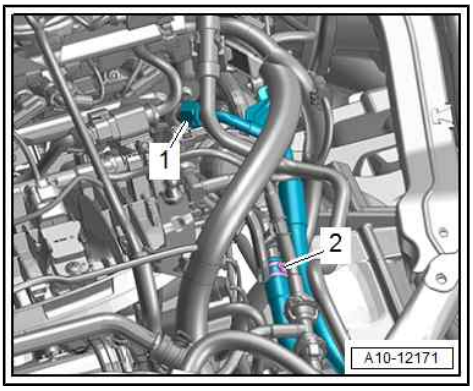

– Unscrew bolts -arrows- for front silencer.

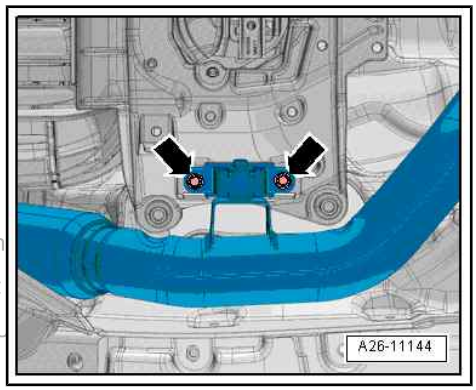

Protected by copyright. Copying for private or commercial purposes, in part or in
permitted unless authorised by AUDI AG. AUDI AG does not guarantee or accept
with respect to the correctness of information in this document. Copyright by AU

– Loosen clamp -arrow- and detach front exhaust pipe from front silencer.

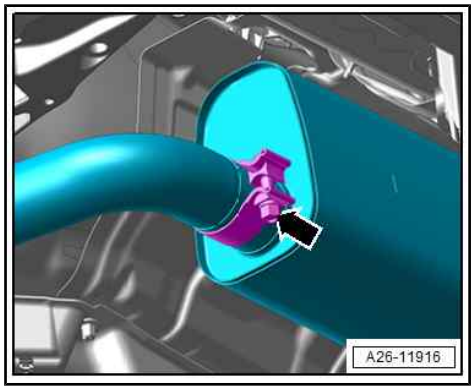

Caution

Avoid damage to flexible joints.

- *Do not bend flexible joints more than 10°.*

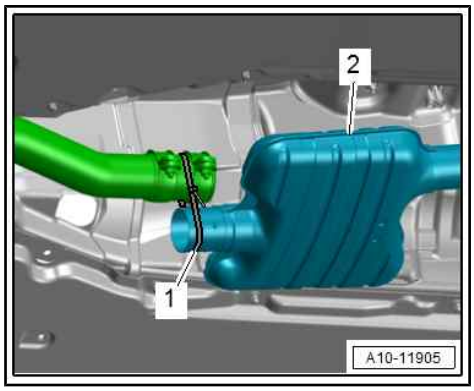

– Lower front exhaust pipe -2- slightly and secure it with a cable tie -1-, as shown.

– Unplug electrical connectors and move wiring clear:

1 - For oil pressure switch - F22- -item 2-

3 - For oil pressure switch for reduced oil pressure - F378- -item 4-

5 - For piston cooling jet control valve - N522- -item 7-

All further procedures are described in ⇒ Servicing 4-cylinder engine, 2.0 ltr. 4-valve TFSI; Rep. gr. 15 ; Cylinder head; Removing and installing cylinder head .

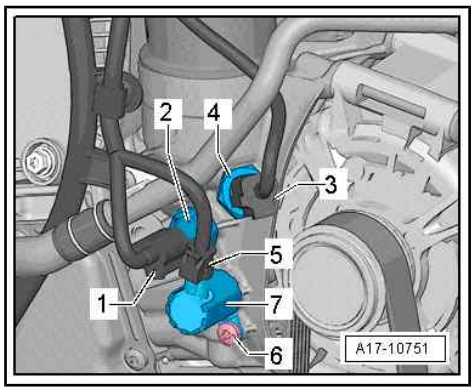

Installing

Additional work:

– Install rear coolant pipes ⇒ page 135 .

– Secure natural gas low-pressure pipe to gas rail ⇒ page 189 ; to do so, counterhold at connection with a suitable tool.

Protected by copyright. Copying for private or commercial purposes, in part or in whole, is not permitted unless authorised by AUDI AG. AUDI AG does not guarantee or accept any liability with respect to the correctness of information in this document. Copyright by AUDI AG.

WARNING

Risk of explosion due to uncontrolled gas escape in connection with ignition sources and electrostatic discharge - risk of death!

Danger of severe or fatal injuries due to explosion.

- *Natural gas system must be re-started by a specially instructed person.*

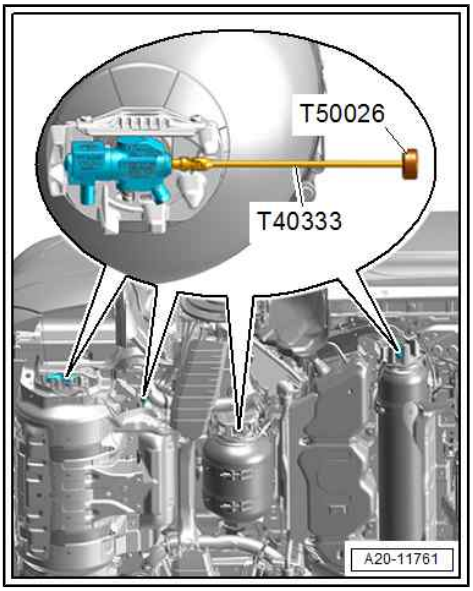

– Open manual shut-off mechanisms of mechanical tank shut-off valves using extension -T40333- and hand wheel -T50026- , and plug in electrical connectors if necessary.

WARNING

Risk of explosion due to escaping natural gas - risk of death! Leaks in the natural gas system can cause uncontrolled escape of natural gas.

Danger of severe or fatal injuries due to explosion.

- *Check natural gas system for leaks.*

– Perform leak test on low-pressure section of natural gas system ⇒ Natural gas engines - General information; Rep. gr. 00 ; Checking natural gas system .

Protected by copyright. Copying for private or commercial purposes, in part or in whole, is not permitted unless authorised by AUDI AG. AUDI AG does not guarantee or accept any liability with respect to the correctness of information in this document. Copyright by AUDI AG.

Tightening torques

- ⇒ “1.1 Exploded view - silencers”, page 213

3.3 Checking compression

All procedures can be found in ⇒ Servicing 4-cylinder engine, 2.0 ltr. 4-valve TFSI; Rep. gr. 15 ; Cylinder head; Checking compression .

4 Valve gear

⇒ “4.1 Exploded view - valve gear”, page 86

⇒ “4.2 Removing and installing camshaft”, page 86

⇒ “4.3 Installing ball for slider”, page 87

⇒ “4.4 Removing and installing actuators for camshaft adjustment”, page 87

⇒ “4.5 Removing and installing camshaft control valve 1 N205 ”, page 87

⇒ “4.6 Removing and installing valve stem oil seals”, page 88

4.1 Exploded view - valve gear

All procedures are described in ⇒ Servicing 4-cylinder engine, 2.0 ltr. 4-valve TFSI; Rep. gr. 15 ; Valve gear; Exploded view - valve gear .

4.2 Removing and installing camshaft

⇒ “4.2.1 Removing and installing camshaft - vehicles without particulate filter”, page 86

⇒ “4.2.2 Removing and installing camshaft - vehicles with particulate filter”, page 86

4.2.1 Removing and installing camshaft - vehicles without particulate filter

All procedures are described in ⇒ Servicing 4-cylinder engine, 2.0 ltr. 4-valve TFSI; Rep. gr. 15 ; Valve gear; Removing and installing camshaft .

Protected by copyright. Copying for private or commercial purposes, in part or in whole, is not permitted unless authorised by AUDI AG. AUDI AG does not guarantee or accept any liability with respect to the correctness of information in this document. Copyright by AUDI AG.

4.2.2 Removing and installing camshaft - vehicles with particulate filter

Removing

– Remove engine cover panel ⇒ Servicing 4-cylinder engine, 2.0 ltr. 4-valve TFSI; Rep. gr. 10 ; Engine cover panel; Removing and installing engine cover panel .

– Move electrical wiring clear at heat shield -1-.

– Remove nuts -arrows- and bolt -2- and detach heat shield (shown with particulate filter removed).

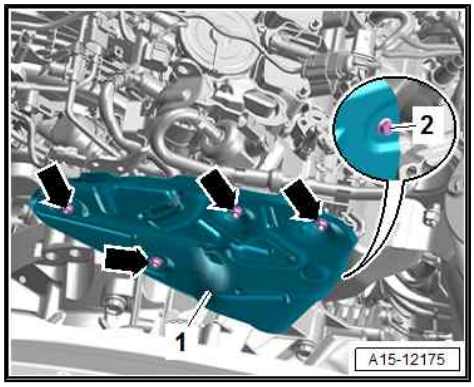

– Take electrical connector -2- for exhaust gas temperature sender 3 - G495- out of bracket and unplug.
– Release retaining clip -3- and move vacuum hose clear.
– Remove bolt -1- and push bracket to one side. (Different versions.)

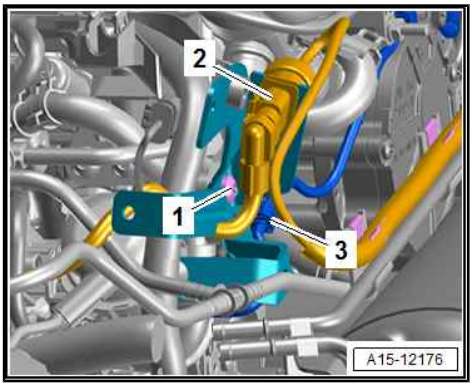

All further procedures are described in ⇒ Servicing 4-cylinder engine, 2.0 ltr. 4-valve TFSI; Rep. gr. 15 ; Valve gear; Removing and installing camshaft .

Installing

Additional work:

– Install engine cover panel ⇒ Servicing 4-cylinder engine, 2.0 ltr. 4-valve TFSI; Rep. gr. 10 ; Engine cover panel; Removing and installing engine cover panel .

Tightening torques

♦ ⇒ Servicing 4-cylinder engine, 2.0 ltr. 4-valve TFSI; Rep. gr. 15 ; Cylinder head; Exploded view - cylinder head

4.3 Installing ball for slider

All procedures are described in ⇒ Servicing 4-cylinder engine, 2.0 ltr. 4-valve TFSI; Rep. gr. 15 ; Valve gear; Installing ball for slider .

4.4 Removing and installing actuators for camshaft adjustment

All procedures are described in ⇒ Servicing 4-cylinder engine, 2.0 ltr. 4-valve TFSI; Rep. gr. 15 ; Valve gear; Removing and installing actuators for camshaft adjustment .

4.5 Removing and installing camshaft control valve 1 - N205-

Removing camshaft control valve 1 - N205-

– Remove engine cover panel ⇒ Servicing 4-cylinder engine, 2.0 ltr. 4-valve TFSI; Rep. gr. 10 ; Engine cover panel; Removing and installing engine cover panel .

Removing exhaust camshaft control valve 1 - N318-

– Remove lock carrier cover ⇒ General body repairs, exterior; Rep. gr. 63 ; Bumper (front); Exploded view - bumper cover .
– Remove bolts -arrows- and detach air duct -2-.

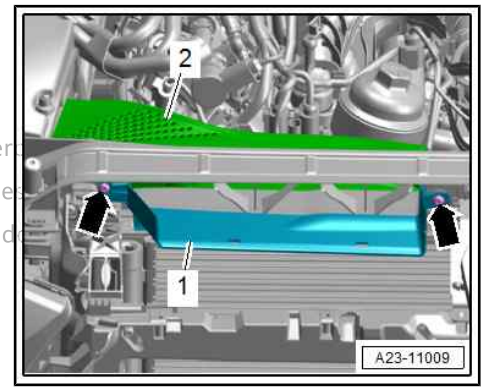

All further procedures are described in ⇒ Servicing 4-cylinder engine, 2.0 ltr. 4-valve TFSI; Rep. gr. 15 ; Valve gear; Removing and installing camshaft control valve 1 - N205- .

Protected by copyright. Copying for private or commer
permitted unless authorised by AUDI AG. AUDI AG doe
with respect to the correctness of information in this d

Installing

Additional work:

– Install lock carrier cover ⇒ General body repairs, exterior; Rep. gr. 63 ; Bumper (front); Exploded view - bumper cover .
– Install engine cover panel ⇒ Servicing 4-cylinder engine, 2.0 ltr. 4-valve TFSI; Rep. gr. 10 ; Engine cover panel; Removing and installing engine cover panel .

Tightening torques

♦ ⇒ “2.1 Exploded view - air cleaner housing”, page 177

4.6 Removing and installing valve stem oil seals

All procedures are described in ⇒ Servicing 4-cylinder engine, 2.0 ltr. 4-valve TFSI; Rep. gr. 15 ; Valve gear; Removing and installing valve stem oil seals .

Protected by Copyright. Copying for private or commercial purposes, in part or in whole, is not permitted unless authorised by AUDI AG. AUDI AG does not guarantee or accept any liability with respect to the correctness of information in this document. Copyright by AUDI AG.

5 Inlet and exhaust valves

All procedures can be found in ⇒ Servicing 4-cylinder engine, 2.0 ltr. 4-valve TFSI; Rep. gr. 15 ; Inlet and exhaust valves .

Protected by copyright. Copying for private or commercial purposes, in part or in whole, is not permitted unless authorised by AUDI AG. AUDI AG does not guarantee or accept any liability with respect to the correctness of information in this document. Copyright by AUDI AG.

17 – Lubrication

1 Sump/oil pump

⇒ “1.1 Exploded view - sump/oil pump”, page 90

⇒ “1.2 Engine oil”, page 90

⇒ “1.3 Removing and installing sump (bottom section)”, page 90

⇒ “1.4 Removing and installing oil pump”, page 92

⇒ “1.5 Removing and installing sump (top section)”, page 92

⇒ “1.6 Removing and installing oil level and oil temperature sender G266 ”, page 92

1.1 Exploded view - sump/oil pump

All components are described in ⇒ Servicing 4-cylinder engine, 2.0 ltr. 4-valve TFSI; Rep. gr. 17 ; Sump/oil pump; Exploded view - sump/oil pump .

1.2 Engine oil

- Draining engine oil ⇒ Maintenance ; Booklet 830 ; Maintenance; Engine oil: draining
- Extracting engine oil ⇒ Maintenance ; Booklet 830 ; Maintenance; Engine oil: extracting
- Filling up with engine oil ⇒ Maintenance ; Booklet 830 ; Maintenance; Engine oil: filling up
- Removing and installing oil filter element ⇒ Maintenance ; Booklet 830 ; Maintenance; Engine oil: renewing oil filter
- Checking oil level ⇒ Maintenance ; Booklet 830 ; Maintenance; Engine oil: checking oil level and correcting if necessary ; ⇒ Technical data for engines; Rep. gr. 00 ; Overview of engines; Overview of engines with adjustment values (oil gauge tester T40178)
- Oil capacities, oil specifications and viscosity grades ⇒ Maintenance tables .

Protected by copyright. Copying for private or commercial purposes, in part or in whole, is not permitted unless authorized by AUDI AG. AUDI AG does not guarantee or accept any liability with respect to the correctness of information in this document. Copyright by AUDI AG.

1.3 Removing and installing sump (bottom section)

Removing

– Remove wheel spoilers (front) on both sides ⇒ General body repairs, exterior; Rep. gr. 66 ; Wheel housing liners; Exploded view - wheel housing liner (front) .

– Remove noise insulation panels ⇒ General body repairs, exterior; Rep. gr. 66 ; Noise insulation; Removing and installing noise insulation .

– Remove bolt -arrow- and move bracket -1- for electrical wiring harness clear.

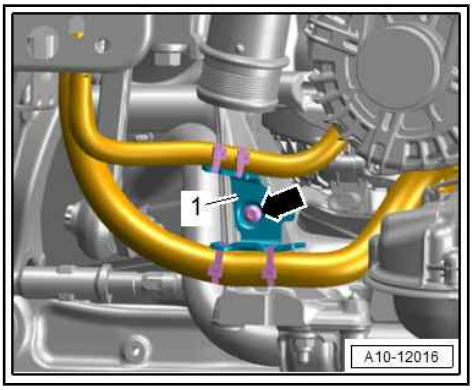

– Vehicles with natural gas system: Unscrew bolt -3- on both sides and press coolant pipes upwards.

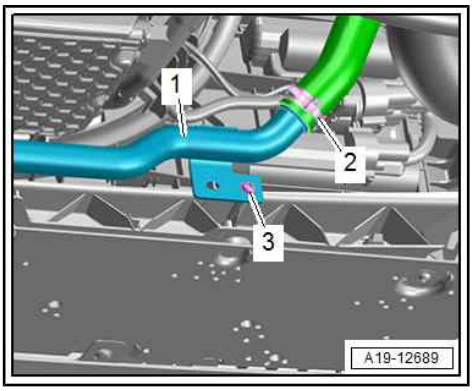

– If fitted, remove bolt -1- for support mounting (both sides).

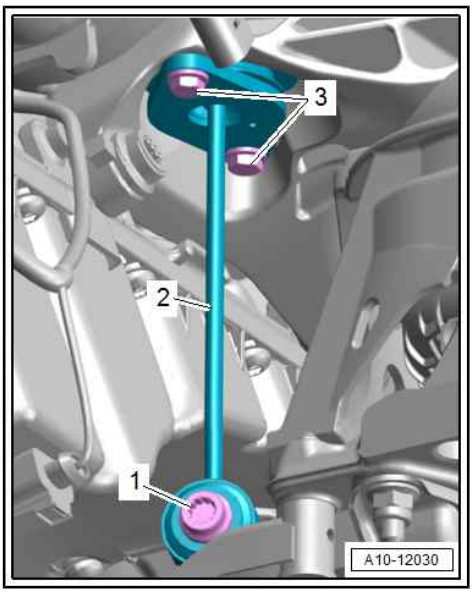

– If fitted, remove bolt -2- for engine mounting (both sides).
– Support engine in installation position ⇒ page 62 .

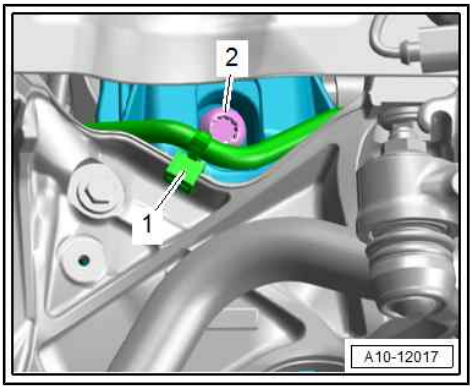

Protected by copyright. Copying for private or commercial purposes, in part or in whole, is not permitted unless authorised by AUDI AG. AUDI AG does not guarantee or accept any liability with respect to the correctness of information in this document. Copyright by AUDI AG.

Caution

Risk of damage to drive shafts.

- *When lifting the engine, the drive shafts must not make contact with the suspension struts.*

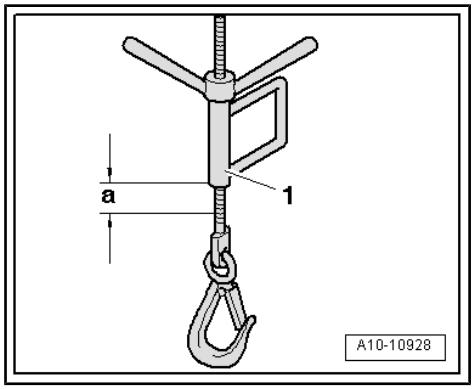

– Using spindle - 10-222A/11- -item 1-, raise engine through distance -a-.

• Dimension -a- = 20 mm

All further procedures are described in ⇒ Servicing 4-cylinder engine, 2.0 ltr. 4-valve TFSI; Rep. gr. 17 ; Sump/oil pump; Removing and installing sump (bottom section) .

Installing

Additional work:

– Electrical connections and routing ⇒ Current flow diagrams, Electrical fault finding and Fitting locations.

– Detach support bracket ⇒ page 62 .

Tightening torques

- ⇒ “2.1 Exploded view - assembly mountings”, page 59
- ⇒ “3.1 Exploded view - coolant pipes”, page 127
- ⇒ General body repairs, exterior; Rep. gr. 66 ; Wheel housing liners; Exploded view - wheel housing liner (front)
- ⇒ General body repairs, exterior; Rep. gr. 66 ; Noise insulation; Exploded view - noise insulation

1.4 Removing and installing oil pump

All procedures are described in ⇒ Servicing 4-cylinder engine, 2.0 ltr. 4-valve TFSI; Rep. gr. 17 ; Sump/oil pump; Removing and installing oil pump .

1.5 Removing and installing sump (top section)

All procedures are described in ⇒ Servicing 4-cylinder engine, 2.0 ltr. 4-valve TFSI; Rep. gr. 17 ; Sump/oil pump; Removing and installing sump (top section) .

1.6 Removing and installing oil level and oil temperature sender - G266-

All procedures are described in ⇒ Servicing 4-cylinder engine, 2.0 ltr. 4-valve TFSI; Rep. gr. 17 ; Sump/oil pump; Removing and installing oil level and oil temperature sender - G266- .

Protected by copyright. Copying for private or commercial purposes, in part or in whole, is not permitted unless authorised by AUDI AG. AUDI AG does not guarantee or accept any liability with respect to the correctness of information in this document. Copyright by AUDI AG.

2 Engine oil cooler

All procedures and components can be found in ⇒ Servicing 4-cylinder engine, 2.0 ltr. 4-valve TFSI; Rep. gr. 17 ; Engine oil cooler .

Protected by copyright. Copying for private or commercial purposes, in part or in whole, is not permitted unless authorised by AUDI AG. AUDI AG does not guarantee or accept any liability with respect to the correctness of information in this document. Copyright by AUDI AG.

3 Crankcase breather

All procedures and components can be found in ⇒ Servicing 4-cylinder engine, 2.0 ltr. 4-valve TFSI; Rep. gr. 17 ; Crankcase breather .

Protected by copyright. Copying for private or commercial purposes, in part or in whole, is not permitted unless authorised by AUDI AG. AUDI AG does not guarantee or accept any liability with respect to the correctness of information in this document. Copyright by AUDI AG.

4 Oil filter/oil pressure switches

⇒ “4.1 Exploded view - oil filter”, page 95

⇒ “4.2 Exploded view - oil pressure switches/oil pressure control”, page 95

⇒ “4.3 Removing and installing oil pressure switch F22 ”, page 95

⇒ “4.4 Removing and installing oil pressure switch for reduced oil pressure F378 ”, page 95

⇒ “4.5 Removing and installing stage 3 oil pressure switch F447 ”, page 95

⇒ “4.6 Removing and installing valve for oil pressure control N428 ”, page 97

⇒ “4.7 Removing and installing piston cooling jet control valve N522 ”, page 97

⇒ “4.8 Checking oil pressure”, page 97

4.1 Exploded view - oil filter

All components are described in ⇒ Servicing 4-cylinder engine, 2.0 ltr. 4-valve TFSI; Rep. gr. 17 ; Oil filter/oil pressure switches; Exploded view - oil filter .

4.2 Exploded view - oil pressure switches/oil pressure control

Protected by copyright. Copying for private or commercial purposes, in part or in whole, is not permitted unless authorised by AUDI AG. AUDI AG does not guarantee or accept any liability with respect to the correctness of information in this document. Copyright by AUDI AG.

All components are described in ⇒ Servicing 4-cylinder engine, 2.0 ltr. TFSI, 4-valve; Rep. gr. 17 ; Oil filter/oil pressure switches; Exploded view - oil pressure switches/oil pressure control .

4.3 Removing and installing oil pressure switch - F22-

All procedures are described in ⇒ Servicing 4-cylinder engine, 2.0 ltr. 4-valve TFSI; Rep. gr. 17 ; Oil filter/oil pressure switches; Removing and installing oil pressure switch - F22- .

4.4 Removing and installing oil pressure switch for reduced oil pressure - F378-

All procedures are described in ⇒ Servicing 4-cylinder engine, 2.0 ltr. 4-valve TFSI; Rep. gr. 17 ; Oil filter/oil pressure switches; Removing and installing oil pressure switch for reduced oil pressure - F378- .

4.5 Removing and installing stage 3 oil pressure switch - F447-

⇒ “4.5.1 Removing and installing stage 3 oil pressure switch F447 - vehicles without natural gas system”, page 95

⇒ “4.5.2 Removing and installing stage 3 oil pressure switch F447 - vehicles with natural gas system”, page 96

4.5.1 Removing and installing stage 3 oil pressure switch - F447- - vehicles without natural gas system

All procedures are described in ⇒ Servicing 4-cylinder engine, 2.0 ltr. 4-valve TFSI; Rep. gr. 17 ; Oil filter/oil pressure switches ; Removing and installing stage 3 oil pressure switch - F447- .

4.5.2 Removing and installing stage 3 oil pressure switch - F447- - vehicles with natural gas system

Special tools and workshop equipment required

- Hose clamps up to 25 mm - 3094-

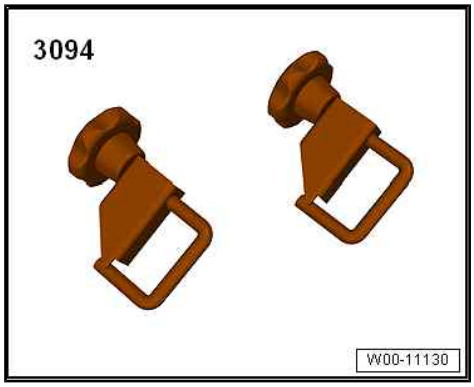

- Hose clip pliers - VAS 6340-

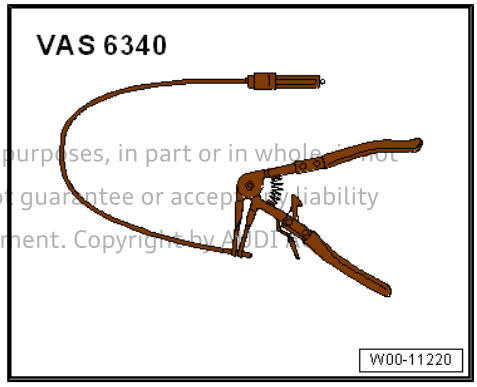

Protected by copyright. Copying for private or commercial purposes, in part or in whole, is not permitted unless authorised by AUDI AG. AUDI AG does not guarantee or accept any liability with respect to the correctness of information in this document. Copyright by AUDI AG.

Procedure

– Remove engine cover panel ⇒ Servicing 4-cylinder engine, 2.0 ltr. 4-valve TFSI; Rep. gr. 10 ; Engine cover panel; Removing and installing engine cover panel .

– Clamp off coolant hose -1- with hose clamps up to 25 mm - 3094- .

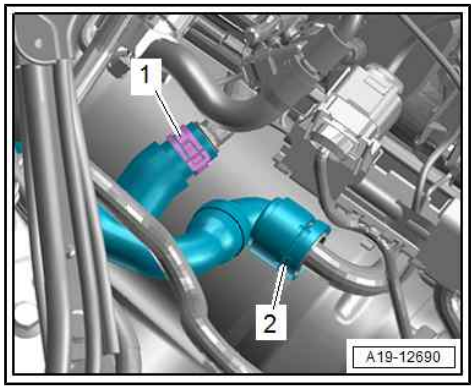

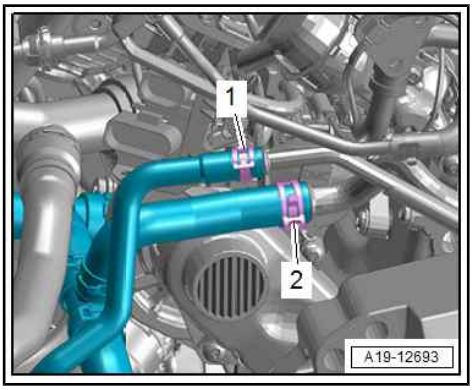

Note

Place a cloth underneath to catch escaping coolant.

– Clamp off coolant hoses using hose clamps, up to 25 mm - 3094- , release hose clips -1 and 2- and disconnect hoses.

All further procedures are described in ⇒ Servicing 4-cylinder engine, 2.0 ltr. 4-valve TFSI; Rep. gr. 17 ; Oil filter/oil pressure switches; Removing and installing stage 3 oil pressure switch - F447- .

Installing

Additional work:

Note

- *Secure all hose connections with correct type of hose clips (as original equipment) ⇒ Electronic parts catalogue .*
- *Do not reuse coolant.*

– Fill up with coolant ⇒ page 102 .

4.6 Removing and installing valve for oil pressure control - N428-

All procedures are described in ⇒ Servicing 4-cylinder engine, 2.0 ltr. 4-valve TFSI; Rep. gr. 17 ; Oil filter/oil pressure switches; Removing and installing valve for oil pressure control - N428- .

4.7 Removing and installing piston cooling jet control valve - N522-

All procedures are described in ⇒ Servicing 4-cylinder engine, 2.0 ltr. 4-valve TFSI; Rep. gr. 17 ; Oil filter/oil pressure switches; Removing and installing piston cooling jet control valve - N522- .

4.8 Checking oil pressure

All procedures are described in ⇒ Servicing 4-cylinder engine, 2.0 ltr. 4-valve TFSI; Rep. gr. 17 ; Oil filter/oil pressure switches; Checking oil pressure .

Protected by copyright. Copying for private or commercial purposes, in part or in whole, is not permitted unless authorised by AUDI AG. AUDI AG does not guarantee or accept any liability with respect to the correctness of information in this document. Copyright by AUDI AG.

19 – Cooling

1 Cooling system/coolant

⇒ “1.1 Connection diagram - coolant hoses”, page 98

⇒ “1.2 Checking cooling system for leaks”, page 102

⇒ “1.3 Draining and filling cooling system”, page 102

Protected by copyright. Copying for private or commercial purposes, in part or in whole, is not permitted unless authorised by AUDI AG. AUDI AG does not guarantee or accept any liability with respect to the correctness of information in this document. Copyright by AUDI AG.

1.1 Connection diagram - coolant hoses

⇒ “1.1.1 Connection diagram - coolant hoses, equipment version without auxiliary heater”, page 98

⇒ “1.1.2 Connection diagram - coolant hoses, equipment version with auxiliary heater”, page 100

⇒ “1.1.3 Connection diagram - coolant hoses, vehicles with natural gas system”, page 101

1.1.1 Connection diagram - coolant hoses, equipment version without auxiliary heater

Note

- *Blue = Large coolant circuit*
- *Red = Small coolant circuit*
- *Brown = Heating circuit*
- *Green = Coolant circuit for gearbox*
- *Arrows show direction of coolant flow.*

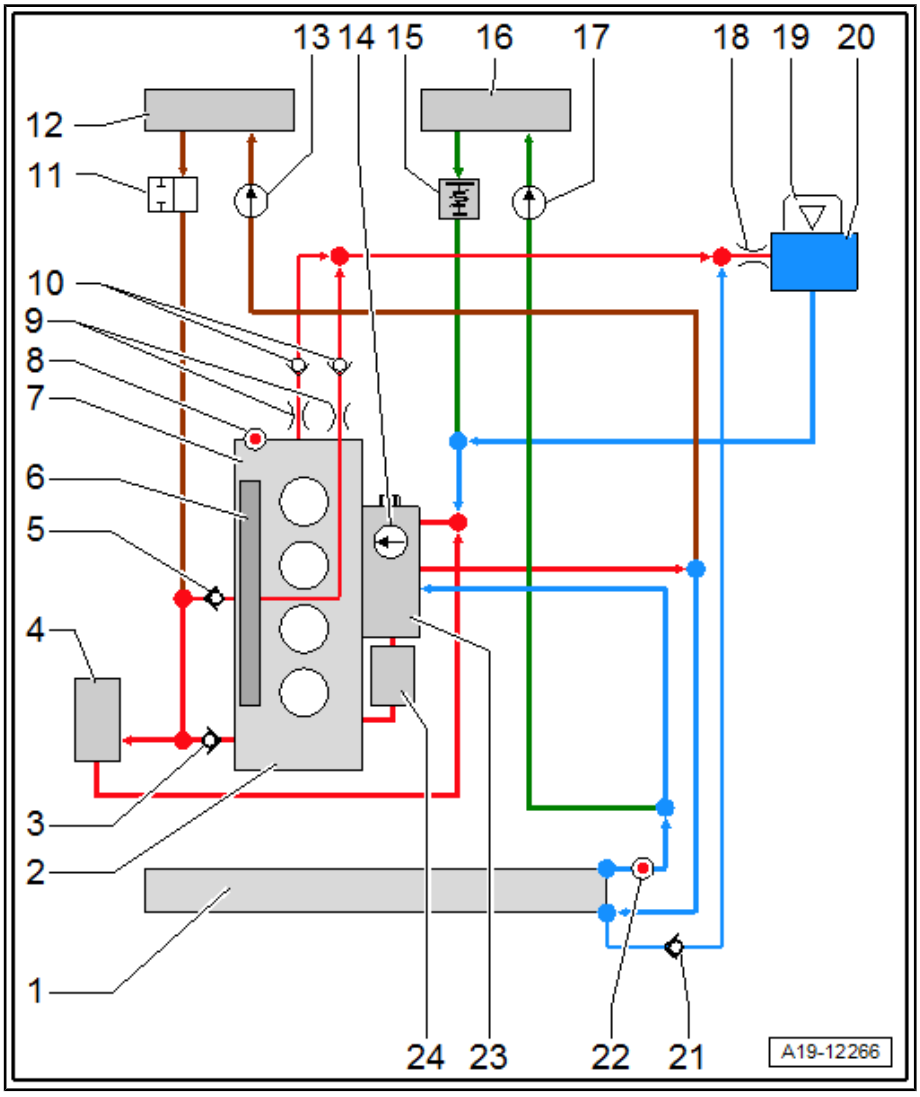

1 - Radiator

2 - Cylinder block

3 - Non-return valve

4 - Turbocharger

5 - Non-return valve

6 - Exhaust manifold

7 - Cylinder head

8 - Coolant temperature sender - G62-

9 - Restrictors

10 - Non-return valves

11 - Coolant shut-off valve

- Activated by Climatronic coolant shut-off valve - N422- (negative pressure)

12 - Heat exchanger for heater

13 - Coolant circulation pump - V50-

14 - Coolant pump

15 - Thermostat

- For coolant circuit for gearbox
- For equipment version with dual clutch gearbox

16 - ATF cooler

- For equipment version with dual clutch gearbox

17 - Continued coolant circulation pump - V51-

- For equipment version with dual clutch gearbox

18 - Restrictor

19 - Filler cap

- Checking pressure relief valve ⇒ Servicing 4-cylinder engine, 2.0 ltr. 4-valve TFSI; Rep. gr. 19 ; Cooling system/coolant; Checking cooling system for leaks

20 - Coolant expansion tank

21 - Non-return valve

22 - Radiator outlet coolant temperature sender - G83-

23 - Actuator for engine temperature regulation - N493-

24 - Engine oil cooler

Protected by copyright. Copying for private or commercial purposes, in part or in whole, is not permitted unless authorised by AUDI AG. AUDI AG does not guarantee or accept any liability with respect to the correctness of information in this document. Copyright by AUDI AG.

1.1.2 Connection diagram - coolant hoses, equipment version with auxiliary heater

Note

- *Blue = Large coolant circuit*
- *Red = Small coolant circuit*
- *Brown = Heating circuit*
- *Green = Coolant circuit for gearbox*
- *Arrows show direction of coolant flow.*

Protected by copyright. Copying for private or commercial purposes, in part or in whole, is not permitted unless authorised by AUDI AG. AUDI AG does not guarantee or accept any liability with respect to the correctness of information in this document. Copyright by AUDI AG.

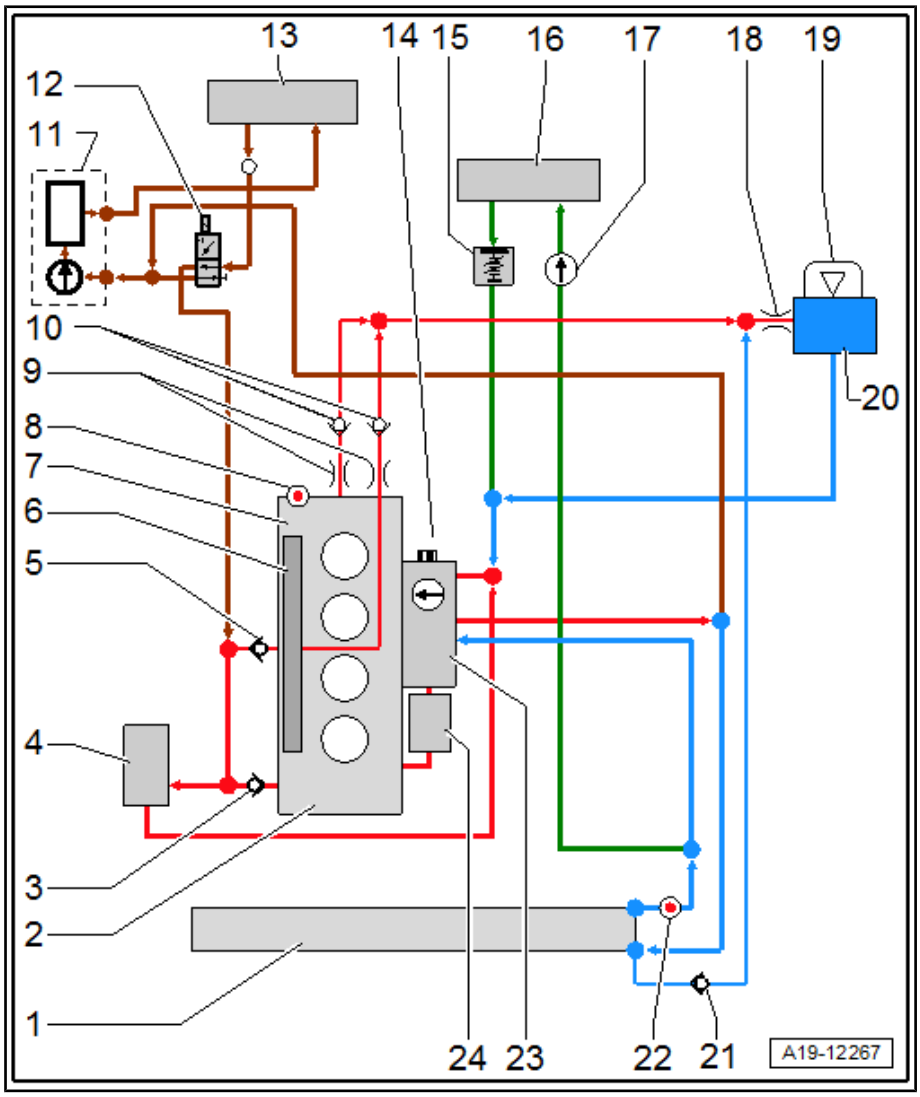

1 - Radiator

2 - Cylinder block

3 - Non-return valve

4 - Turbocharger

5 - Non-return valve

6 - Exhaust manifold

7 - Cylinder head

8 - Coolant temperature sender - G62-

9 - Restrictors

10 - Non-return valves

11 - Auxiliary heater

- ❑ With circulation pump - V55-

12 - Heater coolant shut-off valve - N279-

13 - Heat exchanger for heater

14 - Coolant pump

15 - Thermostat

- ❑ For coolant circuit for gearbox
- ❑ For equipment version with dual clutch gearbox

16 - ATF cooler

- ❑ For equipment version with dual clutch gearbox

17 - Continued coolant circulation pump - V51-

- ❑ For equipment version with dual clutch gearbox

18 - Restrictor

19 - Filler cap

- ❑ Checking pressure relief valve ⇒ Servicing 4-cylinder engine, 2.0 ltr. 4-valve TFSI; Rep. gr. 19 ; Cooling system/coolant; Checking cooling system for leaks

20 - Coolant expansion tank

21 - Non-return valve

22 - Radiator outlet coolant temperature sender - G83-

23 - Actuator for engine temperature regulation - N493-

24 - Engine oil cooler

1.1.3 Connection diagram - coolant hoses, vehicles with natural gas system

Note

- *Blue = Large coolant circuit*
- *Red = Small coolant circuit*
- *Brown = Heating circuit*
- *Green = Coolant circuit for gearbox*
- *Arrows show direction of coolant flow.*

1 - Radiator

2 - Non-return valve

3 - Non-return valve

4 - Turbocharger

5 - Non-return valve

6 - Exhaust manifold

7 - Cylinder head

8 - Coolant temperature sender - G62-

9 - Restrictor

10 - Non-return valves

11 - Coolant expansion tank

12 - Filler cap

- ❑ Checking pressure relief valve ⇒ Servicing 4-cylinder engine, 2.0 ltr. 4-valve TFSI; Rep. gr. 19 ; Cooling system/ coolant; Checking cooling system for leaks

13 - Bleeder hole

14 - Heat exchanger for heater

15 - Heater coolant shut-off valve - N279-

16 - Gas pressure regulator

- ❑ With high-pressure valve for gas mode - N372-

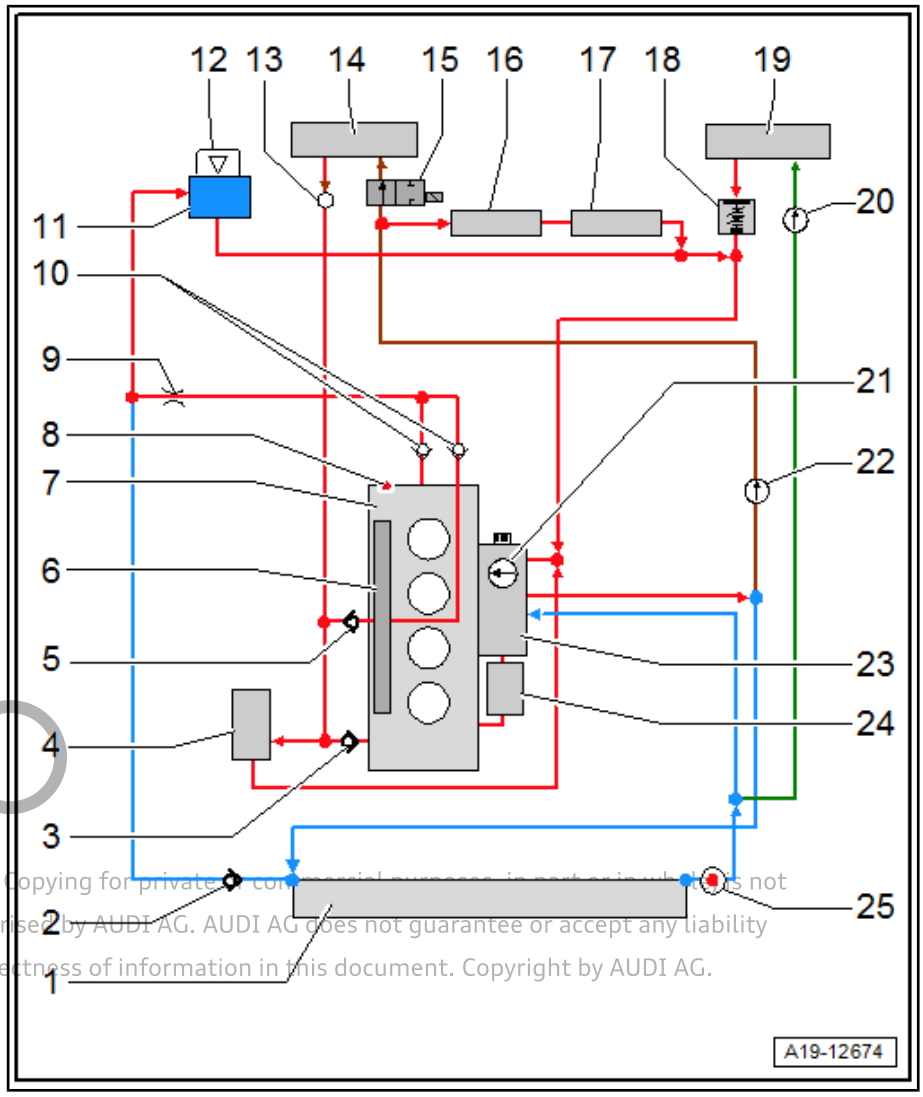

Copyright. Copying for private or commercial purposes, in part or in whole, is not permitted unless authorised by AUDI AG. AUDI AG does not guarantee or accept any liability with respect to the correctness of information in this document. Copyright by AUDI AG.

17 - Cooling flange

18 - Thermostat

- ❑ For coolant circuit for gearbox
- ❑ For equipment version with dual clutch gearbox

19 - ATF cooler

- ❑ For equipment version with dual clutch gearbox

20 - Continued coolant circulation pump - V51-

- ❑ For equipment version with dual clutch gearbox

21 - Coolant pump

22 - Coolant circulation pump - V50-

23 - Actuator for engine temperature regulation - N493-

24 - Engine oil cooler

25 - Radiator outlet coolant temperature sender - G83-

1.2 Checking cooling system for leaks

All procedures are described in ⇒ Servicing 4-cylinder engine, 2.0 ltr. 4-valve TFSI; Rep. gr. 19 ; Cooling system/coolant; Checking cooling system for leaks .

1.3 Draining and filling cooling system

Special tools and workshop equipment required

- ♦ Adapter for cooling system tester - V.A.G 1274/8-

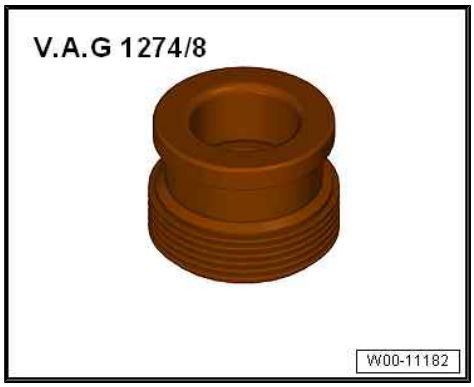

- ♦ Pipe for cooling system tester - V.A.G 1274/10-

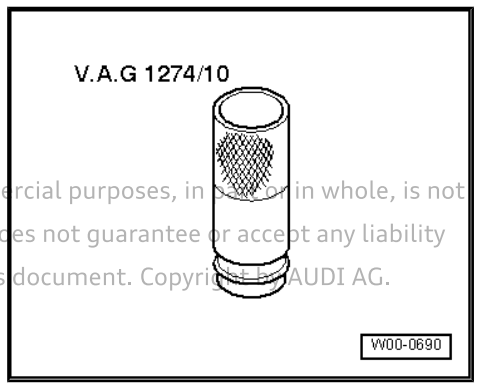

Protected by copyright. Copying for private or commercial purposes, in part or in whole, is not permitted unless authorised by AUDI AG. AUDI AG does not guarantee or accept any liability with respect to the correctness of information in this document. Copyright by AUDI AG.

- Cooling system charge unit - VAS 6096-

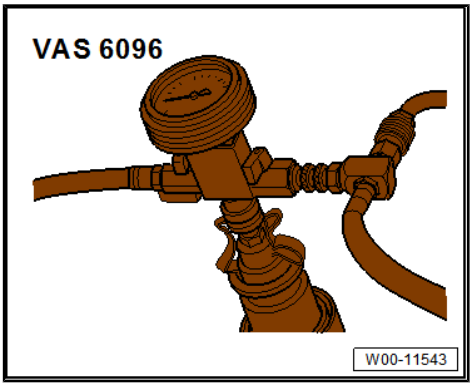

- Coolant collecting system - VAS 5014- or drip tray for workshop hoist - VAS 6208-

- Hose clip pliers - VAS 6362-

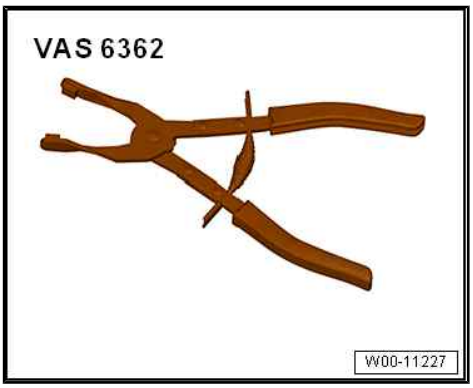

- Refractometer - T10007A-

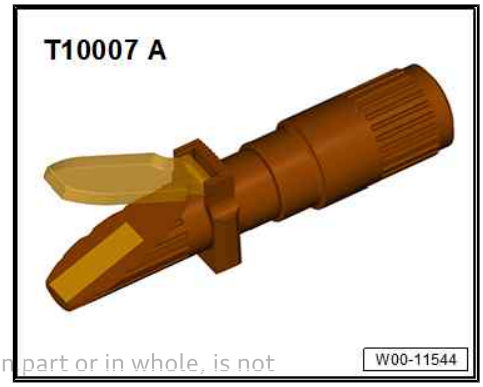

Protected by copyright. Copying for private or commercial purposes, in part or in whole, is not permitted unless authorised by AUDI AG. AUDI AG does not guarantee or accept any liability with respect to the correctness of information in this document. Copyright by AUDI AG.

Draining

– Vehicles with natural gas system: Release catches -arrows B- and open cover -1- -arrow A-.

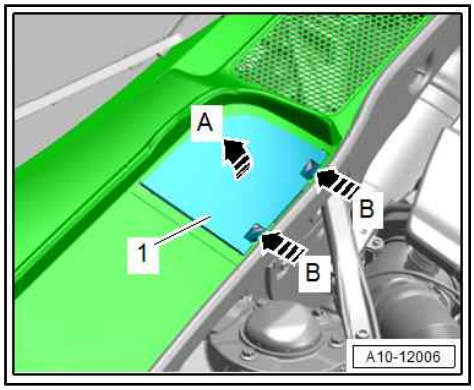

WARNING

The cooling system is under pressure when the power unit is hot. Risk of scalding due to hot steam and hot coolant.

Danger of scalding skin and other parts of the body.

- *Put on protective gloves.*
- *Put on safety goggles.*
- *Cover filler cap on expansion tank with a cloth and open carefully to release pressure.*

– Release fastener -arrow- and open filler cap -1- on coolant expansion tank.

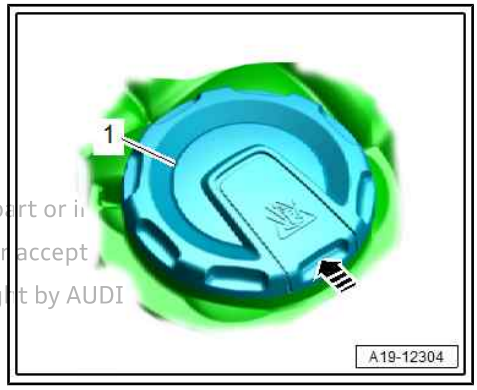

– Remove noise insulation (front) ⇒ General body repairs, exterior; Rep. gr. 66 ; Noise insulation; Removing and installing noise insulation .

Protected by copyright. Copying for private or commercial purposes, in part or in
permitted unless authorised by AUDI AG. AUDI AG does not guarantee or accept
with respect to the correctness of information in this document. Copyright by AUDI

– Place collector tank from coolant collecting system -VAS 5014- or drip tray for workshop hoist - VAS 6208- underneath.

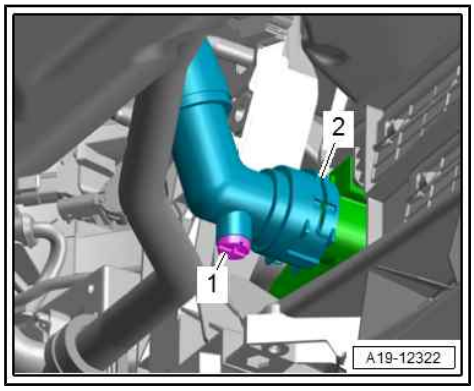

WARNING

Risk of injury as the radiator fans may start up automatically.

- *Even when the ignition is switched off, the radiator fans can start up without warning due to accumulated heat in the engine compartment, etc.*

– Lift retaining clip -2-, disconnect coolant hose from radiator (bottom right) and drain off coolant.

– Vehicles with natural gas system: Release hose clip -2- and detach coolant hose from coolant pipe -1-.

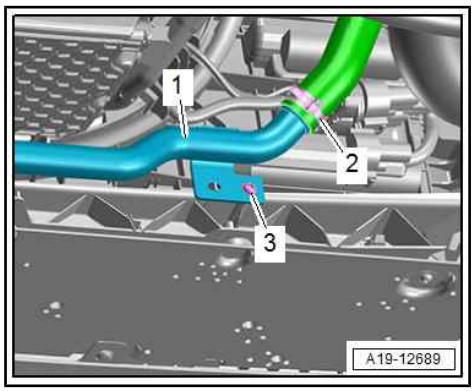

– Vehicles with dual clutch gearbox: Release hose clips -arrows-, disconnect coolant hoses from ATF cooler and drain off coolant (open heat insulation sleeve if fitted).

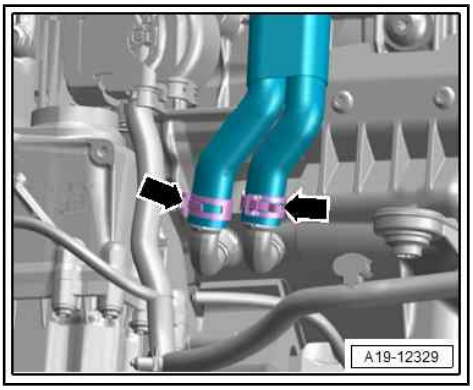

- Secure all hose connections with correct type of hose clips (as original equipment) ⇒ Electronic parts catalogue .
– Connect coolant hoses (version with plug-in connectors) ⇒ page 142 .

Coolant specifications

All information can be found in ⇒ Servicing 4-cylinder engine, 2.0 ltr. 4-valve TFSI; Rep. gr. 19 ; Cooling system/coolant; Draining and filling cooling system .

Recommended mixture ratio for coolant

Caution

Danger of corrosion damage if unsuitable mixtures of water and coolant additives are used.

- ***Only use distilled water as this ensures optimum corrosion protection.***

- Coolant (40 %) and distilled water (60 %) for frost protection to -25 °C
- Coolant (50 %) and distilled water (50 %) for frost protection to -36 °C
- Coolant ⇒ Electronic parts catalogue

Protected by copyright. Copying for private or commercial purposes, in part or in whole, is not permitted without the prior written consent of AUDI AG. We do not guarantee or accept any liability with respect to the correctness of information in this document. Copyright by AUDI AG.

Filling cooling system

- Do not reuse coolant.
– Fill reservoir of -VAS 6096- with 10 litres of premixed coolant (according to recommended ratio; for recommended ratio see ⇒ page 105).
– To simplify filling procedure, place filled reservoir on as high a surface as possible, e.g. on a workshop trolley or the engine and gearbox jack.
– Fit adapter for cooling system tester - V.A.G 1274/8- onto coolant expansion tank -1-.
– Attach cooling system charge unit - VAS 6096- to adapter - V.A.G 1274/8- .
– Run vent hose -2- into a small container -3-.

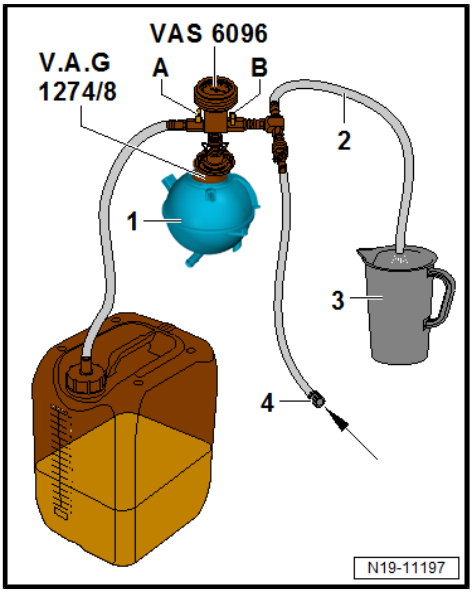

Note

The vented air draws along a small amount of coolant, which should be collected.

– Close both valves -A- and -B- (turn lever at right angles to direction of flow).
– Connect hose -4- to compressed air supply.
- Pressure: 7 ... 10 bar.
– Open valves in coolant circuit; select `01 - Coolant circuit bleeding routine` in `Guided Functions` ⇒ vehicle diagnostic tester .

– Open valve -B- by setting lever in direction of flow.

• The suction jet pump generates a partial vacuum in the cooling system; the needle on the gauge should move into the green zone.

– Also briefly open valve -A- (turn lever in direction of flow) so that hose on reservoir of -VAS 6096- can fill with coolant.

– Close valve -A- again.

– Leave valve -B- open for another 2 minutes.

• The suction jet pump continues to generate a partial vacuum in the cooling system; the needle on the gauge should remain in the green zone.

– Close valve -B-.

• The needle on the gauge should stop in the green zone. The vacuum level in the cooling system is then sufficient for subsequent filling.

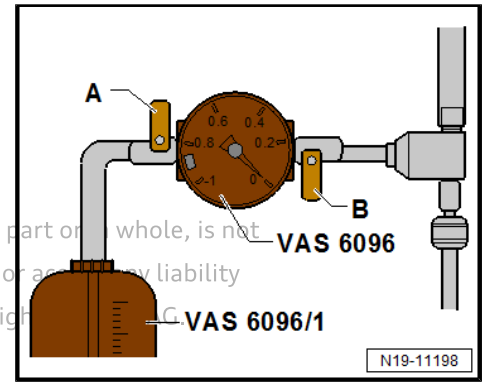

Protected by copyright. Copying for private or commercial purposes, in part or in whole, is not permitted unless authorised by AUDI AG. AUDI AG does not guarantee or accept any liability with respect to the correctness of information in this document. Copyright by AUDI AG.

Note

◆ *If the needle does not reach the green zone, repeat the process.*

◆ *Check cooling system for leaks if the vacuum is not maintained.*

– Detach compressed air hose.

– Open valve -A-.

• The vacuum in the cooling system causes the coolant to be drawn out of the reservoir of -VAS 6096- ; the cooling system is then filled.

– Detach cooling system charge unit - VAS 6096- and adapter -V.A.G 1274/8- .

Bleeding cooling system

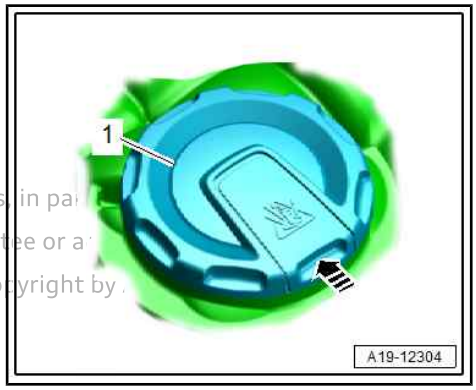

– Close filler cap -1- on coolant expansion tank (make sure it engages).

– Start engine.

Time period	Engine speed	Air conditioner/heater setting
3 minutes	2000 rpm	• Air conditioning system “OFF”, LED in AC button not lit • Heating at “HI”, select lowest possible blower speed (= 0)
Until both large coolant hoses at radiator become warm	Idling	• Air conditioning system “OFF” • Heating at “HI”
2 minutes	2000 rpm	• Air conditioning system “OFF” • Heating at “HI”

– Switch off engine.

Checking coolant level

WARNING

The cooling system is under pressure when the power unit is hot. Risk of scalding due to hot steam and hot coolant.

Danger of scalding skin and other parts of the body.

- *Put on protective gloves.*
- *Put on safety goggles.*
- *Cover filler cap on expansion tank with a cloth and open carefully to release pressure.*

Vehicles without natural gas system:

- The coolant level must be at the “MAX” marking when the engine is cold.
- The coolant level can be above the “MAX” marking when the engine is warm.

– Top up with coolant again if necessary.

Powered by Copyright Copying for private or commercial purposes, in part permitted unless authorised by Audi AG. Audi does not guarantee or assume with respect to the correctness of information in this document. Copyright by Audi AG.

Vehicles with natural gas system:

- The top edge (= MAX marking) of the float -1- must be flush with the opening -arrow- on the coolant expansion tank when the engine is cold.
- The top edge of the float may be above the opening on the coolant expansion tank when the engine is at operating temperature.

– Top up with coolant again if necessary.

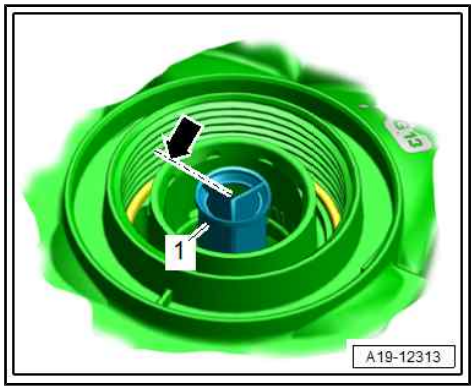

Tightening torques

◆ ⇒ General body repairs, exterior; Rep. gr. 66 ; Noise insulation; Exploded view - noise insulation

Protected by copyright. Copying for private or commercial purposes, in part or in whole, is not permitted unless authorised by AUDI AG. AUDI AG does not guarantee or accept any liability with respect to the correctness of information in this document. Copyright by AUDI AG.

2 Coolant pump/thermostat assembly

⇒ “2.1 Exploded view - coolant pump/thermostat”, page 109

⇒ “2.2 Exploded view - electric coolant pump”, page 109

⇒ “2.3 Exploded view - coolant temperature senders”, page 111

⇒ “2.4 Removing and installing electric coolant pump”, page 111

⇒ “2.5 Removing and installing coolant pump”, page 119

⇒ “2.6 Removing and installing toothed belt for coolant pump”, page 120

⇒ “2.7 Removing and installing actuator for engine temperature regulation N493 ”, page 122

⇒ “2.8 Removing and installing coolant temperature sender G62 ”, page 123

⇒ “2.9 Removing and installing radiator outlet coolant temperature sender G83 ”, page 124

2.1 Exploded view - coolant pump/thermostat

All components are described in ⇒ Servicing 4-cylinder engine, 2.0 ltr. 4-valve TFSI; Rep. gr. 19 ; Coolant pump/thermostat assembly; Exploded view - coolant pump/thermostat .

2.2 Exploded view - electric coolant pump

Protected by copyright. Copying for private or commercial purposes, in part or in whole, is not permitted unless authorised by AUDI AG. AUDI AG does not guarantee or accept any liability with respect to the correctness of information in this document. Copyright by AUDI AG.

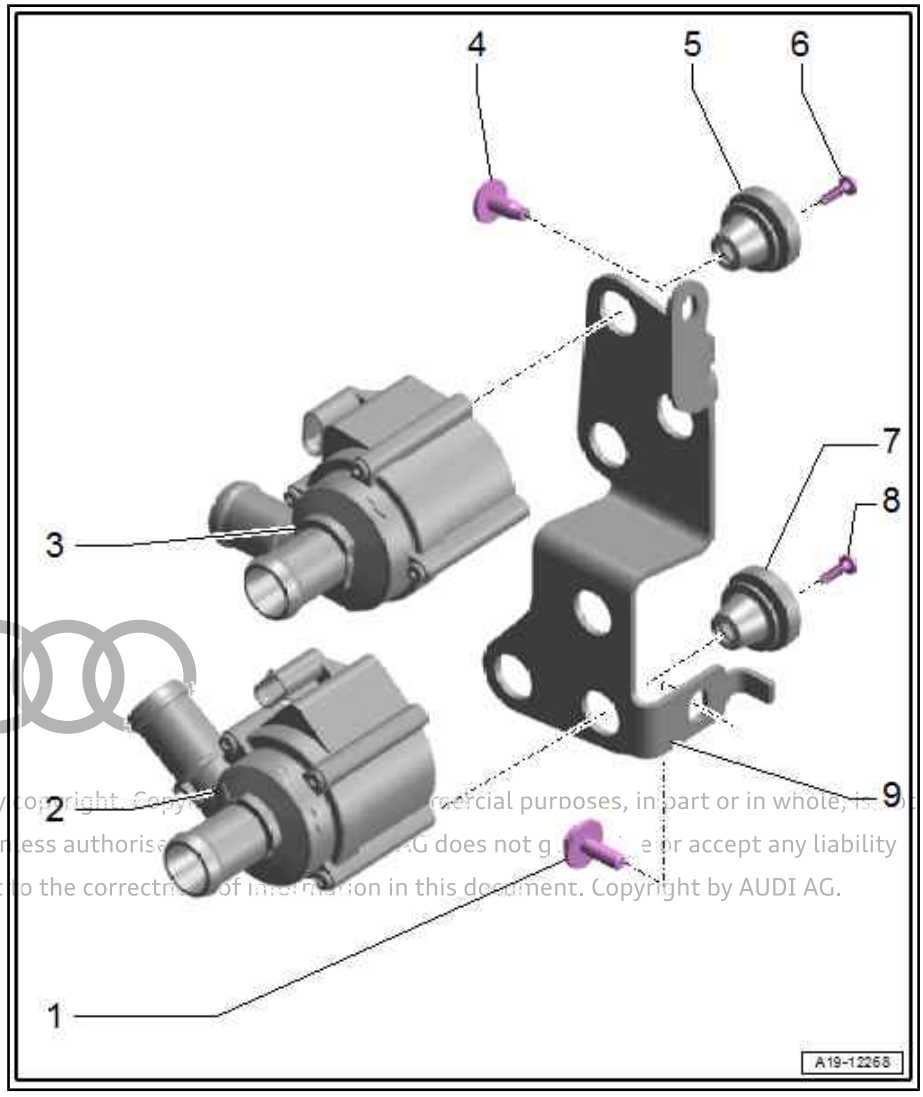

1 - Bolt

- ❑ 9 Nm

2 - Coolant circulation pump - V50-

- ❑ Depending on version
- ❑ Removing and installing:

- ♦ Vehicles without natural gas system
  ⇒ “2.4.1 Removing and installing coolant circulation pump V50 - vehicles without natural gas system”, page 111
- ♦ Vehicles with natural gas system
  ⇒ “2.4.2 Removing and installing coolant circulation pump V50 - vehicles with natural gas system”, page 112

3 - Continued coolant circulation pump - V51-

- ❑ Depending on vehicle equipment
- ❑ Removing and installing:

- ♦ Vehicles without natural gas system
  ⇒ “2.4.3 Removing and installing continued coolant circulation pump V51 - vehicles without natural gas system”, page 114
- ♦ Vehicles with natural gas system
  ⇒ “2.4.4 Removing and installing continued coolant circulation pump V51 - vehicles with natural gas system”, page 116

4 - Bolt

- ❑ 9 Nm

5 - Rubber grommet

6 - Bolt

- ❑ 2.7 Nm

7 - Rubber grommet

8 - Bolt

- ❑ 2.7 Nm

9 - Bracket

- ❑ For electric coolant pumps
- ❑ Different versions available; for allocation refer to ⇒ Electronic parts catalogue

Protected by copyright. Copying for private or commercial purposes, in part or in whole, is not permitted unless authorised by AUDI AG. AUDI AG does not guarantee or accept any liability with respect to the correctness of information in this document. Copyright by AUDI AG.

2.3 Exploded view - coolant temperature senders

All components are described in ⇒ Servicing 4-cylinder engine, 2.0 ltr. 4-valve TFSI; Rep. gr. 19 ; Coolant pump/thermostat assembly; Exploded view - coolant temperature senders .

2.4 Removing and installing electric coolant pump

⇒ "2.4.1 Removing and installing coolant circulation pump V50 - vehicles without natural gas system", page 111

⇒ "2.4.2 Removing and installing coolant circulation pump V50 - vehicles with natural gas system", page 112

⇒ "2.4.3 Removing and installing continued coolant circulation pump V51 - vehicles without natural gas system", page 114

⇒ "2.4.4 Removing and installing continued coolant circulation pump V51 - vehicles with natural gas system", page 116

2.4.1 Removing and installing coolant circulation pump - V50- - vehicles without natural gas system

Special tools and workshop equipment required

- Hose clamps up to 25 mm - 3094-

Protected by copyright. Copying for private or commercial purposes, in part or le, is not permitted unless authorised by AUDI AG. AUDI AG does not guarantee or accept liability with respect to the correctness of information in this document. Copyright by AU

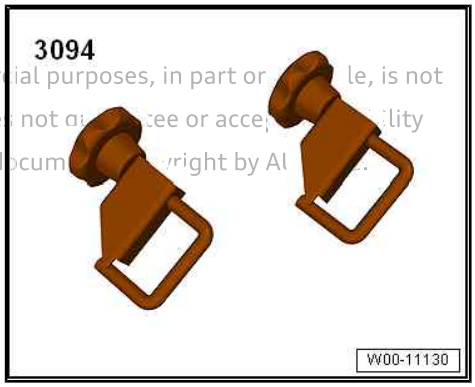

- Hose clip pliers - VAS 6340-

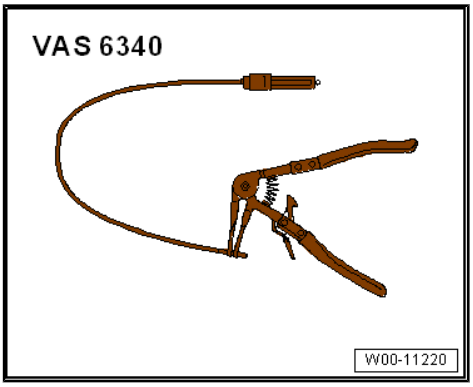

Removing

– Remove engine cover panel ⇒ Servicing 4-cylinder engine, 2.0 ltr. 4-valve TFSI; Rep. gr. 10 ; Engine cover panel; Removing and installing engine cover panel .

– Vehicles with particulate filter: Remove bolts -arrows- for bracket -1-.

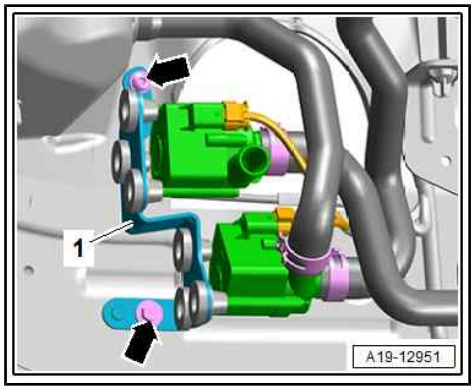

– Unplug electrical connector -1-.

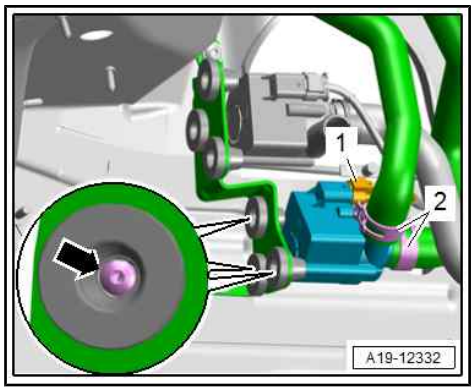

Note

Place a cloth underneath to catch escaping coolant.

– Clamp off coolant hoses using hose clamps up to 25 mm - 3094- , release hose clips -2- and disconnect hoses.

– Remove bolts -arrow- and detach coolant circulation pump - V50- .

Installing

Installation is carried out in reverse order; note the following:

Note

- *Secure all hose connections with correct type of hose clips (as original equipment) ⇒ Electronic parts catalogue .*
- *Do not reuse coolant.*

– Fill up with coolant ⇒ page 102 .

– Install engine cover panel ⇒ Servicing 4-cylinder engine, 2.0 ltr. 4-valve TFSI; Rep. gr. 10 ; Engine cover panel; Removing and installing engine cover panel .

Tightening torques

- ⇒ “2.2 Exploded view - electric coolant pump”, page 109

2.4.2 Removing and installing coolant circulation pump - V50- - vehicles with natural gas system

Special tools and workshop equipment required

Protected by copyright. Copying for private or commercial purposes, in part or in whole, is not permitted unless authorised by AUDI AG. AUDI AG does not guarantee or accept any liability with respect to the correctness of information in this document. Copyright by AUDI AG.

♦ Hose clamps up to 25 mm - 3094-

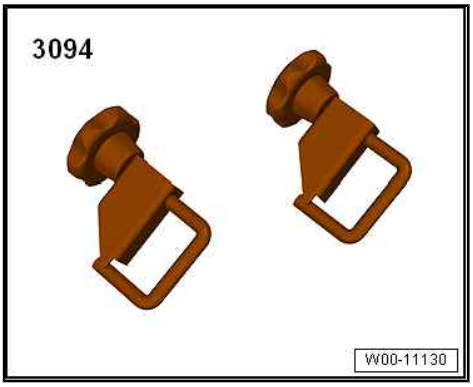

♦ Hose clip pliers - VAS 6340-

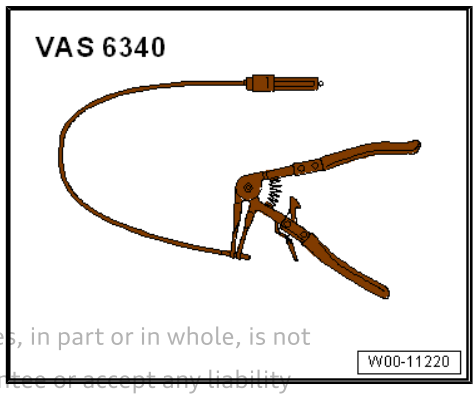

Protected by copyright. Copying for private or commercial purposes, in part or in whole, is not permitted unless authorised by AUDI AG. AUDI AG does not guarantee or accept any liability with respect to the correctness of information in this document. Copyright by AUDI AG.

Removing

– Remove engine cover panel ⇒ Servicing 4-cylinder engine, 2.0 ltr. 4-valve TFSI; Rep. gr. 10 ; Engine cover panel; Removing and installing engine cover panel .

– Detach electrical connectors -2- from bracket and unplug.

– Release fasteners -arrows-, detach engine control unit - J623- -item 3- and place to one side.

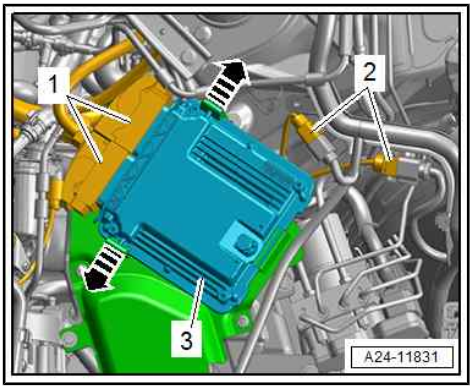

– Unplug electrical connector -3-.

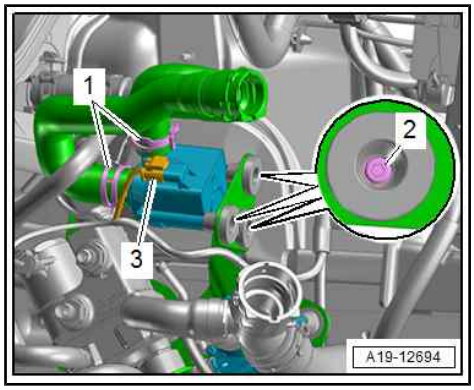

Note

Place a cloth underneath to catch escaping coolant.

– Clamp off coolant hoses using hose clamps up to 25 mm - 3094- , release hose clips -1- and disconnect hoses.

– Remove bolts -2- and detach coolant circulation pump - V50- .

Installing

Installation is carried out in reverse order; note the following:

Note

- *Secure all hose connections with correct type of hose clips (as original equipment) ⇒ Electronic parts catalogue .*
- *Do not reuse coolant.*

– Fill up with coolant ⇒ page 102 .

– Install engine cover panel ⇒ Servicing 4-cylinder engine, 2.0 ltr. 4-valve TFSI; Rep. gr. 10 ; Engine cover panel; Removing and installing engine cover panel .

Tightening torques

- ⇒ “2.2 Exploded view - electric coolant pump”, page 109

2.4.3 Removing and installing continued coolant circulation pump - V51- - vehicles without natural gas system

Special tools and workshop equipment required

- Hose clamps up to 25 mm - 3094-

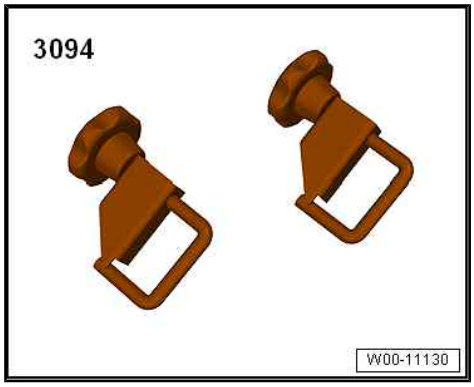

Protected by copyright. Copying for private or commercial purposes, in part or in whole, is not permitted unless authorised by AUDI AG. AUDI AG does not guarantee or accept any liability with respect to the correctness of information in this document. Copyright by AUDI AG.

♦ Hose clip pliers - VAS 6340-

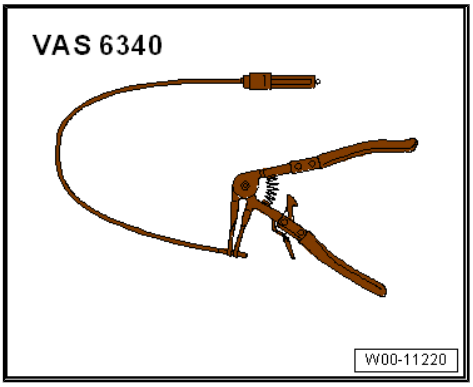

Removing

– Remove engine cover panel ⇒ Servicing 4-cylinder engine, 2.0 ltr. 4-valve TFSI; Rep. gr. 10 ; Engine cover panel; Removing and installing engine cover panel .

– Vehicles with particulate filter: Remove bolts -arrows- for bracket -1-.

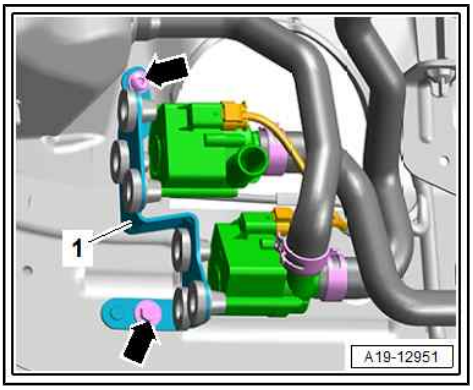

Protected by copyright. Copying for private or commercial purposes, in part or in whole, is not permitted unless authorised by AUDI AG. AUDI AG does not guarantee or accept any liability with respect to the correctness of information in this document. Copyright by AUDI AG.

– Unplug electrical connector -1-.

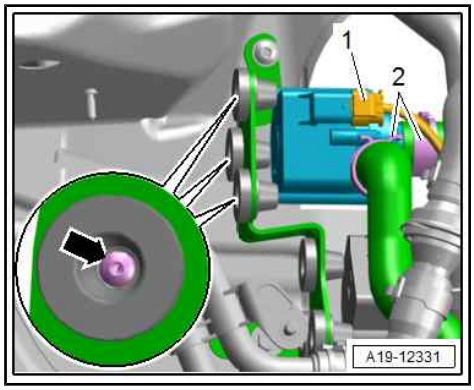

Note

Place a cloth underneath to catch escaping coolant.

– Clamp off coolant hoses using hose clamps up to 25 mm - 3094- , release hose clips -2- and disconnect hoses.

– Remove bolts -arrow- and detach continued coolant circulation pump - V51- .

Installing

Installation is carried out in reverse order; note the following:

Note

- *Secure all hose connections with correct type of hose clips (as original equipment) ⇒ Electronic parts catalogue .*
- *Do not reuse coolant.*

– Fill up with coolant ⇒ page 102 .

– Install engine cover panel ⇒ Servicing 4-cylinder engine, 2.0 ltr. 4-valve TFSI; Rep. gr. 10 ; Engine cover panel; Removing and installing engine cover panel .

Tightening torques

- ⇒ “2.2 Exploded view - electric coolant pump”, page 109

2.4.4 Removing and installing continued coolant circulation pump - V51- - vehicles with natural gas system

Special tools and workshop equipment required

- Hose clamps up to 25 mm - 3094-

Protected by copyright. Copying for private or commercial purposes, in part or in whole, is not permitted unless authorised by AUDI AG. AUDI AG does not guarantee or accept any liability with respect to the correctness of information in this document. Copyright by AUDI AG.

- Engine bung set - VAS 6122-

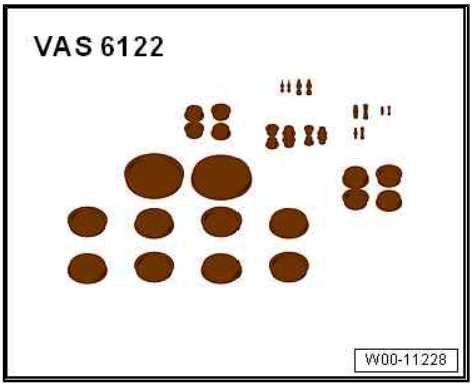

- Hose clip pliers - VAS 6340-

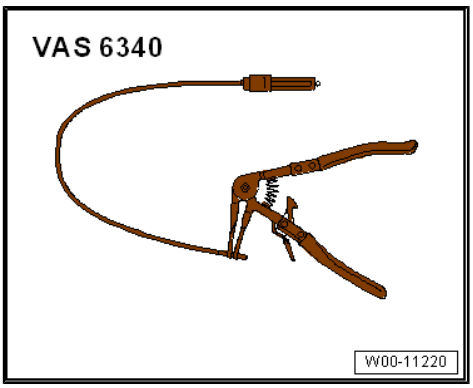

Removing

– Observe safety precautions ⇒ Servicing 4-cylinder engine, 2.0 ltr. 4-valve TFSI; Rep. gr. 00 ; Safety precautions .

– Observe safety precautions when working on the natural gas system ⇒ page 2 .

– Observe rules for cleanliness ⇒ Servicing 4-cylinder engine, 2.0 ltr. 4-valve TFSI; Rep. gr. 00 ; Repair notes; Rules for cleanliness .

WARNING

Risk of explosion due to escaping natural gas - risk of death! Uncontrolled escape of natural gas may occur if the manual fuel tank shut-off valve is defective. In addition, third parties may activate the natural gas system unintentionally.

Danger of severe or fatal injuries due to explosion.

- ***Pressure in natural gas high-pressure pipe must be dissipated by a specially instructed person.***
- ***Shut off natural gas fuel tanks electrically and manually.***

– Dissipate pressure in natural gas high-pressure pipe ⇒ Fuel supply system - g-tron; Rep. gr. 20 ; Fuel tanks; Dissipating fuel pressure in high-pressure section .

– Switch off ignition and remove ignition key.

– Disconnect battery ⇒ Electrical system; Rep. gr. 27 ; Battery; Disconnecting and connecting battery .

– Remove engine cover panel ⇒ Servicing 4-cylinder engine, 2.0 ltr. 4-valve TFSI; Rep. gr. 10 ; Engine cover panel; Removing and installing engine cover panel .

Protected by copyright. Copying for private or commercial purposes, in part or in whole, is not permitted unless authorised by AUDI AG. AUDI AG does not guarantee or accept any liability with respect to the correctness of information in this document. Copyright by AUDI AG.

Note

Place a cloth underneath to catch escaping coolant.

- Clamp off coolant hoses using hose clamps up to 25 mm - 3094- , release hose clips -arrows- and disconnect hoses.
- Carefully unscrew union nuts -1, 2- so that residual gas can escape; counterhold at connections with a suitable tool.

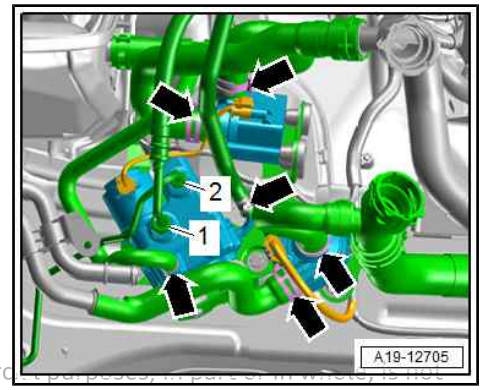

Caution

Risk of gas leaks in gas pressure pipe due to improper handling.

- ***Do not attempt to bend gas pressure pipe to a different shape***

Protected by copyright. Copying for private or commercial purposes, in part or in whole, is not permitted unless authorized by AUDI AG. AUDI AG does not guarantee or accept any liability with respect to the correctness of information in this document. Copyright by AUDI AG.

- Unscrew union nut -1- and move natural gas low-pressure pipe to one side.
- Unclip high-pressure pipe from retainers.
- Unscrew union nut -2- and disconnect high-pressure pipe slightly from gas pressure regulator.
- Seal off open lines and connections with plugs (thoroughly cleaned) from engine bung set - VAS 6122- .
- Unplug electrical connectors:

1 - For high-pressure valve for gas mode - N372-

2 - For sensor module - GX23-

3 - For coolant circulation pump - V50-

4 - For continued coolant circulation pump - V51-

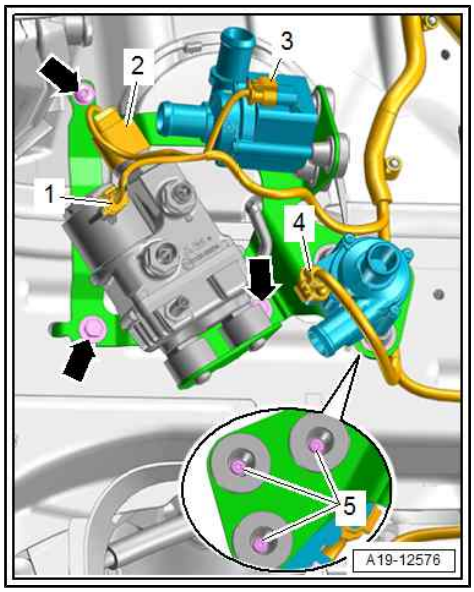

- Unscrew bolts -arrows- and remove pump unit with gas pressure regulator.
- Remove bolts -5- and detach continued coolant circulation pump - V51- .

Installing

Installation is carried out in reverse order; note the following:

Note

- *Secure all hose connections with correct type of hose clips (as original equipment) ⇒ Electronic parts catalogue .*
- *Do not reuse coolant.*

- Install natural gas high-pressure pipe ⇒ page 194 .
- Observe steps required after re-connecting battery ⇒ Electrical system; Rep. gr. 27 ; Battery; Disconnecting and connecting battery .
- Fill up with coolant ⇒ page 102 .
- Install engine cover panel ⇒ Servicing 4-cylinder engine, 2.0 ltr. 4-valve TFSI; Rep. gr. 10 ; Engine cover panel; Removing and installing engine cover panel .

WARNING

Risk of explosion due to uncontrolled gas escape in connection with ignition sources and electrostatic discharge - risk of death!

Danger of severe or fatal injuries due to explosion.

- *Natural gas system must be re-started by a specially instructed person.*

– Open manual shut-off mechanisms of mechanical tank shut-off valves using extension -T40333- and hand wheel -T50026- , and plug in electrical connectors if necessary.

WARNING

Risk of explosion due to escaping natural gas - risk of death! Leaks in the natural gas system can cause uncontrolled escape of natural gas.

Danger of severe or fatal injuries due to explosion.

- *Check natural gas system for leaks.*

– Perform gas system inspection ⇒ Maintenance ; Booklet 830 ; Maintenance; Natural gas system: checking for damage and leaks .

– Perform leak test on low-pressure section of natural gas system ⇒ Natural gas engines - General information; Rep. gr. 00 ; Checking natural gas system .

Tightening torques

- ⇒ “2.2 Exploded view - electric coolant pump”, page 109
- ⇒ “6.1 Exploded view - gas pressure regulator”, page 194

2.5 Removing and installing coolant pump

Removing

– Remove engine cover panel ⇒ Servicing 4-cylinder engine, 2.0 ltr. 4-valve TFSI; Rep. gr. 10 ; Engine cover panel; Removing and installing engine cover panel .

– Drain coolant ⇒ page 102 .

Vehicles with natural gas system:

– Remove coolant pipes (rear) ⇒ page 135 .

– Remove engine control unit - J623- ⇒ page 211 .

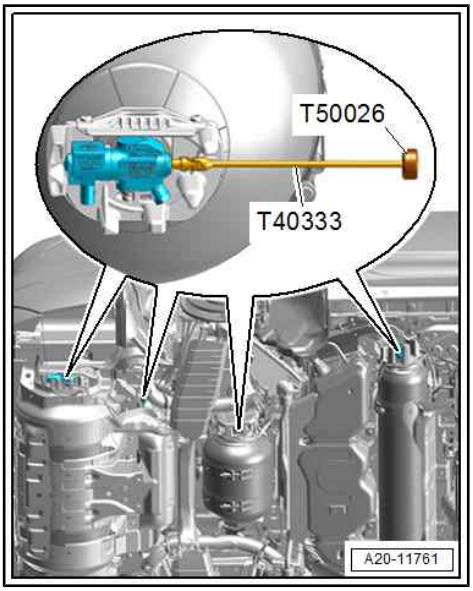

Protected by copyright. Copying for private or commercial purposes, in part or in whole, is not permitted unless authorised by AUDI AG. AUDI AG does not guarantee or accept any liability with respect to the correctness of information in this document. Copyright by AUDI AG.

All vehicles (continued):

– Unplug electrical connectors -2 ... 5-.

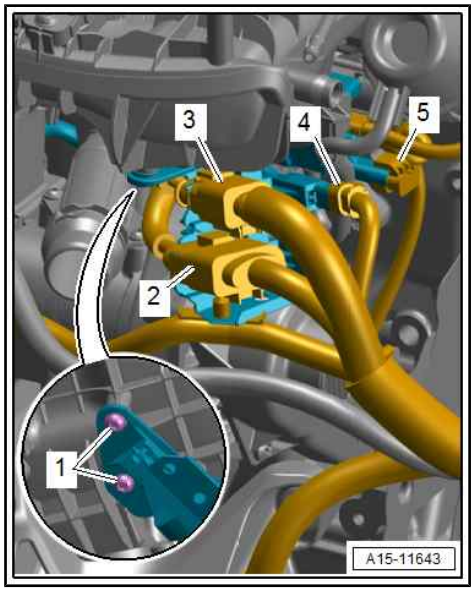

– If necessary, move electrical wiring harness clear.

– Remove bolt -1- and push bracket -2- with engine wiring harness to one side. (Different versions.)

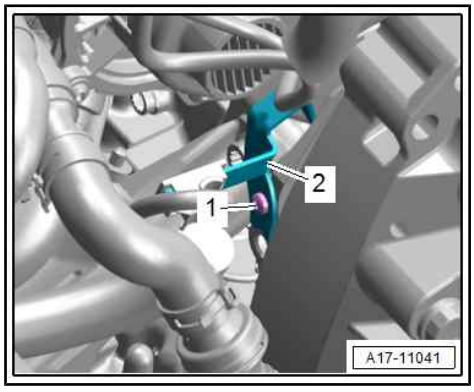

All further procedures are described in ⇒ Servicing 4-cylinder engine, 2.0 ltr. 4-valve TFSI; Rep. gr. 19 ; Coolant pump/thermostat assembly; Removing and installing coolant pump .

Installing

Additional work:

– Electrical connections and routing ⇒ Current flow diagrams, Electrical fault finding and Fitting locations.

Note

Do not reuse coolant.

– Install rear coolant pipes ⇒ page 135 .

– Install engine control unit - J623- ⇒ page 211 .

– Fill up with coolant ⇒ page 102 .

– Install engine cover panel ⇒ Servicing 4-cylinder engine, 2.0 ltr. 4-valve TFSI; Rep. gr. 10 ; Engine cover panel; Removing and installing engine cover panel .

Protected by copyright. Copying for private or commercial purposes, in part or in whole, is not permitted unless authorised by AUDI AG. AUDI AG does not guarantee or accept any liability with respect to the correctness of information in this document. Copyright by AUDI AG.

2.6 Removing and installing toothed belt for coolant pump

Special tools and workshop equipment required

♦ Hose clip pliers - VAS 6340-

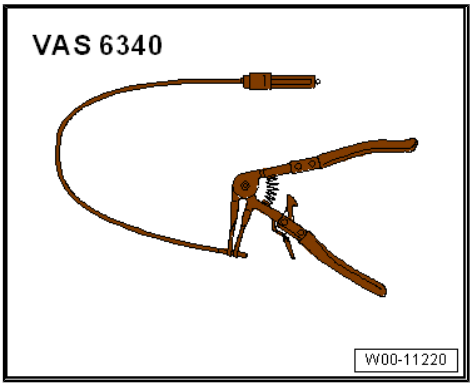

Removing

– Remove engine cover panel ⇒ Servicing 4-cylinder engine, 2.0 ltr. 4-valve TFSI; Rep. gr. 10 ; Engine cover panel; Removing and installing engine cover panel .

– Drain coolant ⇒ page 102 .

Vehicles with natural gas system:

– Remove engine control unit - J623- ⇒ page 211 .

– Release hose clips -1, 2- and disconnect coolant hoses.

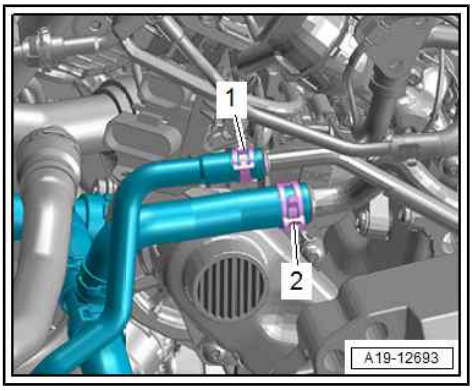

All vehicles (continued):

– If necessary, move electrical wiring harness clear.

– Remove bolt -1- and push bracket -2- with engine wiring harness to one side. (Different versions.)

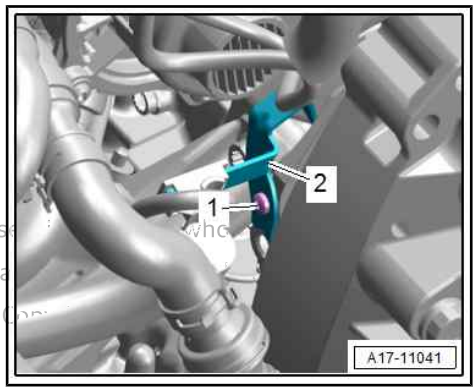

Protected by copyright. Copying for private or commercial purpos
permitted unless authorised by AUDI AG. AUDI AG does not guara
with respect to the correctness of information in this document.

– Lift retaining clips -1, 2-, disconnect coolant hoses and press to one side.

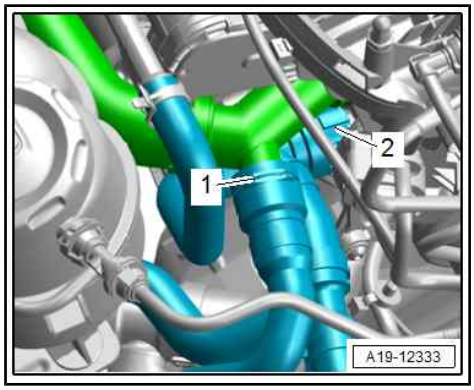

All further procedures are described in ⇒ Servicing 4-cylinder engine, 2.0 ltr. 4-valve TFSI; Rep. gr. 19 ; Coolant pump/thermostat assembly; Removing and installing toothed belt for coolant pump .

Installing

Additional work:

– Electrical connections and routing ⇒ Current flow diagrams, Electrical fault finding and Fitting locations.

– Connect coolant hose with plug-in connector ⇒ page 142 .

Note

Do not reuse coolant.

Protected by copyright. Copying for private or commercial purposes, in part or in whole, is not permitted unless authorised by AUDI AG. AUDI AG does not guarantee or accept any liability with respect to the correctness of information in this document. Copyright by AUDI AG.

– Install engine control unit - J623- ⇒ page 211 .

– Fill up with coolant ⇒ page 102 .

– Install engine cover panel ⇒ Servicing 4-cylinder engine, 2.0 ltr. 4-valve TFSI; Rep. gr. 10 ; Engine cover panel; Removing and installing engine cover panel .

2.7 Removing and installing actuator for engine temperature regulation - N493-

Removing

– Drain coolant ⇒ page 102 .

Vehicles with natural gas system:

– Remove battery tray ⇒ Electrical system; Rep. gr. 27 ; Battery; Removing and installing battery tray .

Vehicles without natural gas system:

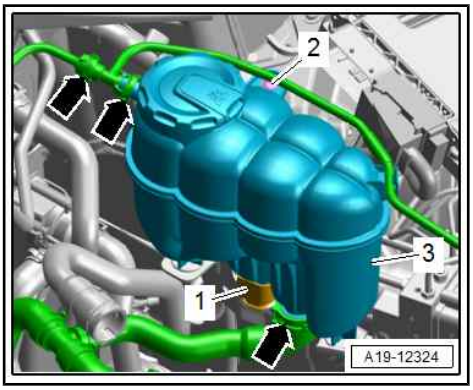

– Lift retaining clips -arrows-, disconnect coolant hoses and move them clear.

– Unplug electrical connector -1- for coolant shortage indicator switch - F66- .

– Unscrew bolt -2- and detach coolant expansion tank -3-.

All further procedures are described in ⇒ Servicing 4-cylinder engine, 2.0 ltr. 4-valve TFSI; Rep. gr. 19 ; Coolant pump/thermostat assembly; Removing and installing actuator for engine temperature regulation - N493- .

Installing

Additional work:

Note

Do not reuse coolant.

– Vehicles with natural gas system: Install battery tray ⇒ Electrical system; Rep. gr. 27 ; Battery; Removing and installing battery tray .

– Connect coolant hose with plug-in connector ⇒ page 142 .

– Fill up with coolant ⇒ page 102 .

2.8 Removing and installing coolant temperature sender - G62-

⇒ "2.8.1 Removing and installing coolant temperature sender G62 - vehicles without particulate filter", page 123

⇒ "2.8.2 Removing and installing coolant temperature sender G62 - vehicles with particulate filter", page 123

2.8.1 Removing and installing coolant temperature sender - G62- - vehicles without particulate filter

Protected by copyright. Copying for private or commercial purposes, in part or in whole, is not permitted unless authorised by AUDI AG. AUDI AG does not guarantee or accept any liability with respect to the correctness of information in this document. Copyright by AUDI AG.

All procedures are described in ⇒ Servicing 4-cylinder engine, 2.0 ltr. 4-valve TFSI; Rep. gr. 19 ; Coolant pump/thermostat assembly; Removing and installing coolant temperature sender - G62- .

2.8.2 Removing and installing coolant temperature sender - G62- - vehicles with particulate filter

Removing

– Remove engine cover panel ⇒ Servicing 4-cylinder engine, 2.0 ltr. 4-valve TFSI; Rep. gr. 10 ; Engine cover panel; Removing and installing engine cover panel .

– Move electrical wiring clear at heat shield -1-.
– Remove nuts -arrows- and bolt -2- and detach heat shield (shown with particulate filter removed).

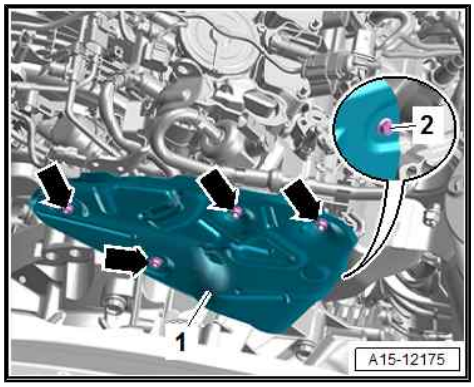

Pressure differential sender for particulate filter - G1037- - version 2:

Protected by copyright. Copying for private or commercial purposes, in part or in whole, is not permitted unless authorised by AUDI AG. AUDI AG does not guarantee or accept any liability with respect to the correctness of information in this document. Copyri

– Unplug electrical connector -3-.
– Remove bolt -1- and move pressure differential sender for particulate filter - G1037- clear.

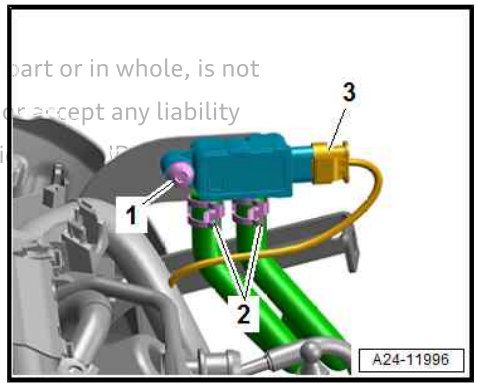

All versions (continued):

– Take electrical connector -2- for exhaust gas temperature sender 3 - G495- out of bracket and unplug.
– Release retaining clip -3- and move vacuum hose clear.
– Remove bolt -1- and detach bracket.

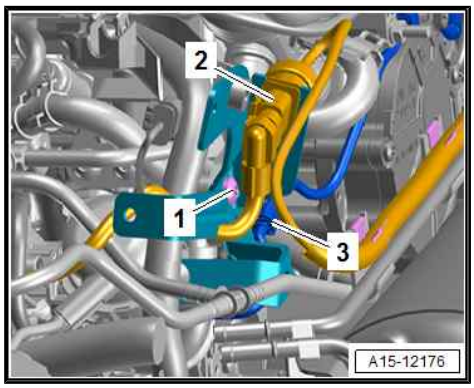

All further procedures are described in ⇒ Servicing 4-cylinder engine, 2.0 ltr. 4-valve TFSI; Rep. gr. 19 ; Coolant pump/thermostat assembly; Removing and installing coolant temperature sender - G62- .

Installing

Additional work:

– Install engine cover panel ⇒ Servicing 4-cylinder engine, 2.0 ltr. 4-valve TFSI; Rep. gr. 10 ; Engine cover panel; Removing and installing engine cover panel .

Tightening torques

◆ ⇒ Servicing 4-cylinder engine, 2.0 ltr. 4-valve TFSI; Rep. gr. 15 ; Cylinder head; Exploded view - cylinder head

2.9 Removing and installing radiator outlet coolant temperature sender - G83-

Procedure

• Engine cold.

– Vehicles with natural gas system: Release catches -arrows B- and open cover -1- -arrow A-.

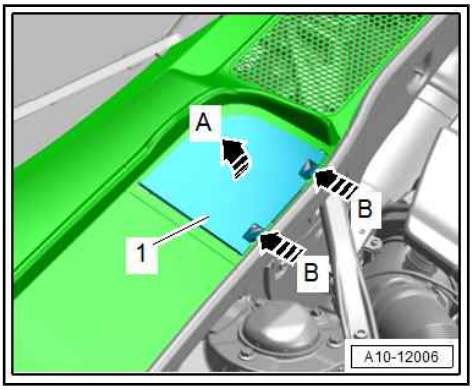

– Relieve residual pressure in cooling system by releasing fastener -arrow- and briefly opening filler cap -1- on coolant expansion tank.

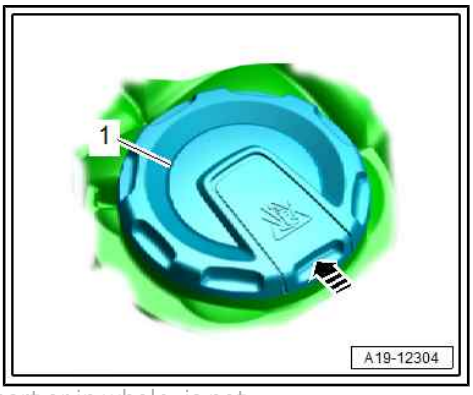

Protected by copyright. Copying for private or commercial purposes, in part or in whole, is not permitted unless authorised by AUDI AG. AUDI AG does not guarantee or with respect to the correctness of information in this document. Copyrig

Radiator outlet coolant temperature sender - G83- - version 1:

– Unplug electrical connector -2-.

Note

- *Place a cloth underneath to catch escaping coolant.*
- *Renew O-ring after removal.*

– Lift retaining clip -1- and pull out radiator outlet coolant temperature sender - G83- .

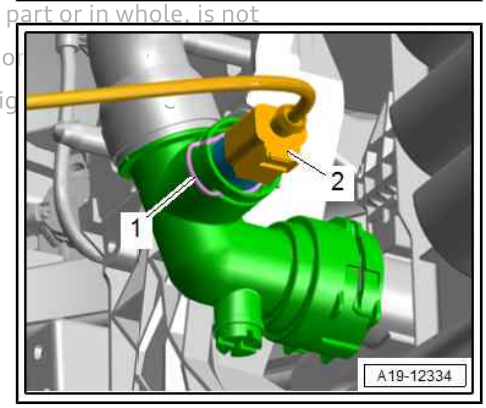

Radiator outlet coolant temperature sender - G83- - version 2:

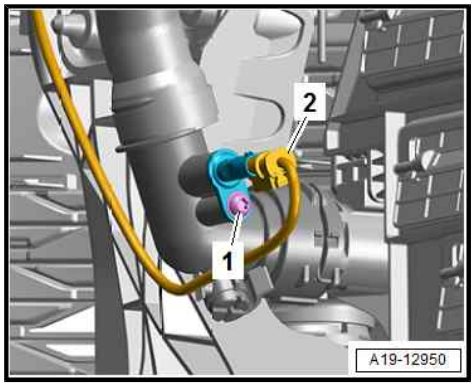

– Unplug electrical connector -2-.

Note

- *Place a cloth underneath to catch escaping coolant.*
- *Renew O-ring after removal.*

– Unscrew bolt -1- and pull off radiator outlet coolant temperature sender - G83- .

Both versions:

Note

Insert new coolant temperature sender into connection immediately to avoid loss of coolant.

Protected by copyright. Copying for private or commercial purposes, in part or in whole, is not permitted unless authorised by AUDI AG. AUDI AG does not guarantee or accept any liability with respect to the correctness of information in this document. Copyright by AUDI AG.

Installation is carried out in reverse order; note the following:

– Check coolant level ⇒ page 107 .

Tightening torques

- ⇒ Servicing 4-cylinder engine, 2.0 ltr. 4-valve TFSI; Rep. gr. 19 ; Coolant pump/thermostat assembly; Exploded view - coolant temperature senders

3 Coolant pipes

⇒ “3.1 Exploded view - coolant pipes”, page 127

⇒ “3.2 Removing and installing coolant pipes”, page 129

⇒ “3.3 Removing and installing coolant pipes for gearbox”, page 136

3.1 Exploded view - coolant pipes

- Coolant pipes on engine ⇒ page 127
- Coolant pipes for gearbox ⇒ page 128

Note

The arrow markings on coolant pipes and on ends of hoses must align.

Coolant pipes on engine

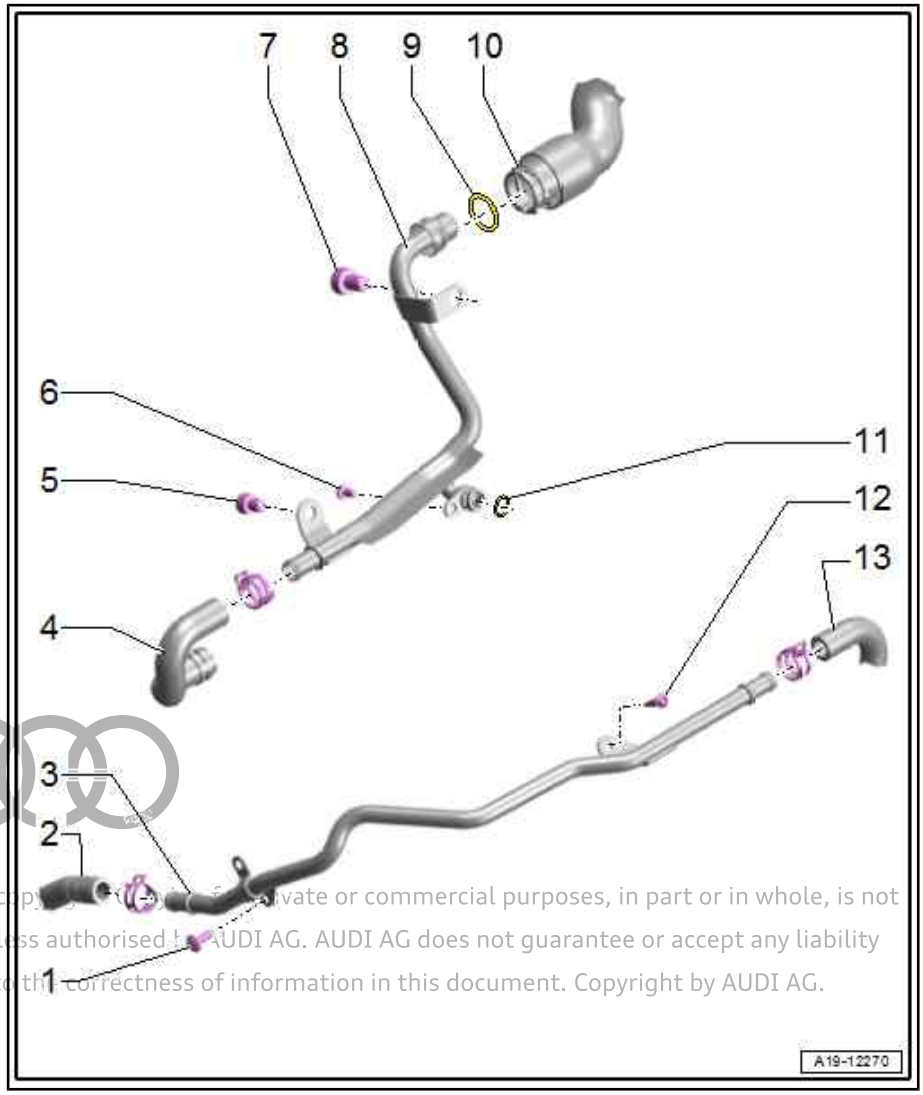

1 - Bolt
- ❑ 9 Nm

2 - Coolant hose

3 - Coolant pipe (left-side)
- ❑ Different versions available; for correct version refer to ⇒ Electronic parts catalogue
- ❑ Removing and installing ⇒ page 129

4 - Coolant hose

5 - Bolt
- ❑ 20 Nm

6 - Bolt
- ❑ 9 Nm

7 - Bolt
- ❑ 20 Nm

8 - Coolant pipe (right-side)
- ❑ Removing and installing
- ⇒ “3.2.2 Removing and installing coolant pipe (right-side) - vehicles with alternator”, page 130
- ⇒ “3.2.3 Removing and installing coolant pipe (right-side) - vehicles with starter-alternator”, page 133

9 - O-ring
- ❑ Renew after removing

10 - Coolant hose
- ❑ To remove, fold back heat insulation sleeve and lift retaining clip
- ❑ Connecting ⇒ page 142

Protected by copyright. Copying for private or commercial purposes, in part or in whole, is not permitted unless authorised by AUDI AG. AUDI AG does not guarantee or accept any liability with respect to the correctness of information in this document. Copyright by AUDI AG.

11 - O-ring

- ❑ Renew after removing

12 - Bolt

- ❑ 6 Nm

13 - Coolant hose

Vehicles with natural gas system: Coolant pipe (rear) - tightening torque

– Tighten bolts -arrows- to 9 Nm.

Protected by copyright. Copying for private or commercial p
permitted unless authorised by AUDI AG. AUDI AG does not
with respect to the correctness of information in this docum

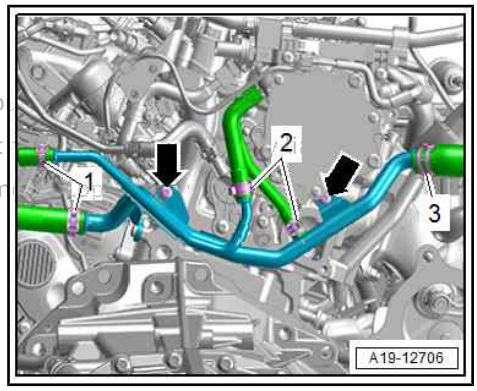

Coolant pipes for gearbox

1 - Coolant hoses

2 - Coolant hoses

3 - Bolt

- ❑ 9 Nm

4 - Coolant pipes for gearbox

- ❑ Removing and installing ⇒ page 136

5 - Bolt

- ❑ 9 Nm

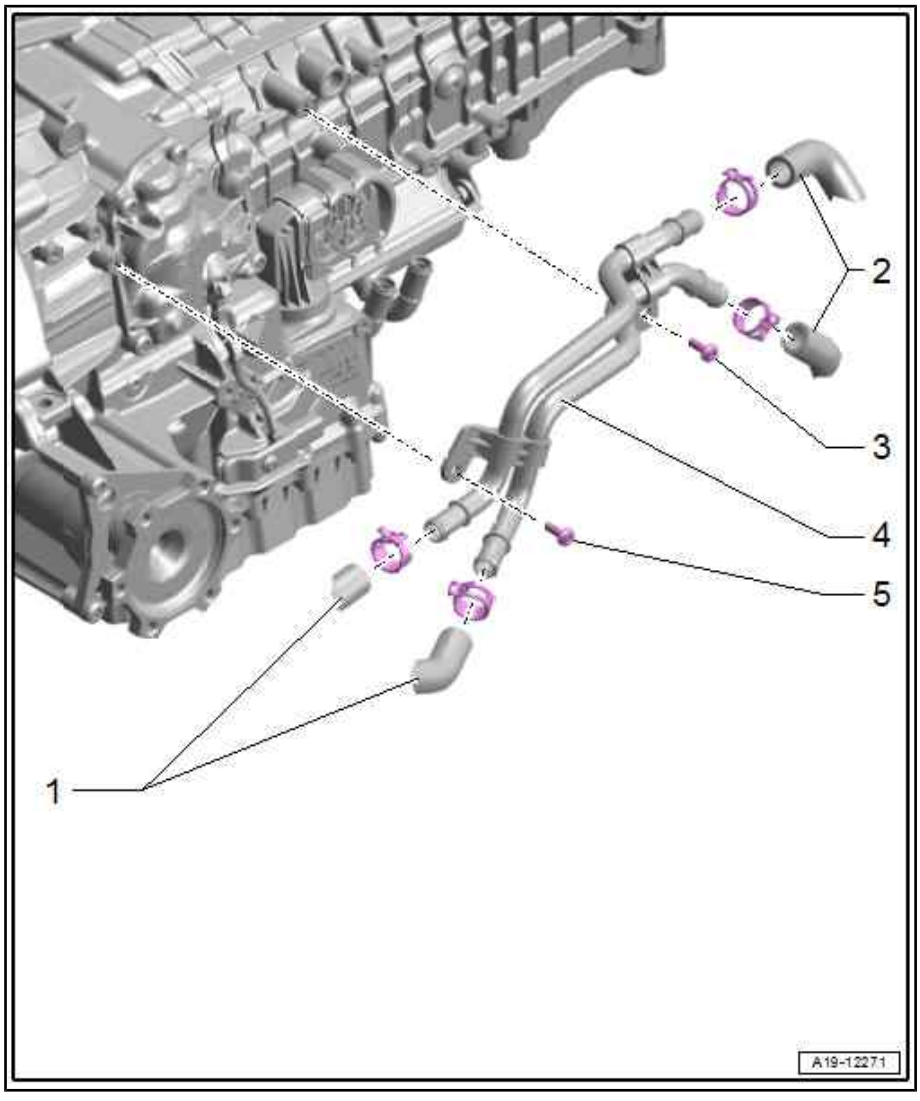

3.2 Removing and installing coolant pipes

⇒ “3.2.1 Removing and installing coolant pipe (left-side)”, page 129

⇒ “3.2.2 Removing and installing coolant pipe (right-side) - vehicles with alternator”, page 130

⇒ “3.2.3 Removing and installing coolant pipe (right-side) - vehicles with starter-alternator”, page 133

⇒ “3.2.4 Removing and installing rear coolant pipes - vehicles with natural gas system”, page 135

3.2.1 Removing and installing coolant pipe (left-side)

Special tools and workshop equipment required

- Hose clamps up to 25 mm - 3094-

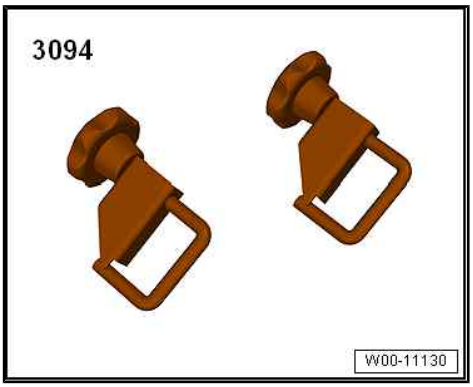

- Hose clip pliers - VAS 6340-

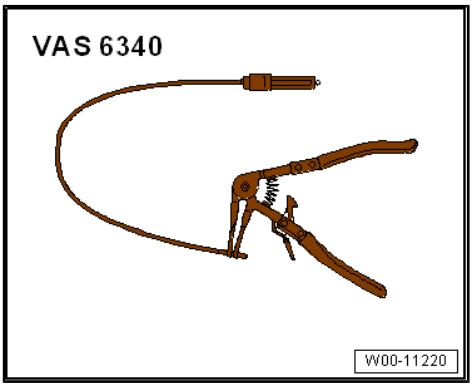

Removing

– Vehicles with natural gas system: Release catches -arrows B- and open cover -1- -arrow A-.

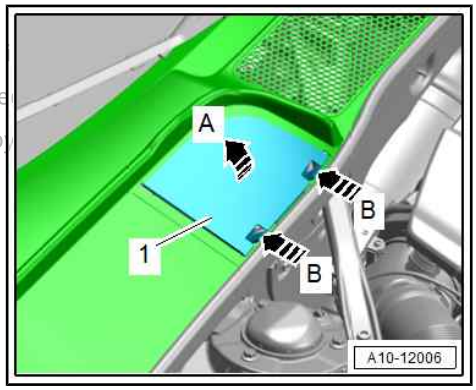

Protected by copyright. Copying for private or commercial purposes, in part or in whole, is not permitted unless authorized by AUDI AG. AUDI AG does not guarantee or accept any liability with respect to the correctness of information in this document. Copyright by AUDI AG.

WARNING

The cooling system is under pressure when the power unit is hot. Risk of scalding due to hot steam and hot coolant.

Danger of scalding skin and other parts of the body.

- *Put on protective gloves.*
- *Put on safety goggles.*
- *Cover filler cap on expansion tank with a cloth and open carefully to release pressure.*

– Release fastener -arrow- and open filler cap -1- on coolant expansion tank.
– Remove engine cover panel ⇒ Servicing 4-cylinder engine, 2.0 ltr. 4-valve TFSI; Rep. gr. 10 ; Engine cover panel; Removing and installing engine cover panel .

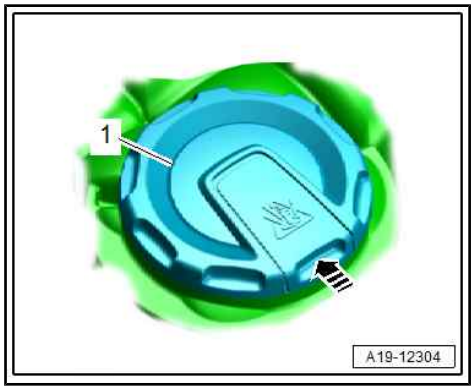

Note

- *Place a cloth under coolant pipe to catch escaping coolant.*
- *Illustration shows installation position on a vehicle without natural gas system.*

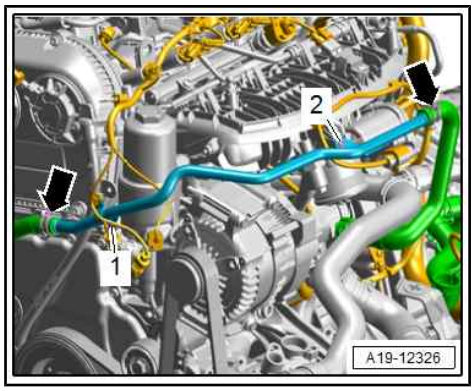

– Move electrical wiring clear.
– Remove bolts -1, 2-.
– Clamp off coolant hoses using hose clamps up to 25 mm - 3094- , release hose clips -arrows- and disconnect hoses.

Installing

Installation is carried out in reverse order; note the following:

Note

- *Secure all hose connections with correct type of hose clips (as original equipment) ⇒ Electronic parts catalogue .*
- *Do not reuse coolant.*

– Fill up with coolant ⇒ page 102 .
– Install engine cover panel ⇒ Servicing 4-cylinder engine, 2.0 ltr. 4-valve TFSI; Rep. gr. 10 ; Engine cover panel; Removing and installing engine cover panel .

Tightening torques

- ⇒ “3.1 Exploded view - coolant pipes”, page 127

3.2.2 Removing and installing coolant pipe (right-side) - vehicles with alternator

Special tools and workshop equipment required

Protected by copyright. Copying for private or commercial purposes, in part or in whole, is not permitted unless authorised by AUDI AG. AUDI AG does not guarantee or accept any liability with respect to the correctness of information in this document. Copyright by AUDI AG.

♦ Hose clip pliers - VAS 6362-

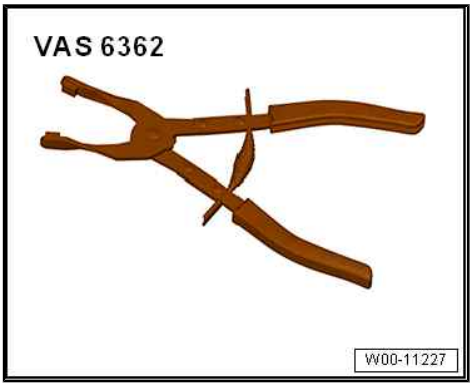

♦ Socket Torx T30 - T10405-

Protected by copyright. Copying for private or commercial purposes, in part or in whole, is not permitted unless authorised by AUDI AG. AUDI AG does not guarantee or accept any liability with respect to the correctness of information in this document. Copyright by AUDI AG.

Removing

Note

Re-install all heat insulation sleeves in the same locations when installing.

– Drain coolant ⇒ page 102 .
– Vehicles without natural gas system: Remove front silencer ⇒ page 223 .
– Vehicles with natural gas system: Remove front exhaust pipe ⇒ page 221 .
– Remove nut -2- from underneath.
– Remove air cleaner housing ⇒ page 178 .

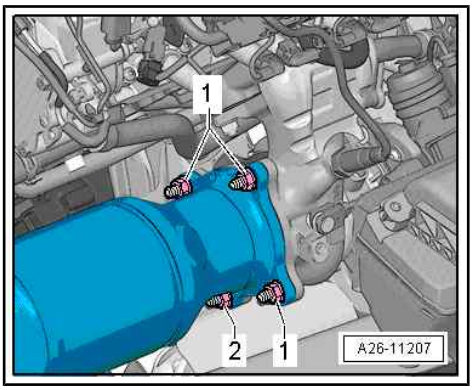

– Unplug electrical connector -1- for Lambda probe 1 after catalytic converter - GX7- -item 2- and move wiring clear.

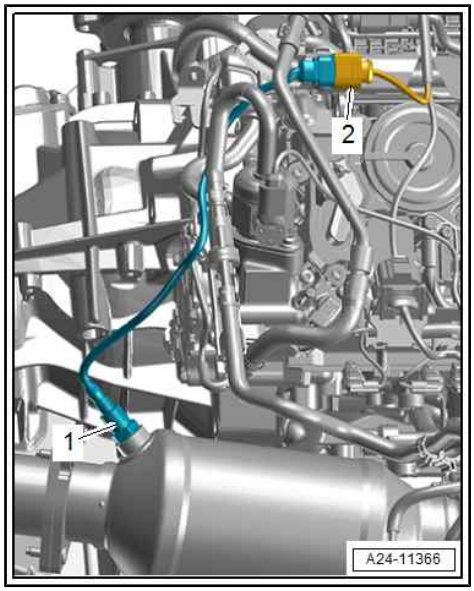

– Remove nuts -1- from above and move catalytic converter towards rear.

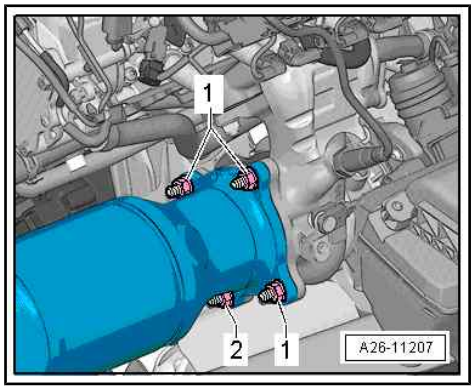

– Remove bolt -arrow- and detach crankcase breather pipe from turbocharger.

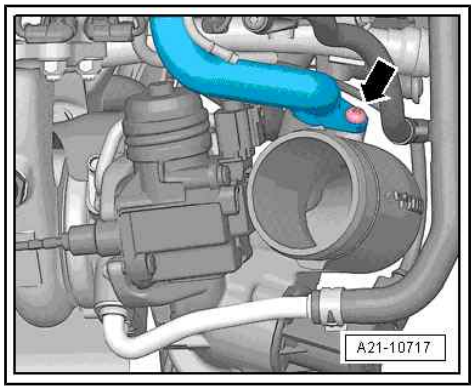

Protected by copyright. Copying for private or commercial purposes, in part or in whole, is not permitted unless authorised by AUDI AG. AUDI AG does not guarantee or accept any liability with respect to the correctness of information in this document. Copyright by AUDI AG.

– Fold back heat insulation sleeve, lift retaining clip -2- and disconnect coolant hose.
– Release hose clip -3- and disconnect coolant hose.
– Remove bolts -arrows- and -1-, detach coolant pipe (right-side) from cylinder block and remove coolant pipe.

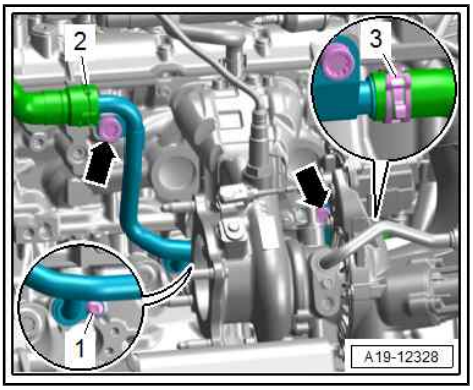

Installing

Installation is carried out in reverse order; note the following:

Note

- *Renew O-ring after removal.*
- *Secure all hose connections with correct type of hose clips (as original equipment) ⇒ Electronic parts catalogue .*

– Install catalytic converter ⇒ Servicing 4-cylinder engine, 2.0 ltr. 4-valve TFSI; Rep. gr. 26 ; Emission control system; Removing and installing catalytic converter .
– Install air cleaner housing ⇒ page 178 .
– Electrical connections and routing ⇒ Current flow diagrams, Electrical fault finding and Fitting locations.
– Connect coolant hose with plug-in connector ⇒ page 142 .

Protected by copyright. Copying for private or commercial purposes, in part or in whole, is not permitted unless authorised by AUDI AG. AUDI AG does not guarantee or accept any liability with respect to the correctness of information in this document. Copyright by AUDI AG.

Note

Do not reuse coolant.

– Fill up with coolant ⇒ page 102 .

Tightening torques

- ⇒ “3.1 Exploded view - coolant pipes”, page 127
- ⇒ Servicing 4-cylinder engine, 2.0 ltr. 4-valve TFSI; Rep. gr. 21 ; Turbocharger; Exploded view - turbocharger

3.2.3 Removing and installing coolant pipe (right-side) - vehicles with starter-alternator

Special tools and workshop equipment required

- Hose clip pliers - VAS 6362-

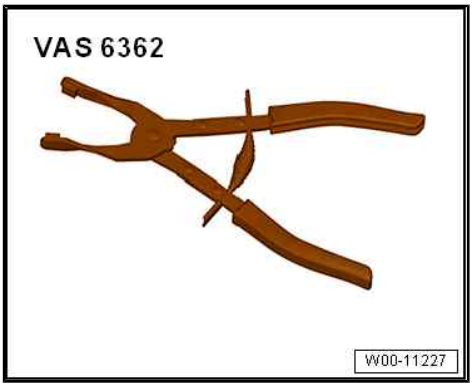

- Socket Torx T30 - T10405-

Protected by copyright. Copying for private or commercial purposes, in part or in whole, is not permitted unless authorised by AUDI AG. AUDI AG does not guarantee or accept any liability with respect to the correctness of information in this document. Copyright by AUDI AG.

Removing

Note

Re-install all heat insulation sleeves in the same locations when installing.

– Remove catalytic converter ⇒ Servicing 4-cylinder engine, 2.0 ltr. 4-valve TFSI; Rep. gr. 26 ; Emission control system; Removing and installing catalytic converter .
– Drain coolant ⇒ page 102 .
– Fold back heat insulation sleeve, lift retaining clip -2- and disconnect coolant hose.
– Release hose clip -3- and disconnect coolant hose.
– Remove bolts -arrows- and -1-, detach coolant pipe (right-side) from cylinder block and remove coolant pipe.

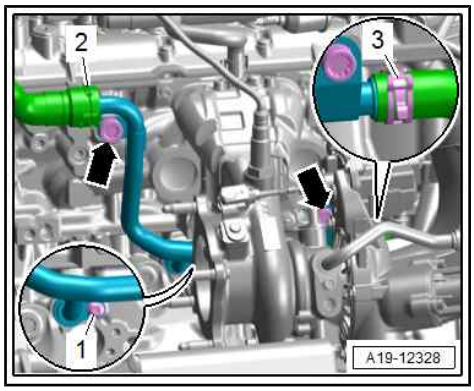

Installing

Installation is carried out in reverse order; note the following:

Note

- *Renew O-ring after removal.*
- *Secure all hose connections with correct type of hose clips (as original equipment) ⇒ Electronic parts catalogue .*

– Install catalytic converter ⇒ Servicing 4-cylinder engine, 2.0 ltr. 4-valve TFSI; Rep. gr. 26 ; Emission control system; Removing and installing catalytic converter .
– Electrical connections and routing ⇒ Current flow diagrams, Electrical fault finding and Fitting locations.

Note

Do not reuse coolant.

– Fill up with coolant ⇒ page 102 .

Tightening torques

- ⇒ “3.1 Exploded view - coolant pipes”, page 127
- ⇒ Servicing 4-cylinder engine, 2.0 ltr. 4-valve TFSI; Rep. gr. 21 ; Turbocharger; Exploded view - turbocharger

3.2.4 Removing and installing rear coolant pipes - vehicles with natural gas system

Special tools and workshop equipment required

- Hose clamps up to 25 mm - 3094-

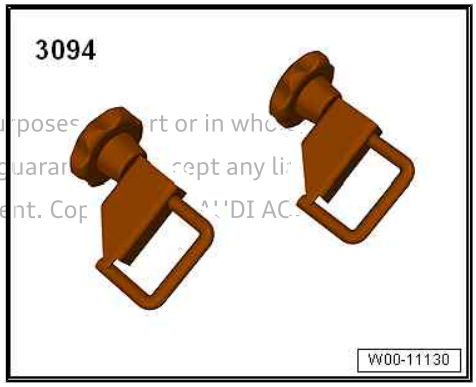

Protected by copyright. Copying for private or commercial purposes, in part or in whole, is not permitted unless authorised by AUDI AG. AUDI AG does not guarantee or accept any liability with respect to the correctness of information in this document. Copyright by AUDI AG.

- Hose clip pliers - VAS 6362-

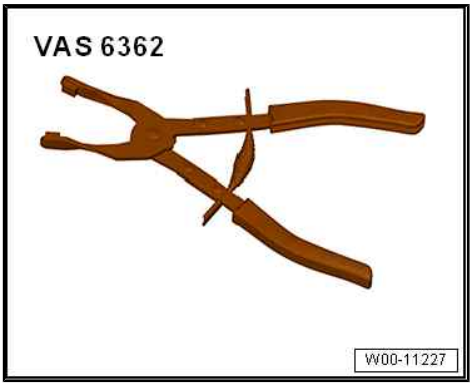

Removing

– Release catches -arrows B- and open cover -1- -arrow A-.

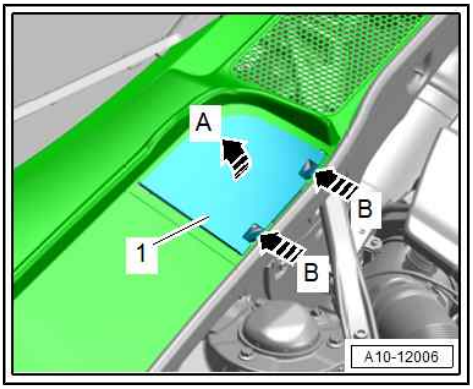

WARNING

The cooling system is under pressure when the power unit is hot. Risk of scalding due to hot steam and hot coolant.

Danger of scalding skin and other parts of the body.

- *Put on protective gloves.*
- *Put on safety goggles.*
- *Cover filler cap on expansion tank with a cloth and open carefully to release pressure.*

– Release fastener -arrow- and open filler cap -1- on coolant expansion tank.
– Remove engine cover panel ⇒ Servicing 4-cylinder engine, 2.0 ltr. 4-valve TFSI; Rep. gr. 10 ; Engine cover panel; Removing and installing engine cover panel .

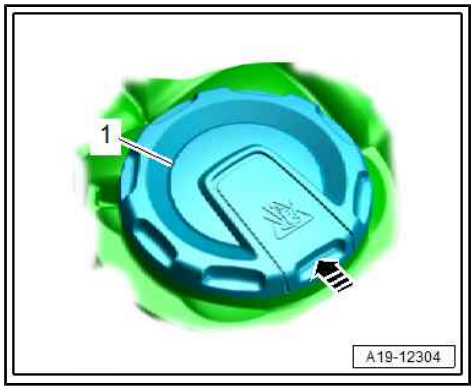

Note

Place a cloth underneath to catch escaping coolant.

– Clamp off coolant hoses using hose clamps, up to 25 mm - 3094- , release hose clips -1 and 3- and disconnect hoses.
– Release hose clips -2- and disconnect coolant hoses.
– Unscrew bolts -arrows- and detach coolant pipes (rear).

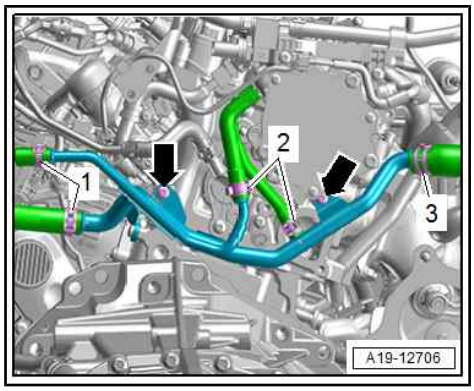

Installing

Installation is carried out in reverse order; note the following:

Note

- *Secure all hose connections with correct type of hose clips (as original equipment) ⇒ Electronic parts catalogue .*
- *Do not reuse coolant.*

– Fill up with coolant ⇒ page 102 .
– Install engine cover panel ⇒ Servicing 4-cylinder engine, 2.0 ltr. 4-valve TFSI; Rep. gr. 10 ; Engine cover panel; Removing and installing engine cover panel .

Protected by copyright. Copying for private or commercial purposes, in part or in whole, is not permitted unless authorised by AUDI AG. AUDI AG does not guarantee or accept any liability with respect to the correctness of information in this document. Copyright by AUDI AG.

Tightening torques

- ⇒ Fig. ""Vehicles with natural gas system: Coolant pipe (rear) - tightening torque"" , page 128

3.3 Removing and installing coolant pipes for gearbox

Special tools and workshop equipment required

- Hose clamps up to 25 mm - 3094-

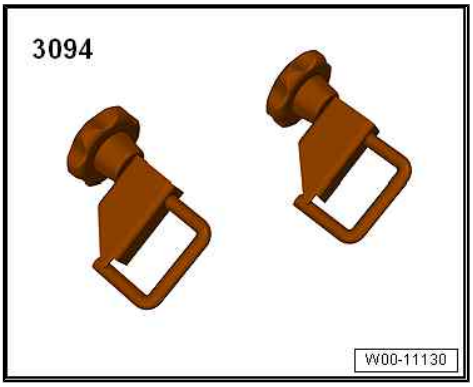

- Coolant collecting system - VAS 5014- or drip tray for workshop hoist - VAS 6208-

Protected by copyright. Copying for private or commercial purposes, in part or in whole, is not permitted unless authorised by AUDI AG. AUDI AG does not guarantee or accept any liability with respect to the correctness of information in this document. Copyright by AUDI AG.

- Hose clip pliers - VAS 6340-

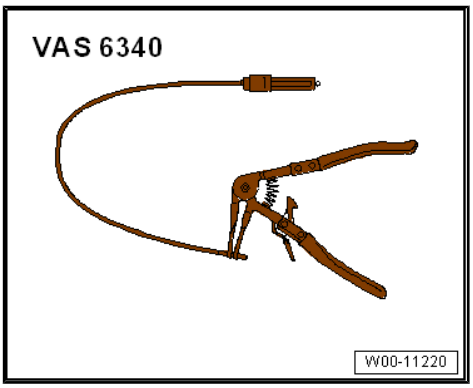

- Hose clip pliers - VAS 6362-

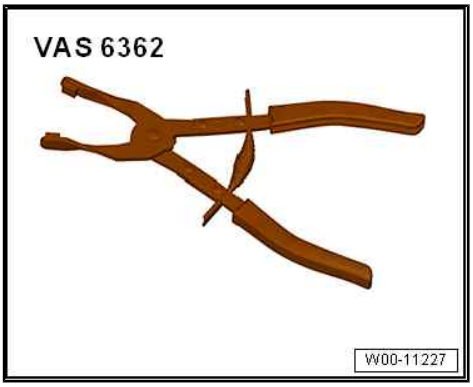

Protected by copyright. Copying for private or commercial purpose
permitted unless authorised by AUDI AG. AUDI AG does not guara
with respect to the correctness of information in this document. C

Removing

– Vehicles with natural gas system: Release catches -arrows B- and open cover -1- -arrow A-.

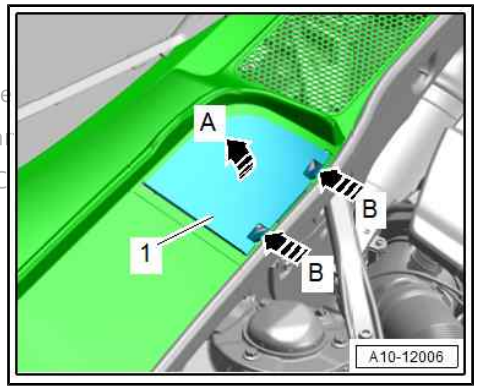

WARNING

The cooling system is under pressure when the power unit is hot. Risk of scalding due to hot steam and hot coolant.

Danger of scalding skin and other parts of the body.

- ***Put on protective gloves.***
- ***Put on safety goggles.***
- ***Cover filler cap on expansion tank with a cloth and open carefully to release pressure.***

– Release fastener -arrow- and open filler cap -1- on coolant expansion tank.

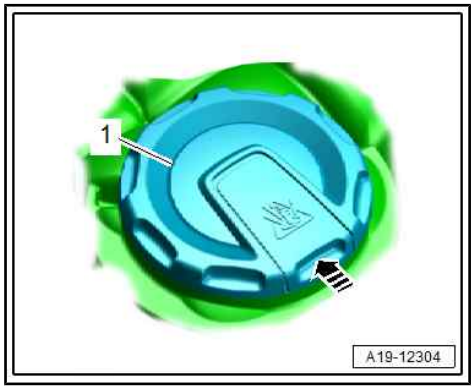

– Remove engine cover panel ⇒ Servicing 4-cylinder engine, 2.0 ltr. 4-valve TFSI; Rep. gr. 10 ; Engine cover panel; Removing and installing engine cover panel .

– Remove noise insulation (rear) ⇒ General body repairs, exterior; Rep. gr. 66 ; Noise insulation; Removing and installing noise insulation .

– Vehicles with particulate filter: Remove front silencer ⇒ page 223 .

– Place collector tank from coolant collecting system -VAS 5014- or drip tray for workshop hoist - VAS 6208- underneath.

– Remove bolts -arrows-.

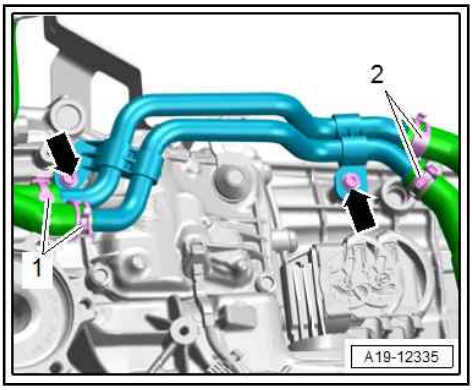

Note

Place a cloth underneath to catch escaping coolant.

– Clamp off coolant hoses using hose clamps up to 25 mm -3094- , release hose clips -1- and disconnect hoses.

– Loosen hose clips -2- and detach coolant pipe.

Installing

Installation is carried out in reverse order; note the following:

Note

- *Secure all hose connections with correct type of hose clips (as original equipment) ⇒ Electronic parts catalogue .*
- *Do not reuse coolant.*

Protected by copyright. Copying for private or commercial purposes, in part or in whole, is not permitted unless authorised by AUDI AG. AUDI AG does not guarantee or accept any liability with respect to the correctness of information in this document. Copyright by AUDI AG.

– Fill up with coolant ⇒ page 102 .

– Install engine cover panel ⇒ Servicing 4-cylinder engine, 2.0 ltr. 4-valve TFSI; Rep. gr. 10 ; Engine cover panel; Removing and installing engine cover panel .

Tightening torques

- ⇒ “3.1 Exploded view - coolant pipes”, page 127
- ⇒ “1.1 Exploded view - silencers”, page 213
- ⇒ General body repairs, exterior; Rep. gr. 66 ; Noise insulation; Exploded view - noise insulation

4 Radiator/radiator fan

⇒ “4.1 Exploded view - radiator/radiator fan”, page 140

⇒ “4.2 Removing and installing radiator”, page 144

⇒ “4.3 Removing and installing radiator blind”, page 149

⇒ “4.4 Removing and installing radiator blind control motor”, page 150

⇒ “4.5 Removing and installing radiator cowl”, page 151

⇒ “4.6 Removing and installing radiator fan V7 ”, page 153

4.1 Exploded view - radiator/radiator fan

- Radiator - vehicles without natural gas system ⇒ page 140
- Radiator - vehicles with natural gas system ⇒ page 141
- Radiator blind ⇒ page 142
- Radiator cowl and radiator fan ⇒ page 143

Radiator - vehicles without natural gas system

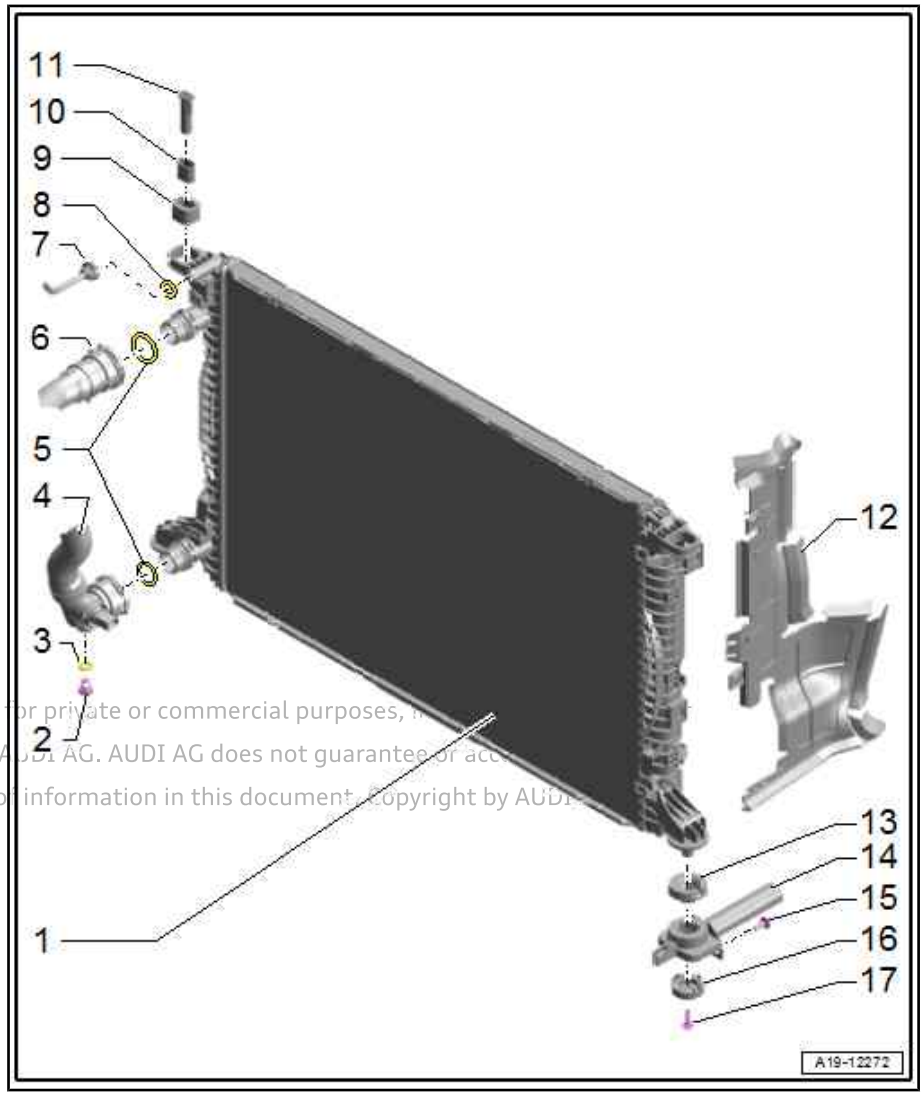

1 - Radiator
- ❑ Removing and installing ⇒ page 144
- ❑ If renewed, change coolant in entire system

2 - Plug
- ❑ Do not unscrew
- ❑ Not available as separate part

3 - O-ring
- ❑ Not available as separate part

4 - Coolant hose
- ❑ Lift retaining clip to detach
- ❑ Connecting ⇒ page 142

5 - O-rings
- ❑ Renew after removing

6 - Coolant hose
- ❑ Lift retaining clip to detach
- ❑ Connecting ⇒ page 142

7 - Coolant pipe
- ❑ To coolant expansion tank
- ❑ Press release ring to detach
- ❑ Connecting ⇒ page 142

8 - O-ring
- ❑ Renew after removing

Protected by copyright. Copying for private or commercial purposes, in part or in whole, is not permitted unless authorised by AUDI AG. AUDI AG does not guarantee or accept any liability with respect to the correctness of information in this document. Copyright by AUDI AG.

9 - Rubber bush
- ❑ For radiator

10 - Sleeve

11 - Retaining pin
- ❑ Use screwdriver to release and pull off

12 - Air duct

13 - Rubber bush
- ❑ For radiator

14 - Radiator bracket

15 - Bolt
- ❑ 5 Nm

16 - Support

17 - Bolt
- ❑ 4.5 Nm

Radiator - vehicles with natural gas system

1 - Coolant hose
- ❑ Lift retaining clip to detach
- ❑ Connecting ⇒ page 142

2 - O-ring
- ❑ Renew after removing

3 - Drain plug
- ❑ 1.5 … 3 Nm

4 - O-ring
- ❑ Renew after removing

5 - Coolant hose
- ❑ Lift retaining clip to detach
- ❑ Connecting ⇒ page 142

6 - O-ring
- ❑ Renew after removing

7 - Radiator
- ❑ Removing and installing ⇒ page 144
- ❑ If renewed, change coolant in entire system

8 - Rubber mounting
- ❑ For radiator

9 - Sleeve

10 - Retaining pin
- ❑ Use screwdriver to release and pull off

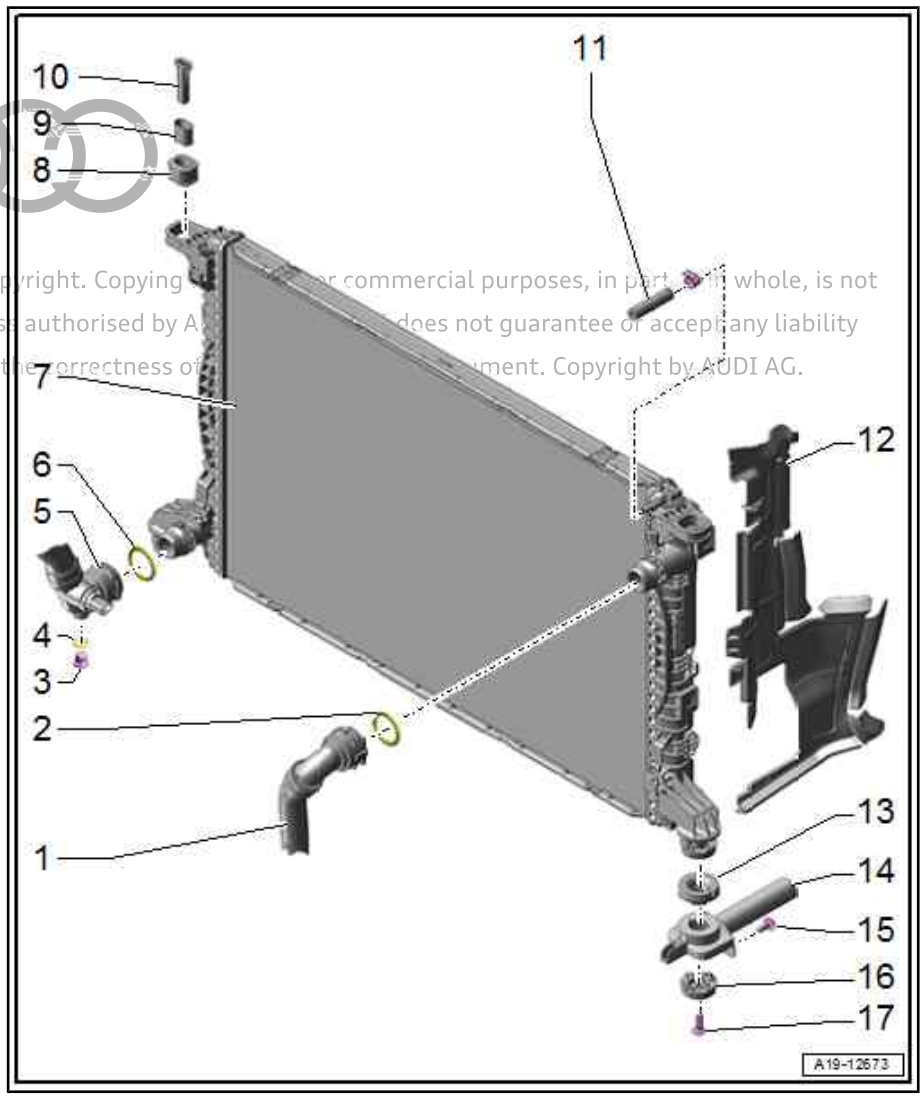

Protected by copyright. Copying for commercial purposes, in part or in whole, is not permitted unless authorised by AUDI AG. AUDI AG does not guarantee or accept any liability with respect to the correctness of information in this document. Copyright by AUDI AG.

11 - Coolant pipe

- ❑ To coolant expansion tank

12 - Air duct

13 - Rubber bush

- ❑ For radiator

14 - Radiator bracket

15 - Bolt

- ❑ 5 Nm

16 - Support

17 - Bolt

- ❑ 4.5 Nm

Connecting coolant hose with plug-in connector

Note

If damaged, renew retaining clip -4-.

Protected by copyright. Copying for private or commercial purposes, in part or in whole, is not permitted unless authorised by AUDI AG. AUDI AG does not guarantee or accept any liability with respect to the correctness of information in this document. Copyright by AUDI AG.

– Remove old O-ring -2- from coolant hose -3-.
– Lightly lubricate new O-ring with coolant and fit O-ring in coolant hose.
– Press coolant hose onto coolant pipe -1- until it engages with a click.
– Press coolant hose in again and then pull to check that plug-in connector is correctly engaged.

Radiator blind

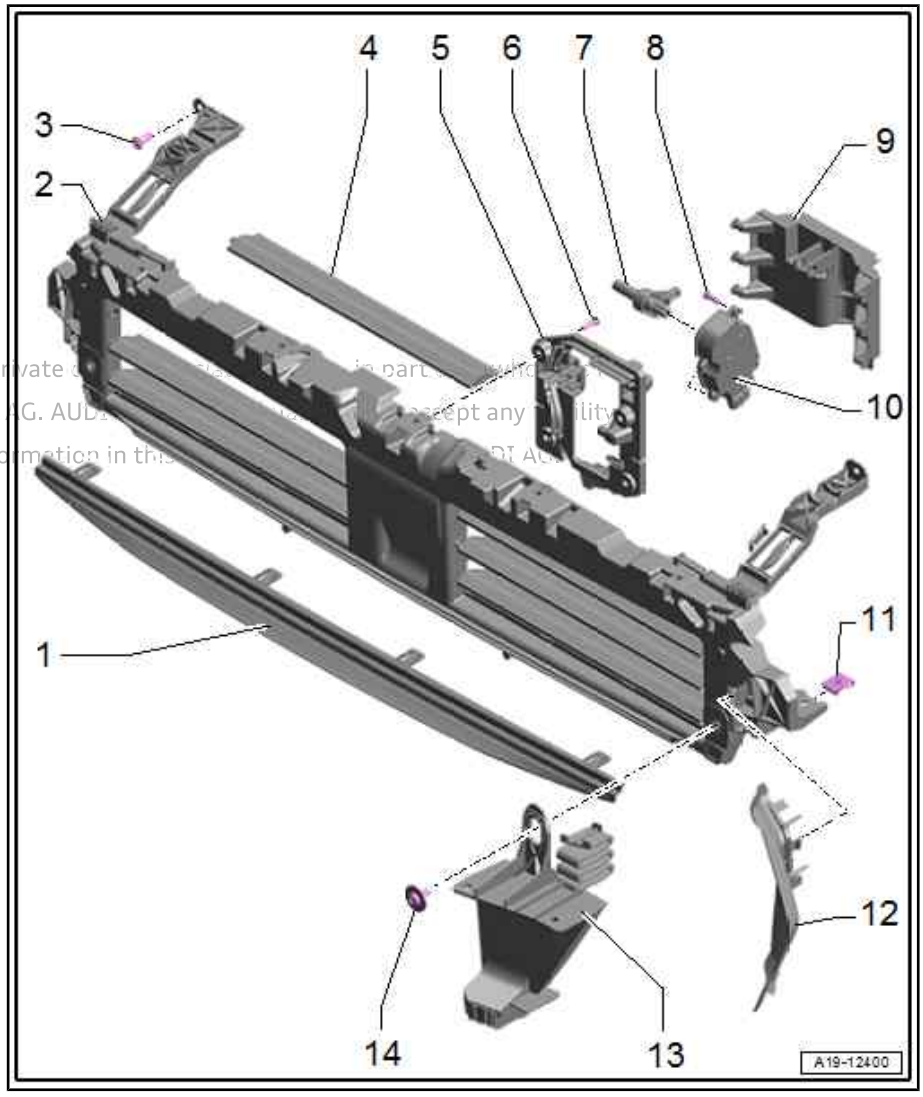

1 - Air duct

2 - Radiator blind

- ❑ Removing and installing ⇒ page 149

3 - Bolt

- ❑ 5 Nm

4 - Fin

5 - Bracket

6 - Bolt

- ❑ 8 Nm

Protected by copyright. Copying for private ... is part ... permitted unless authorised by AUDI AG. AUDI ... accept any ... with respect to the correctness of information in this ... AUDI AG.

7 - Carrier

8 - Bolt

- ❑ 2.5 Nm

9 - Connecting piece

10 - Radiator blind control motor - V544-

- ❑ Removing and installing ⇒ page 150

11 - Speed nut

12 - Air duct

13 - Spring element

14 - Bolt

- ❑ 8 Nm

Radiator cowl and radiator fan

1 - Radiator cowl

- ❑ Removing and installing ⇒ page 151

2 - Bolt

- ❑ 5 Nm

3 - Radiator fan - V7-

- ❑ With radiator fan control unit - J293-
- ❑ Removing and installing ⇒ page 153

4 - Air flow flap

- ❑ Different versions available ⇒ Electronic parts catalogue

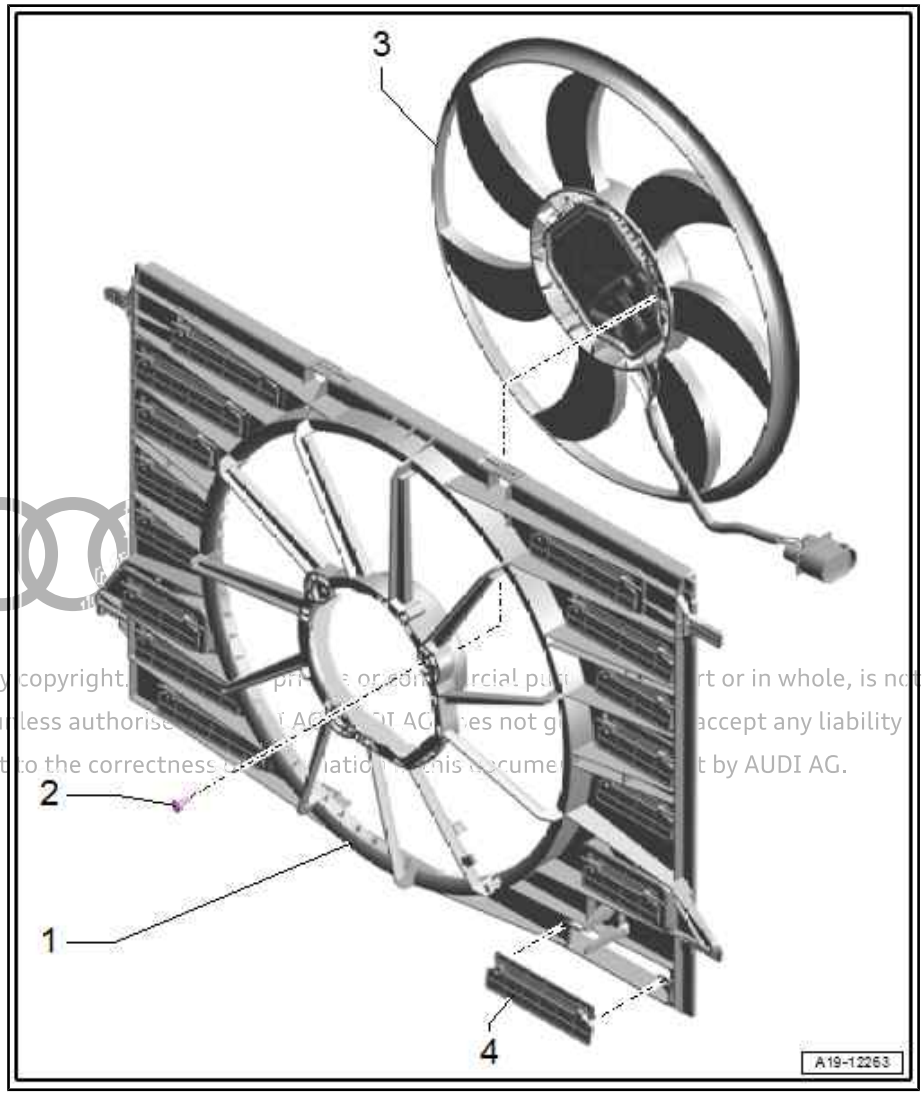

Protected by copyright. [illegible] permitted unless authorised [illegible] with respect to the correctness [illegible] by AUDI AG.

4.2 Removing and installing radiator

Note

The radiator must be removed and installed together with the radiator cowl.

Special tools and workshop equipment required

- ♦ Coolant collecting system - VAS 5014- or drip tray for workshop hoist - VAS 6208-

Protected by copyright. Copying for private or commercial purpose [illegible] not permitted unless authorised by AUDI AG. AUDI AG does not guarantee or accept [illegible] bility with respect to the correctness of information in this document. Copyright by AUDI A[illegible]

- Hose clip pliers - VAS 6362-

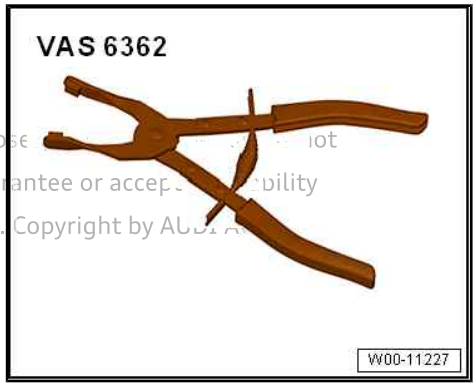

- Assembly tool - T10118-

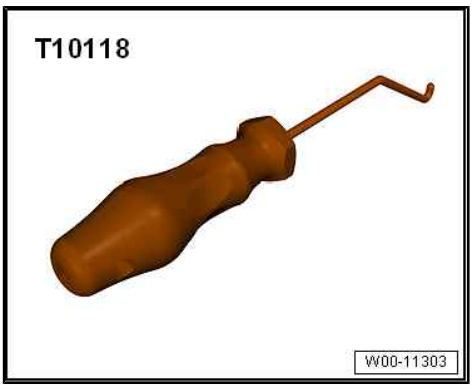

Removing

WARNING

Risk of injury as the radiator fans may start up automatically.

- ***Even when the ignition is switched off, the radiator fans can start up without warning due to accumulated heat in the engine compartment, etc.***

– Remove noise insulation (front) ⇒ General body repairs, exterior; Rep. gr. 66 ; Noise insulation; Removing and installing noise insulation .

Equipment version without radiator blind:

– Remove bracket for bumper cover together with impact bar ⇒ General body repairs, exterior; Rep. gr. 63 ; Bumper (front); Exploded view - bumper cover .

Equipment version with radiator blind:

– Remove impact bar together with radiator blind ⇒ page 149 .

All vehicles (continued):

– A4: Remove headlight (left-side) ⇒ Electrical system; Rep. gr. 94 ; Headlights; Removing and installing headlights .

– Place collector tank from coolant collecting system -VAS 5014- or drip tray for workshop hoist - VAS 6208- underneath.
– Lift retaining clip -2-, disconnect coolant hose from radiator (bottom right) and drain off coolant.

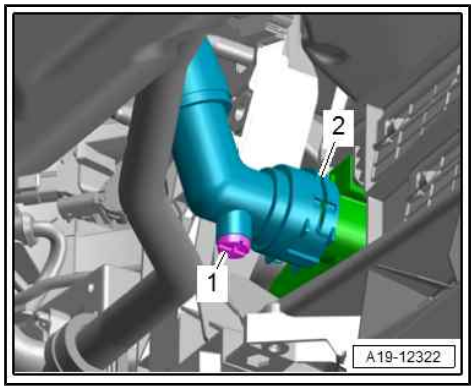

– Unplug electrical connector -arrow- for radiator fan.

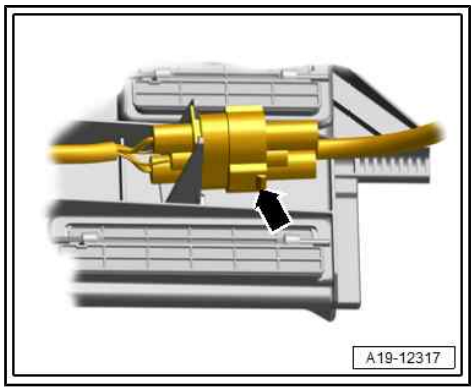

– Release catches -arrow- and detach air ducts -1, 3-.
– Unclip air duct -2-.

Protected by copyright. Copying for private or commercial purposes, in p
permitted unless authorised by AUDI AG. AUDI AG does not guarantee o
with respect to the correctness of information in this document. Copyrig

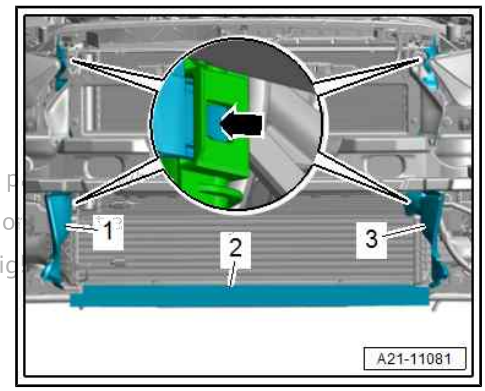

– Remove bolts -arrows- and detach air duct -1-.
– Vehicles with natural gas system: Detach air duct -2-.

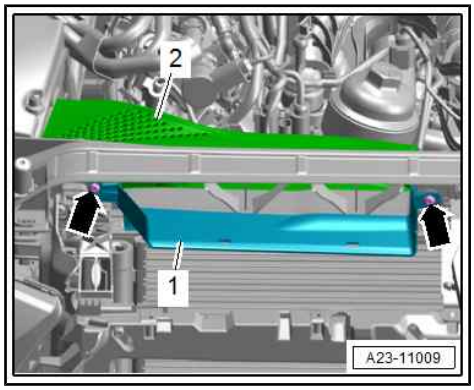

– Detach air duct (top) -arrow-.
– Remove charge air cooler ⇒ page 158 .

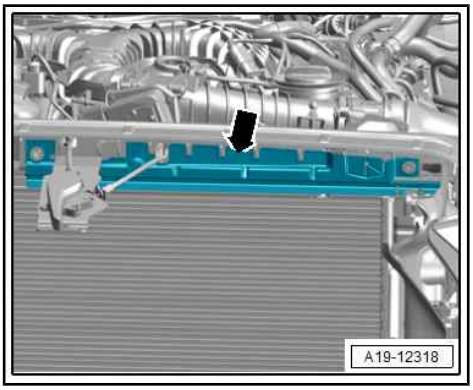

– Unplug electrical connector -2- for high-pressure sender - G65- .

Caution

Risk of irreparable damage to radiator if handled incorrectly.

- *If fasteners are damaged, radiator must be renewed.*

– Carefully release fasteners on both sides -arrows-.

Caution

Risk of damage to refrigerant lines and hoses

- *Do NOT stretch, kink or bend refrigerant lines and hoses.*

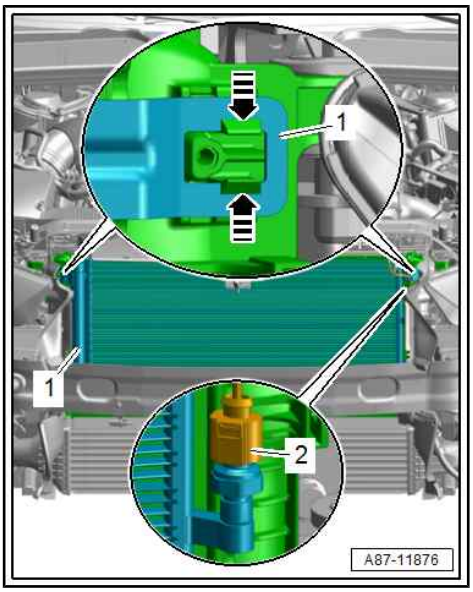

– Disengage condenser -1- from radiator and tie condenser up to one side.

– Vehicles without natural gas system: Lift retaining clips -1, 2-, detach coolant connection from radiator and move connection clear.

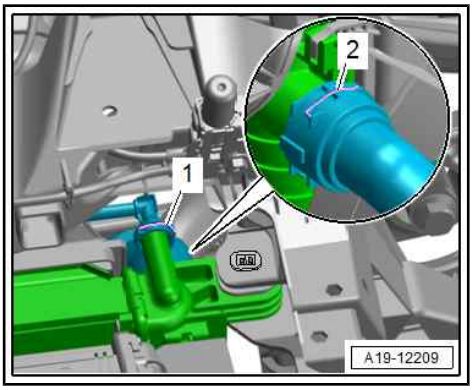

Protected by copyright. Copying for private or commercial purposes, in part or in whole, is not permitted unless authorised by AUDI AG. AUDI AG does not guarantee or accept any liability with respect to the correctness of information in this document. Copyright by AUDI AG.

– Vehicles with natural gas system: Detach coolant connection and coolant hose from radiator (lift retaining clip -1- and open hose clip -2-).

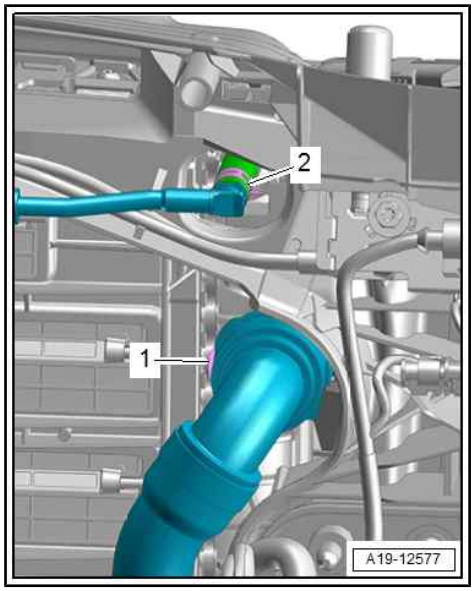

– Remove bolt -2- on both sides and press radiator bracket -1- with radiator towards front -arrow-.

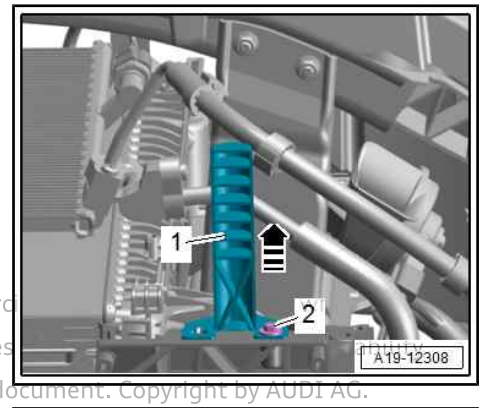

Protected by copyright. Copying for private or commerc
permitted unless authorised by AUDI AG. AUDI AG does
with respect to the correctness of information in this document. Copyright by AUDI AG.

– Release fasteners -arrows- on both sides and pull retaining pins -1- for radiator out upwards.
– Detach radiator.

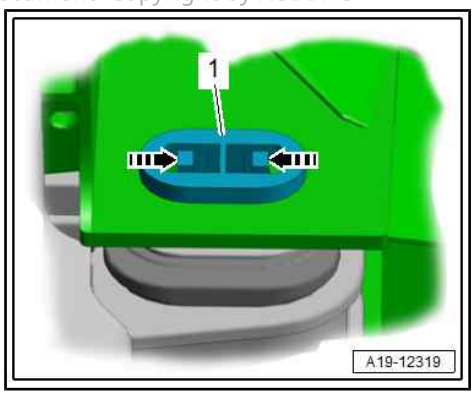

– Press locking tabs on left and right sides of radiator cowl together -arrow- and lift radiator cowl off radiator.

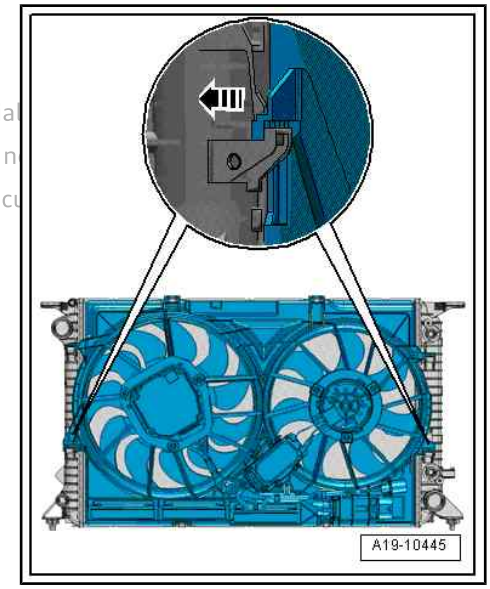

Installing

Protected by copyright. Copying for private or commercial
permitted unless authorised by AUDI AG. AUDI AG does n
with respect to the correctness of information in this docu

Installation is carried out in reverse order; note the following:

Note

If there are slight impressions on the fins, refer to ⇒ Servicing 4-cylinder engine, 2.0 ltr. 4-valve TFSI; Rep. gr. 00 ; Repair notes; Installing radiators and condensers

– Install charge air cooler ⇒ page 158 .
– Install headlight ⇒ Electrical system; Rep. gr. 94 ; Headlights; Removing and installing headlights .
– Electrical connections and routing ⇒ Current flow diagrams, Electrical fault finding and Fitting locations.
– Connect coolant hose with plug-in connector ⇒ page 142 .

Note

Do not reuse coolant.

– Fill up with coolant ⇒ page 102 .

Tightening torques

- ⇒ “4.1 Exploded view - radiator/radiator fan”, page 140
- ⇒ “2.1 Exploded view - air cleaner housing”, page 177
- ⇒ General body repairs, exterior; Rep. gr. 50 ; Lock carrier; Exploded view - lock carrier
- ⇒ General body repairs, exterior; Rep. gr. 66 ; Noise insulation; Exploded view - noise insulation

4.3 Removing and installing radiator blind

Removing

– Remove impact bar ⇒ General body repairs, exterior; Rep. gr. 63 ; Bumper (front); Removing and installing impact bar .

WARNING

Risk of injury if components are triggered inadvertently.

- ***Before handling pyrotechnic components (e.g. plugging in the electrical connector) the mechanic must discharge any static electricity. This can be done by briefly touching the door striker plate, or similar.***

– Equipment version with pedestrian protection: Unplug electrical connector -1- at crash sensor for pedestrian protection and move electrical wiring harness -2- clear.

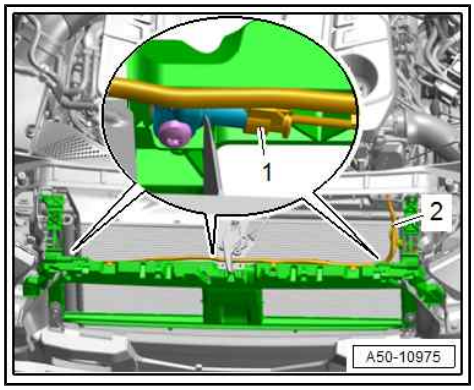

– Unplug electrical connector -3- and move clear.
– Remove bolts -arrows- (left and right).
– Slide mounting bracket -2- with Bowden cable for operating lever for arrester towards lock carrier.
– Detach radiator blind (top) -1- towards front.

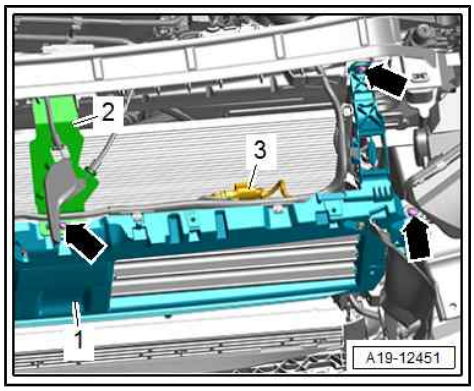

Installing

Installation is carried out in reverse order; note the following:

– Install impact bar ⇒ General body repairs, exterior; Rep. gr. 63 ; Bumper (front); Removing and installing impact bar .

Tightening torques

◆ ⇒ “4.1 Exploded view - radiator/radiator fan”, page 140

◆ ⇒ General body repairs, exterior; Rep. gr. 55 ; Bonnet; Exploded view - Bowden cable

4.4 Removing and installing radiator blind control motor

Removing

– Remove lock carrier cover ⇒ General body repairs, exterior; Rep. gr. 63 ; Bumper (front); Exploded view - bumper cover .
– Remove bolts -arrows- and detach air duct -1-.

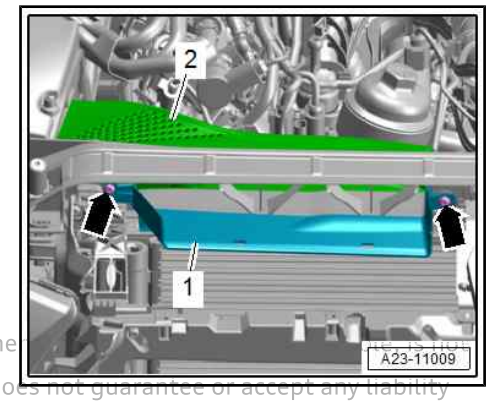

Protected by copyright. Copying for private or commercial purposes, in part, is not permitted unless authorised by AUDI AG. AUDI AG does not guarantee or accept any liability with respect to the correctness of information in this document. Copyright by AUDI AG.

– Take electrical connector -1- for radiator blind control motor - V544- out of bracket and unplug it.
– Carefully press connecting piece -3- upwards/downwards and unscrew bolts -arrows-.
– Detach control motor with bracket -2- and fins.

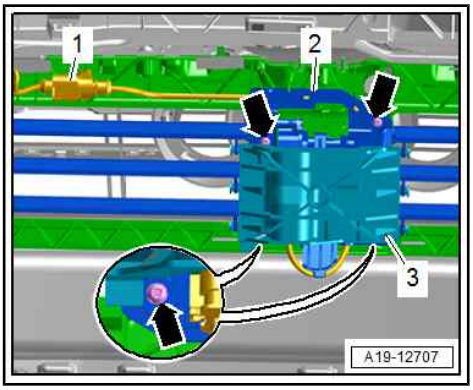

– Unplug electrical connector -4- at radiator blind control motor - V544- -item 3-.
– Remove bolts -2-.
– Carefully unclip coupling -1- -arrow A- and at the same time, detach it from bracket -5- together with control motor -arrow B-.
– Pull off and detach control motor from coupling.

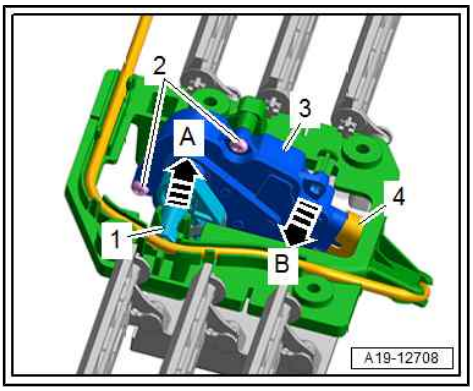

Installing

– Bring radiator blind control motor - V544- with bracket and fins into installation position:
– Insert fins -1- one after another on both sides into holes on radiator blind -2- -left arrows-.
– On both sides, guide fins into recesses on radiator blind -right arrows-.

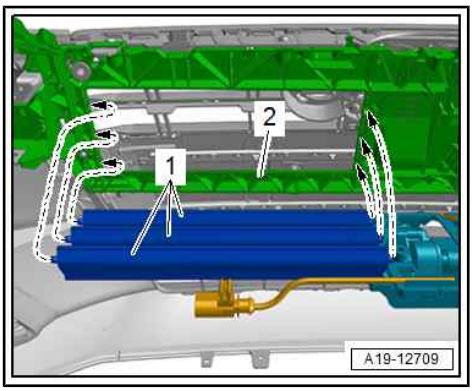

Remaining installation steps are carried out in reverse sequence; note the following:

– Install lock carrier cover ⇒ General body repairs, exterior; Rep. gr. 63 ; Bumper (front); Exploded view - bumper cover .

Tightening torques

◆ ⇒ “4.1 Exploded view - radiator/radiator fan”, page 140

4.5 Removing and installing radiator cowl

Removing

– Remove noise insulation (front) ⇒ General body repairs, exterior; Rep. gr. 66 ; Noise insulation; Removing and installing noise insulation .
– Remove charge air cooler ⇒ page 158 .

Protected by copyright. Copying for private or commercial purposes, in part or in whole, is not permitted unless authorised by AUDI AG. AUDI AG does not guarantee or accept any liability with respect to the correctness of information in this document. Copyright by AUDI AG.

WARNING

Risk of injury as the radiator fans may start up automatically.

- *Unplug electrical connectors before working in vicinity of radiator cowl.*

Protected by copyright. Copying for private or commercial purposes, in part or in whole, is not permitted unless authorised by AUDI AG. AUDI AG does not guarantee or accept any liability with respect to the correctness of information in this document.

– Unplug electrical connector -arrow- for radiator fan.

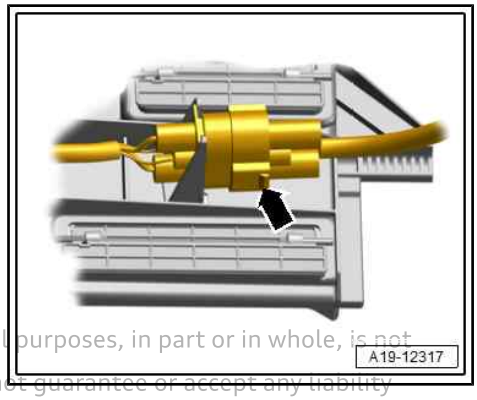

– Unclip air duct (bottom) -arrow-.

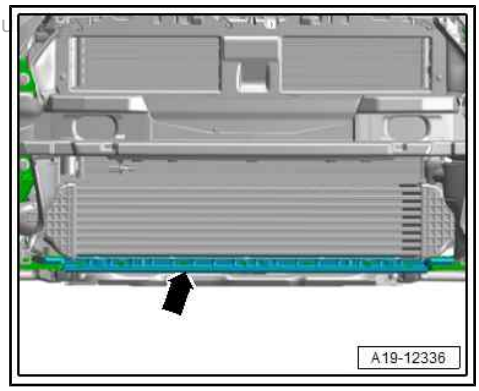

– Unplug electrical connector -2- and move coolant hose clear at longitudinal member. (Different versions.)

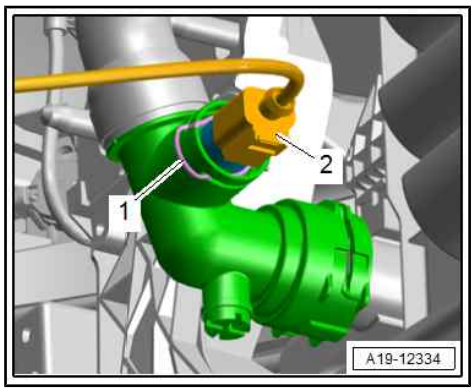

– Remove bolt -2- on both sides and press radiator bracket -1- with radiator towards front -arrow-.

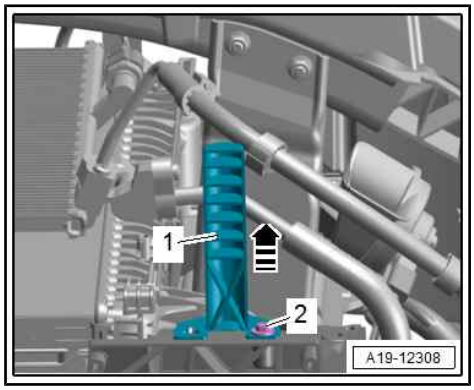

– Press locking tabs on left and right sides of radiator cowl simultaneously -arrow-, lift radiator cowl off radiator and remove from below.

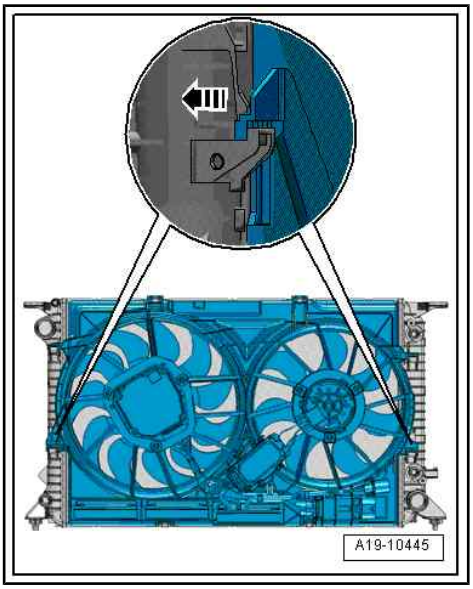

Installing

Installation is carried out in reverse order; note the following:

– Install charge air cooler ⇒ page 158 .

Tightening torques

- ⇒ “4.1 Exploded view - radiator/radiator fan”, page 140
- ⇒ General body repairs, exterior; Rep. gr. 66 ; Noise insulation; Exploded view - noise insulation

4.6 Removing and installing radiator fan - V7-

Removing

– Remove radiator cowl ⇒ page 151 .

– Move electrical wiring harness clear.

– Unscrew bolts -arrows- and remove radiator fan.

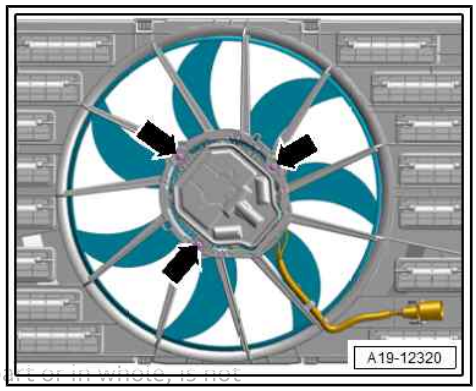

> **Caution**
>
> *Risk of noise due to imbalance in fan wheel.*
>
> - *Do not remove balancing clamps from fan wheel.*

Installing

Installation is carried out in reverse order; note the following:

– Install radiator cowl ⇒ page 151 .

Tightening torques

- ⇒ “4.1 Exploded view - radiator/radiator fan”, page 140

Protected by copyright. Copying for private or commercial purposes, in part or in whole, is not permitted unless authorised by AUDI AG. AUDI AG does not guarantee or accept any liability with respect to the correctness of information in this document. Copyright by AUDI AG.

21 – Turbocharging/supercharging

1 Turbocharger

⇒ “1.1 Exploded view - turbocharger”, page 154

⇒ “1.2 Removing and installing turbocharger”, page 154

1.1 Exploded view - turbocharger

All components are described in ⇒ Servicing 4-cylinder engine, 2.0 ltr. 4-valve TFSI; Rep. gr. 21 ; Turbocharger; Exploded view - turbocharger .

1.2 Removing and installing turbocharger

⇒ “1.2.1 Removing and installing turbocharger - vehicles with alternator”, page 154

⇒ “1.2.2 Removing and installing turbocharger - vehicles with starter-alternator”, page 155

1.2.1 Removing and installing turbocharger - vehicles with alternator

Removing

Protected by copyright. Copying for private or commercial purposes, in
permitted unless authorised by AUDI AG. AUDI AG does not guarantee
with respect to the correctness of information in this document. Copyr

– Unscrew bolts -arrows- for front silencer.

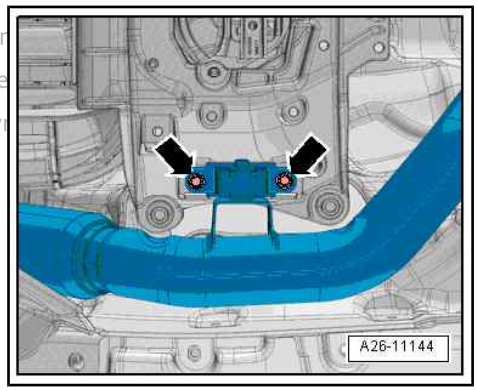

– Vehicles without natural gas system: Loosen bolted connections -arrows- and push clamp towards rear.

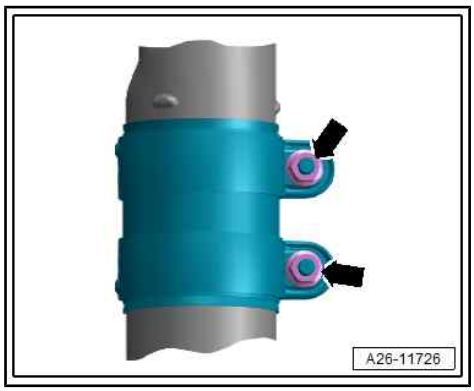

– Vehicles with natural gas system: Loosen clamp -arrow- and detach front exhaust pipe from front silencer.

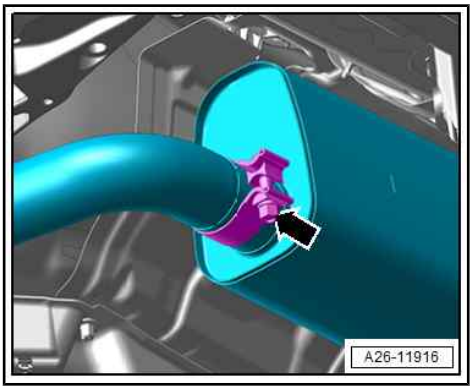

> **Caution**
>
> *Avoid damage to flexible joints.*
>
> ♦ *Do not bend flexible joints more than 10°.*

– Lower front silencer/front exhaust pipe -2- slightly and secure it with a cable tie -1-, as shown.

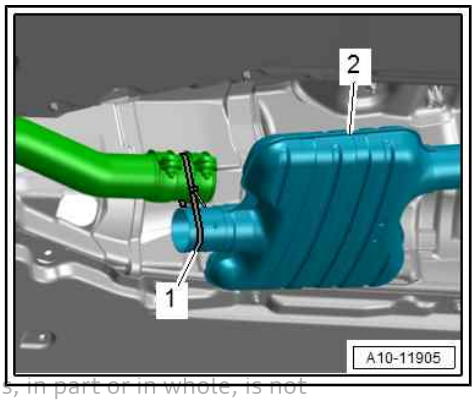

Protected by copyright. Copying for private or commercial purposes, in part or in whole, is not permitted unless authorised by AUDI AG. AUDI AG does not guaran
Without express consent of AUDI AG. AUDI AG does not guarantee the accuracy of this document. Co

– Remove nut -2- from underneath.

– Remove engine cover panel ⇒ Servicing 4-cylinder engine, 2.0 ltr. 4-valve TFSI; Rep. gr. 10 ; Engine cover panel; Removing and installing engine cover panel .

– Remove air cleaner housing ⇒ page 178 .

– Remove nuts -1- from above and push catalytic converter towards rear.

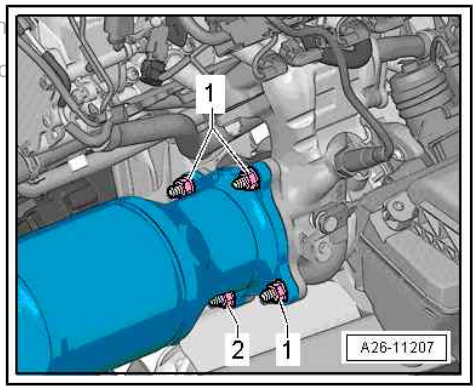

All further procedures are described in ⇒ Servicing 4-cylinder engine, 2.0 ltr. 4-valve TFSI; Rep. gr. 21 ; Turbocharger; Removing and installing turbocharger .

Installing

Additional work:

– Install air cleaner housing ⇒ page 178 .

– Install engine cover panel ⇒ Servicing 4-cylinder engine, 2.0 ltr. 4-valve TFSI; Rep. gr. 10 ; Engine cover panel; Removing and installing engine cover panel .

Tightening torques

♦ ⇒ “1.1 Exploded view - silencers”, page 213

1.2.2 Removing and installing turbocharger - vehicles with starter-alternator

Removing

– Remove catalytic converter ⇒ Servicing 4-cylinder engine, 2.0 ltr. 4-valve TFSI; Rep. gr. 26 ; Emission control system; Removing and installing catalytic converter .

All further procedures are described in ⇒ Servicing 4-cylinder engine, 2.0 ltr. 4-valve TFSI; Rep. gr. 21 ; Turbocharger; Removing and installing turbocharger .

Installing

Additional work:

– Install catalytic converter ⇒ Servicing 4-cylinder engine, 2.0 ltr. 4-valve TFSI; Rep. gr. 26 ; Emission control system; Removing and installing catalytic converter .

Protected by copyright. Copying for private or commercial purposes, in part or in whole, is not permitted unless authorised by AUDI AG. AUDI AG does not guarantee or accept any liability with respect to the correctness of information in this document. Copyright by AUDI AG.

2 Charge air system

⇒ "2.1 Exploded view - charge air system", page 157

⇒ "2.2 Exploded view - hose connections for charge air system", page 158

⇒ "2.3 Removing and installing charge air cooler", page 158

⇒ "2.4 Removing and installing charge pressure sender G31 ", page 159

⇒ "2.5 Checking charge air system for leaks", page 160

2.1 Exploded view - charge air system

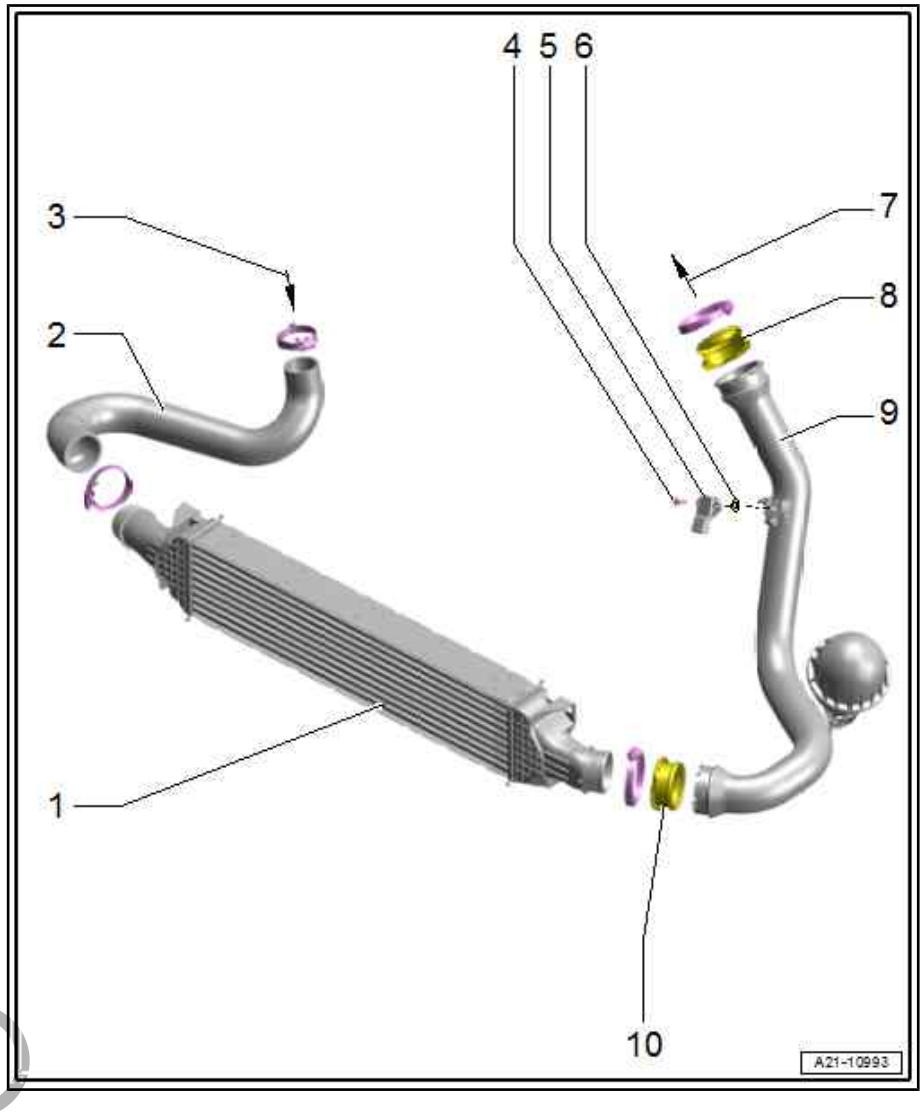

1 - Charge air cooler

- ❑ Removing and installing ⇒ page 158
- ❑ If there are slight impressions on the fins, refer to ⇒ Servicing 4-cylinder engine, 2.0 ltr. 4-valve TFSI; Rep. gr. 00 ; Repair notes; Installing radiators and condensers

2 - Air hose

- ❑ Must be free of oil and grease when installing

3 - From turbocharger

4 - Bolt

- ❑ Repair method if fastener breaks off
- ❑ Thread-forming
- ❑ Fit and screw in bolt by hand so that it is screwed into old thread. Then tighten bolt to torque
- ❑ 7 Nm

5 - Charge pressure sender - G31-

- ❑ Removing and installing ⇒ page 159

6 - O-ring

- ❑ Renew after removing

7 - To intake manifold

8 - Seal

- ❑ Renew if damaged

9 - Air pipe

- ❑ Different versions available; for allocation refer to ⇒ Electronic parts catalogue
- ❑ Must be free of oil and grease when installing

10 - Seal

- ❑ Renew if damaged

Protected by copyright. Copying for private or commercial purposes, in part or in whole, is not permitted unless authorised by AUDI AG. AUDI AG does not guarantee or accept any liability with respect to the correctness of information in this document. Copyright by AUDI AG.

2.2 Exploded view - hose connections for charge air system

All components are described in ⇒ Servicing 4-cylinder engine, 2.0 ltr. 4-valve TFSI; Rep. gr. 21 ; Charge air system; Exploded view - hose connections for charge air system .

2.3 Removing and installing charge air cooler

Protected by copyright. Copying for private or commercial purposes, in part or in whole, is not permitted unless authorised by AUDI AG. AUDI AG does not guarantee or accept any liability with respect to the correctness of information in this document. Copyright by AUDI AG.

Removing

Note

Observe rules for cleanliness ⇒ Servicing 4-cylinder engine, 2.0 ltr. 4-valve TFSI; Rep. gr. 00 ; Repair notes; Rules for cleanliness .

– Remove lock carrier cover, air intake grille (left and right) and closure plate at bumper cover ⇒ General body repairs, exterior; Rep. gr. 63 ; Bumper (front); Exploded view - bumper cover .
– Release catches -arrow- and detach air ducts -1, 3-.

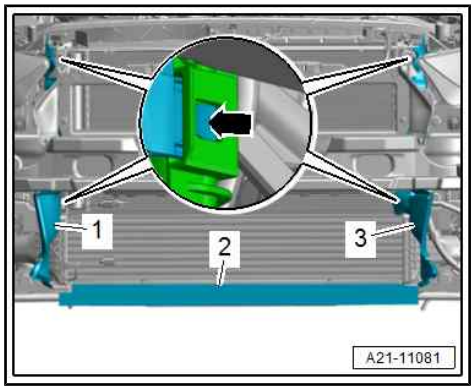

– Release hose clip -1- on both sides and detach air pipe from charge air cooler.

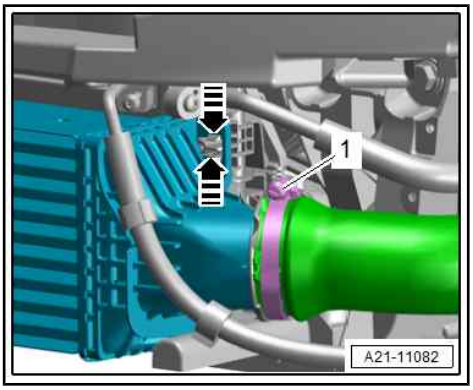

Caution

Risk of irreparable damage to charge air cooler.

- *The charge air cooler must be renewed if the fasteners are damaged.*

– Release fasteners -arrows- on both sides and disengage charge air cooler from radiator.

– Take out charge air cooler from underneath.

Installing

Installation is carried out in reverse order; note the following:

Note

- *If there are slight impressions on the fins, refer to ⇒ Servicing 4-cylinder engine, 2.0 ltr. 4-valve TFSI; Rep. gr. 00 ; Repair notes; Installing radiators and condensers*
- *Secure all hose connections with correct type of hose clips (as original equipment) ⇒ Electronic parts catalogue .*

– Install lock carrier cover, air intake grille (left and right) and closure plate at bumper cover ⇒ General body repairs, exterior; Rep. gr. 63 ; Bumper (front); Exploded view - bumper cover .

Tightening torques

- ⇒ Servicing 4-cylinder engine, 2.0 ltr. 4-valve TFSI; Rep. gr. 21 ; Charge air system; Exploded view - hose connections for charge air system

2.4 Removing and installing charge pressure sender - G31-

Protected by copyright. Copying for private or commercial purposes, in part or in whole, is not permitted unless authorised by AUDI AG. AUDI AG does not guarantee or accept any liability with respect to the correctness of information in this document. Copyright by AUDI AG.

Removing

– Vehicles with natural gas system: Remove noise insulation (front) ⇒ General body repairs, exterior; Rep. gr. 66 ; Noise insulation; Removing and installing noise insulation .

– Unplug electrical connector -1-.
– Turn charge pressure sender - G31- -item 2- anti-clockwise and pull it out of air pipe.

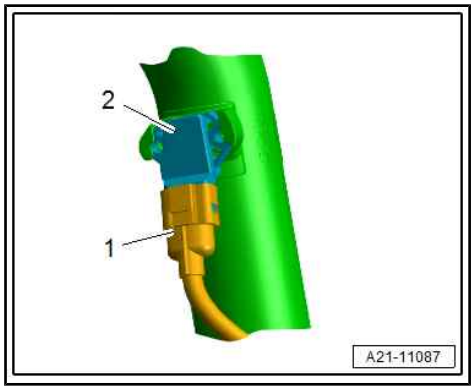

Installing

Installation is carried out in reverse order; note the following:

– Place charge pressure sender - G31- in installation position and turn it clockwise until it engages.

Note

- *Renew O-ring after removal.*
- *If fastener on air pipe has broken off, secure charge pressure positioner - G31- with two bolts, refer to ⇒ Electronic parts catalogue .*

Tightening torques

- ⇒ “2.1 Exploded view - charge air system”, page 157
- ⇒ General body repairs, exterior; Rep. gr. 66 ; Noise insulation; Exploded view - noise insulation

2.5 Checking charge air system for leaks

Special tools and workshop equipment required

- Charge air system tester - V.A.G 1687-

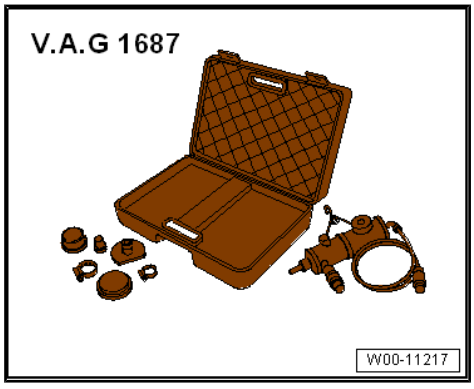

- End seal - V.A.G 1687/6- and adapters -V.A.G 1687/3- , -V.A.G 1687/13-2- , -V.A.G 1687/15-

Protected by copyright. Copying for private or commercial purposes, in part, is not permitted unless authorised by AUDI AG. AUDI AG does not guarantee or accept any liability with respect to the correctness of information in this document. Copyright by AUDI AG.

Procedure

Note

Observe rules for cleanliness ⇒ Servicing 4-cylinder engine, 2.0 ltr. 4-valve TFSI; Rep. gr. 00 ; Repair notes; Rules for cleanliness .

– Remove engine cover panel ⇒ Servicing 4-cylinder engine, 2.0 ltr. 4-valve TFSI; Rep. gr. 10 ; Engine cover panel; Removing and installing engine cover panel .

– Remove lock carrier cover ⇒ General body repairs, exterior; Rep. gr. 63 ; Bumper (front); Exploded view - bumper cover .

– Remove bolts -arrows- and detach air duct -2-.

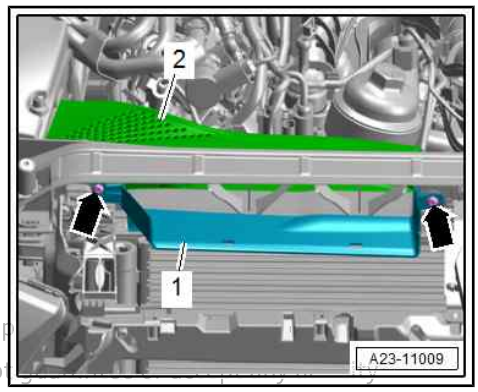

Protected by copyright. Copying for private or commercial p
permitted unless authorised by AUDI AG. AUDI AG does not
with respect to the correctness of information in this docum

– Loosen hose clips -arrows-.

– Disconnect vacuum hose -2- and remove air pipe -1-.

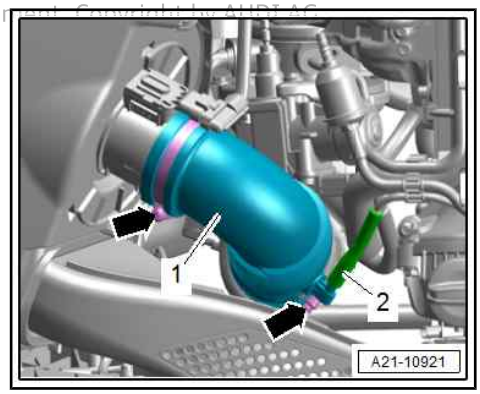

– Fit end seal - V.A.G 1687/6- and adapter - V.A.G 1687/13-2- on turbocharger.

Caution

Avoid damage to flexible joints.

- ***Do not bend flexible joints more than 10°.***

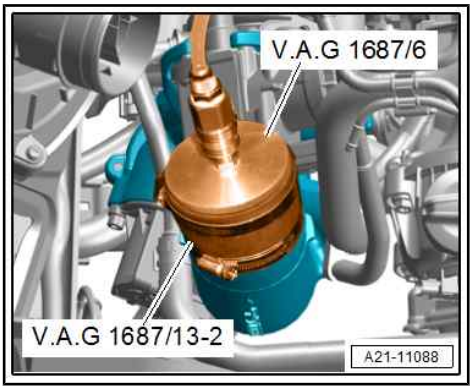

Vehicles without natural gas system:

– Loosen clamp (front) -arrows- and push towards rear.

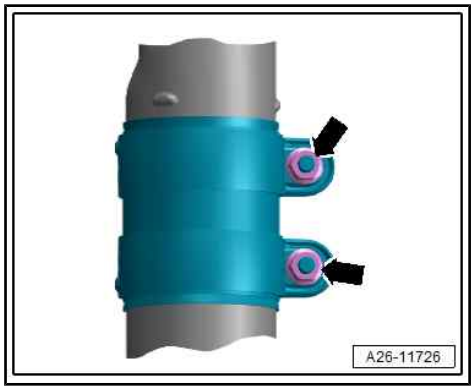

Vehicles with natural gas system:

– Remove bolts -arrows-.

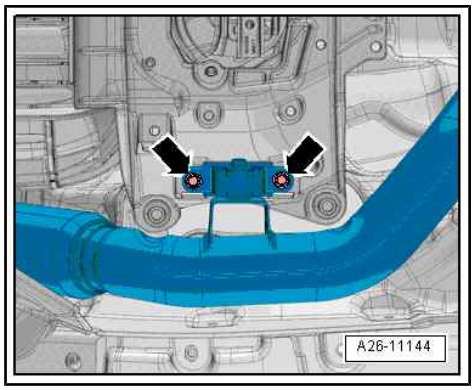

– Loosen clamp -arrow-.

– Detach front exhaust pipe from front silencer.

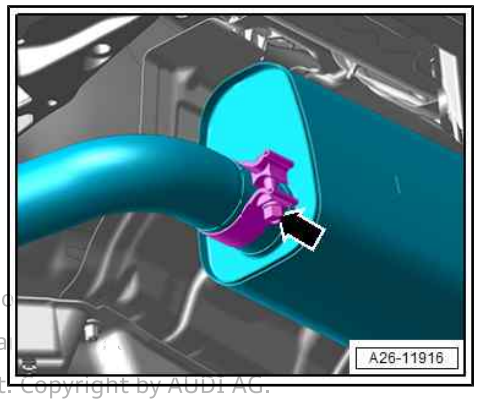

Protected by copyright. Copying for private or commercial purpo
permitted unless authorised by AUDI AG. AUDI AG does not gua
with respect to the correctness of information in this document. Copyright by AUDI AG.

All vehicles (continued):

– Lower front silencer -2- slightly and secure it with a cable tie -1-, as shown. (Shown on a vehicle without natural gas system.)

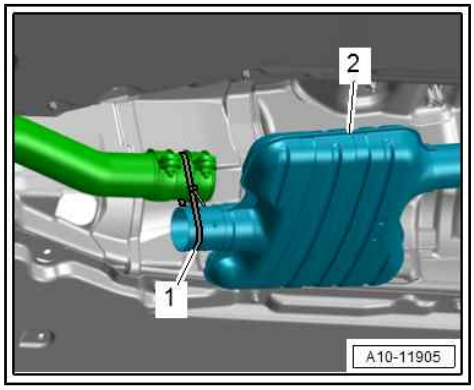

– Seal off front silencer with adapter - V.A.G 1687/3- and adapter - V.A.G 1687/15- .

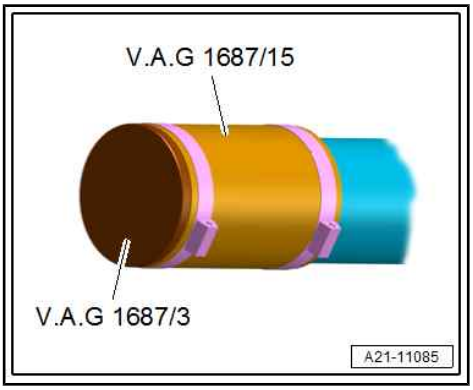

– Connect charge air system tester - V.A.G 1687- with connection -5- to end seal - V.A.G 1687/6- .

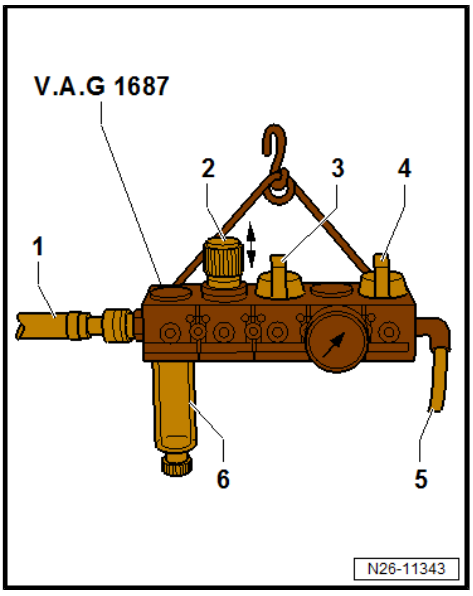

All further procedures are described in ⇒ Servicing 4-cylinder engine, 2.0 ltr. 4-valve TFSI; Rep. gr. 21 ; Charge air system; Checking charge air system for leaks .

Assembling

Additional work:

– Install lock carrier cover ⇒ General body repairs, exterior; Rep. gr. 63 ; Bumper (front); Exploded view - bumper cover .

– Install engine cover panel ⇒ Servicing 4-cylinder engine, 2.0 ltr. 4-valve TFSI; Rep. gr. 10 ; Engine cover panel; Removing and installing engine cover panel .

Tightening torques

- ⇒ “2.1 Exploded view - air cleaner housing”, page 177
- ⇒ “1.1 Exploded view - silencers”, page 213
- ⇒ Servicing 4-cylinder engine, 2.0 ltr. 4-valve TFSI; Rep. gr. 21 ; Charge air system; Exploded view - hose connections for charge air system

Protected by copyright. Copying for private or commercial purposes, in part or in whole, is not permitted unless authorised by AUDI AG. AUDI AG does not guarantee or accept any liability with respect to the correctness of information in this document. Copyright by AUDI AG.

24 – Mixture preparation - injection

1 Injection system

⇒ "1.1 Overview of fitting locations - injection system", page 164

1.1 Overview of fitting locations - injection system

Overview of fitting locations - engine compartment, vehicles without natural gas system

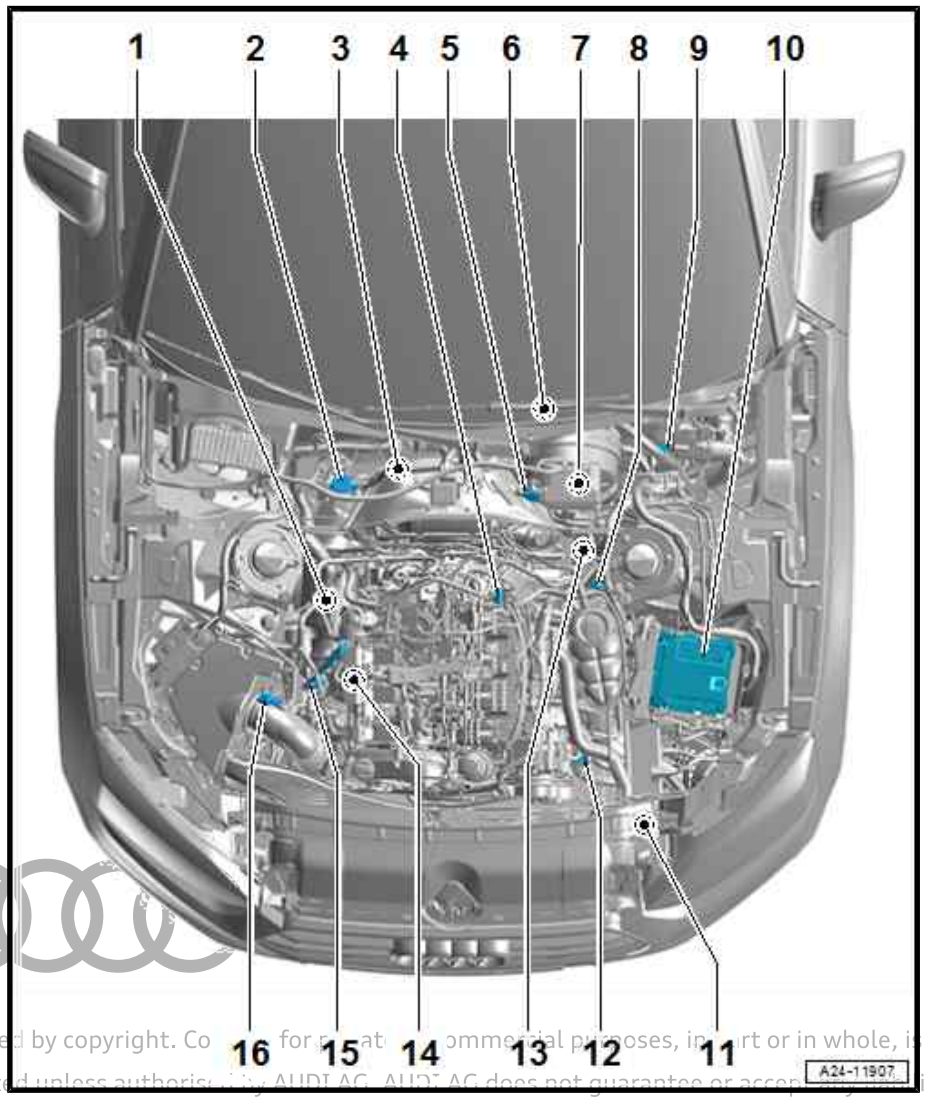

1 - Lambda probe 1 after catalytic converter - GX7-

- ❑ Comprises:
- ♦ Lambda probe after catalytic converter - G130-
- ♦ Lambda probe 1 heater after catalytic converter - Z29-
  - ❑ Fitting location ⇒ page 168

2 - Coolant shut-off valve - N82-

- ❑ On equipment version with auxiliary heating: heater coolant shut-off valve - N279-

3 - Gear detection sensor - G604-

- ❑ For equipment version with manual gearbox
- ❑ Fitting location ⇒ page 168

4 - Pressure differential sender for particulate filter - G1037-

- ❑ Vehicles with particulate filter only
- ❑ Exploded view ⇒ Servicing 4-cylinder engine, 2.0 ltr. 4-valve TFSI; Rep. gr. 24 ; Lambda probe; Exploded view - Lambda probe

5 - Vacuum sender - G608-

6 - Accelerator position sender - G79- and accelerator position sender 2 - G185-

- ❑ Fitting location ⇒ page 167

7 - Brake light switch - F-

- ❑ Fitting location ⇒ page 167

8 - Coolant circulation pump - V50- , continued coolant circulation pump - V51-

- ❑ Exploded view ⇒ page 109

9 - Clutch position sender - G476-

- ❑ With clutch pedal switch - F36- / clutch pedal switch for engine start - F194-

Protected by copyright. Copying for private or commercial purposes, in part or in whole, is not permitted unless authorised by AUDI AG. AUDI AG does not guarantee or accept any liability with respect to the correctness of information in this document. Copyright by AUDI AG.

- ❑ For equipment version with manual gearbox
- ❑ Exploded view ⇒ Gearbox; Rep. gr. 30 ; Clutch mechanism; Exploded view - pedal cluster

10 - Engine control unit - J623-

- ❑ Exploded view ⇒ page 210

11 - Radiator outlet coolant temperature sender - G83-

- ❑ Fitting location ⇒ page 168

12 - Charge pressure sender - G31-

- ❑ Exploded view ⇒ page 157

13 - Left electrohydraulic engine mounting solenoid valve - N144-

- ❑ For equipment version with dual clutch gearbox
- ❑ Fitting location ⇒ page 168

Protected by copyright. Copying for private or commercial purposes, in part or in whole, is not permitted unless authorised by AUDI AG. AUDI AG does not guarantee or accept any liability with respect to the correctness of information in this document. Copyright by AUDI AG.

14 - Right electrohydraulic engine mounting solenoid valve - N145-

- ❑ For equipment version with dual clutch gearbox
- ❑ Fitting location ⇒ page 168

15 - Lambda probe 1 before catalytic converter - GX10-

- ❑ Comprises:

- ♦ Lambda probe - G39-
- ♦ Lambda probe heater - Z19-

- ❑ Exploded view ⇒ Servicing 4-cylinder engine, 2.0 ltr. 4-valve TFSI; Rep. gr. 24 ; Lambda probe; Exploded view - Lambda probe

16 - Air mass meter - G70-

- ❑ Exploded view ⇒ page 177

Overview of fitting locations - engine compartment, vehicles with natural gas system

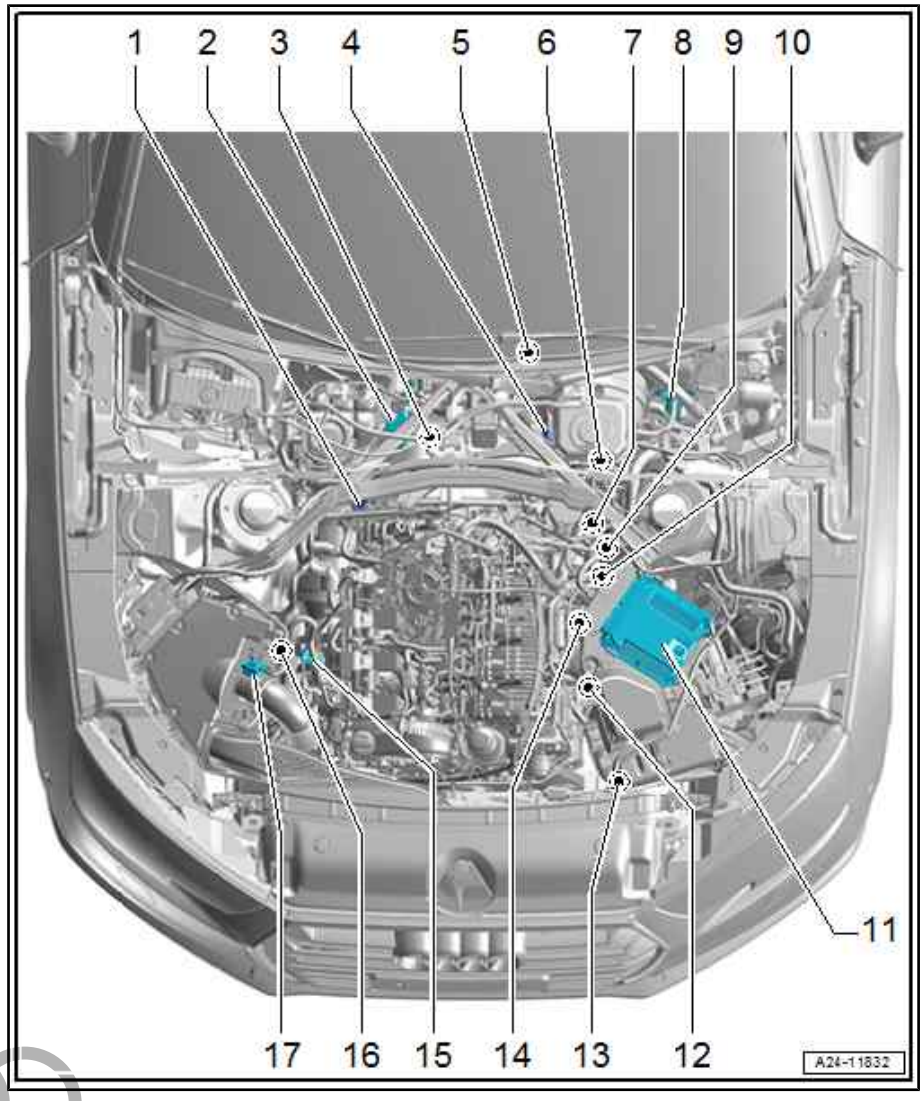

1 - Lambda probe 1 after catalytic converter - GX7-

- ❑ Comprises:
- ♦ Lambda probe after catalytic converter - G130-
- ♦ Lambda probe 1 heater after catalytic converter - Z29-
  - ❑ Fitting location ⇒ page 168

2 - Coolant shut-off valve - N82-

- ❑ On equipment version with auxiliary heating: heater coolant shut-off valve - N279-

3 - Gear detection sensor - G604-

- ❑ For equipment version with manual gearbox
- ❑ Fitting location ⇒ page 168

4 - Brake servo pressure sensor - G294-

5 - Accelerator position sender - G79- and accelerator position sender 2 - G185-

- ❑ Fitting location ⇒ page 167

6 - Brake light switch - F-

- ❑ Fitting location ⇒ page 167

7 - Gas pressure regulator/ sensor module - GX23-

- ❑ Fitting location ⇒ page 169
- ❑ Removing and installing ⇒ “7.7 Removing and installing sensor module GX23 ”, page 203

Protected by copyright. Copying for private or commercial purposes, in part or in whole, is not permitted unless authorised by AUDI AG. AUDI AG does not guarantee or accept any liability with respect to the correctness of information in this document. Copyright by AUDI AG.

8 - Clutch position sender - G476-

- ❑ With clutch pedal switch - F36- / clutch pedal switch for engine start - F194-
- ❑ For equipment version with manual gearbox
- ❑ Exploded view ⇒ Gearbox; Rep. gr. 30 ; Clutch mechanism; Exploded view - pedal cluster

9 - Coolant circulation pump - V50-

- ❑ Fitting location ⇒ page 169

10 - Continued coolant circulation pump - V51-

- ❑ Fitting location ⇒ page 169
- ❑ Exploded view ⇒ page 109

11 - Engine control unit - J623-

- ❑ Exploded view ⇒ page 210

12 - Charge pressure sender - G31-

- ❑ Exploded view ⇒ page 157

13 - Radiator outlet coolant temperature sender - G83-

- ❑ Fitting location ⇒ page 168

14 - Left electrohydraulic engine mounting solenoid valve - N144-

- ❑ For equipment version with dual clutch gearbox
- ❑ Fitting location ⇒ page 168

15 - Lambda probe 1 before catalytic converter - GX10-

- ❑ Comprises:

- ♦ Lambda probe - G39-
- ♦ Lambda probe heater - Z19-
  - ❑ Exploded view ⇒ Servicing 4-cylinder engine, 2.0 ltr. 4-valve TFSI; Rep. gr. 24 ; Lambda probe; Exploded view - Lambda probe

Protected by copyright. Copying for private or commercial purposes, in part or in whole, is not
with respect to the correctness of information in this document. Copyright by AUDI AG.

16 - Right electrohydraulic engine mounting solenoid valve - N145-

- ❑ For equipment version with dual clutch gearbox
- ❑ Fitting location ⇒ page 168

17 - Air mass meter - G70-

- ❑ Exploded view ⇒ page 177

Accelerator position sender - G79- and accelerator position sender 2 - G185-

- ♦ Integrated in accelerator pedal module -3-. Accelerator position senders cannot be renewed separately if defective.

Exploded view ⇒ Fuel supply system; Rep. gr. 20 ; Accelerator mechanism; Exploded view - accelerator pedal module

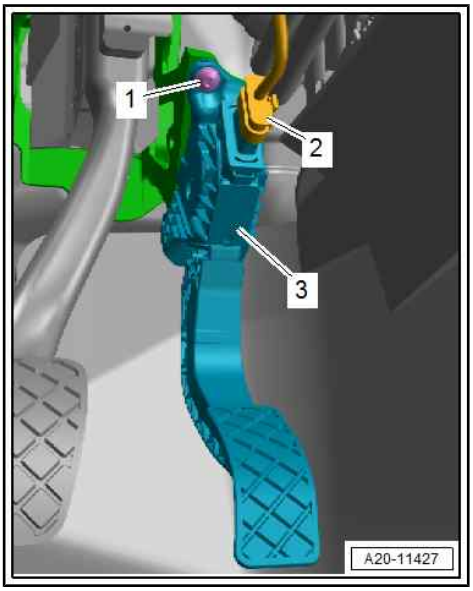

Fitting location of brake light switch - F-

- ♦ In engine compartment on brake master cylinder

1 - Electrical connector for brake light switch - F-

Exploded view ⇒ Brake system; Rep. gr. 47 ; Brake servo/brake master cylinder; Exploded view - brake servo/brake master cylinder

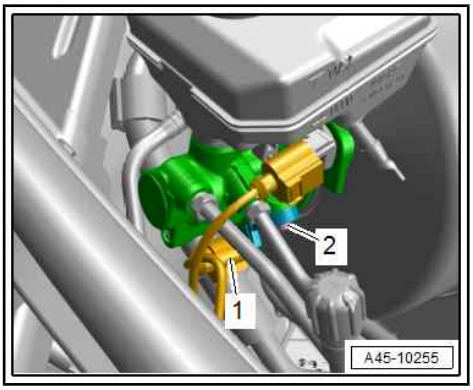

Fitting location of gear detection sensor - G604-

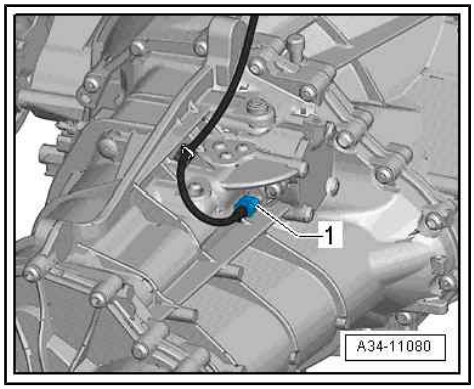

- At top right of manual gearbox

1 - Gear detection sensor - G604-

Removing and installing ⇒ Gearbox; Rep. gr. 34 ; Selector mechanism ; Removing and installing gear detection sensor - G604-

Fitting location of radiator outlet coolant temperature sender - G83-

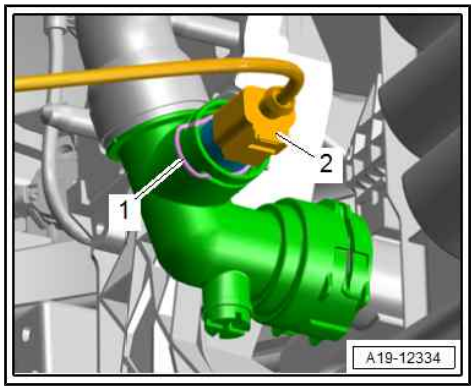

- In coolant connection on radiator at bottom left. (Different versions.)

2 - Electrical connector for radiator outlet coolant temperature sender - G83-

Exploded view ⇒ page 111 .

Fitting location of Lambda probe 1 after catalytic converter - GX7-

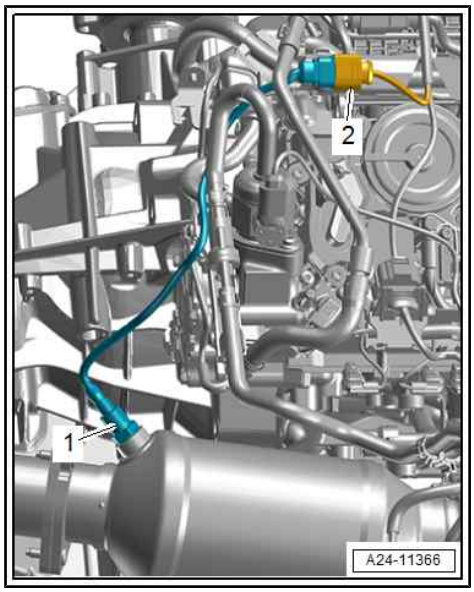

- In catalytic converter

1 - Lambda probe 1 after catalytic converter - GX7-

2 - Electrical connector for Lambda probe 1 after catalytic converter - GX7-

Note:

Installation position varies depending on model and version.

Exploded view ⇒ Servicing 4-cylinder engine, 2.0 ltr. 4-valve TFSI; Rep. gr. 24 ; Lambda probe; Exploded view - Lambda probe

Fitting location of electrohydraulic engine mounting solenoid valves -N144- / -N145-

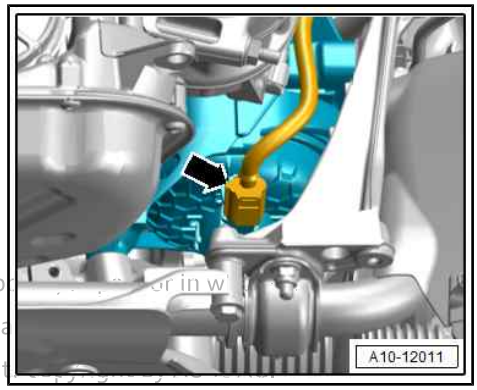

- Integrated in engine mounting. It cannot be renewed separately if defective.

Pfeil - Electrical connector for left electrohydraulic engine mounting solenoid valve - N144-

Removing and installing
⇒ “2.3 Removing and installing engine mountings”, page 63

Protected by copyright. Copying for private or commercial purp or in w
permitted unless authorised by AUDI AG. AUDI AG does not gua
with respect to the correctness of information in this document

Fitting locations on vehicles with natural gas system - gas pressure regulator/ sensor module - GX23- , coolant circulation pump - V50- , continued coolant circulation pump - V51-

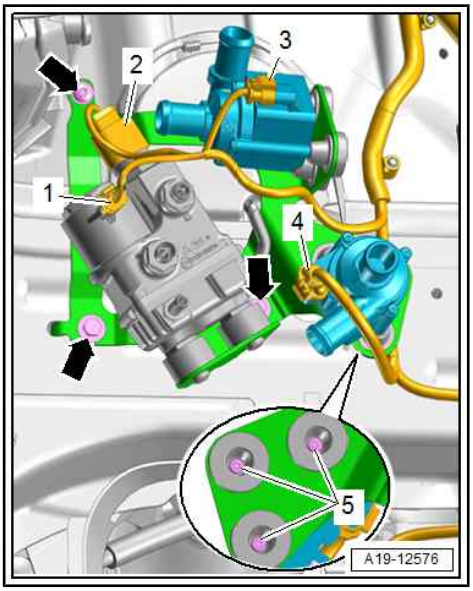

♦ On left of engine compartment

1 - Electrical connector for gas pressure regulator with high-pressure valve for gas mode - N372-

2 - Electrical connector for sensor module - GX23-

Exploded view
⇒ “6.1 Exploded view - gas pressure regulator”, page 194 .

3 - Electrical connector for coolant circulation pump - V50-

4 - Electrical connector for continued coolant circulation pump - V51-

Exploded view
⇒ “2.2 Exploded view - electric coolant pump”, page 109 .

Overview of fitting locations - engine (from above), vehicles without natural gas system

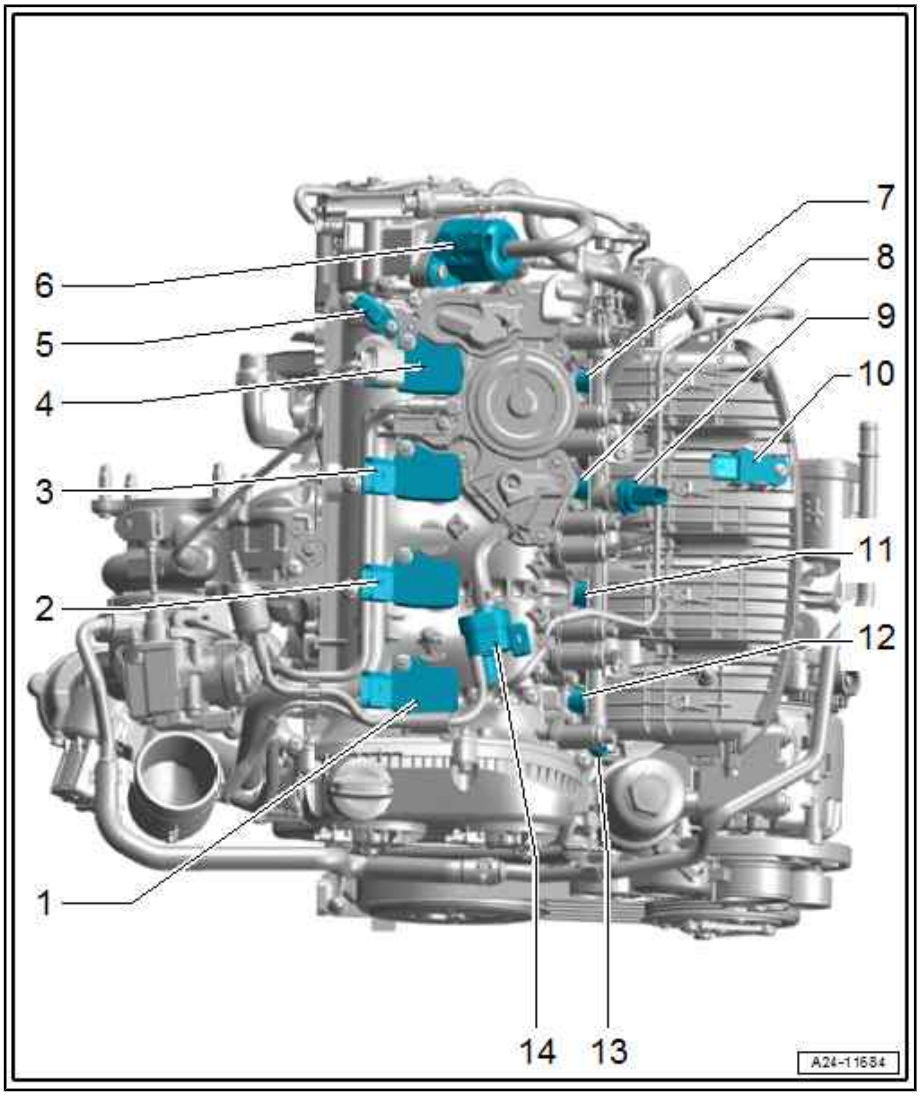

1 - Ignition coil 1 with output stage - N70-

❑ Exploded view ⇒ Servicing 4-cylinder engine, 2.0 ltr. 4-valve TFSI; Rep. gr. 28 ; Ignition system; Exploded view - ignition system

2 - Ignition coil 2 with output stage - N127-

❑ Exploded view ⇒ Servicing 4-cylinder engine, 2.0 ltr. 4-valve TFSI; Rep. gr. 28 ; Ignition system; Exploded view - ignition system

3 - Ignition coil 3 with output stage - N291-

❑ Exploded view ⇒ Servicing 4-cylinder engine, 2.0 ltr. 4-valve TFSI; Rep. gr. 28 ; Ignition system; Exploded view - ignition system

4 - Ignition coil 4 with output stage - N292-

❑ Exploded view ⇒ Servicing 4-cylinder engine, 2.0 ltr. 4-valve TFSI; Rep. gr. 28 ; Ignition system; Exploded view - ignition system

5 - Hall sender 3 - G300-

❑ Exploded view ⇒ Servicing 4-cylinder engine, 2.0 ltr. 4-valve TFSI; Rep. gr. 28 ; Ignition system; Exploded view - ignition system

Protected by copyright. Copying for private or commercial purposes, in part or in whole, is not permitted unless authorised by AUDI AG. AUDI AG does not guarantee or accept any liability with respect to the correctness of information in this document. Copyright by AUDI AG.

6 - Fuel metering valve - N290- or fuel pressure regulating valve - N276-

- ❑ Fuel metering valve - N290- or fuel pressure regulating valve - N276- may be fitted, depending on version
- ❑ Integrated in high-pressure pump

7 - Injector 2, cylinder 4 - N535- , MPI

- ❑ Injector 2, cylinder 4 - N535-
- ❑ Exploded view ⇒ Servicing 4-cylinder engine, 2.0 ltr. 4-valve TFSI; Rep. gr. 24 ; Injectors; Exploded view - fuel rail with injectors

8 - Injector 2, cylinder 3 - N534- , MPI

- ❑ Exploded view ⇒ Servicing 4-cylinder engine, 2.0 ltr. 4-valve TFSI; Rep. gr. 24 ; Injectors; Exploded view - fuel rail with injectors

9 - Fuel pressure sender for low pressure - G410- , MPI

- ❑ Exploded view ⇒ Servicing 4-cylinder engine, 2.0 ltr. 4-valve TFSI; Rep. gr. 24 ; Injectors; Exploded view - fuel rail with injectors

10 - Intake air temperature sender - G42- / intake manifold pressure sender - G71-

- ❑ Exploded view ⇒ Servicing 4-cylinder engine, 2.0 ltr. 4-valve TFSI; Rep. gr. 24 ; Intake manifold; Exploded view - intake manifold

11 - Injector 2, cylinder 2 - N533- , MPI

- ❑ Exploded view ⇒ Servicing 4-cylinder engine, 2.0 ltr. 4-valve TFSI; Rep. gr. 24 ; Injectors; Exploded view - fuel rail with injectors

12 - Injector 2, cylinder 1 - N532- , MPI

- ❑ Exploded view ⇒ Servicing 4-cylinder engine, 2.0 ltr. 4-valve TFSI; Rep. gr. 24 ; Injectors; Exploded view - fuel rail with injectors

13 - Intake manifold flap potentiometer - G336-

- ❑ Exploded view ⇒ Servicing 4-cylinder engine, 2.0 ltr. 4-valve TFSI; Rep. gr. 24 ; Intake manifold; Exploded view - intake manifold

14 - Activated charcoal filter solenoid valve 1 - N80-

Overview of fitting locations - engine (from above), vehicles with natural gas system

Protected by copyright. Copying for private or commercial purposes, in part or in whole, is not permitted unless authorised by AUDI AG. AUDI AG does not guarantee or accept any liability with respect to the correctness of information in this document. Copyright by AUDI AG.

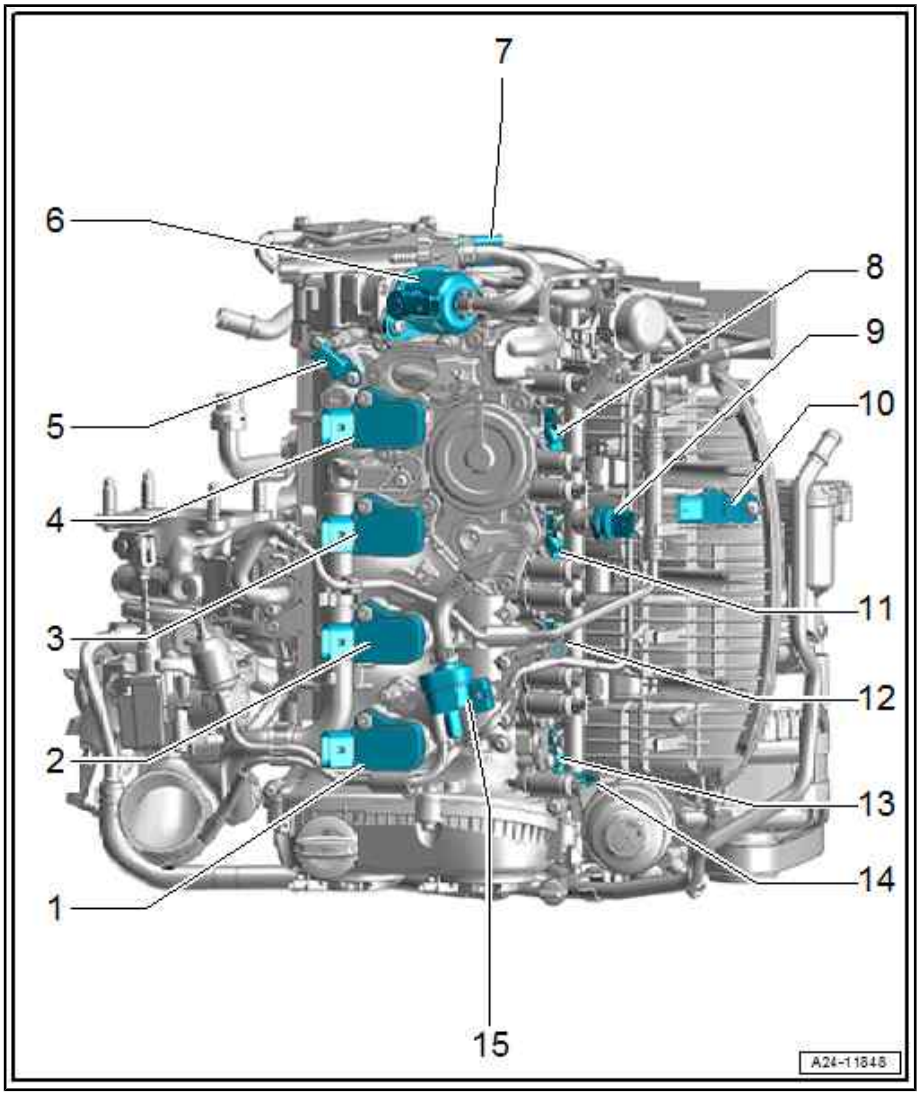

1 - Ignition coil 1 with output stage - N70-

- ❑ Exploded view ⇒ Servicing 4-cylinder engine, 2.0 ltr. 4-valve TFSI; Rep. gr. 28 ; Ignition system; Exploded view - ignition system

2 - Ignition coil 2 with output stage - N127-

- ❑ Exploded view ⇒ Servicing 4-cylinder engine, 2.0 ltr. 4-valve TFSI; Rep. gr. 28 ; Ignition system; Exploded view - ignition system

3 - Ignition coil 3 with output stage - N291-

- ❑ Exploded view ⇒ Servicing 4-cylinder engine, 2.0 ltr. 4-valve TFSI; Rep. gr. 28 ; Ignition system; Exploded view - ignition system

4 - Ignition coil 4 with output stage - N292-

- ❑ Exploded view ⇒ Servicing 4-cylinder engine, 2.0 ltr. 4-valve TFSI; Rep. gr. 28 ; Ignition system; Exploded view - ignition system

5 - Hall sender 3 - G300-

- ❑ Exploded view ⇒ Servicing 4-cylinder engine, 2.0 ltr. 4-valve TFSI; Rep. gr. 28 ; Ignition system; Exploded view - ignition system

6 - Fuel metering valve - N290- or fuel pressure regulating valve - N276-

- ❑ Fuel metering valve - N290- or fuel pressure regulating valve - N276- may be fitted, depending on version
- ❑ Integrated in high-pressure pump

7 - Fuel pressure sender for low pressure - G410-

- ❑ Exploded view ⇒ Servicing 4-cylinder engine, 2.0 ltr. 4-valve TFSI; Rep. gr. 24 ; Injectors; Exploded view - fuel rail with injectors

8 - Gas injection valve 4 - N369-

- ❑ Exploded view ⇒ “5.1 Exploded view - gas rail”, page 189

9 - Gas injection valve for cylinder 3 - N368-

- ❑ Exploded view ⇒ “5.1 Exploded view - gas rail”, page 189

10 - Intake air temperature sender - G42- / intake manifold pressure sender - G71-

- ❑ Exploded view ⇒ Servicing 4-cylinder engine, 2.0 ltr. 4-valve TFSI; Rep. gr. 24 ; Intake manifold; Exploded view - intake manifold

11 - Gas rail temperature and pressure sensor - GX21-

- ❑ Exploded view ⇒ “5.1 Exploded view - gas rail”, page 189

12 - Gas injection valve for cylinder 2 - N367-

- ❑ Exploded view ⇒ “5.1 Exploded view - gas rail”, page 189

Protected by copyright. Copying for private or commercial purposes, in part or in whole, is not permitted unless authorised by AUDI AG. AUDI AG does not guarantee or accept any liability with respect to the correctness of information in this document. Copyright by AUDI AG.

13 - Gas injection valve for cylinder 1 - N366-

- ❑ Exploded view ⇒ “5.1 Exploded view - gas rail”, page 189

14 - Intake manifold flap potentiometer - G336-

- ❑ Exploded view ⇒ Servicing 4-cylinder engine, 2.0 ltr. 4-valve TFSI; Rep. gr. 24 ; Intake manifold; Exploded view - intake manifold

15 - Activated charcoal filter solenoid valve 1 - N80-

Protected by copyright. Copying for private or commercial purposes, in part or in whole, is not permitted unless authorised by AUDI AG. AUDI AG does not guarantee or accept any liability with respect to the correctness of information in this document. Copyright by AUDI AG.

Overview of fitting locations - engine (inlet side)

1 - Oil level and oil temperature sender - G266-

- ❑ Exploded view ⇒ Servicing 4-cylinder engine, 2.0 ltr. 4-valve TFSI; Rep. gr. 17 ; Sump/oil pump; Exploded view - sump/oil pump

2 - Actuator for engine temperature regulation - N493-

- ❑ Exploded view ⇒ Servicing 4-cylinder engine, 2.0 ltr. 4-valve TFSI; Rep. gr. 19 ; Coolant pump/thermostat assembly; Exploded view - coolant pump/thermostat

3 - Injector, cylinder 2 - N31- , FSI

- ❑ Exploded view ⇒ Servicing 4-cylinder engine, 2.0 ltr. 4-valve TFSI; Rep. gr. 24 ; Injectors; Exploded view - fuel rail with injectors

4 - Injector, cylinder 1 - N30- , FSI

- ❑ Exploded view ⇒ Servicing 4-cylinder engine, 2.0 ltr. 4-valve TFSI; Rep. gr. 24 ; Injectors; Exploded view - fuel rail with injectors

5 - Fuel pressure sender - G247-

- ❑ Exploded view ⇒ Servicing 4-cylinder engine, 2.0 ltr. 4-valve TFSI; Rep. gr. 24 ; Injectors; Exploded view - fuel rail with injectors

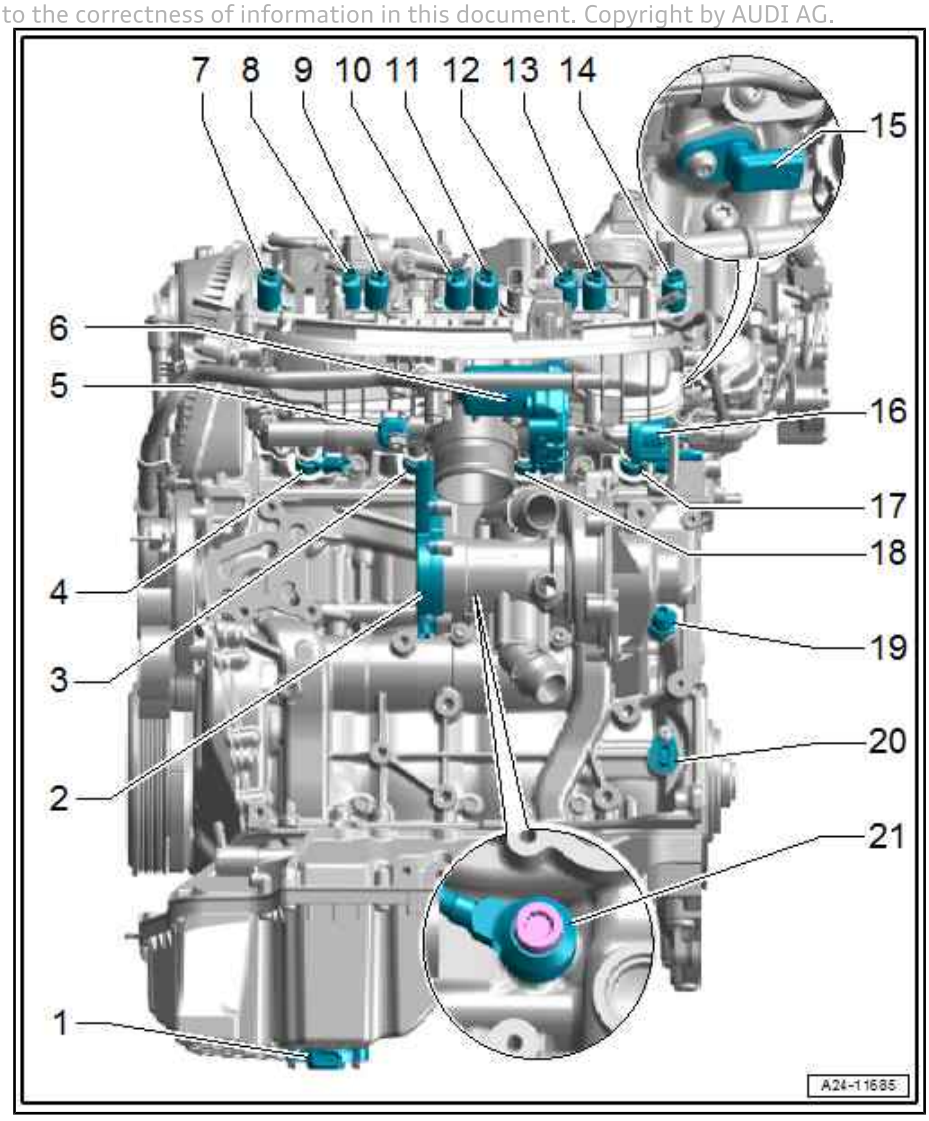

6 - Throttle valve module - GX3-

- ❑ Comprises:

- ♦ Throttle valve module - J338-
- ♦ Throttle valve drive (for electric throttle) - G186-
- ♦ Throttle valve drive angle sender - G187-
- ♦ Throttle valve drive angle sender 2 - G188-

- ❑ Exploded view ⇒ Servicing 4-cylinder engine, 2.0 ltr. 4-valve TFSI; Rep. gr. 24 ; Intake manifold; Exploded view - intake manifold

7 - Actuator 1 for camshaft adjustment - F366- (for cylinder No. 1)

- ❑ Exploded view ⇒ Servicing 4-cylinder engine, 2.0 ltr. 4-valve TFSI; Rep. gr. 15 ; Valve gear; Exploded view - valve gear

8 - Actuator 2 for camshaft adjustment - F367- (for cylinder No. 1)

- ❑ Exploded view ⇒ Servicing 4-cylinder engine, 2.0 ltr. 4-valve TFSI; Rep. gr. 15 ; Valve gear; Exploded view - valve gear

9 - Actuator 3 for camshaft adjustment - F368- (for cylinder No. 2)

- ❑ Exploded view ⇒ Servicing 4-cylinder engine, 2.0 ltr. 4-valve TFSI; Rep. gr. 15 ; Valve gear; Exploded view - valve gear

10 - Actuator 4 for camshaft adjustment - F369- (for cylinder No. 2)

- ❑ Exploded view ⇒ Servicing 4-cylinder engine, 2.0 ltr. 4-valve TFSI; Rep. gr. 15 ; Valve gear; Exploded view - valve gear

11 - Actuator 5 for camshaft adjustment - F370- (for cylinder No. 3)

- ❑ Exploded view ⇒ Servicing 4-cylinder engine, 2.0 ltr. 4-valve TFSI; Rep. gr. 15 ; Valve gear; Exploded view - valve gear

12 - Actuator 6 for camshaft adjustment - F371- (for cylinder No. 3)

- ❑ Exploded view ⇒ Servicing 4-cylinder engine, 2.0 ltr. 4-valve TFSI; Rep. gr. 15 ; Valve gear; Exploded view - valve gear

13 - Actuator 7 for camshaft adjustment - F372- (for cylinder No. 4)

- ❑ Exploded view ⇒ Servicing 4-cylinder engine, 2.0 ltr. 4-valve TFSI; Rep. gr. 15 ; Valve gear; Exploded view - valve gear

14 - Actuator 8 for camshaft adjustment - F373- (for cylinder No. 4)

- ❑ Exploded view ⇒ Servicing 4-cylinder engine, 2.0 ltr. 4-valve TFSI; Rep. gr. 15 ; Valve gear; Exploded view - valve gear

Protected by copyright. Copying for private or commercial purposes, in part or in whole, is not permitted unless authorized by AUDI AG. AUDI AG does not guarantee or accept any liability with respect to the correctness of information in this document. Copyright by AUDI AG.

15 - Hall sender - G40-

- ❑ Exploded view ⇒ Servicing 4-cylinder engine, 2.0 ltr. 4-valve TFSI; Rep. gr. 28 ; Ignition system; Exploded view - ignition system

16 - Intake manifold flap valve - N316-

- ❑ Exploded view ⇒ Servicing 4-cylinder engine, 2.0 ltr. 4-valve TFSI; Rep. gr. 24 ; Intake manifold; Exploded view - intake manifold

17 - Injector, cylinder 4 - N33- , FSI

- ❑ Exploded view ⇒ Servicing 4-cylinder engine, 2.0 ltr. 4-valve TFSI; Rep. gr. 24 ; Injectors; Exploded view - fuel rail with injectors

18 - Injector, cylinder 3 - N32- , FSI

- ❑ Exploded view ⇒ Servicing 4-cylinder engine, 2.0 ltr. 4-valve TFSI; Rep. gr. 24 ; Injectors; Exploded view - fuel rail with injectors

19 - Stage 3 oil pressure switch - F447-

- ❑ Exploded view ⇒ Servicing 4-cylinder engine, 2.0 ltr. 4-valve TFSI; Rep. gr. 17 ; Oil filter/oil pressure switches; Exploded view - oil pressure switches/oil pressure control

20 - Engine speed sender - G28-

- ❑ Exploded view ⇒ Servicing 4-cylinder engine, 2.0 ltr. 4-valve TFSI; Rep. gr. 28 ; Ignition system; Exploded view - ignition system

21 - Knock sensor 1 - G61-

- ❑ Exploded view ⇒ Servicing 4-cylinder engine, 2.0 ltr. 4-valve TFSI; Rep. gr. 28 ; Ignition system; Exploded view - ignition system

Overview of fitting locations - engine (exhaust side)

1 - Coolant temperature sender - G62-

- ❑ Exploded view ⇒ “2.3 Exploded view - coolant temperature senders”, page 111

2 - Charge pressure positioner - V465- with position sender for charge pressure positioner - G581-

- ❑ Integrated in turbocharger

3 - Turbocharger air recirculation valve - N249-

- ❑ Exploded view ⇒ Servicing 4-cylinder engine, 2.0 ltr. 4-valve TFSI; Rep. gr. 21 ; Turbocharger; Exploded view - turbocharger

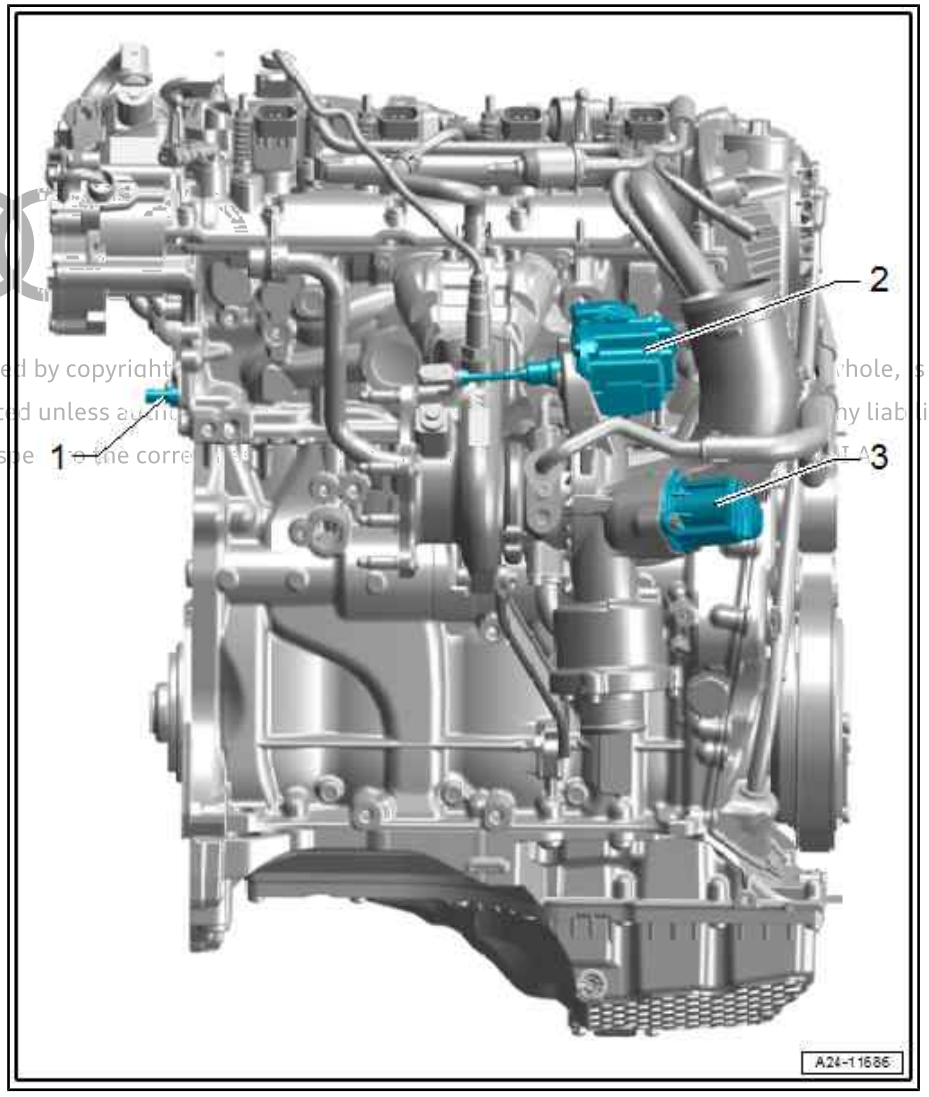

Protected by copyright ... whole, is not permitted unless ... any liability with respect to the correctness ...

Overview of fitting locations - engine (view from front), vehicles with alternator

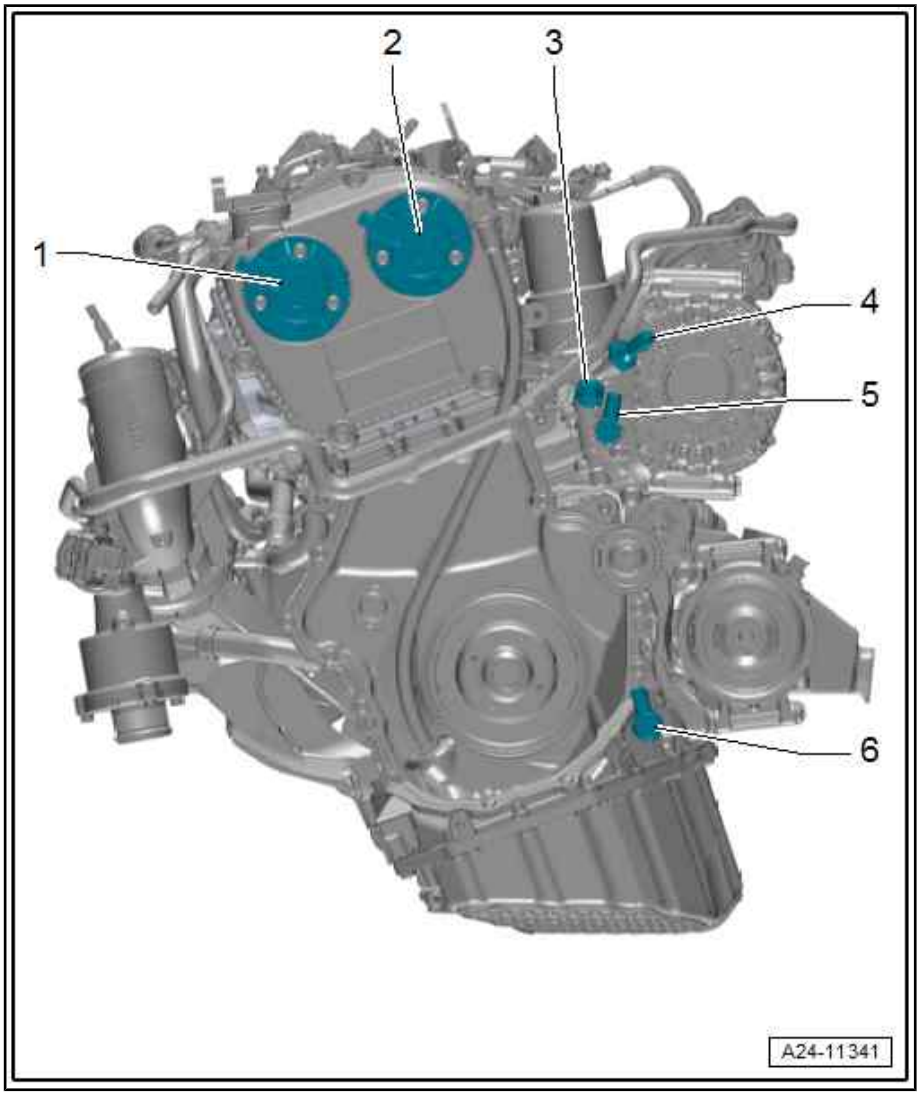

1 - Exhaust camshaft control valve 1 - N318-

- ❑ Exploded view ⇒ Servicing 4-cylinder engine, 2.0 ltr. 4-valve TFSI; Rep. gr. 15 ; Timing chain cover; Exploded view - timing chain cover

2 - Camshaft control valve 1 - N205-

- ❑ Exploded view ⇒ Servicing 4-cylinder engine, 2.0 ltr. 4-valve TFSI; Rep. gr. 15 ; Timing chain cover; Exploded view - timing chain cover

3 - Oil pressure switch - F22-

- ❑ Exploded view ⇒ Servicing 4-cylinder engine, 2.0 ltr. 4-valve TFSI; Rep. gr. 17 ; Oil filter/oil pressure switches; Exploded view - oil pressure switches/oil pressure control

4 - Oil pressure switch for reduced oil pressure - F378-

- ❑ Exploded view ⇒ Servicing 4-cylinder engine, 2.0 ltr. 4-valve TFSI; Rep. gr. 17 ; Oil filter/oil pressure switches; Exploded view - oil pressure switches/oil pressure control

5 - Piston cooling jet control valve - N522-

- ❑ Exploded view ⇒ Servicing 4-cylinder engine, 2.0 ltr. 4-valve TFSI; Rep. gr. 17 ; Oil filter/oil pressure switches; Exploded view - oil pressure switches/oil pressure control

6 - Valve for oil pressure control - N428-

- ❑ Exploded view ⇒ Servicing 4-cylinder engine, 2.0 ltr. 4-valve TFSI; Rep. gr. 17 ; Oil filter/oil pressure switches; Exploded view - oil pressure switches/oil pressure control

Overview of fitting locations - engine (view from front), vehicles with starter-alternator

Protected by copyright. Copying for private or commercial purposes, in part or in whole, is not permitted unless authorised by AUDI AG. AUDI AG does not guarantee or accept any liability with respect to the correctness of information in this document. Copyright by AUDI AG.

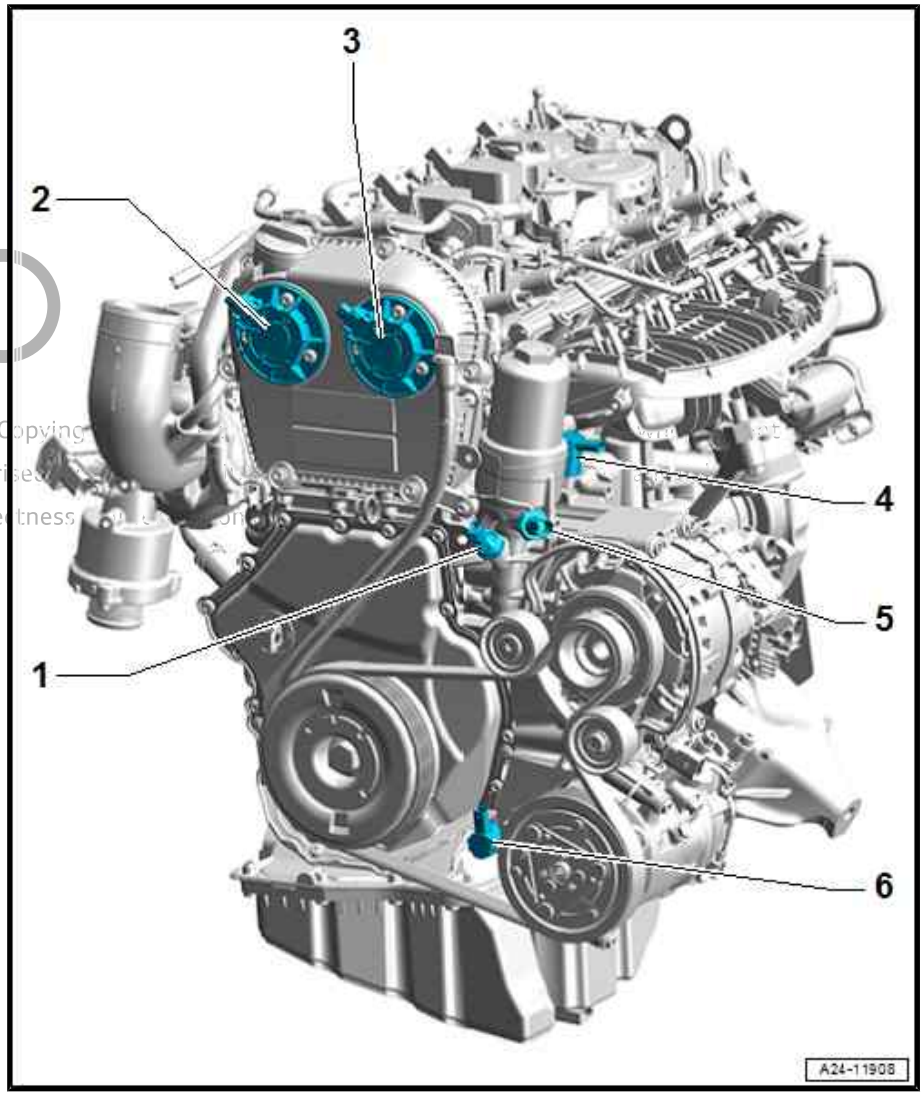

1 - Oil pressure switch - F22-

- ❑ Exploded view ⇒ Servicing 4-cylinder engine, 2.0 ltr. 4-valve TFSI; Rep. gr. 17 ; Oil filter/oil pressure switches; Exploded view - oil pressure switches/oil pressure control

2 - Exhaust camshaft control valve 1 - N318-

- ❑ Exploded view ⇒ Servicing 4-cylinder engine, 2.0 ltr. 4-valve TFSI; Rep. gr. 15 ; Timing chain cover; Exploded view - timing chain cover

3 - Camshaft control valve 1 - N205-

- ❑ Exploded view ⇒ Servicing 4-cylinder engine, 2.0 ltr. 4-valve TFSI; Rep. gr. 15 ; Timing chain cover; Exploded view - timing chain cover

4 - Piston cooling jet control valve - N522-

- ❑ Exploded view ⇒ Servicing 4-cylinder engine, 2.0 ltr. 4-valve TFSI; Rep. gr. 17 ; Oil filter/oil pressure switches; Exploded view - oil pressure switches/oil pressure control

5 - Oil pressure switch for reduced oil pressure - F378-

- ❑ Exploded view ⇒ Servicing 4-cylinder engine, 2.0 ltr. 4-valve TFSI; Rep. gr. 17 ; Oil filter/oil pressure switches; Exploded view - oil pressure switches/oil pressure control

6 - Valve for oil pressure control - N428-

- ❑ Exploded view ⇒ Servicing 4-cylinder engine, 2.0 ltr. 4-valve TFSI; Rep. gr. 17 ; Oil filter/oil pressure switches; Exploded view - oil pressure switches/oil pressure control

Protected by copyright. Copying for private or commercial purposes, in part or in whole, is not permitted unless authorised by Audi AG. Audi AG does not guarantee or accept any liability with respect to the correctness of information in this document.

2 Air cleaner

⇒ "2.1 Exploded view - air cleaner housing", page 177

⇒ "2.2 Removing and installing air cleaner housing", page 178

2.1 Exploded view - air cleaner housing

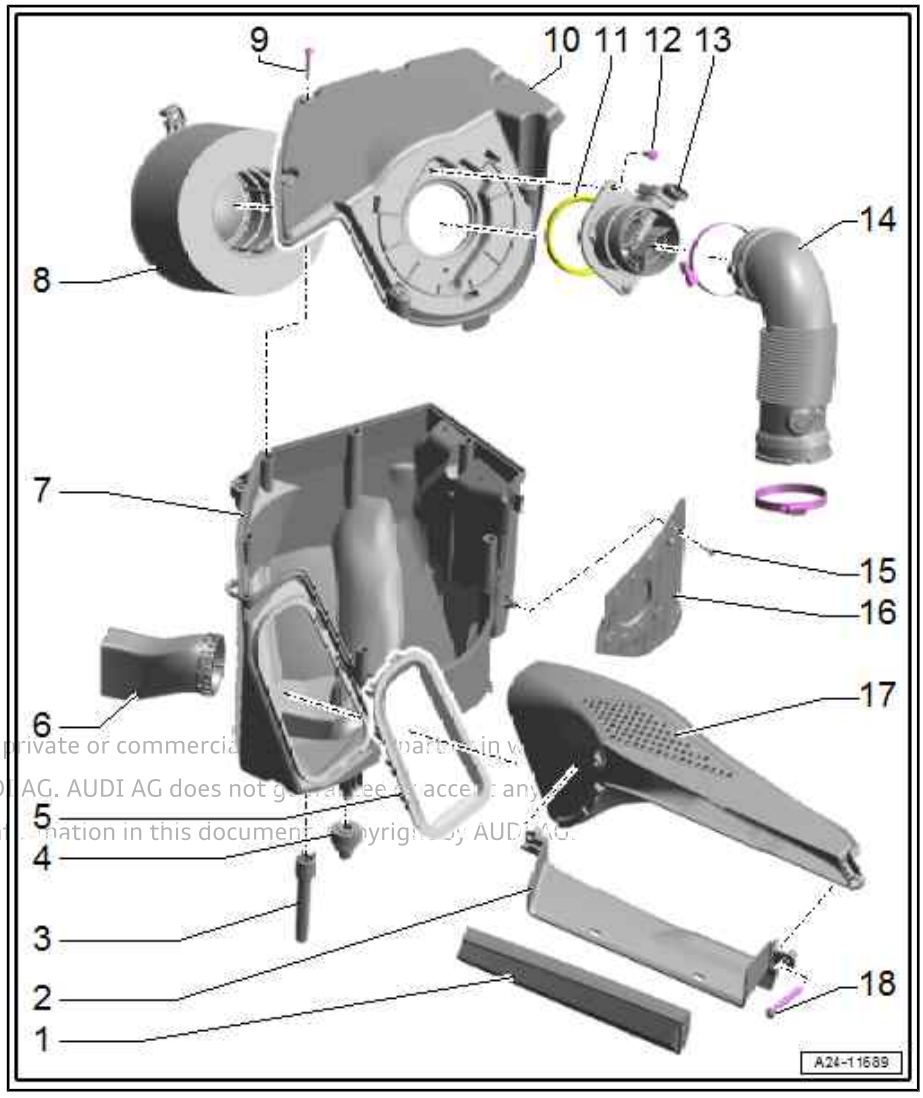

1 - Snow screen

- ❑ Country-specific version

2 - Air duct

- ❑ On lock carrier
- ❑ Remove any salt deposits or dirt

3 - Water drain

- ❑ Clean

4 - Mounting

- ❑ For air cleaner housing

5 - Sealing element

6 - Air duct

- ❑ For country-specific version with variable intake manifold change-over valve - N335-
- ❑ Not fitted after air cleaner (bottom section) has been renewed ⇒ page 180

7 - Air cleaner (bottom section)

- ❑ Remove any salt deposits or dirt
- ❑ Country-specific version: variable intake manifold changeover valve - N335- is not fitted after air cleaner (bottom section) has been renewed ⇒ page 180
- ❑ Removing and installing ⇒ page 178

Protected by copyright. Copying for private or commercial purposes, in part, is not permitted unless authorised by AUDI AG. AUDI AG does not guarantee or accept any liability with respect to the correctness of information in this document. Copyright by AUDI AG.

8 - Air filter element

- ❑ Use genuine air filter element ⇒ Electronic parts catalogue
- ❑ Change intervals ⇒ Maintenance tables
- ❑ Removing and installing ⇒ Maintenance ; Booklet 830 ; Maintenance; Air cleaner: renewing filter element and cleaning housing

9 - Bolt

- ❑ Thread-forming
- ❑ Fit and screw in bolt by hand so that it is screwed into old thread. Then tighten bolt to torque
- ❑ 3.5 Nm

10 - Air cleaner (top section)

- ❑ Remove any salt deposits or dirt
- ❑ Removing and installing ⇒ Maintenance ; Booklet 830 ; Maintenance; Air cleaner: renewing filter element and cleaning housing

11 - Seal

- ❑ Check for damage

12 - Bolt

- ❑ Thread-forming
- ❑ Fit and screw in bolt by hand so that it is screwed into old thread. Then tighten bolt to torque
- ❑ 3.5 Nm

13 - Air mass meter - G70-

- ❑ Removing and installing ⇒ page 200

14 - Air pipe

- ❑ Observe installation markings
- ❑ Tightening torque for screw-type clips ⇒ page 158

15 - Bolt

- ❑ Thread-forming
- ❑ Fit and screw in bolt by hand so that it is screwed into old thread. Then tighten bolt to torque
- ❑ 1.5 Nm

16 - Heat shield

17 - Air duct

- ❑ On lock carrier
- ❑ Remove any salt deposits or dirt

18 - Bolt

- ❑ Thread-forming
- ❑ Fit and screw in bolt by hand so that it is screwed into old thread. Then tighten bolt to torque
- ❑ 2.5 Nm

Protected by copyright. Copying for private or commercial purposes, in part or in whole, is not permitted unless authorised by AUDI AG. AUDI AG does not guarantee or accept any liability with respect to the correctness of information in this document. Copyright by AUDI AG.

2.2 Removing and installing air cleaner housing

Special tools and workshop equipment required

- ♦ Engine bung set - VAS 6122-

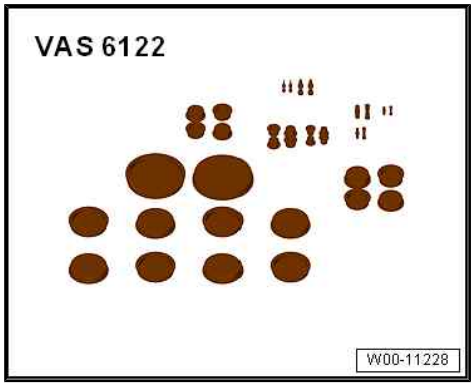

Removing

– Remove lock carrier cover ⇒ General body repairs, exterior; Rep. gr. 63 ; Bumper (front); Exploded view - bumper cover .

Vehicles with air filter bypass flap valve - N275- :

– Remove wheel spoiler (front right) ⇒ General body repairs, exterior; Rep. gr. 66 ; Wheel housing liners; Exploded view - wheel housing liner (front) .

– Unplug electrical connector -2- for air filter bypass flap valve - N275- .

– Detach water drain -1- downwards -arrow-.

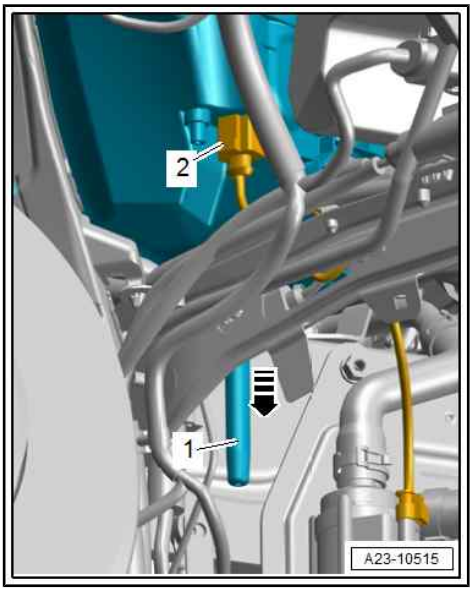

All vehicles (continued):

– Remove bolts -arrows- and detach air duct -2- from lock carrier.

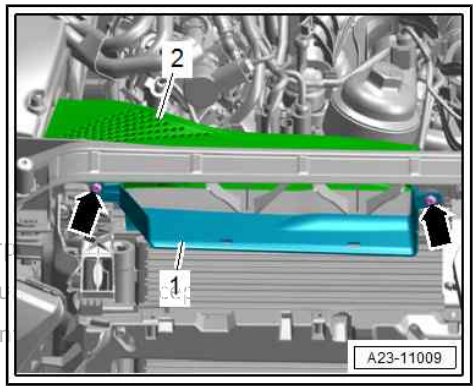

Protected by copyright. Copying for private or commercial purp
permitted unless authorised by AUDI AG. AUDI AG does not gu
with respect to the correctness of information in this documen

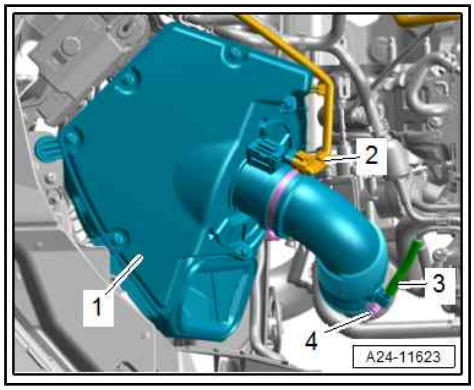

– Unplug electrical connector -2- for air mass meter - G70- .
– Disconnect vacuum hose -3-.
– Release hose clip -4- and disconnect air hose.
– Lift off air cleaner housing -1-.
– Seal off turbocharger with sealing plug (thoroughly cleaned) from engine bung set - VAS 6122- .

Installing

Installation is carried out in reverse order; note the following:

Note

- *The air cleaner housing must always be clean.*
- *Use soap solution when fitting air hose.*
- *Secure all hose connections with correct type of hose clips (as original equipment) ⇒ Electronic parts catalogue .*
- *Country-specific version:*
  variable intake manifold changeover valve - N335- is not fitted after renewal; fit a mating plug onto electrical connector in electrical wiring harness ⇒ Electronic parts catalogue .

– Check water drain in air cleaner (bottom section) for dirt and other obstructions and clean if necessary.
– Check for dirt in air duct going from lock carrier to air cleaner housing.
– Install lock carrier cover ⇒ General body repairs, exterior; Rep. gr. 63 ; Bumper (front); Exploded view - bumper cover .

Protected by copyright. Copying for private or commercial purposes, in part or in whole, is not permitted unless authorised by AUDI AG. AUDI AG does not guarantee or accept any liability with respect to the correctness of information in this document. Copyright by AUDI AG.

Tightening torques

- ⇒ “2.1 Exploded view - air cleaner housing”, page 177
- ⇒ Servicing 4-cylinder engine, 2.0 ltr. 4-valve TFSI; Rep. gr. 21 ; Charge air system; Exploded view - hose connections for charge air system
- ⇒ General body repairs, exterior; Rep. gr. 66 ; Wheel housing liners; Exploded view - wheel housing liner (front)

3 Intake manifold

⇒ “3.1 Exploded view - intake manifold”, page 181

⇒ “3.2 Removing and installing intake manifold”, page 181

⇒ “3.3 Removing and installing throttle valve module GX3 ”, page 185

3.1 Exploded view - intake manifold

All components are described in ⇒ Servicing 4-cylinder engine, 2.0 ltr. 4-valve TFSI; Rep. gr. 24 ; Intake manifold; Exploded view - intake manifold .

3.2 Removing and installing intake manifold

⇒ “3.2.1 Removing and installing intake manifold - vehicles without particulate filter”, page 181

⇒ “3.2.2 Removing and installing intake manifold - vehicles with particulate filter”, page 182

⇒ “3.2.3 Removing and installing intake manifold - vehicles with natural gas system”, page 182

3.2.1 Removing and installing intake manifold - vehicles without particulate filter

Protected by copyright. Copying for private or commercial purposes, in part or in whole, is not permitted unless authorised by AUDI AG. AUDI AG does not guarantee or accept any liability with respect to the correctness and completeness of this document. Copyright by AUDI AG.

Special tools and workshop equipment required

- Assembly tool - T10118-

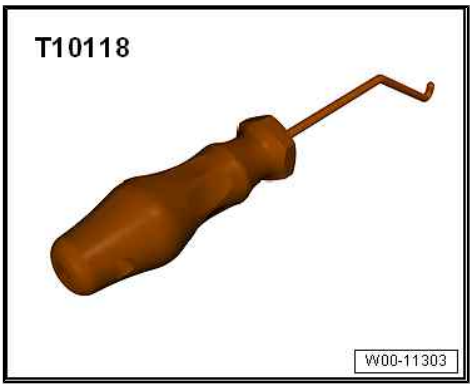

Removing

– Remove engine cover panel ⇒ Servicing 4-cylinder engine, 2.0 ltr. 4-valve TFSI; Rep. gr. 10 ; Engine cover panel; Removing and installing engine cover panel .

– Use assembly tool - T10118- to release electrical connector for fuel pressure sender - G247- and unplug it.

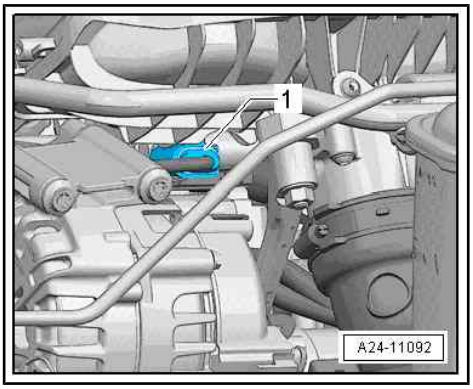

All further procedures are described in ⇒ Servicing 4-cylinder engine, 2.0 ltr. 4-valve TFSI; Rep. gr. 24 ; Intake manifold; Removing and installing intake manifold .

Installing

Additional work:

– Install engine cover panel ⇒ Servicing 4-cylinder engine, 2.0 ltr. 4-valve TFSI; Rep. gr. 10 ; Engine cover panel; Removing and installing engine cover panel .

3.2.2 Removing and installing intake manifold - vehicles with particulate filter

Removing

– Remove engine cover panel ⇒ Servicing 4-cylinder engine, 2.0 ltr. 4-valve TFSI; Rep. gr. 10 ; Engine cover panel; Removing and installing engine cover panel .

– Take electrical connector -2- for exhaust gas temperature sender 3 - G495- / exhaust gas temperature sender 4 - G648- out of bracket and unplug.

– Release retaining clip -3- and move vacuum hose clear.

– Remove bolt -1- and push bracket to one side. (Different versions.)

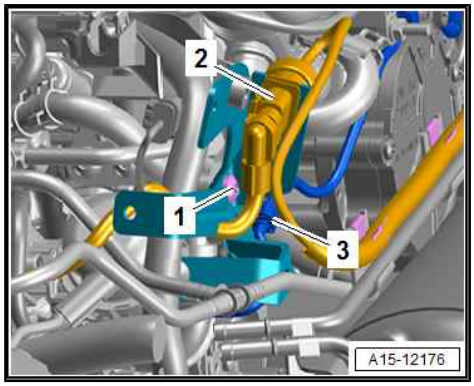

– Unplug electrical connector -1- for exhaust gas temperature sender 3 - G495- and move wiring clear.

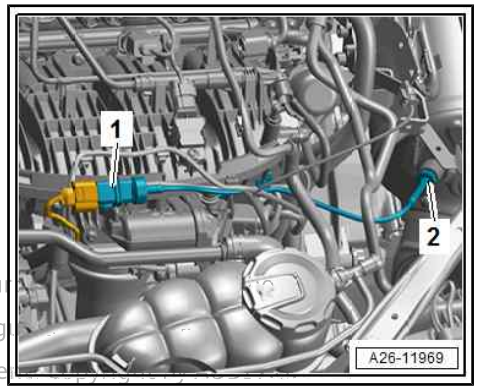

Protected by copyright. Copying for private or commercial pu
permitted unless authorised by AUDI AG. AUDI AG does not g
with respect to the correctness of information in this docume

Pressure differential sender for particulate filter - G1037- - version 1:

– Unplug electrical connector -1- for pressure differential sender for particulate filter - G1037- .

– Move bracket with pressure differential sender clear at intake manifold -arrow-.

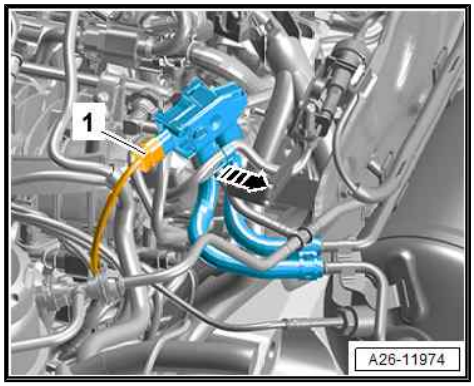

All further procedures are described in ⇒ Servicing 4-cylinder engine, 2.0 ltr. 4-valve TFSI; Rep. gr. 24 ; Intake manifold; Removing and installing intake manifold .

Installing

Additional work:

– Install engine cover panel ⇒ Servicing 4-cylinder engine, 2.0 ltr. 4-valve TFSI; Rep. gr. 10 ; Engine cover panel; Removing and installing engine cover panel .

Tightening torques

♦ ⇒ Servicing 4-cylinder engine, 2.0 ltr. 4-valve TFSI; Rep. gr. 15 ; Cylinder head; Exploded view - cylinder head

3.2.3 Removing and installing intake manifold - vehicles with natural gas system

Special tools and workshop equipment required

♦ Engine bung set - VAS 6122-

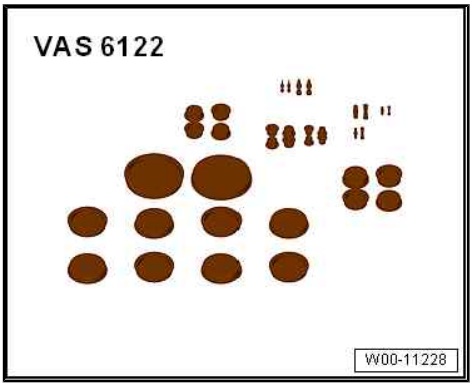

♦ Assembly tool - T10118-

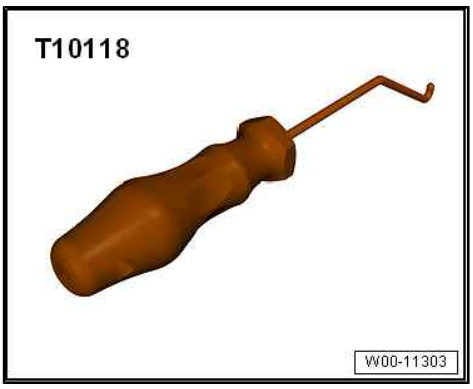

Removing

– Observe safety precautions ⇒ Servicing 4-cylinder engine, 2.0 ltr. 4-valve TFSI; Rep. gr. 00 ; Safety precautions .

– Observe safety precautions when working on the natural gas system ⇒ page 2 .

– Observe rules for cleanliness ⇒ Servicing 4-cylinder engine, 2.0 ltr. 4-valve TFSI; Rep. gr. 00 ; Repair notes; Rules for cleanliness .

WARNING

Risk of explosion due to uncontrolled gas escape in connection with ignition sources and electrostatic discharge - risk of death!

Danger of severe or fatal injuries due to explosion.

- ***Pressure in natural gas high-pressure pipe must be dissipated by a specially instructed person.***
- ***Shut off natural gas fuel tanks electrically and manually.***

Protected by copyright. Copying for private or commercial purposes, in part or in whole, is not permitted unless authorised by AUDI AG. AUDI AG does not guarantee or accept any liability with respect to the correctness of information in this document. Copyright by AUDI AG.

– Dissipate pressure in natural gas high-pressure pipe ⇒ Fuel supply system - g-tron; Rep. gr. 20 ; Fuel tanks; Dissipating fuel pressure in high-pressure section .

– Remove battery tray ⇒ Electrical system; Rep. gr. 27 ; Battery; Removing and installing battery tray .

– Remove engine cover panel ⇒ Servicing 4-cylinder engine, 2.0 ltr. 4-valve TFSI; Rep. gr. 10 ; Engine cover panel; Removing and installing engine cover panel .

– Use assembly tool - T10118- to release electrical connector for fuel pressure sender - G247- and unplug it.

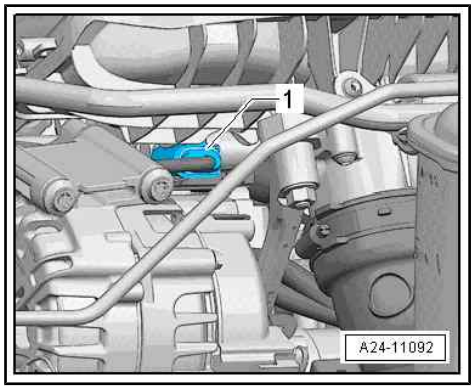

– Unscrew natural gas low-pressure pipe -1- from gas rail; to do so, counterhold at connection with a suitable tool.

– Seal off open lines and connections with plugs (thoroughly cleaned) from engine bung set - VAS 6122- .

All further procedures are described in ⇒ Servicing 4-cylinder engine, 2.0 ltr. 4-valve TFSI; Rep. gr. 24 ; Intake manifold; Removing and installing intake manifold .

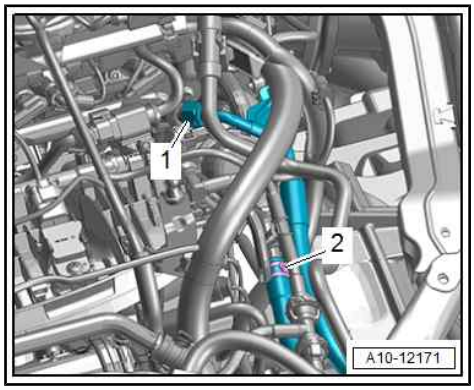

Installing

Additional work:

– Install battery tray ⇒ Electrical system; Rep. gr. 27 ; Battery; Removing and installing battery tray .

– Install engine cover panel ⇒ Servicing 4-cylinder engine, 2.0 ltr. 4-valve TFSI; Rep. gr. 10 ; Engine cover panel; Removing and installing engine cover panel .

WARNING

Risk of explosion due to uncontrolled gas escape in connection with ignition sources and electrostatic discharge - risk of death!

Danger of severe or fatal injuries due to explosion.

- ***Natural gas system must be re-started by a specially instructed person.***

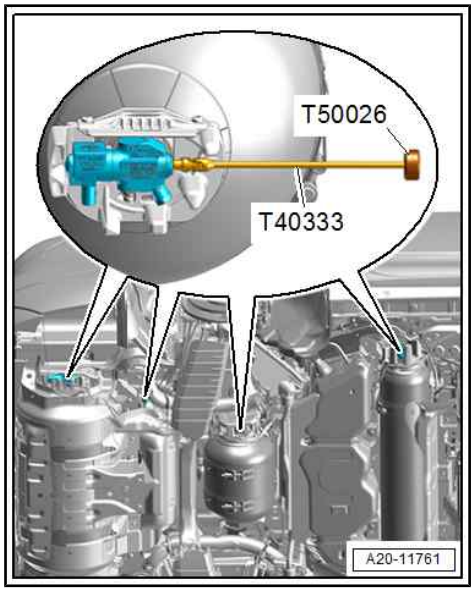

– Open manual shut-off mechanisms of mechanical tank shut-off valves using extension -T40333- and hand wheel - T50026- , and plug in electrical connectors if necessary.

WARNING

Risk of explosion due to escaping natural gas - risk of death! Leaks in the natural gas system can cause uncontrolled escape of natural gas.

Danger of severe or fatal injuries due to explosion.

- ***Check natural gas system for leaks.***

Protected by copyright. Copying for private or commercial purposes, in part or in whole, is not permitted unless authorised by AUDI AG. AUDI AG does not guarantee or accept any liability with respect to the correctness of information in this document. Copyright by AUDI AG.

– Perform leak test on low-pressure section of natural gas system ⇒ Natural gas engines - General information; Rep. gr. 00 ; Checking natural gas system .

3.3 Removing and installing throttle valve module - GX3-

⇒ "3.3.1 Removing and installing throttle valve module GX3 - vehicles without natural gas system", page 185

⇒ "3.3.2 Removing and installing throttle valve module GX3 - vehicles with natural gas system", page 185

3.3.1 Removing and installing throttle valve module - GX3- - vehicles without natural gas system

Protected by copyright. Copying for private or commercial purposes, in part or in whole, is not permitted unless authorised by AUDI AG. AUDI AG does not guarantee or accept any liability with respect to the correctness of information in this document. Copyright by AUDI AG.

All procedures are described in ⇒ Servicing 4-cylinder engine, 2.0 ltr. 4-valve TFSI; Rep. gr. 24 ; Intake manifold; Removing and installing throttle valve module - GX3- .

3.3.2 Removing and installing throttle valve module - GX3- - vehicles with natural gas system

Removing

– Remove battery tray ⇒ Electrical system; Rep. gr. 27 ; Battery; Removing and installing battery tray .

All further procedures are described in ⇒ Servicing 4-cylinder engine, 2.0 ltr. 4-valve TFSI; Rep. gr. 24 ; Intake manifold; Removing and installing throttle valve module - GX3- .

Installing

Additional work:

– Install battery tray ⇒ Electrical system; Rep. gr. 27 ; Battery; Removing and installing battery tray .

4 Injectors

⇒ “4.1 Exploded view - fuel rail with injectors”, page 186

⇒ “4.2 Removing and installing fuel rail”, page 186

⇒ “4.3 Removing and installing injectors”, page 186

⇒ “4.4 Cleaning injectors”, page 188

4.1 Exploded view - fuel rail with injectors

All components are described in ⇒ Servicing 4-cylinder engine, 2.0 ltr. 4-valve TFSI; Rep. gr. 24 ; Injectors; Exploded view - fuel rail with injectors .

4.2 Removing and installing fuel rail

⇒ “4.2.1 Removing and installing fuel rail - vehicles with alternator”, page 186

⇒ “4.2.2 Removing and installing fuel rail - vehicles with starter-alternator”, page 186

4.2.1 Removing and installing fuel rail - vehicles with alternator

All procedures are described in ⇒ Servicing 4-cylinder engine, 2.0 ltr. 4-valve TFSI; Rep. gr. 24 ; Injectors; Removing and installing fuel rail .

4.2.2 Removing and installing fuel rail - vehicles with starter-alternator

Removing

– Unplug electrical connector -arrow- for fuel pressure sender - G247- .

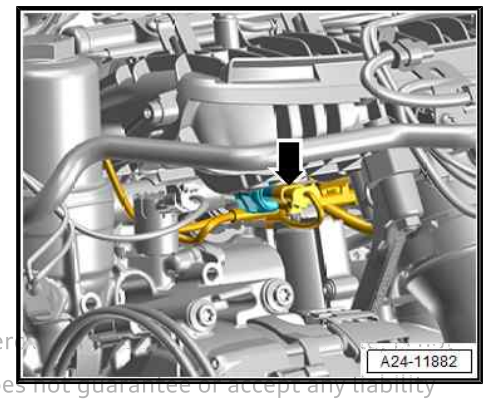

All further procedures are described in ⇒ Servicing 4-cylinder engine, 2.0 ltr. 4-valve TFSI; Rep. gr. 24 ; Injectors; Removing and installing fuel rail .

Protected by copyright. Copying for private or commer
permitted unless authorised by AUDI AG. AUDI AG does not guarantee or accept any liability
nation in this document. Copyright by AUDI AG.

4.3 Removing and installing injectors

⇒ “4.3.1 Removing and installing injectors - vehicles with FSI engine”, page 186

⇒ “4.3.2 Removing and installing injectors - vehicles with MPI engine”, page 187

⇒ “4.3.3 Removing and installing injector sleeves - vehicles with natural gas system”, page 187

4.3.1 Removing and installing injectors - vehicles with FSI engine

All procedures are described in ⇒ Servicing 4-cylinder engine, 2.0 ltr. 4-valve TFSI; Rep. gr. 24 ; Injectors; Removing and installing injectors .

4.3.2 Removing and installing injectors - vehicles with MPI engine

All procedures are described in ⇒ Servicing 4-cylinder engine, 2.0 ltr. 4-valve TFSI; Rep. gr. 24 ; Injectors; Removing and installing injectors .

4.3.3 Removing and installing injector sleeves - vehicles with natural gas system

Special tools and workshop equipment required

- Puller -T40360-

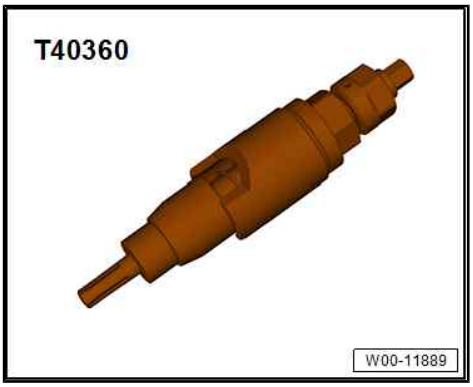

- Thrust piece - T40361-

Protected by copyright. Copying for private or commercial purposes, in part or in whole, is not permitted unless authorised by AUDI AG. AUDI AG does not guarantee or accept any liability with respect to the correctness of information in this document. Copyright by AUDI A

Note

- *The protective sleeve must be renewed if the FSI injector or the support has been renewed.*
- *It is not necessary to renew the protective sleeve if the removed FSI injector is re-installed.*
- *The FSI injector can be re-installed if the protective sleeve has been renewed.*

Preparing puller -T40360-

– Turn nut -1- anti-clockwise -arrow B- by hand as far as stop on circlip -2- (counterhold at hexagon head -4-).

– Turn nut -3- clockwise -arrow A- by hand as far as stop on circlip -2- (counterhold at hexagon head -4-).

Removing

- FSI injectors removed ⇒ Servicing 4-cylinder engine, 2.0 ltr. 4-valve TFSI; Rep. gr. 24 ; Injectors; Removing and installing injectors .

– Insert puller -T40360- all the way into relevant hole for injector.

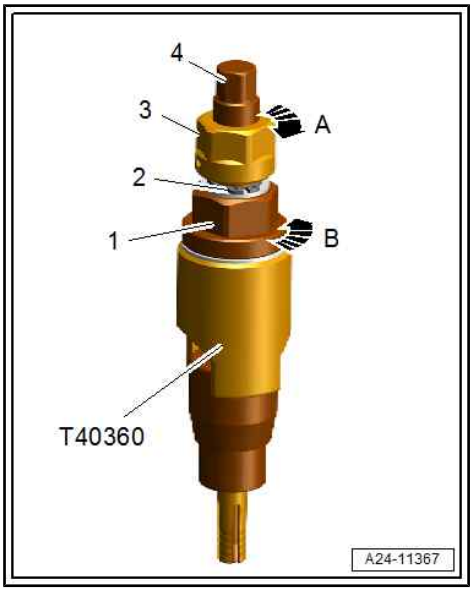

Note

- *Use a torque wrench to fix the injector sleeve in position.*
- *Set torque wrench to 5 Nm.*

– To fix injector sleeve in position, turn nut -2- clockwise -arrow A- until limit torque is reached (counterhold at hexagon head -1-).

– To pull out injector sleeve, turn nut -3- anti-clockwise -arrow B- (counterhold at hexagon head -1-).

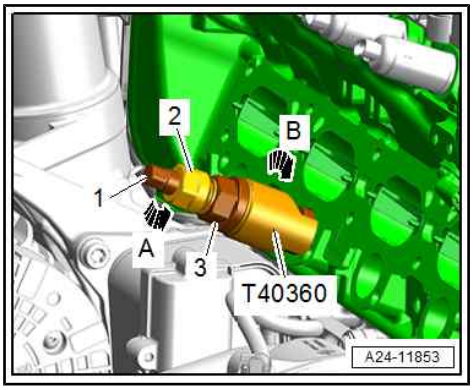

Installing

– Use thrust piece - T40361- to carefully insert injector sleeve -1- as far as it will go into hole in cylinder head -2-.

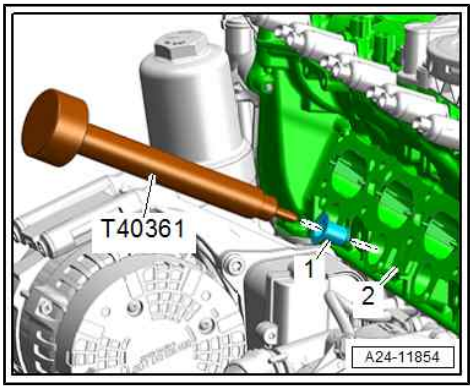

4.4 Cleaning injectors

All procedures are described in ⇒ Servicing 4-cylinder engine, 2.0 ltr. 4-valve TFSI; Rep. gr. 24 ; Injectors; Cleaning injectors .

Protected by copyright. Copying for private or commercial purposes, in part or in whole, is not permitted unless authorised by AUDI AG. AUDI AG does not guarantee or accept any liability with respect to the correctness of information in this document. Copyright by AUDI AG.

5 Gas injection valves

⇒ “5.1 Exploded view - gas rail”, page 189

⇒ “5.2 Removing and installing gas rail with gas injection valve N366 / N367 / N368 / N369 ”, page 190

⇒ “5.3 Removing and installing gas injection valve”, page 193

5.1 Exploded view - gas rail

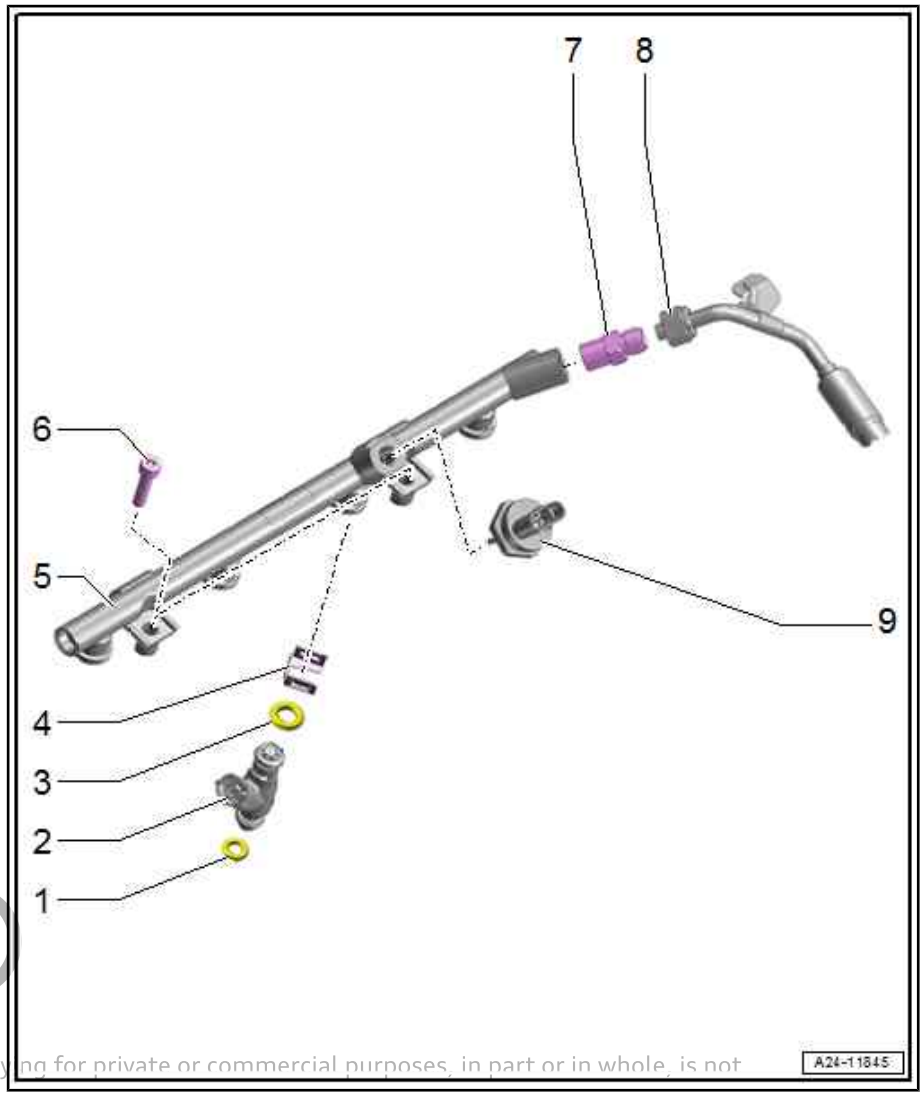

1 - O-ring

- ❑ Renew after removing
- ❑ Must be installed dry

2 - Gas injection valve

- ❑ Removing and installing ⇒ “5.2 Removing and installing gas rail with gas injection valve N366 / N367 / N368 / N369 ”, page 190
- ❑ After removing, perform leak test on low-pressure section of natural gas system ⇒ Natural gas engines - General information; Rep. gr. 00 ; Checking natural gas system

3 - O-ring

- ❑ Renew after removing
- ❑ Must be installed dry

4 - Retaining clip

- ❑ Renew after removing
- ❑ Ensure it is positioned correctly on gas injection valve and fuel rail

5 - Gas rail

- ❑ After removing, perform leak test on low-pressure section of natural gas system ⇒ Natural gas engines - General information; Rep. gr. 00 ; Checking natural gas system

Protected by copyright. Copying for private or commercial purposes, in part or in whole, is not permitted unless authorised by AUDI AG. AUDI AG does not guarantee or accept any liability with respect to the correctness of information in this document. Copyright by AUDI AG.

6 - Bolt

- ❑ 7 Nm

7 - Connection

- ❑ Not available as replacement part

8 - Natural gas low-pressure pipe

- ❑ Installation position ⇒ page 190
- ❑ Screw on union nut by hand until it makes contact
- ❑ 5 Nm +70°

9 - Gas rail temperature and pressure sensor - GX21-

- ❑ Removing and installing
  ⇒ “7.6 Removing and installing gas rail temperature and pressure sensor GX21 ”, page 202
- ❑ Lubricate taper seal and thread lightly with silicone-free oil
- ❑ After removing, perform leak test on low-pressure section of natural gas system ⇒ Natural gas engines - General information; Rep. gr. 00 ; Checking natural gas system
- ❑ Counterhold at connection with a suitable tool to tighten on gas rail
- ❑ Tighten in stages:

- Pre-tighten to 27 Nm
- Turn back by 60°
- Final tightening torque: 34 Nm

Natural gas low-pressure pipe - installation position

– Bring natural gas low-pressure pipe into installation position and screw on union nut -2- by hand until it makes contact.

- Locating element -4- must make contact with engine lifting eye -3-.

– Tighten union nut; to do so, counterhold at connection -1- with a suitable tool.

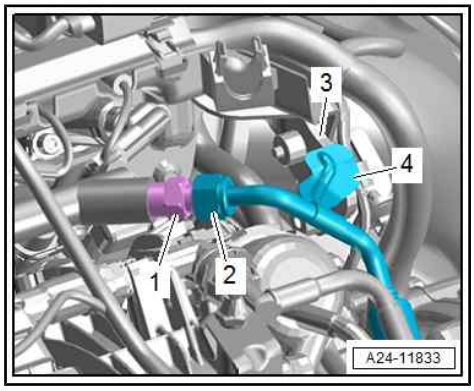

5.2 Removing and installing gas rail with gas injection valve -N366- / -N367- / -N368- / -N369-

Special tools and workshop equipment required

◆ Socket Torx T30 - T10405-

Protected by copyright. Copying for private or commercial purposes, in part or in whole, is not permitted unless authorised by AUDI AG. AUDI AG does not guarantee or accept liability with respect to the correctness of information in this document. Copyright by AUDI AG.

Removing

– Observe safety precautions ⇒ Servicing 4-cylinder engine, 2.0 ltr. 4-valve TFSI; Rep. gr. 00 ; Safety precautions .

– Observe safety precautions when working on the natural gas system ⇒ page 2 .

– Observe rules for cleanliness ⇒ Servicing 4-cylinder engine, 2.0 ltr. 4-valve TFSI; Rep. gr. 00 ; Repair notes; Rules for cleanliness .

WARNING

Risk of explosion due to uncontrolled gas escape in connection with ignition sources and electrostatic discharge - risk of death!

Danger of severe or fatal injuries due to explosion.

- ***Pressure in natural gas high-pressure pipe must be dissipated by a specially instructed person.***
- ***Shut off natural gas fuel tanks electrically and manually.***

– Dissipate pressure in natural gas high-pressure pipe ⇒ Fuel supply system - g-tron; Rep. gr. 20 ; Fuel tanks; Dissipating fuel pressure in high-pressure section .

– Switch off ignition and remove ignition key.

– Remove engine cover panel ⇒ Servicing 4-cylinder engine, 2.0 ltr. 4-valve TFSI; Rep. gr. 10 ; Engine cover panel; Removing and installing engine cover panel .

– Detach electrical connector -3- from bracket and unplug.

– Move electrical wiring clear at intake manifold.

– Detach vacuum line -1- and coolant line -2- from intake manifold.

– Unplug electrical connectors -4, 5-.

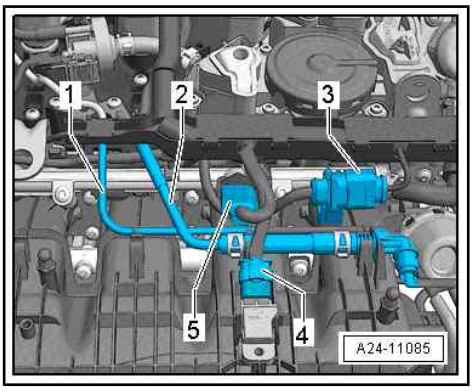

– Unscrew bolt -arrow- using socket Torx T30 - T10405- and detach bracket -1- for electrical connectors.

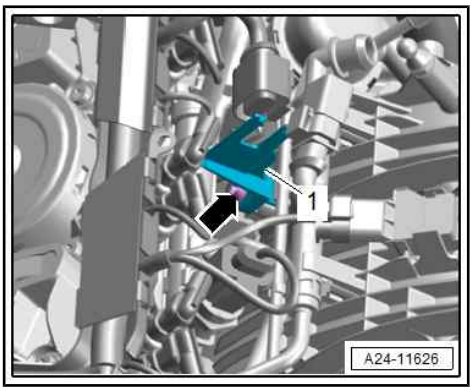

– Unscrew union nut -2- for natural gas low-pressure pipe; to do so, counterhold at connection -1- with a suitable tool.

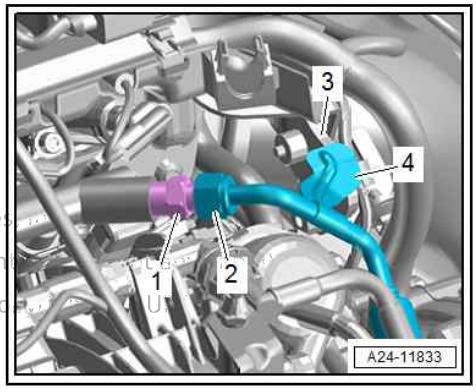

Protected by copyright. Copying for private or commercial purposes
permitted unless authorised by AUDI AG. AUDI AG does not guaran
with respect to the correctness of information in this document. Co

– Move electrical wiring harness -1- clear at engine lifting eye.
– Unscrew bolts -arrows- for gas rail.
– Carefully lift out gas rail -2- with gas injection valves.

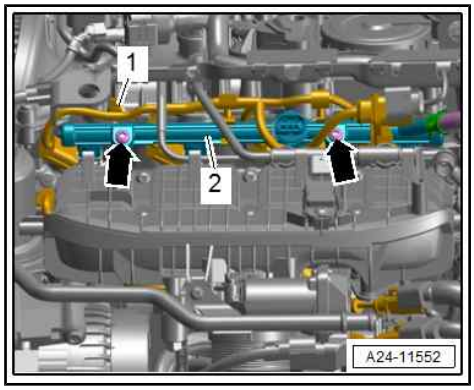

Installing

Installation is carried out in reverse order; note the following:

Note

Renew O-rings after removing.

– Lubricate O-rings with clean engine oil prior to installation.
– Press gas rail with gas injection valves by hand as far as it will go into aperture of intake manifold (gas injection valves must be free of oil and grease).
– Install engine cover panel ⇒ Servicing 4-cylinder engine, 2.0 ltr. 4-valve TFSI; Rep. gr. 10 ; Engine cover panel; Removing and installing engine cover panel .

WARNING

Risk of explosion due to uncontrolled gas escape in connection with ignition sources and electrostatic discharge - risk of death!

Danger of severe or fatal injuries due to explosion.

- ***Natural gas system must be re-started by a specially instructed person.***

Copyright by AUDI AG. Any copying for commercial use, or in whole, is permitted unless authorised by AUDI AG. AUDI AG does not guarantee or accept any liability with respect to the correctness of information in this document.

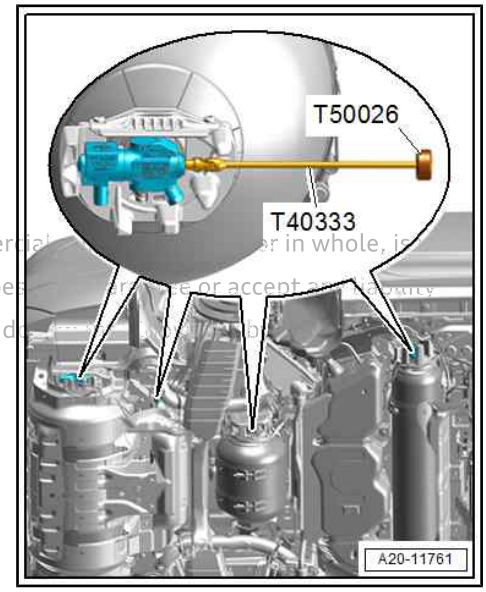

– Open manual shut-off mechanisms of mechanical tank shut-off valves using extension -T40333- and hand wheel -T50026- , and plug in electrical connectors if necessary.

WARNING

Risk of explosion due to escaping natural gas - risk of death! Leaks in the natural gas system can cause uncontrolled escape of natural gas.

Danger of severe or fatal injuries due to explosion.

- ***Check natural gas system for leaks.***

– Perform leak test on low-pressure section of natural gas system ⇒ Natural gas engines - General information; Rep. gr. 00 ; Checking natural gas system .

Tightening torques

- ⇒ “5.1 Exploded view - gas rail”, page 189
- ⇒ Servicing 4-cylinder engine, 2.0 ltr. 4-valve TFSI; Rep. gr. 24 ; Intake manifold; Exploded view - intake manifold

5.3 Removing and installing gas injection valve

Removing

- Gas rail with gas injection valves -N366- / -N367- / -N368- / -N369- removed ⇒ page 190

– Unplug electrical connector -4-.

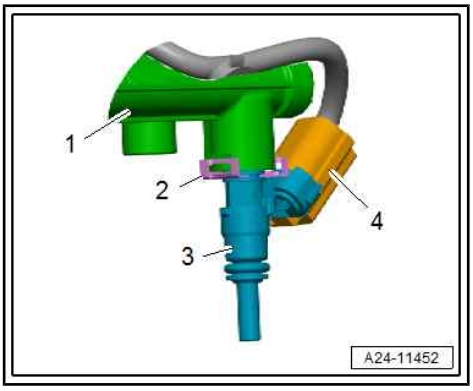

– Remove retaining clip -2- and detach gas injection valve -3- from gas rail -1-.

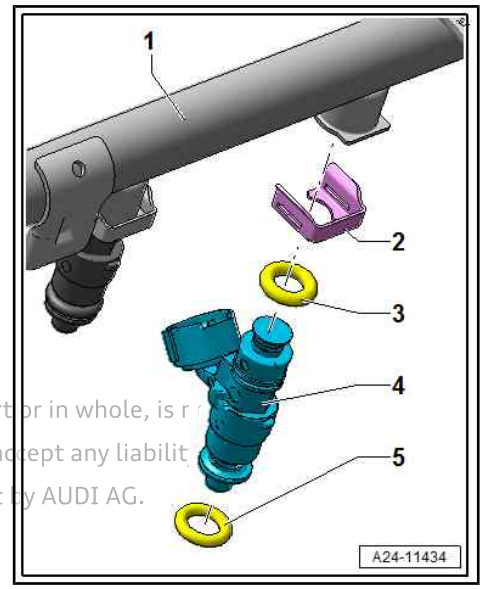

2 - Retaining clip

3 - O-ring

5 - O-ring

Installing

Installation is carried out in reverse order; note the following:

Note

Renew retaining clips and O-rings after removal.

Protected by copyright. Copying for private or commercial purposes, in part or in whole, is r
permitted unless authorised by AUDI AG. AUDI AG does not guarantee or accept any liabilit
with respect to the correctness of information in this document. Copyright by AUDI AG.

– Fit O-rings -3, 5- and check that they are seated correctly (O-rings must be dry).

– Note correct installation position of retaining clip -2- relative to gas injection valve -4-.

– Ensure that gas injection valve is seated correctly on connection to gas rail -1-.

6 Gas pressure regulator

⇒ “6.1 Exploded view - gas pressure regulator”, page 194

⇒ “6.2 Removing and installing gas pressure regulator”, page 195

6.1 Exploded view - gas pressure regulator

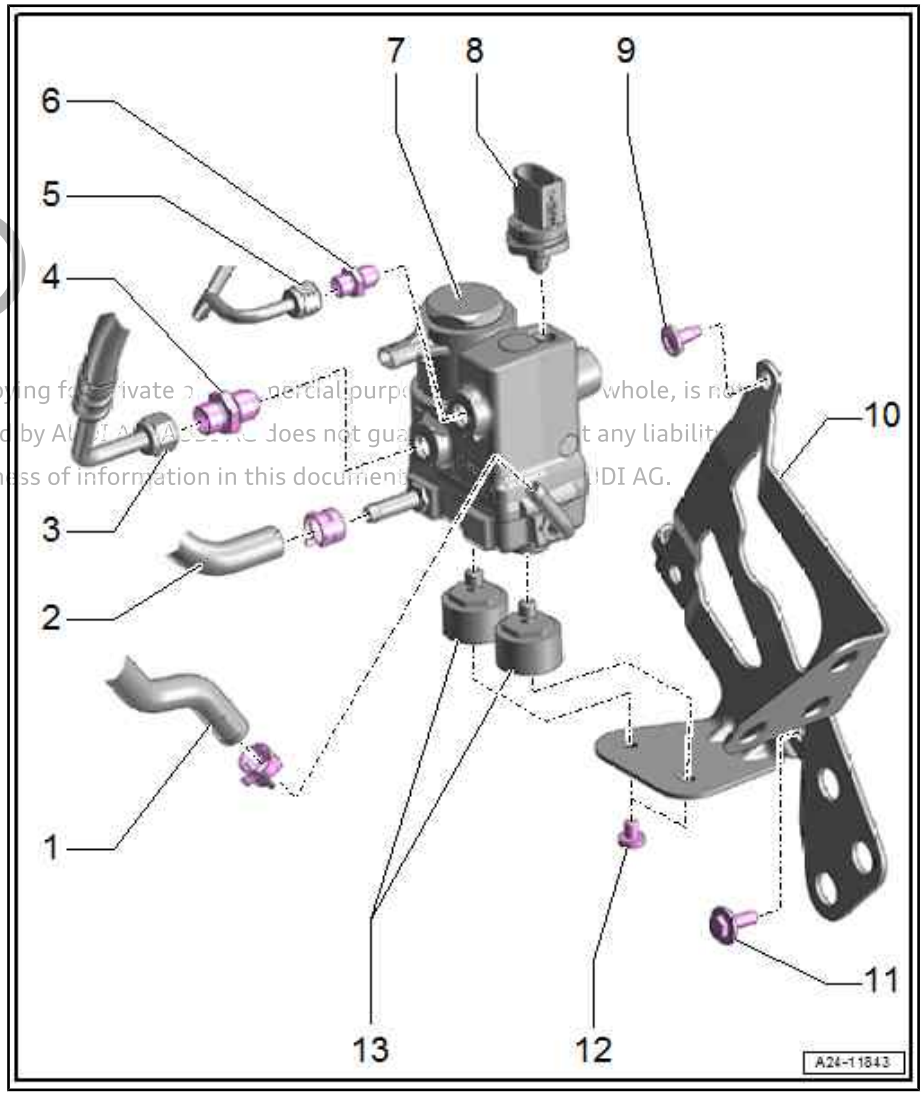

1 - Coolant hose

- To coolant expansion tank

2 - Coolant hose

- From engine

3 - Natural gas low-pressure pipe

- Installation position ⇒ page 195
- If leaks are present, unscrew union nut completely and re-tighten it
- 5 Nm +135°

4 - Pipe connection

- With O-rings (supplied with pipe connection)
- Renew after loosening
- Apply locking fluid when installing; refer to ⇒ Electronic parts catalogue
- 18 Nm

5 - High-pressure pipe

- Counterhold at pipe connection when loosening
- Do not alter shape
- Screw in union nut by hand until it makes contact
- 17 Nm

6 - Pipe connection

- With O-rings (supplied with pipe connection)
- Renew after loosening
- Apply locking fluid when installing; refer to ⇒ Electronic parts catalogue
- 18 Nm

7 - Gas pressure regulator

- With high-pressure valve for gas mode - N372-
- Removing and installing ⇒ “6.2 Removing and installing gas pressure regulator”, page 195

8 - Sensor module - GX23-

- Removing and installing ⇒ “7.7 Removing and installing sensor module GX23 ”, page 203
- 20 Nm

9 - Bolt

- 8 Nm

10 - Bracket

11 - Bolt

- ❑ 2x
- ❑ 8 Nm

12 - Bolt

- ❑ 2x
- ❑ 8 Nm

13 - Bonded rubber bush

- ❑ Screw in by hand until contact is made

Protected by copyright. Copying for private or commercial purposes, in part or in whole, is not permitted unless authorised by AUDI AG. AUDI AG does not guarantee or accept any liability with respect to the correctness of information in this document. Copyright by AUDI AG.

Natural gas low-pressure pipe - installation position

– Move natural gas low-pressure pipe into installation position.

• Angle -α- = max. 35°

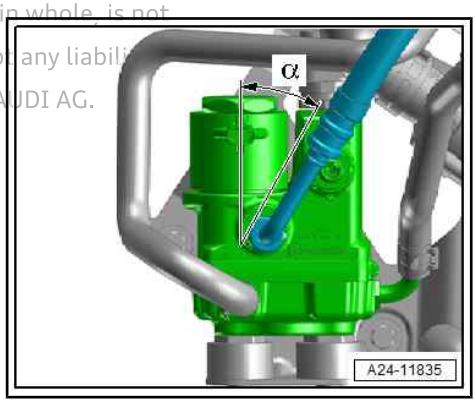

6.2 Removing and installing gas pressure regulator

Special tools and workshop equipment required

♦ Hose clamps up to 25 mm - 3094-

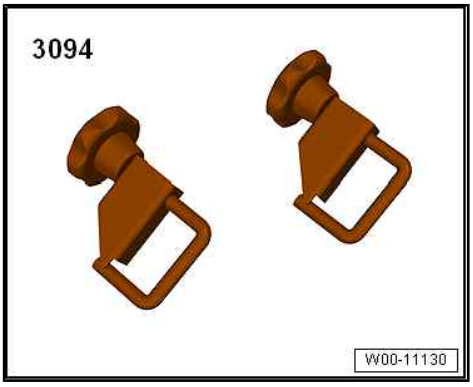

♦ Engine bung set - VAS 6122-

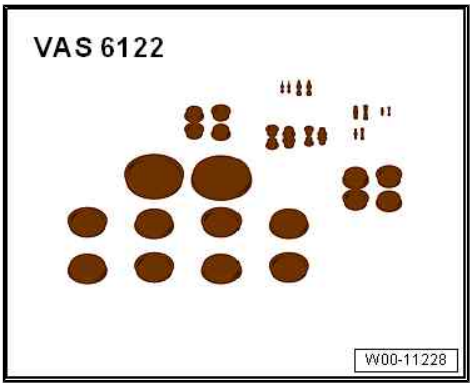

Removing

– Observe safety precautions ⇒ Servicing 4-cylinder engine, 2.0 ltr. 4-valve TFSI; Rep. gr. 00 ; Safety precautions .

– Observe safety precautions when working on the natural gas system ⇒ page 2 .

– Observe rules for cleanliness ⇒ Servicing 4-cylinder engine, 2.0 ltr. 4-valve TFSI; Rep. gr. 00 ; Repair notes; Rules for cleanliness .

WARNING

Risk of explosion due to uncontrolled gas escape in connection with ignition sources and electrostatic discharge - risk of death!

Danger of severe or fatal injuries due to explosion.

- ***Pressure in natural gas high-pressure pipe must be dissipated by a specially instructed person.***
- ***Shut off natural gas fuel tanks electrically and manually.***

– Dissipate pressure in natural gas high-pressure pipe ⇒ Fuel supply system - g-tron; Rep. gr. 20 ; Fuel tanks; Dissipating fuel pressure in high-pressure section .

– Switch off ignition and remove ignition key.

– Disconnect battery ⇒ Electrical system; Rep. gr. 27 ; Battery; Disconnecting and connecting battery .

– Remove engine cover panel ⇒ Servicing 4-cylinder engine, 2.0 ltr. 4-valve TFSI; Rep. gr. 10 ; Engine cover panel; Removing and installing engine cover panel .

– Vehicles with natural gas system: Release catches -arrows B- and open cover -1- -arrow A-.

Protected by copyright. Copying for private or commercial purpo
permitted unless authorised by AUDI AG. AUDI AG does not gua
with respect to the correctness of information in this document.

WARNING

The cooling system is under pressure when the power unit is hot. Risk of scalding due to hot steam and hot coolant.

Danger of scalding skin and other parts of the body.

- ***Put on protective gloves.***
- ***Put on safety goggles.***
- ***Cover filler cap on expansion tank with a cloth and open carefully to release pressure.***

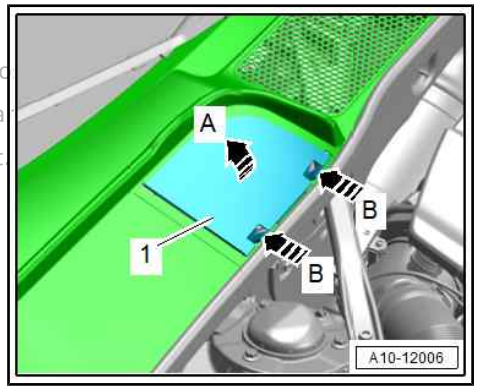

– Release fastener -arrow- and open filler cap -1- on coolant expansion tank.

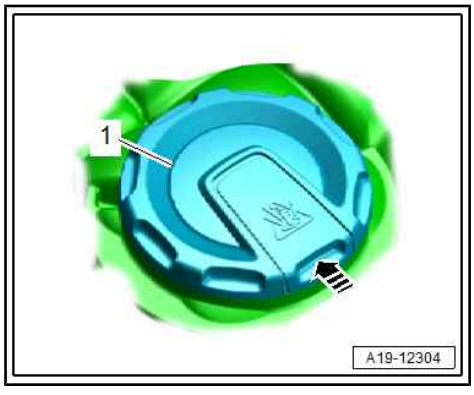

– Unplug electrical connectors -1-.
– Carefully loosen union nuts -2- to release residual gas (counterhold at connection with a suitable tool).
– Unscrew union nut, move high-pressure pipe clear and detach it slightly from gas pressure regulator.

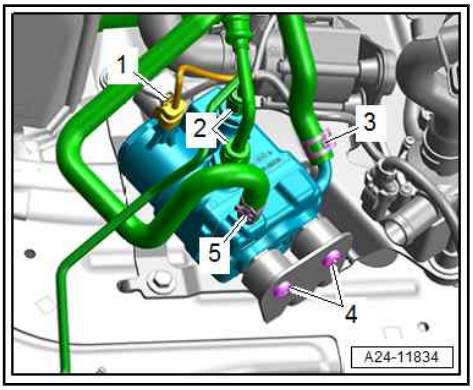

Caution

Risk of gas leaks in gas pressure pipe due to improper handling.

- ***Do not attempt to bend gas pressure pipe to a different shape***

– Seal off open lines and connections with plugs (thoroughly cleaned) from engine bung set - VAS 6122- .
– Clamp off coolant hoses using hose clamps, up to 25 mm - 3094- , release hose clips -3 and 5- and disconnect hoses.
– Remove bolts -4- and detach gas pressure regulator.

Protected by copyright. Copying for private or commercial purposes, in part or in whole, is not permitted unless authorised by AUDI AG. AUDI AG does not guarantee or accept any liability with respect to the correctness of information in this document. Copyright by AUDI AG.

Installing

Installation is carried out in reverse order; note the following:

– Check coolant level ⇒ page 102 .
– Observe steps required after re-connecting battery ⇒ Electrical system; Rep. gr. 27 ; Battery; Disconnecting and connecting battery .
– Check coolant level ⇒ page 107 .

WARNING

Risk of explosion due to uncontrolled gas escape in connection with ignition sources and electrostatic discharge - risk of death!

Danger of severe or fatal injuries due to explosion.

- *Natural gas system must be re-started by a specially instructed person.*

– Open manual shut-off mechanisms of mechanical tank shut-off valves using extension -T40333- and hand wheel -T50026- , and plug in electrical connectors if necessary.

WARNING

Risk of explosion due to escaping natural gas - risk of death! Leaks in the natural gas system can cause uncontrolled escape of natural gas.

Danger of severe or fatal injuries due to explosion.

- *Check natural gas system for leaks.*

– Perform gas system inspection ⇒ Maintenance ; Booklet 830 ; Maintenance; Natural gas system: checking for damage and leaks .

– Perform leak test on low-pressure section of natural gas system ⇒ Natural gas engines - General information; Rep. gr. 00 ; Checking natural gas system .

– Install engine cover panel ⇒ Servicing 4-cylinder engine, 2.0 ltr. 4-valve TFSI; Rep. gr. 10 ; Engine cover panel; Removing and installing engine cover panel .

Tightening torques

- ⇒ “6.1 Exploded view - gas pressure regulator”, page 194

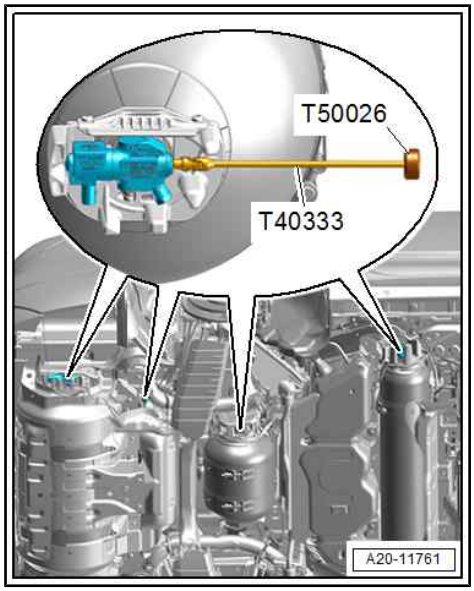

Protected by copyright. Copying for private or commercial purposes, in part or in whole, is not permitted unless authorised by AUDI AG. AUDI AG does not guarantee or accept any liability with respect to the correctness of information in this document. Copyright by AUDI AG.

7 Senders and sensors

⇒ “7.1 Removing and installing intake air temperature sender G42 / intake manifold pressure sender G71 ”, page 199

⇒ “7.2 Removing and installing air mass meter G70 ”, page 200

⇒ “7.3 Removing and installing fuel pressure sender G247 ”, page 200

⇒ “7.4 Checking fuel pressure sender G247 ”, page 201

⇒ “7.5 Removing and installing fuel pressure sender for low pressure G410 ”, page 201

⇒ “7.6 Removing and installing gas rail temperature and pressure sensor GX21 ”, page 202

⇒ “7.7 Removing and installing sensor module GX23 ”, page 203

7.1 Removing and installing intake air temperature sender - G42- / intake manifold pressure sender - G71-

All procedures are described in ⇒ Servicing 4-cylinder engine, 2.0 ltr. 4-valve TFSI; Rep. gr. 24 ; Senders and sensors; Removing and installing intake air temperature sender - G42- / intake manifold pressure sender - G71- .

Protected by copyright. Copying for private or commercial purposes, in part or in whole, is not permitted unless authorised by AUDI AG. AUDI AG does not guarantee or accept any liability with respect to the correctness of information in this document. Copyright by AUDI AG.

7.2 Removing and installing air mass meter - G70-

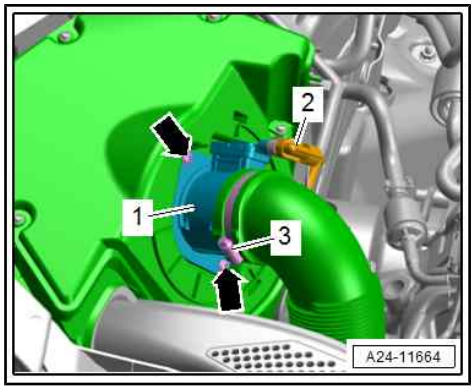

Removing

– Release hose clip -3- and detach air pipe.

– Unplug electrical connector -2-.

– Remove bolts -arrows- and detach air mass meter - G70- -item 1-.

Installing

Installation is carried out in reverse order; note the following:

To ensure that the air mass meter -G70- functions correctly, it is important to observe the following notes and procedures.

Note

- *If the air filter element is very dirty or wet, dirt particles or water can reach the air mass meter and falsify the detected air mass values. This will cause a loss of power as the calculated injection quantities will be too low.*
- *Check air filter element and inside of air cleaner housing for dirt; clean if necessary ⇒ Maintenance ; Booklet 830 ; Maintenance work; Air cleaner: renewing filter element and cleaning housing .*
- *Secure all hose connections with correct type of hose clips (as original equipment) ⇒ Electronic parts catalogue .*

Tightening torques

- ⇒ “2.1 Exploded view - air cleaner housing”, page 177
- ⇒ Servicing 4-cylinder engine, 2.0 ltr. 4-valve TFSI; Rep. gr. 21 ; Charge air system; Exploded view - hose connections for charge air system

7.3 Removing and installing fuel pressure sender - G247-

⇒ “7.3.1 Removing and installing fuel pressure sender G247 - vehicles with alternator”, page 200

⇒ “7.3.2 Removing and installing fuel pressure sender G247 - vehicles with starter-alternator”, page 201

⇒ “7.3.3 Removing and installing fuel pressure sender G247 - vehicles with natural gas system”, page 201

Any unauthorized copying for private or commercial purposes, in part or in whole, is not permitted. Audi AG does not guarantee or accept any liability with respect to the correctness of information in this document. Copyright by AUDI AG.

7.3.1 Removing and installing fuel pressure sender - G247- - vehicles with alternator

Removing

– Disconnect battery ⇒ Electrical system; Rep. gr. 27 ; Battery; Disconnecting and connecting battery .

All further procedures are described in ⇒ Servicing 4-cylinder engine, 2.0 ltr. 4-valve TFSI; Rep. gr. 24 ; Senders and sensors; Removing and installing fuel pressure sender - G247- .

Installing

Additional work:

– Observe steps required after re-connecting battery ⇒ Electrical system; Rep. gr. 27 ; Battery; Disconnecting and connecting battery .

7.3.2 Removing and installing fuel pressure sender - G247- - vehicles with starter-alternator

All procedures are described in ⇒ Servicing 4-cylinder engine, 2.0 ltr. 4-valve TFSI; Rep. gr. 24 ; Senders and sensors; Removing and installing fuel pressure sender - G247- .

7.3.3 Removing and installing fuel pressure sender - G247- - vehicles with natural gas system

Removing

– Remove battery tray ⇒ Electrical system; Rep. gr. 27 ; Battery; Removing and installing battery tray .

All further procedures are described in ⇒ Servicing 4-cylinder engine, 2.0 ltr. 4-valve TFSI; Rep. gr. 24 ; Senders and sensors; Removing and installing fuel pressure sender - G247- .

Motor-Talk.de reproduction, passing on, or use for commercial purposes, in part or in whole, is not permitted unless authorised by AUDI AG. AUDI AG does not guarantee or accept any liability with respect to the correctness of information in this document. Copyright by AUDI AG.

Installing

Additional work:

– Install battery tray ⇒ Electrical system; Rep. gr. 27 ; Battery; Removing and installing battery tray .

7.4 Checking fuel pressure sender - G247-

All procedures are described in ⇒ Servicing 4-cylinder engine, 2.0 ltr. 4-valve TFSI; Rep. gr. 24 ; Senders and sensors; Checking fuel pressure sender - G247- .

7.5 Removing and installing fuel pressure sender for low pressure - G410-

⇒ “7.5.1 Removing and installing fuel pressure sender for low pressure G410 - vehicles without natural gas system”, page 201

⇒ “7.5.2 Removing and installing fuel pressure sender for low pressure G410 - vehicles with natural gas system”, page 201

7.5.1 Removing and installing fuel pressure sender for low pressure - G410- - vehicles without natural gas system

All procedures are described in ⇒ Servicing 4-cylinder engine, 2.0 ltr. 4-valve TFSI; Rep. gr. 24 ; Injectors; Removing and installing fuel pressure sender for low pressure - G410- .

7.5.2 Removing and installing fuel pressure sender for low pressure - G410- - vehicles with natural gas system

Special tools and workshop equipment required

- Socket, 27 mm - T40218-

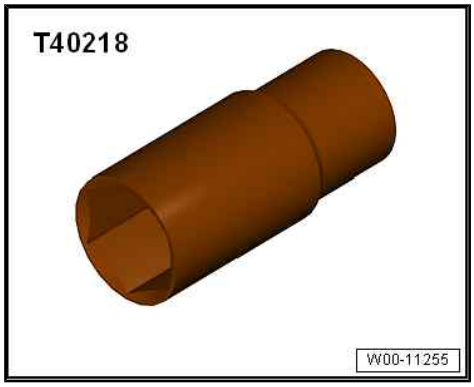

Protected by copyright. Copying for private or commercial purposes, in part or in whole, is not permitted unless authorised by AUDI AG. AUDI AG does not guarantee or accept any liability with respect to the correctness of information in this document. Copyright by AUDI AG.

Removing

– Remove engine cover panel ⇒ Servicing 4-cylinder engine, 2.0 ltr. 4-valve TFSI; Rep. gr. 10 ; Engine cover panel; Removing and installing engine cover panel .
– Unplug electrical connector -1-.
– Unscrew fuel pressure sender for low pressure - G410- -item 2- using socket, 27 mm - T40218- .

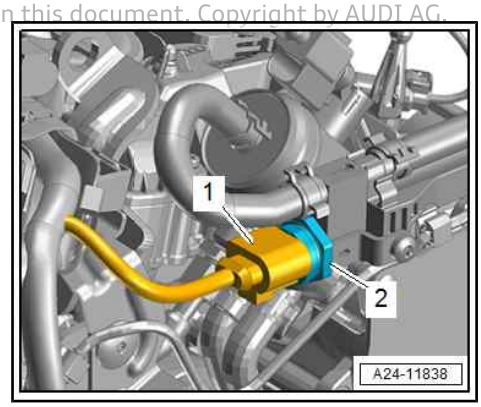

Installing

Installation is carried out in reverse order; note the following:

– Install engine cover panel ⇒ Servicing 4-cylinder engine, 2.0 ltr. 4-valve TFSI; Rep. gr. 10 ; Engine cover panel; Removing and installing engine cover panel .

Tightening torques

- ⇒ Servicing 4-cylinder engine, 2.0 ltr. 4-valve TFSI; Rep. gr. 24 ; Injectors; Exploded view - fuel rail with injectors

7.6 Removing and installing gas rail temperature and pressure sensor - GX21-

Removing

– Observe safety precautions ⇒ Servicing 4-cylinder engine, 2.0 ltr. 4-valve TFSI; Rep. gr. 00 ; Safety precautions .
– Observe safety precautions when working on the natural gas system ⇒ page 2 .
– Observe rules for cleanliness ⇒ Servicing 4-cylinder engine, 2.0 ltr. 4-valve TFSI; Rep. gr. 00 ; Repair notes; Rules for cleanliness .

WARNING

Risk of explosion due to uncontrolled gas escape in connection with ignition sources and electrostatic discharge - risk of death!

Danger of severe or fatal injuries due to explosion.

- ***Pressure in natural gas high-pressure pipe must be dissipated by a specially instructed person.***
- ***Shut off natural gas fuel tanks electrically and manually.***

– Dissipate pressure in natural gas high-pressure pipe ⇒ Fuel supply system - g-tron; Rep. gr. 20 ; Fuel tanks; Dissipating fuel pressure in high-pressure section .

– Switch off ignition and remove ignition key.
– Remove engine cover panel ⇒ Servicing 4-cylinder engine, 2.0 ltr. 4-valve TFSI; Rep. gr. 10 ; Engine cover panel; Removing and installing engine cover panel .
– Unplug electrical connector -2-.
– Unscrew gas rail temperature and pressure sensor - GX21- -item 1-; to do so, counterhold at connection on gas rail with a suitable tool.

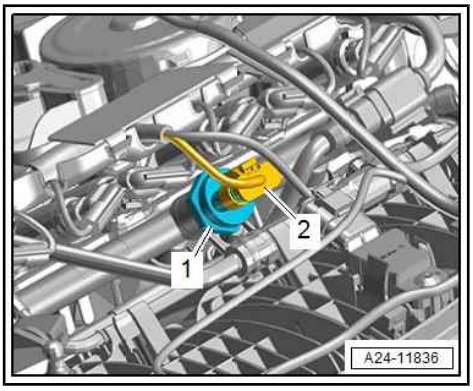

Installing

Installation is carried out in reverse order; note the following:

– Install engine cover panel ⇒ Servicing 4-cylinder engine, 2.0 ltr. 4-valve TFSI; Rep. gr. 10 ; Engine cover panel; Removing and installing engine cover panel .

WARNING

Risk of explosion due to uncontrolled gas escape in connection with ignition sources and electrostatic discharge - risk of death!

Danger of severe or fatal injuries due to explosion.

- *Natural gas system must be re-started by a specially instructed person.*

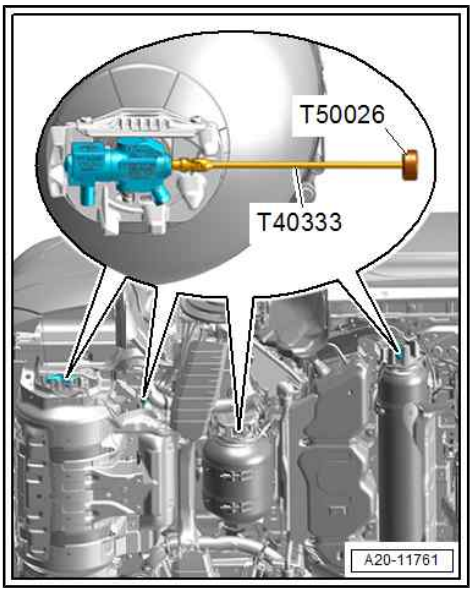

– Open manual shut-off mechanisms of mechanical tank shut-off valves using extension -T40333- and hand wheel -T50026- , and plug in electrical connectors if necessary.

WARNING

Risk of explosion due to escaping natural gas - risk of death! Leaks in the natural gas system can cause uncontrolled escape of natural gas.

Danger of severe or fatal injuries due to explosion.

- *Check natural gas system for leaks.*

– Perform leak test on low-pressure section of natural gas system ⇒ Natural gas engines - General information; Rep. gr. 00 ; Checking natural gas system .

Protected by copyright. Copying for private or commercial purposes, in part or in whole, is not permitted unless authorised by AUDI AG. AUDI AG does not guarantee or accept any liability with respect to the correctness of information in this document. Copyright by AUDI AG.

Tightening torques

- ⇒ “5.1 Exploded view - gas rail”, page 189

7.7 Removing and installing sensor module - GX23-

Special tools and workshop equipment required

- Socket, 27 mm - T40218-

Protected by copyright. Copying for private or commercial purposes, in part or in whole, is not permitted unless authorised by AUDI AG. AUDI AG does not guarantee or accept any liability with respect to the correctness of information in this document. Copyright by AUDI AG.

Removing

– Observe safety precautions ⇒ Servicing 4-cylinder engine, 2.0 ltr. 4-valve TFSI; Rep. gr. 00 ; Safety precautions .

– Observe safety precautions when working on the natural gas system ⇒ page 2 .

– Observe rules for cleanliness ⇒ Servicing 4-cylinder engine, 2.0 ltr. 4-valve TFSI; Rep. gr. 00 ; Repair notes; Rules for cleanliness .

WARNING

Risk of explosion due to uncontrolled gas escape in connection with ignition sources and electrostatic discharge - risk of death!

Danger of severe or fatal injuries due to explosion.

- ***Pressure in natural gas high-pressure pipe must be dissipated by a specially instructed person.***
- ***Shut off natural gas fuel tanks electrically and manually.***

– Dissipate pressure in natural gas high-pressure pipe ⇒ Fuel supply system - g-tron; Rep. gr. 20 ; Fuel tanks; Dissipating fuel pressure in high-pressure section .

– Switch off ignition and remove ignition key.

– Remove engine cover panel ⇒ Servicing 4-cylinder engine, 2.0 ltr. 4-valve TFSI; Rep. gr. 10 ; Engine cover panel; Removing and installing engine cover panel .

– Disconnect battery ⇒ Electrical system; Rep. gr. 27 ; Battery; Disconnecting and connecting battery .

– Unplug electrical connector -1-.

– Unscrew sensor module - GX23- -2- from gas pressure regulator using socket, 27 mm - T40218- .

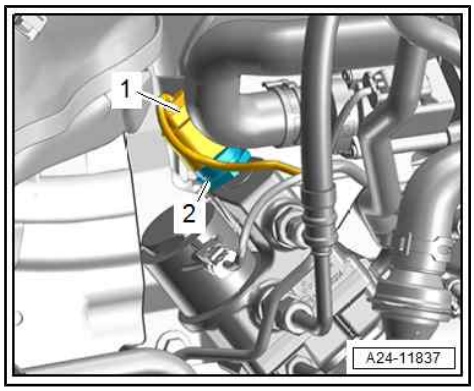

Installing

Installation is carried out in reverse order; note the following:

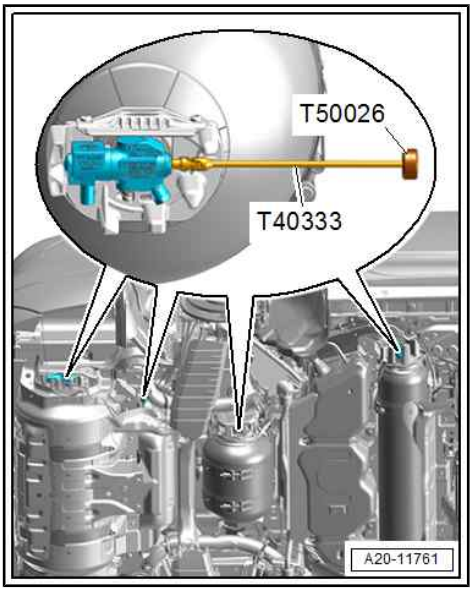

WARNING

Risk of explosion due to uncontrolled gas escape in connection with ignition sources and electrostatic discharge - risk of death!

Danger of severe or fatal injuries due to explosion.

- *Natural gas system must be re-started by a specially instructed person.*

– Open manual shut-off mechanisms of mechanical tank shut-off valves using extension -T40333- and hand wheel -T50026- , and plug in electrical connectors if necessary.

WARNING

Risk of explosion due to escaping natural gas - risk of death! Leaks in the natural gas system can cause uncontrolled escape of natural gas.

Danger of severe or fatal injuries due to explosion.

- *Check natural gas system for leaks.*

– Perform gas system inspection ⇒ Maintenance ; Booklet 830 ; Maintenance; Natural gas system: checking for damage and leaks .

– Install engine cover panel ⇒ Servicing 4-cylinder engine, 2.0 ltr. 4-valve TFSI; Rep. gr. 10 ; Engine cover panel; Removing and installing engine cover panel .

Protected by copyright. Copying for private or commercial purposes, in part or in whole, is not permitted unless authorised by AUDI AG. AUDI AG does not guarantee or accept any liability with respect to the correctness of information in this document. Copyright by AUDI AG.

Tightening torques

- ⇒ “6.1 Exploded view - gas pressure regulator”, page 194

8 High-pressure pump

⇒ “8.1 Exploded view - high-pressure pump”, page 206

⇒ “8.2 Removing and installing high-pressure pump”, page 208

8.1 Exploded view - high-pressure pump

⇒ “8.1.1 Exploded view - high-pressure pump, vehicles without natural gas system”, page 206

⇒ “8.1.2 Exploded view - high-pressure pump, vehicles with natural gas system”, page 206

8.1.1 Exploded view - high-pressure pump, vehicles without natural gas system

All components are described in ⇒ Servicing 4-cylinder engine, 2.0 ltr. 4-valve TFSI; Rep. gr. 24 ; High-pressure pump; Exploded view - high-pressure pump .

8.1.2 Exploded view - high-pressure pump, vehicles with natural gas system

1 - Vacuum pump

- ❑ Exploded view ⇒ Brake system; Rep. gr. 47 ; Vacuum system; Exploded view - vacuum pump

2 - Roller tappet

- ❑ May remain lodged in vacuum pump when high-pressure pump is removed

3 - O-ring

- ❑ Notes on installation ⇒ Servicing 4-cylinder engine, 2.0 ltr. 4-valve TFSI; Rep. gr. 24 ; High-pressure pump; Exploded view - high-pressure pump

4 - Cooling flange

- ❑ For high-pressure pump

5 - O-ring

- ❑ Notes on installation ⇒ Servicing 4-cylinder engine, 2.0 ltr. 4-valve TFSI; Rep. gr. 24 ; High-pressure pump; Exploded view - high-pressure pump

6 - High-pressure pump

- ❑ Depending on version, with integrated fuel metering valve - N290- or fuel pressure regulating valve - N276-
- ❑ Removing and installing ⇒ Servicing 4-cylinder engine, 2.0 ltr. 4-valve TFSI; Rep. gr. 24 ; High-pressure pump; Removing and installing high-pressure pump

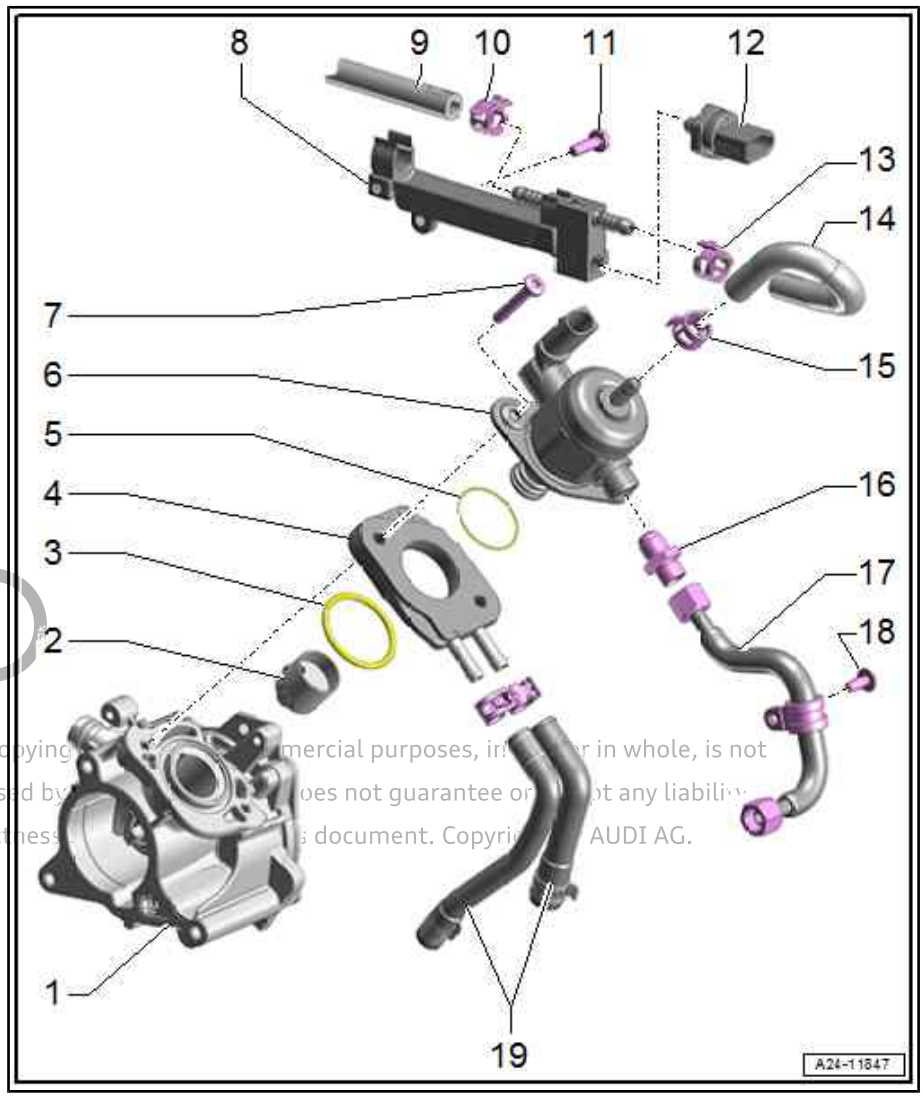

Protected by copyright. Copying for private or commercial purposes, in part or in whole, is not permitted unless authorised by AUDI AG. AUDI AG does not guarantee or assume any liability with respect to the correctness of information in this document. Copyright by AUDI AG.

7 - Bolt

- ❑ Renew after removing
- ❑ Tighten in stages

- ♦ Screw in by hand until contact is made
- ♦ Tighten one turn alternately until flange of high-pressure pump makes contact with vacuum pump
- ♦ 8 Nm +90°

8 - Connection

9 - Fuel supply hose

- ❑ From fuel tank

10 - Spring-type clip

- ❑ Notes on installation ⇒ Servicing 4-cylinder engine, 2.0 ltr. 4-valve TFSI; Rep. gr. 24 ; High-pressure pump; Exploded view - high-pressure pump

11 - Bolt

- ❑ 9 Nm

12 - Fuel pressure sender - G247-

- ❑ Exploded view ⇒ Servicing 4-cylinder engine, 2.0 ltr. 4-valve TFSI; Rep. gr. 24 ; Injectors; Exploded view - fuel rail with injectors

13 - Spring-type clip

- ❑ Notes on installation ⇒ Servicing 4-cylinder engine, 2.0 ltr. 4-valve TFSI; Rep. gr. 24 ; High-pressure pump; Exploded view - high-pressure pump

14 - Fuel supply hose

- ❑ From fuel tank

15 - Spring-type clip

- ❑ Notes on installation ⇒ Servicing 4-cylinder engine, 2.0 ltr. 4-valve TFSI; Rep. gr. 24 ; High-pressure pump; Exploded view - high-pressure pump

16 - Connection

- ❑ For fuel supply line
- ❑ Tightening torques and notes on installation ⇒ Servicing 4-cylinder engine, 2.0 ltr. 4-valve TFSI; Rep. gr. 24 ; High-pressure pump; Exploded view - high-pressure pump

17 - High-pressure pipe

- ❑ To fuel rail
- ❑ Notes on installation ⇒ Servicing 4-cylinder engine, 2.0 ltr. 4-valve TFSI; Rep. gr. 24 ; High-pressure pump; Exploded view - high-pressure pump

18 - Bolt

- ❑ Notes on installation ⇒ Servicing 4-cylinder engine, 2.0 ltr. 4-valve TFSI; Rep. gr. 24 ; High-pressure pump; Exploded view - high-pressure pump

19 - Coolant hoses

Protected by copyright. Copying for private or commercial purposes, in part or in whole, is not permitted unless authorised by AUDI AG. AUDI AG does not guarantee or accept any liability with respect to the correctness of information in this document. Copyright by AUDI AG.

8.2 Removing and installing high-pressure pump

⇒ “8.2.1 Removing and installing high-pressure pump - vehicles without particulate filter”, page 208
⇒ “8.2.2 Removing and installing high-pressure pump - vehicles with particulate filter”, page 208

Protected by copyright. Copying for private or commercial purposes, in part or in whole, is not permitted unless authorised by AUDI AG. AUDI AG does not guarantee or accept any liability with respect to the correctness of information in this document. Copyright by AUDI AG.

8.2.1 Removing and installing high-pressure pump - vehicles without particulate filter

All procedures are described in ⇒ Servicing 4-cylinder engine, 2.0 ltr. 4-valve TFSI; Rep. gr. 24 ; High-pressure pump; Removing and installing high-pressure pump .

8.2.2 Removing and installing high-pressure pump - vehicles with particulate filter

Removing

– Remove engine cover panel ⇒ Servicing 4-cylinder engine, 2.0 ltr. 4-valve TFSI; Rep. gr. 10 ; Engine cover panel; Removing and installing engine cover panel .

– Move electrical wiring clear at heat shield -1-.

– Remove nuts -arrows- and bolt -2- and detach heat shield (shown with particulate filter removed).

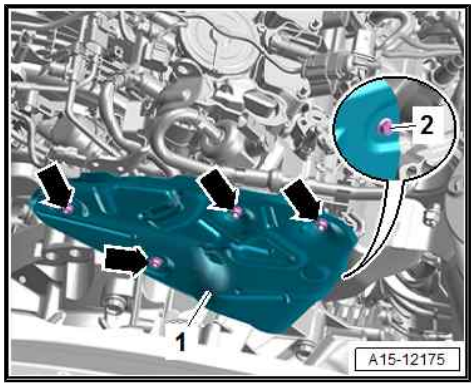

– Take electrical connector -2- for exhaust gas temperature sender 3 - G495- / exhaust gas temperature sender 4 - G648- out of bracket and unplug.

– Release retaining clip -3- and move vacuum hose clear.

– Remove bolt -1- and push bracket to one side. (Different versions.)

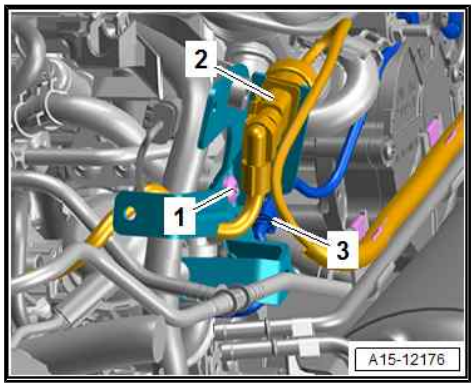

All further procedures are described in ⇒ Servicing 4-cylinder engine, 2.0 ltr. 4-valve TFSI; Rep. gr. 24 ; High-pressure pump; Removing and installing high-pressure pump .

Installing

Additional work:

– Install engine cover panel ⇒ Servicing 4-cylinder engine, 2.0 ltr. 4-valve TFSI; Rep. gr. 10 ; Engine cover panel; Removing and installing engine cover panel .

Tightening torques

◆ ⇒ Servicing 4-cylinder engine, 2.0 ltr. 4-valve TFSI; Rep. gr. 15 ; Cylinder head; Exploded view - cylinder head

9 Lambda probe

All procedures and components can be found in ⇒ Servicing 4-cylinder engine, 2.0 ltr. 4-valve TFSI; Rep. gr. 24 ; Lambda probe .

Protected by copyright. Copying for private or commercial purposes, in part or in whole, is not permitted unless authorised by AUDI AG. AUDI AG does not guarantee or accept any liability with respect to the correctness of information in this document. Copyright by AUDI AG.

10 Engine control unit

⇒ “10.1 Exploded view - engine control unit”, page 210

⇒ “10.2 Removing and installing engine/motor control unit J623 ”, page 211

Protected by copyright. Copying for private or commercial purposes, in part or in whole, is not permitted unless authorized by AUDI AG. AUDI AG does not guarantee or accept any liability with respect to the correctness of information in this document. Copyright by AUDI AG.

10.1 Exploded view - engine control unit

⇒ “10.1.1 Exploded view - engine control unit, vehicles without natural gas system”, page 210

⇒ “10.1.2 Exploded view - engine control unit, vehicles with natural gas system”, page 211

10.1.1 Exploded view - engine control unit, vehicles without natural gas system

1 - Bolt

- ❑ 9 Nm

2 - Mounting

- ❑ For engine control unit - J623-

3 - Engine control unit - J623-

- ❑ Before renewal, perform adaptions listed in Guided Function “01 - Functions, engine mechanics” ⇒ Vehicle diagnostic tester.
- ❑ Removing and installing ⇒ page 211

4 - Bolt

- ❑ 9 Nm

5 - Suspension turret

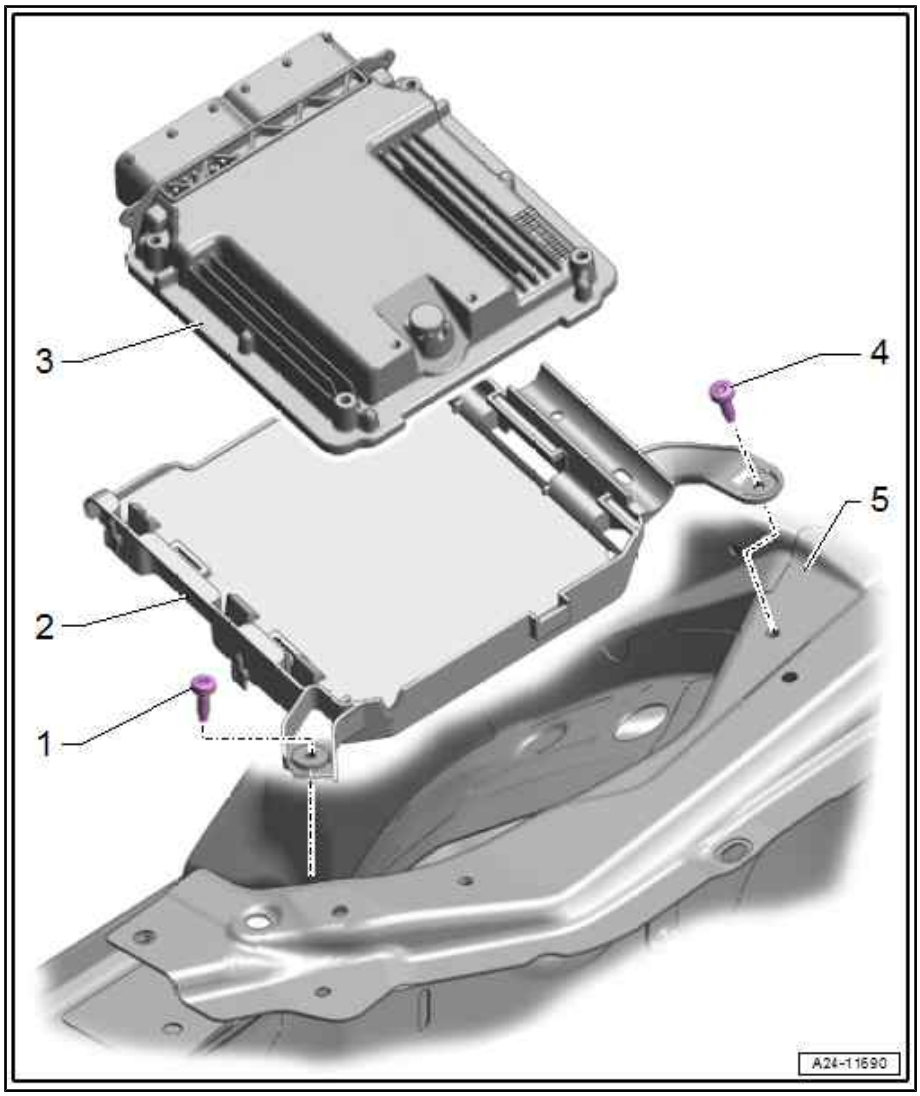

10.1.2 Exploded view - engine control unit, vehicles with natural gas system

1 - Battery tray

2 - Mounting

- ❑ For engine control unit - J623-

3 - Bolt

- ❑ 9 Nm

4 - Nut

- ❑ 9 Nm

5 - Clip

6 - Clip

7 - Engine control unit - J623-

- ❑ Before renewal, perform adaptions listed in Guided Function “01 - Functions, engine mechanics” ⇒ Vehicle diagnostic tester.
- ❑ Removing and installing ⇒ page 211

8 - Clip

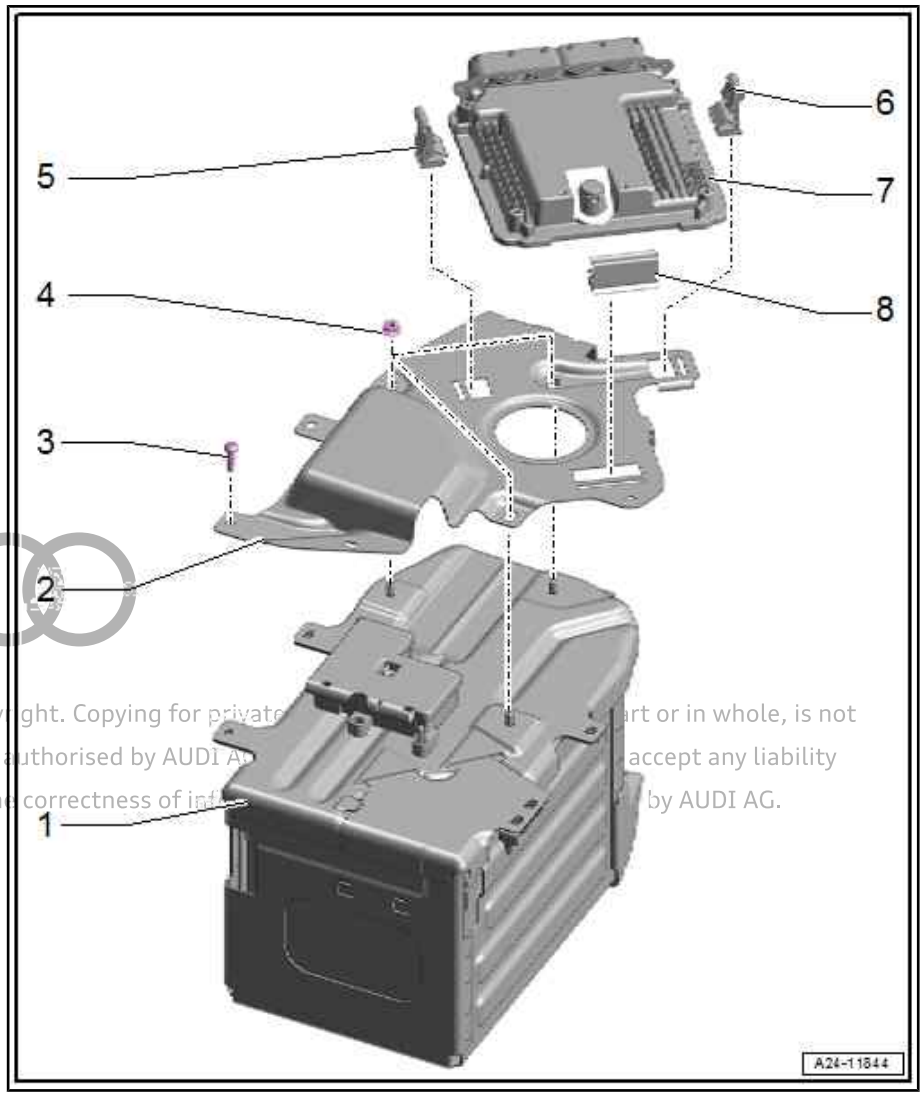

Protected by copyright. Copying for private ... art or in whole, is not permitted unless authorised by AUDI A... accept any liability with respect to the correctness of inf... by AUDI AG.

10.2 Removing and installing engine/motor control unit - J623-

Removing

Note

If engine control unit is renewed, run “01 - Replace control unit” in Guided Functions mode of ⇒ Vehicle diagnostic tester.

– Switch off ignition and remove ignition key.

Vehicles without natural gas system:

– Release catches -arrows- and detach engine control unit - J623- -item 2-.

– Unplug electrical connectors -1-.

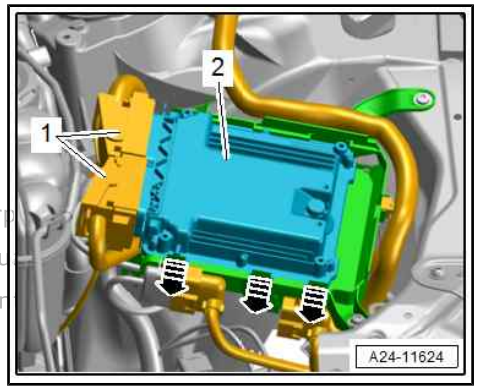

Protected by copyright. Copying for private or commercial purp
permitted unless authorised by AUDI AG. AUDI AG does not gu
with respect to the correctness of information in this documen

Vehicles with natural gas system:

– Release catches -arrows- and detach engine control unit - J623- -item 2-.

– Unplug electrical connectors -1-.

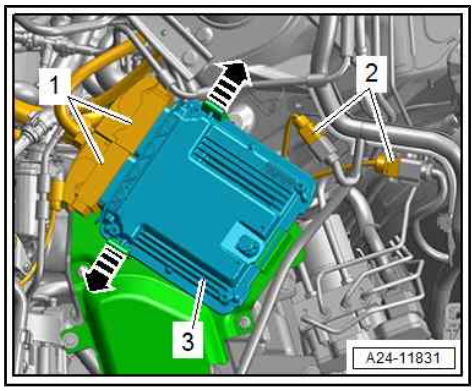

Installing

Installation is carried out in reverse order; note the following:

– If engine control unit - J623- was renewed, perform adaptions listed in Guided Function “01 - Functions, engine mechanics” ⇒ Vehicle diagnostic tester.

26 – Exhaust system

1 Exhaust pipes/silencers

⇒ “1.1 Exploded view - silencers”, page 213

⇒ “1.2 Removing and installing front exhaust pipe”, page 221

⇒ “1.3 Separating exhaust pipes/silencers”, page 222

⇒ “1.4 Removing and installing front silencers”, page 223

⇒ “1.5 Removing and installing silencers”, page 226

⇒ “1.6 Stress-free alignment of exhaust system”, page 228

⇒ “1.7 Checking exhaust system for leaks”, page 229

1.1 Exploded view - silencers

⇒ “1.1.1 Exploded view - silencers, front-wheel drive vehicles without natural gas system”, page 213

⇒ page 216

⇒ “1.1.3 Exploded view - silencers, vehicles with four-wheel drive”, page 219

1.1.1 Exploded view - silencers, front-wheel drive vehicles without natural gas system

Protected by copyright. Copying for private or commercial purposes, in part or in whole, is not permitted unless authorised by AUDI AG. AUDI AG does not guarantee or accept any liability with respect to the correctness of information in this document. Copyright by AUDI AG.

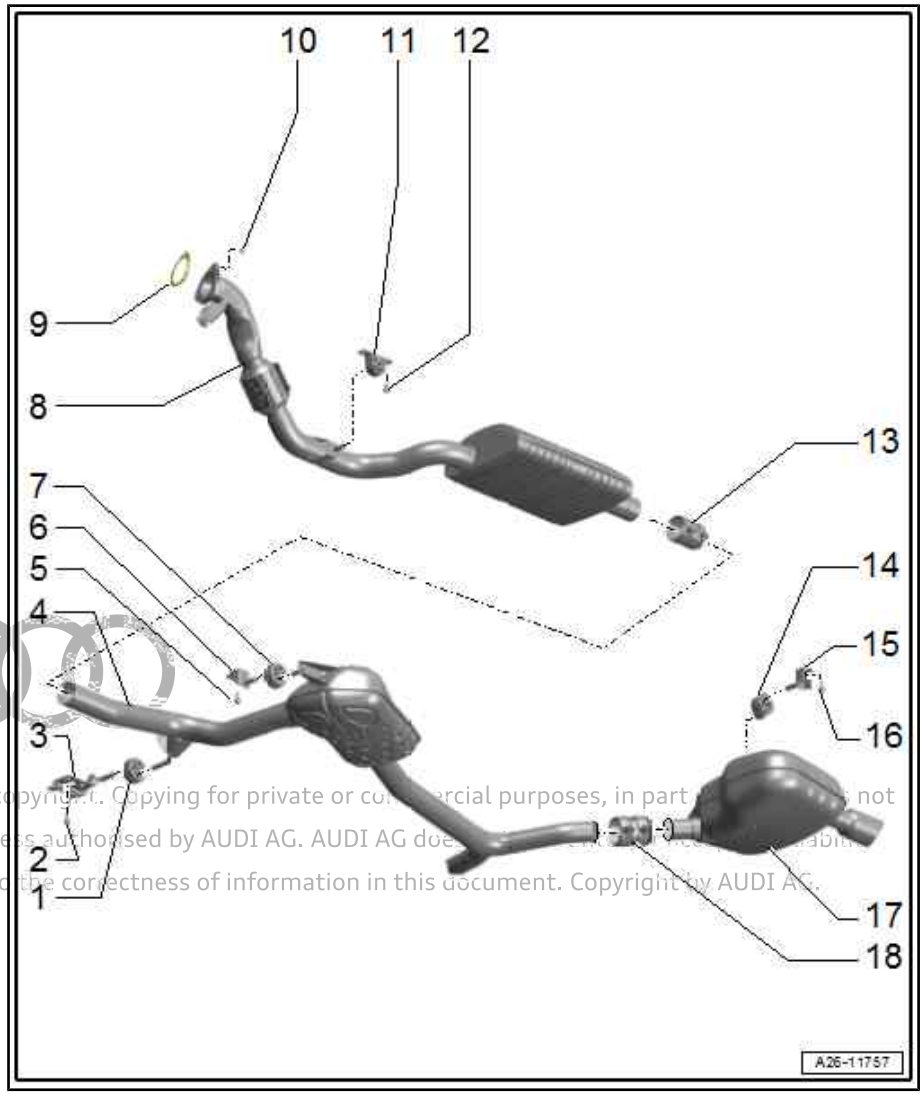

1 - Rubber mounting

- ❑ Renew if damaged
- ❑ Red-coloured mounting must be renewed after it has been pulled off
- ❑ Align exhaust system so it is free of stress ⇒ page 228

2 - Bolt

- ❑ 23 Nm

3 - Retainer

4 - Centre silencer

- ❑ Combined in one unit with rear silencer as original equipment. Can be renewed separately for repair purposes
- ❑ Cutting point ⇒ page 222
- ❑ Align exhaust system so it is free of stress ⇒ page 228

5 - Bolt

- ❑ 23 Nm

6 - Retainer

7 - Rubber mounting

- ❑ Renew if damaged
- ❑ Red-coloured mounting must be renewed after it has been pulled off
- ❑ Align exhaust system so it is free of stress ⇒ page 228

Protected by copyright. Copying for private or commercial purposes, in part or in whole, is not permitted unless authorised by AUDI AG. AUDI AG does not guarantee or accept any liability with respect to the correctness of information in this document. Copyright by AUDI AG.

8 - Front silencer

- ❑ With flexible joint
- ❑ Different versions available; for allocation refer to ⇒ Electronic parts catalogue

Caution

Risk of damage to flexible joint.
Do not bend flexible joint more than 10°.

Install flexible joint so that it is not under tension.

Take care not to damage wire mesh on flexible joint.

- ❑ Removing and installing ⇒ “1.4.1 Removing and installing front silencer - vehicles without particulate filter”, page 223
- ❑ Align exhaust system so it is free of stress ⇒ page 228

9 - Gasket

- ❑ Renew after removing

10 - Nut

- ❑ 23 Nm

11 - Mounting

- ❑ Different versions
- ❑ Renew if damaged
- ❑ Red-coloured mounting must be renewed after it has been pulled off
- ❑ Check preload ⇒ page 228

12 - Bolt

- ❑ 23 Nm

13 - Clamp (front)

- ❑ Before tightening, align exhaust system so it is free of stress ⇒ page 228
- ❑ Installation position ⇒ page 216
- ❑ Tighten screw connections evenly to 23 Nm

14 - Rubber mounting

- ❑ Renew if damaged
- ❑ Red-coloured mounting must be renewed after it has been pulled off
- ❑ Align exhaust system so it is free of stress ⇒ page 228

15 - Retainer

16 - Bolt

- ❑ 23 Nm

17 - Rear silencer

- ❑ Different versions available ⇒ Electronic parts catalogue
- ❑ Combined in one unit with centre silencer as original equipment. Can be renewed separately for repair purposes
- ❑ Cutting point ⇒ page 222
- ❑ Align exhaust system so it is free of stress ⇒ page 228

18 - Clamp (rear)

- ❑ Before tightening, align exhaust system so it is free of stress ⇒ page 228
- ❑ Installation position ⇒ page 216
- ❑ Tighten screw connections evenly to 23 Nm

Protected by copyright. Copying for private or commercial purposes, in part or in whole, is not permitted unless authorised by AUDI AG. AUDI AG does not guarantee or accept any liability with respect to the correctness of information in this document. Copyright by AUDI AG.

Components of mountings for front silencer - vehicles without particulate filter

1 - Spacer sleeve

2 - Compression spring

3 - Washer

4 - Bolt, 23 Nm

5 - Bolt, 23 Nm

6 - Spacer sleeve

7 - Buffer

8 - Bracket

9 - Spacer sleeve

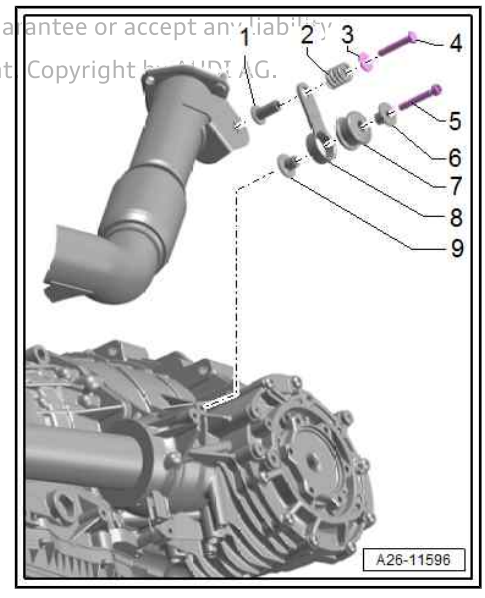

Installation position - front clamp

– Fit clamp in position shown.
- Angle -α- = approx. 20°
- Bolt connections facing towards right
- Nuts face downwards.

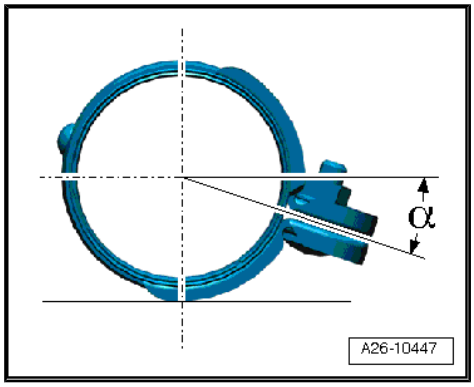

Installation position - rear clamp

– Fit clamp in position shown.
- Bolted connections facing towards left
- Nuts face downwards.
- Install clamp so that ends of bolts do not protrude beyond bottom of clamp.

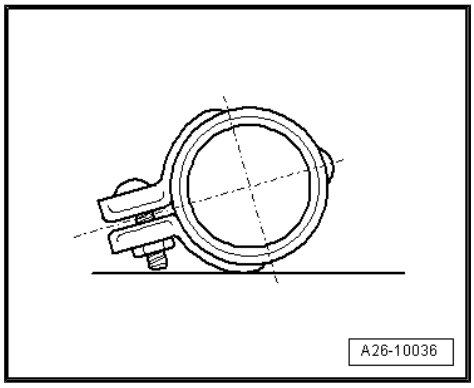

1.1.2 Exploded view - silencers, front-wheel drive vehicles with natural gas system

Protected by copyright. Copying for private or commercial purposes, in part or in whole, is not permitted unless authorised by AUDI AG. AUDI AG does not guarantee or accept any liability with respect to the correctness of information in this document. Copyright by AUDI AG.

Protected by copyright. Copying for private or commercial purposes, in part or in whole, is not permitted unless authorised by AUDI AG. AUDI AG does not guarantee or accept any liability with respect to the correctness of information in this document. Copyright by AUDI AG.

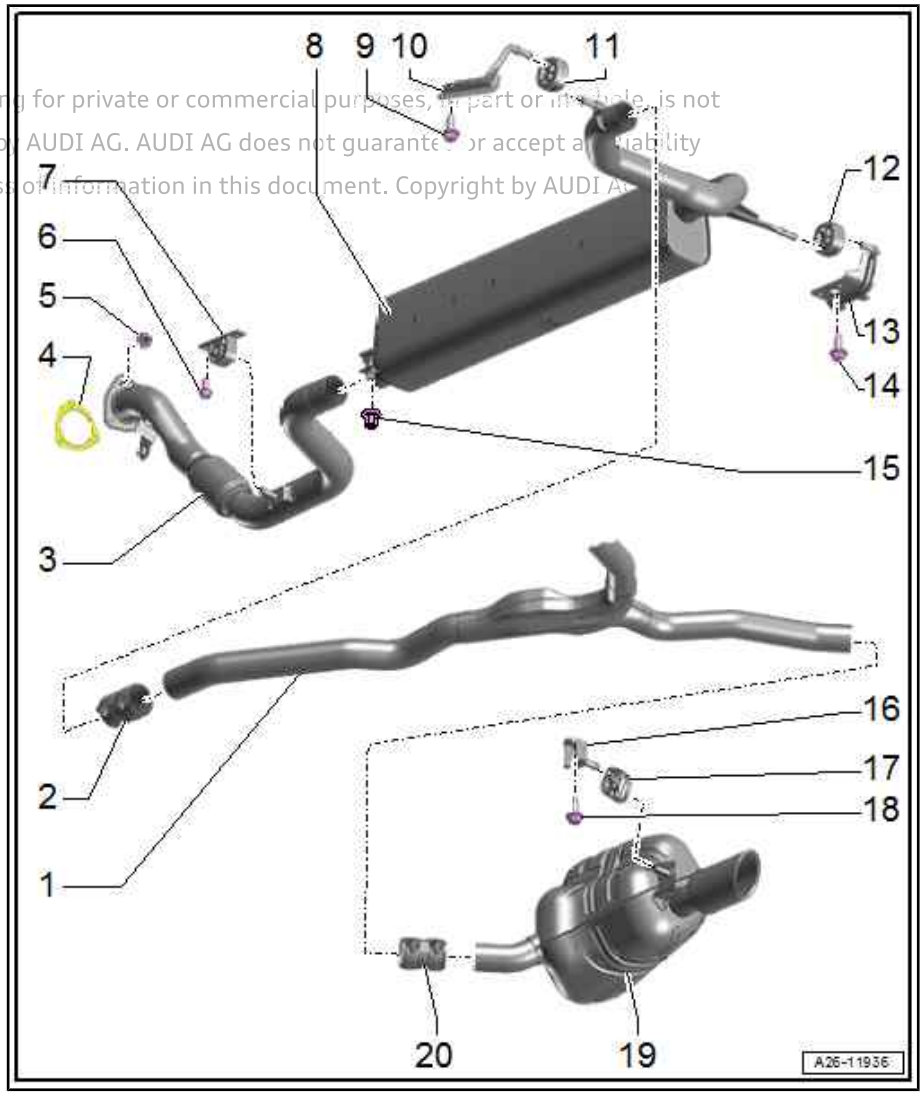

1 - Exhaust pipe

- ❑ Combined in one unit with rear silencer as original equipment. Can be renewed separately for repair purposes
- ❑ Cutting point ⇒ page 222
- ❑ Align exhaust system so it is free of stress ⇒ page 228

2 - Clamp (front)

- ❑ Before tightening, align exhaust system so it is free of stress ⇒ page 228
- ❑ Installation position ⇒ page 218
- ❑ Tighten screw connections evenly to 23 Nm

3 - Front exhaust pipe

- ❑ With flexible joint

> **Caution**
>
> *Risk of damage to flexible joint.*
>
> *Do not bend flexible joint more than 10°.*
>
> *Install flexible joint so that it is not under tension.*
>
> *Take care not to damage wire mesh on flexible joint.*

- ❑ Removing and installing ⇒ page 221
- ❑ Align exhaust system so it is free of stress ⇒ page 228

4 - Gasket

- ❑ Renew after removing

5 - Nut

- ❑ 23 Nm

6 - Bolt

- ❑ 23 Nm

7 - Mounting

- ❑ Renew if damaged
- ❑ Red-coloured mounting must be renewed after it has been pulled off
- ❑ Check preload ⇒ page 228

8 - Front silencer

- ❑ Removing and installing ⇒ “1.4.3 Removing and installing front silencer - vehicles with natural gas system”, page 226
- ❑ Align exhaust system so it is free of stress ⇒ page 228

9 - Bolt

- ❑ Tightening torques ⇒ General body repairs, exterior; Rep. gr. 66 ; Underbody trim; Exploded view - underbody trim

10 - Retainer

11 - Rubber mounting

- ❑ Renew if damaged
- ❑ Red-coloured mounting must be renewed after it has been pulled off
- ❑ Align exhaust system so it is free of stress ⇒ page 228

12 - Rubber mounting

- ❑ Renew if damaged
- ❑ Red-coloured mounting must be renewed after it has been pulled off
- ❑ Align exhaust system so it is free of stress ⇒ page 228

13 - Retainer

14 - Bolt

- ❑ Tightening torques ⇒ General body repairs, exterior; Rep. gr. 66 ; Underbody trim; Exploded view - underbody trim

15 - Nut

- ❑ 23 Nm

16 - Retainer

17 - Rubber mounting

- ❑ Renew if damaged
- ❑ Red-coloured mounting must be renewed after it has been pulled off
- ❑ Align exhaust system so it is free of stress ⇒ page 228

18 - Bolt

- ❑ 23 Nm

19 - Rear silencer

- ❑ Combined with front silencer as original equipment. Can be renewed separately for repair purposes
- ❑ Cutting point ⇒ page 222
- ❑ Align exhaust system so it is free of stress ⇒ page 228

20 - Clamp (rear)

- ❑ Before tightening, align exhaust system so it is free of stress ⇒ page 228
- ❑ Installation position ⇒ page 219
- ❑ Tighten screw connections evenly to 23 Nm

Installation position - front clamp

– Fit clamp in position shown.

- Bolted connections facing towards left
- Nuts face downwards.
- Install clamp so that ends of bolts do not protrude beyond bottom of clamp.

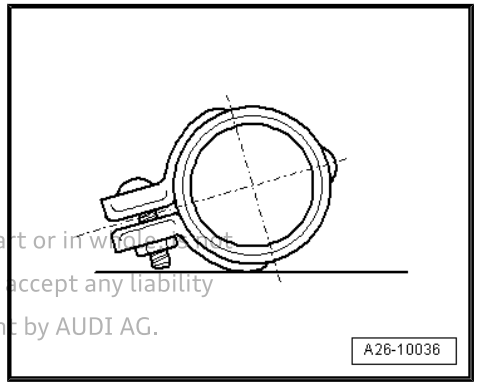

Protected by copyright. Copying for private or commercial purposes, in part or in whole, is not permitted unless authorised by AUDI AG. AUDI AG does not guarantee or accept any liability with respect to the correctness of information in this document. Copyright by AUDI AG.

- Position clamp -1- so that it makes contact with retainer -arrow-.

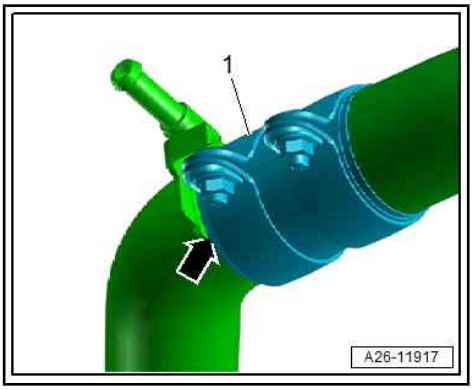

Installation position - rear clamp

– Fit clamp in position shown.

◆ Bolted connections facing towards left

◆ Nuts face downwards.

◆ Install clamp so that ends of bolts do not protrude beyond bottom of clamp.

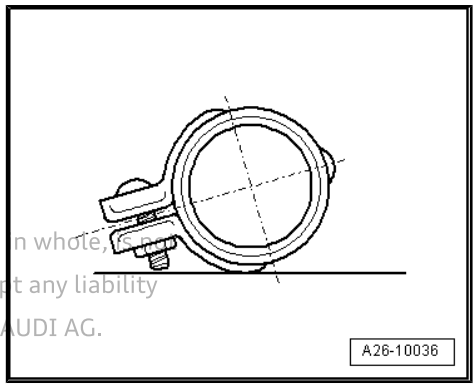

Protected by copyright. Copying for private or commercial purposes, in part or in whole, is not permitted unless authorised by AUDI AG. AUDI AG does not guarantee or accept any liability with respect to the correctness of information in this document. Copyright by AUDI AG.

1.1.3 Exploded view - silencers, vehicles with four-wheel drive

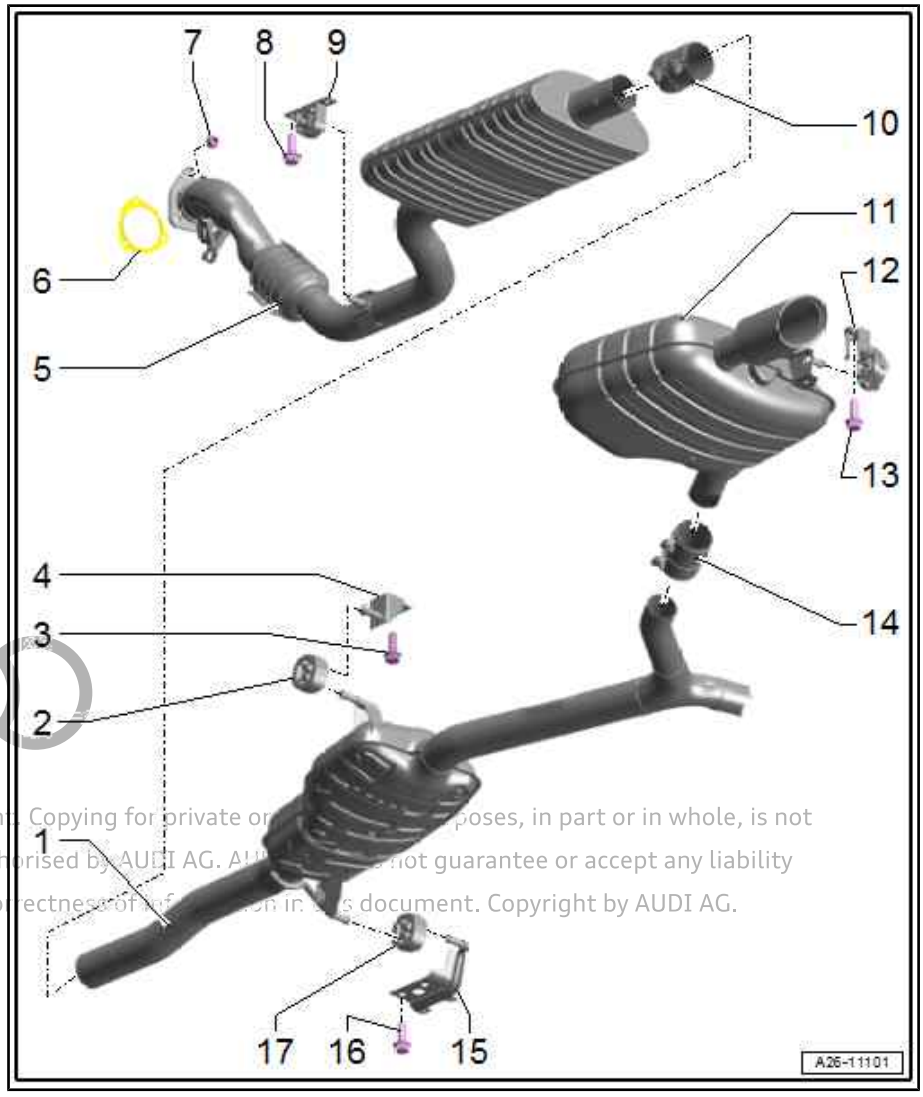

1 - Centre silencer

- ❑ Combined in one unit with rear silencers as original equipment. Can be renewed separately for repair purposes
- ❑ Cutting point ⇒ page 222
- ❑ Align exhaust system so it is free of stress ⇒ page 228

2 - Rubber mounting

- ❑ Renew if damaged
- ❑ Align exhaust system so it is free of stress ⇒ page 228

3 - Bolt

- ❑ 23 Nm

4 - Retainer

5 - Front silencer

- ❑ With flexible joint

Caution

Risk of damage to flexible joint.
Do not bend flexible joint more than 10°.

Install flexible joint so that it is not under tension.

Take care not to damage wire mesh on flexible joint.

- ❑ Removing and installing ⇒ “1.4.1 Removing and installing front silencer - vehicles without particulate filter”, page 223
- ❑ Align exhaust system so it is free of stress ⇒ page 228

6 - Gasket

- ❑ Renew after removing

7 - Nut

- ❑ 23 Nm

8 - Bolt

- ❑ 23 Nm

9 - Mounting

- ❑ Renew if damaged
- ❑ Check preload ⇒ page 228

10 - Clamp (front)

- ❑ Before tightening, align exhaust system so it is free of stress ⇒ page 228
- ❑ Installation position ⇒ page 216
- ❑ Tighten screw connections evenly to 23 Nm

11 - Rear silencer

- ❑ Combined in one unit with centre silencer as original equipment. Can be renewed separately for repair purposes

...right. Copying for private or ...poses, in part or in whole, is not permitted unless authorised by AUDI AG. AU... ...not guarantee or accept any liability with respect to the correctness of ...on in this document. Copyright by AUDI AG.

- ❑ Cutting point ⇒ page 222
- ❑ Align exhaust system so it is free of stress ⇒ page 228

12 - Mounting

- ❑ Renew if damaged
- ❑ Check preload ⇒ page 228

13 - Bolt

- ❑ 23 Nm

14 - Clamp (rear)

- ❑ Before tightening, align exhaust system so it is free of stress ⇒ page 228
- ❑ Installation position ⇒ page 216
- ❑ Tighten screw connections evenly to 23 Nm

Protected by copyright. Copying for private or commercial purposes, in part or in whole, is not permitted unless authorised by AUDI AG. AUDI AG does not guarantee or accept any liability with respect to the correctness of information in this document. Copyright by AUDI AG.

15 - Retainer

16 - Bolt

- ❑ 23 Nm

17 - Rubber mounting

- ❑ Renew if damaged
- ❑ Align exhaust system so it is free of stress ⇒ page 228

1.2 Removing and installing front exhaust pipe

Removing

– Remove engine cover panel ⇒ Servicing 4-cylinder engine, 2.0 ltr. 4-valve TFSI; Rep. gr. 10 ; Engine cover panel; Removing and installing engine cover panel .

– Remove nuts -1- (accessible from above) for front exhaust pipe.

– Remove noise insulation (rear) ⇒ General body repairs, exterior; Rep. gr. 66 ; Noise insulation; Removing and installing noise insulation .

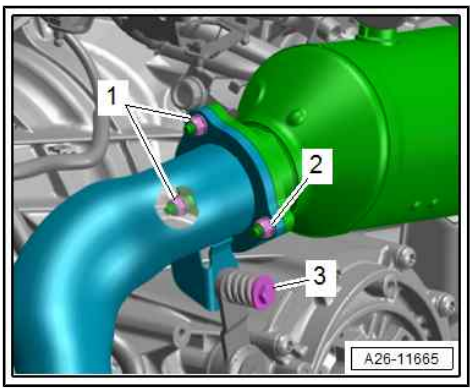

– Remove bolts -arrows- for front exhaust pipe.

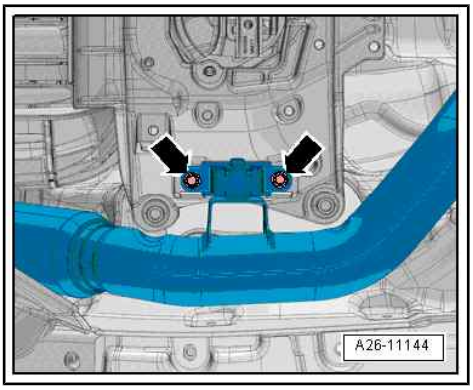

– Loosen clamp -arrows-.

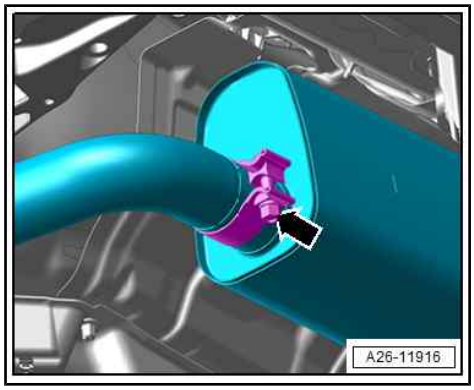

Caution

Risk of damage to flexible joint.

- *Do not bend flexible joint more than 10°.*
- *Install flexible joint so that it is not under tension.*
- *Take care not to damage wire mesh on flexible joint.*

– Carefully detach front exhaust pipe from front silencer and remove.

1.3 Separating exhaust pipes/silencers

- The connecting pipe can be cut through at the cutting location in order to renew the centre silencer/exhaust pipe or rear silencer separately.
- The cutting point is marked by an indentation on the circumference of the exhaust pipe.

Special tools and workshop equipment required

- Chain pipe cutter - VAS 6254-

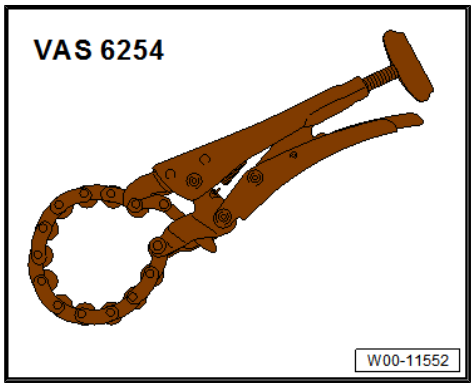

Procedure

– Cut through exhaust pipes at right angle at notch -arrow- using chain pipe cutter - VAS 6254- .

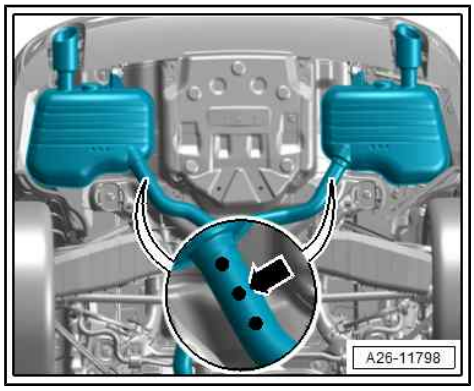

Protected by copyright. Copying for private or commercial purposes, in part or in whole, is not permitted unless authorised by AUDI AG. AUDI AG does not guarantee or accept any liability with respect to the correctness of information in this document. Copyright by AUDI AG.

– Position centre of clamps -arrows- over cutting location.
– Fit clamps ⇒ page 216 .
– Align the exhaust system so it is free of stress ⇒ page 228 .

Tightening torques

◆ ⇒ “1.1 Exploded view - silencers”, page 213

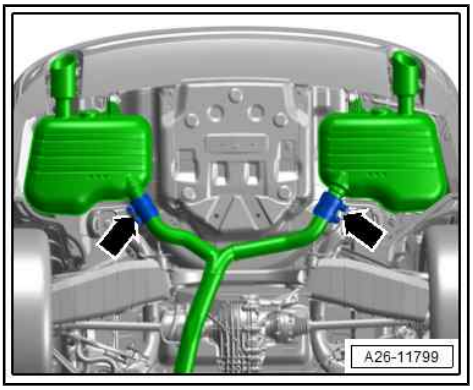

1.4 Removing and installing front silencers

⇒ “1.4.1 Removing and installing front silencer - vehicles without particulate filter”, page 223

⇒ “1.4.2 Removing and installing front silencer - vehicles with particulate filter”, page 224

⇒ “1.4.3 Removing and installing front silencer - vehicles with natural gas system”, page 226

1.4.1 Removing and installing front silencer - vehicles without particulate filter

Protected by copyright. Copying for private or commercial purposes, in part or in whole, is not permitted unless authorised by AUDI AG. AUDI AG does not guarantee or accept any liability with respect to the correctness of information in this document. Copyright by AUDI AG.

Removing

– Remove engine cover panel ⇒ Servicing 4-cylinder engine, 2.0 ltr. 4-valve TFSI; Rep. gr. 10 ; Engine cover panel; Removing and installing engine cover panel .
– Remove nuts -1- (accessible from above) for front silencer.
– Remove noise insulation (rear) ⇒ General body repairs, exterior; Rep. gr. 66 ; Noise insulation; Removing and installing noise insulation .
– Remove nut -2- and bolt -3- for front silencer.

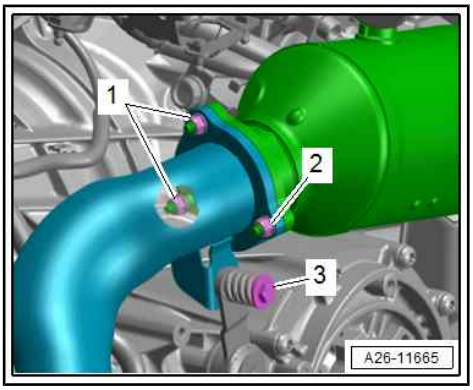

– Unscrew bolts -arrows- for front silencer.

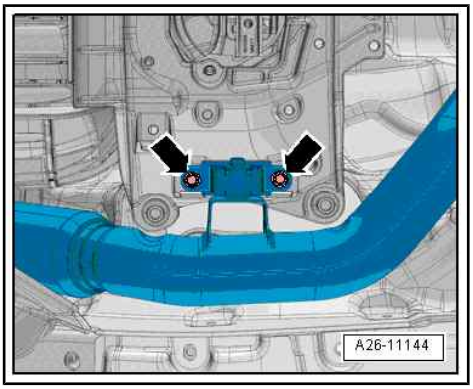

– Loosen clamp -arrows- and push towards rear.

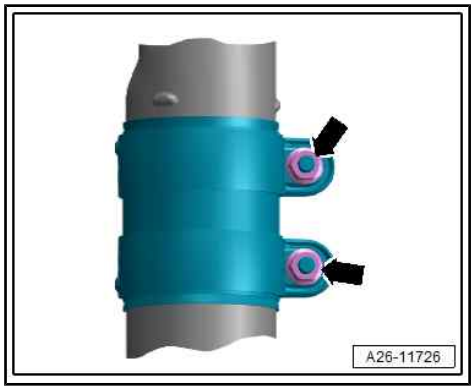

Caution

Risk of damage to flexible joint.

- *Do not bend flexible joint more than 10°.*
- *Install flexible joint so that it is not under tension.*
- *Take care not to damage wire mesh on flexible joint.*

– Detach front silencer.

Installing

Installation is carried out in reverse order; note the following:

Note

Renew gaskets, seals and self-locking nuts after removal.

– Align the exhaust system so it is free of stress ⇒ page 228 .

– Install engine cover panel ⇒ Servicing 4-cylinder engine, 2.0 ltr. 4-valve TFSI; Rep. gr. 10 ; Engine cover panel; Removing and installing engine cover panel .

Tightening torques

- ⇒ “1.1 Exploded view - silencers”, page 213
- ⇒ General body repairs, exterior; Rep. gr. 66 ; Noise insulation; Exploded view - noise insulation

1.4.2 Removing and installing front silencer - vehicles with particulate filter

Removing

– Unscrew nuts -arrows- for front silencer.

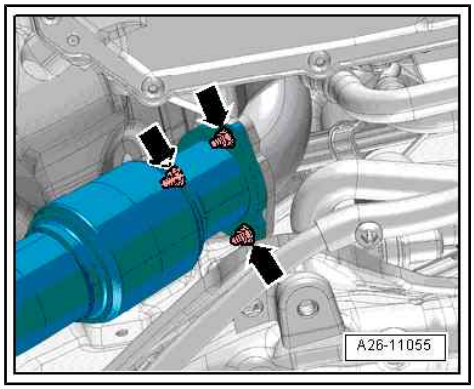

Protected by copyright. Copying for private or commercial purposes, in part or in whole, is not permitted unless authorised by AUDI AG. AUDI AG does not guarantee or accept any liability with respect to the correctness of information in this document. Copyright by AUDI AG.

– Unscrew bolts -arrows- for front silencer (shown on right side).

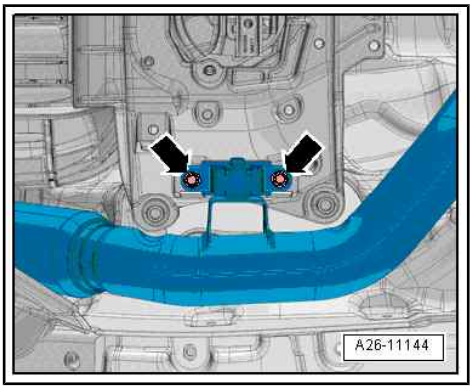

– Loosen clamp -arrows- and push towards rear.

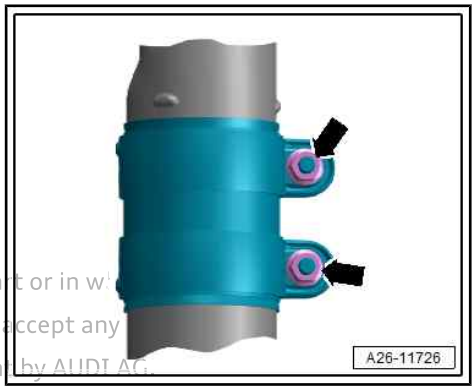

Caution

Risk of damage to flexible joint.

- ***Do not bend flexible joint more than 10°.***
- ***Install flexible joint so that it is not under tension.***
- ***Take care not to damage wire mesh on flexible joint.***

Protected by copyright. Copying for private or commercial purposes, in part or in w
permitted unless authorised by AUDI AG. AUDI AG does not guarantee or accept any
with respect to the correctness of information in this document. Copyright by AUDI AG.

– Detach front silencer.

Installing

Installation is carried out in reverse order; note the following:

Note

Renew gaskets, seals and self-locking nuts after removal.

– Align the exhaust system so it is free of stress ⇒ page 228 .

Tightening torques

- ⇒ “1.1 Exploded view - silencers”, page 213

1.4.3 Removing and installing front silencer - vehicles with natural gas system

Removing

– Remove tunnel cross-piece ⇒ General body repairs, exterior; Rep. gr. 66 ; Underbody trim; Exploded view - underbody struts .

Protected by copyright. Copying for private or commercial purposes, in
permitted unless authorised by AUDI AG. AUDI AG does not guarantee
respect to the correctness of information in this document. Copy

WARNING

Risk of accident caused by weight of silencer.

- *A second mechanic is required for removal of the front silencer.*

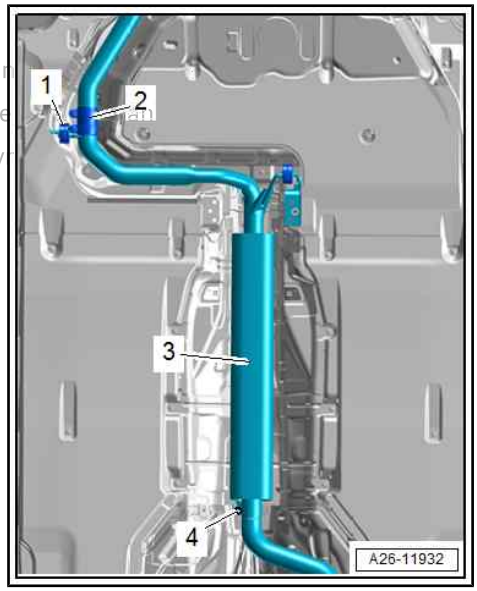

– Loosen clamp -4-.

– Loosen clamp -2- and push to rear.

– Disengage mounting -1- at exhaust system.

– Disconnect front silencer -3- from front exhaust pipe and remove.

Installing

Installation is carried out in reverse order; note the following:

– Align the exhaust system so it is free of stress ⇒ page 228 .

Tightening torques

- ⇒ “1.1 Exploded view - silencers”, page 213
- ⇒ General body repairs, exterior; Rep. gr. 66 ; Underbody trim; Exploded view - underbody struts

1.5 Removing and installing silencers

⇒ “1.5.1 Removing and installing silencers - vehicles without natural gas system”, page 226

⇒ “1.5.2 Removing and installing silencers - vehicles with natural gas system”, page 228

1.5.1 Removing and installing silencers - vehicles without natural gas system

Removing

– Depending on country/equipment version: Remove diagonal struts (left and right) ⇒ General body repairs, exterior; Rep. gr. 66 ; Underbody trim; Exploded view - underbody struts .

– Remove tunnel cross-piece ⇒ General body repairs, exterior; Rep. gr. 66 ; Underbody trim; Exploded view - underbody struts .

– Loosen clamp -arrows- and push towards rear.

Caution

Risk of damage to flexible joints in front silencer.

- *Do NOT bend the flexible joints in the front silencer more than 10°.*

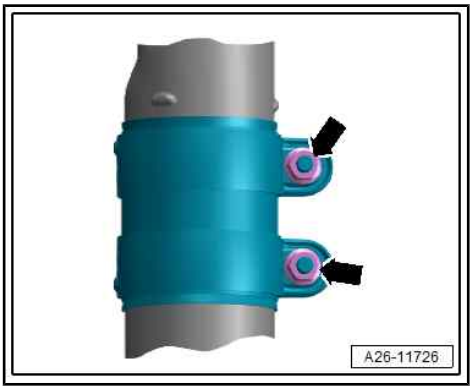

– Lower front silencer slightly and detach clamp.

– Tie up front silencer.

Vehicles with front-wheel drive:

WARNING

Risk of accident caused by weight of silencers.

- *A second mechanic is required for removal of the rear silencer.*

– Unscrew bolts -1, 3- and remove silencer -2-.

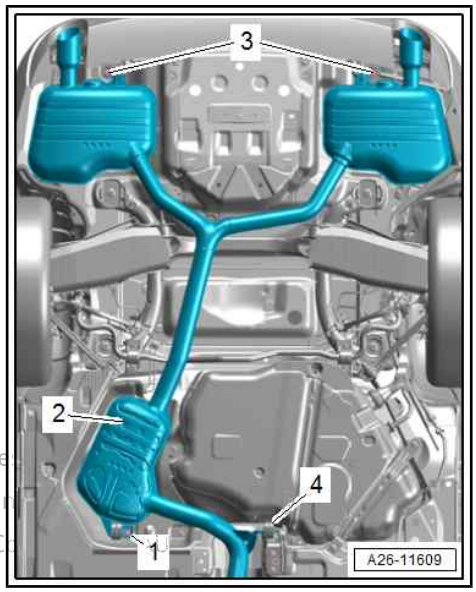

Protected by copyright. Copying for private or commercial purpose
permitted unless authorised by AUDI AG. AUDI AG does not guara
with respect to the correctness of information in this document. C

Vehicles with four-wheel drive:

WARNING

Risk of accident caused by weight of silencers.

- *A second mechanic is required for removal of the rear silencer.*

– Disengage mounting -2- at exhaust system.

– Unscrew bolts -3- and remove silencer -1-.

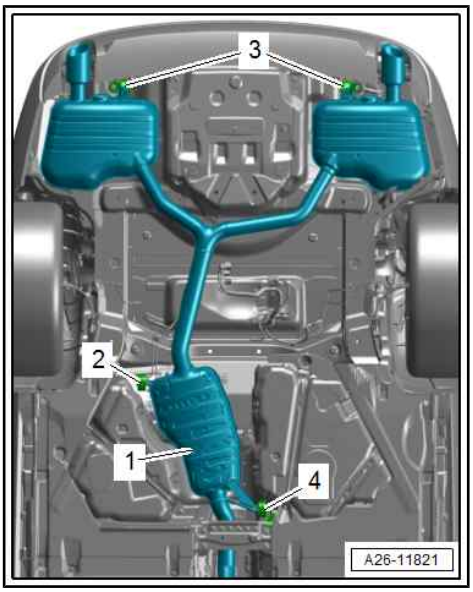

Installing

Installation is carried out in reverse order; note the following:

– Align the exhaust system so it is free of stress ⇒ page 228 .

Tightening torques

- ⇒ “1.1 Exploded view - silencers”, page 213
- ⇒ General body repairs, exterior; Rep. gr. 66 ; Underbody trim; Exploded view - underbody trim
- ⇒ General body repairs, exterior; Rep. gr. 66 ; Underbody trim; Exploded view - underbody struts

1.5.2 Removing and installing silencers - vehicles with natural gas system

Removing rear silencer without cutting point

– Remove diagonal struts (left and right) ⇒ General body repairs, exterior; Rep. gr. 66 ; Underbody trim; Exploded view - underbody struts .

WARNING

Risk of accident caused by weight of silencers.

- *A second mechanic is required for removal of the rear silencers.*

– Loosen clamp -1- and push to rear.

– Unscrew bolts -arrows- and remove silencer -2-.

– Screw in bolts again until contact is made.

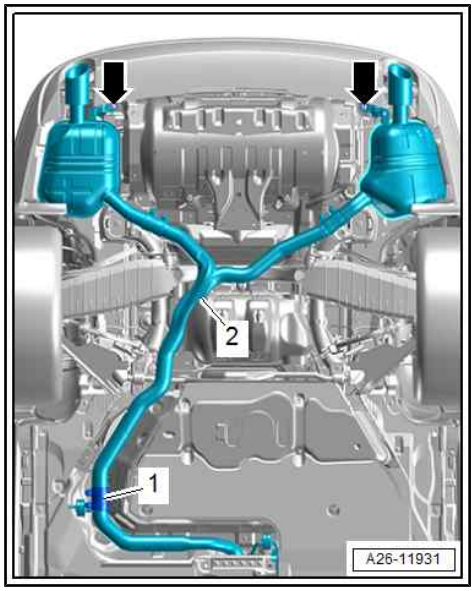

Removing rear silencer with cutting point

– Loosen clamp -3-.

– Unscrew bolt -2-, slide clamp towards front and detach silencer -1-.

– Screw in bolts again until contact is made.

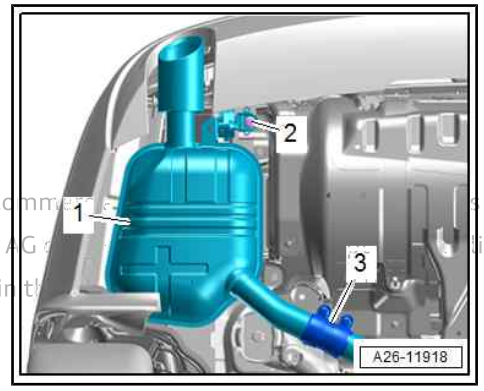

Protected by copyright. Copying for private or commercial purposes, in part or in whole, is not permitted unless authorised by AUDI AG. AUDI AG does not guarantee or accept any liability with respect to the correctness of information in this document.

Installing

Installation is carried out in reverse order; note the following:

– Align the exhaust system so it is free of stress ⇒ page 228 .

Tightening torques

- ⇒ “1.1 Exploded view - silencers”, page 213
- ⇒ General body repairs, exterior; Rep. gr. 66 ; Underbody trim; Exploded view - underbody struts

1.6 Stress-free alignment of exhaust system

Procedure

- The exhaust system must be aligned when it is cool.

– Slacken front clamp -arrows-.

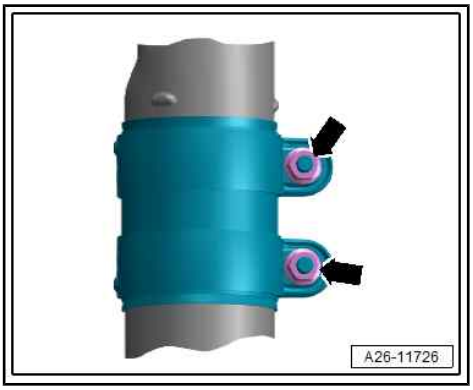

– Push exhaust system towards front of vehicle -arrow- so that mounting -1- for exhaust pipe is preloaded by -a- = 6 ... 10 mm.
– Position clamp at front ⇒ page 216 and tighten bolted connections evenly.

Protected by copyright. Copying for private or commercial purposes, in part ... permitted unless authorised by AUDI AG. AUDI AG does not guarantee or ... with respect to the correctness of information in this document. Copyright by A...

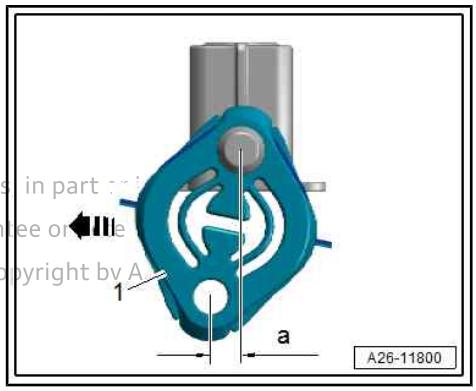

A4/A5 before product upgrade

– Check clearance between tailpipes and bumper on both sides:

• Dimension -x- (left-side) = dimension -x- (right-side)

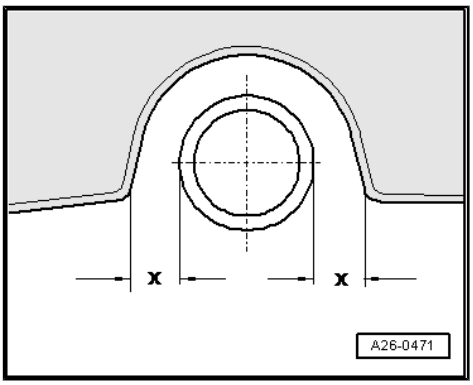

Tightening torques

◆ ⇒ “1.1 Exploded view - silencers”, page 213

1.7 Checking exhaust system for leaks

All procedures are described in ⇒ Servicing 4-cylinder engine, 2.0 ltr. 4-valve TFSI; Rep. gr. 26 ; Exhaust pipes/silencers; Checking exhaust system for leaks .

2 Emission control system

All procedures and components can be found in ⇒ Servicing 4-cylinder engine, 2.0 ltr. 4-valve TFSI; Rep. gr. 26 ; Emission control system .

Protected by copyright. Copying for private or commercial purposes, in part or in whole, is not permitted unless authorised by AUDI AG. AUDI AG does not guarantee or accept any liability with respect to the correctness of information in this document. Copyright by AUDI AG.

28 – Ignition system

1 Ignition system

All procedures and components can be found in ⇒ Servicing 4-cylinder engine, 2.0 ltr. 4-valve TFSI; Rep. gr. 28 ; Ignition system .

Protected by copyright. Copying for private or commercial purposes, in part or in whole, is not permitted unless authorised by AUDI AG. AUDI AG does not guarantee or accept any liability with respect to the correctness of information in this document. Copyright by AUDI AG.