2007 Acura RDX Online Reference Owner's Manual

Use these links (and links throughout this manual) to navigate through this reference.
For a printed owner's manual, click on authorized manuals or go to www.helminc.com.

Contents

Owner's Identification Form

Introduction i

A Few Words About Safety iii

Your Vehicle at a Glance 3

Driver and Passenger Safety 5
Proper use and care of your vehicle's seat belts, and Supplemental Restraint System.

Instruments and Controls 61
Instrument panel indicator and gauge, and how to use dashboard and steering column controls.

Comfort and Convenience Features 169
How to operate the climate control system, the audio system, and other convenience features.

Before Driving 277
What gasoline to use, how to break-in your new vehicle, and how to load luggage and other cargo.

Driving 291
The proper way to start the engine, shift the transmission, and park, plus towing a trailer.

Maintenance 327
The Maintenance Schedule shows you when you need to take your vehicle to the dealer.

Taking Care of the Unexpected 381
This section covers several problems motorists sometimes experience, and how to handle them.

Technical Information 405
ID numbers, dimensions, capacities, and technical information.

Warranty and Customer Relations (U.S. and Canada) 421
A summary of the warranties covering your new Acura, and how to contact us.

Authorized Manuals (U.S. only) 425
How to order manuals and other technical literature.

Index I

Service Information Summary
A summary of information you need when you pull up to the fuel pump.

Owner's Identification

OWNER _____

_____

ADDRESS _____
STREET

_____ _____ _____
CITY STATE/PROVINCE ZIP CODE/ POSTAL CODE

V. I. N. _____

DELIVERY DATE _____
(Date sold to original retail purchaser)

DEALER NAME _____ DEALER NO. _____

ADDRESS _____
STREET

_____ _____ _____
CITY STATE/PROVINCE ZIP CODE/ POSTAL CODE

OWNER'S SIGNATURE _____

DEALER'S SIGNATURE _____

This owner's manual should be considered a permanent part of the vehicle and should remain with the vehicle when it is sold.

This owner's manual covers all models of the Acura RDX. You may find descriptions of equipment and features that are not on your particular vehicle.

The information and specifications included in this publication were in effect at the time of approval for printing. Honda Motor Co., Ltd. reserves the right, however, to discontinue or change specifications or design at any time without notice and without incurring any obligation whatsoever.

POUR CLIENTS CANADIEN
AVIS IMPORTANT: Si vous avez besoin d'un Manuel du Conducteur en français, veuillez demander à votre concessionnaire de commander le numéro de pièce 33STKC00

Introduction

Congratulations! Your selection of a 2007 Acura RDX was a wise investment. It will give you years of driving pleasure.

One of the best ways to enhance the enjoyment of your new vehicle is to read this manual. In it, you will learn how to operate its driving controls and convenience items. Afterwards, keep this owner's manual in your vehicle so you can refer to it at any time.

Several warranties protect your new vehicle. Read the warranty booklet thoroughly so you understand the coverages and are aware of your rights and responsibilities.

Maintaining your vehicle according to the maintenance minder shown in the instrument panel helps to keep your driving trouble-free while it preserves your investment. When your vehicle needs maintenance, keep in mind that your dealer's staff is specially trained in servicing the many systems unique to your vehicle. Your dealer is dedicated to your satisfaction and will be pleased to answer any questions and concerns.

As you read this manual, you will find information that is preceded by a NOTICE symbol. This information is intended to help you avoid damage to your vehicle, other property, or the environment.

Introduction

California Proposition 65 Warning

WARNING: This product contains or emits chemicals known to the state of California to cause cancer and birth defects or other reproductive harm.

Event Data Recorders
This vehicle is equipped with one or more devices commonly referred to as event data recorders. These devices record front seat belt use, front passenger seat occupancy, airbag deployment data, and the failure of any airbag system component. This data belongs to the vehicle owner and may not be accessed by anyone else except as legally required or with the permission of the vehicle owner.

Service Diagnostic Recorders
This vehicle is equipped with service-related devices that record information about powertrain performance. The data can be used to verify emissions law requirements and/or help technicians diagnose and solve service problems. It may also be combined with data from other sources for research purposes, but it remains confidential and is never linked to the vehicle owner.

California Perchlorate Contamination Prevention Act
The airbags, seat belt tensioners, and CR type batteries in this vehicle contain perchlorate materials — special handling may apply. See www.dtsc.ca.gov/hazardouswaste/perchlorate.

A Few Words About Safety

Your safety, and the safety of others, is very important. And operating this vehicle safely is an important responsibility.

To help you make informed decisions about safety, we have provided operating procedures and other information on labels and in this manual. This information alerts you to potential hazards that could hurt you or others.

Of course, it is not practical or possible to warn you about all the hazards associated with operating or maintaining your vehicle. You must use your own good judgement.

You will find this important safety information in a variety of forms, including:

- **Safety Labels** — on the vehicle.
- **Safety Messages** — preceded by a safety alert symbol ⚠ and one of three signal words: **DANGER**, **WARNING**, or **CAUTION**. These signal words mean:

⚠ DANGER	You WILL be KILLED or SERIOUSLY HURT if you don't follow instructions.
⚠ WARNING	You CAN be KILLED or SERIOUSLY HURT if you don't follow instructions.
⚠ CAUTION	You CAN be HURT if you don't follow instructions.

- **Safety Headings** — such as Important Safety Reminders or Important Safety Precautions.
- **Safety Section** — such as Driver and Passenger Safety.
- **Instructions** — how to use this vehicle correctly and safely.

This entire book is filled with important safety information — please read it carefully.

Important Handling Information

Your RDX has higher ground clearance than a passenger vehicle designed for use only on pavement. Higher ground clearance has many advantages for off-highway driving. It allows you to travel over bumps, obstacles, and rough terrain. It also provides good visibility so you can anticipate problems earlier.

These advantages come at some cost. Because your vehicle is taller and rides higher off the ground, it has a high center of gravity. This means your vehicle can tip or roll over if you make abrupt turns. Utility vehicles have a significantly higher rollover rate than other types of vehicles. In a rollover crash, an unbelted person is significantly more likely to die than a person wearing a seat belt. As a reminder, make sure you and your passengers always wear seat belts.

For information on how to reduce the risk of rollover, read “Driving Guidelines” on page 292 of this manual and the *Off-Highway Driving Guidelines* section on page 324 . Failure to operate your vehicle correctly might result in loss of control or an accident.

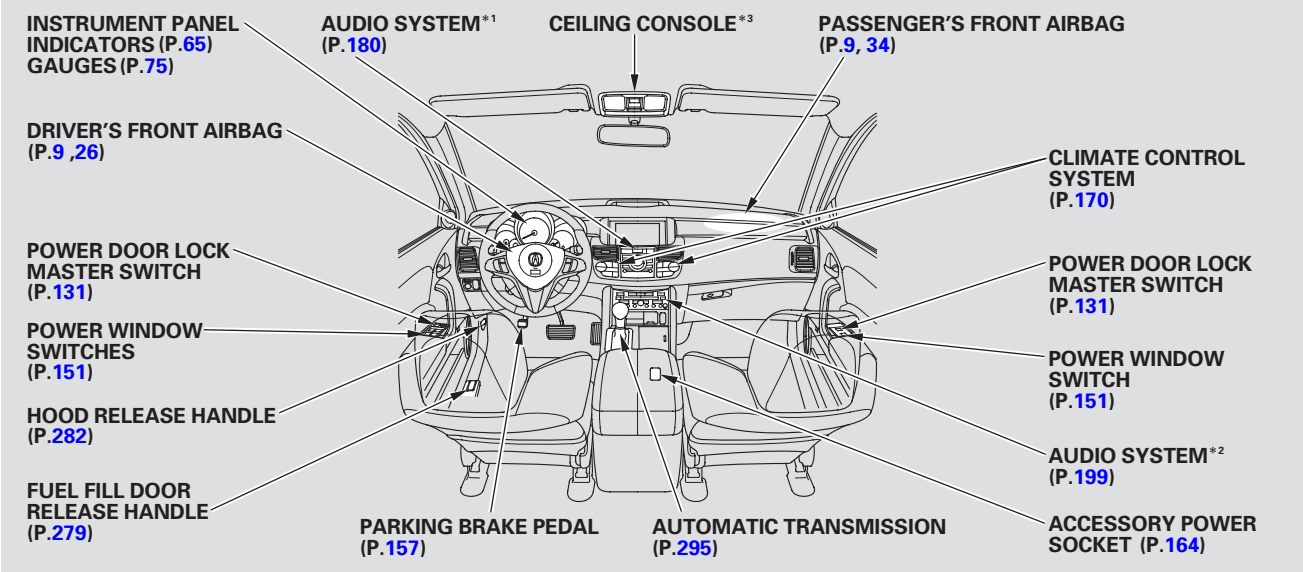

*1: On RDX model only
*2: On RDX with Technology Package model only
*3: HomeLink Buttons (P.253)
Moonroof Switch (P.153)
Front Ceiling Light Switch (P.158)

Your Vehicle at a Glance

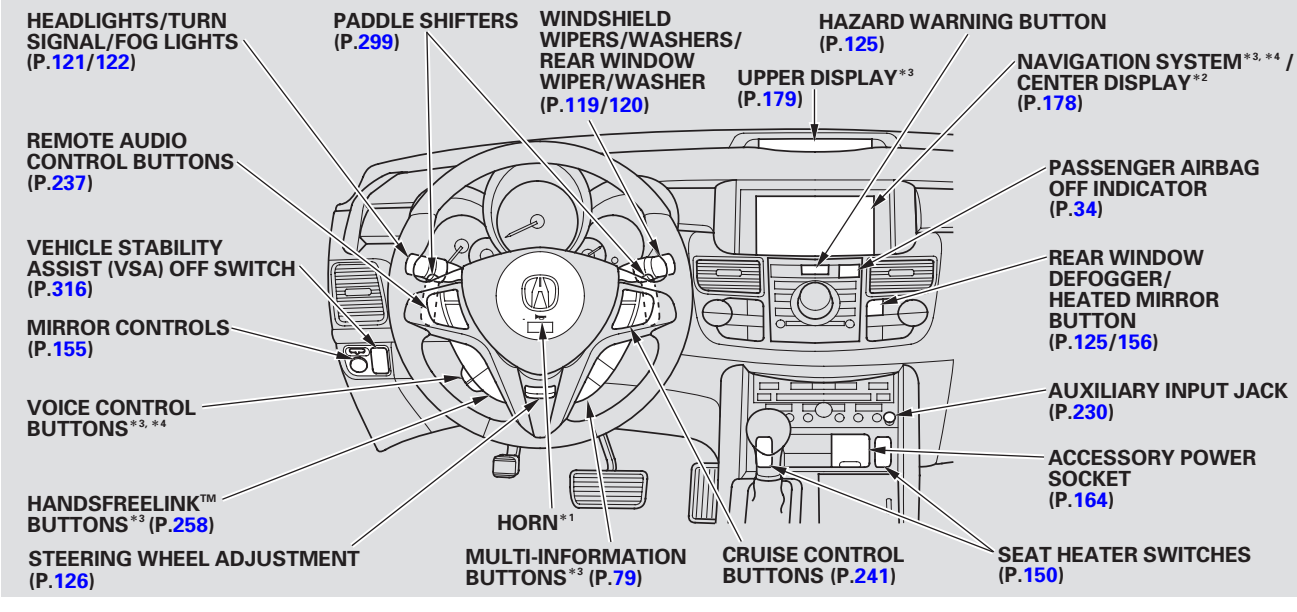

*1 : To use the horn, press the center pad of the steering wheel.
*2 : On RDX model only
*3 : On RDX with Technology Package model only
*4 : Refer to the navigation system manual.

Driver and Passenger Safety

This section gives you important information about how to protect yourself and your passengers. It shows you how to use seat belts. It explains how your airbags work. And it tells you how to properly restrain infants and children in your vehicle.

Important Safety Precautions 6
Your Vehicle's Safety Features..... 7
Seat Belts 8
Airbags 9
Protecting Adults and Teens..... 11
1. Close and Lock the Doors 11
2. Adjust the Front Seats 13
3. Adjust the Seat-Backs 14
4. Adjust the Head Restraints 15
5. Fasten and Position the Seat Belts 16
6. Maintain a Proper Sitting Position 17
Advice for Pregnant Women..... 18
Additional Safety Precautions.... 19
Additional Information About Your Seat Belts 20
Seat Belt System Components... 20
Lap/Shoulder Belt..... 21
Automatic Seat Belt Tensioners..... 22
Seat Belt Maintenance 23
Additional Information About Your Airbags 24
Airbag System Components..... 24
How Your Front Airbags Work..... 26
How Your Side Airbags Work.... 31
How Your Side Curtain Airbags Work..... 32
How the SRS Indicator Works... 33
How the Side Airbag Off Indicator Works..... 33
How the Passenger Airbag Off Indicator Works..... 34
Airbag Service..... 35
Additional Safety Precautions.... 36
Protecting Children — General Guidelines..... 37
All Children Must Be Restrained 37
All Children Should Sit in a Back Seat 38
The Passenger's Front Airbag Can Pose Serious Risks 38
If You Must Drive with Several Children 40
If a Child Requires Close Attention 40
Additional Safety Precautions.... 41
Protecting Infants and Small Children 42
Protecting Infants..... 42
Protecting Small Children 43
Selecting a Child Seat..... 45
Installing a Child Seat 46
With LATCH 47
With a Lap/Shoulder Belt 51
With a Tether..... 52
Protecting Larger Children 54
Checking Seat Belt Fit 54
Using a Booster Seat..... 55
When Can a Larger Child Sit in Front..... 56
Additional Safety Precautions.... 57
Carbon Monoxide Hazard 58
Safety Labels 59

Important Safety Precautions

You'll find many safety recommendations throughout this section, and throughout this manual. The recommendations on this page are the ones we consider to be the most important.

Always Wear Your Seat Belt
A seat belt is your best protection in all types of collisions. Airbags are designed to supplement seat belts, not replace them. So even though your vehicle is equipped with airbags, make sure you and your passengers always wear your seat belts, and wear them properly (see page 16).

Restrain All Children
Children age 12 and under should ride properly restrained in a back seat, not the front seat. Infants and small children should be restrained in a child seat. Larger children should use a booster seat and a lap/shoulder belt until they can use the belt properly without a booster seat (see pages 37 – 57).

Be Aware of Airbag Hazards
While airbags can save lives, they can cause serious or fatal injuries to occupants who sit too close to them, or are not properly restrained. Infants, young children, and short adults are at the greatest risk. Be sure to follow all instructions and warnings in this manual.

Don't Drink and Drive
Alcohol and driving don't mix. Even one drink can reduce your ability to respond to changing conditions, and your reaction time gets worse with every additional drink. So don't drink and drive, and don't let your friends drink and drive, either.

Control Your Speed
Excessive speed is a major factor in crash injuries and deaths. Generally, the higher the speed, the greater the risk, but serious injuries can also occur at lower speeds. Never drive faster than is safe for current conditions, regardless of the maximum speed posted.

Keep Your Vehicle in Safe Condition
Having a tire blowout or a mechanical failure can be extremely hazardous. To reduce the possibility of such problems, check your tire pressures and condition frequently, and perform all regularly scheduled maintenance (see page 330).

Your Vehicle's Safety Features

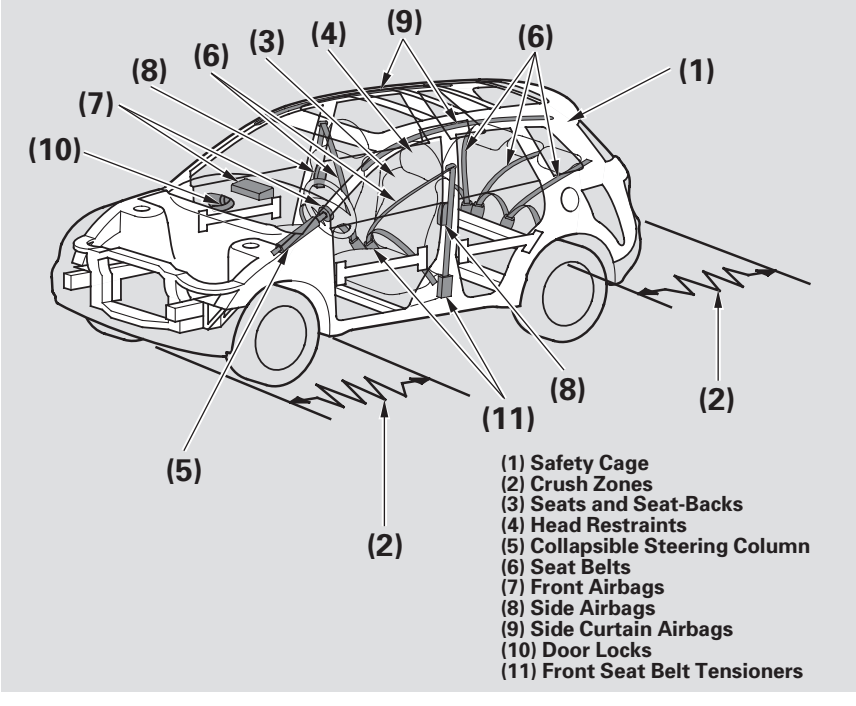

Your vehicle is equipped with many features that work together to protect you and your passengers during a crash.

Some features do not require any action on your part. These include a strong steel framework that forms a safety cage around the passenger compartment, front and rear crush zones, a collapsible steering column, and tensioners that tighten the front seat belts in a crash.

However, you and your passengers can't take full advantage of these features unless you remain sitting in a proper position and ***always wear your seat belts***. In fact, some safety features can contribute to injuries if they are not used properly.

The following pages explain how you can take an active role in protecting yourself and your passengers.

Your Vehicle's Safety Features

Seat Belts

Your vehicle is equipped with seat belts in all seating positions.

Your seat belt system also includes an indicator on the instrument panel and a beeper to remind you and your passengers to fasten your seat belts.

Why Wear Seat Belts

Seat belts are the single most effective safety device for adults and larger children. (Infants and smaller children must be properly restrained in child seats.)

Not wearing a seat belt properly increases the chance of serious injury or death in a crash, even though your vehicle has airbags.

In addition, most states and all Canadian provinces require you to wear seat belts.

⚠ WARNING

Not wearing a seat belt properly increases the chance of serious injury or death in a crash, even though your vehicle has airbags.

Be sure you and your passengers always wear seat belts and wear them properly.

When properly worn, seat belts:

- Keep you connected to the vehicle so you can take advantage of the vehicle's built-in safety features.
- Help protect you in almost every type of crash, including frontal, side, and rear impacts and rollovers.
- Help keep you from being thrown against the inside of the vehicle and against other occupants.
- Keep you from being thrown out of the vehicle.
- Help keep you in a good position should the airbags ever deploy. A good position reduces the risk of injury from an inflating airbag and allows you to get the best advantage from the airbag.

Of course, seat belts cannot completely protect you in every crash. But in most cases, seat belts can reduce your risk of serious injury.

What You Should Do:

Always wear your seat belt, and make sure you wear it properly.

Airbags

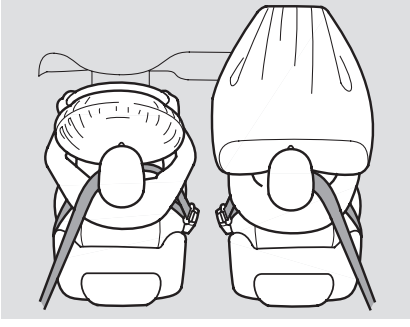

Your vehicle has a supplemental restraint system (SRS) with front airbags to help protect the heads and chests of the driver and a front seat passenger during a moderate to severe frontal collision (see page 26 for more information on how your front airbags work).

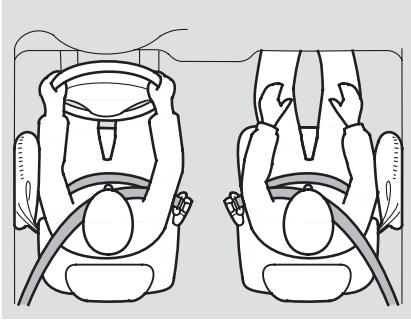

Your vehicle also has side airbags to help protect the upper torso of the driver or a front seat passenger during a moderate to severe side impact (see page 31 for more information on how your side airbags work).

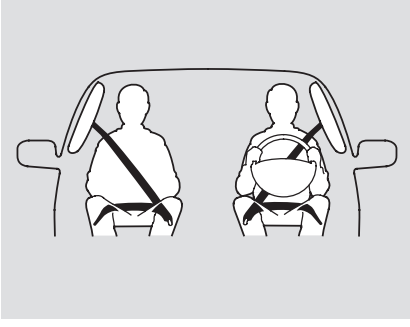

In addition, your vehicle has side curtain airbags to help protect the heads of the driver, front passenger, and passengers in the outer rear seating positions during a moderate to severe side impact or rollover (see page 32 for more information on how your side curtain airbags work).

CONTINUED

Your Vehicle's Safety Features

The most important things you need to know about your airbags are:

- ***Airbags do not replace seat belts.*** They are designed to supplement the seat belts.
- ***Airbags offer no protection in rear impacts, or minor frontal or side collisions.***
- ***Airbags can pose serious hazards.*** To do their job, airbags must inflate with tremendous force. So while airbags help save lives, they can cause minor injuries or more serious or even fatal injuries if occupants are not properly restrained or sitting properly.

What you should do: Always wear your seat belt properly, and sit upright and as far back from the steering wheel as possible while allowing full control of the vehicle. A front passenger should move their seat as far back from the dashboard as possible.

The rest of this section gives more detailed information about how you can maximize your safety.

Remember, however, that no safety system can prevent all injuries or deaths that can occur in a severe crash, even when seat belts are properly worn and the airbags deploy.

Protecting Adults and Teens

Introduction

The following pages provide instructions on how to properly protect the driver, adult passengers, and teenage children who are large enough and mature enough to drive or ride in the front.

See pages 37 – 41 for important guidelines on how to properly protect infants, small children, and larger children who ride in your vehicle.

1. Close and Lock the Doors

After everyone has entered the vehicle, be sure the doors and the tailgate are closed and locked.

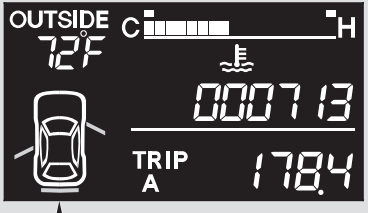

DOOR AND TAILGATE OPEN MONITOR

On RDX model

Your vehicle has a door and tailgate open monitor on the information display to indicate when a specific door or the tailgate is not tightly closed.

CONTINUED

Protecting Adults and Teens

On RDX with Technology Package model
The door and tailgate open monitor appears on the multi-information display to indicate when a specific door or the tailgate is not tightly closed.
When one or more doors are not tightly closed, the “DOOR OPEN” message will come on.
When the tailgate is not tightly closed, the “TAILGATE OPEN” message will come on.

When both tailgate and one or more doors are not tightly closed, the “DOOR & TAILGATE OPEN” message will come on.

Locking the doors and the tailgate reduces the chance of someone being thrown out of the vehicle during a crash, and it helps prevent passengers from accidentally opening a door or the tailgate and falling out.

Locking the doors and the tailgate also helps prevent an outsider from unexpectedly opening a door or the tailgate when you come to a stop.

See page 131 for how to lock the doors and the tailgate.

On RDX model
This vehicle has auto door locking/unlocking features. See page 133 for how to set them.

On RDX with Technology Package model
This vehicle has auto door locking/unlocking features. See pages 108 and 116 for how to set them.

2.Adjust the Front Seats

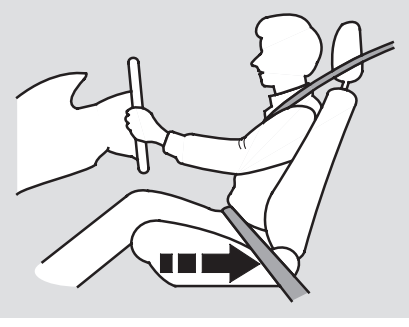

Adjust the driver's seat as far to the rear as possible while allowing you to maintain full control of the vehicle. Have a front passenger adjust their seat as far to the rear as possible.

If you sit too close to the steering wheel or dashboard, you can be seriously injured by an inflating front airbag, or by striking the steering wheel or dashboard.

The National Highway Traffic Safety Administration and Transport Canada recommend that drivers allow at least 10 inches (25 cm) between the center of the steering wheel and the chest. In addition to adjusting the seat, you can adjust the steering wheel up and down, and in and out (see page 126).

If you cannot get far enough away from the steering wheel and still reach the controls, we recommend that you investigate whether some type of adaptive equipment may help.

⚠ WARNING

Sitting too close to a front airbag can result in serious injury or death if the front airbags inflate.

Always sit as far back from the front airbags as possible.

Once your seat is adjusted correctly, rock it back and forth to make sure the seat is locked in position.

See pages 144 and 145 for how to adjust the front seats.

Protecting Adults and Teens

3.Adjust the Seat-Backs

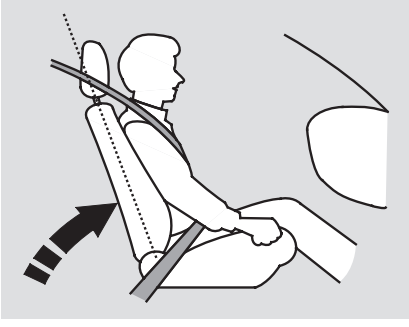

Adjust the driver's seat-back to a comfortable, upright position, leaving ample space between your chest and the airbag cover in the center of the steering wheel.

Passengers with adjustable seat-backs should also adjust their seat-back to a comfortable, upright position.

⚠WARNING

Reclining the seat-back too far can result in serious injury or death in a crash.

Adjust the seat-back to an upright position, and sit well back in the seat.

Reclining a seat-back so that the shoulder part of the belt no longer rests against the occupant's chest reduces the protective capability of the belt. It also increases the chance of sliding under the belt in a crash and being seriously injured. The farther a seat-back is reclined, the greater the risk of injury.

See pages 144 and 145 for how to adjust the seat-backs.

4.Adjust the Head Restraints

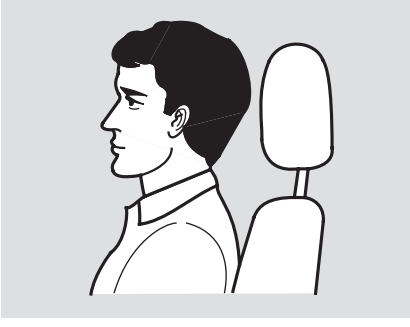

Adjust the driver's head restraint so the back of your head rests against the center of the restraint.

Have passengers adjust their head restraints properly as well. Taller persons should adjust their restraint as high as possible.

⚠ WARNING

Improperly positioning head restraints reduces their effectiveness and you can be seriously injured in a crash.

Make sure head restraints are in place and positioned properly before driving.

Properly adjusted head restraints will help protect occupants from whiplash and other crash injuries.

See page 146 for how to adjust the head restraints.

5. Fasten and Position the Seat Belts

Insert the latch plate into the buckle, then tug on the belt to make sure the belt is securely latched. Check that the belt is not twisted, because a twisted belt can cause serious injuries in a crash.

Position the lap part of the belt as low as possible across your hips, then pull up on the shoulder part of the belt so the lap part fits snugly. This lets your strong pelvic bones take the force of a crash and reduces the chance of internal injuries.

If necessary, pull up on the belt again to remove any slack, then check that the belt rests across the center of your chest and over your shoulder.

This spreads the forces of a crash over the strongest bones in your upper body.

⚠ WARNING

Improperly positioning the seat belts can cause serious injury or death in a crash.

Make sure all seat belts are properly positioned before driving.

If the seat belt touches or crosses your neck, or if it crosses your arm instead of your shoulder, you need to adjust the seat belt anchor height.

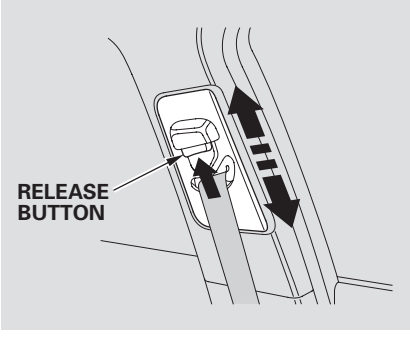

The front seats have adjustable seat belt anchors. To adjust the height of an anchor, press and hold the release button and slide the anchor up or down as needed (it has four positions).

Never place the shoulder portion of a lap/shoulder belt under your arm or behind your back. This could cause very serious injuries in a crash.

If a seat belt does not seem to work properly, it may not protect the occupant in a crash.

No one should sit in a seat with an inoperative seat belt. Using a seat belt that is not working properly can result in serious injury or death. Have your dealer check the belt as soon as possible.

See page 20 for additional information about your seat belts and how to take care of them.

6. Maintain a Proper Sitting Position

After all occupants have adjusted their seats and put on seat belts, it is very important that they continue to sit upright, well back in their seats, with their feet on the floor, until the vehicle is parked and the engine is off.

Sitting improperly can increase the chance of injury during a crash. For example, if an occupant slouches, lies down, turns sideways, sits forward, leans forward or sideways, or puts one or both feet up, the chance of injury during a crash is greatly increased.

CONTINUED

Protecting Adults and Teens

In addition, an occupant who is out of position in the front seat can be seriously or fatally injured in a crash by striking interior parts of the vehicle or being struck by an inflating front airbag.

⚠ WARNING

Sitting improperly or out of position can result in serious injury or death in a crash.

Always sit upright, well back in the seat, with your feet on the floor.

Advice for Pregnant Women

If you are pregnant, the best way to protect yourself and your unborn child when driving or riding in a vehicle is to always wear a seat belt, and keep the lap part of the belt as low as possible across the hips.

When driving, remember to sit upright and adjust the seat as far back as possible while allowing full control of the vehicle. When riding as a front passenger, adjust the seat as far back as possible.

This will reduce the risk of injuries to both you and your unborn child that can be caused by a crash or an inflating front airbag.

Each time you have a checkup, ask your doctor if it's okay for you to drive.

Additional Safety Precautions

- ***Never let passengers ride in the cargo area or on top of a folded-down back seat.*** If they do, they could be very seriously injured in a crash.

- ***Passengers should not stand up or change seats while the vehicle is moving.*** A passenger who is not wearing a seat belt during a crash or emergency stop can be thrown against the inside of the vehicle, against other occupants, or out of the vehicle.

- ***Two people should never use the same seat belt.*** If they do, they could be very seriously injured in a crash.

- ***Do not put any accessories on seat belts.*** Devices intended to improve occupant comfort or reposition the shoulder part of a seat belt can reduce the protective capability of the belt and increase the chance of serious injury in a crash.

- ***Do not place hard or sharp objects between yourself and a front airbag.*** Carrying hard or sharp objects on your lap, or driving with a pipe or other sharp object in your mouth, can result in injuries if your front airbag inflates.

- ***Keep your hands and arms away from the airbag covers.*** If your hands or arms are close to an airbag cover, they could be injured if the airbag inflates.

- ***Do not attach or place objects on the front airbag covers.*** Objects on the covers marked “SRS AIRBAG” could interfere with the proper operation of the airbags or be propelled inside the vehicle and hurt someone if the airbags inflate.

- ***Do not attach solid objects on or near a door.*** If a side airbag or a side curtain airbag inflates, a cup holder or other solid object attached on or near the door could be propelled inside the vehicle and hurt someone.

Additional Information About Your Seat Belts

Seat Belt System Components
Your seat belt system includes lap/shoulder belts in all five seating positions. The front seat belts are also equipped with automatic seat belt tensioners.

This system uses the same sensors as the front airbags to monitor whether the front seat belts are latched or unlatched, and how much weight is on the front passenger's seat (see pages 29 and 30).

The seat belt system includes an indicator on the instrument panel and a beeper to remind you and your passengers to fasten your seat belts.

This system monitors the front seat belts. If you turn the ignition switch to the ON (II) position before your seat belt is fastened, the beeper will sound and the indicator will flash. If your seat belt is not fastened before the beeper stops, the indicator will stop flashing but remain on.

If a front passenger does not fasten their seat belt, the indicator will come on about 6 seconds after the ignition switch is turned to the ON (II) position.

If either the driver or a front passenger does not fasten their seat belt while driving, the beeper will sound and the indicator will flash again at regular intervals.

On RDX with Technology Package model
You will also see a "FASTEN SEAT BELT" or "FASTEN PASSENGER SEAT BELT" message on the multi-information display (see page 84).

When no one is sitting in the front passenger's seat, or a child or small adult is riding there, the indicator should not come on and the beeper should not sound.

Additional Information About Your Seat Belts

If the indicator comes on or the beeper sounds when the driver's seat belt is latched and there is no front seat passenger and no items on the front seat, something may be interfering with the monitoring system. Look for and remove:

- Any items under the front passenger's seat.
- Any objects hanging on the seat or in the seat-back pocket.
- Any objects, such as a folded-down back seat, that is touching the rear of the seat-back.

If no obstructions are found, have your vehicle checked by a dealer.

Lap/Shoulder Belt
The lap/shoulder belt goes over your shoulder, across your chest, and across your hips.

To fasten the belt, insert the latch plate into the buckle, then tug on the belt to make sure the buckle is latched (see page 16 for how to properly position the belt).

To unlock the belt, press the red PRESS button on the buckle. Guide the belt across your body so that it retracts completely. After exiting the vehicle, be sure the belt is out of the way and will not get closed in the door.

All seat belts have an emergency locking retractor. In normal driving, the retractor lets you move freely in your seat while it keeps some tension on the belt. During a collision or sudden stop, the retractor automatically locks the belt to help restrain your body.

The seat belts in all positions except the driver's have an additional lockable retractor that must be activated to secure a child seat (see page 51).

CONTINUED

Additional Information About Your Seat Belts

If the shoulder part of the belt is pulled all the way out, the lockable retractor will activate. The belt will retract, but it will not allow the passenger to move freely.

To deactivate the lockable retractor, unlatch the buckle and let the seat belt fully retract. To refasten the seat belt, pull it out only as far as needed.

Automatic Seat Belt Tensioners

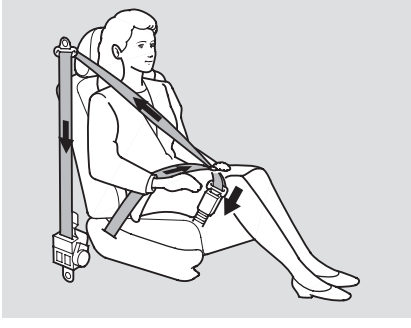

For added protection, the front seat belts are equipped with automatic seat belt tensioners. When activated, the tensioners immediately tighten the belts to help hold the driver and a front passenger in position.

The tensioners are designed to activate in any collision severe enough to cause the front airbags to deploy, or if a sensor detects your vehicle is about to roll over (see page 32).

If a side airbag or side curtain airbag deploys during a side impact, the tensioner on that side of the vehicle will also deploy.

The tensioners can also be activated during a collision in which the front airbags *do not deploy*. In this case, the airbags would not be needed, but the additional restraint could be helpful.

When the tensioners are activated, the seat belts will remain tight until they are unbuckled.

Additional Information About Your Seat Belts

Seat Belt Maintenance

For safety, you should check the condition of your seat belts regularly.

Pull each belt out fully, and look for frays, cuts, burns, and wear. Check that the latches work smoothly and the belts retract easily. If a belt does not retract easily, cleaning the belt may correct the problem (see page 366). Any belt that is not in good condition or working properly will not provide good protection and should be replaced as soon as possible.

Acura provides a limited warranty on seat belts. See your *Acura Warranty Information* booklet for details.

If a seat belt is worn during a crash, it must be replaced by your dealer. A belt that has been worn during a crash may not provide the same level of protection in a subsequent crash.

The dealer should also inspect the anchors for damage and replace them if needed. If the automatic seat belt tensioners activate during a crash, they must be replaced.

⚠ WARNING

Not checking or maintaining seat belts can result in serious injury or death if the seat belts do not work properly when needed.

Check your seat belts regularly, and have any problem corrected as soon as possible.

Additional Information About Your Airbags

Airbag System Components

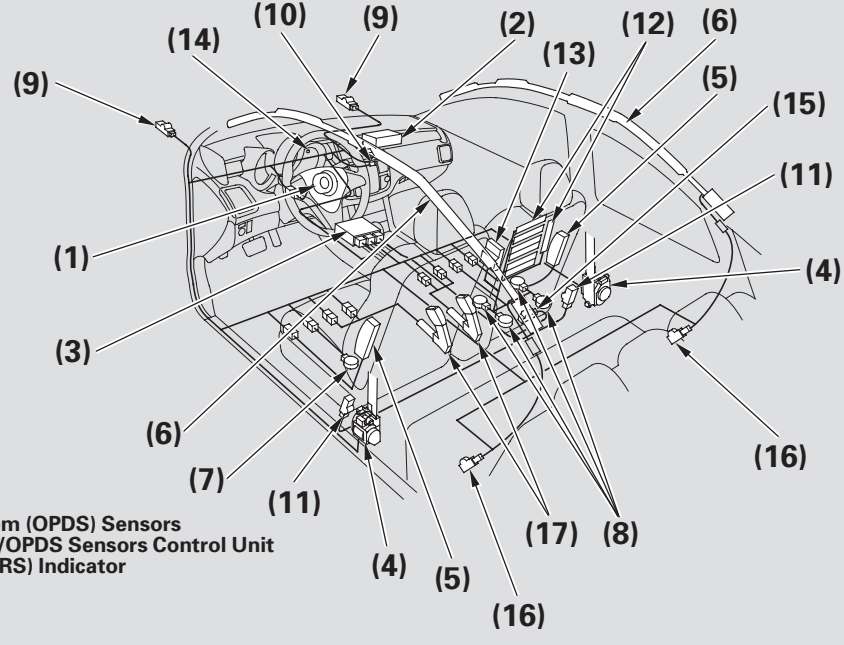

(1) Driver's Front Airbag
(2) Passenger's Front Airbag
(3) Control Unit
(4) Front Seat Belt Tensioners
(5) Side Airbags
(6) Side Curtain Airbags
(7) Driver's Seat Position Sensor
(8) Front Passenger's Weight Sensors
(9) Front Impact Sensors
(10) Passenger Airbag Off Indicator
(11) Side Impact Sensors (First)
(12) Occupant Position Detection System (OPDS) Sensors
(13) Front Passenger's Weight Sensors/OPDS Sensors Control Unit
(14) Supplemental Restraint System (SRS) Indicator
(15) Rollover Sensor
(16) Side Impact Sensors (Second)
(17) Seat Belt Buckle Tensioners

Additional Information About Your Airbags

Your airbag system includes:

- Two SRS (supplemental restraint system) front airbags. The driver's airbag is stored in the center of the steering wheel; the front passenger's airbag is stored in the dashboard. Both are marked "SRS AIRBAG" (see page 26).
- Two side airbags, one for the driver and one for a front passenger. The airbags are stored in the outer edges of the seat-backs. Both are marked "SIDE AIRBAG" (see page 31).
- Two side curtain airbags, one for each side of the vehicle. The airbags are stored in the ceiling, above the side windows. The front and rear pillars are marked "SIDE CURTAIN AIRBAG" (see page 32).
- Automatic front seat belt tensioners (see page 22).
- Sensors that can detect a moderate to severe front impact, side impact, or rollover.
- Sensors that can detect whether a child is in the passenger's side airbag path and signal the control unit to turn the airbag off (see page 31).
- Sensors that can detect whether the driver's seat belt and a front passenger's seat belt is latched or unlatched (see page 20).
- A driver's seat position sensor that monitors the distance of the seat from the front airbag. If the seat is too far forward, the airbag will inflate with less force (see page 29).
- Weight sensors that monitor the weight on the front passenger's seat. If the weight is about 65 lbs (29 kg) or less (the weight of an infant or small child), the passenger's front airbag will be turned off (see page 30).

CONTINUED

Additional Information About Your Airbags

- A rollover sensor that can detect if your vehicle is about to roll over and signal the control unit to deploy both side curtain airbags and front seat belt tensioners (see page 32).
- A sophisticated electronic system that continually monitors and records information about the sensors, the control unit, the airbag activators, the seat belt tensioners, and driver and front passenger seat belt use when the ignition switch is in the ON (II) position.
- An indicator on the instrument panel that alerts you to a possible problem with your airbags, sensors, or seat belt tensioners (see page 33).
- An indicator on the instrument panel that alerts you that the passenger's side airbag has been turned off (see page 33).
- An indicator on the dashboard that alerts you that the passenger's front airbag has been turned off (see page 34).
- Emergency backup power in case your vehicle's electrical system is disconnected in a crash.

How Your Front Airbags Work

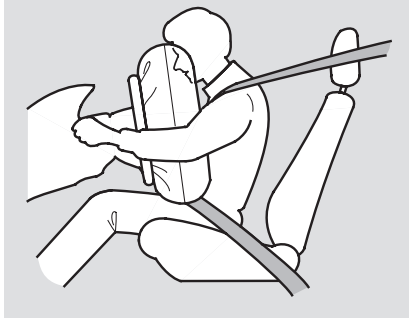

If you ever have a moderate to severe frontal collision, sensors will detect the vehicle's rapid deceleration.

If the rate of deceleration is high enough, the control unit will instantly inflate the driver's and front passenger's airbags, at the time and with the force needed.

Additional Information About Your Airbags

During a frontal crash, your seat belt restrains your lower body and torso, and the front airbag helps protect your head and chest.

Although both airbags normally inflate within split second of each other, it is possible for only one airbag to deploy.

This can happen if the severity of a collision is at the margin, or threshold, that determines whether or not the airbags will deploy. In such cases, the seat belt will provide sufficient protection, and the supplemental protection offered by the airbag would be minimal.

Only the driver's airbag will deploy if there is no passenger in the front seat, or if the advanced airbag system has turned the passenger's airbag off (see page 29).

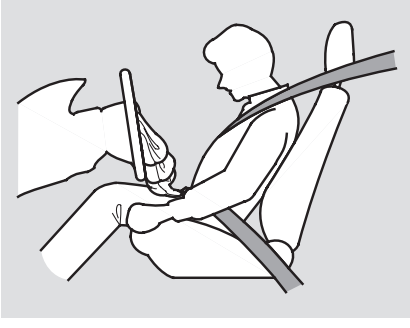

After inflating, the front airbags immediately deflate, so they won't interfere with the driver's visibility, or the ability to steer or operate other controls.

CONTINUED

Additional Information About Your Airbags

The total time for inflation and deflation is one-tenth of a second, so fast that most occupants are not aware that the airbags deployed until they see them lying in their laps.

After a crash, you may see what looks like smoke. This is actually powder from the airbag's surface. Although the powder is not harmful, people with respiratory problems may experience some temporary discomfort. If this occurs, get out of the vehicle as soon as it is safe to do so.

Dual-Stage Airbags
Your front airbags are dual-stage airbags. This means they have two inflation stages that can be ignited sequentially or simultaneously, depending on crash severity.

In a ***more severe*** crash, both stages will ignite simultaneously to provide the quickest and greatest protection.

In a ***less severe*** crash, one stage will ignite first, then the second stage will ignite a split second later. This provides longer airbag inflation time with a little less force.

Dual-Threshold Airbags
Your front airbags are also dual-threshold airbags. Airbags with this feature have two deployment thresholds that depend on whether sensors detect the occupant is wearing a seat belt or not.

If the occupant's belt is ***not latched***, the airbag will deploy at a slightly lower threshold, because the occupant would need extra protection.

If the occupant's belt ***is latched***, the airbag will inflate at a slightly higher threshold, when the airbag would be needed to supplement the protection provided by the seat belt.

Additional Information About Your Airbags

Advanced Airbags
Your front airbags are also advanced airbags. The main purpose of this feature is to help prevent airbag-caused injuries to short drivers and children who ride in front.

For both advanced airbags to work properly:

- Occupants must sit upright and wear their seat belts properly.
- Do not spill any liquids on or under the seats, cover the sensors, or put any cargo or metal objects under the front seats.
- Back-seat passengers should not put their feet under the front seats.

Failure to follow these instructions could damage the sensors or prevent them from working properly.

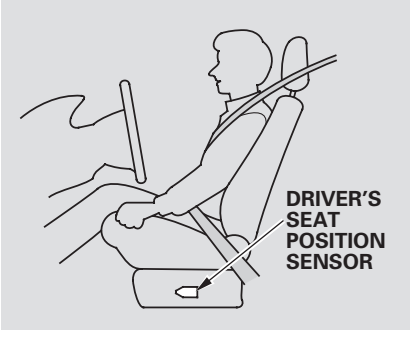

The driver's advanced front airbag system includes a seat position sensor under the seat. If the seat is too far forward, the airbag will inflate with less force, regardless of the severity of the impact.

If there is a problem with the sensor, the SRS Indicator will come on, and the airbag will inflate in the normal manner regardless of the driver's seating position.

CONTINUED

Additional Information About Your Airbags

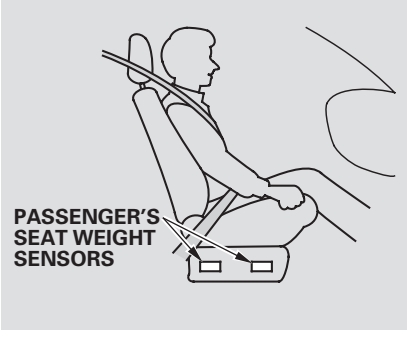

The passenger's advanced front airbag system has weight sensors under the seat. Although Acura does not encourage carrying an infant or small child in front, if the sensors detect the weight of an infant or small child (up to about 65 lbs or 29 kg), the system will automatically turn the passenger's front airbag off.

Be aware that objects placed on the passenger's seat can also cause the airbag to be turned off.

When the airbag is turned off, a "passenger airbag off" indicator in the center of the dashboard comes on (see page 34).

If the weight sensors detect there is no passenger in the front seat, the airbag will be off. However, the passenger airbag off indicator will not come on.

To ensure that the passenger's advanced front airbag system will work properly, ***do not do anything that would increase or decrease the weight on the front passenger's seat.*** This includes:

- A rear passenger pushing or pulling on the back of the front passenger's seat.
- Moving the front seat forcibly back against cargo on the seat or floor behind it.
- Hanging heavy items on the front passenger seat, or placing heavy items in the seat-back pocket.
- Moving the front seat or seat-back forcibly back against the folded rear seat.

Additional Information About Your Airbags

How Your Side Airbags Work

If you ever have a moderate to severe side impact, sensors will detect rapid acceleration and signal the control unit to instantly inflate either the driver's or the passenger's side airbag and activate the seat belt tensioner.

Only one airbag will deploy during a side impact. If the impact is on the passenger's side, the passenger's side airbag will deploy even if there is no passenger.

To get the best protection from the side airbags, front seat occupants should wear their seat belts and sit upright and well back in their seats.

Side Airbag Cutoff System

Your vehicle has a side airbag cutoff system designed primarily to protect a child riding in the front passenger's seat.

Although Acura does not encourage children to ride in front, if the sensors in the seat detect a child has leaned into the side airbag's deployment path, the airbag will shut off.

The side airbag may also shut off if a short adult leans sideways, or a larger adult slouches and leans sideways into the airbag's deployment path.

Objects placed on the front passenger seat can also cause the side airbag to be shut off.

CONTINUED

Additional Information About Your Airbags

If the side airbag off indicator comes on (see page 33), have the passenger sit upright. Once the passenger is out of the airbag's deployment path, the system will turn the airbag back on, and the indicator will go out.

There will be some delay between the moment the passenger moves into or out of the airbag deployment path and when the indicator comes on or goes off.

A front seat passenger should not use a cushion or other object as a backrest. It may prevent the cutoff system from working properly.

How Your Side Curtain Airbags Work

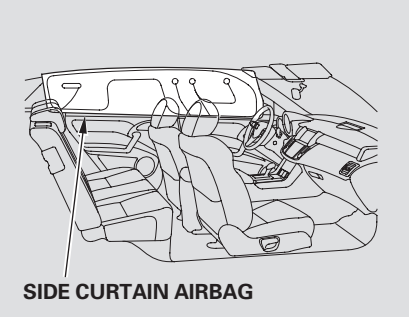

In a Side Impact
In a moderate to severe side impact, sensors will detect rapid acceleration and signal the control unit to instantly inflate the side curtain airbag and activate the seat belt tensioner on the driver's or the passenger's side of the vehicle.

If the impact is on the passenger's side, the passenger's side curtain airbag will inflate even if there are no occupants on that side of the vehicle.

In a Rollover
If the rollover sensor detects your vehicle is about to roll over, it signals the control unit, which immediately deploys both side curtain airbags and activates both front seat belt tensioners.

The airbag on the passenger's side will deploy, and the seat belt tensioner will activate, even if there are no passengers on that side of the vehicle.

To get the best protection from the side curtain airbags, occupants should wear their seat belts and sit upright and well back in their seats.

Additional Information About Your Airbags

How the SRS Indicator Works

The SRS indicator alerts you to a potential problem with your airbags or seat belt tensioners.

When you turn the ignition switch to the ON (II) position, this indicator comes on for several seconds then goes off. This tells you the system is working properly.

If the indicator comes on at any other time, or does not come on at all, you should have the system checked by your dealer. For example:

- If the SRS indicator does not come on after you turn the ignition switch to the ON (II) position.
- If the indicator stays on after the engine starts.
- If the indicator comes on or flashes on and off while you drive.

On RDX with Technology Package model
You will also see a "CHECK AIRBAG SYSTEM" message on the multi-information display (see page 85).

If you see any of these indications, the airbags and seat belt tensioners may not work properly when you need them.

⚠ WARNING

Ignoring the SRS indicator can result in serious injury or death if the airbag systems or tensioners do not work properly.

Have your vehicle checked by a dealer as soon as possible if the SRS indicator alerts you to a possible problem.

How the Side Airbag Off Indicator Works

U.S. Canada

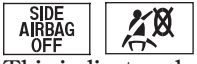

This indicator alerts you that the passenger's side airbag has been automatically shut off. It does ***not*** mean there is a problem with your side airbags.

When you turn the ignition switch to the ON (II) position, the indicator should come on for several seconds and then go off (see page 67). If it doesn't come on, stays on, or comes on while driving without a passenger in the front seat, have the system checked.

On RDX with Technology Package model
You will also see a "PASSENGER SIDE AIRBAG OFF" message on the multi-information display (see page 85).

Additional Information About Your Airbags

How the Passenger Airbag Off Indicator Works

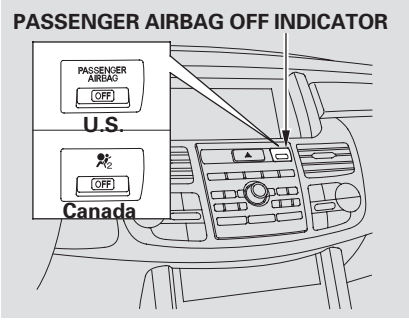

This indicator alerts you that the passenger's front airbag has been shut off because weight sensors detect about 65 lbs (29 kg) or less (the weight of an infant or small child) on the front passenger's seat. It does ***not mean*** there is a problem with the airbag.

Be aware that objects placed on the front seat can cause the indicator to come on.

If no weight is detected on the front seat, the airbag will be automatically shut off. However, the indicator will not come on.

The passenger airbag off indicator may come on and off repeatedly if the total weight on the seat is near the airbag cutoff threshold.

If an adult or teenage passenger is riding in front, move the seat as far to the rear as possible, and have the passenger sit upright and wear the seat belt properly.

If the indicator comes on with no front seat passenger and no objects on the seat, or with an adult riding there, something may be interfering with the weight sensors. Look for and remove:

- Any items under the front passenger's seat.
- Any objects hanging on the seat or in the seat-back pocket.
- Any object, such as a folded-down back seat, that is touching the rear of the seat-back.

If no obstructions are found, have your vehicle checked by a dealer as soon as possible.

Additional Information About Your Airbags

Airbag Service

Your airbag systems are virtually maintenance free, and there are no parts you can safely service. However, you must have your vehicle serviced if:

- ***An airbag ever inflates.*** Any airbag that has deployed must be replaced along with the control unit and other related parts. Any seat belt tensioner that activates must also be replaced.

  Do not try to remove or replace any airbag by yourself. This must be done by an authorized dealer or a knowledgeable body shop.

- ***The SRS indicator alerts you to a problem.*** Take your vehicle to an authorized dealer as soon as possible. If you ignore this indication, your airbags may not operate properly.

- ***If your vehicle has a moderate to severe impact.*** Even if your airbags do not inflate, your dealer should inspect the driver's seat position sensor, the front passenger's weight sensors, the front seat belt tensioners, and all seat belts worn during the crash to make sure they are operating properly.

Additional Information About Your Airbags

Additional Safety Precautions

- ***Do not attempt to deactivate your airbags.*** Together, airbags and seat belts provide the best protection.

- ***Do not tamper with airbag components or wiring for any reason.*** Tampering could cause the airbags to deploy, possibly causing very serious injury.

- ***Do not expose the front passenger's seat-back to liquid.*** If water or another liquid soaks into a seat-back, it can prevent the side airbag cutoff system from working properly.

- ***Do not cover or replace front seat-back covers without consulting your dealer.*** Improperly replacing or covering front seat-back covers can prevent your side airbags from inflating during a side impact.

- ***Do not remove or modify a front seat without consulting your dealer.*** This could make the driver's seat position sensor or the front passenger's weight sensors ineffective. If it is necessary to remove or modify a front seat to accommodate a person with disabilities, first contact Acura Client Services at 800-382-2238.

Protecting Children — General Guidelines

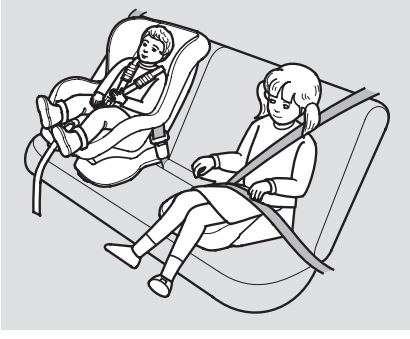

Children depend on adults to protect them. However, despite their best intentions, many adults do not know how to *properly* protect child passengers.

If you have children, or ever need to drive with a child in your vehicle, be sure to read this section. It begins with important general guidelines, then presents special information for infants, small children, and larger children.

All Children Must Be Restrained
Each year, many children are injured or killed in vehicle crashes because they are either unrestrained or not properly restrained. In fact, vehicle accidents are the number one cause of the death of children aged 12 and under.

To reduce the number of child deaths and injuries, every state and Canadian province requires that infants and children be properly restrained when they ride in a vehicle.

Infants and small children must be restrained in an approved child seat that is properly secured to the vehicle (see pages 42 — 57).

⚠ WARNING

Children who are unrestrained or improperly restrained can be seriously injured or killed in a crash.

Any child too small for a seat belt should be properly restrained in a child seat. A larger child should be properly restrained with a seat belt and use a booster seat if necessary.

Larger children must be restrained with a lap/shoulder belt and ride on a booster seat until the seat belt fits them properly (see pages 54 — 57).

Protecting Children — General Guidelines

All Children Should Sit in a Back Seat

According to accident statistics, children of all ages and sizes are safer when they are restrained in a back seat. The National Highway Traffic Safety Administration and Transport Canada recommend that all children aged 12 and under be properly restrained in a back seat. Some states have laws restricting where children may ride.

Children who ride in back are less likely to be injured by striking interior vehicle parts during a collision or hard braking. Also, children cannot be injured by an inflating front airbag when they ride in the back.

The Passenger's Front Airbag Can Pose Serious Risks

Front airbags have been designed to help protect adults in a moderate to severe frontal collision. To do this, the passenger's front airbag is quite large, and it can inflate with enough force to cause very serious injuries.

Even though your vehicle has an advanced front airbag system that automatically turns the passenger's front airbag off (see page 34), please follow these guidelines:

Infants

Never put a rear-facing child seat in the front seat of a vehicle equipped with a passenger's front airbag. If the airbag inflates, it can hit the back of the child seat with enough force to kill or very seriously injure an infant.

Small Children

Placing a forward-facing child seat in the front seat of a vehicle equipped with a passenger's front airbag can be hazardous. If the vehicle seat is too far forward, or the child's head is thrown forward during a collision, an inflating front airbag can strike the child with enough force to kill or very seriously injure a small child.

Larger Children

Children who have outgrown child seats are also at risk of being injured or killed by an inflating passenger's front airbag. Whenever possible, larger children should sit in the back seat, on a booster seat if needed, and be properly restrained with a seat belt (see page 54 for important information about protecting larger children).

Protecting Children – General Guidelines

To remind you of the passenger's front airbag hazards, and that children must be properly restrained in a back seat, your vehicle has warning labels on the dashboard (U.S. models) and on the front visors. Please read and follow the instructions on these labels.

U.S. Models

SUN VISORS

DASHBOARD

Canadian Models

SUN VISORS

CAUTION
TO AVOID SERIOUS INJURY:
- FOR MAXIMUM SAFETY PROTECTION IN ALL TYPES OF CRASHES, YOU MUST ALWAYS WEAR YOUR SAFETY BELT.
- DO NOT INSTALL REARWARD-FACING CHILD SEATS IN ANY FRONT PASSENGER SEAT POSITION.
- DO NOT SIT OR LEAN UNNECESSARILY CLOSE TO THE AIR BAG.
- DO NOT PLACE ANY OBJECTS OVER THE AIR BAG OR BETWEEN THE AIR BAG AND YOURSELF.
- SEE THE OWNER'S MANUAL FOR FURTHER INFORMATION AND EXPLANATIONS.

PRÉCAUTION:
POUR EVITER DES BLESSURES GRAVES:
- POUR PROFITER D'UNE PROTECTION MAXIMALE LORS D'UNE COLLISION BOUCLEZ TOUJOURS VOTRE CEINTURE DE SECURITE.
- N'INSTALLEZ JAMAIS UN SIEGE POUR ENFANTS FAISANT FACE A L'ARRIERE SUR LE SIEGE DU PASSAGER AVANT.
- NE VOUS APPUYEZ PAS ET NE VOUS ASSEYEZ PAS PRES DU COUSSIN GONFLABLE.
- NE DEPOSEZ AUCUN OBJET SUR LE COUSSIN GONFLABLE OU ENTRE LE COUSSIN GONFLABLE ET VOUS.
- LISEZ LE GUIDE UTILISATEUR POUR DE PLUS AMPLES RENSEIGNEMENTS.

Protecting Children — General Guidelines

If You Must Drive with Several Children

Your vehicle has a back seat where children can be properly restrained. If you ever have to carry a group of children, and a child must ride in front:

- Place the largest child in the front seat, provided the child is large enough to wear the lap/shoulder belt properly (see page 54).
- Move the vehicle seat as far to the rear as possible (see page 145).
- Have the child sit upright and well back in the seat (see page 17).
- Make sure the seat belt is properly positioned and secured (see page 16).

If a Child Requires Close Attention

Many parents say they prefer to put an infant or a small child in the front passenger seat so they can watch the child, or because the child requires attention.

Placing a child in the front seat exposes the child to hazards in a frontal collision, and paying close attention to a child distracts the driver from the important tasks of driving, placing both of you at risk.

If a child requires close physical attention or frequent visual contact, we strongly recommend that another adult ride with the child in a back seat. The back seat is far safer for a child than the front.

Protecting Children — General Guidelines

Additional Safety Precautions

- ***Never hold an infant or child on your lap.*** If you are not wearing a seat belt in a crash, you could be thrown forward and crush the child against the dashboard or a seat-back. If you are wearing a seat belt, the child can be torn from your arms and be seriously hurt or killed.

- ***Never put a seat belt over yourself or a child.*** During a crash, the belt could press deep into the child and cause serious or fatal injuries.

- ***Never let two children use the same seat belt.*** If they do, they could be very seriously injured in a crash.

- ***Use the childproof door locks to prevent children from opening the rear doors.*** This can prevent children from accidentally falling out (see page 132).

- ***Make sure any unused seat belt that a child can reach is buckled, the lockable retractor is activated, and the belt is fully retracted and locked.*** If a child wraps a loose seat belt around their neck, they can be seriously or fatally injured. (See pages 51 and 52 for how to activate and deactivate the lockable retractor.)

- ***Do not leave children alone in a vehicle.*** Leaving children without adult supervision is illegal in most states and Canadian provinces, and can be very hazardous.

  For example, infants and small children left in a vehicle on a hot day can die from heatstroke. A child left alone with the key in the ignition switch can accidentally set the vehicle in motion, possibly injuring themselves or others.

- ***Lock all doors and the tailgate when your vehicle is not in use.*** Children who play in vehicles can accidentally get trapped inside. Teach your children not to play in or around vehicles.

- ***Keep vehicle keys/remote transmitters out of the reach of children.*** Even very young children learn how to unlock vehicle doors, turn on the ignition switch, and open the tailgate, which can lead to accidental injury or death.

Protecting Infants and Small Children

Protecting Infants

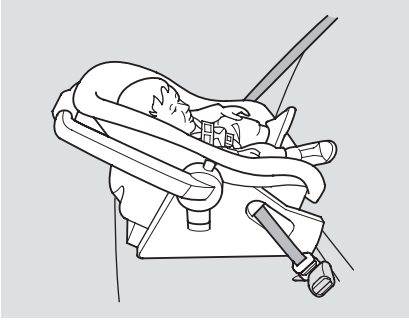

Child Seat Type
An infant must be properly restrained in a rear-facing, reclining child seat until the child reaches the seat maker's weight or height limit for the seat, and the child is at least one year old.

Only a rear-facing child seat provides proper support for a baby's head, neck, and back.

Two types of seats may be used: a seat designed exclusively for infants, or a convertible seat used in the rear-facing, reclining mode.

Do not put a rear-facing child seat in a forward-facing position. If placed facing forward, an infant could be very seriously injured during a frontal collision.

Rear-facing Child Seat Placement
A rear-facing child seat can be placed in any seating position in the back seat, but not in the front. ***Never put a rear-facing child seat in the front seat.***

If the passenger's front airbag inflates, it can hit the back of the child seat with enough force to kill or seriously injure an infant.

When properly installed, a rear-facing child seat may prevent the driver or a front passenger from moving their seat as far back as recommended, or from locking their seat-back in the desired position.

It can also interfere with proper operation of the passenger's advanced front airbag system.

Protecting Infants and Small Children

In any of these situations, we strongly recommend that you install the child seat directly behind the front passenger's seat, move the seat as far forward as needed, and leave it unoccupied. Or, you may wish to get a smaller rear-facing child seat.

⚠ WARNING

Placing a rear-facing child seat in the front seat can result in serious injury or death during a collision.

Always place a rear-facing child seat in the back seat, not the front.

Protecting Small Children

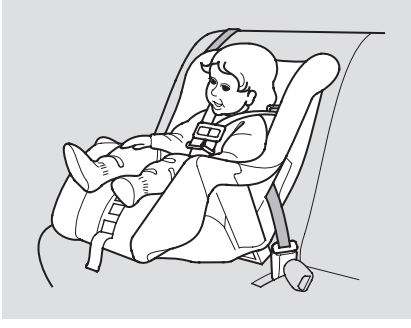

Child Seat Type
A child who is at least one year old, and who fits within the child seat maker's weight and height limits, should be restrained in a forward-facing, upright child seat.

Of the different seats available, we recommend those that have a five-point harness system as shown.

We also recommend that a small child use the child seat until the child reaches the weight or height limit for the seat.

CONTINUED

Protecting Infants and Small Children

Child Seat Placement
We strongly recommend placing a forward-facing child seat in a back seat, not the front.

Placing a forward-facing child seat in the front seat of a vehicle equipped with a passenger's airbag can be hazardous. If the vehicle seat is too far forward, or the child's head is thrown forward during a collision, an inflating airbag can strike the child with enough force to cause very serious or fatal injuries.

Even with advanced front airbags that automatically turn the passenger's front airbag off (see page 34), a back seat is the safest place for a small child.

If it is necessary to put a forward-facing child seat in the front, move the vehicle seat as far to the rear as possible, and be sure the child seat is firmly secured to the vehicle and the child is properly strapped in the seat.

⚠ WARNING

Placing a forward-facing child seat in the front seat can result in serious injury or death if the front airbag inflates.

If you must place a forward-facing child seat in front, move the vehicle seat as far back as possible, and properly restrain the child.

Selecting a Child Seat

When buying a child seat, you need to choose either a conventional child seat, or one designed for use with the lower anchors and tethers for children (LATCH) system.

Conventional child seats must be secured to a vehicle with a seat belt, whereas LATCH-compatible seats are secured by attaching the seat to hardware built into the rear seating positions.

Since LATCH-compatible child seats are easier to install and reduce the possibility of improper installation, we recommend selecting this style.

We also recommend selecting a LATCH-compatible seat with a rigid, rather than a flexible, anchor (see page 48).

In seating positions and vehicles not equipped with LATCH, a LATCH-compatible child seat can be installed using a seat belt.

Whatever type of seat you choose, to provide proper protection, a child seat should meet three requirements:

1. ***The child seat should meet U.S. or Canadian Motor Vehicle Safety Standard 213.*** Look for FMVSS 213 or CMVSS 213 on the box.

2. ***The child seat should be of the proper type and size to fit the child.*** Rear-facing for infants, forward-facing for small children.

3. ***The child seat should fit the vehicle seating position (or positions) where it will be used.***

Before purchasing a conventional child seat, or using a previously purchased one, we recommend that you test the seat in the specific vehicle seating position or positions where the seat will be used.

Installing a Child Seat

After selecting a proper child seat and a good place to install the seat, there are three main steps in installing the seat:

1. ***Properly secure the child seat to the vehicle.*** All child seats must be secured to the vehicle with the lap part of a lap/shoulder belt or with the LATCH (lower anchors and tethers for children) system. A child whose seat is not properly secured to the vehicle can be endangered in a crash.

2. ***Make sure the child seat is firmly secured.*** After installing a child seat, push and pull the seat forward and from side-to-side to verify that it is secure.

A child seat secured with a seat belt should be installed as firmly as possible. However, it does not need to be "rock solid." Some side-to-side movement can be expected and should not reduce the child seat's effectiveness.

If the child seat is not secure, try installing it in a different seating position, or use a different style of child seat that can be firmly secured.

3. ***Secure the child in the child seat.*** Make sure the child is properly strapped in the child seat according to the child seat maker's instructions. A child who is not properly secured in a child seat can be seriously injured in a crash.

The following pages provide guidelines on how to properly install a child seat. A forward-facing child seat is used in all examples, but the instructions are the same for rear-facing child seats.

Installing a Child Seat

Installing a Child Seat with LATCH

Your vehicle is equipped with LATCH (lower anchors and tethers for children) at the rear seats to secure a child seat in any seating position: one in each outer seating position, or one in the center.

The five lower anchors are located between the seat-back and seat bottom, and are to be used only with a child seat designed for use with LATCH.

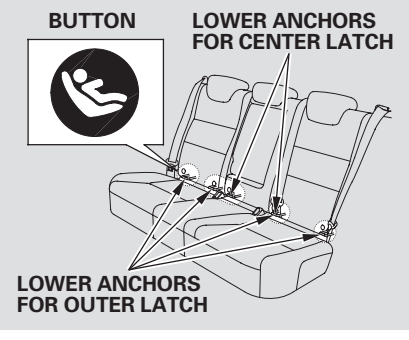

The location of each lower anchor is indicated by a small button above the anchor point.

When you install a child seat in the rear center seating position, use the center LATCH as shown in the illustration. To install a child seat in the outer seating position, use either LATCH. You can install up to two child seat at a time with outer LATCH.

Using the Outer LATCH

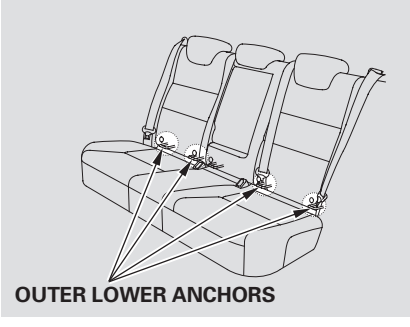

To install a LATCH-compatible child seat in either of the rear outer seats:

1. Move the seat belt buckle or tongue away from the lower anchors.
2. Make sure there are no objects near the anchors that could prevent a secure connection between the child seat and the anchors.

CONTINUED

Installing a Child Seat

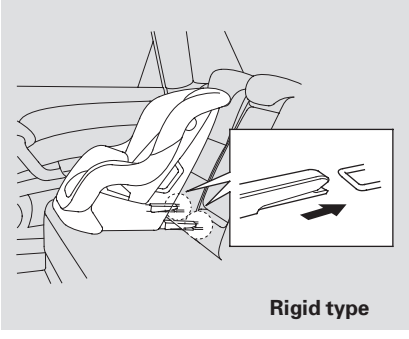

3. Place the child seat on the vehicle seat, then attach the seat to the lower anchors according to the child seat maker's instructions.

   Some LATCH-compatible seats have a rigid-type connector as shown above.

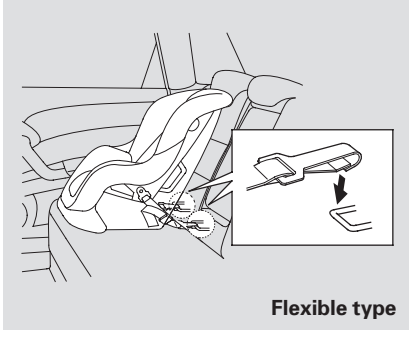

Other LATCH-compatible seats have a flexible-type connector as shown above.

4. Whatever type you have, follow the child seat maker's instructions for adjusting or tightening the fit.

5. Remove the cargo area cover, and place it on the cargo area floor (see page 167).

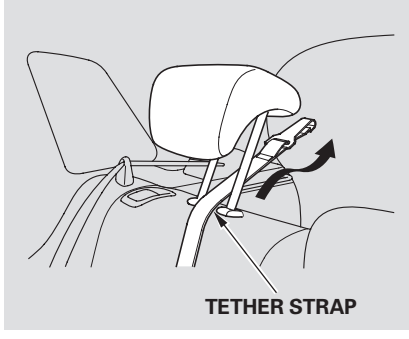

6. Lift the head restraint (see page 146), then route the tether strap through the legs of the head restraint and over the seat-back, making sure the strap is not twisted.

Installing a Child Seat

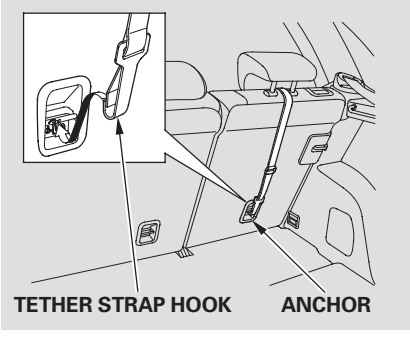

7. Attach the tether strap hook to the tether anchor, then tighten the strap as instructed by the child seat maker.

8. Push and pull the child seat forward and from side-to-side to verify that it is secure.

Using the Center LATCH

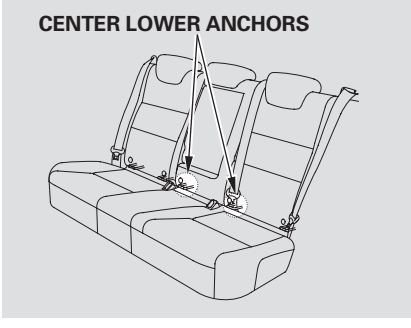

To install a LATCH-compatible child seat in the rear center seating position, use the center lower anchors as shown above.

Remove the head restraint (see page 146). Make sure the removed head restraint is secured in the cargo area. Reinstall the head restraint when the child seat is removed.

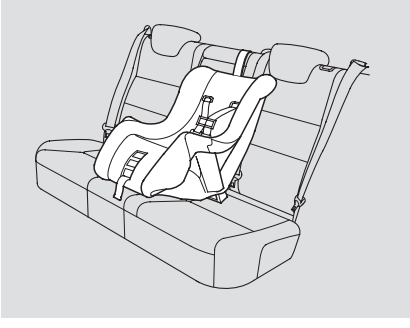

Follow step 1 through 8 as described previously to secure the child seat.

When you install the child seat in the rear center seating position, you cannot use the seat belt behind the driver's seat.

CONTINUED

Installing a Child Seat

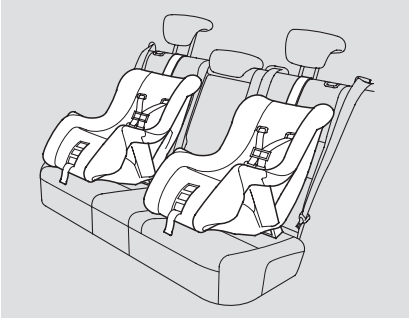

If you want to install two child seats in the back seats, place each child seat in the outer seat, as shown in the above illustration.

Do not attach two child seat connectors to a single lower anchor at a time.

The LATCH system or the child seats might be damaged if you try to install three child seats in the rear seats.

Installing a Child Seat

Installing a Child Seat with a Lap/ Shoulder Belt

When not using the LATCH system, all child seats must be secured to the vehicle with the lap part of a lap/ shoulder belt.

In addition, the lap/shoulder belts in all seating positions except the driver's have a lockable retractor that must be activated to secure a child seat.

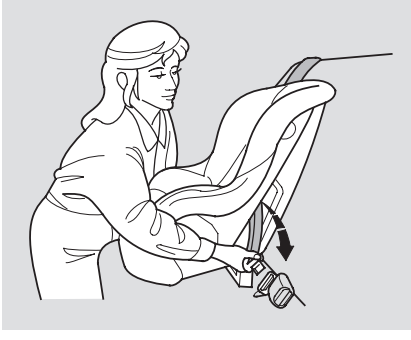

1. With the child seat in the desired seating position, route the belt through the child seat according to the seat maker's instructions, then insert the latch plate into the buckle.

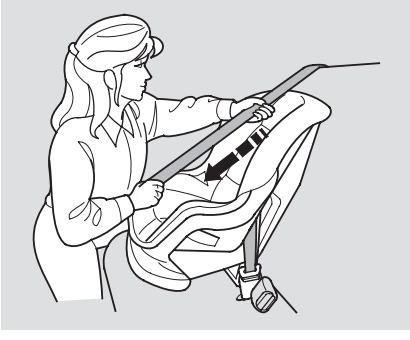

2. To activate the lockable retractor, slowly pull the shoulder part of the belt all the way out until it stops, then let the belt feed back into the retractor.

3. After the belt has retracted, tug on it. If the belt is locked, you will not be able to pull it out. If you can pull the belt out, it is not locked, and you will need to repeat these steps.

CONTINUED

Installing a Child Seat

4. After confirming that the belt is locked, grab the shoulder part of the belt near the buckle, and pull up to remove any slack from the lap part of the belt. Remember, if the lap part of the belt is not tight, the child seat will not be secure.

   To remove slack, it may help to put weight on the child seat, or push on the back of the seat while pulling up on the belt.

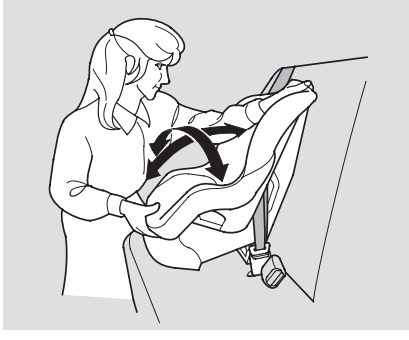

5. Push and pull the child seat forward and from side-to-side to verify that it is secure enough to stay upright during normal driving maneuvers. If the child seat is not secure, unlatch the belt, allow it to retract fully, then repeat these steps.

To deactivate the lockable retractor and remove a child seat, unlatch the buckle, unroute the seat belt, and let the belt fully retract.

Installing a Child Seat with a Tether

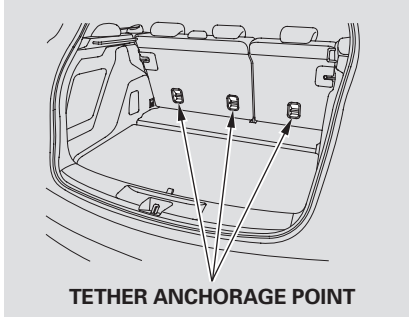

A child seat with a tether can be installed in any seating position in the back seat.

Since a tether can provide additional security to the lap/shoulder belt installation, we recommend using a tether whenever one is required or available.

Installing a Child Seat

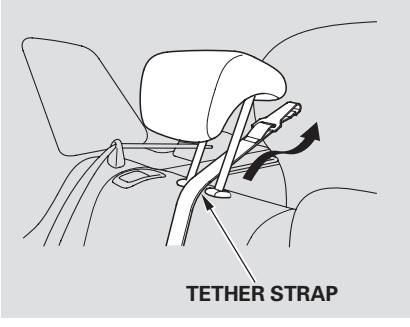

1. Remove the cargo area cover, and place it on the cargo area floor (see page 167).

2. (Outer seating position)
   After properly securing the child seat (see page 51), lift the head restraint, then route the tether strap over the seat-back and through the head restraint legs.

   (Rear center seating position)
   Remove the head restraint (see page146). Make sure the removed head restraint is secured in the cargo area. Reinstall the head restraint when the child seat is removed.

   After properly securing the child seat (see page 51), route the tether strap over the top of the seat-back.

   When you install the child seat in the rear center seating position, you cannot use the seat belt behind the driver's seat.

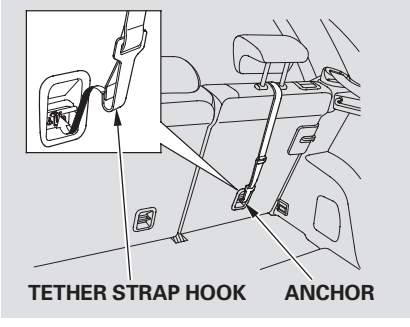

3. Attach the tether strap hook to the anchor, making sure the tether strap is not twisted.

4. Tighten the strap according to the seat maker's instructions.

Protecting Larger Children

When a child reaches the recommended weight or height limit for a forward-facing child seat, the child should sit in a back seat on a booster seat and wear a lap/shoulder belt.

The following pages give instructions on how to check proper seat belt fit, what kind of booster seat to use if one is needed, and important precautions for a child who must sit in front.

⚠ WARNING

Allowing a child age 12 or under to sit in front can result in injury or death if the passenger's front airbag inflates.

If a child must ride in front, move the vehicle seat as far back as possible, use a booster seat if needed, have the child sit up properly and wear the seat belt properly.

Checking Seat Belt Fit

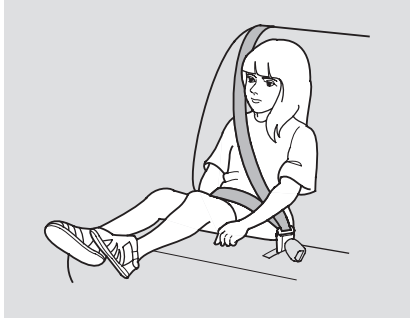

To determine if a lap/shoulder belt properly fits a child, have the child put on the seat belt, then ask yourself:

1. Does the child sit all the way back against the seat?

2. Do the child's knees bend comfortably over the edge of the seat?

Protecting Larger Children

3. Does the shoulder belt cross between the child's neck and arm?

4. Is the lap part of the belt as low as possible, touching the child's thighs?

5. Will the child be able to stay seated like this for the whole trip?

If you answer yes to all these questions, the child is ready to wear the lap/shoulder belt correctly. If you answer no to any question, the child needs to ride on a booster seat.

Using a Booster Seat

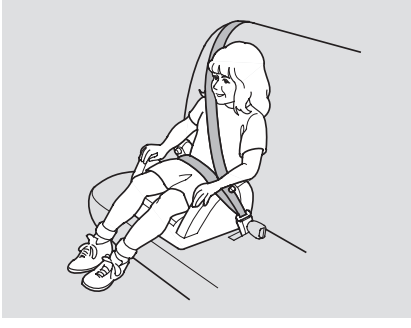

A child who has outgrown a forward-facing child seat should ride in a back seat and use a booster seat until the lap/shoulder belt fits them properly without the booster.

Some states and Canadian provinces also require children to use a booster seat until they reach a given age or weight (e.g., 6 years or 60 lbs). Be sure to check current laws in the states or provinces where you intend to drive.

Booster seats can be high-back or low-back. Whichever style you select, make sure the booster seat meets federal safety standards (see page 45) and that you follow the booster seat maker's instructions.

CONTINUED

Protecting Larger Children

If a child who uses a booster seat must ride in front, move the vehicle seat as far back as possible and be sure the child is wearing the seat belt properly.

A child may continue using a booster seat until the tops of their ears are even with the top of the vehicle's or booster's seat-back. A child of this height should be tall enough to use the lap/shoulder belt without a booster seat.

When Can a Larger Child Sit in Front

The National Highway Traffic Safety Administration and Transport Canada recommend that all children aged 12 and under be properly restrained in a back seat.

If the passenger's front airbag inflates in a moderate to severe frontal collision, the airbag can cause serious injuries to a child who is unrestrained, improperly restrained, sitting too close to the airbag, or out of position.

A side airbag also poses risks. If any part of a larger child's body is in the path of a deploying side airbag, the child could receive possibly serious injuries.

Of course, children vary widely. And while age may be one indicator of when a child can safely ride in front, there are other important factors you should consider.

Physical Size

Physically, a child must be large enough for the lap/shoulder belt to properly fit (see pages 16 and 54). If the seat belt does not fit properly, with or without the child sitting on a booster seat, the child should not sit in front.

Maturity

To safely ride in front, a child must be able to follow the rules, including sitting properly, and wearing the seat belt properly throughout a ride.

Protecting Larger Children

If you decide that a child can safely ride up front, be sure to:

- Carefully read the owner's manual, and make sure you understand all seat belt instructions and all safety information.
- Move the vehicle seat to the rear-most position.
- Have the child sit up straight, back against the seat, and feet on or near the floor.
- Check that the child's seat belt is properly and securely positioned.
- Supervise the child. Even a mature child sometimes needs to be reminded to fasten the seat belt or sit properly.

Additional Safety Precautions

- ***Do not let a child wear a seat belt across the neck.*** This could result in serious neck injuries during a crash.
- ***Do not let a child put the shoulder part of a seat belt behind the back or under the arm.*** This could cause very serious injuries during a crash. It also increases the chance that the child will slide under the belt in a crash and be injured.
- ***Two children should never use the same seat belt.*** If they do, they could be very seriously injured in a crash.
- ***Do not put any accessories on a seat belt.*** Devices intended to improve a child's comfort or reposition the shoulder part of a seat belt can make the belt less effective and increase the chance of serious injury in a crash.

Carbon Monoxide Hazard

Your vehicle's exhaust contains carbon monoxide gas. Carbon monoxide should not enter the vehicle in normal driving if you maintain your vehicle properly and follow the information on this page.

Have the exhaust system inspected for leaks whenever:

- The vehicle is raised for an oil change.
- You notice a change in the sound of the exhaust.
- The vehicle was in an accident that may have damaged the underside.

⚠ WARNING

Carbon monoxide gas is toxic. Breathing it can cause unconsciousness and even kill you.

Avoid any enclosed areas or activities that expose you to carbon monoxide.

High levels of carbon monoxide can collect rapidly in enclosed areas, such as a garage. Do not run the engine with the garage door closed. Even with the door open, run the engine only long enough to move the vehicle out of the garage.

With the tailgate open, airflow can pull exhaust gas into your vehicle's interior and create a hazardous condition. If you must drive with the tailgate open, open all the windows, and set the climate control system as shown below.

If you must sit in your parked vehicle with the engine running, even in an unconfined area, adjust the climate control system as follows:

1. Select the fresh air mode.
2. Select the mode.
3. Set the fan speed to high.
4. Set the temperature control to a comfortable setting.

Safety Labels

These labels are in the locations shown. They warn you of potential hazards that could cause serious injury or death. Read these labels carefully.

If a label comes off or becomes hard to read (except for the U.S. dashboard label which may be removed by the owner), contact your dealer for a replacement.

DASHBOARD

U.S. models only

This Vehicle is Equipped with Advanced Air Bags

Even with Advanced Air Bags

Children can be killed or seriously injured by the air bag.
The back seat is the safest place for children.
Never put a rear-facing child seat in the front.
Always use seat belts and child restraints.
See owner's manual for more information about air bags.

To be removed by owner only.

SUN VISORS

U.S. models

AIR BAG WARNING

FLIP VISOR OVER

WARNING

EVEN WITH ADVANCED AIR BAGS

- Children can be killed or seriously injured by the air bag
- The back seat is the safest place for children
- Never put a rear-facing child seat in the front
- Always use seat belts and child restraints
- See owner's manual for more information about air bags

Canadian models

CAUTION
TO AVOID SERIOUS INJURY:
- FOR MAXIMUM SAFETY PROTECTION IN ALL TYPES OF CRASHES,YOU MUST ALWAYS WEAR YOUR SAFETY BELT.
- DO NOT INSTALL REARWARD-FACING CHILD SEATS IN ANY FRONT PASSENGER SEAT POSITION.
- DO NOT SIT OR LEAN UNNECESSARILY CLOSE TO THE AIR BAG.
- DO NOT PLACE ANY OBJECTS OVER THE AIR BAG OR BETWEEN THE AIR BAG AND YOURSELF.
- SEE THE OWNER'S MANUAL FOR FURTHER INFORMATION AND EXPLANATIONS.

PRECAUTIONS:
POUR EVITER DES BLESSURES GRAVES:
- POUR PROFITER D'UNE PROTECTION MAXIMALE LORS D'UNE COLLISION BOUCLEZ TOUJOURS VOTRE CEINTURE DE SECURITE.
- N'INSTALLEZ JAMAIS UN SIEGE POUR ENFANTS FAISANT FACE A L'ARRIERE SUR LE SIEGE DU PASSAGER AVANT.
- NE VOUS APPUYEZ PAS ET NE VOUS ASSOYEZ PAS PRES DU COUSSIN GONFLABLE.
- NE DEPOSEZ AUCUN OBJET SUR LE COUSSIN GONFLABLE OU ENTRE LE COUSSIN GONFLABLE ET VOUS.
- LISEZ LE GUIDE UTILISATEUR POUR DE PLUS AMPLES RENSEIGNEMENTS.

SUN VISOR

U.S. models only

WARNING: HIGHER ROLLOVER RISK

Avoid Abrupt Maneuvers and Excessive Speed.

Always Buckle Up.

See Owner's Manual For Further Information.

CONTINUED

Safety Labels

HOOD

U.S. models

SUPPLEMENTAL RESTRAINT SYSTEM (SRS)

This vehicle is equipped with front airbags, side airbags in the front seats, front seatbelt tensioners, and side curtain airbags.

All SRS electrical wiring and connectors are colored yellow.

Tampering with, disconnecting or using test equipment on the SRS wiring can make the system inoperative or cause accidental deployment.

▲ WARNING

Accidental deployment can seriously hurt or kill you.

Follow Service Manual instructions carefully.

Canadian models

SUPPLEMENTAL RESTRAINT SYSTEM (SRS)

This vehicle is equipped with front airbags, side airbags in the front seats, front seatbelt tensioners, and side curtain airbags.

All SRS electrical wiring and connectors are colored yellow.

Tampering with, disconnecting or using test equipment on the SRS wiring can make the system inoperative or cause accidental deployment.

▲ WARNING

Accidental deployment can seriously hurt or kill you.

Follow Service Manual instructions carefully.

SYSTÈME DE RETENUE SUPPLÉMENTAIRE (SRS)

Ce véhicule est équipé de coussins gonflables frontaux, coussins gonflables latéraux, coussins gonflables latéraux en type rideau, ainsi que de prétensionneurs de ceinture de sécurité avant. Tous les fils électriques et les connecteurs du système SRS sont jaunes.

Toute modification ou débranchement des fils du système SRS ou encore l'utilisation d'appareils d'essai sur ces circuits pourrait rendre le système inopérable ou entraîner un déploiement accidentel.

▲ ATTENTION

Un déploiement accidentel peut entraîner des blessures graves ou la mort.

Suivre les instructions du manuel de réparation attentivement.

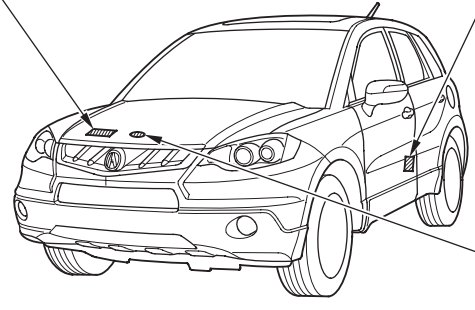

DOOR JAMBS

U.S. models

SIDE AIRBAG

- This car is equipped with side airbags in the front seats and side curtain airbags.
- Do not lean against the door.
- See owner's manual for more information.

Canadian models

SIDE AIRBAG

- This car is equipped with side airbags in the front seats and side curtain airbags.
- Do not lean against the door.
- See owner's manual for more information.

COUSSIN GONFLABLE LATERAL

- Cette automobile est équipée de coussins gonflables latéraux dans les sièges avant ainsi que de coussins gonflables latéraux de type rideau.
- Ne vous appuyez pas sur la porte.
- Consultez le Manuel du propriétaire pour en savoir plus.

RADIATOR CAP

Instruments and Controls

This section gives information about the controls and displays that contribute to the daily operation of your vehicle. All the essential controls are within easy reach.

Control Locations 62
Instrument Panel 63, 64
Instrument Panel Indicators..... 65
Gauges 75
Turbo Boost Meter..... 75
Fuel Gauge 75
Information Display..... 76
Multi-Information Display 79
System Messages 84
Customized Settings..... 87
Controls Near the Steering Wheel 118
Windshield Wipers and Washers..... 119
Rear Window Wiper and Washer..... 120
Turn Signal and Headlights..... 121
Instrument Panel Brightness 124
Rear Window Defogger 125
Hazard Warning Button..... 125
Steering Wheel Adjustment 126
Keys and Locks..... 126
Immobilizer System..... 128
Ignition Switch 129
Door Locks 131
Power Door Locks..... 131
Childproof Door Locks 132
Auto Door Locking/Unlocking 133
Tailgate 138
Remote Transmitter..... 140
Seats 144
Driver's Seat Adjustments..... 144
Front Passenger's Seat Adjustments 145
Head Restraints 146
Armrests 147
Folding the Rear Seats Down .. 147
Seat Heaters 150
Power Windows 151
Moonroof 153
Mirrors 155
Adjusting the Power Mirrors ... 155
Reverse Mirror Tilt 156
Heated Mirrors 156
Parking Brake 157
Interior Lights..... 158
Ceiling Lights..... 158
Courtesy Lights 160
Cargo Area Light 160
Interior Convenience Items..... 161
Glove Box 162
Front Door Pockets..... 162
Beverage Holders..... 163
Accessory Power Sockets..... 164
Sun Visor 164
Vanity Mirror 165
Console Compartment 165
Cargo Area Cover..... 167

Control Locations

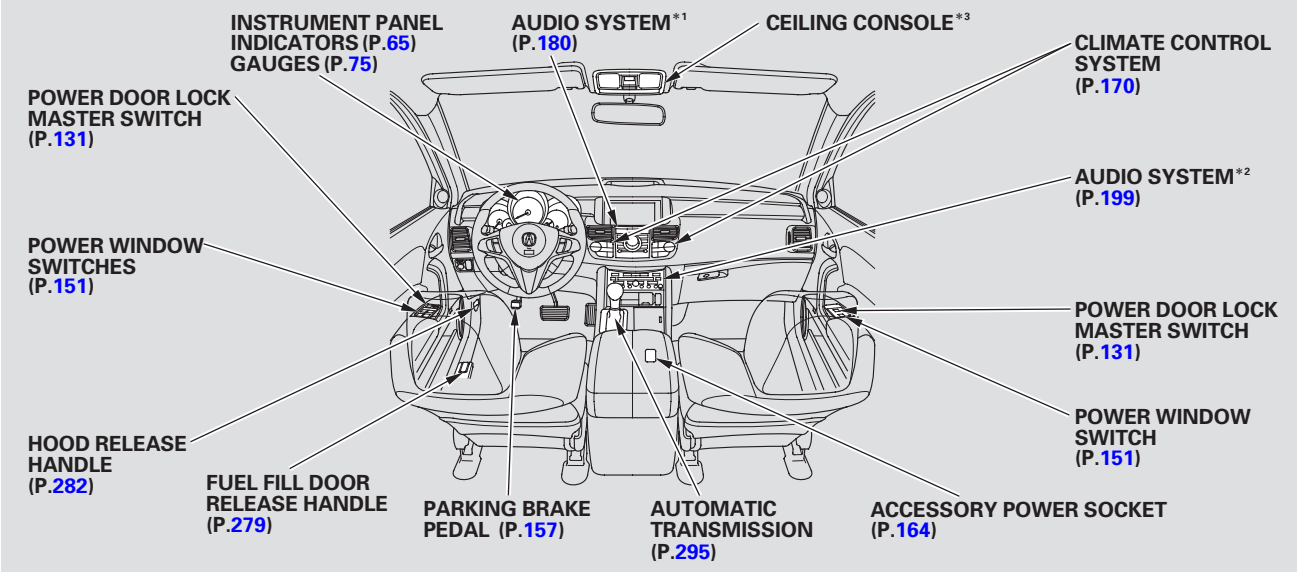

*1: On RDX model only
*2: On RDX Technology Package model only
*3: HomeLink Buttons(P.253)
Moonroof Switch (P.153)
Front Ceiling Light Switch (P.158)

Instrument Panel

RDX model

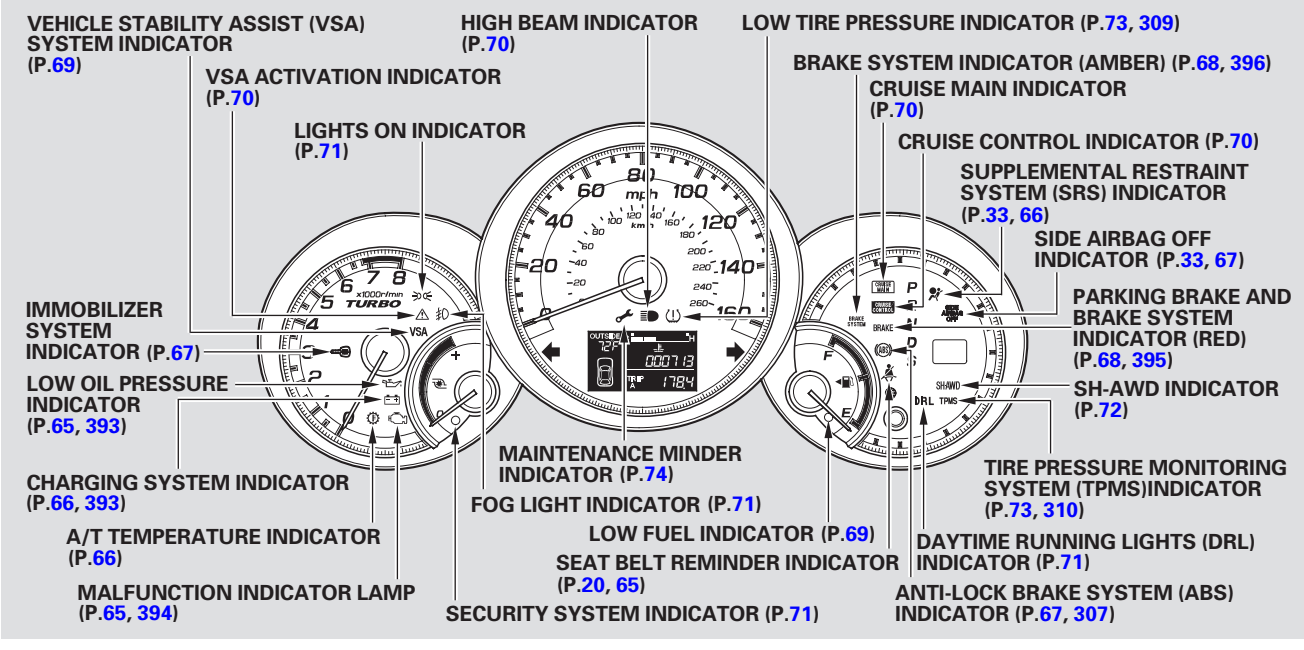

The U.S. instrument panel is shown. Differences for the Canadian models are noted in the text.

CONTINUED

Instrument Panel

RDX with Technology Package model

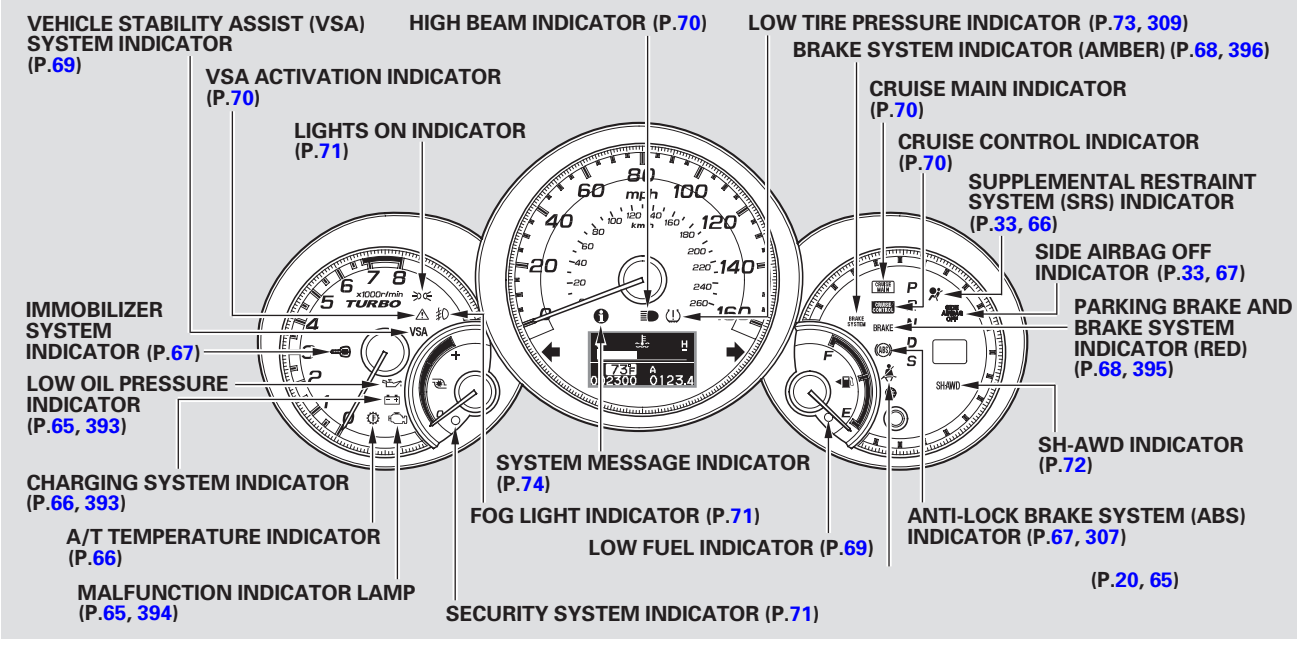

The U.S. instrument panel is shown. Differences for the Canadian models are noted in the text.

Instrument Panel Indicators

The instrument panel has many indicators that give you important information about your vehicle.

Seat Belt Reminder Indicator

This indicator comes on when you turn the ignition switch to the ON (II) position. It reminds you and your passengers to fasten your seat belts. A beeper also sounds if you have not fastened your seat belt.

If you turn the ignition switch to the ON (II) position before fastening your seat belts, the beeper sounds, and the indicator flashes. If you do not fasten your seat belts before the beeper stops, the indicator stops flashing but remains on.

If your front passenger does not fasten their seat belt, the indicator comes on about 6 seconds after the ignition switch is turned to the ON (II) position.

If either of you do not fasten your seat belt while driving, the beeper will sound and the indicator will flash again at regular intervals. For more information, see page 20.

On RDX with Technology Package model
You will also see a “FASTEN SEAT BELT” or “FASTEN PASSENGER SEAT BELT” message on the multi-information display (see page 84).

Malfunction Indicator Lamp

For more information, see page 394.

On RDX with Technology Package model
You will also see a “CHECK EMISSION SYSTEM” message on the multi-information display (see page 84).

Low Oil Pressure Indicator

The engine can be severely damaged if this indicator flashes or stays on when the engine is running. For more information, see page 393.

On RDX with Technology Package model
You will also see a “OIL PRESSURE LOW” message on the multi-information display (see page 84).

Instrument Panel Indicators

Charging System Indicator

If this indicator comes on when the engine is running, the battery is not being charged. For more information, see page 393 .

On RDX with Technology Package model

You will also see a “CHECK CHARGING SYSTEM” message on the multi-information display (see page 84).

A/T Temperature Indicator

This indicator monitors the temperature of the automatic transmission fluid. If it comes on while driving, it means the transmission fluid temperature is too high. Pull to the side of the road when it is safe, shift to Park, and let the engine idle until the indicator goes out.

On RDX with Technology Package model

You will also see a “CHECK TRANSMISSION” message on the multi-information display (see page 85).

NOTICE

Continuing to drive with the A/T temperature indicator on may cause serious damage to the transmission.

Supplemental Restraint System (SRS) Indicator

This indicator comes on for several seconds when you turn the ignition switch to the ON (II) position. If it comes on at any other time, it indicates a potential problem with your front airbags. This indicator will also alert you to a potential problem with your side airbags, passenger’s side airbag automatic cutoff system, side curtain airbags, automatic seat belt tensioners, driver’s seat position sensor, or the front passenger’s weight sensors. For more information, see page 33 .

On RDX with Technology Package model

You will also see a “CHECK AIRBAG SYSTEM” message on the multi-information display (see page 85).

Instrument Panel Indicators

U.S. Canada

Side Airbag Off Indicator

This indicator comes on when you turn the ignition switch to the ON (II) position. If it comes on at any other time, it indicates that the passenger's side airbag has automatically shut off. For more information, see page 33 .

On RDX with Technology Package model

You will also see a "PASSENGER SIDE AIRBAG OFF" message on the multi-information display (see page 85).

Anti-lock Brake System (ABS) Indicator

This indicator normally comes on for a few seconds when you turn the ignition switch to the ON (II) position, and when the ignition switch is turned to the START (III) position. If it comes on at any other time, there is a problem with the ABS. If this happens, have your vehicle checked at a dealer. With this indicator on, your vehicle still has normal braking ability but no anti-lock function. For more information, see page 307 .

On RDX with Technology Package model

You will also see a "CHECK ABS SYSTEM" message on the multi-information display (see page 85).

Immobilizer System Indicator

This indicator comes on briefly when you turn the ignition switch to the ON (II) position. It will then go off if you have inserted a properly-coded ignition key. If it is not a properly-coded key, the indicator will blink, and the engine will not start (see page 128).

Instrument Panel Indicators

U.S. Canada

BRAKE

Parking Brake and Brake System Indicator (Red)

This indicator has two functions:

1. It comes on when you turn the ignition switch to the ON (II) position. It is a reminder to check the parking brake. A beeper sounds if you drive with the parking brake not fully released. Driving with the parking brake not fully released can damage the brakes and tires.

On RDX with Technology Package model

You will also see a "RELEASE PARKING BRAKE" message on the multi-information display (see page 84).

2. If it remains on after you have fully released the parking brake while the engine is running, or if it comes on while driving, there could be a problem with the brake system. For more information, see page 395 .

On RDX with Technology Package model

You will also see a "BRAKE FLUID LOW" or "CHECK BRAKE SYSTEM" message on the multi-information display (see page 84).

U.S. Canada

BRAKE SYSTEM

Brake System Indicator (Amber)

The brake system indicator (amber) normally comes on for a few seconds when you turn the ignition switch to the ON (II) position. If the indicator is still on or comes on again after the engine starts, there is a problem in the brake system including the electric vacuum pump. If this happens, have your vehicle checked by your dealer. For more information, see page 396 .

On RDX with Technology Package model

You will also see a "CHECK BRAKE SYSTEM" message on the multi-information display (see page 84).

Instrument Panel Indicators

Low Fuel Indicator

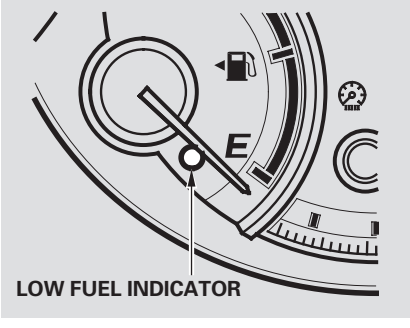

This indicator is in the fuel gauge. It comes on as a reminder that you must refuel soon. When the indicator comes on, there is about 2.0 US gal (7.6 ℓ) of fuel remaining in the tank before the reading reaches E. There is a small reserve of fuel remaining in the tank when the reading does reach E.

On RDX with Technology Package model
You will also see a "FUEL LOW" message on the multi-information display (see page 85).

VSA Vehicle Stability Assist (VSA) System Indicator

This indicator normally comes on for a few seconds when you turn the ignition switch to the ON (II) position.

If it comes on and stays on at any other time, or if it does not come on when you turn the ignition switch to the ON (II) position, there is a problem with the VSA system. Take your vehicle to a dealer to have it checked. Without VSA, your vehicle still has normal driving ability, but will not have VSA traction and stability enhancement. See page 315 for more information on the VSA system.

On RDX with Technology Package model
You will also see a "CHECK VSA SYSTEM" message on the multi-information display (see page 85).

Instrument Panel Indicators

VSA Activation Indicator

This indicator has three functions:

1. It comes on as a reminder that you have turned off the vehicle stability assist (VSA) system.
2. It flashes when VSA is active (see page 315).
3. It comes on along with the VSA system indicator if there is a problem with the VSA system.

   On RDX with Technology Package model
   You will also see a "CHECK VSA SYSTEM" message on the multi-information display (see page 85).

This indicator normally comes on for a few seconds when you turn the ignition switch to the ON (II) position. See page 315 for more information on the VSA system.

Cruise Main Indicator

This indicator comes on when you turn on the cruise control system by pressing the CRUISE button (see page 241).

Cruise Control Indicator

This indicator comes on when you set the cruise control. See page 241 for information on operating the cruise control.

High Beam Indicator

This indicator comes on with the high beam headlights. For more information, see page 122.

This indicator also comes on with reduced brightness when the daytime running lights (DRL) are on (see page 123).

Turn Signal and Hazard Warning Indicators

The left or right turn signal indicator blinks when you signal a lane change or turn. If an indicator does not blink or blinks rapidly, it usually means one of the turn signal bulbs is burned out (see pages 360 and 362). Replace the bulb as soon as possible, since other drivers cannot see that you are signaling.

When you press the hazard warning button, both turn signal indicators and all turn signals on the outside of the vehicle flash.

Instrument Panel Indicators

Daytime Running Lights Indicator

On RDX model only

If this indicator comes on when the ignition switch is turned to the ON (II) position and the parking brake is released, it means there is a problem in the high beam headlight's circuit. Have your vehicle checked by your dealer.

On RDX with Technology Package model

If you see a "CHECK DRL SYSTEM" message on the multi-information display, there is a problem in the high beam headlight's circuit. Take your vehicle to a dealer to have it checked (see page 85).

Security System Indicator

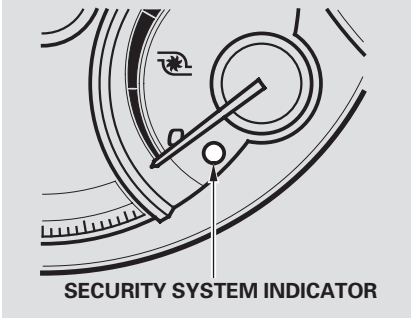

This indicator comes on when the security system is set. For more information, see page 240 .

Lights On Indicator

This indicator reminds you that the exterior lights are on. It comes on when the light switch is in either the or position. If you turn the ignition switch to the ACCESSORY (I) or the LOCK (0) position without turning off the light switch, this indicator will remain on. A reminder chime will also sound when you open the driver's door and remove the key from the ignition switch.

Fog Light Indicator

This indicator comes on when you turn on the fog lights. For more information, see page 122 .

Instrument Panel Indicators

SH-AWD Indicator

This indicator normally comes on for a few seconds when you turn the ignition switch to the ON (II) position.

If this indicator comes on at any other time, there is a problem in the SH-AWD system. Avoid rapid acceleration, and take your vehicle to a dealer to have it checked as soon as possible.

On RDX with Technology Package model
If a "CHECK SH-AWD SYSTEM" message on the multi-information display comes on (see page 85) along with the SH-AWD indicator at any other time, there is a problem in the SH-AWD system.

If this indicator blinks while driving, it indicates the differential temperature is too high.

On RDX with Technology Package model
If this indicator blinks while driving, you will also see an "SH-AWD DIFF TEMP HIGH" message on the multi-information display (see page 85).

Pull to the side of the road when it is safe, shift to Park, and let the engine idle until the indicator goes out. If the indicator does not go out, take your vehicle to a dealer to have it checked.

For more information, see page 303 .

NOTICE

Continuing to drive with the SH-AWD indicator blinking may cause serious damage to the system.

Tire Pressure Monitor

On RDX model
This monitor normally comes on for a few seconds when you turn the ignition switch to the ON (II) position. While driving, the appropriate tire indicator will come on, along with the low tire pressure indicator, if a tire is extremely underinflated or has suddenly lost pressure. See **Low Tire Pressure Indicator** for what to do if this indicator comes on.

On RDX with Technology Package model
This monitor is displayed as the system message on the multi-information display (see page 312).

Instrument Panel Indicators

Low Tire Pressure Indicator

This indicator normally comes on for a few seconds when you turn the ignition switch to the ON (II) position.

If it comes on while driving, it indicates that one or more of your vehicle's tires are extremely low on pressure.

On RDX model
Check which tire has lost pressure on the tire pressure monitor (see page 311), and determine the cause.

On RDX with Technology Package model
You will also see a "CHECK TIRE PRESSURE" message on the multi-information display (see page 84). You may see one or more of the low pressure tire positions the display are displayed along with this message.
Check the tire pressure monitor on the multi-information display and determine the cause (see page 313).

If this happens, pull to the side of the road when it is safe. If it is because of a flat tire, replace the flat tire with the compact spare (see page 383), and have the flat tire repaired as soon as possible. If two or more tires are underinflated, call a professional towing service (see page 403). For more information, see page 309 .

Tire Pressure Monitoring System (TPMS) Indicator

On RDX model only
This indicator normally comes on for a few seconds when you turn the ignition switch to the ON (II) position.

If this indicator comes on and stays on at any other time, or if it does not come on when you turn the ignition switch to the ON (II) position, there is a problem with the TPMS. With this indicator on, the low tire pressure indicator and the tire pressure monitor will not come on when a tire loses pressure. Take the vehicle to your dealer to have the system checked.

Instrument Panel Indicators

Maintenance Minder Indicator

On RDX model only

This indicator comes on for a few seconds when you turn the ignition switch to the ON (II) position. It reminds you that it is time to take your vehicle in for scheduled maintenance. The maintenance main items and sub items will be displayed in the information display. See page 330 for more information on the maintenance minder.

This indicator goes off when your dealer resets it after completing the required maintenance service.

System Message Indicator

On RDX with Technology Package model only

This indicator comes on when there is a system message in the multi-information display. Press the INFO button on the steering wheel (see page 79) to see the message (see page 86).

Most of the time, this indicator comes on along with other indicators in the instrument panel such as the seat belt reminder indicator, SRS indicator, VSA system indicator, etc.

Washer Level Indicator

Canadian RDX model only

This indicator comes on when the washer fluid level is low. Add washer fluid when you see this indicator (see page 353).

Door and Tailgate Open Monitor

On RDX model

Your vehicle has a door and tailgate open monitor on the information display. If any door(s) or the tailgate is not closed tightly, the appropriate light/lights will come on to reminds you to close the tailgate or the door(s).

On RDX with Technology Package model only

The door and tailgate open monitor appears on the multi-information display (see page 84).

Gauges

Turbo Boost Meter

When the turbo charger is activated, this meter shows the boost pressure.

Fuel Gauge

This shows how much fuel you have. It may show slightly more or less than the actual amount. The needle returns to the bottom after you turn off the ignition.

NOTICE

Avoid driving with an extremely low fuel level. Running out of fuel could cause the engine to misfire, damaging the catalytic converter.

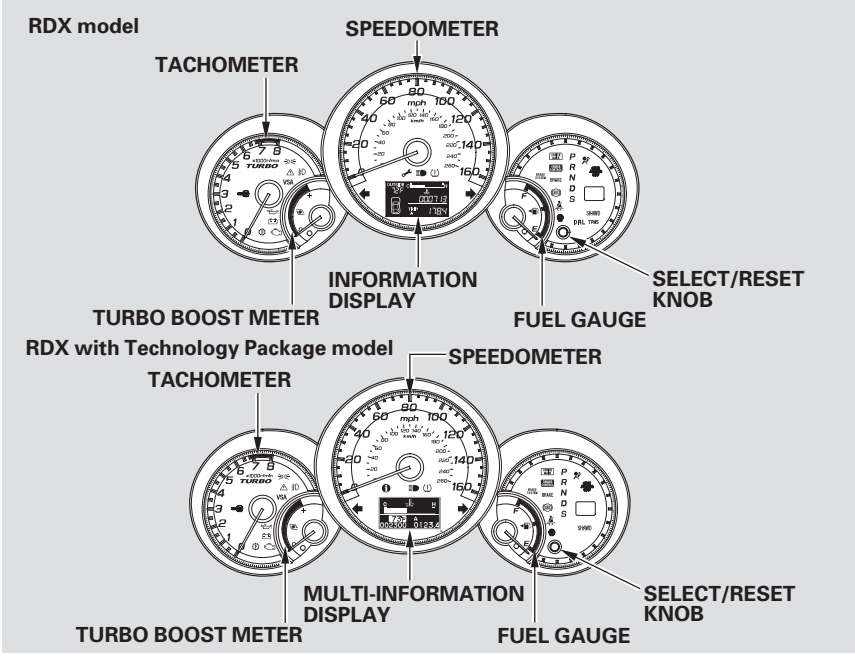

CONTINUED

On RDX with Technology Package model
For information about multi-information display, see page 79 .

Information Display

On RDX model
The information display in the instrument panel displays various information when the ignition switch is in the ON (II) position. Some information helps your safety driving. Others help to keep you aware of the periodic maintenance your vehicle needs for continued trouble-free driving.

To change the display, push the Select/Reset knob on the instrument panel repeatedly until the desired information appears.

When you turn the ignition switch to the ON (II) position, what you last selected is displayed.

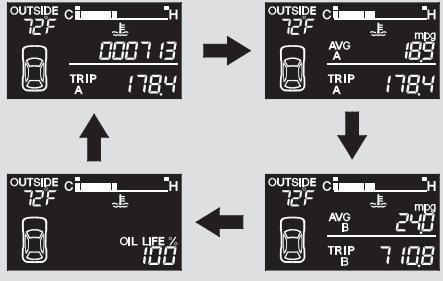

: Press the Select/Reset knob

U.S. model is shown

Odometer
The odometer shows the total distance your vehicle has been driven. It measures miles in U.S. models and kilometers in Canadian models. It is illegal under U.S. federal law and Canadian provincial regulations to disconnect, reset, or alter the odometer with the intent to change the number of miles or kilometers indicated.

Trip Meter
This meter shows the number of miles (U.S.) or kilometers (Canada) driven since you last reset it. There are two trip meters: Trip A and Trip B. Each trip meter works independently, so you can keep track of two different distances.

To reset a trip meter, display it, and then press and hold the Select/Reset knob until the number resets to “0.0”.

When you reset Trip A, AVG. FUEL A is reset at the same time. When you reset Trip B, AVG. FUEL B is reset.

AVG. FUEL A/B
This shows your vehicle’s average fuel economy in mpg (U.S. models) or ℓ/100 km (Canadian models) since you last reset the Trip A or Trip B.

The average fuel mileage will be reset when you reset the trip meter, or if the vehicle’s battery goes dead or is disconnected.

Outside Temperature Indicator
This shows the outside temperature in Fahrenheit (U.S. models), or in Centigrade (Canadian models).

The temperature sensor is in the front bumper. The temperature reading can be affected by heat reflection from the road surface, engine heat, and the exhaust from surrounding traffic. This can cause an incorrect temperature reading when your vehicle speed is under 19 mph (30 km/h). When you start your trip, the sensor is not fully acclimatized, therefore it may take several minutes until the proper temperature is displayed.

In certain weather conditions, temperature readings near freezing (32°F, 0°C) could mean that ice is forming on the road surface.

If the outside temperature is incorrectly displayed, you can adjust it up ±5°F in U.S. models (±3°C in Canadian models) warmer or cooler.

NOTE: The temperature must be stabilized before doing this procedure.

To adjust the outside temperature indicator, press and hold the Select/Reset knob for 10 seconds. The following sequence will appear for 1 second each: 0, 1, 2, 3, 4, 5, −5, −4, −3, −2, −1, 0 (U.S.) or 0, 1, 2, 3, −3, −2, −1, 0 (Canada).

When the temperature reaches the desired value, release the Select/Reset knob. You should see the new outside temperature displayed.

CONTINUED

Gauges

Temperature Gauge
This shows the temperature of the engine's coolant. During normal operation, the reading should rise from the "C (Cold)" mark to about the middle of the gauge. In severe driving conditions, such as very hot weather or a long period of uphill driving, the reading may rise to near the "H (Hot)" mark of the gauge. If it reaches the "H" mark, pull safely to the side of the road. See page 391 for instructions and precautions on checking the engine's coolant system.

Maintenance Minder
The information display in the instrument panel shows you the engine oil life and maintenance service items when the ignition switch is in the ON (II) position. This information helps to keep you aware of the periodic maintenance your vehicle needs for continued trouble-free driving. Refer to page 330 for more information.

Check Fuel Cap Message
If your fuel fill cap is loose or missing, a "CHECK FUEL CAP" message appears on the information display after you start the engine. For more information, see page 280 .

Multi-Information Display

On RDX with Technology Package model
The multi-information display in the instrument panel displays various information and messages when the ignition switch is in the ON (II) position. Some of the messages help you operate your vehicle more comfortably.
Others help to keep you aware of the periodic maintenance your vehicle needs for continued trouble-free driving.

When you open the driver's door, a "Welcome" message is shown on the multi-information display. When you turn the ignition switch from the ON (II) position to the ACCESSORY (I) position, a "Goodbye" message is shown on the display.

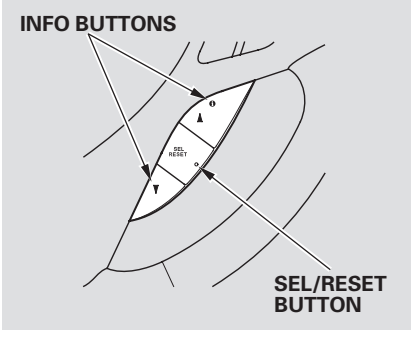

To change the display, press the SEL/RESET button or INFO (▲/▼) button on the steering wheel repeatedly until the desired information appears (see page 80).

You can also change the display by pressing the Select/Reset knob in the instrument panel.

When you turn the ignition switch to the ON (II) position, what you last selected is displayed.

In the multi-information display, the system message is also displayed (see page 84) and you can customize your vehicle control settings (see page 87).

CONTINUED

Multi-Information Display

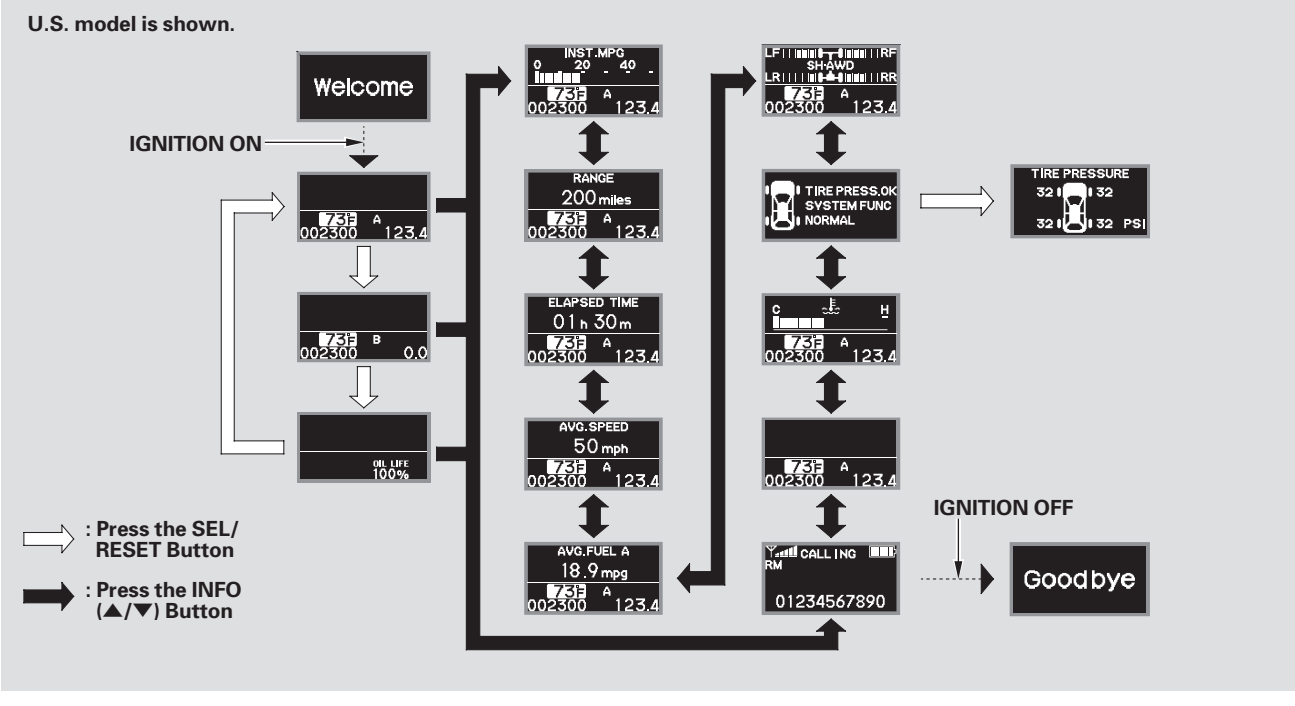

Multi-Information Display

Odometer
The odometer shows the total distance your vehicle has been driven. It measures miles in U.S. models and kilometers in Canadian models. It is illegal under U.S. federal law and Canadian provincial regulations to disconnect, reset, or alter the odometer with the intent to change the number of miles or kilometers indicated.

Trip Meter
This meter shows the number of miles (U.S.) or kilometers (Canada) driven since you last reset it. There are two trip meters: Trip A and Trip B. Each trip meter works independently, so you can keep track of two different distances.

To reset a trip meter, display it, then press and hold the SEL/RESET button until the number resets to "0.0".

When you reset Trip A, AVG. FUEL A is reset at the same time. When you reset Trip B, AVG. FUEL B is reset.

You can customize the Trip A and AVG. FUEL A reset condition in the multi-information display (see page 98).

Outside Temperature Display
This shows the outside temperature in Fahrenheit (U.S. models), or in Centigrade (Canadian models).

The temperature sensor is in the front bumper. The temperature reading can be affected by heat reflection from the road surface, engine heat, and the exhaust from surrounding traffic. This can cause an incorrect temperature reading when your vehicle speed is under 19 mph (30 km/h). When you start your trip, the sensor is not fully acclimatized, therefore it may take several minutes until the proper temperature is displayed.

In certain weather conditions, temperature readings near freezing (32°F, 0°C) could mean that ice is forming on the road surface.

You can adjust the outside temperature in the multi-information display (see page 96).

Multi-Information Display

Maintenance Minder
The multi-information display in the instrument panel shows you the engine oil life and maintenance service items when the ignition switch is in the ON (II) position. This information helps to keep you aware of the periodic maintenance your vehicle needs for continued trouble-free driving. Refer to page 330 for more information.

INST. MPG (U.S. models)/INST. L/100km (Canadian models)
This shows your current fuel mileage.

When you turn off the engine, INST. MPG or INST. L/100 km is also reset.

RANGE
This shows the estimated distance you can travel on the fuel remaining in the fuel tank. This distance is estimated from the fuel economy you received over the last several miles(U.S.) or kilometers (Canada), so it will vary with changes in speed, traffic, etc.

When the battery is disconnected, or you refuel, RANGE is also reset.

ELAPSED TIME
This shows the time traveled since you last reset it. When you turn the ignition switch to the ON (II) position, ELAPSED TIME is reset.

You can customize the ELAPSED TIME reset condition in the multi-information display (see page 100).

AVG. SPEED
This shows the average speed you are traveling in miles per hour (mph) for U.S. models or kilometers per hour (km/h) for Canadian models.

When you reset Trip A, AVG. SPEED is also reset.

AVG. FUEL A/B
This shows your vehicle's average fuel economy in mpg (U.S. models) or ℓ/100 km (Canadian models) since you last reset the Trip A or Trip B.

You can customize the Trip A and AVG. FUEL A reset condition in the multi-information display (see page 98).

The average fuel mileage will be reset when you reset the trip meter, or if the vehicle's battery goes dead or is disconnected.

Multi-Information Display

SH-AWD Torque Distribution Monitor
This monitor shows how much torque is being delivered to each wheel. For more information, see page 303 .

Tire Pressure Monitor
You can see the pressure of each tire in this monitor. If one or more tire pressure are low, inflate them to the correct pressure. For more information, see page 312 .

Temperature Gauge
This shows the temperature of the engine's coolant. During normal operation, the reading should rise from the "C (Cold)" mark to about the middle of the gauge. In severe driving conditions, such as very hot weather or a long period of uphill driving, the reading may rise to near the "H (Hot)" mark of the gauge. If it reaches the "H" mark, pull safely to the side of the road. See page 391 for instructions and precautions on checking the engine's coolant system.

HandsFreeLink™
You can receive or make phone calls from your cellphone through your vehicle's HandsFreeLink (HFL) system without touching your cellphone.

To use the system, your cellphone and the HFL system must be linked. Not all cellphones are compatible with this system. Refer to page 262 for instructions on how to link your cellphone to the HFL and how to receive or make phone calls, or visit the handsfreelink.com website.

Multi-Information Display

System Messages

If there is a problem with your vehicle, for example, the engine oil level is low or a door is not fully closed, the multi-information display will show you the problem. It does this by interrupting the current display with one or more messages.

Here is a list of messages shown on the multi-information display:

FASTEN SEATBELT / FASTEN PASSENGER SEATBELT	See page 20
DOOR OPEN	See page 12
BRAKE RELEASE PARKING BRAKE (U.S.) / RELEASE PARKING BRAKE (Canada)	See page 68
BRAKE BRAKE FLUID LOW (U.S.) / BRAKE FLUID LOW (Canada)	See page 395
BRAKE CHECK BRAKE SYSTEM (U.S.) / CHECK BRAKE SYSTEM (Canada)	See pages 395, 396

TPMS CHECK TPMS SYSTEM	See page 313
CHECK TIRE PRESSURE	See page 312
OIL PRESSURE LOW	See page 393
CHECK CHARGING SYSTEM	See page 393
CHECK EMISSION SYSTEM	See page 394

Multi-Information Display

CHECK TRANS-MISSION	See page 295
SH-AWD CHECK SH-AWD SYSTEM	See page 304
SH-AWD SH-AWD DIFF TEMP HIGH	See page 304
CHECK AIRBAG SYSTEM	See page 33
ABS CHECK ABS SYSTEM	See page 307

VSA CHECK VSA SYSTEM	See page 315
SIDE AIRBAG OFF PASSEN-GER SIDE AIRBAG OFF (U.S.) / PASSEN-GER SIDE AIRBAG OFF (Canada)	See page 33
DRL CHECK DRL SYSTEM	See page 123
FUEL LOW	See page 69
TAIL GATE OPEN	See page 12

TIGHTEN FUEL CAP	See page 281
WASHER FLUID LOW	See page 353
SERVICE DUE NOW A1	See page 334
REMOVE KEY	See page 130

CONTINUED

Multi-Information Display

The system message(s) triggers the appropriate indicator(s) on the instrument panel, including the system message indicator, to come on. The system message indicator does not go off until the problem(s) is corrected.

You will also hear a beep when the system message indicator comes on for the first time.

Most of the messages are displayed for about 5 seconds, and then the normal display returns. If there are several system messages to be shown, the display switches these messages every 5 seconds.

To cancel the message(s) before 5 seconds elapsed, press the INFO (▲/▼) button on the steering wheel.

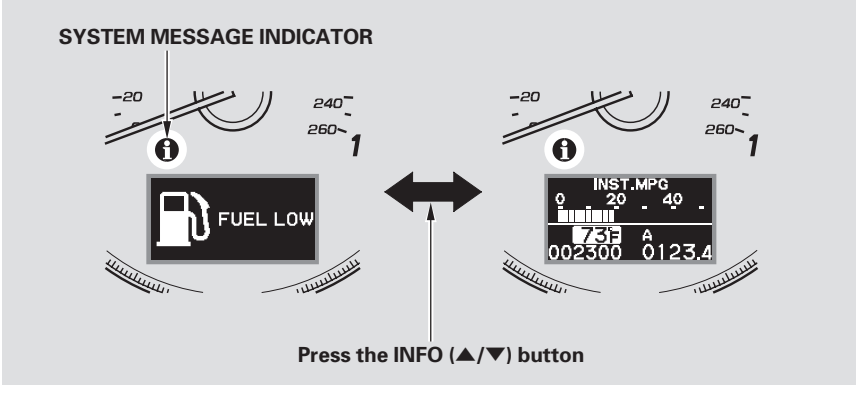

Even if you press the INFO (▲/▼) button, some messages stay on or come on again at regular intervals until the problem is corrected.

- FASTEN SEAT BELT
- FASTEN PASSENGER SEAT BELT
- RELEASE PARKING BRAKE
- Door and Tailgate Open

You can see the message(s) again by pressing the INFO (▲/▼) button repeatedly if the system message indicator remains lit on the instrument panel.

Multi-Information Display

Customized Settings
With the multi-information display and the INFO (▲/▼) and SEL/RESET buttons on the right side of the steering wheel, you can customize some vehicle control settings.

To enter the customizing mode, press and hold the INFO (▲/▼) button for more than 3 seconds.

To change the settings, the ignition switch must be in the ON (II) position, and the vehicle must be stopped with the transmission in Park.

You cannot customize the settings under these conditions:

- If you turn the ignition switch to the ACCESSORY (I) or the LOCK (0) position.
- If you move the shift lever out of Park.

The first customizing menu is:
- CHG SETTING
- DEFAULT ALL

If you want the settings as they were when the vehicle left the factory, select DEFAULT ALL, as described on page 90 .

If you want to change any vehicle control settings, select CHG SETTING, then press the SEL/RESET button (see page 91).

Refer to the table in the next page about the settings you want to customize.

CONTINUED

Multi-Information Display

Group Setup	Menu Item	Description	Setting Option	Page
METER SETUP (P.93)	LANGUAGE SELECTION	Changes the language used in the display.	ENGLISH*	94
			FRENCH	
			SPANISH	
	ADJUST OUTSIDE TEMP. DISPLAY	Changes the outside temperature reading above or below its current reading.	−5°F ~ ±0°F* ~ 5°F	96
			−3°C ~ ±0°C* ~ 3°C	
	TRIP A & AVG. FUEL RESET with REFUEL	Causes trip meter A and the average fuel economy to reset when you refuel.	ON	98
			OFF*	
	ELAP. TIME RESET CONDITION	Resets the elapsed time of your current trip.	IGN RESET*	100
			TRIP A RESET	
			TRIP B RESET	
LIGHTING SETUP (P.102)	INTERIOR LIGHT DIMMING TIME	Changes how long (in seconds) the interior lights stay on after you close the doors.	15 sec	103
			30 sec*	
			60 sec	
	HEADLIGHT AUTO OFF TIMER	Changes how long (in seconds) the exterior lights stay on after you close the driver's door.	0 sec	105
			15 sec*	
			30 sec	
			60 sec	
DOOR SETUP (P.107)	AUTO DOOR LOCK	Changes when the doors automatically lock.	SHIFT FROM P	108
			WITH VEH SPEED*	
			OFF	

∗ : Default setting

Multi-Information Display

Group Setup	Menu Item	Description	Setting Option	Page
DOOR SETUP (P.107)	DOOR LOCK MODE	Changes which doors unlock with the remote transmitter in a first push.	DRIVER DOOR*	110
			ALL DOORS	
	KEYLESS LOCK ACKNOWLEDGMENT	The exterior lights flash each time you press the LOCK or UNLOCK button. A beeper will also sound when you press the LOCK button twice.	ON*	112
			OFF	
	SECURITY RELOCK TIMER	Changes how long it takes (in seconds) for the doors to relock and the security system to set after you unlock and not opening the door.	30 sec*	114
			60 sec	
			90 sec	
	AUTO DOOR UNLOCK	Changes when the doors automatically unlock.	DRIVER'S DOOR WITH SHIFT TO P*	116
			ALL DOORS WITH SHIFT TO P	
			DRIVER'S DOOR WITH IGN OFF	
			ALL DOORS WITH IGN OFF	
			OFF	
DEFAULT ALL		Changes all the customized settings as they were the vehicle left the factory.	SET	90
			EXIT	

* : Default setting

Multi-Information Display

DEFAULT ALL

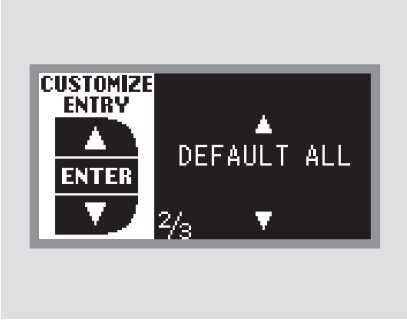

To enter the customizing mode, press and hold the INFO (▲/▼) button for more than 3 seconds.

If you want to set the default settings, press the INFO (▲/▼) button to select DEFAULT ALL, then press the SEL/RESET button.

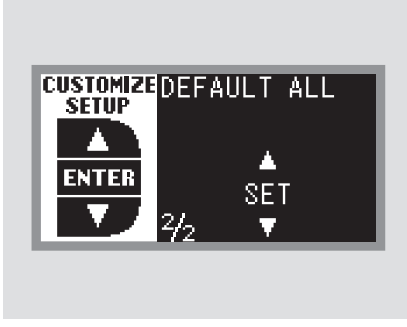

To set the default settings, select DEFAULT ALL, and press the SEL/RESET button. Then select SET, and press the SEL/RESET button.

When DEFAULT ALL is set, you will see the above display for several seconds, then the screen returns to CUSTOMIZE ENTRY.

Multi-Information Display

If DEFAULT ALL is not set, you will see the above display for several seconds, then the screen goes back to CUSTOMIZE ENTRY. Repeat the procedure to select DEFAULT ALL.

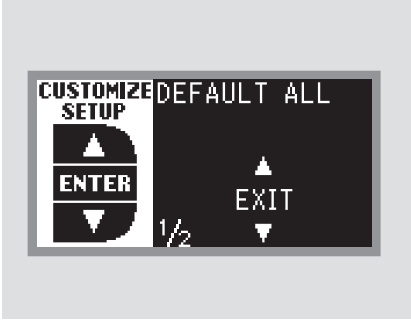

If you want to cancel DEFAULT ALL, select EXIT, then press the SEL/RESET button. The screen goes back to CUSTOMIZE ENTRY.

Change Settings
You can customize some of the vehicle control settings to your preference. Here are the settings you can customize:

- METER SETUP
- LIGHTING SETUP
- DOOR SETUP

While CHG SETTING in the CUSTOMIZE ENTRY is shown in the multi-information display, press the SEL/RESET button. The screen changes to METER SETUP in the CUSTOMIZE GROUP.

Each time you press the INFO (▲/▼) button, the screen changes as shown on the next page. Press the INFO (▲/▼) button, until you see the setup you want to customize, then press the SEL/RESET button to enter your selection.

CONTINUED

Multi-Information Display

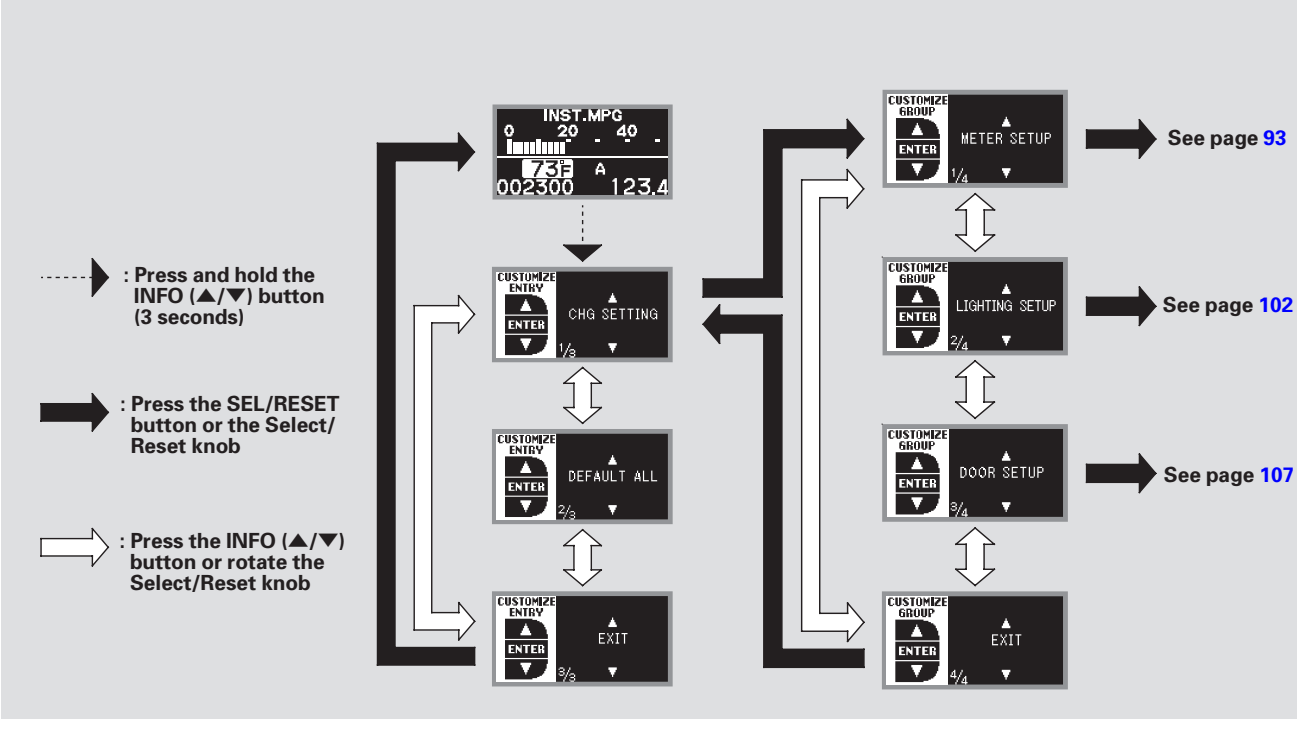

Multi-Information Display

Meter Setup

Here are the four custom settings for the meter setup:

- LANGUAGE SELECTION
- ADJUST OUTSIDE TEMP. DISPLAY
- TRIP A & AVG. FUEL RESET with REFUEL
- ELAP. TIME RESET CONDITION

While METER SETUP is shown in the CUSTOMIZE GROUP of the multi-information display, press the SEL/RESET button.

Each time you press the INFO (▲/▼) button, the screen changes as shown in the illustration. Press the INFO (▲/▼) button until you see the setting you want to customize, then press the SEL/RESET button to enter your selection.

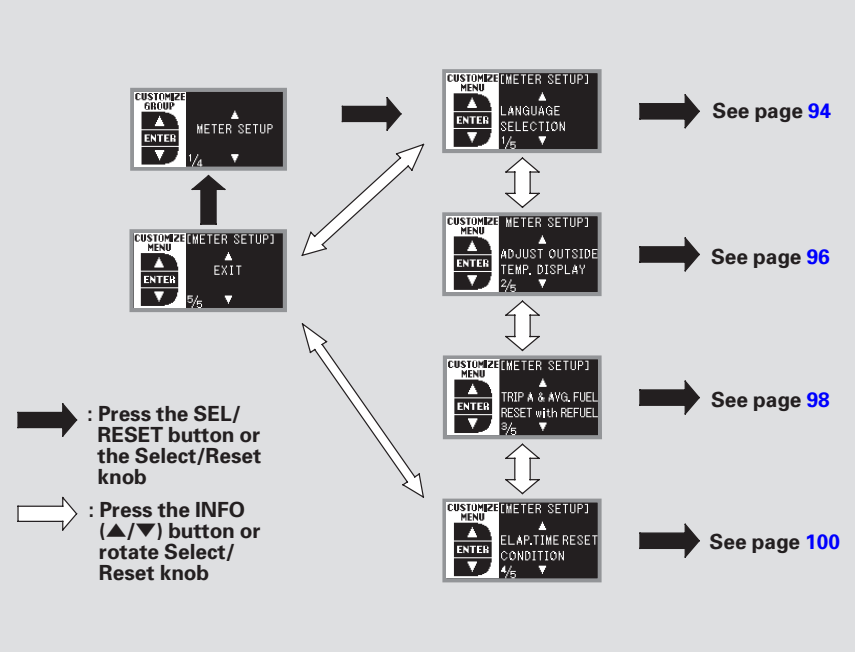

See page 94
See page 96
See page 98
See page 100

CONTINUED

Multi-Information Display

Language Selection
There are three language selections you can make: English, French, and Spanish. To choose the language you want, follow these instructions:

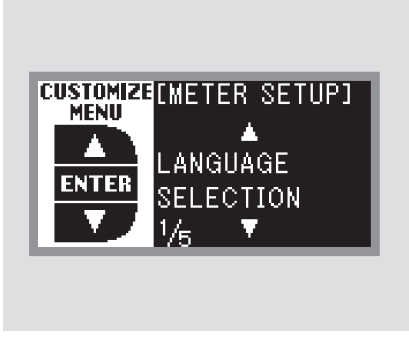

While METER SETUP is shown in the CUSTOMIZE GROUP of the multi-information display, press the SEL/RESET button. You will see the above display.

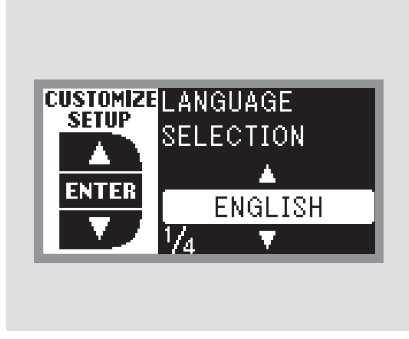

Select the desired language by pressing the INFO (▲/▼) button, then enter your selection by pressing the SEL/RESET button.

Multi-Information Display

When your choice is set, you will see the above display for several seconds, then the screen goes back to CUSTOMIZE MENU.

All messages in the multi-information display will be shown in the language you selected.

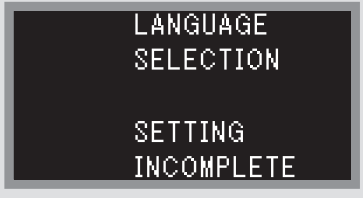

If your choice is not set, you will see the above display for several seconds, then the screen goes back to CUSTOMIZE MENU. If this happens, you need to repeat the same procedure.

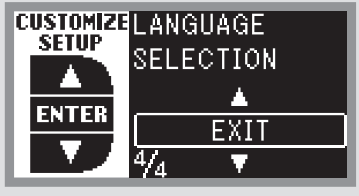

To exit LANGUAGE SELECTION without changing the current setting, select EXIT by pressing the INFO (▲/▼) button, then press the SEL/RESET button. The screen goes back to CUSTOMIZE MENU.

CONTINUED

Multi-Information Display

Adjust Outside Temp. Display
If you sometimes find that the temperature reading is a few degrees above or below the actual temperature, you can adjust it by following these instructions:

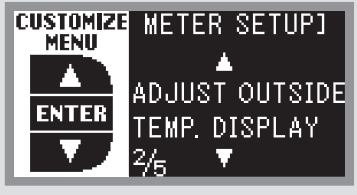

While METER SETUP is shown in the CUSTOMIZE GROUP of the multi-information display, press the SEL/RESET button. The screen changes to CUSTOMIZE MENU. Press the INFO (▲/▼) button until you see the above display.

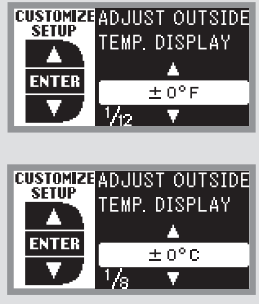

Press the SEL/RESET button. The screen changes as shown above. The highlighted number is the current setting above or below the outside temperature. Press the INFO (▲/▼) button repeatedly until the number you want appears, then press the SEL/RESET button to enter your selection.

Multi-Information Display

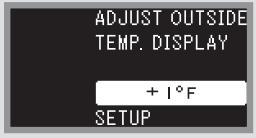

U.S.

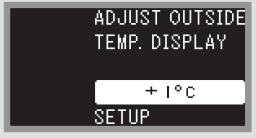

Canada

When your choice is set, you will see the above display for several seconds, then the screen goes back to CUSTOMIZE MENU.

If your choice is not set, you will see the above display for several seconds, then the screen goes back to CUSTOMIZE MENU. If this happens, you need to repeat the same procedure.

To exit ADJUST OUTSIDE TEMP. DISPLAY without changing the current setting, select EXIT by pressing the INFO (▲/▼) button, then press the SEL/RESET button. The screen goes back to CUSTOMIZE MENU.

CONTINUED

Multi-Information Display

Trip A & Avg. Fuel Reset with Refuel
To cause Trip A and AVG. FUEL A to reset every time you refuel your vehicle, follow these instructions:

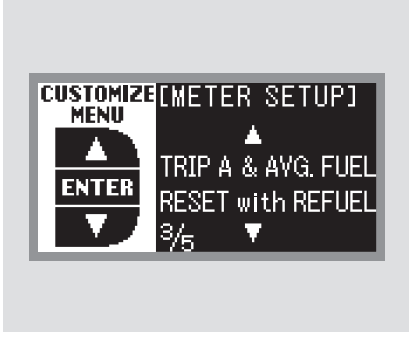

While METER SETUP is shown in the CUSTOMIZE GROUP of the multi-information display, press the SEL/RESET button. The screen changes to CUSTOMIZE MENU. Press the INFO (▲/▼) button until you see the above display.

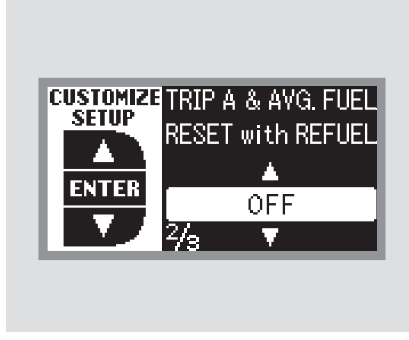

Press the SEL/RESET button. The screen changes as shown above. Select ON or OFF by pressing the INFO (▲/▼) button, then press the SEL/RESET button to enter your selection.

Multi-Information Display

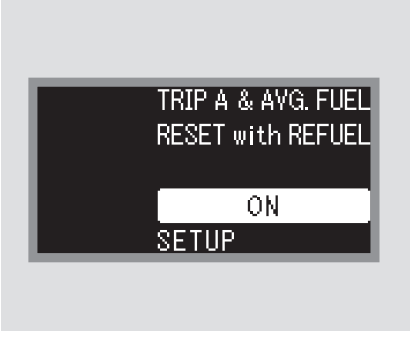

When your choice is set, you will see the above display for several seconds, then the screen goes back to CUSTOMIZE MENU.

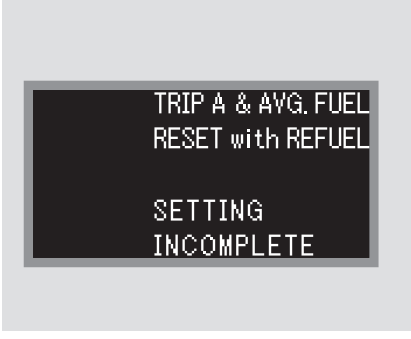

If your choice is not set, you will see the above display for several seconds, then the screen goes back to CUSTOMIZE MENU. If this happens, you need to repeat the same procedure.

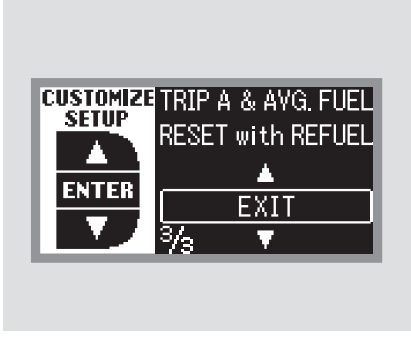

To exit TRIP A & AVG. FUEL RESET with REFUEL without changing the current setting, select EXIT by pressing the INFO (▲/▼) button, then press the SEL/RESET button. The screen goes back to CUSTOMIZE MENU.

CONTINUED

Multi-Information Display

Elap. Time Reset Condition
There are three elapsed time reset choices you can make:

IGN RESET — The elapsed time is reset when you turn the ignition switch to the LOCK (0) position.

TRIP A — The elapsed time is reset when the Trip A is reset.

TRIP B — The elapsed time is reset when the Trip B is reset.

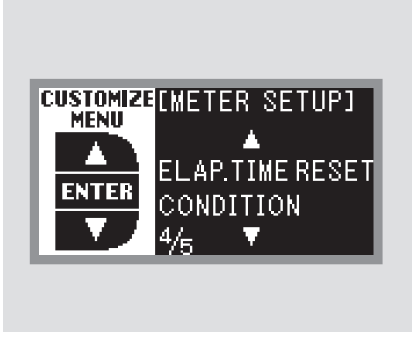

While METER SETUP is shown in the CUSTOMIZE GROUP of the multi-information display, press the SEL/RESET button. The screen changes to CUSTOMIZE MENU. Press the INFO (▲/▼) button until you see the above display.

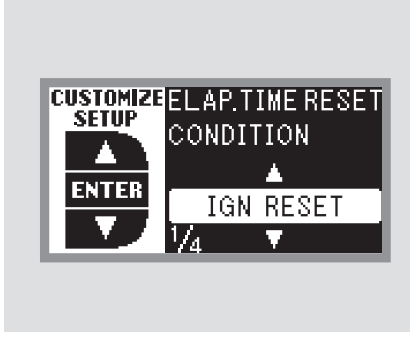

Press the SEL/RESET button. The screen changes as shown above. Select the desired setting by pressing the INFO (▲/▼) button, then press the SEL/RESET button to enter your selection.

Multi-Information Display

When your choice is set, you will see the above display for several seconds, then the screen goes back to CUSTOMIZE MENU.

If your choice is not set, you will see the above display for several seconds, then the screen goes back to CUSTOMIZE MENU. If this happens, you need to repeat the same procedure.

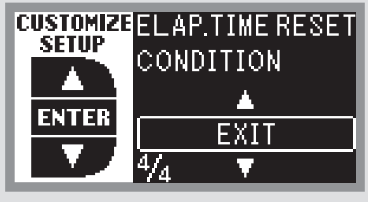

To exit ELAP. TIME RESET CONDITION without changing the current setting, select EXIT by pressing the INFO (▲/▼) button, then press the SEL/RESET button. The display goes back to CUSTOMIZE MENU.

Multi-Information Display

Lighting Setup

There are two settings in the lighting setup:

- INTERIOR LIGHT DIMMING TIME
- HEADLIGHT AUTO OFF TIMER

While CUSTOMIZE GROUP is shown in the multi-information display, select LIGHTING SETUP by pressing INFO (▲/▼) button, then press the SEL/RESET button.

Each time you press the INFO (▲/▼) button, the screen changes as shown in the illustration. Press the INFO (▲/▼) button until you see the setting you want to customize, then press the SEL/RESET button to enter your selection.

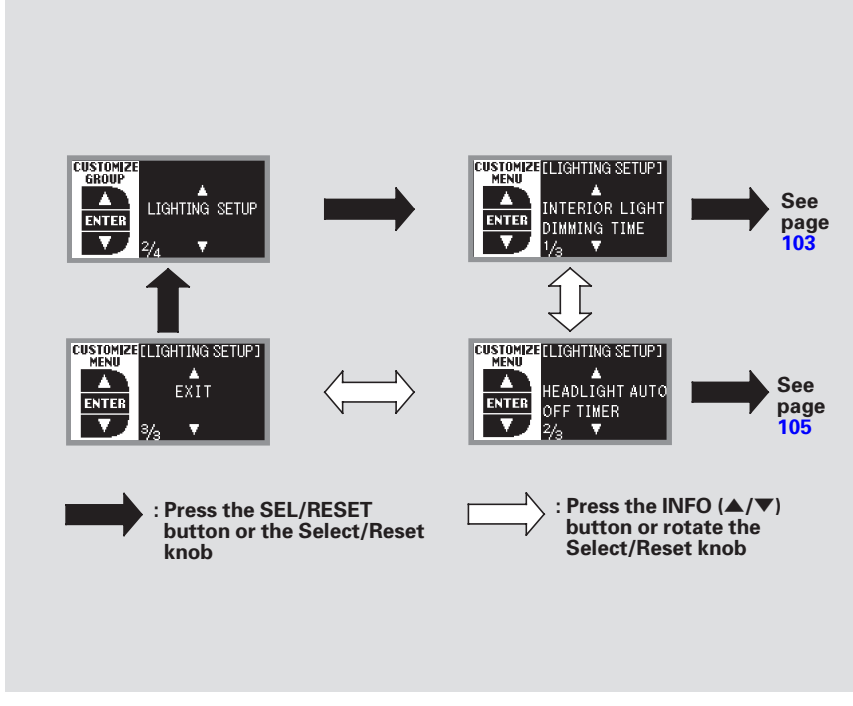

Multi-Information Display

Interior Light Dimming Time
The interior lights fade out when you close all doors. You can change the time that the interior lights fade out.

While LIGHTING SETUP is shown in the CUSTOMIZE GROUP of the multi-information display, press the SEL/RESET button. You will see the above display.

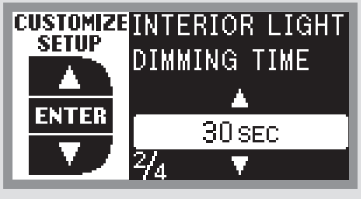

Press the SEL/RESET button. The screen changes as shown above. Select how long you want the lights to stay on before they fade out (15, 30, or 60 seconds) by pressing the INFO (▲/▼) button, then press the SEL/RESET button to enter your selection.

CONTINUED

Multi-Information Display

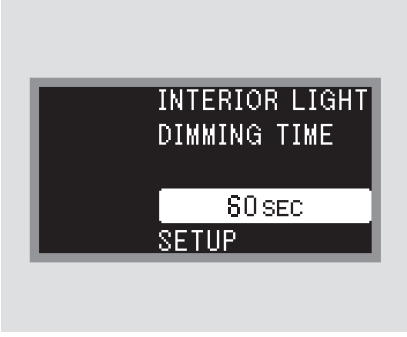

When your choice is set, you will see the above display for several seconds, then the screen goes back to CUSTOMIZE MENU.

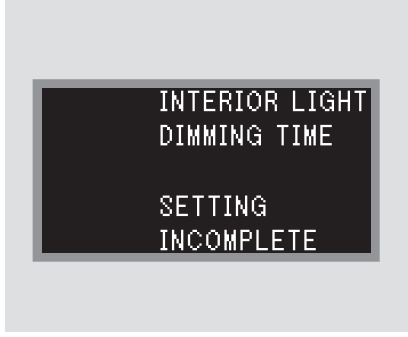

If your choice is not set, you will see the above display for several seconds, then the screen goes back to CUSTOMIZE MENU. If this happens, you need to repeat the same procedure.

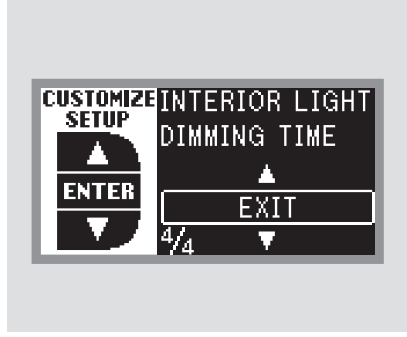

To exit INTERIOR LIGHT DIMMING TIME without changing the current setting, select EXIT by pressing the INFO (▲/▼) button, then press the SEL/RESET button. The screen goes back to CUSTOMIZE MENU.

Multi-Information Display

Headlight Auto Off Timer
The headlights, parking lights, side marker lights, taillights, and license plate lights go off after the selected time when you close the driver's door and take the remote with you. To change how long the lights stay on before they go off, follow these instructions:

While LIGHTING SETUP is shown in the CUSTOMIZE GROUP of the multi-information display, press the SEL/RESET button. The screen changes to CUSTOMIZE MENU. Press the INFO (▲/▼) button until you see the above display.

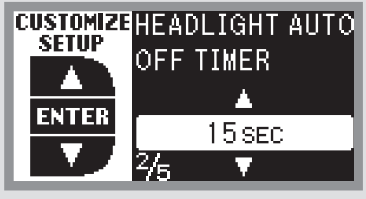

Press the SEL/RESET button. The screen changes as shown above. Select how long you want the lights to stay on before they go off (0, 15, 30, or 60 seconds) by pressing the INFO (▲/▼) button, then press the SEL/RESET button to enter your selection.

CONTINUED

Multi-Information Display

When your choice is set, you will see the above display for several seconds, then the screen goes back to CUSTOMIZE MENU.

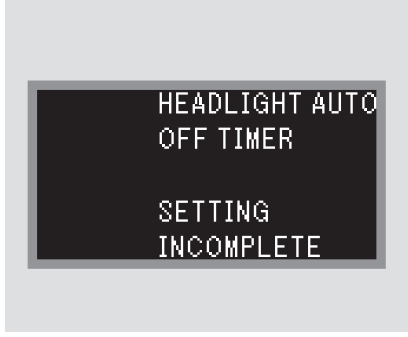

If your choice is not set, you will see the above display for several seconds, then the screen goes back to CUSTOMIZE MENU. If this happens, you need to repeat the same procedure.

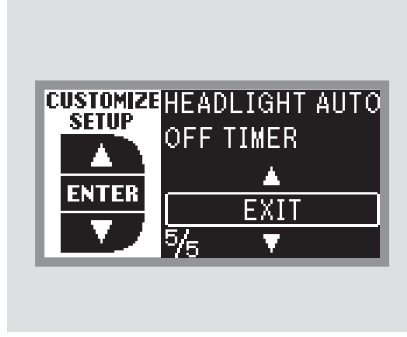

To exit HEADLIGHT AUTO OFF TIMER without changing the current setting, select EXIT by pressing the INFO (▲/▼) button, then press the SEL/RESET button. The screen goes back to CUSTOMIZE MENU.

Multi-Information Display

Door Setup

There are five settings to choose from in the door setup:

- AUTO DOOR LOCK
- DOOR LOCK MODE
- KEYLESS LOCK ACKNOWLEDGMENT
- SECURITY RELOCK TIMER
- AUTO DOOR UNLOCK

While CUSTOMIZE GROUP is shown in the multi-information display, select DOOR SETUP by pressing INFO (▲/▼) button, then press the SEL/RESET button.

Each time you press the INFO (▲/▼) button, the screen changes as shown in the illustration. Press the INFO (▲/▼) button until you see the setting you want to customize, then press the SEL/RESET button to enter your selection.

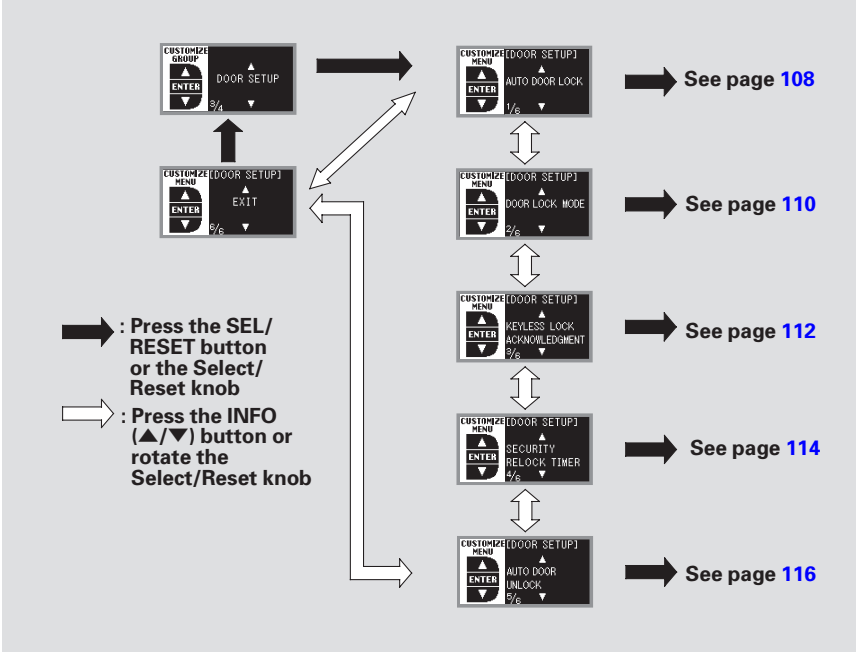

CONTINUED

Multi-Information Display

Auto Door Lock
There are three settings you can choose from:

OFF —
The auto door lock is deactivated all the time.

WITH VEH SPD —
The doors lock when the vehicle speed reaches about 10 mph (about 15 km/h).

SHIFT FROM P —
The doors lock whenever you move the shift lever out of Park.

While DOOR SETUP is shown in the CUSTOMIZE GROUP of the multi-information display, press the SEL/RESET button. You will see the above display.

Press the SEL/RESET button. The screen changes as shown above. Select the desired setting by pressing the INFO (▲/▼) button, then press the SEL/RESET button to enter your selection.

Multi-Information Display

When your choice is set, you will see the above display for several seconds, then the screen goes back to CUSTOMIZE MENU.

If your choice is not set, you will see the above display for several seconds, then the screen goes back to CUSTOMIZE MENU. If this happens, you need to repeat the same procedure.

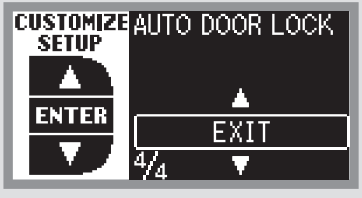

To exit AUTO DOOR LOCK without changing the current setting, select EXIT by pressing the INFO (▲/▼) button, then press the SEL/RESET button. The screen goes back to CUSTOMIZE MENU.

CONTINUED

Multi-Information Display

Door Lock Mode
To select whether the driver's door unlocks or all the doors unlock when you unlock the doors with the remote transmitter or the key, follow these instructions.

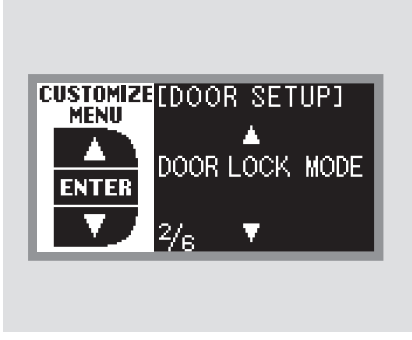

While DOOR SETUP is shown in the CUSTOMIZE GROUP of the multi-information display, press the SEL/RESET button. The screen changes to CUSTOMIZE MENU. Press the INFO (▲/▼) button until you see the above display.

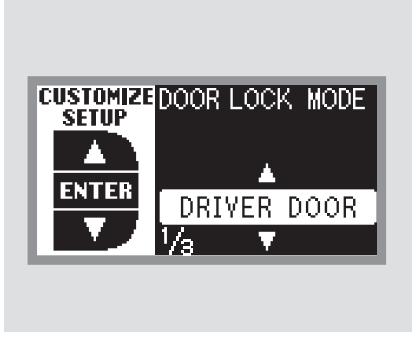

Press the SEL/RESET button. The screen changes as shown above. Select DRIVER DOOR or ALL DOORS by pressing the INFO (▲/▼) button, then press the SEL/RESET button to enter your selection.

Multi-Information Display

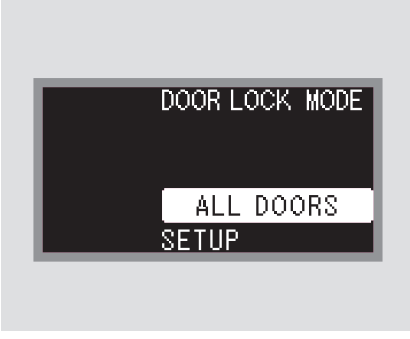

When your choice is set, you will see the above display for several seconds, then the screen goes back to CUSTOMIZE MENU.

If your choice is not set, you will see the above display for several seconds, then the screen goes back to CUSTOMIZE MENU. If this happens, you need to repeat the same procedure.

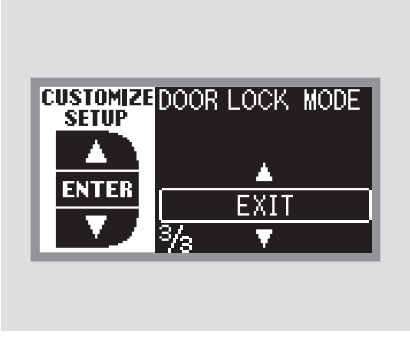

To exit DOOR LOCK MODE without changing the current setting, select EXIT by pressing the INFO (▲/▼) button, and then press the SEL/RESET button. The screen goes back to CUSTOMIZE MENU.

CONTINUED

Multi-Information Display

Keyless Lock Acknowledgment
When you press the UNLOCK button on the remote transmitter to unlock the doors and the tailgate, the exterior lights blink twice to verify that the doors and the tailgate are unlocked and the security system is turned off.

When you push the LOCK button on the remote transmitter, some exterior lights flash, and a beeper sounds when you push the LOCK button again within 5 seconds to verify that the doors and the tailgate are locked and the security system has set (see page 140). You can customize the exterior lights not to flash and the beeper not to sound.

While DOOR SETUP is shown in the CUSTOMIZE GROUP of the multi-information display, press the SEL/RESET button. The screen changes to CUSTOMIZE MENU. Press the INFO (▲/▼) button until you see the above display.

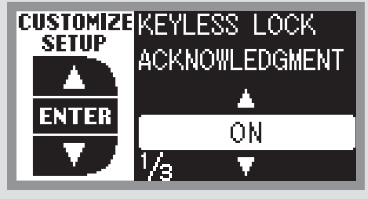

Press the SEL/RESET button. The screen changes as shown above. Select ON or OFF by pressing the INFO (▲/▼) button, then press the SEL/RESET button to enter your selection.

Multi-Information Display

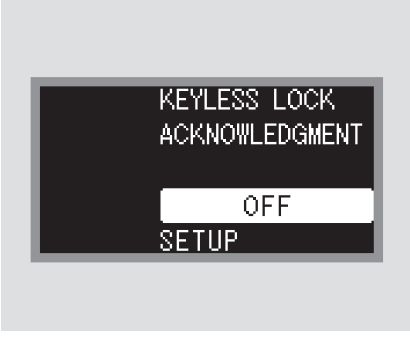

When your choice is set, you will see the above display for several seconds, then the screen goes back to CUSTOMIZE MENU.

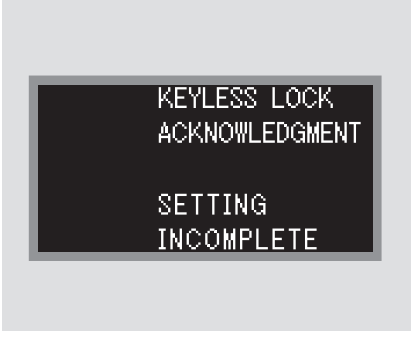

If your choice is not set, you will see the above display for several seconds, then the screen goes back to CUSTOMIZE MENU. If this happens, you need to repeat the same procedure.

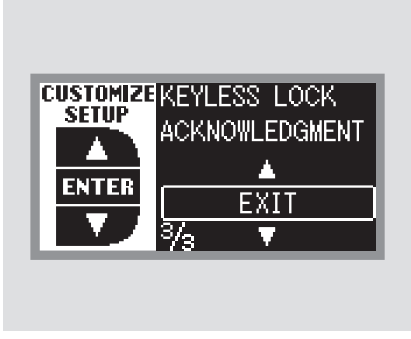

To exit KEYLESS LOCK ACKNOWLEDGMENT without changing the current setting, select EXIT by pressing the INFO (▲/▼) button, then press the SEL/RESET button. The screen goes back to CUSTOMIZE MENU.

CONTINUED

Multi-Information Display

Security Relock Timer
If you unlock the doors and the tailgate with the remote transmitter, but do not open any of the doors or the tailgate within 30 seconds, the doors and the tailgate automatically relock and the security system sets.

You can change this relock time from 30 seconds to 60 or 90 seconds.

While DOOR SETUP is shown in the CUSTOMIZE GROUP of the multi-information display, press the SEL/RESET button. The screen changes to CUSTOMIZE MENU. Press the INFO (▲/▼) button until you see the above display.

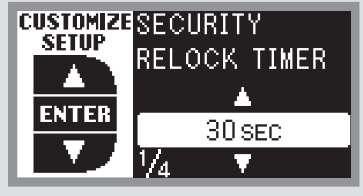

Press the SEL/RESET button. The screen changes as shown above. Select the relock time you want (30, 60, or 90 seconds) by pressing the INFO (▲/▼) button, then press the SEL/RESET button to enter your selection.

Multi-Information Display

When your choice is set, you will see the above display for several seconds, then the screen goes back to CUSTOMIZE MENU.

If your choice is not set, you will see the above display for several seconds, then the screen goes back to CUSTOMIZE MENU. If this happens, you need to repeat the same procedure.

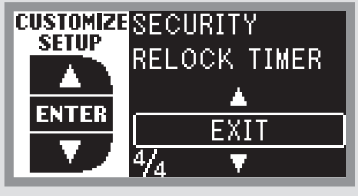

To exit SECURITY RELOCK TIMER without changing the current setting, select EXIT by pressing the INFO (▲/▼) button, then press the SEL/RESET button. The screen goes back to CUSTOMIZE MENU.

Multi-Information Display

Auto Door Unlock
There are three settings you can choose from:

SHIFT TO P — The driver's door or all the doors unlock when you move the shift lever to Park.

IGN OFF — The driver's door or all the doors unlock when you turn the ignition switch to the LOCK (0) position.

OFF — The auto door unlock is deactivated all the time.

While DOOR SETUP is shown in the CUSTOMIZE GROUP of the multi-information display, press the SEL/RESET button. The screen changes to CUSTOMIZE MENU. Press the INFO (▲/▼) button until you see the above display.

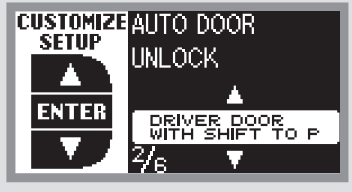

Press the SEL/RESET button. The screen changes as shown above. Select the desired setting by pressing the INFO (▲/▼) button, then press the SEL/RESET button to enter your selection.

Multi-Information Display

When your choice is set, you will see the above display for several seconds, then the screen goes back to CUSTOMIZE MENU.

If your choice is not set, you will see the above display for several seconds, then the screen goes back to CUSTOMIZE MENU. If this happens, you need to repeat the same procedure.

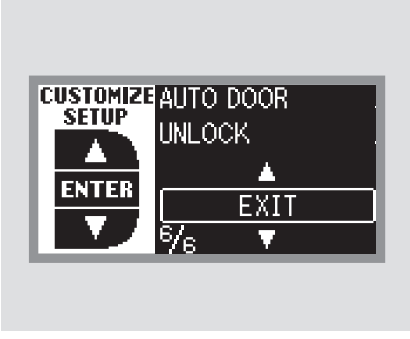

To exit AUTO DOOR UNLOCK without changing the current setting, select EXIT by pressing the INFO (▲/▼) button, then press the SEL/RESET button. The screen goes back to CUSTOMIZE MENU.

Controls Near the Steering Wheel

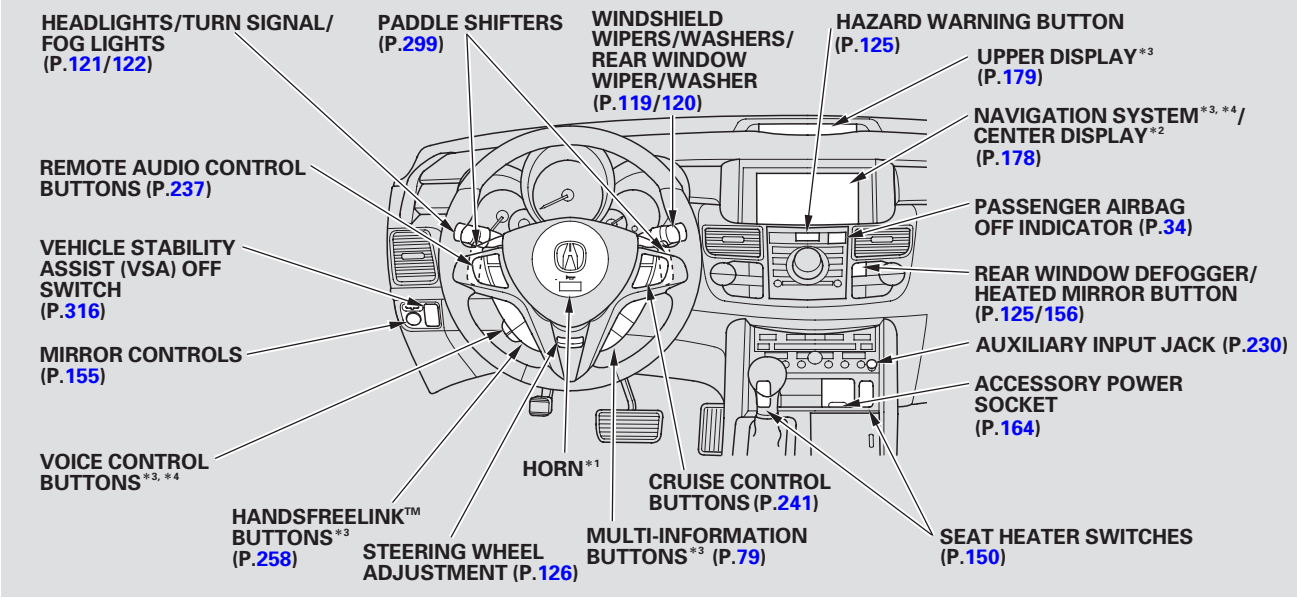

*1 : To use the horn, press the center pad of the steering wheel.
*2 : On RDX model only
*3 : On RDX with Technology Package model only
*4 : Refer to the navigation system manual.

Windshield Wipers and Washers

Windshield Wiper

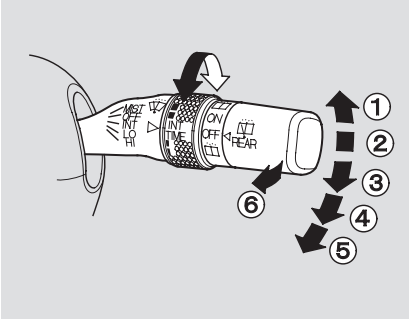

1. MIST
2. OFF
3. INT — Intermittent
4. LO — Low speed
5. HI — High speed
6. Windshield washers

Push the right lever up or down to select a position.

MIST — The wipers run at high speed until you release the lever.

OFF — The wipers are not activated.

INT — The length of the wiper interval is varied automatically according to the vehicle's speed. Vary the delay by turning the INT TIME ring. If you turn it to the shortest delay, the wiper speed will increase to low speed operation when the vehicle speed exceeds 12 mph (20 km/h).

While the vehicle is stopped and in gear, the wipers sweep the windshield whenever you remove your foot from the brake pedal.

LO — The wipers run at low speed.

HI — The wipers run at high speed.

Windshield Washers — Pull the wiper control lever toward you, and hold it. The washers spray until you release the lever. The wipers run at low speed, then complete one more sweep after you release the lever.

Windshield Wipers and Washers

Rear Window Wiper and Washer

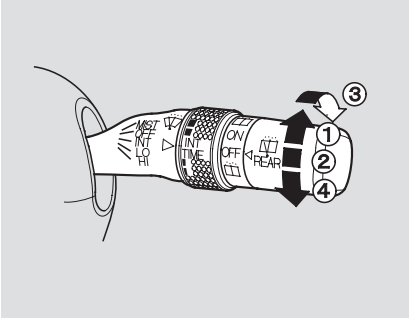

1. ON
2. OFF
3. Rear Window Wiper and Washer
4. Rear Window Washer

ON — Rotate the switch clockwise to turn the rear window wiper ON. The wiper operates intermittently.

OFF — The wiper is not activated. When you turn the wiper switch to OFF while the rear window wiper is in action, it will return to its parked position.

When you shift the transmission to the reverse position with the front windshield wipers activated, the rear window wiper operates automatically. When the wiper control lever position is INT, the rear wiper operates intermittently. When it is LO or HI, the rear wiper operates continuously.

Rear Window Wiper and Washer — Hold past ON to turn the rear window wiper on and to spray the rear window washer. The rear window wiper makes one more sweep after you release the switch.

Rear Window Washer — Rotate the switch counterclockwise from OFF to spray the window washer without activating the wiper. The washer will operate until you release the switch.

The rear window washer uses the same fluid reservoir as the windshield washer.

Turn Signal and Headlights

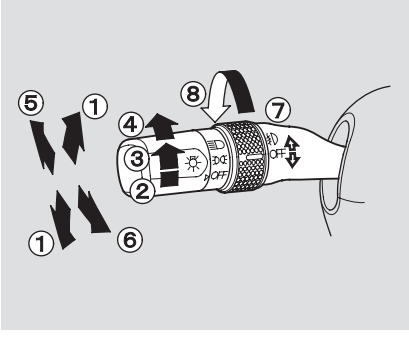

1. Turn signal
2. Off
3. Parking and interior lights
4. Headlights
5. High beams
6. Flash high beams
7. Fog lights off
8. Fog lights on

Turn Signal — Push down on the lever to signal a left turn and up to signal a right turn. To signal a lane change, push lightly on the lever, and hold it. The lever will return to center when you release it or complete a turn.

Headlights — Turning the switch to the " " position turns on the parking lights, taillights, instrument panel lights, side-marker lights, and rear license plate lights.

Turning the switch to the " " position turns on the headlights.

When the light switch is in the " " or " " position, the lights on indicator comes on as a reminder. This indicator stays on if you leave the light switch on and turn the ignition switch to the ACCESSORY (I) or the LOCK (0) position.

If you leave the lights on with the key removed from the ignition switch, you will hear a reminder beeper when you open the driver's door.

CONTINUED

Headlights

High Beams — Push the lever forward and the high beam indicator will come on (see page 70). Pull it back to return to low beams.

To flash the high beams, pull the lever back lightly, then release it. The high beams will stay on as long as you hold the lever back.

Fog Lights
Turn the fog lights on and off by turning the switch next to the headlight switch.

You can use the fog lights only when the headlights are on low beam. They will go off when the headlights are turned off.

Automatic Lighting Off Feature
This feature turns off the headlights, parking lights, taillights, side marker lights, license plate lights, and instrument panel lights within 15 seconds of removing the key from the ignition switch and closing the driver's door.

This feature activates if you leave the headlight switch in the ≣DOE or ≣D position, remove the key, then open and close the driver's door.

If you remove the key from the ignition switch with the headlight switch on, but do not open the door, the lights will turn off after 10 minutes.

Headlights

The lights will turn on again when you unlock or open the driver's door. If you unlock the door, but do not open it within 15 seconds, the lights will go off. With the driver's door open, you will hear a lights on reminder beeper.

On RDX with Technology Package model
You can change the "HEADLIGHT AUTO OFF TIMER" setting on the multi-information display (see page 105).

Daytime Running Lights
With the headlight switch off or in the position, the high beam headlights and the high beam indicator come on with reduced brightness when you turn the ignition switch to the ON (II) position and release the parking brake. They remain on until you turn the ignition switch off, even if you set the parking brake.

The headlights revert to normal operation when you turn them on with the switch.

Instrument Panel Brightness

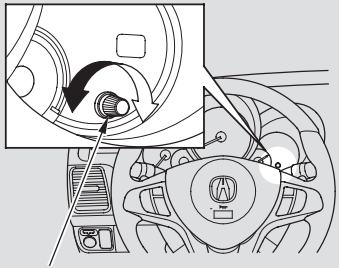

INSTRUMENT PANEL BRIGHTNESS CONTROL KNOB

The knob on the instrument panel controls the brightness of the instrument panel lights. Turn the knob to adjust the brightness.
Separate adjustments can be made when the headlights are on and off.

You will hear a beep when maximum or minimum brightness is reached. You will also hear a beep when the maximum level is canceled by turning the knob a click to the left.

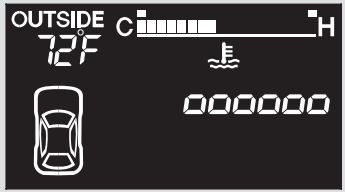

U.S. model is shown

To reduce glare at night, the instrument panel illumination dims when you turn the light switch to the ≣DOC or ≣D position.

On RDX model
The level of brightness is shown in the information display while you adjust it. It goes out 5 seconds after you finish adjusting.

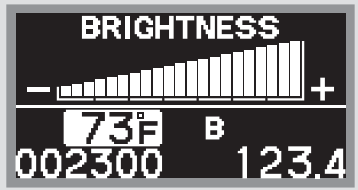

U.S. model is shown

On RDX with Technology Package model
The level of brightness is shown on the multi-information display while you adjust it. It goes out 5 seconds after you finish adjusting.

Rear Window Defogger, Hazard Warning Button

Rear Window Defogger

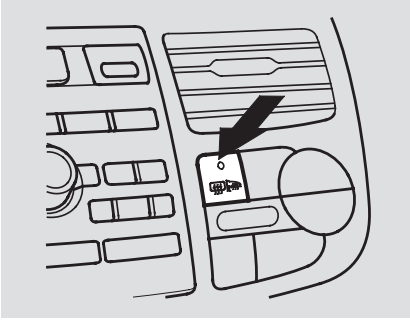

The rear window defogger clears fog, frost, and thin ice from the window. Push the defogger button to turn it on and off. Pushing this button also turns the mirror heaters on and off. The indicator in the button comes on to show the defogger is on.

If you do not turn it off, the defogger will automatically shut itself off after a certain period depending on the ambient temperature. It also shuts off when you turn off the ignition switch. You have to turn it on again when you restart the vehicle.

In cold weather, the defogger will not automatically shut itself off. You must manually shut off the rear window defogger when it is no longer needed.

Make sure the rear window is clear and you have good visibility before starting to drive.

The defogger wires on the inside of the rear window can be accidentally damaged. When cleaning the glass, always wipe side-to-side.

Hazard Warning Button

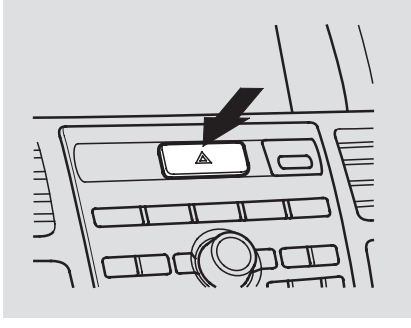

Push the button between the center vents to turn on the hazard warning lights (four-way flashers). This causes all outside turn signals and both indicators in the instrument panel to flash. Use the hazard warning lights if you need to park in a dangerous area near heavy traffic, or if your vehicle is disabled.

Steering Wheel Adjustment, Keys and Locks

Steering Wheel Adjustment

Make any steering wheel adjustment before you start driving.

⚠ WARNING

Adjusting the steering wheel position while driving may cause you to lose control of the vehicle and be seriously injured in a crash.

Adjust the steering wheel only when the vehicle is stopped.

1. Push the lever under the steering column all the way down.
2. Move the steering wheel so it points toward your chest, not toward your face. Make sure you can see the instrument panel gauges and indicators.

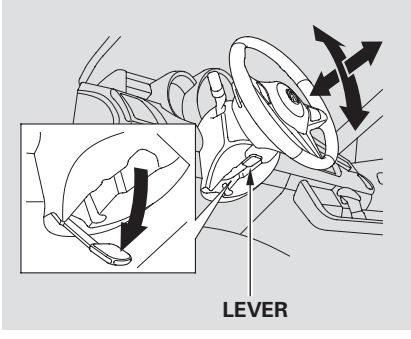

3. Push the lever up to lock the steering wheel in position.
4. Make sure you have securely locked the steering wheel in place by trying to move it up, down, in, and out.

Keys

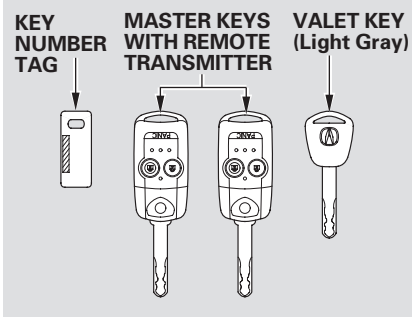

The master key fits all the locks on your vehicle. The valet key works only in the ignition and the door locks. You can keep the glove box and console compartment locked when you leave your vehicle and the valet key at a parking facility.

Keys and Locks

You should have received a key number tag with your keys. You will need this key number if you ever have to get a lost key replaced. Use only Acura-approved key blanks.

These keys contain electronic circuits that are activated by the immobilizer system. They will not work to start the engine if the circuits are damaged.

- Protect the keys from direct sunlight, high temperature, and high humidity.
- Do not drop the keys or set heavy objects on them.
- Keep the keys away from liquids. If they get wet, dry them immediately with a soft cloth.

The valet key does not contain a battery. Do not try to take it apart.

Retractable Master Key

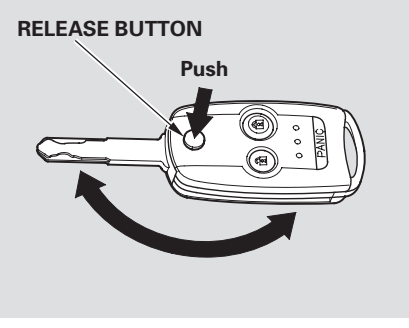

The master key can be retracted into the remote transmitter. When you use the key, push the release button to pop the key out of the remote transmitter. To retract the key, push the release button and at the same time push the key into the remote transmitter until it is securely latched.

Always use the fully-extended key when you insert it to the ignition switch. If the key does not fully extend, the immobilizer system may not operate properly and prevents from starting the engine.

Retracting or extending the key may hurt your finger. Make sure your fingers do not touch the pivot of the key when retracting or extending the key.

Remote Transmitter

Your vehicle has two transmitters; see page 140 for an explanation of the operation.

Immobilizer System

The immobilizer system protects your vehicle from theft. If an improperly-coded key (or other device) is used, the engine will not start.

When you turn the ignition switch to the ON (II) position, the immobilizer system indicator should come on briefly, then go off. If the indicator starts to blink, it means the system does not recognize the coding of the key. Turn the ignition switch to the LOCK (0) position, remove the key, reinsert it, and turn the ignition switch to the ON (II) position again.

The system may not recognize your key's coding if another immobilizer key or other metal object (i.e. key fob) is near the ignition switch when you insert the key.

If the system repeatedly does not recognize the coding of your key, contact your dealer.

Do not attempt to alter this system or add other devices to it. Electrical problems could result that may make your vehicle undrivable.

If you have lost your key and cannot start the engine, contact your dealer.

As required by the FCC:
This device complies with Part 15 of the FCC rules. Operation is subject to the following two conditions: (1) This device may not cause harmful interference, and (2) this device must accept any interference received, including interference that may cause undesired operation.

Changes or modifications not expressly approved by the party responsible for compliance could void the user's authority to operate the equipment.

This device complies with Industry Canada Standard RSS-210.
Operation is subject to the following two conditions: (1) this device may not cause interference, and (2) this device must accept any interference that may cause undesired operation of the device.

Ignition Switch

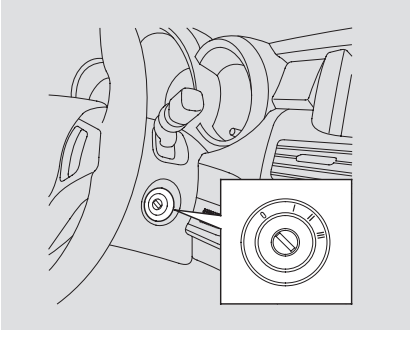

The ignition switch has four positions: LOCK (0), ACCESSORY (I), ON (II), and START (III).

LOCK (0) — You can insert or remove the key only in this position. To turn the key, the shift lever must be in Park, and you must push the key in slightly.

If the front wheels are turned, the anti-theft lock may make it difficult to turn the key. Firmly turn the steering wheel to the left or right as you turn the key.

ACCESSORY (I) — You can operate the audio system and the accessory power sockets in this position.

ON (II) — This is the normal key position when driving. Several of the indicators on the instrument panel come on as a test when you turn the ignition switch from the ACCESSORY (I) to the ON (II) position.

START (III) — Use this position only to start the engine. The switch returns to the ON (II) position when you let go of the key.

CONTINUED

Ignition Switch

You will hear a reminder beeper if you leave the key in the LOCK (0) or the ACCESSORY (I) position and open the driver's door. Remove the key to turn off the beeper.

On RDX with Technology Package model
You will also see a "REMOVE KEY" message on the multi-information display (see page 85).

The shift lever must be in Park before you can remove the key from the ignition switch.

Door Locks

Power Door Locks

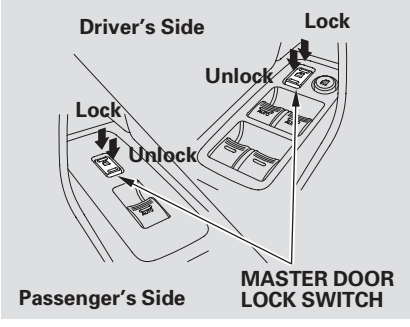

Each front door has a master door lock switch. Either switch locks and unlocks all doors and the tailgate. Push the top of the switch to lock all doors and the tailgate; push the bottom to unlock them.

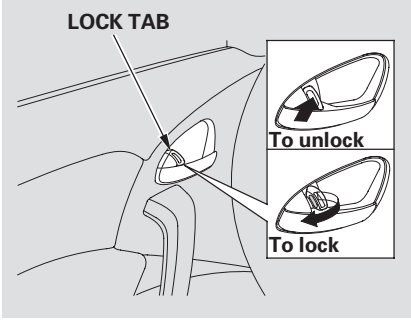

Each door has a lock tab next to the inside door handle. When you pull backward on the lock tab on the driver's door, all the doors and the tailgate lock. Push forward on the lock tab on the driver's door unlocks only that door. The lock tab on the each passenger's door locks and unlocks only that door.

When the door is unlocked, you can see the red indicator on the lock tab next to the inside door handle.

All doors and the tailgate can be locked from the outside by using the key in the driver's door lock. To unlock only the driver's door, insert the key, turn the key, and release it. The remaining doors and the tailgate unlock when you turn the key a second time within a few seconds.

On RDX with Technology Package model
You can change the "DOOR LOCK MODE" setting in the multi-information display (see page 110).

CONTINUED

Door Locks

When the vehicle speed reaches about 9 mph (about 15 km/h) or more, all the doors lock automatically.
To change the “AUTO DOOR LOCK” setting, see page 133 .

On RDX with Technology Package model
You can change the “AUTO DOOR LOCK ” setting in the multi-information display (see page 108).

When you shift to P after driving, the driver’s door unlocks.
To change the “AUTO DOOR UNLOCK” setting, see page 135 .

On RDX with Technology Package model
You can change the “AUTO DOOR UNLOCK” setting in the multi-information display (see page 116).

To lock any passenger’s door when getting out of the vehicle, pull backward on the lock tab and close the door. To lock the driver’s door, remove the key from the ignition switch and pull backward on the lock tab. Then close the door.

Lockout Prevention
With the driver’s door open and the key in the ignition, both master door lock switches are disabled. They are not disabled if the driver’s door is closed. Pushing the switch down on the open front passenger’s door will lock all doors and the tailgate.

Childproof Door Locks

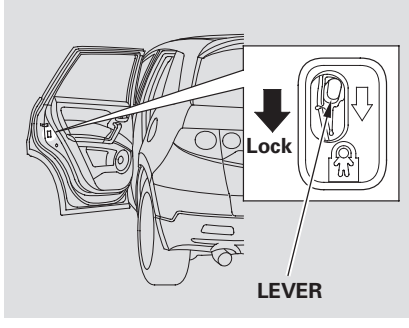

The childproof door locks are designed to prevent children seated in the rear from accidentally opening the rear doors. Each rear door has a lock lever near the edge. With the lever in the LOCK position (lever is down), the door cannot be opened from the inside regardless of the position of the lock tab. To open the door, push the lock tab forward and use the outside door handle.

Door Locks

Auto Door Locking/Unlocking

On RDX model

Your vehicle has customizable settings for the doors and the tailgate to automatically lock and unlock. Make all settings before you start driving.

With the auto door locking and unlocking, the tailgate also locks and unlocks.

On RDX with Technology Package model

To change the "AUTO DOOR LOCK" setting, see page 108.

To change the "AUTO DOOR UNLOCK" setting, see page 116.

Auto Door Locking

On RDX model

The auto door locking feature has three possible settings:

- The doors and the tailgate lock when the vehicle speed reaches 9 mph (15 km/h).
  This is the default setting.
- The auto door locking is deactivated all the time.
- The doors and the tailgate lock whenever you move the shift lever out of the Park position.

To activate an auto door lock mode:

Locks all doors and the tailgate when the vehicle's speed reaches about 9 mph (15 km/h).

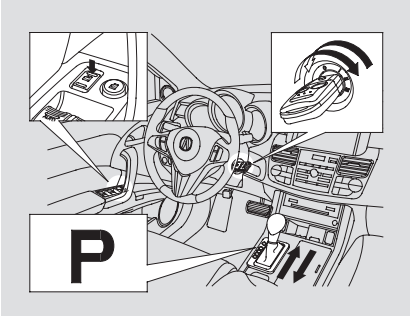

1. Make sure the shift lever is in Park (P), and close the driver's door.
2. Turn the ignition switch to the ON (II) position.
3. Set the parking brake.

CONTINUED

Door Locks

4. Push and hold the brake pedal, then move the shift lever out of Park (P).

5. Push and hold the front of the master door lock switch on the driver's door. You will hear a clicking sound, and after about 5 seconds, you will hear another clicking sound.

6. Release the switch, move the shift lever to Park (P), and turn the ignition switch to the ACCESSORY (I) position within 5 seconds.

To turn the auto door lock modes off:

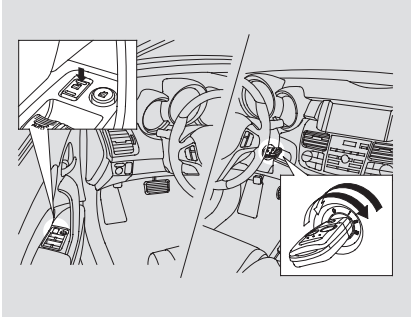

1. Make sure the shift lever is in Park (P), and open the driver's door.

2. Turn the ignition switch to the ON (II) position.

3. Set the parking brake.

4. Push and hold the front of the master door lock switch on the driver's door. You will hear a clicking sound after about 5 seconds.

5. Release the switch, and turn the ignition switch to the ACCESSORY (I) position within 5 seconds.

Door Locks

To activate an auto door lock mode:
Locks all doors and the tailgate when the shift lever is moved out of Park (P).

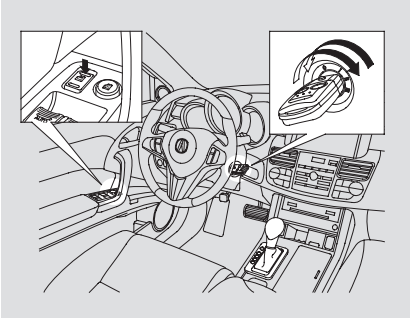

1. Make sure the shift lever is in Park (P), and close the driver's door.

2. Turn the ignition switch to the ON (II) position.

3. Push and hold the front of the master door lock switch on the driver's door. You will hear a clicking sound, and after about 5 seconds, you will hear another clicking sound.

4. Release the switch, and turn the ignition switch to the ACCESSORY (I) position within 5 seconds.

Auto Door Unlocking

On RDX model

The auto door unlocking feature has five possible settings:

- The driver's door unlocks whenever you turn the ignition switch to the ACCESSORY (I) position.

- All doors and the tailgate unlock whenever you turn the ignition switch to the ACCESSORY (I) position.

- The auto door unlocking is deactivated all the time.

- The driver's door unlocks when you move the shift lever to the Park position.
  This is the default setting.

- All doors and the tailgate unlock when you move the shift lever to the Park position.

CONTINUED

Door Locks

To activate an auto door unlock mode:
Unlocks driver's door or all doors and the tailgate when the ignition switch is out of the ON (II) position.

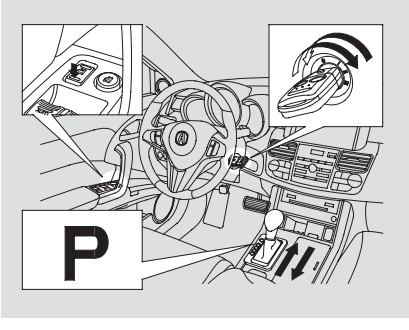

1. Make sure the shift lever is in Park (P), and close the driver's door.

2. Turn the ignition switch to the ON (II) position.

3. Set the parking brake.

4. Push and hold the brake pedal, then move the shift lever out of Park (P).

5. Push and hold the rear of the master door lock switch on the driver's door. You will hear a clicking sound. Continue to hold down the switch:

   – Until you hear one click (after about 5 seconds) to activate the driver's door unlock feature.

   – Or, until you hear a second click (after about 10 seconds) to activate the all doors and tailgate unlock feature.

6. Release the switch, move the shift lever to Park (P), and turn the ignition switch to the ACCESSORY (I) position within 5 seconds.

To turn the auto door unlock modes off:

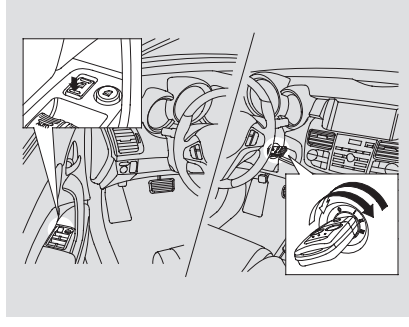

1. Make sure the shift lever is in Park (P), and open the driver's door.

2. Turn the ignition switch to the ON (II) position.

3. Set the parking brake.

Door Locks

4. Push and hold the rear of the master door lock switch on the driver's door. You will hear a clicking sound, and after about 5 seconds, you will hear another clicking sound.

5. Release the switch, and turn the ignition switch to the ACCESSORY (I) position within 5 seconds.

To activate an auto door unlock mode:
Unlocks driver's door or all doors and the tailgate when the shift lever is moved to Park (P).

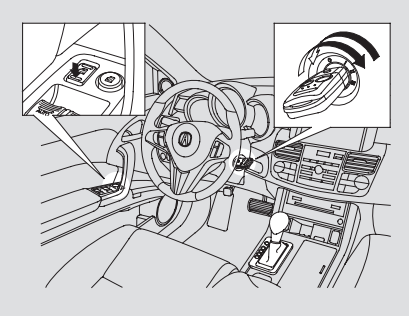

1. Make sure the shift lever is in Park (P), and close the driver's door.

2. Turn the ignition switch to the ON (II) position.

3. Push and hold the rear of the master door lock switch on the driver's door. You will hear a clicking sound. Continue to hold down the switch:

   – Until you hear one click (after about 5 seconds) to activate the driver's door unlock feature.

   – Or, until you hear a second click (after about 10 seconds) to activate the all doors and tailgate unlock feature.

4. Release the switch, and turn the ignition switch to the ACCESSORY (I) position within 5 seconds.

Tailgate

The tailgate will lock or unlock when you lock or unlock the driver's door by using the key, the lock tab on the driver's door, the master door lock switch, or the remote transmitter.

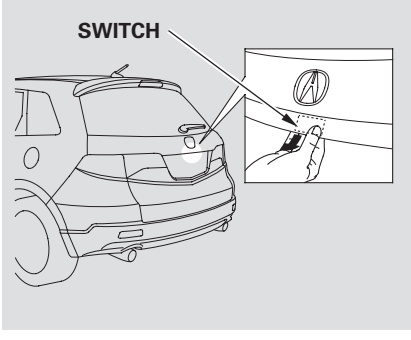

To open the tailgate, press and hold the switch, then lift up.

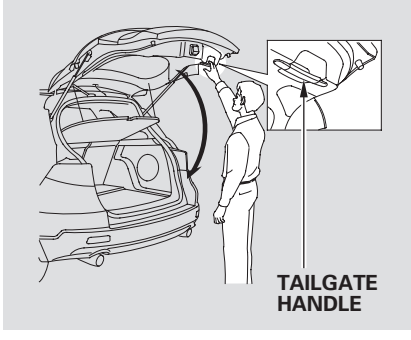

To close the tailgate, hold the tailgate handle, lower the tailgate, then press down on the back edge.

Keep the tailgate closed at all times while driving to avoid damaging the tailgate and to prevent exhaust gas from getting into the interior. See **Carbon Monoxide Hazard** on page 58.

Tailgate

Unlocking the Tailgate

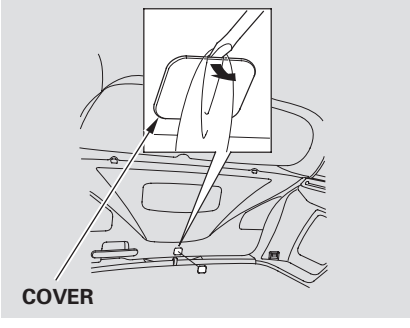

If the power door lock system cannot unlock the tailgate, unlock it manually.

Use a small flat-tip screwdriver to remove the cover on the back of the tailgate.

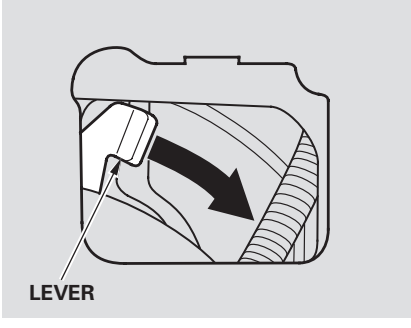

Push and hold the release lever to the right as shown, then push the tailgate to open it.

If you need to unlock the tailgate manually, it means there is a problem with the tailgate. Have the vehicle checked by your dealer.

Remote Transmitter

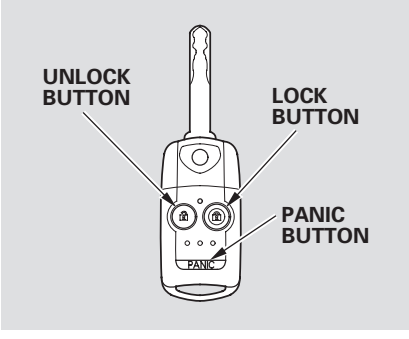

LOCK — Press this button once to lock all doors and the tailgate. Some exterior lights will flash once. When you push LOCK twice within 5 seconds, you will hear a beep to verify that the security system has set. You cannot lock the doors and the tailgate if any door or the tailgate is not fully closed or the key is in the ignition switch.

UNLOCK — Press this button once to unlock the driver's door. Push it twice to unlock the remaining doors and the tailgate. Some exterior lights will flash twice each time you press the button.

On RDX with Technology Package model
You can change the "KEYLESS LOCK ACKNOWLEDGMENT" setting in the multi-information display (see page 112).

You can change the "DOOR LOCK MODE" setting in the multi-information display (see page 110).

When you press the UNLOCK button, the ceiling lights (if the front and rear ceiling light switches are in the door activated position) will come on. If you do not open any door, the lights stay on for about 30 seconds, then fade out. If you relock the doors with the remote transmitter before 30 seconds have elapsed, the lights go off immediately.

On RDX with Technology Package model
You can change the "INTERIOR LIGHT DIMMING TIME" setting in the multi-information display (see page 103).

Remote Transmitter

If you unlock the doors and the tailgate with the remote transmitter, but do not open any of the doors or the tailgate within 30 seconds, the doors and the tailgate automatically relock and the security system sets.

On RDX with Technology Package model
You can change the "SECURITY RELOCK TIMER" setting in the multi-information display (see page 114).

PANIC — Press this button for about 1 second to attract attention; the horn will sound, and the exterior lights will flash for about 30 seconds. To cancel panic mode, press any button on the remote transmitter, or turn the ignition switch to the ON (II) position.

Remote Transmitter Care

- Avoid dropping or throwing the transmitter.
- Protect the transmitter from extreme temperature.
- Do not immerse the transmitter in any liquid.
- If you lose a transmitter, the replacement needs to be reprogrammed by your dealer.

Remote Transmitter

Replacing the Transmitter Battery

If it takes several pushes on the button to lock or unlock the doors and the tailgate, replace the battery as soon as possible.
Battery type: CR1616

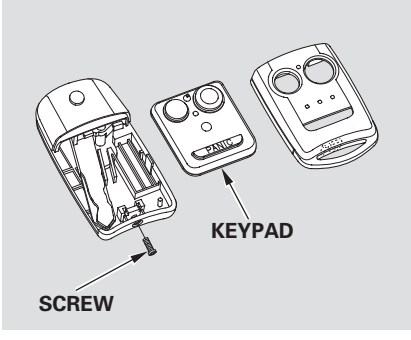

To replace the battery:

1. Remove the screw at the base of the transmitter with a small Phillips-head screwdriver.

2. Separate the keypad from the transmitter by pushing any button from outside.

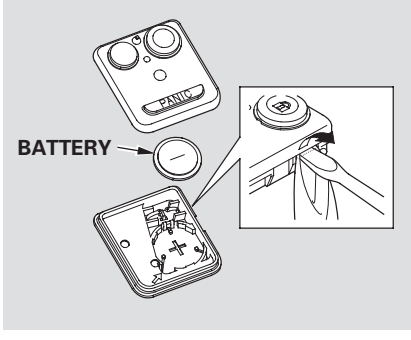

3. Place a cloth on the edge of the keypad, and remove the upper half by carefully prying on the edge with a small flat-tip screwdriver.

Remote Transmitter

4. Remove the old battery and note the polarity. Make sure the polarity of the new battery is the same (− side facing up), then insert it in the keypad.

   An improperly disposed battery can hurt the environment. Always confirm local regulations for battery disposal.

5. Snap the two halves of the keypad, then install the parts in reverse order.

As required by the FCC:
This device complies with Part 15 of the FCC rules. Operation is subject to the following two conditions: (1) This device may not cause harmful interference, and (2) this device must accept any interference received, including interference that may cause undesired operation.

Changes or modifications not expressly approved by the party responsible for compliance could void the user's authority to operate the equipment.

This device complies with Industry Canada Standard RSS-210.
Operation is subject to the following two conditions: (1) this device may not cause interference, and (2) this device must accept any interference that may cause undesired operation of the device.

Seats

Driver's Seat Adjustments

See pages 13 — 14 for important safety information and warnings about how to properly position the seats and seat-backs.

The controls for the power adjustable driver's seat are on the outside edge of the seat bottom. You can adjust the seat with the ignition switch in any position. Make all seat adjustments before you start driving.

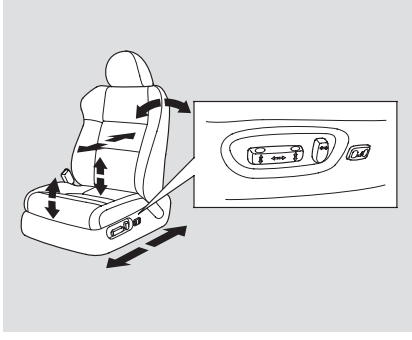

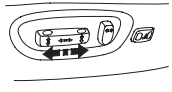

Moves the seat forward and backward.

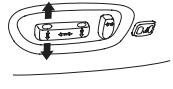

Moves the front of the seat up or down.

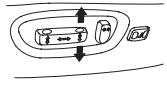

Raises or lowers the seat.

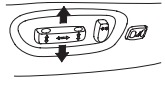

Moves the whole seat up and forward, or down and backward. The front of the seat also tilts up or down at the same time.

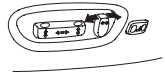

Adjusts the seat-back angle forward or backward.

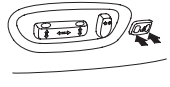

Increases or decreases the lumbar support.

Front Passenger's Seat Adjustments

See pages 13 – 14 for important safety information and warnings about how to properly position the seats and seat-backs.

Make all seat adjustments before you start driving.

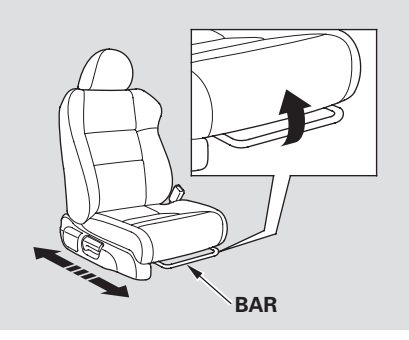

To adjust the seat forward or backward, pull up on the bar under the seat cushion's front edge. Move the seat to the desired position, and release the bar. Try to move the seat to make sure it is locked in position.

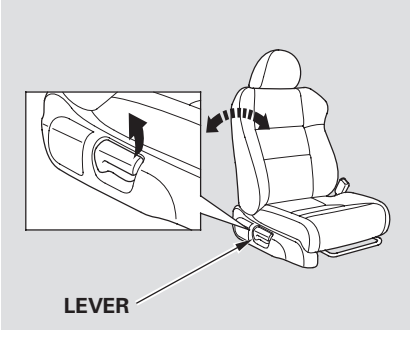

To change the seat-back angle, pull up on the lever on the outside of the seat bottom.

Once your seat is adjusted correctly, rock it back and forth to make sure the seat is locked in position.

Seats

Head Restraints

See page 15 for important safety information and a warning about how to properly position the head restraints.

Your vehicle is equipped with head restraints in all seating positions to help protect you and your passengers from whiplash and other injuries.

They are most effective when you adjust them so the back of the occupant's head rests against the center of the restraint.

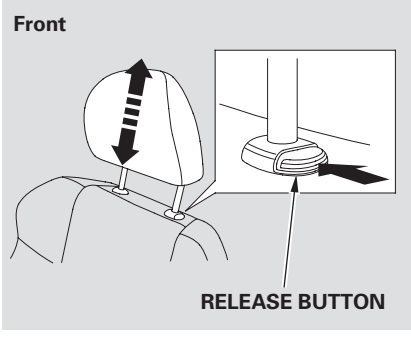

The front and rear head restraints adjust for height. You need both hands to adjust the restraint. Do not attempt to adjust it while driving. To raise it, pull upward. To lower the restraint, push the release button and push the restraint down.

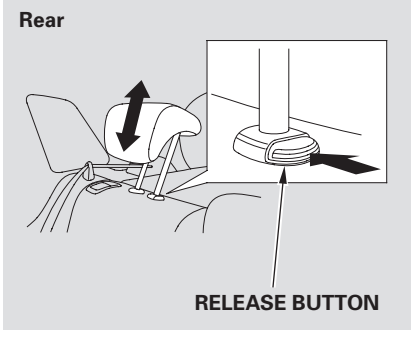

To remove a head restraint for cleaning or repair, pull it up as far as it will go. Push the release button, then pull the restraint out of the seat-back.

Make sure the removed head restraints are securely stored.

Seats

Armrests

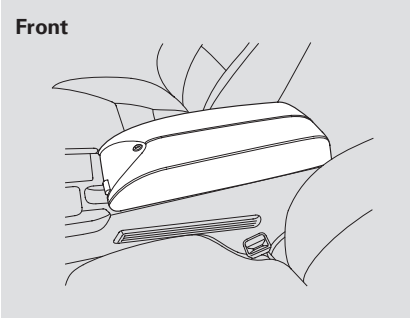

The lid of the console compartment can be used as an armrest.

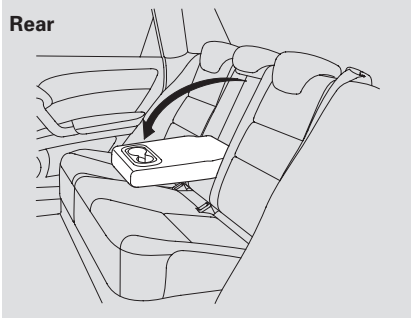

The rear seat armrest is in the center of the rear seat. Pivot it down to use it.

Folding the Rear Seats Down

The rear seat-backs can be folded down to give more cargo room. Each side folds down separately. So you can still carry a passenger in the rear seat.

Remove any items from the seat before folding down the seat-back.

Make sure there are no items on the floor before folding down the seats.

CONTINUED

Seats

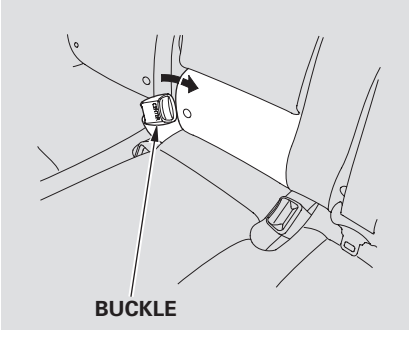

1. Move the front seats as far forward as possible. Make sure the front seat-backs are in the upright positions.

2. Store the center seat belt buckle into the pocket in the rear seat-back.

3. Lower the head restraints to their lowest positions.

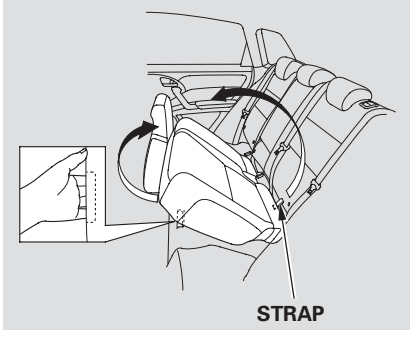

4. Push the armrest back in place.

5. Lift the front edge of the rear seat cushion, then pull up on the:
   - Strap at the rear of the cushion (driver's side)
   - Rear of the seat cushion (passenger's side)

   then fold the cushion forward.

6. Pull up the release lever on the outside of the seat-back. Fold the seat-back forward.

7. Move the front seats backward to the desired position. Make sure the front passenger's seat is locked in place.

Seats

Do not put any heavy items on the seat-back when it is folded down.

Make sure all items in the cargo area are secured. Loose items can fly forward and cause injury if you have to brake hard (See **Carrying Cargo** on page 287).

Make sure that the folded down rear seat does not interfere with the front passenger's seat-back. This will cause the front passenger's weight sensors and the front passenger's seat belt reminder indicator to work improperly (see pages 21 and 34). Also check the passenger airbag off indicator to assure proper operation of the passenger's front airbag.

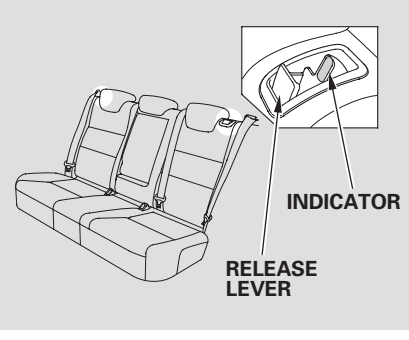

To return the seat-back to the upright position, tug on the seat-back to make sure it is latched. If the seat-back is not latched fully, the seat belt will not work properly and you will see the red indicator behind the release lever as shown.

To return the seat cushion to its original position, lift up the seat cushion, then place the rear of the seat cushion at the base of the seat-back. Use the seat buckles as guides. Lower the front of the seat cushion until it locks into place.

Make sure the seat-back and seat cushion are locked securely and all rear shoulder belts are positioned in front of the rear seat-backs.

Seat Heaters

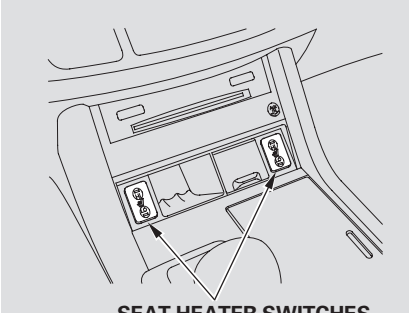

SEAT HEATER SWITCHES

Both front seats have seat heaters. The passenger seat is only heated in the seat bottom because of the side airbag cutoff system. The ignition switch must be in the ON (II) position to use seat heaters. Push the top of the switch, HI, to rapidly heat up the seat. After the seat reaches a comfortable temperature, select LO by pushing the bottom of the switch. This will keep the seat warm.

In HI, the heater turns off when the seat gets warm, and turns back on after the seat's temperature drops.

In LO, the heater runs continuously. It does not cycle with temperature changes.

Follow these precautions whenever you use the seat heaters:

- Use the HI setting only to heat the seats quickly, because it draws large amounts of current from the battery.
- If the engine is left idling for an extended period, do not use the seat heaters, even on the LO setting. It can weaken the battery, causing hard starting.

Power Windows

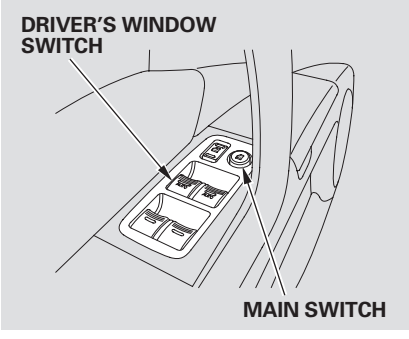

Turn the ignition switch to the ON (II) position to raise or lower any window. To open the window, push the switch down and hold it. Release the switch when you want to stop the window. To close the window, pull back on the switch and hold it.

The windows will operate for up to 10 minutes after you turn off the ignition switch. Opening either front door cancels this function.

⚠ WARNING

Closing a power window on someone's hands or fingers can cause serious injury.

Make sure your passengers are away from the windows before closing them.

When you push the MAIN switch in, the switch is off, and the passenger windows cannot be raised or lowered. To cancel this feature, push on the switch again to get it to pop out. Keep the MAIN switch off when you have children in the vehicle so they do not injure themselves by operating the windows unintentionally.

CONTINUED

Power Windows

AUTO — To open or close either front window fully, push or pull the window switch firmly down or up to the second detent, and release it. The window will automatically go up or down all the way. To stop the window, pull or push the window switch briefly.

To open or close either front window partially, push down or pull back on the window switch lightly to the first detent and hold it. The window will stop when you release the switch.

AUTO REVERSE — If either front window senses any obstacle while it is closing automatically, it will reverse direction and then stop. To close the window, remove the obstacle, then use the window switch again.

Auto reverse stops sensing when the window is almost closed. You should always check that all passengers and objects are away from the window before closing it.

Moonroof

Turn the ignition switch to the ON (II) position before operating the moonroof switch on the ceiling console.

To open the moonroof fully, pull back the moonroof switch firmly. The moonroof opens all the way. To stop the moonroof from opening fully, briefly move the switch in either direction.

To tilt the moonroof, push the center of the moonroof switch straight up. To stop the moonroof from tilting fully open, push the moonroof switch forward.

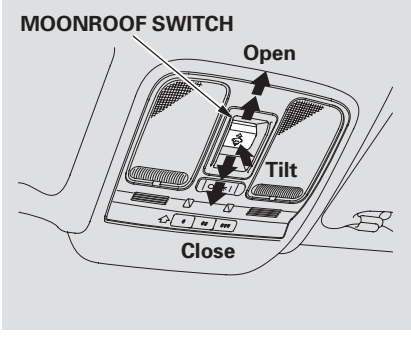

To open or close the moonroof partially, pull or push the moonroof switch lightly to the first detent, and hold it. The moonroof will stop when you release the switch.

To close the moonroof fully, push the moonroof switch forward to the second detent, then release it. The moonroof closes all the way. To stop the moonroof from closing all the way, briefly move the switch in either direction.

CONTINUED

Moonroof

⚠ WARNING

Opening or closing the moonroof on someone's hands or fingers can cause serious injury.

Make sure all hands and fingers are clear of the moonroof before opening or closing it.

The moonroof has a key-off delay. You can open and close the moonroof for up to 10 minutes after you turn off the ignition switch. The key-off delay cancels as soon as you open either front door. You must then turn the ignition switch to the ON (II) position for the moonroof to operate.

NOTICE

If you try to open the moonroof in below-freezing temperatures, or when it is covered with snow or ice, you can damage the moonroof panel or motor.

Auto Reverse

If the moonroof runs into any obstacle while it is closing automatically, it will reverse direction, and then stop. To close the moonroof, remove the obstacle, then use the moonroof switch again.

Auto reverse stops sensing when the moonroof is almost closed. You should always check that all passengers and objects are away from the moonroof before closing it.

Mirrors

Keep the inside and outside mirrors clean and adjusted for best visibility. Be sure to adjust the mirrors before you start driving.

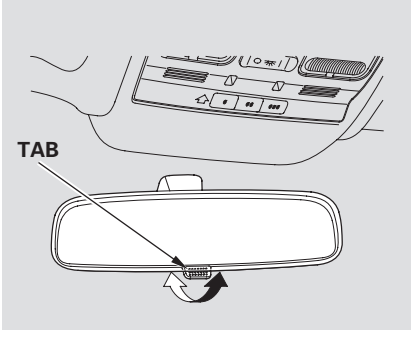

The inside mirror has day and night positions. The night position reduces glare from headlights behind you. Flip the tab on the bottom edge of the mirror to select the day or night position.

Adjusting the Power Mirrors

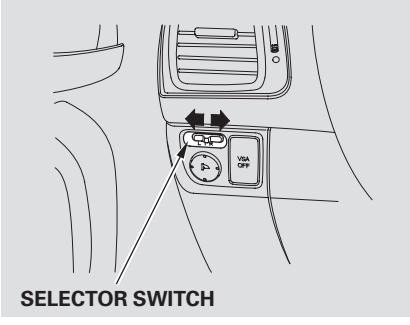

1. Turn the ignition switch to the ON (II) position.
2. Move the selector switch to L (driver's side) or R (passenger's side).

CONTINUED

Mirrors

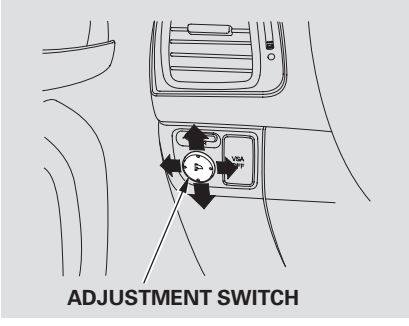

ADJUSTMENT SWITCH

3. Push the appropriate edge of the adjustment switch to move the mirror right, left, up, or down.

4. When you finish, move the selector switch to the center (off) position. This turns the adjustment switch off to keep your setting.

Reverse Mirror Tilt

With the selector switch in the R (right) position, the passenger's side mirror will pivot downward slightly when you shift the transmission into reverse. This gives you a better view of the side of the vehicle while parallel parking. The mirror returns to its original position when you take the transmission out of reverse. Turn this feature off by leaving the selector switch in the left or center position.

Heated Mirrors

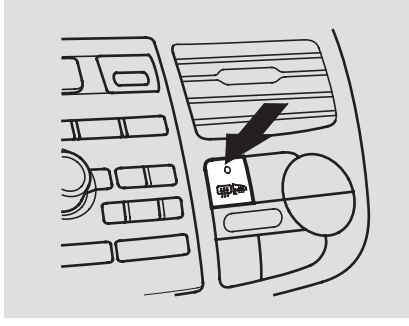

The outside mirrors are heated to remove fog and frost. With the ignition switch in the ON (II) position, turn on the heaters by pressing the button. The indicator in the button comes on as a reminder. Press the button again to turn the heaters off. Pressing this button also turns the rear window defogger on and off.

Parking Brake

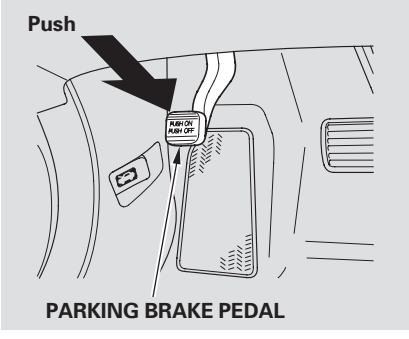

PARKING BRAKE PEDAL

To apply the parking brake, push the pedal down with your foot. To release it, push on the pedal again. The parking brake indicator on the instrument panel should go out when the parking brake is fully released (see page 68).

NOTICE

Driving the vehicle with the parking brake applied can damage the rear brakes and axles. A beeper will sound if the vehicle is driven with the parking brake on.

On RDX with Technology Package model
You will also see a “RELEASE PARKING BRAKE” message on the multi-information display (see page 84).

Interior Lights

Ceiling Lights

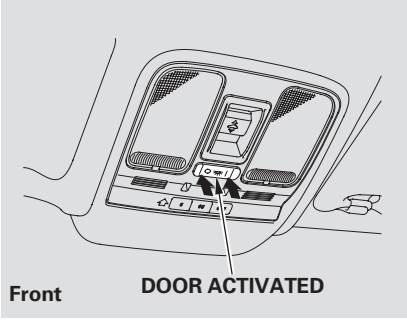

Each front and rear ceiling light has three-position switch.

Front ceiling lights:
In the “ | ” position, both front and rear ceiling lights are on all the time except when the rear ceiling light switch is in the OFF position.

In the “ ○ ” position, both front and rear ceiling lights are off all the time.

With the front ceiling lights switch in this position, the rear ceiling light does not work, and both front and rear ceiling lights do not come on when you open any door.

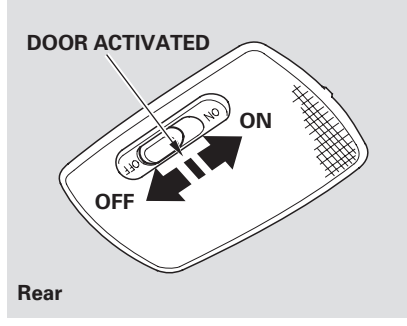

Rear ceiling light:
You can use the rear ceiling light independently. In the OFF position, the light does not come on even if the front ceiling light switch is in the “ | ” position. In the ON position, the light stays on continuously except when the front ceiling light switch is in the “ ○ ” position.

Interior Lights

In the door activated position, both front and rear ceiling lights come on when you:

- Open any door.
- Remove the key from the ignition switch.
- Unlock the doors with the key, lock tab on the driver's door, master door lock switch, or remote transmitter.

After all doors are closed tightly, the light(s) dims slightly, then fades out in about 30 seconds.

If you do not open any door after unlocking the driver's door or removing the key from the ignition switch, the light(s) fade out in about 30 seconds. If you leave any door open without the key in the ignition switch, the light(s) will go off after 3 minutes.

On RDX with Technology Package model
You can change the "INTERIOR LIGHT DIMMING TIME" setting in the multi-information display (see page 103).

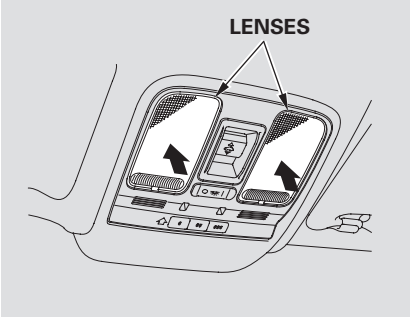

You can use the front ceiling lights whenever the lights are off.
To turn the lights on or off, push its lens.

Interior Lights

Courtesy Lights

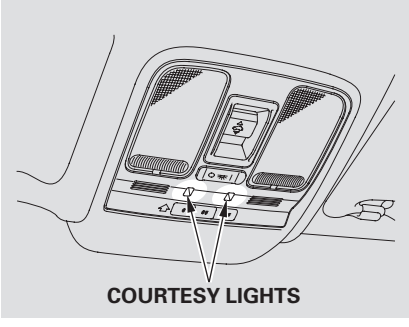

The courtesy lights in the ceiling console come on when the light switch is in the ⊃DOC or the ≣D position. You can adjust their brightness by turning the Select/Reset knob on the instrument panel.

The courtesy light in each front door comes on when the door is opened, and goes out when the door is closed.

Your vehicle also has a courtesy light in the ignition switch. This light comes on when you;

- Open any door.
- Unlock the driver's door.
- Remove the key from the ignition switch.

After all doors are closed tightly, the light fades out in about 30 seconds.

On RDX with Technology Package model
You can change the "INTERIOR LIGHT DIMMING TIME" setting in the multi-information display (see page 103).

Cargo Area Light

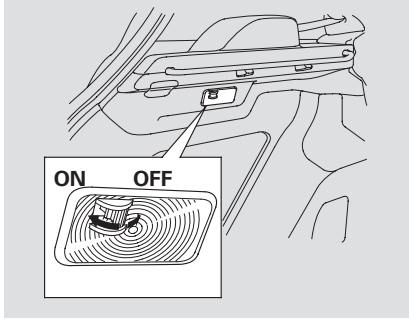

The cargo area light has a two position switch. In the OFF (right) position, the light does not come on. In the ON (left) position, the light comes on when you open the tailgate.

Interior Convenience Items

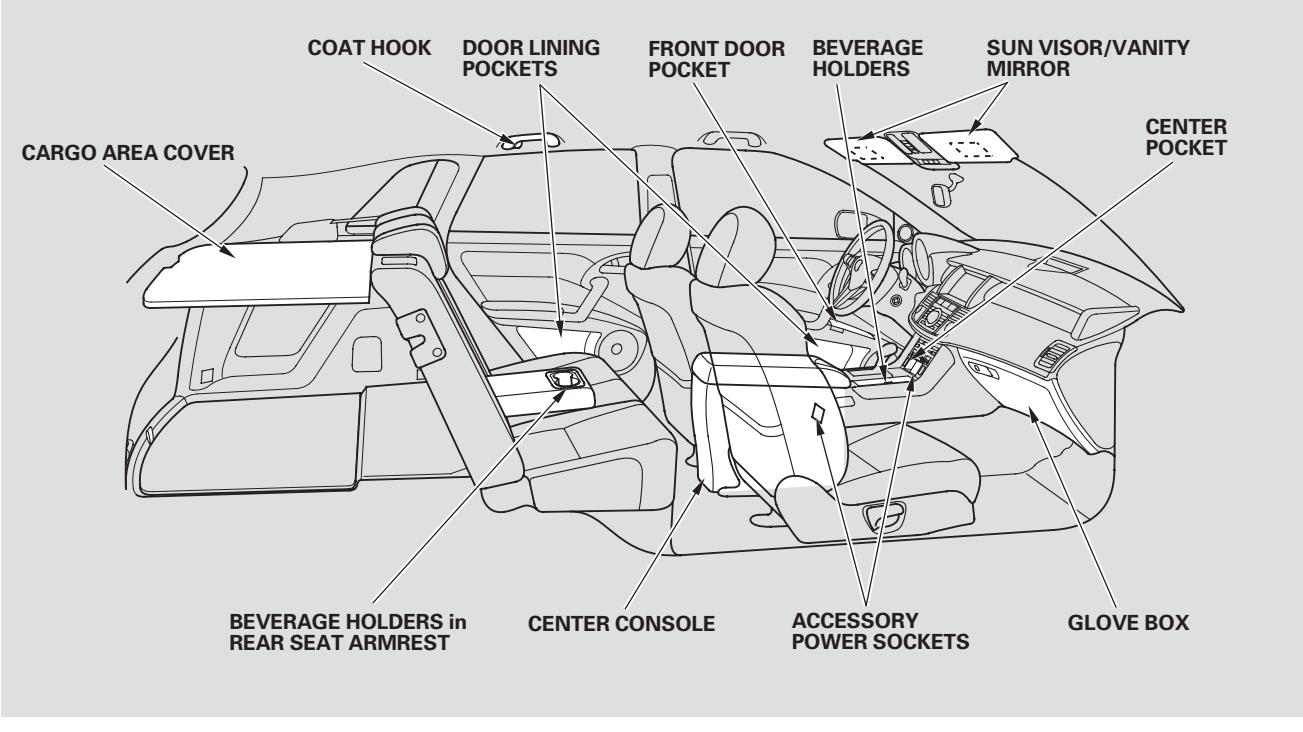

Interior Convenience Items

Glove Box

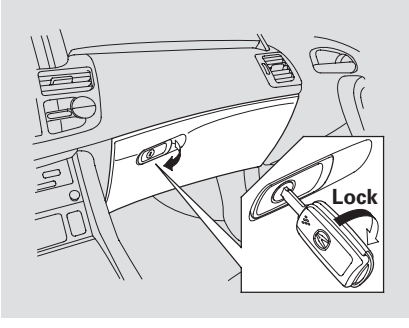

Open the glove box by pulling the handle to the left. Close it with a firm push. Lock or unlock the glove box with the master key.

⚠ WARNING

An open glove box can cause serious injury to your passenger in a crash, even if the passenger is wearing the seat belt.

Always keep the glove box closed while driving.

The glove box light comes on when the parking lights are on.

Front Door Pockets

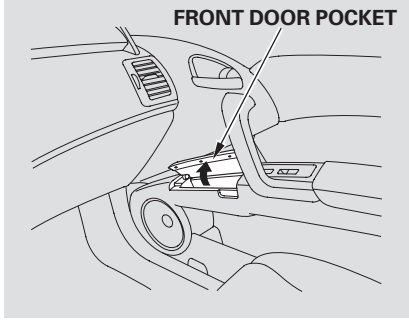

The interior of each front door has an extendable pocket for maps and other small, lightweight items. For safety, be sure both front door pockets are closed while driving.

Interior Convenience Items

Beverage Holders

Be careful when you are using the beverage holders. A spilled liquid that is very hot can scald you or your passengers. Spilled liquids can damage the upholstery, carpeting, and electrical components in the interior.

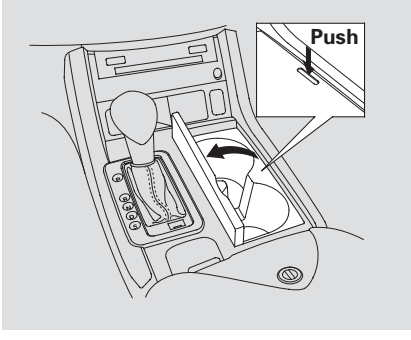

To use the front beverage holder, push on the lid. It will swing open. To close the lid, push it down until it latches.

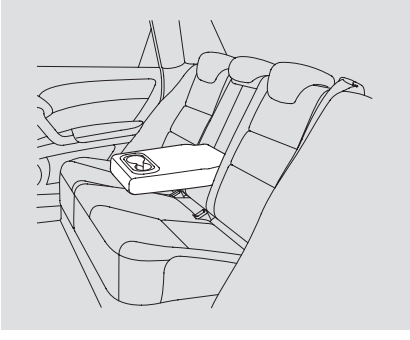

The rear seat also has a beverage holder in the center armrest. To use it, pivot the armrest down.

Interior Convenience Items

Accessory Power Sockets

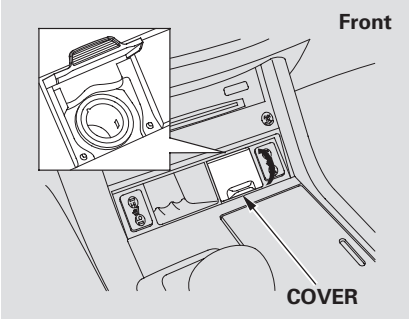

To use the accessory power socket, pull up the cover. The ignition switch must be in the ACCESSORY (I) or ON (II) position.

These sockets are intended to supply power for 12 volt DC accessories that are rated 120 watts or less (10 amps).

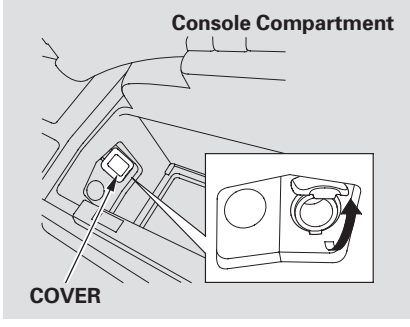

None of the sockets will power an automotive type cigarette lighter element. When both sockets are being used, the combined power rating of the accessories should be 120 watts or less (10 amps).

Sun Visor

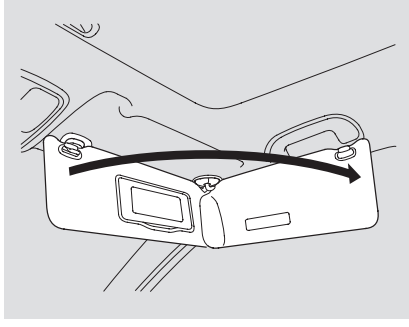

To use the sun visor, pull it down. You can also use the sun visor at the side window. Remove the support rod from the clip and swing the sun visor toward the side window.

Make sure you put the sun visor back in place when you are getting into or out of the vehicle.

Interior Convenience Items

Vanity Mirror

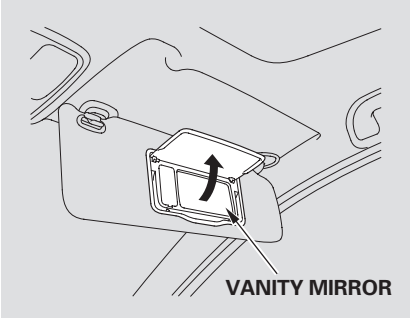

To use a vanity mirror on the back of the sun visor, pull up the cover.

The light comes on when you pull up the cover.

Console Compartment

Your vehicle has a multi-function console compartment. It includes an armrest, a coin holder, a pen holder, a card holder and a console compartment with two separatable shelves.

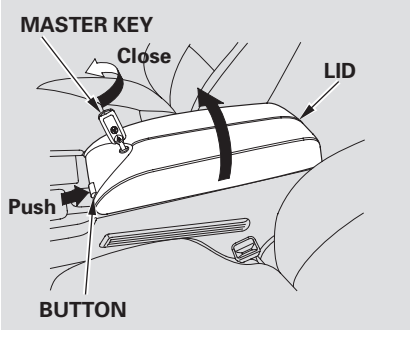

To open the console compartment, push the button and lift the lid.
To close, lower the lid, and push it down until it latches.

You can lock or unlock the console compartment lid with the master key.

CONTINUED

Interior Convenience Items

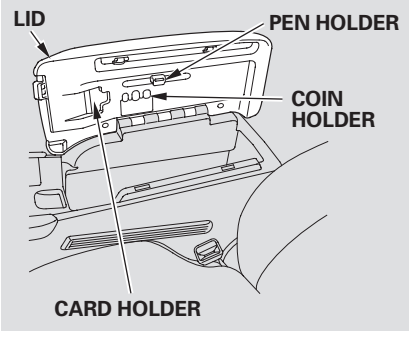

You can use the inside of the lid for a pen holder, a coin holder and a card holder.

The console compartment light comes on when the parking lights are on.

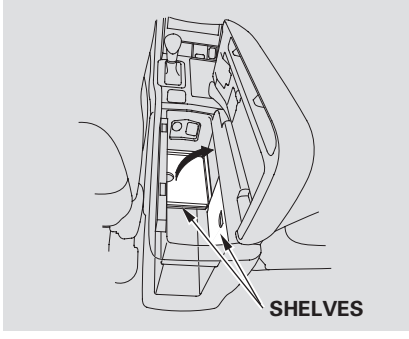

The console compartment has two shelves to divide it into two levels. To store small items, you can use the upper half of the space by putting the shelves down until they latch. The front and rear shelves can be used separately.

The items on each shelves should not exceed 11 lbs (5 kg). Heavy items may damage the shelves.

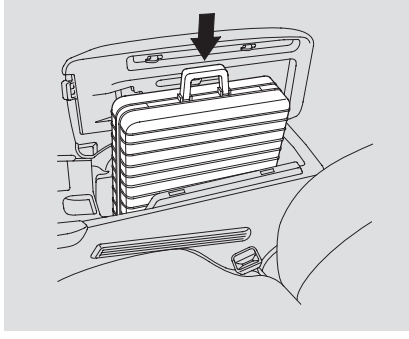

When you store a large item like a briefcase, lift the shelves up to create a large space.

The maximum dimensions of the item you can store in the console compartment are:
Length: 16.9 in (430 mm)
Height: 12.2 in (310 mm)
Width: 5.5 in (140 mm)

Interior Convenience Items

Cargo Area Cover

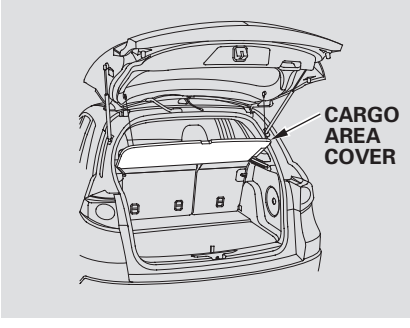

Your vehicle has a cargo area cover to conceal your luggage and protect them from direct sunlight.

Do not put any items on top of the cargo area cover. They can block your view and be thrown around the vehicle during a crash.

The cargo area cover may be removed to give you more cargo space.

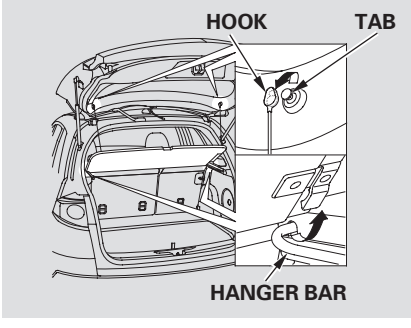

To remove it:

1. Open the tailgate. Remove the hook from the tab on the tailgate. Make sure you use both hands to prevent the cargo area cover from falling accidentally.

2. Lift and pull the rear edge of the cargo area cover slightly to unlock it from the hanger bars, then remove it straight out.

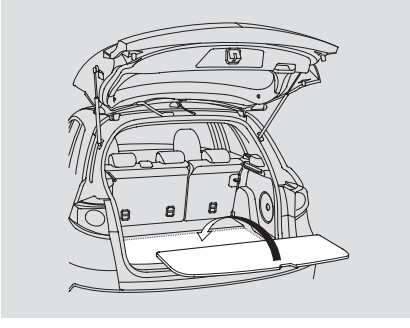

3. Place the cargo area cover on the cargo area floor.

Make sure the cargo area cover is securely placed so it will not move while you are driving.

Reverse this procedure to install the cargo area cover.

Main Menu

Features

The climate control system in your vehicle provides a comfortable driving environment in all weather conditions.

The standard audio system has many features. This section describes those features and how to use them.

Your vehicle has an anti-theft audio system that requires a code number to enable it.

The security system helps to discourage vandalism and theft of your vehicle.

On RDX with Technology Package model
The climate control system and the audio system have a voice control feature. Refer to the navigation system manual for more information.

Climate Control System 170
Dual Temperature Control 175
Climate Control Sensors 177
Audio System 178
Audio System (On RDX model) .. 180
To Play the AM/FM Radio 180
Operating the CD Changer 183
XM® Satellite Radio 193
Adjusting the Sound 196
Setting the Clock 198
Audio System (On RDX with Technology Package model) 199
Interface Dial 199
To Play the AM/FM Radio 200
Operating the CD Changer 206
XM® Satellite Radio 221
Adjusting the Sound 227
Auxiliary Input Jack.....230
Radio Reception 231
Protecting Your Discs 233
CD Changer Error Messages 234
Playing the XM® Satellite Radio .. 235
Remote Audio Controls..... 237
Radio Theft Protection..... 239
Security System 240
Cruise Control..... 241
AcuraLink 244
HomeLink Universal Transceiver..... 253
HandsFreeLink™..... 257
Rear View Camera and Monitor .. 275

Climate Control System

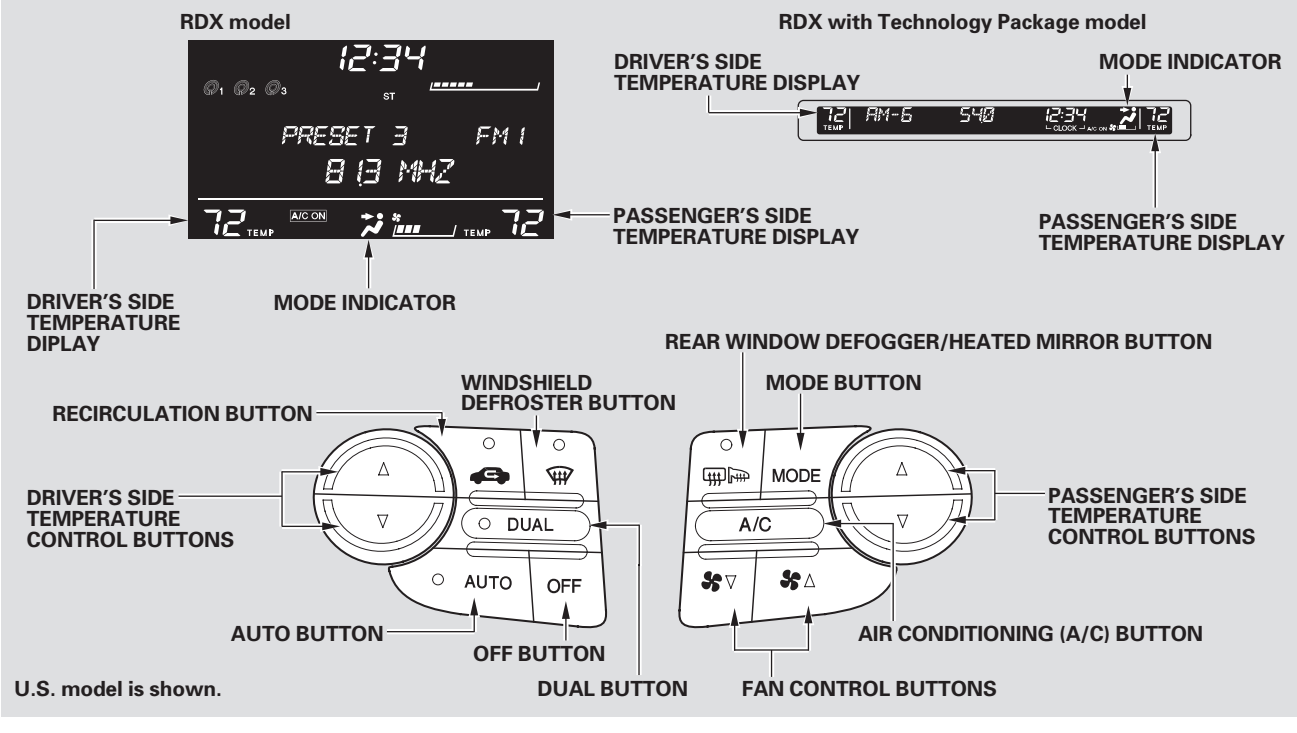

U.S. model is shown.

Climate Control System

Proper use of the climate control system can make the interior dry and comfortable, and keep the windows clear for best visibility.

For the climate control system to provide heating and cooling, the engine must be running.

You can adjust the temperatures of the driver's side and the passenger's side independently (see page 175).

Voice Control System

On RDX with Technology Package model

The climate control system for your vehicle can also be operated by voice control. See the navigation section in your quick start guide for an overview of this system, and the navigation system manual for complete details.

Automatic Operation

The automatic climate control system adjusts the fan speed and airflow levels to maintain the interior temperature you select.

On RDX with Technology Package model

In the AUTO mode, the vehicle's interior temperature is independently regulated for the driver and passenger. If the driver's side of the vehicle is getting too much sun, the system will adjust to a lower temperature.

1. Press the AUTO button. You will see AUTO in the display. The indicator in the button also comes on as a reminder.
2. Set the desired temperature by pushing ▲ or ▼ of the driver's side temperature control buttons. The selected temperature will show in the display.

When you push the passenger's side temperature control buttons, the indicator in the DUAL button comes on and the driver's side and passenger's side temperature can be controlled independently (see page 175).

The system automatically selects the proper mix of conditioned and/or heated air that will, as quickly as possible, raise or lower the interior temperature to your preference.

CONTINUED

Climate Control System

When you set the temperature to its lowest limit (LO) or its highest limit (HI), the system runs at full cooling or heating only. It does not regulate the interior temperature.

In cold weather, the fan will not come on automatically until the heater starts to develop warm air.

Semi-automatic Operation
You can manually select various functions of the climate control system when it is in the AUTO mode. All other features remain automatically controlled.

Making any manual selection causes the word AUTO in the display to go out.

Fan Control
Select the fan speed by pressing the fan control buttons (▲ or ▼). The fan speed is represented by vertical bars in the display.

Temperature Control
To adjust the desired temperature, push ▲ or ▼ of the temperature control buttons.

Dual Button
Press the DUAL button to select dual temperature control mode (see page 175). The indicator in the DUAL button comes on.

When you press the DUAL button again (indicator turns off), both sides adjust to the driver's side temperature.

Air Conditioning (A/C) Button
Press the A/C button to turn the air conditioning on and off. You will see A/C ON or A/C OFF in the display.

When you turn the A/C off, the system cannot regulate the inside temperature if you set the temperature control below the outside temperature.

Climate Control System

Recirculation Button
When the indicator in the button is on, air from the vehicle's interior is sent throughout the system again. When the indicator is off, air is brought in from the outside of the vehicle (fresh air mode).

The outside air intakes for the climate control system are at the base of the windshield. Keep this area clear of leaves and other debris.

The system should be left in fresh air mode under almost all conditions. Keeping the system in recirculation mode, particularly with the A/C off, can cause the windows to fog up.

Switch to recirculation mode when driving through dusty or smoky conditions, then return to fresh air mode.

Windshield Defroster Button
This button turns the windshield defrost on and off.

When you push this button, air flows from the defroster vents at the base of the windshield, and the system automatically switches to fresh air mode and turns on the A/C. When the indicator in the button is on, the passenger's temperature cannot be set separately from the driver's.

Rear Window Defogger Button
This button turns the rear window defogger on and off. Pushing this button also turns the mirror heaters on and off (see page 125).

CONTINUED

Climate Control System

Mode Button
Use the MODE button to select the vents the air flows from. Some air will flow from the dashboard corner vents in all modes.

The mode indicator in the display changes to the current mode each time you press the button.

Air flows from the center and corner vents in the dashboard.

Airflow is divided between the vents in the dashboard and the floor vents.

Air flows from the floor vents.

Airflow is divided between the floor vents and the defroster vents at the base of the windshield.

To Turn Everything Off
If you press the OFF button, the climate control system shuts off completely.

- Keep the system off for short periods only.
- To keep stale air and mustiness from collecting, you should have the fan running at all times.

When the climate control system is turned off, the temperature in the display will also turn off.

Dual Temperature Control

Your vehicle has four temperature control buttons, two for the driver, and two for the front passenger.

The driver's side and the passenger's side can be controlled independently by adjusting these buttons when the indicator in the DUAL button is lit.

Temperature Control Buttons
To set the driver's side temperature to a different value than the passenger's, press the DUAL button, then press the temperature control buttons (▲ or ▼) on the driver's side. To set the passenger's side to a different value than the driver's, press the temperature control buttons (▲ or ▼) on the passenger's side. You can adjust the passenger's side without pressing the DUAL button first.

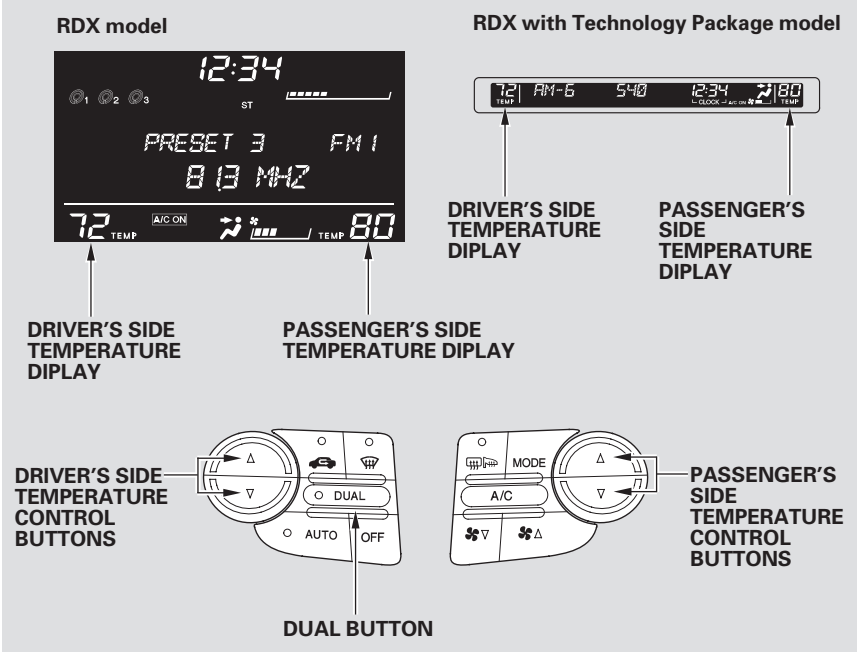

CONTINUED

Dual Temperature Control

When you set the temperature to its lower or upper limit, it is displayed as Lo or Hi .

Push AUTO or . The selected temperatures appear in the display. When the indicator in the DUAL button is off, you can adjust both sides to the same temperature by adjusting the driver's side temperature control buttons (▲or ▼).

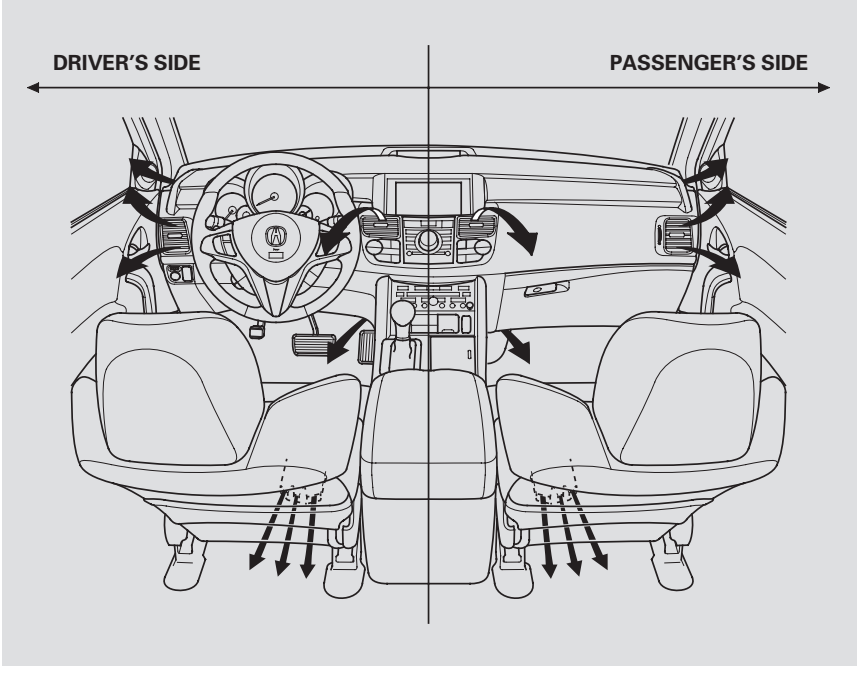

Climate Control Sensors

Sunlight Sensor/Temperature Sensor

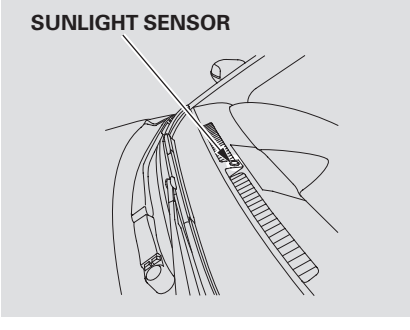

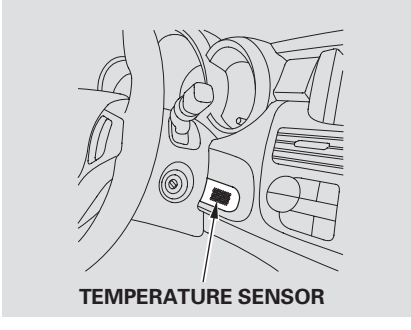

The climate control system has two sensors. A sunlight sensor is in the top of the dashboard, and a temperature sensor is next to the steering column. Do not cover the sensors or spill any liquid on them.

Audio System

Read the appropriate pages in this section for operation of the audio systems installed in your vehicle.

- For RDX model, see pages 179 thru 198 .
- For RDX with Technology Package model, see page 199 thru 230 .

RDX model

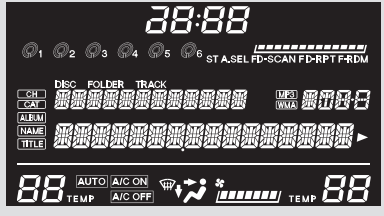

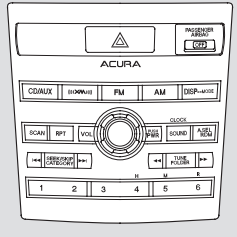

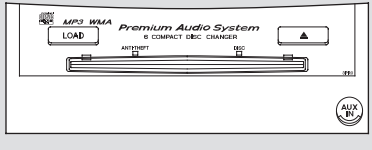

U.S. model is shown.

Audio System

RDX with Technology Package model

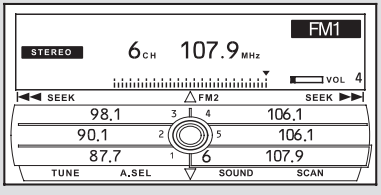

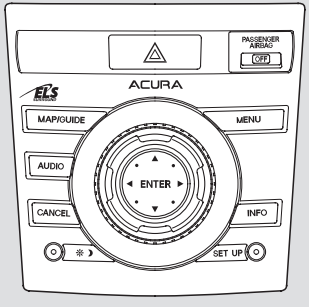

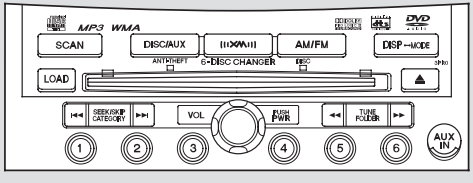

U.S. model is shown.

Audio System

To Play the AM/FM Radio

On RDX model

The ignition switch must be in the ACCESSORY (I) or the ON (II) position. Turn the system on by pushing the PWR/VOL knob, or the AM or FM button. Adjust the volume by turning the PWR/VOL knob.

The band and frequency that the radio was last tuned to is displayed. To change bands, press the AM or FM button. On the FM band, “ST” will be shown on the center display if the station is broadcasting in stereo. Stereo reproduction on AM is not available.

On U.S. models

XM satellite radio information is available on page 193 .

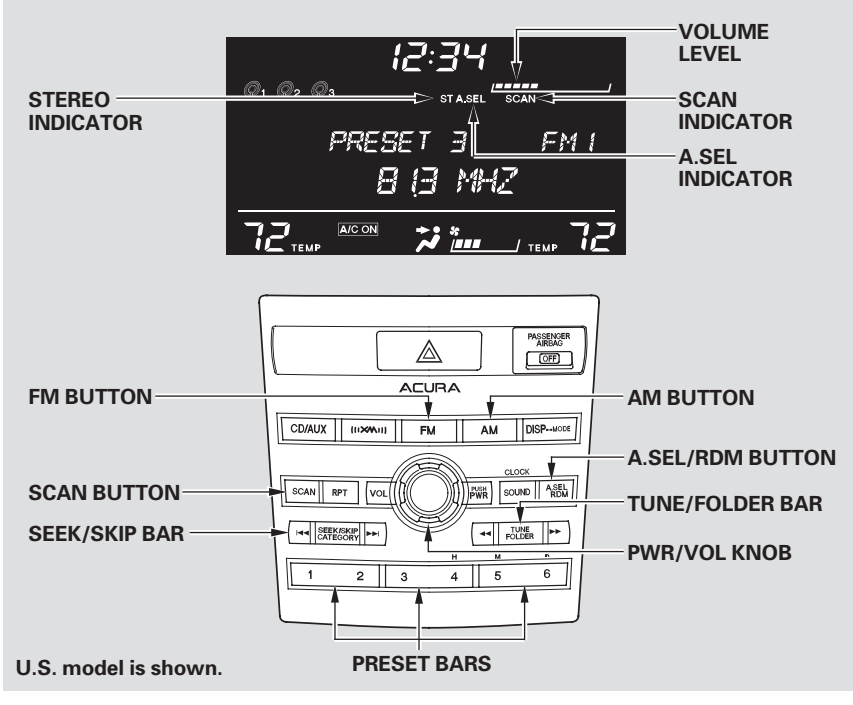

U.S. model is shown.

To Select a Station
You can use any of five methods to find radio stations on the selected band: TUNE, SEEK, SCAN, the preset bars, and AUTO SELECT.

TUNE — Use the TUNE/FOLDER bar to tune the radio to a desired frequency. Press the ▶▶ side of the bar to tune to a higher frequency, and the ◀◀ side of the bar to tune to a lower frequency.

If you press and hold the ◀◀ or ▶▶ side of the bar, the frequency will begin to change rapidly. It will stop when you release it.

SEEK — The SEEK function searches up and down from the current frequency to find a station with a strong signal. To activate it, press the ⏮ or ⏭ side of the SEEK/SKIP bar, then release it.

SCAN — The SCAN function samples all stations with strong signals on the selected band. To activate it, press the SCAN button, then release it. You will see "SCAN" on the center display. The system will scan for a station with a strong signal. When it finds one, it will stop and play that station for about 10 seconds.

If you do nothing, the system will then scan for the next strong station and play it for 10 seconds. When it plays a station you want to listen to, press the SCAN button again.

Preset — Each side of the bars (1—6) can store one frequency on AM and two frequencies on FM.

1. Select the desired band, AM or FM. FM1 and FM2 let you store two frequencies with each side of the preset bar.
2. Use the TUNE, SEEK, or SCAN function to tune the radio to a desired station.
3. Pick the preset number (1—6), for the station you want to store. Press the left or right side of the bar, and hold it until you hear a beep.
4. Repeat steps 1 through 3 to store a total of six stations on AM and twelve stations on FM.

CONTINUED

Audio System

AUTO SELECT — If you are traveling far from home and can no longer receive your preset stations, you can use the auto select feature to find stations in the local area.

To activate it, press the A. SEL/RDM button. “A. SEL” will flash on the center display, and the system will go into scan mode for several seconds. It stores the frequencies of six AM and twelve FM stations in the preset bars (1 — 6).

You will see “0” displayed if auto select cannot find a strong station for every preset bar.

If you do not like the stations auto select has stored, you can store other frequencies on the preset bars.

To turn off auto select, press the A. SEL/RDM button. This restores the presets you originally set.

Radio Frequencies and Reception
For information on AM/FM radio frequencies and reception, see page 231 .

Adjusting the Sound
For information, see page 196 .

Operating the CD Changer

On RDX model

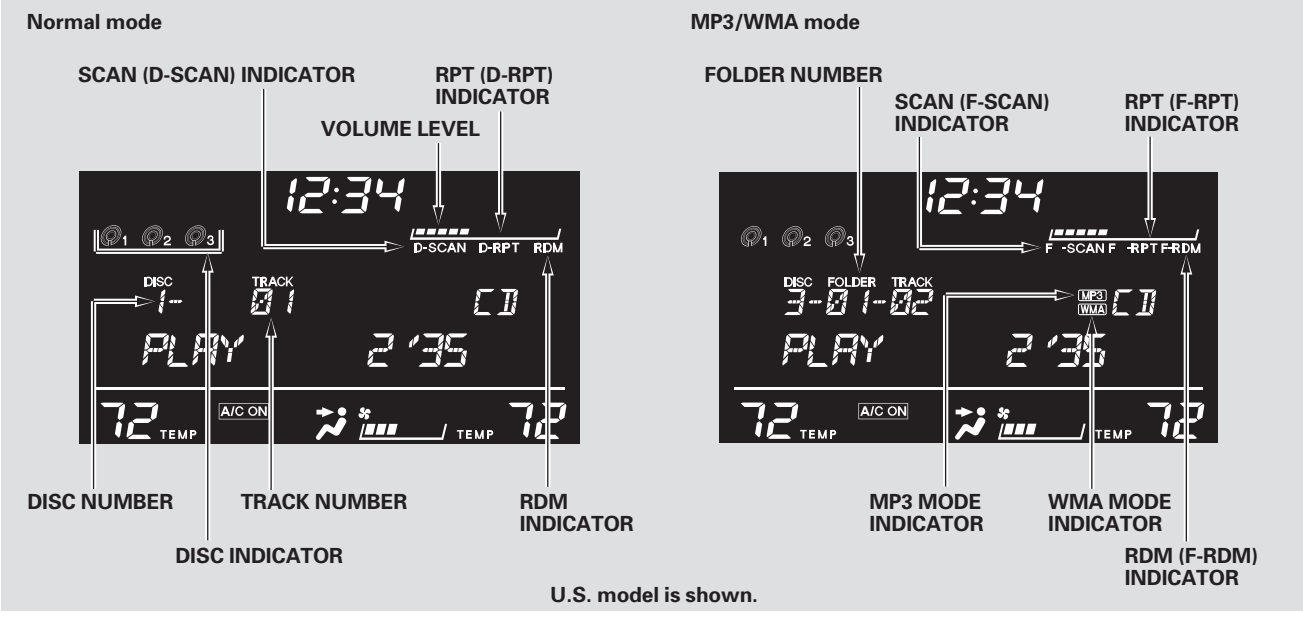

U.S. model is shown.

CONTINUED

Audio System

U.S. model is shown.

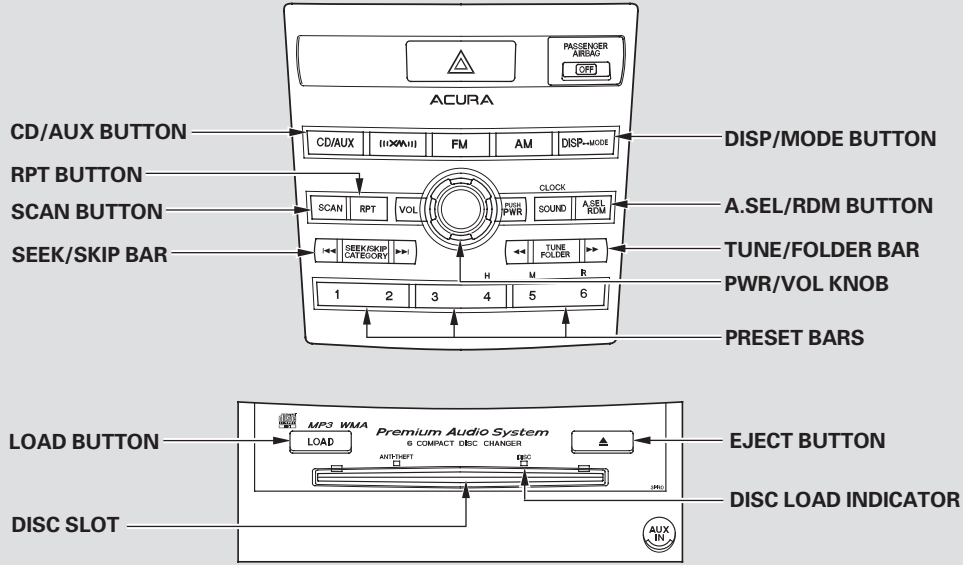

Audio System

Your audio system has an in-dash CD changer that holds up to six CDs, providing several hours of continuous entertainment. You operate this CD changer with the same controls used for the radio.

To load CDs or operate the CD changer, the ignition switch must be in the ACCESSORY (I) or ON (II) position.

The disc changer can play these disc formats:
- CD (CD-DA)
- CD-R/RW

The disc packages or jackets should have one of these marks.

The changer can also play MP3 or WMA format (see page 187).

For best results when using CD-R or CD-RW discs, use only high quality discs labeled for audio use. When recording a CD-R or CD-RW, the recording must be closed in order for the disc to be played by CD player.

NOTICE

Do not use CDs with adhesive labels. The label can curl up and cause the CD to jam in the unit.

You cannot load and play 3-inch (8-cm) discs in this system.
Video CDs and DVDs will not work in this unit.

CONTINUED

Loading CDs in the Changer
To load multiple discs in one operation:

1. Press and hold the LOAD button on the changer unit until you hear a beep. You will see “BUSY” on the center display, and disc load indicator turns red and starts blinking.

2. Insert the disc into the disc slot when the disc load indicator turns green and “LOAD” appears on the center display at the same time. Insert it only halfway; the drive will pull it in the rest of the way. You will see “BUSY” on the center display, and the disc load indicator turns red again and blinks as the CD is loaded.

3. When the disc load indicator turns green and “LOAD” appears on the center display again, insert the next CD in the slot.

   Do not try to insert a disc until “LOAD” appears. You could damage the audio unit.

4. Repeat steps 1 through 3 until all six positions are loaded. If you are not loading all six positions, press the LOAD button again after the last CD has loaded. “DISC READ” appears on the center display, then the system begins playing the last CD loaded.

If you stop loading discs before all six positions are filled, the system will wait for 10 seconds, stop the load operation, and begin playing the last disc loaded.

To load a single disc:

1. Press and release the LOAD button on the changer unit. You will see “BUSY” on the center display, and the disc load indicator turns red and starts blinking.

2. Insert a disc into the disc slot when the disc load indicator turns green and “LOAD” appears on the center display at the same time. Insert the disc only about halfway; the drive will pull it in the rest of the way. You will see the disc indicator blinking on the center display.

   Do not try to insert a disc until “LOAD” appears. You could damage the audio unit.

3. You will see “DISC READ” on the center display, then the system begins to play the CD.

You can load a CD into an empty position while a CD is playing. Select the empty position (the disc indicator is not shown on the center display) by pressing the appropriate side of the preset bars. The current CD stops playing and starts the loading sequence. The CD just loaded will play.

You can load a disc(s) in any mode (AM, FM, XM radio, or AUX) if you do not select an empty position.

If you press the LOAD button while a disc is playing, the system will stop playing that disc and start the loading sequence. It will then play the disc just loaded.

To Play a CD
Select the CD changer by pressing the CD/AUX (U.S. model) or CD (Canadian model) button. You will see “CD” on the center display. The system will begin playing the last selected CD in the CD changer. You will see the disc and track numbers displayed.

When the system reaches the end of the disc, the system will advance to the next disc and begin to play. To select a different disc, press an appropriate side of the preset bar (1 −6). If you select an empty position in the CD changer, the system will try to load the CD in the empty slot.

Playing an MP3/WMA Disc
The CD changer can play CD-Rs and CD-RWs compressed in MP3 and WMA format. When playing a disc in MP3 or WMA, you will see “MP3” or “WMA” on the center display. A disc can support more than 99 folders, and each folder can hold up to 255 playable files.

When there are more than 99 folders in a disc, the center display only shows two digits.

If the disc has a complex structure, it will be a while to read the disc before the system begins to play it.

CONTINUED

The specifications of the compatible MP3 file are:

Sampling frequency: 32/44.1/48 kHz (MPEG1), 24, 22.05, 16 kHz (MPEG2)
Bit rate: 32/40/48/56/64/80/96/112/128/160/192/224/256/320 kbps (MPEG1), 8/16/24/32/40/48/56/64/80/96/112/128/160 kbps (MPEG2)
Compatible with variable bit rate and multi-session.
Maximum layers (including ROOT): 8 layers

The specifications of the compatible WMA file are:

Sampling frequency: 32/44.1/48 kHz
Bit rate: 48/64/80/96/128/160/192 kbps
Compatible with variable bit rate and multi-session.
Maximum layers (including ROOT): 8 layers

Name Display Function
Each time you press the DISP/MODE (U.S. model) or DISP (Canadian model) button while playing a CD (CD-DA), the center display changes from album name, to track name, to artist name, and then to normal display. If the disc was not recorded with CD-TEXT, “NO INFO” will be shown on the center display.

When playing a disc compressed in MP3/WMA format, the display changes from folder name, to file name, to artist tag, to album tag, to track tag, and then to normal display each time you press the DISP/MODE (U.S. model) or DISP (Canadian model) button. If the disc was not recorded with this information, “NO INFO” will be shown on the center display.

If the title is too long, it will not show all at once. Press and hold the DISP/MODE (U.S. model) or DISP (Canadian model) button, and the rest of the title will show on the center display.

You will also see the album and track name (CD-TEXT), or the folder and file name (MP3/WMA) under these conditions:

- When you insert a disc, and the system begins to play.
- Each time a new track, file, or folder plays.

To Change or Select Tracks/Files
While a disc is playing you can use the SEEK/SKIP bar to select passages and change tracks (files in MP3/WMA mode).

In MP3/WMA mode, use the TUNE/FOLDER bar to select folders in the disc, and use the SEEK/SKIP bar to change files.

SEEK/SKIP — Each time you press and release the ▶▶| side of the SEEK/SKIP bar, the system skips forward to the beginning of the next track (file in MP3/WMA mode). Press and release the |◀◀ side of the bar to skip backward to the beginning of the current track/file. Press it again to skip to the beginning of the previous track/file.

To move rapidly within a track/file, press and hold the ▶▶| or |◀◀ side of the SEEK/SKIP bar.

In MP3/WMA mode
FOLDER SELECTION — To select a different folder, press and release the ▶▶ side of the TUNE/FOLDER bar to move to the beginning of the next folder. Press and release the ◀◀ side of the bar to move to the beginning of the current folder. Press it again to skip to the beginning of the previous folder.

REPEAT — This feature, when activated, continuously replays the current track (file in MP3/WMA mode). To activate it, press and release the RPT button. You will see “RPT” on the center display. To turn off this feature, press the RPT button for more than 2 seconds.

CONTINUED

In MP3/WMA mode
FOLDER REPEAT — This feature, when activated, replays all the files on the current folder in the order they are compressed in MP3/WMA. To activate folder repeat mode, press the RPT button twice. You will see "F-RPT" on the center display. Press and hold the RPT button for more than 2 seconds to turn off this feature.

DISC REPEAT — Press the RPT button twice to continuously replay the current CD. In MP3/WMA mode, press the RPT button three times. You will see "D-RPT" on the center display. Press and hold the RPT button for more than 2 seconds to turn off this feature.

Each time you press and release the RPT button, the mode changes from repeat to folder repeat, disc repeat then to normal playing.

SCAN — The scan function samples all the tracks (files in a folder in MP3/WMA mode) of the current disc in the order they are recorded on the CD. To activate this feature, press and release the SCAN button. You will see "SCAN" and the track/file number flashing on the center display. The system will then play the track/file for approximately 10 seconds. To hear the rest of the track/file, press and hold the SCAN button for more than 2 seconds. If you do nothing, the system will then play the following tracks/files for 10 seconds each. When the system finishes scanning all the tracks/files in the current disc, the system returns to the track/file it first started scanning with, scan is canceled and the system begins to play that track/file normally.

In MP3/WMA mode
FOLDER SCAN — The folder scan function samples the first file of each folder of the current disc in the order they are compressed in MP3/WMA. To activate this feature, press the SCAN button twice. The first file of each folder plays for about 10 seconds. You will see "F-SCAN" and the folder number flashing on the center display. To hear the rest of the file in the folder currently scanning, press and hold the SCAN button for more than 2 seconds. When the system finishes scanning all the folders of the current disc, the system returns to the folder it started scanning with, folder scan is canceled and the system begins to play that folder normally.

DISC SCAN — The disc scan function samples the first track (file in MP3/WMA mode) of each disc within the changer in numerical order. To activate this feature, press the SCAN button twice. In MP3/WMA mode, press the SCAN button three times. The first track/file of each disc plays for about 10 seconds. You will see "D-SCAN" and disc number flashing on the center display. To hear the rest of the track/file in the disc currently scanning, press and hold the SCAN button for more than 2 seconds. When the system finishes scanning all the discs, disc scan is canceled and the system begins to play the first track/file of that disc normally.

Each time you press and release the SCAN button, the mode changes from scan to folder scan, disc scan then to normal playing.

RANDOM (Random within a Disc) — This feature plays the tracks (all files in each folder in MP3/WMA mode) within a disc in random order. To activate it, press and release the A. SEL/RDM button. In MP3/WMA mode, press the A. SEL/RDM button twice to select within a disc random play. You will see "RDM" on the center display. Press and hold the A. SEL/RDM button for more than 2 seconds to return to normal play.

In MP3/WMA mode
FOLDER RANDOM — This feature plays the files within a folder in random order, rather than in the order they are compressed in MP3/WMA. To activate it, press the A. SEL/RDM button once. You will see "F-RDM" on the center display. The system will then select and play files randomly. This continues until you deactivate folder random play by pressing and holding the RDM button for more than 2 seconds.

Each time you press and release the A. SEL/RDM button, the mode changes from folder random to random, then to normal playing.

Audio System

To Pause a Disc
To pause a disc, press the corresponding number of the current disc on the appropriate side of the preset bars. To play the disc again, press the preset bar again.

To Stop Playing a Disc
If you turn the system off while a CD is playing, either with the PWR/VOL knob or by turning off the ignition switch, the disc will stay in the drive. When you turn the system back on, the CD will begin playing where it left off.

To take the system out of CD mode, press the AM or FM, CD/AUX, or «XM» button. To return to CD mode, press the CD/AUX or CD (Canadian model) button. The system will continue at the same point that it left off.

Removing CDs from the Changer
To remove the disc that is currently playing, press and release the eject (▲) button. You will see "EJECT" on the center display. When you remove the disc from the slot, the system begins the load sequence so you can load another disc in that position. If you do not load another CD within 10 seconds, the system selects the previous mode [AM, FM1, FM2, or XM Radio (U.S. models)].

If you do not remove the CD from the slot, the system will reload the CD after 10 seconds and put the CD changer in pause mode. To begin playing the CD, press the CD/AUX or CD (Canadian model) button.

To remove a different CD from the changer, select it with the appropriate side of the preset bar. When that CD begins playing, press the eject button.

Press and hold the eject button until you hear a beep to remove all the discs from the changer.

You can also eject discs when the ignition switch is off by pressing the eject button. The disc that was last selected is ejected first. You can eject the rest of the discs one at a time.

Protecting Discs
For information on how to handle and protect compact discs, see page 233 .

CD Changer Error Messages
For information, see page 234 .

Adjusting the Sound
For information, see page 196 .

XM® Satellite Radio

On U.S. RDX model only

Your vehicle is capable of receiving XM® Satellite Radio anywhere in the United States, except Hawaii and Alaska.

XM® is a registered trade mark of XM Satellite Radio, Inc.

XM Satellite Radio receives signals from two satellites to produce clear, high-quality digital reception. It offers many channels in several categories. Along with a large selection of different types of music, XM Satellite Radio also allows you to view channel and category selections on the center display.

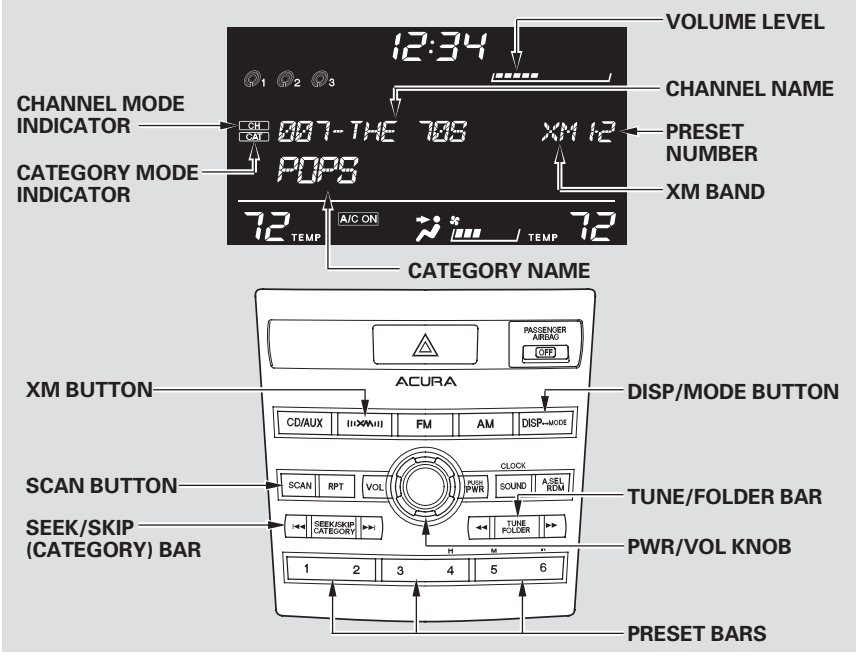

CONTINUED

Audio System

Operating the XM Radio
To listen to the XM satellite Radio, turn the ignition switch to the ACCESSORY (I) or ON (II) position. Push the PWR/VOL knob to turn on the audio system, and press the «XM»button. Adjust the volume by turning the PWR/VOL knob. The last channel you listened to will show on the center display.

DISP — Each time you press and release the DISP/MODE button, the center display changes in the following sequence: Channel name, category, artist name, and music title.

MODE — To switch between the category mode and channel mode, press and hold the DISP/MODE button until the mode changes. “CH (channel)” or “CAT (category)” mode indicator appears on the center display.

To Select a Channel
When in the satellite radio mode, you can use any of four methods to find channels: TUNE, SEEK/SKIP (CATEGORY), SCAN, and the preset bars.

TUNE — Press the TUNE/FOLDER bar to change channel selections. Press the ▶▶ side of the bar to tune to higher numbered channels, and the ◀◀ side of the bar to tune to lower numbered channels. In the category mode, you can only select channels within that category.

SEEK/SKIP (CATEGORY) — Press either side of the SEEK/SKIP (CATEGORY) bar (◀◀ or ▶▶) to select another category.

SCAN — The scan function gives you a sampling of all channels while in the channel mode. In the category mode, only the channels within that category are scanned. To activate scan, press the SCAN button. The system plays each channel in numerical order for a few seconds, then selects the next channel. When you hear a channel you want to continue listening to, press the button again.

Preset — You can store up to 12 preset channels using each side of the preset bar. Each side of the bar stores one channel from the XM1 band and one channel from the XM2 band.

To store a channel:

1. Press the «XM» button. Either XM1 or XM2 will be shown on the center display.
2. Use the tune, seek, or scan function to tune to a desired channel.

In category mode, only channels within that category can be selected. In channel mode, all channels can be selected.

3. Pick a preset number for the channel you want to store. Press and hold the appropriate side of the preset bar until you hear a beep.
4. Repeat steps 2 and 3 to store the first six channels.
5. Press the «XM» button again. The other XM band will be shown. Store the next six channels repeating steps 2 and 3.

Once a channel is stored, press and release the proper side of the preset bar to tune to it.

Adjusting the Sound
For information, see page 196 .

XM Satellite Radio Reception
For information, see page 235 .

Audio System

Adjusting the Sound

On RDX model

Press the SOUND/CLOCK button repeatedly to display the BASS, TREBLE, FADER, BALANCE, SUBWOOFER and SVC (speed-sensitive volume compensation) settings.

Each mode is shown on the center display as it changes. Turn the PWR/VOL knob to adjust the setting to your liking. When the level reaches the center, you will see " C " on the center display. The system will automatically return the display to the selected audio mode about 5 seconds after you stop adjusting a mode.

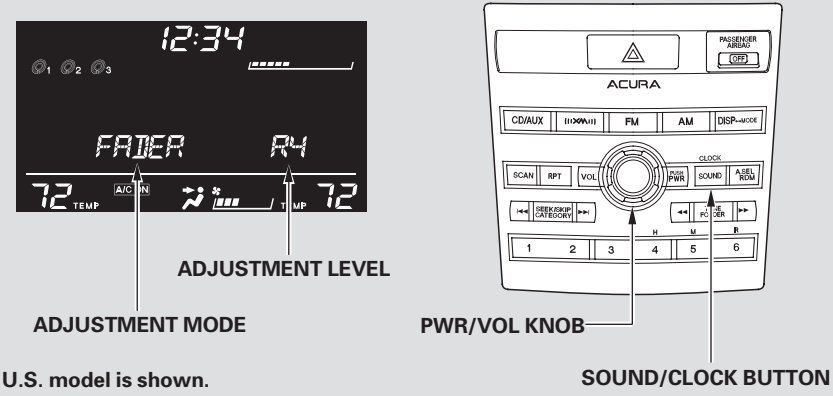

U.S. model is shown.

Treble/Bass — Use the TREBLE/BASS modes to adjust the tone to your liking. You can adjust each mode in levels between − 6 and + 6.

Balance/Fader — These two modes adjust the strength of the sound coming from each speaker. BALANCE adjusts the side-to-side strength, while FADER adjusts the front-to-back strength. BALANCE can be adjusted in levels between L9 and R9. FADER can be adjusted in levels between F9 and R9. When FADER adjustment level reaches F9, the subwoofer speaker will be turned off.

SUBWOOFER — Use the SUBWOOFER mode to adjust the strength of the sound from the subwoofer speaker. Turn the PWR/VOL knob to the desired level (−6 to +6). Even if the adjustment level reaches −6, the subwoofer is not turned off.

Speed-sensitive volume compensation (SVC) — The SVC mode controls the volume based on vehicle speed. The faster you go, the louder the audio volume becomes. As you slow down, the audio volume decreases.

The SVC has four modes; SVC OFF, SVC LOW, SVC MID, and SVC HIGH. The default setting is MID. Turn the PWR/VOL knob to adjust the setting to your liking.

Audio System Lighting
You can use the instrument panel brightness control knob to adjust the illumination of the audio system (see page124). The audio system illuminates when the parking lights are on, even if the system is turned off.

Audio System

Setting the Clock

On RDX model

To set the time, press the SOUND/CLOCK button until you hear a beep, then release the button. The displayed time begins to blink.

Change the hour by pressing the H (preset 4) side of the preset bar until the numbers advance to the desired time. Change the minute by pressing the M (preset 5) side of the bar until the numbers advance to the desired time.

You can quickly set the time to the nearest hour. If the displayed time is before the half hour, pressing the SOUND/CLOCK button until you hear a beep, then pressing the R (preset 6) side of the preset bar sets the clock back to the previous hour. If the displayed time is after the half hour, the clock sets forward to the beginning of the next hour.

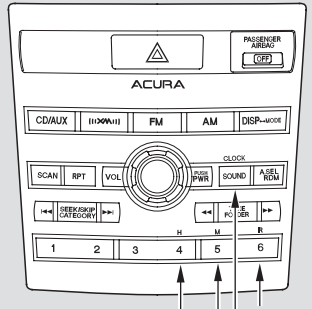

U.S. model is shown.

When you are finished, press the SOUND/CLOCK button again to set the time.

Interface Dial

On RDX with Technology Package model

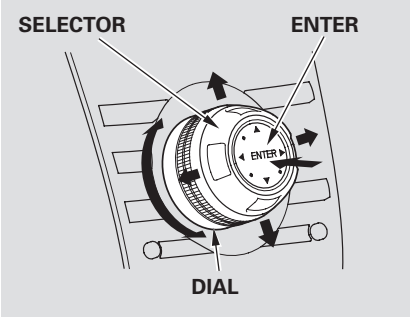

Your vehicle has the interface dial on the dashboard to operate the audio system and navigation system. Most functions of these systems can also be controlled with the appropriate buttons on the dashboard, but some functions can be accessed or selected with the interface dial only.

This dial consists of an upper part (selector) and a lower part (dial). Turning the dial left or right to select or scroll through a list or item(s) on the navigation display and adjust the level or condition. Push the selector to the left, right, up, and down to scroll through and select a list or item(s). The selected item will be highlighted on the display. To confirm the item or enter the setting, push on the center of the selector (ENTER).

When you operate the audio system with the interface dial, press the AUDIO button on the control panel to show the audio control display on the navigation display. You can scroll the display and enter the setting with the interface dial. You will see the indicator ▲ , ▼ , ▶ , or ◀ on the display. This indicates the direction to move the interface dial.

You can operate the audio system with the control buttons on the CD changer unit without displaying the audio control display on the navigation display. The audio setting will be shown on the upper display.

Voice Control System

The audio system for your vehicle can also be operated by voice control. See the navigation section in your quick start guide for an overview of this system, and the navigation system manual for complete details.

Audio System

To Play the AM/FM Radio

On RDX with Technology Package model

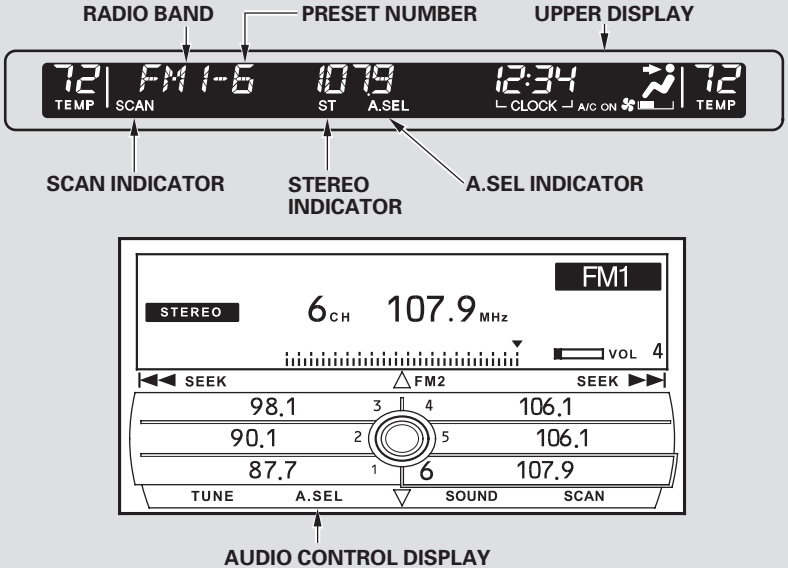

U.S. model is shown.

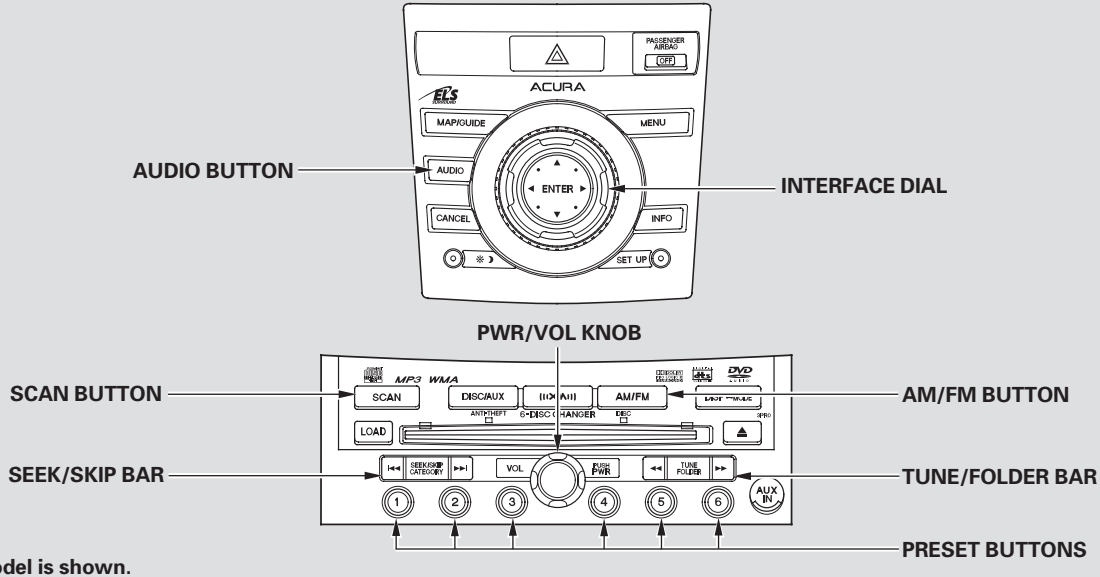

U.S. model is shown.

CONTINUED

Audio System

The ignition switch must be in the ACCESSORY (I) or the ON (II) position. Press the AUDIO button to view the audio control display. Turn the system on by pressing the PWR/VOL knob or the AM/FM button (AM or FM button on Canadian models). Adjust the volume by turning the PWR/VOL knob.

The band and frequency the radio was last tuned to are shown on the upper display. To change bands, press the AM/FM button (AM or FM button). You can also change bands with the interface dial. Press the AUDIO button to view the audio control display and the band changes to FM1, FM2, or AM each time you push the selector up. On the FM bands, "STEREO" will be shown on the audio control display. "ST" will also appear on the upper display if the station is broadcasting in stereo. Stereo reproduction on AM is not available.

On U.S. models
XM satellite radio information is available on page 221 .

To Select a Station
You can use any of five methods to find radio stations on the selected band: TUNE, SEEK, SCAN, the preset buttons or icons, and AUTO SELECT.

TUNE — Use the TUNE/FOLDER bar to tune the radio to a desired frequency. Press the ▶▶ side of the bar to tune to a higher frequency, and the ◀◀ side of the bar to tune to a lower frequency.

If you press and hold the ◀◀ or ▶▶ side of the bar, the frequency will begin to change rapidly. It will stop when you release it.

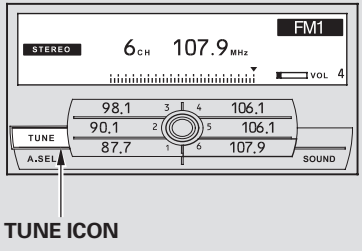

To tune with the interface dial, press the AUDIO button to view the audio control display, then push the selector down, and turn the dial to TUNE. Then press ENTER on the selector, and turn the dial to the desired frequency. To exit the TUNE mode, press ENTER again.

Audio System

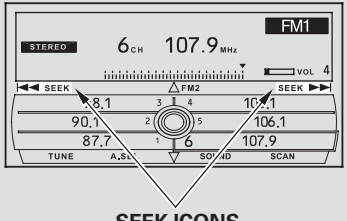

SEEK ICONS

SEEK — The SEEK function searches up and down from the current frequency to find a station with a strong signal. To activate it, press the ⏮ or ⏭ side of the SEEK/SKIP bar, then release it.

To activate the seek function with the interface dial, press the AUDIO button to view the audio control display, then push the selector on the interface dial to the right or left.

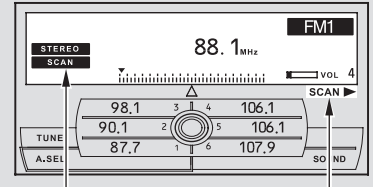

SCAN ICON

SCAN INDICATOR

SCAN — The SCAN function samples all stations with strong signals on the selected band. To activate it, press the SCAN button, then release it. You will see "SCAN" on the upper display.

To activate the scan function with the interface dial, press the AUDIO button to view the audio control display, then push down the selector on the interface dial, and push the selector to the right. You will see "SCAN" on the audio control display.

The system will scan for a station with a strong signal. When it finds one, it will stop and play that station for about 10 seconds. If you do nothing, the system will then scan for the next strong station and play it for 10 seconds. When it plays a station that you want to listen to, press the SCAN button again, or push the interface selector to the right again.

CONTINUED

Audio System

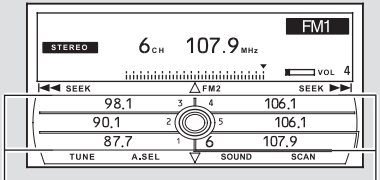

PRESET ICONS

Preset — Each preset button/icon can store one frequency on AM and two frequencies on FM. To view the preset icons on the audio control display, push the AUDIO button.

1. Select the desired band, AM or FM. FM1 and FM2 let you store two frequencies with each preset button (icon).

2. Use the TUNE, SEEK, or SCAN function to tune the radio to a desired station.

3. Pick a preset number (1—6), you want for that station. Press the preset button, and hold it until you hear a beep.

   To store the frequency on a preset icon, turn the interface dial to select a desired preset icon. The selected preset icon will be highlighted. Press and hold ENTER on the selector for more than 2 seconds to store the frequency.

4. Repeat steps 1 through 3 to store a total of six stations on AM and twelve stations on FM.

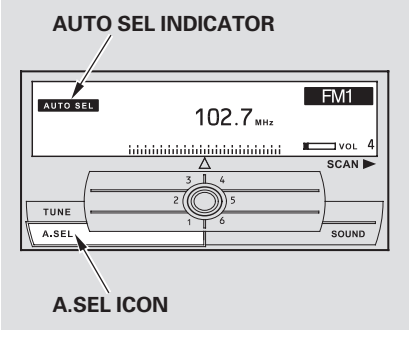

AUTO SELECT — If you are traveling far from home and can no longer receive your preset stations, you can use the auto select feature to find stations in the local area.

To activate AUTO SELECT, press the AUDIO button to view the audio control display. Push the interface selector down to scroll down the display, turn the dial to A. SEL, then press ENTER on the interface selector. You will see "AUTO SEL" flashing in the audio control display, and "A. SEL" on the upper display. Then, the system goes into scan mode for several seconds.

On Canadian models
Press the A.SEL button. You will see AUTO SEL on the screen, and the system goes into scan mode for several seconds. The system stores the frequencies of six AM and twelve FM stations in the preset buttons.

You will see "0" displayed if auto select cannot find a strong station for every preset button.

If you do not like the stations auto select has stored, you can store other frequencies on the preset buttons (icons) as previously described.

To turn off auto select, press ENTER on the interface selector (press the A.SEL button) again. This restores the presets you originally set.

Radio Frequencies and Reception
For information on AM/FM radio frequencies and reception, see page 231.

Adjusting the Sound
For information, see page 227.

Audio System

Operating the CD Changer

On RDX with Technology Package model

Normal mode

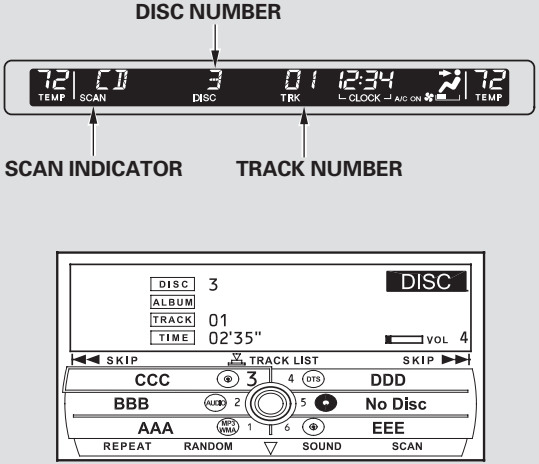

MP3/WMA mode

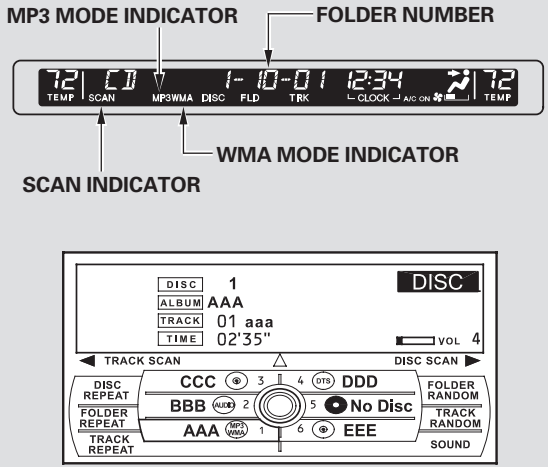

U.S. model is shown.

U.S. model is shown.

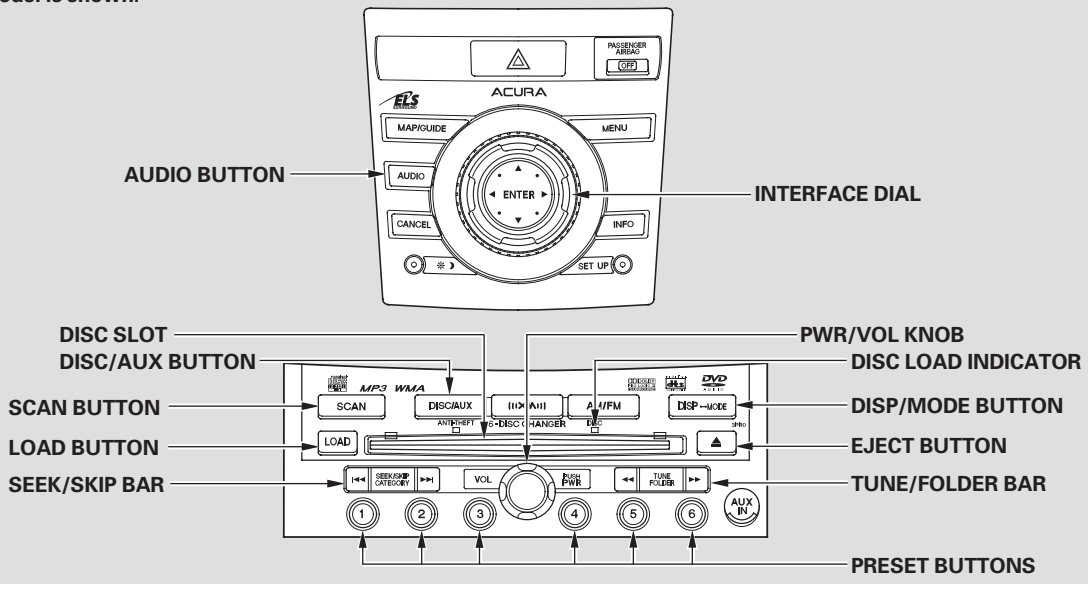

CONTINUED

Audio System

Your vehicle's audio system has an in-dash disc changer with the same controls used for the radio. To operate the disc changer, the ignition switch must be in the ACCESSORY (I) or the ON (II) position.

The disc changer can play these disc formats:
- CD (CD-DA)
- CD-R/RW
- DVD-A
- DTS™

The disc packages or jackets should have one of these marks.

The changer can also play MP3 or WMA format (see page 212).

DVD-A discs not meeting DVD verification standards may not be playable.

The changer cannot play DVD-V or DVD-R/RW formats.

Some CD-DA and CD-ROM mixed discs are not playable.

"DTS" and "DTS Digital Surround" are registered trademarks of Digital Theater Systems, Inc.

You cannot load and play 3-inch (8-cm) discs in this system.

NOTICE

Do not use discs with adhesive labels. The label can curl up and cause the disc to jam in the unit.

Loading CDs in the Changer
To load multiple discs in one operation:

1. Press and hold the LOAD button on the changer unit until you hear a beep. You will see “BUSY” on the upper display, and the disc load indicator turns red and starts blinking.

2. Insert the disc into the disc slot when the disc load indicator turns green and “LOAD” appears in the upper display at the same time. Insert it only halfway; the drive will pull it in the rest of the way. You will see “BUSY” on the upper display, and the disc load indicator turns red again and blinks as the CD is loaded.

3. When the disc load indicator turns green and “LOAD” appears on the upper display again, insert the next CD in the slot.

   Do not try to insert a disc until “LOAD” appears. You could damage the audio unit.

4. Repeat steps 1 through 3 until all six positions are loaded. If you are not loading all six positions, press the LOAD button again after the last CD has loaded. “DISC READ” appears on the upper display, then the system begins playing the last loaded.

If you stop loading discs before all six positions are filled, the system will wait for 10 seconds, stop the load operation, and begin playing the last disc loaded.

To load a single disc:

1. Press and release the LOAD button on the changer unit. You will see “BUSY” on the upper display, and the disc load indicator turns red and starts blinking.

2. Insert a disc into the disc slot when the disc load indicator turns green, and “LOAD” appears on the upper display at the same time. Insert the disc only about halfway; the drive will pull it in the rest of the way. You will see the disc number blinking on the upper display, and the disc load indicator turns red again and blinks as the CD is loaded.

   Do not try to insert a disc until “LOAD” appears. You could damage the audio unit.

3. You will see “DISC READ” on the upper display, then the system begins to play the CD.

CONTINUED

Audio System

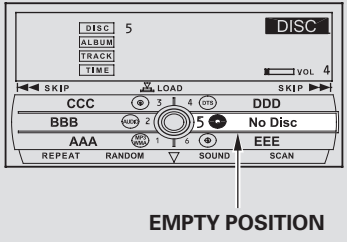

You can load a CD into an empty position while a CD is playing. Press the AUDIO button to view the audio control display. Select the empty position ("No Disc" is shown on the audio control display) by rotating the interface dial. Then press ENTER on the selector to enter your selection. The current CD stops playing and starts the loading sequence. The CD just loaded will play.

You can also select the empty position by pressing the appropriate preset button.

You can load a disc(s) in any mode (AM, FM, XM radio, or AUX) if you do not select an empty position.

You cannot select the empty position if there is no disc in the changer.

Audio System

To Play a Disc

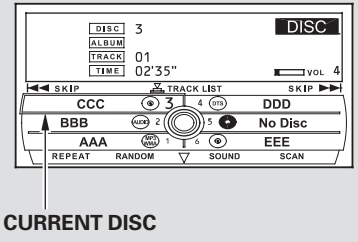

Select the changer by pressing the DISC/AUX button. You will see the "CD" on the upper display. The system will begin playing the last selected CD in the CD changer.

If you want to see the list of the discs in the CD changer, press the AUDIO button to view the audio control display. You will see the current disc position highlighted.

When playing a CD (CD-DA), the audio control display shows disc number, album name, track number, and elapsed time. When playing a CD without this information, the number of the disc and track playing and the elapsed time are shown on the audio control display.

When the system reaches the end of the disc, it will advance to the beginning of the first track/file (in MP3/WMA mode) in the next disc, then play that track/file.

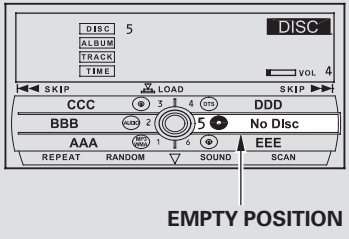

To select a disc, press an appropriate preset button (1–6), or select an appropriate preset icon by rotating the interface dial, then press ENTER on the interface selector. If you select an empty position ("No Disc" is shown) in the CD changer, the system will load a CD into the empty slot (see page 209).

Playing an MP3/WMA Disc
The CD changer can also play CD-Rs and CD-RWs compressed in MP3 and WMA format. When playing a disc in MP3 or WMA, you will see “MP3” or “WMA” on the upper display. A disc can support more than 99 folders, and each folder can hold up to 255 playable files.

When there are more than 99 folders in a disc, the upper display only shows two digits.

When playing a CD compressed in MP3/WMA format, the audio control display shows disc number, folder name, file number, and elapsed time. When playing a CD without this information, the disc number, track number, and the elapsed time are shown on the audio control display.

If the disc has a complex structure, it will be a while to read the disc before the system begins to play it.

The specifications of the compatible MP3 file are:

Sampling frequency: 32/44.1/48 kHz (MPEG1), 24, 22.05, 16 kHz (MPEG2)
Bit rate: 32/40/48/56/64/80/96/112/128/160/192/224/256/320 kbps (MPEG1), 8/16/24/32/40/48/56/64/80/96/112/128/160 kbps (MPEG2)
Compatible with variable bit rate and multi-session.
Maximum layers (including ROOT): 8 layers

The specifications of the compatible WMA file are:

Sampling frequency: 32/44.1/48 kHz
Bit rate: 48/64/80/96/128/160/192 kbps
Compatible with variable bit rate and multi-session.
Maximum layers (including ROOT): 8 layers

To Change or Select Tracks/Files
While a disc is playing you can use the SEEK/SKIP bar to select passages and change tracks (files in MP3/WMA mode).

In MP3/WMA mode, use the TUNE/FOLDER bar to select folders in the disc, and use the SEEK/SKIP bar to change files.

SEEK/SKIP – Each time you press and release the ▶▶I side of the SEEK/SKIP bar, the system skips forward to the beginning of the next track (file in MP3/WMA mode). Press and release the I◀◀ side of the bar to skip backward to the beginning of the current track/file. Press it again to skip to the beginning of the previous track/file.

To move rapidly within a track/file, press and hold the I◀◀ or ▶▶I side of the SEEK/SKIP bar.

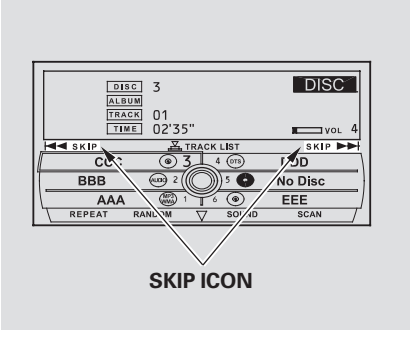

You can also change tracks/files on the audio control display. Press the AUDIO button to view the display, then push the selector on the interface dial to the right to skip forward to the beginning of the next track/file. Push the selector left to skip backward to the beginning of the current track/file. Press it again to skip to the beginning of the previous track/file.

CONTINUED

Audio System

In MP3/WMA mode
FOLDER SELECTION — To select a different folder, press and release the ▶▶ side of the TUNE/FOLDER bar to move to the beginning of the next folder. Press and release the ◀◀ side of the bar to move to the beginning of the current folder. Press it again to skip to the beginning of the previous folder.

Using a Track List
You can also select a track/file (in MP3/WMA) directly from the track list on the audio control display. Press the AUDIO button to view the display, then rotate the interface dial to the current disc. Press ENTER on the selector to view the track list on the display. The current disc is highlighted.

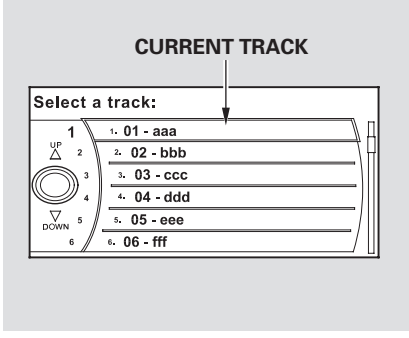

To select a track, rotate the interface dial or push up and down the selector on the interface dial. Then press ENTER on the selector to enter your selection.

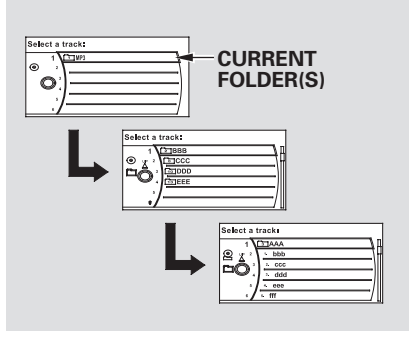

In MP3/WMA mode
You will see a list of the folder(s) in the current disc. To select a folder (s), rotate the interface dial or push up and down the selector on the interface dial. Then press ENTER on the selector to enter your selection. If the disc has several folders, the list advances to the next folder. When the list of the files is displayed, select it by rotating the dial, or pushing the selector up and down.

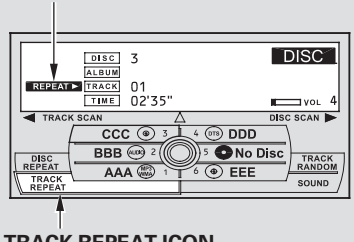

REPEAT — This feature, when activated, continuously replays the current track (file in MP3/WMA mode). To activate it, press the AUDIO button to view the display, then push down the selector on the interface dial. Rotate the interface dial to select track repeat. Press ENTER on the selector to enter your selection.

You will see “REPEAT” next to the TRACK icon on the audio control display. To turn off this feature, select track repeat as previously described, then press ENTER again.

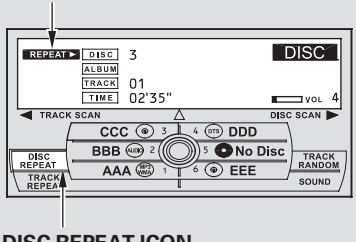

DISC REPEAT — This feature, when activated, continuously replays the current CD. Press the AUDIO button to view the audio control display, then push down the selector on the interface dial. Rotate the interface dial to select the disc repeat. Press ENTER on the selector to enter your selection. You will see “REPEAT” next to the DISC icon on the audio control display. To turn off this feature, select the disc repeat, then press ENTER again.

Audio System

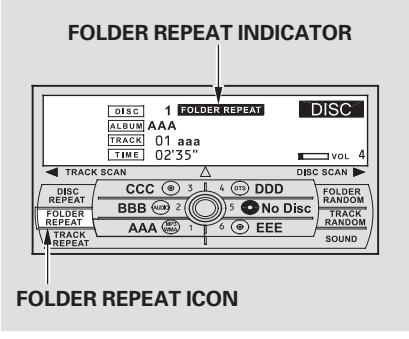

In MP3/WMA mode
FOLDER REPEAT — This feature, when activated, replays all the files on the selected folder in the order they are compressed in MP3/WMA. To activate folder repeat, press the AUDIO button to view the display, then push down the selector on the interface dial. Rotate the interface dial to select folder repeat. Press ENTER on the selector to enter your selection.

You will see “FOLDER REPEAT” on the audio control display. To turn off this feature, select folder repeat, then press ENTER again.

SCAN — The scan function samples all the tracks/files (in MP3/WMA mode) of the current disc/folder in the order they are recorded on the CD. To activate this feature, press and release the SCAN button. You will also see “SCAN” and the track/file number blinking on the upper display. To hear the rest of the track/file, press and hold the SCAN button for more than 2 seconds. If you don’t, the system advances to the next tracks/files, plays about 10 seconds of it, and continues through the rest of the track/file the same way. When the system finishes scanning all the tracks/files in the current disc, the system returns to the track/file it first started scanning with, scan is canceled, and the system begins to play that track/file

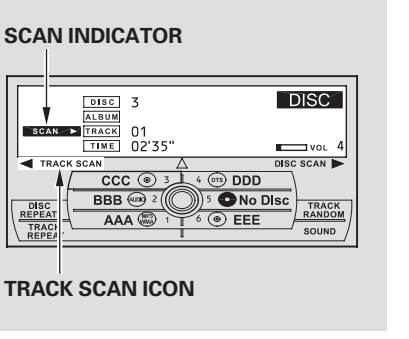

normally.

To activate scan feature on the audio control display, press the AUDIO button to view the display. Push down the selector on the interface dial, then push the selector to the left. You will see “SCAN” next to the TRACK icon on the audio control display. To turn off this feature, push the selector to the left again within 10 seconds.

In MP3/WMA mode

FOLDER SCAN — The folder scan function samples the first file of each folder in the current disc in the order they are compressed in MP3/WMA. To activate this feature, press the SCAN button twice. The first file of each folder plays for about 10 seconds. You will see “FOLDER SCAN” next to disc number on the audio control display. You will also see “SCAN” and the folder number blinking on the upper display. To hear the rest of the file in the folder currently scanning, press and hold the SCAN button for more than 2 seconds.

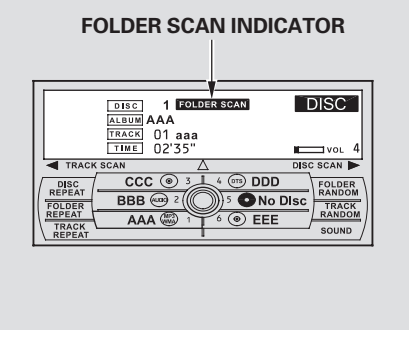

If you don’t, the system advances to the next folder, plays about 10 seconds of it, and continues through the rest of the folders the same way. When the system finishes scanning all the folders of the current disc, the system returns to the folder it started scanning with, folder scan is canceled and the system begins to play that folder normally.

DISC SCAN — The disc scan function samples the first track/file (in MP3/WMA mode) of each disc within the changer in numerical order. To activate this feature, press the SCAN button twice. In the MP3/WMA mode, press the SCAN button three times. The first track/file of each disc plays for about 10 seconds. You will see “SCAN” next to the DISC icon on the audio control display. You will also see “SCAN” and the disc number blinking on the upper display. To hear the rest of the track/file in the disc currently scanning, press and hold the SCAN button for more than 2 seconds.

CONTINUED

Audio System

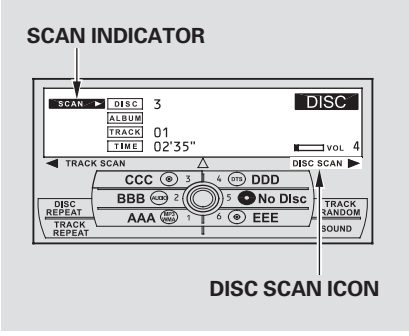

If you don't, the system advances to the next disc, plays about 10 seconds of it, and continues through the rest of the discs the same way. When the system finishes scanning all the discs, disc scan is canceled and the system begins to play the first track/file of that disc normally.

Each time you press and release the SCAN button, the mode changes from scan to folder scan, disc scan then to normal playing.

RANDOM (Random within a disc) — This feature plays the tracks (all files in each folder in MP3/WMA mode) within a disc in random order. To activate random play, press the AUDIO button to view the audio control display, then push down the selector on the interface dial. Rotate the interface dial to select random. Press ENTER on the selector to enter your selection.

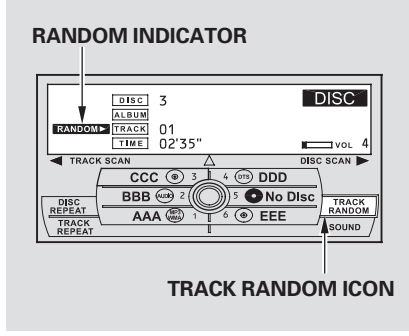

You will see "RANDOM" next to the TRACK/FILE icon on the audio display. To turn off this feature, select random, then press ENTER again.

Audio System

In MP3/WMA mode
FOLDER RANDOM — This feature plays the files within a folder in random order, rather than in the order they are compressed in MP3/WMA. To activate folder random play, press the AUDIO button to view the audio control display, then push down the selector on the interface dial. Rotate the interface dial to select the folder random. Press ENTER on the selector to enter your selection.

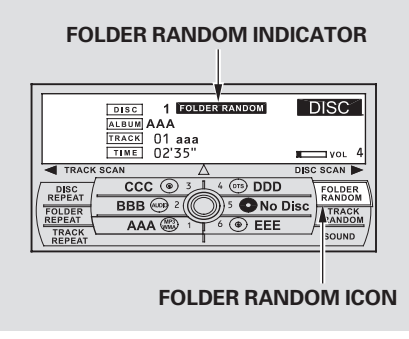

You will see “FOLDER RANDOM” on the audio control display. To turn off this feature, select the folder random then, press ENTER again.

Playing a DVD-A Disc

You can play a DVD-A disc in the CD changer. The disc controls are same as previously described.

To Pause a Disc

To pause a disc, press the corresponding number of the current disc on the preset buttons. To play the disc again, press the preset button again.

You can also pause a disc on the audio control display. Press the AUDIO button to view the display, select a corresponding number of the current disc on the preset icons by rotating the interface dial, then press ENTER on the interface selector. To play the disc again, select the preset icon, then press ENTER again.

To Stop Playing a Disc

If you turn the system off while a CD is playing, either with the PWR/VOL knob or by turning off the ignition switch, the disc will stay in the drive. When you turn the system back on, the CD will begin playing where it left off.

To take the system out of CD mode, press the AM/FM, or DISC/AUX, or «XM» button to switch to the radio, or satellite radio (U.S. models only), or auxiliary input while a CD is playing. When you return to CD mode by pressing the DISC/AUX button, play will continue at the same point that it left off.

Removing CDs from the Changer

To remove the disc that is currently playing, press and release the eject (▲) button. You will see "EJECT" on the upper display. When you remove the disc from the slot, the system begins the load sequence so you can load another disc in that position. If you do not load another disc within 10 seconds, the system selects the previous mode [AM, FM1, FM2, or XM Radio (U.S. models)].

If you do not remove the disc from the slot, the system will reload the disc after 10 seconds and put the CD changer in pause mode. To begin playing the disc, press the DISC/AUX button.

To remove a different CD from the changer, select it with the appropriate preset button, or icon on the audio control display. When that disc begins playing, press the eject button.

Press and hold the eject button until you hear a beep to remove all the discs from the changer.

You can also eject discs when the ignition switch is off by pressing the eject button. The disc that was last selected is ejected first. You can eject the rest of the discs one at a time.

Protecting Discs

For information on how to handle and protect compact discs, see page 233 .

CD Changer Error Messages

For information, see page 234 .

Adjusting the Sound

For information, see page 227 .

XM Satellite Radio

On U.S. RDX with Technology Package model only

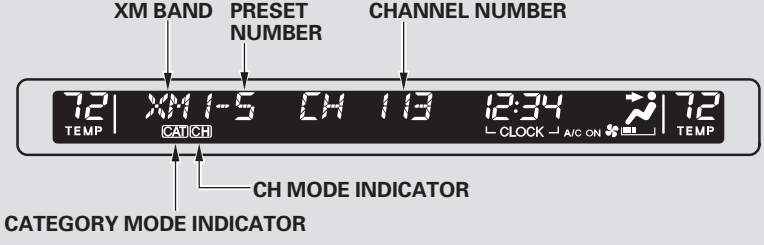

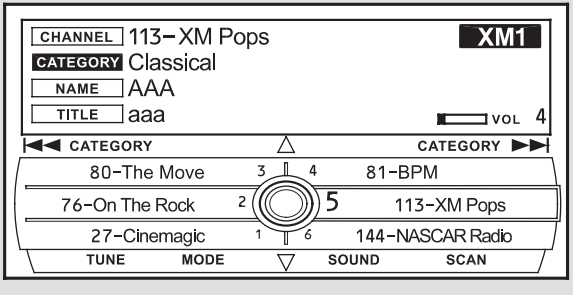

CONTINUED

Audio System

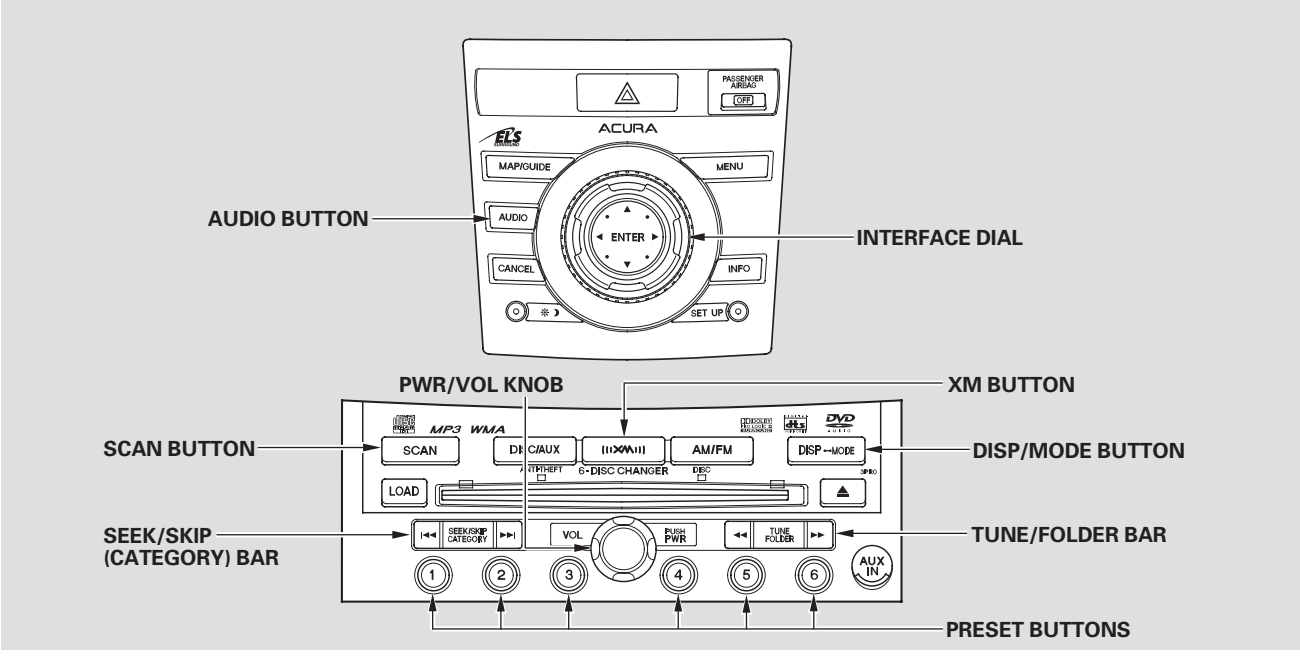

Audio System

Your vehicle is capable of receiving XM® Satellite Radio anywhere in the United States, except Hawaii and Alaska.
XM® is a registered trade mark of XM Satellite Radio, Inc.

XM Satellite Radio receives signals from two satellites to produce clear, high-quality digital reception. It offers many channels in several categories. Along with a large selection of different types of music, XM Satellite Radio also allows you to view channel and category selections in the upper display and the audio control display.

Operating the XM Radio
To listen to the XM satellite Radio, turn the ignition switch to the ACCESSORY (I) or ON (II) position. Push the PWR/VOL knob to turn on the audio system, and press the «XM» button. To view the audio control display, press the AUDIO button. Adjust the volume turning the PWR/VOL knob. The last channel you listened to will show on the upper display.

DISP — Each time you press and release the DISP/MODE button, the upper display changes in the following sequence: Channel name, category, artist name, and music title.

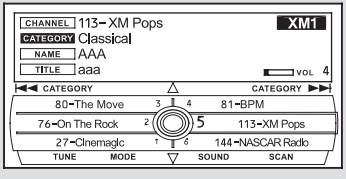

MODE — To switch between the category mode and channel mode, press and hold the DISP/MODE button until the mode changes. appears “CH” or “CAT” mode indicator appears on the upper display.

CONTINUED

Audio System

To Select a Channel
When in the satellite radio mode, you can use any of four methods to find channels: TUNE, SEEK/SKIP (CATEGORY), SCAN, and the preset icons.

You can also switch between the category mode and channel mode, on the audio control display. Press the AUDIO button to view the display, then push down the selector on the interface dial. Rotate the interface dial to select the mode. Press ENTER on the selector to enter your selection.

TUNE – Press the TUNE/FOLDER bar to change channel selections. Press the ▶▶ side of the bar to tune to higher numbered channels, and the ◀◀ side of the bar to tune to lower numbered channels. In the category mode, you can only select channels within that category.

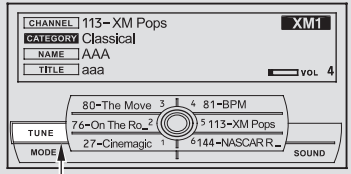

TUNE ICON

You can also change channel selections on the audio control display. Press the AUDIO button to view the display, then push down the selector on the interface dial. Rotate the interface dial to select the tune. Press ENTER on the selector to enter your selection. Rotate the interface knob to the desired channel. In the category mode, you can only select channels within that category.

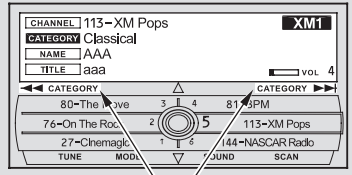

SEEK/SKIP (CATEGORY) ICON

SEEK/SKIP (CATEGORY) – Press either side of the SEEK/SKIP (CATEGORY) bar (⏮ or ⏭) to select another category.

You can also change the category on the audio control display. Press the AUDIO button to view the display, then push the selector on the interface dial to the right side or left side to select another category.

Audio System

SCAN — The scan function gives you a sampling of all channels while in the channel mode. In the category mode, only the channels within that category are scanned. To activate scan, press the SCAN button. The system plays each channel in numerical order for a few seconds, then selects the next channel. When you hear a channel you want to continue listening to, press the button again.

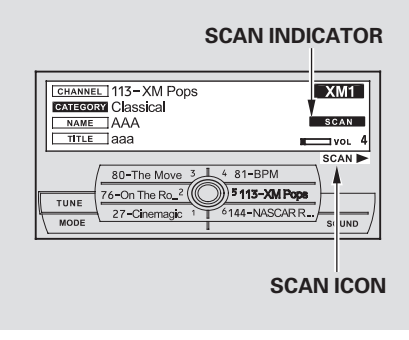

You can also scan the channels on the audio control display. Press the AUDIO button to view the display, then push down the selector on the interface dial. Push the selector to the right to activate scan feature.

Preset — You can store up to 12 preset channels using the preset buttons/icons. Each button/icon stores one channel from the XM1 band and one channel from the XM2 band.

To store a channel:

1. Press the «XM» button. To view the audio control display, press the AUDIO button. Either XM1 or XM 2 will be shown on the display.

2. Use the tune, seek, or scan function to tune to a desired channel.

In category mode, only channels within that category can be selected. In channel mode, all channels can be selected.

CONTINUED

Audio System

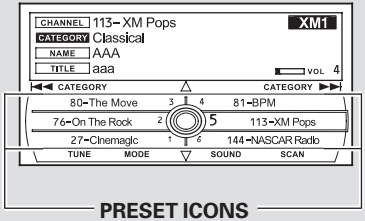

PRESET ICONS

3. Pick a preset number for the channel you want to store. Press and hold the appropriate button until you hear a beep.

   To store the channel on a preset icon, rotate the interface dial to select a desired preset icon. The selected preset icon will be highlighted. Press and hold ENTER on the selector for more than 2 seconds to store the channel.

4. Repeat steps 2 and 3 to store the first six channels.

5. Press the «XM» button again. The other XM band will be shown. Store the next six channels repeating steps 2 and 3.

Once a channel is stored, press and release the proper preset button to tune to it.

Adjusting the Sound
For information, see page 227 .

XM Satellite Radio Reception
For information, see page 235 .

Adjusting the Sound

On RDX with Technology Package model

BASS, TREBLE, BALANCE, and FADER are each adjustable. You can also adjust the strength of the sound coming from the center and subwoofer speakers. In addition, you can set the Dolby PL (Prologic) II and Speed-sensitive volume compensation (SVC).

To adjust each mode, press the AUDIO button to view the audio control display, push the interface selector down, and turn the interface dial to SOUND. Then press ENTER on the selector.

Select the mode you want to adjust by pushing the interface selector up or down, or by turning the interface dial.

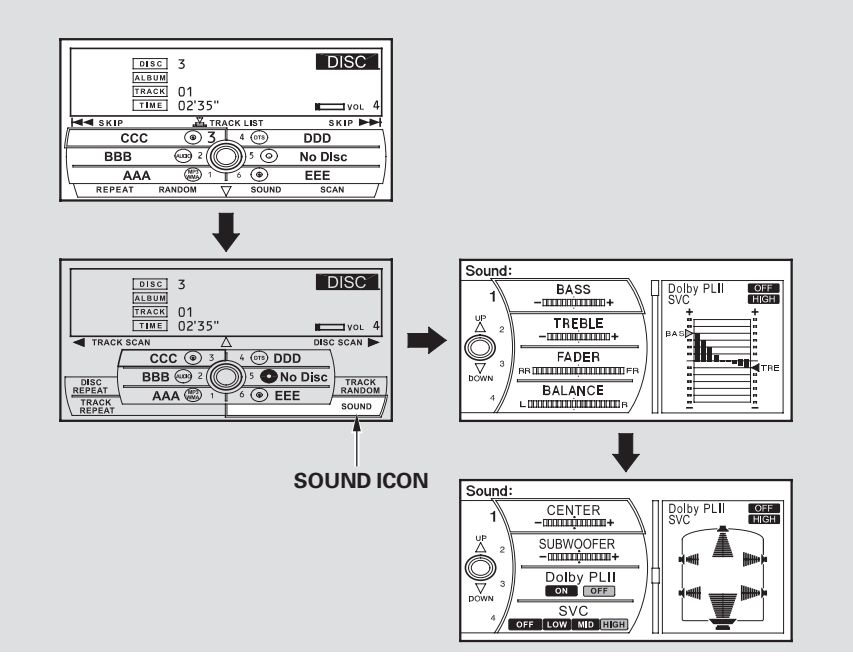

CONTINUED

Audio System

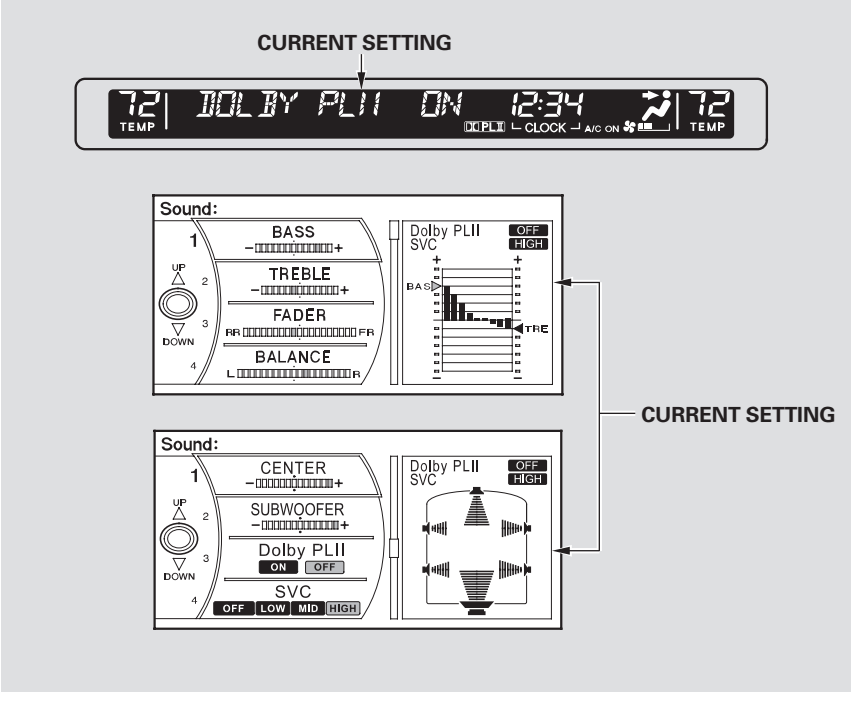

The current setting is also shown on the upper display.

The system will automatically return the display to the selected audio mode about 5 seconds after you stop adjusting a mode.

BASS/TREBLE — To adjust bass and treble, select BASS or TREBLE, and press ENTER on the interface selector. The current setting is shown on the audio control display. Turn the interface dial to the desired level (−6 to +6), and enter your selection by pressing ENTER.

FADER/BALANCE — These modes adjust the strength of the sound coming from each speaker. Fader adjusts the front-to-back strength, while balance adjusts the side-to-side strength. To adjust fader and balance, select FADER or BALANCE, then press ENTER on the interface selector. The current setting is shown on the audio control display. Turn the interface dial to the desired level (fader: F9 to R9, balance: L9 to R9), and enter your selection by pressing ENTER. To equalize the fader or balance, turn the interface dial until the readings on the sound grid come to the center of the adjustment bar.

CENTER/SUBWOOFER — To adjust the strength of the sound from the center or subwoofer speaker, select it and press ENTER on the interface selector. Turn the interface dial to the desired level (−6 to +6), and enter your selection by pressing ENTER. The current setting is shown on the audio control display. Even if the adjustment level reaches −6, the sub woofer is not turned off.

Dolby PL (Prologic) II — Dolby PL (Prologic) II signal processing creates multi-channel surround sound from the audio signal recorded with 2ch stereo sources. Dolby prologic II can only activate when listening to CD (CD-DA, MP3/WMA), XM radio, and AUX. When it activates, “DPL II” is shown on the upper display.

To set this feature on or off, select Dolby PL II, and press ENTER on the interface selector. Rotate the interface dial to ON or OFF, and press ENTER.

Manufactured under license from Dolby Laboratories. “Dolby”, “ProLogic”, and the double-D symbol are trademarks of Dolby Laboratories.

CONTINUED

Audio System, Auxiliary Input Jack

Speed-sensitive volume compensation (SVC) — The SVC mode controls the volume based on vehicle speed. The faster you go, the louder the audio volume becomes. As you slow down, the audio volume decreases.

The SVC has four modes; OFF, LOW, MID, and HIGH. The default setting is MID.

Turn the interface dial to the desired setting, and enter your selection by pressing ENTER.

Auxiliary Input Jack

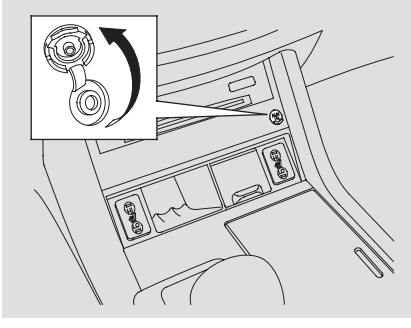

The auxiliary input jack is on the disc changer unit. The system will accept auxiliary input from standard audio accessories.

Connect a compatible audio unit to the jack, then select it by pressing:

- CD/AUX button (U.S. RDX model)
- AUX button (Canadian RDX model)
- DISC/AUX button (RDX with Technology Package model)

Radio Reception

Radio Frequencies
The radio can receive the complete AM and FM bands.
Those bands cover these frequencies:

AM band: 530 to 1,710 kHz
FM band: 87.7 to 107.9 MHz

Radio stations on the AM band are assigned frequencies at least 10 kHz apart (530, 540, 550). Stations on the FM band are assigned frequencies at least 0.2 MHz apart (87.9, 88.1, 88.3).

Stations must use these exact frequencies. It is fairly common for stations to round off the frequency in their advertising, so your radio could display a frequency of 100.9 even though the announcer may identify the station as “FM101.”

Radio Reception
How well the radio receives stations is dependent on many factors, such as the distance from the station’s transmitter, nearby large objects, and atmospheric conditions.

A radio station’s signal gets weaker as you get farther away from its transmitter. If you are listening to an AM station, you will notice the sound volume becoming weaker, and the station drifting in and out. If you are listening to an FM station, you will see the stereo indicator flickering off and on as the signal weakens. Eventually, the stereo indicator will go off and the sound will fade completely as you get out of range of the station’s signal.

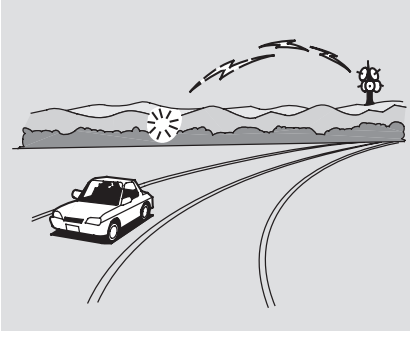

Driving very near the transmitter of a station that is broadcasting on a frequency close to the frequency of the station you are listening to can also affect your radio’s reception. You may temporarily hear both stations, or hear only the station you are close to.

CONTINUED

Radio Reception

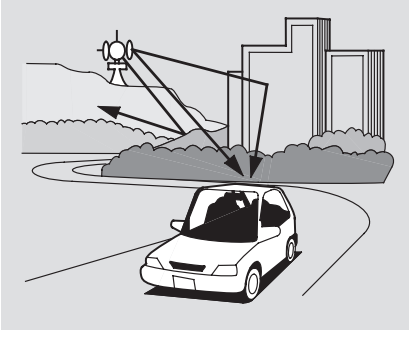

Radio signals, especially on the FM band, are deflected by large objects such as buildings and hills. Your radio then receives both the direct signal from the station's transmitter, and the deflected signal. This causes the sound to distort or flutter. This is a main cause of poor radio reception in city driving.

Radio reception can be affected by atmospheric conditions such as thunderstorms, high humidity, and even sunspots. You may be able to receive a distant radio station one day and not receive it the next day because of a change in conditions.

Electrical interference from passing vehicles and stationary sources (such as garages or parking structures) can cause temporary reception problems.

As required by the FCC:
Changes or modifications not expressly approved by the party responsible for compliance could void the user's authority to operate the equipment.

Protecting Your Discs

General Information

- When using CD-R/CD-RW discs, use only high quality CDs labeled for audio use.
- When recording a CD-R/CD-RW, the recording must be closed for it to be used by the system.
- Play only standard round CDs. Odd-shaped CDs may jam in the drive or cause other problems.
- Handle your CDs properly to prevent damage and skipping.

Protecting CDs

When a CD is not being played, store it in its case to protect it from dust and other contamination. To prevent warpage, keep CDs out of direct sunlight and extreme heat.

To clean a CD, use a clean soft cloth. Wipe across the CD from the center to the outside edge.

A new CD may be rough on the inner and outer edges. The small plastic pieces causing this roughness can flake off and fall on the recording surface of the CD, causing skipping or other problems. Remove these pieces by rubbing the inner and outer edges with the side of a pencil or pen.

Never try to insert foreign objects in the disc changer.

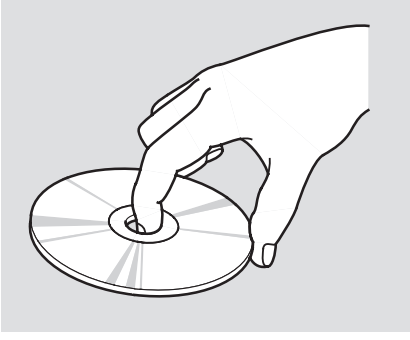

Handle a CD by its edges; never touch either surface. Do not place stabilizer rings or labels on the CD. These, along with contamination from fingerprints, liquids, and felt-tip pens, can cause the CD to not play properly or possibly jam in the drive.

CD Changer Error Messages

If you see an error message in the display while playing a CD, find the cause in the chart to the right. If you cannot clear the error message, take the vehicle to your dealer.

Error Message	Cause	Solution
CHECK DISC	FOCUS Error	Press the EJECT button, and pull out the disc. Check if it is inserted correctly in the disc changer. Make sure the disc is not scratched or damaged.
MECH ERROR	Mechanical Error	Press the EJECT button, and pull out the disc. Check the disc for damage or deformation. If the disc cannot be pulled out, or the error message does not disappear after the disc is ejected, see your dealer.
HOT	High Temperature	Will disappear when the temperature returns to normal.
CHECK DISC LOAD	Check Disc	Press the EJECT button, and pull out the disc. Check if it is playable disc in the CD changer (see page 208).
CHANGER ERROR	Check Disc and Changer Error	Press the EJECT button, and pull out the disc. Check the disc for damage or deformation. If the disc cannot be pulled out, or the error message does not disappear after the disc is ejected, see your dealer.

Playing the XM® Satellite Radio (U.S. Models)

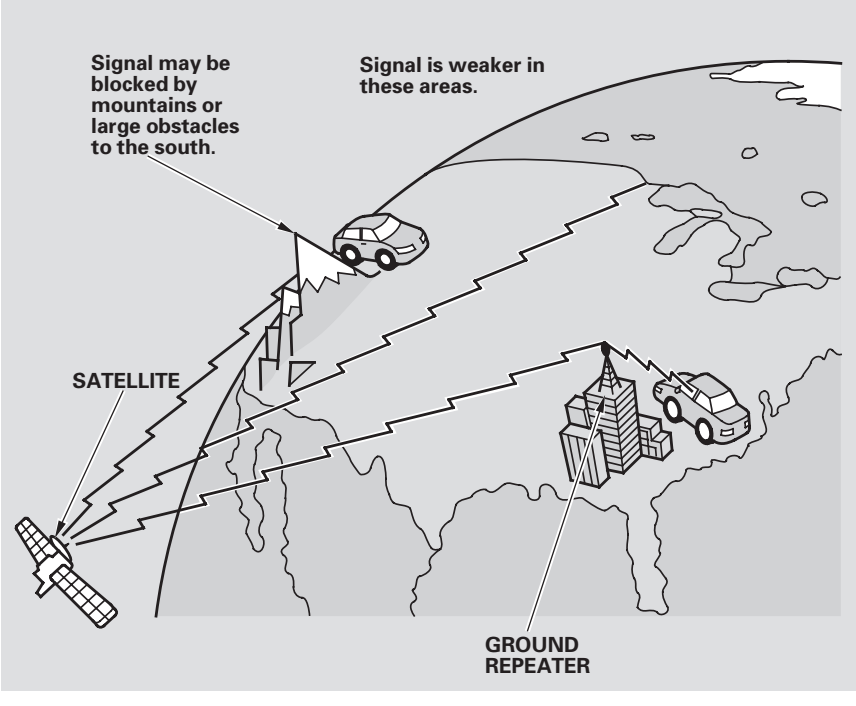

Satellite Radio Signals

Satellite radio receives signals from two satellites to produce clear, high-quality digital reception. It offers many channels in several categories. Along with a large selection of different types of music, satellite radio also allows you to view channel and category selections in the audio display.

The XM satellites are in orbit over the equator; therefore, objects south of the vehicle may cause satellite reception interruptions. To help compensate for this, ground-based repeaters are placed in major metropolitan areas.

Satellite signals are more likely to be blocked by tall buildings and mountains the farther north you travel from the equator.

CONTINUED

Playing the XM® Satellite Radio (U.S. Models)

Depending on where you drive, you may experience reception problems. Interference can be caused by any of these conditions:

- Driving on the south side of an east/west mountain road.
- Driving on the north side of a large commercial truck on an east/west road.
- Driving in tunnels.
- Driving on a road beside a vertical wall, steep cliff, or hill to the south of you.
- Driving on the lower level of a multi-tiered road.
- Driving on a single lane road alongside dense trees taller than 50 ft. (15 m) to the south of you.

There may also be other geographic situations or structures that could affect satellite radio reception.

As required by the FCC:
Changes or modifications not expressly approved by the party responsible for compliance could void the user's authority to operate the equipment.

Receiving Satellite Radio Service
If your XM Radio service has expired or you purchased your vehicle from a previous owner, you can listen to a sampling of the broadcasts available on XM satellite radio. With the ignition switch in the ACCESSORY (I) or the ON (II) position, push the PWR/VOL knob to turn on the audio system, and press the CD/XM button. A variety of music types and styles will play.

If you decide to purchase XM satellite radio service, contact XM Radio at *www.xmradio.com*, or at 1-800-852-9696. You will need to give them your radio I.D. number and your credit card number. To get your radio I.D. number, turn the TUNE knob until "0" appears in the display. Your I.D. will appear in the display.

After you've registered with XM Radio, keep your audio system in the satellite radio mode while you wait for activation. This should take about 30 minutes.

While waiting for activation, make sure your vehicle remains in an open area with good reception. Once your audio system is activated, "category" or "CH" will appear in the display, and you'll be able to listen to XM Radio broadcasts. XM Radio will continue to send an activation signal to your vehicle for at least 12 hours from the activation request. If the service has not been activated after 36 hours, contact XM Radio.

Remote Audio Controls

Three controls for the audio system are mounted in the steering wheel hub. They let you control basic functions without removing your hand from the steering wheel.

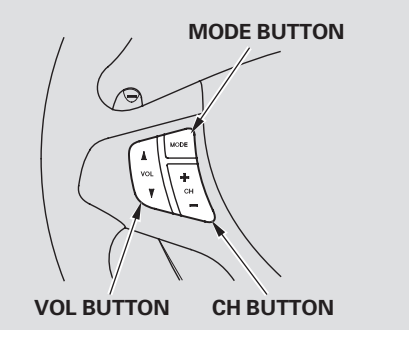

The VOL button adjusts the volume up (▲) or down (▼). Press the top or bottom of the button, hold it until the desired volume is reached, then release it.

The MODE button changes the mode. Pressing the button repeatedly selects FM1, FM2, AM, XM Satellite Radio (U.S. models except Alaskan and Hawaiian models), or CD (if a CD is loaded).

If you are listening to the radio, use the CH button to change stations. Each time you press and release the top (+) of the button, the system goes to the next preset station on the band you are listening to. Press and release the bottom (−) to go back to the previous station.

To activate the seek function, press and hold the top (+) or bottom (−) of the CH button until you hear a beep. The system searches up or down from the current frequency to find a station with a strong signal.

CONTINUED

Remote Audio Controls

If you are playing CD, the system skips to the beginning of the next track/file (in MP3/WMA mode) each time you press the top (+) of the CH button. Press the bottom (−) to return to the beginning of the current track/file. Press it again to return to the previous track/file.

To select a different disc/folder (in MP3/WMA mode), press and hold the top (+) or bottom (−) of the CH button until you hear a beep.

On U.S. models except Alaskan and Hawaiian

If you are listening to XM Satellite Radio, use the CH button to change channels. Each time you press the top (+) of the button, the system goes to the next preset channel. Press the bottom (−) to go back to the previous preset channel.

To select a different channel of the category you are listening to, press and hold the top (+) or bottom (−) of the CH button until you hear a beep.

Radio Theft Protection

Your vehicle's audio system will disable itself if it is disconnected from electrical power for any reason. To make it work again, you must enter a specific five-digit code with the preset bars or buttons (depending on models). Because there are hundreds of number combinations possible from the five digits, making the system work without knowing the exact code is nearly impossible.

You should have received a card that lists your audio system code number and serial number. It is best to store this card in a safe place at home. In addition, you should write the audio system's serial number in this owner's manual.

If you lose the card, you must obtain the code number from your dealer. To do this, you will need the audio system's serial number.

If your vehicle's battery is disconnected or goes dead, or the radio fuse is removed, the audio system will disable itself. If this happens, you will see "ENTER CODE" on the center or upper display (depending on models) the next time you turn on the system. Use the preset bars or buttons (depending on models) to enter the five-digit code. The code is located on the radio code card included in your owner's manual kit. When it is entered correctly, the radio will start playing.

If you make a mistake entering the code, do not start over; complete the five-digit sequence, then enter the correct code. You have 10 tries to enter the correct code. If you are unsuccessful in 10 attempts, you must then leave the system on for 1 hour before trying again.

The system will retain your AM and FM presets even if power is disconnected.

Security System

The security system helps to protect your vehicle and valuables from theft. The horn sounds and a combination of headlights, parking lights, side marker lights, and taillights flashes if someone attempts to break into your vehicle or remove the radio. This alarm continues for 2 minutes, then the system resets. To reset an alarming system before the 2 minutes have elapsed, unlock the driver's door with the key or the remote transmitter.

The security system automatically sets 15 seconds after you lock the doors, hood, and the tailgate. For the system to activate, you must lock the doors and the tailgate from the outside with the key, driver's lock tab, door lock master switch, or remote transmitter. The security system indicator on the instrument panel starts blinking immediately to show you the system is setting itself.

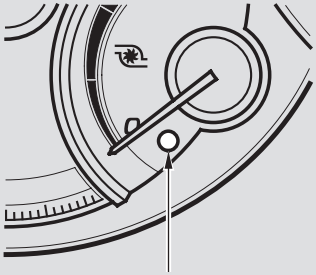

Once the security system is set, opening any door, the tailgate, or the hood without using the key or the remote transmitter, will cause it to alarm. It also alarms if the radio is removed from the dashboard or the wiring is cut.

The alarm will also be activated if the passenger inside the locked vehicle turns the ignition switch on.

The security system will not set if the hood, tailgate, or any door is not fully closed. Before you leave the vehicle, make sure the doors, tailgate, and hood are securely closed.

NOTE: To see if the system is set after you exit the vehicle, press the LOCK button on the remote transmitter within 5 seconds. If the system is set, a beep will sound.

Do not attempt to alter this system or add other devices to it.

Cruise Control

Cruise control allows you to maintain a set speed above 25 mph (40 km/h) without keeping your foot on the accelerator pedal. It should be used for cruising on straight, open highways. It is not recommended for city driving, winding roads, slippery roads, heavy rain, or bad weather.

⚠ WARNING

Improper use of the cruise control can lead to a crash.

Use the cruise control only when traveling on open highways in good weather.

Using Cruise Control

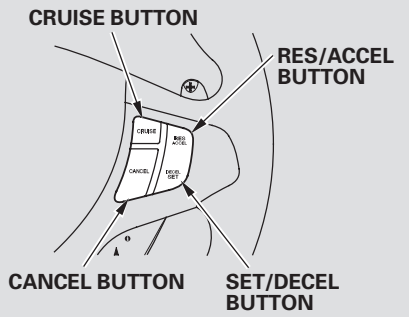

1. Push in the CRUISE button on the steering wheel. The CRUISE MAIN indicator on the instrument panel comes on.

2. Accelerate to the desired cruising speed above 25 mph (40 km/h).

3. Press and release the SET/DECEL button on the steering wheel. The CRUISE CONTROL indicator on the instrument panel comes on to show the system is now activated.

Cruise control may not hold the set speed when you are going up and down hills. If your vehicle speed increases going down a hill, use the brakes to slow down. This will cancel the cruise control. To resume the set speed, press the RES/ACCEL button. The CRUISE CONTROL indicator on the instrument panel will come back on.

When climbing a steep hill, the automatic transmission may downshift to hold the set speed.

Cruise Control

Changing the Set Speed
You can increase the set cruising speed in any of these ways:

- Press and hold the RES/ACCEL button. When you reach the desired cruising speed, release the button.
- Push on the accelerator pedal. Accelerate to the desired cruising speed, then press the SET/DECEL button.
- To increase your speed in very small amounts, tap the RES/ACCEL button. Each time you do this, the vehicle speeds up about 1 mph (1.6 km/h).

You can decrease the set cruising speed in any of these ways:

- Press and hold the SET/DECEL button. Release the button when you reach the desired speed.
- To slow down in very small amounts, tap the SET/DECEL button. Each time you do this, your vehicle will slow down about 1 mph (1.6 km/h).
- Tap the brake pedal lightly with your foot. The CRUISE CONTROL indicator on the instrument panel will go out. When the vehicle slows to the desired speed, press the SET/DECEL button.

Even with cruise control on, you can still use the accelerator pedal to speed up for passing. After completing the pass, take your foot off the accelerator pedal. The vehicle will return to the set cruising speed.

Resting your foot on the brake pedal causes cruise control to cancel.

Cruise Control

Cancelling Cruise Control

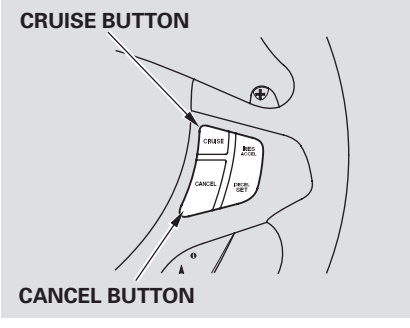

You can cancel cruise control in any of these ways:

- Tap the brake pedal.
- Push the CANCEL button on the steering wheel.
- Push the CRUISE button on the steering wheel.

The cruise control will be canceled when the vehicle speed reaches about 25 mph (40 km/h) or less.

Tapping either of the paddle shifters shifts the gear up or down, but the cruise control will be canceled if you downshift to first gear.

For more information on driving with paddle shifters, see page 299 .

Resuming the Set Speed

When you push the CANCEL button or tap the brake pedal, the system remembers the previously set speed. To return to that speed, accelerate to above 25 mph (40 km/h), then press and release the RES/ACCEL button. The CRUISE CONTROL indicator comes on. The vehicle accelerates to the same speed as before.

Pressing the CRUISE button turns the system completely off and erases the previous cruising speed.

AcuraLink

On U.S. RDX with Technology Package model except Alaskan and Hawaiian

AcuraLink enhances your ownership experience by providing a direct communication link between your vehicle and the Acura Server. Working through the XM radio satellite, AcuraLink works in conjunction with the navigation system, HandsFreeLink (HFL), and audio system in your vehicle. It displays and receives several kinds of messages, including:

- Operating tips and information on your vehicle's features.
- Important recall and safety information.
- Maintenance information to keep your vehicle in top condition.
- Diagnostic information to provide information about any problems with your vehicle.

Interface Dial

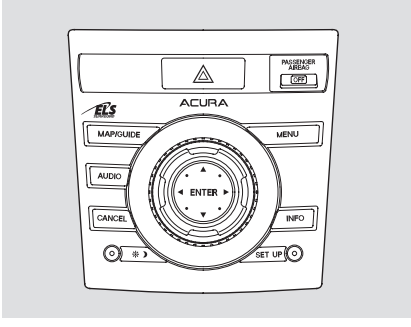

Most AcuraLink functions are controlled by the interface dial. The interface dial has two parts, a knob and a selector.

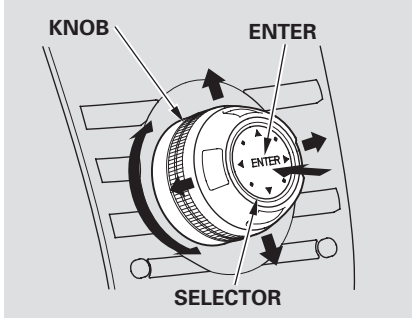

The knob turns left and right. Use it to make selections or adjustments to a list or menu on the screen.

The selector can be pushed left, right, up, down, and in. Use the selector to scroll through lists, to select menus, and to highlight menu items. When you make a selection, push the center of the selector (ENTER) to go to that selection.

Reading Messages

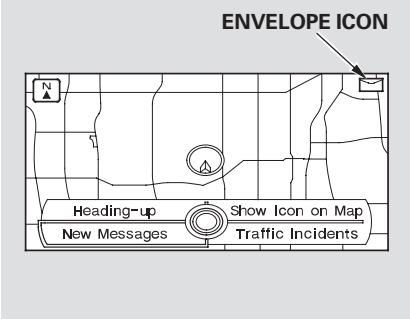

If you have a new message, an envelope icon appears in the top right corner of the navigation screen.

To open a message:

- Press ENTER on the interface selector, then select New Message from the navigation system map menu. If there is more than one new message, you will see a list of message titles.

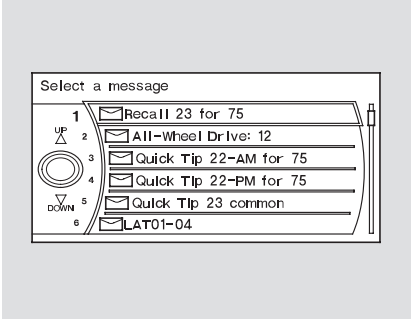

- Select Message to display the Select a message category screen. Then, select ALL MESSAGES.

- Scroll up or down, and select the message you want to read by pressing ENTER on the interface selector.

  To view previously read messages, press the INFO button, then select messages.

Unread messages have a closed envelope icon next to them. The icon disappears when it has already been read.

NOTE: Only diagnostic info messages appear while driving. They indicate if your vehicle has a problem that may need immediate attention (see page 251).

After purchasing your vehicle, messages may not appear immediately.
Your dealer has to register the vehicle identification before you can receive messages. This can take several days to process.

Deleting Messages

NOTE: Diagnostic info and recall/campaign messages can only be deleted by your dealer.

To delete a single message:

- Press the INFO button to bring up the Information screen.
- Scroll to the Messages option, then select it by pressing ENTER on the interface selector.
- Use the interface knob to scroll up or down to the message title you want to delete, and select it by pressing ENTER on the interface selector.
- Scroll to Delete with the interface knob, and select it by pressing ENTER on the interface selector.

To delete all messages:

NOTE: The Delete All Messages command only works for quick tip and maintenance minder messages. Other messages must be deleted individually.

- Press the SETUP button to view the setup screen.
- Select MORE by pushing the interface selector to the right.
- Use the interface knob to scroll to the AcuraLink/Messages button, and select it by pressing ENTER on the interface selector.
- Scroll to the Delete Messages option, and select it by pressing ENTER on the interface selector.
- Scroll to the category with the messages you want to delete, and select the category by pressing ENTER on the interface selector.

Message Options

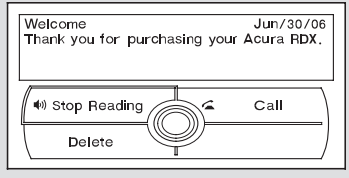

When you open a message, you can read a summary of it, and then choose one of several options. If an option is not available for a message, that button will not be highlighted.

Delete — Select this button to delete the current message.

Voice — Select this button to hear a voice read the entire message. This gives you more information than the screen can display at one time. When you select the Voice button, it changes to a Stop Reading button. Select the button again to stop the voice.

Call — Select this button to call a phone number embedded in the message. When you select **Call**, the HandsFreeLink (HFL) dials the number for you.
To make a call, your Bluetooth compatible phone must be paired to your vehicle's HandsFreeLink (see page 257).

Find Nearest Acura Dealer — Select this button to find the nearest Acura dealer using the navigation system.

Call Your Acura Dealer — Select this button to call the Acura dealer you purchased your vehicle from. AcuraLink also directs you to this dealer so you can schedule a maintenance appointment or receive information about a message. If you visit another dealer for service two times within a 14-month period, AcuraLink will reset to call that dealer.

Diagnostic Info — Select this button to get more information about the current diagnostic message. To use this option, your cell phone must be linked to the HFL and have a compatible data service available. Access the Owner Link website to find out which data services are currently compatible with AcuraLink.

Message Preferences
To set your AcuraLink preferences (the types of messages you want to receive, if any), visit the Owner Link website at *www.owners.acura.com*, and choose what you would like to receive. If you do not have internet access, call Acura Client Services at (800) 382-2238; they can set your message preferences for you.

AcuraLink

AcuraLink/Message Screen

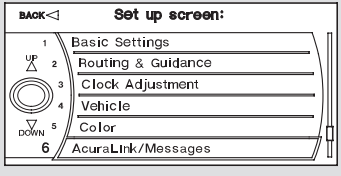

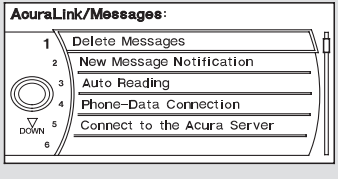

To access the following functions, press the SETUP button, push the interface dial to the right to select MORE, then rotate the interface dial to select AcuraLink/Messages.

Delete Messages — Select this button to delete all stored messages within a category, except for diagnostic info and recall campaign messages. These messages can only be deleted by a certified technician after the recall is done or the problem is corrected, or through a broadcast message from Acura.

New Message Notification — Select ON if you want to be notified of new messages (envelope icon appears on the navigation screen). Select OFF if you do not want to be notified of new messages (envelope icon does not appear on the navigation screen).

Auto Reading — Select ON to have the system automatically read each message to you. Select OFF to manually select the Voice button when you want a message read to you.

Phone-Data Connection — Select this button to begin the process required to connect to Acura. This is used to access the most recent diagnostic information when a problem occurs.

NOTE: For the Phone Data Connection button to be active, you need a Bluetooth compatible and enabled cellphone paired to the HandsFreeLink (HFL), and a compatible data service (see ***Pairing Your Phone*** on page 262).

Message Categories

There are six message categories in AcuraLink: Quick Tips, Feature Guides, Maintenance Minders, Recalls/Campaigns, Diagnostic Info, and Dealer Appointment Reminders. The system can store up to 256 messages.

Message categories can be added, revised, or deleted through broadcast messages from Acura.

Quick Tips

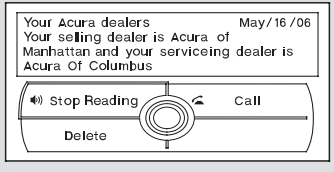

These messages, based on updated vehicle information and comments from other RDX owners, supplement your Owner's Manual and Quick Start Guide. They provide you with relevant information for a safe and enjoyable ownership experience. For additional information, call Acura Client Services directly through the HFL.

Feature Guide

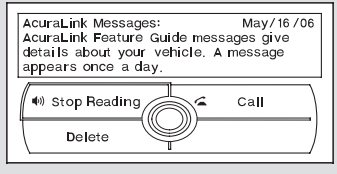

During the first 90 days of ownership, one of 16 different messages appears each day. These messages help you to use and understand the technological features of your vehicle.

AcuraLink

Maintenance Minder

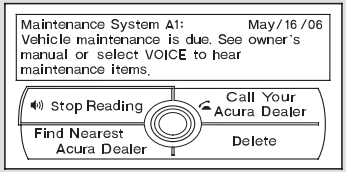

These messages provide detailed information about the service needed for your vehicle. When a maintenance message appears on the multi-information display, a list of needed maintenance items also appears in an AcuraLink message. These messages tell you the exact maintenance needed, helping you to avoid unnecessary maintenance costs.

You can then use the message options to call your dealer for an appointment or to find the nearest dealer.

Recall/Campaigns

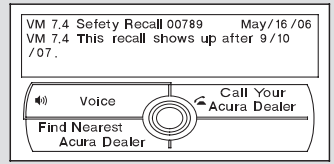

If your vehicle is affected by a recall or other important safety information, a letter will be mailed to you about the issue and how to fix it. If you don't get your vehicle fixed, you will also receive a reminder message through AcuraLink. You can then use the message options to call your dealer for an appointment or to find the nearest dealer.

Diagnostic Info
If an instrument panel indicator stays on when it should go off, or a message appears on the multi-information display, AcuraLink can identify the problem, send the information to Acura for analysis, and then provide you with the most accurate repair information available all before going to a dealer. This helps you handle the problem as it occurs, preventing or limiting costly repairs.

The AcuraLink system cannot determine some mechanical problems (such as squeaks or rattles) that are not triggered by the diagnostic indicator monitors.

A diagnostic message is generated if any of the instrument panel indicators stay on when they should go off. For more information on the instrument panel indicators, see page 63 .

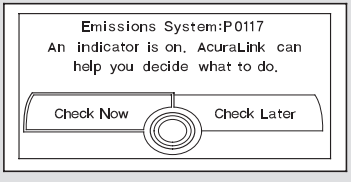

When an instrument panel indicator comes on, AcuraLink immediately notifies you with the message, “Check more information.” If you do not want the information right away, select the Check Later option. If you want the information now, select the Check Now option. (If the navigation screen is not active, you must select OK from the navigation disclaimer screen before you can check the information.)

Depending on the severity of the problem, the message will let you know if you should see your dealer immediately or if you can wait a while.

CONTINUED

AcuraLink

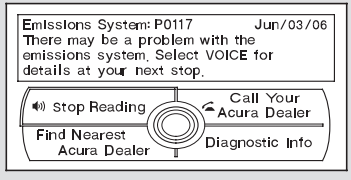

You will see information from the onboard troubleshooting database.

You can then use message options to call your dealer for an appointment, find the nearest dealer, or find out more information about the issue.

When you select the Diagnostic Info option, if the HFL is connected to a cellular data service, AcuraLink gathers more information about the problem, and sends it to Acura. There, the information is analyzed and returned to the vehicle with the most accurate repair information.

Dealer Appointment Reminder

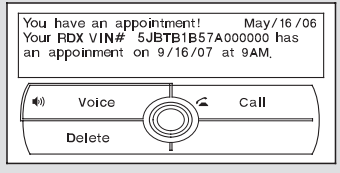

When you make an appointment through the Owner's Link Online Scheduling Service, you can be reminded about that appointment through the AcuraLink two days in advance. If you need to reschedule, you can call your dealer directly with the HFL.

The timing of your reminder is based on your reminder preference established on Owner Link.

HomeLink Universal Transceiver

The HomeLink® universal transceiver built into your vehicle can be programmed to operate up to three remotely controlled devices around your home, such as garage doors, lighting, or home security systems.

General Information
If you are training HomeLink to operate a garage door or gate, you should unplug the motor for that device during training. Repeatedly pressing the remote control button could burn out the motor.

HomeLink stores the code in a permanent memory. There should be no need to retrain HomeLink if your vehicle's battery goes dead or is disconnected. If your garage door opener was manufactured before April 1982, you may not be able to program HomeLink to operate it. They do not have the safety feature that causes the motor to stop and reverse if an obstacle is detected during closing, increasing the risk of injury.

Important Safety Precautions
Always refer to the opening instructions and safety information that came with your garage door opener or other equipment you intend to operate with HomeLink. If you do not have this information, contact the manufacturer of the equipment.

For quick and accurate training, make sure the remote transmitter for the device (garage door, automatic gate, security system, etc.) has a fresh battery.

Training HomeLink
Before you begin — If you just received your vehicle and have not trained any of the buttons in HomeLink before, you should erase any previously learned codes before training the first button.

To do this, press and hold the two outside buttons on the HomeLink transceiver for about 20 seconds, until the red indicator flashes. Release the buttons, then proceed to step 1.
If you are training the second or third buttons, go directly to step 1.

1. Unplug the garage door opener motor from the electrical outlet.

2. Hold the end of the garage door opener remote 2 to 5 inches from HomeLink. Make sure you are not blocking your view of the red indicator in HomeLink.

CONTINUED

HomeLink Universal Transceiver

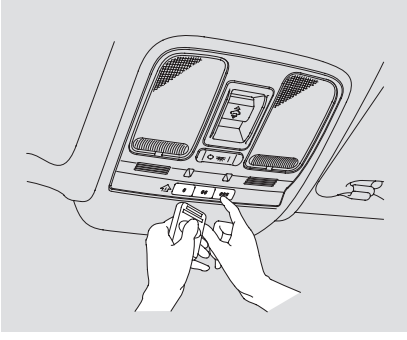

3. Press and hold the remote transmitter button and one of the HomeLink buttons at the same time.
   - If the red indicator in HomeLink begins to flash slowly at first, then rapidly, release both buttons, and go to step 5.
   - If the red indicator in HomeLink continues to flash slowly (does not flash rapidly), your remote transmitter may stop transmitting after a short time. Go to step 4.

4. Press and hold the remote transmitter button and one of the HomeLink buttons at the same time. While continuing to hold the HomeLink button, press and release the remote transmitter button every 2 seconds.
   - If the red indicator in HomeLink begins to flash slowly at first, then rapidly, release both buttons, and go to step 5.
   - If the red indicator in HomeLink continues to flash slowly (does not begin to flash rapidly), repeat steps 2 thru 4.

5. Plug in the garage door opener motor, then test the HomeLink button by pushing it for about 1 second.
   - If the button works, programming is complete.
   - If the button does not work go to step 6.

6. Push and hold the HomeLink button for a few seconds, then watch the red indicator on HomeLink.
   - If the indicator stays on or flashes slowly, repeat steps 2 thru 5.
   - If the indicator flashes rapidly for 2 seconds then stays on, you have a rolling code transmitter: go to “Training with a Rolling Code System” (see page 255).

7. Repeat these steps to train the other two HomeLink buttons to operate any other compatible remotely controlled devices around your home (lighting, automatic gate, security system, etc.).

HomeLink Universal Transceiver

Training With a Rolling Code System
For security purposes, newer garage door opening systems use a “rolling” or variable code. Information from the remote control and the garage door opener are needed before HomeLink can operate the garage door opener.

The “Training HomeLink” procedure trains HomeLink to the proper garage door opener code. The following procedure synchronizes HomeLink to the garage door opener so it sends and receives the correct codes.

1. Make sure you have properly completed the “Training HomeLink” procedure.

2. Find the “training” button on your garage door opener unit. The location will vary, depending on the manufacturer.

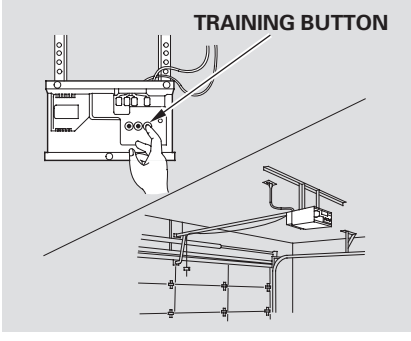

3. Press the training button on the garage door opener unit until the indicator next to the button comes on. The indicator may blink, or come on and stay on. You then have approximately 30 seconds to complete the following steps.

4. Press and hold the button on HomeLink for 3 to 4 seconds.

5. Press and hold the HomeLink button again for 3 to 4 seconds. This should turn off the training indicator on the garage door opener unit. (Some systems may require you to press the button up to three times.)

6. Press the HomeLink button again for about 1 second. It should operate the garage door.

HomeLink Universal Transceiver

Erasing Codes
To erase the codes stored in all three buttons, press and hold the two outside buttons until the red indicator begins to flash, then release the buttons.

You should erase all three codes before selling the vehicle.

Retraining a Button
If you want to retrain a programmed button for a new device, you do not have to erase all button memory. You can replace the existing memory code using this procedure:

1. Press and hold the HomeLink button to be trained until the HomeLink indicator begins to flash slowly.
   - If a rolling code transmitter was previously programmed, the indicator will flash rapidly for 2 seconds, and then stay on for about 23 seconds.
   - If a standard transmitter was programmed, the indicator will stay on for about 25 seconds.
2. Once the HomeLink indicator begins to flash slowly, continue to hold the HomeLink button, and follow steps 3 thru 6 under "Training HomeLink" (see page 253).

Customer Assistance
If you have problems with training the HomeLink Universal Transceiver, or would like information on home products that can be operated by HomeLink, call (800) 355-3515. On the Internet, go to www.homelink.com.

HomeLink® is a registered trademark of Johnson Controls, Inc.

As required by the FCC:
This device complies with Part 15 of the FCC rules. Operation is subject to the following two conditions: (1) This device may not cause harmful interference, and (2) this device must accept any interference received, including interference that may cause undesired operation.

Changes or modifications not expressly approved by the party responsible for compliance could void the user's authority to operate the equipment.

This device complies with Industry Canada Standard RSS-210.
Operation is subject to the following two conditions: (1) this device may not cause interference, and (2) this device must accept any interference that may cause undesired operation of the device.

HandsFreeLink™

On RDX with Technology Package model
Your vehicle is equipped with the HandsFreeLink (HFL). HFL uses Bluetooth technology as a wireless link between it and your Bluetooth compatible cellphone. When you are in your vehicle and your phone is linked to the HFL, you'll enjoy hands-free phone use. The HFL is available in both English and French (Canadian models only). To change the language, see page 273 .

Here are the main features of the HFL. Instructions for using the HFL begin on page 258 .

Voice Control
HFL recognizes simple voice commands, such as phone numbers and names. It uses these commands to automatically dial, receive, and store numbers. For more information on voice control, see Using Voice Control on page 260 .

Bluetooth® Wireless Technology
Bluetooth® is a registered trademark of Bluetooth SIG, Inc.
Bluetooth is the wireless technology that links your phone to the HFL. The HFL uses a Class 2 Bluetooth, which means the maximum range between your phone and vehicle is 30 feet (10 meters).

To use the HFL, your phone must have approved Bluetooth capability along with the Hands Free Profile. This type of phone is available through many phone makers and cellular carriers. You can also find an approved phone by visiting *www.acura.com. (*In Canada, visit *www.acura.ca.) or by calling the Hands Free Link customer support at (888) 528-7876.*

Incoming/Outgoing Calls
With a linked phone, the HFL allows you to send and receive calls in your vehicle without holding the phone.

Phonebook
The HFL can store up to 50 names and phone numbers in its phonebook. With a linked phone, you can then automatically dial any name or number in the phonebook.

Here are the main components of the HFL system:

Microphone
The HFL microphone is on the ceiling console. The microphone is shared with the navigation system.

Audio System

When the HFL is in use, the sound comes through the vehicle's front audio system speakers. If the audio system is in use while making a call, the HFL over-rides the audio system. To change the volume level, use the audio system volume knob.

HFL Buttons

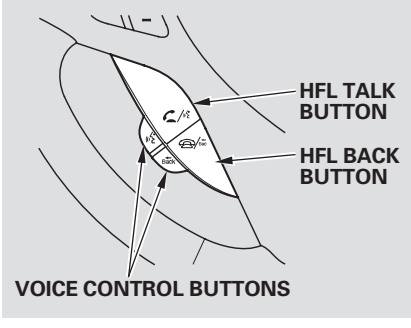

To operate the HFL, use the HFL Talk and Back buttons on the left side of the steering wheel. Below the HFL buttons is another set of voice control buttons for the navigation, climate control, and audio systems.

To use the voice control system, refer to the navigation system manual.

Here is the function of each HFL button:

HFL Talk: This button is used before you give a command, to answer incoming calls, and to confirm system information.

HFL Back: This button is used to end a call, go back to the previous voice control command, and to cancel an operation.

Multi-Information Display

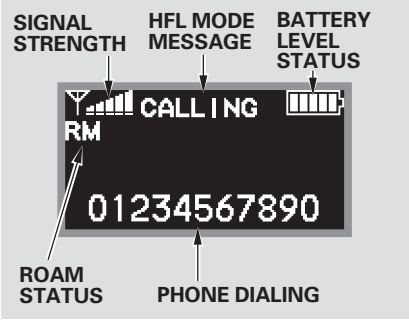

When you are operating the HFL, or when you manually select HFL in the multi-information display, you will see this information in the display:

- Signal Strength* — Indicates the network signal strength of the current phone call. Five bars equals full strength.
- ROAM Status* — Indicates your phone is roaming.
- Battery Level Status* — Indicates the power remaining in your phone's current battery charge. Five bars equals full battery strength.
- HFL Mode Message — Indicates when you are dialing and receiving calls.
- Phone Dialing — Indicates the number you entered or the number of the incoming call.

* : Some phones do not send this information to the HFL.

You will also see a "HANDS FREELINK" on the upper display.

How to Use the HFL
The HFL is operated by the HFL Talk and Back buttons on the left side of the steering wheel. The next few pages provide instructions for all basic features of the HFL.

NOTE: All phones may not operate identically, and some may cause inconsistent operation of the HFL.

Using Voice Control
Here are some guidelines for using voice control:

- To enter a command, press the Talk button. Then, after the beep, say your command in a clear, natural tone.
- For best system operation, set the climate control fan speed to low, and direct the center vents away from the microphone in the ceiling.
- If the HFL does not recognize a command, its response is, “Pardon.” If it doesn’t recognize the command a second time, its response is, “Please repeat.” If it doesn’t recognize the command a third time, it plays the Help prompt.
- To hear a list of available options at any time, press the Talk button, wait for the beep, and say, “Hands free help.”
- Many commands can be spoken together. For example, you can say, “Dial 123-456-7891.”
- To enter a string of numbers in a Call or Dial command, you can say them all at once, or you can separate them in blocks of 3, 4, 7, 10, or 11.
- To skip a voice prompt, press the Talk button while the HFL is speaking. The HFL will then begin listening for your next command.

- To go back one step in a command process, say, “Go back,” or press the Back button.
  If nothing is said while the HFL is listening for a command, the HFL will time out and stop its voice recognition. The next time you press the Talk button, the HFL begins listening from the point at which it timed out.

- To end a command sequence at any time, press and hold the Back button, or press the Talk button, wait for the beep, and say, “Cancel.” The next time you press the Talk button, the HFL begins from its main menu.

- When you finish a command sequence, the HFL goes back to its main menu. For example, when you store the name, “Eric,” the HFL response is, “Eric has been stored.” The next time you press the Talk button, you will be at the main menu.

Setting Up the System

The voice of the HFL can be set to male or female (U.S. models only). Also, the incoming notification can be set to a ring tone, a prompt, or no notification.

To set up the system, do this:

1. Press and release the Talk button. After the beep, say “System.” The HFL response is, “System options are setup and clear.”
2. Press and release the Talk button. After the beep, say “Setup.” The HFL response is “Would you like male or female prompts?”
3. Press and release the Talk button. After the beep, say “Male” or “Female,” depending on the system voice you want. The HFL response is, “Male (Female) prompts have been selected. Would you like an audible notification of an incoming call?”

CONTINUED

4. Press and release the Talk button. If you say “Yes” after the beep, the HFL response is, “Would you like a ring tone or a prompt?” If you say “No” after the beep, the HFL returns to its main menu. Saying “No” will result in no ring tone or prompt playback during an incoming call. The audio system will still mute, and a message will be displayed.

5. Press and release the Talk button. After the beep, say “Ring tone” or “Prompt.” If you choose “Ring tone” you will hear a ring tone through the audio speakers to announce an incoming call. If you choose “Prompt,” you will hear this message to announce an incoming call: “You have an incoming call.”

Pairing Your Phone

Your Bluetooth compatible phone with HandsFree Profile must be paired to the HFL before you can make and receive hands-free calls.

NOTE:

- HFL does not allow you to pair your phone if the vehicle is moving.
- For pairing, your phone must be in its Discovery mode.
- Up to six phones can be paired to the HFL.
- The following procedure works for most phones. If you cannot pair your phone to the HFL with this procedure, refer to your phone’s operating manual, talk to your phone retailer, or call the HandsFreeLink customer support at (888) 528-7876.
- During the pairing process, turn off any previously paired phones before pairing a new phone.

HandsFreeLink™

1. With your phone on and the ignition in the ACCESSORY (I) or ON (II) position, press and release the Talk button. After the beep, say “Phone set up.” The HFL response is “Phone set up options are status, pair, edit, delete, and list.”

2. Press and release the Talk button. After the beep, say “Pair.” The HFL response is “The pairing process requires operation of your mobile phone. For safety, only perform this function while the vehicle is stopped. State a four-digit code for pairing. Note this code. It will be requested by the phone.”

3. Press and release the Talk button. After the beep, say the four-digit code you want to use. For example, say “1, 2, 3, 4.” The HFL response is, “1, 2, 3, 4. Is this correct?”

4. Press and release the Talk button. After the beep, say “Yes.” The HFL response is “Searching for a Bluetooth phone. Make sure the phone you are trying to pair is in Discovery mode.”

NOTE: Steps 5 and 6 show a common way to get your phone into its Discovery mode. If these steps do not work on your phone, refer to the phone’s operating manual.

5. Follow the prompts on your phone to get it into its Discovery mode. The phone will search for the HFL. When it comes up, select HandsFreeLink from the list of options displayed on your phone.

6. When asked by the phone, enter the four-digit code from step 3 into your phone. The HFL response is “A new phone has been found. What would you like to name this phone?”

7. Press and release the Talk button. After the beep, say the name you want to use. For example, say “Eric’s phone.” The HFL response is “Eric’s phone has been successfully paired. Returning to the main menu.”

8. If you want to pair another phone, repeat steps 1 through 7.

Once the paring process is completed, AcuraLink may display a connection confirmation screen. This screen is used to create a data connection between your cell phone and the AcuraLink system. You can choose to setup the data connection now, or do it later. If you want to do it now, exit the HFL menu by pressing the HFL Back button one or more times.

CONTINUED

To rename a paired phone, do this:

1. Press and release the Talk button. After the beep, say “Phone setup.” The HFL response is “Phone setup options are status, pair, edit, delete, and list.”

2. Press and release the Talk button. After the beep, say “Edit.” The HFL response is “Which phone would you like to edit?”

3. Press and release the Talk button. After the beep, say the name of the phone you want to rename. For example, say “Eric’s phone.” The HFL response is “What is the new name for Eric’s phone?”

4. Press and release the Talk button. After the beep, say the new name of the phone. For example, say “Lisa’s phone.” The HFL response is, “The name has been changed. Returning to the main menu.”

To delete a paired phone, do this:

1. Press and release the Talk button. After the beep, say “Phone setup.” The HFL response is, “Phone setup options are status, pair, edit, delete, and list.”

2. Press and release the Talk button. After the beep, say “Delete.” The HFL response is, “Which phone would you like to delete?”

3. Press and release the Talk button. After the beep, say the name of the phone you want to delete. For example say “Eric’s phone.” The HFL response is “Would you like to delete Eric’s phone?”

4. Press and release the Talk button. After the beep, say “Yes.” The HFL response is “Preparing to delete Eric’s phone.” Say “OK” to continue. Otherwise, say “Go back,” or “Cancel.”

5. Press and release the Talk button. If you say “OK” after the beep, the HFL response is “The phone has been deleted. Returning to the main menu.” If you say “Go back,” or “Cancel,” the phone will not be deleted.

To list all paired phones, do this:

1. Press and release the Talk button. After the beep, say “Phone setup.” The HFL response is “Phone setup options are status, pair, edit, delete, and list.”

2. Press and release the Talk button. After the beep, say “List.” The HFL responds by listing the name of each paired phone. When all phones paired to the system have been read, the HFL response is “The entire list has been read. Returning to the main menu.”

To find out the status of the phone being used, do this:

1. Press and release the Talk button. After the beep, say “Phone setup.” The HFL response is “Phone setup options are status, pair, edit, delete, and list.”

2. Press and release the Talk button. After the beep, say “Status.” An example of the HFL response is, “Eric’s phone is linked. Battery strength is three bars. Signal strength is five bars, and the phone is roaming. Returning to the main menu.”

To change from the currently linked phone to another paired phone, do this:

1. Press and release the Talk button. After the beep, say “Next phone.” The HFL response is “Searching for the next phone.” The HFL then disconnects the linked phone and searches for another paired phone. If no other phones are found, the first phone remains linked.

Making a Call
You can make calls using any phone number, or by using a name in the HFL phonebook. You can also redial the last number called. During a call, the HFL allows you to talk up to 30 minutes after you remove the key from the ignition switch.

To make a call using a phone number, do this:

1. With your phone on and the ignition in the ACCESSORY (I) or ON (II) position, press and release the Talk button. After the beep, say “Call” or “Dial.” The HFL response is, “What name or number would you like to call/ dial?”

2. Press and release the Talk button. After the beep, say the number you want to call. For example, say “123 456 7891.” The HFL response is “123 456 7891. Say call, dial, or continue to add numbers.”

3. Press and release the Talk button. After the beep, say “Call” or “Dial.” The HFL response is “Calling” or “Dialing.” Once connected, you will hear the person you called through the audio speakers. To change the volume, use the audio system volume knob.

4. To end the call, press the Back button.

To make a call using a name in the HFL phonebook, do this:

1. With your phone on and the ignition in the ACCESSORY (I) or ON (II) position, press and release the Talk button. After the beep, say “Call” or “Dial.” The HFL response is “What name or number would you like to call/ dial?”

2. Press and release the Talk button. After the beep, say the name you want to call. For example, say “Eric.” The HFL response is “Would you like to call Eric?”

3. Press and release the Talk button. After the beep, say “Yes.” The HFL response is “Calling” or “Dialing.” Once connected, you will hear the person you called through the audio speakers. To change the volume, use the audio system volume knob.

4. To end the call, press the Back button.

To redial the last number called by the phone, press and release the Talk button. After the beep, say “Redial.” The HFL response is, “Redialing.” Once connected, you will hear the person you called through the audio speakers. To change the volume, use the audio system volume knob.

Sending Numbers or Names During a Call

The HFL allows you to send numbers or names during a call. This is useful when you call a menu-driven phone system. You can also program account numbers into the HFL phonebook for easy retrieval during menu-driven calls.

To send a number during a call, do this:

1. Press and release the Talk button. After the beep, say “Send.” The HFL response is, “What name or number would you like to send?”
2. Press and release the Talk button. After the beep, say the number you want to send. For example, say “1, 2, 3.” The HFL response is “1, 2, 3. Say send, or continue to add numbers.”
3. Press and release the Talk button. After the beep, say “Send.” The dial tones will be sent, and the call will continue.

To send a name during a call, do this:

1. Press and release the Talk button. After the beep, say “Send.” The HFL response is “What name or number would you like to send?”
2. Press and release the Talk button. After the beep, say the name you want to send. For example, say “Account number.” The HFL response is “Would you like to send account number?”
3. Press and release the Talk button. After the beep, say “Send.” The dial tones will be sent, and the call will continue.

Receiving a Call

If you receive a call when you are not on the phone, the HFL interrupts the audio system (if it is on), and plays the incoming call notification, if activated. To answer the call, press the Talk button and begin speaking. If you don't want to answer the call, press the Back button.

If your phone has Call Waiting, and you receive a call when you are on the phone, press and release the Talk button to answer it. When you do this, the original call is placed on hold. To return to the original call, press the Talk button again. If you don't want to answer the new call, disregard it, and continue with your original call. If you want to hang up the original call and answer the new call, press the Back button.

Transferring a Call

During a call, you can transfer it from the HFL to your phone, or from your phone to the HFL.

To transfer a call from the HFL to your phone, do this:

1. Press and release the Talk button. After the beep, say "Transfer." The audio switches from the HFL to the phone.

To transfer a call from your phone to the HFL, do this:

2. Press and release the Talk button. After the beep, say "Transfer." The audio switches from your phone to the HFL.

Muting a Call

During a call, you can mute or unmute your voice to the person you are talking to.

To mute your voice, do this:

1. Press and release the Talk button. After the beep, say "Mute." The HFL response is, "Mute is active."

To unmute your voice, do this:

2. Press and release the Talk button. After the beep, say "Mute." The HFL response is, "Mute is canceled."

Setting up the Phonebook

The HFL phonebook can store up to 50 names with their associated numbers. These can be any types of numbers. For example, you can store a phone number and use it to make a call, or you can store an account number and use it during a call to a menu-driven phone system.

To add a name, do this:

1. Press and release the Talk button. After the beep, say “Phonebook.” The HFL response is “Phonebook options are store, edit, delete, and list.”

2. Press and release the Talk button. After the beep, say “Store.” The HFL response is, “What name would you like to store?”

3. Press and release the Talk button. After the beep, say the name you would like to store. For example, say “Eric” or say “account number.” The HFL response is “What is the number for Eric,” or “What is the number for account number?”

4. Press and release the Talk button. After the beep, say the number. For example, say “123 456 7891.” The HFL response is “123 456 7891.”

5. Press and release the Talk button. After the beep, say “Enter.” The HFL response is “Eric (or account number) has been stored. Returning to the main menu.”

To edit the number of a name, do this:

1. Press and release the Talk button. After the beep, say "Phonebook." The HFL response is "Phonebook options are store, edit, delete, and list."

2. Press and release the Talk button. After the beep, say "Edit." The HFL response is, "What name would you like to edit?"

3. Press and release the Talk button. After the beep, say the name you would like to edit. For example, say "Eric." The HFL response is "What is the new number for Eric?"

4. Press and release the Talk button. After the beep, say the new number for Eric. For example, say "987 654 3219." The HFL response is, "987 654 3219."

5. Press and release the Talk button. After the beep, say "Enter." The HFL response is "The number has been changed. Returning to the main menu."

To delete a name, do this:

1. Press and release the Talk button. After the beep, say "Phonebook." The HFL response is, "Phonebook options are store, edit, delete, and list."

2. Press and release the Talk button. After the beep, say "Delete." The HFL response is, "What name would you like to delete?"

3. Press and release the Talk button. After the beep, say the name you would like to delete. For example, say "Eric." The HFL response is "Do you want to delete Eric?"

4. Press and release the Talk button. After the beep, say "Yes." The HFL response is, "The name has been deleted. Returning to the main menu."

To list all names in the phonebook, do this:

1. Press and release the Talk button. After the beep, say "Phonebook." The HFL response is, "The Phonebook options are store, edit, delete, and list."

CONTINUED

2. Press and release the Talk button. After the beep, say “List.” The HFL responds by listing the names in the phonebook. When the end of the list is reached, the HFL response is, “The entire list has been read. Returning to the main menu.”

To call a name from the phonebook list, do this:

1. Press and release the Talk button. After the beep, say “Phonebook.” The HFL response is “Phonebook options are store, edit, delete, and list.”

2. Press and release the Talk button. After the beep, say “List.” The HFL responds by listing the names in the phonebook. When it says the name you want to call, for example, Eric, press the Talk button, and then say “Call.” The HFL response is, “Would you like to call Eric?”

3. Press and release the Talk button. After the beep, say “Yes.” The HFL response is “Calling.” Once connected, you will hear the person you called through the audio speakers. To change the volume, use the audio system volume knob.

Clearing the System

This operation clears the HFL of your passcode, your paired phones, and all names in the HFL phonebook. Clearing is recommended before you sell your vehicle.

To clear the system, do this:

1. Press and release the Talk button. After the beep, say “System.” The HFL response is, “System options are setup and clear.”

2. Press and release the Talk button. After the beep, say “Clear.” The HFL response is, “This process will clear all paired phones, clear all entries in the phonebook, clear the passcode, and restore the defaults in the system setup. Is this what you would like to do?”

3. Press and release the Talk button. After the beep, say “Yes.” The HFL response is “Preparing to clear all paired phones, all phonebook entries, the passcode, and restore the defaults in the system setup. This may take up to 2 minutes to complete.” Press and release the Talk button. After the beep, say “OK” to proceed, otherwise say “Go back” or “Cancel.”

4. If you said “OK,” after a short period of time, the HFL response is, “System has been cleared. Returning to the main menu.”

Changing Language (Canadian Models Only)

To change from English to French, do this:

1. Press and release the Talk button. After the beep, say "Change language." The HFL response is "English or Français?"

2. Press and release the Talk button. After the beep, say "Français." The HFL response is "Vous avez sélectionné le Français. Les noms en registrés dans une autre langue ne seront pas accessible en mode Français. Voulez-vous continuer?"

3. Press and release the Talk button. After the beep, say "Oui." If there are no paired phones without French name tags, the HFL response is "La langue a été changée. Retour au menu principal."

   If there are paired phones without French name tags, the HFL response is "Pour que le système identifie les téléphones qui ont été jumelés dans une autre langue, les noms des téléphones doivent être ré-enregistrés."

   NOTE: If there are paired phones without French name tags the following prompts will continue.

4. The HFL response is, for example, "Quel est le nom Français pour <Paul's phone>?" Press and release the Talk button. After the beep, say "Téléphone de Paul." The HFL response is, "Quel est le nom Français pour <Pat's phone>?" Press and release the Talk button. Say "Téléphone de Pat." After all paired phones missing a French name tag are re-recorded, the HFL will prompt, "Retour au menu principal."

To change from French to English, do this:

1. Press and release the Talk button. After the beep, say "Changer Langue." The HFL response is, "English or Français?"

2. Press and release the Talk button. After the beep, say "English." The HFL response is, "You have selected English. Name tags that were stored while in French mode will not be accessible in English mode. Would you like to continue?"

3. Press and release the Talk button. After the beep, say "Yes." If there are no paired phones without English name tags, the HFL response is "The language has been changed. Returning to the main menu."

CONTINUED

If there are paired phones without English name tags, the HFL response is “The language has been changed. For the system to identify phones that were paired while in another language, the phone names need to be re-recorded.”

NOTE: If there are paired phones without English name tags, the following prompts will continue.

4. The HFL says, for example, “What is the English name for <Téléphone de Paul>?” Press and release the Talk button. After the beep, say “Paul’s phone. ” The HFL response is “What is the English name for <Téléphone de Pat>?” Press and release the Talk button. After the beep, say “Pat’s phone.” After all paired phones missing an English name tag are re-recorded, the HFL will say “Returning to the main menu.”

Rearview Camera and Monitor

On RDX with Technology Package model

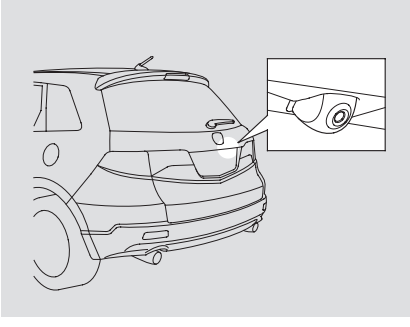

Whenever you shift to reverse (R) with the ignition switch in the ON (II) position, the rear view is shown on the navigation system screen.

For the best picture, always keep the rearview camera clean, and do not cover the camera lens. To avoid scratching the lens when you clean it, use a moist, soft cloth.

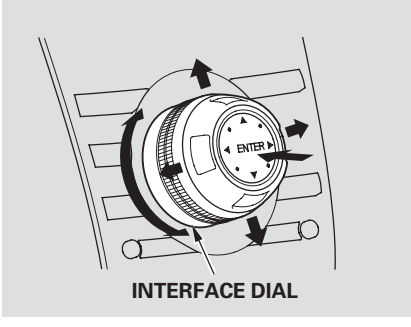

Since the rearview camera display area is limited, you should always back up slowly and carefully, and look behind you for obstacles.

When in reverse, the navigation buttons are locked out, except the interface dial on the dashboard. Turn the dial clockwise to make the camera image brighter, and counter-clockwise to darken the image.

NOTICE

The camera brightness cannot be adjusted by voice control.

Main Menu

Before Driving

Before you begin driving your vehicle, you should know what gasoline to use and how to check the levels of important fluids. You also need to know how to properly store luggage or packages. The information in this section will help you. If you plan to add any accessories to your vehicle, please read the information in this section first.

Break-in Period 278
Fuel Recommendation 278
Service Station Procedures 279
Refueling..... 279
Check Fuel Cap Message..... 280
Tighten Fuel Cap Message 281
Opening and Closing the Hood 282
Oil Check 283
Engine Coolant Check 283
Fuel Economy 284
Accessories and Modifications 285
Carrying Cargo 287

Break-in Period, Fuel Recommendation

Break-in Period

Help assure your vehicle's future reliability and performance by paying extra attention to how you drive during the first 600 miles (1,000 km). During this period:

- Avoid full-throttle starts and rapid acceleration.
- Avoid hard braking for the first 200 miles (300 km).
- Do not change the oil until the scheduled maintenance time.
- Do not tow a trailer.

You should also follow these recommendations with an overhauled or exchanged engine, or when the brakes are replaced.

Fuel Recommendation

Your vehicle is designed to operate on premium unleaded gasoline with a pump octane of 91 or higher. If this octane grade is unavailable, regular unleaded gasoline with a pump octane of 87 or higher may be used temporarily. The use of regular unleaded gasoline can cause metallic knocking noises in the engine and will result in decreased engine performance. The long-term use of regular-grade gasoline can lead to engine damage.

We recommend using quality gasolines containing detergent additives that help prevent fuel system and engine deposits.

In addition, in order to maintain good performance, fuel economy, and emissions control, we strongly recommend, in areas where it is available, the use of gasoline that does NOT contain manganese-based fuel additives such as MMT.
Use of gasoline with these additives may adversely affect performance, and cause the malfunction indicator lamp on your instrument panel to come on. If this happens, contact your authorized dealer for service.

Fuel Recommendation, Service Station Procedures

Some gasoline today is blended with oxygenates such as ethanol or MTBE. Your vehicle is designed to operate on oxygenated gasoline containing up to 10 % ethanol by volume and up to 15 % MTBE by volume. Do not use gasoline containing methanol.

If your notice any undesirable operating symptoms, try another service station or switch to another brand of gasoline.

For further important fuel-related information, please refer to your **Quick Start Guide**.

Refueling

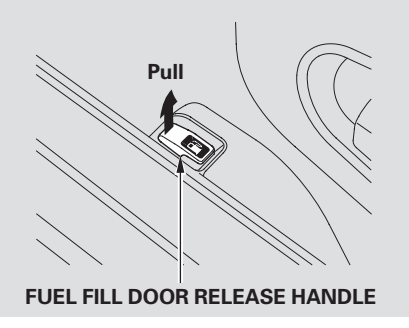

1. Park with the driver's side closest to the service station pump.

2. Open the fuel fill door by pulling on the handle at the outside of the driver's seat.

⚠ WARNING

Gasoline is highly flammable and explosive. You can be burned or seriously injured when handling fuel.

- Stop the engine, and keep heat, sparks, and flame away.
- Handle fuel only outdoors.
- Wipe up spills immediately.

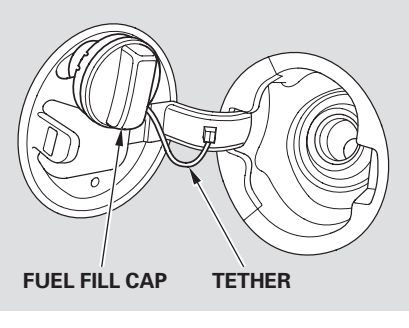

CONTINUED

Service Station Procedure

3. Remove the fuel fill cap slowly. You may hear a hissing sound as pressure inside the tank escapes. Place the cap in the holder on the fuel fill door.

4. Stop filling the tank after the fuel nozzle automatically clicks off. Do not try to "top off" the tank. Leave some room for the fuel to expand with temperature changes.

   If the fuel nozzle keeps clicking off even though the tank is not full, there may be a problem with your vehicle's fuel vapor recovery system. The system helps keep fuel vapors from going into the atmosphere. Try filling at another pump. If this does not fix the problem, consult your dealer.

5. Screw the fuel fill cap back on until it clicks at least once.

   On RDX model
   If you do not properly tighten the cap, you will see a "CHECK FUEL CAP" message on the information display (see the next column).

   On RDX with Technology Package model
   If you do not properly tighten the cap, you will see a "TIGHTEN FUEL CAP" message on the multi-information display (see page 281).

6. Push the fuel fill door closed until it latches.

Check Fuel Cap Message

On RDX model

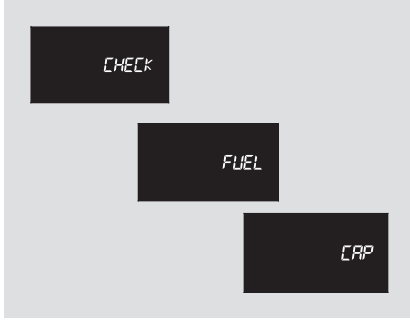

If your fuel fill cap is loose or missing, a "CHECK FUEL CAP" message appears on the information display after you start the engine.

Service Station Procedure

Turn the engine off, and confirm the fuel fill cap is installed. If it is, loosen it, then retighten it until it clicks at least once. When you restart the engine, the message appears again. The message goes off after several days of normal driving once you tighten or replace the fuel fill cap. To scroll to another display, press the Select/Reset knob.

If the system still detects a leak in your vehicle's evaporative emissions system, the malfunction indicator lamp (MIL) comes on. If the fuel fill cap was not already tightened, turn the engine off, and check or retighten the fuel fill cap until it clicks at least once. The MIL should go off after several days of normal driving once the cap is tightened or replaced. If the MIL does not go off, have your vehicle inspected by a dealer. For more information, see page 394 .

Tighten Fuel Cap Message

On RDX with Technology Package model

If your fuel fill cap is loose or missing, a "TIGHTEN FUEL CAP" message appears on the multi-information display after you start the engine.

Turn the engine off, and confirm the fuel fill cap is installed. If it is, loosen it, then retighten it until it clicks at least once. When you can restart the engine, the message appears again. The message goes off after several days of normal driving once you tighten or replace the fuel fill cap. To scroll to another message, press the INFO (▲/▼) button.

If the system still detects a leak in your vehicle's evaporative emissions system, the malfunction indicator lamp (MIL) comes on. If the fuel fill cap was not already tightened, turn the engine off, and check or retighten the fuel fill cap until it clicks at least once. The MIL should go off after several days of normal driving once the cap is tightened or replaced. If the MIL does not go off, have your vehicle inspected by a dealer. For more information, see page 394 .

Service Station Procedures

Opening and Closing the Hood

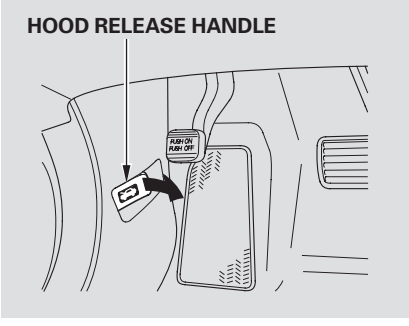

1. Park the vehicle, and set the parking brake. Pull the hood release handle located under the lower left corner of the dashboard. The hood will pop up slightly.

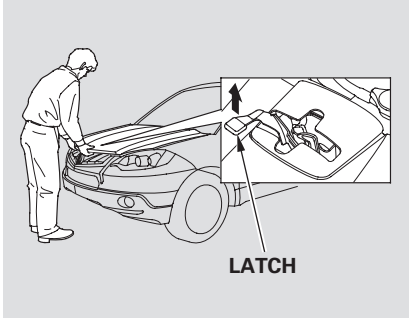

2. Put your fingers under the front edge of the hood near the center. Slide your hand to the left until you feel the hood latch handle. Push this handle up to release it. Lift up the hood.

If the hood latch handle moves stiffly, or if you can open the hood without lifting the handle, the mechanism should be cleaned and lubricated.

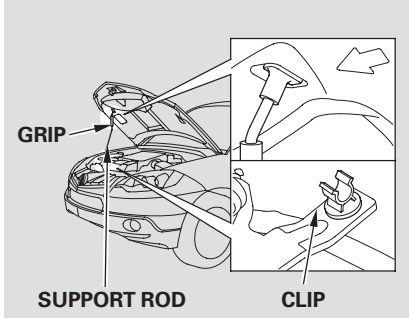

3. Holding the grip, pull the support rod out of its clip. Insert the end into the designated hole in the hood.

To close the hood, lift it up slightly to remove the support rod from the hole. Put the support rod back into its holding clip. Lower the hood to about a foot (30 cm) above the fender, then let it drop. Make sure it is securely latched.

Oil Check

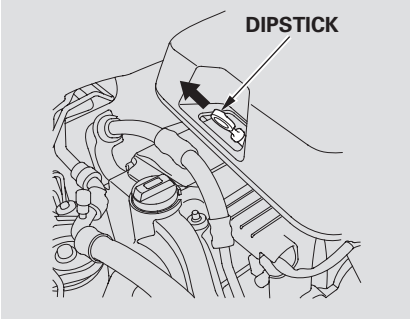

Park the vehicle on a level surface. Wait a few minutes after turning the engine off before you check the oil.

1. Remove the dipstick (orange loop).

2. Wipe off the dipstick with a clean cloth or paper towel.

3. Hold the dipstick with a clean cloth or paper towel, and then insert it all the way back in its hole.

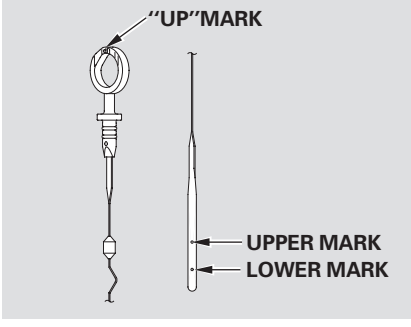

Make sure the "UP" mark on the loop is facing up when you insert the dipstick.

4. Remove the dipstick again, and check the level. It should be between the upper and lower marks.

If it is near or below the lower mark, see **Adding Engine Oil** on page 347 .

Engine Coolant Check

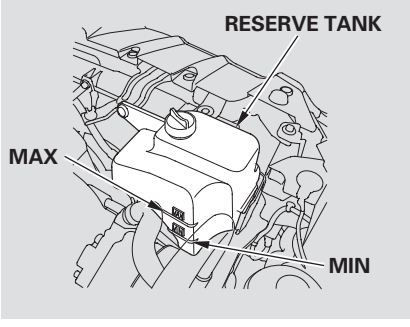

Look at the coolant level in the radiator reserve tank. Make sure it is between the MAX and MIN lines. If it is below the MIN line, see **Adding Engine Coolant** on page 351 for information on adding the proper coolant.

Refer to **Owner's Maintenance Checks** on page 342 for information about checking other items on your vehicle.

Fuel Economy

Improving Fuel Economy

- Always maintain your vehicle according to the maintenance messages. See **Owner's Maintenance Checks** (page 342).

  For example, an underinflated tire causes more "rolling resistance," which uses more fuel.

  The build-up of snow or mud on your vehicle's underside adds weight and rolling resistance. Frequent cleaning helps your fuel mileage and reduces the chance of corrosion.

- Drive moderately. Rapid acceleration, abrupt cornering, and hard braking use more fuel.

- Always drive in the highest gear possible.

- Try to maintain a constant speed. Every time you slow down and speed up, your vehicle uses extra fuel. Use cruise control when appropriate.

- Combine several short trips into one.

- The air conditioning puts an extra load on the engine which makes it use more fuel. Use the fresh-air ventilation when possible.

Accessories and Modifications

Modifying your vehicle, or installing some non-Acura accessories, can make your vehicle unsafe. Before you make any modifications or add any accessories, be sure to read the following information.

Accessories
Your dealer has Acura accessories that allow you to personalize your vehicle. These accessories have been designed and approved for your vehicle, and are covered by warranty.

Although non-Acura accessories may fit on your vehicle, they may not meet factory specifications, and could adversely affect your vehicle's handling and stability.

⚠ WARNING

Improper accessories or modifications can affect your vehicle's handling, stability, and performance, and cause a crash in which you can be hurt or killed.

Follow all instructions in this owner's manual regarding accessories and modifications.

When properly installed, cellular phones, alarms, two-way radios, and low-powered audio systems should not interfere with your vehicle's computer controlled systems, such as your airbags and anti-lock brakes.

CONTINUED

Accessories and Modifications

Before installing any accessory:

- Make sure the accessory does not obscure any lights, or interfere with proper vehicle operation or performance.
- Be sure electronic accessories do not overload electrical circuits (see page 398) or interfere with proper operation of your vehicle.
- Before installing any electronic accessory, have the installer contact your dealer for assistance. If possible, have your dealer inspect the final installation.
- Do not install accessories on the side pillars or across the rear windows. In these areas, accessories may interfere with proper operation of the side curtain airbags.

Modifying Your Vehicle
Removing parts from your vehicle, or replacing components with non-Acura components could seriously affect your vehicle's handling, stability, and reliability.

Here are some examples:

- Lowering the vehicle with a non-Acura suspension kit that significantly reduces ground clearance can allow the undercarriage to hit speed bumps or other raised objects, which could cause the airbags to deploy.
- Raising your vehicle with a non-Acura suspension kit can affect the handling and stability.
- Non-Acura wheels can cause excessive stress on suspension components and are not compatible with the tire pressure monitoring system.
- Larger or smaller wheels and tires can interfere with the operation of your vehicle's anti-lock brakes and other systems.
- Modifying your steering wheel or any other part of your vehicle's safety features can make the systems ineffective.

If you plan to modify your vehicle, consult your dealer.

Carrying Cargo

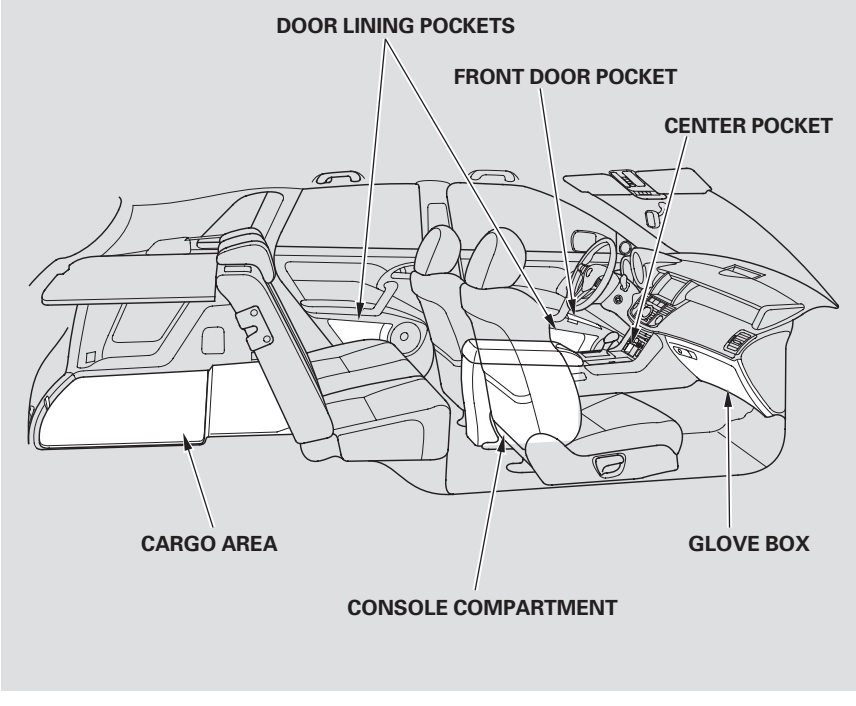

Your vehicle has several convenient storage areas:

- Glove box
- Front door pockets
- Door lining pockets
- Center pocket
- Console compartment
- Cargo area, including the rear seats when folded down.

However, carrying too much cargo, or improperly storing it, can affect your vehicle's handling, stability, stopping distance, and tires, and make it unsafe. Before carrying any type of cargo, be sure to read the following pages.

Carrying Cargo

Load Limits

The maximum load for your vehicle is 870 lbs for U.S. vehicles, and 395 kg for Canadian vehicles. This figure includes the total weight of all occupants, cargo, and accessories, and the tongue load if you are towing a trailer.

⚠ WARNING

Overloading or improper loading can affect handling and stability and cause a crash in which you can be hurt or killed.

Follow all load limits and other loading guidelines in this manual.

Steps for determining correct load limit:

1. Locate the statement, "the combined weight of occupants and cargo should never exceed 870 lbs" on your vehicle's placard. (The placard is on the driver's doorjamb.)

2. Determine the combined weight of the driver and passengers that will be riding in your vehicle.

3. Subtract the combined weight of the driver and passengers from 870 lbs.

4. The resulting figure equals the available amount of cargo and luggage load capacity.
   For example, if the maximum load is 870 lbs and there will be five 150 lb. passengers in your vehicle, the amount of available cargo and luggage load capacity is 120 lbs. (870 − 750 (5 × 150) = 120 lbs.)

5. Determine the combined weight of luggage and cargo being loaded in the vehicle. That weight may not safely exceed the available cargo and luggage load capacity calculated in step 4.

6. If your vehicle will be towing a trailer, the load from your trailer will be transferred to your vehicle. Consult this manual to determine how this reduces the available cargo and luggage load capacity of your vehicle (see page 317).

In addition, the total weight of the vehicle, all occupants, accessories, cargo, and trailer tongue load must not exceed the gross vehicle weight rating (GVWR) or the gross axle weight rating (GAWR). Both are on a label on the driver's doorjamb.

Carrying Cargo in the Passenger Compartment

- Store or secure all items that could be thrown around and hurt someone during a crash.
- Be sure items placed on the floor behind the front seats cannot roll under the seats and interfere with the driver's ability to operate the pedals, the proper operation of the seats, or proper operation of the sensors under the seats.
- Keep the glove box closed while driving. If it is open, a passenger could injure their knees during a crash or sudden stop.
- Do not put any items on top of the cargo area cover. They can block your view and be thrown around the vehicle during a crash.

Carrying Cargo in the Cargo Area

- Distribute cargo evenly on the floor of the cargo area, placing the heaviest items on the bottom and as far forward as possible. Tie down items that could be thrown about the vehicle during a crash or sudden stop.
- If you fold the rear seats down, tie down items that could be thrown about the vehicle during a crash or sudden stop. Also, keep all cargo below the bottom of the windows. If it is higher, it could interfere with the proper operation of the side curtain airbags.
- If you carry large items that prevent you from closing the tailgate, exhaust gas can enter the passenger area. To avoid the possibility of **carbon monoxide poisoning**, follow the instructions on page 58 .
- If you carry any items on a roof rack, be sure the total weight of the rack and the items does not exceed the maximum allowable weight. Please contact your dealer for further information.

If you use an accessory roof rack, the roof rack weight limit may be lower. Refer to the information that came with your roof rack.

Carrying Cargo

Cargo Hooks/Hanger Bars

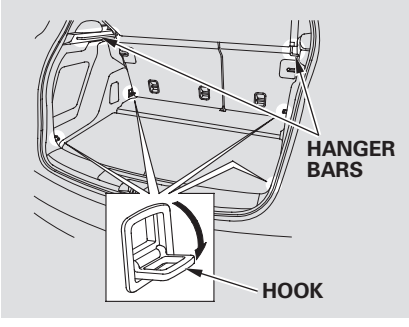

To secure the cargo, you can use the four cargo hooks on the cargo area. The illustration shows the location of each cargo hook.

The cargo hooks on the floor can be used to install the cargo net for securing items.

The hanger bars can be used to hang items. The hanger bar is designed to hang light items (maximum load: 11 lbs or 5 kg on each side). Heavy items may damage the bars.

Optional Cargo Net

The cargo net can be used to help hold down light items in the cargo area. The cargo net may not prevent heavy items from being thrown forward in a crash or a sudden stop. Heavy items should be secured to the cargo area floor with the hooks or cinch straps attached to the cargo hooks.

Driving

This section gives you tips on starting the engine under various conditions, and how to operate the automatic transmission. It also includes important information on parking your vehicle, the braking system, the super handling-all wheel drive (SH-AWD) system, the vehicle stability assist (VSA) system, the tire pressure monitoring system (TPMS), and facts you need if you are planning to tow a trailer or drive off-highway.

Driving Guidelines..... 292
Preparing to Drive 293
Starting the Engine..... 294
Automatic Transmission..... 295
Driving with the Paddle Shifters..... 299
Super Handling-All Wheel Drive (SH-AWD) System 303
Parking..... 305
Braking System..... 306
Anti-lock Brakes (ABS) 307
Tire Pressure Monitoring System (TPMS) 309
Vehicle Stability Assist (VSA) System..... 315
Towing a Trailer 317
Off-Highway Driving Guidelines..... 324

Driving Guidelines

Your vehicle has higher ground clearance that allows you to travel over bumps, obstacles, and rough terrain. It also provides good visibility so you can anticipate problems earlier.

Because your vehicle rides higher off the ground, it has a high center of gravity that can cause it to roll over if you make abrupt turns. Utility vehicles have a significantly higher roll over rate than other types of vehicles.

To prevent rollovers or loss of control:

- Take corners at slower speeds than you would with a passenger vehicle.
- Avoid sharp turns and abrupt maneuvers whenever possible.
- Do not modify your vehicle in any way that would raise the center of gravity.
- Do not carry heavy cargo on the roof.

Your vehicle is equipped with a super handling-all wheel drive (SH-AWD) system. When the system senses a loss of one or more wheel traction, it automatically transfers some power to the other wheels. This gives you better traction and mobility.

You still need to exercise the same care when accelerating, steering, and braking that you would in a two-wheel drive vehicle.

See page 324 for off-highway driving guidelines.

Preparing to Drive

You should do these checks and adjustments before you drive your vehicle:

1. Make sure all windows, mirrors, and outside lights are clean and unobstructed. Remove frost, snow, or ice.

2. Check that the hood is fully closed.

3. Visually check the tires. If a tire looks low, use a gauge to check its pressure (see page 372).

4. Check that any items you may be carrying are stored properly or fastened down securely.

5. Check the seat adjustment (see page 145).

6. Check the adjustment of the inside and outside mirrors (see page 155).

7. Check the steering wheel adjustment (see page 126).

8. Make sure the doors and the tailgate are securely closed and locked.

9. Fasten your seat belt. Check that your passengers have fastened their seat belts (see page 16).

10. When you start the engine, check the gauges and indicators in the instrument panel, and the messages in the information display or multi-information display (depending on models) (see pages 63 , 64 , 75 , and 84).

Starting the Engine

1. Apply the parking brake.

2. In cold weather, turn off all electrical accessories to reduce the drain on the battery.

3. Make sure the shift lever is in Park. Press on the brake pedal.

4. Without touching the accelerator pedal, turn the ignition key to the START (III) position. Do not hold the key in the START (III) position for more than 15 seconds at a time. If the engine does not start right away, pause for at least 10 seconds before trying again.

NOTICE

The immobilizer system protects your vehicle from theft. If an improperly-coded key (or other device) is used, the engine's fuel system is disabled. For more information, see page *128**.*

5. If the engine does not start within 15 seconds, or starts but stalls right away, repeat step 4 with the accelerator pedal pressed halfway down. If the engine starts, release pressure on the accelerator pedal so the engine does not race.

6. If the engine fails to start, press the accelerator pedal all the way down, and hold it there while starting to clear flooding. If the engine still does not start, return to step 5.

NOTICE

The engine is harder to start in cold weather. Also, the thinner air found at altitudes above 8,000 feet (2,400 meters) adds to this problem.

Your vehicle has an electric vacuum pump located in the engine compartment. When you drive in cold weather or thinner air at high altitude, the electric vacuum pump operates more frequently after the engine is started.

When the electric vacuum pump is in operation, it makes some mechanical noises come from the engine compartment. This is normal.

Automatic Transmission

Shift Lever Position Indicators

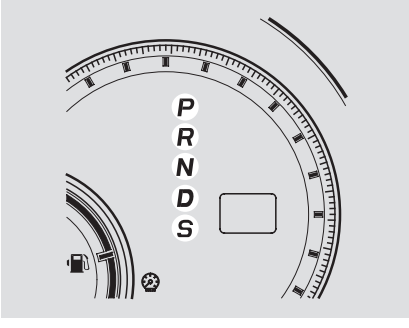

These indicators on the instrument panel show which position the shift lever is in.

The "D" indicator comes on for a few seconds when you turn the ignition switch to the ON (II) position. If it flashes while driving (in any shift position), it indicates a possible problem in the transmission.

If the malfunction indicator lamp comes on along with the "D" indicator, there is a problem with the automatic transmission control system. Avoid rapid acceleration, and have the transmission checked by your dealer as soon as possible.

On RDX with Technology Package model
You will also see a "CHECK TRANSMISSION" message on the multi-information display (see page 85).

Shifting

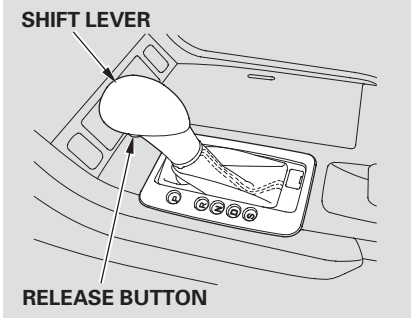

To shift from Park to any position, press firmly on the brake pedal and press the release button on the front of the shift lever, then pull the lever. You cannot shift out of Park when the ignition switch is in the LOCK (0) or the ACCESSORY (I) position.

CONTINUED

Automatic Transmission

To shift from:	Do this:
P to R	Press the brake pedal, and press the shift lever release button.
R to P N to R D to S	Press the shift lever release button.
S to D D to N N to D R to N	Move the shift lever.

Park (P) — This position mechanically locks the transmission. Use Park whenever you are turning off or starting the engine. To shift out of Park, you must press on the brake pedal and have your foot off the accelerator pedal. Press the release button on the front of the shift lever to move it.

If you have done all of the above and still cannot move the lever out of Park, see **Shift Lock Release** on page 298 .

To avoid transmission damage, come to a complete stop before shifting into Park. You must also press the release button to shift into Park. The shift lever must be in Park before you can remove the key from the ignition switch.

Reverse (R) — Press the brake pedal and press the release button on the front of the shift lever to shift from Park to reverse. To shift from reverse to neutral, come to a complete stop, and then shift. Press the release button before shifting into reverse from neutral.

Automatic Transmission

Neutral (N) — Use neutral if you need to restart a stalled engine, or if it is necessary to stop briefly with the engine idling. Shift to the Park position if you need to leave your vehicle for any reason. Press on the brake pedal when you are moving the shift lever from neutral to another gear.

Drive (D) — Use this position for your normal driving. The transmission automatically selects a suitable gear for your speed and acceleration.

S position (S) — To shift into the S position, press the release button on the front of the shift lever, and move the lever to S. This position is similar to D, except only gears from first to fourth are selected. The S position keeps the transmission from cycling between fourth and fifth gears in stop-and-go driving.

With the shift lever in D or S, you can also use the paddle shifters to shift the transmission up or down. Once you begin to use the paddle shifters in S, the transmission will no longer upshift or downshift automatically. For more information of driving with the paddle shifters, see page 299 .

Engine Speed Limiter
If you exceed the maximum speed for the gear you are in, the engine speed will enter into the tachometer's red zone. If this occurs, you may feel the engine cut in and out. This is caused by a limiter in the engine's computer controls. The engine will run normally when you reduce the rpm below the red zone.

Automatic Transmission

Shift Lock Release

This allows you to move the shift lever out of Park if the normal method of pushing on the brake pedal and pressing the release button does not work.

1. Set the parking brake.

2. Remove the key from the ignition switch.

3. Put a cloth on the notch of the shift lock release slot cover. Using a small flat-tipped screwdriver or a metal fingernail file, carefully pry on the notch of the cover to remove it.

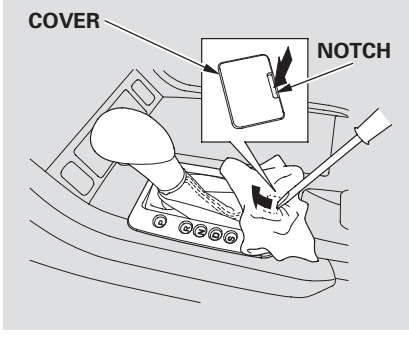

4. Insert the key in the shift lock release slot.

5. Push down on the key while you press the release button on the shift lever and move the shift lever out of Park to neutral.

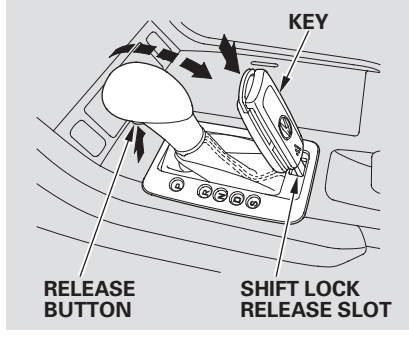

6. Remove the key from the shift lock release slot, then install the cover. Make sure the notch on the cover is on the rear.
   Return the key to the ignition switch, press the brake pedal, and restart the engine.

If you need to use the shift lock release, it means your vehicle is developing a problem. Have it checked by your dealer.

Driving with the Paddle Shifters

Using the Paddle Shifters in D position (D-Paddle Shift Mode)
When you are driving in D position, pulling the either paddle shifter switches from the ordinary automatic transmission [drive mode (D)] to the D-paddle shift mode. You can shift the transmission up or down manually with the paddle shifters.

Downshifting gives you more power when climbing, and provides engine braking when going down a steep hill.

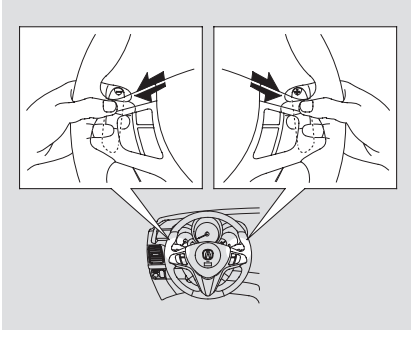

To shift up or down, use the + (right) or − (left) paddle shifter on each side of the steering wheel.

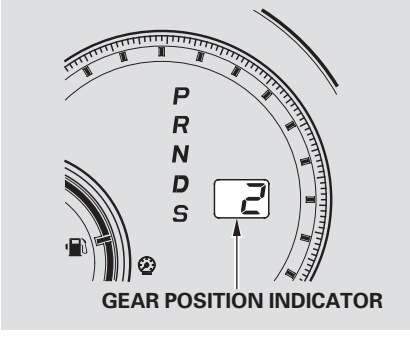

Each time you pull the + (right), the transmission shifts to a higher gear. Pull the − (left) to downshift. You will see the selected gear number on the instrument panel.

When you pull either paddle shifter, the gear position indicator shows you the selected gear number.

CONTINUED

Driving with the Paddle Shifters

The transmission control system monitors the accelerator pedal use and your driving conditions. When you press the accelerator pedal as in the normal driving, the system judges that you are driving at a constant cruising speed without using the paddle shifters. Under these conditions, D-paddle shift mode is canceled, and the transmission automatically returns to drive mode (D).

When the transmission returns to drive mode (D), the displayed gear number goes out.

The transmission remains in the selected gear if you do not accelerate.

Each time you pull either paddle shifter, the transmission shifts one gear up or down. If you want to shift up or down more than two gears, pull the paddle shifter twice, pause, and then pull it again.

The automatic transmission will not allow you to change shift if:

- You downshift before the engine speed reaches the upper limit of the lower gear.

  If you try to do this, the gear position indicator will flash the number of the lower gear several times, then return to a higher gear.

- You upshift before the engine speed reaches the lower limit of the higher gear.

- You press both paddle shifters at the same time.

- You press one of the two paddle shifters with another paddle shifter being pressed.

The transmission downshifts to first gear and returns to drive mode (D) when the vehicle comes to a complete stop and the vehicle speed is about 6 mph (10 km/h).

If there is a problem in the transmission while you are driving with the paddle shifters, the D indicator flashes, the D-paddle shift mode is canceled, and the transmission returns to drive mode (D).

Driving with the Paddle Shifters

Using the Paddle Shift in S position (Sequential Shift Mode)
With the shift lever in S position, you can select the sequential shift mode to shift gears; much like a manual transmission using the paddle shifters, but without a clutch pedal.

To enter the sequential shift mode, press the release button on the front of the shift lever, move the lever to the S position, then pull either paddle shifter. To cancel the sequential shift mode and return to the ordinary automatic transmission, move the shift lever from S position. When moving the shift lever, be careful not to operate incorrectly. While you are driving in the sequential shift mode, the transmission will not automatically return to ordinary automatic transmission.

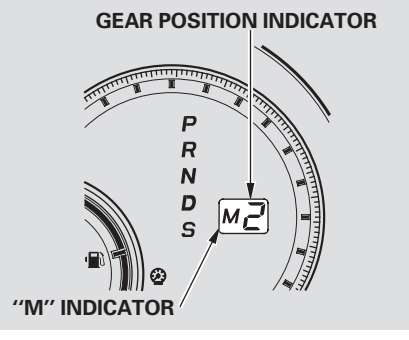

When you move the shift lever from "D" to "S" position and pull either paddle shifter, the gear position indicator displays on "M" along with the selected gear number.

To upshift, pull the + (right) paddle shifter. To downshift, pull the − (left) paddle shifter.

When you accelerate from a stop, the transmission starts in first gear, and you must manually upshift between first and fifth gears. Make sure you upshift before the engine speed reaches the tachometer's red zone.

The transmission remains in the selected gear (5, 4, 3, 2, or 1). There is no automatic downshift when you push the accelerator pedal to the floor.

When you are driving in 4th or 5th gear, the transmission downshifts to the lower gear under the following conditions:

- The vehicle slows down to a certain speed.
- You press the brake pedal.

CONTINUED

Driving with the Paddle Shifters

Downshifting with the paddle shifter allows you to increase the engine braking when going down steep or long hills, and provides more power when climbing uphills. You can upshift the transmission manually to reduce the rpm. Driving in the higher gear helps fuel economy.

The transmission also shifts automatically as the vehicle comes to a complete stop. It downshifts to first gear when the vehicle speed reaches 6 mph (10 km/h) or less.

The automatic transmission will not allow you to change shift if:

- You downshift before the engine speed reaches the upper limit of the lower gear.

  If you try to do this, the gear position indicator will flash the number of the lower gear several times, then return to a higher gear.

- You upshift before the engine speed reaches the lower limit of the higher gear.

- You try to shift to third or a higher gear when the vehicle is stationary.

- You press both paddle shifters at the same time.

- You press one of the two paddle shifters with another paddle shifter being pressed.

Here are the speed ranges for upshifting and downshifting.

To shift from	Speed range
1 → 2	over 0 mph (0 km/h)
2 → 3	over 8 mph (13 km/h)
3 → 4	over 17 mph (27 km/h)
4 → 5	over 47 mph (75 km/h)

To shift from	Speed range
2 → 1	under 29 mph (47 km/h)
3 → 2	under 63 mph (100 km/h)
4 → 3	under 94 mph (150 km/h)
5 → 4	under 114 mph (182 km/h)

Driving with the Paddle Shifter, Super Handling-All Wheel Drive (SH-AWD) System

Starting in Second Gear
When you are in sequential shift mode, and the vehicle is stopped, pull the + (right) paddle shifter to shift to second gear. You will see “M 2” in the display. Starting in second gear helps to reduce wheelspin in deep snow or on a slippery surface.

Super Handling-All Wheel Drive (SH-AWD) system

The super handling-all wheel drive (SH-AWD) system is a full time all-wheel-drive system that automatically controls and transfers varying amounts of engine torque to all wheels independently, according to the driving conditions.

While the SH-AWD system helps to enhance the vehicle’s driving stability in all situations, it is still your responsibility to drive and corner at reasonable speeds and to leave a sufficient margin of safety.

SH-AWD Torque Distribution Monitor

On RDX with Technology Package model

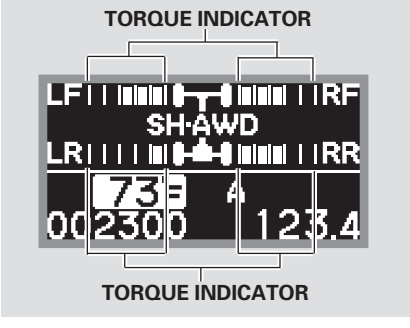

The SH-AWD torque distribution monitor on the multi-information display shows you the amount of torque being sent to the wheels. Each wheel: right front (RF), left front (LF), right rear (RR), and left rear (LR), has its own torque indicator.

CONTINUED

Super Handling-All Wheel Drive (SH-AWD) System

Each torque indicator is displayed as a bar graph divided into 5 segments. The number of segments represents the amount of torque distributed to each wheel.

When there is only a slight change in torque distribution while driving, such as cruising on level roads at the same speed, the torque distribution monitor may stop displaying the amount of torque. This is not a system problem. The monitor will show the amount if the system senses any change in torque distribution.

If the SH-AWD indicator blinks while driving, it indicates the differential temperature is too high. You will also see an “SH-AWD DIFF TEMP HIGH” message on the multi-information display. If this happens, pull to the side of the road when it is safe, shift to Park, and let the engine idle until the indicator goes out. If the indicator does not go out, take your vehicle to a dealer to have it checked,

If the SH-AWD indicator on the instrument panel stays on, and the “CHECK SH-AWD SYSTEM” message also appears on the multi-information display, there is problem with the SH-AWD system.

Your vehicle still has normal front-wheel drive with vehicle stability assist (VSA), but does not have the advantages of SH-AWD. Have your vehicle checked by a dealer as soon as possible.

Parking

Always use the parking brake when you park your vehicle. Make sure the parking brake is set firmly, or your vehicle may roll if it is parked on an incline.

Set the parking brake before you put the transmission in Park. This keeps the vehicle from moving and putting pressure on the parking mechanism in the transmission.

Parking Tips

- Make sure the moonroof and the windows are closed.
- Turn off the lights.
- Place any packages, valuables, etc. in the cargo area or take them with you.
- Lock the doors and the tailgate.
- Never park over dry leaves, tall grass, or other flammable materials. The hot three way catalytic converter could cause these materials to catch on fire.
- If the vehicle is facing uphill, turn the front wheels away from the curb.
- If the vehicle is facing downhill, turn the front wheels toward the curb.
- Check the indicator on the instrument panel to verify that the security system is set.
- Make sure the parking brake is fully released before driving away. Driving with the parking brake partially set can overheat or damage the rear brakes.

Braking System

Your vehicle is equipped with disc brakes at all four wheels. A power assist using negative pressure generated by the engine and the electric vacuum pump helps reduce the effort needed on the brake pedal. The anti-lock brake system (ABS) helps you retain steering control when braking very hard.

When the electric vacuum pump is in operation, it makes some mechanical noises come from the engine compartment. This is normal.

When you drive in cold weather or thinner air at high altitude, the electric vacuum pump operates more frequently after the engine is started.

For more information about the electric vacuum pump, see page 396 .

Resting your foot on the pedal keeps the brakes applied lightly, builds up heat, and reduces their effectiveness. It also keeps your brake lights on all the time, confusing drivers behind you.

Constant application of the brakes when going down a long hill builds up heat and reduces their effectiveness. Use the engine to assist the brakes by taking your foot off the accelerator and downshifting to a lower gear.

Check your brakes after driving through deep water. Apply the brakes moderately to see if they feel normal. If not, apply them gently and frequently until they do. Be extra cautious and alert in your driving.

Braking System Design
The hydraulic system that operates the brakes has two separate circuits. Each circuit works diagonally across the vehicle (the left-front brake is connected with the right-rear brake, etc.). If one circuit should develop a problem, you will still have braking at two wheels.

Brake Pad Wear Indicators
All four brakes have audible brake wear indicators.

If the brake pads need replacing, you will hear a distinctive, metallic screeching sound when you apply the brake pedal. If you do not have the brake pads replaced, they will screech all the time. It is normal for the brakes to occasionally squeal or squeak when you apply them.

Anti-lock Brakes (ABS)

The anti-lock brake system (ABS) helps prevent the brakes from locking up, and helps you retain steering control by pumping the brakes rapidly, much faster than a person can do it.

The ABS also balances the front-to-rear braking distribution according to vehicle loading.

You should never pump the brake pedal. Let the ABS work for you by always keeping firm, steady pressure on the brake pedal. This is sometimes referred to as “stomp and steer.”

You will feel a pulsation in the brake pedal when the ABS activates, and you may hear some noise. This is normal: it is the ABS rapidly pumping the brakes. On dry pavement, you will need to press on the brake pedal very hard before the ABS activates. However, you may feel the ABS activate immediately if you are trying to stop on snow or ice.

ABS Indicator

If this indicator comes on, the anti-lock function of the braking system has shut down. The brakes still work like a conventional system, but without anti-lock. You should have your dealer inspect your vehicle as soon as possible.

On RDX with Technology Package model
You will also see a “CHECK ABS SYSTEM” message on the multi-information display (see page 85).

CONTINUED

Anti-lock Brakes (ABS)

If the ABS indicator and the brake system indicator come on together, and the parking brake is fully released, the front-to-rear braking distribution system may also be shut down.

Test your brakes as instructed on page 395 . If the brakes feel normal, drive slowly and have your vehicle repaired by your dealer as soon as possible. Avoid sudden hard braking which could cause the rear wheels to lock up and possibly lead to a loss of control.

The VSA indicator will come on along with the ABS indicator.

Important Safety Reminders
ABS does not reduce the time or distance it takes to stop the vehicle. It only helps with the steering control during braking.

ABS will not prevent a skid that results from changing direction abruptly, such as trying to take a corner too fast or making a sudden lane change. Always drive at a safe speed for the road and weather conditions.

ABS cannot prevent a loss of stability. Always steer moderately when you are braking hard. Severe or sharp steering wheel movement can still cause your vehicle to veer into oncoming traffic or off the road.

A vehicle with ABS may require a longer distance to stop on loose or uneven surfaces, such as gravel or snow, than a vehicle without anti-lock.

Tire Pressure Monitoring System (TPMS)

Your vehicle is equipped with a tire pressure monitoring system (TPMS) that turns on every time you start the engine and monitors the pressure in your tires while driving.

Each tire has its own pressure sensor. If the air pressure of a tire becomes significantly low, the sensor in that tire immediately sends a signal that causes the low tire pressure indicator to come on.

Although your tire pressure is monitored, you must manually check the tire pressures monthly.

Each tire, including the spare, should be checked monthly when cold, and set to the recommended inflation pressure as specified on the vehicle placard and in the owner's manual (see page 373).

Driving on a significantly under-inflated tire causes the tire to overheat and can lead to tire failure. Under-inflation also reduces fuel efficiency and tire tread life, and may affect the vehicle's handling and stopping ability.

Low Tire Pressure Indicator

When the low tire pressure indicator is on, one or more of your tires is significantly underinflated. You should stop and check your tires as soon as possible, and inflate them to the proper pressure as indicated on the vehicle's tire information placard.

On RDX model
With this indicator on, you will see which tire is losing the pressure on the tire pressure monitor (see page 311).

On RDX with Technology Package model
With this indicator on, you will see which tire is losing the pressure on the multi-information display along with a "CHECK TIRE PRESSURE" message (see page 312).

CONTINUED

Tire Pressure Monitoring System (TPMS)

Because tire pressure varies by temperature and other conditions, the low tire pressure indicator may come on unexpectedly.

For example, if you check and fill your tires in a warm area, then drive in extremely cold weather, the tire pressure will be lower than measured and could be underinflated and cause the low tire pressure indicator to come on. Or, if you check and adjust your tire pressure in cooler conditions, and drive into extremely hot conditions, the tire may become overinflated. However, the low tire pressure indicator will not come on if the tires are overinflated.

Refer to page 372 for tire inflation guidelines.

TPMS Tire Pressure Monitoring System (TPMS) Indicator

On RDX model only

This indicator comes on and stays on if there is a problem with the tire pressure monitoring system.

If this happens, the system will shut off and no longer monitor tire pressures. Have the system checked by your dealer as soon as possible.

Changing a Tire with TPMS

If you have a flat tire, the low tire indicator and tire pressure monitor will come on. Replace the indicated flat tire with the compact spare tire (see page 383).

After you replace the flat tire with the spare, the low tire pressure indicator stays on. This is normal; the system is not monitoring the spare tire pressure. Manually check the spare tire pressure to be sure it is correct.

Never use a puncture-repairing agent in a flat tire. If used, you will have to replace the tire pressure sensor. Have the flat tire repaired by your dealer as soon as possible.

Tire Pressure Monitoring System (TPMS)

Each wheel is equipped with a tire pressure sensor mounted inside the tire behind the valve stem. You must use TPMS specific wheels. It is recommended that you always have your tires serviced by your dealer or qualified technician.

Tire Pressure Monitor

On RDX model

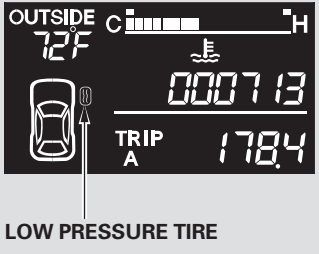

Your vehicle has a tire pressure monitor on the information display.

The tire pressure monitor uses the same display as the door and tailgate open monitor. When any of the tires has low pressure, the low tire pressure indicator on the instrument panel comes on, and you will also see which tire is losing the pressure on the tire pressure monitor.

If the TPMS indicator comes on, the tire pressure monitor does not work (see page 73).

If the low tire pressure indicator and the low tire position on the low tire pressure monitor do not go out after inflating the tires to the specified values, have your dealer check the system as soon as possible.

CONTINUED

Tire Pressure Monitoring System (TPMS)

On RDX with Technology Package model

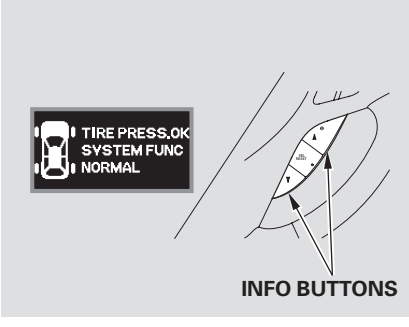

To display the tire pressure monitor, press the INFO (▲/▼) button until it appears on the multi-information display.

When all tire pressures are normal, the tire pressure monitor will show a “TIRE PRESS. OK SYSTEM FUNC NORMAL” message.

When any of the tires have low pressure, the low tire pressure indicator on the instrument panel comes on, and the multi-information display also interrupts the current display and shows a “CHECK TIRE PRESSURE” message. You can see one or more of the low pressure tire positions highlighted in the display along with this message.

When any of the tires have low pressure, the tire pressure monitor shows a “TIRE PRESS. ERROR SYSTEM FUNC NORMAL” message.

Tire Pressure Monitoring System (TPMS)

Tire Pressure Readings
On RDX with Technology Package model

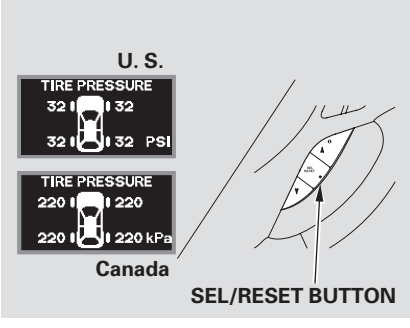

When the TPMS is functioning normally, you can see the tire pressure readings of each tire in psi (U.S. models) or kPa (Canadian models) by pressing the SEL/RESET button while the multi-information display shows the tire pressure monitor.

If one or more tires have low pressure, the low tire pressure indicator on the instrument panel also comes on (see page 73).

It is possible that the pressures shown on the multi-information display and the pressures you manually measure are slightly different.
If the difference is significant or you cannot make the low tire pressure indicator and message on the multi-information display go out after inflating the tires to the specified values, have your dealer check the system as soon as possible.

Check TPMS System Message
On RDX with Technology Package model

If there is a problem with the TPMS, the multi-information display shows a “CHECK TPMS SYSTEM” message.

CONTINUED

Tire Pressure Monitoring System (TPMS)

If you see this message, the tire pressure monitor shows a “SYSTEM FUNCTION ERROR” message. The system may not be able to detect or signal low tire pressure as intended. Also, the tire pressure readings will not be displayed. Have your vehicle checked by a dealer as soon as possible.

If the low tire pressure indicator comes on, or the multi-information display shows a “CHECK TPMS SYSTEM” message, the VSA system automatically turns on even when the VSA system is turned off by pressing the VSA OFF switch (see page 316). If this happens, you cannot turn the VSA system off by pressing the VSA OFF switch again.

As required by the FCC:
This device complies with Part 15 of the FCC rules. Operation is subject to the following two conditions: (1) This device may not cause harmful interference, and (2) this device must accept any interference received, including interference that may cause undesired operation.

Changes or modifications not expressly approved by the party responsible for compliance could void the user’s authority to operate the equipment.

This device complies with Industry Canada Standard RSS-210.
Operation is subject to the following two conditions: (1) this device may not cause interference, and (2) this device must accept any interference that may cause undesired operation of the device.

Vehicle Stability Assist (VSA) System

The vehicle stability assist (VSA) system helps to stabilize the vehicle during cornering if the vehicle turns more or less than desired. It also assists you in maintaining traction while accelerating on loose or slippery road surfaces. It does this by regulating the engine's output and by selectively applying the brakes.

When VSA activates, you may notice that the engine does not respond to the accelerator in the same way it does at other times. You will also see the VSA activation indicator blink.

The VSA system cannot enhance the vehicle's driving stability in all situations and does not control your vehicle's entire braking system. It is still your responsibility to drive and corner at reasonable speeds and to leave a sufficient margin of safety.

VSA Activation Indicator

When VSA activates, you will see the VSA activation indicator blink (see page 70).

Vehicle Stability Assist (VSA) System Indicator

If this indicator comes on while driving, pull to the side of the road when it is safe, and turn off the engine. Reset the system by restarting the engine. If the VSA system indicator stays on, or comes back on while driving, have the VSA system inspected by your dealer.

If the indicator does not come on when the ignition switch is turned to the ON (II) position, there may be a problem with the VSA system. Have your dealer inspect your vehicle as soon as possible.

On RDX with Technology Package model

You will also see a "CHECK VSA SYSTEM" message on the multi-information display (see page 85).

Without VSA, your vehicle will have normal braking and cornering ability, but it will not have VSA traction and stability enhancement.

When you put a spare tire on the wheel, TPMS indicator or "CHECK TPMS SYSTEM" message (depending on the models) may come on. When the indicator or message is on, you are unable to turn off the VSA system with the VSA OFF switch.

Vehicle Stability Assist (VSA) System

VSA Off Switch

In certain unusual conditions when your vehicle gets stuck in shallow mud or fresh snow, it may be easier to free it with the VSA temporarily switched off. When the VSA system is off, the traction control system is also off. You should only attempt to free your vehicle with the VSA off if you are not able to free it when the VSA is on.

Immediately after freeing your vehicle, be sure to switch the VSA on again. We do not recommend driving your vehicle with the VSA and traction control systems switched off.

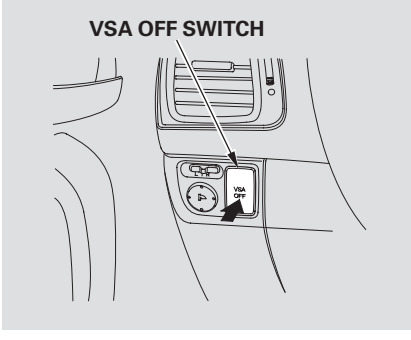

This switch is under the driver's side vent. To turn the VSA system on and off, press and hold it until you hear a beep.

When VSA is off, the VSA activation indicator comes on as a reminder.

VSA is turned on every time you start the engine, even if you turned it off the last time you drove the vehicle.

VSA and Tire Sizes

Driving with varying tire or wheel sizes may cause the VSA to malfunction. When replacing tires, make sure they are the same size and type as your original tires (see page 376).

If you install winter tires, make sure they are the same size as those that were originally supplied with your vehicle. Exercise the same caution during winter driving as you would if your vehicle was not equipped with VSA.

Towing a Trailer

Your vehicle has been designed primarily to carry passengers and their cargo. You can also use it to tow a trailer if you carefully observe the load limits, use the proper equipment, and follow the guidelines in this section.

Be sure to read the **Off-Highway Driving Guidelines** section on page 324 if you plan to tow off paved surfaces.

⚠WARNING

Exceeding any load limit or improperly loading your vehicle and trailer can cause a crash in which you can be seriously hurt or killed.

Check the loading of your vehicle and trailer carefully before starting to drive.

Load Limits

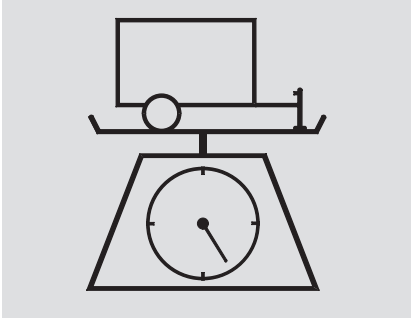

Total Trailer Weight: The maximum allowable weight of the trailer and everything in or on it must not exceed 1,500 lbs (680 kg). Towing a load that is too heavy can seriously affect your vehicle's handling and performance. It can also damage the engine and drivetrain.

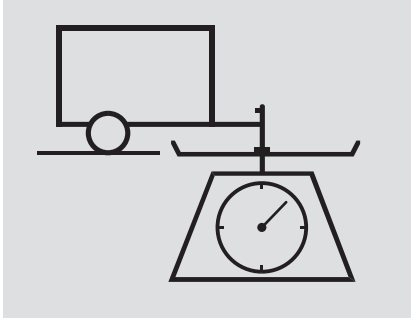

Tongue Load: The weight that the tongue of a fully-loaded trailer puts on the hitch should be approximately 10 % of the total trailer weight. Too much tongue load reduces front-tire traction and steering control. Too little tongue load can make the trailer unstable and cause it to sway.

CONTINUED

Towing a Trailer

To achieve a proper tongue load, start by loading 60 % of the load toward the front of the trailer and 40 % toward the rear, then re-adjust the load as needed.

Gross Vehicle Weight Rating (GVWR) — The maximum allowable weight of the vehicle, all occupants, all accessories, all cargo, and the tongue load is 4,894 lbs (2,220 kg).

Gross Axle Weight Ratings (GAWR) — The maximum allowable weight of the vehicle, all occupants, all accessories, all cargo, and the tongue load must not exceed 2,546 lbs (1,155 kg) on the front axle, and 2,381 lbs (1,080 kg) on the rear axle.

Gross Combined Weight Rating (GCWR) — The maximum allowable weight of the fully loaded vehicle and trailer is 6,394 lbs (2,900 kg)

Checking Loads
The best way to confirm that all loads are within limits is to check them at a public scale. For public scales in your area, check your local phone book, or contact your trailer dealer or rental agency for assistance.

If you cannot get to a public scale, you can estimate the total trailer weight by adding the weight of your trailer (as quoted by the manufacturer) with everything in or on the trailer.

If you normally pull the same load each time you tow a trailer, you can use a suitable scale or a special tongue load gauge to check the tongue load the first time you set up a towing combination (a fully loaded vehicle and trailer), then recheck the tongue load whenever the conditions change.

Towing Equipment and Accessories
Towing can require a variety of equipment, depending on the size of your trailer, how it will be used, how much load you are towing, and where you tow.

Discuss your needs with your trailer sales or rental agency, and follow the guidelines in this section. Also make sure that all equipment is properly installed and maintained, and that it meets federal, state, province, and local regulations.

Towing a Trailer

Hitches
Any hitch used on your vehicle must be properly bolted to the underbody.

Safety Chains
Always use safety chains when you tow a trailer. Make sure the chains are secured to the trailer and hitch, and that they cross under the tongue and can catch the trailer if it becomes unhitched. Leave enough slack to allow the trailer to turn corners easily, but do not let the chains drag on the ground.

Trailer Brakes
Acura requires that any trailer with a total trailer weight of 1,000 lbs (455 kg) or more have its own brakes.

If you choose electric brakes, be sure they are electronically actuated. Do not attempt to tap into your vehicle's hydraulic system. No matter how successful it may seem, any attempt to attach trailer brakes to your vehicle's hydraulic system will lower braking effectiveness and create a potential hazard.

See your trailer dealer or rental agency for more information on installing electric brakes.

Trailer Lights
Trailer lights and equipment must comply with federal, state, province, and local regulations. Check with your local trailer sales or rental agencies for the requirements in the area where you plan to tow, and use only equipment designed for your vehicle.

CONTINUED

Towing a Trailer

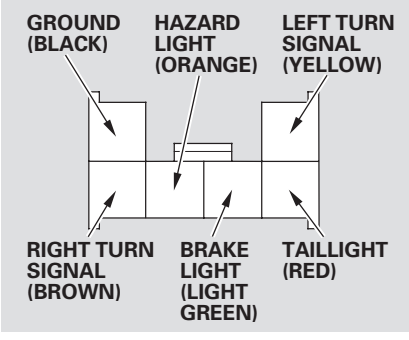

Your vehicle has a trailer lighting connector located under the right side tool case in the cargo area. Refer to the drawing above for the wiring color code and purpose of each pin.

Since lighting and wiring vary by trailer type and brand, you should have a qualified technician install a suitable connector between the vehicle and the trailer. Improper equipment or installation can cause damage to your vehicle's electrical system and affect your vehicle warranty.

Additional Towing Equipment

Many states and Canadian provinces require special outside mirrors when towing a trailer. Even if they don't, you should install special mirrors if you cannot clearly see behind you, or if the trailer creates a blind spot.

Ask your trailer sales or rental agency if any other items are recommended or required for your towing situation.

Towing a Trailer

Pre-Tow Checklist
When preparing to tow, and before driving away, be sure to check the following:

- The vehicle has been properly serviced, and the suspension, cooling system, and lights are in good operating condition.
- The trailer has been properly serviced and is in good condition.
- All weights and loads are within limits.
- The hitch, safety chains, and any other attachments are secure.
- All items in or on the trailer are properly secured and cannot shift while you drive.
- The lights and brakes on your vehicle and the trailer are working properly.
- Your vehicle tires and spare are properly inflated, and the trailer tires and spare are inflated as recommended by the trailer maker.
- You may want to fill the fuel tank with premium fuel. Premium fuel provides improved performance.

Towing a Trailer

Driving Safely With a Trailer

The added weight, length, and height of a trailer will affect your vehicle's handling and performance, so driving with a trailer requires some special driving skills and techniques.

For your safety and the safety of others, take time to practice driving maneuvers before heading for the open road, and follow the guidelines in this section.

Towing Speeds and Gears

Drive slower than normal in all driving situations, and obey posted speed limits for vehicles with trailers. Use the D position when towing a trailer on level roads. See "***Driving on Hills***" in the next column for additional gear information. Do not exceed 55 mph (88 km/h). At higher speeds, the trailer may sway or affect vehicle handling.

Making Turns and Braking

Make turns more slowly and wider than normal. The trailer tracks a smaller arc than your vehicle, and it can hit or run over something the vehicle misses. Allow more time and distance for braking. Do not brake or turn suddenly as this could cause the trailer to jackknife or turn over.

Driving on Hills

When climbing hills, closely watch your temperature gauge (see pages 78 and 83). If it nears the H (Hot) mark, turn the A/C off, reduce speed and, if necessary, pull to the side of the road to let the engine cool.

When driving down hills, reduce your speed, and shift down to S position, or use the puddle shift to the lower gear (3, 2 or 1)in the S position. When towing a trailer, do not "ride" the brakes, and remember, it will take longer to slow down and stop when towing a trailer.

Towing a Trailer

If you must stop when facing uphill, use the foot brake or parking brake. Do not try to hold the vehicle in place by pressing on the accelerator, as this can cause the automatic transmission to overheat.

Handling Crosswinds and Buffeting
Crosswinds and air turbulence caused by passing trucks can disrupt your steering and cause the trailer to sway. When being passed by a large vehicle, keep a constant speed, and steer straight ahead. Do not try to make quick steering or braking corrections.

Backing Up
Always drive slowly and have someone guide you when backing up. Grip the *bottom* of the steering wheel; then turn the wheel to the left to get the trailer to move to the left, and turn the wheel right to move the trailer to the right.

Parking
Follow all normal precautions when parking, including putting the transmission in Park and firmly setting the parking brake. Also, place wheel chocks at each of the trailer's tires.

Off-Highway Driving Guidelines

General Information

Your vehicle has been designed primarily for use on pavement. But its higher ground clearance and super handling-all wheel drive (SH-AWD) system allow you to occasionally travel on unpaved roads, to campgrounds, picnic sites, and similar locations. It is not designed for trailblazing, mountain climbing, or other challenging off-road activities.

If you decide to drive on unpaved roads, you will find that it requires somewhat different driving skills. Your vehicle will also handle somewhat differently than it does on pavement. So be sure to read this owner's manual, pay special attention to the precautions and tips in this section, and get acquainted with your vehicle before you leave the pavement.

⚠ WARNING

Improperly operating this vehicle on or off pavement can cause an accident or rollover in which you and your passengers could be seriously injured or killed.

- Follow all instructions and guidelines in this owner's manual.
- Keep your speed low, and don't drive faster than conditions permit.

Important Safety Precautions

To avoid loss of control or rollover, be sure to follow all precautions and recommendations.

- Be sure to store cargo properly, and do not exceed your vehicle cargo load limits (see pages 288 and 317).
- Wherever you drive, make sure you and your passengers always wear seat belts.
- Keep your speed low, and never go faster than the conditions allow.
- It's up to you to continually assess the situation and drive within the limits.

Off-Highway Driving Guidelines

Check Out Your Vehicle
Before you leave the pavement, be sure to do all scheduled maintenance and service, and inspect your vehicle for any problems. Pay special attention to the condition of the tires, and check the tire pressures.

After you return to the pavement, carefully inspect your vehicle to make sure there is no damage that could make driving it unsafe. Recheck the condition of the tires and the tire pressures.

Remember
The route presents limits (too steep or bumpy roads). You have limits (driving skill and comfort). And your vehicle has limits (traction, stability, and power).

Driving off-highway can be hazardous if you fail to recognize limits and take the proper precautions.

Accelerating and Braking
For better traction on all surfaces, accelerate slowly and gradually build up speed. If you try to start too fast on wet soil, mud, snow, or ice, you might not have enough traction to get underway, and you may dig yourself a hole. Starting with the shift lever in D position will help you have a smoother start on snow or ice.

Keep in mind that you will usually need more time and distance to brake to a stop on unpaved surfaces. Avoid hard braking. Do not “pump” the brakes; let the anti-lock braking system pump them for you.

Avoiding Obstacles
Debris in the road can damage your suspension or other components. Because your vehicle has a high center of gravity, driving over a large obstacle, or allowing a wheel to drop into a deep hole can cause your vehicle to tip or roll over.

Driving on Slopes
If you can’t clearly see all conditions or obstacles on a slope, walk the slope before you drive on it. If you have any doubt whether or not you can safely drive on the slope, don’t do it. Find another route.

If you are driving up a hill and find that you cannot continue, *do not try to turn around*. Your vehicle could roll over. Slowly back down the hill, following the same route you took up the hill.

Off-Highway Driving Guidelines

Crossing a Stream

Avoid driving through deep water. If you encounter water in your route (a small stream or large puddle, for example), evaluate it carefully before going ahead. Make sure it is shallow, flowing slowly, and has firm ground underneath. If you are not sure of the depth or the ground, turn around and find another route.

Driving through deep water can also damage your vehicle. The water can get into the transmission and differential, diluting the lubricant and causing an eventual failure. It can also wash the grease out of the wheel bearings.

If You Get Stuck

Avoid driving on soft sand, deep mud, or other surfaces where you could get stuck. If you do happen to get stuck because of inclement weather or other conditions, choose a safe and appropriate course of action.

You should never use a jack to try getting unstuck. A jack only works on firm, level ground. Also, your vehicle could easily slip off the jack and hurt you or someone else.

If you spin the wheels excessively trying to get unstuck, you may overheat the components of the SH-AWD system. The SH-AWD indicator on the instrument panel will blink to indicate the rear differential temperature is too high.

On RDX with Technology Package model

You will also see an “SH-AWD DIFF TEMP HIGH” message on the multi-information display (see page 85).

If this happens, stop and allow everything to cool down. The SH-AWD indicator goes off after the rear differential temperature drops.

Maintenance

This section explains why it is important to keep your vehicle well maintained and how to follow basic maintenance safety precautions.

This section also includes instructions on how to read the maintenance minder messages on the information display or multi-information display (depending on models), a maintenance record, and instructions for simple maintenance tasks you may want to take care of yourself.

If you have the skills and tools to perform more complex maintenance tasks on your vehicle, you may want to purchase the service manual. See page 425 for information on how to obtain a copy, or see your dealer.

Maintenance Safety 328
Maintenance Minder 330
Maintenance Record 344
Fluid Locations 346
Adding Engine Oil 347
  Required Engine Oil 347
Changing the Oil and Filter 349
Engine Coolant 351
Windshield Washers 353
Automatic Transmission Fluid 355
Brake Fluid 357
Power Steering Fluid 358
Lights 359
Cleaning the Seat Belts 366
Floor Mats 366
Audio Antenna 367
Intercooler 367
Dust and Pollen Filter 367
Wiper Blades 368
Tires 372
Checking the Battery 378
Vehicle Storage 380

Maintenance Safety

All service items not detailed in this section should be performed by a certified technician or other qualified mechanic.

Important Safety Precautions
To eliminate potential hazards, read the instructions before you begin, and make sure you have the tools and skills required.

- Make sure your vehicle is parked on level ground, the parking brake is set, and the engine is off.
- To clean parts, use a commercially available degreaser or parts cleaner, not gasoline.
- To reduce the possibility of fire or explosion, keep cigarettes, sparks, and flames away from the battery and all fuel-related parts.
- Wear eye protection and protective clothing when working with the battery or compressed air.

⚠ WARNING

Improperly maintaining this vehicle, or failing to correct a problem before driving can cause a crash in which you can be seriously hurt or killed.

Always follow the inspection and maintenance recommendations and schedules in this owner's manual.

Maintenance Safety

Potential Vehicle Hazards

- **Carbon Monoxide poison from engine exhaust.** Be sure there is adequate ventilation whenever you operate the engine.
- **Burns from hot parts.** Let the engine and exhaust system cool down before touching any parts.
- **Injury from moving parts.** Do not run the engine unless instructed to do so.

⚠ WARNING

Failure to properly follow maintenance instructions and precautions can cause you to be seriously hurt or killed.

Always follow the procedures and precautions in this owner's manual.

Some of the most important safety precautions are given here. However, we cannot warn you of every conceivable hazard that can arise in performing maintenance. Only you can decide whether or not you should perform a given task.

Maintenance Minder

Your vehicle displays engine oil life and maintenance service items on the information display or multi-information display (depending on models) to show you when you should have your dealer perform engine oil replacement and indicated maintenance services.

Based on the engine operating conditions and accumulated engine revolutions, the onboard computer in your vehicle calculates the remaining engine oil life and displays it as a percentage.

The remaining engine oil life is shown on the display according to this table:

Calculated Engine Oil Life (%)	Displayed Engine Oil Life (%)
100 %—91 %	100 %
90 %—81 %	90 %
80 %—71 %	80 %
70 %—61 %	70 %
60 %—51 %	60 %
50 %—41 %	50 %
40 %—31 %	40 %
30 %—21 %	30 %
20 %—16 %	20 %
15 %—11 %	15 %
10 %—6 %	10 %
5 %—1 %	5 %
0 %	0 %

Engine Oil Life Display

On RDX model

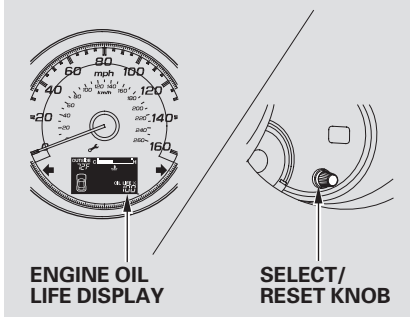

To see the current engine oil life, turn the ignition switch to the ON (II) position, and press the Select/ Reset knob repeatedly until the engine oil life display appears (see page 76).

Maintenance Minder

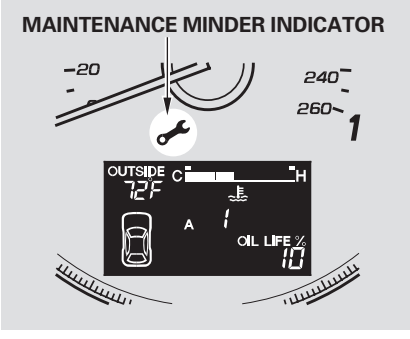

If the remaining engine oil life is 15 to 6 percent, you will see the engine oil life indicator every time you turn the ignition switch to the ON (II) position. The maintenance minder indicator will also come on, and the maintenance item code(s) for other scheduled maintenance items needing service will be displayed near the "OIL LIFE" message.

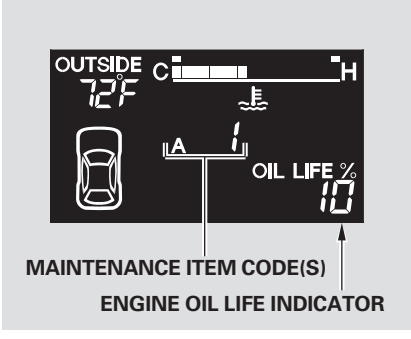

The 15 and 10 percent oil life indicator reminds you that the time is coming soon to take your vehicle in for the required maintenance.

When the remaining engine oil life is 5 to 1 percent, you will see a "SERVICE" message along with the same maintenance item code(s), every time you turn the ignition switch to the ON (II) position.

CONTINUED

Maintenance Minder

The maintenance item code or codes indicate the main and sub items required at the time of the oil change (see page 333).

You can switch the information display from the engine oil life display to the odometer or the trip meter. Press and release the Select/ Reset knob on the instrument panel.

When the engine oil life is 15 to 1 percent, the maintenance minder indicator (🔧) comes on every time you turn the ignition switch to the ON (II) position, then it goes out if you switch the information display.

When you see this message, have the indicated maintenance performed by your dealer as soon as possible.

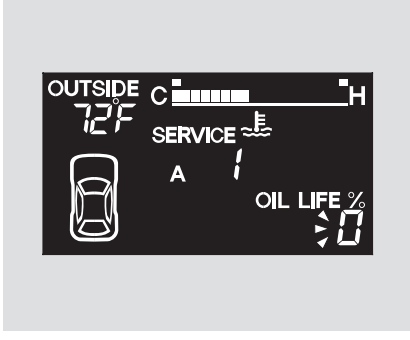

When the remaining engine oil life is 0 percent, the engine oil life indicator will blink. The display comes on every time you turn the ignition switch to the ON (II) position. The maintenance minder indicator (🔧) also comes on and remains on in the instrument panel. When you see this message, immediately have the indicated maintenance performed by your dealer.

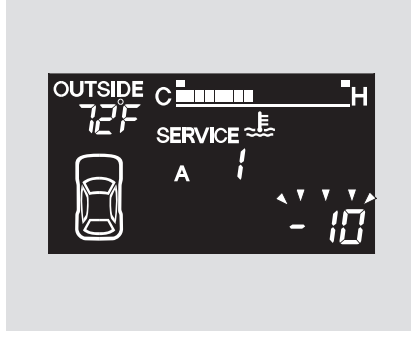

If you do not perform the indicated maintenance, negative mileage is displayed and begins to blink after the vehicle has been driven 10 miles (10 km) or more.

Negative mileage means your vehicle has passed the maintenance required point.

Immediately have the indicated maintenance done by your dealer.

Maintenance Minder

To change the information display from the engine oil life display to the odometer or the trip meter, press and release the Select/Reset knob.

When the engine oil life is 0 percent or negative mileage, the maintenance minder indicator (🔧) remains on even if you change the information display.

Immediately have the service performed, and make sure to reset the display as described on the following.

Maintenance Main Items and Sub Items

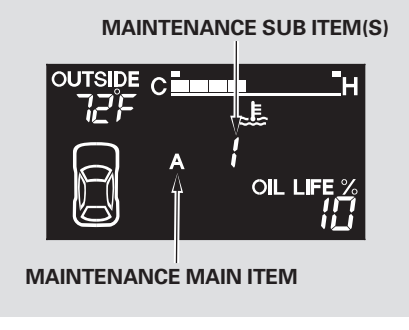

All maintenance items displayed in the information display are in code. For an explanation of these maintenance codes, see page 343 .

Resetting the Engine Oil Life Display

Your dealer will reset the display after completing the required maintenance service. You will see “OIL LIFE 100%” on the information display the next time you turn the ignition switch to the ON (II) position.

If maintenance service is done by someone other than your dealer, reset the maintenance minder as follows:

1. Turn the ignition switch to the ON (II) position.

2. Press the Select/Reset knob repeatedly until the engine oil life is displayed.

Maintenance Minder

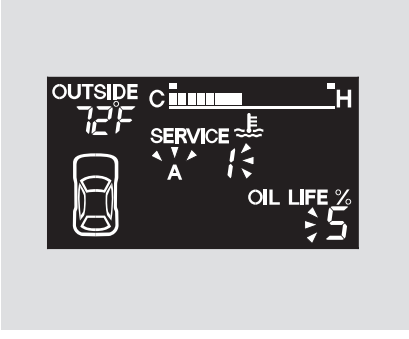

3. Press and hold the Select/Reset knob for about 10 seconds. The engine oil life and the maintenance item code(s) will blink.

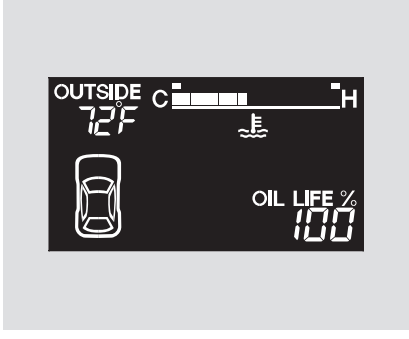

4. Press the Select/Reset knob for another 5 seconds. The maintenance item code(s) will disappear, and the engine oil life will reset to “100.”

On RDX with Technology Package model

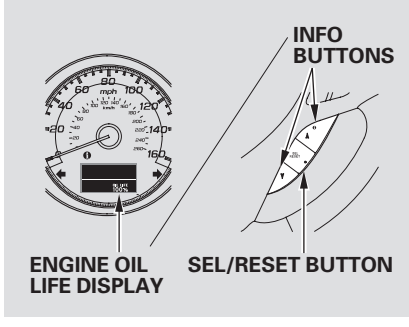

To see the current engine oil life, turn the ignition switch to the ON (II) position, and push and release the INFO (▲/▼) button on the steering wheel repeatedly, until the engine oil life is displayed (see page 80).

Maintenance Minder

When the remaining engine oil life is 15 percent or less, the display shows a “SERVICE DUE SOON” message along with the maintenance item code(s) for other scheduled maintenance items needing service.

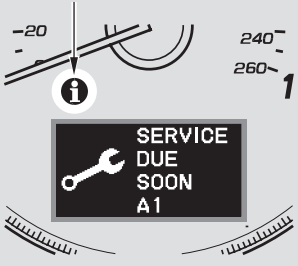

The system message indicator on the instrument panel will also come on, and a beeper will sound.

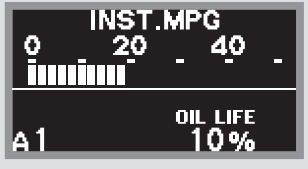

To cancel the system message, press and release the INFO (▲/▼) button on the steering wheel. At this time, the system message indicator will also be turned off. Then the display will change to the engine oil life display. You will see the maintenance item code(s) along with the engine oil life on the multi-information display.

CONTINUED

Maintenance Minder

You will also see the system message every time you turn the ignition switch to the ON (II) position until your vehicle have the indicated maintenance performed by your dealer.

The maintenance item code(s) indicate the main and sub items required at the time of the oil change (see page 340).

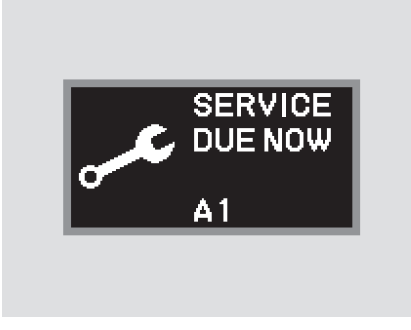

When the remaining engine oil life is less than 5 percent, you will see the above display. The display then changes to “SERVICE DUE NOW.” Have the indicated maintenance done as soon as possible.

The system message indicator on the instrument panel will also come on, and a beeper will sound.

Maintenance Minder

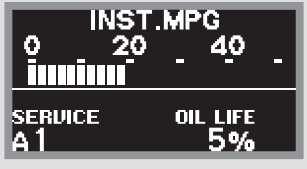

To cancel the system message, press and release the INFO (▲/▼) button on the steering wheel. At this time, the system message indicator will also be turned off. Then the display will change to the engine oil life display. You will see a “SERVICE” message and along with the maintenance item code(s) on the multi-information display.

You will also see the system message every time you turn the ignition switch to the ON (II) position until your vehicle have the indicated maintenance performed by your dealer.

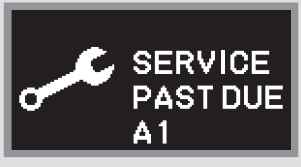

If the indicated maintenance service is not done and the engine oil life reaches to 0 percent, you will see a “SERVICE PAST DUE” message along with the maintenance item code(s) on the multi-information display.

CONTINUED

Maintenance Minder

The system message indicator on the instrument panel will also come on, and a beeper will sound.

When you see this message, have the indicated maintenance done by your dealer immediately.

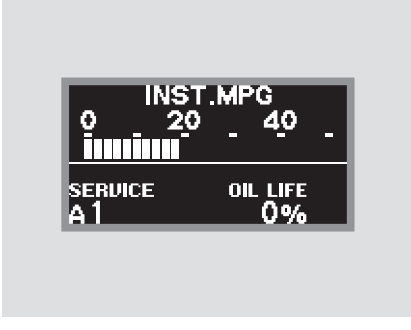

To cancel the system message, press and release the INFO (▲/▼) button on the steering wheel. At this time, the system message indicator will ***not*** be turned off. Then the display will change to the engine oil life display. You will see the engine oil life blinking and a “SERVICE” message along with the maintenance item code(s) on the multi-information display.

The system message will appear again by pressing the INFO (▲/▼) button after cancel it.

You will also see the system message every time you turn the ignition switch to the ON (II) position until your vehicle have the indicated maintenance performed by your dealer.

Maintenance Minder

U.S.

Canada

If the indicated maintenance is not performed, you will see a "SERVICE PAST DUE" message along with the maintenance item code(s), and the negative mileage will be also displayed. The negative mileage continues to display after the vehicle has been driven 10 miles (10 km) or more.

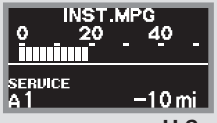

U.S.

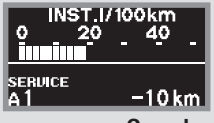

Canada

To cancel the system message, press and release the INFO (▲/▼) button on the steering wheel. At this time, the system message indicator will ***not*** be turned off. Then the display will change to the engine oil life display. You will see the negative mileage blinking and a “SERVICE” message along with the maintenance item code(s) on the multi-information display.

The system message will appear again by pressing the INFO (▲/▼) button after cancel it.

You will also see the system message every time you turn the ignition switch to the ON (II) position until your vehicle have the indicated maintenance performed by your dealer.

Negative mileage means your vehicle has passed the maintenance required point.

Immediately have the service performed, and make sure to reset the display as described on the following.

Maintenance Minder

Maintenance Main Items and Sub Items

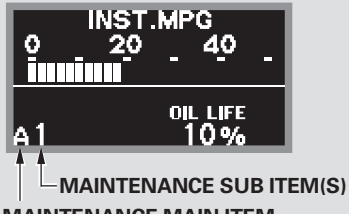

All maintenance items displayed in the information display are in code. For an explanation of these maintenance codes, see page 343 .

Resetting the Engine Oil Life Display

Your dealer will reset the display after completing the required maintenance service. You will see "OIL LIFE 100%" on the display the next time you turn the ignition switch to the ON (II) position.

If maintenance service is done by someone other than your dealer, reset the maintenance minder as follows:

1. Turn the ignition switch to the ON (II) position.

2. Press the SEL/RESET button on the steering wheel until you see the engine oil life display.

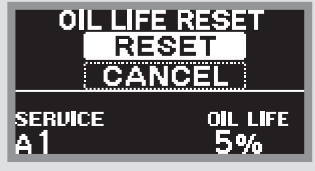

3. Press and hold the SEL/RESET button on the steering wheel for more than 10 seconds. The remaining engine oil life reset mode will be shown on the multi-information display.

Maintenance Minder

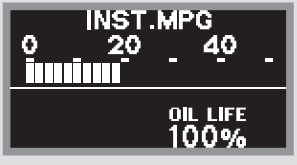

4. Select “RESET” by pressing the INFO (▲/▼) button, then press the SEL/RESET button to reset the engine oil life display. The maintenance item code(s) will disappear, and the engine oil life will reset to “100.” If you want to cancel the oil life reset mode, select “CANCEL.”

Important Maintenance Precautions

If you have the required service done but do not reset the display, or reset the display without doing the service, the system will not show the proper maintenance intervals. This can lead to serious mechanical problems because you will no longer have an accurate record of when maintenance is needed.

Your authorized Acura dealer knows your vehicle best and can provide competent, efficient service.

However, service at a dealer is not mandatory to keep your warranties in effect. Maintenance may be done by any qualified service facility or person who is skilled in this type of automotive service. Make sure to have the service facility or person reset the display as previously described. Keep all receipts as proof of completion, and have the person who does the work fill out the maintenance record. Check your warranty booklet for more information.

We recommend using Acura parts and fluids whenever you have maintenance done. These are manufactured to the same high-quality standards as the original components, so you can be confident of their performance and durability.

Maintenance Minder

U.S. Vehicles: **Maintenance, replacement, or repair of emissions control devices and systems may be done by any automotive repair establishment or individual using parts that are "certified" to EPA standards.**

According to state and federal regulations, failure to perform maintenance on the items marked with # will not void your emissions warranties. However, all maintenance services should be performed in accordance with the intervals indicated by the information display.

Owner's Maintenance Checks
You should check the following items at the specified intervals. If you are unsure of how to perform any check, turn to the appropriate page listed.

- Engine oil level — Check every time you fill the fuel tank. See page 283 .
- Engine coolant level — Check the radiator reserve tank every time you fill the fuel tank. See page 283 .
- Automatic transmission — Check the fluid level monthly. See page 355 .
- Brakes — Check the fluid level monthly. See page 357 .
- Tires — Check the tire pressure monthly. Examine the tread for wear and foreign objects. See page 374 .
- Lights — Check the operation of the headlights, parking lights, taillights, high-mount brake light, and license plate lights monthly. See page 359 .

Maintenance Minder

Symbol	Maintenance Main Items
A	• Replace engine oil*1

B	• Replace engine oil*1 and oil filter
	• Inspect front and rear brakes
	• Check parking brake adjustment
	• Inspect these items:
	  • Tie rod ends, steering gear box, and boots
	  • Suspension components
	  • Driveshaft boots
	  • Brake hoses and lines (including ABS)
	  • All fluid levels and condition of fluids
	  • Exhaust system#
	  • Fuel lines and connections#

* 1 : On RDX model
If the message "SERVICE" does not appear more than 12 months after the display is reset, change the engine oil every year.

On RDX with Technology Package model
If the message "SERVICE DUE NOW" does not appear more than 12 months after the display is reset, change the engine oil every year.

: See information on maintenance and emissions warranty on page 342.

NOTE:
- Independent of the maintenance items in the information display, replace the brake fluid every 3 years.
- Inspect idle speed every 160,000 miles (256,000 km).
- Adjust the valves during services A, B, 1, 2, or 3 only if they are noisy.

Symbol	Maintenance Sub Items
1	• Rotate tires
2	• Replace air cleaner element If you drive in dusty conditions, replace every 15,000 miles (24,000 km). • Replace dust and pollen filter If you drive primarily in urban areas that have high concentrations of soot in the air from industry and from diesel-powered vehicles, replace every 15,000 miles (24,000 km). • Inspect drive belt
3	• Replace transmission and transfer fluid Driving in mountainous areas at very low vehicle speeds or trailer towing results in higher transmission and transfer temperatures. This requires transmission and transfer fluid changes more frequently than recommended by the maintenance minder. If you regularly drive your vehicle under these conditions, have the transmission and transfer fluid changed at 60,000 miles (100,000 km), then every 30,000 miles (48,000 km).
4	• Replace spark plugs • Inspect valve clearance
5	• Replace engine coolant
6	• Replace rear differential fluid Driving in mountainous areas at very low vehicle speeds or trailer towing results in higher level of mechanical (shear) stress to fluid. This requires differential fluid changes more frequently than recommended by the Maintenance Minder. If you regularly drive your vehicle under these conditions, have the differential fluid changed at 7,500 miles (12,000 km), then every 15,000 miles (24,000 km).

Maintenance Record

You or the servicing dealer can record all completed maintenance here. When maintenance is performed, record the mileage, circle the coded item(s) completed, and write in any other non-coded items (such as brake fluid replacement) below the codes. Keep the receipts for all work done on your vehicle. Maintenance can also be recorded in your-Acura maintenance journal.

Mileage	Maintenance Performed	Signature / Date
mi km	A B 1 2 3 4 5 6	
mi km	A B 1 2 3 4 5 6	
mi km	A B 1 2 3 4 5 6	
mi km	A B 1 2 3 4 5 6	
mi km	A B 1 2 3 4 5 6	
mi km	A B 1 2 3 4 5 6	
mi km	A B 1 2 3 4 5 6	

Mileage	Maintenance Performed	Signature / Date
mi km	A B 1 2 3 4 5 6	
mi km	A B 1 2 3 4 5 6	
mi km	A B 1 2 3 4 5 6	
mi km	A B 1 2 3 4 5 6	
mi km	A B 1 2 3 4 5 6	
mi km	A B 1 2 3 4 5 6	
mi km	A B 1 2 3 4 5 6	

Maintenance Record

Mileage	Maintenance Performed	Signature / Date
mi km	A B 1 2 3 4 5 6	
mi km	A B 1 2 3 4 5 6	
mi km	A B 1 2 3 4 5 6	
mi km	A B 1 2 3 4 5 6	
mi km	A B 1 2 3 4 5 6	
mi km	A B 1 2 3 4 5 6	
mi km	A B 1 2 3 4 5 6	

Mileage	Maintenance Performed	Signature / Date
mi km	A B 1 2 3 4 5 6	
mi km	A B 1 2 3 4 5 6	
mi km	A B 1 2 3 4 5 6	
mi km	A B 1 2 3 4 5 6	
mi km	A B 1 2 3 4 5 6	
mi km	A B 1 2 3 4 5 6	
mi km	A B 1 2 3 4 5 6	

Fluid Locations

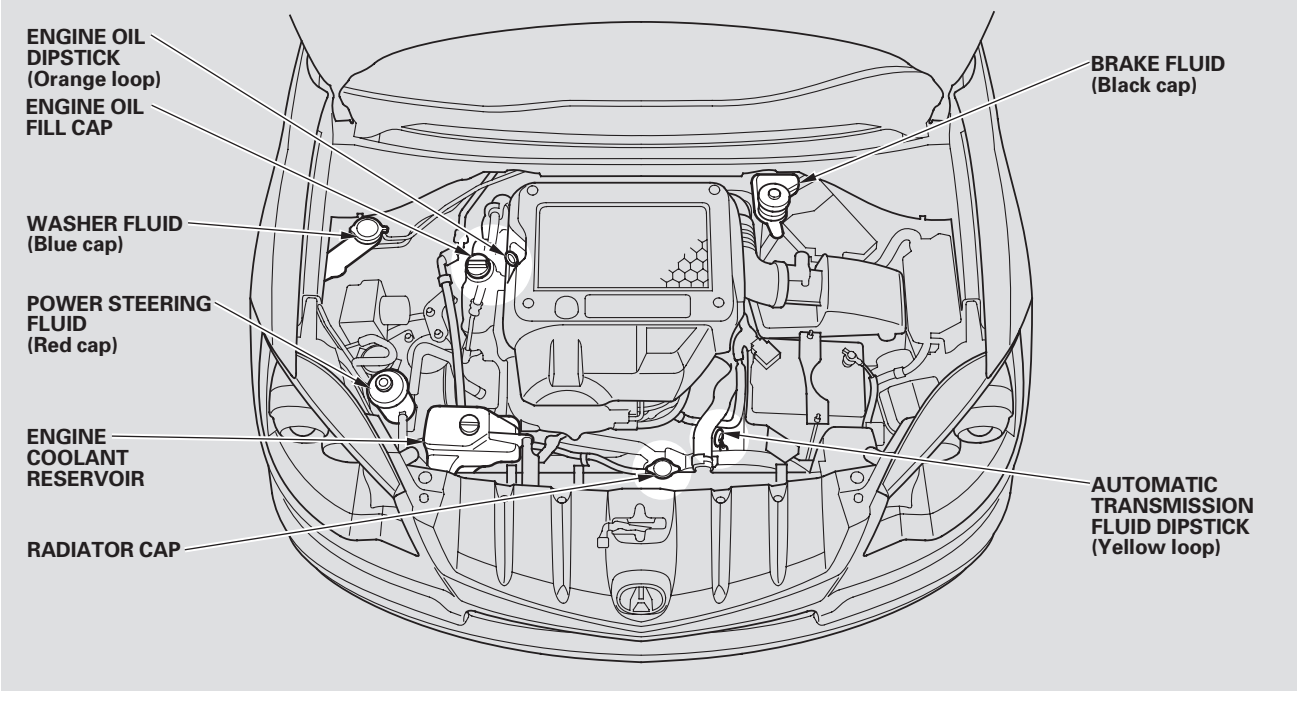

Adding Engine Oil

Adding Engine Oil

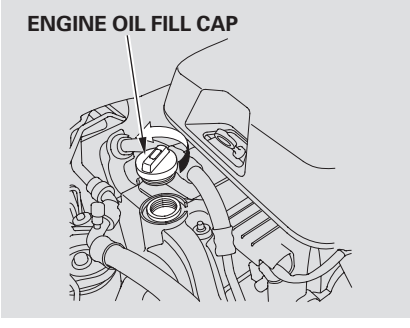

Unscrew and remove the engine oil fill cap on top of the valve cover. Pour in the oil slowly and carefully so you do not spill. Clean up any spills immediately. Spilled oil could damage components in the engine compartment.

Reinstall the engine oil fill cap, and tighten it securely. Wait a few minutes, and recheck the oil level on the engine oil dipstick. Do not fill above the upper mark; you could damage the engine.

Required Engine Oil

Oil is a major contributor to your engine's performance and longevity. Your vehicle is equipped with a high-performance turbocharged engine that requires the use of synthetic motor oil. Always use Mobil 1® 5W-30 or an equivalent oil that meets the Acura HTO-06 standard. Not all synthetic oils will meet this standard. Only use oils that display the HTO-06 standard on the label.

Failure to use Mobil 1® or an equivalent oil that meets the HTO-06 standard can lead to a reduction in engine performance or durability, and can cause engine damage not covered by your warranty.

Adding Engine Oil

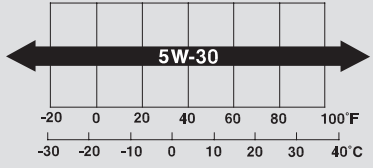

Ambient Temperature

The oil viscosity or weight is provided on the container's label. 5W-30 oil is formulated for year-round protection of your vehicle to improve cold weather starting and fuel economy.

Engine Oil Additives

Your vehicle does not require any oil additives. Additives may adversely affect the engine or transmission performance and durability.

Changing the Oil and Filter

Always change the oil and filter according to the maintenance messages shown on the information display or multi-information display (depending on models). The oil and filter collect contaminants that can damage your engine if they are not removed regularly.

Changing the oil and filter requires special tools and access from underneath the vehicle. The vehicle should be raised on a service station-type hydraulic lift for this service. Unless you have the knowledge and proper equipment, you should have this maintenance done by a skilled technician.

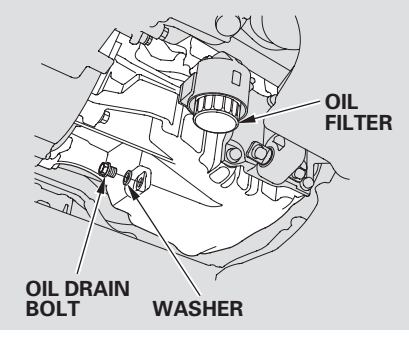

1. Run the engine until it reaches normal operating temperature, then shut it off.

2. Open the hood, and remove the engine oil fill cap. Remove the oil drain bolt and washer from the bottom of the engine. Drain the oil into an appropriate container.

3. Remove the oil filter, and let the remaining oil drain. A special wrench (available from your dealer) is required.

4. Check the oil filter to make sure its gasket did not stick to the filter base. A stuck gasket could cause an oil leak.

5. Install a new oil filter according to the instructions that come with it.

Changing the Oil and Filter

6. Put a new washer on the drain bolt, then reinstall the drain bolt. Tighten the drain bolt to:
   29 lbf·ft (39 N·m , 4.0 kgf·m)

7. Refill the engine with the recommended oil.

   Engine oil change capacity (including filter):
   4.9 US qt (4.6 ℓ)

8. Replace the engine oil fill cap. Start the engine. The oil pressure indicator should go out within 5 seconds. If it does not, turn off the engine, and check your work.

9. Let the engine run for several minutes, then check the drain bolt and oil filter for leaks.

10. Turn off the engine and let it sit for several minutes, then check the oil level on the dipstick. If necessary, add more oil.

NOTICE

Improper disposal of engine oil can be harmful to the environment. If you change your own oil, please dispose of the used oil properly. Put it in a sealed container and take it to a recycling center. Do not discard it in a trash bin or dump it on the ground.

Engine Coolant

Adding Engine Coolant

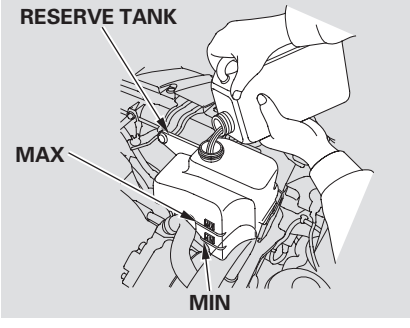

If the coolant level in the reserve tank is at or below the MIN line, add coolant to bring it up to the MAX line. Inspect the cooling system for leaks.

Always use Honda Long-life Anti-freeze/Coolant Type 2. This coolant is pre-mixed with 50 percent antifreeze and 50 percent water. Never add straight antifreeze or plain water.

If Honda antifreeze/coolant is not available, you may use another major-brand non-silicate coolant as a temporary replacement. Make sure it is a high-quality coolant recommended for aluminum engines. Continued use of any non-Honda coolant can result in corrosion, causing the cooling system to malfunction or fail. Have the cooling system flushed and refilled with Honda antifreeze/coolant as soon as possible.

If the reserve tank is completely empty, you should also check the coolant level in the radiator.

⚠ WARNING

Removing the radiator cap while the engine is hot can cause the coolant to spray out, seriously scalding you.

Always let the engine and radiator cool down before removing the radiator cap.

Engine Coolant

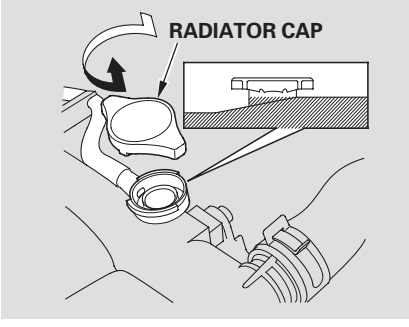

1. Make sure the engine and radiator are cool.

2. Relieve any pressure in the cooling system by turning the radiator cap counterclockwise, without pressing down.

3. Remove the radiator cap by pushing down and turning counterclockwise.

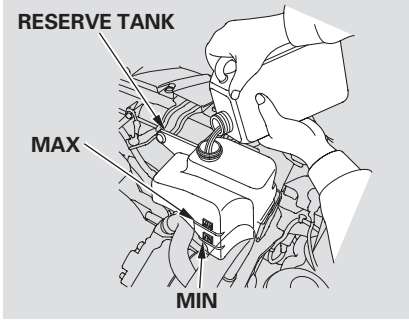

4. The coolant level should be up to the base of the filler neck. Add coolant if it is low.

   Pour the coolant slowly and carefully so you do not spill any. Clean up any spill immediately; it could damage components in the engine compartment.

5. Put the radiator cap back on, and tighten it fully.

6. Pour coolant into the reserve tank. Fill it halfway between the MAX and MIN marks. Put the cap back on the reserve tank.

Do not add any rust inhibitors or other additives to your vehicle's cooling system. They may not be compatible with the coolant or engine components.

Windshield Washers

Check the fluid level in the windshield washer reservoir at least monthly during normal use.

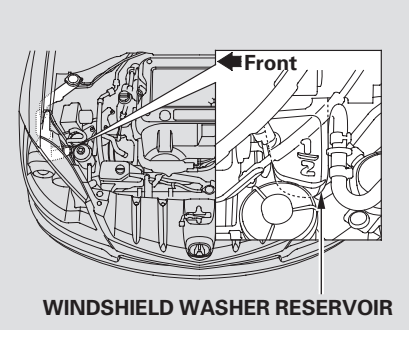

WINDSHIELD WASHER RESERVOIR

On U.S. models: To check the windshield washer fluid level, open the hood and look the windshield washer reservoir located behind the left headlight. You will see a "1/2" mark on the reservoir.

WASHER LEVEL INDICATOR

On Canadian RDX model
The washer level indicator will come on when the level is low (see page 74).

On Canadian RDX with Technology Package model
You will see a "WASHER FLUID LOW" message on the multi-information display (see page 85).

CONTINUED

Windshield Washers

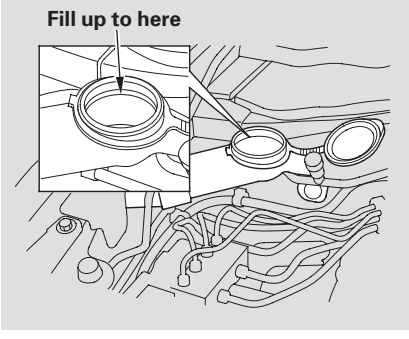

Fill the reservoir with a good-quality windshield washer fluid. This increases the cleaning capability and prevents freezing in cold weather.

When you refill the reservoir, clean the edges of the windshield wiper blades with windshield washer fluid on a clean cloth. This will help to condition the blade edges.

NOTICE

Do not use engine antifreeze or a vinegar/water solution in the windshield washer reservoir. Antifreeze can damage your vehicle's paint, while a vinegar/water solution can damage the windshield washer pump. Use only commercially-available windshield washer fluid.

Automatic Transmission Fluid

The transmission should be drained and refilled with new fluid when this service is shown on the information display or multi-information display (depending on models).

If you are not sure how to add fluid or you do not have the proper equipment to reach the transmission fluid fill hole, you should have this maintenance done by a skilled technician.

Check the fluid level with the engine at normal operating temperature.

1. Park the vehicle on level ground. Start the engine until the radiator fan comes on and rotate it once. Turn off the engine. For accurate results, wait at least 60 seconds, and no more than 90 seconds, after turning off the engine to check the fluid level.

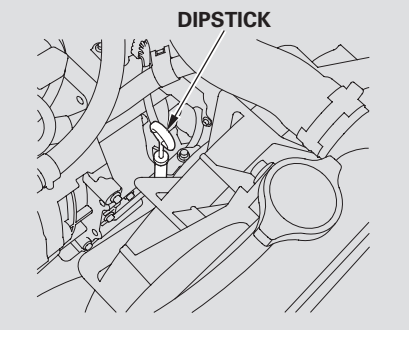

2. Remove the dipstick (yellow loop) from the transmission, and wipe it with a clean cloth.

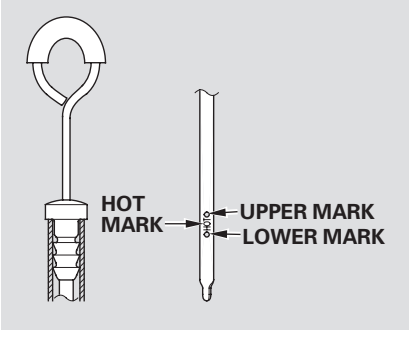

3. Insert the dipstick all the way into the transmission securely as shown in the illustration.

4. Remove the dipstick and check the fluid level. It should be between the upper and lower marks.

CONTINUED

Automatic Transmission Fluid

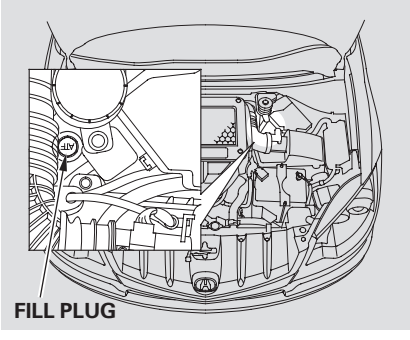

5. If the level is below the lower mark, remove the fill plug, then add the fluid into the hole to bring it to the level between the upper and lower marks on the dipstick.

   Pour the fluid slowly and carefully so you do not spill any. Clean up any spill immediately; it could damage components in the engine compartment.

   Always use Honda ATF-Z1 (automatic transmission fluid). If it's not available, you may use a DEXRON® III automatic transmission fluid as a temporary replacement. However, continued use can affect the shift quality. Have the transmission flushed and refilled with Honda ATF-Z1 as soon as it is convenient.

6. Insert the dipstick all the way back into the transmission securely as shown in the illustration.

Brake Fluid

Check the fluid level in the brake fluid reservoir monthly.

Replace the brake fluid every 3 years, independent of mileage.

Always use Honda Heavy Duty Brake Fluid DOT 3. If it is not available, you should use only DOT 3 or DOT 4 fluid, from a sealed container, as a temporary replacement.

Using any non-Honda brake fluid can cause corrosion and decrease the life of the system. Have the brake system flushed and refilled with Honda Heavy Duty Brake Fluid DOT 3 as soon as possible.

Brake fluid marked DOT 5 is not compatible with your vehicle's braking system and can cause extensive damage.

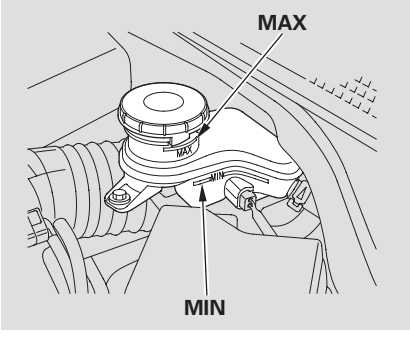

The fluid level should be between the MIN and MAX marks on the side of the reservoir. If the level is at or below the MIN mark, your brake system needs attention. Have the brake system inspected for leaks or worn brake pads.

Power Steering Fluid

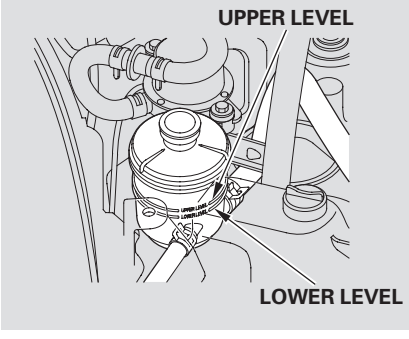

Check the level on the side of the reservoir when the engine is cold. The fluid should be between the UPPER LEVEL and LOWER LEVEL. If not, add power steering fluid to the UPPER LEVEL.

Pour the fluid slowly and carefully so you do not spill any. Clean up any spills immediately; it could damage components in the engine compartment.

Always use Honda Power Steering Fluid. You may use another power steering fluid as an emergency replacement, but have the power steering system flushed and refilled with Honda PSF as soon as possible.

A low power steering fluid level can indicate a leak in the system. Check the fluid level frequently, and have the system inspected as soon as possible.

If you are not sure how to add fluid, contact your dealer.

NOTICE

Turning the steering wheel to full left or right lock and holding it there can damage the power steering pump.

Headlight Aiming

The headlights were properly aimed when your vehicle was new. If you regularly carry heavy items in the cargo area or pull a trailer, readjustment may be required. Adjustments should be done by your dealer or other qualified technician.

Low Beam Headlight Bulb Replacement

The low beam headlight bulbs are a type of high voltage discharge tube. High voltage can remain in the circuit even with the light switch off and the key removed. Because of this, you should not attempt to examine or change a low beam headlight bulb yourself. If a low beam headlight bulb fails, take the vehicle to your dealer to have it replaced.

Replacing a High Beam Headlight Bulb

Your vehicle has halogen headlight bulbs. When replacing a bulb, handle it by its base, and protect the glass from contact with your skin or hard objects. If you touch the glass, clean it with denatured alcohol and a clean cloth.

NOTICE

Halogen headlight bulbs get very hot when lit. Oil, perspiration, or a scratch on the glass can cause the bulb to overheat and shatter.

1. Open the hood.
   Remove the electrical connector from the bulb by pushing on the tab and pulling the connector down.

2. Remove the bulb by turning it about one-quarter turn counterclockwise.

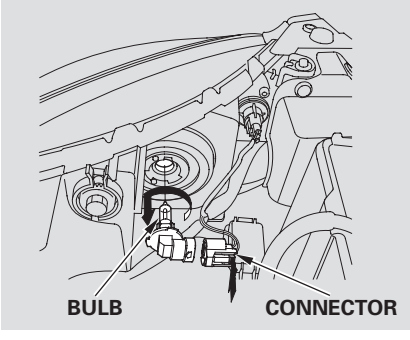

3. Insert the new bulb into the hole, and turn it one-quarter turn clockwise to lock it in place.

4. Push the electrical connector onto the new bulb.

5. Turn on the headlights to test the new bulb.

Lights

Replacing a Front Turn Signal/ Parking Light Bulb

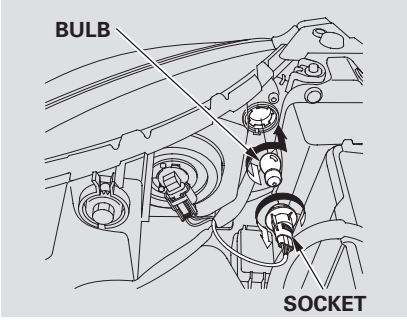

1. Open the hood. Remove the socket from the headlight assembly by turning it one-quarter turn counterclockwise.

2. Remove the bulb from the socket by pushing the bulb in and turning it counterclockwise until it unlocks.

3. Install the new bulb in the socket. Turn it clockwise to lock it in place.

4. Test the lights to make sure the new bulb is working.

5. Insert the socket back into the headlight assembly. Turn it clockwise to lock it in place.

Replacing a Front Side Marker Light Bulb

1. Open the hood. Remove the socket from the headlight assembly by turning it one-quarter turn counterclockwise.

2. Pull the bulb straight out of its socket. Push the new bulb straight into the socket until it bottoms.

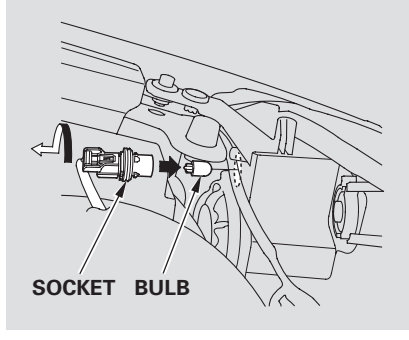

3. Install the socket back into the headlight assembly. Turn it clockwise to lock it in place.

4. Turn on the lights to make sure the new bulb is working.

Replacing Rear Bulbs (in Tailgate)

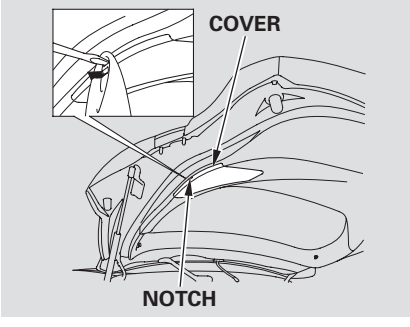

1. Open the tailgate. Place a cloth on the edge of the light assembly cover. Remove the cover by carefully prying in the notch on its middle edge with a flat-tip screwdriver.

2. Determine which of the two bulbs is burned out: taillight or back-up light.

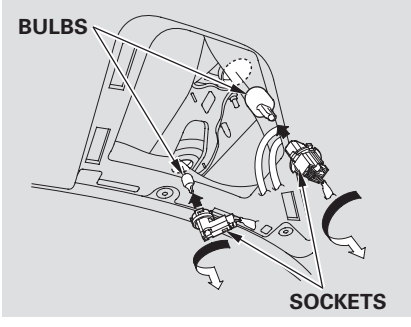

3. Remove the socket by turning it one-quarter turn counterclockwise.

4. Pull the bulb straight out of its socket. Push the new bulb straight into the socket until it bottoms.

5. Turn on the lights to make sure the new bulb is working.

6. Reinstall the socket into the light assembly by turning it clockwise until it locks.

7. Reinstall the light assembly cover.

Replacing Rear Bulbs (in Rear Pillar)

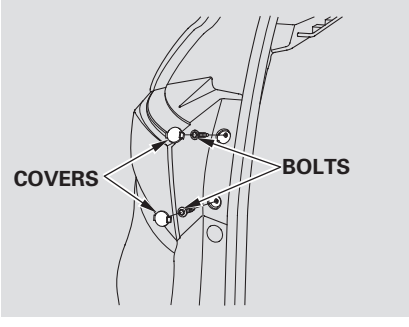

1. Open the tailgate.

2. Remove the two bolt covers on the rear pillar by prying on the bottom edge with a flat-tip screwdriver. Remove the bolts with a Phillips-head screwdriver, and remove the light assembly from the rear pillar.

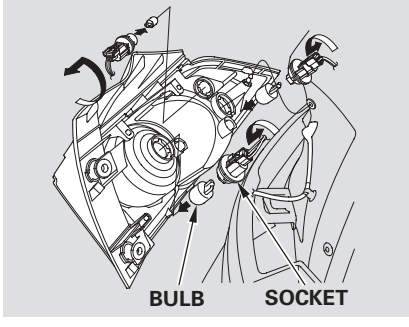

3. Determine which of the three bulbs is burned out: brake/taillight, turn signal or rear side marker.

4. Remove the socket by turning it one-quarter turn counterclockwise.

5. Pull the bulb straight out of its socket. Push the new bulb straight into the socket until it bottoms.

6. Turn on the lights to make sure the new bulb is working.

7. Put the socket back into the light assembly, and turn it clockwise to lock it in place.

8. Install the rear light assembly in the rear pillar. Tighten the two bolts. Snap the bolt covers into position.

Replacing a Front Fog Light Bulb

Your vehicle uses halogen light bulbs. When replacing a bulb, handle it by its plastic case, and protect the glass from contact with your skin or hard objects. If you touch the glass, clean it with denatured alcohol and a clean cloth.

NOTICE

Halogen bulbs get very hot when lit. Oil, perspiration, or a scratch on the glass can cause the bulb to overheat and shatter.

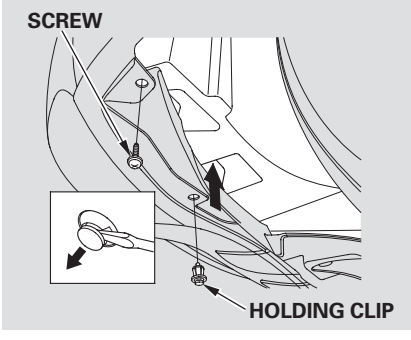

1. Use a Phillips-head screwdriver to remove the screw and use the flat-tipped screwdriver to remove the holding clip located under the front bumper.

2. Push up the undercover.

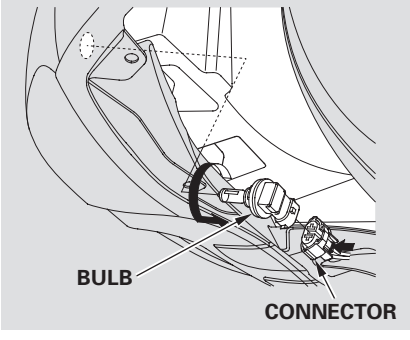

3. Remove the electrical connector from the bulb by pushing on the tab and pulling the connector down.

4. Remove the bulb from the fog light assembly by turning it one-quarter turn counterclockwise.

CONTINUED

5. Install the new bulb into the hole and turn it one-quarter turn clockwise to lock it in place.

6. Push the electrical connector back onto the bulb. Make sure it is on all the way.

7. Turn on the fog lights to test the new bulb.

8. Put the undercover in place. Reinstall the clip, and tighten the screw securely.

Replacing a High-mount Brake Light Bulb

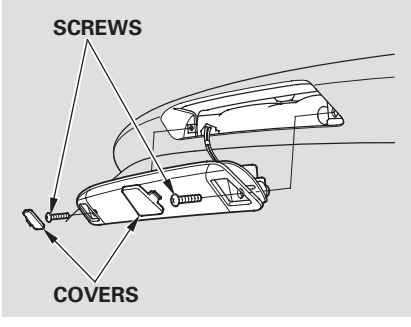

1. Remove the two screw covers on the light assembly by prying on the side edge with a flat-tip screwdriver.

2. Remove the screws with a Phillips-head screwdriver, then remove the light assembly from the tailgate.

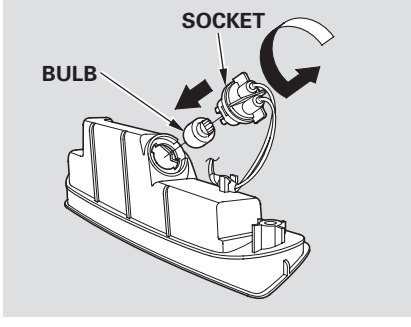

3. Remove the socket from the light assembly by turning it one-quarter turn counterclockwise.

4. Pull the bulb straight out of its socket. Push the new bulb straight into the socket until it bottoms.

5. Press the brake pedal to make sure the new bulb is working.

6. Put the socket back into the light assembly, and turn it clockwise to lock it in place.

7. Reinstall the high-mount brake light assembly into the tailgate. Tighten the two screws and reinstall the covers.

Side Turn Signal Light
Each outside mirror has side turn signal lights. The lights should be replaced by your dealer.

Replacing a Rear License Plate Light Bulb
The license plate has two lights above it. The bulbs should be replaced by your dealer.

Cleaning the Seat Belts, Floor Mats

Cleaning the Seat Belts

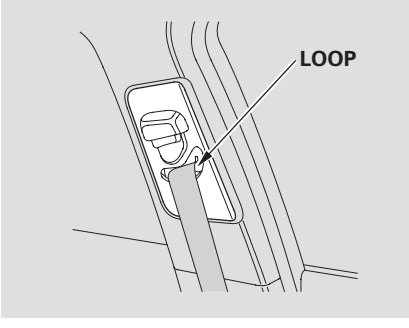

If your seat belts get dirty, use a soft brush with a mixture of mild soap and warm water to clean them. Do not use bleach, dye, or cleaning solvents. Let the belts air-dry before you use the vehicle.
Dirt build-up in the loops of the seat belt anchors can cause the belts to retract slowly. Wipe the insides of the loops with a clean cloth dampened in mild soap and warm water or isopropyl alcohol.

Floor Mats

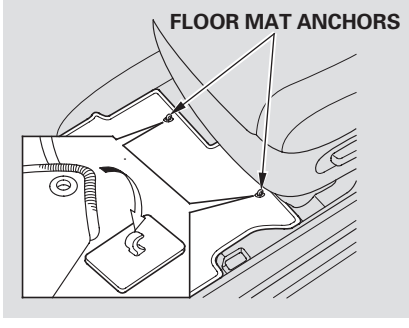

The driver's floor mat that came with your vehicle hooks over the floor mat anchors. This keeps the floor mat from sliding forward and possibly interfering with the pedals.

If you remove the driver's floor mat, make sure to re-anchor it when you put it back in your vehicle.

A non-Acura floor mat may not fit your vehicle properly. This could prevent the proper operation of the folding rear seats and the passenger's seat weight sensors. We recommend using genuine Acura floor mats. Do not put additional floor mats on top of the anchored mat.

Audio Antenna, Intercooler, Dust and Pollen Filter

Audio Antenna

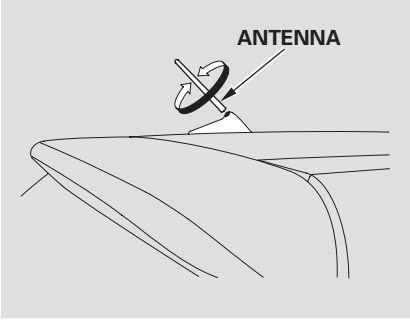

NOTICE

Your vehicle is equipped with an antenna at the rear of the roof. Before using a ''drive-through'' car wash, remove the antenna by unscrewing it by hand. This prevents the antenna from being damaged by the car wash brushes.

Intercooler

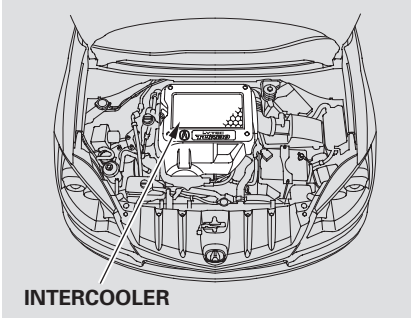

Your vehicle is equipped with a intercooler on the engine to cool the air flow from a turbo charger into the engine. The intercooler fins bend easily. Do not push them with your finger.

NOTICE

Do not spray water (from such sources as garden hoses, high pressure sprayers) into the engine compartment. It may cause serious damage to your vehicle, and could also damage the intercooler fins.

Dust and Pollen Filter

This filter removes the dust and pollen that is brought in from the outside through the heating and cooling system.

Have your dealer replace the filter when this service is indicated by a maintenance message on the information display or multi-information display (depending on the models). It should be replaced every 15,000 miles (24,000 km) if you drive primarily in urban areas that have high concentrations of soot in the air, or if the flow from the heating and cooling system becomes less than usual.

Wiper Blades

Check the condition of the wiper blades at least every six months. Look for signs of cracking in the rubber, or areas that are getting hard. Replace the blades if you find these signs, or if they leave streaks and unwiped areas when used.

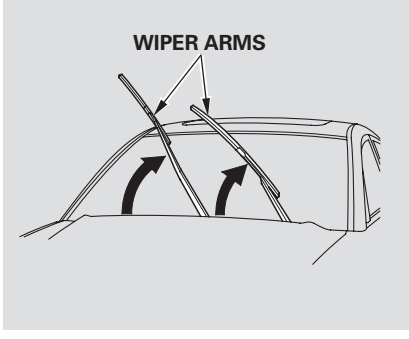

To replace a front wiper blade:

1. Raise each wiper arm off the windshield, lifting the driver's side first, then the passenger's side.

NOTICE

Do not open the hood when the wiper arms are raised, or you will damage the hood and the wiper arms.

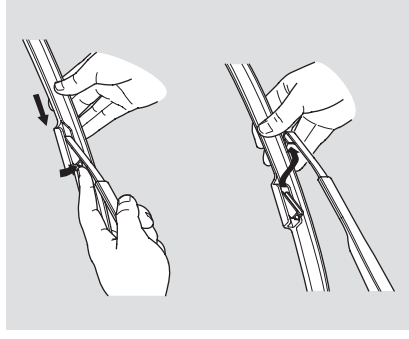

2. Disconnect the blade assembly from the wiper arm:
   - Press and hold the lock tab.
   - Slide the blade assembly toward the lock tab until it releases from the wiper arm.

   When replacing a wiper blade, make sure not to drop the wiper blade or wiper arm down on the windshield.

Wiper Blades

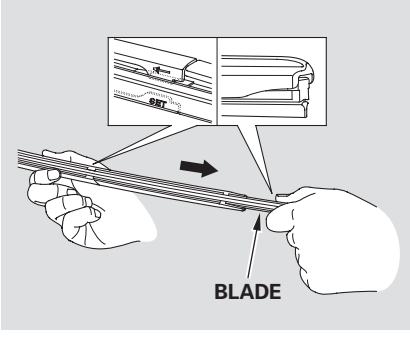

3. Remove the blade from the blade assembly:

   - Find two tabs with a “SET” and “←” mark on the wiper blade assembly. The opposite side of the “←” mark is the direction you pull out the wiper blade.

   - Pull out the blade by grabbing the end of the blade as shown above illustration.

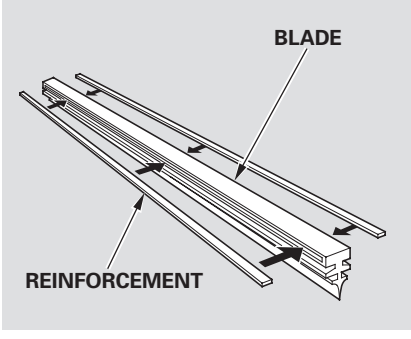

4. Examine the new wiper blades. If they have no plastic or metal reinforcement along the back edge, remove the metal reinforcement strips from the old wiper blade, and install them in the slots along the edge of the new blade.

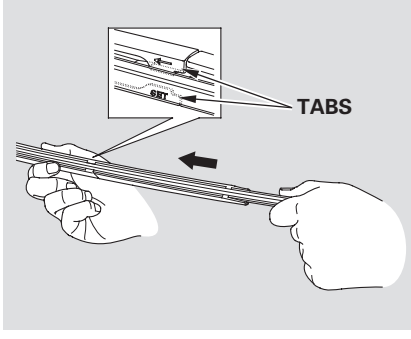

5. Install the new blade onto the blade assembly:

   - Find two tabs with a “SET” and “←” mark on the wiper blade assembly. This is the direction you install.

   - Slide the blade onto the assembly until it is locked by the tabs.

CONTINUED

Wiper Blades

6. Slide the wiper blade assembly onto the wiper arm. Make sure it locks in place.

7. Make sure the blade is completely installed and that its edge is not bunched up.

8. Lower the wiper arm down against the windshield, the passenger's side first, then the driver's side.

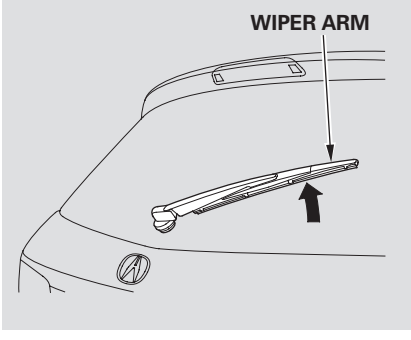

To replace the rear wiper blade:

1. Raise the wiper arm off the rear window.

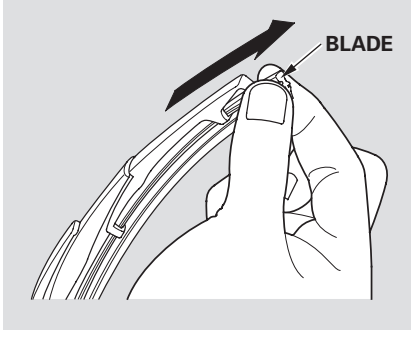

2. Slide the blade out of the wiper arm.

Wiper Blades

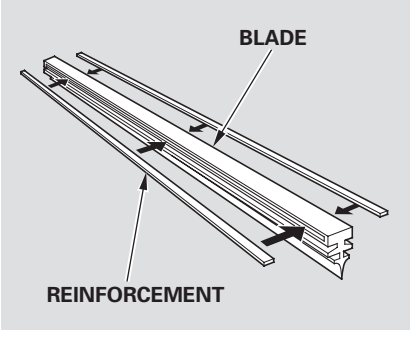

3. Examine the new wiper blades. If they have no plastic or metal reinforcement along the back edge, remove the metal reinforcement strips from the old wiper blade, and install them in the slots along the edge of the new blade.

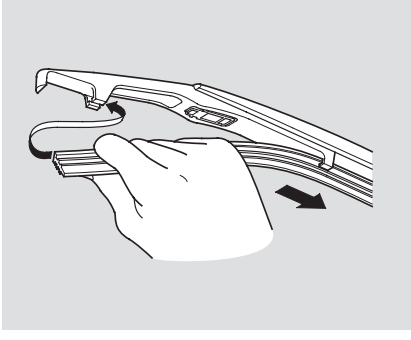

4. Slide the new blade into the wiper arm. Make sure it is engaged in the slot along its full length.

5. Lower the wiper arm.

Tires

Wheels

Clean the wheels as you would the rest of the exterior. Wash them with the same solution, and rinse them thoroughly.

Aluminum alloy wheels have a protective clear-coat that keeps the aluminum from corroding and tarnishing. Cleaning the wheels with harsh chemicals (including some commercial wheel cleaners) or a stiff brush can damage the clear-coat. To clean the wheels, use a mild detergent and a soft brush or sponge.

Tires

To safely operate your vehicle, your tires must be the proper type and size, in good condition with adequate tread, and correctly inflated.

The following pages give more detailed information on how to take care of your tires and what to do when they need to be replaced.

⚠ WARNING

Using tires that are excessively worn or improperly inflated can cause a crash in which you can be seriously hurt or killed.

Follow all instructions in this owner's manual regarding tire inflation and maintenance.

Inflation Guidelines

Keeping the tires properly inflated provides the best combination of handling, tread life, and riding comfort.

- Underinflated tires wear unevenly, adversely affect handling and fuel economy, and are more likely to fail from being overheated.
- Overinflated tires can make your vehicle ride more harshly, are more prone to damage from road hazards, and wear unevenly.

The tire pressure monitoring system (TPMS) will warn you when a tire pressure is low. See page 309 for information on the TPMS.

Tires

Even though your vehicle is equipped with TPMS, we recommend that you visually check your tires every day. If you think a tire might be low, check it immediately with a tire gauge.

Use a gauge to measure the air pressure in each tire at least once a month. Even tires that are in good condition may lose 1 to 2 psi (10 to 20 kPa, 0.1 to 0.2 kgf/cm²) per month. Remember to check the spare tire at the same time.

Check the air pressures when the tires are cold. This means the vehicle has been parked for at least 3 hours, or driven less than 1 mile (1.6 km). Add or release air, if needed, to match the recommended cold tire pressures.

If you check air pressures when the tires are hot [driven for several miles (kilometers)], you will see readings 4 to 6 psi (30 to 40 kPa, 0.3 to 0.4 kgf/cm²) higher than the cold readings. This is normal. Do not let air out to match the recommended cold air pressure. The tire will be underinflated.

You should use your own tire pressure gauge whenever you check your tire pressures. This will make it easier for you to tell if a pressure loss is due to a tire problem and not due to a variation between gauges.

While tubeless tires have some ability to self-seal if they are punctured, you should look closely for punctures if a tire starts losing pressure.

Recommended Tire Pressures

The following chart shows the recommended cold tire pressures for most normal and high-speed driving conditions.

Tire Size	Cold Tire Pressure for Normal Driving
P235/55R18 99V	Front/Rear: 32 psi (220 kPa , 2.2 kgf/cm²)

The compact spare tire pressure is: 60 psi (420 kPa , 4.2 kgf/cm²)

For convenience, the recommended tire sizes and cold tire pressures are on a label on the driver's doorjamb.

For additional information about your tires, see page 412 .

Tires

Tire Inspection

Every time you check inflation, you should also examine the tires for damage, foreign objects, and wear.

You should look for:

- Bumps or bulges in the tread or side of the tire. Replace the tire if you find either of these conditions.
- Cuts, splits, or cracks in the side of the tire. Replace the tire if you can see fabric or cord.
- Excessive tread wear.

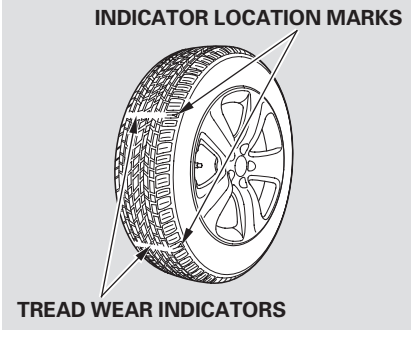

Your tires have wear indicators molded into the tread. When the tread wears down, you will see a band 1/2 inch (12.7 mm) wide band across the tread. This shows there is less than 1/16 inch (1.6 mm) of tread left on the tire.

A tire this worn gives very little traction on wet roads. You should replace the tire if you can see three or more tread wear indicators.

Tire Maintenance

In addition to proper inflation, correct wheel alignment helps to decrease tire wear. If you find a tire is worn unevenly, have your dealer check the wheel alignment.

Have your dealer check the tires if you feel a consistent vibration while driving. A tire should always be rebalanced if it is removed from the wheel. When you have new tires installed, make sure they are balanced. This increases riding comfort and tire life. For best results, have the installer perform a dynamic balance.

NOTICE

Improper wheel weights can damage your vehicle's aluminum wheels. Use only genuine Acura wheels weights for balancing.

Tire Rotation

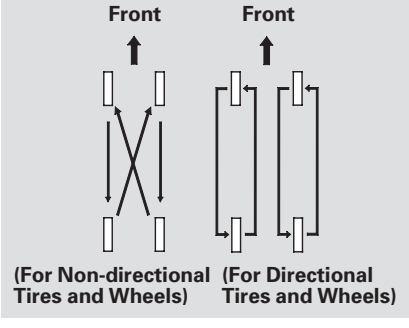

To help increase tire life and distribute wear more evenly, rotate the tires according to the maintenance messages displayed on the information display or multi-information display (depending on models). Move the tires to the positions shown in the diagram each time they are rotated. If you purchase directional tires, rotate only front-to-back.

Replacing Tires and Wheels

Replace your tires with radial tires of the same size, load range, speed rating, and maximum cold tire pressure rating (as shown on the tire's sidewall).

Mixing radial and bias-ply tires on your vehicle can reduce braking ability, traction, and steering accuracy. Using tires of a different size or construction can cause the ABS and vehicle stability assist system (VSA) to work inconsistently.

The ABS works by comparing the speed of the wheels. When replacing tires, use the same size originally supplied with the vehicle. Tire size and construction can affect wheel speed and may cause the system to activate.

It is best to replace all four tires at the same time. If that is not possible or necessary, replace the two front tires or two rear tires as a pair. Replacing just one tire can seriously affect your vehicle's handling.

If you ever replace a wheel, make sure the new one matches the specifications of the original.

Replacement wheels are available at your dealer.

Tires

⚠ WARNING

Installing improper tires on your vehicle can affect handling and stability. This can cause a crash in which you can be seriously hurt or killed.

Always use the size and type of tires recommended in this owner's manual.

Wheel and Tire Specifications

Wheels:
18 x 7 1/2J (TPMS)

Tires:
P235/55R18 99V

See page 410 for information about DOT Tire Quality Grading, and page 412 for tire size and labeling information.

Winter Driving

Tires marked "M + S" or "All Season" on the sidewall have an all-weather tread design suitable for most winter driving conditions.

For the best performance in snowy or icy conditions, you should install snow tires or tire chains. They may be required by local laws under certain conditions.

Snow Tires

If you mount snow tires on your vehicle, make sure they are radial tires of the same size and load range as the original tires. Mount snow tires on all four wheels. The traction provided by snow tires on dry roads may be lower than your original tires. Check with the tire dealer for maximum speed recommendations.

Tire Chains
Mount tire chains on your tires when required by driving conditions or local laws. Install them only on the front tires.

Because your vehicle has limited tire clearance, Acura strongly recommends using the chains listed below, made by Security Chain Company (SCC).

Cable type: Shur Grip Z
SZ343

When installing cables, follow the manufacturer's instructions, and mount them as tight as you can. Make sure they are not contacting the brake lines or suspension. Drive slowly with them installed. If you hear them coming into contact with the body or chassis, stop and investigate. Remove them as soon as you begin driving on cleared roads.

NOTICE

Traction devices that are the wrong size or improperly installed can damage your vehicle's brake lines, suspension, body, and wheels. Stop driving if they are hitting any part of the vehicle.

⚠ WARNING

Using the wrong chains, or not properly installing chains, can damage the brake lines and cause a crash in which you can be seriously injured or killed.

Follow all instructions in this owner's manual regarding the selection and use of tire chains.

Checking the Battery

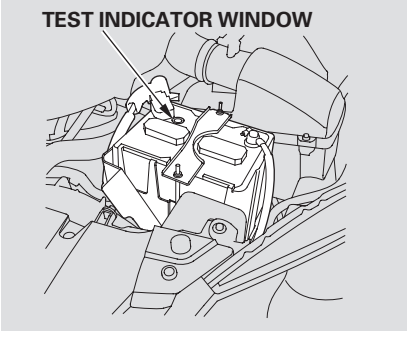

Check the condition of the battery monthly by looking at the test indicator window. The label on the battery explains the test indicator's colors.

Check the terminals for corrosion (a white or yellowish powder). To remove it, cover the terminals with a solution of baking soda and water. It will bubble up and turn brown. When this stops, wash it off with plain water. Dry off the battery with a cloth or paper towel. Coat the terminals with grease to help prevent future corrosion.

If additional battery maintenance is needed, see your dealer or a qualified technician.

WARNING: Battery posts, terminals, and related accessories contain lead and lead compounds. **Wash your hands after handling.**

If you need to connect the battery to a charger, disconnect both cables to prevent damaging your vehicle's electrical system. Always disconnect the negative (−) cable first, and reconnect it last.

⚠ WARNING

The battery gives off explosive hydrogen gas during normal operation.

A spark or flame can cause the battery to explode with enough force to kill or seriously hurt you.

Wear protective clothing and a face shield, or have a skilled technician do the battery maintenance.

On RDX models
If your vehicle's battery is disconnected, or goes dead, the time setting will be reset to 1:00. To set the time again, follow the setting procedure (see page 198).

Checking the Battery

If your vehicle's battery is disconnected or goes dead, the audio system will disable itself. The next time you turn on the radio you will see "ENTER CODE" in the frequency display. Use the preset bars or preset buttons (depending on models) to enter the five-digit code (see page 239).

On RDX with Technology Package model

The navigation system will also disable itself. The next time you turn on the ignition switch, the system will require you to enter a PIN before it can be used. Refer to the navigation system manual.

Vehicle Storage

If you need to park your vehicle for an extended period (more than 1 month), there are several things you should do to prepare it for storage. Proper preparation helps prevent deterioration and makes it easier to get your vehicle back on the road. If possible, store your vehicle indoors.

- Fill the fuel tank.
- Change the engine oil and filter.
- Wash and dry the exterior completely.
- Clean the interior. Make sure the carpeting, floor mats, etc., are completely dry.
- Leave the parking brake off. Put the transmission in Park.
- Block the rear wheels.
- If the vehicle is to be stored for a longer period, it should be supported on jackstands so the tires are off the ground.
- Leave one window open slightly (if the vehicle is being stored indoors).
- Disconnect the battery.
- Support the front and rear wiper blade arms with a folded towel or rag so they do not touch the windshield.
- To minimize sticking, apply a silicone spray lubricant to all door and tailgate seals. Also, apply a vehicle body wax to the painted surfaces that mate with the door and tailgate seals.
- Cover the vehicle with a “breathable” cover, one made from a porous material such as cotton. Non-porous materials, such as plastic sheeting, trap moisture, which can damage the paint.
- If possible, periodically run the engine until it reaches full operating temperature (the cooling fans cycle on and off twice). Preferably, do this once a month.

Taking Care of the Unexpected

This section covers the more common problems that motorists experience with their vehicles. It gives you information about how to safely evaluate the problem and what to do to correct it. If the problem has stranded you on the side of the road, you may be able to get going again. If not, you will also find instructions on getting your vehicle towed.

Compact Spare Tire 382
Changing a Flat Tire 383
If the Engine Won't Start 387
Jump Starting 389
If the Engine Overheats 391
Low Oil Pressure Indicator 393
Charging System Indicator 393
Malfunction Indicator Lamp 394
Brake System Indicator (Red) 395
Brake System Indicator (Amber) 396
Fuses 397
Fuse Locations 401
Emergency Towing 403

Compact Spare Tire

Use the compact spare tire as a temporary replacement only. Get your regular tire repaired or replaced, and put it back on your vehicle as soon as you can.

Check the inflation pressure of the compact spare tire every time you check the other tires. It should be inflated to:

60 psi (420 kPa , 4.2 kgf/cm^2)

Follow these precautions:

- Never exceed 50 mph (80 km/h).
- This tire gives a harsher ride and less traction on some road surfaces. Use greater caution while driving.
- Do not mount snow chains on the compact spare tire.
- Do not use your compact spare tire on another vehicle unless it is the same make and model.
- Do not use the compact spare tire if you are towing a trailer.

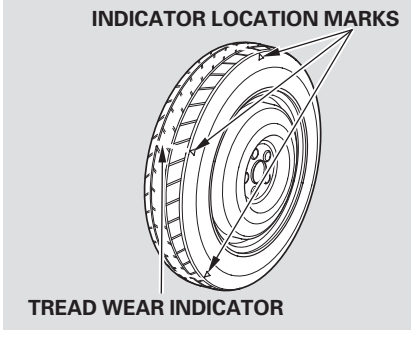

Replace the tire when you can see the tread wear indicator bars. The replacement should be the same size and design tire, mounted on the same wheel. The spare tire is not designed to be mounted on a regular wheel, and the spare wheel is not designed for mounting a regular tire.

Changing a Flat Tire

If you have a flat tire while driving, stop in a safe place to change it. Drive slowly along the shoulder until you get to an exit or an area that is far away from the traffic lanes.

⚠ WARNING

The vehicle can easily roll off the jack, seriously injuring anyone underneath.

Follow the directions for changing a tire exactly, and never get under the vehicle when it is supported only by the jack.

1. Park the vehicle on firm, level, and non-slippery ground. Put the transmission in Park. Apply the parking brake.
   If you are towing a trailer, unhitch it.

2. Turn on the hazard warning lights, and turn the ignition switch to the LOCK (0) position. Have all passengers get out of the vehicle while you change the tire.

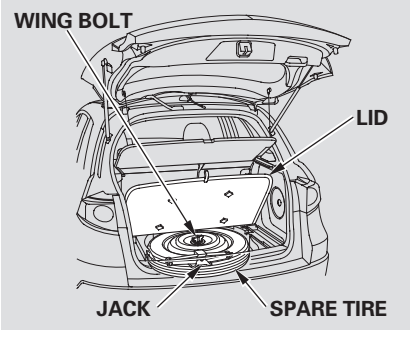

3. Open the tailgate. Raise the cargo area floor lid by lifting it up with the strap, then remove the lid. The spare tire, jack, and tools are under the cargo area floor.

4. Unscrew the wing bolt. Use the hooked end of the wheel nut wrench extension as a wrench if the wing bolt is hard to loosen. Then take the spare tire out of the cargo area.

CONTINUED

Changing a Flat Tire

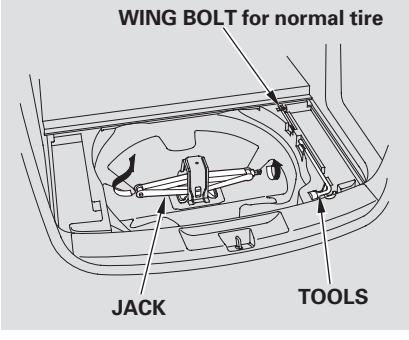

5. Remove the tools, wing bolt and the jack. To remove the jack, turn the jack's end bracket counterclockwise to loosen it.

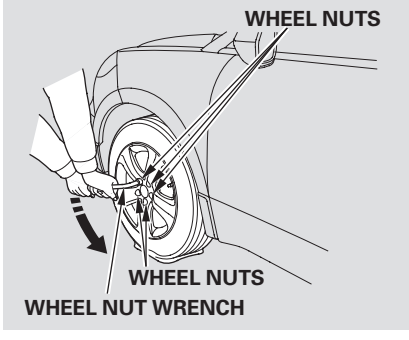

6. Loosen the five wheel nuts 1/2 turn with the wheel nut wrench.

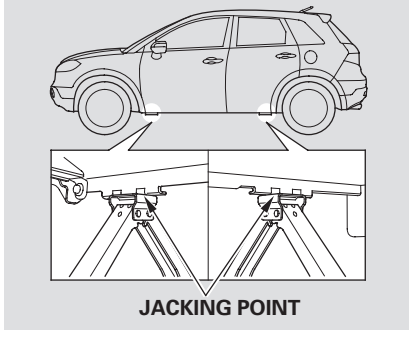

7. Place the jack under the jacking point nearest the tire you need to change. Turn the end bracket clockwise until the top of the jack contacts the jacking point. Make sure the jacking point tab is resting in the jack notch.

Changing a Flat Tire

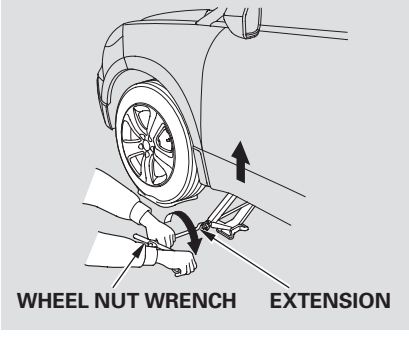

8. Use the extension and the wheel nut wrench as shown to raise the vehicle until the flat tire is off the ground.

9. Remove the wheel nuts, then remove the flat tire. Handle the wheel nuts carefully; they may be hot from driving. Place the flat tire on the ground with the outside surface facing up.

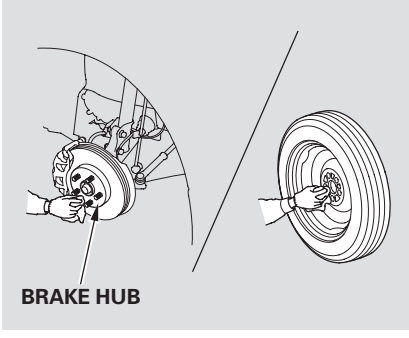

10. Before mounting the spare tire, wipe any dirt off the mounting surface of the wheel and hub with a clean cloth. Wipe the hub carefully; it may be hot from driving.

11. Put on the spare tire. Put the wheel nuts back on finger-tight, then tighten them in a crisscross pattern with the wheel nut wrench until the wheel is firmly against the hub. Do not try to tighten the wheel nuts fully.

12. Lower the vehicle to the ground, and remove the jack.

CONTINUED

Changing a Flat Tire

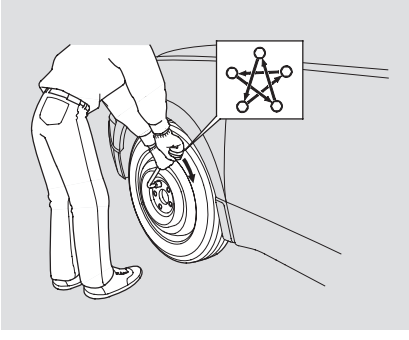

13. Tighten the wheel nuts securely in the same crisscross pattern. Have the wheel nut torque checked at the nearest automotive service facility.
    Tighten the wheel nuts to:
    80 lbf·ft (108 N·m , 11 kgf·m)

14. Store the jack in its holder. Turn the jack's end bracket to lock it in place. Store the tools.

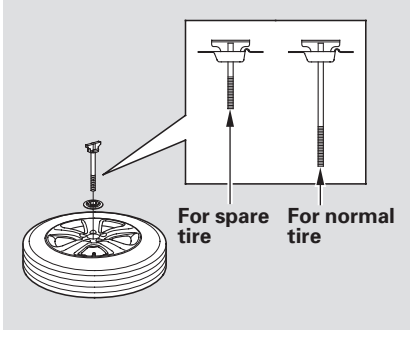

15. Remove the center cap from the flat tire, and store it in the cargo area.

16. Place the flat tire face up in the cargo area.

17. Secure the flat tire by screwing the wing bolt back into its hole.

⚠ WARNING

Loose items can fly around the interior in a crash and could seriously injure the occupants.

Store the wheel, jack, and tools securely before driving.

18. Reinstall the cargo area floor, and close the tailgate.

19. Refer to **Changing a Tire with TPMS** (see page 310).

If the Engine Won't Start

Diagnosing why the engine won't start falls into two areas, depending on what you hear when you turn the ignition switch to the START (III) position:

- You hear nothing, or almost nothing. The engine's starter motor does not operate at all, or operates very slowly.
- You can hear the starter motor operating normally, or the starter motor sounds like it is spinning faster than normal, but the engine does not start up and run.

Nothing Happens or the Starter Motor Operates Very Slowly

When you turn the ignition switch to the START (III) position, you do not hear the normal noise of the engine trying to start. You may hear a clicking sound, a series of clicks, or nothing at all.

Check these things:

- Check the transmission interlock. The transmission must be in Park or neutral or the starter will not operate.
- Turn the ignition switch to the ON (II) position. Turn on the headlights, and check their brightness. If the headlights are very dim or do not come on at all, the battery is discharged. See **Jump Starting** on page 389 .
- Turn the ignition switch to the START (III) position. If the headlights do not dim, check the condition of the fuses. If the fuses are OK, there is probably something wrong with the electrical circuit for the ignition switch or starter motor. You will need a qualified mechanic to determine the problem (see **Emergency Towing** on page 403).

If the headlights dim noticeably or go out when you try to start the engine, either the battery is discharged or the connections are corroded. Check the condition of the battery and terminal connections (see page 378). You can then try jump starting the vehicle from a booster battery (see page 389).

If the Engine Won't Start

The Starter Operates Normally
In this case, the starter motor's speed sounds normal, or even faster than normal, when you turn the ignition switch to the START (III) position, but the engine does not run.

- Are you using a properly coded key? An improperly coded key will cause the immobilizer system indicator in the instrument panel to blink rapidly (see page 128).
- Are you using the proper starting procedure? Refer to **Starting the Engine** on page 294 .
- Do you have fuel? Check the fuel gauge; the low fuel indicator may not be working.
- There may be an electrical problem, such as no power to the fuel pump. Check all the fuses (see page 398).

If you find nothing wrong, you will need a qualified technician to find the problem. See **Emergency Towing** on page 403 .

Jump Starting

Although this seems like a simple procedure, you should take several precautions.

⚠WARNING

A battery can explode if you do not follow the correct procedure, seriously injuring anyone nearby.

Keep all sparks, open flames, and smoking materials away from the battery.

You cannot start your vehicle by pushing or pulling it.

To Jump Start Your Vehicle:

1. Open the hood, and check the physical condition of the battery. In very cold weather, check the condition of the electrolyte. If it seems slushy or frozen, do not try jump starting until it thaws.

NOTICE

If a battery sits in extreme cold, the electrolyte inside can freeze. Attempting to jump start with a frozen battery can cause it to rupture.

2. Turn off all electrical accessories: heater, A/C, climate control, audio system, lights, etc. Put the transmission in Park, and set the parking brake.

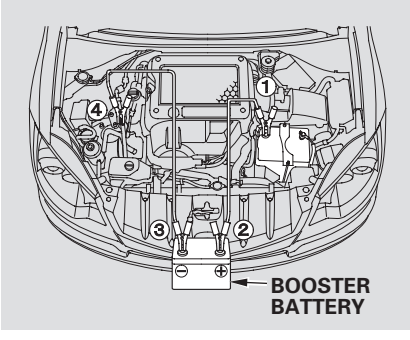

The numbers in the illustration show you the order to connect the jumper cables.

CONTINUED

Jump Starting

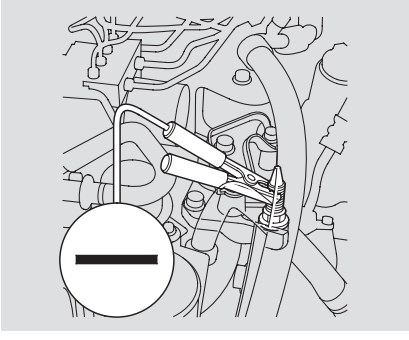

3. Connect one jumper cable to the positive (+) terminal on your battery. Connect the other end to the positive (+) terminal on the booster battery.

4. Connect the second jumper cable to the negative (−) terminal on the booster battery. Connect the other end to the grounding point as shown. Do not connect this jumper cable to any other part of the engine.

5. If the booster battery is in another vehicle, have an assistant start that vehicle and run it at a fast idle.

6. Start your vehicle. If the starter motor still operates slowly, check that the jumper cables have good metal-to-metal contact.

7. Once your vehicle is running, disconnect the negative cable from your vehicle, then from the booster battery. Disconnect the positive cable from your vehicle, then from the booster battery.

Keep the ends of the jumper cables away from each other and any metal on the vehicle until everything is disconnected. Otherwise, you may cause an electrical short.

If the Engine Overheats

The reading of the vehicle's temperature gauge on the information display or multi-information display (depending on models) should stay in the midrange. If it climbs to the H (Hot) mark, you should determine the reason (hot day, driving up a steep hill, etc.).

If the coolant temperature rises to 224°F (118°C) or more, the temperature gauge will appear on the display and blink for several times. At the same time, the beeper will sound once.

If your vehicle overheats, you should take immediate action. The only indication may be the temperature gauge climbing to the H (Hot) mark. Or you may see steam or spray coming from under the hood.

NOTICE

Driving with the temperature gauge reading at the H (Hot) mark can cause serious damage to the engine.

⚠ WARNING

Steam and spray from an overheated engine can seriously scald you.

Do not open the hood if steam is coming out.

1. Safely pull to the side of the road. Put the transmission in Park, and set the parking brake. Turn off all accessories, and turn on the hazard warning indicators.
2. If you see steam and/or spray coming from under the hood, turn off the engine. Wait until you see no more signs of steam or spray, then open the hood.
3. If you do not see steam or spray, leave the engine running, and watch the temperature gauge. If the high heat is due to overloading, the engine should start to cool down almost immediately. If it does, wait until the temperature gauge comes down to the midpoint, then continue driving.
4. If the temperature gauge reading stays at the H (Hot) mark, turn off the engine.

CONTINUED

If the Engine Overheats

5. Look for any obvious coolant leaks, such as a split radiator hose. Everything is still extremely hot, so use caution. If you find a leak, it must be repaired before you continue driving (see **Emergency Towing** on page 403).

6. If you don't find an obvious leak, check the coolant level in the radiator reserve tank (see page 283).

7. If there was no coolant in the reserve tank, you may need to add coolant to the radiator. Let the engine cool down until the reading reaches the middle of the temperature gauge or lower before checking the radiator.

⚠ WARNING

Removing the radiator cap while the engine is hot can cause the coolant to spray out, seriously scalding you.

Always let the engine and radiator cool down before removing the radiator cap.

8. Using gloves or a large heavy cloth, turn the radiator cap counterclockwise, without pushing down, to the first stop. After the pressure releases, push down on the cap, and turn it until it comes off.

9. Start the engine, and set the temperature to maximum heat (climate control to AUTO at " Hi "). Add coolant to the radiator up to the base of the filler neck. If you do not have the proper coolant mixture available, you can add plain water. Remember to have the cooling system drained and refilled with the proper mixture as soon as you can.

10. Put the radiator cap back on tightly. Run the engine, and watch the temperature gauge. If it goes back to the H mark, the engine needs repair (see **Emergency Towing** on page 403).

11. If the temperature stays normal, check the coolant level in the radiator reserve tank. If it has gone down, add coolant to the MAX mark. Put the cap back on tightly.

Low Oil Pressure Indicator, Charging System Indicator

Low Oil Pressure Indicator

This indicator should never come on when the engine is running. If it starts flashing or stays on, the oil pressure has dropped very low or lost pressure. Serious engine damage is possible, and you should take immediate action.

On RDX with Technology Package model
You will also see an "OIL PRESSURE LOW" message on the multi-information display (see page 84).

NOTICE

Running the engine with low oil pressure can cause serious mechanical damage almost immediately. Turn off the engine as soon as you can safely get the vehicle stopped.

1. Safely pull off the road, and shut off the engine. Turn on the hazard warning lights.
2. Let the vehicle sit for a minute. Open the hood, and check the oil level (see page 283). An engine very low on oil can lose pressure during cornering and other driving maneuvers.
3. If necessary, add oil to bring the level back to the full mark on the dipstick (see page 347).
4. Start the engine, and watch the oil pressure indicator. If it does not go out within 10 seconds, turn off the engine. There is a mechanical problem that needs to be repaired before you can continue driving (see **Emergency Towing** on page 403).

Charging System Indicator

If the charging system indicator comes on brightly when the engine is running, the battery is not being charged.

On RDX with Technology Package model
You will also see a "CHECK CHARGING SYSTEM" message on the multi-information display (see page 84).

Immediately turn off all electrical accessories. Try not to use other electrically operated controls such as the power windows. Keep the engine running; starting the engine will discharge the battery rapidly.

Go to a service station or garage where you can get technical assistance.

Malfunction Indicator Lamp

If the indicator comes on while driving, it means one of the engine's emissions control systems may have a problem. Even though you may feel no difference in your vehicle's performance, it can reduce your fuel economy and cause increased emissions. Continued operation may cause serious damage.

If you have recently refueled your vehicle, the indicator coming on could be due to a loose or missing fuel fill cap. Tighten the cap until it clicks at least once. Tightening the cap will not turn the indicator off immediately; it can take several days of normal driving.

If the indicator comes on repeatedly, even though it may turn off as you continue driving, have your vehicle checked by your dealer as soon as possible.

NOTICE

If you keep driving with the malfunction indicator lamp on, you can damage your vehicle's emissions controls and engine. Those repairs may not be covered by your vehicle's warranties.

The indicator may also come on with the "D" indicator.

On RDX with Technology Package model
You will also see a "CHECK EMISSION SYSTEM" message on the multi-information display (see page 84).

Readiness Codes
Your vehicle has certain "readiness codes" that are part of the on-board diagnostics for the emissions systems. In some states, part of the emissions testing is to make sure these codes are set. If they are not set, the test cannot be completed.

If the battery in your vehicle has been disconnected or gone dead, these codes are erased. It takes at least three days of driving under various conditions to set the codes again.

To check if they are set, turn the ignition switch to the ON (II) position, without starting the engine. The malfunction indicator lamp will come on for 20 seconds. If it then goes off, the readiness codes are set. If it blinks five times, the readiness codes are not set. If possible, do not take your vehicle for a state emissions test until the readiness codes are set. Refer to **State Emissions Testing** for more information (see page 418).

Brake System Indicator

U. S. Canada

BRAKE

Brake System Indicator (Red)
The brake system indicator (red) normally comes on when you turn the ignition switch to the ON (II) position, and as a reminder to check the parking brake. It will stay on if you do not fully release the parking brake.

If the brake system indicator (red) comes on while driving, the brake fluid level is probably low. Press lightly on the brake pedal to see if it feels normal. If it does, check the brake fluid level the next time you stop at a service station (see page 357).

On RDX with Technology Package model
You will also see a "BRAKE FLUID LOW" message on the multi-information display (see page 84).

If the fluid level is low, take your vehicle to a dealer, and have the brake system inspected for leaks or worn brake pads.

However, if the brake pedal does not feel normal, you should take immediate action. A problem in one part of the system's dual circuit design will still give you braking at two wheels. You will feel the brake pedal go down much farther before the vehicle begins to slow down, and you will have to press harder on the pedal.

On RDX with Technology Package model
You will also see a "CHECK BRAKE SYSTEM" message on the multi-information display (see page 84).

Slow down by shifting to a lower gear, and pull to the side of the road when it is safe. Because of the long distance needed to stop, it is hazardous to drive the vehicle. You should have it towed, and repaired as soon as possible (see **Emergency Towing** on page 403).

CONTINUED

Brake System Indicator

If you must drive the vehicle a short distance in this condition, drive slowly and carefully.

If the ABS indicator and the VSA system indicator come on with the brake system indicator, have your vehicle inspected by your dealer immediately.

U. S. Canada

Brake System Indicator (Amber)
Your vehicle has an electric vacuum pump located in the engine compartment. It enhances the effectiveness of your vehicle's brake system more frequently when you drive in cold weather or thinner air at high altitude after the engine is started.

When the electric vacuum pump is in operation, it makes some mechanical noises come from the engine compartment. This is normal.

The brake system indicator (amber) on the instrument panel normally comes on for a few seconds when you turn the ignition switch to the ON (II) position. If it stays on after the engine starts, press on the brake pedal with your foot several times until the indicator turns off. If the indicator is still on or comes on again after this procedure, there is a problem in the brake system including the electric vacuum pump. If this happens, the brake pedal might feel heavy when you press it. Have your vehicle checked by your dealer.

On RDX with Technology Package model
You will also see a "CHECK BRAKE SYSTEM" message on the multi-information display (see page 84).

Fuses

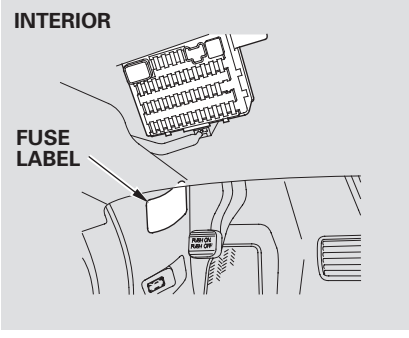

The vehicle's fuses are contained in three fuse boxes.

The interior fuse box is on the driver's lower left side.

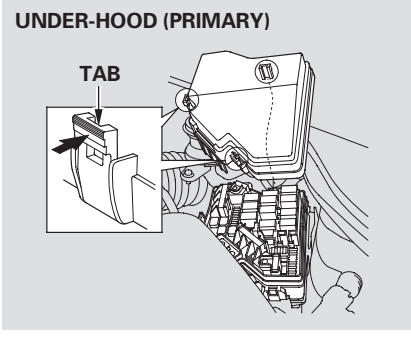

The primary under-hood fuse box is in the engine compartment on the driver's side. To open it, push the tabs as shown.

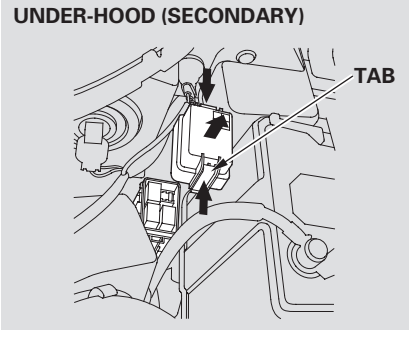

The secondary under-hood fuse box is next to the battery. To open it, push the tabs as shown.

Fuses

Checking and Replacing Fuses

If something electrical in your vehicle stops working, check for a blown fuse first. Determine from the chart on pages 401 and 402, or the diagram on the fuse box lid, which fuse or fuses control that device. Check those fuses first, but check all the fuses before deciding that a blown fuse is the cause. Replace any blown fuses, and check if the device works.

1. Turn the ignition switch to the LOCK (0) position. Make sure the headlights and all other accessories are off.

2. (Under-hood fuse boxes) Remove the cover from the fuse box.

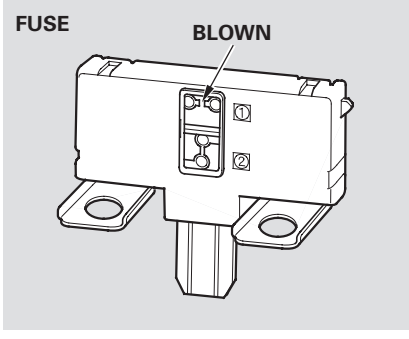

3. Check each of the large fuses in the under-hood fuse box by looking through the side window at the wire inside. Remove the screws with a Phillips-head screwdriver.

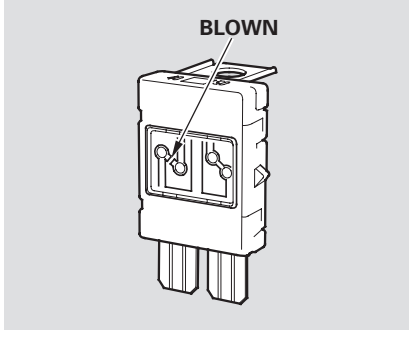

Fuses

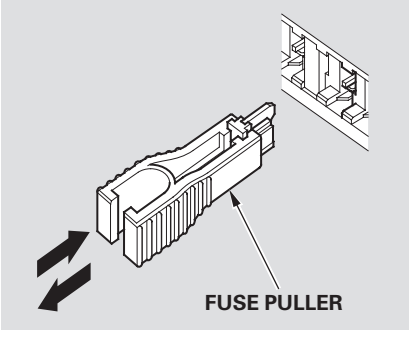

4. Check the smaller fuses in the under-hood fuse boxes and all the fuses in the interior fuse box by pulling out each one with the fuse puller provided in the primary under-hood fuse box.

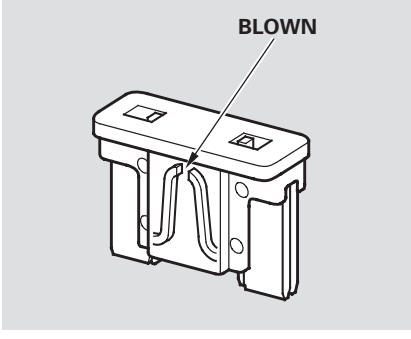

5. Look for a blown wire inside the fuse. If it is blown, replace it with one of the spare fuses of the same rating or lower. The spare fuses are provided back of the under-hood fuse cover.

If you cannot drive the vehicle without fixing the problem, and you do not have a spare fuse, take a fuse of the same rating or a lower rating from one of the other circuits. Make sure you can do without that circuit temporarily (such as the accessory power socket or radio).
If you replace the blown fuse with a spare fuse that has a lower rating, it might blow out again. This does not indicate anything wrong. Replace the fuse with one of the correct rating as soon as you can.

CONTINUED

Fuses

NOTICE

Replacing a fuse with one that has a higher rating greatly increases the chances of damaging the electrical system. If you do not have a replacement fuse with the proper rating for the circuit, install one with a lower rating.

6. If the replacement fuse of the same rating blows in a short time, there is probably a serious electrical problem in your vehicle. Leave the blown fuse in that circuit and have your vehicle checked by a qualified technician.

If the audio fuse is removed, the audio system will disable itself. The next time you turn on the audio you will see "ENTER CODE" on the display. Use the preset bars or buttons (depending on models) to enter the five-digit code (see page 239).

On RDX model
When the audio system is disabled, the clock setting in the audio system will be canceled. You will need to reset the clock (see page 198).

On RDX with Technology Package model
If the navigation system fuse is removed, the navigation system will disable itself. The next time you turn on the ignition switch, the system will require you to enter a PIN before it can be used. Refer to the Navigation System Owner's Manual.

Fuse Locations

INTERIOR FUSE BOX

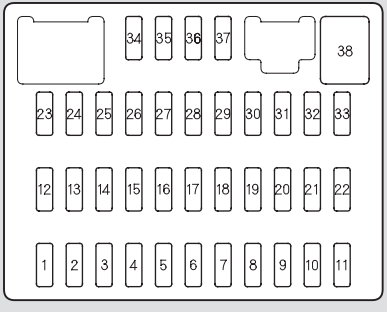

No.	Amps.	Circuits Protected
1	7.5 A	SH-AWD
2	20 A	Fuel Pump
3	15 A	ACG
4	7.5 A	ABS/VSA
5	15 A	Heated Seat
6	20 A	FR Fog Lights
7	7.5 A	Driver's Power Seat Lumber Support

No.	Amps.	Circuits Protected
8	10 A	RR Wiper
9	7.5 A	OPDS
10	7.5 A	Meter
11	10 A	SRS
12	10 A	Right Headlight High
13	10 A	Left Headlight High
14	7.5 A	Small Lights (Interior)
15	15 A	Small Lights (Exterior)

No.	Amps.	Circuits Protected
16	15 A	Right Headlight Low
17	15 A	Left Headlight Low
18	20 A	Headlight High Main
19	20 A	Small Lights Main
20	7.5 A	TPMS
21	30 A	Headlight Low Main
22	—	Not Used
23	—	Not Used
24	20 A	Moonroof
25	20 A	Door Lock
26	20 A	Driver's Power Window
27	—	Not Used
28	15 A	Accessory Socket (Console Compartment)
29	15 A	+B ACC
30	20 A	Passenger's Power Window
31	20 A	Radio Amplifier
32	20 A	Right Rear Power Window
33	20 A	Left Rear Power Window
34	—	Not Used
35	7.5 A	Radio
36	10 A	HAC
37	7.5 A	Daytime Running Light
38	30 A	FR Wiper

Fuse Locations

UNDER-HOOD FUSE BOXES

PRIMARY

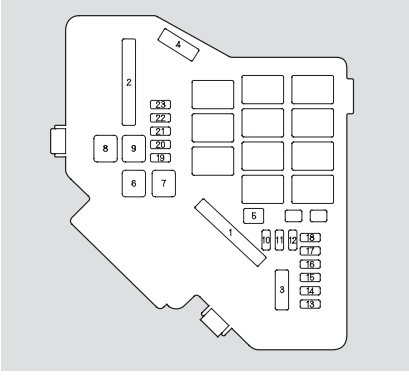

SECONDARY

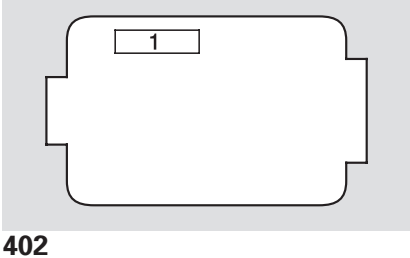

Primary Fuse Box

No.	Amps.	Circuits Protected
1	100 A	Main Fuse
	30 A	SH-AWD
2	80 A	Option Main
	50 A	Ignition Switch Main
3	20 A	ABS/VSA Fail Safe
	40 A	ABS/VSA Motor
4	50 A	Headlight Main
	40 A	Power Window Main
5	—	Not Used
6	30 A	Main Fan Motor
7	30 A	Sub Fan Motor
8	30 A	Rear Defogger
9	40 A	Blower
10	15 A	Hazard

No.	Amps.	Circuits Protected
11	15 A	LAF
12	15 A	Stop & Horn
13	20 A	Power Seat (Recline)
14	20 A	Power Seat (Slide)
15	7.5 A	IGPS Oil Level
16	—	Not Used
17	15 A	Electric Vacuum Pump
18	15 A	IG Coil
19	15 A	FI Main
20	7.5 A	MG Clutch
21	15 A	DBW
22	7.5 A	Interior Light
23	10 A	Back Up

Secondary Fuse Box

No.	Amps.	Circuits Protected
1	7.5 A	Electric Vacuum Pump

Emergency Towing

If your vehicle needs to be towed, call a professional towing service or organization. Never tow your vehicle with just a rope or chain. It is very dangerous.

The only way you can safely tow your vehicle is with flat-bed equipment. The operator will load your vehicle on the back of a truck. Any other method of towing will damage the drive system. When you contact the towing agency, inform them a flat-bed is required.

NOTICE

Towing with only two tires on the ground will damage parts of the all-wheel-drive system. Your vehicle should be transported on a flat-bed truck or trailer.

Main Menu

Technical Information

The diagrams in this section give you the dimensions and capacities of your vehicle and the locations of the identification numbers. It also includes information you should know about your vehicle's tires and emissions control systems.

Identification Numbers 406
Specifications 408
DOT Tire Quality Grading (U.S. Vehicles) 410
Uniform Tire Quality Grading 410
Treadwear 410
Traction..... 410
Temperature 411
Tire Labeling..... 412
Tire Pressure Monitoring System (TPMS)-Required Federal Explanation..... 413
Emissions Controls..... 415
The Clean Air Act..... 415
Crankcase Emissions Control System..... 415
Evaporative Emissions Control System..... 415
Onboard Refueling Vapor Recovery 415
Exhaust Emissions Controls 416
PGM-FI System 416
Ignition Timing Control System..... 416
Three Way Catalytic Converter..... 416
Replacement Parts..... 416
Three Way Catalytic Converter... 417
State Emissions Testing 418

Identification Numbers

Your vehicle has several identifying numbers located in various places.

The vehicle identification number (VIN) is the 17-digit number your dealer uses to register your vehicle for warranty purposes. It is also necessary for licensing and insuring your vehicle. The easiest place to find the VIN is on a plate fastened to the top of the dashboard. You can see it by looking through the windshield on the driver's side. It is also on the certification label attached to the driver's doorjamb, and is stamped on the engine compartment bulkhead. The VIN is also provided in bar code on the certification label.

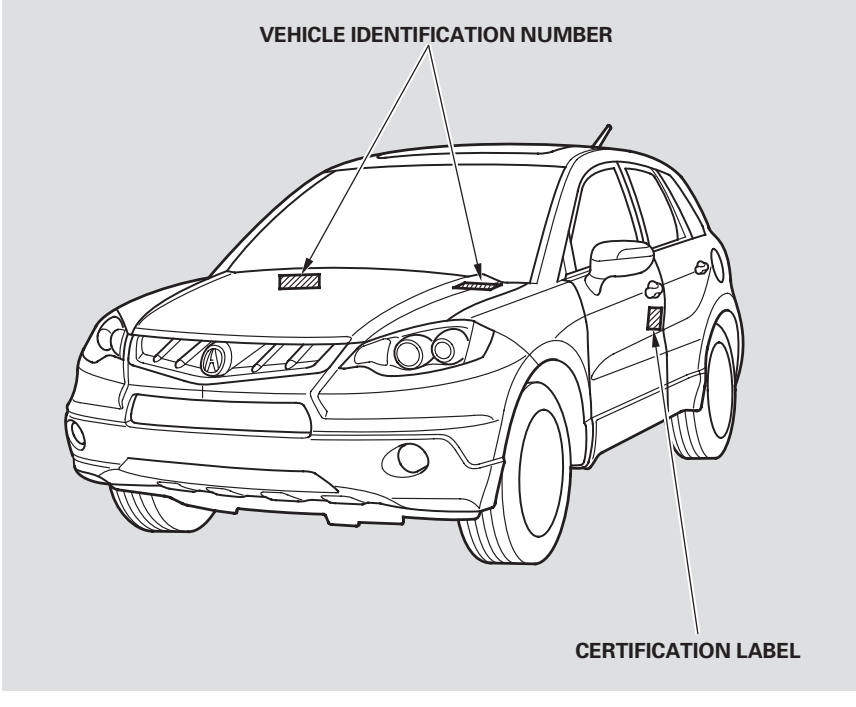

Identification Numbers

The engine number is stamped into the front of the engine block.

The transmission number is on a label on top of the transmission.

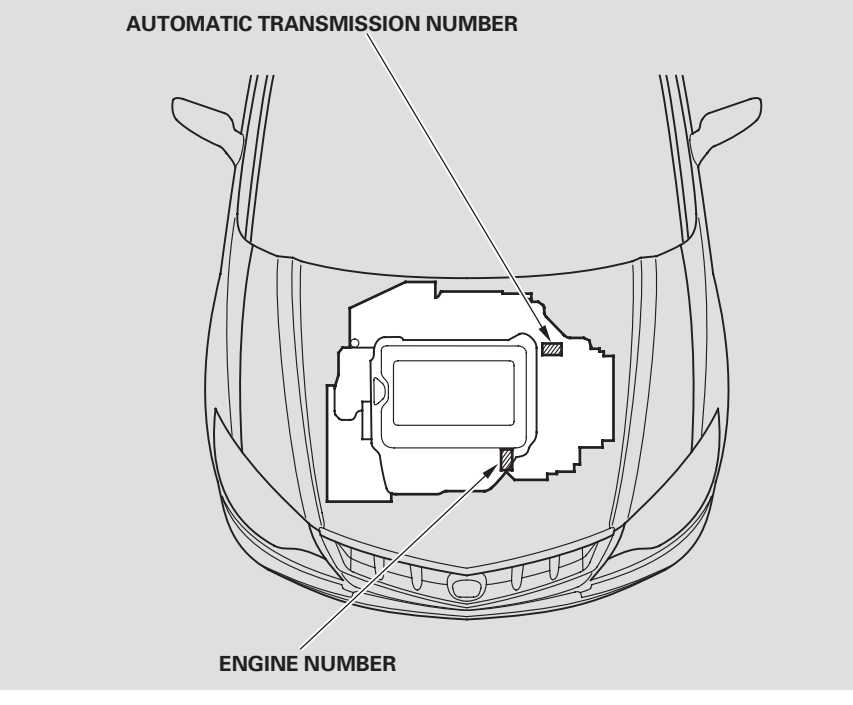

Specifications

Dimensions

Length		180.7 in (4,590 mm)
Width		73.6 in (1,870 mm)
Height		65.2 in (1,655 mm)
Wheelbase		104.3 in (2,650 mm)
Track	Front	61.9 in (1,572 mm)
	Rear	62.6 in (1,590 mm)

Weights

Gross vehicle weight rating	See the certification label attached to the driver's doorjamb.

Engine

Type	Water cooled 4-stroke DOHC i-VTEC 4-cylinder gasoline engine with turbo charger
Bore x Stroke	3.39 x 3.90 in (86.0 x 99.0 mm)
Displacement	140.4 cu-in (2,300 cm^3)
Compression ratio	8.8 : 1
Spark plugs	SILKR8A-S (NGK)

Capacities

Fuel tank		Approx. 18.0 US gal (68 ℓ)
Engine oil	Change*1	
	Including filter	5.0 US qt (4.7 ℓ)
	Without filter	4.6 US qt (4.4 ℓ)
	Total	6.1 US qt (5.8 ℓ)

Capacities

Engine coolant	Change*2	1.66 US gal (6.3 ℓ)
	Total	2.40 US gal (9.1 ℓ)
Automatic transmission fluid	Change	3.5 US qt (3.3 ℓ)
	Total	8.1 US qt (7.7 ℓ)
Rear differential fluid	Change	2.6 US qt (2.5 ℓ)
	Total	2.9 US qt (2.7 ℓ)
Windshield washer reservoir	U.S. Vehicles	2.6 US qt (2.5 ℓ)
	Canada Vehicles	4.8 US qt (4.5 ℓ)

*1 : Excluding the oil remaining in the engine

*2 : Including the coolant in the reserve tank and that remaining in the engine
Reserve tank capacity:
0.190 US gal (0.72 ℓ)

Specifications

Air Conditioning

Refrigerant type	HFC-134a (R-134a)
Charge quantity	15.9—17.6 oz (450—500 g)
Lubricant type	SP-10

Lights

Headlights	High	12 V — 60 W (HB3)
	Low*	12 V — 35 W (D2S)
Front turn signal/parking lights		12 V — 24/2.2 CP (Amber)
Front fog lights		12 V — 55 W (H11)
Front side marker lights		12 V — 3 CP
Rear turn signal lights		12 V — 21 W
Brake/Taillights (in fenders)		12 V — 21/5 W
Taillights (in tailgate)		12 V — 3 CP
Back-up lights		12 V — 21 W
Rear side marker lights		12 V — 2 CP
License plate lights		12 V — 3 CP
High-mount brake light		12 V — 16 W
Rear ceiling light		12 V — 8 W
Front ceiling lights/Spotlights		12 V — 4 CP
Door courtesy lights		12 V — 2 CP
Cargo area light		12 V — 5 W

* : The low beam headlights are high voltage discharged type. Replacement of a low beam headlight bulb should be performed by your dealer.

Battery

Capacity	12 V — 52 AH/5 HR 12 V — 65 AH/20 HR

Fuses

Interior	See page 401 or the fuse label attached to the dashboard.
Under-hood	See page 402 or the fuse box covers.

Alignment

Toe-in	Front	0.0 in (0 mm)
	Rear	0.10 in (2.5 mm)
Camber	Front	0°10′
	Rear	—1°
Caster	Front	2°57′

Tires

Size	Front/Rear	P235/55R18 99V
	Spare	T165/80D17 104M
Pressure	Front/Rear	32 psi (220 kPa , 2.2 kgf/cm^2)
	Spare	60 psi (420 kPa , 4.2 kgf/cm^2)

DOT Tire Quality Grading (U.S. Vehicles)

The tires on your vehicle meet all U.S. Federal Safety Requirements. All tires are also graded for treadwear, traction, and temperature performance according to Department of Transportation (DOT) standards. The following explains these gradings.

Uniform Tire Quality Grading
Quality grades can be found where applicable on the tire sidewall between the tread shoulder and the maximum section width. For example:

Treadwear 200
Traction AA
Temperature A

All passenger car tires must conform to Federal Safety Requirements in addition to these grades.

Treadwear
The treadwear grade is a comparative rating based on the wear rate of the tire when tested under controlled conditions on a specified government test course. For example, a tire graded 150 would wear one and one-half (1 1/2) times as well on the government course as a tire graded 100. The relative performance of tires depends upon the actual conditions of their use, however, and may depart significantly from the norm due to variations in driving habits, service practices, and differences in road characteristics and climate.

Traction – AA, A, B, C
The traction grades, from highest to lowest, are AA, A, B, and C. Those grades represent the tire's ability to stop on wet pavement as measured under controlled conditions on specified government test surfaces of asphalt and concrete. A tire marked C may have poor traction performance.

Warning: The traction grade assigned to this tire is based on straight-ahead braking traction tests, and does not include acceleration, cornering, hydroplaning, or peak traction characteristics.

DOT Tire Quality Grading (U.S. Vehicles)

Temperature — A, B, C
The temperature grades are A (the highest), B, and C, representing the tire's resistance to the generation of heat, and its ability to dissipate heat when tested under controlled conditions on a specified indoor laboratory test wheel. Sustained high temperature can cause the material of the tire to degenerate and reduce tire life, and excessive temperature can lead to sudden tire failure. The Grade C corresponds to a level of performance which all passenger car tires must meet under the Federal Motor Vehicle Safety Standard No. 109. Grades B and A represent higher levels of performance on the laboratory test wheel than the minimum required by law.

Warning: The temperature grade for this tire is established for a tire that is properly inflated and not overloaded. Excessive speed, underinflation, or excessive loading, either separately or in combination, can cause heat buildup and possible tire failure.

Tire Labeling

The tires that came on your vehicle have a number of markings. Those you should be aware of are described below.

Tire Size
Whenever tires are replaced, they should be replaced with tires of the same size. Below is an example of tire size with an explanation of what each component means.

P235/55R18 99V

235 — Tire width in millimeters.

55 — Aspect ratio (the tire's section height as a percentage of its width).

R — Tire construction code (R indicates radial).

18 — Rim diameter in inches.

99 — Load index (a numerical code associated with the maximum load the tire can carry).

V — Speed symbol (an alphabetical code indicating the maximum speed rating).

Tire Identification Number
The tire identification number (TIN) is a group of numbers and letters that look like the following example TIN. TIN is located on the sidewall of the tire.

DOT B97R FW6X 2202

DOT — This indicates that the tire meets all requirements of the U.S. Department of Transportation.

B97R — Manufacturer's identification mark.

FW6X — Tire type code.

2202 — Date of manufacture.

Maximum Tire Pressure
Max Press — The maximum air pressure the tire can hold.

Maximum Tire Load
Max Load — The maximum load the tire can carry at maximum air pressure.

Tire Pressure Monitoring System (TPMS) – Required Federal Explanation

Each tire, including the spare (if provided), should be checked monthly when cold and inflated to the inflation pressure recommended by the vehicle manufacturer on the vehicle placard or tire inflation pressure label.

(If your vehicle has tires of a different size than the size indicated on the vehicle placard or tire inflation pressure label, you should determine the proper tire inflation pressure for those tires.)

As an added safety feature, your vehicle has been equipped with a tire pressure monitoring system (TPMS) that illuminates a low tire pressure telltale

when one or more of your tires is significantly under-inflated.

Accordingly, when the low tire pressure telltale illuminates, you should stop and check your tires as soon as possible, and inflate them to the proper pressure.

Driving on a significantly underinflated tire causes the tire to overheat and can lead to tire failure. Underinflation also reduces fuel efficiency and tire tread life, and may affect the vehicle's handling and stopping ability.

Please note that the TPMS is not a substitute for proper tire maintenance, and it is the driver's responsibility to maintain correct tire pressure, even if under-inflation has not reached the level to trigger illumination of the TPMS low tire pressure telltale.

CONTINUED

Tire Pressure Monitoring System (TPMS) – Required Federal Explanation

Your vehicle has also been equipped with a TPMS malfunction indicator to indicate when the system is not operating properly. The TPMS malfunction indicator is provided by a separate telltale, which displays the symbol “TPMS” when illuminated.

When the malfunction indicator is illuminated,

TPMS

the system may not be able to detect or signal low tire pressure as intended.

TPMS malfunctions may occur for a variety of reasons, including the installation of replacement or alternate tires or wheels on the vehicle that prevent the TPMS from functioning properly.

Always check the TPMS malfunction telltale after replacing one or more tires or wheels on your vehicle to ensure that the replacement or alternate tires and wheels allow the TPMS to continue to function properly.

Emissions Controls

The burning of gasoline in your vehicle's engine produces several by-products. Some of these are carbon monoxide (CO), oxides of nitrogen (NOx), and hydrocarbons (HC). Gasoline evaporating from the tank also produces hydrocarbons. Controlling the production of NOx, CO, and HC is important to the environment. Under certain conditions of sunlight and climate, NOx and HC react to form photochemical "smog." Carbon monoxide does not contribute to smog creation, but it is a poisonous gas.

The Clean Air Act
The United States Clean Air Act* sets standards for automobile emissions. It also requires that automobile manufacturers explain to owners how their emissions controls work and what to do to maintain them. This section summarizes how the emissions controls work. Scheduled maintenance is on page 343.

* In Canada, Acura vehicles comply with the Canadian emission requirements, as specified in an agreement with Environment Canada, at the time they are manufactured.

Crankcase Emissions Control System
Your vehicle has a positive crankcase ventilation system. This keeps gasses that build up in the engine's crankcase from going into the atmosphere. The positive crankcase ventilation valve routes them from the crankcase back to the intake manifold. They are then drawn into the engine and burned.

Evaporative Emissions Control System
As gasoline evaporates in the fuel tank, an evaporative emissions control canister filled with charcoal adsorbs the vapor. It is stored in this canister while the engine is off. After the engine is started and warmed up, the vapor is drawn into the engine and burned during driving.

Onboard Refueling Vapor Recovery
The onboard refueling vapor recovery (ORVR) system captures the fuel vapors during refueling. The vapors are adsorbed in a canister filled with activated carbon. While driving, the fuel vapors are drawn into the engine and burned off.

Emissions Controls

Exhaust Emissions Controls

The exhaust emissions controls include three systems: PGM-FI, ignition timing control, and three way catalytic converter. These three systems work together to control the engine's combustion and minimize the amount of HC, CO, and NOx that come out the tailpipe. The exhaust emissions control systems are separate from the crankcase and evaporative emissions control systems.

PGM-FI System

The PGM-FI system uses sequential multiport fuel injection.
It has three subsystems: air intake, engine control, and fuel control. The powertrain control module (PCM) uses various sensors to determine how much air is going into the engine. It then controls how much fuel to inject under all operating conditions.

Ignition Timing Control System

This system constantly adjusts the ignition timing, reducing the amount of HC, CO, and NOx produced.

Three Way Catalytic Converter

The three way catalytic converter is in the exhaust system. Through chemical reactions, it converts HC, CO, and NOx in the engine's exhaust to carbon dioxide (CO_2), nitrogen (N_2), and water vapor.

Replacement Parts

The emissions control systems are designed and certified to work together in reducing emissions to levels that comply with the Clean Air Act. To make sure the emissions remain low, you should use only new Acura replacement parts or their equivalent for repairs. Using lower quality parts may increase the emissions from your vehicle.

The emissions control systems are covered by warranties separate from the rest of your vehicle. Read your warranty manual for more information.

Three Way Catalytic Converter

The three way catalytic converters contain precious metals that serve as catalysts, promoting chemical reactions to convert the exhaust gasses without affecting the metals. The catalytic converters are referred to as three-way catalysts, since they act on HC, CO, and NOx. Replacement units must be original Acura parts or their equivalent.

The three way catalytic converter must operate at a high temperature for the chemical reactions to take place. It can set on fire any combustible materials that come near it. Park your vehicle away from high grass, dry leaves, or other flammables.

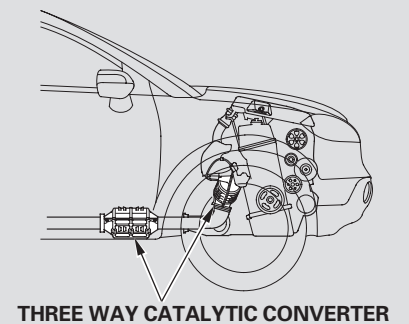

THREE WAY CATALYTIC CONVERTER

A defective three way catalytic converter contributes to air pollution, and can impair your engine's performance. Follow these guidelines to protect your vehicle's three way catalytic converter.

- Always use unleaded gasoline. Even a small amount of leaded gasoline can contaminate the catalyst metals, making the three way catalytic converter ineffective.
- Keep the engine well maintained.
- Have your vehicle diagnosed and repaired if it is misfiring, back-firing, stalling, or otherwise not running properly.

State Emissions Testing

Testing of Readiness Codes
If you take your vehicle for a state emissions test shortly after the battery has been disconnected or gone dead, it may not pass the test. This is because of certain “readiness codes” that must be set in the on-board diagnostics for the emissions systems. These codes are erased when the battery is disconnected, and set again only after several days of driving under a variety of conditions.

If the testing facility determines that the readiness codes are not set, you will be requested to return at a later date to complete the test. If you must get the vehicle retested within the next two or three days, you can condition the vehicle for retesting by doing the following.

- Make sure the gas tank is nearly, but not completely, full (around 3/4).
- Make sure the vehicle has been parked with the engine off for 6 hours or more.
- Make sure the ambient temperature is between 40° and 95°F.
- Without touching the accelerator pedal, start the engine, and let it idle for 20 seconds.
- Keep the vehicle in Park. Increase the engine speed to 2,000 rpm, and hold it there until the temperature gauge rises to at least 1/4 of the scale (about 3 minutes).
- Without touching the accelerator pedal, start the engine, and let it idle for 20 seconds.
- Drive your vehicle for 30 seconds while accelerating.

State Emissions Testing

- Select a nearby lightly traveled major highway where you can maintain a speed of 50 to 60 mph (80 to 97 km/h) for at least 20 minutes. Drive on the highway in D. Do not use the cruise control. When traffic allows, drive for 90 seconds without moving the accelerator pedal. (Vehicle speed may vary slightly; this is okay.) If you cannot do this for a continuous 90 seconds because of traffic conditions, drive for at least 30 seconds, then repeat it two more times (for a total of 90 seconds).
- Then drive in city/suburban traffic for at least 10 minutes. When traffic conditions allow, let the vehicle coast for several seconds without using the accelerator pedal or the brake pedal.
- Make sure the vehicle has been parked with the engine off for 30 minutes.

If the testing facility determines the readiness codes are still not set, see your dealer.

Main Menu

Warranty and Customer Relations

Customer Service Information 422
Warranty Coverages 423
Reporting Safety Defects (U.S. Vehicles) 424
Authorized Manuals 425

Customer Service Information

Acura dealership personnel are trained professionals. They should be able to answer all your questions. If you encounter a problem that your dealership does not solve to your satisfaction, please discuss it with the dealership's management. The service manager or general manager can help. Almost all problems are solved in this way.

If you are dissatisfied with the decision made by the dealership's management, contact the Acura Client Services Office.

U.S. Owners:
American Honda Motor Co., Inc.
Acura Client Services
Mail Stop 500-2N-7E
1919 Torrance Blvd.
Torrance, CA 90501-2746

Tel: (800) 382-2238

Canadian Owners:
CUSTOMER RELATIONS
RELATIONS AVEC LA CLIENTÈLE

Honda Canada Inc.
715 Milner Avenue
Toronto, ON
M1B 2K8

Tel: 1-888-9-ACURA-9
Fax: Toll-free 1-877-939-0909
Toronto (416) 287-4776

In Puerto Rico and the U.S. Virgin Islands:
Vortex Motor Corp.
Bella International
P.O. Box 190816
San Juan, PR 00919-0816

Tel: (787) 620-7028

When you call or write, please give us this information:

- Vehicle Identification Number (see page 406)
- Name and address of the dealer who services your vehicle
- Date of purchase
- Mileage on your vehicle
- Your name, address, and telephone number
- A detailed description of the problem
- Name of the dealer who sold the vehicle to you

Warranty Coverages

U.S. Owners

Your new vehicle is covered by these warranties:

New Vehicle Limited Warranty — covers your new vehicle, except for the battery, emissions control systems, and accessories against defects in materials and workmanship.

Emissions Control Systems Defects Warranty and Emissions Performance Warranty — these two warranties cover your vehicle's emissions control systems. Time, mileage, and coverage are conditional. Please read your warranty booklet for exact information.

Original Equipment Battery Limited Warranty — this warranty gives up to 100 % credit toward a replacement battery.

Seat Belt Limited Warranty — a seat belt that fails to function properly is covered by a limited warranty. Please read your warranty booklet for details.

Rust Perforation Limited Warranty — all exterior body panels are covered for rust-through from the inside for the specified time period with no mileage limit.

Accessory Limited Warranty — Acura accessories are covered under this warranty. Time and mileage limits depend on the type of accessory and other factors. Please read your warranty manual for details.

Replacement Parts Limited Warranty — covers all Honda replacement parts against defects in materials and workmanship.

Replacement Battery Limited Warranty — provides prorated coverage for a replacement battery purchased from your dealer.

Replacement Muffler Lifetime Limited Warranty — provides coverage for as long as the purchaser of the muffler owns the vehicle.

Restrictions and exclusions apply to all these warranties. Please read the 2007 Acura warranty information booklet that came with your vehicle for precise information on warranty coverages. Your vehicle's original tires are covered by their manufacturer. Tire warranty information is in a separate booklet.

Canadian Owners

Please refer to the 2007 warranty manual that came with your vehicle.

Reporting Safety Defects (U.S. Vehicles)

If you believe that your vehicle has a defect which could cause a crash or could cause injury or death, you should immediately inform the National Highway Traffic Safety Administration (NHTSA) in addition to notifying American Honda Motor Co., Inc.

If NHTSA receives similar complaints, it may open an investigation, and if it finds that a safety defect exists in a group of vehicles, it may order a recall and remedy campaign. However, NHTSA cannot become involved in individual problems between you, your dealer, or American Honda Motor Co., Inc.

To contact NHTSA, you may call the Vehicle Safety Hotline toll-free at 1-888-327-4236 (TTY: 1-800-424-9153); go to *http://www.safercar.gov;* or write to: Administrator, NHTSA, 400 Seventh Street, SW., Washington, DC 20590. You can also obtain other information about motor vehicle safety from *http://www.safercar.gov*.

Authorized Manuals

Purchasing Factory Authorized Manuals (U.S. only)

The publications shown below can be purchased from Helm Incorporated. You can order in any of three ways:

- Detach and mail the order form on the right half of this page
- Call Helm Inc. at 1-800-782-4356 (credit card orders only)
- Go online at *www. helminc. com*

If you are interested in other years or models, contact Helm Inc. at 1-800-782-4356.

Publication Form Number	Form Description	Price Each*
61STK00	2007 Acura RDX Service Manual	$75.00
61STK00EL	2007 Acura RDX Electrical Troubleshooting Manual	$50.00
61STK00	2007 Acura RDX Body Repair Manual	$44.00
31STK600	2007 Acura RDX Owner's Manual	$37.00
31STK800	2007 Acura RDX Navigation System Manual	$29.00
31STKM00	2007 Acura RDX Maintenance Journal	$15.00
31STKQ00	2007 Acura RDX Quick Start Guide	$15.00
ACU-R	Order Form for Previous Years- Indicate Year and Model Desired	FREE

* Prices are subject to change without notice and without incurring obligation.

Valid only for sales within the United States. Canadian owners should contact their authorized Acura dealer.

ORDER TOLL FREE: 1-800-782-4356
(NOTE: For Credit Card Holder Orders Only)
Monday-Friday 8:00 A.M. – 6:00 P.M. EST
MINIMUM CREDIT CARD PURCHASE $10.00

OR

By completing this form you can order the materials desired. You can pay by check or money order, or charge to your credit card. Mail to Helm Incorporated at the address shown on the back of the order form.

2007 ACU	PUBLICATION NUMBER	VEHICLE MODEL Name	VEHICLE MODEL Year	Qty	Price Each*	Total Price

* Prices are subject to change without notice and without incurring obligation.

Orders are mailed within 10 days. Please allow adequate time for delivery.

TOTAL MATERIAL	
Mich. Purchases Add 6% Sales Tax	
HANDLING CHARGE	$6.95
GRAND TOTAL	

Authorized Manuals

SHIP TO

NOTE: Dealers and companies, please provide dealer or company name, and the name of the person to whose attention the shipment should be sent. For purchases outside U.S.A. please write to the address shown below for a quotation.

Customer Name _____ Attention _____

Street Address — No P.O. Box Number _____ Apartment Number _____

City _____ State & Zip Code _____

Daytime Telephone Number ( ) _____

PAYMENT

☐ Check or money order enclosed payable to Helm Inc — U.S. funds only. Do not send cash

☐ Master Card ☐ VISA ☐ Check here if your billing address is different from the shipping address shown above.

Account Number _____ Expiration: Mo. Yr. _____

CUSTOMER SIGNATURE _____ DATE _____

These publications cannot be returned for credit without receiving advance authorization within 14 days of delivery. On returns, a restocking fee may be applied against the original order.

HELM P.O. BOX 07280·DETROIT, MICHIGAN 48207·1-800-782-4356

Service Manual:
This manual covers maintenance and recommended procedures for repair to engine and chassis components. It is written for the journeyman mechanic, but is simple enough for most mechanically-inclined owners to understand.

Electrical Troubleshooting Manual:
This manual complements the service manual by providing in-depth troubleshooting information for each electrical circuit in your vehicle.

Body Repair Manual:
This manual describes the procedures involved in the replacement of damaged body parts.

Index

A

Accessories 285
ACCESSORY (Ignition Key Position) 129
Accessory Power Sockets 164
Acura Link 244
Additives, Engine Oil 348
Additives, Gasoline 278
Adjusting the Sound 196, 227
Adjusting the Steering Wheel 126
Adjust Outside Temperature 77
Adjust Outside Temp. Display 96
Advanced Airbags 29
Airbag (SRS) 9, 24
Air Conditioning System 170
  Usage 171
Air Pressure, Tires 373
Antifreeze 351
Anti-lock Brakes (ABS)
  Indicator 67, 307
  Operation 307
Anti-theft, Audio System 239
Anti-theft Steering Column Lock 129
Audio System 178
Auto Door Lock 108
Auto Door Locking/Unlocking 133
Auto Door Unlock 116
Automatic Lighting Off Feature 122
Automatic Seat Belt Tensioners 22
Automatic Transmission 295
  Capacity, Fluid 408
  Checking Fluid Level 355
  Driving with the Paddle Shifters 299
  Shifting 295
  Shift Lever Position Indicators 295
  Shift Lever Positions 296
  Shift Lock Release 298
Auxiliary Input Jack 230

B

Battery
  Charging System Indicator 66, 393
  Jump Starting 389
  Maintenance 378
  Specifications 409
Before Driving 277
Belts, Seat 8, 20
Beverage Holders 163
Booster Seats 55
Brakes
  Anti-lock System (ABS) 307
  Break-in, New Linings 278
  Bulb Replacement 362
  Fluid 357
  Parking 157
  System Indicator (Red) 68, 395
  System Indicator (Amber) 68, 396
  System Design 306
  Wear Indicators 306
Braking System 306
Break-in, New Vehicle 278
Brightness Control, Instruments 124
Brights, Headlights 121

CONTINUED

Index

Bulb Replacement
- Back-up Lights 361
- Brake Lights 362
- Fog Lights 363
- Front Parking Lights 360
- Front Side Marker Lights 360
- Headlights 359
- High-mount Brake Light 364
- Rear Side Marker Lights 362
- Specifications 409
- Taillights 361, 362
- Turn Signal Lights 360, 362

Bulbs, Halogen 359
Bulbs, High Voltage Discharged Type 359

C

Capacities Chart 408
Carbon Monoxide Hazard 58
Cargo 287
Cargo Area Cover 167
Cargo Area Light 160
Cargo Hooks 290
Cargo Net 290
Carrying Cargo 287
CAUTION, Explanation of iii
CD Care 233
CD Changer 183, 206
CD Changer Error Messages 234
Ceiling Lights 158
Certification Label 406
Chains, Tires 377
Changing a Flat Tire 383
Changing Oil 349
- How to 349
- When to 330

Charging System Indicator 66, 393
Check Fuel Cap Message 78, 280
Checklist, Before Driving 293
Child Safety 37
- Booster Seats 55
- Child Seats 37, 45
- Important Safety Reminders 41
- Infants 42
- Large Children 54
- LATCH 47
- Risks with Airbags 38
- Small Children 43
- Tethers 52
- Warning Labels 39
- Where Should a Child Sit? 38

Child Seats 37, 45
- LATCH 47
- Tether Anchorage Points 52

Childproof Door Locks 132
Cleaning Seat Belts 366
Climate Control Sensors 177
Climate Control System 170
Clock 198
Coin Holder 166
CO in the Exhaust 415
Cold Weather, Starting in 294
Compact Spare Tire 382
Console Compartment 165
Consumer Information 422
Controls, Instruments and 61
Coolant
- Adding 351
- Checking 283
- Proper Solution 351
- Temperature Gauge 78, 83

Courtesy Lights 160
Crankcase Emissions Control System 415
Cruise Control Indicator 70
Cruise Control Operation 241

Cruise Main Indicator 70
Cup Holders..... 163
Customized Settings..... 87
  Default All..... 90
  Door Setup..... 107
  Lighting Setup..... 102
  Meter Setup..... 93
Customer Service Office 422

D

DANGER, Explanation of iii
Dashboard 3, 62
Daytime Running Lights..... 123
Daytime Running Lights
  Indicator..... 71
Dead Battery 389
Default All..... 90
Defects, Reporting Safety* 424
Defogger, Rear Window 125
Defrosting the Windows..... 173
Dimensions..... 408
Dimming the Headlights 121
Dipstick
  Automatic Transmission..... 355
  Engine Oil 283
Directional Signals..... 121
Disc Brake Wear Indicators..... 306
Disc Care 233
Disc Changer 183, 206
Disc Changer Error
  Message..... 234
Disposal of Used Oil..... 350
Door Setup..... 107
  Auto Door Lock 108
  Auto Door Unlock..... 116
  Door Lock Mode..... 110
  Keyless Lock
    Acknowledgement..... 112
  Security Relock Timer 114
Doors
  Childproof Door Locks 132
  Locking and Unlocking..... 131
  Power Door Locks..... 131
DOT Tire Quality Grading* 410
Drive (D) 297
Driver and Passenger Safety..... 5
Driving 291
  Economy 284
Driving Guidelines..... 292
Driving with Paddle Shifters..... 299
  D-Paddle Shift Mode 299
  In S Position..... 301
Dual Temperature Control..... 175
Dust and Pollen Filter 367

E

Economy, Fuel 284
Elapsed Time..... 82
  Reset Condition..... 100
Electric Vacuum Pump 306, 396

CONTINUED

Index

Emergencies 381
Battery, Jump Starting 389
Brake System Indicator (Red) 395
Brake System Indicator (Amber) 396
Changing a Flat Tire 383
Charging System Indicator 393
Checking the Fuses 398
Hazard Warning Flashers 125
Jump Starting 389
Low Oil Pressure Indicator 393
Malfunction Indicator Lamp 394
Overheated Engine 391
Tailgate Open 139
Emergency Towing 403
Emergency Brake 157
Emergency Flashers 125
Emissions Controls 415
Emissions Testing, State 418
Engine
Adding Engine Coolant 351
Coolant Temperature Gauge 78, 83
If It Won't Start 387
Malfunction Indicator Lamp 65, 394
Oil Life Display 330
Oil Pressure Indicator 65, 393
Oil, What Kind to Use 347
Overheating 391
Specifications 408
Speed Limiter 297
Starting 294
Evaporative Emissions Controls 415
Exhaust Fumes 58
Expectant Mothers, Use of Seat Belts by 18

F

Fan, Interior 172
Features 169
Filling the Fuel Tank 279
Filters
Dust and Pollen 367
Oil 349
Flashers, Hazard Warning 125
Flat Tire, Changing a 383
Fluids
Automatic Transmission 355
Brake 357
Power Steering 358
Windshield Washer 353
Folding Rear Seat Down 147
Four-way Flashers 125
Front Airbags
Driver's Side 9, 26
Passenger's Side 9, 34
Front Door Pockets 162
Front Seat
Adjusting (Driver's Side) 144
Adjusting (Passenger's Side) 145
Heaters 150
Fuel 278
AVG. Fuel A/B 77, 82
Check Fuel Cap Message 280
Fill Door and Cap 279
Low Fuel Indicator 69
Gauge 75
INST. Fuel 82
Octane Requirement 278
Oxygenated 279
Tank, Refueling 279
Tighten Fuel Cap Message 281
Fuel Economy 284
Fuses, Checking the 398

G

Gas Mileage, Improving 284
Gasoline 278
  AVG. Fuel A/B 77, 82
  Low Fuel Indicator 69
  Gauge 75
  INST. Fuel 82
  Octane Requirement 278
  Tank, Refueling 279
Gas Station Procedures 279
Gauges
  Engine Coolant
    Temperature 78, 83
  Fuel 75
  Tachometer 75
  Turbo Boost Meter 75
  Speedometer 75
Gearshift Lever Positions 295
Glove Box 162
Gross Vehicle Weight Rating
  (GVWR) 318

H

Halogen Headlight Bulbs 359, 363
Hanger Bars 290
HandsFreeLink™ 257
Hazard Warning Flashers 125
Headlights
  Aiming 359
  Daytime Running Lights 123
  High Beam Indicator 70
  High-Intensity Discharge
    Lamp 359
  Reminder Tone 121
  Replacing Halogen Bulbs 359
  Turning on 121
Headlight Auto Off Timer 105
Head Restraints 146
Heated Mirrors 156
Heaters, Seat 150
High Beam Lever 121
HomeLink Universal
  Transceiver 253
Hood, Opening the 282
Horn 4, 118

I

Identification Number, Vehicle 406
Ignition
  Keys 126
  Switch 129
  Timing Control System 416
Immobilizer System 128
Important Safety Precautions 6

CONTINUED

Index

Indicators
- ABS (Anti-Lock Brake) 67, 307
- A/T Temperature 66
- Brake (Red) 68, 395
- Brake (Amber) 68, 396
- Charging System 66, 393
- Cruise Control 70
- Cruise Main 70
- DRL (Daytime Running Lights) 71
- Fog Light 71
- High Beam 70
- Key (Immobilizer System) 67
- Low Fuel 69
- Low Oil Pressure 65, 393
- Lights On 71
- Low Tire Pressure 73, 309
- Maintenance Minder 74
- Malfunction Indicator Lamp 65
- Passenger Airbag Off 34
- Security System 71, 240
- SH-AWD 72
- Side Airbag Off 33, 67
- SRS 33, 66
- System Message 74
- TPMS 73, 310
- Turn Signal and Hazard Warning 70
- VSA (Vehicle Stability Assist) 69, 315
- VSA Activation 70, 315
- Washer Level 74

Infant Restraint 42
Infant Seats 42
- Tether Anchorage Points 52

Inflation, Proper Tire 372
- Recommended Pressures 373

Information Display 76
INFO Button 79
Inside Mirror 155
Inspection, Tire 374
Installing a Child Seat 46
Instrument Panel 63
Instrument Panel Brightness 124
Instruments and Controls 61
Intercooler 367
Interior Lights 158
Interior Light Dimming Time 103
Introduction i

J

Jacking up the Vehicle 384
Jack, Tire 384
Jump Starting 389

K

Keyless Lock
- Acknowledgement 112

Keys 126

L

Label, Certification 406
Lane Change, Signaling 121
Language Selection 94
Lap/Shoulder Belts 16, 21
LATCH Anchorage System 47
Lighting Setup 102
- Interior Light Dimming Time 103
- Headlight Auto Off Timer 105

Lights
- Bulb Replacement 359
- Indicator 63, 64

Parking 121
Turn Signal 121
Load Limits 288
LOCK (Ignition Key Position) 129
Lockout Prevention 132
Locks
Anti-theft Steering Column 129
Childproof Door 132
Console Compartment 165
Fuel Fill Door 279
Glove Box 162
Power Door 131
Tailgate 138
Low Coolant Level 283
Lower Anchors 47
Low Fuel Indicator 69
Low Oil Pressure Indicator 65, 393
Low Tire Pressure Indicator .. 73, 309
Lubricant Specifications Chart 408
Luggage Hooks (Cargo Hooks) .. 290
Luggage, Storing (Cargo) 287
Luggage Net (Cargo Net) 290

M

Maintenance 327
Main Items and Sub Items ... 333, 340
Minder 330
Minder Indicator 74
Owner's Maintenance Checks 342
Record 344
Safety 328
Malfunction Indicator Lamp .. 65, 394
Meters, Gauges 75
Meter Setup 93
Adjust Outside Temp. Display ... 96
Elap. Time Reset Condition 100
Language Selection 94
Trip A&Avg. Fuel Reset with Refuel 98
Mirrors, Adjusting 155
Modifying Your Vehicle 286
Moonroof 153
Multi-Information Display 79

N

Neutral Gear Position 297
New Vehicle Break-in 278
Normal Shift Speeds 302
NOTICE, Explanation of i
Numbers, Identification 406

O

Octane Requirement, Gasoline 278
Odometer 76, 81
Off-Highway Driving 324
Oil
Change, How to 349
Change, When to 330
Checking Engine 283
Pressure Indicator 65, 393
Selecting Proper Viscosity Chart 348
ON (Ignition Key Position) 129
Onboard Refueling Vapor Recovery 415
Optional Cargo Net 290
Outside Mirrors 155
Outside Temperature 77, 81
Overheating, Engine 391
Owner's Maintenance Checks 342

Index

P

Panel Brightness Control 124
Park Gear Position..... 296
Parking..... 305
Parking Brake 157
Parking Brake and Brake System Indicator (Red)..... 68, 395
Parking Lights..... 121
Parking Over Things that Burn... 305
Passenger Airbag Off Indicator..... 34
PGM-FI System..... 416
Playing the XM® Satellite Radio* 235
Pollen Filter 367
Power Door Locks..... 131
Power Sockets..... 164
Power Steering Fluid..... 358
Power Windows 151
Pregnancy, Using Seat Belts 18
Preparing to Drive 293
Protecting Adults and Teens..... 11
  Additional Safety Precautions.... 19
  Advice for Pregnant Women..... 18
Protecting Children 37
  Protecting Infants..... 42
  Protecting Larger Children..... 54
  Protecting Small Children 43
  Using Child Seats with Tethers..... 52
  Using LATCH 47

R

Radiator Overheating..... 391
Radio Theft Protection..... 239
Readiness Codes..... 394
Rear Pillar Lights, Bulb Replacement..... 362
Rear Seat, Folding Down 147
Rear View Mirror..... 155
Rear Window Defogger 125
Rear Window Wiper and Washer..... 120
Reception, XM® Satellite Radio* 235
Reclining the Seat Backs 144, 145
Recommended Shift Speeds 302
Refueling..... 279
Remote Transmitter..... 140
Replacement Information
  Dust and Pollen Filter 367
  Engine Oil and Filter..... 349
  Fuses 398
  Light Bulbs..... 359
  Tires 375
  Transmitter Battery 142
  Wiper Blades..... 368
Replacing Seat Belts After a Crash 23
Reporting Safety Defects* 424
Required Engine Oil..... 347
Reserve Tank, Engine Coolant..... 283, 351
Restraint, Child 37
Retractable Master Key..... 127
Reverse Gear Position..... 296
Reverse Mirror Tilt 156
Roof Rack 289
Rotation, Tire 375

S

Safety Belts..... 8, 20
Safety Defects, Reporting* 424
Safety Features 7
  Airbags..... 9
  Seat Belts 8

Safety Labels, Location of 59
Safety Messages iii
Satellite Radio, XM®* 193, 221
Seat Belts 8, 20
  Additional Information 20
  Advice for Pregnant Women 18
  Automatic Seat Belt Tensioners 22
  Cleaning 366
  Lap/Shoulder Belt 16, 21
  Maintenance 23
  Reminder Indicator and Beeper 20, 65
  System Components 20
  Use During Pregnancy 18
  Wearing a Lap/Shoulder Belt 16
Seat Heaters 150
Seats, Adjusting the 144, 145
Security Relock Timer 114
Security System 240
SEL/RESET Button 79
Select/Reset Knob 75
Serial Number 406
Service Station Procedures 279
Setting the Clock 198
SH-AWD (Super Handling-All Wheel Drive) 303
  Indicator 72
  System Message 85
  Torque Distribution Monitor 83, 303
Shift Lever Position Indicators 295
Shift Lock Release 298
Side Airbags 9
  How the Side Airbag Off Indicator Works 33
  How Your Side Airbags Work 31
Side Curtain Airbags 9
  How Your Side Curtain Airbags Work 32
Side Marker Lights, Bulb Replacement 360, 362
Signaling Turns 121
Snow Tires 376
Sound System 178
Spare Tire 382
Specifications 408
Speed Limiter 297
SRS, Additional Information 24
  Additional Safety Precautions 36
  Advanced Airbags 29
  Airbag Service 35
  Airbag System Components 24
  Dual-Stage Airbags 28
  Dual-Threshold Airbags 28
  How the Side Airbag Off Indicator Works 33
  How the SRS Indicator Works 33
  How Your Front Airbags Work 26
  How Your Side Airbags Work 31
  How Your Side Curtain Airbags Work 32
SRS Indicator 33, 66
START (Ignition Key Position) 129
Starting the Engine 294
  In Cold Weather at High Altitude 294
  With a Dead Battery 389
State Emissions Testing 418
Steam Coming from Engine 391
Steering Wheel
  Adjustment 126
  Anti-theft Column Lock 129

CONTINUED

Index

Steering Wheel
Buttons 79, 237, 241, 258
Storing Your Vehicle 380
Sun Visor..... 164
Supplemental Restraint System..... 9, 24
Servicing 35
SRS Indicator..... 33, 66
System Components..... 24
Synthetic Oil 347

T

Tailgate
Open Indicator 11, 12
Opening the..... 138
Unlocking the Tailgate 139
Taillights, Changing Bulbs... 361, 362
Taking Care of the Unexpected .. 381
Technical Descriptions
DOT Tire Quality Grading* 410
Emissions Control Systems..... 415
State Emissions Testing 418
Three Way Catalytic Converter..... 416
Tire Labeling..... 412
Tire Pressure Monitoring System (TPMS) — Required Federal Explanation 413
Temperature Gauge 78, 83
Temperature, Outside..... 77, 81
Tether Anchorage Points 52
Theft Protection, Radio..... 239
Three Way Catalytic Converter... 417
Tilt the Steering Wheel..... 126
Time, Setting the 198
Tire Chains 377
Tire, How to Change a Flat 383
Tire Information* 410
Tires 372
Air Pressure 373
Chains 377
Checking Wear 374
DOT Tire Quality Grading* 410
Inflation..... 372
Inspection 374
Labeling 412
Low Tire Pressure Indicator..... 73, 309
Maintenance..... 374
Pressure Monitor..... 311
Pressure Monitoring System ... 309
Replacing 375
Rotating..... 375
Snow 376
Specifications 409
Tools, Tire Changing 383
Towing
A Trailer..... 317
Emergency Wrecker 403
Equipment and Accessories..... 318
Pre-Tow Checklist 321
Weight Limit 317
TPMS (Tire Pressure Monitoring System) 309
Indicator..... 73, 310
Required Federal Explanation..... 413
Trailer Loading 317, 318
Trailer Towing Tips..... 322
Transmission
Checking Fluid Level, Automatic 355
Fluid Selection..... 356
Identification Number..... 407
Shifting the Automatic..... 295
Treadwear 374
Trip Meter 76, 81

Turbo Boost Meter 75
Turn Signals 121

U

Unexpected, Taking Care
of the 381
Uniform Tire Quality Grading* ... 410
Unleaded Gasoline..... 278
Used Oil, How to Dispose of 350

V

Vehicle Capacity Load 288
Vehicle Dimensions..... 408
Vehicle Identification Number..... 406
Vehicle Stability Assist (VSA)
System..... 315
Indicators..... 69, 70, 315
Vehicle Storage..... 380
Ventilation 173, 174
VIN 406
Viscosity, Oil..... 348

W

WARNING, Explanation of iii
Warning Labels, Location of 59
Warranty Coverages* 423
Washers, Windshield
Checking the Fluid Level 353
Operation 119
Wheels
Adjusting the Steering 126
Alignment and Balance..... 374
Wrench, Nut..... 384
Windows
Auto Reverse..... 152
Operating the Power 151
Rear, Defogger 125
Windshield
Cleaning 119
Defroster 173
Washers 353
Wipers, Windshield
Changing Blades..... 368
Operation 119
Worn Tires 374
Wrecker, Emergency Towing..... 403

* : U.S. only

Service Information Summary

Gasoline:
Premium unleaded gasoline, pump octane number of 91 or higher.

Fuel Tank Capacity:
18.0 US gal (68 ℓ)

Required Engine Oil;
Always use Mobil 1® 5W-30 or an equivalent oil that meets the Acura HTO-06 standard.

Oil change capacity (including filter):
5.0 US qt (4.7 ℓ)

Automatic Transmission Fluid:
Honda ATF-Z1 (Automatic Transmission Fluid) preferred, or a DEXRON® III ATF as a temporary replacement (see page 355).

Rear Differential Fluid:
Honda ATF-Z1 (Automatic Transmission Fluid) preferred, or a DEXRON® III ATF as a temporary replacement.

Capacity:
SH-AWD differential case
2.6 US qt (2.5 ℓ)

Transfer Assembly Fluid:
SAE 90 or SAE 80W-90 viscosity hypoid gear oil, API service classified GL4 or GL5 only.

Power Steering Fluid:
Honda Power Steering Fluid preferred, or another brand of power steering fluid as a temporary replacement. Do not use ATF (see page 358).

Brake Fluid:
Honda Heavy Duty Brake Fluid DOT 3 preferred, or a DOT 3 or DOT 4 brake fluid as a temporary replacement (see page 357).

Tire Pressure (measured cold):
Front/Rear:
32 psi (220 kPa , 2.2 kgf/cm^2)

Spare Tire Pressure:
60 psi (420 kPa , 4.2 kgf/cm^2)