Fastener Tightening Specifications

Application	Specification	
	Metric	English
Driver Seat Lumbar Support Actuator Screw	5 N·m	44 lb in
Front Seat Assembly Bolt	45 N·m	33 lb ft
Front Seat Back Frame Bolt	50 N·m	37 lb ft
Front Seat Inner Adjuster Finish Cover Screw	2 N·m	18 lb in
Front Seat Inner Recliner Finish Cover Screw	2 N·m	18 lb in
Front Seat Outer Adjuster Finish Cover Screw	2 N·m	18 lb in
Rear Seat Armrest Nut	10 N·m	89 lb in
Rear Seat Assembly Bolt	40 N·m	30 lb ft
Rear Seat Back Cushion Frame Bolt	45 N·m	33 lb ft
Rear Seat Belt Buckle Bolt	45 N·m	33 lb ft
Rear Seat Cushion Frame Bolt - Rear	45 N·m	33 lb ft
Rear Seat Cushion Frame Bolt - Front	28 N·m	21 lb ft
Rear Seat Cushion Frame Bolt - Upper	10 N·m	89 lb in
Rear Seat Inner Latch Bolt	28 N·m	21 lb ft
Rear Seat Inner Recliner Finish Cover Screw	2 N·m	18 lb in
Rear Seat Latch Release Strap Bezel Bolt	5 N·m	44 lb in
Rear Seat Outer Latch Bolt	28 N·m	21 lb ft
Rear Seat Recliner Outer Finish Cover Screw	2 N·m	18 lb in

cardiagn.com

Front Seat Replacement - Bucket

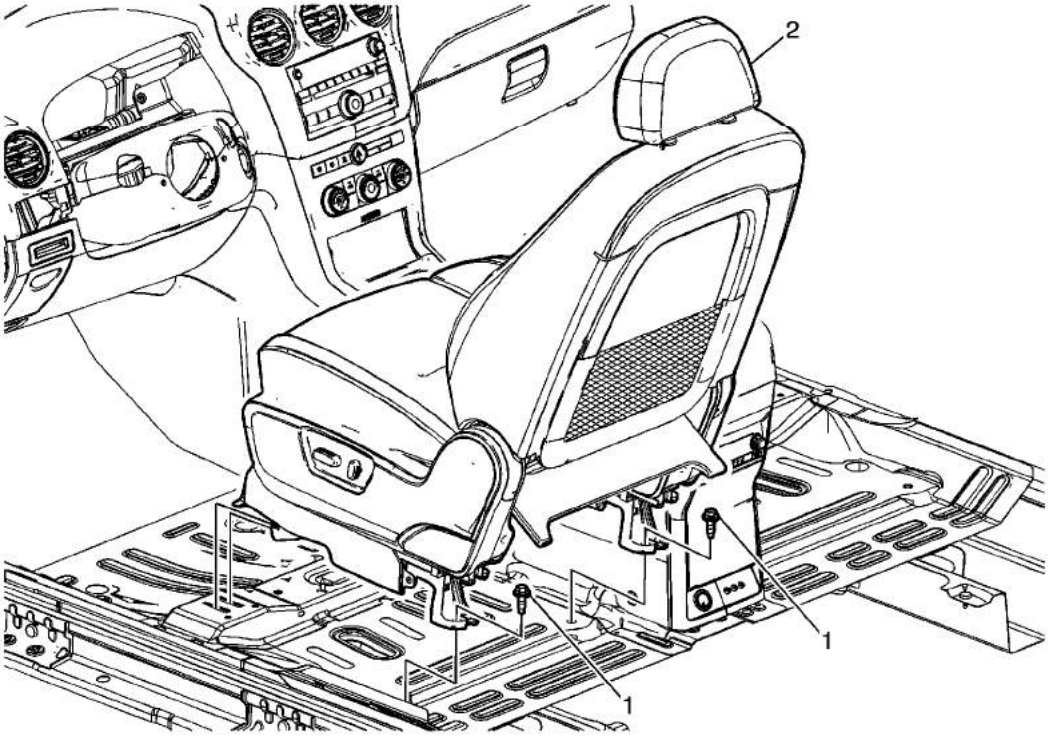

Callout	Component Name
1	Front Seat Assembly Bolt (Qty: 2) **Caution:** Refer to Fastener Caution in the Preface section. **Tighten** 45 N·m (33 lb ft)
2	Front Seat Assembly **Procedure** 1. Disable the SIR. Refer to SIR Disabling and Enabling. 2. Lift the seat upward at the rear of the seat. 3. Disconnect the electrical connectors. 4. Slide the seat rearward to disengage the adjuster hooks holding the seat to the floor pan.

cardiagn.com

Front Seat Adjuster Replacement

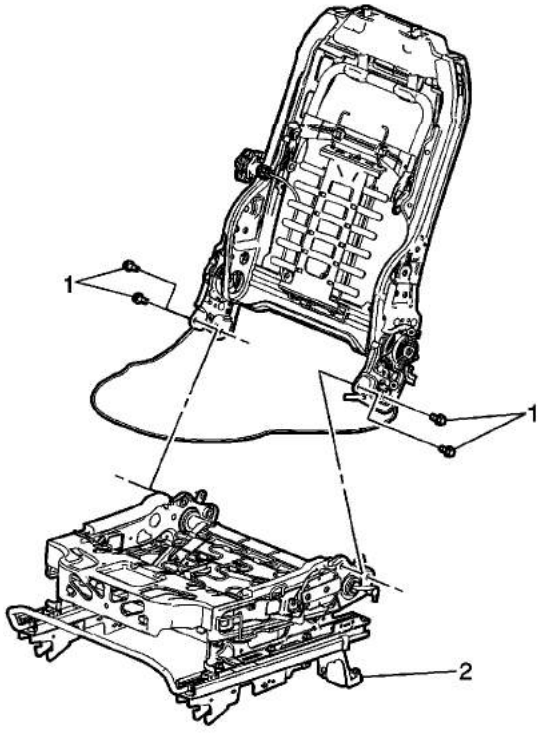

Callout	Component Name
Preliminary Procedures 1. Remove the front seat back cushion cover and pad. Refer to Front Seat Back Cushion Cover and Cushion Pad Replacement. 2. Remove the front seat cushion cover and pad. Refer to Front Seat Cushion Cover and Pad Replacement.	
1	Front Seat Back Frame Bolt (Qty: 4) **Caution:** Refer to Fastener Caution in the Preface section. **Tighten** 50 N·m (37 lb ft)
2	Front Seat Adjuster **Procedure** If replacing the front seat adjuster components as necessary.

cardiagn.com

Driver or Passenger Seat Adjuster Handle Replacement

Callout	Component Name
1	Front Seat Adjuster Handle **Tip** Pull forward to remove.

cardiagn.com

Front Seat Adjuster Track Finish Cover Replacement

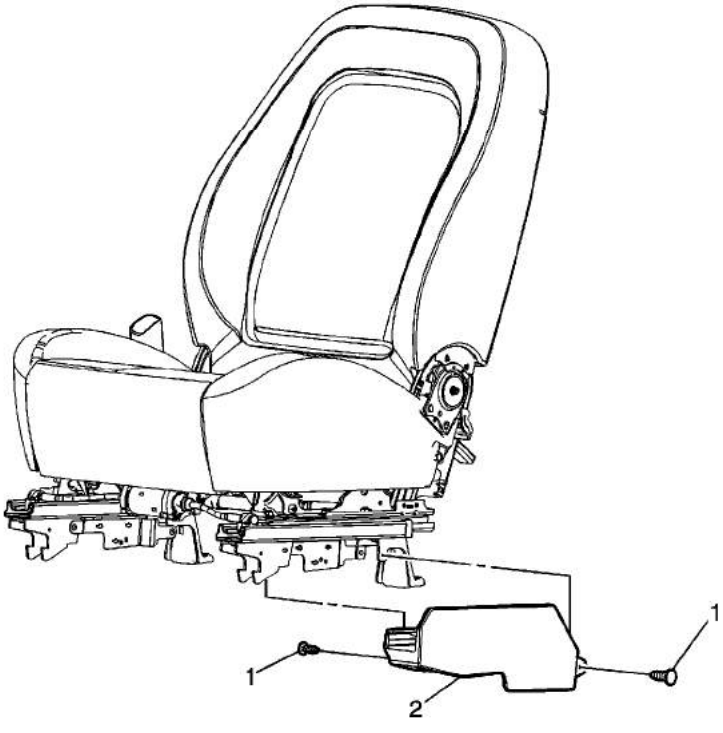

Callout	Component Name
1	Front Seat Adjuster Track Finish Cover Retainer (Qty: 2) **Tip** Use a trim tool or equivalent to aid in the removal of the retainers.
2	Front Seat Adjuster Track Finish Cover

cardiagn.com

Driver or Passenger Seat Head Restraint Replacement

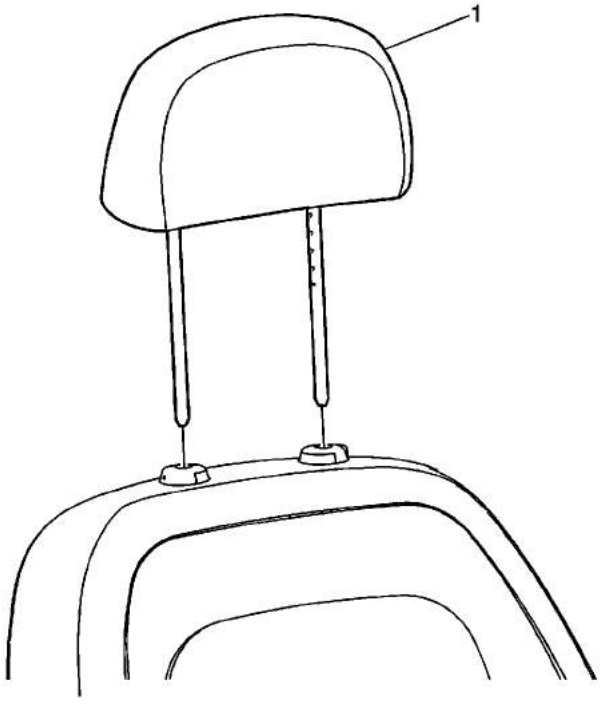

Callout	Component Name
1	Front Seat Head Restraint **Procedure** 1. Depress the button on the left head restraint guide to raise the head restraint to the full up position. 2. Insert a small diameter tool into the hole on the right side of the right head restraint guide and pull upward to remove.

cardiagn.com

Front Seat Head Restraint Guide Replacement

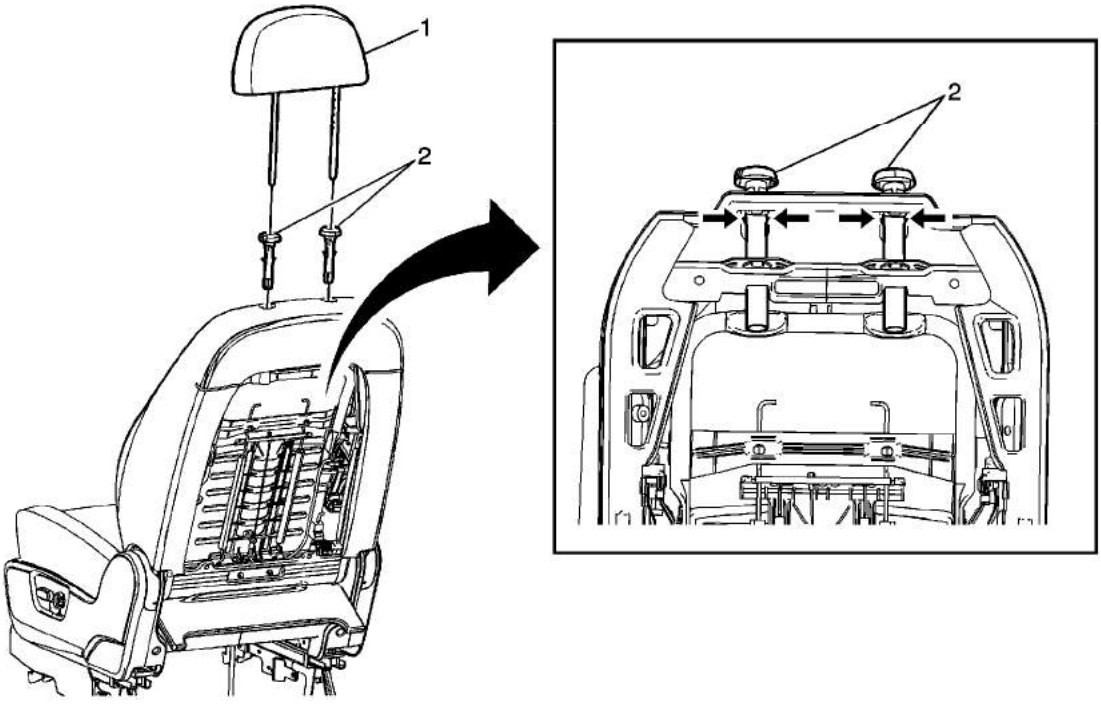

Callout	Component Name
Preliminary Procedure Remove the front seat back panel. Refer to Driver or Passenger Seat Back Cushion Finish Panel Replacement .	
1	Front Seat Head Restraint **Procedure** 1. Depress the button on the left head restraint guide to raise the head restraint to the full up position. 2. Insert a small diameter tool into the hole on the right side of the right head restraint guide and pull upward to remove.
2	Front Seat Head Restraint Guide (Qty: 2) **Procedure** 1. Release the j-channel and reposition the seat back cushion cover to gain access to the release tabs on the guide. 2. Squeeze the head restraint guides in the location shown and pull upward to

© 2010 General Motors Corporation. All rights reserved.

cardiagn.com

cardiagn.com

Driver or Passenger Seat Inner Adjuster Finish Cover Replacement

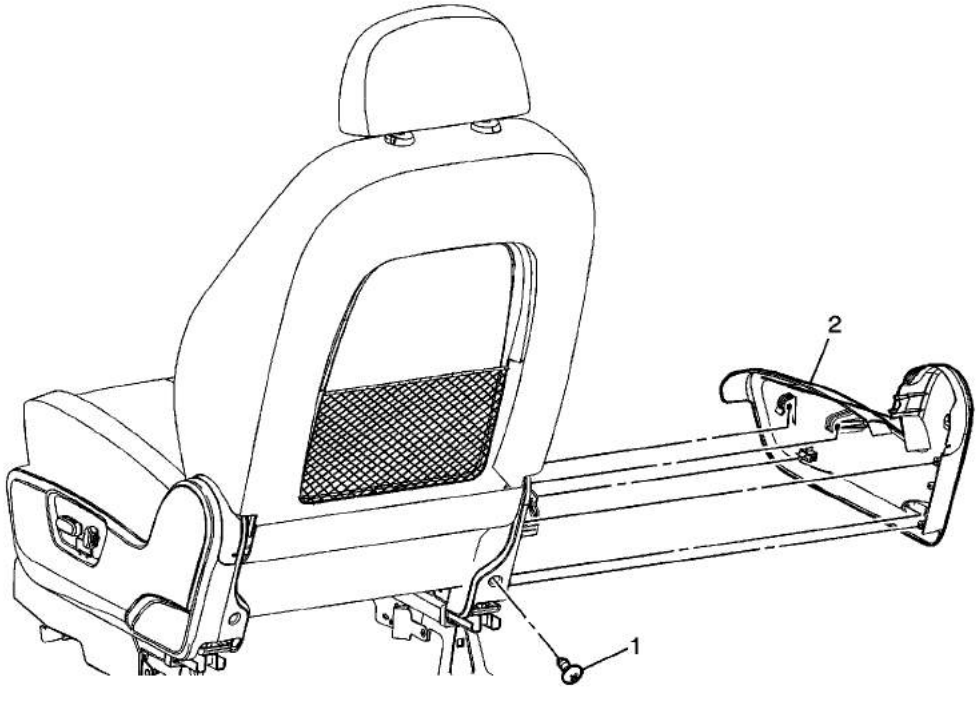

Callout	Component Name
Preliminary Procedure Remove the front seat. Refer to Front Seat Replacement - Bucket.	
1	Front Seat Inner Adjuster Finish Cover Screw **Caution:** Refer to Fastener Caution in the Preface section. **Tighten** 2 N·m (18 lb in)
2	Front Seat Inner Adjuster Finish Cover **Procedure** 1. Release the rear of the adjuster cover first. 2. Pull outward from the bottom of the adjuster cover and push upward to release the cover from the seat cushion frame.

cardiagn.com

Driver or Passenger Seat Outer Adjuster Finish Cover Replacement (without Power Seat)

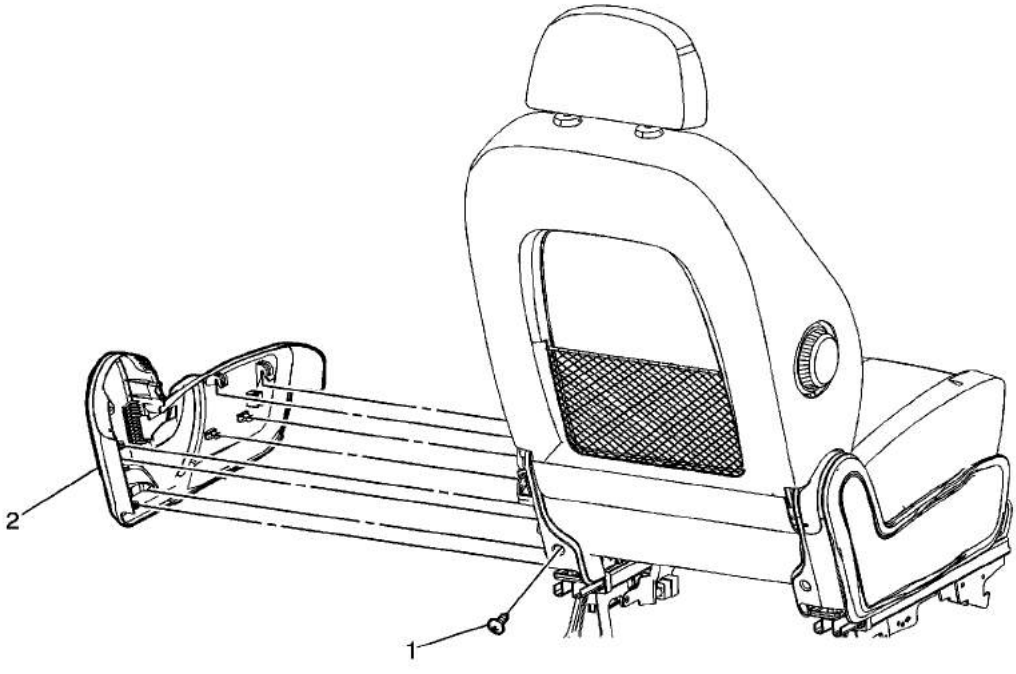

Callout	Component Name
Preliminary Procedures 1. Remove the seat adjuster handle. Refer to Driver or Passenger Seat Adjuster Handle Replacement. 2. Remove the front seat recliner handle. Refer to Driver or Passenger Seat Recliner Handle Replacement.	
1	Front Seat Outer Adjuster Finish Cover Screw **Caution:** Refer to Fastener Caution in the Preface section. **Tighten** 2 N·m (18 lb in)
2	Front Seat Outer Adjuster Finish Cover **Procedure** 1. Release the rear of the adjuster cover first.

© 2010 General Motors Corporation. All rights reserved.

cardiagn.com

cardiagn.com

Driver or Passenger Seat Outer Adjuster Finish Cover Replacement (with Power Seat)

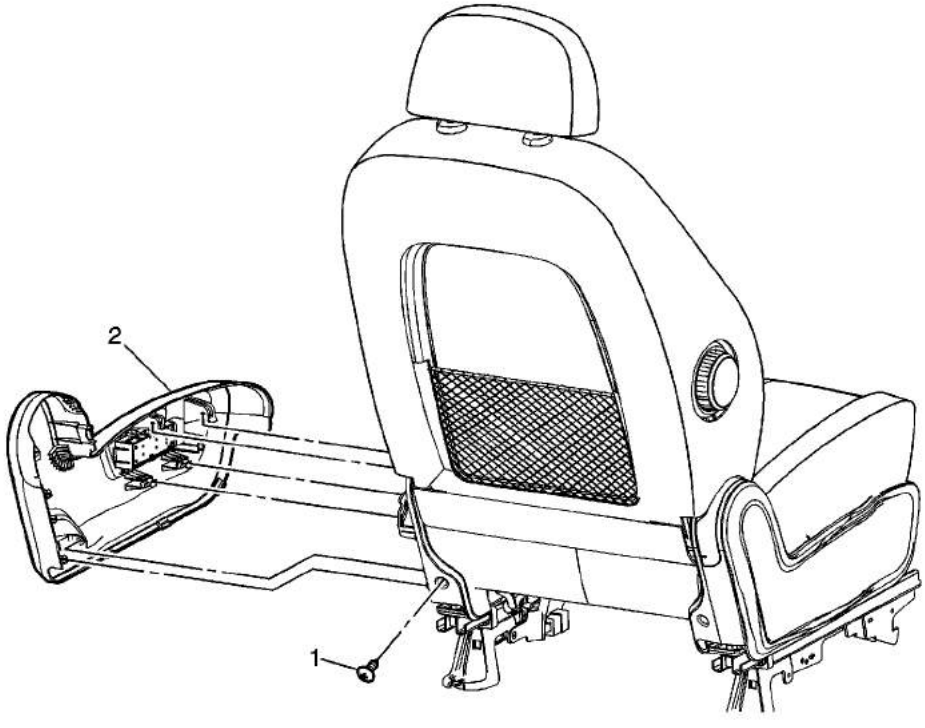

Callout	Component Name
1	Front Seat Outer Adjuster Finish Cover Screw **Caution:** Refer to Fastener Caution in the Preface section. **Tighten** 2 N·m (18 lb in)
2	Front Seat Outer Adjuster Finish Cover **Procedure** 1. Release the rear of the adjuster cover first. 2. Pull outward from the bottom of the adjuster cover and push upward to release the cover from the seat cushion frame. 3. Disconnect the power seat switch electrical connector.

cardiagn.com

Driver or Passenger Seat Inner Recliner Finish Cover Replacement

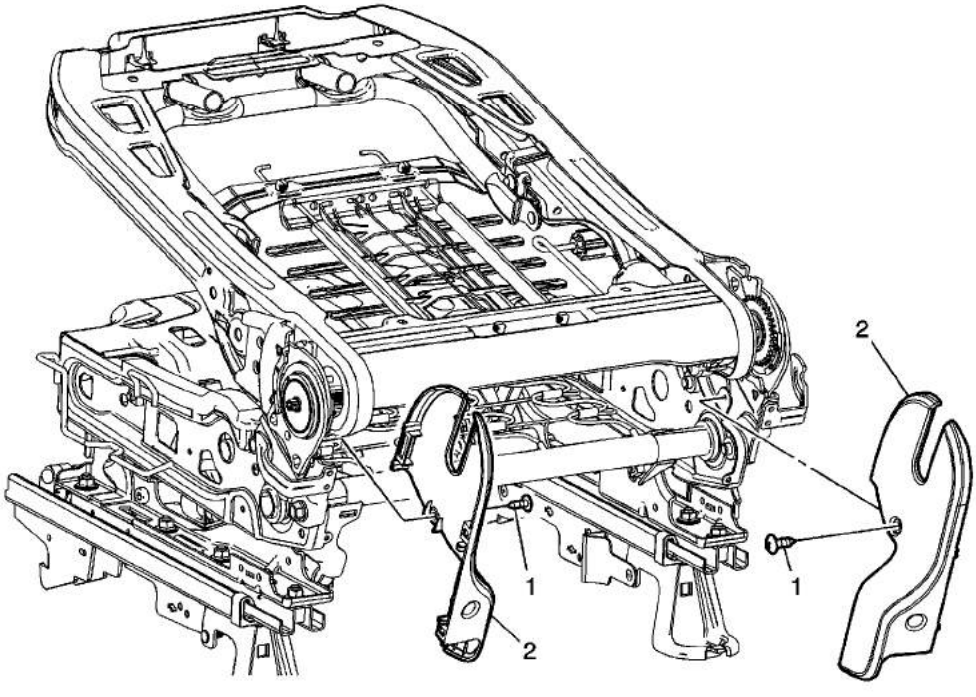

Callout	Component Name
Preliminary Procedures 1. Remove the front seat back cushion cover and pad. Refer to Front Seat Back Cushion Cover and Cushion Pad Replacement. 2. Remove the front seat cushion cover and pad. Refer to Front Seat Cushion Cover and Pad Replacement.	
1	Front Seat Inner Recliner Finish Cover Screw **Caution:** Refer to Fastener Caution in the Preface section. **Tighten** 2 N·m (18 lb in)
2	Front Seat Inner Recliner Finish Cover

cardiagn.com

Front Seat Cushion Cover and Pad Replacement (without KA1)

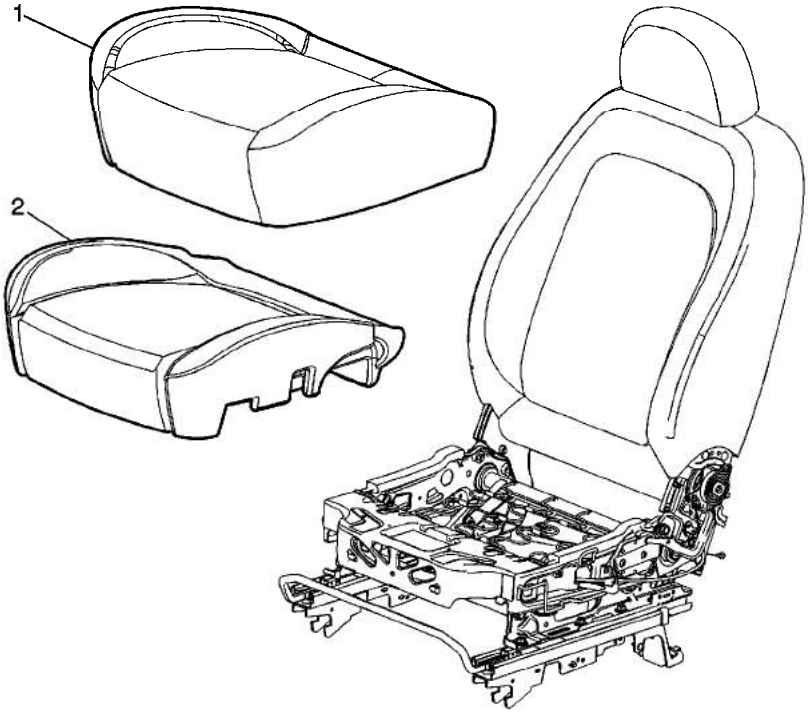

Callout	Component Name
Preliminary Procedures 1. Remove the front seat. Refer to Front Seat Replacement - Bucket . 2. Remove the front seat outer adjuster finish cover. Refer to Driver or Passenger Seat Outer Adjuster Finish Cover Replacement . 3. Remove the front seat inner adjuster finish cover. Refer to Driver or Passenger Seat Inner Adjuster Finish Cover Replacement .	
1	Front Seat Cushion Cover **Procedure** 1. Disengage the j-channel retainers from the seat back cushion frame. 2. Disconnect the electrical connectors that attach to the seat back cushion, if equipped. 3. Remove the seat belt buckle pretensioner electrical wire from the seat cushion and cover. 4. Remove the seat cushion cover and pad as an assembly. 5. Pull the cover away from the pad to disengage the retainers.
[redacted]	

cardiagn.com

cardiagn.com

Front Seat Cushion Cover and Pad Replacement (with KA1)

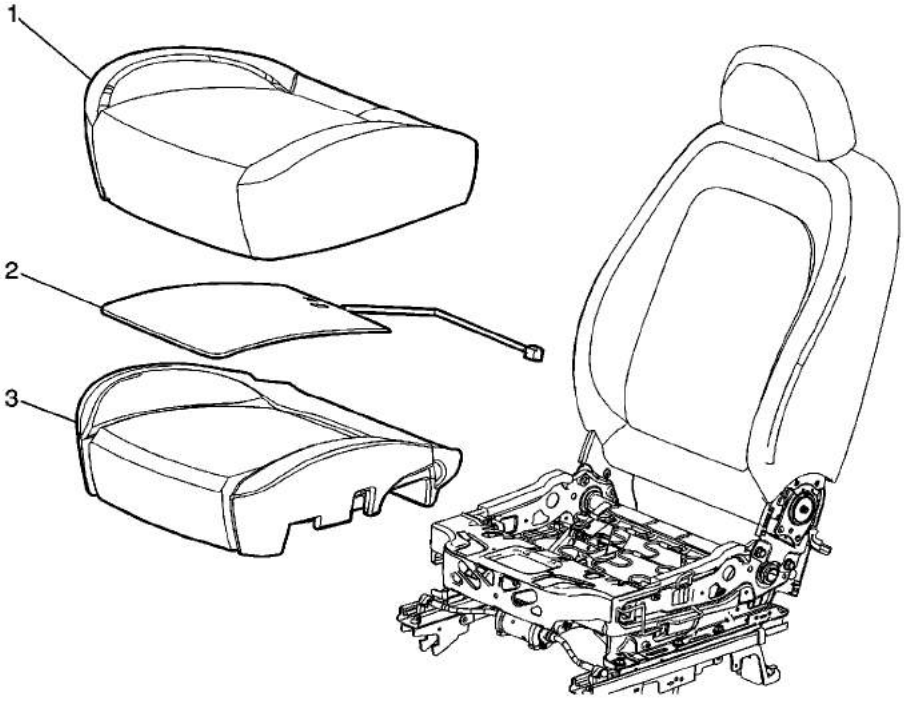

Callout	Component Name
Preliminary Procedures 1. Remove the front seat. Refer to Front Seat Replacement - Bucket . 2. Remove the front seat outer adjuster finish cover. Refer to Driver or Passenger Seat Outer Adjuster Finish Cover Replacement . 3. Remove the front seat inner adjuster finish cover. Refer to Driver or Passenger Seat Inner Adjuster Finish Cover Replacement .	
1	Front Seat Cushion Cover **Procedure** 1. Disengage the j-channel retainers from the seat back cushion frame. 2. Disconnect the electrical connectors that attach to the seat back cushion, if equipped. 3. Remove the seat belt buckle pretensioner electrical wire from the seat cushion and cover. 4. Remove the seat cushion cover and pad as an assembly. 5. Pull the cover away from the pad to disengage the retainers.
	[redacted]

cardiagn.com

3	Front Seat Cushion Pad

cardiagn.com

Driver or Passenger Seat Back Cushion Cover and Pad Replacement (without KA1)

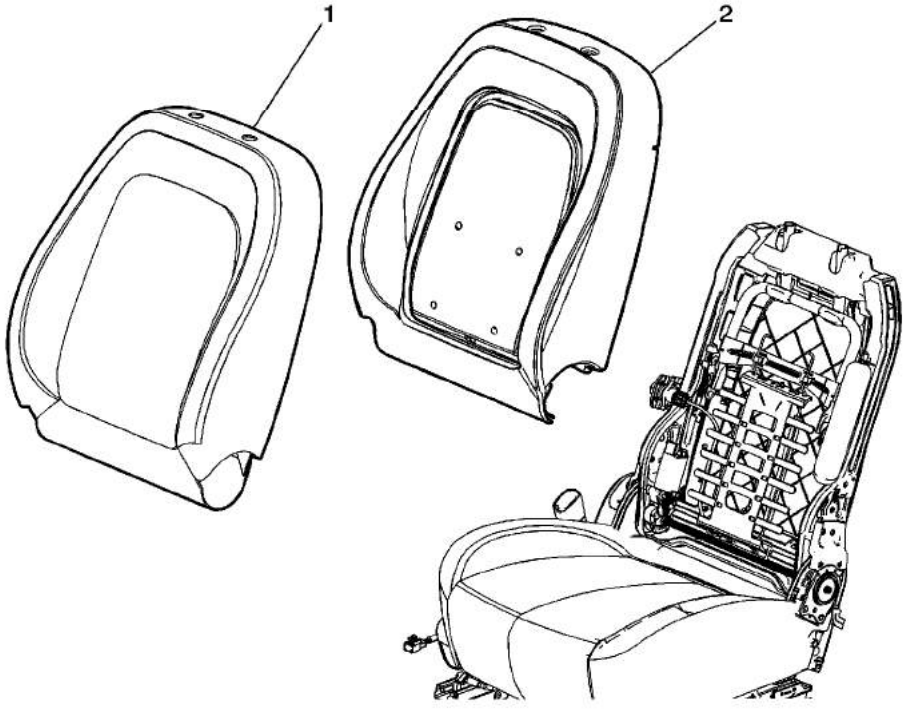

Callout	Component Name
Preliminary Procedures 1. Remove the front seat. Refer to Front Seat Replacement - Bucket . 2. Remove the front seat back panel. Refer to Driver or Passenger Seat Back Cushion Finish Panel Replacement . 3. Remove the front seat head restraint. Refer to Front Seat Head Restraint Replacement . 4. Remove the front seat head restraint guides. Refer to Front Seat Head Restraint Guide Replacement . 5. Remove the front seat lumbar support actuator knob and bezel, if equipped. Refer to Driver Seat Lumbar Support Actuator Knob Bezel Replacement . 6. Remove the front seat outer adjuster finish cover. Refer to Driver or Passenger Seat Outer Adjuster Finish Cover Replacement . 7. Remove the front seat inner adjuster finish cover. Refer to Driver or Passenger Seat Inner Adjuster Finish Cover Replacement .	
	Front Seat Back Cushion Cover **Procedure** [redacted]

cardiagn.com

1	equipped. 3. Remove the inflatable restraint module hog rings from the seat cover, use new hog rings when installing. 4. Remove the seat back cushion cover and pad as an assembly. 5. Pull the cover away from the pad to disengage the retainers.
2	Front Seat Back Cushion Pad

cardiagn.com

Driver or Passenger Seat Back Cushion Cover and Pad Replacement (with KA1)

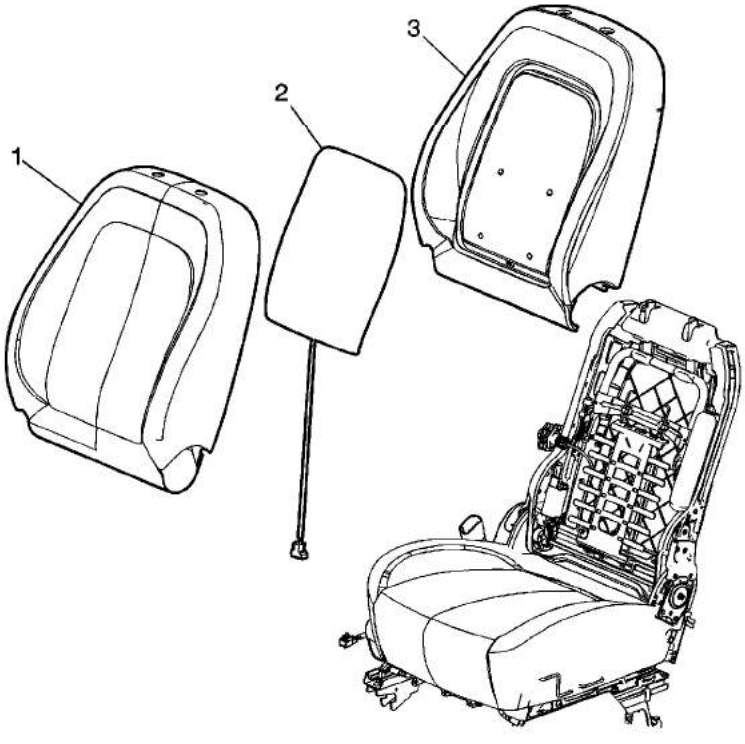

Callout	Component Name
Preliminary Procedures 1. Remove the front seat. Refer to Front Seat Replacement - Bucket . 2. Remove the front seat back panel. Refer to Driver or Passenger Seat Back Cushion Finish Panel Replacement . 3. Remove the front seat head restraint. Refer to Front Seat Head Restraint Replacement . 4. Remove the front seat head restraint guides. Refer to Front Seat Head Restraint Guide Replacement . 5. Remove the front seat lumbar support actuator knob and bezel, if equipped. Refer to Driver Seat Lumbar Support Actuator Knob Bezel Replacement . 6. Remove the front seat outer adjuster finish cover. Refer to Driver or Passenger Seat Outer Adjuster Finish Cover Replacement . 7. Remove the front seat inner adjuster finish cover. Refer to Driver or Passenger Seat Inner Adjuster Finish Cover Replacement .	
	Front Seat Back Cushion Cover **Procedure** [redacted]

cardiagn.com

1	equipped. 3. Remove the inflatable restraint module hog rings from the seat cover, use new hog rings when installing. 4. Remove the seat back cushion cover and pad as an assembly. 5. Pull the cover away from the pad to disengage the retainers.
2	Front Seat Back Cushion Heater
3	Front Seat Back Cushion Pad

cardiagn.com

Driver or Passenger Seat Back Cushion Frame Replacement (with Power Seat)

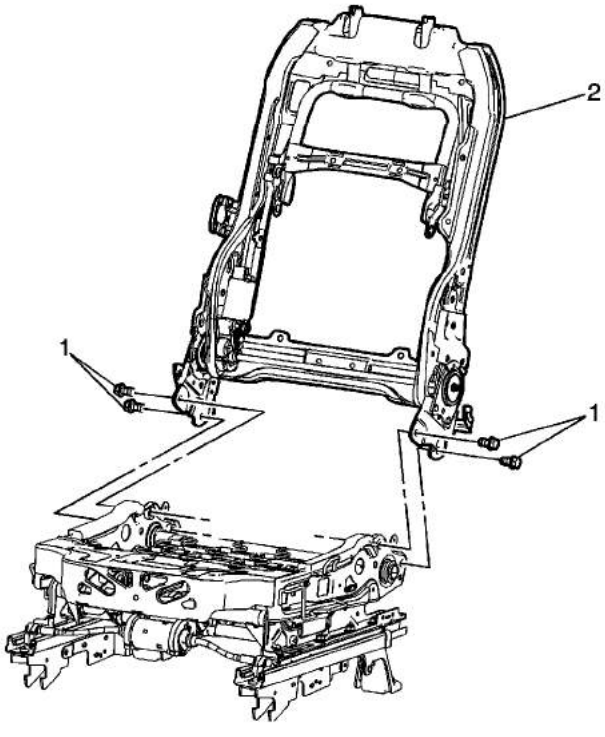

Callout	Component Name
Preliminary Procedures 1. Remove the front seat back cushion cover and pad. Refer to Front Seat Back Cushion Cover and Cushion Pad Replacement. 2. Remove the front seat cushion cover and pad. Refer to Front Seat Cushion Cover and Pad Replacement.	
1	Front Seat Back Frame Bolt (Qty: 4) **Caution:** Refer to Fastener Caution in the Preface section. **Tighten** 50 N·m (37 lb ft)
2	Front Seat Back Frame **Procedure** 1. Disconnect the electrical connector.

© 2010 General Motors Corporation. All rights reserved.

cardiagn.com

cardiagn.com

Driver or Passenger Seat Back Cushion Frame Replacement (without Power Seat)

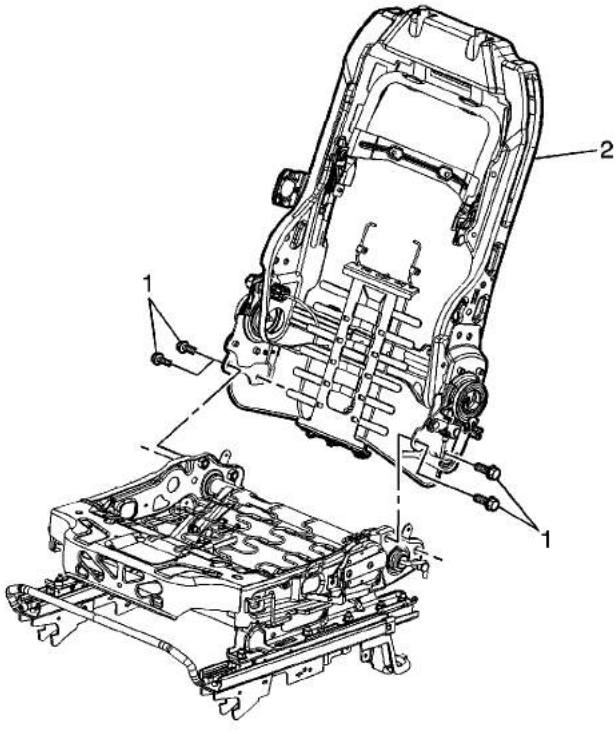

Callout	Component Name
Preliminary Procedures 1. Remove the front seat back cushion cover and pad. Refer to Front Seat Back Cushion Cover and Cushion Pad Replacement. 2. Remove the front seat cushion cover and pad. Refer to Front Seat Cushion Cover and Pad Replacement.	
1	Front Seat Back Frame Bolt (Qty: 4) **Caution:** Refer to Fastener Caution in the Preface section. **Tighten** 50 N·m (37 lb ft)
2	Front Seat Back Frame **Procedure** If replacing the seat back frame transfer components as necessary.

cardiagn.com

Passenger Seat Recliner Upper Finish Cover Replacement

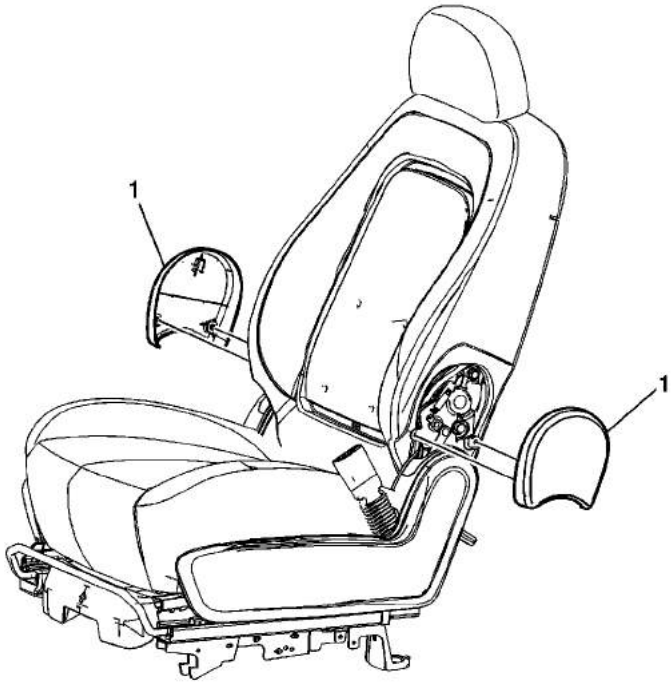

Callout	Component Name
1	Passenger Seat Recliner Upper Finish Cover **Procedure** 1. Use a door pad trim removal tool or equivalent to aid in the removal of the cover. 2. Release the lower retainers and slide upward to release the cover from the seat.

cardiagn.com

Driver or Passenger Seat Recliner Handle Replacement

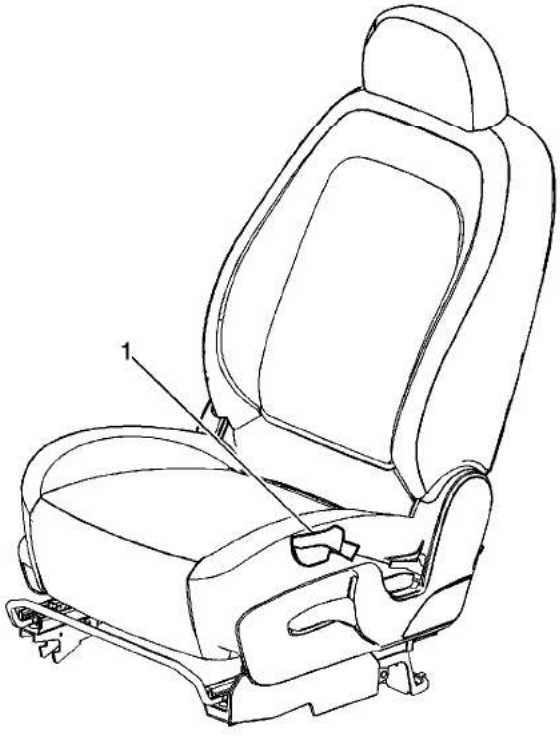

Callout	Component Name
1	Front Seat Recliner Handle **Tip** Pull forward and up to remove.

cardiagn.com

Driver or Passenger Seat Back Cushion Finish Panel Replacement

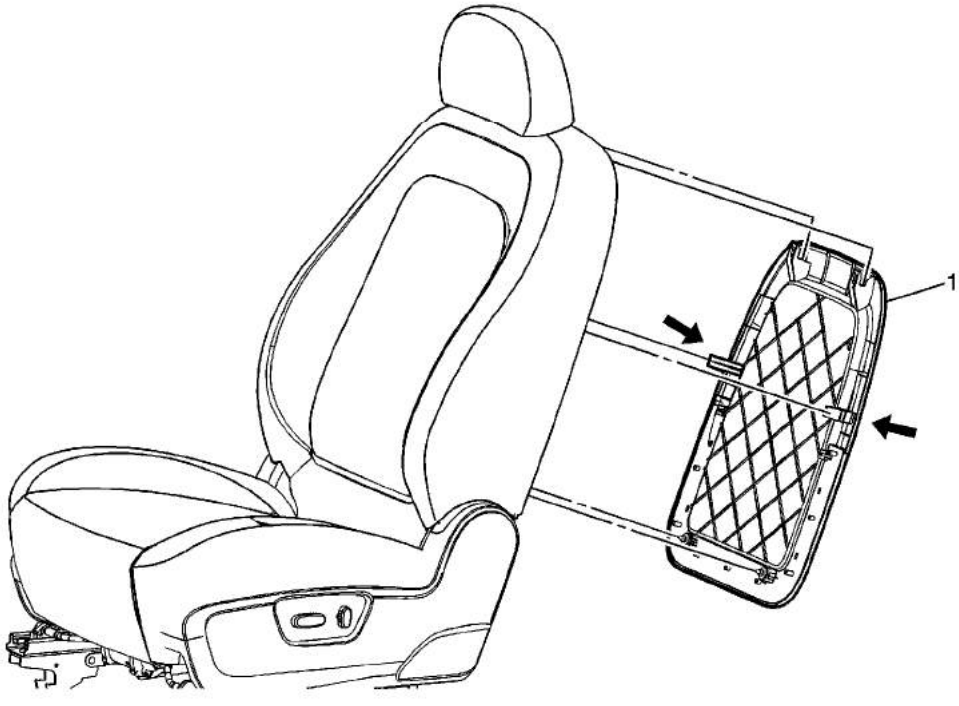

Callout	Component Name
1	Front Seat Recliner Handle **Procedure** 1. Pull rearward at the bottom of the seat to release the push in retainers. 2. Use a flat bladed tool to push inward on the sides of the seat back panel to release the upper portion of the panel from the seat back frame.

cardiagn.com

Front Seat Lumbar Support Replacement

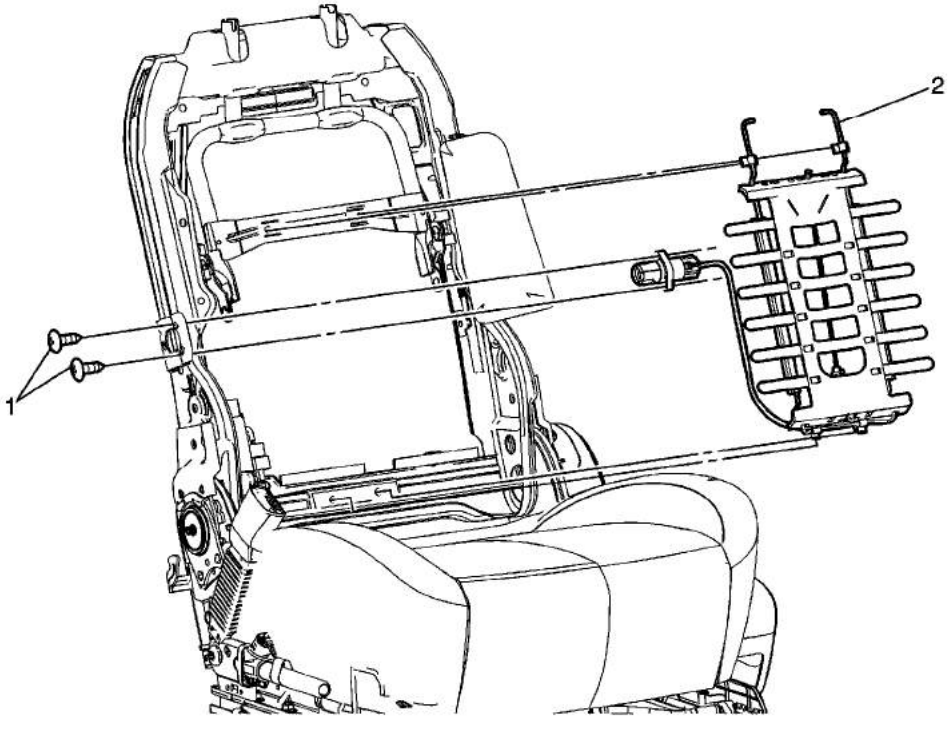

Callout	Component Name
Preliminary Procedures Remove the front seat back cushion cover and pad. Refer to Front Seat Back Cushion Cover and Cushion Pad Replacement.	
1	Driver Seat Lumbar Support Actuator Screw (Qty: 2) **Caution:** Refer to Fastener Caution in the Preface section. **Tighten** 5 N·m (44 lb in)
2	Driver Seat Lumbar Support Assembly **Tip** Compress the lumbar support upper tabs and pull the lumbar assembly forward from the seat to remove from the seat back frame.

cardiagn.com

Driver Seat Lumbar Support Actuator Knob Replacement

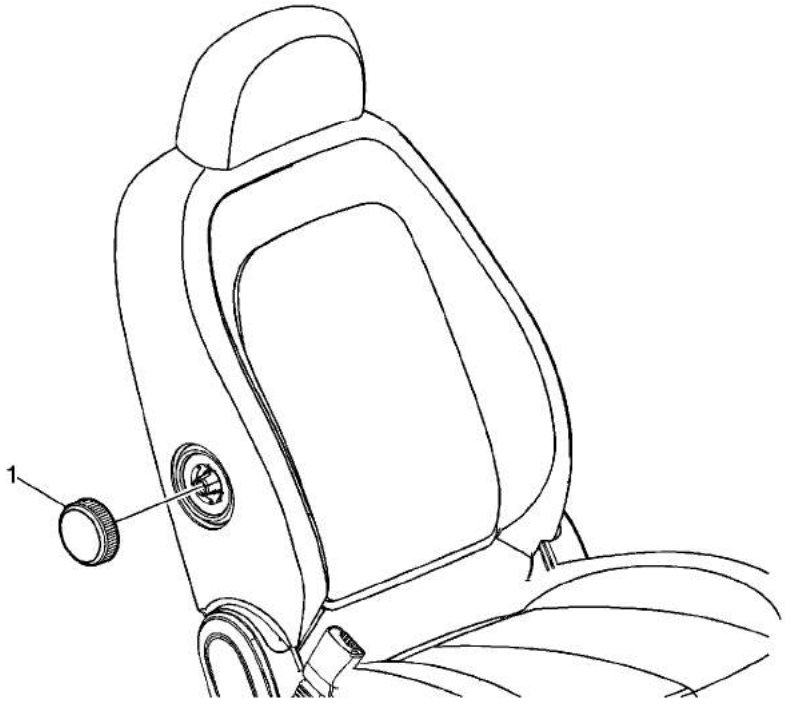

Callout	Component Name
1	Driver Seat Lumbar Support Actuator Knob **Tip** Pull outward to release from the seat.

cardiagn.com

Driver Seat Lumbar Support Actuator Knob Bezel Replacement

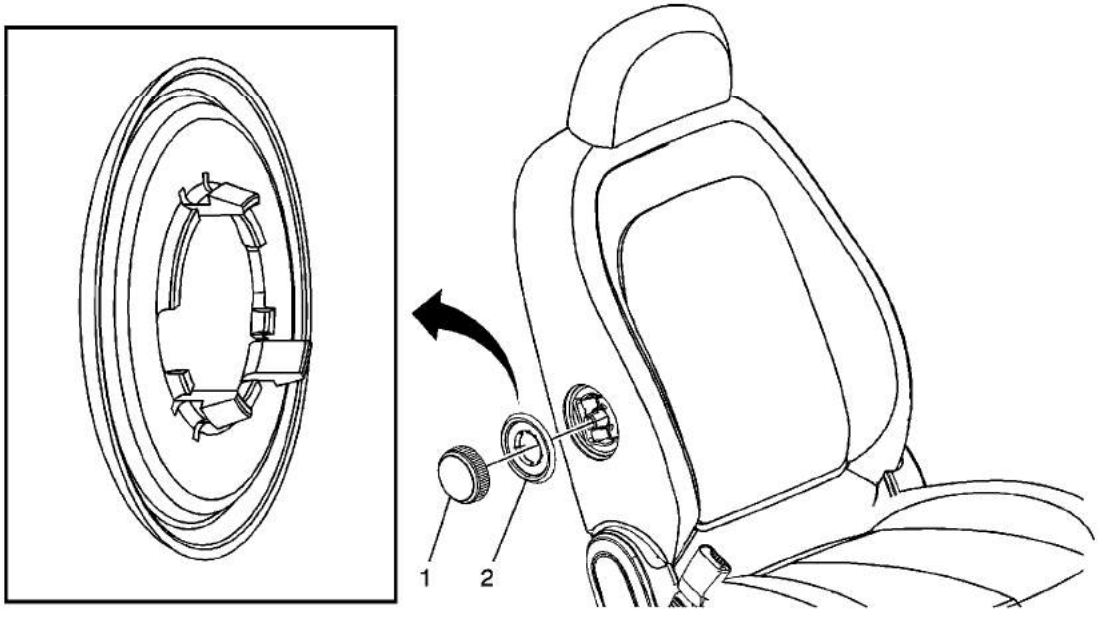

Callout	Component Name
1	Driver Seat Lumbar Support Actuator Knob **Tip** Pull outward to disengage the knob from the actuator.
2	Driver Seat Lumbar Support Actuator Knob Bezel **Tip** Use a small flat bladed tool and push in on the tabs behind the bezel to release the bezel from the actuator.

cardiagn.com

Child Seat Bracket Trim Cover Replacement

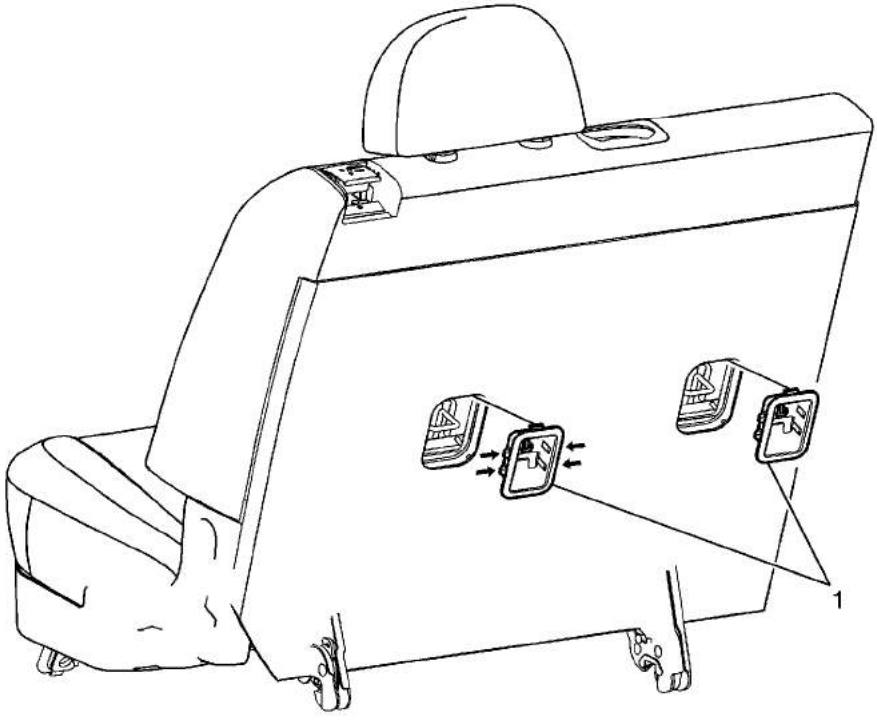

Callout	Component Name
1	Child Seat Bracket Trim Cover **Tip** Use a flat bladed tool and pry the tabs inward at the four locations shown to release the cover from the seat back.

cardiagn.com

Rear Seat Replacement

Removal Procedure

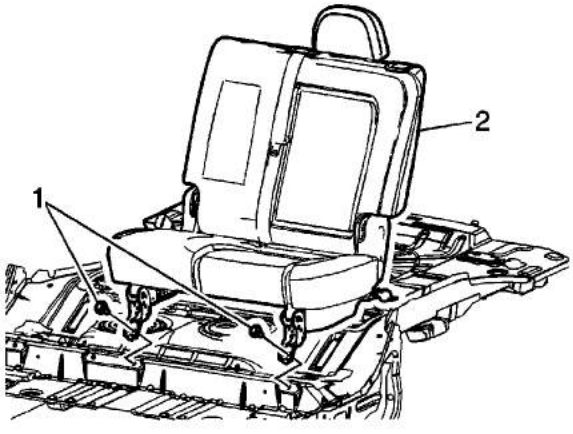

1. Remove the rear seat riser finish covers.
2. Remove the rear seat bolts (1).
3. Open the rear compartment floor stowage compartment cover and remove the foam insulator over the spare tire to gain access to the rear seat latches.

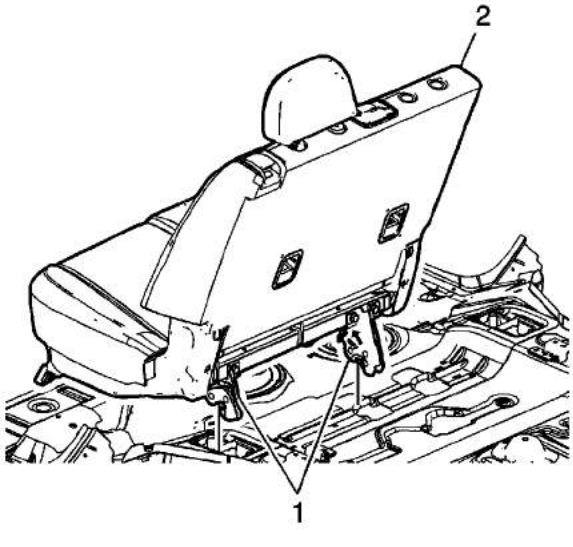

4. Unlatch the rear seat (2) by pushing forward on the seat latch buttons located on the inboard

© 2010 General Motors Corporation. All rights reserved.

cardiagn.com

Installation Procedure

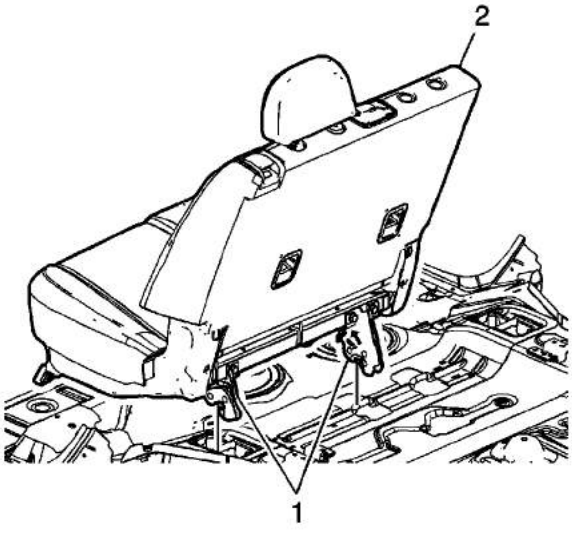

1. Install the rear seat (2) to the vehicle, locating the front seat riser pins into the floor.
2. Secure the rear of the seat by pushing down on the back of the seat ensuring that the seat latch (1) is securely latched.
3. Install the foam insulator over the spare tire and close the rear compartment floor stowage compartment cover.

Caution: Refer to Fastener Caution in the Preface section.

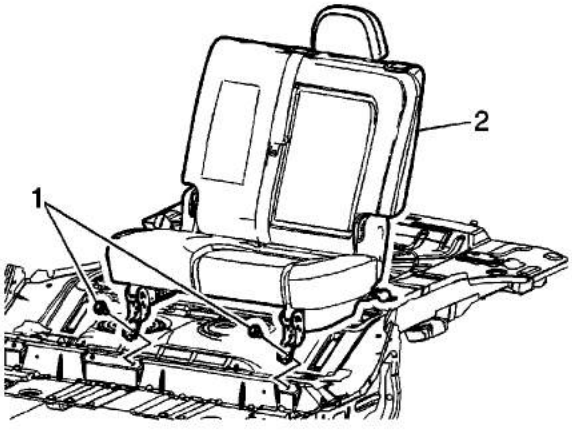

cardiagn.com

4. Install the 2 seat attachments bolts (1) to the front of the seat risers and tighten the bolts to **40 N·m (30 lb ft)**.

cardiagn.com

Rear Seat Armrest Replacement

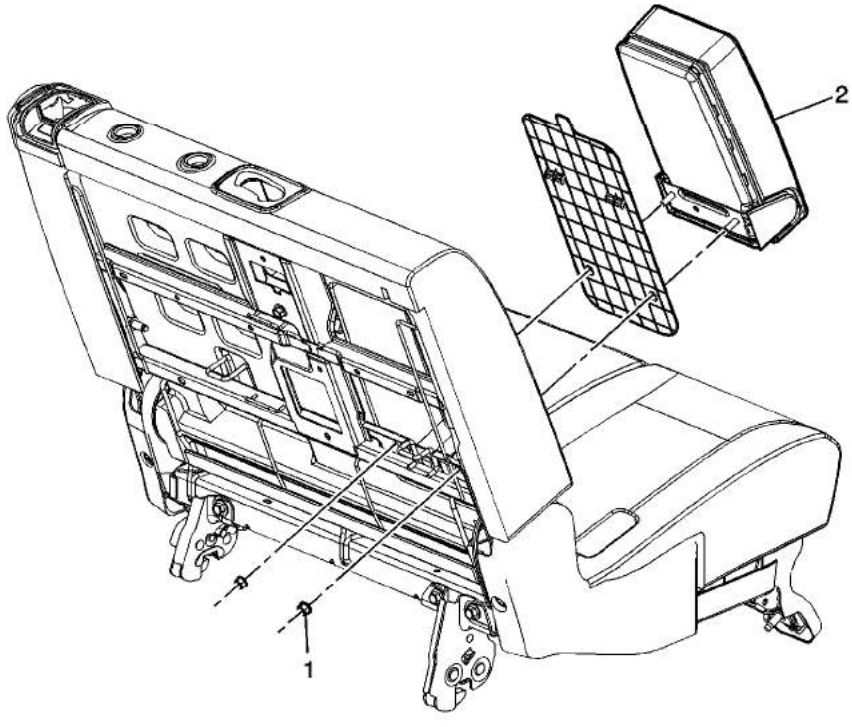

Callout	Component Name
Preliminary Procedures 1. Remove the rear seat. Refer to Rear Seat Replacement. 2. Remove the rear seat recliner covers. Refer to Rear Seat Recliner Outer Finish Cover Replacement - Inboard and Rear Seat Recliner Outer Finish Cover Replacement - Outboard. 3. Remove the rear seat head restraint. Refer to Rear Seat Head Restraint Replacement. 4. Remove the rear child seat bracket trim cover. Refer to Child Seat Bracket Trim Cover Replacement. 5. Remove the rear seat latch release strap bezel. Refer to Rear Seat Latch Release Strap Bezel Replacement. 6. Remove the rear seat back panel. Refer to Rear Seat Back Cushion Panel Replacement.	
1	Rear Seat Armrest Nut (Qty: 2) **Caution:** Refer to Fastener Caution in the Preface section. **Tighten** 10 N·m (89 lb in)
	Rear Seat Armrest

© 2010 General Motors Corporation. All rights reserved.

cardiagn.com

2	Rear seat back armrest close out comes out when the armrest is removed..

cardiagn.com

Rear Seat Head Restraint Replacement

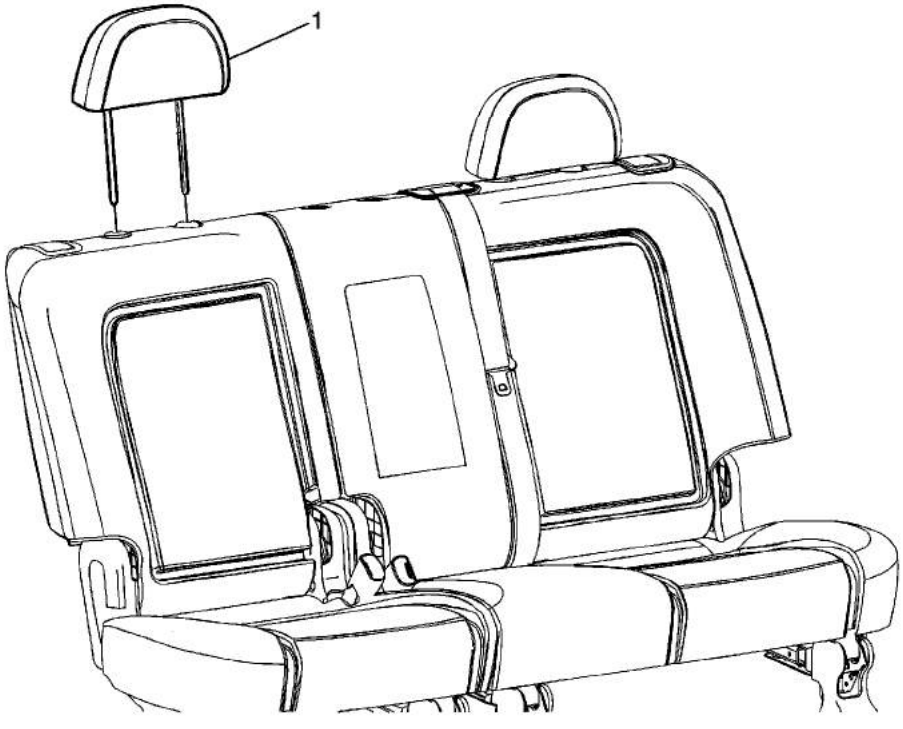

Callout	Component Name
1	Rear Seat Head Restraint **Procedure** 1. Depress the button on the left head restraint guide to raise the head restraint to the full up position. 2. Insert a small diameter tool into the hole on the right side of the right head restraint guide and pull upward to remove.

cardiagn.com

Rear Seat Head Restraint Guide Replacement

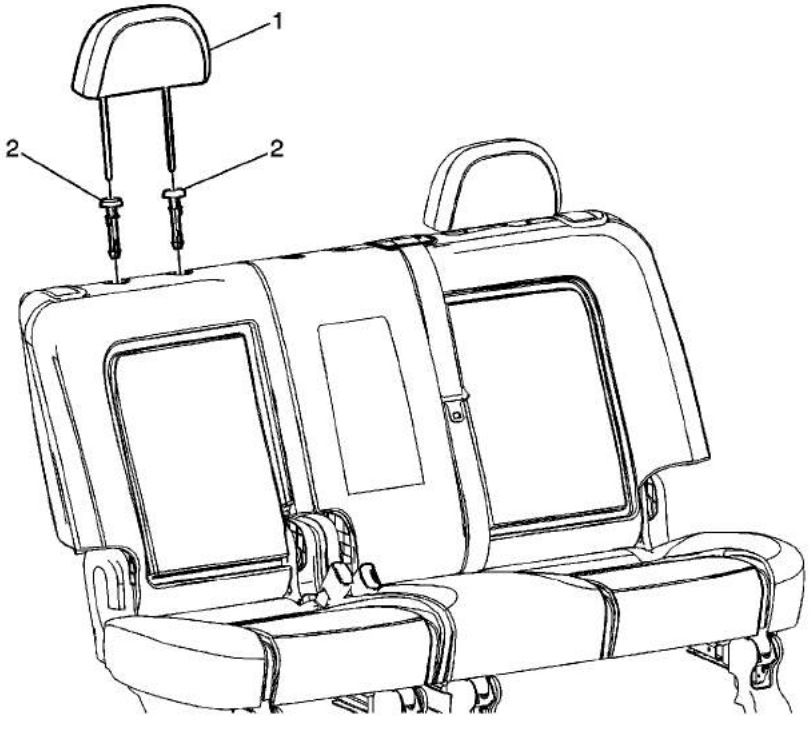

Callout	Component Name
Preliminary Procedures 1. Remove the rear seat. Refer to Rear Seat Replacement. 2. Remove the rear seat recliner covers. Refer to Rear Seat Recliner Outer Finish Cover Replacement - Inboard and Rear Seat Recliner Outer Finish Cover Replacement - Outboard. 3. Remove the rear child seat bracket trim cover. Refer to Child Seat Bracket Trim Cover Replacement. 4. Remove the rear seat latch release strap bezel. Refer to Rear Seat Latch Release Strap Bezel Replacement. 5. Remove the rear seat back panel. Refer to Rear Seat Back Cushion Panel Replacement.	
1	Rear Seat Head Restraint **Procedure** 1. Depress the button on the left head restraint guide to raise the head restraint to the full up position. 2. Insert a small diameter tool into the hole on the right side of the right head restraint guide and pull upward to remove.
	[redacted]

cardiagn.com

2	**Procedure** Squeeze the bottom of the head restraint guide together and push up to remove.

cardiagn.com

Rear Seat Recliner Outer Finish Cover Replacement - Inboard (with 40 Percent Seat)

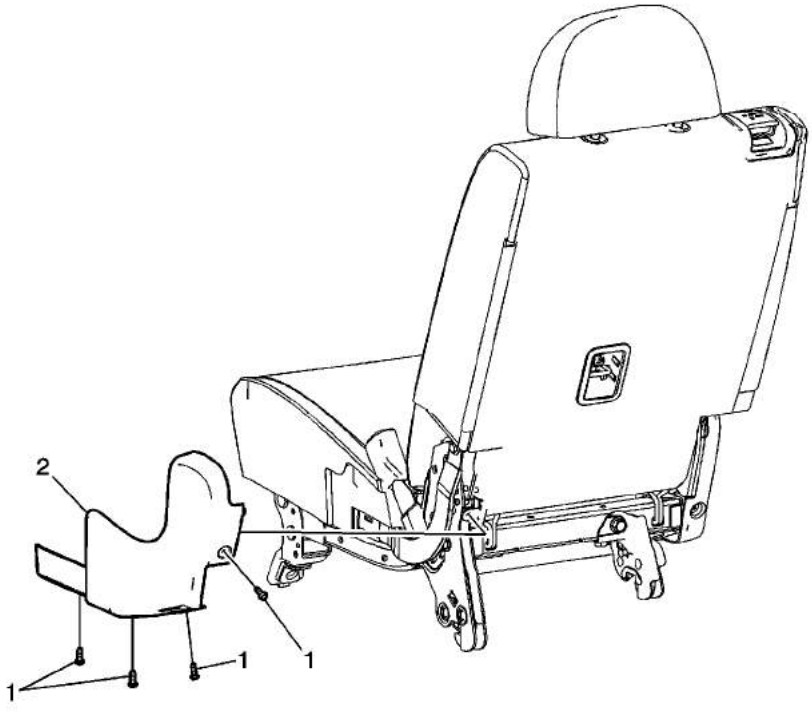

Callout	Component Name
1	Rear Seat Recliner Outer Finish Cover Screw (Qty: 4) **Caution:** Refer to Fastener Caution in the Preface section. **Tip** Release the rear seat latches to fold the seat up by pressing forward on the latch button located on the inboard side of each of the lower latches. **Tighten** 2 N·m (18 lb in)
2	Rear Seat Recliner Outer Finish Cover - Inboard

cardiagn.com

Rear Seat Recliner Outer Finish Cover Replacement - Inboard (with 60 Percent Seat)

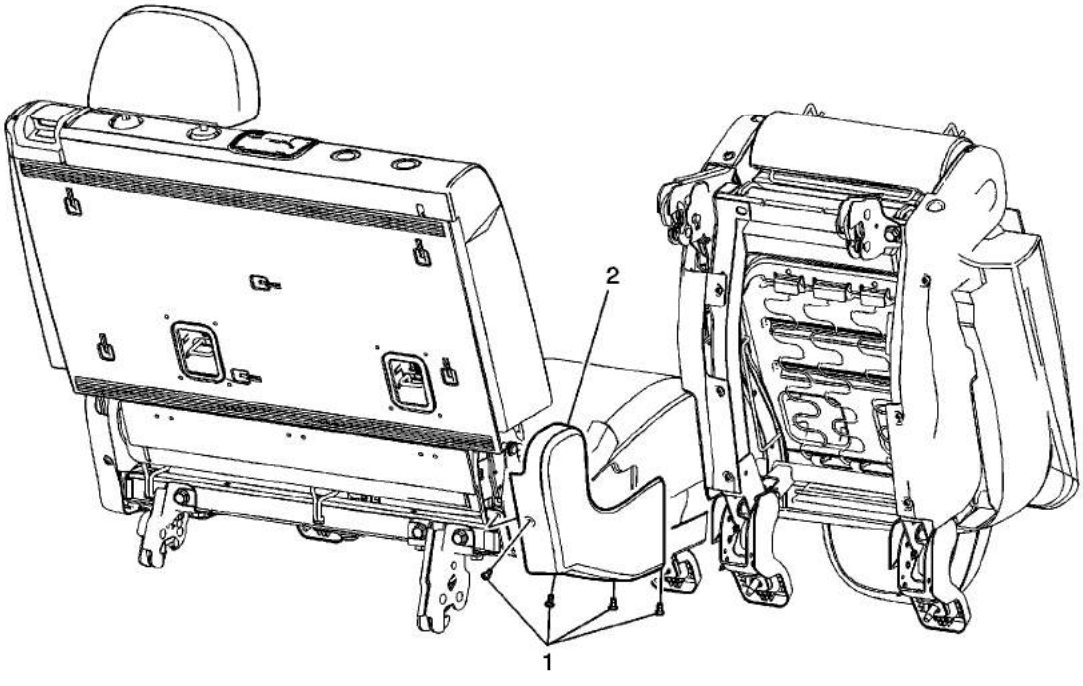

Callout	Component Name
1	Rear Seat Recliner Outer Finish Cover Screw (Qty: 4) **Caution:** Refer to Fastener Caution in the Preface section. **Tip** Release the rear seat latches to fold the seat up by pressing forward on the latch button located on the inboard side of each of the lower latches. **Tighten** 2 N·m (18 lb in)
2	Rear Seat Recliner Outer Finish Cover - Inboard

cardiagn.com

Rear Seat Recliner Outer Finish Cover Replacement - Outboard (with 60 Percent Seat)

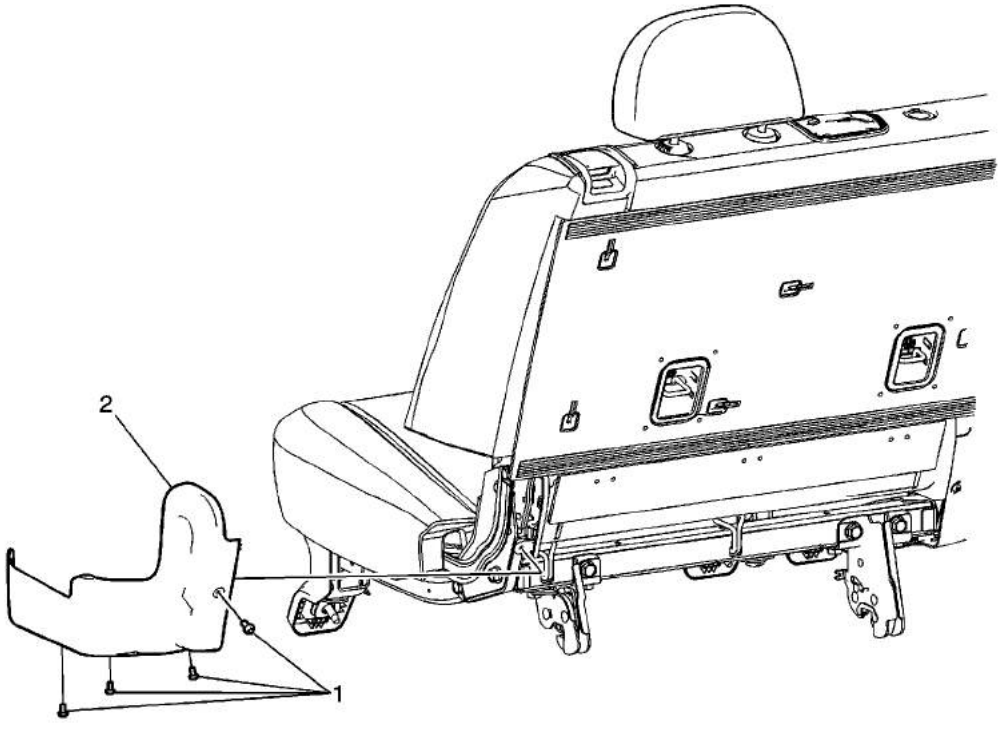

Callout	Component Name
1	Rear Seat Recliner Outer Finish Cover Screw (Qty: 4) **Caution:** Refer to Fastener Caution in the Preface section. **Tip** Release the rear seat latches to fold the seat up by pressing forward on the latch button located on the inboard side of each of the lower latches. **Tighten** 2 N·m (18 lb in)
2	Rear Seat Recliner Outer Finish Cover - Outboard

cardiagn.com

Rear Seat Recliner Outer Finish Cover Replacement - Outboard (with 40 Percent Seat)

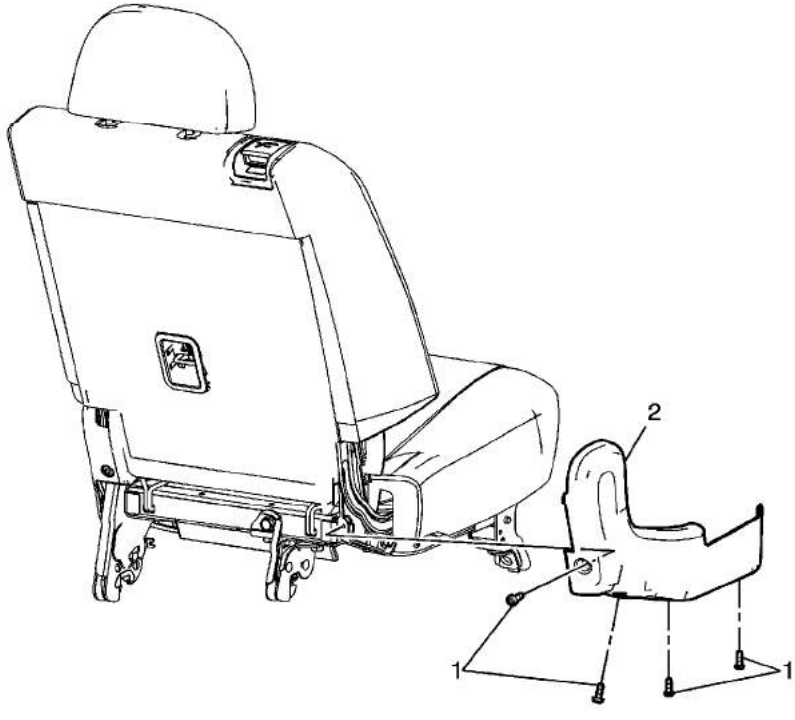

Callout	Component Name
1	Rear Seat Recliner Outer Finish Cover Screw (Qty: 4) **Caution:** Refer to Fastener Caution in the Preface section. **Tip** Release the rear seat latches to fold the seat up by pressing forward on the latch button located on the inboard side of each of the lower latches. **Tighten** 2 N·m (18 lb in)
2	Rear Seat Recliner Outer Finish Cover - Outboard

cardiagn.com

Rear Seat Cushion Cover and Pad Replacement (with 60 Percent Seat)

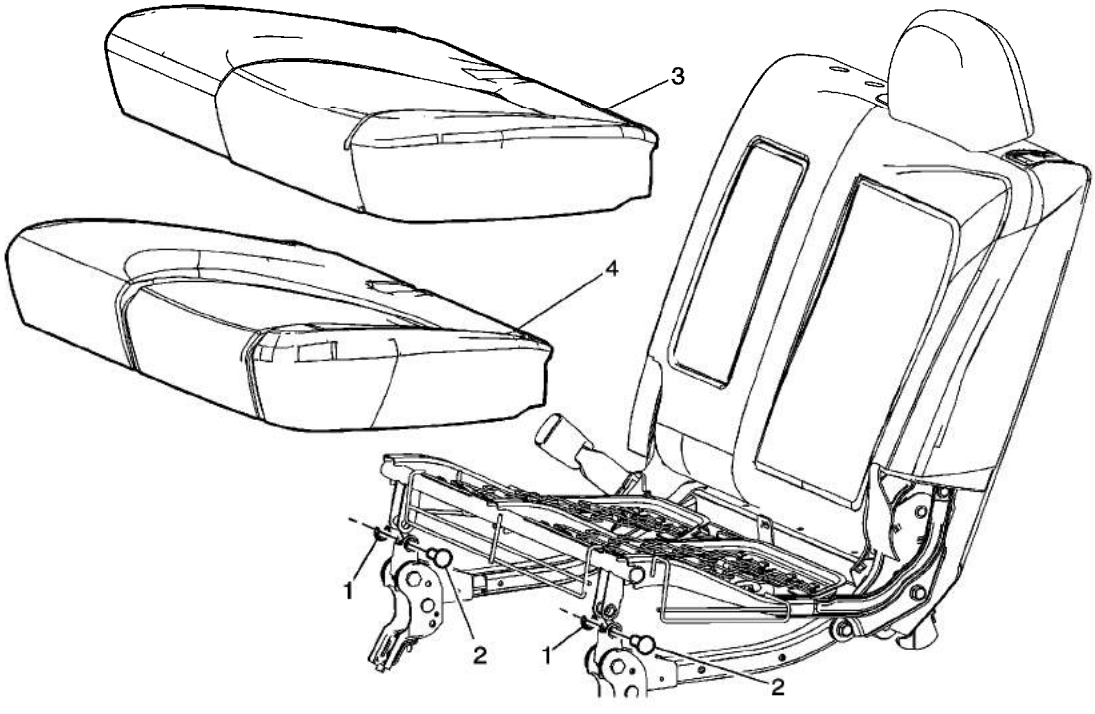

Callout	Component Name
Preliminary Procedures 1. Remove the rear seat. Refer to Rear Seat Replacement. 2. Remove the rear seat recliner covers. Refer to Rear Seat Recliner Outer Finish Cover Replacement - Inboard and Rear Seat Recliner Outer Finish Cover Replacement - Outboard. 3. Remove the rear seat belt buckle. Refer to Rear Seat Belt Buckle Replacement or Rear Seat Center Belt Buckle Replacement.	
1	Rear Seat Pivot Pin Clip (Qty: 2)
2	Rear Seat Pivot Pin (Qty: 2)
3	Rear Seat Cushion Cover **Procedure** 1. Lift the rear seat cushion frame up away from the seat riser far enough to slide the seat cushion cover away from the frame. 2. Disconnect the rear seat cushion cover j-channels and straps from the rear

© 2010 General Motors Corporation. All rights reserved.

cardiagn.com

4	Rear Seat Cushion Pad

cardiagn.com

Rear Seat Cushion Frame Replacement (with 40 Percent Seat)

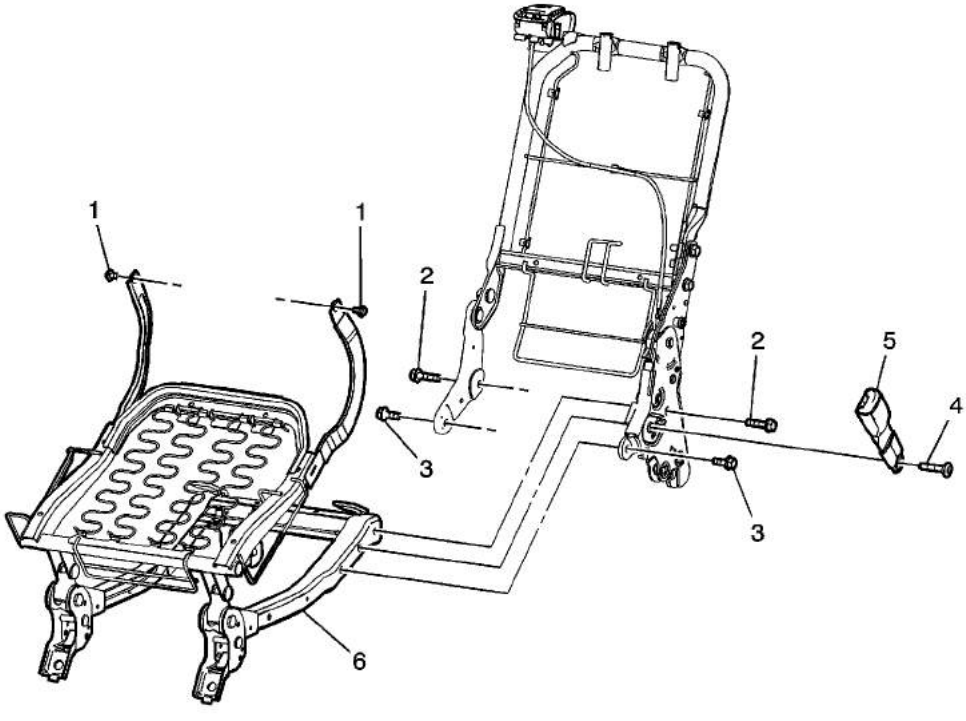

Callout	Component Name
Preliminary Procedures 1. Remove the rear seat. Refer to Rear Seat Replacement. 2. Remove the rear seat back cover and pad. Refer to Rear Seat Back Cushion Cover and Pad Replacement. 3. Remove the rear seat cushion cover and pad. Refer to Rear Seat Cushion Cover and Pad Replacement.	
1	Rear Seat Cushion Frame Bolt (Qty: 2) **Caution:** Refer to Fastener Caution in the Preface section. **Tighten** 10 N·m (89 lb in)
2	Rear Seat Cushion Frame Bolt (Qty: 2) **Tighten** 45 N·m (33 lb ft)
	Rear Seat Cushion Frame Bolt (Qty: 2)

© 2010 General Motors Corporation. All rights reserved.

cardiagn.com

4	Rear Seat Belt Buckle Bolt **Tighten** 45 N·m (33 lb ft)
5	Rear Seat Belt Buckle
6	Rear Seat Back Cushion Frame

cardiagn.com

Rear Seat Cushion Frame Replacement (with 60 Percent Seat)

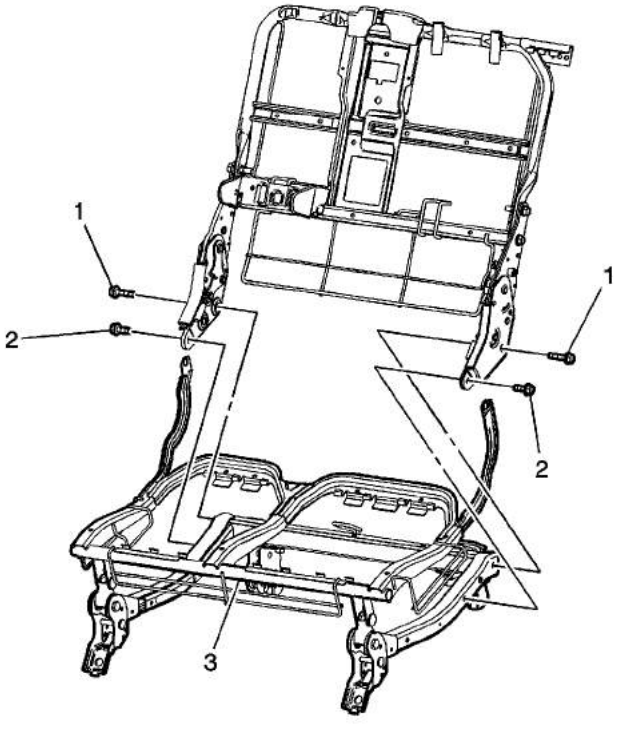

Callout	Component Name
Preliminary Procedures 1. Remove the rear seat. Refer to Rear Seat Replacement. 2. Remove the rear seat back cover and pad. Refer to Rear Seat Back Cushion Cover and Pad Replacement. 3. Remove the rear seat cushion cover and pad. Refer to Rear Seat Cushion Cover and Pad Replacement.	
1	Rear Seat Cushion Frame Bolt (Qty: 2) **Caution:** Refer to Fastener Caution in the Preface section. **Tighten** 45 N·m (33 lb ft)
2	Rear Seat Cushion Frame Bolt (Qty: 2) **Tighten** 28 N·m (21 lb ft)
3	Rear Seat Cu[redacted]

cardiagn.com

Rear Seat Latch Release Strap Bezel Replacement

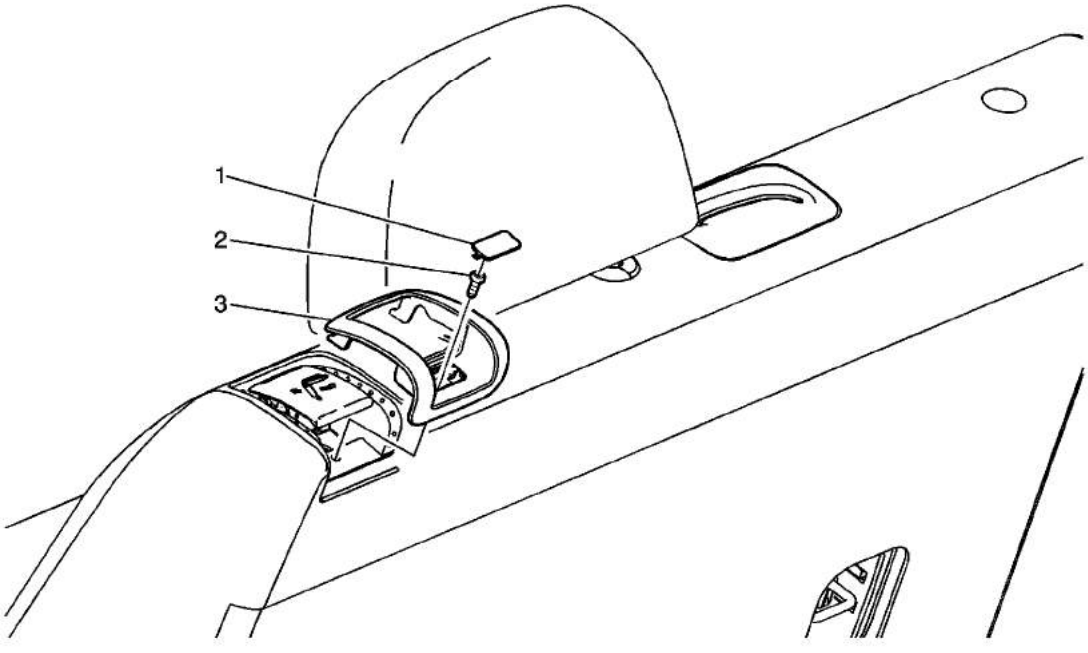

Callout	Component Name
1	Rear Seat Latch Release Strap Bezel Bolt Cover **Tip** Use a small flat-bladed tool to aid in the removal of the bolt cover.
2	Rear Seat Latch Release Strap Bezel Bolt **Caution:** Refer to Fastener Caution in the Preface section. **Tighten** 5 N·m (44 lb in)
3	Rear Seat Latch Release Strap Bezel

cardiagn.com

Rear Seat Latch Replacement (Outer with 60 Percent Seat)

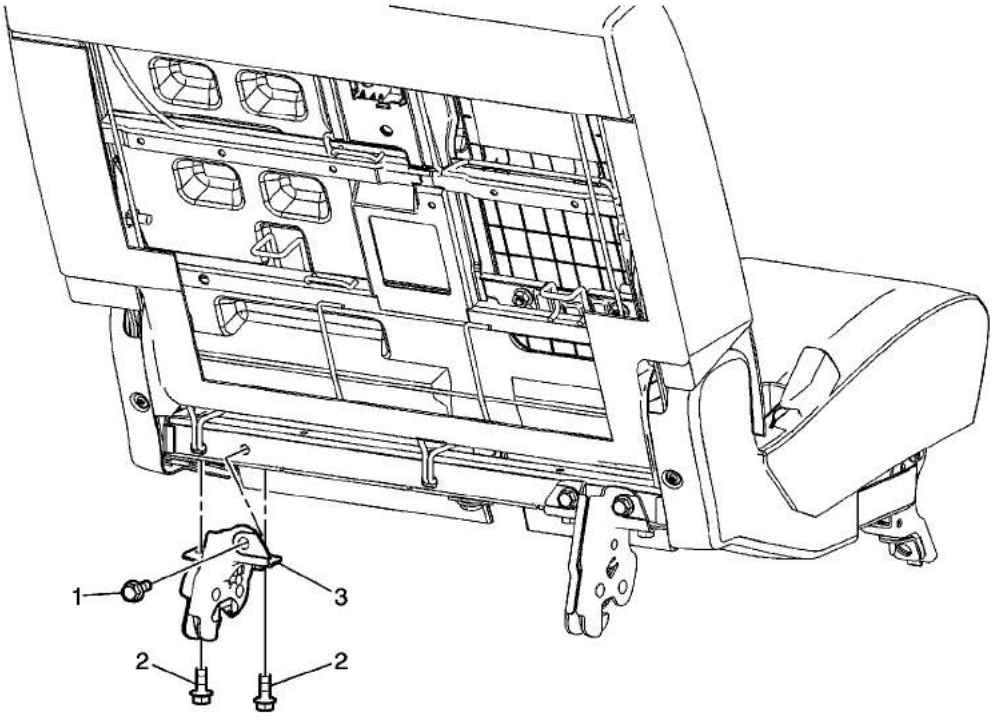

Callout	Component Name
1	Rear Seat Latch - Outer Bolt **Caution:** Refer to Fastener Caution in the Preface section. **Tip** Release the rear seat latches to fold the seat up by pressing forward on the latch button located on the inboard side of each of the lower latches. **Tighten** 25 N·m (18 lb ft)
2	Rear Seat Latch - Outer Bolt (Qty: 2) **Tighten** 25 N·m (18 lb ft)
3	Rear Seat Latch - Outer

cardiagn.com

Rear Seat Latch Replacement (Inner with 60 Percent Seat)

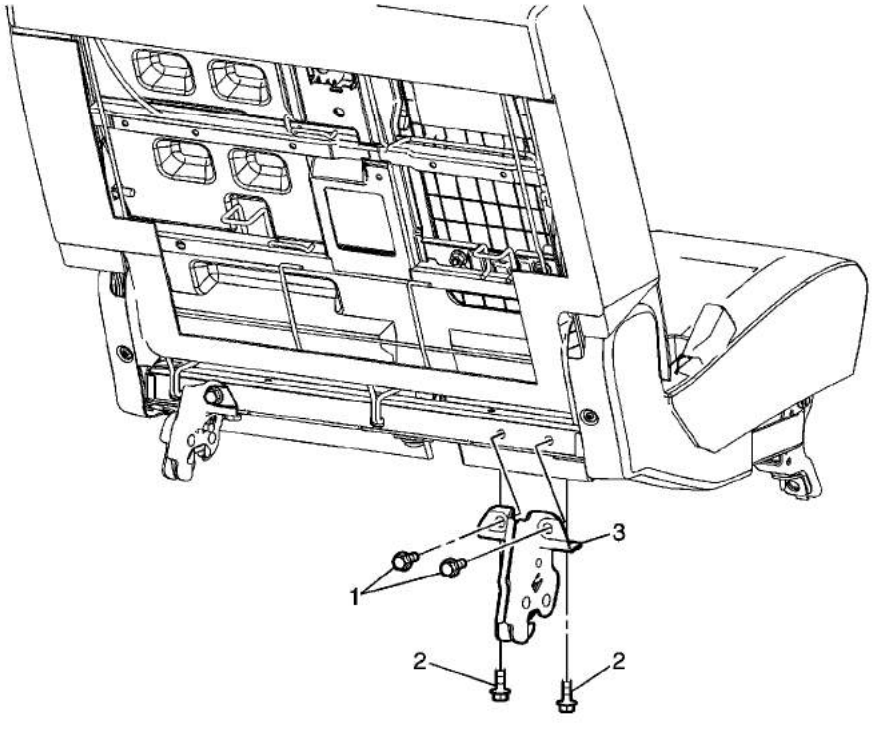

Callout	Component Name
1	Rear Seat Latch - Inner Bolt (Qty: 2) **Caution:** Refer to Fastener Caution in the Preface section. **Tip** Release the rear seat latches to fold the seat up by pressing forward on the latch button located on the inboard side of each of the lower latches. **Tighten** 25 N·m (18 lb ft)
2	Rear Seat Latch - Inner Bolt (Qty: 2) **Tighten** 25 N·m (18 lb ft)
3	Rear Seat Latch - Inner

cardiagn.com

Rear Seat Shoulder Belt Opening Bezel Replacement (with 60 Percent Seat)

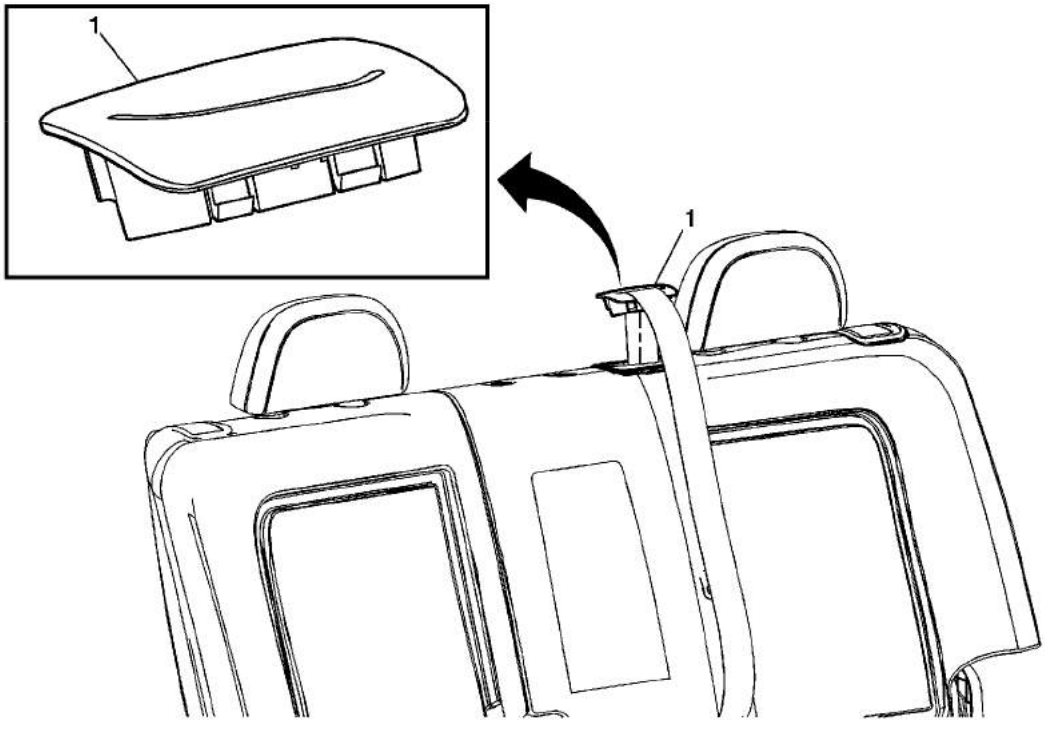

Callout	Component Name
1	Rear Seat Shoulder Belt Opening Bezel **Tip** • Push inward and upward from the front of the bezel to release from the seat back. • The rear seat shoulder belt opening bezel is part of the rear seat center belt assembly and is replaced as an assembly.

cardiagn.com

Rear Seat Back Cushion Panel Replacement (with 60 Percent Seat)

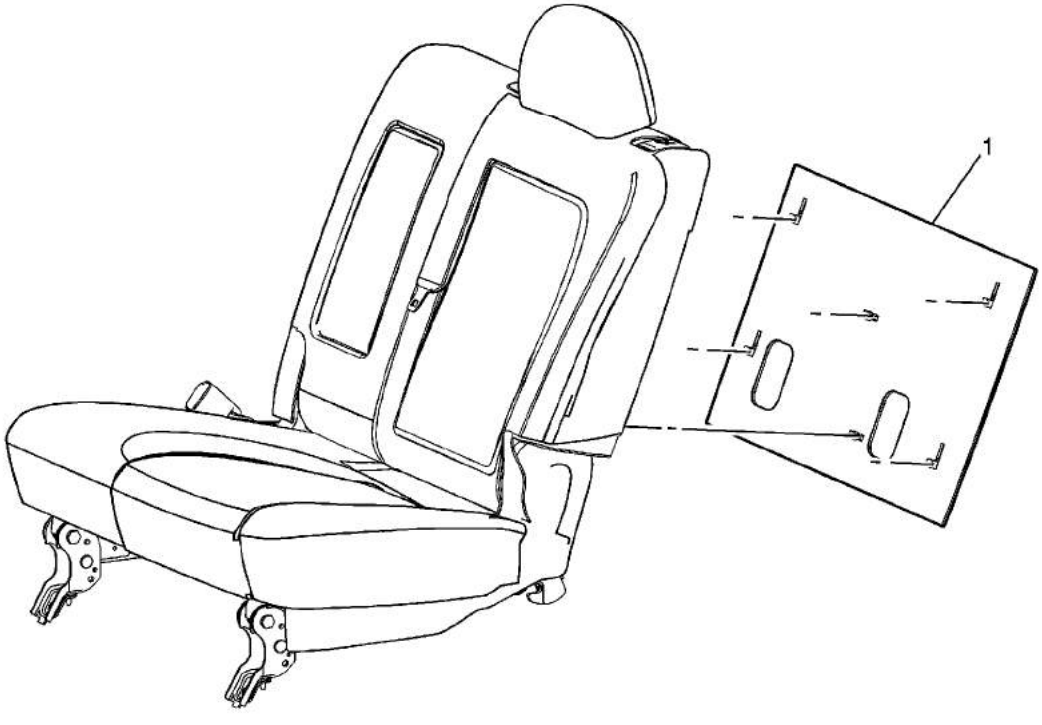

Callout	Component Name
Preliminary Procedures 1. Remove the rear seat. Refer to Rear Seat Replacement . 2. Remove the rear seat recliner covers. Refer to Rear Seat Recliner Outer Finish Cover Replacement - Inboard and Rear Seat Recliner Outer Finish Cover Replacement - Outboard . 3. Remove the rear seat head restraint. Refer to Rear Seat Head Restraint Replacement . 4. Remove the seat belt opening cover, if equipped. Refer to Rear Seat Shoulder Belt Opening Bezel Replacement . 5. Remove the rear child seat bracket trim cover. Refer to Child Seat Bracket Trim Cover Replacement . 6. Remove the rear seat latch release strap bezel. Refer to Rear Seat Latch Release Strap Bezel Replacement .	
1	Rear Seat Back Cushion Panel **Procedure** 1. Disconnect the j-channel retainer on the bottom and reposition the cover

© 2010 General Motors Corporation. All rights reserved.

cardiagn.com

	3. Pull rearward on the back panel to remove. 4. Position the clips to the back panel and clip onto the back frame wires for installation.

cardiagn.com

Rear Seat Back Cushion Cover and Pad Replacement (with 60 Percent Seat)

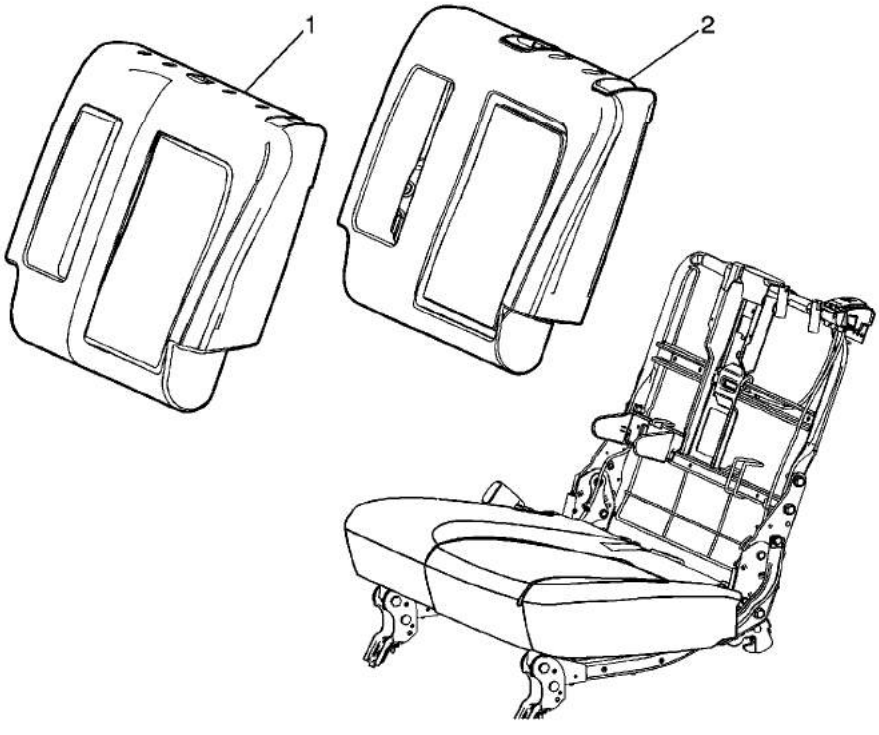

Callout	Component Name
	Preliminary Procedures 1. Remove the rear seat. Refer to Rear Seat Replacement. 2. Remove the rear seat recliner covers. Refer to Rear Seat Recliner Outer Finish Cover Replacement - Inboard and Rear Seat Recliner Outer Finish Cover Replacement - Outboard. 3. Remove the rear seat head restraint. Refer to Rear Seat Head Restraint Replacement. 4. Remove the seat belt opening cover, if equipped. Refer to Rear Seat Shoulder Belt Opening Bezel Replacement. 5. Remove the rear child seat bracket trim cover. Refer to Child Seat Bracket Trim Cover Replacement. 6. Remove the rear seat latch release strap bezel. Refer to Rear Seat Latch Release Strap Bezel Replacement. 7. Remove the rear seat back panel. Refer to Rear Seat Back Cushion Panel Replacement. 8. Remove the rear seat head restraint guides. Refer to Rear Seat Head Restraint Guide Replacement. 9. Remove the rear seat center belt anchor bolt. 10. Remove the rear seat armrest. Refer to Rear Seat Armrest Replacement.
	Rear Seat Back Cushion Cover

© 2010 General Motors Corporation. All rights reserved.

cardiagn.com

1	1. Disconnect the rear seat back cushion cover j-channel. 2. Disconnect the straps from the rear seat back cushion cover to the bottom of the seat cushion. 3. Remove the rear seat back cushion cover from the rear seat back cushion pad.
2	Rear Seat Back Cushion Pad

cardiagn.com

Rear Seat Back Cushion Frame Replacement (with 40 Percent Seat)

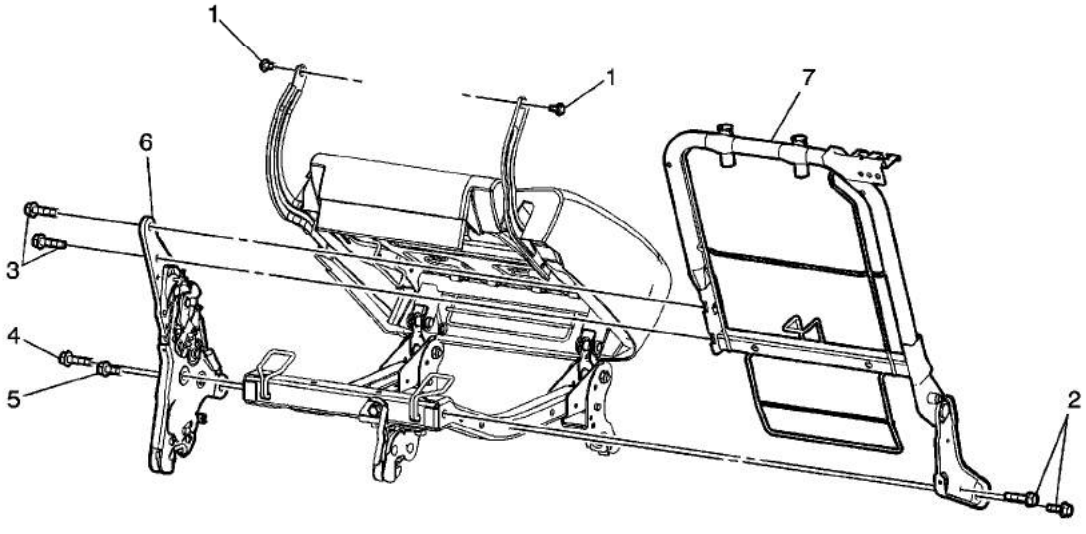

Callout	Component Name
Preliminary Procedures 1. Remove the rear seat. Refer to Rear Seat Replacement. 2. Remove the rear seat back cover and pad. Refer to Rear Seat Back Cushion Cover and Pad Replacement. 3. Remove the rear seat cushion cover and pad. Refer to Rear Seat Cushion Cover and Pad Replacement.	
1	Rear Seat Cushion Frame Bolt (Qty: 2) **Caution:** Refer to Fastener Caution in the Preface section. **Tighten** 10 N·m (89 lb in)
2	Rear Seat Cushion Frame Bolt (Qty: 2) **Tighten** 45 N·m (33 lb ft)
	Rear Seat Cushion Frame Bolt (Qty: 2)

© 2010 General Motors Corporation. All rights reserved.

cardiagn.com

4	Rear Seat Belt Buckle Bolt **Tighten** 28 N·m (21 lb ft)
5	Rear Seat Recliner Bolt **Tighten** 28 N·m (21 lb ft)
6	Rear Seat Recliner Assembly
7	Rear Seat Back Cushion Frame Assembly

cardiagn.com

Rear Seat Back Cushion Frame Replacement (with 60 Percent Seat)

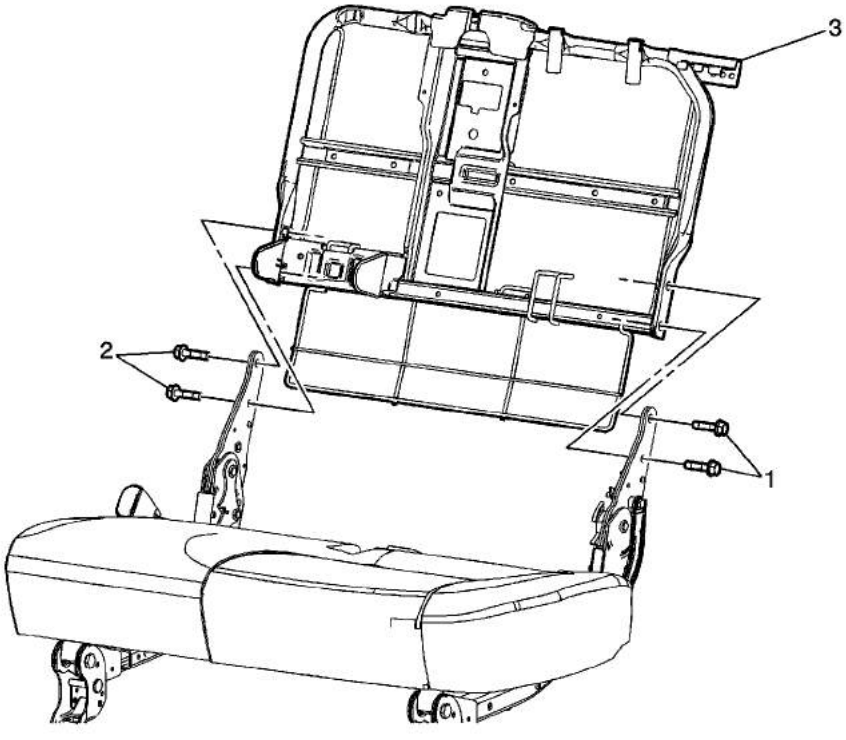

Callout	Component Name
Preliminary Procedures 1. Remove the rear seat. Refer to Rear Seat Replacement. 2. Remove the rear seat back cover and pad. Refer to Rear Seat Back Cushion Cover and Pad Replacement. 3. Remove the rear seat back latch release handle assembly. Refer to Rear Seat Back Cushion Latch Release Handle Replacement.	
1	Rear Seat Back Cushion Frame Bolt (Qty: 2) **Caution:** Refer to Fastener Caution in the Preface section. **Tighten** 45 N·m (33 lb ft)
2	Rear Seat Back Cushion Frame Bolt (Qty: 2) **Tighten** 45 N·m (33 lb ft)
3	Rear Seat Ba[redacted]

cardiagn.com

Rear Seat Back Cushion Latch Release Handle Replacement (with 60 Percent Seat)

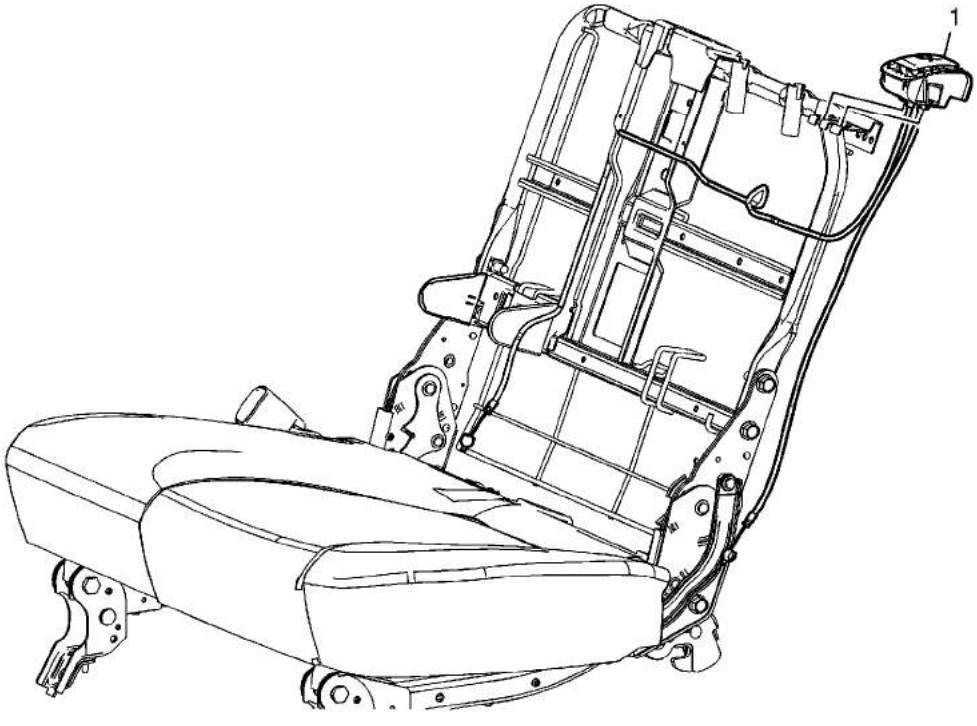

Callout	Component Name
Preliminary Procedures 1. Remove the rear seat. Refer to Rear Seat Replacement. 2. Remove the rear seat back cover and pad. Refer to Rear Seat Back Cushion Cover and Pad Replacement. 3. Remove the rear seat inner recliner covers. Refer to Rear Seat Recliner Inner Finish Cover Replacement.	
1	Rear Seat Back Cushion Latch Release Handle Assembly **Procedure** 1. Disconnect the seat back latch cables from the recliners. 2. Slide the handle assembly forward to remove from the seat back frame.

cardiagn.com

Rear Seat Back Cushion Latch Release Handle Replacement (with 40 Percent Seat)

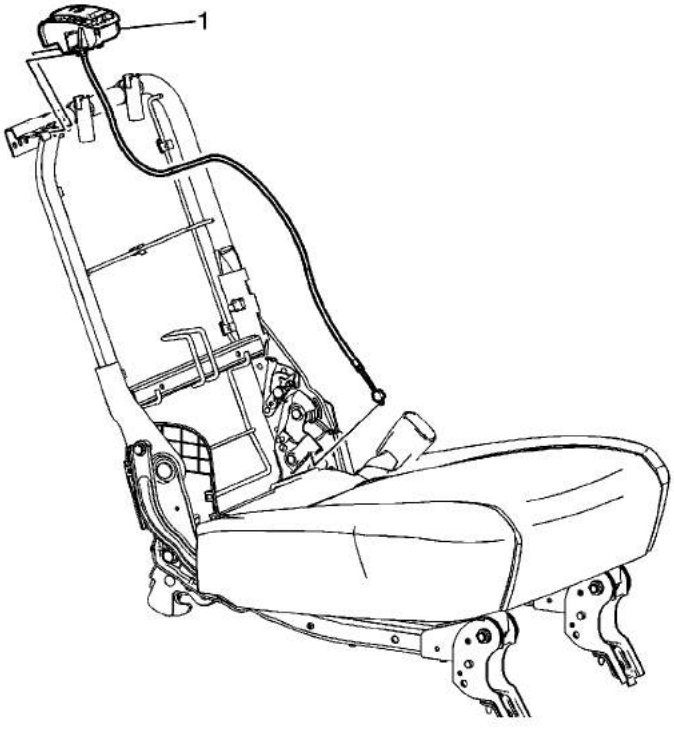

Callout	Component Name
Preliminary Procedures 1. Remove the rear seat. Refer to Rear Seat Replacement. 2. Remove the rear seat back cover and pad. Refer to Rear Seat Back Cushion Cover and Pad Replacement. 3. Remove the rear seat inner recliner covers. Refer to Rear Seat Recliner Inner Finish Cover Replacement.	
1	Rear Seat Back Cushion Latch Release Handle Assembly **Procedure** 1. Disconnect the seat back latch cables from the recliners. 2. Slide the handle assembly forward to remove from the seat back frame.

cardiagn.com

Rear Seat Recliner Inner Finish Cover Replacement

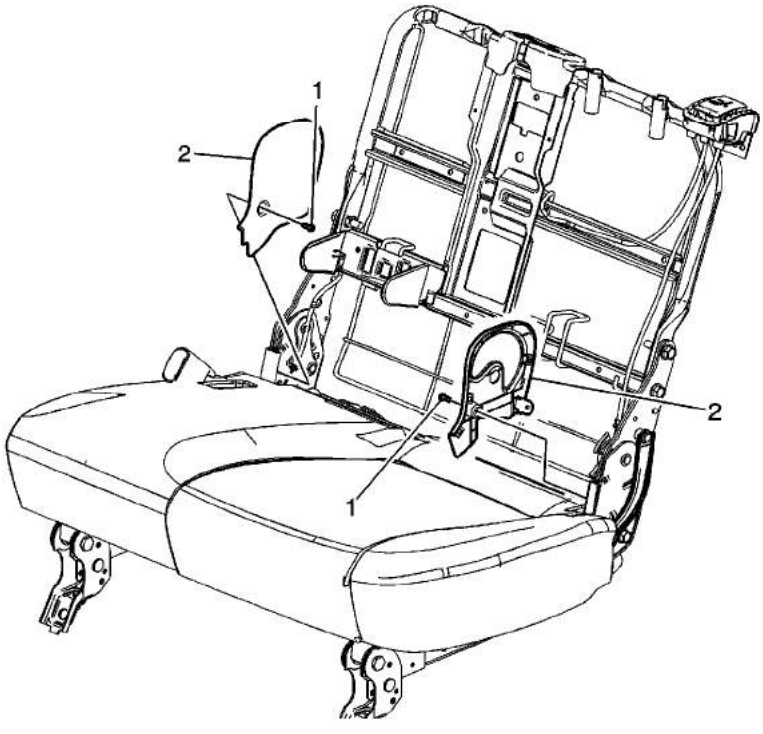

Callout	Component Name
Preliminary Procedures 1. Remove the rear seat. Refer to Rear Seat Replacement. 2. Remove the rear seat back cover and pad. Refer to Rear Seat Back Cushion Cover and Pad Replacement.	
1	Rear Seat Inner Recliner Finish Cover Screw **Caution:** Refer to Fastener Caution in the Preface section. **Tighten** 2 N·m (18 lb in)
2	Rear Seat Inner Recliner Finish Cover

cardiagn.com

Rear Seat Recliner Replacement (with 40 Percent Seat)

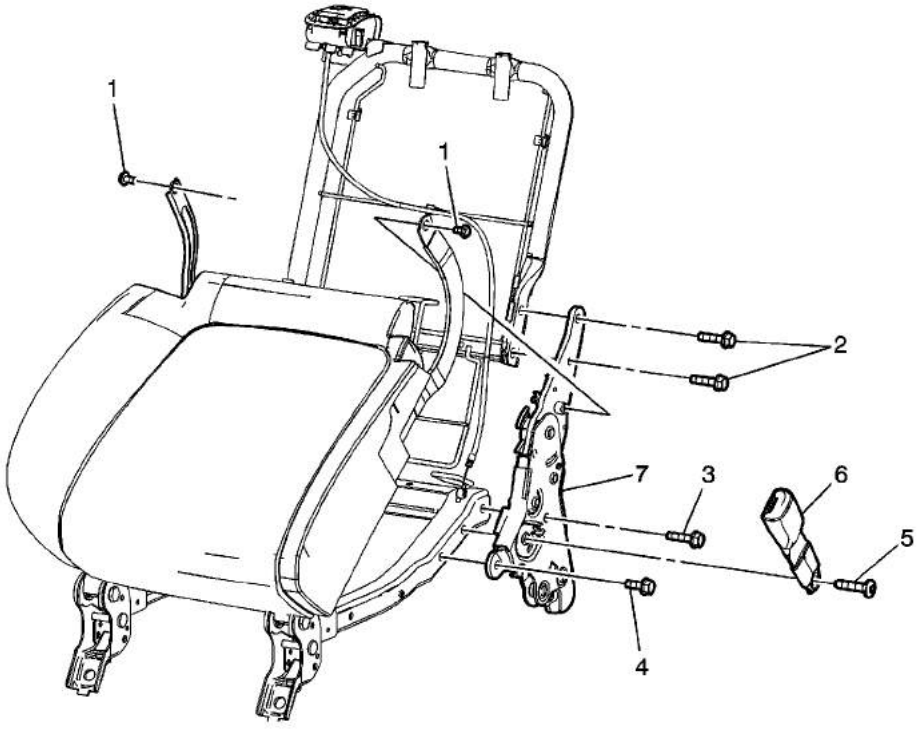

Callout	Component Name
Preliminary Procedures 1. Remove the rear seat. Refer to Rear Seat Replacement. 2. Remove the rear seat back cover and pad. Refer to Rear Seat Back Cushion Cover and Pad Replacement. 3. Remove the rear seat cushion cover and pad. Refer to Rear Seat Cushion Cover and Pad Replacement.	
1	Rear Seat Cushion Frame Bolt (Qty: 2) **Caution:** Refer to Fastener Caution in the Preface section. **Tighten** 10 N·m (89 lb in)
2	Rear Seat Cushion Frame Bolt (Qty: 2) **Tighten** 45 N·m (33 lb ft)
3	Rear Seat Cushion Frame Bolt (Qty: 2)

© 2010 General Motors Corporation. All rights reserved.

cardiagn.com

4	Rear Seat Cushion Frame Bolt (Qty: 2) **Tighten** 28 N·m (21 lb ft)
5	Rear Seat Belt Buckle Bolt **Tighten** 45 N·m (33 lb ft)
6	Rear Seat Belt Buckle
7	Rear Seat Recliner Assembly

cardiagn.com

Rear Seat Recliner Replacement (with 60 Percent Seat)

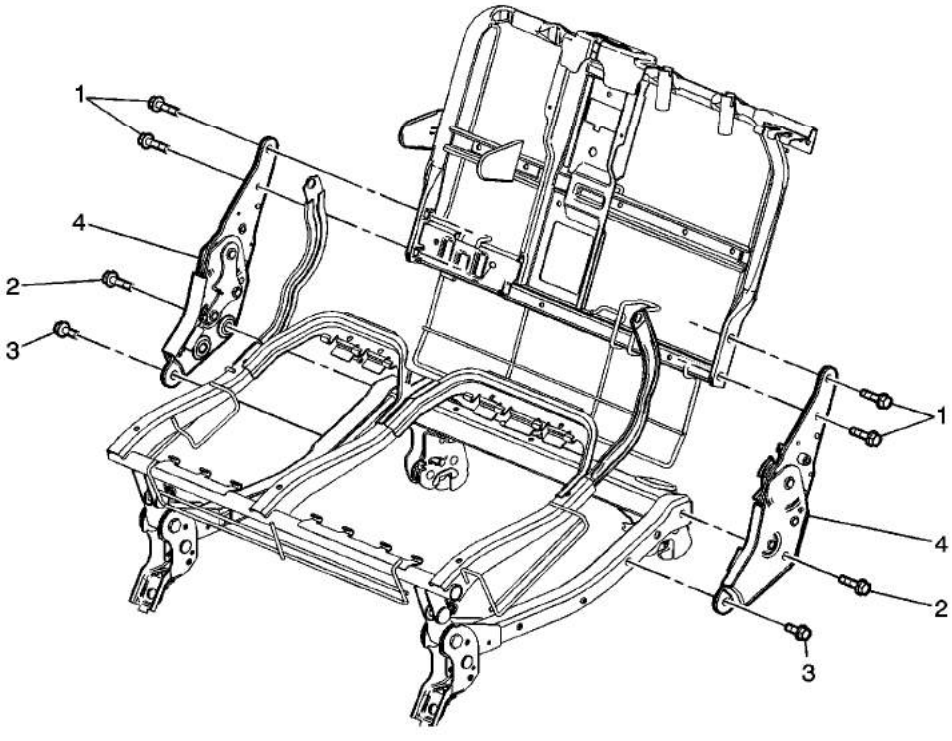

Callout	Component Name
Preliminary Procedures 1. Remove the rear seat. Refer to Rear Seat Replacement. 2. Remove the rear seat back cover and pad. Refer to Rear Seat Back Cushion Cover and Pad Replacement. 3. Remove the rear seat cushion cover and pad. Refer to Rear Seat Cushion Cover and Pad Replacement.	
1	Rear Seat Back Cushion Frame Bolt (Qty: 4) **Caution:** Refer to Fastener Caution in the Preface section. **Tighten** 45 N·m (33 lb ft)
2	Rear Seat Cushion Frame Bolt (Qty: 2) **Tighten** 45 N·m (33 lb ft)
3	Rear Seat Cushion Frame Bolt (Qty: 2)

© 2010 General Motors Corporation. All rights reserved.

cardiagn.com

4	Rear Seat Recliner Assembly (Qty: 2) **Procedure** Disconnect the rear seat back latch release handle cables from the recliner assemblies.

cardiagn.com