TROUBLESHOOTING

MX01Z–08

PROBLEM SYMPTOMS TABLE

Use the table below to help you find the cause of the problem. The numbers indicate the priority of the likely cause of the problem. Check each part in order. If necessary, replace these parts.

Symptom	Suspect Area		See page
Noise	14.Oil (Level low)	2WD	MX–3
		4WD	MX–9
	15. Oil (Wrong)	2WD	MX–3
		4WD	MX–9
	16.Gear (Worn or damaged)		MX–12
			MX–79
	17.Bearing (Worn or damaged)		MX–12
			MX–79
Oil leakage	1. Oil (Level too high)	2WD	MX–3
		4WD	MX–9
	2. Gasket (Damaged)		MX–12
			MX–79
	3. Oil seal (Worn or damaged)		MX–12
			MX–79
	4. O–Ring (Worn or damaged)		MX–12
			MX–78
			MX–79
Hard to shift or will not shift	1. Control cable (Faulty)		MX–77
	2. Synchronizer ring (Worn or damaged)		MX–12
			MX–29
			MX–36
	3. Shift key spring (Damaged)		MX–12
			MX–29
			MX–36
Jumps out of gear	1. Locking ball spring (Damaged)		MX–12
	2. Shift fork (Worn)		MX–12
			MX–79
	3. Gear (Worn or damaged)		MX–12
			MX–79
	4. Bearing (Worn or damaged)		MX–12
			MX–79
Tight corner braking	1. Differential, Center differential (Faulty)		MX–58
			MX–72

MANUAL TRANSAXLE UNIT (2WD)

COMPONENTS

MX05N–02

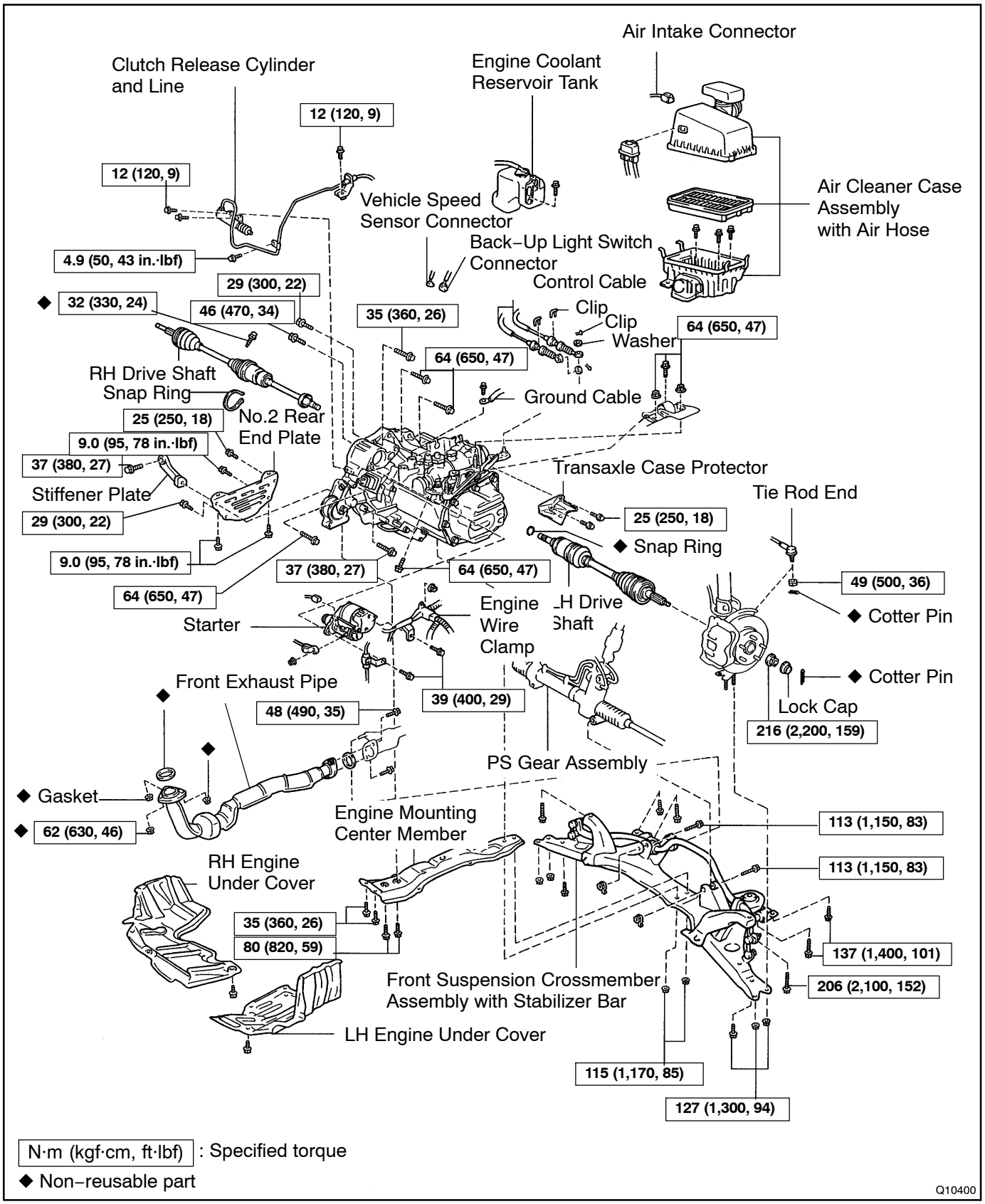

MX05O–02

REMOVAL

1. REMOVE AIR CLEANER CASE ASSEMBLY WITH AIR HOSE

2. REMOVE ENGINE COOLANT RESERVOIR TANK

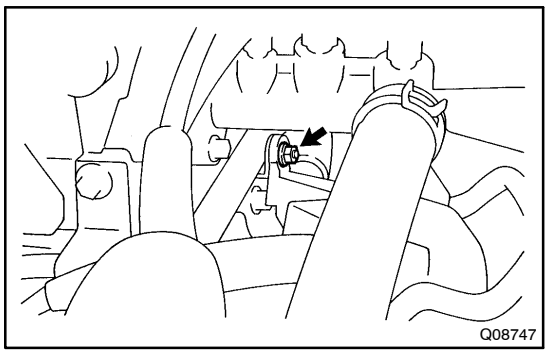

3. REMOVE ENGINE WIRE CLAMP SET NUT

4. REMOVE STARTER

(a) Disconnect the connector and wire from the starter.

(b) Remove the 2 bolts and starter.
Torque: 39 N·m (400 kgf·cm, 29 ft·lbf)

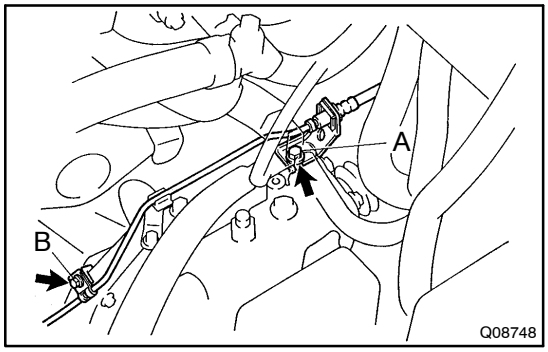

5. DISCONNECT CLUTCH RELEASE CYLINDER AND LINE

(a) Remove the 2 set bolts of the clutch line bracket.
Torque:
Bolt A: 12 N·m (120 kgf·cm, 9 ft·lbf)
Bolt B: 4.9 N·m (50 kgf·cm, 43 in.·lbf)

(b) Remove the 2 bolts, release cylinder and line.
Torque: 12 N·m (120 kgf·cm, 9 ft·lbf)

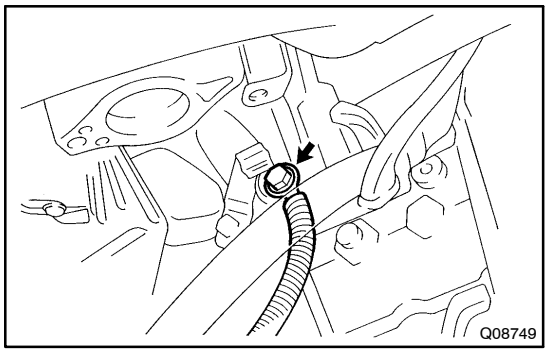

6. DISCONNECT GROUND CABLE

Remove the set bolt of the ground cable from the transaxle.

7. DISCONNECT VEHICLE SPEED SENSOR AND BACK–UP LIGHT SWITCH CONNECTORS

8. DISCONNECT CONTROL CABLE

(a) Remove the 2 clips and washers.

(b) Remove the 2 clips from the cables.

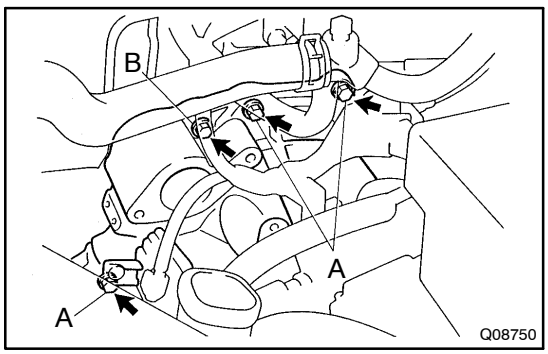

9. REMOVE 4 TRANSAXLE UPPER SIDE MOUNTING BOLTS
Torque:
Bolt A: 64 N·m (650 kgf·cm, 47 ft·lbf)
Bolt B: 35 N·m (360 kgf·cm, 26 ft·lbf)

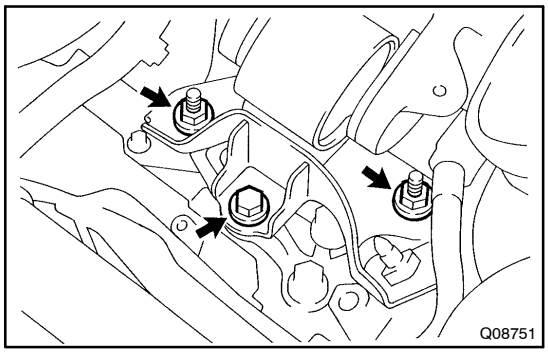

10. REMOVE ENGINE LEFT MOUNTING INSULATOR SET BOLT AND 2 NUTS
Torque: 64 N·m (650 kgf·cm, 47 ft·lbf)

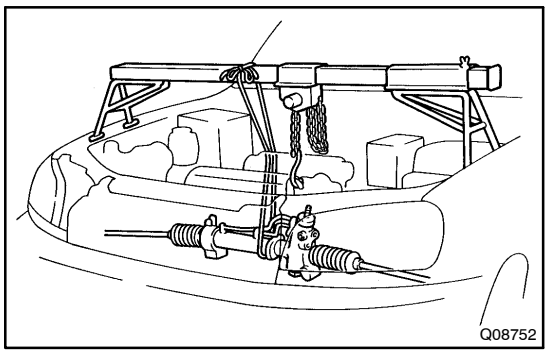

11. INSTALL ENGINE SUPPORT FIXTURE
12. TIE PS GEAR ASSEMBLY TO ENGINE SUPPORT FIXTURE BY CORD OR EQUIVALENT
13. REMOVE FRONT WHEEL
Torque: 103 N·m (1,050 kgf·cm, 76 ft·lbf)
14. RAISE VEHICLE
NOTICE:
Make sure that the vehicle is securely supported.
15. REMOVE LH AND RH ENGINE UNDER COVERS

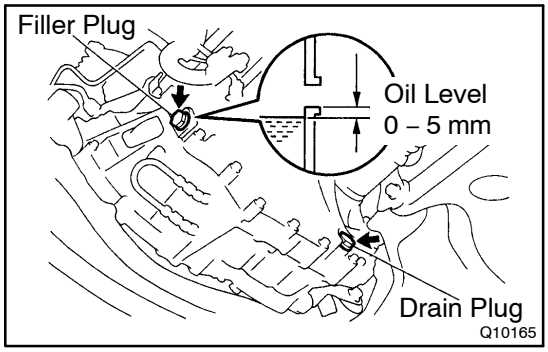

16. DRAIN TRANSAXLE OIL
Oil grade: API GL–4 or GL–5
Viscosity: SAE 75W–90
Capacity: 3.9 liters (4.1 US qts, 3.4 Imp. qts)
Torque: 49 N·m (500 kgf·cm, 36 ft·lbf)
17. REMOVE LH AND RH FRONT DRIVE SHAFTS
(See page SA–18)

18. REMOVE FRONT EXHAUST PIPE
(a) Remove the 3 nuts and gasket from the exhaust manifold.
Torque: 62 N·m (630 kgf·cm, 46 ft·lbf)
(b) Remove the 2 bolts, gasket and pipe.
Torque: 48 N·m (490 kgf·cm, 35 ft·lbf)

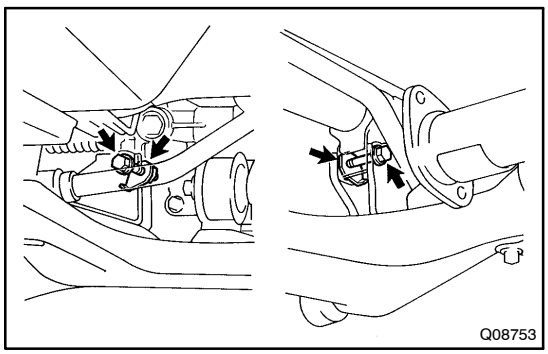

19. REMOVE FRONT SUSPENSION CROSSMEMBER ASSEMBLY WITH STABILIZER BAR
(a) Support the front suspension crossmember with a jack.
(b) Disconnect the ring from the center exhaust pipe.
(c) Remove the 2 set bolts and nuts of the PS gear assembly.
Torque: 113 N·m (1,150 kgf·cm, 83 ft·lbf)

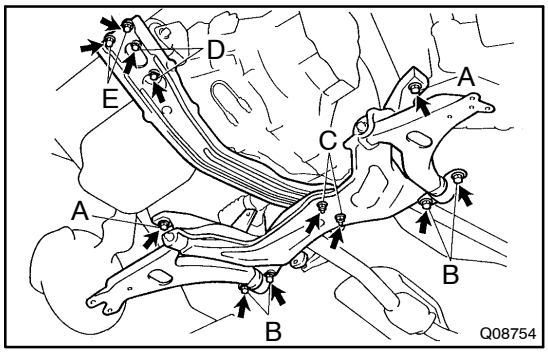

(d) Remove the 2 nuts, 6 bolts and front suspension cross-member assembly with the stabilizer bar.
Torque:
Bolt A: 206 N·m (2,100 kgf·cm, 152 ft·lbf)
Bolt B: 137 N·m (1,400 kgf·cm, 101 ft·lbf)
Nut C: 115 N·m (1,170 kgf·cm, 85 ft·lbf)

20. REMOVE ENGINE MOUNTING CENTER MEMBER

Remove the 4 bolts and center member.
Torque:
Bolt D: 80 N·m (820 kgf·cm, 59 ft·lbf)
Bolt E: 35 N·m (360 kgf·cm, 26 ft·lbf)

21. JACK UP TRANSAXLE SLIGHTLY

Using a trasmission jack, support the transaxle.

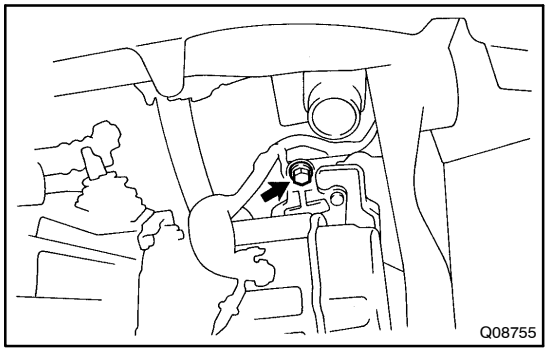

22. DISCONNECT ENGINE LEFT MOUNTING BRACKET FROM ENGINE LEFT MOUNTING INSULATOR

Remove the set bolt of the engine left mounting bracket.
Torque: 64 N·m (650 kgf·cm, 47 ft·lbf)

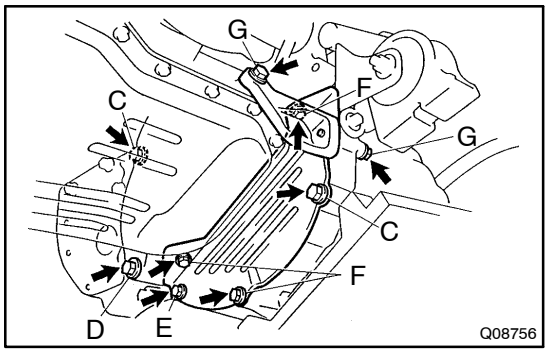

23. REMOVE STIFFENER PLATE, NO.2 REAR END PLATE AND TRANSAXLE LOWER SIDE MOUNTING BOLT

(a) Remove the 2 bolts and stiffener plate.
Torque:
Bolt G: 37 N·m (380 kgf·cm, 27 ft·lbf)

(b) Remove the 7 bolts and No.2 rear end plate.
Torque:
Bolt C: 29 N·m (300 kgf·cm, 22 ft·lbf)
Bolt D: 46 N·m (470 kgf·cm, 34 ft·lbf)
Bolt E: 25 N·m (250 kgf·cm, 18 ft·lbf)
Bolt F: 9.0 N·m (95 kgf·cm, 78 in.·lbf)

24. REMOVE TRANSAXLE

Lower the engine left side and remove the transaxle from the engine.
HINT:
At the time of installation, please refer to the following items.
- Align the input shaft with the clutch disc and install the transaxle to the engine.
- Temporarily tighten the transaxle mounting bolts.

25. REMOVE TRANSAXLE CASE PROTECTOR

Remove the 2 bolts and protector.

Torque: 25 N·m (250 kgf·cm, 18 ft·lbf)

MX05P–05

INSTALLATION

Installation is in the reverse order of removal.
(See page MX–3)
NOTICE:
When working with FIPG material, you must observe the following items.

- **Using a razor blade and gasket scraper, remove all the old FIPG material from the gasket surfaces.**
- **Thoroughly clean all components to remove all the loose material.**
- **Clean both sealing surfaces with a non–residue solvent.**
- **Apply FIPG in an approx. 1 mm (0.04 in.) wide bead along the sealing surface.**
- **Parts must be assembled within 10 minutes of application. Otherwise, the FIPG material must be removed and reapplied.**

HINT:
After installation, check and inspect items as follows.

- Front wheel alignment (See page SA–4).
- Do the road test.

MANUAL TRANSAXLE UNIT (4WD)

COMPONENTS

MX05R–02

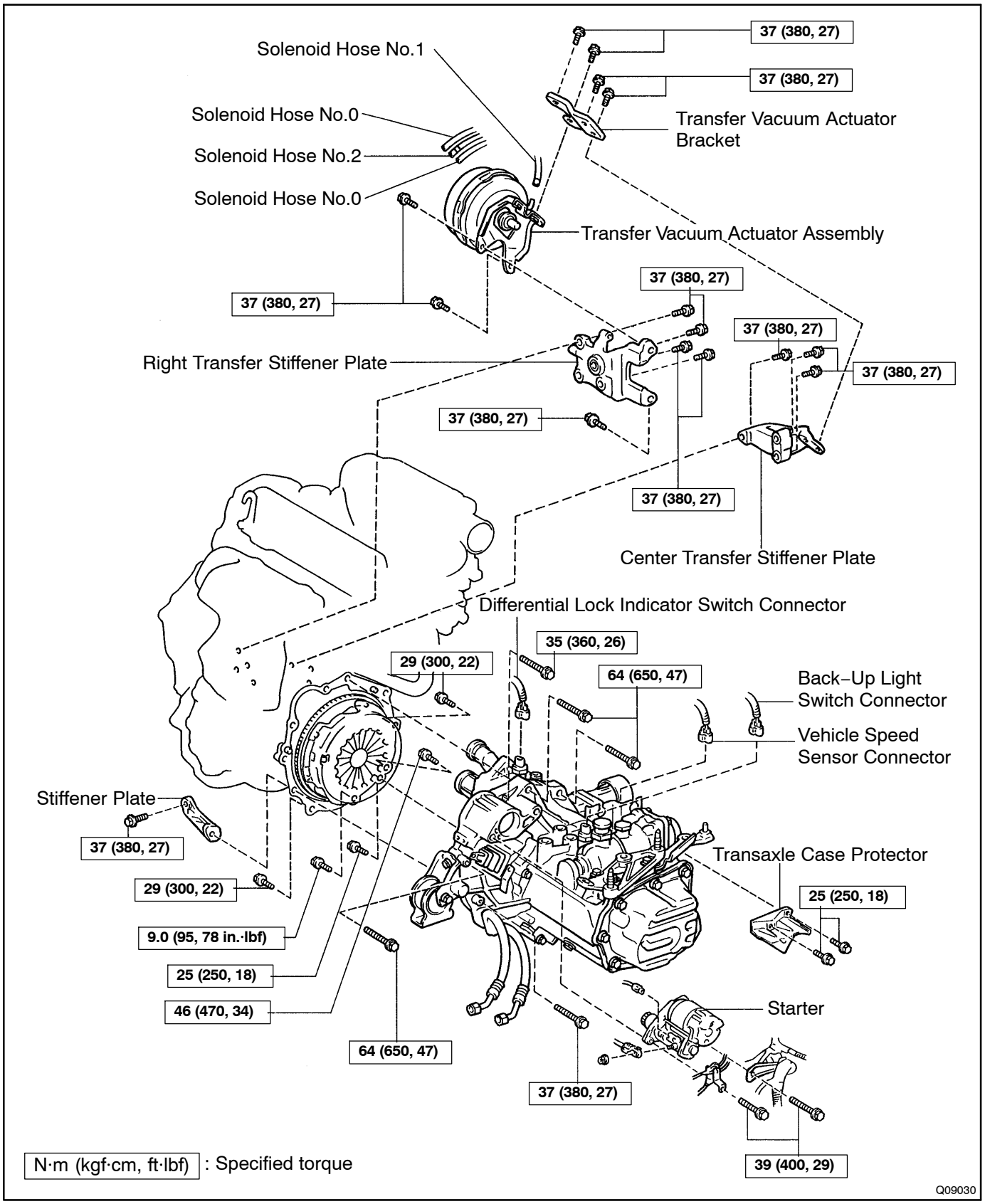

MX05S–01

REMOVAL

1. REMOVE TRANSAXLE WITH ENGINE
(See page EM–80)

2. REMOVE TRANSAXLE CASE PROTECTOR

Remove the 2 bolts and transaxle case protector.

Torque: 25 N·m (250 kgf·cm, 18 ft·lbf)

3. REMOVE STARTER

(a) Disconnect the connector and wire from the starter.

(b) Remove the 2 bolts and starter.

Torque: 39 N·m (400 kgf·cm, 29 ft·lbf)

4. DISCONNECT DIFFERENTIAL LOCK INDICATOR SWITCH, BACK–UP LIGHT SWITCH AND VEHICLE SPEED SENSOR CONNECTORS

5. REMOVE TRANSFER VACUUM ACTUATOR BRACKET

Remove the 4 bolts and bracket.

Torque: 37 N·m (380 kgf·cm, 27 ft·lbf)

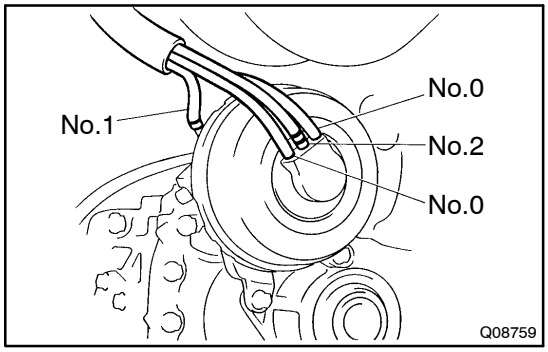

6. REMOVE TRANSFER VACUUM ACTUATOR ASSEMBLY

(a) Disconnect the 4 solenoid hoses from the transfer vacuum actuator assembly.

NOTICE:

At the time of installation, please refer to the following item. Check that the hose No.0, No.1 and No.2 are securely installed to the solenoid.

(b) Remove the 2 bolts and transfer vacuum actuator assembly.

Torque: 37 N·m (380 kgf·cm, 27 ft·lbf)

7. REMOVE RIGHT TRANSFER STIFFENER PLATE

Remove the 5 bolts and right transfer stiffener plate.

Torque: 37 N·m (380 kgf·cm, 27 ft·lbf)

8. REMOVE CENTER TRANSFER STIFFENER PLATE

Remove the 3 bolts and center transfer stiffener plate.

Torque: 37 N·m (380 kgf·cm, 27 ft·lbf)

9. REMOVE STIFFENER PLATE

Remove the 2 bolts and stiffener plate.

Torque: 37 N·m (380 kgf·cm, 27 ft·lbf)

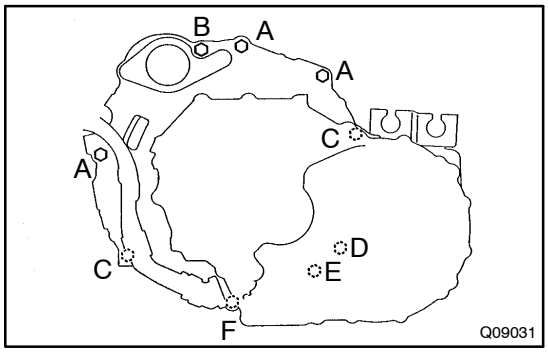

10. REMOVE TRANSAXLE FROM ENGINE

(a) Remove the 9 transaxle mounting bolts from the engine.

Torque:
Bolt A: 64 N·m (650 kgf·cm, 47 ft·lbf)
Bolt B: 35 N·m (360 kgf·cm, 26 ft·lbf)
Bolt C: 29 N·m (300 kgf·cm, 22 ft·lbf)
Bolt D: 46 N·m (470 kgf·cm, 34 ft·lbf)
Bolt E: 25 N·m (250 kgf·cm, 18 ft·lbf)
Bolt F: 9.0 N·m (95 kgf·cm, 78 in.·lbf)

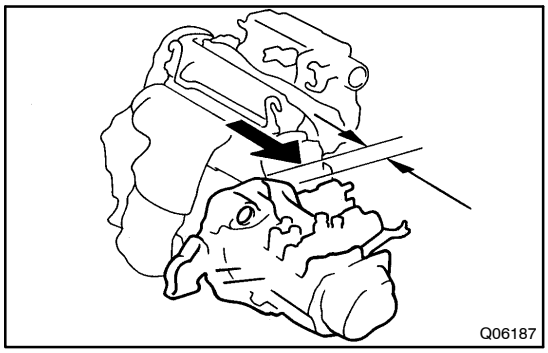

(b) Pull straight until there is a gap of about 60–80 mm (2.4–3.1 in.) between the engine and transaxle case.

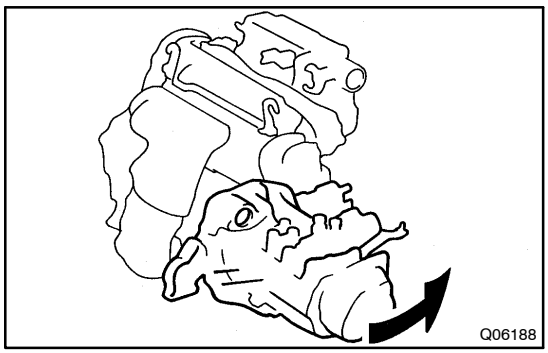

(c) Move the transmission case cover in the direction, as shown in the illustration.

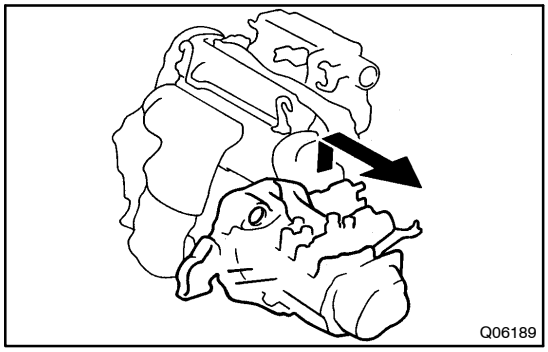

(d) While holding transfer output, gently pull out whole transaxle.

MX05T–03

INSTALLATION

Installation is in the reverse order of removal.
(See page MX–9)

NOTICE:

When working with FIPG material, you must observe the following items.

- **Using a razor blade and gasket scraper, remove all the old FIPG material from the gasket surfaces.**
- **Thoroughly clean all components to remove all the loose material.**
- **Clean both sealing surfaces with a non–residue solvent.**
- **Apply FIPG in an approx. 1 mm (0.04 in.) wide bead along the sealing surface.**
- **Parts must be assembled within 10 minutes of application. Otherwise, the FIPG material must be removed and reapplied.**

HINT:
After installation, do the road test.

MANUAL TRANSAXLE ASSEMBLY

COMPONENTS

MX05U–01

2WD:

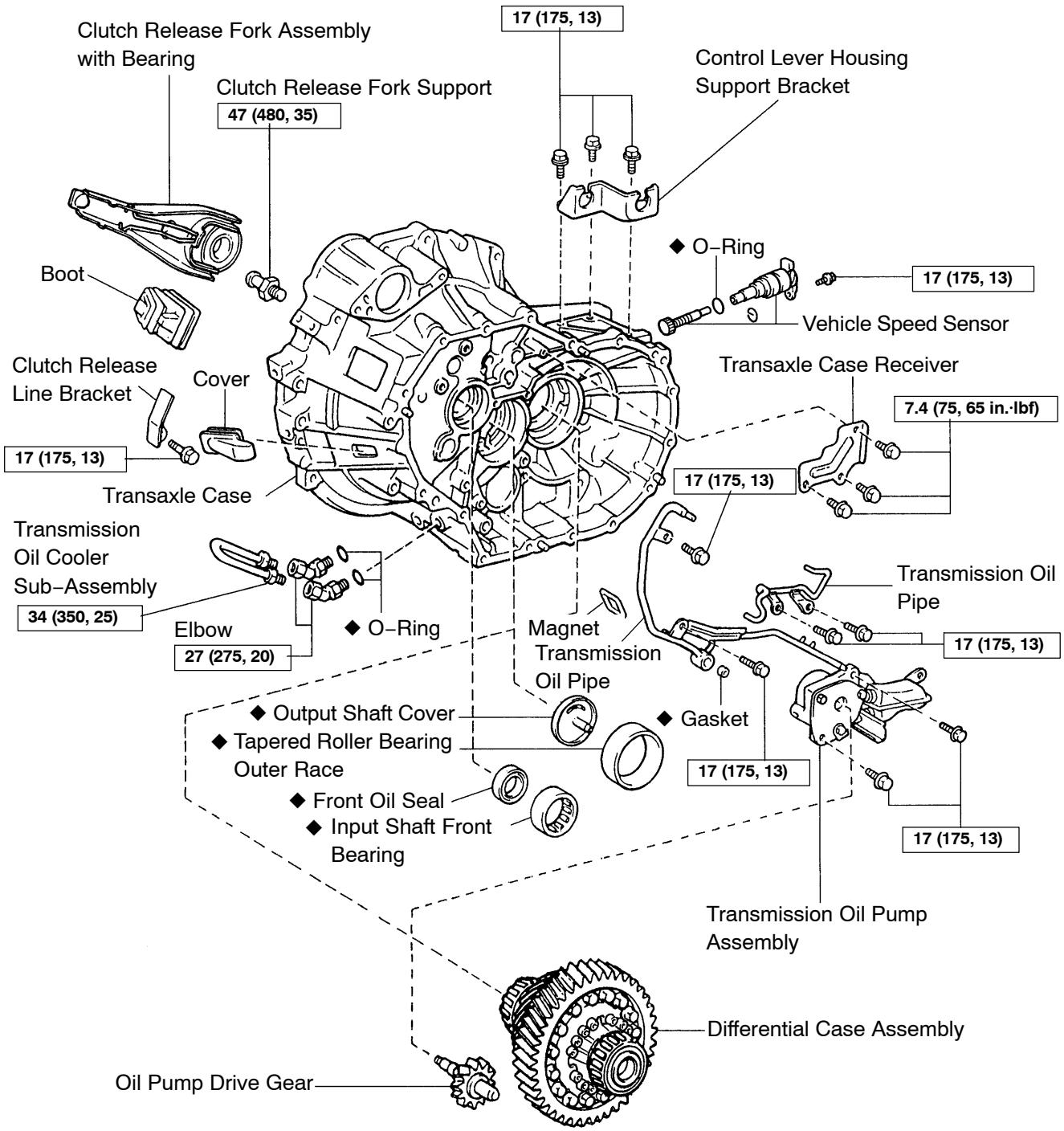

N·m (kgf·cm, ft·lbf) : Specified torque
◆ Non–reusable part

Q09032

4WD:

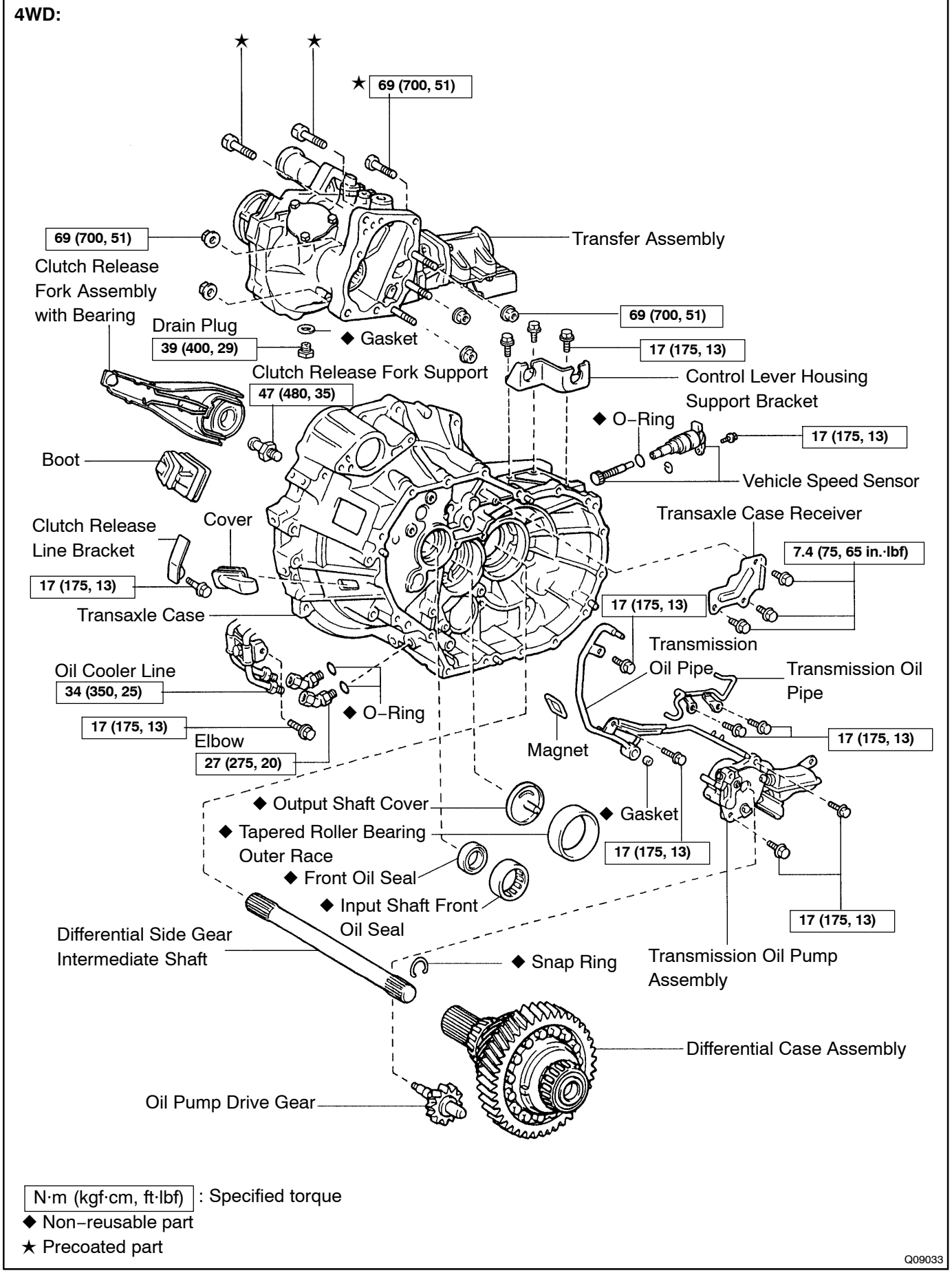

N·m (kgf·cm, ft·lbf) : Specified torque
◆ Non–reusable part
★ Precoated part

Q09033

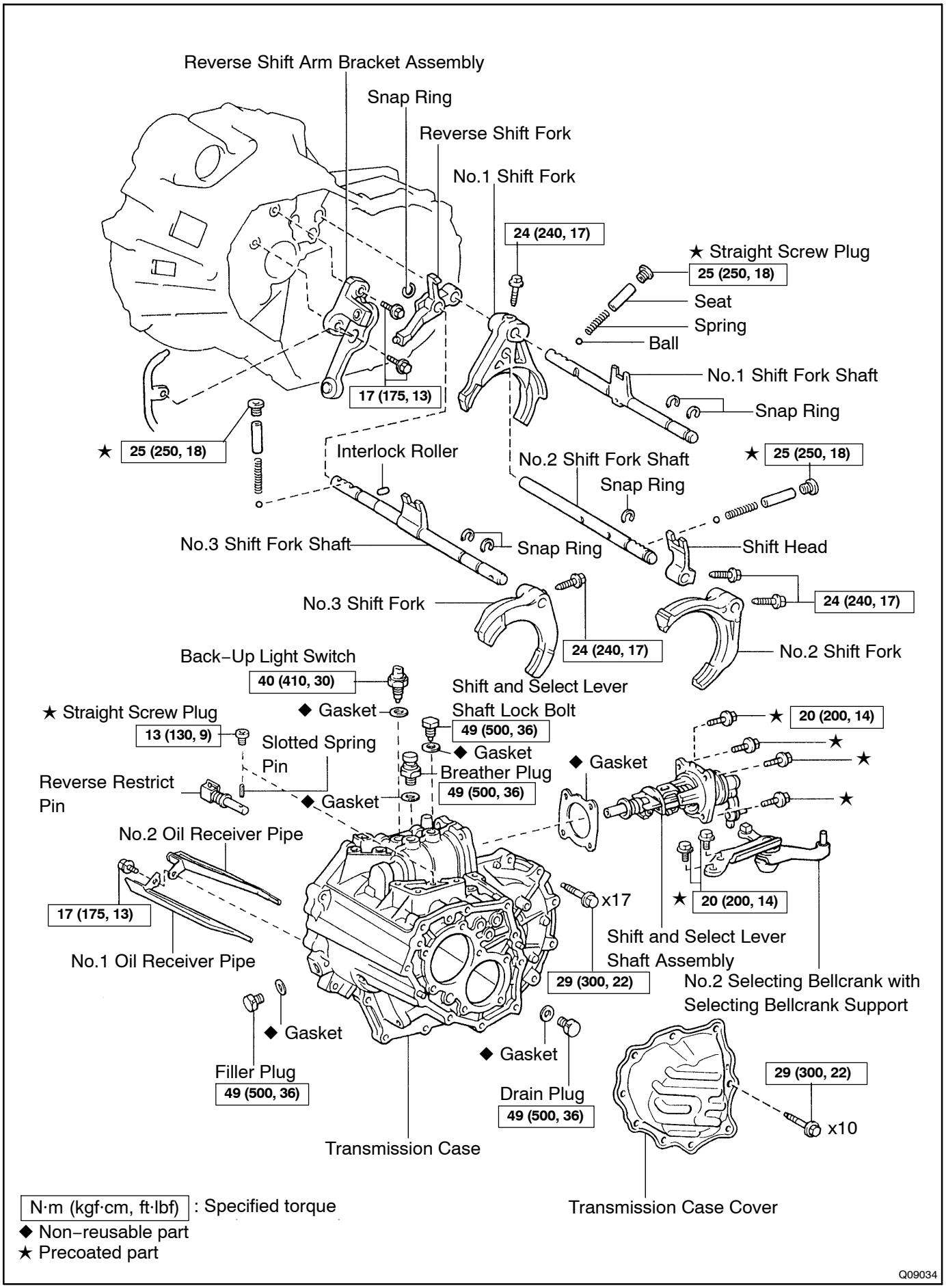
Reverse Shift Arm Bracket Assembly
Snap Ring
Reverse Shift Fork
No.1 Shift Fork
24 (240, 17)
★ Straight Screw Plug
25 (250, 18)
Seat
Spring
Ball
No.1 Shift Fork Shaft
Snap Ring
17 (175, 13)
★ 25 (250, 18)
Interlock Roller
No.2 Shift Fork Shaft
Snap Ring
★ 25 (250, 18)
No.3 Shift Fork Shaft
Snap Ring
Shift Head
No.3 Shift Fork
24 (240, 17)
24 (240, 17)
No.2 Shift Fork
Back–Up Light Switch
40 (410, 30)
Shift and Select Lever Shaft Lock Bolt
◆ Gasket
★ Straight Screw Plug
13 (130, 9)
49 (500, 36)
★ 20 (200, 14)
Slotted Spring Pin
◆ Gasket
Breather Plug
49 (500, 36)
◆ Gasket
Reverse Restrict Pin
◆ Gasket
No.2 Oil Receiver Pipe
17 (175, 13)
x17
★ 20 (200, 14)
Shift and Select Lever Shaft Assembly
No.1 Oil Receiver Pipe
29 (300, 22)
No.2 Selecting Bellcrank with Selecting Bellcrank Support
◆ Gasket
◆ Gasket
Filler Plug
49 (500, 36)
Drain Plug
49 (500, 36)
29 (300, 22)
x10
Transmission Case
Transmission Case Cover
N·m (kgf·cm, ft·lbf) : Specified torque
◆ Non–reusable part
★ Precoated part
Q09034

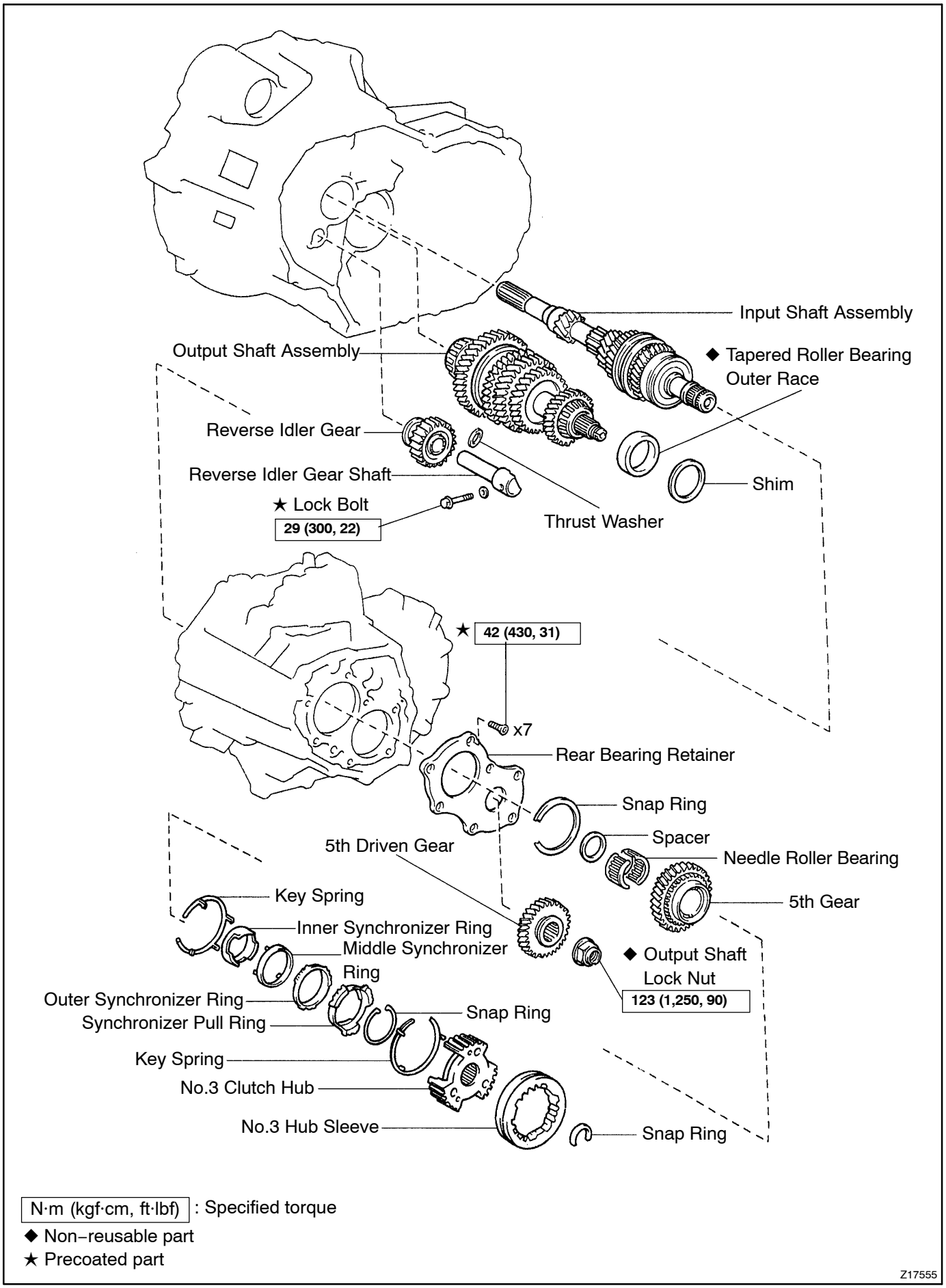
Input Shaft Assembly
Output Shaft Assembly
◆ Tapered Roller Bearing Outer Race
Reverse Idler Gear
Reverse Idler Gear Shaft
Shim
★ Lock Bolt
29 (300, 22)
Thrust Washer
★ 42 (430, 31)
x7
Rear Bearing Retainer
Snap Ring
Spacer
5th Driven Gear
Needle Roller Bearing
Key Spring
5th Gear
Inner Synchronizer Ring
Middle Synchronizer Ring
◆ Output Shaft Lock Nut
123 (1,250, 90)
Outer Synchronizer Ring
Synchronizer Pull Ring
Snap Ring
Key Spring
No.3 Clutch Hub
No.3 Hub Sleeve
Snap Ring
N·m (kgf·cm, ft·lbf) : Specified torque
◆ Non–reusable part
★ Precoated part
Z17555

MX05V–02

DISASSEMBLY

1. 4WD:
REMOVE TRANSFER ASSEMBLY

(a) Remove the 3 bolts.
Sealant:
Part No. 08833–00080, THREE BOND 1344, LOCTITE 242 or equivalent
Torque: 69 N·m (700 kgf·cm, 51 ft·lbf)

(b) Remove the 5 nuts.
Torque: 69 N·m (700 kgf·cm, 51 ft·lbf)

(c) Using a plastic hammer, remove the transfer assembly from the transaxle.

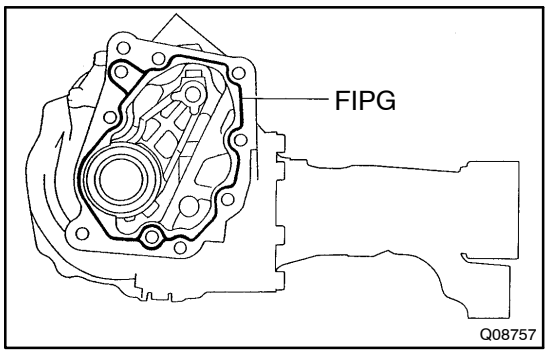

HINT:
At the time of reassembly, please refer to the following item.
Shift into the 4th gear, and install the transfer assembly while turning the input shaft of the transaxle.
FIPG:
Part No. 08826–00090, THREE BOND 1281 or equivalent

2. 4WD:
REMOVE DIFFERENTIAL SIDE GEAR INTERMEDIATE SHAFT

(a) Screw in a suitable bolt with a washer into the side gear intermediate shaft.

(b) Using SST, remove the side gear intermediate shaft.
SST 09910–00015 (09911–00011, 09912–00010)

(c) Remove the snap ring from the differential side gear intermediate shaft.

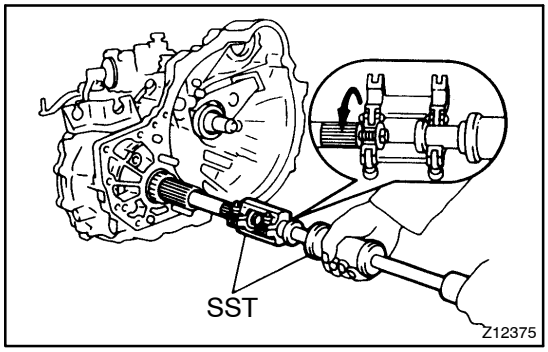

HINT:
At the time of reassembly, please refer to the following item.
Keeping the intermediate shaft on the differential pinion shaft, measure the dimension, as shown in the illustration.
Protrusion length: 255.5 mm (10.06 in.)

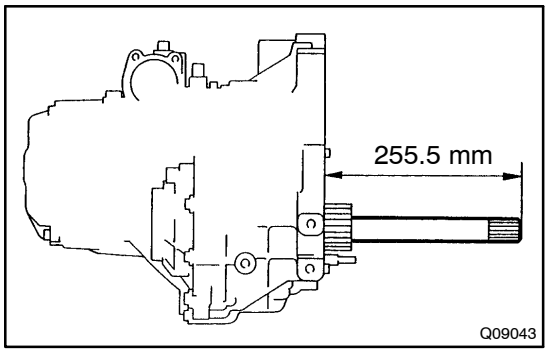

3. REMOVE RELEASE FORK AND BEARING

4. REMOVE BACK–UP LIGHT SWITCH WITH GASKET
Torque: 40 N·m (410 kgf·cm, 30 ft·lbf)

5. REMOVE BOLT AND VEHICLE SPEED SENSOR
Torque: 17 N·m (175 kgf·cm, 13 ft·lbf)

6. REMOVE NO.2 SELECTING BELLCRANK WITH SELECTING BELLCRANK SUPPORT

Remove the 2 bolts and No.2 selecting bellcrank with the selecting bellcrank support.
Sealant:
Part No. 08833–00080, THREE BOND 1344, LOCTITE 242 or equivalent
Torque: 20 N·m (200 kgf·cm, 14 ft·lbf)

7. REMOVE SHIFT AND SELECT LEVER SHAFT LOCK BOLT WITH GASKET

Torque: 49 N·m (500 kgf·cm, 36 ft·lbf)

8. REMOVE SHIFT AND SELECT LEVER SHAFT ASSEMBLY WITH GASKET

Remove the 4 bolts, shift and select lever shaft assembly and gasket.

Sealant:

Part No. 08833–00080, THREE BOND 1344, LOCTITE 242 or equivalent

Torque: 20 N·m (200 kgf·cm, 14 ft·lbf)

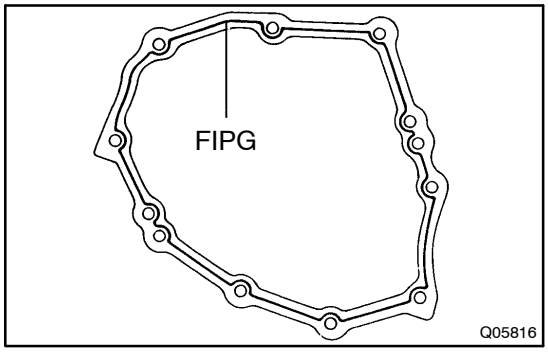

9. REMOVE TRANSMISSION CASE COVER

Remove the 10 bolts and transmission case cover.

FIPG:

Part No. 08826–00090, THREE BOND 1281 or equivalent

Torque: 29 N·m (300 kgf·cm, 22 ft·lbf)

10. REMOVE BREATHER PLUG WITH GASKET

Torque: 49 N·m (500 kgf·cm, 36 ft·lbf)

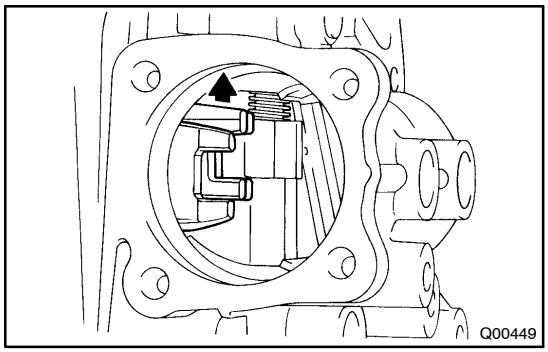

11. REMOVE OUTPUT SHAFT LOCK NUT

(a) Unstake the lock nut.

(b) Engage the gear double meshing.

(c) Remove the lock nut.

Torque: 123 N·m (1,250 kgf·cm, 90 ft·lbf)

(d) Disengage the gear double meshing.

12. REMOVE NO.3 HUB SLEEVE AND NO.3 SHIFT FORK

(a) Remove the No.3 shift fork set bolt.

Torque: 24 N·m (240 kgf·cm, 17 ft·lbf)

(b) Remove the No.3 hub sleeve and No.3 shift fork.

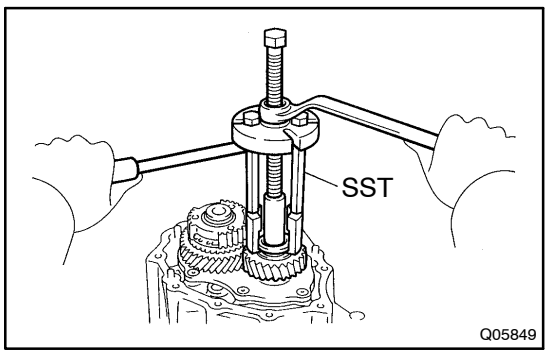

13. REMOVE 5TH DRIVEN GEAR

Using SST, remove the 5th driven gear.

SST 09950–30010

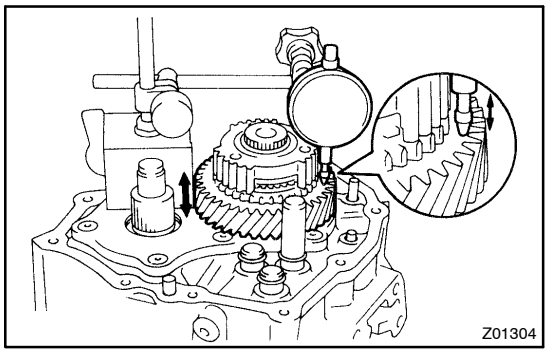

14. MEASURE 5TH GEAR THRUST CLEARANCE AND RADIAL CLEARANCE

(a) Using a dial indicator, measure the thrust clearance.
Standard clearance:
0.10–0.57 mm (0.0039–0.0224 in.)
Maximum clearance:
0.65 mm (0.0256 in.)

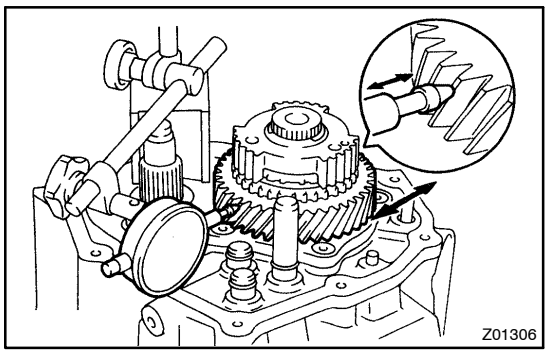

(b) Using a dial indicator, measure the radial clearance.
Standard clearance:
0.009–0.050 mm (0.0004–0.0020 in.)
Maximum clearance:
0.070 mm (0.0028 in.)

15. REMOVE NO.3 CLUTCH HUB AND 5TH GEAR

(a) Using 2 screwdrivers and a hammer, tap out the snap ring.

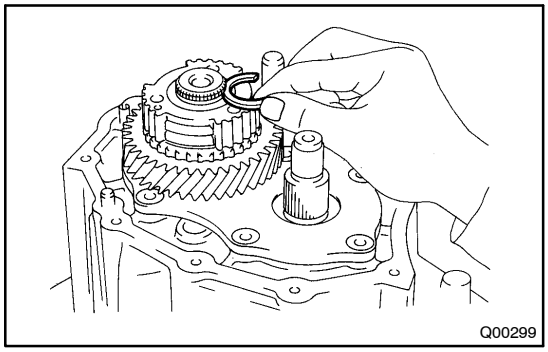

HINT:
At the time of the reassembly, please refer to the following item. Select a snap ring that allows the minimum axial play.

Mark	Thickness mm (in.)	Mark	Thickness mm (in.)
a	1.75 (0.0689)	f	2.00 (0.0787)
b	1.80 (0.0709)	g	2.05 (0.0807)
c	1.85 (0.0729)	h	2.10 (0.0827)
d	1.90 (0.0748)	j	2.15 (0.0847)
e	1.95 (0.0768)	–	–

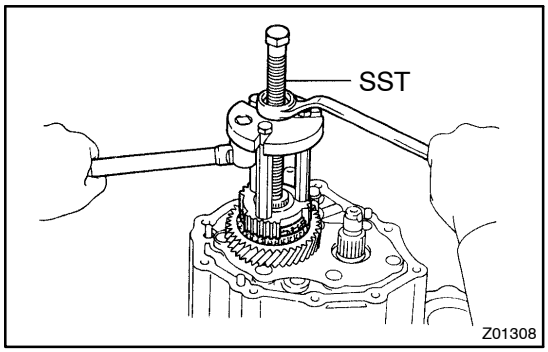

(b) Using SST, remove the No.3 clutch hub with the synchronizer ring and 5th gear.
SST 09950–30010

16. REMOVE NEEDLE ROLLER BEARING AND SPACER

17. REMOVE REAR BEARING RETAINER

Using a torx socket wrench (T45), remove the 7 torx screws and rear bearing retainer.
Sealant:
Part No. 08833–00080, THREE BOND 1344, LOCTITE 242 or equivalent
Torque: 42 N·m (430 kgf·cm, 31 ft·lbf)

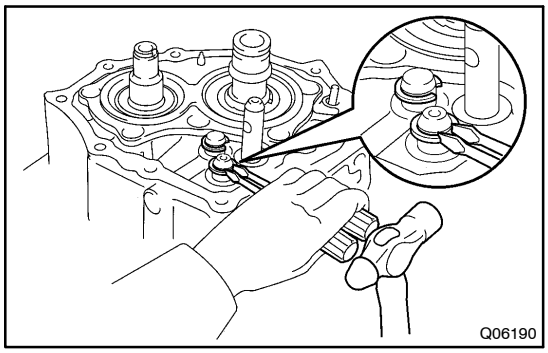

18. REMOVE SNAP RING

(a) Using a snap ring expander, remove the input shaft rear bearing snap ring.

(b) Using 2 screwdrivers and a hammer, remove the 2 snap rings.

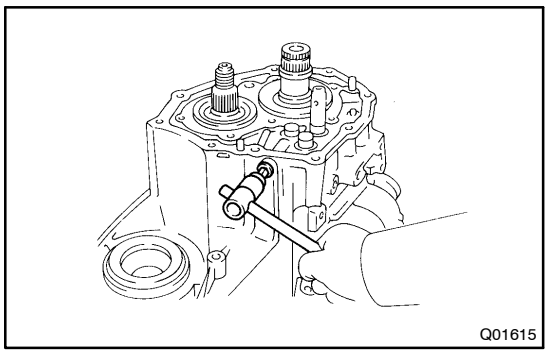

19. REMOVE STRAIGHT SCREW PLUG, SEAT, SPRING AND LOCKING BALL

(a) Using a hexagon wrench (6 mm), remove the plug.
Sealant:
Part No. 08833–00080, THREE BOND 1344, LOCTITE 242 or equivalent
Torque: 25 N·m (250 kgf·cm, 18 ft·lbf)

(b) Using a magnetic finger, remove the seat, spring and locking ball.

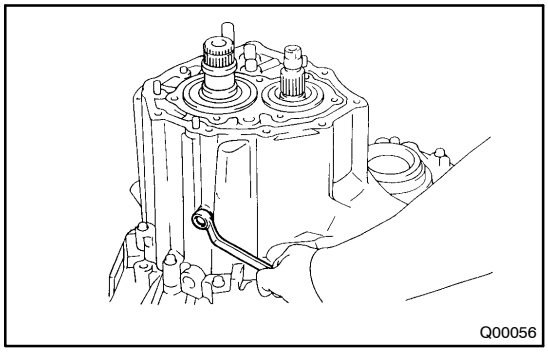

20. REMOVE REVERSE IDLER GEAR SHAFT LOCK BOLT
Sealant:
Part No. 08833–00080, THREE BOND 1344, LOCTITE 242 or equivalent
Torque: 29 N·m (300 kgf·cm, 22 ft·lbf)

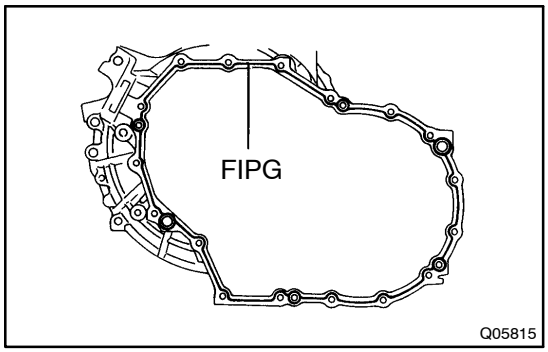

21. REMOVE TRANSMISSION CASE

Remove the 17 bolts and tap the case with a plastic hammer.
FIPG:
Part No. 08826–00090, THREE BOND 1281 or equivalent
Torque: 29 N·m (300 kgf·cm, 22 ft·lbf)

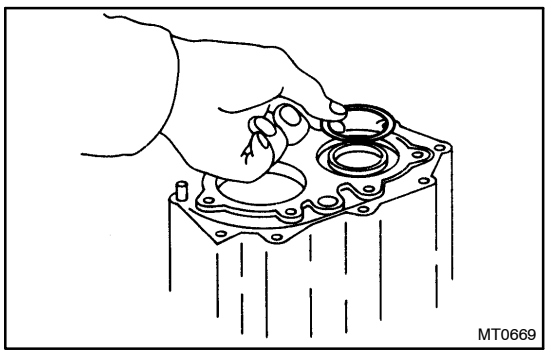

22. REMOVE SHIM

HINT:
At the time of reassembly, please refer to the following item.
Install the previously selected shim by adjusting output shaft preload.
(See page MX–27)

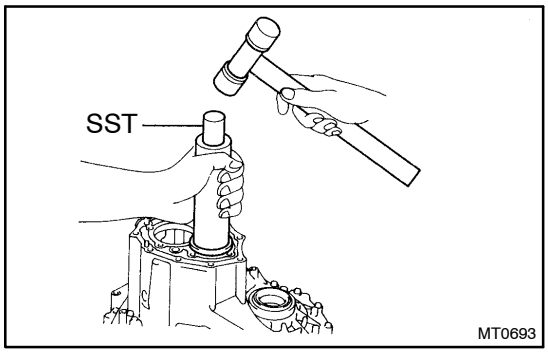

23. REMOVE OUTPUT SHAFT REAR TAPER ROLLER BEARING OUTER RACE

Using SST and a hammer, remove the output shaft rear taper roller bearing outer race.

SST 09316–60011 (09316–00011)

24. REMOVE TRANSMISSION OIL PIPE

(a) Remove the gasket from the oil pipe.

(b) Remove the 2 bolts and oil pipe.

Torque: 17 N·m (175 kgf·cm, 13 ft·lbf)

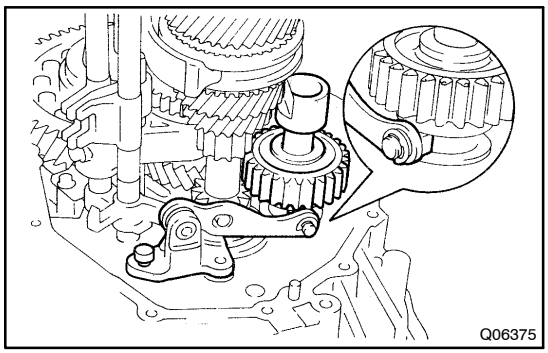

25. REMOVE REVERSE SHIFT ARM BRACKET ASSEMBLY

Remove the bolt and pull off the reverse shift arm and bracket.

Torque: 17 N·m (175 kgf·cm, 13 ft·lbf)

26. REMOVE REVERSE IDLER GEAR AND SHAFT

Pull out the shaft, remove the reverse idler gear and thrust washer.

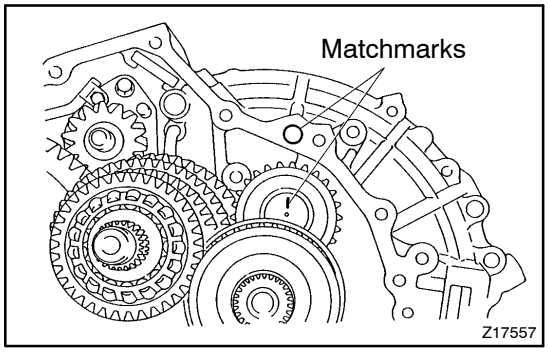

HINT:

At the time of reassembly, please refer to the following item.

Align the matchmarks, as shown.

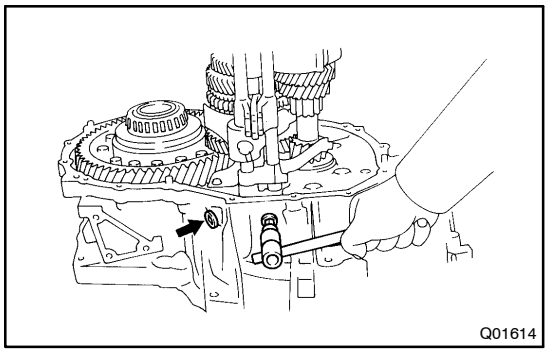

27. REMOVE STRAIGHT SCREW PLUG, LOCKING BALL AND SPRING

(a) Using a hexagon wrench (6 mm), remove the 2 plugs.

Sealant:

Part No. 08833–00080, THREE BOND 1344, LOCTITE 242 or equivalent

Torque: 25 N·m (250 kgf·cm, 18 ft·lbf)

(b) Using a magnetic finger, remove the 2 seats, springs and balls.

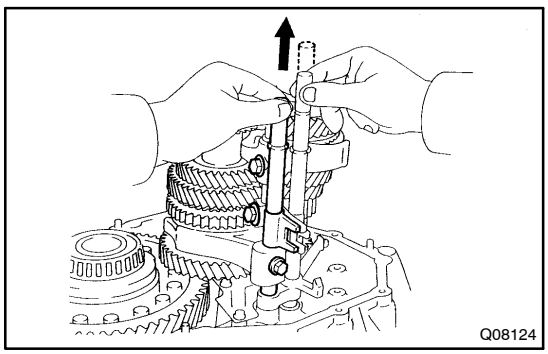

28. REMOVE NO.1, NO.2 SHIFT FORKS AND SHIFT HEAD SET BOLT

Torque: 24 N·m (240 kgf·cm, 17 ft·lbf)

29. REMOVE NO.1 SHIFT FORK SHAFT

Pull up the No.3 shift fork shaft, remove the No.1 shift fork shaft.

HINT:

At the time of reassembly, please refer to the following item.

When it is difficult to push the fork shaft through the reverse shift fork, pull up the No.3 shift fork shaft.

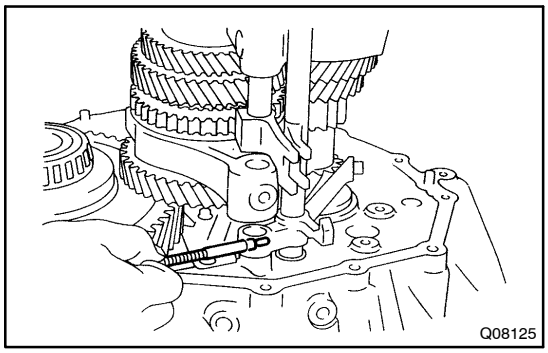

30. REMOVE INTERLOCK ROLLER

Using a magnetic finger, remove the interlock roller from the reverse shift fork.

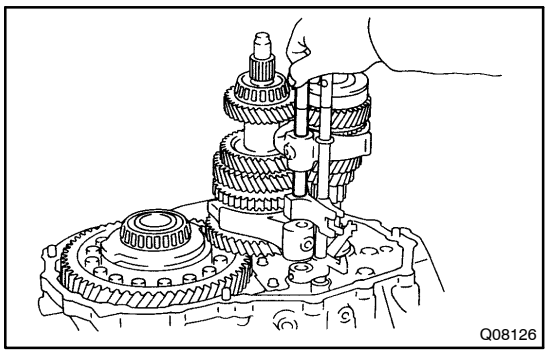

31. REMOVE NO.2 SHIFT FORK SHAFT, SHIFT HEAD AND NO.1 SHIFT FORK

(a) Pull out the No.2 shift fork shaft.

(b) Remove the shift head and No.1 shift fork.

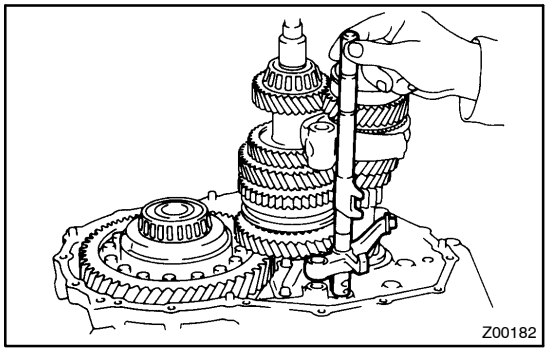

32. REMOVE NO.3 SHIFT FORK SHAFT WITH REVERSE SHIFT FORK AND NO.2 SHIFT FORK

(a) Pull out the No.3 shift fork shaft with the reverse shift fork.

(b) Remove the No.2 shift fork.

33. REMOVE SNAP RING

(a) Using 2 screwdrivers and a hammer, remove the snap ring and reverse shift fork from the No.3 shift fork shaft.

(b) Using 2 screwdrivers and a hammer, remove the 3 snap rings from the No.1, No.2 and No.3 shift fork shafts.

34. REMOVE INPUT AND OUTPUT SHAFTS ASSEMBLY

(a) Leaning the output shaft to the differential side, remove the input shaft assembly.

(b) Lift up the differential case assembly, remove the output shaft assembly.

35. REMOVE DIFFERENTIAL CASE ASSEMBLY

(a) Remove the oil pump drive gear.

(b) Remove the differential case assembly.

36. REMOVE MAGNET FROM TRANSAXLE CASE

37. REMOVE TRANSMISSION OIL PUMP ASSEMBLY AND OIL PIPE

(a) Remove the 2 bolts and oil pipe.
Torque: 17 N·m (175 kgf·cm, 13 ft·lbf)

(b) Remove the 2 bolts and oil pump assembly.
Torque: 17 N·m (175 kgf·cm, 13 ft·lbf)

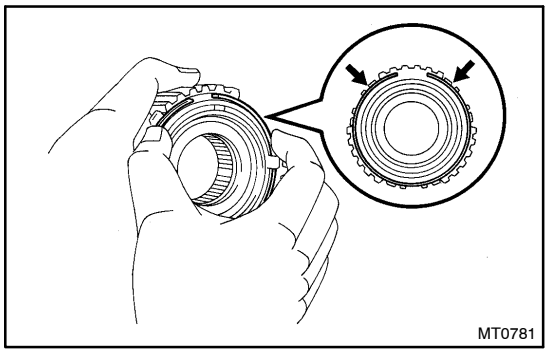

38. REMOVE NO.5 SYNCHRONIZER RING WITH KEY SPRING FROM NO.3 CLUTCH HUB

(a) Remove the No.5 synchronizer ring with the key spring from the No.3 clutch hub.

(b) Using a screwdriver, remove the snap ring.

HINT:

Wrap vinyl tape on the screwdriver to prevent damaging the synchronizer ring.

(c) Remove the synchronizer rings.

MX0DT–01

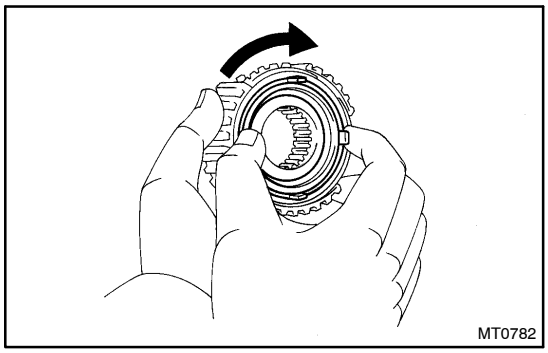

INSPECTION

1. INSPECT NO.5 SYNCHRONIZER RING

(a) Check for wear or damage.

(b) Check the braking effect of the synchronizer ring. Turn the middle No.5 synchronizer ring in one direction while pushing it to the outer No.5 synchronizer ring. Check that the ring locks.

If it does not lock, replace the synchronizer ring.

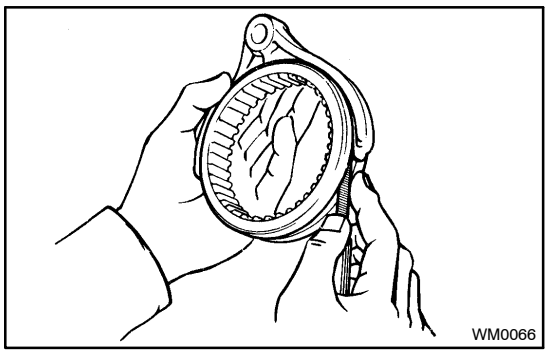

2. MEASURE SHIFT FORK AND HUB SLEEVE CLEARANCE

Using a feeler gauge, measure the clearance between the hub sleeve and shift fork.

Maximum clearance: 1.0 mm (0.039 in.)

If the clearance exceeds the maximum, replace the shift fork or hub sleeve.

MX0DU–01

REPLACEMENT

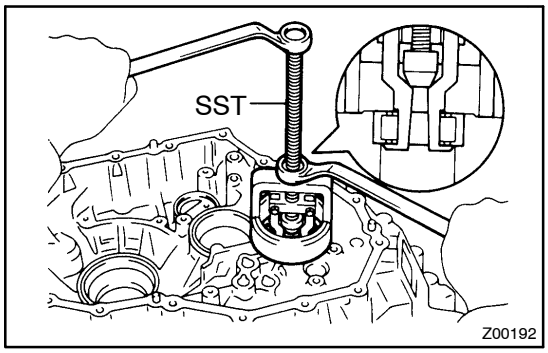

1. REPLACE INPUT SHAFT BEARING AND OIL SEAL

(a) Remove the 3 bolts and transaxle case receiver.

(b) Using SST, pull out the bearing.
SST 09612–65014

(c) Using a screwdriver, remove the oil seal.

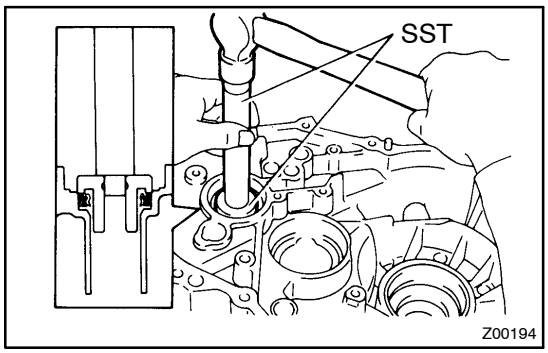

(d) Using SST, drive in a new oil seal.
SST 09608–00081, 09950–70010 (09951–07150)

(e) Coat the lip of seal with MP grease.

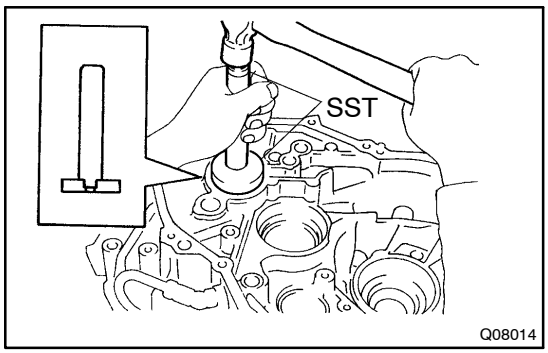

(f) Using SST, drive in a new bearing.
SST 09950–60010 (09951–00580), 09950–70010 (09951–07150)

(g) Install the transaxle case receiver.

(h) Install and torque the 3 bolts.
Torque: 7.4 N·m (75 kgf·cm, 65 in.·lbf)

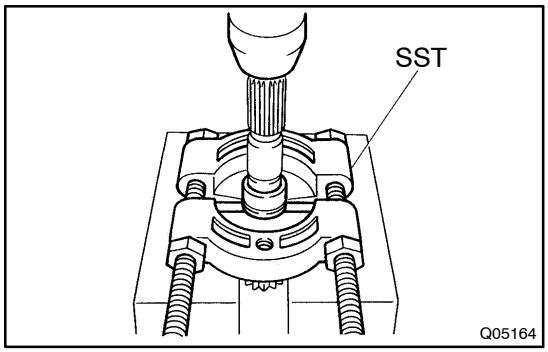

(i) Using SST and a press, remove the inner race.
SST 09950–00020

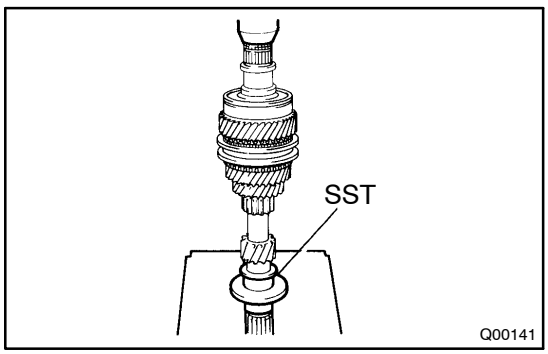

(j) Using SST and a press, install a new input shaft front bearing inner race.
SST 09316–60011 (09316–00021)

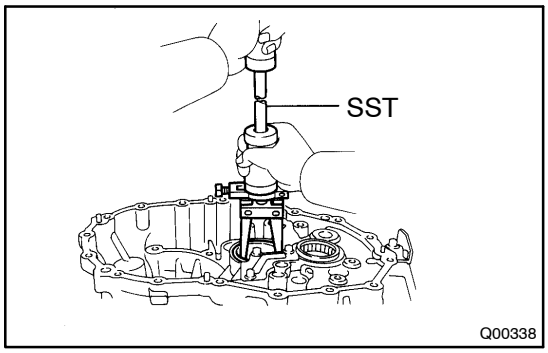

2. REPLACE OUTPUT SHAFT FRONT BEARING OUTER RACE AND OUTPUT SHAFT FRONT COVER

(a) Using SST, pull out the output shaft front bearing outer race.
SST 09308–00010

(b) Remove the output shaft cover.

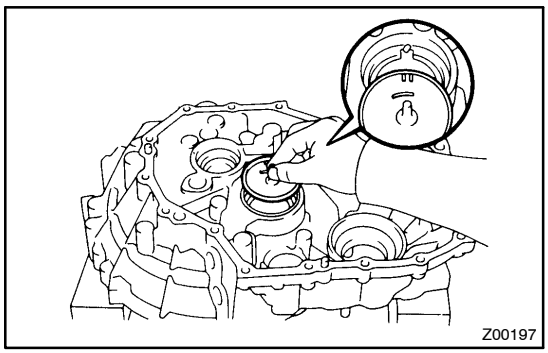

(c) Install a new output shaft cover.

HINT:
Install the output shaft cover projection into the case side groove.

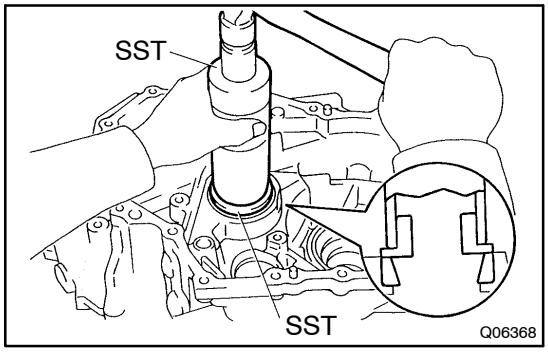

(d) Using SST and a hammer, drive in a new output shaft front bearing outer race.
SST 09316–60011 (09316–00011, 09316–00021)

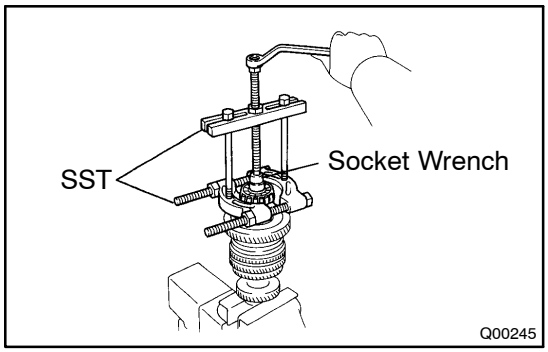

(e) Using SST and a socket wrench, remove the output shaft front bearing.
SST 09950–00020, 09950–00030

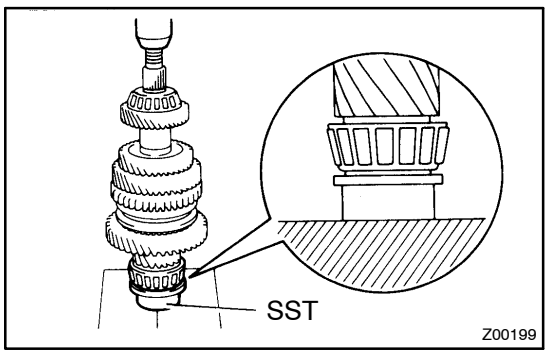

(f) Using SST and a press, install a new output shaft front bearing.
SST 09316–60011 (09316–00071)

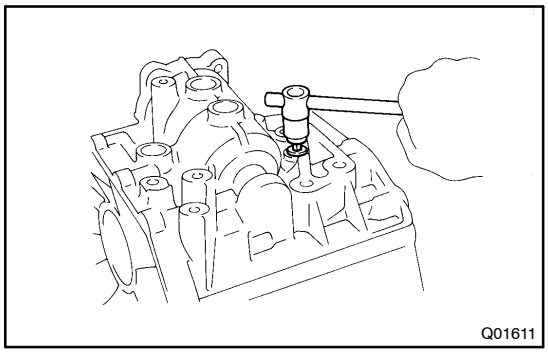

3. REPLACE REVERSE RESTRICT PIN

(a) Using a hexagon wrench (6 mm), remove the screw plug.

(b) Using a pin punch and hammer, drive out the slotted spring pin.

(c) Replace the reverse restrict pin.

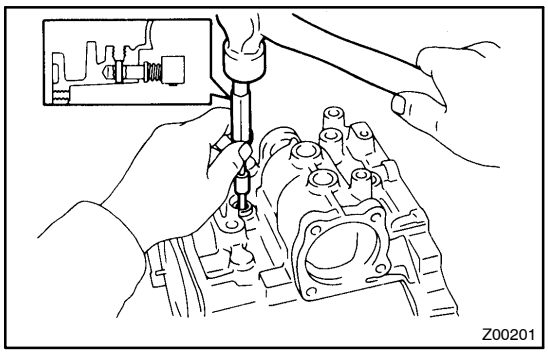

(d) Using a pin punch and hammer, drive in the slotted spring pin.

(e) Apply sealant to the screw plug threads.
Sealant:
Part No. 08833–00080, THREE BOND 1344, LOCTITE 242 or equivalent

(f) Using a hexagon wrench (6 mm), install and torque the screw plug.
Torque: 13 N·m (130 kgf·cm, 9 ft·lbf)

MX05X–01

REASSEMBLY

Reassembly is in the reverse order of disassembly (See page MX–16).

NOTICE:

When working with FIPG material, you must observe the following items.

- **Using a razor blade and gasket scraper, remove all the old FIPG material from the gasket surfaces.**
- **Thoroughly clean all components to remove all the loose material.**
- **Clean both sealing surfaces with a non–residue solvent.**
- **Apply FIPG in an approx. 1 mm (0.04 in.) wide bead along the sealing surface.**
- **Parts must be assembled within 10 minutes of application. Otherwise, the FIPG material must be removed and reapplied.**

HINT:

- Before reassembly, select a shim by adjusting output shaft preload.
- Coat all of the sliding and rotating surfaces with gear oil before reassembly.

ADJUST OUTPUT SHAFT PRELOAD

(a) Install the output shaft assembly to the transaxle case.

(b) Install the transmission case to the transaxle case.

HINT:

If necessary, tap on the case with a plastic hammer.

(c) Install and torque the 17 bolts.

Torque: 29 N·m (300 kgf·cm, 22 ft·lbf)

(d) Install the output shaft rear taper roller bearing outer race.

(e) Install the adjusting shim.

HINT:

When reusing the output shaft bearing, first install a shim of the same thickness as before. If installing a new taper roller bearing, first select and install a shim of lesser thickness than before.

(f) Install the rear bearing retainer.

(g) Using a torx wrench (T45), install and torque the 7 torx screws.

Torque: 42 N·m (430 kgf·cm, 31 ft·lbf)

(h) Install a new lock nut to the output shaft.

(i) Turn the output shaft right and left 2 or 3 times to allow the bearing to settle.

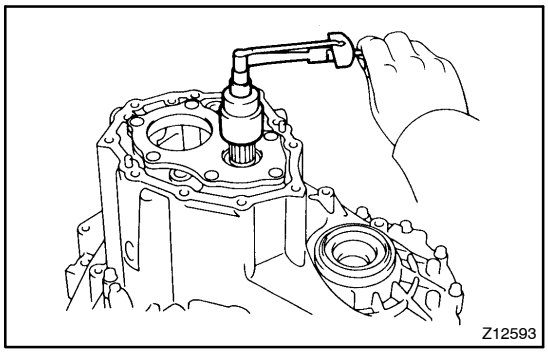

(j) Using a torque wrench, measure the preload.
Preload (at starting):
New bearing
0.8–1.6 N·m (8–16 kgf·cm, 6.9–13.9 in.·lbf)
Reused bearing
0.5–1.0 N·m (5–10 kgf·cm, 4.3–8.7 in.·lbf)

If the preload is not within the specification, select an appropriate adjusting shim.

(k) The preload will change about 0.4–0.5 N·m (4–5 kgf·cm, 3.5–4.3 in.·lbf) for every 0.05 mm change in adjusting shim thickness.

Mark	Thickness mm (in.)	Mark	Thickness mm (in.)
0	1.30 (0.0512)	D	1.95 (0.0768)
1	1.35 (0.0531)	E	2.00 (0.0787)
2	1.40 (0.0551)	F	2.05 (0.0807)
3	1.45 (0.0571)	G	2.10 (0.0827)
4	1.50 (0.0591)	H	2.15 (0.0846)
5	1.55 (0.0610)	J	2.20 (0.0866)
6	1.60 (0.0630)	K	2.25 (0.0886)
7	1.65 (0.0650)	L	2.30 (0.0906)
8	1.70 (0.0669)	M	2.35 (0.0925)
9	1.75 (0.0689)	N	2.40 (0.0945)
A	1.80 (0.0709)	P	2.45 (0.0965)
B	1.85 (0.0728)	Q	2.50 (0.0984)
C	1.90 (0.0748)	–	–

(l) Remove the lock nut.

(m) Remove these parts. Removal is in the reverse order of installation.
- Rear bearing retainer
- Shim
- Transmission case
- Output shaft assembly
- Output shaft rear bearing outer race

INPUT SHAFT

COMPONENTS

MX028–02

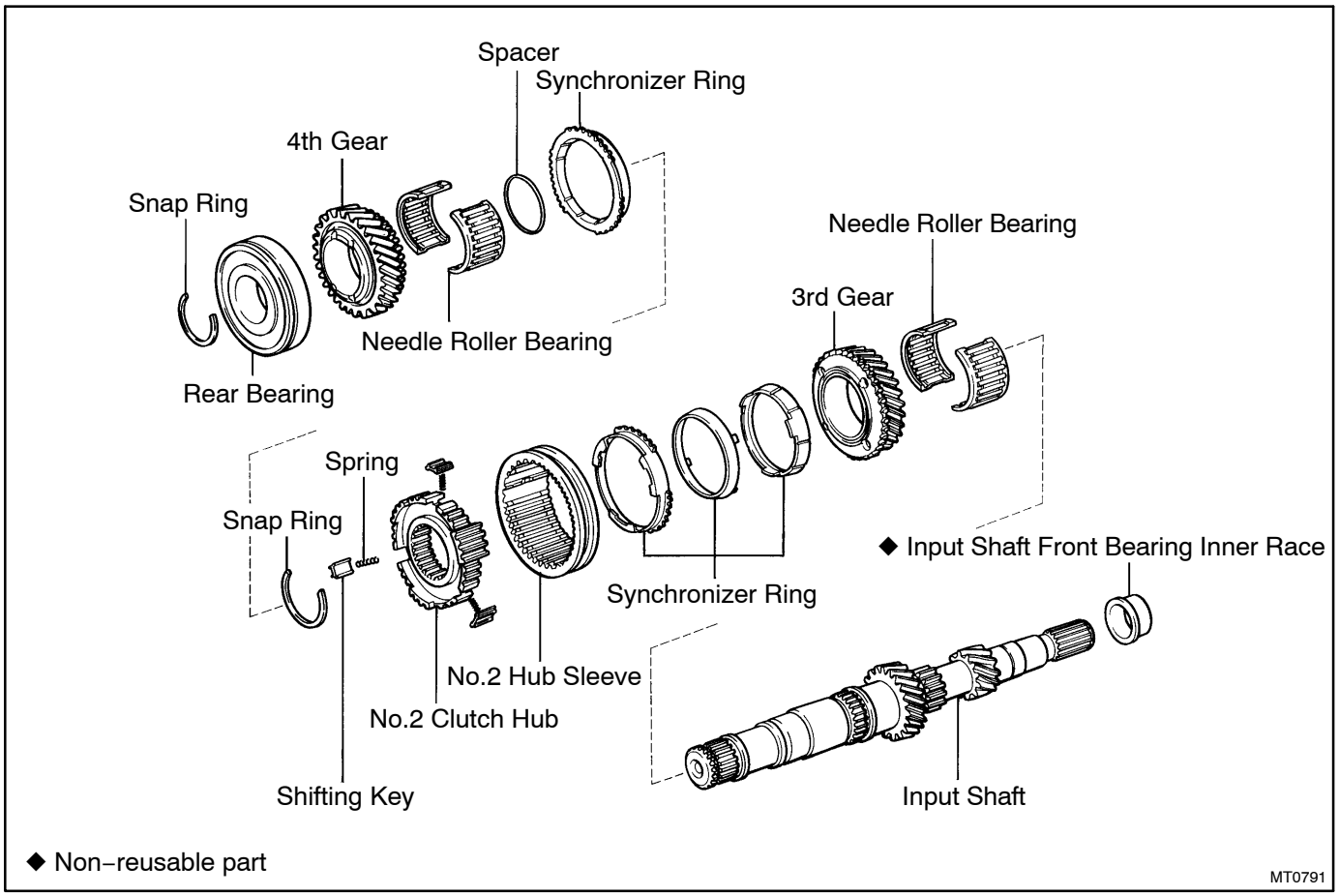

MX029–02

DISASSEMBLY

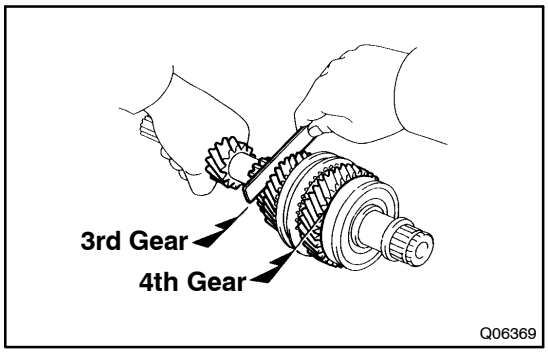

1. MEASURE 3RD AND 4TH GEARS THRUST CLEARANCE

Using a feeler gauge, measure the thrust clearance.

Standard clearance:
3rd gear: 0.10 – 0.35 mm (0.0039 – 0.0138 in.)
4th gear: 0.10 – 0.55 mm (0.0039 – 0.0217 in.)
Maximum clearance:
3rd gear: 0.40 mm (0.0157 in.)
4th gear: 0.60 mm (0.0236 in.)

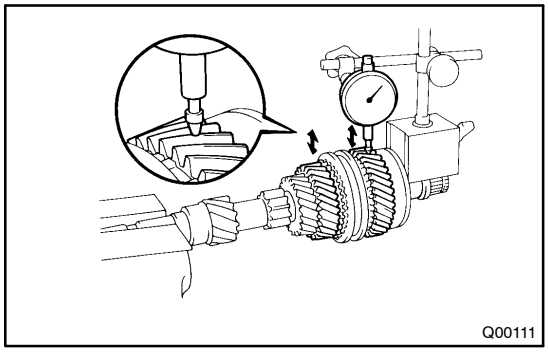

2. CHECK 3RD AND 4TH GEARS RADIAL CLEARANCE

Using a dial indicator, measure the radial clearance between the gear and shaft.

Standard clearance:
3rd gear: 0.009 – 0.053 mm (0.0004 – 0.0021 in.)
4th gear: 0.009 – 0.051 mm (0.0004 – 0.0020 in.)
Maximum clearance:
3rd and 4th gears: 0.070 mm (0.0028 in.)

If the clearance exceeds the maximum, replace the gear, needle roller bearing or shaft.

3. REMOVE SNAP RING

Using 2 screwdrivers and a hammer, tap out the snap ring.

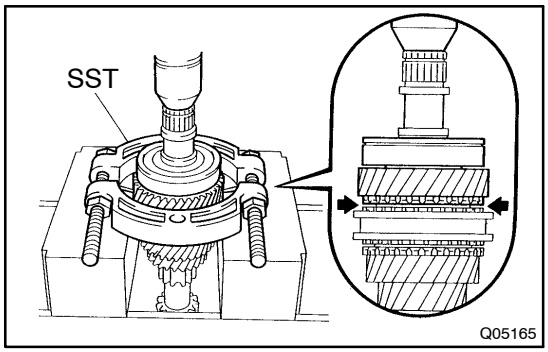

4. REMOVE REAR BALL BEARING AND 4TH GEAR

Using SST and a press, remove the rear bearing.

SST 09950–00020

5. REMOVE NEEDLE ROLLER BEARING, SPACER AND SYNCHRONIZER RING

6. REMOVE SNAP RING

Using 2 screwdrivers and a hammer, tap out the snap ring.

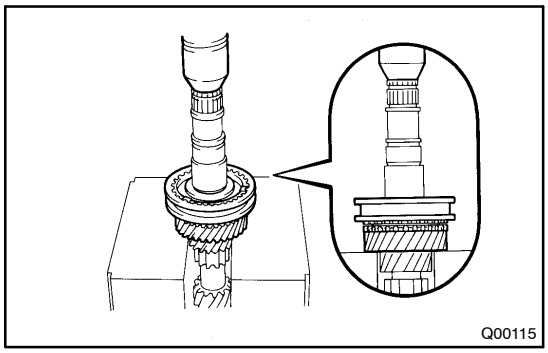

7. REMOVE NO.2 CLUTCH HUB ASSEMBLY, SYNCHRONIZER RING AND 3RD GEAR

Using a press, remove the No.2 hub sleeve, 3rd gear and synchronizer rings.

8. REMOVE NEEDLE ROLLER BEARING

MX02A–02

INSPECTION

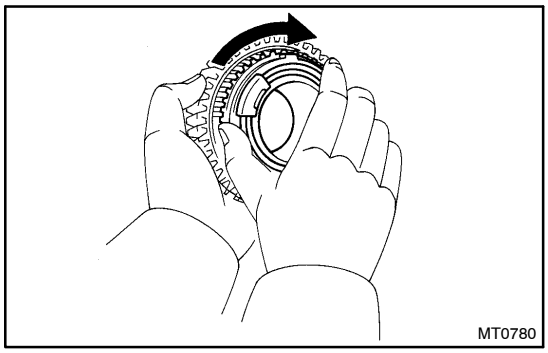

1. INSPECT 3RD GEAR SYNCHRONIZER RING

(a) Check for wear or damage.

(b) Check the braking effect of the synchronizer ring. Turn the synchronizer ring in one direction while pushing it to the gear cone. Check that the ring locks.

If it does not lock, replace the synchronizer ring.

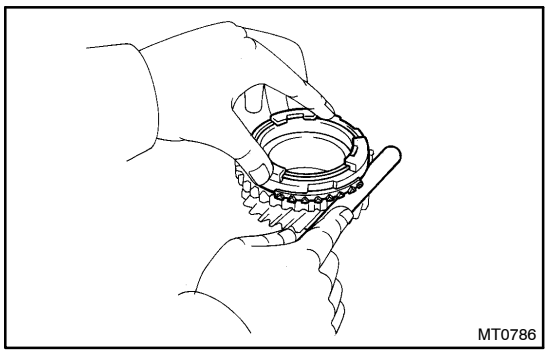

(c) Using a feeler gauge, measure the clearance between the synchronizer ring back and gear spline end.
Minimum clearance: 0.7 mm (0.028 in.)

If the clearance is less than the minimum, replace the synchronizer ring.

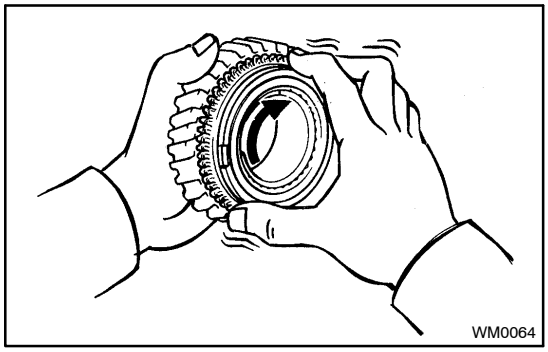

2. INSPECT 4TH GEAR SYNCHRONIZER RING

(a) Check for wear or damage.

(b) Check the braking effect of the synchronizer ring. Turn the synchronizer ring in one direction while pushing it to the gear cone. Check that the ring locks.

If the braking effect is insufficient, apply a small amount of the fine lapping compound between the synchronizer ring and gear cone. Lightly rub the synchronizer ring and gear cone together.

NOTICE:

Ensure the fine lapping compound is completely washed off after rubbing.

(c) Check again the braking effect of the synchronizer ring.

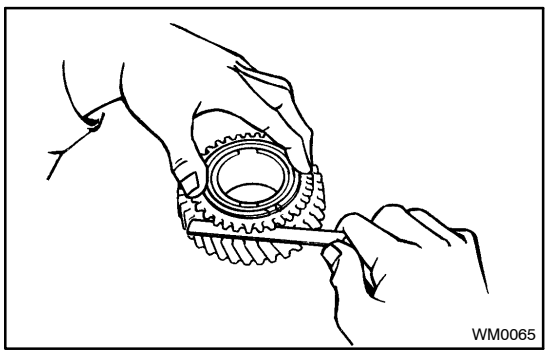

(d) Using a feeler gauge, measure the clearance between the synchronizer ring back and spline end.
Minimum clearance: 0.8 mm (0.031 in.)

If the clearance is less than the minimum, replace the synchronizer ring, and apply a small amount of the fine lapping compound on gear cone.

NOTICE:

Ensure the fine lapping compound is completely washed off after rubbing.

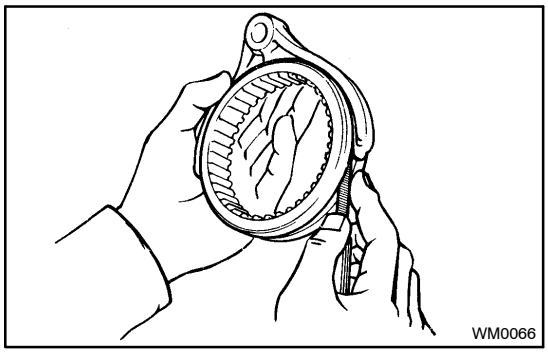

3. MEASURE NO.2 SHIFT FORK AND HUB SLEEVE CLEARANCE

Using a feeler gauge, measure the clearance between the hub sleeve and shift fork.

Maximum clearance: 1.0 mm (0.039 in.)

If the clearance exceeds the maximum, replace the shift fork or hub sleeve.

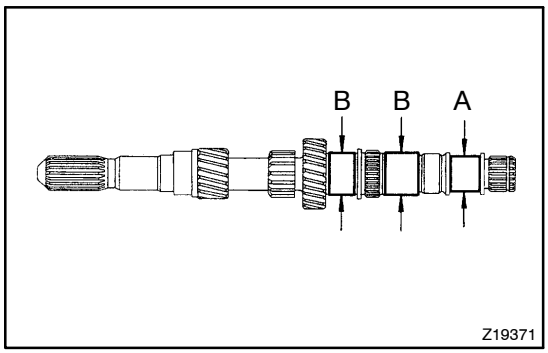

4. INSPECT INPUT SHAFT

(a) Check the input shaft for wear or damage.

(b) Using a micrometer, measure the outer diameter of the input shaft journal surface.

Minimum outer diameter:
Part A: 27.950 mm (1.1004 in.)
Part B: 35.950 mm (1.4154 in.)

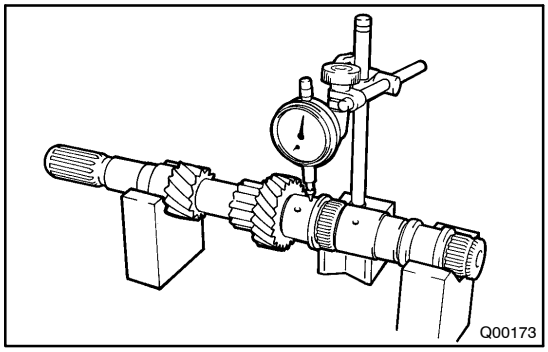

(c) Using a dial indicator, check the shaft runout.

Maximum runout: 0.05 mm (0.0020 in.)

MX02B–04

REASSEMBLY

HINT:
Coat all of the sliding and rotating surfaces with gear oil before reassembly.

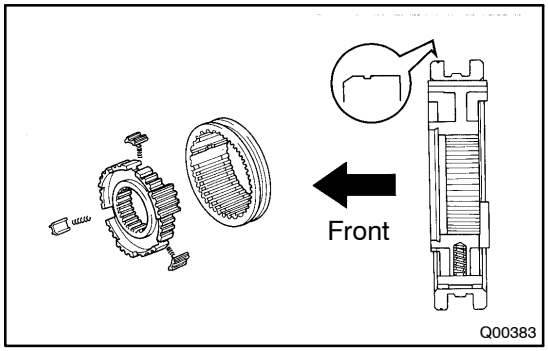

1. INSTALL NO.2 CLUTCH HUB INTO HUB SLEEVE

(a) Install the 3 springs and shifting keys to the clutch hub.
(b) Install the hub sleeve to the clutch hub.

HINT:
Direct identification groove of the hub sleeve to front of the transmission.

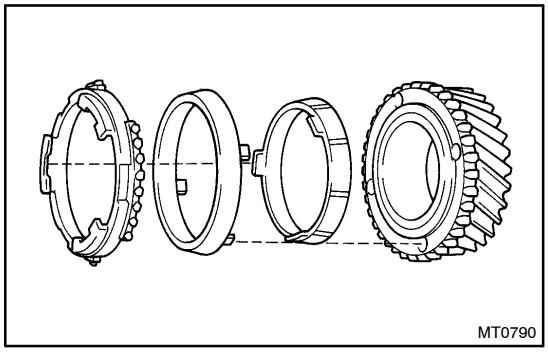

2. INSTALL NEEDLE ROLLER BEARING, 3RD GEAR, SYNCHRONIZER RING AND NO.2 HUB SLEEVE ASSEMBLY TO INPUT SHAFT

(a) Apply MP grease to the needle roller bearing.
(b) Assemble the needle roller bearings into the 3rd gear.
(c) Place the synchronizer rings on the gear and align the ring slots with the shifting keys.

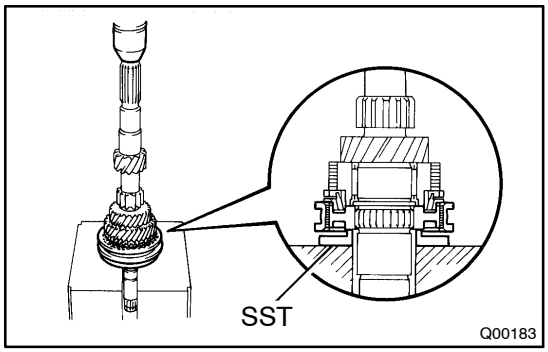

(d) Using SST and a press, install the 3rd gear and No.2 hub sleeve.
SST 09506–35010

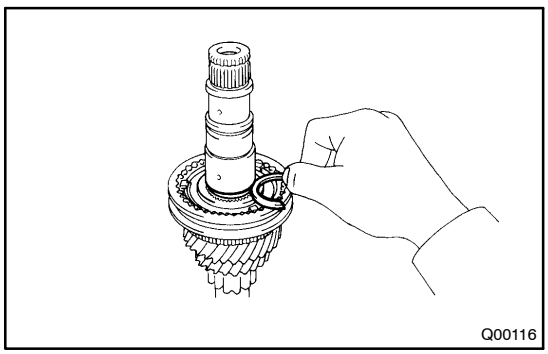

3. INSTALL SNAP RING

(a) Select a snap ring that allows the minimum axial play.

Mark	Thickness mm (in.)	Mark	Thickness mm (in.)
H	2.30 (0.0906)	M	2.50 (0.0984)
J	2.35 (0.0925)	N	2.55 (0.1004)
K	2.40 (0.0945)	P	2.60 (0.1024)
L	2.45 (0.0965)	–	–

(b) Using a screwdriver and hammer, tap in the snap ring.

4. MEASURE 3RD GEAR THRUST CLEARANCE
(See page MX–30)

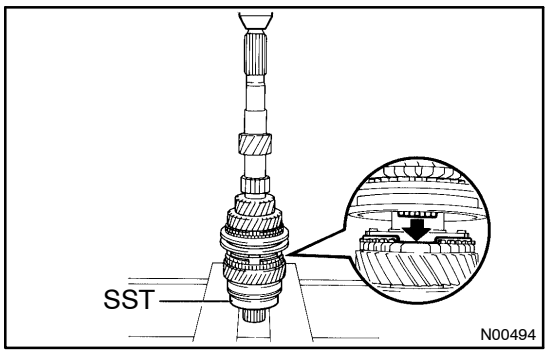

5. INSTALL SPACER, SYNCHRONIZER RING, NEEDLE ROLLER BEARING, 4TH GEAR AND REAR BALL BEARING

(a) Install the spacer.
(b) Apply MP grease to the needle roller bearings.
(c) Place the synchronizer ring on the gear and align the ring slots with the shifting keys.
(d) Install the 4th gear.
(e) Using SST and a press, install the rear ball bearing.
SST 09506–35010

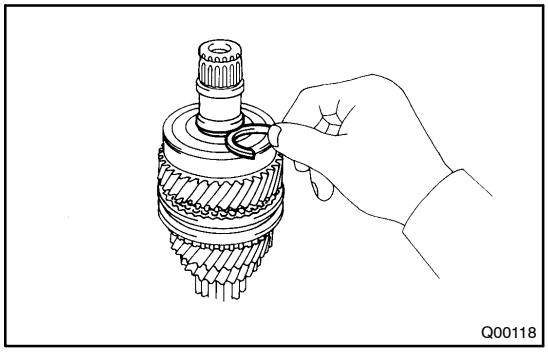

6. INSTALL SNAP RING

(a) Select a snap ring that allows the minimum axial play.

Mark	Thickness mm (in.)	Mark	Thickness mm (in.)
1	2.35 (0.0925)	5	2.55 (0.1004)
2	2.40 (0.0945)	6	2.60 (0.1024)
3	2.45 (0.0965)	7	2.65 (0.1043)
4	2.50 (0.0984)	8	2.70 (0.1063)

(b) Using a screwdriver and hammer, tap in the snap ring.

7. MEASURE 4TH GEAR THRUST CLEARANCE
(See page MX–30)

OUTPUT SHAFT

COMPONENTS

MX02C–02

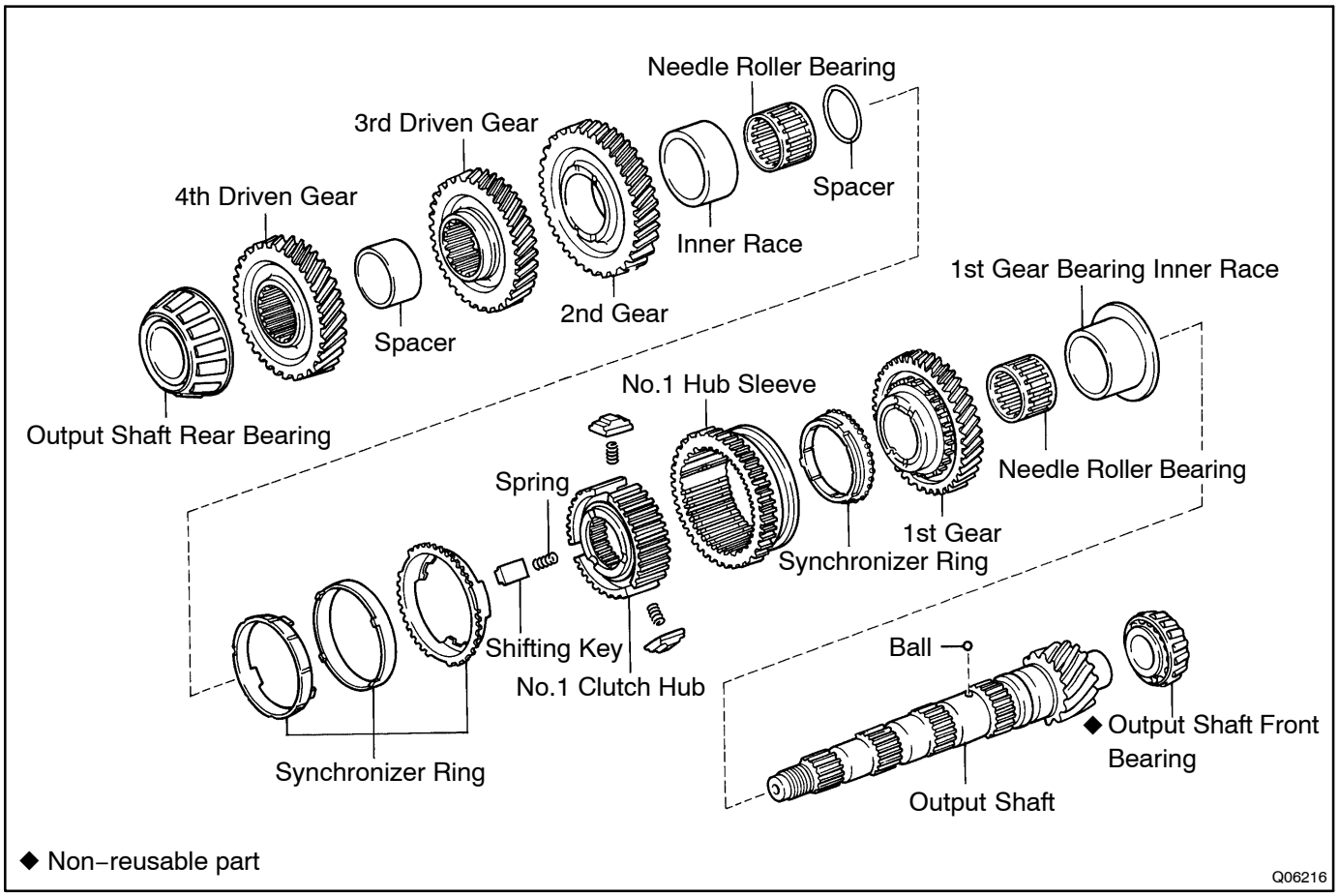

MX02D–03

DISASSEMBLY

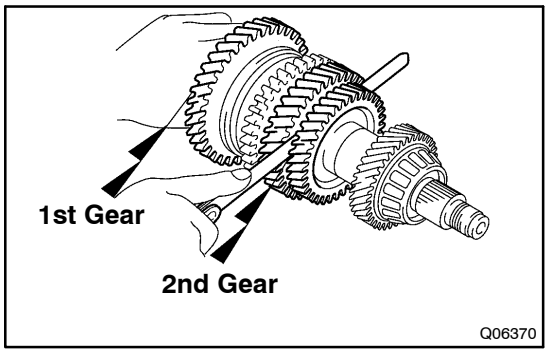

1. MEASURE 1ST AND 2ND GEARS THRUST CLEARANCE

Using a feeler gauge, measure the thrust clearance.

Standard clearance:
1st gear: 0.10 – 0.35 mm (0.0039 – 0.0138 in.)
2nd gear: 0.10 – 0.45 mm (0.0039 – 0.0177 in.)
Maximum clearance:
1st gear: 0.40 mm (0.0157 in.)
2nd gear: 0.50 mm (0.0197 in.)

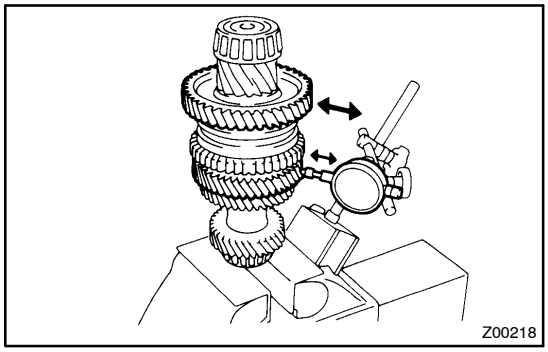

2. CHECK 1ST AND 2ND GEARS RADIAL CLEARANCE

Using a dial indicator, measure the radial clearance between the gear and shaft.

Standard clearance:
1st gear: 0.009 – 0.051 mm (0.0004 – 0.0020 in.)
2nd gear: 0.009 – 0.053 mm (0.0004 – 0.0021 in.)
Maximum clearance:
1st and 2nd gears: 0.070 mm (0.0028 in.)

If the clearance exceeds the maximum, replace the gear, needle roller bearing or shaft.

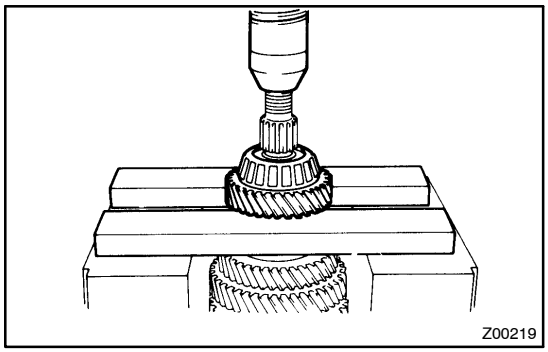

3. REMOVE OUTPUT SHAFT REAR BEARING, 4TH DRIVEN GEAR AND SPACER

(a) Using a press, remove the bearing and 4th driven gear.
(b) Remove the spacer.

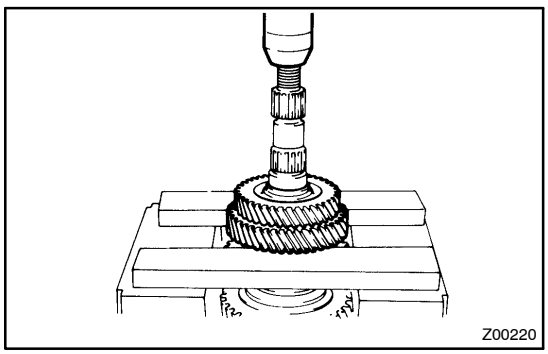

4. REMOVE 3RD DRIVEN GEAR AND 2ND GEAR

Using a press, remove the 3rd driven gear and 2nd gear.

5. REMOVE NEEDLE ROLLER BEARING, SPACER AND SYNCHRONIZER RING

6. REMOVE INNER RACE AND BALL FROM OUTPUT SHAFT

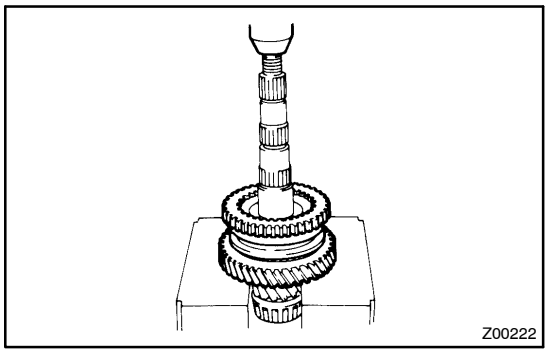

7. REMOVE NO.1 HUB SLEEVE ASSEMBLY AND 1ST GEAR

Using a press, remove the No.1 hub sleeve and 1st gear.

8. REMOVE SYNCHRONIZER RING AND NEEDLE ROLLER BEARING

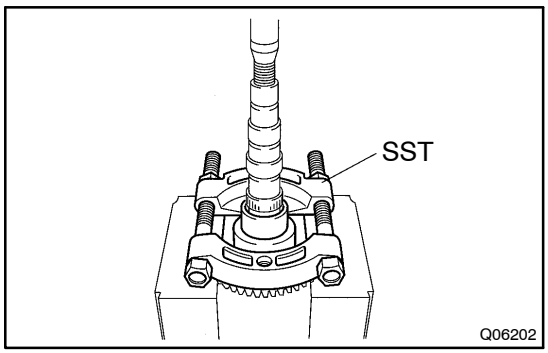

9. REMOVE 1ST GEAR BEARING INNER RACE

Using SST and a press, remove the 1st gear bearing inner race.

SST 09950–00020

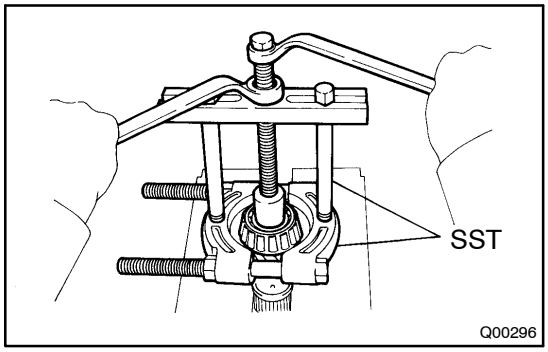

10. REMOVE OUTPUT SHAFT FRONT BEARING

Using SST, remove the output shaft front bearing.

SST 09950–00020, 09950–00030

MX02E–02

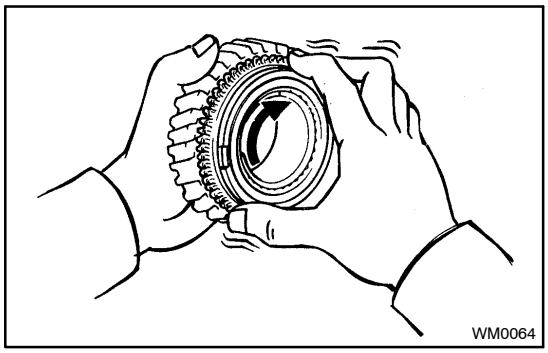
WM0064

INSPECTION

1. INSPECT 1ST GEAR SYNCHRONIZER RING

(a) Check for wear or damage.

(b) Check the braking effect of the synchronizer ring. Turn the synchronizer ring in one direction while pushing it to the gear cone. Check that the ring locks.

If the braking effect is insufficient, apply a small amount of the fine lapping compound between the synchronizer ring and gear cone. Lightly rub the synchronizer ring and gear cone together.

NOTICE:

Ensure the fine lapping compound is completely washed off after rubbing.

(c) Check again the braking effect of the synchronizer ring.

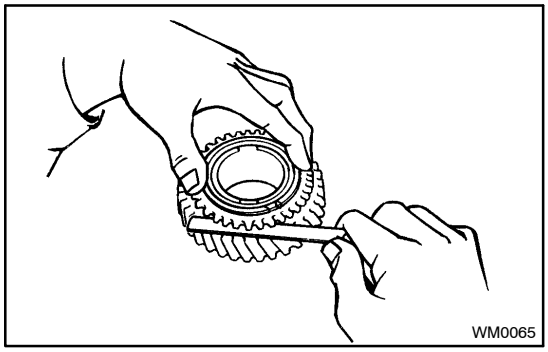
WM0065

(d) Using a feeler gauge, measure the clearance between the synchronizer ring back and gear spline end.

Minimum clearance: 0.8 mm (0.031 in.)

If the clearance is less than the minimum, replace the synchronizer ring, and apply a small amount of the fine lapping compound on gear cone.

NOTICE:

Ensure the fine lapping compound is completely washed off after rubbing.

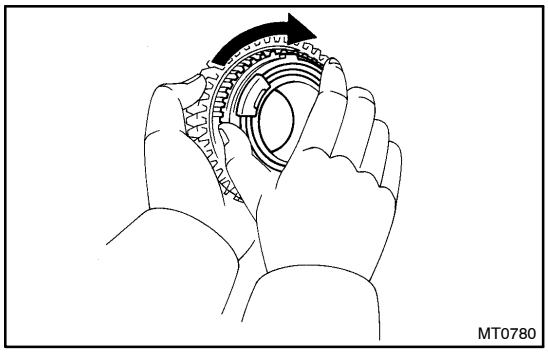
MT0780

2. INSPECT 2ND GEAR SYNCHRONIZER RING

(a) Check for wear or damage.

(b) Check the braking effect of the synchronizer ring.

(c) Turn the synchronizer ring in one direction while pushing it to the gear cone. Check that the ring locks.

If it does not lock, replace the synchronizer ring.

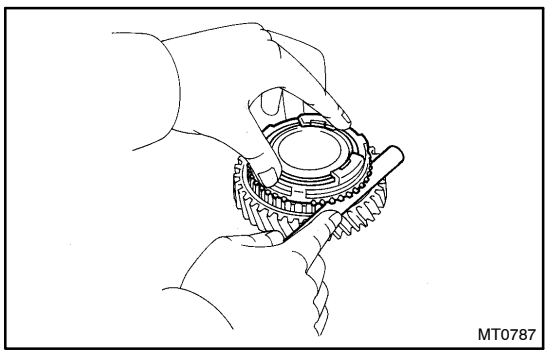
MT0787

(d) Using a feeler gauge, measure the clearance between the synchronizer ring back and gear spline end.

Minimum clearance: 0.7 mm (0.028 in.)

If the clearance is less than the minimum, replace the synchronizer ring.

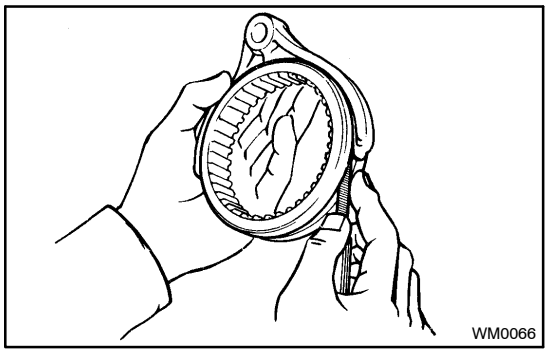

3. MEASURE NO.1 SHIFT FORK AND HUB SLEEVE CLEARANCE

Using a feeler gauge, measure the clearance between the hub sleeve and shift fork.

Maximum clearance: 1.0 mm (0.039 in.)

If the clearance exceeds the maximum, replace the shift fork or hub sleeve.

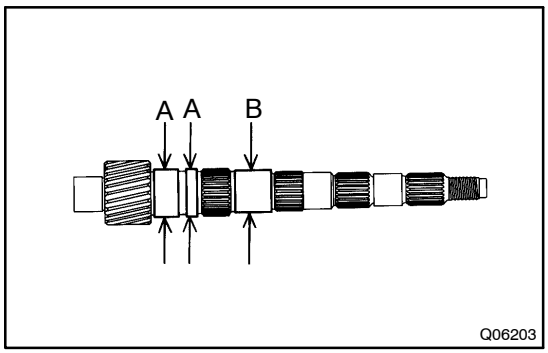

4. INSPECT OUTPUT SHAFT

(a) Check the output shaft for wear or damage.

(b) Using a micrometer, measure the outer diameter of the output shaft journal surface.

Minimum outer diameter:
Part A: 37.526 mm (1.4774 in.)
Part B: 34.512 mm (1.3588 in.)

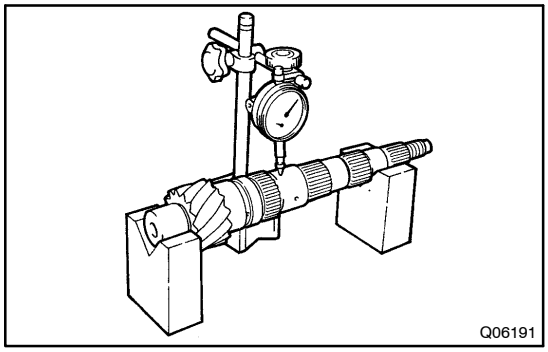

(c) Using a dial indicator, check the shaft runout.

Maximum runout: 0.06 mm (0.0024 in.)

MX02F–04

REASSEMBLY

HINT:
Coat all of the sliding and rotating surfaces with gear oil before reassembly.

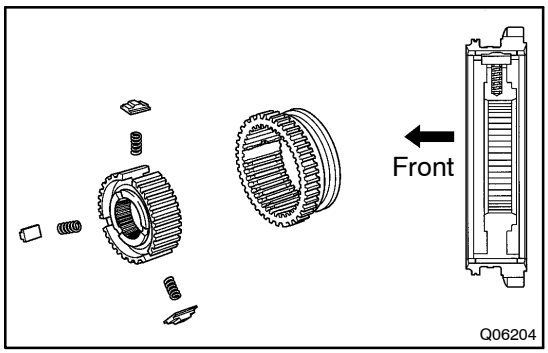

1. INSTALL NO.1 CLUTCH HUB INTO HUB SLEEVE

(a) Install the 3 springs and shifting keys to the clutch hub.
(b) Install the hub sleeve to the clutch hub.

HINT:
Direct identification groove of the hub sleeve to the front of the transmission.

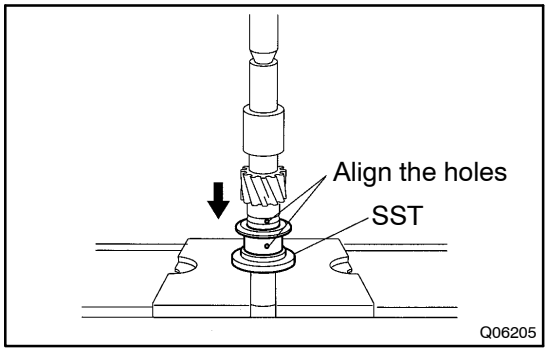

2. INSTALL 1ST GEAR BEARING INNER RACE

Using SST and a press, install the 1st gear bearing inner race.
SST 09506–35010

HINT:
Align the hole of the output shaft and inner race.

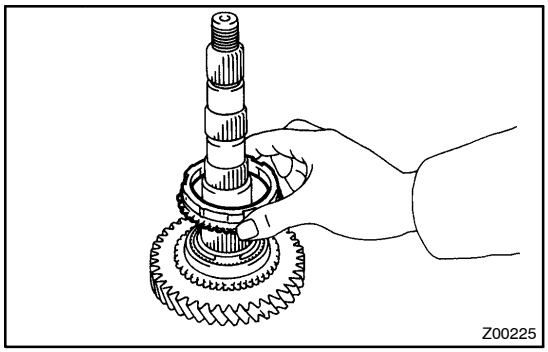

3. INSTALL NEEDLE ROLLER BEARING, 1ST GEAR, SYNCHRONIZER RING AND NO.1 HUB SLEEVE TO OUTPUT SHAFT

(a) Apply MP grease to the needle roller bearing.
(b) Install the 1st gear.
(c) Place the synchronizer ring (for the 1st gear) on the gear and align the ring slots with the shifting keys.

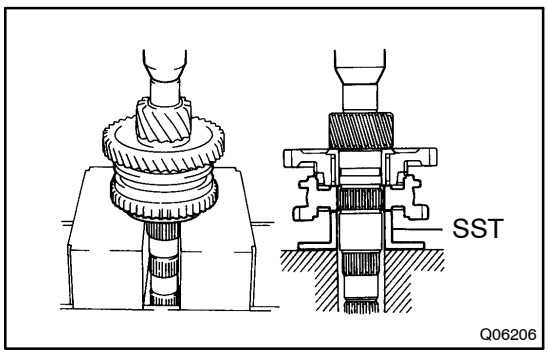

(d) Using SST and a press, install the 1st gear and No.1 hub sleeve.
SST 09316–60011 (09316–00041)

4. MEASURE 1ST GEAR THRUST CLEARANCE
(See page MX–37)

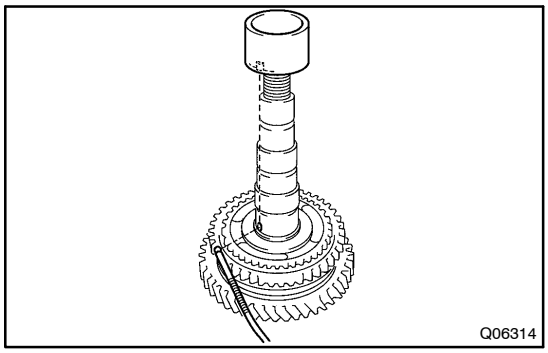

5. INSTALL BALL AND INNER RACE TO OUTPUT SHAFT

HINT:

Align the groove of the inner race and ball.

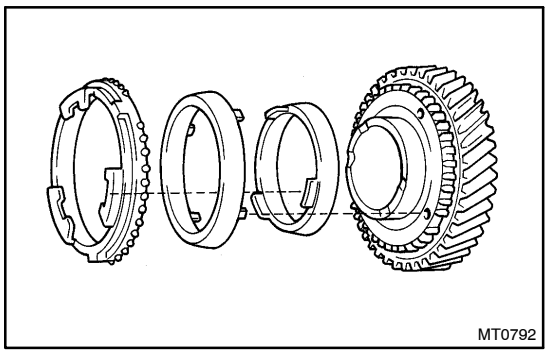

6. INSTALL SPACER, NEEDLE ROLLER BEARING, SYNCHRONIZER RING, 2ND GEAR AND 3RD DRIVEN GEAR

(a) Install the spacer.

(b) Apply MP grease to the needle roller bearing.

(c) Place the synchronizer rings (for the 2nd gear) on the gear.

NOTICE:

Do not install the synchronizer ring for the 1st gear.

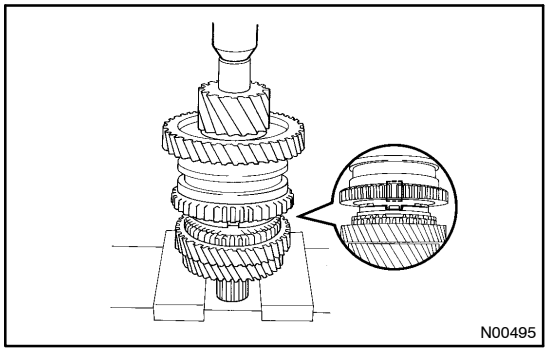

(d) Install the 2nd gear.

(e) Using a press, install the 3rd driven gear.

NOTICE:

Align the clutch hub grooves with the projections on the synchronizer ring.

7. MEASURE 2ND GEAR THRUST CLEARANCE

(See page MX–37)

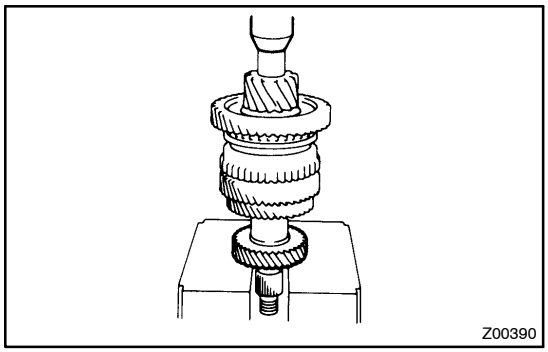

8. INSTALL SPACER AND 4TH DRIVEN GEAR

(a) Install the spacer.

(b) Using a press, install the 4th driven gear.

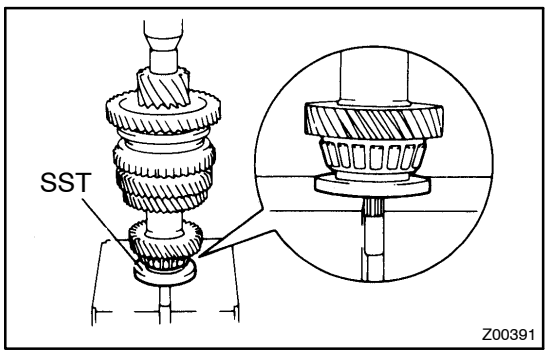

9. INSTALL OUTPUT SHAFT REAR BEARING

Using SST and a press, install the bearing.

SST 09506–30012

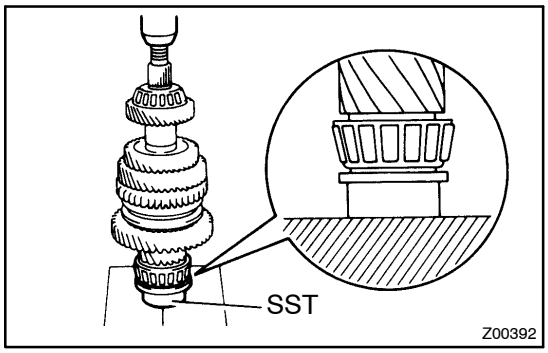

10. INSTALL OUTPUT SHAFT FRONT BEARING

Using SST and a press, install a new output shaft front bearing.

SST 09316–60011 (09316–00071)

OIL PUMP (2WD)

COMPONENTS

MX02G–02

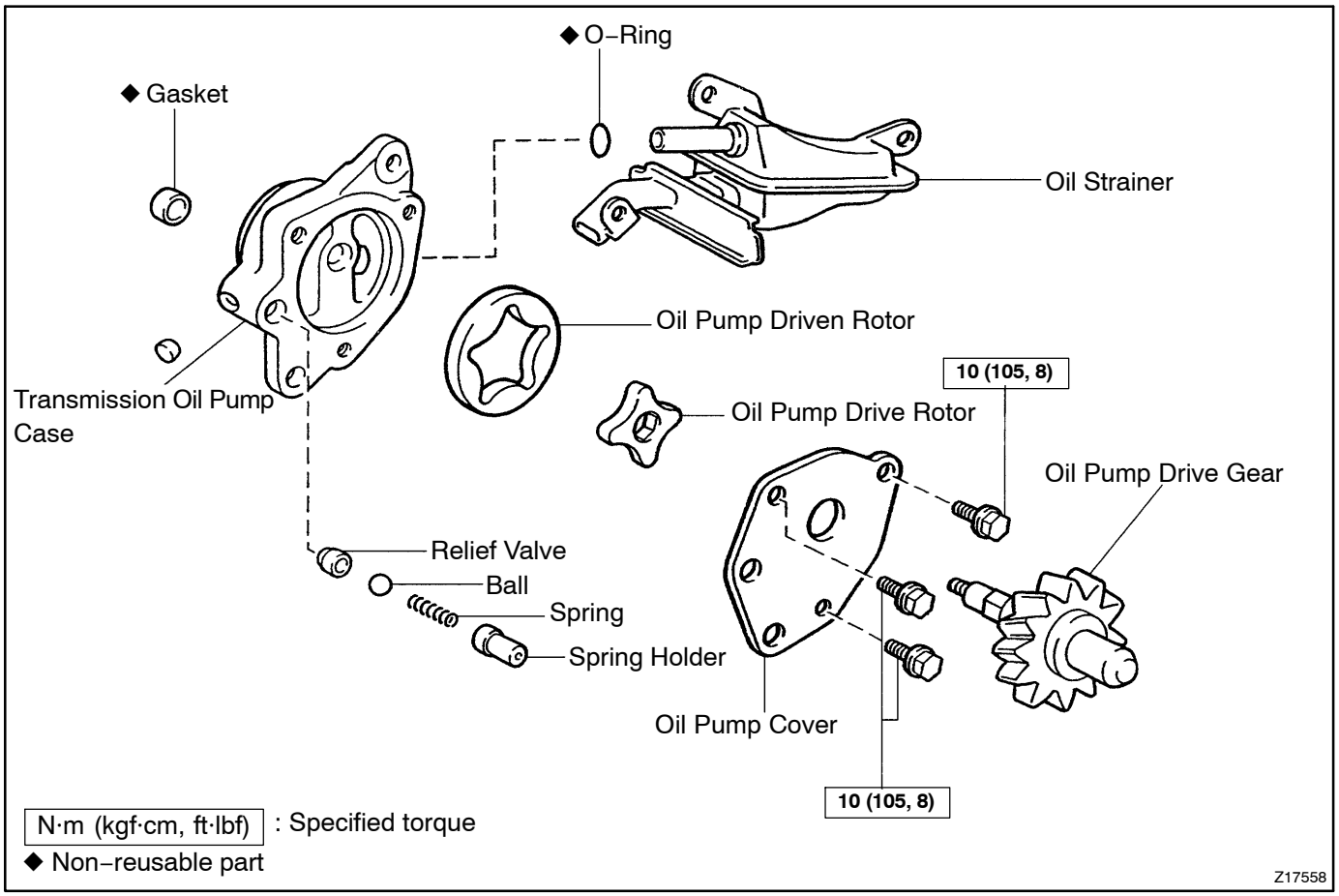

MX02H–01

INSPECTION

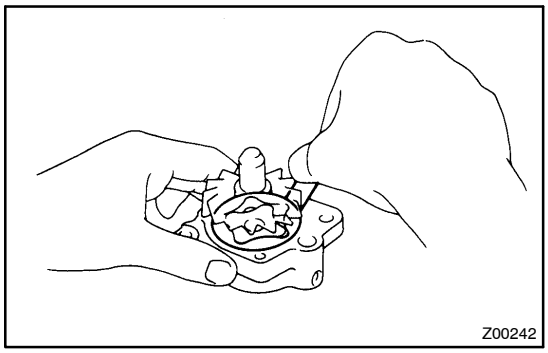

1. CHECK ROTOR BODY CLEARANCE

(a) Install the oil pump drive gear to the drive rotor.

(b) Using a feeler gauge, measure the body clearance between the drive rotor and oil pump case.

Standard clearance:
0.10 – 0.16 mm (0.0039 – 0.0063 in.)
Maximum clearance:
0.30 mm (0.0118 in.)

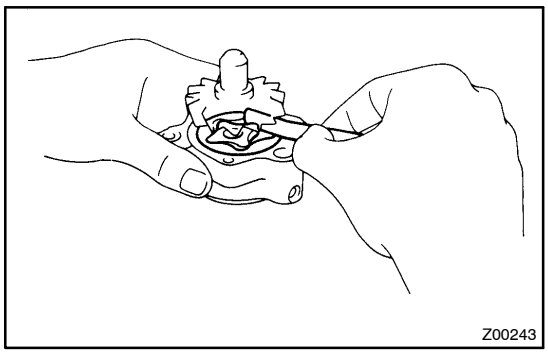

2. CHECK ROTOR TIP CLEARANCE

(a) Install the oil pump drive gear to the drive rotor.

(b) Using a feeler gauge, measure the tip clearance between the drive and driven rotors.

Standard clearance:
0.08 – 0.15 mm (0.0031 – 0.0059 in.)
Maximum clearance:
0.30 mm (0.0118 in.)

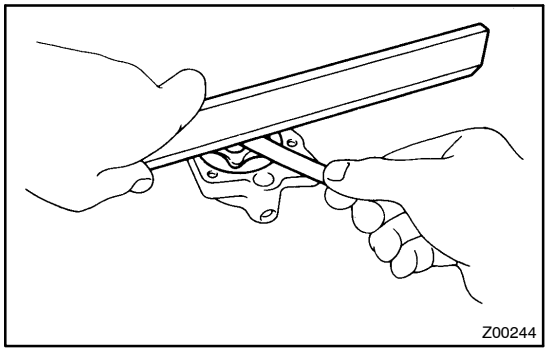

3. CHECK SIDE CLEARANCE

Using a precision straight edge and feeler gauge, measure the side clearance of both rotors.

Standard clearance:
0.03 – 0.08 mm (0.0012 – 0.0031 in.)
Maximum clearance:
0.15 mm (0.0059 in.)

OIL PUMP (4WD)

COMPONENTS

MX05Y–01

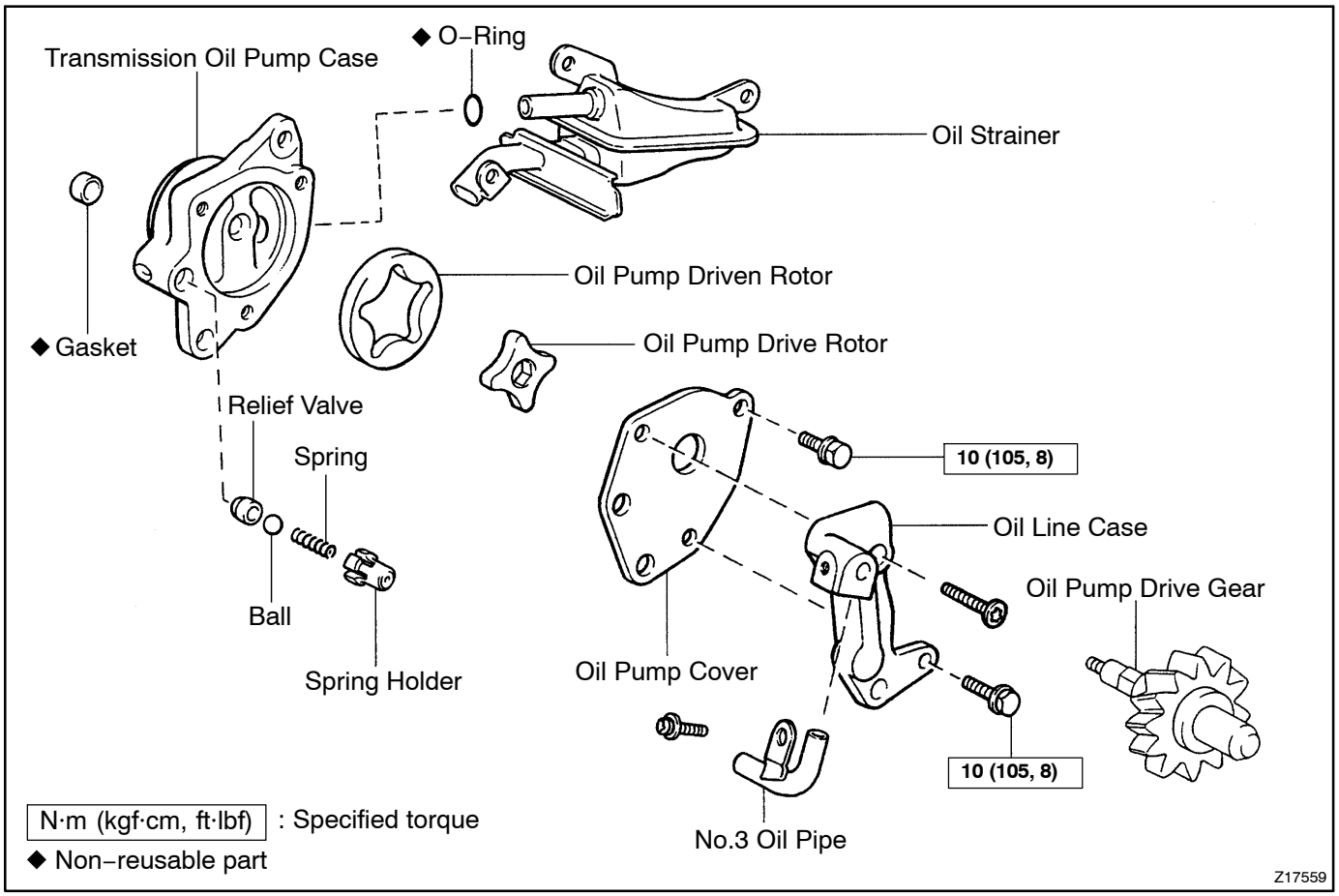

MX05Z–01

INSPECTION

(See page MX–45)

SHIFT AND SELECT LEVER SHAFT

COMPONENTS

MX02I–02

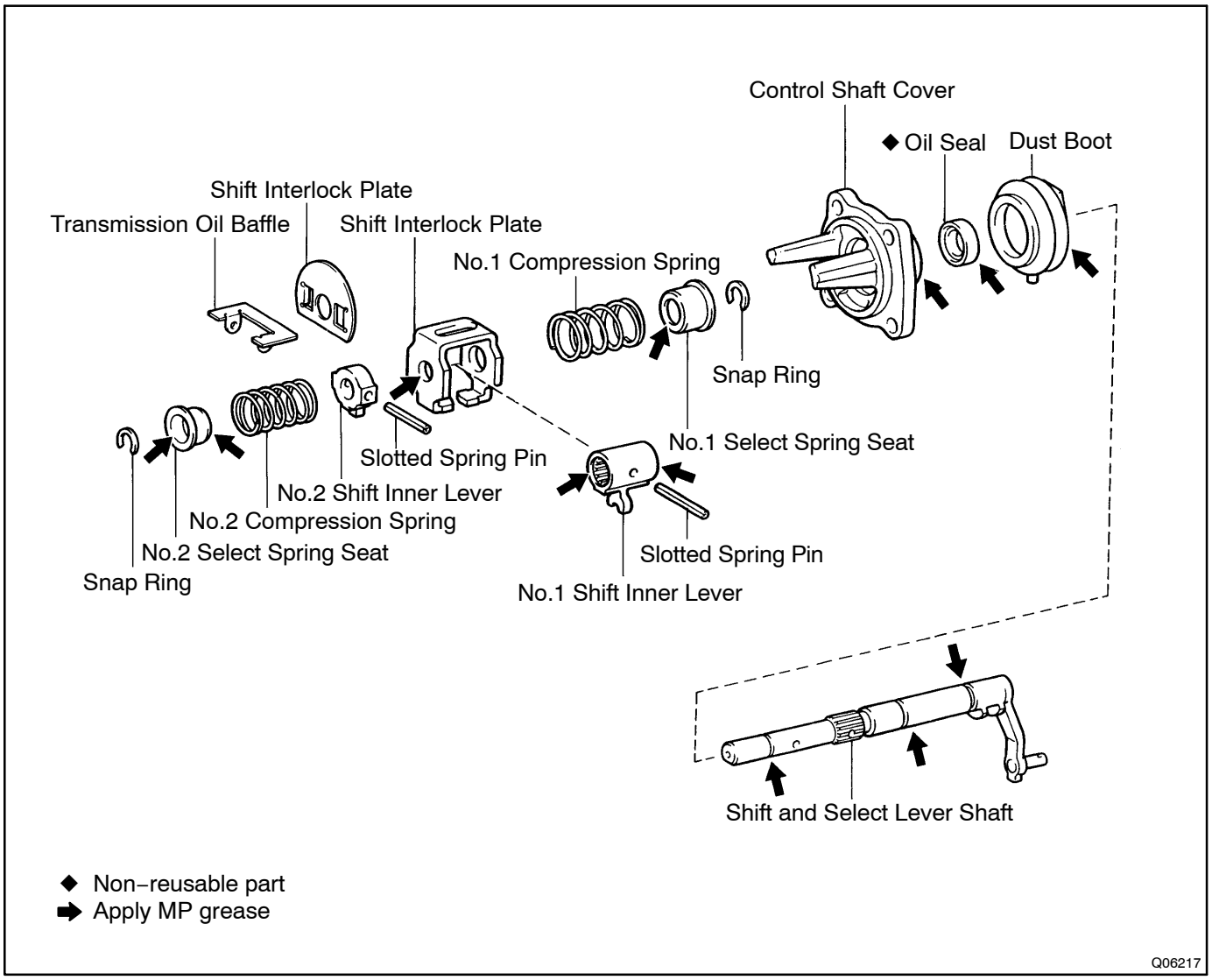

DIFFERENTIAL CASE (2WD)

COMPONENTS

MX060–01

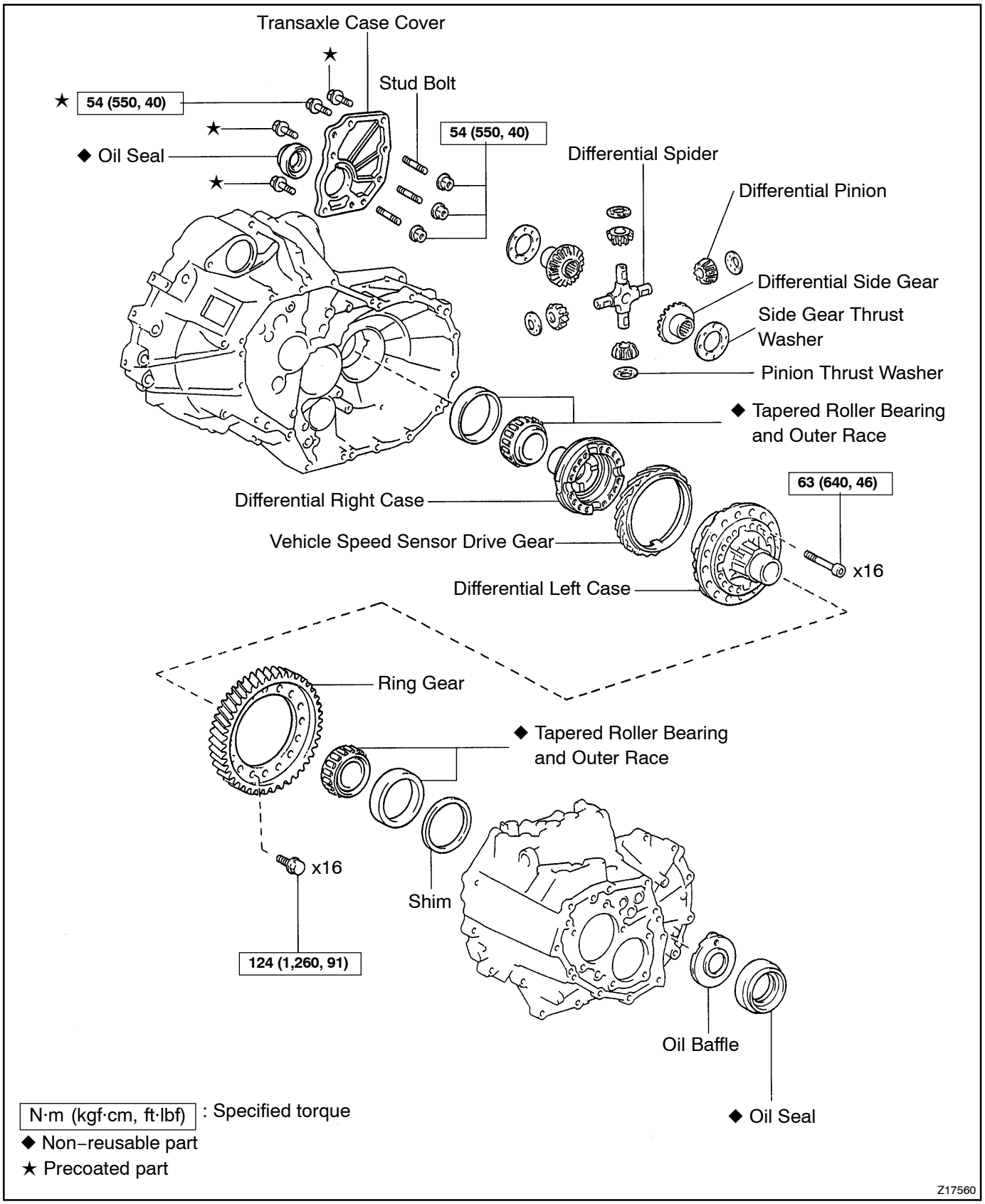

MX0DV–01

DISASSEMBLY

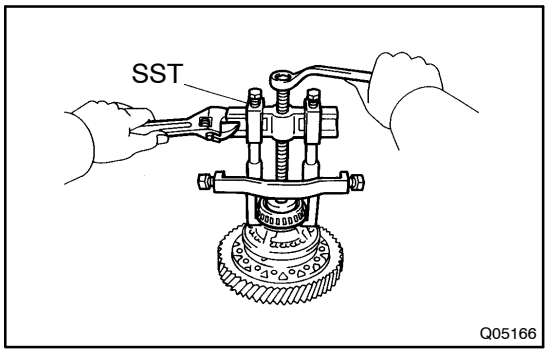

1. REMOVE TAPERED ROLLER BEARING

Using SST, remove the left and right bearings.

SST 09950–40010

2. REMOVE RING GEAR

(a) Place matchmarks on both the differential case and ring gear.

(b) Remove the 16 bolts.

(c) Using a plastic hammer, tap the ring gear and remove it.

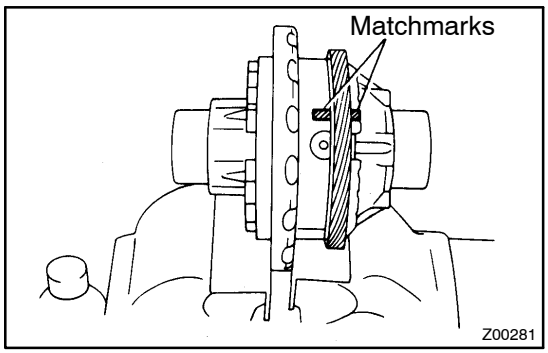

3. DISASSEMBLE DIFFERENTIAL CASE

(a) Place matchmarks on the differential right and left cases.

(b) Using a torx wrench (T50), remove the 16 torx screws.

(c) Using a plastic hammer, tap the differential left case.

(d) Remove the vehicle speed sensor drive gear from the differential right case.

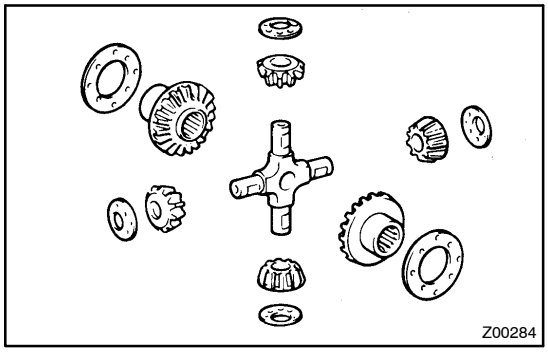

(e) Remove the 2 differential side gears, side gear thrust washers, 4 differential pinions and pinion thrust washers from the differential left case.

MX0DW–01

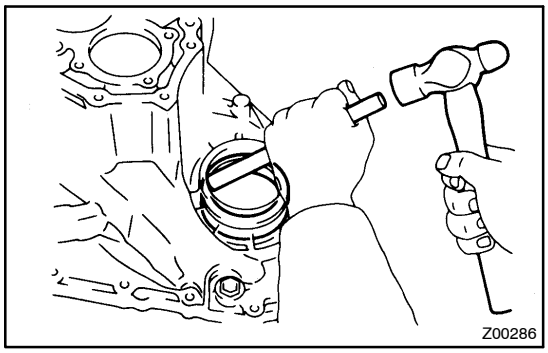

REPLACEMENT

1. Transmission Case Side:
REPLACE OIL SEAL AND TAPERED ROLLER BEARING OUTER RACE

(a) Using a screwdriver, remove the oil seal.
(b) Remove the oil baffle.
(c) Using a brass bar and hammer, drive out the bearing outer race lightly and evenly.
(d) Remove the shim.
(e) Install the shim (See page MX–49).

HINT:
First select and install a shim of lesser thickness than before.

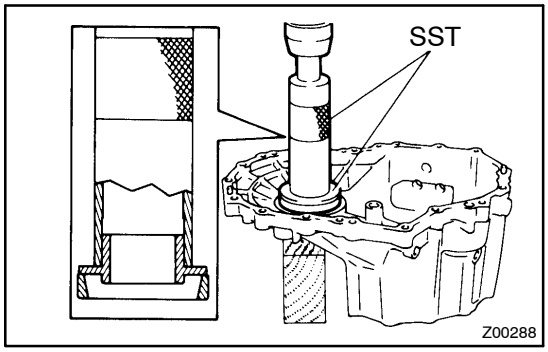

(f) Using SST and a press, install a new tapered roller bearing outer race.
SST 09316–60011 (09316–00011, 09316–00041)

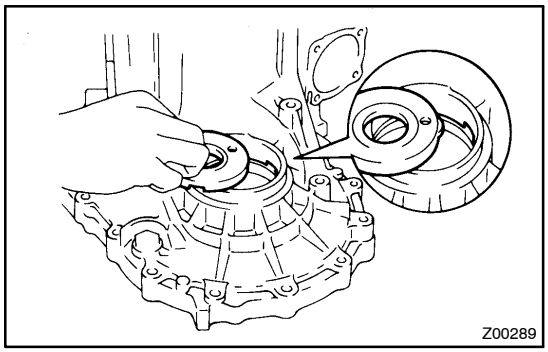

(g) Install the oil baffle.

HINT:
Install the oil baffle projection into the case side cutout.

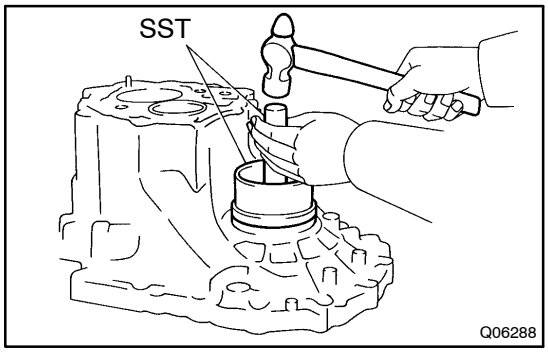

(h) Using SST and a hammer, drive in a new oil seal.
SST 09223–15020, 09950–70010 (09951–07150)
(i) Coat the lip of oil seal with MP grease.

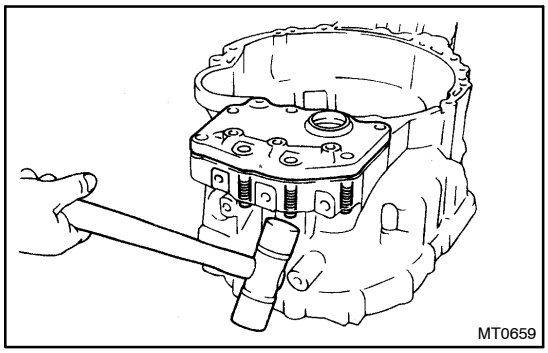

2. Transaxle Case Side:
REPLACE OIL SEAL AND TAPERED ROLLER BEARING OUTER RACE

(a) Remove the 4 bolts and 3 nuts.

(b) Using a plastic hammer, tap the stud bolt and remove the transaxle case cover.

(c) Using a screwdriver and hammer, drive out the oil seal from the transaxle case cover.

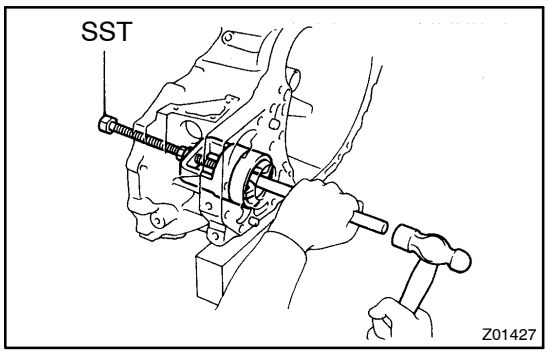

(d) Using SST, a brass bar and hammer, remove the tapered roller bearing outer race.
SST 09612–65014

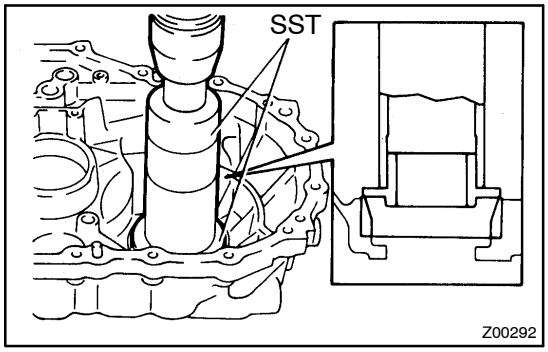

(e) Using SST and a press, install a new tapered roller bearing outer race.
SST 09316–60011 (09316–00011, 09316–00041)

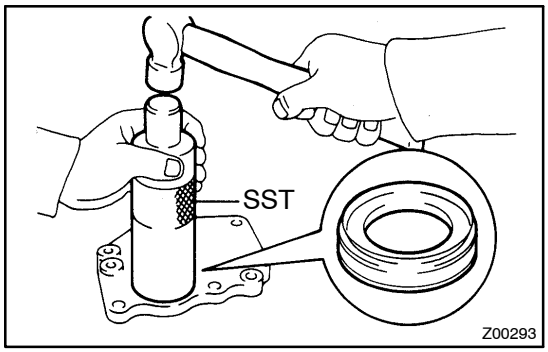

(f) Using SST and a hammer, drive in a new oil seal.
SST 09316–60011 (09316–00011)

(g) Coat the oil seal lip with MP grease.

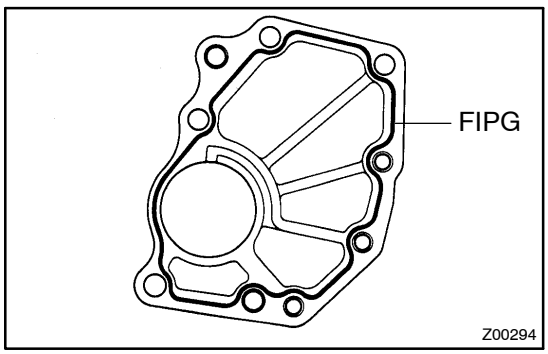

(h) Apply FIPG to the transaxle case cover, as shown.
FIPG:
Part No. 08826–00090, THREE BOND 1281 or equivalent

(i) Apply sealant to the bolt threads.
Sealant:
Part No.08833–00080, THREE BOND 1344, LOCTITE 242 or equivalent

(j) Install the stud bolt and cover to the transaxle case.

(k) Install and torque the 4 bolts and 3 nuts.
Torque: 54 N·m (550 kgf·cm, 40 ft·lbf)

MX062–03

REASSEMBLY

NOTICE:

When working with FIPG material, you must observe the following items.

- **Using a razor blade and gasket scraper, remove all the old FIPG material from the gasket surfaces.**
- **Thoroughly clean all components to remove all the loose material.**
- **Clean both sealing surfaces with a non–residue solvent.**
- **Apply FIPG in an approx. 1 mm (0.04 in.) wide bead along the sealing surface.**
- **Parts must be assembled within 10 minutes of application. Otherwise, the FIPG material must be removed and reapplied.**

HINT:

Coat all of the sliding and rotating surfaces with gear oil before reassembly.

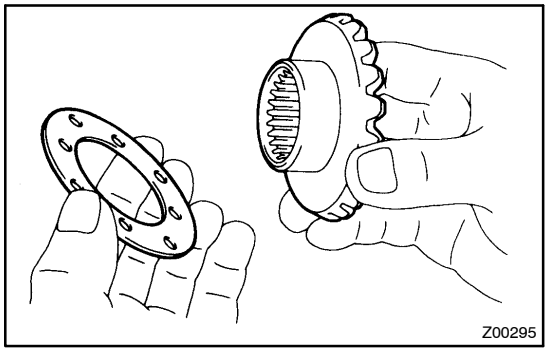

1. ASSEMBLE DIFFERENTIAL CASE

(a) Install the thrust washer to the side gear.

(b) Install the 4 pinions and thrust washers to the spider.

(c) Install the side gear and spider with the 4 pinions to the differential left case.

(d) Using a dial indicator, measure the backlash of the pinion gear while holding the differential left case.

Standard backlash:

0.05 – 0.20 mm (0.0020 – 0.0079 in.)

HINT:

Push the pinion gear and spider with the 4 pinions to the differential left case.

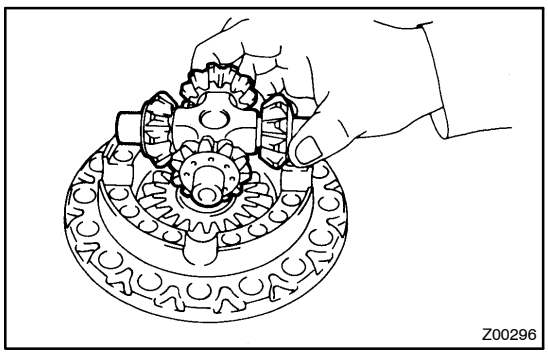

(e) Install the side gear and spider with the 4 pinions to the right side of the differential case. Check the side gear backlash.

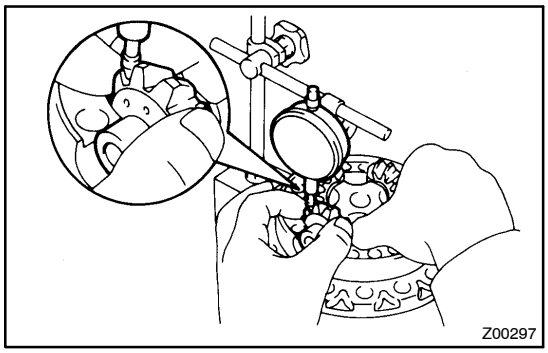

(f) Refer to the table below, select the thrust washer which will ensure that the backlash is within the specification. Try to select a washer of the same size.

Thickness mm (in.)	Thickness mm (in.)
0.80 (0.0315)	1.20 (0.0472)
0.90 (0.0354)	1.30 (0.0512)
1.00 (0.0394)	1.40 (0.0551)
1.10 (0.0433)	–

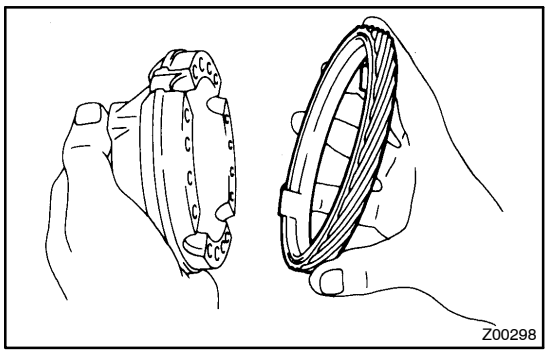

(g) Install the vehicle speed sensor drive gear.

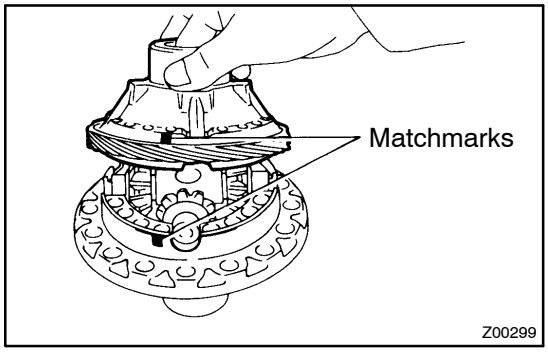

(h) Align the matchmarks on the differential cases.
(i) Using a plastic hammer, carefully tap the differential case to install it.
(j) Using a torx wrench (T50), install and torque the 16 torx screws.
Torque: 63 N·m (640 kgf·cm, 46 ft·lbf)

2. INSTALL RING GEAR

(a) Clean the contact surface of the differential case and the threads of the ring gear and differential case.
(b) Heat the ring gear to about 100˚C (212˚F) in boiling water.
(c) Carefully take the ring gear out of the water.
(d) Clean the contact surface of the ring gear with cleaning solvent.
(e) Quickly install the ring gear on the differential case.

HINT:
Align the matchmarks on the differential left case and contact the ring gear.

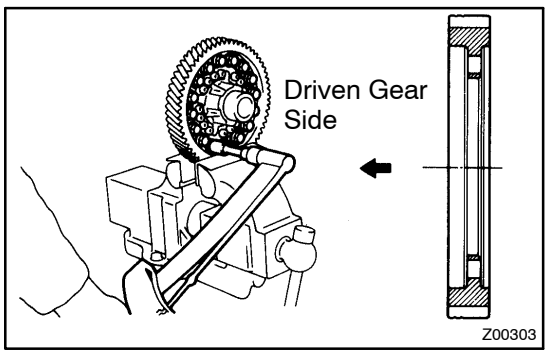

(f) Temporarily install the 16 bolts.

NOTICE:
The ring gear set bolts should not be tightened until the ring gear has cooled sufficiently.

(g) After the ring gear has cooled sufficiently, torque the ring gear set bolts.
Torque: 124 N·m (1,260 kgf·cm, 91 ft·lbf)

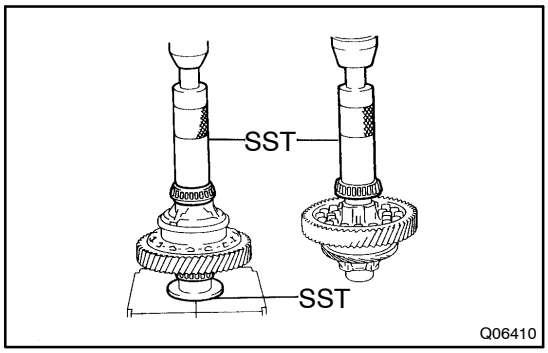

3. INSTALL TAPERED ROLLER BEARING

Using SST and a press, install new left and right bearings onto the differential case.

SST 09316–20011, 09316–60011 (09316–00011)

HINT:

Press the bearing on the ring side first.

4. ADJUST OUTPUT SHAFT ASSEMBLY PRELOAD (See page MX–27)

5. INSTALL DIFFERENTIAL CASE ASSEMBLY TO TRANSAXLE CASE

6. INSTALL OUTPUT SHAFT ASSEMBLY

Lift up the differential case and install the output shaft assembly.

7. INSTALL TRANSMISSION CASE

(a) Install the transmission case.

HINT:

If necessary, tap on the case with a plastic hammer.

(b) Install and torque the 17 bolts.

Torque: 29 N·m (300 kgf·cm 22 ft·lbf)

8. INSTALL OUTPUT SHAFT REAR TAPERED ROLLER BEARING OUTER RACE

Using a plastic hammer, drive in the outer race.

9. INSTALL SHIM (See page MX–27)

HINT:

Install the previously selected shim.

10. INSTALL REAR BEARING RETAINER

Using a torx wrench (T45), install and torque the 7 torx screws.

Torque: 42 N·m (430 kgf·cm, 31 ft·lbf)

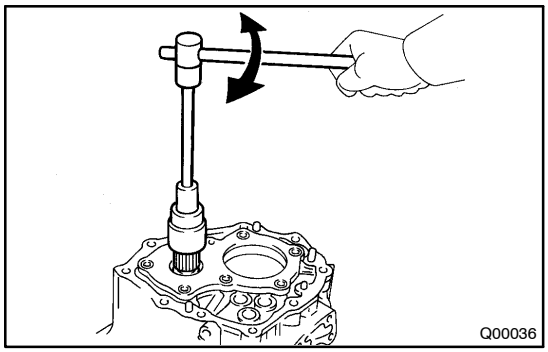

11. ADJUST DIFFERENTIAL CASE SIDE BEARING PRELOAD

(a) Install a new lock nut to the output shaft.

(b) Turn the output shaft right and left 2 or 3 times to allow the bearings to settle.

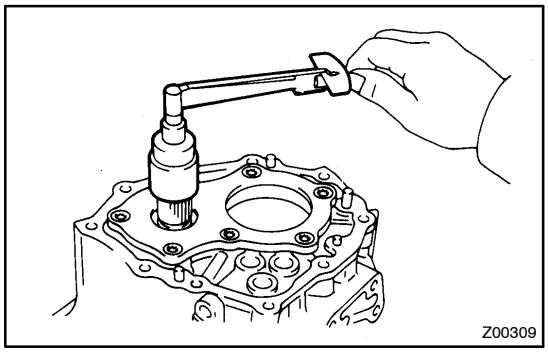

(c) Using a torque wrench, measure the preload.

Preload (at starting):

New bearing (Output shaft preload plus)

0.2 – 0.3 N·m (1.8 – 3.5 kgf·cm, 1.6 – 3.0 in.·lbf)

Reused bearing (Output shaft preload plus)

0.1 – 0.2 N·m (1.1 – 2.2 kgf·cm, 1.0 – 1.9 in.·lbf)

If the preload is not within the specification, select an appropriate adjusting shim.

HINT:
The total preload will change by about 0.1 – 0.2 N·m (1 – 2 kgf·cm, 0.9 – 1.7 in.·lbf) with each 0.05 mm change in adjusting shim thickness.

Mark	Thickness mm (in.)	Mark	Thickness mm (in.)
0	2.00 (0.0787)	9	2.45 (0.0965)
1	2.05 (0.0807)	A	2.50 (0.0984)
2	2.10 (0.0827)	B	2.55 (0.1004)
3	2.15 (0.0846)	C	2.60 (0.1024)
4	2.20 (0.0866)	D	2.65 (0.1043)
5	2.25 (0.0886)	E	2.70 (0.1063)
6	2.30 (0.0906)	F	2.75 (0.1083)
7	2.35 (0.0925)	G	2.80 (0.1102)
8	2.40 (0.0945)	H	2.85 (0.1122)

12. REMOVE REAR BEARING RETAINER

Using a torx wrench (T45), remove the 7 torx screws and rear bearing retainer.

13. REMOVE SHIM

14. REMOVE TRANSMISSION CASE

(a) Remove the 17 bolts.

(b) Using a plastic hammer, tap the transmission case.

15. REMOVE OUTPUT SHAFT ASSEMBLY

16. REMOVE DIFFERENTIAL CASE ASSEMBLY

DIFFERENTIAL CASE (4WD)

COMPONENTS

MX02J–02

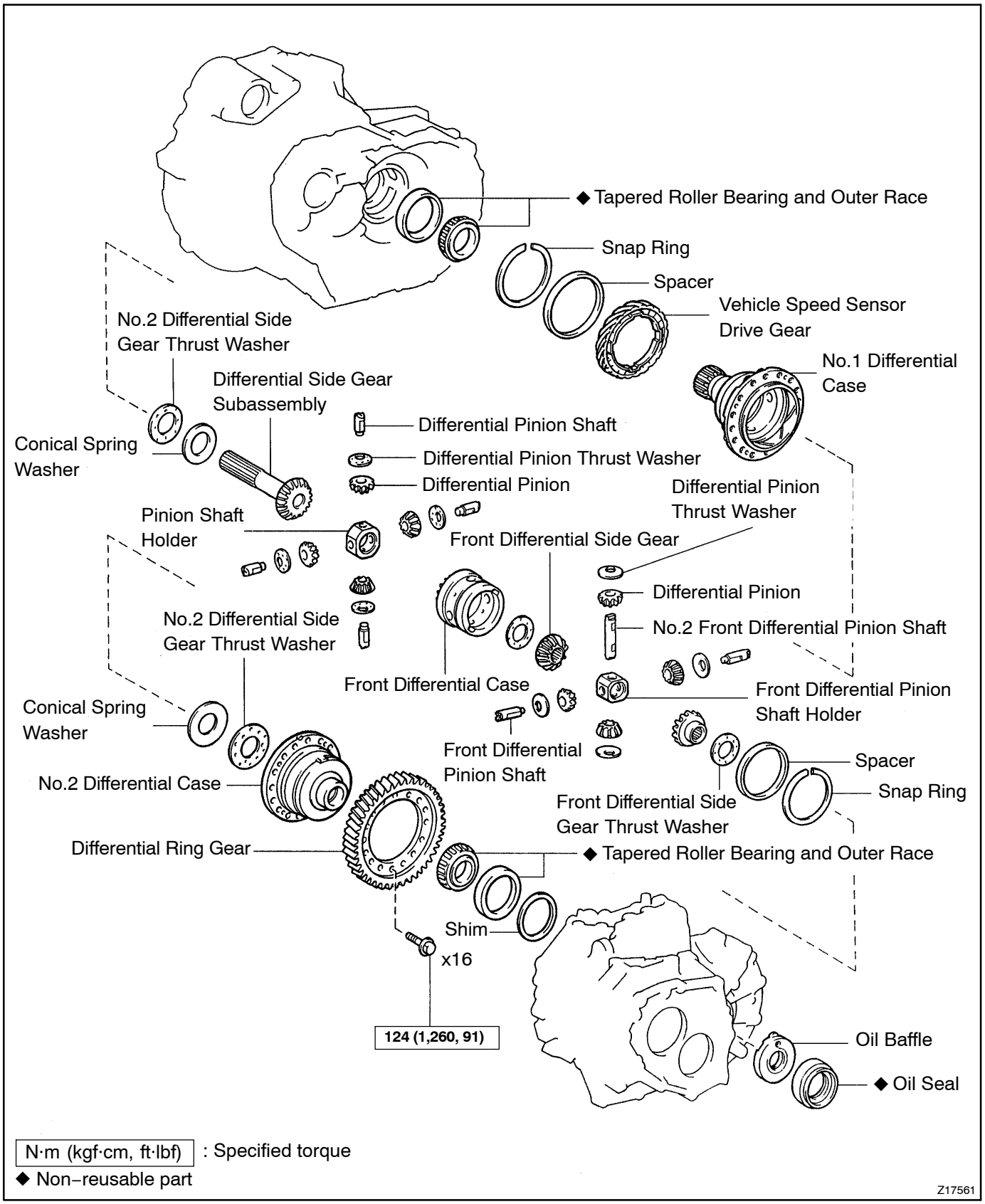

MX02K–03

DISASSEMBLY

1. REMOVE NO.2 DIFFERENTIAL CASE

(a) Remove the 16 bolts.

(b) Remove the No.2 differential case upward.

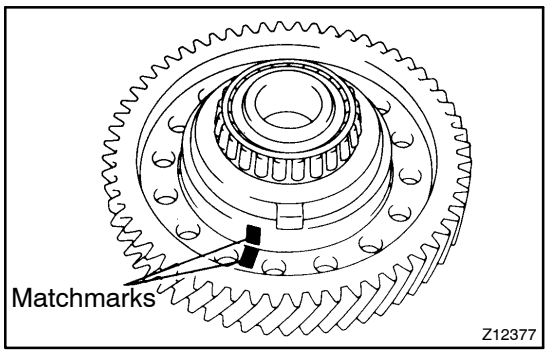

2. REMOVE DIFFERENTIAL RING GEAR

(a) Place matchmarks on both the differential case and ring gear.

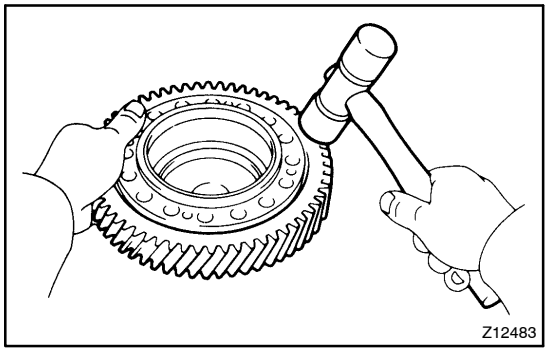

(b) Using a plastic hammer, tap out the ring gear.

3. REMOVE NO.2 DIFFERENTIAL SIDE GEAR THRUST WASHER AND CONICAL SPRING WASHER

4. REMOVE FRONT DIFFERENTIAL CASE ASSEMBLY

5. DISASSEMBLE FRONT DIFFERENTIAL CASE

(a) Remove the front differential side gear together with the thrust washer from the front differential case.

(b) Remove the front differential side gear thrust washer from the side gear.

(c) Using a snap ring expander, remove the snap ring and spacer.

HINT:

Before removing the shaft snap ring, wrap vinyl tape around the case to prevent from damage.

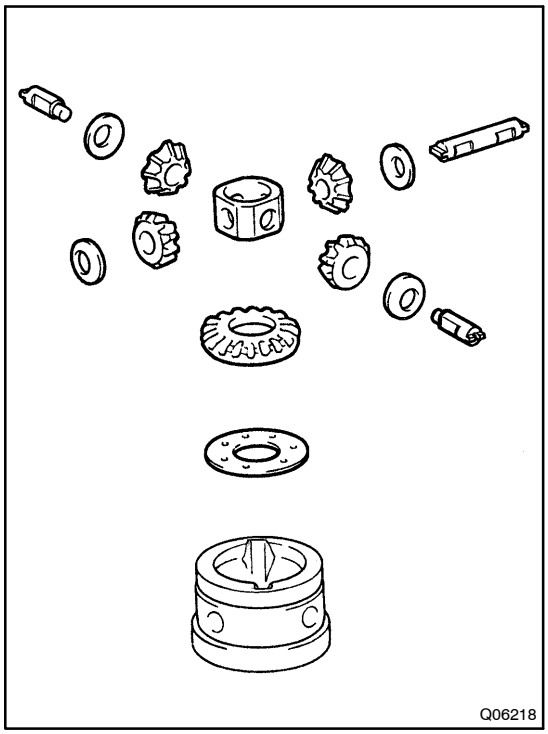

(d) Remove these parts from the front differential case:
- 2 front differential pinion shafts
- No.2 front differential pinion shaft
- Front differential pinion shaft holder
- 4 differential pinions
- 4 differential pinion thrust washers
- Front differential side gear
- Front differential side gear thrust washer

6. REMOVE VEHICLE SPEED SENSOR DRIVE GEAR

(a) Using a snap ring expander, remove the snap ring.

(b) Remove the spacer and vehicle speed sensor drive gear.

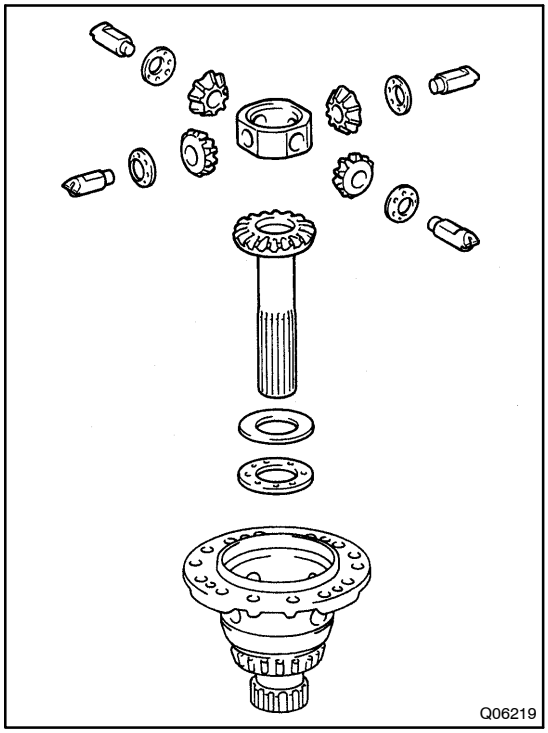

7. DISASSEMBLE NO.1 DIFFERENTIAL CASE

Remove these parts from the No.1 differential case:
- 4 differential pinion shafts
- Pinion shaft holder
- 4 differential pinions
- 4 differential pinion thrust washers
- Differential side gear subassembly
- Conical spring washer
- No.2 differential side gear thrust washer

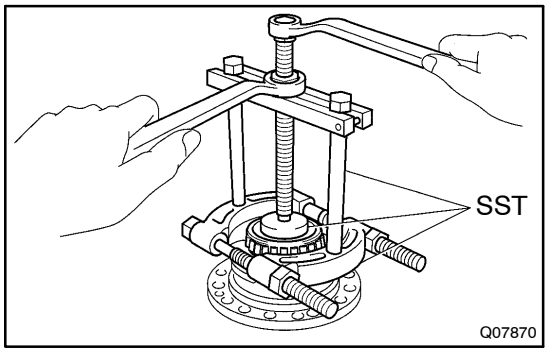

8. No.2 Differential Case Side:
REMOVE TAPERED ROLLER BEARING

Using SST, remove the tapered roller bearing.

SST 09950–00020, 09950–00030, 09950–60010 (09951–00520)

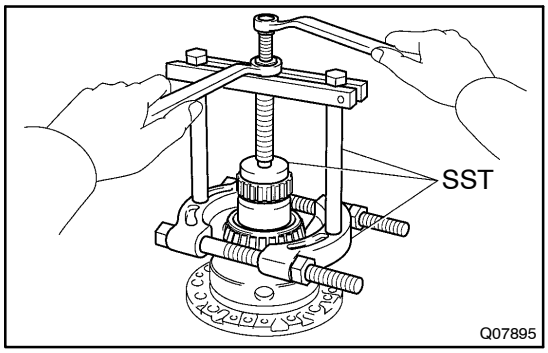

9. No.1 Differential Case Side:
REMOVE TAPERED ROLLER BEARING

Using SST, remove the tapered roller bearing.

SST 09950–00020, 09950–00030, 09950–60010 (09951–00450)

MX0DX–01

INSPECTION

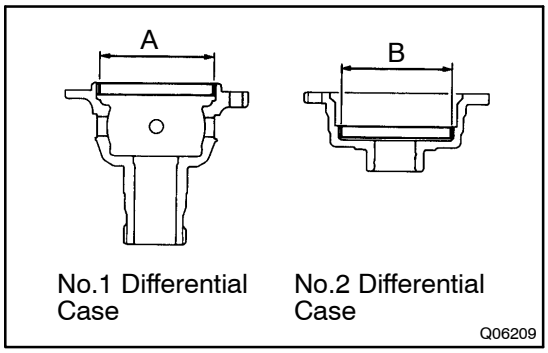

1. MEASURE NO.1 AND NO.2 DIFFERENTIAL CASES

Using a cylinder gauge, measure the inner diameter of the No.1 and No.2 differential cases bushing.

Standard diameter:
A: 104.000–104.035 mm (4.0945–4.0959 in.)
B: 97.000–97.035 mm (3.8189–3.8203 in.)
Maximum diameter:
A: 104.060 mm (4.0969 in.)
B: 97.060 mm (3.8213 in.)

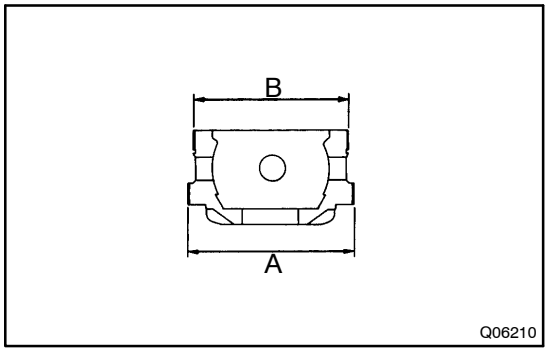

2. MEASURE FRONT DIFFERENTIAL CASE

Using a micrometer, measure the outer diameter of the front differential case.

Standard diameter:
A: 103.929–103.964 mm (4.0917–4.0931 in.)
B: 96.929–96.964 mm (3.8161–3.8175 in.)
Minimum diameter:
A: 103.850 mm (4.0887 in.)
B: 96.850 mm (3.8130 in.)

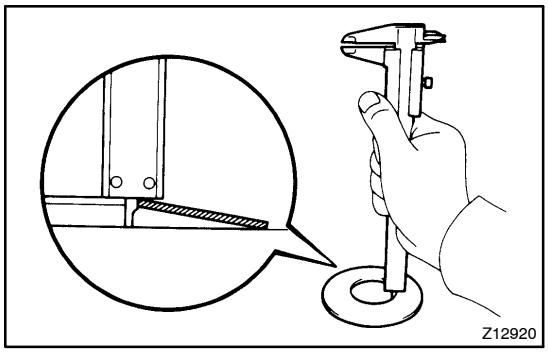

3. MEASURE CONICAL SPRING WASHER

Using calipers, measure the height of the conical spring washer.

Standard height:
No.2 differential case side
2.60–2.80 mm (0.102–0.110 in.)
No.1 differential case side
1.70–1.90 mm (0.067–0.075 in.)
Minimum height:
No.2 differential case side
2.50 mm (0.098 in.)
No.1 differential case side
1.60 mm (0.063 in.)

MX0DY–01

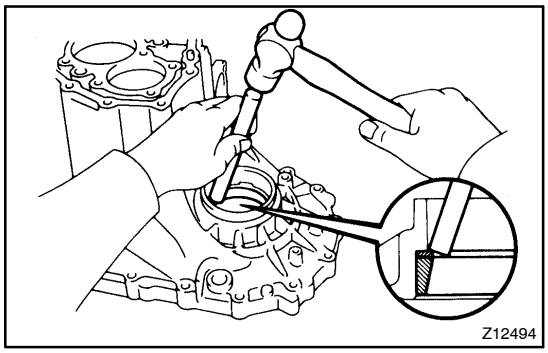

REPLACEMENT

1. Transmission Case Side:
REPLACE OIL SEAL AND TAPERED ROLLER BEARING OUTER RACE

(a) Using a screwdriver, remove the oil seal.
(b) Remove the transmission oil baffle.
(c) Using a brass bar and hammer, drive out the bearing outer race lightly and evenly.
(d) Remove the adjust shim.
(e) Install the adjust shim.
(See page MX–65)

HINT:
First select and install a shim of less thickness than before.

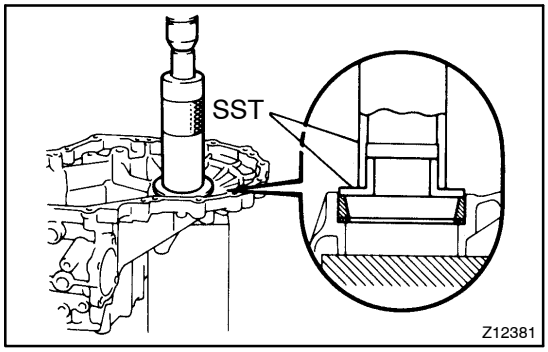

(f) Using SST and a press, install the tapered roller bearing outer race.
SST 09316–60011 (09316–00011, 09316–00041)

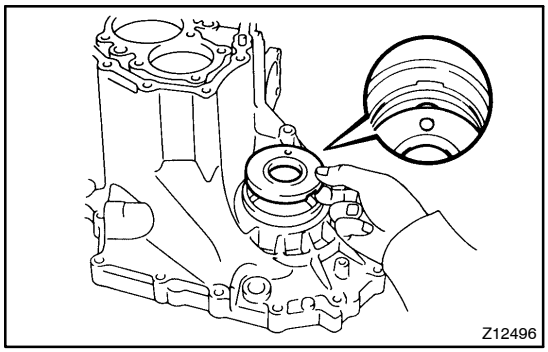

(g) Install the transmission oil baffle.
HINT:
Install the transmission oil baffle projection into the case side cutout.

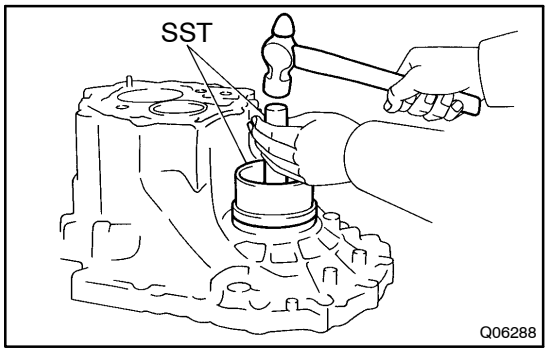

(h) Using SST, drive in a new oil seal.
SST 09223–15020, 09950–70010 (09951–07150)
(i) Coat the lip of the oil seal with MP grease.

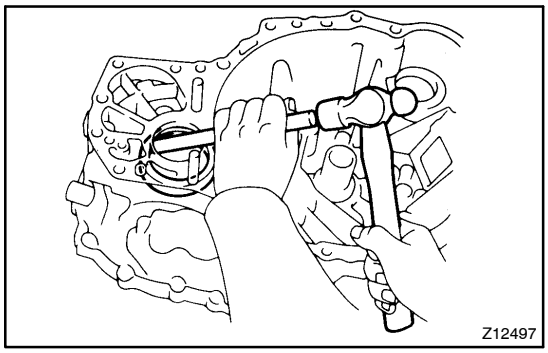

2. Transaxle Case Side:
REPLACE TAPERED ROLLER BEARING OUTER RACE

(a) Using a brass bar and hammer, drive out the bearing outer race lightly and evenly through the cutout portion on the transaxle case.

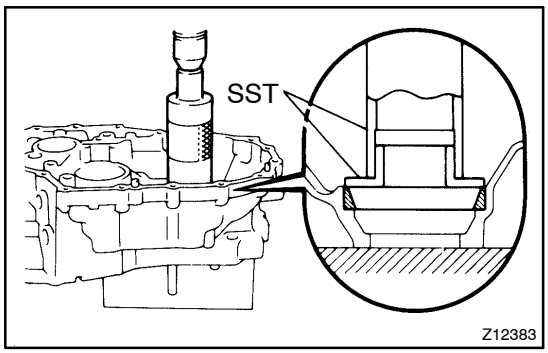

(b) Using SST and a press, install the tapered roller bearing outer race.
SST 09316–60011 (09316–00011, 09316–00041)

MX02M–03

REASSEMBLY

HINT:
Coat all of the sliding and rotating surfaces with gear oil before reassembly.

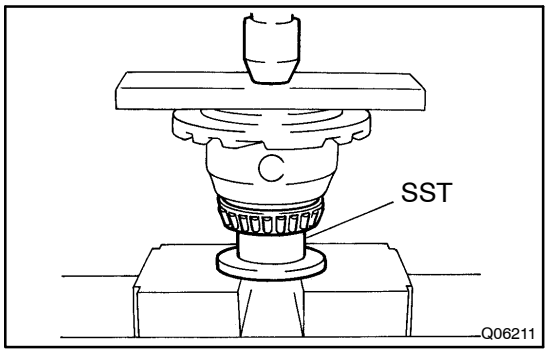

1. No.1 Differential Case Side:
INSTALL TAPERED ROLLER BEARING

Using SST, install a new tapered roller bearing.
SST 09316–20011

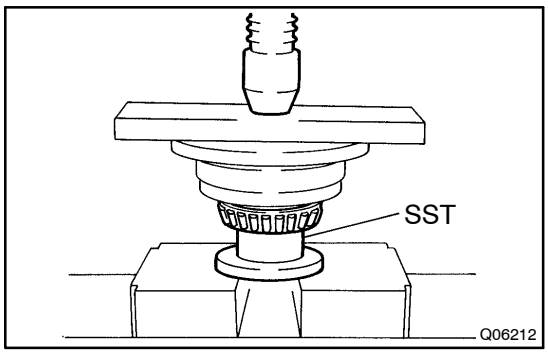

2. No.2 Differential Case Side:
INSTALL TAPERED ROLLER BEARING

Using SST, install a new tapered roller bearing.
SST 09316–20011

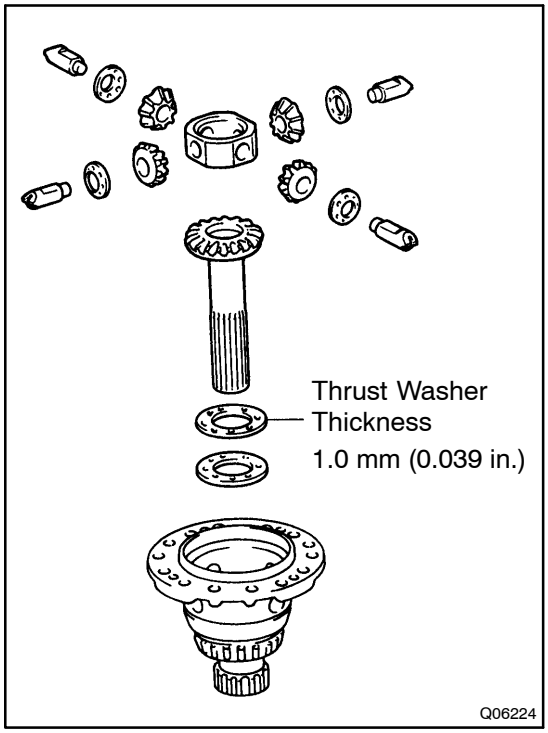

3. CHECK AND ADJUST CENTER DIFFERENTIAL SIDE GEAR BACKLASH (DIFFERENTIAL SIDE GEAR SUB-ASSEMBLY SIDE)

(a) Install these parts to the No.1 differential case:
- No.2 differential side gear thrust washer
- Temporarily install a 1.0 mm (0.039 in.) thick thrust washer
- Differential side gear subassembly
- Pinion shaft holder
- 4 differential pinions
- 4 differential pinion thrust washers
- 4 differential pinion shafts

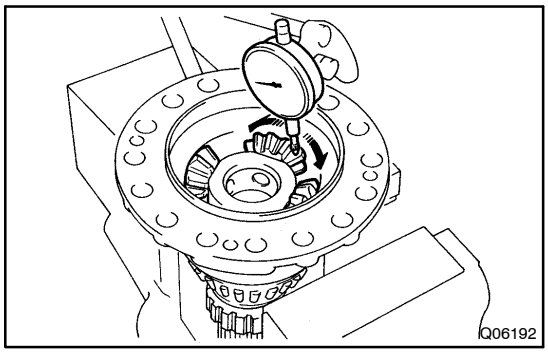

(b) Using a dial indicator, measure the backlash of one pinion gear while holding the differential side gear sub assembly toward the case.

Standard backlash: 0.05–0.20 mm (0.0020–0.0079 in.)

HINT:

Push the pinion gear of the right side of the differential case.

If the backlash is out of the specification, refer to the table below and select a thrust washer which will ensure that the backlash is within the specification.

Mark	Thickness mm (in.)	Mark	Thickness mm (in.)
–	0.80 (0.0315)	–	1.15 (0.0453)
–	0.85 (0.0335)	–	1.20 (0.0472)
–	0.90 (0.0354)	–	1.25 (0.0492)
–	0.95 (0.0374)	–	1.30 (0.0512)
–	1.00 (0.0394)	–	1.35 (0.0531)
–	1.05 (0.0413)	–	1.40 (0.0551)
–	1.10 (0.0433)	–	–

(c) Disassemble the No.1 differential case.

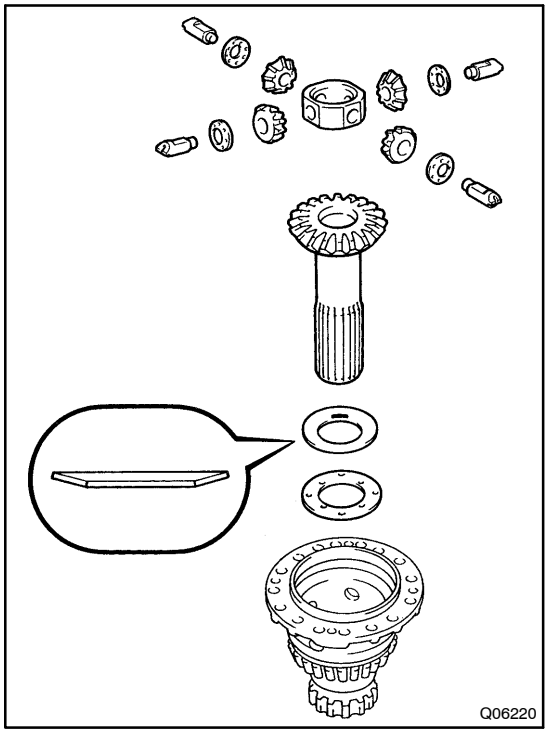

4. ASSEMBLE NO.1 DIFFERENTIAL CASE

Install these parts to the No.1 differential case:

- No.2 side gear thrust washer (previously selected)
- Conical spring washer
- Differential side gear subassembly
- Pinion shaft holder
- 4 differential pinions
- 4 differential pinion thrust washers
- 4 differential pinion shafts

HINT:

Ensure that the conical spring washer is installed correctly.

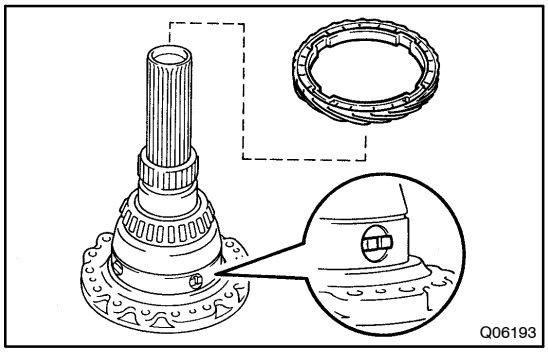

5. INSTALL VEHICLE SPEED SENSOR DRIVE GEAR

(a) Install the vehicle speed sensor drive gear and spacer.

(b) Using a snap ring expander, install the snap ring.

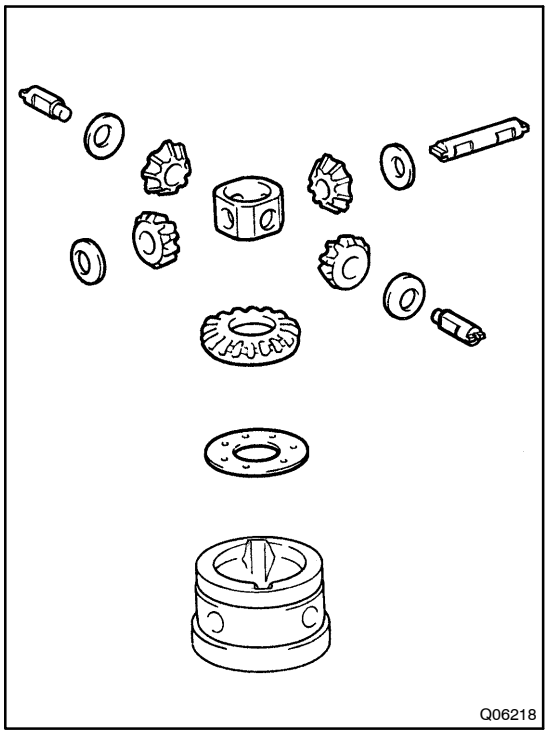

6. CHECK AND ADJUST FRONT SIDE GEAR BACKLASH (FRONT DIFFERENTIAL CASE SIDE)

(a) Install these parts to the front differential case:
- Front differential side gear thrust washer
- Front differential side gear
- Front differential pinion shaft holder
- 4 differential pinions
- 4 differential pinion thrust washers
- No.2 front differential pinion shaft
- 2 front differential pinion shafts

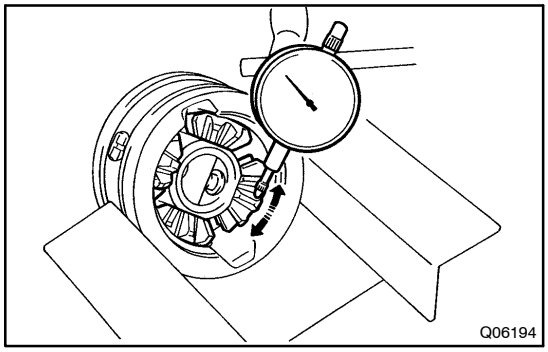

(b) Using a dial indicator, measure the backlash of one pinion gear while holding the front differential side gear toward the case.

Standard backlash: 0.05–0.20 mm (0.0020–0.0079 in.)

NOTICE:

Do not mount the surface of front differential case which contacts with bushing in a vise.

If the backlash is out of the specification, refer to the table below and select a thrust washer which will ensure that the backlash is within the specification.

Mark	Thickness mm (in.)
B	1.00 (0.0394)
C	1.05 (0.0413)
D	1.10 (0.0433)
E	1.15 (0.0453)
F	1.20 (0.0472)
G	1.25 (0.0492)

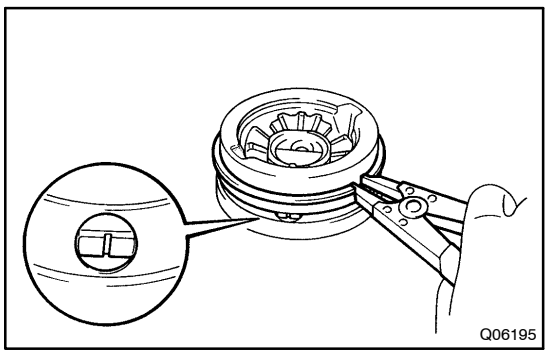

7. INSTALL SNAP RING

(a) Install the spacer.

(b) Using a snap ring expander, install the shaft snap ring, as shown.

HINT:

Before installing the shaft snap ring, wrap vinyl tape around the case to avoid damaging the case.

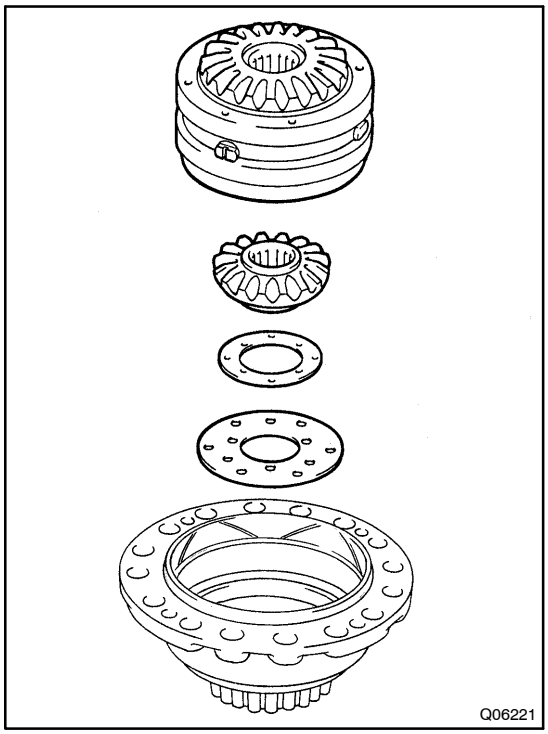

8. CHECK AND ADJUST FRONT DIFFERENTIAL SIDE GEAR THRUST CLEARANCE (NO.2 DIFFERENTIAL CASE SIDE)

(a) Install these parts to the No.2 differential case:
- No.2 differential side gear thrust washer
- Front differential side gear thrust washer
- Front differential side gear
- Front differential case assembly

HINT:
Engage the front differential side gear and pinion gear of the front differential case.

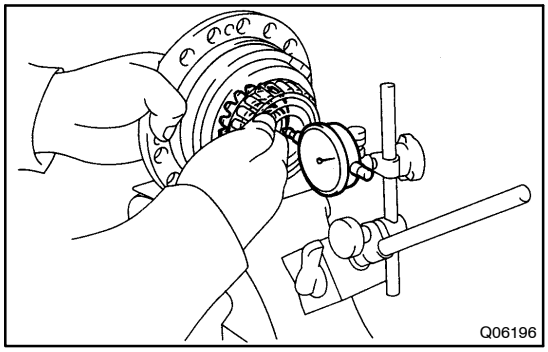

(b) Using a dial indicator, measure the thrust clearance of the front differential side gear while holding the front differential case on the No.2 differential case side.
Standard clearance: 0.17–0.26 mm (0.007–0.010 in.)

HINT:
Turning the side gear a bit, check the maximum value of the thrust clearance.
If the backlash is out of the specification, refer to the table below and select a thrust washer which will ensure that the backlash is within the specification.

Mark	Thickness mm (in.)	Mark	Thickness mm (in.)
A	0.95 (0.0374)	F	1.20 (0.0472)
B	1.00 (0.0394)	G	1.25 (0.0492)
C	1.05 (0.0413)	H	1.30 (0.0512)
D	1.10 (0.0433)	J	1.35 (0.0531)
E	1.15 (0.0453)	K	1.40 (0.0551)

(c) Disassemble the No.2 differential case.

9. INSTALL RING GEAR

(a) Clean the contact surface of the differential left case.
(b) Heat the ring gear to about 100°C (212°F) in boiling water.
(c) Carefully take the ring gear out of the water.
(d) Clean the contact surface of the ring gear with cleaning solvent.
(e) Quickly install the ring gear on the differential case.

HINT:
Align the matchmarks on the No.2 differential case and connect the ring gear.

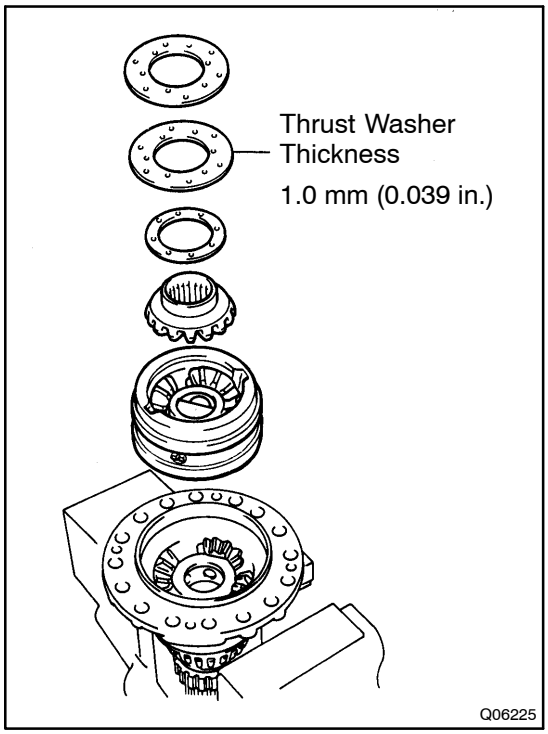

10. CHECK AND ADJUST CENTER DIFFERENTIAL SIDE GEAR THRUST CLEARANCE (FRONT DIFFERENTIAL CASE SIDE)

(a) Install these parts:
- Front differential case assembly
- Front differential side gear
- Front differential side gear thrust washer
- Temporarily install a 1.0 mm (0.039 in.) thick No.2 differential side gear thrust washer
- No.2 differential side gear thrust washer

HINT:
- Engage the front differential side gear and pinion gear of the No.1 differential case.
- The temporarily installed a 1.0 mm (0.039 in.) thick No.2 side gear thrust washer is used for reference when checking backlash.

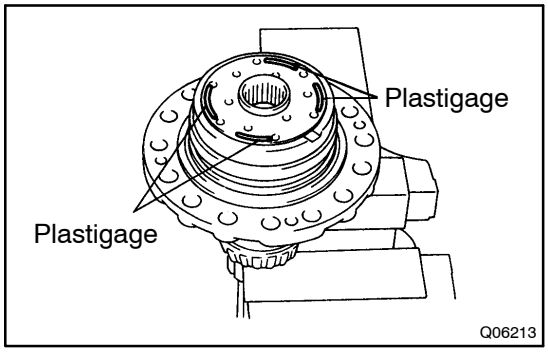

(b) Clean the contact surface of the No.2 side gear thrust washer and No.2 differential case.

(c) Apply plastigage on the No.2 side gear thrust washer, as shown.

HINT:
Apply the plastigage on the No.2 side gear thrust washer in the 4 positions directly above the pinion shafts in the No.1 differential case's position.

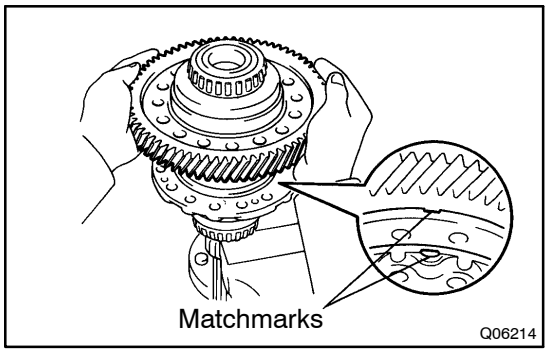

(d) Install the No.2 differential case downward.

HINT:
Align the matchmarks on the No.1 differential case and contact the No.2 differential case.

(e) Install and torque the 16 bolts.
Torque: 124 N·m (1,260 kgf·cm, 91 ft·lbf)

(f) Remove the 16 bolts and No.2 differential case upward.

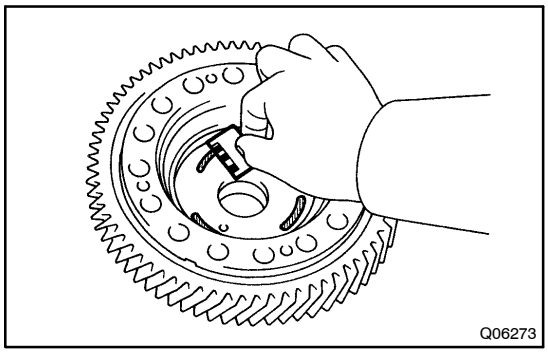

(g) Measure the Plastigage at its widest point.
Standard clearance: 0.16–0.25 mm (0.006–0.010 in.)

(h) Refer to the table below, select the No.2 thrust washer which will ensure that the backlash is within the specification. Try to select a washer of the same size.

Mark	Thickness mm (in.)	Mark	Thickness mm (in.)
–	0.80 (0.0315)	–	1.15 (0.0453)
–	0.85 (0.0335)	–	1.20 (0.0472)
–	0.90 (0.0354)	–	1.25 (0.0492)
–	0.95 (0.0374)	–	1.30 (0.0512)
–	1.00 (0.0394)	–	1.35 (0.0531)
–	1.05 (0.0413)	–	1.40 (0.0551)
–	1.10 (0.0433)	–	–

(i) Remove the No.2 differential case, No.2 side gear thrust washer and (temporarily install) a 1.0 mm (0.039 in.) thick No.2 side gear thrust washer.

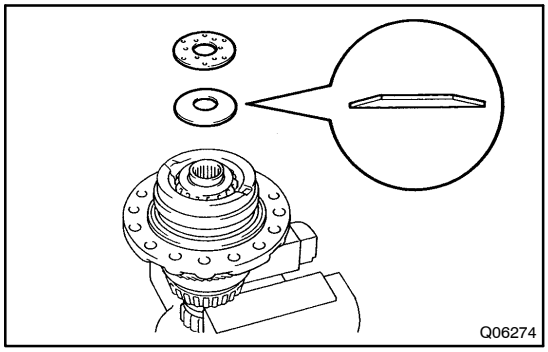

11. ASSEMBLE NO.2 DIFFERENTIAL CASE

(a) Install the No.2 side gear thrust washer (previously selected) and conical spring washer to the front differential case.

HINT:
Be careful not to mistake the direction of the conical spring washer.

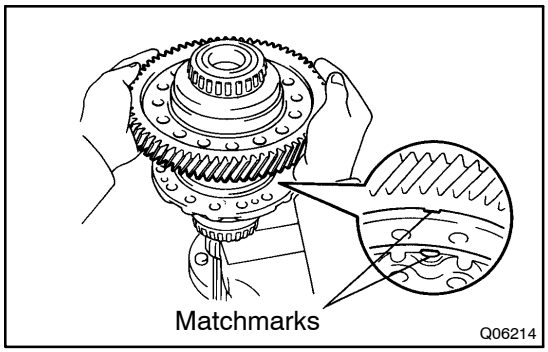

(b) Install the No.2 differential case to the No.1 differential case.

HINT:
Align the matchmarks on the No.2 differential case and connect the No.1 differential case.

(c) Install and torque the 16 bolts.
Torque: 124 N·m (1,260 kgf·cm, 91 ft·lbf)

12. ADJUST DIFFERENTIAL CASE SIDE BEARING PRELOAD

(a) Install the differential case assembly to the transaxle case.

(b) Install the transmission case.

HINT:
If necessary, tap on the transmission case with a plastic hammer.

(c) Install and torque the 17 bolts.
Torque: 29 N·m (300 kgf·cm, 22 ft·lbf)

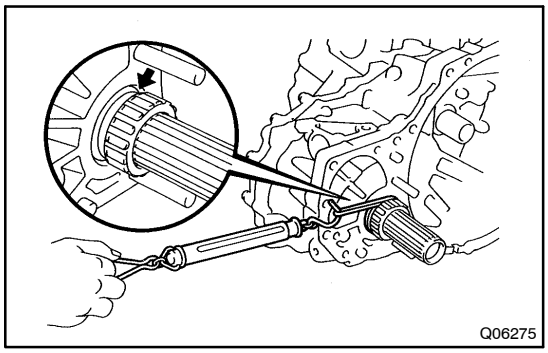

(d) Turn the differential case assembly right and left 2 or 3 times to allow the bearings to settle.

(e) Using a spring tension gauge, measure the preload.
Preload (at starting):
New bearing (Output shaft preload plus)
31–61 N (3.2–6.3 kgf, 7–14 lbf)
Reused bearing (Output shaft preload plus)
20–39 N (2.0–4.0 kgf, 4–9 lbf)

If the preload is not within the specification, select an appropriate adjusting shim.

HINT:
The total preload will change about 5.1 N (0.5 kgf, 1.1 lbf) for every 0.05 mm change in adjusting shim thickness.

Mark	Thickness mm (in.)	Mark	Thickness mm (in.)
0	2.00 (0.0787)	9	2.45 (0.0965)
1	2.05 (0.0807)	A	2.50 (0.0984)
2	2.10 (0.0827)	B	2.55 (0.1004)
3	2.15 (0.0846)	C	2.60 (0.1024)
4	2.20 (0.0866)	D	2.65 (0.1043)
5	2.25 (0.0886)	E	2.70 (0.1063)
6	2.30 (0.0906)	F	2.75 (0.1083)
7	2.35 (0.0925)	G	2.80 (0.1102)
8	2.40 (0.0945)	H	2.85 (0.1122)

(f) Remove the 17 bolts, tap the transmission case with a plastic hammer and remove it.

(g) Remove the differential case assembly.

DIFFERENTIAL LOCKING SYSTEM (4WD)

MX063–02

LOCATION

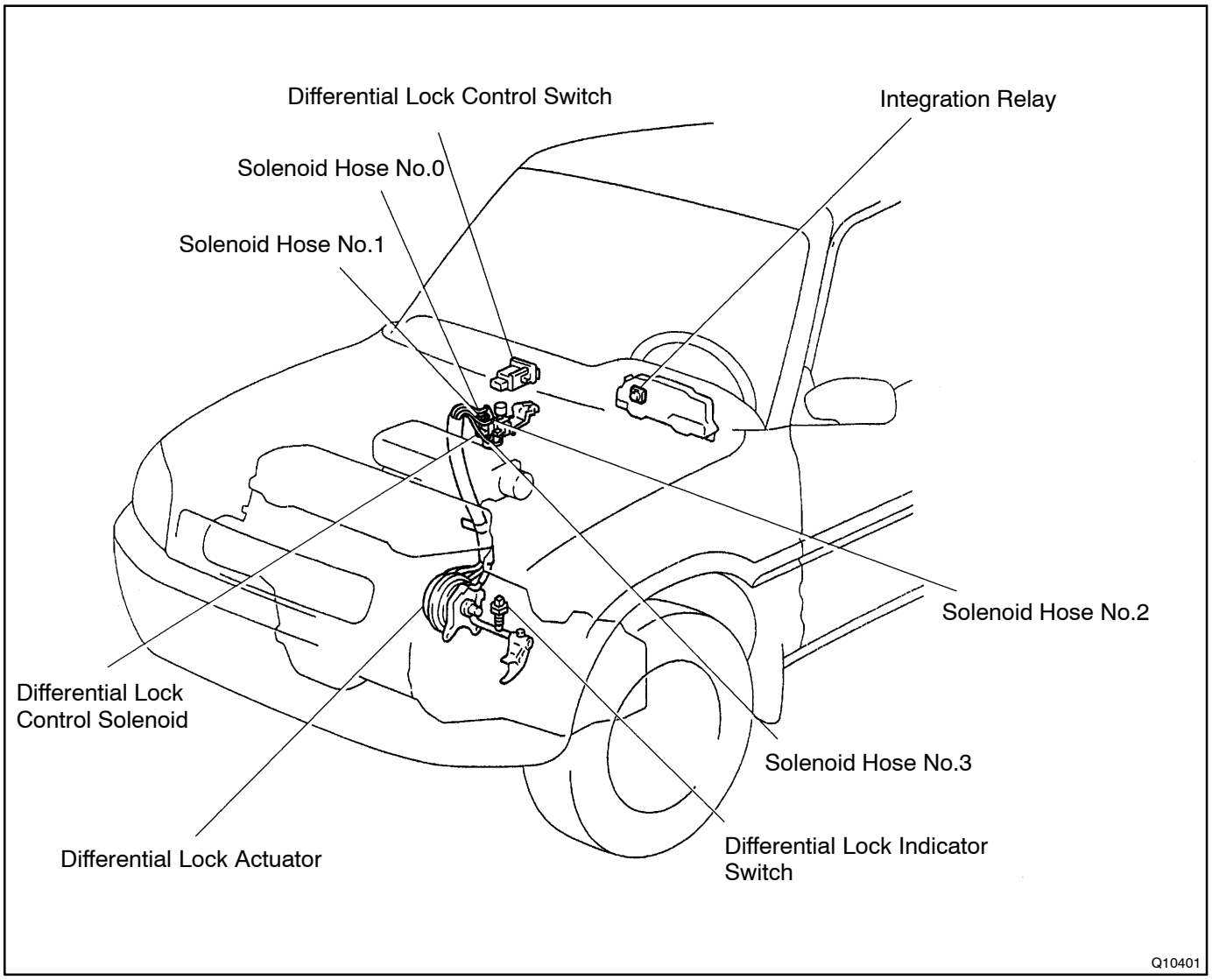

MX0C0–02

INSPECTION

1. INSPECT CENTER DIFFERENTIAL LOCK SYSTEM

(a) Inspect the differential lock operation.
  (1) Use a lift or jack stand to lift up the vehicle so that all 4 tires can rotate.
  (2) Apply the parking brake and start the engine.
  (3) Set the center differential lock switch to ON.
  (4) Depress the clutch pedal and shift into the 2nd gear.
  (5) With the engine idling, gradually engage the clutch and check that the engine stops.
  (6) With the parking brake and engine ON, turn the center differential lock switch OFF.
  (7) Depress the clutch pedal and shift into the 2nd gear.
  (8) With the engine idling, gradually engage the clutch and check that the front wheels rotate.

HINT:
This inspection must be done when the engine is idling.

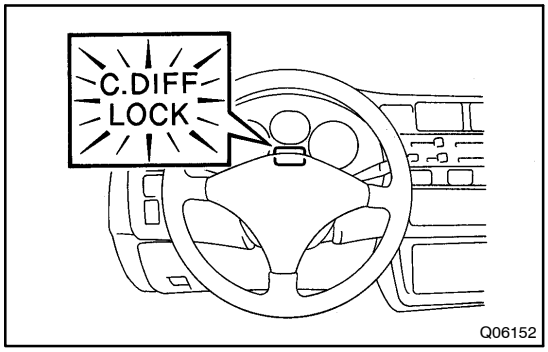

(b) Inspect the center differential lock indicator operation.
  (1) Turn the ignition switch ON.
  (2) Check that when the differential lock switch is turned ON and OFF, the differential lock indicator lamp lights up and goes off, respectively.

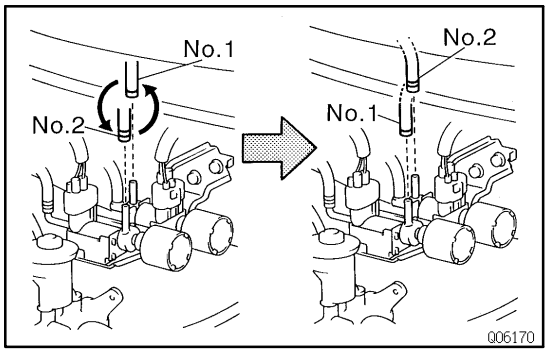

(c) Inspect the center differential lock warning buzzer operation.
  (1) Start the engine and check that the differential lock warning buzzer does not sound when the center differential lock switch is turned ON.
  (2) Interchange the solenoid hose No.1 and solenoid hose No.2 between the differential lock control solenoid No.1 and No.2 and the differential lock actuator. And check that the differential lock warning buzzer sounds when the differential lock switch is turned OFF.
  (3) Return the solenoid hose No.1 and solenoid hose No.2 to their original location, and check that the differential lock warning buzzer stops.

HINT:
- Do the inspection with the vehicle stopped.
- After finishing the inspection, inspect the differential lock control solenoid hoses.

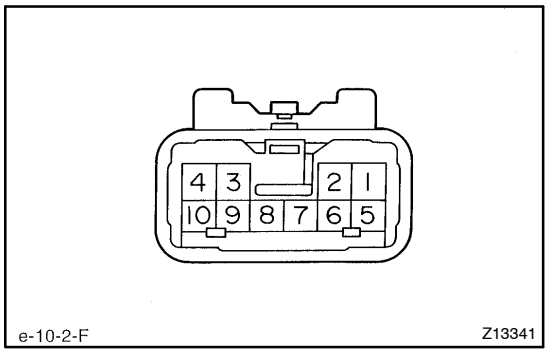

2. INSPECT DIFFERENTIAL LOCK CONTROL COMPONENTS

(a) Inspect the differential lock control switch continuity.

Switch Position	Tester Connection	Specified Condition
OFF (Free)	7–10	Continuity
ON (Lock)	7–8	Continuity
Illumination circuit	2–3	Continuity

If continuity is not as specified, check the bulb or replace the switch.

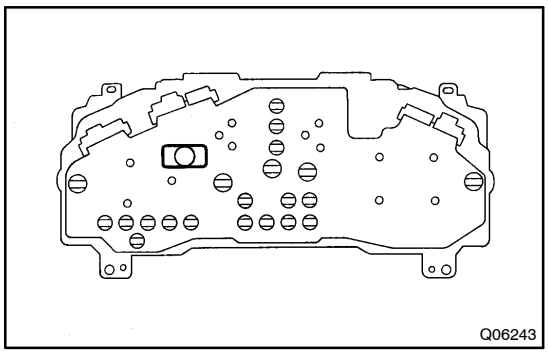

(b) Inspect the differential lock warning buzzer.

(1) Remove the combination meter, then remove the differential lock warning buzzer.

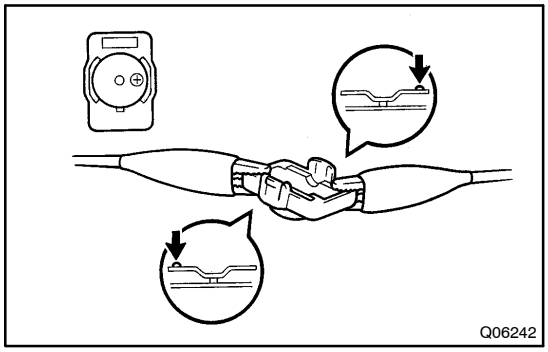

(2) Taking care to match the polarity of the buzzer, apply battery positive voltage to the terminals of the buzzer and check that the buzzer sounds.

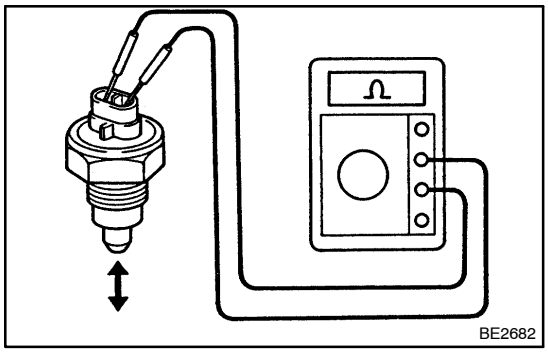

(c) Inspect the differential lock indicator switch continuity.

Switch Position	Tester Connection	Specified Condition
Free	1 – 2	No continuity
Push	1 – 2	Continuity

If continuity is not as specified, replace the switch.

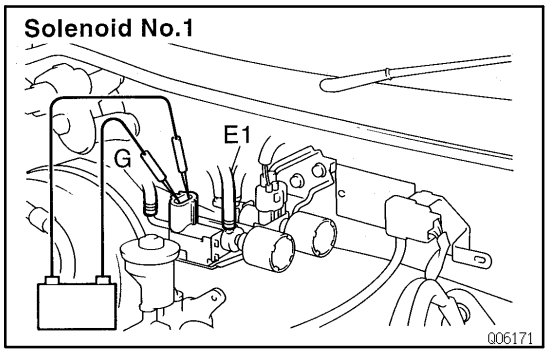

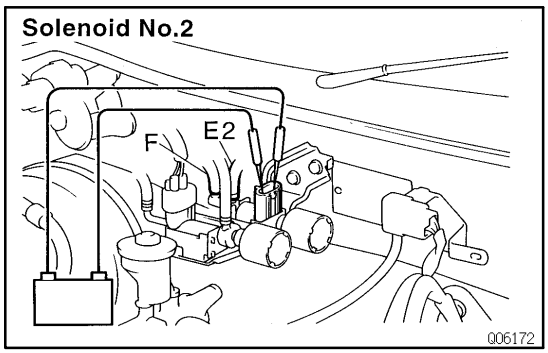

3. INSPECT DIFFERENTIAL LOCK CONTROL SOLENOID

Inspect the differential lock control solenoid.

(1) Disconnect the connector from the solenoid No.1 and No.2.

(2) Check continuity to each port when battery positive voltage is applied and not applied to the connector terminals of the solenoid No.1 and No.2.

Solenoid No.1

Condition	Port
Battery positive voltage	E1 – Air
No voltage	G – E1

Solenoid No.2

Condition	Port
Battery positive voltage	F – E2
No voltage	E2 – Air

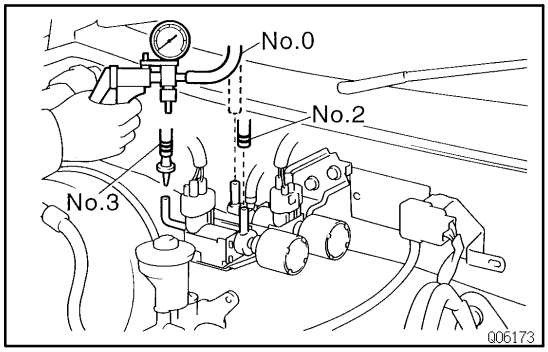

4. INSPECT TRANSFER VACUUM ACTUATOR

(a) Vacuum Tank:

Inspect the transfer vacuum tank.

(1) Disconnect the solenoid hose No.0, No.2 and No.3 from the solenoid.

(2) Fill in the No.3 hose with a plug.

(3) Check that the indicator needle remains steady when a vacuum of 500 mmHg (19.685 in.Hg) is applied to the hose No.0.

Standard:

Indicator falls 45 mmHg (1.772 in.Hg) or less during 15 seconds.

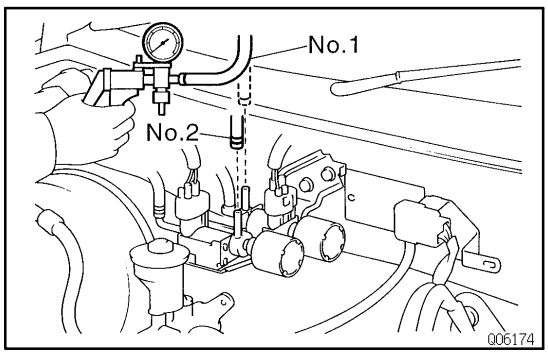

(b) Diaphragm (Lock Side):

Inspect the transfer vacuum tank.

(1) Disconnect the solenoid hose No.1 and No.2 from the solenoid.

(2) Check that the indicator needle remains steady when a vacuum of 500 mmHg (19.685 in.Hg) is applied to the hose No.1.

Standard:

Indicator falls 45 mmHg (1.772 in.Hg) or less during 15 seconds.

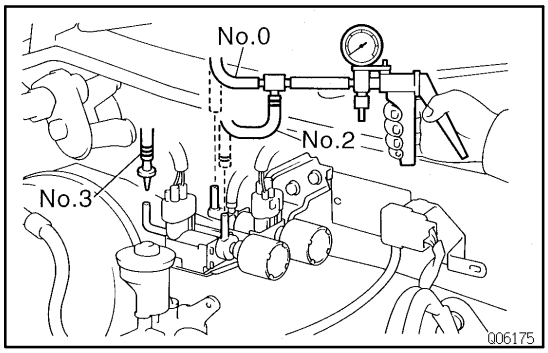

(c) Diaphragm (Free Side):
Inspect the transfer vacuum tank.
(1) Disconnect the solenoid hose No.0, No.1, No.2 and No.3 from the solenoid.
(2) Fill in the No.3 hose with a plug.
(3) Check that the indicator needle remains steady when a vacuum of 500 mmHg (19.685 in.Hg) are applied to the hose No.0 and No.2.

Standard:
Indicator falls 45 mmHg (1.772 in.Hg) or less during 15 seconds.

NOTICE:
Apply vacuum simultaneously to the hose No.0 and hose No.2.

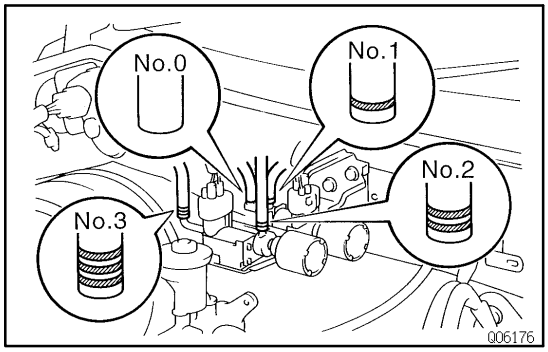

(4) Reinstall the removed hoses to the solenoid.

NOTICE:
Check that the hose No.0, No.1, No.2 and No.3 are securely installed to the solenoid.

SHIFT LEVER AND CONTROL CABLE

COMPONENTS

MX065–01

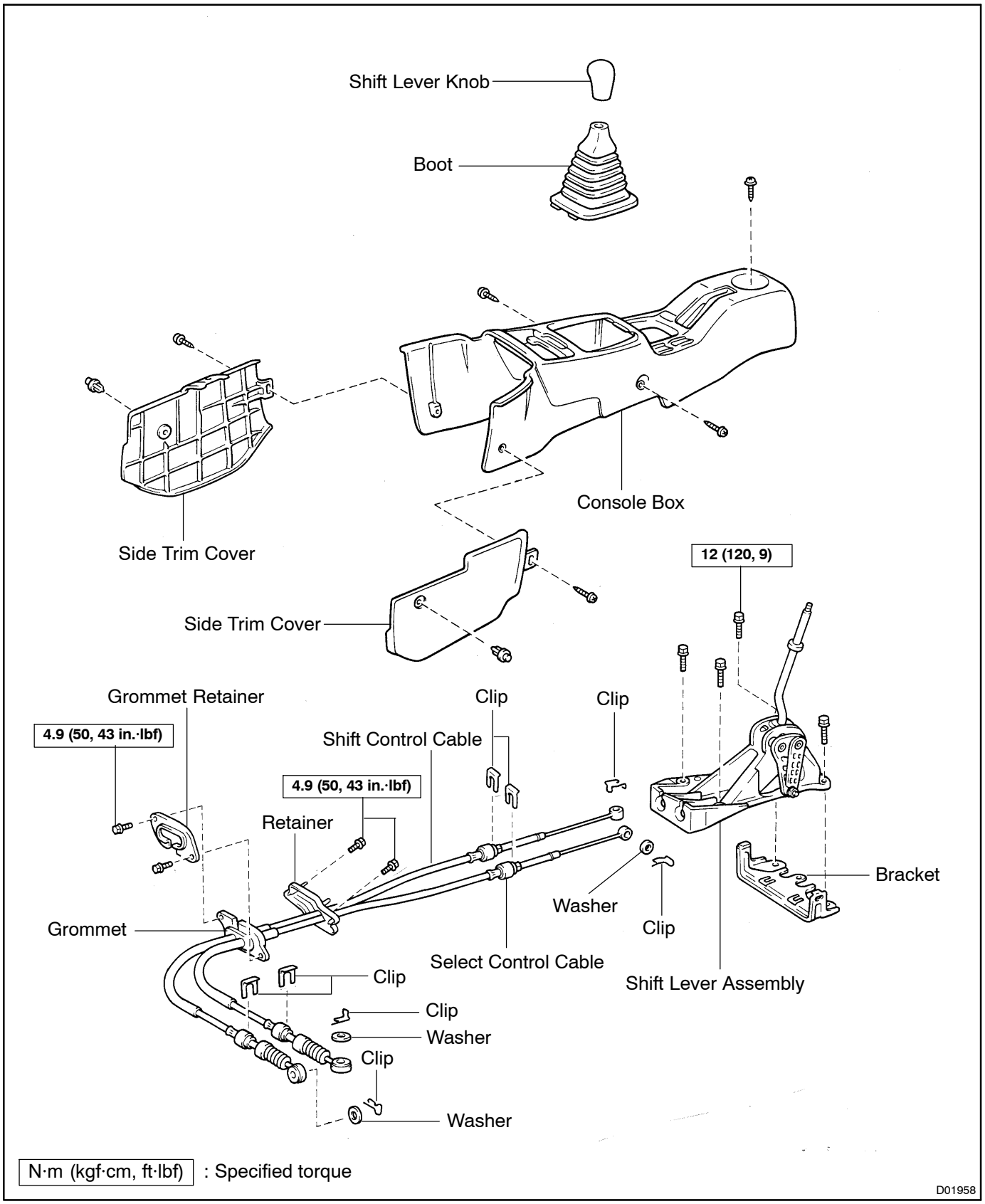

OIL COOLER (4WD)

COMPONENTS

MX066–01

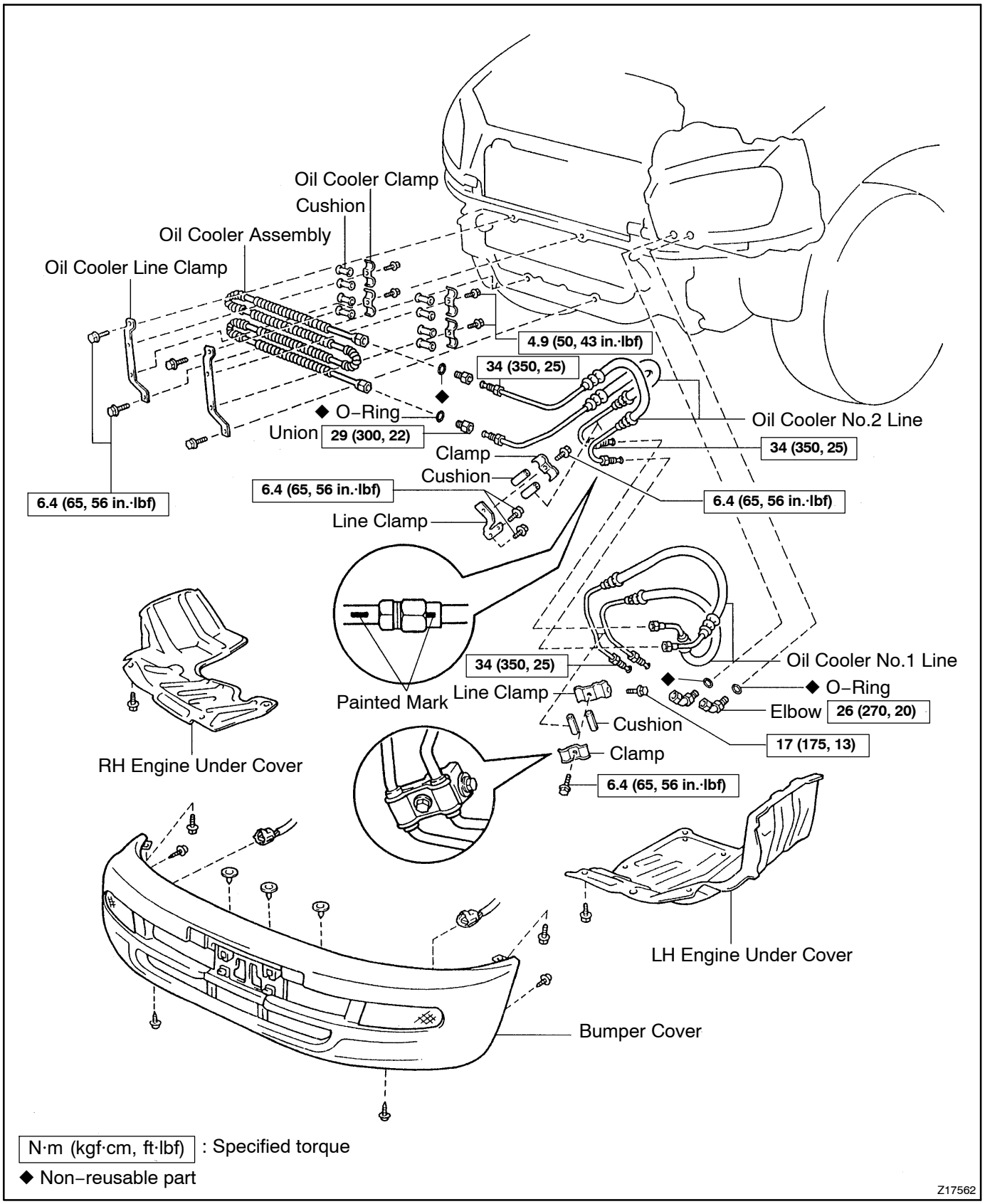

TRANSFER (4WD)

COMPONENTS

MX0C1–01

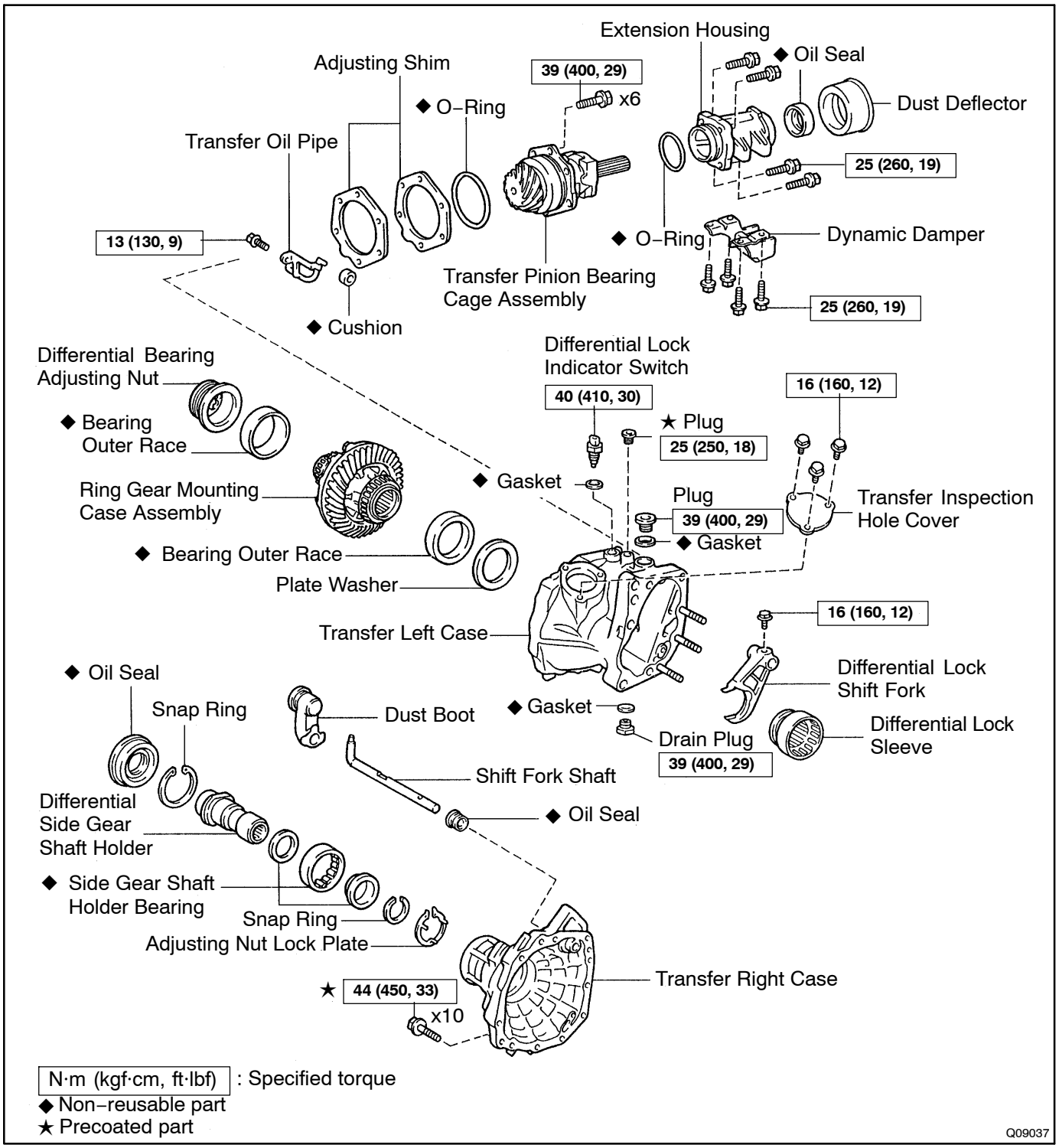

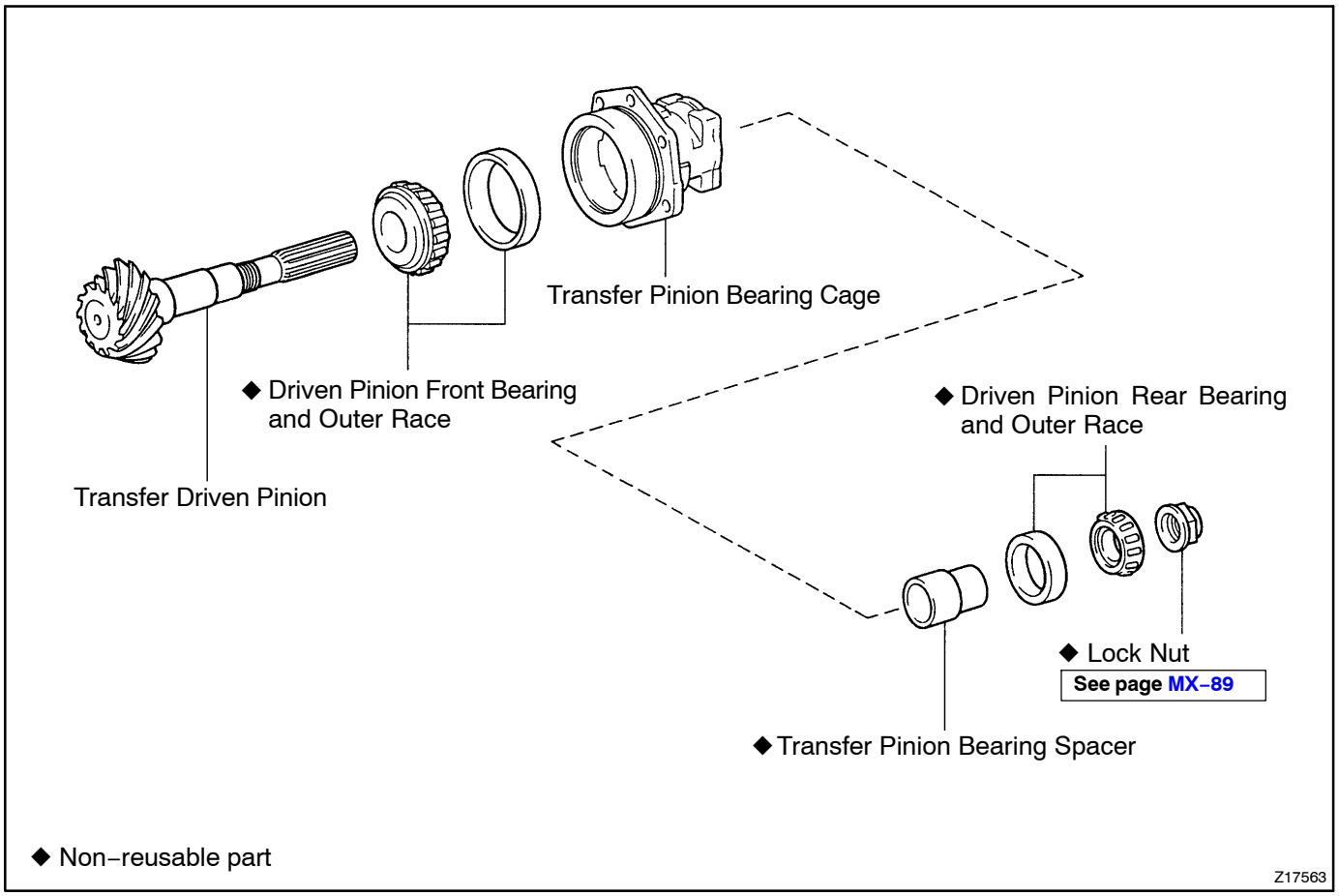
Transfer Pinion Bearing Cage
◆ Driven Pinion Front Bearing and Outer Race
Transfer Driven Pinion
◆ Driven Pinion Rear Bearing and Outer Race
◆ Lock Nut
See page MX–89
◆ Transfer Pinion Bearing Spacer
◆ Non–reusable part
Z17563

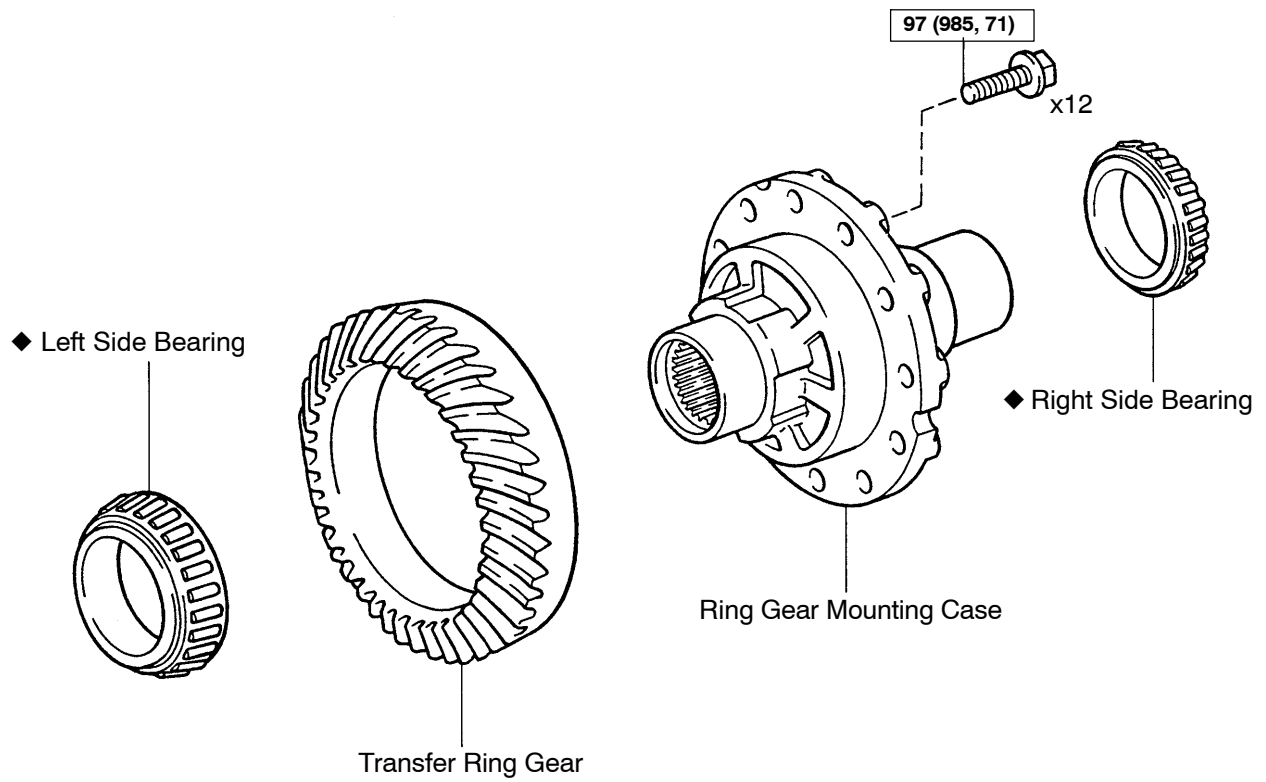

N·m (kgf·cm, ft·lbf) : Specified torque
◆ Non–reusable part

Z17564

MX0DZ–01

DISASSEMBLY

1. REMOVE DUST BOOT

2. REMOVE DYNAMIC DAMPER

Remove the 4 bolts and dynamic damper.

3. REMOVE EXTENSION HOUSING

(a) Remove the 4 bolts, tap the extension housing with a plastic hammer and remove it.

(b) Remove the O–ring from the extension housing.

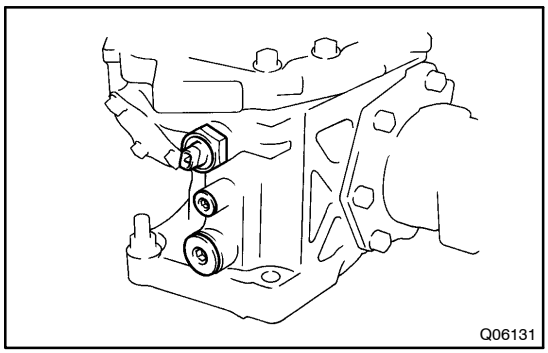

4. REMOVE PLUG AND DIFFERENTIAL LOCK INDICATOR SWITCH

(a) Using a hexagon wrench (6 mm), remove the plug.

(b) Using a hexagon wrench (10 mm), remove the plug and gasket.

(c) Remove the differential lock indicator switch and gasket.

5. REMOVE TRANSFER RIGHT CASE OIL SEAL

Using a screwdriver and hammer, remove the oil seal.

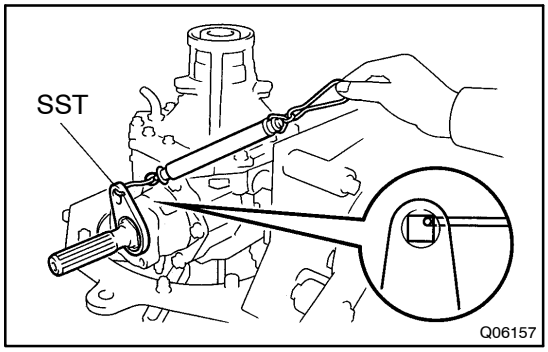

6. CHECK PRELOAD

(a) Using SST and a spring tension gauge, measure the driven pinion preload of the backlash between the driven pinion and ring gear.

SST 09326–20011

Preload (at starting):

9–14 N (0.9–1.4 kgf, 2–3 lbf)

(b) Using SST and a spring tension gauge, measure the total preload.

SST 09326–20011

Total preload (at starting):

Driven pinion preload plus

5–9 N (0.5–0.9 kgf, 1–2 lbf)

7. REMOVE TRANSFER INSPECTION HOLE COVER

(a) Remove the 3 bolts.

(b) Using a screwdriver and hammer, remove the transfer inspection hole cover.

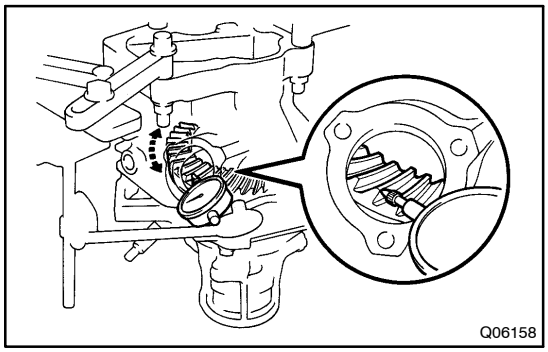

8. CHECK RING GEAR BACKLASH

Using a dial indicator, measure the ring gear backlash.

Backlash: 0.13–0.18 mm (0.0051–0.0071 in.)

9. CHECK TOOTH CONTACT (See page MX–89)

10. REMOVE TRANSFER PINION BEARING CAGE ASSEMBLY

(a) Remove the 6 bolts, tap the transfer pinion bearing cage assembly with a plastic hammer and remove it.

(b) Remove the O–ring and 2 adjusting shims from the transfer pinion bearing cage.

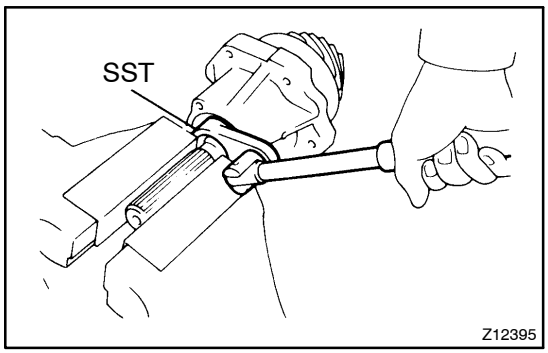

(c) Remove the lock nut.
(1) Unstake the lock nut.
(2) Using SST, remove the lock nut.
SST 09326–20011

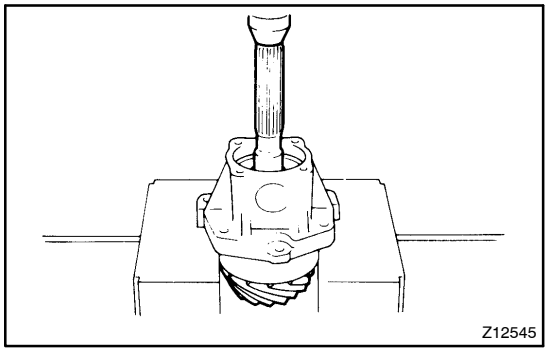

(d) Remove the transfer driven pinion.
Using a press, remove the transfer driven pinion, rear bearing and spacer.

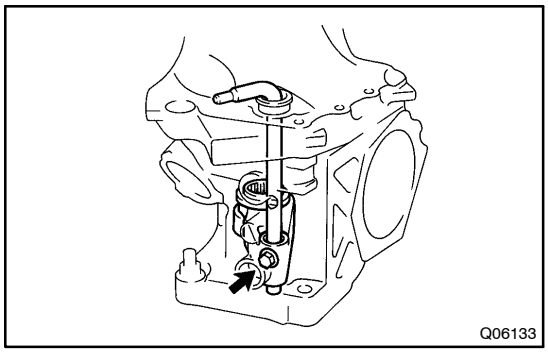

11. REMOVE DIFFERENTIAL LOCK SHIFT FORK, LOCK SLEEVE AND SHIFT FORK SHAFT

Remove the bolt, shift fork, shift fork shaft and lock sleeve.

12. REMOVE TRANSFER RIGHT CASE

Remove the 10 bolts, tap the transfer right case with a plastic hammer and remove it.

13. REMOVE RING GEAR MOUNTING CASE ASSEMBLY

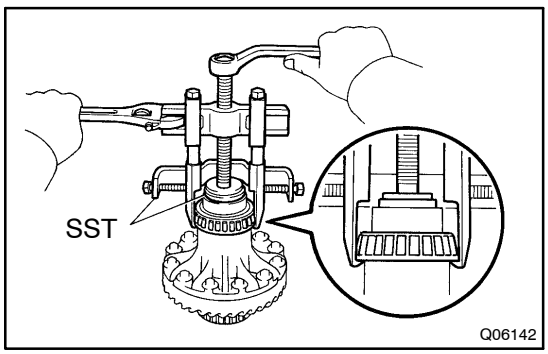

(a) Remove the mounting case right side bearing.
Using SST, remove the right side bearing.
SST 09950–40010, 09950–60010 (09951–00500)

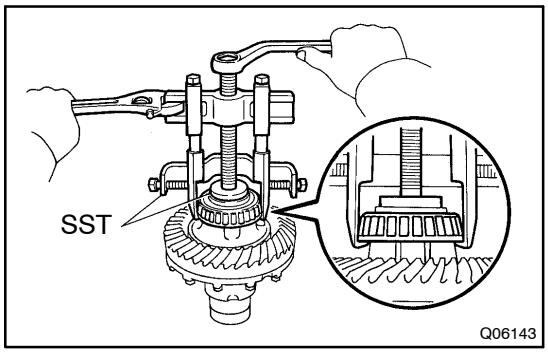

(b) Remove the mounting case left side bearing.
Using SST, remove the left side bearing.
SST 09950–40010, 09950–60010 (09951–00500)

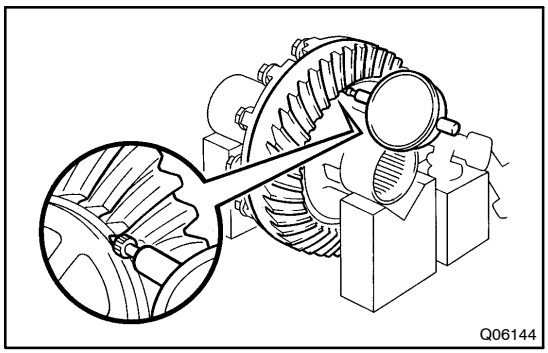

(c) Check the ring gear runout.
Using a dial indicator, check the ring gear runout.
Maximum runout: 0.1 mm (0.004 in.)

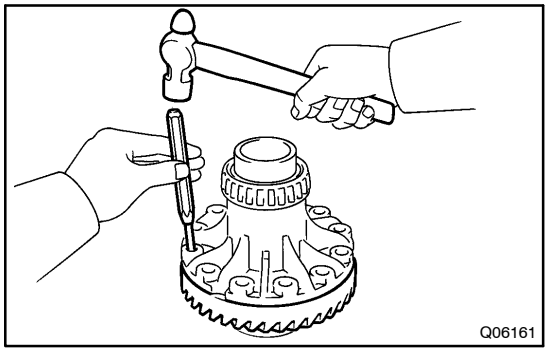

(d) Remove the transfer ring gear.
(1) Place matchmarks on both the ring gear mounting case and transfer ring gear.
(2) Remove the 12 bolts.
(3) Using a pin punch and hammer, tap out the transfer ring gear.

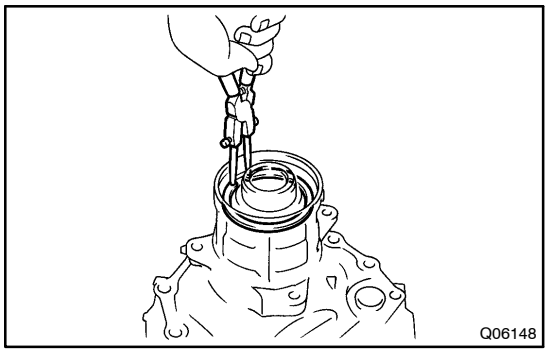

14. REMOVE DIFFERENTIAL SIDE GEAR SHAFT HOLDER

(a) Using snap ring pliers, remove the snap ring from the transfer right case.

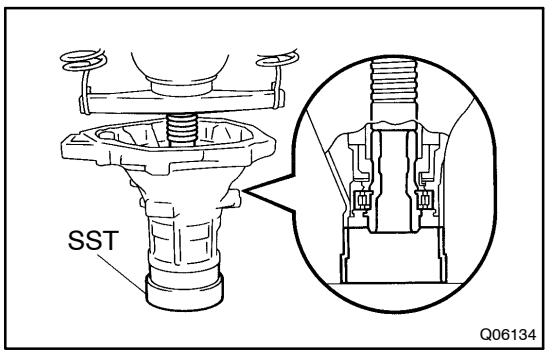

(b) Using SST and a press, remove the differential side gear shaft holder.
SST 09527–17011

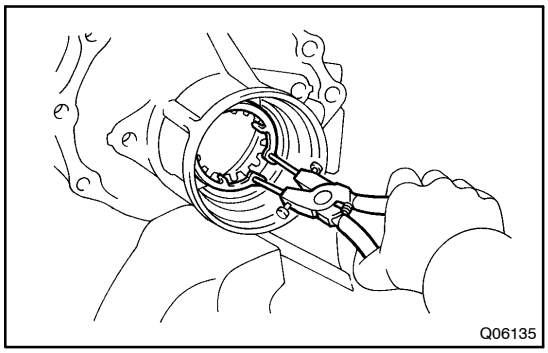

15. REMOVE ADJUSTING NUT LOCK PLATE

Using snap ring pliers, remove the adjusting nut lock plate from the transfer right case.

MX0E0–01

REPLACEMENT

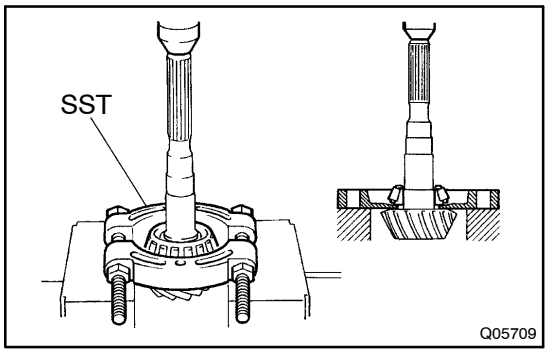

1. REPLACE DRIVEN PINION FRONT BEARING

(a) Using SST and a press, remove the front bearing.
SST 09950–00020

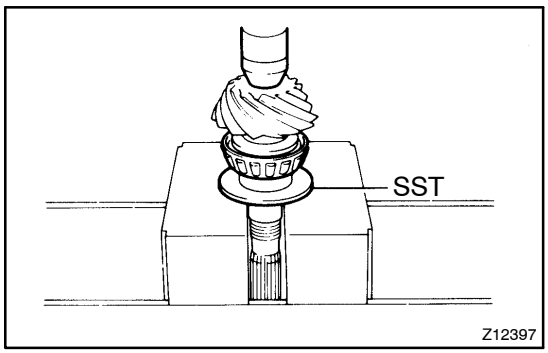

(b) Using SST and a press, install a new front bearing.
SST 09316–60011 (09316–00051)

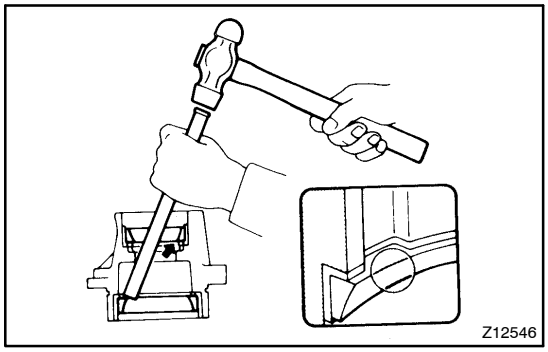

2. REPLACE FRONT AND REAR BEARING OUTER RACE

(a) Using a brass bar and hammer, drive out the front and rear bearing outer race lightly and evenly.

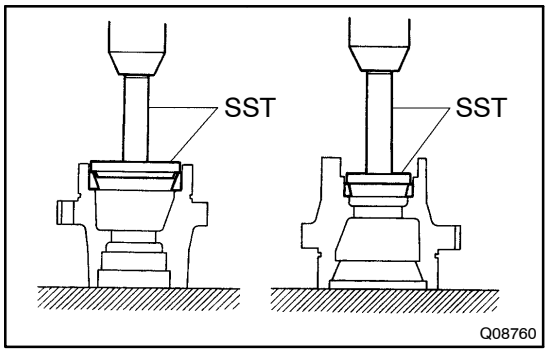

(b) Using SST and a press, install a new front bearing outer race.
SST 09950–60020 (09951–00780), 09950–70010 (09951–07150)

(c) Using SST and a press, install a new rear bearing outer race.
SST 09950–60010 (09951–00590), 09950–70010 (09951–07150)

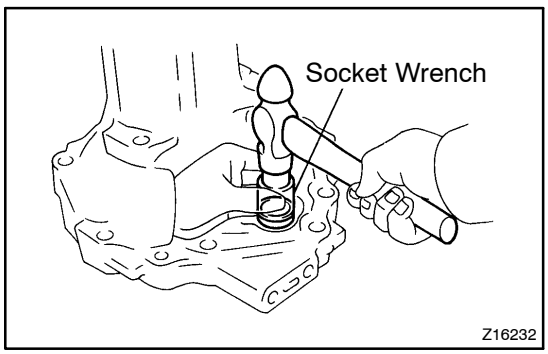

3. REPLACE SHIFT FORK SHAFT OIL SEAL

(a) Using a screwdriver, remove the oil seal from the transfer right case.

(b) Using a socket wrench and hammer, install a new oil seal.

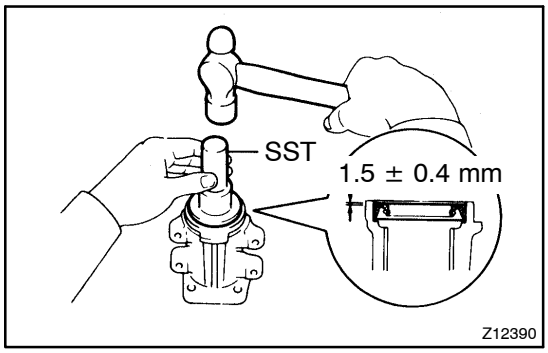

4. REPLACE EXTENSION HOUSING OIL SEAL

(a) Using a screwdriver, remove the oil seal.

(b) Using SST and a hammer, drive in a new oil seal.
SST 09325–20010
Oil seal depth: 1.5 ± 0.4 mm (0.059 ± 0.016 in.)

(c) Coat the lip of oil seal with MP grease.

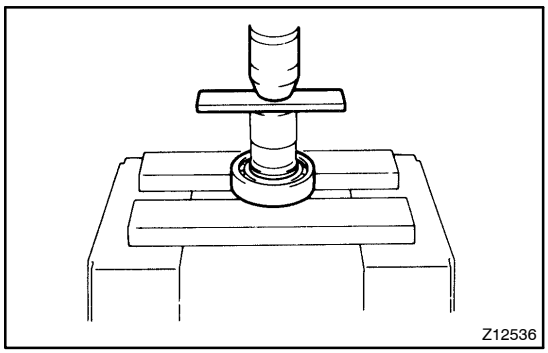

5. REPLACE SIDE GEAR SHAFT HOLDER BEARING

(a) Using a snap ring expander, remove the snap ring.

(b) Using a press, remove the bearing from the side gear shaft holder.

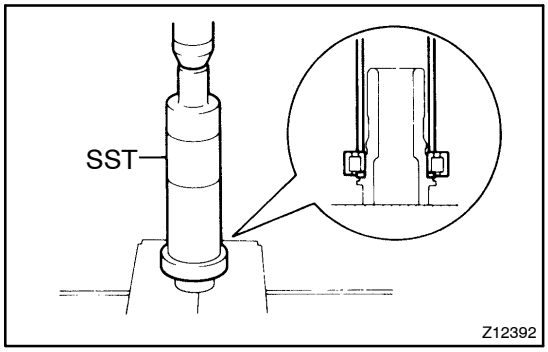

(c) Using SST and a press, install a new bearing.
SST 09316–60011 (09316–00011)

(d) Using a snap ring expander, install the snap ring.

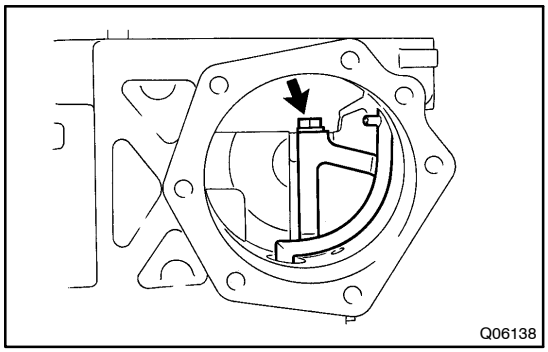

6. REPLACE TRANSFER OIL PIPE

(a) Remove the bolt and oil pipe from the transfer left case.

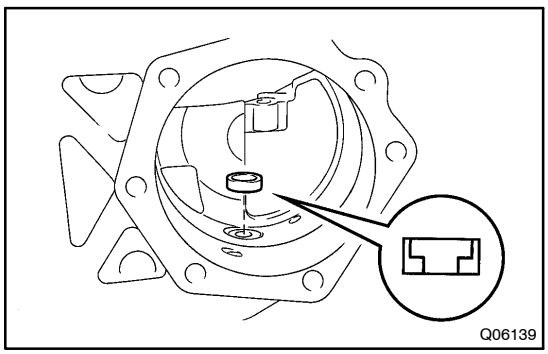

(b) Using a screwdriver, remove the cushion.

(c) Install a new cushion.

(d) Install the oil pipe.

(e) Install and torque the bolt.
Torque: 13 N·m (130 kgf·cm, 9 ft·lbf)

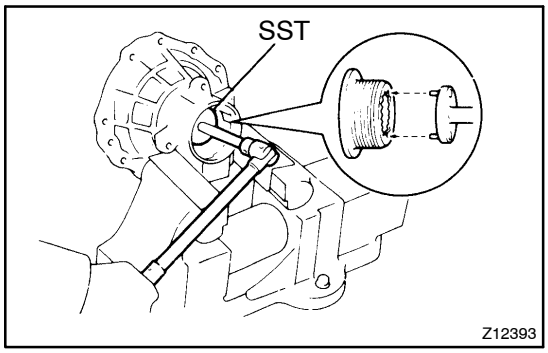

7. Transfer Right Case Side:
REPLACE RING GEAR MOUNTING CASE SIDE BEARING OUTER RACE

(a) Using SST, turn the bearing adjusting nut, and remove the outer race and bearing adjusting nut.
SST 09318–20010

(b) Using SST, turn the bearing adjusting nut until it touches the lip of the case.
SST 09318–20010

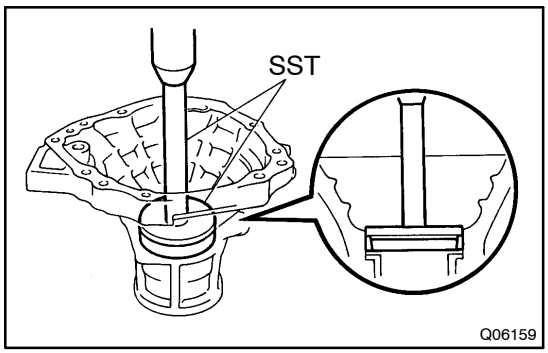

(c) Using SST and a press, install a new bearing outer race until it almost touches the bearing adjusting nut.
SST 09950–60020 (09951–00890), 09950–70010 (09951–07150)

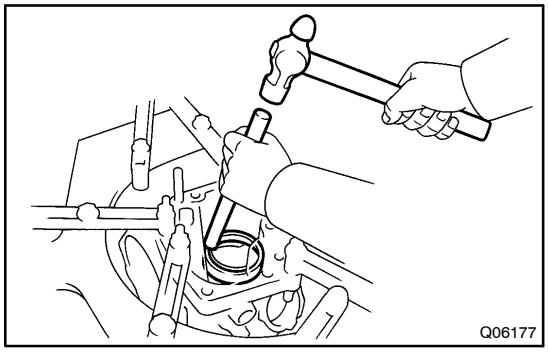

8. Transfer Left Case Side:
REPLACE RING GEAR MOUNTING CASE SIDE BEARING OUTER RACE

(a) Using a brass bar and hammer, drive out the bearing outer race lightly and evenly.

(b) Remove the plate washer.

(c) Install the plate washer.

HINT:
First install a washer of the same thickness as before.

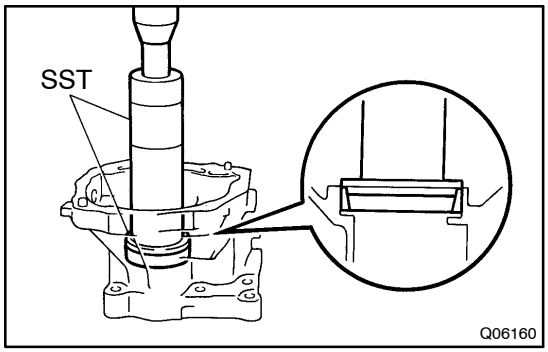

(d) Using SST and a press, install a new bearing outer race.
SST 09316–60011 (09316–00011, 09316–00061)

MX0C3–02

REASSEMBLY

NOTICE:

When working with FIPG material, you must observe the following items.

- **Using a razor blade and gasket scraper, remove all the old FIPG material from the gasket surfaces.**
- **Thoroughly clean all components to remove all the loose material.**
- **Clean both sealing surfaces with a non–residue solvent.**
- **Apply FIPG in an approx. 1 mm (0.04 in.) wide bead along the sealing surface.**
- **Parts must be assembled within 10 minutes of application. Otherwise, the FIPG material must be removed and reapplied.**

HINT:

Coat all of the sliding and rotating surfaces with gear oil before reassembly.

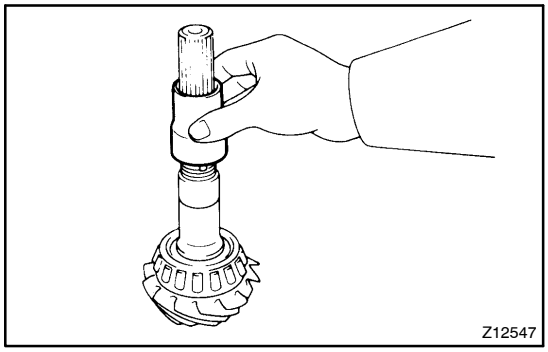

1. ASSEMBLE TRANSFER PINION BEARING CAGE

(a) Install the transfer pinion bearing cage.

(1) Install a new bearing spacer.

HINT:

Insert the spacer with the smaller diameter facing upwards.

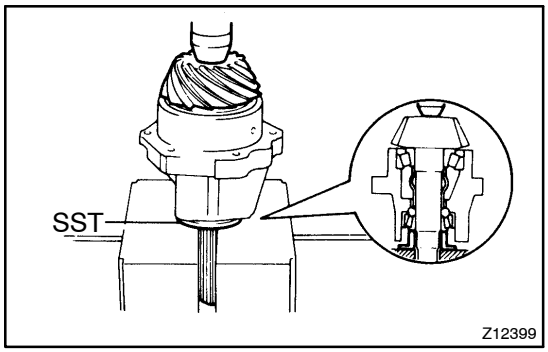

(2) Using SST and a press, install the rear bearing.

HINT:

Press down until the pinion can move slightly up and down.

SST 09316–60011 (09316–00021)

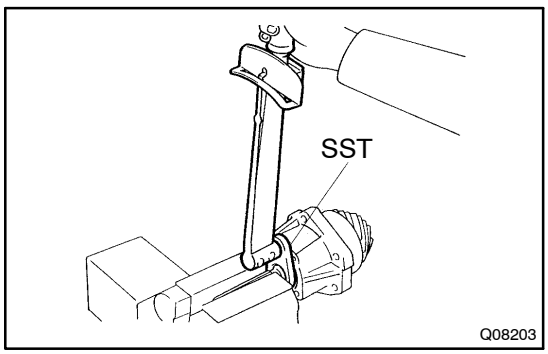

(b) Adjust the driven pinion preload.

(1) Using SST, install and torque a new lock nut.

SST 09326–20011

Torque: 95 N·m (968 kgf·cm, 70 ft·lbf)

HINT:

- Use a torque wrench with a fulcrum length of 38 cm (14.96 in.).
- The torque specification for without using SST is 108 N·m (1,100 kgf·cm, 80 ft·lbf).

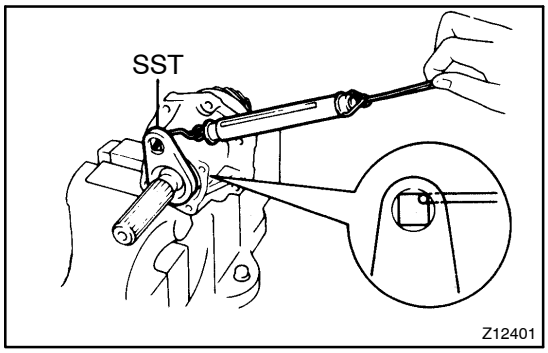

(2) Using SST and a spring tension gauge, measure the driven pinion preload.

SST 09326–20011

HINT:

Turn the driven pinion right and left 2 or 3 times to allow the bearing to settle.

Preload (at starting):

New bearing

17.7 – 28.4 N (1.8 – 2.9 kgf, 4.0 – 6.4 lbf)

Reused bearing

4.9 – 8.8 N (0.9 – 1.4 kgf, 1.1 – 2.0 lbf)

- If the preload exceeds than the specification, replace the bearing spacer.
- If the preload is less than the specification, retighten the nut 5–10° gradually a time until the specified preload is reached.
- If the maximum torque is exceeded while retightening the nut, replace the bearing spacer and repeat the preload procedure. Do not back off the pinion nut to reduce the preload.

Torque: 214 N·m (2,184 kgf·cm, 158 ft·lbf) or less

HINT:

- Use a torque wrench with a fulcrum length of 50 cm (19.69 in.).
- The maximum torque specification for without using SST is 235 N·m (2,400 kgf·cm, 174 ft·lbf).

(c) Stake the lock nut.

2. ASSEMBLE RING GEAR MOUNTING CASE

(a) Install the transfer ring gear.

(1) Clean the contact surface of the mounting case.

(2) Heat the ring gear to about 100°C (212°F) in boiling water.

(3) Carefully take the ring gear out of the water.

(4) Clean the contact surface of the ring gear with cleaning solvent.

(5) Quickly install the ring gear on the mounting case.

HINT:

Align the matchmarks on the mounting case and connect the ring gear.

(6) Install and torque the 12 bolts.

Torque: 97 N·m (985 kgf·cm, 71 ft·lbf)

(b) Checking the ring gear runout (See page MX–82).

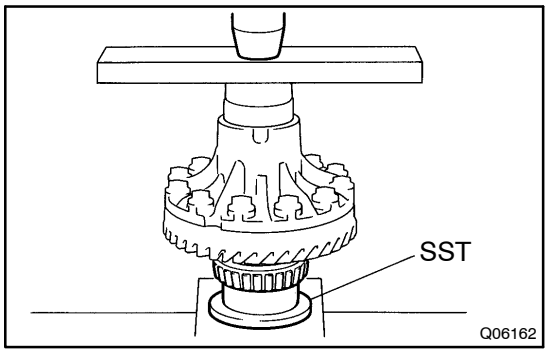

(c) Install the mounting case left side bearing.
Using SST and a press, install a new left side bearing.
SST 09316–20011

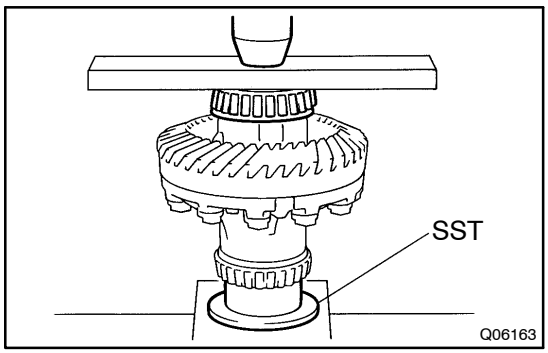

(d) Install the mounting case right side bearing.
Using SST and a press, install a new right side bearing.
SST 09316–20011

3. ADJUST RING GEAR BACKLASH

(a) Install the adjusting shim to the transfer pinion bearing cage assembly.

HINT:
First install a shim of the same thickness as before.

(b) Install the transfer pinion bearing cage assembly to the transfer left case.

(c) Install and torque the 6 bolts.
Torque: 39 N·m (400 kgf·cm, 29 kgf·cm)

HINT:
Do not install the O–ring.

(d) Install the ring gear mounting case assembly to the transfer left case.

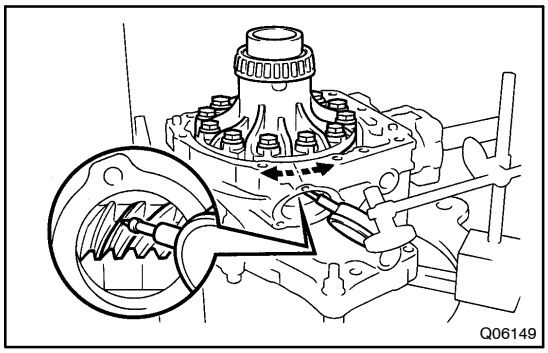

(e) Using a dial indicator, measure the ring gear backlash.
Backlash: 0.13 – 0.18 mm (0.0051 – 0.0071 in.)

(f) Refer to the table below, select a plate washer which will ensure that the backlash is within the specification. Try to select a washer of the same size.

HINT:
The backlash will change about 0.02 mm (0.0008 in.) with every 0.03 mm (0.0012 in.) change in shim thickness.

Mark	Thickness mm (in.)	Mark	Thickness mm (in.)
1	2.13 (0.0839)	13	2.49 (0.0980)
2	2.16 (0.0850)	14	2.52 (0.0992)
3	2.19 (0.0862)	15	2.55 (0.1004)
4	2.22 (0.0874)	16	2.58 (0.1016)
5	2.25 (0.0886)	17	2.61 (0.1028)
6	2.28 (0.0898)	18	2.64 (0.1039)
7	2.31 (0.0909)	19	2.67 (0.1051)
8	2.34 (0.0921)	20	2.70 (0.1063)
9	2.37 (0.0933)	21	2.73 (0.1075)
10	2.40 (0.0945)	22	2.76 (0.1087)
11	2.43 (0.0957)	23	2.79 (0.1098)
12	2.46 (0.0968)	24	2.82 (0.1110)

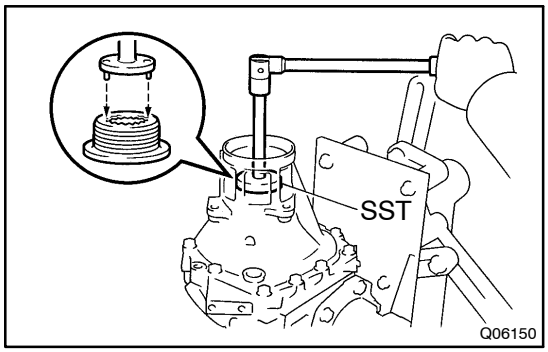

4. ADJUST TOTAL PRELOAD

(a) Install the transfer right case.

(b) Install and torque the 10 bolts.
Torque: 44 N·m (450 kgf·cm, 33 ft·lbf)

(c) Adjust the total preload by tightening the differential bearing adjusting nut.

(d) Using SST, tighten the differential bearing adjusting nut.
SST 09318–20010

HINT:
While measuring the preload, tighten the adjusting nut a little at a time.

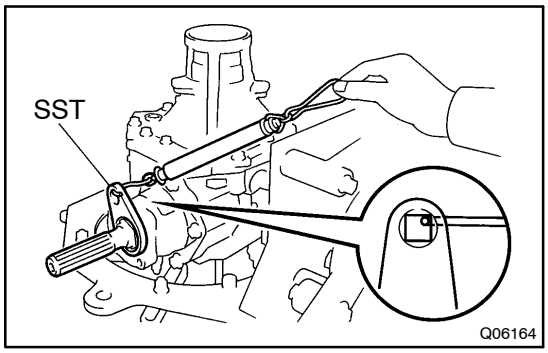

(e) Using SST and a spring tension gauge, measure the total preload.
SST 09326–20011
Preload (at starting):
New bearing (Driven pinion preload plus)
13 – 14 N (1.3 – 1.4 kgf, 2.9 – 3.1 lbf)
Reused bearing (Driven pinion preload plus)
5 – 9 N (0.5 – 0.9 kgf, 1 – 2 lbf)

HINT:
Turn the output shaft counterclockwise and clockwise several times.

(f) When the standard value for the total preload exceeds, remove the transfer right case, and push in the adjusting nut and outer race. Again adjust the total preload.

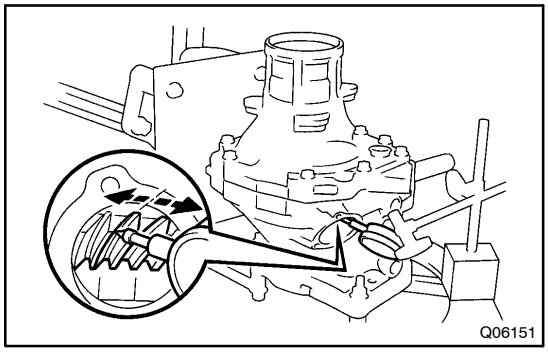

5. CHECK RING GEAR BACKLASH

(a) Using a dial indicator, measure the ring gear backlash.
Backlash: 0.13 – 0.18 mm (0.0051 – 0.0071 in.)

(b) When the backlash exceeds the standard value, select a different plate washer to the one selected step 4. Again adjust the backlash and total preload.

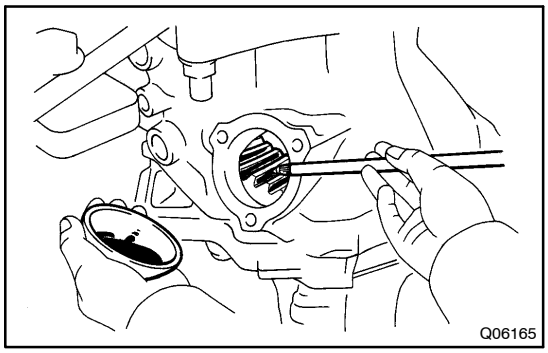

6. CHECK TOOTH CONTACT

(a) Coat 3 or 4 teeth at 4 different positions on the ring gear with red lead.

(b) Rotate the ring gear, inspect the teeth pattern.

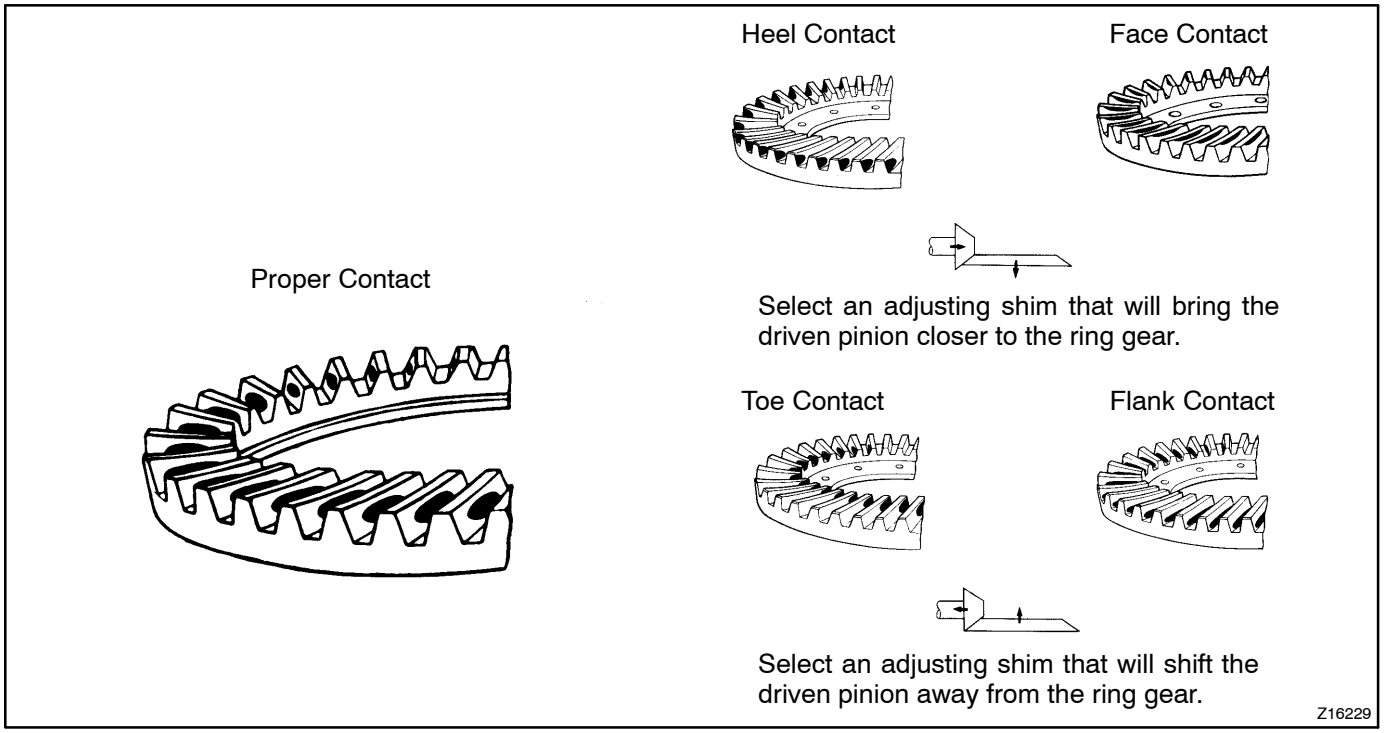

(c) If the teeth are not contacting properly, again select the proper shim and plate.

Mark	Thickness mm (in.)	Mark	Thickness mm (in.)
A	0.30 (0.0118)	F	0.45 (0.0177)
B	0.33 (0.0130)	G	0.48 (0.0189)
C	0.36 (0.0142)	H	0.51 (0.0201)
D	0.39 (0.0154)	J	0.54 (0.0213)
E	0.42 (0.0165)	K	0.57 (0.0224)

7. REMOVE RING GEAR MOUNTING CASE ASSEMBLY

(a) Remove the 10 bolts and transfer right case.

(b) Remove the ring gear mounting case assembly.

8. REMOVE TRANSFER PINION BEARING CAGE ASSEMBLY

Remove the 6 bolts and transfer pinion bearing cage assembly.

9. INSTALL TRANSFER PINION BEARING CAGE ASSEMBLY

(a) Coat the O–ring with gear oil.

(b) Install the O–ring to the transfer pinion bearing cage.

(c) Install the transfer pinion bearing cage with the adjusting shim (previously selected) to the transfer left case.

(d) Install and torque the 6 bolts.
Torque: 39 N·m (400 kgf·cm, 29 ft·lbf)

10. INSTALL RING GEAR MOUNTING CASE ASSEMBLY

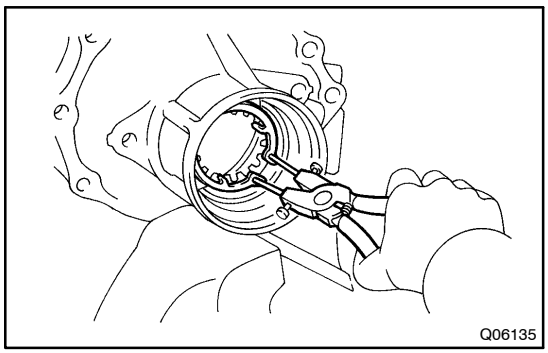

11. INSTALL ADJUSTING NUT LOCK PLATE

Using snap ring pliers, install the lock plate so that the projection from the lock plate fits properly into the groove of the adjusting nut.

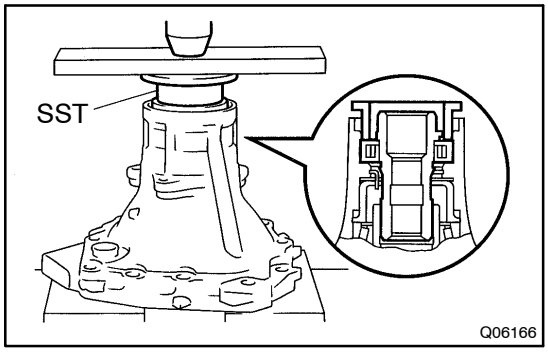

12. INSTALL DIFFERENTIAL SIDE GEAR SHAFT HOLDER

(a) Using SST and a press, install the differential side gear shaft holder to the transfer right case.
SST 09316–20011

(b) Using snap ring pliers, install the snap ring.

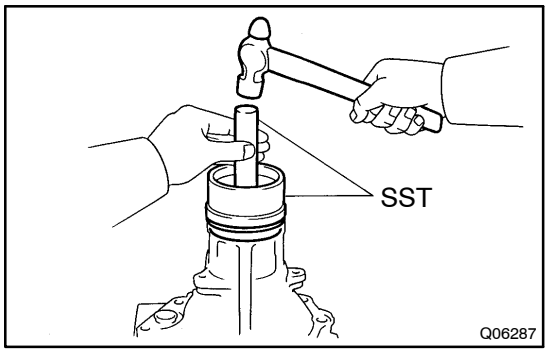

13. INSTALL TRANSFER RIGHT CASE OIL SEAL

(a) Using SST and a hammer, drive in a new oil seal.
SST 09223–15020, 09950–70010 (09951–07150)

(b) Coat the lip of the oil seal with MP grease.

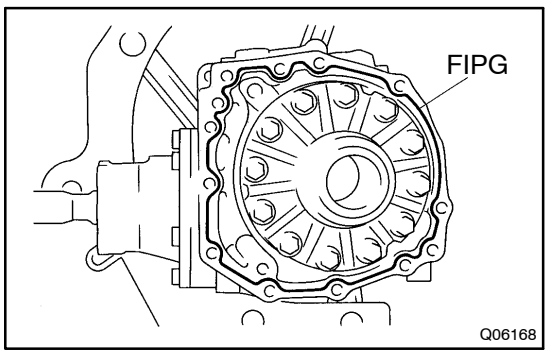

14. INSTALL TRANSFER RIGHT CASE

(a) Apply FIPG to the transfer left case, as shown.
FIPG:
Part No. 08826–00090, THREE BOND 1281 or equivalent

(b) Apply sealant to the bolt threads.
Sealant:
Part No. 08833–00080, THREE BOND 1344, LOCTITE 242 or equivalent

(c) Install and torque the 10 bolts.

Torque: 44 N·m (450 kgf·cm, 33 ft·lbf)

15. CHECK TOTAL PRELOAD (See step 4)

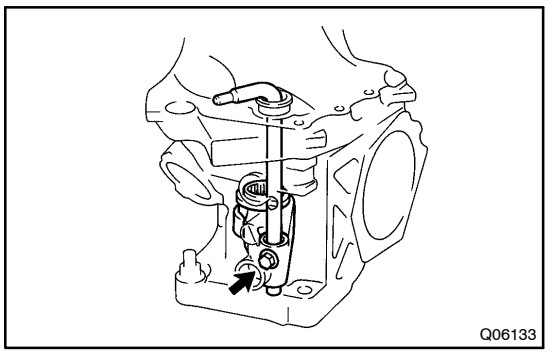

16. INSTALL DIFFERENTIAL LOCK SHIFT FORK, LOCK SLEEVE AND SHIFT FORK SHAFT

(a) Install the shift fork, shift fork shaft and lock sleeve.

(b) Install and torque the bolt.
Torque: 16 N·m (160 kgf·cm, 12 ft·lbf)

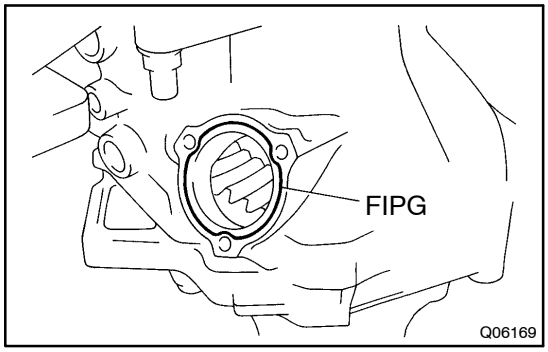

17. INSTALL TRANSFER INSPECTION HOLE COVER

(a) Apply FIPG to the transfer left case, as shown.
FIPG:
Part No. 08826–00090, THREE BOND 1281 or equivalent

(b) Install the cover on the transfer left case.

(c) Install and torque the 3 bolts.
Torque: 16 N·m (160 kgf·cm, 12 ft·lbf)

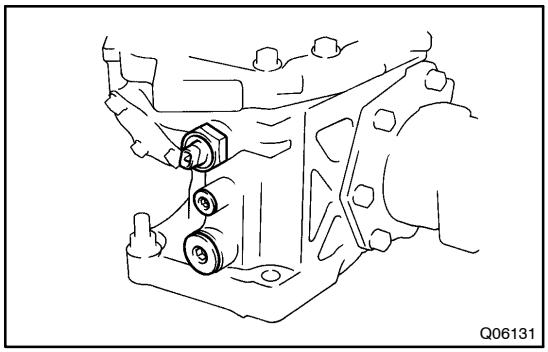

18. INSTALL PLUG AND DIFFERENTIAL LOCK INDICATOR SWITCH

(a) Using a hexagon wrench (10 mm), install and torque the plug and gasket.
Torque: 39 N·m (400 kgf·cm, 29 ft·lbf)

(b) Apply sealant to the plug threads.
Using a hexagon wrench (6 mm), install and torque the plug.
Sealant:
Part No. 08833–00080, THREE BOND 1344, LOCTITE 242 or equivalent
Torque: 25 N·m (250 kgf·cm, 18 ft·lbf)

(c) Install and torque the differential lock indicator switch and gasket.
Torque: 40 N·m (410 kgf·cm, 30 ft·lbf)

19. INSTALL EXTENSION HOUSING

(a) Coat the O–ring with gear oil.

(b) Install a new O–ring to the extension housing.

(c) Install the extension housing to the transfer pinion bearing cage.

(d) Install and torque the 4 bolts.
Torque: 25 N·m (260 kgf·cm, 19 ft·lbf)

20. INSTALL DYNAMIC DAMPER

Install the dynamic damper and torque the 4 bolts.
Torque: 25 N·m (260 kgf·cm, 19 ft·lbf)

21. INSTALL DUST BOOT