PERFORMANCE

VEHICLES • PARTS • RACING

Retail Price $5.00
PP Number 28
P/N 19351916
Supersedes All Previous Catalogs

2016 CATALOG

LT4 POWERHOUSE

◀ ALL-NEW, DIRECT-INJECTED 6.2L IS SUPERCHARGED!

PAGE 218

▲ GEN 6 IS HERE!

PERSONALIZE YOUR RIDE WITH PERFORMANCE PARTS FOR THE NEW CAMARO!

PAGE 16

NEW! LT1/LT4 ALUMINUM BLOCK – PAGE 252

NEW! C7 CORVETTE UPGRADES – PAGE 42

NEW! ZZ6 CRATE ENGINE – PAGE 122

PERFORMANCE
VEHICLES • PARTS • RACING

Chevrolet Performance – Fulfilling Dreams for Nearly 50 Years!

For nearly half a century, Chevrolet Performance has been the go-to resource for enthusiasts of all stripes. From the original Small-Block and Big-Block engines that fueled our start, to the LS and new LT engines that are pushing us forward, we have never stopped innovating. Our 2016 catalog showcases new and improved products designed to provide the crate-engine, components, vehicle-specific performance parts and accessories you need to build your dream.

We have two exciting new crate engines: the ZZ6 350 and the supercharged LT4. The ZZ6 is the latest in our decades-long legacy of building uncompromising Gen I Small-Block performance. It uses LS-style beehive valve springs and other modern features to deliver exceptional high-rpm performance and 405 horsepower. That's more than any 350 Small-Block ever installed in a production Chevy car or truck.

As for the new LT4, it's the 650 horsepower supercharged powerhouse used in the world-conquering Corvette Z06 and our unique package doesn't sacrifice one force-inducted horsepower, making it the most powerful production-based crate engine ever from Chevrolet Performance. We've got the controller and wire harness, too, to get it running in your project vehicle.

And speaking of the Corvette Z06, our new collection of Z06-based components, including chassis, brakes and aerodynamic components, is designed to turn a C7 Stingray into the ultimate track weapon.

We also have new performance parts and accessories for the all-new, 2016 Camaro, including brakes, air intakes, exhaust systems and more. Likewise, there are similar Chevrolet Performance parts for the new Silverado, Colorado, Cruze and Sonic.

The bottom line is, no matter what you're driving or what you're building, Chevrolet Performance has the engines, parts and other accessories you need to fulfill your project-vehicle dream.

We've been doing that for nearly 50 years!

The Chevrolet Performance Team

Every effort is made to make this catalog comprehensive and factual. We reserve the right, however, to make changes at any time, without notice, to materials, equipment, specifications, and availability. Specifications, dimensions, measurements, ratings, and other numbers are based upon design and engineering information, prototypes and laboratory tests. Since some information may have been updated since the time of printing, please check with your dealer for complete details.

The parts listed in this catalog are intended primarily for use in race or "off-highway" vehicles only. Federal law restricts the removal, modification or knowingly making inoperative of any part or element of design installed in compliance with an applicable Federal Motor Vehicle Safety Standard or any part of federally required emission control systems on a motor vehicle used on public roads. Further, many states have enacted laws with various penalties for tampering with, or otherwise modifying any required emission or noise control system. Parts which have been granted an exemption by the California Air Resources Board (CARB) are noted as such.

Unless specifically noted to the contrary herein, vehicles equipped with Chevrolet Performance Parts may not meet Federal Motor Vehicle Safety Standards and emissions regulations and should not be operated on public roads. *Chevrolet Performance customers are responsible for ensuring their use of Chevrolet Performance Parts complies with applicable federal, state and local laws, regulations and ordinances.*

Many parts intended for racing or other "off-highway" use are not designed or tested for crashworthiness or to meet the safety needs of the motoring public, and may adversely affect the original intended performance or handling characteristics of the vehicle. These parts are designed and intended to be used with experts supervising their installation and use, to help assure the proper and safe operation of the vehicle.

Performance Center News

News and New Products 2

Upgrades & Accessories

Introduction 14
Camaro 16
Corvette 42
Cruze 54
Sonic 56
Silverado 60
Colorado 66

COPO Program

Introduction 70
COPO Engines 72
COPO Components 75

Crate Engines & Components

Introduction 86
Crate Engine Quick Reference Chart 88
Torque Converter Quick Reference Chart 90
Dyno Testing Procedure 91
Crate Engine Levels 91
Dressed Crate Engines 92

Small-Block Crate Engines

Introduction 110
350/290 112
350 HO 114
Ram Jet 350 116
SP350 Base 118
SP350 Turn-Key 120
ZZ6 Base 122
ZZ6 Turn-Key 124
HT383 126
HT383E 128
SP383 Deluxe 130

Circle Track Crate Engines

Introduction 132
CT350 134
CT400 136
CT525 138

Small-Block Components

Introduction 140
Blocks & Components 142
Cylinder Heads 150
Head Gaskets & Bolts 160
Valves & Valve Springs 161
Rocker Arms 163
Valve Covers 164
Adapters, Hardware & Breathers 166
Pushrods 167
Camshafts & Components 169
Connecting Rods & Components 170
Pistons & Rings 171
Crankshafts 172
Balancers & Pulleys 172
Flywheels & Flexplates 173
Timing Chains & Sprockets 174
Water Pumps & Components 175
Accessory Drive Systems 176
Oil Pans & Accessories 176
Distributors & Components 178
Intake Manifolds & Components 179
Starters & Alternators 186
Spark Plug Wires 187
Carburetors & Air Cleaners 188
Fuel Pumps 189

LS/LT-Series Crate Engines

Introduction 190
LS Engine Family Tree 192
LS3 200
LS376/480 202
LS376/515 204
LS376/525 206
DR525 208
LSA 210
LS9 212
LS7 214
LT1 216
LT4 218
LTG 2.0L 220
E-ROD Systems 222
Connect & Cruise Powertrain Systems 226

LSX-Series Crate Engines

Introduction 234
LSX376-B8 236
LSX376-B15 238
LSX454 240
LSX454R 242

LS/LT/LSX-Series Components

Introduction 244
Blocks & Components 246
Cylinder Heads 258
Head Gaskets & Bolts 266
Rocker Arms 267
Valves & Valve Springs 267
Valve Covers 268
Hardware & Breathers 269
Valve Lifters 269
Camshafts & Components 271
Connecting Rods & Components 272
Pistons & Rings 273
Crankshafts & Components 274
Flywheels & Flexplates 275
Timing Chains & Sprockets 275
Accessory Drive Systems 276
Balancers 284
Water Pumps & Components 284
Oil Pans & Accessories 285
Intake Manifolds 286
Dry Sump Components 290
Starters 290
Carburetors & Air Cleaners 291
Engine Control Modules 292
Spark Plug Wires 294
Fuel Pumps 294

Big-Block Crate Engines

Introduction 296
ZZ427/480 298
454HO 300
ZZ454/440 302
HT502 304
502 HO 306
ZZ502/502 Deluxe 308
ZZ502/502 Base 310
Ram Jet 502 312
ZZ572/620 314
ZZ572/720R Deluxe 316
Vortec 8.0L 318

Big-Block Components

Introduction 320
Blocks & Components 322
Cylinder Heads 332
Head Gaskets & Bolts 338
Valves & Valve Springs 339
Rocker Arms 340
Pushrods 341
Valve Covers 342
Adapters, Hardware & Breathers 344
Guide Plates 345
Valve Lifters & Components 345
Camshafts & Components 346
Pistons & Rings 346
Connecting Rods & Components 347
Crankshafts 348
Balancers 348
Flywheels & Flexplates 349
Timing Chains & Sprockets 349
Water Pumps & Components 350
Accessory Drive Systems 350
Oil Pans & Accessories 351
Distributors & Components 353
Intake Manifolds & Components 354
Starters 358
Carburetors & Throttle Bodies 359
Air Cleaners 360
Spark Plug Wires 360
Fuel Pumps 361

Transmissions & Components

Introduction 362
Torque Converters 364
Automatic Transmissions 366
Manual Transmissions 370
4-Cylinder Transmissions 375

GM Parts Engines

Production-Based Engines 376

Additional Parts & Components

Cruze & Cobalt 380
Chevy V-6 Cylinder Heads 383
Ecotec 384
Chassis, Suspensions & Brakes 385
Factory Engineered Race Parts F&Y Car 387
Books & Manuals 388

Licensed Parts

Proform Dress Parts 390
Autometer Gauges 400
GM Restoration Parts Listing 406
Apparel 408
ACDelco Tools 413

Reference

Authorized Centers 414
Index 418
Warranty Information 420
Notes 422

PERFORMANCE CENTER

NEW for 2016

Gen 6 Camaro
page 4

Z06 Corvette Parts
page 6

LT4 Crate Engine
page 8

NEWS

ZZ6 Crate Engine
page 10

LT1 Head Cam Kit
page 11

Web & Social Media
page 12

Chevrolet Performance Introduces Upgrades for the All-New Gen 6 Camaro

Nearly 50 years after its 1967 introduction, the iconic Camaro is all-new for 2016. And when we say all-new, we mean from the ground up. Only two parts carry over from the fifth-generation Camaro: the rear bowtie emblem and the SS badge.

The "Gen 6" Camaro offers higher levels of performance, technology and refinement, thanks to an all-new, lighter architecture and higher-output V-6 and V-8 engines. It also introduces a new, 2.0L Turbo engine that makes as much – or more – horsepower than any Small-Block V-8 offered between 1971 and 1995.

In fact, six all-new powertrain combinations are offered, including the 2.0L Turbo (275 hp), an all-new 3.6L V-6 (335 hp) and the LT1 6.2L V-8, which is SAE-certified at 455 horsepower and 455 lb.-ft. of torque (617 Nm), which makes it the most powerful Camaro SS ever. Each engine is available with a six-speed manual or eight-speed automatic transmission.

With less weight and more power, the new Camaro has the combination for performance success and Chevrolet's internal testing proves it. The Camaro SS coupe sprints from 0-60 mph in 4.1 seconds and covers the quarter-mile in 12.4 seconds, when equipped with the all-new eight-speed paddle-shift automatic transmission.

The other Gen 6 Camaro coupe models are commensurately quick, with the 2.0L Turbo delivering 5.4-second 0-60 performance and a 14.0-second quarter-mile, with the six-speed manual. With the available 3.6L V-6 and eight-speed automatic, the Camaro zips to 60 mph in 5.1 seconds and down the quarter-mile in only 13.5 seconds.

"The performance of the Camaro 2.0L Turbo will challenge many of the iconic muscle cars from the 1960s, while the Camaro SS's performance – including 0.97 g cornering – makes it one of the most capable 2+2 coupes on the market," says Al Oppenheiser, Camaro chief engineer. "The performance numbers only tell half of the story, because the lighter curb weight also makes the new Camaro feel more responsive and agile behind the wheel. It brakes more powerfully, dives into corners quicker, accelerates faster and is more fun to drive than ever."

Chevrolet Performance helps new Gen 6 Camaro owners build on the dynamic driving experience of the reborn muscle car with an exciting portfolio of performance parts and accessories. From performance air intake and exhaust systems, to lowering kits and even performance Brembo® brake systems, this new lineup is designed to distinguish the new Camaro on the street or at the track. They also complement a full line of Camaro accessories available from Chevrolet dealers.

Like all of Chevrolet Performance's new vehicle components and accessories, each Gen 6 Camaro component is factory-engineered and validated to production-vehicle standards, so you can be confident these upgrades will look, fit and perform like original equipment.

See page 16 for a complete look at the new parts.

FIRST GENERATION: 1967-1969
Introduced in September 1966, the all-new Camaro was an instant hit, with a base price of $2,466 – the equivalent of about $18,000 today, when adjusted for inflation. This first generation was inextricably woven into the era's raging muscle car and drag racing wars – as well as road racing, which spawned the Z/28 in 1967. First-generation Camaros also served twice as the Indy 500 pace car: first in 1967 and again in 1969. The '69 examples, with their Hugger Orange stripes and orange houndstooth interiors, are among the most distinguishable and recognizable special models of their era.

SECOND GENERATION: 1970-1981
The Camaro's second generation was its longest and unquestionably its most successful. An all-new structure offered a slightly wider footprint and lower center of gravity. They were attributes that gave the car excellent handling characteristics. The Camaro enjoyed its best year ever in 1979, when 282,571 were sold, including nearly 85,000 Z/28 models.

THIRD GENERATION: 1982-1992
The third-generation Camaro also introduced an all-new architecture, with a contemporary strut-type front suspension, rack-and-pinion steering and more. The chassis system turned a car already renowned for its handling capability into a serious track machine. Its aggressive styling complemented greater performance capability and was actually designed to enhance downforce. It was also the first Camaro with a hatchback – a signature '80s feature – that represented a technical achievement in design and manufacturing; and it was the first American production car to incorporate ground effects.

FOURTH GENERATION: 1993-2002
Performance continued to improve with the fourth-generation Camaro and while the styling was decidedly sharper and more dramatic, it represented a mostly evolutionary change over the third-generation models. The chassis layout was largely similar, although the fast-raked windshield gave the car a unique, undeniably sleek profile. The Camaro's front end was redesigned in 1998, which coincided with the introduction of the landmark LS1 V-8.

FIFTH GENERATION: 2010-2015
Talk about a comeback! The seven years between the fourth-generation's demise and the launch of the fifth-generation (it was introduced in 2009 as a '10 model) didn't seem all that long, but was an eternity in the automotive world. Chevrolet decided a new Camaro would have to acknowledge its heritage on the outside and it was the right call. The fifth-gen car went on to sell more than 500,000 copies and outpace its pony-car rival for five consecutive years.

Corvette Z06 Performance Parts Offer Greater Capability for Stingray Owners!

The October 2015 cover of Car and Driver said it all: Giant Slayer. The editors were referring to the Corvette Z06 and how, during the magazine's Lightning Lap comparison at Virginia International Raceway, it punched up at exotics such as the Mercedes-AMG GT S, Lamborghini Huracán LP610-4 and McLaren 650S Spider and took them all down. No other car turned in a faster lap than the American-born-and-bred Corvette Z06.

Its capability is rooted in its LT4 supercharged 6.2L V-8 engine, which is SAE-certified at 650 horsepower at 6,000 rpm and 650 lb.-ft. of torque at 3,600 rpm – making it the most powerful production car ever from General Motors and one of the most powerful production cars available in the United States.

That capability is quantifiable, too. With the optional Z07 package, it can:

- *Zoom from 0-60 mph in 2.95 seconds with the eight-speed automatic and 3.2 seconds with the seven-speed manual transmission*
- *Cover the quarter-mile in 10.95 seconds at 127 mph with the eight-speed and 11.2 seconds at 127 mph with the seven-speed transmission*
- *Corner with lateral acceleration of 1.2 g*
- *Haul down from 60-0 mph in only 99.6 feet – the best of any production car tested by General Motors.*

As the editors of Car and Driver confirmed, the Corvette shines brightest on the road course, where its design balances aggressive good looks with uncompromising functionality. Wide wheels and tires – covered by exclusive, wider fenders – give the car a stable foot print with lots of contact patch.

The exterior is also tailored to produce aerodynamic downforce that presses the tires to the ground at high speeds, with a Level 3 aero package on the optional Z07 package offering the greatest aerodynamic downforce of any production vehicle tested by GM.

To ensure the car stops as assuredly as it accelerates and corners, the Z06 features two-piece steel rotors, measuring 14.6" x 1.3" front and 14.4" x 1" rear, with aluminum six-piston and four-piston fixed calipers, respectively. (Carbon-ceramic brakes are optional.)

Further, the exterior design reflects the increased cooling requirements for track use. For example, the mesh pattern on the front fascia was painstakingly designed to deliver the most possible airflow, while dedicated brake-cooling intakes and wider grille outlets on the bottom serve as air diffusers. Many components on, in and under the Z06 are made of lightweight carbon fiber to minimize overall mass – an attribute that improves the car's devastatingly effective power-to-weight ratio.

Many of these unique performance components engineered to make the Corvette Z06 a world-beating supercar are now available from Chevrolet Performance. Working with the engineers who made the Z06 one of the most capable performers at any price, we've developed a portfolio that leverages them to enhance the performance and track capability of the 2014 – 2016 Corvette Stingray.

The lineup includes:

- *Corvette Z06 and Z51 brake upgrade kits*
- *Corvette Z06 quarter-panel vents, which offer greater airflow capability*
- *Corvette Z06 grille, which offers more airflow than the Stingray*
- *Corvette Z06/Z51 front brake ducts kit, which enhances performance by helping keep the front brakes cooler*
- *Corvette Z06 600-watt electric cooling fan, which spins faster than the Stingray's fan to enhance cooling capability*
- *Corvette Z06 Level 3 aero package, offering the ultimate in downforce capability, based on the Z07 package*
- *Corvette Z06 carbon fiber torque tube kit, which saves nearly 15.5 pounds over the steel-intensive torque tube from the Stingray*
- *Corvette Z06 carbon fiber underbody braces, which are about 20-percent lighter than the Stingray's aluminum braces.*

These are the actual production parts used on the Corvette Z06, each factory-engineered and validated to production standards. Put the power the Z06 to use on your Stingray and start slaying your own dragons on the track!

See page 42 for complete details.

All-New LT4 Crate Engine, Supercharged Thrust From the Corvette Z06

Of the Corvette Z06's performance, Car and Driver said, "[it] is that of a true supercar." Road & Track said its supercharged LT4 engine is "equal parts high-revving sociopath and low-rpm sweetheart," adding it was also a "torque firebomb." Even the foreign automotive media is impressed, as England's AutoCar noted the acceleration "shoves you into your seat with uncompromising force." High praise, indeed.

The heart of the Z06's performance is its supercharged LT4 6.2L engine and it's now available from Chevrolet Performance as the ultimate production-based crate engine. It is offered with every one of the Z06's factory-rated 650 horsepower and 650 lb.-ft. of torque, in wet-sump (P/N 19332621) and dry-sump (P/N 19332702) versions. The wet-sump edition is great for street-based project vehicles, while the dry-sump LT4 is the perfect weapon for dual-purpose street/track vehicles.

In addition to being the most powerful production engine ever from Chevrolet, the LT4 is also the most technologically advanced, with features such as variable valve timing, direct injection, lightweight titanium intake valves and a more efficient supercharger with higher-rpm capability. They help optimize performance while offering surprising efficiency.

The Corvette Z06 reset the bar for production high-performance and its LT4 does the same for production-based crate engines. If your resto-mod muscle car, vintage Corvette or off-roader can handle the power, this is the high-tech heart transplant it's been waiting for! See page 218 for more details.

CORVETTE
LT4

New ZZ6 350 Advances Historic 'ZZ' Crate Engine Legacy

It's been more than 25 years since Chevrolet Performance introduced the first "ZZ" 350-based crate engine – and nearly 20 years since the iconic ZZ4 350 crate engine made hot rodding history.

This year, Chevrolet Performance makes history again with the all-new ZZ6 crate engine. Developed with contemporary technologies, such as a high-rpm valvetrain with beehive-style valve springs inspired by the LS engine family, it pushes factory-built performance for the classic 350 to a new threshold: 405 horsepower and 406 lb.-ft. of torque. That's more power than any 350 engine ever installed in a production vehicle.

High-flow, Fast Burn-style aluminum cylinder heads enable the ZZ6 to flow big air and the beehive-style valve springs offer exceptional high-rpm performance and durability, allowing the engine to rev higher to achieve its benchmark output. The engine is also built on a strong foundation, with a brand-new four-bolt-mains block and a forged crankshaft.

Chevrolet Performance offers the new ZZ6 crate engine in a complete Turn-Key package (P/N 19351533), which includes the carburetor, starter, distributor and even accessories, such as the air conditioning compressor and front-end accessory drive system. It is also offered in a Base version (P/N 19351532), which includes a high-flow aluminum intake, but requires the carburetor and other accessories to be added.

No matter how you order it, the all-new ZZ6 is the ultimate ZZ 350-based crate engine from Chevrolet Performance – and the perfect Small-Block for your project! See pages 122-125 for more details.

New and Hot! LT1 Performance Parts!

CNC Heads, Hot Cam Kit Expand Capability of Chevy's Gen V Small-Block

Introduced more than 60 years ago, the Chevrolet Small-Block is the benchmark performance V-8 engine. The fifth-generation of the iconic overhead-valve architecture is the power behind today's Chevy full-size trucks, the Corvette and the all-new 2016 Camaro SS.

In the Corvette Stingray and Camaro SS, it's known as the LT1, and at 460 horsepower it's the most powerful standard engine ever offered in both vehicles. Chevrolet Performance is proud to announce a new CNC-ported cylinder head and an LT1 Hot Cam for the engine to give builders and enthusiasts the capability of coaxing even more power from the high-tech V-8.

The new LT1 CNC cylinder head (P/N19329839) offers greater airflow capability from ported intake and exhaust runners. It comes fully assembled with the valves, valve springs and retainers; and is designed as a direct replacement for the original LT1 cylinder head.

Chevrolet Performance's new LT1 Hot Cam (P/N 19303897) builds on the legacy of racing-proven camshafts for Gen I and LS-Family Small-Block engines, enabling the LT1 to increase airflow capability across the rpm band. It is designed for off-road use and to perform optimally with the Active Fuel Management cylinder deactivation system disabled. A new valve lifter kit (P/N 12648846) includes eight conventional lifters to replace the eight specialty lifters in the LT1 that support Active Fuel Management. There's also a new valve lifter guide kit (P/N 12595365) to go with the new lifters.

For the ultimate LT1 performance upgrade, Chevrolet Performance offers a comprehensive kit (P/N 19333525) that includes a pair of the CNC-ported heads, the Hot Cam, lifters and lifter guides. Tuning is required with all of the components to achieve optimal performance. Off-road use only. Tuning calibration not supplied by Chevrolet Performance.

The LT1 is driving Small-Block performance into a new era and with Chevrolet Performance, you can get even more from this modern classic!

See page 271 for complete details.

NOTE: *Installation of this kit will affect engine variable valve timing and Active Fuel Management operation. Recalibration is required for accurate engine operation (not available from GM).*

(See page 35 for important warranty information)

Stay Connected.

3 DESTINATIONS. 1 HOME.

Connect to the most current Chevrolet Performance parts, news, and more.

@ChevroletPerformance @ChevroletPerformance @ChevroletPerf @ChevroletPerf

Chevrolet Performance Website

Visit chevrolet.com/performance. Stay current with new product offerings, connect to your local dealer, and get pricing on the parts you need.

- *Access the engine selector*
- *Download the online parts catalog*
- *Access the FUEL e-news archive*
- *Explore racing components and the COPO Camaro*

It all begins at chevrolet.com/performance

FUEL eNewsletter

Feed your passion for high-octane stories on the vehicles, parts, and racing that matter to you when you subscribe to FUEL eNewsletter.

- *Monthly newsletter*
- *Conveniently e-mailed straight to your in-box*
- *Quick and easy sign-up*

Get your complimentary subscription at chevrolet.com/performance/fuel-newsletter

TheBLOCK.com Social Forum

The only online community devoted exclusively to Chevrolet Performance news, culture, and more can be found on the all-new BLOCK website.

- *New stories added every week*
- *Home to enthusiast forums*
- *Event calendars*
- *Featured engineer interviews, vehicle builds, and part spotlights*

Join the community at theBLOCK.com

CHEVROLET PERFORMANCE

Upgrades & Accessories

New Upgrades for the Gen 6 Camaro, Corvette, Trucks and More!

That new Chevrolet becomes truly yours when you personalize it with factory-engineered performance parts and accessories from Chevrolet Performance.

Available through your Chevy dealer and other authorized retailers, Chevrolet Performance offers components for nearly every new Chevy vehicle, including new, exciting collections for the all-new 2016 Camaro and Z06-based parts for the 2014 – 2016 Corvette Stingray. We have also introduced new performance parts for trucks and full-size SUVs.

All Chevrolet Performance parts and accessories are designed and validated to the same standards as regular-production parts. That means they have the look, feel and durability of regular-production components – and we guarantee them, so you can be confident about your purchase. In fact, most of our production-based parts won't affect your new Chevrolet's new-vehicle warranty when they're installed by your dealer.

Take a look at all Chevrolet Performance has to offer to make your new Chevy truly yours!

CAMARO PG.16

CORVETTE PG. 42

CRUZE PG.54

SONIC PG.56

SILVERADO PG.60

COLORADO PG.66

GEN 6 Camaro Performance Upgrades

All-New Performance Parts for Your All-New Gen 6 Camaro!

Thanks to an all-new, stronger, stiffer and lighter architecture as its foundation, the Gen 6 Camaro is more capable than ever. In fact, with more power than its predecessor's V-6 and V-8 engines, the Gen 6 Camaro accelerates quicker, turns with greater confidence and brakes harder to deliver new benchmarks in performance.

Of course, true performance enthusiasts are always looking for an edge in performance and profile, and Chevrolet Performance is there with an all-new lineup of components and systems designed to make the Gen 6 Camaro pull even harder, stop even shorter while looking – and sounding – even better doing it.

From performance air intake and exhaust systems, to lowering kits and even performance brake systems, this new lineup is sure to distinguish your 2016 Camaro on the street or at the track. Like all of our new vehicle components and accessories, each is factory-engineered and validated to production-vehicle standards, so you can be confident these upgrades will look, fit and perform like original equipment.

There's never been a better-performing Camaro and with these new performance accessories, your Gen 6 will offer even more!

NEW!

▲

84004136 (SS Coupe without magnetic ride control)

2016 Camaro Lowering Kit – Camaro SS with LT1 V-8

Our engineers have designed the Camaro Lowering Kit components to lower vehicle ride height and improve handling feel. The kit uses higher rate front and rear coil springs along with specifically tuned struts and shocks to provide an integrated package to maximize both ride quality and vehicle performance. The package also lowers the vehicle a maximum of 20mm at each corner to give your Camaro a more-aggressive stance – and a lower center of gravity that enhances the feeling of responsiveness. Each factory-engineered kit is tuned for the unique chassis attributes of the LT and SS models, including specific kits for coupes and convertibles.

2016 Camaro Lowering Kit Options include:

Part Number	Description
84004136	Camaro SS Coupe (without Magnetic Ride Control). For 1SS/2SS
84004140	Camaro SS Convertible (without Magnetic Ride Control). For 1SS/2SS
84004131	Camaro LT Coupe (with 20" wheels). For 1LT/2LT/LGX/LTG
84004138	Camaro LT Convertible (with 20" wheels) For 1LT/2LT/LGX/LTG

NOTE: *Rear shocks will not include shock mount, dust cover, or jounce bumper as shown in kit.*

NEW!

◄ **23408280**

Performance Air Intake – Camaro SS with LT1 V-8

Upgrade the look and performance of your 2016 Camaro with the Chevrolet Performance Air Intake. This intake looks great under the hood. It is available for LT1 applications and reduces air intake restriction by 17% at peak airflow (350 grams per second).

NEW!

▲

23245470

Brembo® Performance Front Brake Package (Four-Piston Calipers) – 2016 Camaro LT with 2.0L Turbo or 3.6L V-6

The Chevrolet Performance front brake system features Brembo® four-piston aluminum calipers with performance brake pads and 13.6-inch x 1.2-inch (345mm x 30mm) vented and slotted Duralife™ rotors – the same size as the Camaro SS! The Duralife™ rotors feature a hardened surface to reduce corrosion and provide quieter braking with less vibration. The kit is a direct replacement for the original front brakes and includes low-expansion front brake hoses, all necessary hardware and installation instructions. It is available for Gen 6 Camaro models equipped with the 2.0L Turbo or 3.6L V-6 engines.

NEW!

▲

23245471

Brembo® Performance Front Brake Package (Six-Piston Calipers) – 2016 Camaro LT and SS

Take the braking capability of your Camaro LT or SS to a higher level with the Chevrolet Performance Brembo® front brake system featuring six-piston monoblock aluminum calipers with performance brake pads and two-piece, 14.6-inch x 1.3-inch (370mm x 34mm) vented and slotted Duralife™ rotors (cast-iron braking rings with aluminum hats). These performance brakes are for the serious track enthusiast looking for ultimate braking performance while maintaining street drivability – and they're larger than the factory systems for LT and SS (SS features 13.6-inch rotors/four-piston calipers from the factory). The Duralife™ rotors feature a hardened surface to reduce corrosion and provide quieter braking with less vibration. This front-brake kit is available for all Gen 6 Camaro models and includes low-expansion front brake hoses, all necessary hardware and installation instructions.

NEW!

84028865

Performance Exhaust – 2016 Camaro SS with LT1 V-8

Your new Camaro SS will sound better than ever with the Chevrolet Performance Exhaust System. The axle-back exhaust system offers great performance sound and premium appearance, replacing the original exhaust – and it won't void the factory warranty. Entire system made from 304 Stainless Steel. Made with 2.75" Diameter piping and includes 4" High Polish 304 Stainless Tip. Backpressure in the accessory mufflers is reduced 25% from the stock muffler based on correlated flow testing. This kit is available for Camaro SS LT1 applications, except when equipped with the NPP-code dual-mode exhaust.

NOTE: *Active Noise Cancellation is included for vehicles with Bose® stereo system*

Options include:

Part Number	Description
84028867	LT1 Exhaust Kit With Ground Effects Kit

NEW!

84028864

Performance Exhaust – 2016 Camaro LGX with 3.6L V-6

Give your V-6-powered Gen Six Camaro a distinctive sound with this Chevrolet Performance Exhaust System. Entire system made from 304 Stainless Steel. Made with 2.25" Diameter piping and includes 4" High Polish 304 Stainless Tip. The axle-back exhaust system offers great performance sound and premium appearance, replacing the original exhaust – and it won't void the factory warranty. This kit is available for Camaro LT models with the LGX-code 3.6L V-6, except when equipped with the NPP-code dual-mode exhaust.

Options include:

Part Number	Description
84028866	LGX Exhaust Kit With Ground Effects Kit

NEW!

12663903 (LGX V-6, red)
12663900 (LTG 4-cylinder, blue)

2016 Camaro Engine Covers

Give your Gen 6 Camaro's LT or SS engine a stylish, show quality upgrade with this engine cover. They are available to match most exterior colors, allowing you to complement or contrast the color choices to suit your style.

Engine Cover Options include:

Part Number	Description
12663899	For use with LTG, Red
12663900	For use with LTG, Blue (shown)
12663901	For use with LTG, Black
12663903	For use with LGX, Red (shown)
12663904	For use with LGX, Blue
12663905	For use with LGX, Black
12669894	For use with LT1, Red
12669895	For use with LT1, Black
12669896	For use with LT1, Blue

GEN 6 CAMARO EXTERIOR

Custom Graphics

A. Decal/Stripe Package – Body Side Spear

Add a personal touch to your Camaro with these Full-Length Decal Packages in multiple color options.

Part Number	Year	Detail
23507052	2016	Body-Side Spear Decals, Carbon Flash Metallic, For Coupe Only
23507053	2016	Body-Side Spear Decals, Nightfall Gray Metallic (G7Q), For Coupe Only
23507054	2016	Body-Side Spear Decals, Silver Ice Metallic, For Coupe Only
23507055	2016	Body-Side Spear Decals, Red Hot (G7C), For Coupe Only
23507056	2016	Body-Side Spear Decals, Hyper Blue Metallic (GD1), For Coupe Only
23507057	2016	Body-Side Spear Decals, Abalone White (G1W), For Coupe Only

B. Decal/Stripe Package – Center Stripe

Add a personal touch to your Camaro with these Center Stripe Decal Packages in multiple color options.

Part Number	Year	Detail
84047832	2016	Center Stripe Decal, Black
84047833	2016	Center Stripe Decal, Silver Ice Metallic
84047834	2016	Center Stripe Decal, Abalone White
84047835	2016	Center Stripe Decal, Red Hot
84047836	2016	Center Stripe Decal, Hyper Blue Metallic
84047837	2016	Center Stripe Decal, Carbon Flash Metallic

A Body Side Spear Decal, Abalone White

A Body Side Spear Decal, Black

B Center Stripe Decal, Abalone White

Rally Stripe, Black C

Fender Hash Marks, Abalone White D

Fender Hash Marks, Hyper Blue Metallic D

C. Decal/Stripe Package – Rally Stripe

Add Rally Stripes in varoius color options to the hood/deck lid of your Camaro for additional styling.

Part Number	Year	Detail
84047846	2016	Hood/Decklid Rally Stripe Package, LT Convertible, Silver Ice Metallic (GAN)
84047847	2016	Hood/Decklid Rally Stripe Package, LT Convertible, Black (GBA)
84047848	2016	Hood/Decklid Rally Stripe Package, LT Convertible, Abalone White (G1W)
84047849	2016	Hood/Decklid Rally Stripe Package, LT Convertible, Red Hot (G7C)
84047850	2016	Hood/Decklid Rally Stripe Package, LT Convertible, Hyper Blue Metallic (GD1)
84047851	2016	Hood/Decklid Rally Stripe Package, LT Convertible, Carbon Flash Metallic
84047853	2016	Hood/Decklid Rally Stripe Package, SS Convertible, Silver Ice Metallic (GAN)
84047854	2016	Hood/Decklid Rally Stripe Package, SS Convertible, Carbon Flash Metallic
84047855	2016	Hood/Decklid Rally Stripe Package, SS Convertible, Abalone White (G1W)
84047856	2016	Hood/Decklid Rally Stripe Package, SS Convertible, Black (GBA)
84047857	2016	Hood/Decklid Rally Stripe Package, SS Convertible, Red Hot (G7C)
84047858	2016	Hood/Decklid Rally Stripe Package, SS Convertible, Hyper Blue Metallic (GD1)

D. Decal/Stripe Package – Fender Hash Marks

Fender Hash Marks can be added to the front fenders of your Camaro to accentuate the vehicle's powerful style lines.

Part Number	Year	Detail
23287483	2016	Fender Hash Decal Package - Abalone White (G1W)
23287484	2016	Fender Hash Decal Package - Hyper Blue Metallic (GD1)
23287485	2016	Fender Hash Decal Package - Red Hot (G7C)
23287486	2016	Fender Hash Decal Package - Silver Ice Metallic (GAN)
23287487	2016	Fender Hash Decal Package - Nightfall Gray Metallic (G7Q)
23287488	2016	Fender Hash Decal Package - Carbon Flash Metallic

Emblems (not shown)

Increase the visibility of your Camaro with these eye-catching exterior body Emblems.

Part Number	Year	Detail
23380121	2016	Emblems - Gold Illuminated Bowtie Badge
23358104	2016	Emblems - Front and Back Black Bowtie

Gen 6 Camaro Exterior Continued

A. Ground Effects

Create a dramatic, ground-hugging appearance for your Camaro LT or SS with this Ground Effects Package featuring a Front Fascia Extension in multiple color options. Dual or Quad exhaust compatible options available.

Part Number	Year	Detail
23301624	2016	Ground Effects - Front Fascia Extension, Black (GBA)
23301617	2016	Ground Effects - Front Fascia Extension, Black (GBA)
23301623	2016	Ground Effects - Front Fascia Extension, Mosaic Black Metallic (GB8)
23301616	2016	Ground Effects - Front Fascia Extension, Mosaic Black Metallic (GB8)
23301622	2016	Ground Effects - Front Fascia Extension, Nightfall Gray Metallic (G7Q)
23301615	2016	Ground Effects - Front Fascia Extension, Nightfall Gray Metallic (G7Q)
23301618	2016	Ground Effects - Front Fascia Extension, Paint to Match
23301611	2016	Ground Effects - Front Fascia Extension, Paint to Match
23301619	2016	Ground Effects - Front Fascia Extension, Red Hot (G7C)
23301612	2016	Ground Effects - Front Fascia Extension, Red Hot (G7C)
23301621	2016	Ground Effects - Front Fascia Extension, Silver Ice Metallic (GAN)
23301614	2016	Ground Effects - Front Fascia Extension, Silver Ice Metallic (GAN)
23301620	2016	Ground Effects - Front Fascia Extension, Summit White (GAZ)
23301613	2016	Ground Effects - Front Fascia Extension, Summit White (GAZ)

B. Spoiler Kit – Blade

Personalize the look of your Camaro with a custom race-inspired Blade Spoiler Kit in multiple color options.

Part Number	Year	Detail
23359709	2016	Blade Spoiler Kit, Black (GBA)
23359716	2016	Blade Spoiler Kit, Blue Velvet Metallic (G1W)
23359712	2016	Blade Spoiler Kit, Bright Yellow (G7D)
23359714	2016	Blade Spoiler Kit, Garnet Red Tintcoat (G7E)
23359715	2016	Blade Spoiler Kit, Hyper Blue Metallic (GD1)
23362020	2016	Blade Spoiler Kit, Mosaic Black Metallic (GB8)
23359710	2016	Blade Spoiler Kit, Nightfall Gray Metallic (G7Q)
23359713	2016	Blade Spoiler Kit, Red Hot (G7C)
23359717	2016	Blade Spoiler Kit, Silver Ice Metallic (GAN)
23359711	2016	Blade Spoiler Kit, Summit White (GAZ)

C. Grille

Personalize the front end of your Camaro LT or SS model with this sporty looking Grille in multiple color options.

Part Number	Year	Detail
23409567	2016	Black Grille, Silver Inserts
23409568	2016	Black Grille, Black Inserts
23409569	2016	Black Grille, Gray Inserts
23409570	2016	Black Grille, White Inserts
23409571	2016	Black Grille, Red Inserts
23409572	2016	Black Grille, Blue Inserts
23409573	2016	Black Grille, Silver Inserts
23409574	2016	Black Grille, Black Inserts
23409575	2016	Black Grille, Gray Inserts
23409576	2016	Black Grille, White Inserts
23409577	2016	Black Grille, Red Inserts
23409578	2016	Black Grille, Blue Inserts
23409579	2016	Black Grille, Bright Chrome Inserts
23409580	2016	Black Grille, Bright Chrome Inserts

Vehicle Cover (not shown)

Help protect the exterior finish of your Camaro from dirt, dust and abrasive particles with these indoor and outdoor vehicle covers in various color options.

Part Number	Year	Detail
23457478	2016	Vehicle Cover - Indoor, Black
23457480	2016	Vehicle Cover - Indoor, Gray
23457479	2016	Vehicle Cover - Indoor, Red
23457475	2016	Vehicle Cover - Outdoor, Black
23457476	2016	Vehicle Cover - Outdoor, Red
23457477	2016	Vehicle Cover - Outdoor, Gray

A Ground Effects

B Spoiler Kit – Blade

C Grille – Red Inserts

20-Inch Aluminum Wheel – Polished with Black Star Center **D**

20-Inch Aluminum Wheel – Black with Red Stripe **D**

20-Inch Aluminum Wheel – Low-Gloss Black **D**

GEN 6 CAMARO WHEELS & ACCESSORIES

D. 20-Inch Wheels

Add a high-performance appearance to your Camaro with these Aluminum Wheels painted in various color options. For use on SS models only. Use only GM-approved wheel and tire combinations. See chevrolet.com/accessories for important tire and wheel information.

Part Number	Year	Detail
23333839	2016	20-inch Wheel - (20 x 8.5) Front Aluminum Wheel, Gloss Black Painted with Red Stripe (For SS Models only) - 56H
23333843	2016	20-inch Wheel - (20 x 8.5) Front Aluminum Wheel, Low-Gloss Black (For SS Models only) - 56F
23333841	2016	20-inch Wheel - (20 x 8.5) Front Aluminum Wheel, Polished Forged Wheel with Black Star Center Cap (For SS Models only) - 56K
23333848	2016	20-inch Wheel - (20 x 9.5) Rear Aluminum Wheel, Gloss Black Painted with Red Stripe (For SS Models only) - 56H
23333840	2016	20-inch Wheel - (20 x 9.5) Rear Aluminum Wheel, Low-Gloss Black (For SS Models only) - 56F
23333842	2016	20-inch Wheel - (20 x 9.5) Rear Aluminum Wheel, Polished Forged Wheel with Black Star Center Cap (For SS Models only) - 56K

Center Caps (not shown)

Add a finishing touch to your Camaro with these custom Center Caps that are Polished and include a Star Design. For use with 56K/5JW wheels.

Part Number	Year	Detail
23115620	2016	Polished, Star Design (For use with 56K/5JW Wheels)

GEN 5 Camaro Performance Upgrades

Upgrades to Enhance Capability on the Street or Track

The Gen 5 Camaro offers great performance capability, with special models including the 1LE, ZL1 and Z/28 taking that capability to higher levels.

Chevrolet Performance has dug into the parts bins for those higher-performing Camaro models to offer engine-performance, chassis and brake enhancements that give Camaro V-6 and SS owners the tools to build stronger-pulling, harder-cornering and quicker-stopping performance on the street or track. From the comprehensive Z/28 suspension kit to the ZL1 driveline package and brakes – along with shifters, cylinder heads, fuel system upgrades and even aerodynamic aids, we've got the components you need to transform your performance-hungry Gen 5 Camaro.

Better still, all of Chevrolet Performance's Gen 5 Camaro components are the factory-engineered and validated components used on the production models, so you know they'll fit, performance and hold up with the confidence you can't get with other aftermarket parts.

Check out our extensive and unmatched collection and take your Camaro's capability to the next level!

▲ 23464729

Gen 5 Z/28 Suspension Kit with DSSV® Dampers

The Z/28 is the first high-volume production road car to employ racing-derived DSSV® (Dynamic Suspensions Spool Valve) damper technology from Multimatic. The dampers rely upon a pair of self-piloted spool valves to control fluid through tuned port shapes rather than conventional deflected disc dampers. The design of the inverted-monotube front strut and aluminum-body monotube rear hydraulic dampers offers maximum response, stiffness and tuning optimized for the track, with the highest level of damper predictability, accuracy and repeatability. The unique dampers are the center of a comprehensive suspension package that also includes higher-rate coil springs, smaller-diameter solid stabilizer bars, and higher-rate suspension bushings. The dampers are matched with optimized stiff spring rates and stabilizer bars in both the front and rear to reduce body movement in hard cornering and acceleration. Also included in the package are front ride and handling links, rear upper control arms, rear trailing links, and toe links, which have upgraded stiffer bushings designed to reduce cornering compliance and increase durability on the track.

The system includes:

Part Number	Description	QTY
22942442	Performance Emblem	1
22842513	Front Stability Bar Assembly	1
22812943	Rear Stability Bar	1
22761221	Rear Stability Bar Links	2
23105018	Right Side Ride Link	1
23105019	Left Side Ride Link	1
23105014	Left Side Handling Link	1
23105015	Right Side Handling Link	1
23104902	Right Rear Upper Control Arm	1
23104903	Left Rear Upper Control Arm	1
23104900	Rear Lower Trailing Arm	2
22845487	Rear Toe Link	2
22903661	Left Strut	1
22903662	Right Strut	1
23473509	Right Rear Shock Absorber	1
23473510	Left Rear Shock Absorber	1
23475839	Installation Instructions	1

NOTE: *Intended for track only application, performs well when combined with high performance tires.*

◄ 23484878

Gen 5 1LE & Z/28 Service Modification Kit (2010-2011 Gen 5 Camaro model years only)

This kit includes the rear lower control arms and hardware necessary to properly install the stability bars included in the 1LE and Z/28 suspensions. This kit is needed for 2010 and 2011 model year Camaros only, as the size of the stabilizer bar clamp stud changed starting in 2012 for both the front and the rear bar clamps.

◀ 23478424 (driver seat)
23478428 (passenger seat)

Gen 5 Z/28 RECARO Sport Seats

RECARO is synonymous with performance seating and those developed for the Z/28 feature aggressive bolsters for high-performance driving, as well as cutouts inspired by the five-point harnesses found on racing seats. To save weight, the seats incorporate manual adjustment. They are trimmed in black leather with micro fiber inserts. Heated seats are a standard option in the 6-way powered seats only. "ZL1" and "SS" logos are optional for the 6-way powered seats only. Compatible with 2011-2015 Gen 5 Camaro coupe models only.

NOTE: *To maintain vehicle warranty, both driver AND passenger RECARO seats must be installed by an authorized dealer. Seats must match the original vehicle configuration.*

RECARO Sport Seat Options include:

Part Number	Description	Heated Seat	Stitching	Logo
23478424	4-way Manual, Driver Seat	N	Dark Steel Gray	—
23478428	2-way Manual, Passenger Seat	N	Dark Steel Gray	—
23478425	6-way Power, Driver Seat	Y	2SS-Light Stone	SS
23478429	6-way Power, Passenger Seat	Y	2SS-Light Stone	SS
23478426	6-way Power, Driver Seat	Y	2SS-Light Stone	—
23478430	6-way Power, Passenger Seat	Y	2SS-Light Stone	—
23478427	6-way Power, Driver Seat	Y	ZL1 - Torch Red	ZL1
23478431	6-way Power, Passenger Seat	Y	ZL1 - Torch Red	ZL1

▲ 19302762

Gen 5 Z/28 Exhaust Manifold Package* (Gen 5 Camaro only)

The Z/28 high-flow exhaust manifolds will provide increased airflow to the Camaro LS3/L99 6.2L engine. This kit enables bolt-on installation of the Z/28 dual-mode exhaust system. However, it will not work with the production LS3/L99 exhaust system.

NOTE: *No calibration support from GM is available.*

**See Warranty Statement on page 35*

23454578
Gen 5 Z/28 Air Intake*
A unique open air box intake system is used with the Z/28's LS7 engine, featuring a replaceable conical air filter and delivers the highest airflow performance of any production Camaro filter system. The air cleaner seals around the bottom of the hood, reducing the chance recirculated hot air will be drawn into the engine. It is a direct replacement for the intake system on the Camaro SS. The Z/28 air intake provides a 51% reduction in air restriction when compared to a standard LS3 equipped Camaro. Includes hardware that supports 1LE and SS PCV systems. Not recommended for use on L99. Not available for sale in California.

**See Warranty Statement on page 35*

23454579
Gen 5 Z/28 Exhaust Hook-Up Kit
Bolts an LS7 Z/28 cat-back exhaust to a LS3 Gen 5 Camaro. This is the only kit necessary to clamp the LS7 Z/28 exhaust (P/N 22906768) right up to your production LS3 equipped SS. The Z/28 Exhaust system provides a 26% reduction in back pressure compared to a LS3 equipped Camaro.

22906768
Gen 5 Z/28 Cat-Back Exhaust System (not shown)
A complete kit with pipes, mufflers, hangers and exhaust tips assembled as a single unit. It features 2.75" pipes, with 26% less back pressure than a stock LS3 system.

23216684
Gen 5 Z/28 Rear Differential Module Cooler Kit
The Camaro Z/28 is equipped with an RDM cooling system that circulates cooled transmission fluid through a heat exchanger integrated into the RDM cover. This innovative system reduces oil temperature by over 100°F, helping the differential maintain cool, stable performance throughout the most aggressive track driving sessions. The Z/28 system has greater heat rejection capability than competitors' air cooled RDMs, helping to prevent differential component damage from high temperature oil degradation. The integral heat exchanger design also eliminates the weight, noise and complexity of a dedicated external pump and its associated hardware, seen in many aftermarket systems. This Z/28 based RDM cooling kit can be applied to any 2010-2015 Camaro SS with a manual transmission.

Kit Includes:
- Z/28 RDM cover with gasket
- Upper and lower fluid lines
- All mounting hardware, clips brackets, and bolts for proper installation

▲

23489551

Gen 5 Z/28 Aero Components Kit

Take your Camaro's handling performance to the next level with this kit. Select downforce-enhancing aero components from the Z/28 are offered in this bolt-on package, including the Z/28 front splitter, Z/28 rear spoiler, underbody closeout panel, and revised Gurney lip extensions. And for even greater rear downforce performance, the Z/28 Wicker Bill Kit is offered above as a great addition to this kit.

The system includes:

Part Number	Description	QTY
23498354	Front Splitter Kit	1
23227595	Front Splitter Bracket Kit	1
23481656	Rear Blade Spoiler Kit	1

Part Number	Description	QTY
23222454	Gurney Lip Extension Kit	1
23459995	Underbody Closeout Panel Kit (not shown)	1

▲

23200130

Gen 5 Z/28 Wicker Bill Spoiler Kit

The rear spoiler kit contains everything you need to boost the downward force you are looking for on the rear wheels. The wicker blade spoiler extension rigidly attaches with 7 bolts that ensure a lifetime of durability. The spoiler and extension wicker can add over 110 lbs. at speeds above 125 mph. The kit includes, instruction sheet, rear wicker extension, installation drill template, and attaching fasteners. Compatible with the Rear Blade Spoiler (sold separately). *See page 39 for more details.*

23120542

Gen 5 Camaro SS Brake Upgrade Kit for Camaro V-6

Upgrades the front and rear brakes for 2010-2015 Camaro V-6 models with the Brembo® front and rear brake components from the SS. The front rotors are 14-inch diameter, compared to the 12.6-inch diameter of the V-6 brakes, while the rear rotors are 14.4-inch diameter, compared to the stock 12.4-inch rotors. The SS calipers are aluminum Brembo® four-piston units for each corner. It's a more economical option for customers who want greater brake performance on the street and track, but don't need the performance of the ZL1 brakes. The kit includes two front rotors and calipers, two rear rotors and calipers, brake pads, master cylinder and installation hardware.

NOTE: *Requires 20" wheels for caliper clearance. (See page 41 for details)*

The system includes:

Part Number	Description	QTY
23120544	Installation Sheet	1
22956541	Master Brake Cylinder	1
23131778	RR Brake Shield	1
23131777	LR Brake Shield	1
92229712	Front Hose	1
92229713	Front Hose	1
92229716	Rear Hose	2
21012386	Front and Rear Hose Washers	8
11569590	Front and Rear Hose Bolts	4
11611687	Rear Drive Shaft Nut	2
22907156	Front Pad Kit	1

Part Number	Description	QTY
89047711	Front Caliper Pin Kit	2
92233176	RR SS Caliper	1
92233177	LR SS Caliper	1
92244287	LF SS Caliper	1
92244288	RF SS Caliper	1
92245928	Front Rotor	2
92245929	Rear Rotor	2
89047728	Rear Caliper Pin Kit	2
89047744	Rear Pad Kit	1
22942442	Chevrolet Performance Badge	1
11515781	Rear Caliper to Knuckle Bolt	4
11570788	Front Caliper to Knuckle Bolt	4

23252398

Gen 5 Z/28 Brake Ducts

Brake ducts decrease "brake fade", increase brake component life, create secondary cooling of brake fluid and sustain brake pedal feel for longer periods of time. This is achieved by a supply of constant fresh air to the back of rotor area. This air supply improves convection of the brake rotor vanes, reducing heat build up compared to conventional air flow, thus increasing brake performance. Fits 2014-2015 SS and 1LE.

▲

22959672

Gen 5 SS V-8 Camaro to ZL1 Brembo® Front Brake Conversion Kit[1]

Upgrade the front brakes on your 2010-2015 Camaro SS with the larger brakes from the supercharged Camaro ZL1 – including racing-style two-piece, 14.6-inch front rotors and six-piston Brembo aluminum calipers, in black with the ZL1 logo. That compares with the 14-inch rotors/four-piston calipers on SS models.

The ZL1 two-piece rotors offer greater resistance to warping and potentially longer rotor life, as well as reduced weight. The design features a separate cast-iron rotor brake ring mounted to an aluminum "hat" that attaches the brake assembly to the wheel hub. The hat and brake ring cool at different rates, which helps the rotor dissipate heat more effectively. This racing-style disc design enhances braking performance under track operating conditions. Kit includes two rotors, two calipers, pads and mounting hardware.

Add the optional ZL1 rear caliper kit, P/N 23104466, to complement the style of the ZL1 front caliper.

The system includes:

Part Number	Description	QTY
22960684	Front Installation Sheet	1
20795300	ZL1 Front LH Rotor	1
20944529	ZL1 Front LH Caliper	1
20944530	ZL1 Front RH Caliper	1
25940448	SPO Front Caliper Pin Kit	2
25940447	SPO Front Service Pad Kit	1
20944523	ZL1 Front LH Hose	1
20944532	ZL1 Front LH Shield	1
20795302	ZL1 Front RH Rotor	1
20944522	ZL1 Front RH Hose	1
20944531	ZL1 Front RH Shield	1
11570788	Caliper to Knuckle Bolts	4
11569590	Front Hose Bolts	2
21012386	Front Hose Washers	4
22942442	Chevrolet Perf. Badge	1

NOTE: *Requires 20" wheels for caliper clearance.*

[1]For V-6 Conversion use Complete Kit P/N 22989384 (front and rear)

▲

23104466

Gen 5 SS V-8 Camaro to ZL1 Rear Conversion Kit

Make your SS rear brakes match the look of your front ZL1 conversion. Includes black ZL1 calipers and pads, hardware and instruction sheet.

NOTE: *Requires 20" wheels for caliper clearance.*

(See page 41 for details)

The system includes:

Part Number	Description	QTY
23117967	SSV8 Rear Installation Sheet	1
20944518	ZL1 Rear LH Caliper	1
20944519	ZL1 Rear RH Caliper	1
89047744	SPO Rear Pad Kit	1
89047728	SPO Rear Caliper Pin Kit	2
21012386	Rear Hose Washers (not shown)	4

▲

22989384

Gen 5 Camaro V-6 to ZL1 Brake Conversion Kit (Complete Front & Rear Kit)

Upgrade the brakes on your 2010-2015 Camaro V-6 to the system used on the supercharged Camaro ZL1 – including racing-style two-piece, 14.6 front rotors with six-piston Brembo® front calipers, 14.4-inch rear rotors with 4-piston Brembo® rear calipers and a V-8-specific master cylinder. That compares to the 12.6-inch front and 12.4-inch rear rotors and single-piston sliding calipers on V-6 models.

NOTE: *Requires 20" wheels for caliper clearance. (See page 41 for details)*

The front system includes:

Part Number	Description	QTY
22960684	Front Installation Sheet	1
20795300	ZL1 Front LH Rotor	1
20944529	ZL1 Front LH Caliper	1
20944530	ZL1 Front RH Caliper	1
25940448	Front Caliper Pin Kit	2
25940447	Front Service Pad Kit	1
20944523	ZL1 Front LH Hose	1
20944532	ZL1 Front LH Shield	1
20795302	ZL1 Front RH Rotor	1
20944522	ZL1 Front RH Hose	1
20944531	ZL1 Front RH Shield	1
11570788	Caliper to Knuckle Bolts	4
11569590	Front Hose Bolts	2
21012386	Front Hose Washers	4
22942442	Chevrolet Perf. Badge	1

The rear system includes:

Part Number	Description	QTY
22989385	Rear Installation Sheet	1
11515781	Rear Caliper to Knuckle Bolts	4
92245929	Rear Rotor	2
20944518	ZL1 Rear RH Caliper	1
20944519	ZL1 Rear LH Caliper	1
89047744	Rear Pad Kit	1
89047728	Rear Caliper Pin Kit	2
23131777	ZL1 Rear LH Shield	1
92229716	ZL1 Rear RH & LH Hose	2
23131778	ZL1 Rear RH Shield	1
21012386	Front & Rear Hose Washers	4
22956541	V-8 Master Cylinder	1
11569590	Rear Hose Bolts	2

▲

23123398 (V-6 Camaro)
23123397 (V-8 Camaro, not shown)
Gen 5 Camaro 1LE Track Pack – Street

Upgrade your V-6 or SS Camaro's suspension with the same parts used in the 1LE Trak-Pak. This kit features a stiffer 27mm solid front stabilizer bar and a 28mm solid rear stabilizer bar for improved body control in cornering. The front struts were redesigned with improved damping curves for more body control and quicker response times. It also includes faster reacting rear monotube shocks to replace the V-6 and SS twin-tube design and combines them with a stiffer rear upper shock mount to increase vehicle agility, both are shared with the ZL1. The bushings in the rear toe link are replaced with spherical bushings to eliminate compliance in cornering, which is also common with the ZL1. The V-6 kit also includes the stiffer front springs used on the 1LE and SS variants. Vehicle warranty remains intact with the installation of either system.

NOTE: *The V-6 1LE suspension kit requires use of SS Brake kit #'s 23120542 and 23120543 for proper rear stabilizer bar clearance (not included).*

23123397 V-8 system includes:

Part Number	Description	QTY
11516078	Nut-FRT STAB HYD SHF Link	2
22942442	Emblem-F/End UPR Tie Bar	1
23123399	Installation - ACSRY	1
11569638	Nut-FRT SUSP Strut MT	2
11516078	Nut-RR S/ABS (UPR)	2
22845487	Link ASM-RR SUSP ADJ	2
23115372	Absorber ASM-RR SHK	2
22922445	Mount ASM-RR S/ABS UPR	1
22922446	Mount ASM-RR S/ABS UPR	1
22761221	Link ASM-RR S/ABS UPR	2
22786260	Shaft ASM-RR STAB	1
22812942	Shaft ASM-FRT STAB	1
22812984	Strut ASM-FRT SUSP	1
22812985	Strut ASM-FRT SUSP	1

23123398 V-6 system includes:

Part Number	Description	QTY
92245257	Spring-FRT	2
23123400	Installation - ACSRY	1
11516078	Nut-FRT STAB HYD SHF Link	2
22942442	Emblem-F/End Upper Tie Bar	1
23123399	Installation ACSRY	1
11569638	Nut-FRT SUSP Strut MT	2
11516078	Nut-RR S/ABS (UPR)	2
22845487	Link ASM-RR SUSP ADJ	2
23115372	Absorber ASM-RR SHK	2
22922445	Mount ASM-RR S/ABS UPR	1
22922446	Mount ASM-RR S/ABS UPR	1
22761221	Link ASM-RR STAB SHF	2
22786260	Shaft ASM-RR STAB	1
22812942	Shaft ASM-FRT STAB	1
22812984	Strut ASM-FRT SUSP	1
22812985	Strut ASM-FRT SUSP	1

22959394
Gen 5 Camaro ZL1 HD Driveline Kit (Manual)*

If you're building an ultimate-performance 2010-2015 Camaro, Chevrolet Performance's Camaro ZL1 Driveline Kit delivers the strength required to put big power to the pavement. This kit features the specialty components from the production Camaro ZL1, including a larger, stronger 9.9-inch cast iron differential housing, stronger axles and heavy-duty limited-slip differential. This patent-pending system is designed to ensure that the ZL1's tremendous power is delivered smoothly to the ground. A rear-differential cooler is incorporated and reduces temperatures in the differential by more than 100° F (fluid lines must be installed). Asymmetrical half-shafts – a 60mm hollow shaft on the right and a 33mm solid shaft on the left – offer different torsional stiffness rates, which work with the limited-slip differential to minimize the chance of wheel hop on hard launches. Also included is a stronger ZL1 prop shaft.

NOTE: *This change will affect the indicated vehicle speed. Recalibration is required for accurate speedometer reading. Not available from Chevrolet Performance.*

22959395 (not shown)
Gen 5 Camaro ZL1 HD Driveline Kit (Automatic)*

All the performance advantages of kit #22959394 described above, but for vehicles equipped with an automatic transmission.

NOTE: *This change will affect the indicated vehicle speed. Recalibration is required for accurate speedometer reading. Not available from Chevrolet Performance.*

**See Warranty Statement on page 35*

Manual system includes:

Part Number	Description	QTY
20931145	Propshaft	1
20931133	RDM	1
22960153	RDM Plug/cap	2
22953760	LH Halfshaft	1
22953759	RH Halfshaft	1
22960154	Trans Flange	1
89059464	Trans Flange Nut	2
89059465	Trans Flange Washer	1
22960155	I-Sheet	1
11611234	Driveshaft Nut	1
11611965	Driveshaft Washer	2
11611335	Prop to Trans Bolt	3
11611365	Prop to Trans Nut	3
11515758	Prop to Frame Bolt	2
11516878	RDM to Crade Bolt	3
11516078	RDM to Crade Nut	3
22942442	Chevrolet Perf. Badge	1

Automatic system includes:

Part Number	Description	QTY
22960156	Propshaft	1
20931134	RDM	1
22960153	RDM Plug/cap	2
22953760	LH Halfshaft	1
22953759	RH Halfshaft	1
24256909	Trans Flange	1
24256278	Trans Flange Nut	1
22960155	I-Sheet	1
11611234	Driveshaft Nut	2
11611965	Driveshaft Washer	2
11611335	Prop to Trans Bolt	3
11611365	Prop to Trans Nut	3
11611336	Prop to RDM Bolt	3
11515758	Prop to Frame Bolt	2
11516878	RDM to Crade Bolt	3
11516078	RDM to Crade Nut	3
22942442	Chevrolet Perf. Badge	1

19301504 (fits MY 2010-2013)
19329768 (fits MY 2014-2015)
Gen 5 Camaro 1LE 3.91 Gear Kit

This lower (higher numerically) ratio rear drive gear kit will increase effective rear wheel torque multiplication in Gen 5 Camaros by 13% (over standard 3.45 ratio) in a manual transmission-equipped car, and 20% (over standard 3.27 ratio) in an automatic-equipped car. This gearset is the original equipment ratio found in the 2013 – 2015 1LE Camaro package. Reflash of the speedometer calibration by your dealer is included with the kit. GM provides a calibration and new certification label.

The kit includes:

Part Number	Description	QTY
22813040	Gear Kit (shown)	1
92230403	Gasket	1
92230584	Oil Seal	1
90538867	Nut	3
92138569	Bolt	3
92139104	Bolt	3
88900330	Limited Slip Differential Oil Additive	1
19301909	Label Altered Vehicle Cert.	1
19301503	Instruction Sheet	1

A. 23322214

Gen 5 Camaro Short-Throw Suede-Wrapped Shifter Kit

Get quicker, more precise shifts in your manual-transmission Camaro SS with Chevrolet Performance's Camaro ZL1 shifter kit. This is the same shifter used in the production ZL1, which delivers shorter shifts than the shifter in the SS. The kit includes the shifter, installation hardware and a sueded micro-fiber shift knob with contrast stitching.

23157703

Gen 5 Camaro Short-Throw Leather-Wrapped Shifter (not shown)

The production Camaro Performance Package shifter delivers shorter, more precise shifts for a greater feeling of control and more immediate performance. It is a direct replacement for the standard manual shifter on 2010-2015 Camaro SS models and is similar to the Camaro ZL1 shifter, but with a leather-wrapped shift knob. The kit includes the shifter, shift knob and installation hardware.

B. 19301246

Air Inlet Kit for LS-Based Crate Engine Installation[1]

Designed for universal LS and LSX EFI crate engine installations, this kit contains intake tubes with provisions for the mass airflow meter and vacuum line, along with a reusable, high-performance air filter and mounting hardware. When joined, the kit's straight and elbow tubes provide the optimal distance between the throttle opening and mass airflow meter, including the minimum length of straight tubing required for accurate mass airflow meter operation – saving the time and guesswork involved with fabricating a similar system. The intake tubes are polished and the kit also includes couplers, worm-style clamps and a vacuum hose. The mass airflow meter provision accepts all GM production meters, which must be purchased separately.

[1]Only impacts warranty if used as a replacement for production air systems. No calibration or emission certification for OBD II vehicles is available. See Warranty Statement on page 35

NOTE: *This is a universal kit and may not fit every application. Additional fabrication may be required, but the length of the straight tube must be maintained for accurate mass airflow meter operation.*

C. 19300535

LS3 Power Upgrade Kit – Basic (Heads and Cam Only)*

Increase the power of the LS3 engine in your Corvette or Camaro SS by 40 horsepower with Chevrolet Performance's high-performance heads-and-cam kit. Developed by Chevrolet Performance engineers as a direct replacement for the factory-installed heads and camshaft (tuning required), the kit includes our CNC-ported LS3 cylinder heads, which flow more than 350 cfm (intake side), with 276cc intake runners and 2.165"/1.590" valves. The high-lift LS7 camshaft makes the most of the heads' generous airflow attributes, holding the big valves open so the engine can process more air. This kit fits other LS-family engines with at least 4.000" bores. Contents include the camshaft and fully assembled cylinder heads. Head gaskets and cylinder head bolts must be purchased separately.

19301990

LS3 Power Upgrade Kit – Deluxe (Heads, Cam and Components)* (not shown)

Same as #19300535 (above), but includes cylinder heads, camshaft and components needed to complete the job.

Part Number	Description	QTY
88958758	CNC LS3 Cyl Head	2
12638426	LS7 Camshaft	1
12623754	Camshaft Sprocket	1
11588723	Cam Bolts	3
12610046	Head Gasket	2
19258707	Head Bolts	20
12602540	Cover	2
12617944	Exhaust Manifold Gasket	2
12557840	Crankshaft Bolt	1

A Gen 5 Camaro Short-Throw Suede-Wrapped Shifter Kit

B Air Inlet Kit for LS-Based Crate Engine Installation

C LS3 Power Upgrade Kit – Basic

LS3 CNC-Ported Cylinder Head **D**

Gen 5 Camaro 1LE PCV System **E**

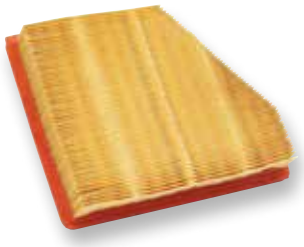

Gen 5 ZL1 Low-Restriction Air Filter **F**

Gen 5 ZL1 Fuel Pump **G**

Gen 5 Camaro 1LE Strut Tower Brace **H**

D. 88958758
LS3 CNC-Ported Cylinder Head*
It flows nearly 10-percent more than the stock cylinder head to promote greater power across the rpm band.

19328743
LS9 CNC-Ported Head Assembly (not shown)
- Roto-cast design for additional casting strength
- CNC-Ported to same specs as P/N 88958758 LS3 design
- Assembled with lightweight LS9 components including titanium intake valves, sodium-filled exhaust valves and high-performance beehive-style valve springs

See page 259 for more details

E. 12653073
Gen 5 Camaro 1LE PCV System
Crankcase ventilation system designed for the track-oriented Camaro 1LE package, designed for excellent oil separation and crankcase return during high-performance driving and high-load cornering. Simple catch-can-type design screws into oil-fill port in the rocker cover of V-8 and V-6 models.

F. 92229651
Gen 5 ZL1 Low-Restriction Air Filter
The 580-horsepower supercharged LSA engine in the Camaro ZL1 draws air through a special, low-restriction air filter element. It is a direct replacement for the air filter element in 2010-2015 Camaro SS models.

G. 19260557
Gen 5 ZL1 Fuel Pump
The high-capacity fuel pump module from the 2012 Camaro ZL1 drops right into 2010+ Camaro fuel tanks and supports about 600 hp.

NOTE: *When combined with service part 22756513 and 22756514 fuel pickups, you can expand the amount of fuel available during road course usage with your Camaro.*

H. 23120485
Gen 5 Camaro 1LE Strut Tower Brace
Standard on the Camaro 1LE, this lightweight, aluminum underhood tower-to-tower brace enhances chassis stiffness, contributing to a firmer feel behind the wheel and more-direct steering response. It is a direct bolt-on for 2011-2015 Camaro SS and V-6 models. Kit includes the brace and installation hardware (not shown).

** The installation and operation of these components in vehicles is intended for off-road operation only. The use of these components in a GM vehicle may result in adversely affecting vehicle performance. In some cases, use of certain Chevrolet Performance components may result in the failure of other components or systems, which would not be covered under the New Vehicle Limited Warranty. Specific restrictions are called out with each Performance Part. Otherwise, vehicles do retain their New Vehicle Limited Warranty coverage with Chevrolet Performance components installed by an authorized GM Dealer or qualified Independent Service Center.*

The Ultimate Track Gen 5 Camaro SS

So you have decided to stop using your Gen 5 Camaro SS merely as a daily driver, and want to dedicate it to dominating on the road course? We can help take you there!

As we have steadily improved the performance of our production Camaro lineup from the SS to the 1LE, ZL1, and culminating with the Z/28, we have continuously offered key performance-enhancing parts from each of these performance variants as Chevrolet Performance Accessories to integrate into your Camaro SS, and improve its track acumen.

We have now combined the ultimate selection of these key upgrades, with select service parts and our Chevrolet Performance LS3 Engine upgrades to create an incredibly fast, reliable, and affordable track car that will take the drama out of your build and track events. These parts are designed and tested to meet not only our typical lifetime component and vehicle durability, but also our grueling 24-hour track durability testing.

Why take the risk with the aftermarket when you can transform your car with genuine Chevrolet Performance parts developed and tested by the same team that developed your Camaro SS?

THE ULTIMATE TRACK GEN 5 CAMARO SS SELECTION

	Part Numbers per Model/Year				
Kit Description	**Camaro 1LE 2014-2015**	**Camaro 1LE 2013**	**Camaro SS 2014-2015**	**Camaro SS 2012-2013**	**Camaro SS 2010-2011**
Z/28 RDM	23172755	23172755	23172755	23172755	23172755
Z/28 RDM Cooling System Kit[1]	23216684	23216684	23216684	23216684	23216684
Z/28 Half Shaft (Left)	23473010	23473010	23473010	23473010	23473010
Z/28 Half Shaft (Right)	23473011	23473011	23473011	23473011	23473011
Z/28 Aero Package[2]	23489551	—	23489551	—	—
Z/28 Wicker Kit	23200130	—	23200130	—	—
Z/28 Suspension Kit	23464729	23464729	23464729	23464729	23464729
ZL1 Engine Mounts	20952437	20952437	20952437	20952437	20952437
Z/28 Concentric Slave Cylinder	24266013	24266013	24266013	24266013	24266013
Z/28 Induction	23454578	23454578	23454578	23454578	23454578
Z/28 Brake Ducts	23252398	—	23252398	—	—
LS7 Exhaust Adapter	23454579	23454579	23454579	23454579	23454579
LS7 Exhaust System	22906768	22906768	22906768	22906768	22906768
ZL1 Brake Upgrade Kit	22959672	22959672	22959672	22959672	22959672
LS3 Power Upgrade Kit – Deluxe	19301990	19301990	19301990	19301990	19301990
RECARO Seats (Driver/Passenger)	23478424/23478428	23478424/23478428	23478424/23478428	23478424/23478428	—
ZL1 Wheel Hubs/Bearings	25954415	25954415	25954415	25954415	25954415
1LE Wheels - Front, 20" x 10"	—	—	22798741	22798741	22798741
1LE Wheels - Rear, 20" x 11"	—	—	22798743	22798743	22798743
1LE Tires - Left	—	—	88878548	88878548	88878548
1LE Tires - Right	—	—	88878549	88878549	88878549
1LE PCV System	—	—	12653073	12653073	12653073
Camaro 1LE Strut Tower Brace	—	—	23120485	23120485	23120485
Short Throw Shifter (Suede)[3]	—	—	19299460	19299460	19299460
ZL1 Fuel Pump	—	—	19260557	19260557	19260557
ZL1 Fuel Pickup Hose	—	—	22756513	22756513	22756513
ZL1 Fuel Pickup Pipe	—	—	22756514	22756514	22756514
1LE Suspension Adapter Kit[4]	—	—	—	—	23484878

[1] For Manual Cars only
[2] See page 28 for details
[3] Alternate P/N 23157703, Leather Gear Knob
[4] Needed for Z/28 Suspension Upgrade

GEN 5 CAMARO EXTERIOR

A. Ground Effects

This Ground Effects package creates a dramatic, ground-hugging look for your Camaro. Package includes a front splitter, side rockers, and a rear diffuser with chrome exhaust bezels. Available in select body colors. Not compatible with Quarter Flares/Splash Guards, Performance Exhaust (NPP), and ZL1 Models,

Part Number	Year	Detail
22986797	2014-2015	Paint to Match - price does not include charge for painting. For use on SS Model Vehicles with Performance Exhaust (NPP)
22986798	2014-2015	Red Rock Metallic (G7P) - For use on SS Model Vehicles with Performance Exhaust (NPP)
22986799	2014-2015	Red (G7C) - For use on SS Model Vehicles with Performance Exhaust (NPP)
22986800	2014-2015	Silver Ice (GAN) - For use on SS Model Vehicles with Performance Exhaust (NPP)
22986801	2014-2015	Summit White (GAZ) - For use on SS Model Vehicles with Performance Exhaust (NPP)
22986802	2014-2015	Black (GBA) - For use on SS Model Vehicles with Performance Exhaust (NPP)
22986803	2014-2015	Crystal Red (GBE) - For use on SS Model Vehicles with Performance Exhaust (NPP)
22986804	2014-2015	Ashen Gray (GLJ) - For use on SS Model Vehicles With Performance Exhaust (NPP)
22986805	2014-2015	Blue Ray (GXH) - For use on SS Model Vehicles with Performance Exhaust (NPP)
22986806	2014-2015	Lemon (G7D) - For use on SS Model Vehicles with Performance Exhaust (NPP)
22986809	2014-2015	Paint to Match - price does not include charge for painting. For use on LT Model Vehicles with Performance Exhaust (NPP)
22986810	2014-2015	Silver Ice (GAN) - For use on LT Model Vehicles with Performance Exhaust (NPP)
22986823	2014-2015	Summit White (GAZ) - For use on LT Model Vehicles with Performance Exhaust (NPP)
22986824	2014-2015	Black (GBA) - For use on LT Model Vehicles with Performance Exhaust (NPP)
22986825	2014-2015	Crystal Red (GBE) - For use on LT Model Vehicles with Performance Exhaust (NPP)
22986826	2014-2015	Ashen Gray (GLJ) - For use on LT Model Vehicles with Performance Exhaust (NPP)
22986827	2014-2015	Blue Ray (GXH) - For use on LT Model Vehicles with Performance Exhaust (NPP)
22986828	2014-2015	Lemon (G7D) - For use on LT Model Vehicles with Performance Exhaust (NPP)
22986830	2014-2015	Red Rock Metallic (G7P) - For Use on LT Model Vehicles with Performance Exhaust (NPP)
22986831	2014-2015	Red (G7C) - For use on LT Model Vehicles with Performance Exhaust (NPP)
22986832	2014-2015	Paint to Match - price does not include charge for painting. For use on LT Model Vehicles with Dual Exhaust (N10)
22986833	2014-2015	Silver Ice (GAN) - For use on LT Model Vehicles with Dual Exhaust (N10)
22986834	2014-2015	Summit White (GAZ) - For use on LT Model Vehicles with Dual Exhaust (N10)
22986835	2014-2015	Black (GBA) - For use on LT Model Vehicles With Dual Exhaust (N10)
22986836	2014-2015	Crystal Red (GBE) - For use on LT Model Vehicles With Dual Exhaust (N10)
22986837	2014-2015	Ashen Gray (GLJ) - For use on LT Model Vehicles with Dual Exhaust (N10)
22986838	2014-2015	Blue Ray (GXH) - For use on LT Model Vehicles with Dual Exhaust (N10)
22986839	2014-2015	Lemon (G7D) - For use on LT Model Vehicles with Dual Exhaust (N10)

A Ground Effects

A Ground Effects

A Ground Effects

Gill Stripes **B**

Performance Decals, Black **C**

Heritage Stripe – White **D**

Spoiler Kit – ZL1 Blade Style **E**

Spoiler Kit – Z/28 High Wing Style, Bright Yellow **E**

B. Decal/Stripe Package – Gill Stripes

Add Gill Stripes to the rear-quarter side vents of your Camaro to accentuate the vehicle's powerful style lines.

Part Number	Year	Detail
20972524	2011-2015	Stripe Package - Black

C. Decal/Stripe Package – Performance Decals

Part Number	Year	Detail
23214522	2014-2015	Performance Decal Package, Black
23213279	2014-2015	Performance Decal Package, Gray

D. Decal/Stripe Package – Heritage Stripes

Give your Camaro a classic look with these Heritage Stripes. Available in a variety of colors.

Part Number	Year	Detail
20968499	2011-2015	Stripe Package - White
20968500	2011-2015	Stripe Package - Black
20990192	2010-2015	Stripe Package - Silver
20990193	2014-2015	Stripe Package - Gray
20990195	2011-2015	Stripe Package - Orange
22995858	2014-2015	Stripe Package - Blue
22995859	2014-2015	Stripe Package - Red Hot

Decal/Stripe Package – Hockey Stick Stripes (not shown)

The Hockey Stick Stripe Kit gives your Camaro a classic look with contemporary styling. Contact your Chevrolet dealership for more information.

Part Number	Year	Detail
22995864	2014-2015	Stripe Package - Silver
22995865	2014-2015	Stripe Package - Blue
22995866	2014-2015	Stripe Package - Red
22995872	2014-2015	Stripe Package - Orange
23106918	2014-2015	Stripe Package - White
23106919	2014-2015	Stripe Package - Cyber Gray
23106920	2014-2015	Stripe Package - Black

E. Spoiler Kits

Personalize the look of your Camaro with a custom race-inspired Spoiler Kit, available in two styles and several body colors. The mounting holes for the High-Wing Spoiler are completely different than the factory spoiler.

Blade

Part Number	Year	Detail
23209149	2014-2015	Rear Blade Wing Spoiler, Paint To Match
23475085	2014-2015	Rear Spoiler, ZL1 Blade, Ashen Gray Metallic
23475083	2014-2015	Rear Spoiler, ZL1 Blade, Black
23475089	2014-2015	Rear Spoiler, ZL1 Blade, Bright Yellow
23475087	2014-2015	Rear Spoiler, ZL1 Blade, Red Hot
23475088	2014-2015	Rear Spoiler, ZL1 Blade, Red Rock
23475084	2014-2015	Rear Spoiler, ZL1 Blade, Silver Ice Metallic

High Wing

Part Number	Year	Detail
23481654	2014-2015	Rear Spoiler, Z/28, Ashen Gray Metallic
23481656	2014-2015	Rear Spoiler, Z/28, Black
23481662	2014-2015	Rear Spoiler, Z/28, Blue Velvet Metallic
23481660	2014-2015	Rear Spoiler, Z/28, Bright Yellow
23481655	2014-2015	Rear Spoiler, Z/28, Crystal Red Tintcoat
23481653	2014-2015	Rear Spoiler, Z/28, Red Hot
23481661	2014-2015	Rear Spoiler, Z/28, Red Rock Metallic
23481657	2014-2015	Rear Spoiler, Z/28, Silver Ice Metallic

Wicker Bill

Part Number	Year	Detail
23200130	2014-2015	Wicker Bill Spoiler Kit

See Page 28 for more Wicker Bill details

GEN 5 CAMARO PERFORMANCE

A. Engine Cover

Give your Gen 5 Camaro's V-6 or V-8 engine a stylish, show-quality upgrade with this engine cover. They are available to match most exterior colors, allowing you to complement or contrast the color choices to suit your style.

Part Number	Year	Detail
12643075	2012-2015	V-6 (LFX) - Crystal Red (GBE)
12643077	2012-2015	V-8 (LS3 and L99) - Crystal Red (GBE)
12654765	2013-2015	V-6 (LFX) - Blue Ray (GXH)
12654766	2013-2015	V-8 (LS3 and L99) - Blue Ray (GXH)
12658126	2014-2015	V-6 (LFX) - Red Rock (G7P)
12658127	2014-2015	V-6 (LFX) - Bright Yellow (G7D)
12658128	2014-2015	V-8 (LS3 and L99) - Bright Yellow (G7D)
12658129	2014-2015	V-8 (LS3 and L99) - Red Rock (G7P)
12658130	2014-2015	V-8 (LS3 and L99) - Red Hot (G7C)
12658131	2014-2015	V-6 (LFX) - Red Hot (G7C)
92219186	2013-2015	V-6 (LFX) - Black (GBA)
92247656	2010-2015	V-8 (LS3 and L99) - Black (GBA)
12643076	2012-2015	V-6 1-Year Anniversary Color
12643078	2012-2015	V-8 1-Year Anniversary Color
92219194	2010-2013	V-6 Victory Red
92247654	2010-2013	V-8 Victory Red
92219193	2010-2012	V-6 Red Jewel Tint Coat
92247671	2010-2012	V-8 Red Jewel Tint Coat
92219192	2010-2013	V-6 Inferno Orange
92247664	2010-2013	V-8 Inferno Orange
92219188	2010-2013	V-6 SCO Yellow
92247663	2010-2013	V-8 SCO Yellow

B. Performance Exhaust Upgrade

Upgrade the look and sound of your Camaro's exhaust system with one of our tuned, emissions-legal bolt-on exhaust kits. They deliver a great performance sound and reduced restriction, which promotes increased power – especially when combined with other performance parts.

Part Number	Year	Detail
23206771	2014-2015	V-8 (LS3) Off-Road Exhaust Upgrade Kit. with tips
23206772	2014-2015	V-8 (LS3) Exhaust Upgrade Kit with Tips
23206773	2014-2015	V-8 (LS3) Exhaust Upgrade Kit, No Tips
23206774	2014-2015	V-6 (LFX) Exhaust Upgrade Kit, with Tips
23206775	2014-2015	V-6 (LFX) Exhaust Upgrade Kit, without tips
92206990	2010-2013	V-6
92225673	2010-2013	V-6 with Ground Effects
92225672	2010-2013	V-8 LS3 with Ground Effects
92206992	2010-2013	V-8 LS3
92231570	2010-2013	V-8 LS3 Off-Road

A Engine Cover – V-8, Crystal Red

A Engine Cover – V-6, Crystal Red

B Performance Exhaust Upgrade Package – V-8 (LS3) with Tips

20-Inch Wheel, EA407, Black **C**

20-Inch Wheel – EA407, Manoogian Silver **C**

21-Inch Wheel – EA172, Red Flange Stripe **D**

21-Inch Wheel – EA708, Multi-Spoke Painted Silver **D**

GEN 5 CAMARO WHEELS

C. 20-Inch Wheels

Personalize your Camaro with these stylish 20-inch 5-Spoke Accessory Wheels. Validated to GM specifications. Use only GM-approved tire and wheel combinations. See www.chevyaccessories.com for important wheel and tire information.

Part Number	Year	Detail
19301174	2013-2015	20-Inch Wheels - EA896 - 20-Inch x 9-Inch Rear Wheel- 5-Spoke Polished- SEK
19301175	2013-2015	20 Inch Wheels - EA892 - 20-Inch x 8-Inch Front Wheel - Five Spoke Polished - SEK
19301172	2013-2015	20-Inch Wheels - EA407 - 20-Inch x 8-Inch Front Wheel- Alt. Finish - Painted Black - SEO
19301173	2013-2015	20-Inch Wheels - EA407 - 20-Inch x 9-Inch Rear Wheel- Alt. Finish - Painted Black - SEO
19301177	2013-2015	20-Inch Wheels - EA407 - 20-Inch x 8-Inch Front Wheel- Manoogian Silver Painted - SEM
19301176	2013-2015	20-Inch Wheels - EA407 - 20-Inch x 9-Inch Rear Wheel- Manoogian Silver Painted - SEM
19301170	2013-2015	20-Inch Wheels - EA170 - 20-Inch x 9-Inch Front Wheel - 5-Spoke Black Painted - SEL
19301171	2013-2015	20-Inch Wheels - EA171 - 20-Inch x 9-Inch Rear Wheel- 5-Spoke Black Painted - SEL
19301168	2013-2015	20-Inch Wheels - EA892 - 20-Inch x 10-Inch Front Wheel- ZL1/1LE 5-Spoke Black w/ Polished Fangs (not shown) 20-Inch Wheels - EA892 - 20-Inch x 11-Inch Rear Wheel- ZL1/1LE 5-Spoke Black w/ Polished Fangs - RZT- RZT (not shown)

D. 21-Inch Wheels

Personalize your Camaro with these stylish 21-inch Accessory Wheels. Validated to GM specifications. Use only GM-approved tire and wheel combinations. See www.chevyaccessories.com for important wheel and tire information. Not for use on ZL1 or 1LE.

Part Number	Year	Detail
19302759	2013-2015	21-Inch Wheels - EA712 - 21-Inch x 8.5-Inch Front Wheel - Multi-Spoke Chrome - SEP
19302758	2013-2015	21-Inch Wheels - EA712 - 21-Inch x 9.5-Inch Rear Wheel - Multi-Spoke Chrome - SEP
19302857	2013-2015	21-Inch Wheels - EA708 - 21-Inch x 8.5-Inch Front Wheel - Multi-Spoke Painted Silver - SEQ
19302858	2013-2015	21-Inch Wheels - EA711 - 21-Inch x 9.5-Inch Rear Wheel - Multi-Spoke Painted Silver - SEQ
19302760	2011-2015	21-Inch Wheels - EA172, Single Wheel, 21-Inch x 8.5-Inch Front Wheel - Red Flange Stripe with Black Spokes - 5W6
19302761	2011-2015	21-Inch Wheels - EA173, Single Wheel - 21-Inch x 9.5-Inch Rear Wheel - Red Flange Stripe with Black Spokes - 5W6

Corvette Performance Upgrades

The Ultimate Complement to the Ultimate Corvette

Every Corvette is designed to offer track-capable performance, but that capability increases with the Z51 Performance Package, offered on the 2014+ Stingray, and it is taken to its zenith with the Corvette Z06 – a true American supercar that delivered the fastest performance in the 2015 *Car and Driver* Lightning Lap shootout, topping the best European exotics.

Chevrolet Performance is proud to offer a new line of performance parts and accessories for 2014+ Corvette models based on the incomparable, uncompromising Z06. From brakes and cooling aids to downforce-enhancing aero panels and lightweight components, they're designed to give Stingray owners a competitive edge on the track, while enhancing durability and longevity.

These are the actual production parts used on the Corvette Z06, so you know each is factory-engineered and validated to production standards. In short, they look, fit and perform like original equipment.

Whether you're looking to upgrade your Stingray for dedicated track use, a blend of street and track, or simply give it a distinctive, Z06-influenced appearance, Chevrolet Performance has the parts you need backed with the confidence they'll perform as promised.

You've got nothing to lose except seconds off your lap times!

NEW!

▲
23336064
Corvette Stingray T1 Suspension (2014 + MY)

This suspension package was developed to improve the on-track handling capabilities of the Corvette Stingray, including Z51-equipped models. Developed for racing, the Corvette Stingray T1 Suspension Kit has been tuned with all-new stabilizer bars, lower control arms with stiffer handling bushings, and track-optimized passive shocks. Roll Stiffness has been increased (40% Front, 20% Rear). This kit is homologated for SCCA's Touring 1 Class, and is designed to maintain eligibility for most club racing sanctioning bodies.

Corvette Z07 Rough Surface Track Suspension Calibration (not shown) NEW!

Chevy Performance has developed a rough-racing-surface suspension calibration for owners of the Z06 spec'd with the Z07 track package featuring the Magnetic Selective Ride Control. Dealers can "flash" this calibration into the vehicle's software if the track the customer frequents is a very rough track or if they will be attending a track with this type of surface. The calibration update only optimizes the driver selectable "track mode" for rough track surfaces. The remaining driver modes (Weather, Eco, Tour, and Sport) remain unchanged.

Rough Surface Track Suspension Options include:

Part Number	Description
23396302	For 2015 Corvette Models
23396303	For 2016 Corvette Models

NEW!

▲
23387122 (without front camera)
Corvette Z06 Grille Kit

The Z06 front grille was designed to provide maximum airflow to the radiator, and brake cooling ducts. This resulted in a front-end airflow increase of 17-percent (based of CFD analysis) when compared to the Z51. That additional airflow can help keep your Stingray running cooler on the track. Additionally, the inlet ramps to the brake cooling ducts were optimized to balance the airflow demands of brake cooling and engine cooling.

Grille Kit Options include:

Part Number	Description
84020980	With Front Camera
23387122	Without Front Camera

NEW!

▲

23193590

Corvette Z06 Level 3 Aero Package (2015 + MY)

Add a new dimension of downforce to your Corvette Z06. This Level 3 Aero Package is an upgrade for Level 2-equipped Corvette Z06 models (only) and adds elements from the Z07 Performance Package, including larger end plates (not shown) to the front splitter, as well as an adjustable, transparent wicker bill on the rear spoiler for track use. With this package, the Corvette Z06 delivers the most aerodynamic downforce of any production car that GM has ever tested.

NEW!

▲

23373152

Corvette Z06 Quarter Panel Vents

Substantial airflow is critical for maintaining cooling performance on the track. The Z06 quarter vents for Z51 models offer larger openings for increased airflow to the transmission oil cooler and differential cooler – an approximately 25-percent improvement over the airflow of the Z51 at track speeds (based on CFD analysis).

NEW!

▲

23385708

Corvette Z06 Carbon Fiber Underbody Braces*

Developed for the Corvette Z06, these carbon fiber underbody braces are about 17 percent lighter than the aluminum braces on the Corvette Stingray, while maintaining original overall torsional stiffness. They are a direct replacement for the standard braces and fit all C7 Corvettes (Z06 and Non-Z06).

**See Warranty Statement on page 35*

NOTE: *These parts are intended for off-road use only. Our long term, 10 year corrosion testing is not complete and therefore warranty claims for corrosion at the attachments of the brace to body will be restricted.*

NEW!

◄ **23376530**

Corvette Z06 600-Watt Radiator Fan

Developed to meet the Z06's track cooling requirements, this powerful, 600-watt radiator cooling fan increases the fan speed over the Stingray's 500-Watt system for greater airflow and enhanced cooling capability. It is a direct replacement for the standard Corvette Stingray cooling fan.

84037858

Corvette Secondary Radiator (not shown) NEW!

This radiator adds additional cooling capability to manual transmission Corvettes that see regular track use. This kit includes the lines and hardware necessary to mount and plumb this additional radiator to the front of any manual transmission-equipped Stingray. This includes base Stingray, Z51, and Z06 cars. With the addition of this kit to a Z51 manual transmission car, the radiator fluid temperatures are lowered 25 degrees F along with the engine oil temperatures down 15 degrees F. Addition of the Z06 grill (page 43) further enhances the cooling capacity of this kit.

NEW!

▲

23228000 (Manual)

Corvette Z06 Carbon Fiber Torque Tube and Prop Shaft Kit

Drop a few pounds on your Stingray with the Z06 Carbon Fiber Torque Tube assembly. It saves almost 15.5 pounds (7 Kg) compared to the Stingray's steel-intensive torque tube. Chevrolet Performance's Corvette Z06 Carbon Fiber Torque Tube and Prop Shaft Kit (P/Ns 23228000, 23401477, 23227999 and 23401476) features the torque tube assembly and the Corvette Z06 prop shaft with high-temperature couplings. The higher-temperature rubber couplers in the prop shaft that can withstand the higher temperatures typically encountered at the track. Applications vary by transmission and model year. See your Chevrolet Performance dealer for the correct part number for your vehicle.

Torque Tube and Prop Shaft Kit Options include:

Part Number	Description
23228000	Manual (shown)
23227999	Automatic

Corvette Z06 Prop Shaft Assembly with High-Temp Couplers (not shown) NEW!

The Corvette Z06's internal prop shaft includes rubber couplers designed for higher temperatures and, combined with the larger heat shield, results in increased durability during track use. They are only needed for vehicles manufactured before June 2, 2015. Includes prop shaft assembly only.

Prop Shaft Assembly Options include:

Part Number	Description
23366291	Manual
23366290	Automatic

Corvette Z06 Carbon Fiber Torque Tube Housing (not shown) NEW!

The Corvette Z06's Carbon Fiber Torque Tube Housing saves almost 15.5 pounds (7 Kg) compared to the Stingray's steel-intensive torque tube. Includes the torque tube housing assembly only.

Torque Tube Housing Options include:

Part Number	Description
23366289	Manual
23366287	Automatic

NEW!

23229542 ►

Corvette Stingray Heat Shield

This larger heat shield helps protect the prop shaft from high temperatures seen with track use. It is only required for 2014 Corvette Stingray models. It is included on 2015+ models.

NEW!

▲

23386143

Corvette Stingray Z51 Brake Kit*

Upgrade the brakes on your 2014+ Corvette Stingray to the greater capability of the Z51 package. The Z51 brake kit features slotted rotors with diameters measuring 345mm in front and 338mm in rear. This increases the overall diameter in relation to your "standard" Corvette Stingray's 321mm front rotors and increases the brake torque up to 57% on average. This kit also features high performance pads, which provide greater resistance to brake fade at track condition rotor temperatures over 500C. Coupled with the Z51 Brake cooling kit, this system will match the braking performance of the Z51 brake system.

**See Warranty Statement on page 35*

NOTE: *The mass dampers were removed from the stock Z51 pads in order to fit inside of the base Stingray wheels. Mass dampers are used to tune the system for brake noise, and therefore this kit is not warranteed for noise performance.*

NEW!

◄ **23383592**

Corvette Z06/Z51 Front Brake Ducts Kit

The available Z06/Z51 Front Brake Duct Cooling Kit for base model vehicles includes brake ducts and deflectors that transport air from the front grille through the wheel wells to effectively cool the front brakes and expel heat. This increases airflow by 16 percent (based of CFD analysis) to increase stopping performance by reducing temperature and brake fade.

NOTE: *Brake ducts performance is optimized when used with Z06 Grille Kit (page 43).*

NEW!

Front Brake Kit

Rear Brake Kit

▲

23386144 (Front)
23386145 (Rear)

Corvette Z06 Brake Kits (Iron Rotors) for Stingray with Z51*

The Z06 standard brake upgrade kit for Z51 vehicles features two-piece iron slotted rotors, measuring 370mm x 34mm in the front and 365mm x 26mm in the rear with aluminum mono-block six-piston and four-piston fixed calipers, respectively. The front calipers feature vented pistons for improved pad and brake fluid cooling, including pads 39 percent larger than those found on the stock Z51 vehicle. These calipers offer differentiated piston diameters of 30, 34, and 38mm (leading to trailing) to ensure more even pad pressure for improved pad wear.

**See Warranty Statement on page 35*

NOTE: *These brakes will not fit under stock base or Z51 wheels. Requires a minimum 4mm wheel clearance between the outboard face of the caliper and the inner wheel spoke. This application is for off-road use only because the stock Z51 wheels do not fit over the Z06 brakes. Any failures occuring as a result of the non-production wheels selected by the customer would not be covered.*

The Ultimate Track Corvette Stingray

The C7 Corvette Stingray is one of the most track-capable sports cars you can buy, with its performance eclipsed only by the supercharged Corvette Z06 – particularly when it's equipped with the available, track-tested Z07 package.

From aerodynamic aids designed to produce cornering-enhancing downforce and high-speed stability to the larger brakes and other unique drivetrain elements required to support the 650-hp Z06's higher performance capability, it's a world-class supercar.

Many of the Z06's special components can be applied to the Stingray (including Z51 models) to enhance handling, braking, cooling and downforce performance, elevating its capability on the track for quicker lap times and a greater overall feeling of confidence in turns and on straights.

Chevrolet Performance engineers have hand-picked the Z06 parts and other components that offer the greatest performance enhancements, with most of them offered as direct replacements for the stock corresponding Stingray parts.

No one has spent more time developing Corvette performance components than Chevrolet and our new range of components is the result of countless hours of testing, which helped the Corvette Z06 win Car and Driver's 2015 Lightning Lap evaluation. They not only perform, but when applied to your Stingray, you can trust they will fit and perform as expected, with production-level durability.

Mix and match the parts to build your own ultimate Stingray track car. It's the capability of the Z06 straight from Chevrolet Performance!

THE ULTIMATE TRACK CORVETTE STINGRAY SELECTION

Kit Description	Part Numbers	Trim	Transmission	Restrictions
J55 front/rear brakes	**23386143**	Non-Z51	Man. or Auto.	Recommended to buy with brake ducts
J56 front brakes	**23386144**	Z51	Man. or Auto.	Requires new wheels or wheel spacers
J56 rear brakes	**23386145**	Z51	Man. or Auto.	Requires new wheels or wheel spacers
T1 suspension kit	**23336064**	Non-Z51 or Z51	Man. or Auto.	Vehicles with FE1/FE3
Carbon fiber underbody braces	**23385708**	Non-Z51 or Z51	Man. or Auto.	N/A
Manual transmission carbon fiber driveshaft complete assemble	**23228000**	Non-Z51 or Z51	Man.	N/A
Automatic transmission carbon fiber driveshaft complete assemble	**23227999**	Non-Z51 or Z51	Auto.	N/A
Larger driveshaft heat shield [3]	**23229542**	Non-Z51 or Z51	Man. or Auto.	N/A
Manual transmission internal prop-shaft assemble including higher temp couplers [2]	**23366291**	Non-Z51 or Z51	Man.	N/A
Automatic transmission internal prop-shaft assemble including higher temp couplers [2]	**23366290**	Non-Z51 or Z51	Auto.	N/A
Manual trans. Carbon fiber torque tube housing assemble	**23366289**	Non-Z51 or Z51	Man.	N/A
Automatic trans. Carbon fiber torque tube housing assemble	**23366287**	Non-Z51 or Z51	Auto.	N/A
Z06 transmission cooler duct [1]	**23212340**	Z51	Man.	N/A
Z06 transmission fluid pump (internal to transmission)	**19180060**	Z51	Man.	N/A
Z06 large core transmission cooler (manual, rpo: mek) [1]	**23283460**	Z51	Man.	N/A
Pipe, trans fluid clr inl & otlt, rear large core manual transmission line [1]	**23212375**	Z51	Man.	N/A
Z06 grille w/o camera	**23387122**	Non-Z51 or Z51	Man. or Auto.	Base car should buy brake ducts to fill the hole
Z06 grille w/ camera	**84020980**	Non-Z51 or Z51	Man. or Auto.	Base car should buy brake ducts to fill the hole
Quarter panel vent [1]	**23373152**	Z51	Man. or Auto.	N/A
Z51 brake ducts	**23383592**	Non-Z51	Man. or Auto.	N/A
600W radiator fan [4]	**23376530**	Non-Z51 or Z51	Man. or Auto.	N/A
Aux laydown radiator	**84037858**	Non-Z51, Z51 & Z06	Man.	N/A
C7 front compartment air deflector	**23135212**	Non-Z51, Z51 & Z06	Man. or Auto.	Track use only, must be removed for daily driving
C6 Z06 rear duct (eps cooler)	**15842373**	Non-Z51, Z51 & Z06	Man. or Auto.	Track use only, must be removed for daily driving
Tube asm-pcv (jumper) (aux dry sump tank to lh rocker tube)	**12663621**	Z51	Man. or Auto.	N/A
Tube asm-pcv (aux dry sump tank jumper to lh rocker cover)	**12663620**	Z51	Man. or Auto.	N/A
Tube asm-pcv (dry sump tank to rh rocker cover)	**12663623**	Z51	Man. or Auto.	N/A
Tube asm-pcv (fresh) (air induction to dry sump tank)	**12665107**	Z51	Man. or Auto.	N/A
Ground effects - exposed carbon fiber	**23495173**	Non-Z51 or Z51	Man. or Auto.	Must be purchased with rear spoiler kit
Ground effects - carbon flash	**23495172**	Non-Z51 or Z51	Man. or Auto.	Must be purchased with rear spoiler kit
Ground effects - arctic white	**23495175**	Non-Z51 or Z51	Man. or Auto.	Must be purchased with rear spoiler kit
Ground effects - laguna blue/blue my mind	**23495176**	Non-Z51 or Z51	Man. or Auto.	Must be purchased with rear spoiler kit
Ground effects - shark gray metallic/fusion gray metallic	**23495177**	Non-Z51 or Z51	Man. or Auto.	Must be purchased with rear spoiler kit
Ground effects - torch red	**23495179**	Non-Z51 or Z51	Man. or Auto.	Must be purchased with rear spoiler kit
Z06 rear spoiler w/stage 1 - carbon flash metallic	**23303055**	Non-Z51	Man. or Auto.	Must be purchased with ground effects
Z06 rear spoiler w/stage 1 - white arctic	**23301862**	Non-Z51	Man. or Auto.	Must be purchased with ground effects
Z06 rear spoiler w/stage 1 - laguna blue/blue my mind	**23301863**	Non-Z51	Man. or Auto.	Must be purchased with ground effects
Z06 rear spoiler w/stage 1 - shark gray metallic/fusion gray metallic	**23301860**	Non-Z51	Man. or Auto.	Must be purchased with ground effects
Z06 rear spoiler w/stage 1 - torch red	**23301864**	Non-Z51	Man. or Auto.	Must be purchased with ground effects
Z06 rear spoiler w/stage 3 bridge - carbon flash metallic	**23409284**	Z51	Man. or Auto.	Must be purchased with ground effects
Z06 rear spoiler w/stage 3 bridge - white arctic	**23409283**	Z51	Man. or Auto.	Must be purchased with ground effects
Z06 rear spoiler w/stage 3 bridge - laguna blue/blue my mind	**23409281**	Z51	Man. or Auto.	Must be purchased with ground effects
Z06 rear spoiler w/stage 3 bridge - shark gray metallic/fusion gray metallic	**23409282**	Z51	Man. or Auto.	Must be purchased with ground effects
Z06 rear spoiler w/stage 3 bridge - torch red	**23409280**	Z51	Man. or Auto.	Must be purchased with ground effects
Z51 spoiler - carbon flash metallic	**22989472**	Non-Z51	Man. or Auto.	N/A
Z51 spoiler - white arctic	**22967764**	Non-Z51	Man. or Auto.	N/A
Z51 spoiler - Berlin blue metallic/night race blue metallic	**22967765**	Non-Z51	Man. or Auto.	N/A
Z51 spoiler - torch red	**22966767**	Non-Z51	Man. or Auto.	N/A
Z51 spoiler - crystal red tintcoat	**22967769**	Non-Z51	Man. or Auto.	N/A
Z51 spoiler - black	**22967771**	Non-Z51	Man. or Auto.	N/A
Z51 spoiler - switchblade silver/blade silver metallic	**22967773**	Non-Z51	Man. or Auto.	N/A
Z51 spoiler - velocity yellow tintcoat	**22967774**	Non-Z51	Man. or Auto.	N/A
Z51 spoiler - unripened green metallic	**22967763**	Non-Z51	Man. or Auto.	N/A
Z51 spoiler - laguna blue/blue my mind	**22967770**	Non-Z51	Man. or Auto.	N/A

[1] For Coupe body style only
[2] For models manufactured before 06/02/2015
[3] 2014 model year only
[4] 2014+ model years for Non-Z51, 2014 model year for Z51

CORVETTE INTERIOR

A. Floor Console Lid

Add some flair to your Corvette Stingray interior with an embroidered Floor Console Lid, featuring a distinctive Stingray logo. Available in Gray, Black or Kalahari to match your Stingray's interior.

Part Number	Year	Detail
23177467	2014-2016	Floor Console Lid, Stingray Logo, Leather, Gray
23177468	2014-2016	Floor Console Lid, Stingray Logo, Leather, Black
23177469	2014-2016	Floor Console Lid, Stingray Logo, Leather, Kalahari
23177470	2014-2016	Floor Console Lid, Stingray Logo, Leather, Red
23177471	2014-2016	Floor Console Lid, Stingray Logo, PUR Wrapped, Kalahari
23177472	2014-2016	Floor Console Lid, Stingray Logo, PUR Wrapped, Gray
23177473	2014-2016	Floor Console Lid, Stingray Logo, PUR Wrapped, Red
23177474	2014-2016	Floor Console Lid, Stingray Logo, PUR Wrapped, Black
23177475	2014-2016	Floor Console Lid, Stingray Logo, Suede, Brownstone
23296451	2014-2016	Floor Console Lid - Suede, Stingray Logo, Brownstone
23354873	2014-2016	Floor Console Lid - Suede, Stingray Logo, Brownstone
23296446	2014-2016	Floor Console Lid - Stingray Logo, Kalahari
23296447	2014-2016	Floor Console Lid - Stingray Logo, Gray
23296448	2014-2016	Floor Console Lid - Stingray Logo, Red
23296449	2014-2016	Floor Console Lid - Stingray Logo, Black
23296451	2014-2016	Floor Console Lid - Suede, Stingray Logo, Brownstone
23296481	2014-2016	Floor Console Lid - Leather, Stingray Logo, Gray
23296482	2014-2016	Floor Console Lid - Leather, Stingray Logo, Black
23296483	2014-2016	Floor Console Lid - Leather, Stingray Logo, Kalahari
23296484	2014-2016	Floor Console Lid - Leather, Stingray Logo, Red
23296453	2015-2016	Floor Console Lid - Leather, Z06, Gray
23296454	2015-2016	Floor Console Lid - Leather, Z06, Black
23296455	2015-2016	Floor Console Lid - Leather, Z06, Kalahari
23296456	2015-2016	Floor Console Lid - Leather, Z06, Blue
23296461	2015-2016	Floor Console Lid - Z06, Kalahari

A Z06 Floor Console Lid – Black

A Stingray Logo Floor Console Lid – Kalahari

A Stingray Logo Floor Console Lid – Black

Windscreen **B**

High-wing Spoiler with Wicker Bill **C**

Ground Effects **D**

CORVETTE EXTERIOR

B. Windscreen

Minimize air turbulence in the passenger compartment of your Corvette when you have the top down with this Convertible Windscreen.

Part Number	Year	Detail
23353688	2015-2016	Windscreen Air Deflector

C. High Wing Spoiler

Add style to your Corvette with a body-color Rear Spoiler that replaces the standard black spoiler. Shown with Performance Wickers finished in Black.

High Wing

Part Number	Year	Detail
22908984	2014-2016	High Wing Spoiler, Black
22908985	2014-2015	High Wing Spoiler, Crystal Red
22908980	2014-2015	High Wing Spoiler, Laguna Blue
22908981	2014-2016	High Wing Spoiler, Lime Rock Green
22908989	2014-2016	High Wing Spoiler, Night Race Blue Metallic
22881387	2014-2016	High Wing Spoiler, Paint to Match (price does not include charge for painting)
22908983	2014-2016	High Wing Spoiler, Silver
22908987	2014-2016	High Wing Spoiler, Torch Red
22908982	2014-2015	High Wing Spoiler, Velocity Yellow
22908986	2014-2015	High Wing Spoiler, Cyber
22938855	2014-2016	High Wing Spoiler, Arctic White
23214209	2016	High Wing Spoiler, Yell-O Tint
23214210	2016	High Wing Spoiler, Addiction Red
23319143	2015-2016	High Wing Spoiler, Fusion Gray Metallic
23322549	2016	High Wing Spoiler, Opulent Blue Metallic

Wicker Bill

Part Number	Year	Detail
23486749	2014-2016	Wicker Bill Spoiler, Black

D. Ground Effects

Accentuate the sleek, expressive exterior of your Corvette Stingray with these eye-catching Ground Effects. Includes front splitter and side rocker panels.

Part Number	Year	Detail
23495173	2014-2015	Ground Effects, Carbon Flash (Exposed Carbon Fiber)
23495174	2014-2015	Ground Effects, Exposed Carbon Fiber
23495175	2014-2015	Ground Effects, White
23495176	2014-2015	Ground Effects, Blue
23495177	2014-2015	Ground Effects. Gray
23495179	2014-2015	Ground Effects, Red

Hood Louver (not shown)

Enhance the performance aura of your Corvette Stingray by adding an eye-catching Hood Louver.

Part Number	Year	Detail
23277854	2015-2016	Hood Louver Ornamentation, Gray

E. Z06 Spoiler – Body Color W/ Wicker (not shown)

Take your Stingray to the next level with a stylish and functional Z06-style Spoiler Kit in body color to match the original finish.

Part Number	Year	Detail
23409280	2016	Spoiler Kit - Z06-Style, Red
23409281	2016	Spoiler Kit - Z06-Style, Blue
23409282	2016	Spoiler Kit - Z06-Style, Gray
23409283	2016	Spoiler Kit - Z06-Style, White
23409285	2016	Spoiler Kit - Z06-Style, Paint to Match

Corvette Exterior Continued

A. Vehicle Covers

Keep your performance investment clean and protected with a choice of indoor or outdoor Vehicle Covers. The soft Indoor Dust Cover helps keep dust and light debris off, and when circumstances dictate outdoor storage, an Outdoor All-Weather Vehicle Cover helps to shield the finish from the elements, offering waterproof, breathable protection. Great looks are always important, and both versions have you covered with Corvette-specific logos. Each includes a duffle-style storage bag to keep the cover clean and neatly out of the way when not in use.

Indoor Covers

Part Number	Year	Detail
23142888	2015-2016	Vehicle Cover, Indoor Dust Cover, Crossed-Flag Logo, Red (shown)
23481362	2015-2016	Vehicle Cover, C7R Corvette Racing, Indoor (Fits MY14 - MY16 Vehicles) (shown)
23142881	2015-2016	Vehicle Cover, Indoor Dust Cover, Crossed-Flag Logo, Gray
23142882	2015-2016	Vehicle Cover, Indoor Dust Cover, Crossed-Flag Logo, Kalahari
23142883	2015-2016	Vehicle Cover, Black Stingray Logo (shown)
23187874	2015-2016	Vehicle Cover, For Z06, Indoor, Galvanized Cool
23187875	2015-2016	Vehicle Cover, For Z06, Indoor, Blue

Outdoor Covers

Part Number	Year	Detail
23142884	2015-2016	Vehicle Cover, Outdoor All-Weather, Stingray Logo, Black
23142885	2015-2016	Vehicle Cover, Outdoor All-Weather, Stingray Logo, Gray (shown)
23187877	2015-2016	Vehicle Cover, For Z06, Outdoors, Redline
23187876	2015-2016	Vehicle Cover, For Z06, Outdoors, Black

A Indoor Vehicle Cover – Black Stingray Logo

A Indoor Vehicle Cover – Crossed Flag Logo, Red

A Indoor Vehicle Cover – C7R Corvette Racing

A Outdoor, All-Weather Vehicle Cover – Stingray Logo, Gray

B Z06 10-Spoke Black Painted Wheel

Z06 10-Spoke Pearl Nickel Painted Wheel C

D Spoke Chrome Wheel

Spoke Silver Painted Wheel E

F 10-Spoke Satin Black Finish with Red Stripe Wheel

10-Spoke Satin Black Finish with Yellow Stripe Wheel G

CORVETTE WHEELS

B. 19 – 20-Inch Wheels (Z06 only) - Black Painted With Machine Groove

Make a dramatic modification to the appearance of your Corvette Z06 with these 10-spoke Accessory Wheels. Features the crossed-flags logo on the center cap. Use only GM-approved wheel and tire combinations.

Part Number	Year	Detail
23251387	2016	19-inch Wheel - Front Wheel - Black Painted With Machine Groove - 6Z9 (Z06 Only)
23319267	2016	20-inch Wheel - Rear Wheel - Black Painted With Machine Groove - 6Z9 (Z06 Only)

C. 19 – 20-Inch Wheels (Z06 only) - Nickel Pearl Painted With Machine Groove

Features the crossed-flags logo on the center cap. Use only GM-approved wheel and tire combinations.

Part Number	Year	Detail
23251390	2016	19-inch Wheel - Front Wheel - Nickel Pearl Painted - 5Z8 (Z06 Only)
23319266	2016	20-inch Wheel - Rear Wheel - Nickel Pearl Painted - 5Z8 (Z06 Only)

D. 19 – 20-Inch Wheels C7113 - 5 Spoke Chrome

Features the crossed-flags logo on the center cap. Use only GM-approved wheel and tire combinations.

Part Number	Year	Detail
19302113	2016	19-inch Wheel - Front Wheel - Chrome 5-Spoke
19302115	2016	20-inch Wheel - Rear Wheel - Chrome 5-Spoke

E. 19 – 20-Inch Wheels C7114 - 5 Spoke Silver Painted

Features the crossed-flags, Z51, Jake, or Stingray logos on the center cap. Use only GM-approved wheel and tire combinations.

Part Number	Year	Detail
19302114	2016	19-inch Wheel - Front Wheel - Silver Painted 5-Spoke
19302116	2016	20-inch Wheel - Rear Wheel - Silver Painted 5-Spoke

F. 19 – 20-Inch Wheels - 10-Spoke Satin Black with Red Stripe (Not for Z06)

Features red stripe with the crossed-flags logos on the center cap. Use only GM-approved wheel and tire combinations.

Part Number	Year	Detail
19302117	2016	19-inch Wheel - Front Wheel - Satin Black Finish with Red Stripe - 5YZ
19302118	2016	20-inch Wheel - Rear Wheel - Satin Black Finish with Red Strip - 5YZ

G. 19 – 20-Inch Wheels - 10-Spoke Satin Black with Yellow Stripe (Not for Z06)

Features yellow stripe with the crossed-flags logos on the center cap. Use only GM-approved wheel and tire combinations.

Part Number	Year	Detail
19302119	2016	19-inch Wheel - Front Wheel - Satin Black Finish with Yellow Stripe - 5Z2
19302120	2016	20-inch Wheel - Rear Wheel - Satin Black Finish with Yellow Stripe - 5Z2

Cruze Performance Upgrades

CRUZE PERFORMANCE UPGRADES

A. Stage Kit

Chevrolet Performance Cruze 1.4L Stage Kits are engineered, developed and tested to exceed your expectations for fit and function. This upgrade for Cruze RS with manual or automatic transmission includes a High Flow Exhaust System for optimum engine breathing and performance. This low-restriction system and included dealer-installed calibration will provide 10 more HP (up to 148HP) and a 10 percent increase in torque (+15 lb.-ft.).

Part Number	Year	Detail
23233811	2014-2016	1.4L Turbo Stage Kit with High Flow Exhaust System, for RS Models
23494247	2012-2016	1.4L Turbo Stage Kit with High Flow Exhaust System, for Non-RS Models

A Stage Kit (Non-RS)

Illuminated Sill B

Sport Pedal Kit C

Cruise Control Kit D

Chrome Door Handles E

Spoiler F

CRUZE INTERIOR

B. Illuminated Door Sill Plates

Add a stylish accent to the entry area of your Cruze while also helping to protect against scratches and scrapes with front and rear Door Sill Plates. Choose the more distinctive look with eye-catching blue illumination.

Part Number	Year	Detail
95240239	2013-2016	Front and Rear Sets, w/Illuminated Blue Chevrolet Logo

C. Sport Pedal Kit

Enhance the appearance of your Cruze with these accessory Pedal Covers. The stainless steel and black design provides a sporty look to the interior.

Part Number	Year	Detail
13301696	2013-2016	Brake, Accelerator and Clutch Pedal Cover
19212762	2013-2016	Brake and Accelerator Pedal Covers

CRUZE ELECTRONICS

Ambient Lighting (not shown)

This Ambient Lighting Kit provides accent lighting to the footwell area of your Cruze with a touch of the on/off switch. Set your mood with six colors (Blue, Red, Green, White, Purple and Orange) and two intensity levels (Low and High). Change colors manually or allow the system to cycle through the colors automatically.

Part Number	Year	Detail
95088392	2013-2016	Ambient Lighting w/ Cupholder and Footwell Lighting

D. Cruise Control Kit

Add a Cruise Control Kit to your Cruze to maintain your desired speed on those long road trips without having to manually press your foot to the accelerator.

Part Number	Year	Detail
94536705	2013-2016	Steering Wheel, Cruise Control
95393423	2013-2016	Steering Wheel, Cruise Control

CRUZE EXTERIOR

E. Chrome Door Handles

These Body-Color Door Handles with a Chrome Stripe replace the factory door handles to give your vehicle a stylish, more personalized appearance.

Part Number	Year	Detail
20919348	2013-2016	Door Handles - Front and Rear Sets - Silver Ice Metallic (GAN) With Chrome Stripe
20919349	2013-2016	Door Handles - Front and Rear Sets - Black Granite Metallic (GAR) With Chrome Stripe
20919351	2013-2016	Door Handles - Front and Rear Sets - Summit White (GAZ) With Chrome Stripe
95107223	2013-2016	Door Handles - Front and Rear Sets - Blue (GXH) with Chrome Stripe
95107224	2013-2016	Door Handles - Front and Rear Sets - Red (G7C) with Chrome Stripe
95437844	2013-2016	Door Handles - Front and Rear Door Handles, Red with Chrome Stripe

F. Spoiler

Add a sporty flair to your Cruze with a Rear Spoiler Kit featuring this great looking flushmount rear spoiler. It's available in several colors.

Part Number	Year	Detail
95404356	2013-2016	Spoiler Kit, Flushmount White (GAZ)
95404357	2013-2016	Spoiler Kit, Flushmount, Black Granite Metallic (GAR)
95404359	2013-2016	Spoiler Kit, Flushmount, Silver Ice Metallic (GAN)
95404364	2013-2016	Spoiler Kit, Flushmount, Tungsten (GXG)
95404366	2013-2016	Spoiler Kit, Flushmount, Champagne Silver Metallic (GWT)
95404371	2013-2016	Spoiler Kit, Flushmount, Red Hot (G7C)
95404374	2013-2016	Spoiler Kit, Flushmount, Blue (GXH)
95439407	2013-2016	Spoiler Kit, Flushmount, Red (G1E)

Sonic Performance Upgrades

Handle ...

It takes a tuned suspension to complement your Sonic's performance-oriented wheels and tires. The engineers at Chevrolet Performance have designed the Sonic suspension components to optimize vehicle handling performance, and improve the stance at the same time. This kit uses the "RS" fast-reacting shock valving, but lowers the "RS" by 10mm, and the base model by 20mm. It utilizes the "RS" front struts assembled with a different spring and jounce bumper. The rear springs and shocks are redesigned to accommodate the new suspension travel. This package lowers the center of gravity of your vehicle, which results in improved handling.

Exhale ...

The Sonic Performance High Flow Exhaust system sounds and looks great, with a chrome stainless steel tip proudly showing the Chevy Bowtie to your friends! This low-restriction system and included dealer-installed calibration will provide 10 more HP (up to 148 HP) and 10% increase in torque (+15 lb.-ft.)

Chevrolet Performance Suspension Kit **A**

1.4L Stage Kit with High Flow Exhaust **B**

SONIC PERFORMANCE UPGRADES

Chevrolet Performance Suspension Kits

Our engineers have designed the Sonic suspension components to optimize vehicle handling performance, and improve the stance. This kit uses the "RS" fast-reacting shock valving but lowers the "RS" by 10mm, and the base model by 20mm. It utilizes the "RS" front struts assembled with a different spring and jounce bumper. The rear springs and shocks are redesigned to accommodate the new suspension travel. This package lowers the center of gravity of your vehicle, which results in improved handling.

A. 23158161
Sonic Performance Suspension Kit
This kit includes:

Part Number	Year	Detail
23158167	2012-2016	Installation Instructions
96859128	2012-2016	Front Suspension Jounce Bumper
95481254	2012-2016	Front Strut
95483008	2012-2016	Front Strut
23158165	2012-2016	Rear Shock Absorber
23158164	2012-2016	Rear Spring
23158163	2012-2016	Front Spring
22942442	2012-2016	Chevrolet Performance Badge

23158162
Sonic RS Performance Suspension Kit (not shown)
This kit includes:

Part Number	Year	Detail
23158167	2012-2016	Installation Instructions
23158165	2012-2016	Rear Shock Absorbers
23158164	2012-2016	Rear Springs
23158163	2012-2016	Front Springs
22942442	2012-2016	Chevrolet Performance Badge

B. 1.4L Turbo Stage Kit with High Flow Exhaust System

This low-restriction system and included dealer-installed calibration will provide 10 more HP (up to 148 HP) and 10% increase in torque (+15 lb.-ft.). Kit includes exhaust system, calibration, premium fuel label and new 50-state legal emission certification label.

NOTE: *2012-2014 vehicles require a new high capacity 2014 manual clutch. See your dealer for Service Part Number information.*

Part Number	Year	Detail
23444736	2012-2016	Exhaust Kit (1.4L turbo - Base Hatchback)
23444737	2012-2016	Exhaust Kit (1.4L turbo - RS Hatchback)
23451716	2012-2016	Exhaust Kit (1.4L turbo - Sedan)

19303797
Sonic Performance Clutch Kit (not shown)

This increased torque capacity system includes a larger-than-stock flywheel, clutch disk and pressure plate, along with new attaching bolts.

NOTE: *Must be used on 2012-2014 Sonics that have installed P/N's 23444736, 23444737, 23451716 Stage Kits.*

SONIC INTERIOR

A. Premium Carpet Floormats

Front and Rear Premium Carpet Replacement Floor Mats provide a factory fit for your Sonic with a quality carpeted upper surface to match your interior.

Part Number	Year	Detail
95073881	2014-2016	Floor Mats - Front and Rear Premium Carpet- Z Spec Logo

B. Sport Pedal Kit

Pedal Covers are a great way to personalize the interior of your Sonic. They are available for Sonic models with either manual or automatic transmission. Contact your Chevrolet dealership for more information.

Part Number	Year	Detail
95057350	2013-2016	Pedal Cover - Brake and Accelerator Pedals, Z-Spec
95970279	2013-2016	Pedal Cover - Brake, Accelerator and Clutch Pedals, Z-Spec

SONIC EXTERIOR

C. Spoiler Kit

This one-piece, custom-molded Flushmount Spoiler Kit adds a sporty flair to your Sonic Sedan or Hatchback. Available in select body colors. Personalize your Sonic by adding this Rear Spoiler in either the same body color or really stand out from the crowd by choosing a contrasting color. Other coordinating parts available include the Mirror Caps and painted Grille Surround.

Part Number	Year	Detail
95103593	2012-2016	Spoiler Kit - Crystal Red (GBE), Z-Spec for use on Sedan
95271834	2012-2016	Crystal Red (GBE), Z-Spec for use on Sedan
95292678	2012-2016	Crystal Red (GBE), Z-Spec for use on Sedan
95328340	2012-2016	Red Hot (G7C), Z-Spec for use on Sedan
95328344	2012-2016	Spoiler Kit - Crystal Red (GBE), Z-Spec for use on Sedan
95328345	2012-2016	Spoiler Kit - Mocha Bronze (GVU), Z-Spec for use on Sedan
95328346	2012-2016	Spoiler Kit - Silver Ice Metallic (GAN), Z-Spec Color Flash for use on Sedan
95328352	2012-2016	Spoiler Kit - Summit White (GAZ), Z-Spec Color Flash for use on Sedan
95328355	2012-2016	Spoiler Kit - Paint to Match, Z-Spec for use on Sedan
95908899	2012-2016	Spoiler Kit - Silver Ice Metallic (GAN), Z-Spec Color Flash for use on Sedan
95940490	2012-2016	Spoiler Kit - Summit White (GAZ), Z-Spec Color Flash for use on Sedan
95940494	2012-2016	Spoiler Kit - Crystal Red (GBE), Z-Spec for use on Sedan

D. Headlamp and Taillamp Trim

Personalize the exterior of your vehicle with these cool Headlamp and Taillamp Trim Rings. Available in several colors.

Part Number	Year	Detail
95351687	2014-2016	Front Head Lamp Trim Rings, White
95351688	2014-2016	Front Head Lamp Trim Rings, Blue
95351689	2014-2016	Front Head Lamp Trim Rings, Green
95351690	2014-2016	Front Head Lamp Trim Rings, Red
95351692	2014-2016	Rear Taillamp Trim Rings, White
95351693	2014-2016	Rear Taillamp Trim Rings, Blue
95351694	2014-2016	Rear Taillamp Trim Rings, Green
95351695	2014-2016	Rear Taillamp Trim Rings, Red

A Premium Carpet Floormats

B Sport Pedal Kit

C Spoiler Kit

D Headlamp & Taillamp Trim

17-Inch Black Painted Wheels **E**

17-Inch SIlver Painted Wheels **F**

17-Inch White Painted Wheels **G**

SONIC WHEELS

E. 17-Inch Black Painted Wheels

Customize your Sonic with these 17-inch Black painted 5-split-spoke Z-spec wheels, validated to GM specifications. Package includes center caps, tires, lug nuts, tire pressure monitors, and a wheel lock kit.

Part Number	Year	Detail
19119269	2015-2016	Tire Pressure Monitor (Snap In) - Black Rubber - Multipack (16 pc) - Discontinued; 16 PC QTY OF 22854866
19300043	2012-2015	Center Cap with Chevrolet Bowtie Logo
88875461	2014-2016	17-Inch - Hankook OptimoTire
19301363	2012-2016	17-Inch Black Painted 5-Split-Spoke Z-Spec Wheels; Alternate Description: 17-Inch Wheels - JA758 Z-Spec Black - 17-Inch x 6.5-Inch

F. 17-Inch Silver Painted Wheels

Customize your Sonic with these 17-inch Silver painted 5-split-spoke Z-spec wheels, validated to GM specifications. Package includes center caps, tires, lug nuts, tire pressure monitors, and a wheel lock kit.

Part Number	Year	Detail
19301364	2014-2016	17-Inch Wheels - JA762 Z-Spec Silver - 17-Inch x 6.5-Inch

G. 17-Inch White Painted Wheels

Customize your Sonic with these 17-inch White painted 5-split-spoke Z-spec wheels, validated to GM specifications. Package includes center caps, tires, lug nuts, tire pressure monitors, and a wheel lock kit.

Part Number	Year	Detail
19301365	2014-2016	17-Inch Wheels - JA761 Z-Spec White - 17-Inch x 6.5-Inch

Silverado Performance Upgrades

SILVERADO PERFORMANCE UPGRADES

A. Exhaust Tip

Add a sporty appearance to your Silverado with Dual-walled Exhaust Tips made from highly polished, stainless steel.

Part Number	Year	Detail
22799814	2014-2015	Bowtie Logo, Dual Wall, Angle Cut, Highly Polished
22911703	2014-2015	No Logo, Dual Wall, Angle Cut, Highly Polished for 6.0L (LC8, L96) or 6.2L (L86) Engines
23435023	2014-2015	Exhaust Tip - OE for Cat-Back, Dual Wall, Angle Cut, No Logo, Not for Use with Borla® Cat-Back

A Exhaust Tip - Bowtie Logo

NEW!

Performance Brake Kit B

NEW!

Performance Exhaust Kit C

NEW!

Performance Air Intake D

B. Performance Front Brake Kit – 2014+ Silverado 1500/2015+ Tahoe and Suburban

The Chevrolet Performance 5JL front brake system features Brembo® six-piston, fixed aluminum calipers loaded with high performance brake pads clamping on massive 410x32mm (16.1-inch x 1.3-inch) vented and slotted Duralife™ rotors to increase system thermal capacity. Coupled with a 94% increase in brake pad area, testing shows a brake torque increase of up to 35% over the stock brakes. Duralife™ rotors feature a hardened surface to reduce corrosion and provide quieter braking with less vibration. The 5JL brake package includes all necessary hardware and installation instructions. This front brake system is available for any light-duty 2014+ Silverado and light-duty 2015+ Tahoe/Suburban with 20-inch – 22-inch original equipment or GM Accessory wheels (excluding 22-inch accessory wheel SEU).

Part Number	Year	Detail
84050685	2015-2016	Performance Front Brake Kit – 2014+ Silverado 1500/2015+ Tahoe and Suburban

C. Performance Exhaust – 2014+ Silverado 1500 with 5.3L V-8

Upgrade the look and sound of your truck's exhaust system with one of our tuned, bolt-on exhaust kits. They deliver great performance sound and look great on your new truck. Entire system made from 304 Stainless Steel with increased 3-inch diameter piping and includes 4.5-inch High Polish 304 Stainless Tip. Backpressure in the cat-back system is reduced up to 66% from the stock system based on correlated flow testing. This kit is available for V-8 5.3L applications and won't void your warranty. Installation is legal in all 50 states.

Part Number	Year	Detail
23462044	2014-2016	Performance Exhaust – Silverado 1500 with 5.3L V-8 (LWB)
23462045	2014-2016	Performance Exhaust – Silverado 1500 with 5.3L V-8 (SWB)

Performance Exhaust – 2014+ Silverado 1500 with 6.2L V-8

Upgrade the look and sound of your truck's exhaust system with one of our tuned, bolt-on exhaust kits. They deliver great performance sound and look great on your new truck. Entire system made from 304 Stainless Steel with 3.5-inch diameter piping and includes 4.5-inch High Polish 304 Stainless Tip. This kit is available for V-8 6.2L applications and won't void your warranty. Custom Active Noise Cancellation calibrations are also available for all Bose stereo equipped and/or crew cab light duty trucks with the 6.2L. Installation is legal in all 50 states.

Part Number	Year	Detail
23462042	2014-2016	Performance Exhaust – Silverado 1500 with 6.2L V-8 (LWB)
23462043	2014-2016	Performance Exhaust – Silverado 1500 with 6.2L V-8 (SWB)

D. Performance Air Intake – 2014+ Silverado 1500, Tahoe and Suburban with 5.3L V-8

Upgrade the performance and look of your truck with the Chevrolet Performance Air Intake. This system reduces air intake restriction by up to 15% and looks great under the hood. It's available for 5.3L applications. Rigorously tested to GM standards for durability, corrosion, and performance.

Part Number	Year	Detail
84016022	2014-2016	Performance Air Intake - 2014+ Silverado 1500, Tahoe, and Suburban with 5.3L V-8'

SILVERADO INTERIOR

A. Floor Liners

Premium Floor Liners take All-Weather Floor Liners coverage even further with raised edges to follow and protect floor and trim contours. They feature a textured, anti-slip pattern that traps debris and water while providing optimum carpet coverage.

Part Number	Year	Detail
84073612	2015-2016	Chevy Front Floor Liner Kit Jet Black 600R W/O Manual 4X4 Floor Shifter
84073613	2015-2016	Chevy Front Floor Liner Kit 413P Cocoa 600R W/O Manual 4X4 Floor Shifter
84073614	2015-2016	Chevy Front Floor Liner Kit 514Q Dune W/O Manual 4X4 Floor Shifter
23237330	2015-2016	Chevy Front FLoor Liner Kit Jet Black 600R with Manual 4X4 Floor Shifter
23237331	2015-2016	Chevy Front Floor Liner Kit 413P Cocoa with Manual 4X4 Floor Shifter
23237402	2015-2016	PU Crew Cab 2nd Row Floor Liner Kit 600R Jet Black
23237403	2015-2016	PU Crew Cab 2nd Row Floor Liner Kit 413P Cocoa
23237404	2015-2016	PU Double Cab 2nd Row Floor Liner Kit 600R Jet Black
23237405	2015-2016	PU Double Cab 2nd Row Floor Liner Kit 413P Cocoa
23416204	2015-2016	Chevy Cab Reg Front Floor Liner Kit 413P Cocoa W/O Manual 4X4 Floor Shifter
23416205	2015-2016	Chevy Cab Reg Front Floor Liner Kit 600R Jet Black With Manual 4X4 Floor Shifter
23416206	2015-2016	Chevy Cab Reg Front Floor Liner Kit 413P Cocoa With Manual 4X4 Floor Shifter

SILVERADO EXTERIOR

B. Fuel Door

Add some extra personality to your all-new Silverado with this great looking Chrome Fuel Door.

Part Number	Year	Detail
23441975	2014-2015	Fuel Door - Chrome, 6'6-Inch Standard Box and 8' Long Box
23441976	2014-2015	Chrome, 5'8" Short Box, Crew Cab

C. Off-Road Assist Steps

Get in and out of your Silverado with ease with these stylish Rectangular Off-Road Assist Steps featuring textured step pads.

Part Number	Year	Detail
23194635	2015-2016	Off-Road Assist Steps - Rectangular, Short Box and Standard Box, Crew Cab
23194640	2015-2016	Off-Road Assist Steps - Rectangular, Short Box and Standard Box, Extended Cab

D. Black Bowtie Emblem

Heighten the visibility of your Silverado with these distinctive Black Bowtie Front Grille and Tailgate Emblems.

Part Number	Year	Detail
23303572	2016	Bowtie Emblems - Black, Front Grille and Tailgate

A Floor Liners

B Fuel Door

C Off-Road Assist Steps – Rectangular

D Black Bowtie Emblem

Grille – Black with Black Mesh **E**

Grille – Victory Red with Black Mesh **E**

Nudge Bar **F**

Sport Bar **G**

Sport Bar Off-Road Lights **H**

E. Grille

Enhance the front end of your 2015 MY Silverado with this Grille. It's designed specifically for your vehicle.

Part Number	Year	Detail
23194173	2014-2015	Grille, Body Color Surround w/Black Mesh, Black
23194170	2014-2015	Grille, Body Color Surround w/Black Mesh, Deep Ruby Metallic
23194171	2014-2015	Grille, Body Color Surround w/Black Mesh, Silver Ice Metallic
23194174	2014-2015	Grille, Body Color Surround w/Black Mesh, Summit White
23194172	2014-2015	Grille, Body Color Surround w/Black Mesh, Victory Red
23194167	2014-2015	Grille, Body Color Surround w/Chrome Mesh, Black
23194165	2014-2015	Grille, Body Color Surround w/Chrome Mesh, Silver Ice Metallic
23194166	2014-2015	Grille, Body Color Surround w/Chrome Mesh, Victory Red
23194164	2014-2015	Grille, Body Color Surround w/Chrome Mesh, Deep Ruby Metallic
23194168	2014-2015	Grille, Body Color Surround w/Chrome Mesh, Summit White

F. Nudge Bar

Help protect the front end of your Silverado from damage with this rugged tubular Nudge Bar.

Part Number	Year	Detail
23387670	2016	Nudge Bar - Tubular

G. Sport Bar

Create a ruggged, off-road appearance with your Silverado with this bed-mounted Chevrolet Sport Bar.

Part Number	Year	Detail
23387668	2016	Sport Bar - Bed-Mounted

H. Sport Bar Off-Road Lights

Enhance off-road driving and illuminate the area in front of your Silverado with this Off-Road, Front Roof-Mounted Lamp.

Part Number	Year	Detail
23415421	2016	Lamp, Front Roof-Mounted, Off-Road (with factory fog lamps)
23415422	2016	Lamp, Front Roof-Mounted, Off-Road (without factory fog lamps)

SILVERADO BED PRODUCTS

A. Tonneau Cover – Soft Folding

This Soft Folding Tonneau Cover is constructed of durable, lightweight black grained vinyl to help protect truck bed cargo from the elements. The tri-fold design allows for quick and easy installation and removal.

Part Number	Year	Detail
22895471	2014-2015	5'8" Short Box, Hi Gloss Vinyl, Black
22895472	2014-2015	6'6" Standard Box, High Gloss Vinyl, Black
22895473	2014-2015	Black Tri-Fold, 8' Long Box

B. Tonneau Cover – Hard Folding

These Hard Folding Tonneau covers are engineered to provide quick and easy access to your truck's cargo area, while offering the ultimate protection for your cargo. The flat and smooth tri-fold design allows easy opening and closing.

Part Number	Year	Detail
19301291	2014-2015	5'8" Short Box, High Gloss Vinyl, Black
19302797	2014-2015	6'6" Standard Box, High Gloss Vinyl, Black
19302798	2014-2015	5'8" Short Box, High Gloss Vinyl, Black, with Personal Caddy
19302799	2014-2015	6'6" Standard Box, High Gloss Vinyl, Black, with Personal Caddy
22834742	2014-2015	5'8" Short Box, High Gloss Vinyl, Black
22834743	2014-2015	6'6" Standard Box, High Gloss Vinyl, Black
22834744	2014-2015	8' Long Box, High Gloss Vinyl, Black

C. Tonneau Cover – Soft Roll-Up

This Soft Roll-Up Tonneau Cover is constructed of durable, lightweight black grained vinyl to help protect truck bed cargo from the elements.

Part Number	Year	Detail
22772361	2014-2015	Black with Embossed Bowtie Logo, Crew Cab, 5'8" Short Box
22772362	2014-2015	Black with Embossed Bowtie Logo, 6'6" Standard Box
22772363	2014-2015	Black with Embossed Bowtie Logo, 8' Long Box

D. Tool Box

This hardworking Tool Box can handle up to 250 lbs. of storage and has many great features; it mounts securely to the bed of your vehicle without drilling; integrated handle makes it easy to remove and carry, and it has a removable sliding tray with rubber mat.

Part Number	Year	Detail
19170990	2014-2015	Stationary, Bowtie Logo, Diamond Patterned
19260344	2014-2015	Gull-Wing Tool Box by UWS - a division of Thule®
19299117	2014-2015	Cross-Over Deep-Well Aluminum Toolbox by UWS A Division of Thule®
19299118	2014-2015	Cross-Over Deep-Well Toolbox (For Use with Aluminum Full Ladder Rack) by UWS A Division of Thule®
19302652	2014-2015	Low-Profile Tool Box by UWS - a division of Thule®
19303349	2014-2015	Black Low-Profile Single Lid Tool Box

A Tonneau Cover – Soft Folding

B Tonneau Cover – Hard Folding

C Tonneau Cover – Soft Roll-Up

D Tool Box

22-Inch Wheel – SEV, High-Gloss Black **E**

22-Inch Wheel – SF1, Silver **E**

Center Cap – Black **F**

Center Cap – Chrome **F**

SILVERADO WHEELS & ACCESSORIES

E. 22-Inch Wheels

Personalize your vehicle with these attractive Accessory Wheels, validated to GM specifications. Available with center cap and lug nuts. Use only GM-approved tire and wheel combinations. See www.chevyaccessories.com for important tire and wheel information.

Part Number	Year	Detail
19301157	2014-2015	22-Inch Wheel - CK157 Chrome - SEZ
19301158	2014-2015	22-Inch Wheel - CK158 Chrome - SEU
19301160	2014-2015	22-Inch Wheel - CK160 Ultra-Bright Machined - High Gloss Black - SEW
19301161	2014-2015	22-Inch Wheel - CK161 Ultra-Bright Machined - Manoogian Silver - SF0
19301162	2014-2015	22-Inch Wheel - CK162 High-Gloss Black - SEV
19301163	2014-2015	22-Inch Wheel - CK163 Silver - SF1
19301164	2014-2015	22-Inch Wheel - CK164 Silver with Black Inserts - RX1
19301190	2014-2015	22-Inch Wheel - CK190 Silver with Chrome Inserts - RXN

F. Center Caps

These Custom Center Caps are specifically designed for your Silverado wheels and feature the Chevy Bowtie logo. They're made of durable material to resist corrosion for a long life.

Part Number	Year	Detail
19301595	2014-2015	Center Cap, Brushed Aluminum
19301597	2014-2015	Center Cap, Bright Aluminum
19301593	2014-2015	Center Cap, Chrome
19333202	2016	Center Cap, Black Bowtie. Kit of 4. Single P/N is 23480948.

Colorado Performance Upgrades

COLORADO PERFORMANCE UPGRADES

A. Performance Air Intake – 2015+ Colorado with 3.6L V-6
Upgrade the look and performance of your truck with the Performance Air Intake. Entire airbox hand constructed from Aluminum and powder coated for durability. This intake looks great under the hood and is available for V-6 applications and reduces air intake restriction by 20% at peak airflow (240 grams per second). Insulated to keep it isolated from engine compartment heat and works with factory engine cover and PCV.This system has been rigorously tested to GM standards for durability, corrosion, and performance.

Part Number	Year	Detail
22342235	2015-2016	Performance Air Intake – With 3.6L V6 (includes California E.O.) Works with stock calibration. 50 state legal.

NEW!

A Performance Air Intake – 2015+ Colorado with 3.6L V-6

NEW!

Performance Exhaust – 2015+ Colorado with 3.6L V-6 **B**

B. Performance Exhaust – 2015+ Colorado with 3.6L V-6

Upgrade the look and sound of your truck's exhaust system with one of our tuned, bolt-on exhaust kits. They deliver great performance sound and look great on your new truck. Entire system made from 304 Stainless Steel with increased 3" diameter piping and includes 4.5" High Polish 304 Stainless Steel Tip. This kit is available for V-6 applications. It has been rigorously tested to GM standards for durability, corrosion, and performance, and will not void your vehicle warranty.

Part Number	Year	Detail
23206304	2015-2016	Colorado with 3.6L V-6 (LWB)
23460296	2015-2016	Colorado with 3.6L V-6 (SWB)

C. Transfer Case Skid Shield – 2015+ Colorado

Add some piece of mind and underbody protection to your truck with this stout, bolt-on Transfer Case Skid Shield.

Part Number	Year	Detail
23282726	2015-2016	Transfer Case Skid Shield

NEW!

Transfer Case Skid Shield – 2015+ Colorado **C**

COLORADO INTERIOR

A. Premium All-Weather Floor Liners

Premium Floor Liners take all-weather floor mat coverage even further with raised edges to follow and protect floor and trim contours. They feature a textured, anti-slip pattern that traps debris and water while providing optimum carpet coverage.

Part Number	Year	Detail
23343573	2015-2016	Chevy Front Floor Liner Kit 600R Jet Black
23381382	2015-2016	Chevy/GMC Crew Cab 2nd-Row Floor Liner Kit 600R Jet Black
23381376	2015-2016	Chevy/GMC Extended Cab 2nd-Row Floor Liner Kit 600R Jet Black

COLORADO EXTERIOR

B. Grille

Go for the ultimate in customization with this sporty Grille Assembly. It's designed for perfect fit and easily replaces the existing grille in your Colorado.

Part Number	Year	Detail
23321737	2015-2016	Grille Package, Green
23321738	2015-2016	Grille Package, Silver
23321739	2015-2016	Grille Package, Rust
23321740	2015-2016	Grille Package, Black
23321741	2015-2016	Grille Package, Subterranean
23321742	2015-2016	Grille Package, Gray
23321743	2015-2016	Grille Package, Blue
23321744	2015-2016	Grille Package, White
23321745	2015-2016	Grille Package, Red

C. Black Bowtie

Heighten the visibility of your Colorado with these distinctive Black Bow Tie Front Grille and Tailgate Emblems.

Part Number	Year	Detail
23219389	2015-2016	Bow Tie Emblems - Black, Front Grille and Tailgate

D. Sport Bar

Create a rugged, off-road appearance with your Colorado with this bed-mounted Chevrolet Sport Bar.

Part Number	Year	Detail
23325905	2016	Sport Bar - Bed Mounted

E. Sport Bar Off-Road Lights

Enhance off-road driving and illuminate the area in front of your Colorado with this Off-Road, Front Roof-Mounted Lamp.

Part Number	Year	Detail
23415421	2016	Off-Road Lights with fog lamps
23415422	2016	Off-Road Lights without fog lamps

A Premium All-Weather Floor Liners (Jet Black)

B Grille

C Black Bowtie

D Sport Bar

E Sport Bar Off-Road Lights

18-Inch Black Aluminum Wheel (non off-road use) F

17-Inch Black Aluminum Wheel (off-road use) G

Off-Road Tire H

COLORADO WHEELS & TIRES

F. 18-Inch Black Aluminum Wheel

Personalize your Colorado with this attractive 18-inch Black Aluminum Wheel, validated to GM specifications. Use only GM-approved wheel and tire combinations. See chevrolet.com/accessories for important tire and wheel information.

Part Number	Year	Detail
23307840	2016-2016	18-inch Black Aluminum Wheel - Not compatible with off road tire.

G. 17-Inch Black Aluminum Wheel

Add a personal sense of style to your Colorado with this 17-inch Wheel Kit. Use only GM-approved wheel and tire combinations. See chevrolet.com/accessories for important tire and wheel information.

Part Number	Year	Detail
23343590	2016-2016	17-inch Wheel Kit - Black Finish

H. Off-Road Tire

This 17-inch tire has been specifically designed for your vehicle. Use only GM-approved wheel and tire combinations. See www.chevyaccessories.com for important tire and wheel information.

Part Number	Year	Detail
19325357	2015-2016	17-inch Tire - Goodyear Wrangler Duratrac, 265/65R17, BSL 112S

COPO

The Legend Continues with the All-New 2016 Camaro!

Chevrolet Performance announced at the 2015 SEMA Show there will be a 2016 model of the legendary drag-race-only car, based on the all-new Gen 6 Camaro platform. Built with NHRA Stock Eliminator competition in mind, the special-order production run will be limited to 69 hand-built units, in recognition of the original '69 Camaro-based fleet. Go to Chevrolet.com/Performance to find out more about the all-new COPO Camaro!

The powertrain options for the 2016 COPO have not been announced yet, but you can be assured that the Chevrolet Performance Engineers are hard at work developing an engine package that is worthy of the GEN 6 Camaro! The engines and components on the following pages represent past-model COPO powertrains that may be of interest to GEN 5 owners who are contemplating converting their street car into a purpose-built race car.

COPO Camaro … Chevrolet Performance Engineering at its best!

COPO 427 CID

2016 COPO Camaro Concept

COPO 350 Supercharged

COPO Camaro Program

COPO Crate Engines

Chevrolet Performance's COPO crate engines are engineered for NHRA's Stock Eliminator and Super Stock classes, offering sportsman racers a range of factory-developed-and-assembled racing engines.

The 350, 396 and 427 naturally aspirated engines make a race car eligible for NHRA Stock Eliminator classes from AA/S to D/S, based primarily on curb weight and horsepower ratings. The 350 SC engine makes cars eligible for AAA/S and AA/S classes. Consult the NHRA rule book at nhra.com for class and compliance guidelines.

Chevrolet Performance engineers designed and tested the engines with the same methods used to develop production engines, ensuring their performance and durability; and each engine is hand-assembled in a specialty build facility.

COPO Vehicle Components

Chevrolet Performance's COPO Camaro vehicle components are factory-engineered or factory-approved after conforming to General Motors production-vehicle standards – and all are approved by NHRA for competition. They enable racers to build their cars to comparable standards of the production race cars, with a full range of high-performance parts.

Additional components such as the LSX Bowtie block are available from Chevrolet Performance. See page 83 for a complete COPO Camaro service parts list.

COPO Camaro Build Book

Chevrolet Performance's *COPO Camaro Build Book* (P/N 88958767) provides a step-by-step look at the assembly of the production race cars through hundreds of color photos, which can assist racers when it comes to building their own race cars.

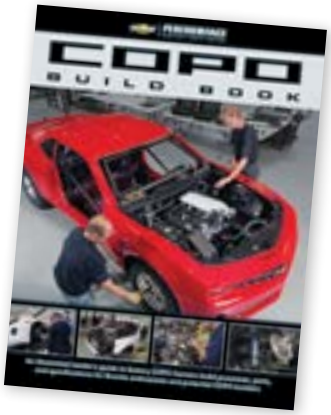

19304010 (2014-2015)
COPO 350 SC – NHRA Rated at 530 hp

The COPO 350 Supercharged is the same engine offered exclusively in the 2014 COPO Camaro race cars. It features the high-performance LSX engine block, forged internals that stand up to the cylinder pressures generated by forced induction, LSX cylinder heads with six-bolt clamping strength and a 2.9L Whipple screw-type supercharger.

TECH SPECS:

Displacement:	350 cu in (5.7L)
Compression Ratio:	10.2:1
Cylinder Block:	LSX cast-iron
Bore x Stroke (in):	4.065 x 3.370
Crankshaft:	Forged steel
Connecting Rods:	Forged steel
Pistons:	Forged dome
Cylinder Heads:	LSX/LS7 aluminum 6-bolt
Induction:	Boosted
Intake Manifold:	2.9L Whipple
Camshaft Type:	Hydraulic roller
Camshaft Lift (int./exh.):	.640/.640-inch
Camshaft Duration (int./exh.):	244/255 deg. @.050-inch

▲

19304009 (2014-2015)
COPO 427 – NHRA Rated at 430 hp

A proven combination, the COPO 427 gets a lighter, custom aluminum oil pan and a 90mm throttle body as standard equipment. The lightweight LS7 block and smaller throttle body should prove to be a real winner in your late model COPO Camaro.

TECH SPECS:

Displacement:	427 cu in (7.0L)
Compression Ratio:	13.5:1
Cylinder Block:	LS7 cast-aluminum
Bore x Stroke (in):	4.125 x 4.000
Crankshaft:	Forged steel
Connecting Rods:	Forged steel
Pistons:	Forged dome
Cylinder Heads:	LS7 aluminum
Induction:	Natural - EFI
Intake Manifold:	Holley Hi-Ram
Camshaft Type:	Hydraulic roller
Camshaft Lift (int./exh.):	.630/.630-inch
Camshaft Duration (int./exh.):	233/276 deg. @ .050-inch

ADDITIONAL COPO CRATE ENGINE OPTIONS

17802825 (2012-2013)

COPO 427 – NHRA Rated at 430 hp (not shown)

The COPO 427 uses the large-bore cylinder block and high-flow cylinder heads of the LS7 engine and complements them with a high-compression rotating assembly to deliver big power from its large displacement. Its lightweight aluminum block and heads revive the spirit of the original ZL1 all-aluminum 427 Big-Block that helped forge the COPO legacy in 1969.

TECH SPECS:

Displacement:	427 cu in (7.0L)
Compression Ratio:	13.5:1
Cylinder Block:	LS7 cast-aluminum
Bore x Stroke (in):	4.125 x 4.000
Crankshaft:	Forged steel
Connecting Rods:	Forged steel
Pistons:	Forged dome
Cylinder Heads:	LS7 aluminum
Induction:	Natural
Intake Manifold:	Holley Hi-Ram
Camshaft Type:	Hydraulic roller
Camshaft Lift (int./exh.):	.630/.630-inch
Camshaft Duration (int./exh.):	233/276 deg. @ .050-inch

19301608 (2013-2014)

COPO 396 – NHRA Rated at 390 hp (not shown)

With the displacement of a classic Chevrolet Big-Block, the lightweight, all-aluminum COPO 396 racing engine delivers power reminiscent of vintage muscle cars, but with the high-rpm capability and vehicle balance dynamics that only an LS engine can deliver. An all-forged rotating assembly makes it a durable performer, too!

TECH SPECS:

Displacement:	396 cu in (6.5L)
Compression Ratio:	10.5:1
Cylinder Block:	LS3 cast-aluminum
Bore x Stroke (in):	4.065 x 3.825
Crankshaft:	Forged steel
Connecting Rods:	Forged steel
Pistons:	Forged flat top
Cylinder Heads:	LS3 aluminum
Induction:	Natural
Intake Manifold:	Holley Hi-Ram
Camshaft Type:	Hydraulic roller
Camshaft Lift (int./exh.):	.595/.595-inch
Camshaft Duration (int./exh.):	233/276 deg. @ .050-inch

19301609 (2013-2014)

COPO 350 – NHRA Rated at 350 hp (not shown)

The entry-level COPO racing engine is a bit of a sleeper that has capabilities far beyond what the modest specs might indicate. Its high-flow LS3 cylinder heads help deliver high-rpm power, that will move the car through the top-end lights quickly.

TECH SPECS:

Displacement:	350 cu in (5.7L)
Compression Ratio:	10.7:1
Cylinder Block:	LS7 cast-aluminum
Bore x Stroke (in):	4.125 x 3.270
Crankshaft:	Forged steel
Connecting Rods:	Forged steel
Pistons:	Forged dome
Cylinder Heads:	LS3 aluminum
Induction:	Natural
Intake Manifold:	Holley Hi-Ram
Camshaft Type:	Hydraulic roller
Camshaft Lift (int./exh.):	.525/.525-inch
Camshaft Duration (int./exh.):	226/236 deg. @ .050-inch

Additional COPO Crate Engine Options Continued

A. 17802826 (2012)
COPO 327 2.9L SC – NHRA Rated at 500 hp

Don't let the smaller displacement fool you. This COPO racing engine packs a supercharged punch, thanks to a 2.9L Whipple twin-screw supercharger. It forces air into a pair of LSX-LS7 6-bolt heads mounted on a strong LSX Bowtie block, for a potent combination of exceptional power and strength.

TECH SPECS:

Displacement:	327 cu in (5.3L)
Compression Ratio:	10.2:1
Cylinder Block:	LSX cast-iron
Bore x Stroke (in):	4.065 x 3.150
Crankshaft:	Forged steel
Connecting Rods:	Forged steel
Pistons:	Forged dome
Cylinder Heads:	LSX-LS7 aluminum
Induction:	Boosted
Supercharger:	2.9L Whipple
Camshaft Type:	Hydraulic roller
Camshaft Lift (int./exh.):	.640/.640-inch
Camshaft Duration (int./exh.):	244/255 deg. @ .050-inch

B. 17802827 (2012)
COPO 327 4.0L SC – NHRA Rated at 550 hp

The most powerful supercharged COPO crate engine is designed for NHRA's A Super Stock class and uses a large, 4.0L compressor to generate tremendous horsepower. Its foundation is the sturdy LSX cylinder block, with a tough, all-forged rotating assembly and the big-displacement Whipple blower. Like the other COPO crate engines, this one uses the high-flow LSX-LS7 6-bolt heads to move as much air as possible.

TECH SPECS:

Displacement:	327 cu in (5.3L)
Compression Ratio:	10.2:1
Cylinder Block:	LSX cast-iron
Bore x Stroke (in):	4.065 x 3.150
Crankshaft:	Forged steel
Connecting Rods:	Forged steel
Pistons:	Forged dome
Cylinder Heads:	LSX-LS7 aluminum
Induction:	Boosted
Intake Manifold:	4.0L Whipple
Camshaft Type:	Hydraulic roller
Camshaft Lift (int./exh.):	.640/.640-inch
Camshaft Duration (int./exh.):	244/255 deg. @ .050-inch

A COPO 327 2.9L SC Crate Engine

B COPO 327 4.0L SC Crate Engine

COPO 396/390 Long Block Replacement Engine **C**

COPO 427/430 Intake Manifold for LS7 Heads **D**

COPO 427/430 Throttle Body **E**

COPO 350/350 Steel Replacement Crankshaft **F**

Flat Top

COPO 396/390 and 350/350 Piston **G**

Dome Top

COPO 350/350 Piston **H**

COPO ENGINE COMPONENTS

The factory-engineered COPO Camaro racing engines deliver the power to win, and Chevrolet Performance is proud to offer many of the same components that go into hand-assembled engines for the production cars and our very own COPO 427 (7.0L) and 327 (5.3L) crate engines. Use them to build your own high-performance engine for the street or strip, starting with our lightweight LS7 cylinder block – the same used in the COPO 427 engine – or the durable and economical LSX Bowtie block.

C. 19301614
COPO 396/390 Long Block
- Replacement long-block engine for factory COPO 396/375

19299607
COPO 427/430 Long Block (not shown)
- Replacement long-block engine for factory COPO 427/425

19301615
COPO 350/350 Long Block (not shown)
- Replacement long-block engine for factory COPO 350/327

D. 17802810
COPO 427/430 Intake for LS7 Heads
- The COPO race-only intake manifold is a Holley Hi-Ram with fuel rails

19301195
COPO 350/350 and 396/390 for LS3 Heads (not shown)
- The COPO race-only intake manifold is a Holley Hi-Ram with fuel rails

E. 17802828*
Throttle Body – COPO 427/430 (102mm Round)
- Mechanical throttle body used on COPO racing engines, LS3/LS7 mounting, COPO engraved on top of housing

19301616*
Throttle Body – COPO 350/350, 396/390 and 427/430 hp (90mm round) (not shown)
- Mechanical throttle body used on COPO racing engines, LS3/LS7 mounting, COPO engraved on top of housing

19300083*
Throttle Body – COPO 327/2.9L SC (109mm round) (not shown)
- Mechanical throttle body used on COPO racing engines, LS3/LS7 mounting, COPO engraved on top of housing

19300085*
Throttle Body – COPO 327/4.0L SC (not shown)
- Mechanical throttle body used on COPO racing engines, COPO engraved on top of housing

F. 19301559
COPO 350/350 Steel Replacement Crankshaft
- Crankshaft for COPO engines

19301270
COPO 396/390 Steel Replacement Crankshaft (not shown)
- Crankshaft for COPO engines

19299608
COPO 427/430 Steel Replacement Crankshaft (not shown)
- Crankshaft for COPO engines

G. 19301556
COPO 396/390 and 350/350 Piston (flat top)
- Forged aluminum piston with rings

H. 19301558
COPO 350/350 Piston (dome top)
- Forged aluminum high-dome piston with rings

**Does not include TPS sensors, must use P/N 17123852. (See page 83)*

COPO Engine Components Continued

A. 17802818
COPO LS7 CNC Head Assembly

The high-revving horsepower of the COPO 427 racing engines is enabled by the high-flow LS7 CNC cylinder head, which features a 12-degree valve angle for efficient airflow at high rpm. The head is fully CNC machined and the 356-T6 aluminum casting features 275cc (nominal) intake ports, 90cc exhaust ports and 70cc combustion chambers. There's also a thick, 5/8" deck for exceptional (nominal) strength. The assembled head includes:

- 2.205" titanium intake valves
- 1.615" sodium-filled exhaust valves
- Max-Life Beehive-type valve springs
- Valve retainers and locks
- Intake and exhaust stem seals
- Intake lash cap

B. 17802804
COPO LS7 CNC Head

All the same high-flow attributes as the assembled head described above, but delivered unassembled. Valves and valvetrain components must be purchased separately.

- Intake, exhaust and combustion chambers are optimized for COPO drag-race engines.

NOTE: *All COPO 350 and 396 racing cylinder heads are built with the same "Max-life" valve springs and hardened spring seats as the 327-SC and the 427 naturally aspirated, plus, they include lightweight hollow-stem LS3 intake valves and lightweight LS9 hollow-stem exhaust valves.*

19166979
LSX-DR CNC Ported Cylinder Head (not shown)

- Fully CNC ported
- 356-T6 aluminum racing head. 5/8" thick deck
- LSX-DR rectangle intake port design – requires LSX-DR intake manifold
- LSX-CT/DR spread port exhaust port pattern
- Cast-in down-nozzle bosses (not machined)
- Designed for up to 2.280" intake and 1.620" exhaust valves (4.165" minimum bore)
- Machined for 1.660" valve springs. 11° valve angle
- Minimum 4.125" bore
- 313cc CNC'd intake ports. 116cc CNC'd exhaust ports
- 50cc CNC'd combustion chambers
- Requires 19201808 shaft-mount Rocker Kit
- Capable of over 900 naturally aspirated horsepower!
- Installed on LSX454R engine assembly
- See page 263 for images and information

19202986
LSX-DR Cylinder Head (not shown)

- Rough machined seats and guides for cylinder head porters to work their magic!
- See page 264 for images and information

A COPO CNC Cylinder Head Assembly (Combustion Chamber)

A COPO CNC Cylinder Head Assembly (Exhaust)

B Bare COPO CNC Cylinder Head (Combustion Chamber)

B Bare COPO CNC Cylinder Head (Intake)

B Close-up shots of the COPO-specific CNC porting applied to an LS7 head

COPO LS7-Style Exhaust Header Gasket **C**

COPO LS7-Style Intake Valve **D**

COPO LS7-Style Exhaust Valve **E**

COPO LS7-Style Intake Rocker Arm **F**

COPO LS7-Style Exhaust Rocker Arm **G**

COPO Injector Harness **H**

COPO Alternator Mounting Kit **I**

Fuel Rail Fitting **J**

C. 12594171
COPO LS7-Style Exhaust Header Gaskets
High-performance exhaust header gaskets designed for the high-temperature operation of the COPO racing engines. Fits the exhaust port configuration of LS7-style cylinder heads. Package includes two gaskets.

D. 12591644
COPO LS7-Style Intake Valve
Lightweight titanium 2.205" intake valve, as used on the COPO racing engines and production LS7 engine. Use to assemble COPO LS7 CNC Bare Head 17802804. Sold individually. Eight required per engine.

E. 12618110
COPO LS7-Style Exhaust Valve
Sodium-filled 1.615" exhaust valve stands up to the high temperatures experienced by racing engines, especially supercharged applications. Use to assemble COPO LS7 CNC Bare Head 17802804. Sold individually. Eight required per engine.

F. 12579615
COPO LS7-Style Intake Rocker Arm
Durable, pedestal-mount cast iron rocker arm with 1.8 ratio. Unique offset design accommodates the LS7's valve arrangement. Self-aligning design with self-locking rocker arm nut. Sold individually. Eight required per engine.

G. 12579617
COPO LS7-Style Exhaust Rocker Arm
Durable, pedestal-mount cast iron rocker arm with 1.8 ratio. Unique offset design accommodates the LS7's valve arrangement. Self-aligning design with self-locking rocker arm nut. Sold individually. Eight required per engine.

H. 19299611
COPO Injector Harness
Designed to fit all normally aspirated COPO engines with Hi-Ram intake manifold.

19299612
COPO Injector Harness (not shown)
Designed to fit all supercharged COPO engines.

I. 19299546
COPO Alternator Mounting Kit
High-output alternator mounting kit designed for proper clearance in the factory-built COPO Camaro drag race vehicles.

J. 19301143
Fuel Rail Fitting
Four fuel rail fittings are required for all normally aspirated COPO engines.

COPO Engine Components Continued

A. 19301144
Oil Pump
LS production-style gerotor-type oil pump modified to maintain oil pressure at high rpm's for engines using a conventional wet-sump lubrication system.

B. 19299313
Damper/Hub Pulley Kit
Special Chevrolet Performance/ATI SFI-approved harmonic damper with front hub adapter, pulley and engine damper.

19304012
COPO Oil Pan Service Bolt Kit (not shown)
Oil Pan attaching bolts for aluminum aftermarket oil pan.

C. 12633906
Front Engine Block Cover Kit
Front engine cover for Gen IV Small-Block. Kit includes camshaft sensor and harness, cover gasket, front crankshaft seal and bolts.

D. 12633904
Rear Engine Block Cover Kit
Rear engine cover for Gen IV Small-Block. Kit includes cover, cover gasket and rear crankshaft seal.

E. 12570471
Valley Cover Kit
Engine block valley cover for Gen IV Small-Block (without Active Fuel Management). Kit includes aluminum cover, bolts, gasket and O-rings.

F. 19299624
Air Induction Tube*
Air Intake – 5.3L (327) Engine with 2.9L Supercharger
Air intake system for use with 5.3L supercharged COPO crate engine 17802826, with 2.9L supercharger.

G. 19299621
Air Induction Tube*
Air Intake – 7.0L (427) Engine
Air intake system for use with 7.0L 427 COPO crate engine 17802825.

19300087
Air Induction Tube* (not shown)
Air Intake – 4.0L SC COPO
Air intake system for use with 4.0L SC COPO crate engine 17802827.

COPO ENGINE CONTROL MODULES AND HARNESSES

Part Number	Description
19299289	Engine Control Harness
19299610	Engine Control Jumper (427)
19299611	Injector Harness (427)
19299612	Injector Harness (327)
19299290	Engine Control Harness Jumper (327) Both
19299291	Engine Control Harness Jumper (327)/4.0L
19299292	Engine Control MEFI 5-427
19299293	Engine Control MEFI 5-327/2.9
19299294	Engine Control MEFI 5-327/4.0
TK40015*	Crank Case Breather Cam
19299546	Alternator Mount Kit
19329258	Alternator
19328593	Alternator Pulley (large diameter - 3 1/2")
12223861	Map Sensor
12569240	Map Sensor (427)
10480003	COPO LS Starter Assembly

**Chevrolet Performance does not service the COPO air filter elements. Replacement air filter elements are readily available in the retail automotive aftermarket.*

A Oil Pump

B Damper/Hub Pulley Kit

C Front Engine Block Cover Kit

D Rear Engine Block Cover Kit

E Valley Cover Kit

F Air Induction Tube (2.9L SC)

G Air Induction Tube (7.0L)

Body-in-White **H**

COPO Camaro Cowl-Induction Hood (Top) **I**

COPO Camaro Cowl-Induction Hood (Underside) **I**

Rear Suspension Installation Kit **J**

Powertrain Mounting Kit **K**

COPO VEHICLE COMPONENTS

Build your own COPO Camaro race car with the same parts used on the production models, including the unique, lightweight hood emblazoned with the COPO name and drivetrain mount kits that make installing a high-performance powertrain and racing-style solid rear axle easier – and without time-consuming fabrication. Start with one of our Chevrolet Performance Camaro bodies-in-white and build your COPO your way!

H. 19243374
Camaro Body-in-White
Chevrolet Performance's Gen 5 Camaro Body-in-White is the smart choice and affordable foundation on which to build a COPO replica or other Camaro race car. It includes an assembled body structure, including the front fenders, hood, roof, doors, rear quarters and trunk lid. The structure also includes the complete floorpans and chassis rails. It is delivered as a painted body shell (color availability is limited), with no additional components or materials. The bodies do not have vehicle identification numbers, so they may be used only as racing vehicles that will never be licensed for street driving.

I. 22950678
COPO Camaro Cowl-Induction Style Hood
Lightweight composite hood with high-rise cowl-induction styling to clear tall racing engines, featuring the Chevrolet Bowtie and the COPO logo embossed on the underside. Designed for hinged/strut opening or adaptable to racing hood pins. Delivered ready to paint.

23177465
COPO Carbon Fiber Hood (not shown)
Want to take off 12 lbs in a few minutes? Swap out your composite COPO hood for this high-tech carbon-fiber piece to improve your launch times.

J. TK10004
COPO Rear Suspension Installation Kit*
This kit includes brackets and other hardware to mount a solid rear axle and coil-spring suspension in place of the production-style independent rear suspension. Tailored design is a direct fit. Made of heavy-gauge steel. Requires welding.

K. TK20001
COPO Powertrain Mounting Kit*
Heavy-duty engine mounts and transmission mount for installation of racing engine and transmission in the fifth-generation Camaro body. Conforms to NHRA Stock and Super Stock class guidelines.

**Not serviced by Chevrolet Performance. To order, contact COPO Parts Direct at: 855.267.6685 or www.COPOpartsdirect.com.*

COPO Vehicle Components Continued

A. TK50005
COPO Drag Racing Rear Wheel*
- 15" x 9.75" polished
- 5 on 4.75" bolt pattern
- .625" lug studs
- Manufactured by WELD Racing

B. TK50004
COPO Drag Racing Front Wheel*
- 15" x 4" polished
- 5 on 4.75" bolt pattern
- .500" lug studs
- Manufactured by WELD Racing

C. TK10007
COPO Wheelie Bar Kit*
- Adjustable for optimum traction

D. TK10000
COPO Weight Box*
- Rugged steel construction

E. TK10006
COPO Parachute Kit*
- 10' cross

F. COPO Parachute Tag*
- Red canvas with white vinyl COPO logo

A COPO Rear Wheel

B COPO Front Wheel

C COPO Wheelie Bar Kit

D COPO Weight Box

E COPO Parachute Kit

F COPO Parachute Tag

**Not serviced by Chevrolet Performance. To order, contact COPO Parts Direct at: 855.267.6685 or www.COPOpartsdirect.com.*

COPO Switch Kit **G**

COPO Gauge Housing Panel **H**

Tachometer **I**

Oil Pressure **J**

Water Temperature **K**

Voltmeter **L**

Transmission Temperature **M**

Fuel Pressure **N**

G. TK30001
COPO Switch Panel Assembly*
Powertrain switch kit includes switches and jumper connector to plug into COPO wiring harness (not included). Switches include engine start/stop, ignition, fuel pump and auxiliary fan.

NOTE: *Camaro production radio panel not included - COPO factory installation replaces radio screen with switch kit.*

H. TK70002
Gauge Panel*
Auxiliary gauge panel, as used in the COPO Camaro production vehicles. Holds four 2-5/8". gauges (not included) and includes jumper connector for the COPO wiring harness (not included). Mounts on the instrument panel.

GAUGES

NOTE: *GM Licensed Parts. See page 400 for more information.*

I. 880445
Tachometer
5" Tach, 10,000 RPM with shift indicator light.

J. 880447
Oil Pressure
2-1/16" Oil pressure – 0-100PSI

K. 880446
Water Temperature
2-1/16" Water Temperature – 100°- 260°

L. 880444
Voltmeter
2-1/16" Voltmeter – 8-18 volts

M. 880448
Transmission Temperature
2-1/16" Trans Temperature – 100°- 260°

N. 880449
Fuel Pressure
2-1/16" Fuel Pressure - 0-100 PSI

**Not serviced by Chevrolet Performance. To order, contact COPO Parts Direct at: 855.267.6685 or www.COPOpartsdirect.com.*

COPO GRAPHICS

A. COPO Camaro 2012 Graphics Package

Add a touch of color to your Camaro race car. Original equipment option on 2012 COPO Camaro.

Part Number	Description
22951636	Chevy Racing Blue (not shown)
22951637	Metallic White (not shown)
22951638	Flat Black (not shown)
22951639	Inferno Orange

B. COPO Camaro 2013 Graphics Package

Dress your Camaro race car in authentic COPO body-side graphics. High-quality die-cut vinyl available in inferno orange, blue, white and black. Kit includes fender and hood graphics.

Part Number	Description
23162262	Inferno Orange (not shown)
23162259	Chevy Racing Blue
23162260	Metallic White (not shown)
23162261	Flat Black (not shown)

C. COPO Camaro 2014 Graphics Package

Includes engine cubic-inch (hood application) and COPO graphic on rear quarter-panel.

Part Number	Description
23494503	COPO Graphics Metallic White w/427 engine designator
23494504	COPO Graphics 40 Gloss Black w/427 engine designator (shown)
23494505	COPO Graphics Inferno Orange w/427 engine designator
23494506	COPO Graphics Chevy Racing Blue w/427 engine designator
23494514	COPO Graphics Metallic White w/350 SC engine designator
23494515	COPO Graphics 40 Gloss Black w/350 SC engine designator
23494516	COPO Graphics Inferno Orange w/350 SC engine designator
23494517	COPO Graphics Chevy Racing Blue w/350 SC engine designator
23225974	COPO Graphics Metallic White w/350 engine designator
23225975	COPO Graphics 40 Gloss Black w/350 engine designator
23225976	COPO Graphics Inferno Orange w/350 engine designator
23225977	COPO Graphics Chevy Racing Blue w/350 engine designator
23225978	COPO Graphics Metallic White w/396 engine designator
23225979	COPO Graphics 40 Gloss Black w/396 engine designator
23225980	COPO Graphics Inferno Orange w/396 engine designator
23225981	COPO Graphics Chevy Racing Blue w/396 engine designator

A COPO Camaro 2012 Graphics Package

B COPO Camaro 2013 Graphics Package

C COPO Camaro 2014 Graphics Package (Hood Decal)

C COPO Camaro 2014 Graphics Package (Rear Decal)

2015 COPO Camaro Service Parts – Manual Transmission Application

		2015			
Item	**QTY**	**427/430 HP**	**396/390 HP**	**350/350 HP**	**350 SC/530 HP**
Engine Assembly	1	19304009	19301608	19301609	19304010
Exhaust Gaskets	2	12617944	12617944	12617944	N/A
Bolt, Exhaust Manifold	16	12552344	12552344	12552344	N/A
Harness, Engine Control	1	19331116	19331116	19331116	N/A
Harness, Engine Control Map Jumper	1	19301112	19301112	19301112	N/A
Harness 327/4.0 Tps Jumper	1	N/A	N/A	N/A	N/A
Harness, Injector	1	19299611	19299611	19299611	N/A
Module, Engine Control	1	19302703	19302704	19302705	N/A
Fuel Rail Fittings	4	19301143	19301143	19301143	19301143
Air Induction Tube	1	N/A	N/A	N/A	N/A
Mount Kit, Alternator	1	19299546	19299546	19299546	N/A
Alternator	1	19329258	19329258	19329258	N/A
Alternator Pulley	1	19328593	19328593	19328593	N/A
Map Sensor	1	12591290	12591290	12591290	12592525
Harness, Alternator Excite	1	19301113	19301113	19301113	N/A
Sensor, Water Temp	1	19328612	19328612	19328612	N/A
Adapter, Water Temp Sens	1	19328613	19328613	19328613	N/A

2015 COPO Camaro Service Parts – Automatic Transmission Application

		2015			
Item	**QTY**	**427/430 HP**	**396/390 HP**	**350/350 HP**	**350 SC/530 HP**
Engine Assembly	1	19304009	19301608	19301609	19304010
Exhaust Gaskets	2	12617944	12617944	12617944	12617944
Bolt, Exhaust Manifold	16	12552344	12552344	12552344	12552344
Harness, Engine Control	1	19331116	19331116	19331116	19301111
Harness, Engine Control Map Jumper	1	19301112	19301112	19301112	19301112
Harness 327/4.0 Tps Jumper	1	N/A	N/A	N/A	N/A
Harness, Injector	1	19299611	19299611	19299611	19299612
Module, Engine Control	1	19301200	19301610	19301611	19302942
Fuel Rail Fittings	4	19301143	19301143	19301143	19328601
Air Induction Tube	1	N/A	N/A	N/A	N/A
Air Filter	1	N/A	N/A	N/A	N/A
Mount Kit, Alternator	1	19299546	19299546	19299546	19299546
Alternator	1	19329258	19329258	19329258	19329258
Alternator Pulley	1	19328593	19328593	19328593	19328593
Map Sensor	1	12591290	12591290	12591290	12592525
Harness, Alternator Excite	1	19301113	19301113	19301113	19301113

2015 COPO Camaro Service Parts – Manual and Automatic Transmission Application

		2015			
Item	**QTY**	**427/430 HP**	**396/390 HP**	**350/350 HP**	**350 SC/530 HP**
Long Block ASM	1	19328698	19301614	19301615	19328600
Intake Kit	1	17802810	19301195	19301195	N/A
Supercharger Kit	1	N/A	N/A	N/A	19299308
Throttle Body	1	19301616	19301616	19301616	19300083
TPS Sensor	1	17123852	17123852	17123852	17123852
Throttle Cable Bracket	1	19299618	19299618	19299618	19299623
Valve Cover Breather Cap	2	19299619	19299619	19299619	19299619
Block ASM	1	19213580	12623967	19213580	19260093
Crank	1	19299608	19301270	19301559	19302944
Rods	8	17802817	19301271	17802816	17802816
Piston	8	N/A	19301556	N/A	19302939
Piston, .005" O.S.	8	19303524	N/A	19303523	N/A
Ring Kit, Piston	8	17802822	19301557	17802822	19302367
Oil Pump	1	19301144	19301144	19301144	19301144
Damper ASM	1	19299313	19299313	19299313	17802805
Pick-Up Tube	1	19301149	19301149	19301149	19301149
Head w/Valves	2	17802818	12629063	12629063	19301209
Head ASM	1	17802804	19302061	19302061	19301208
Retainer, Intake	4	17802819	17802819	17802819	17802819
Retainer, Exhaust	4	17802819	12596508	12596508	17802819
Push Rods	16	12593344	19301617	19331657	19328609
Valve Cover	2	19301147	19301147	19301147	19301147
Oil Dipstick Tube	1	19301148	19301148	19301148	19301148

2014 COPO Camaro Service Parts – Manual Transmission Application

		2014			
Item	**QTY**	**427/430 HP**	**396/390 HP**	**350/350 HP**	**350 SC/530 HP**
Engine Assembly	1	19304009	19301608	19301609	19304010
Exhaust Gaskets	2	12617944	12617944	12617944	N/A
Bolt, Exhaust Manifold	16	12552344	12552344	12552344	N/A
Harness, Engine Control	1	19301111	19331116	19331116	N/A
Harness, Engine Control Map Jumper	1	19301112	19301112	19301112	N/A
Harness 327/4.0 TPS Jumper	1	N/A	N/A	N/A	N/A
Harness, Injector	1	19299611	19299611	19299611	N/A
Module, Engine Control	1	19302703	19302704	19302705	N/A
Fuel Rail Fittings	4	19301143	19301143	19301143	19301143
Air Induction Tube	1	N/A	N/A	N/A	N/A
Mount Kit, Alternator	1	19299546	19299546	19299546	N/A
Alternator	1	19329258	19329258	19329258	N/A
Alternator Pulley	1	19328593	19328593	19328593	N/A
Map Sensor	1	12591290	12591290	12591290	12592525
Harness, Alternator Excite	1	19301113	19301113	19301113	N/A
Sensor, Water Temp	1	19328612	19328612	19328612	N/A
Adapter, Water Temp Sens	1	19328613	19328613	19328613	N/A

2014 COPO Camaro Service Parts – Automatic Transmission Application

		2014			
Item	**QTY**	**427/430 HP**	**396/390 HP**	**350/350 HP**	**350 SC/530 HP**
Engine Assembly	1	19304009	19301608	19301609	19304010
Exhaust Gaskets	2	12617944	12617944	12617944	12617944
Bolt, Exhaust Manifold	16	12552344	12552344	12552344	12552344
Harness, Engine Control	1	19331116	19331116	19331116	19301111
Harness, Engine Control Map Jumper	1	19301112	19301112	19301112	19301112
Harness 327/4.0 Tps Jumper	1	N/A	N/A	N/A	N/A
Harness, Injector	1	19299611	19299611	19299611	19299612
Module, Engine Control	1	19301200	19301610	19301611	19302942
Fuel Rail Fittings	4	19301143	19301143	19301143	19328601
Air Induction Tube	1	N/A	N/A	N/A	N/A
Air Filter	1	N/A	N/A	N/A	N/A
Mount Kit, Alternator	1	19299546	19299546	19299546	19299546
Alternator	1	19329258	19329258	19329258	19329258
Alternator Pulley	1	19328593	19328593	19328593	19328593
Map Sensor	1	12591290	12591290	12591290	12592525
Harness, Alternator Excite	1	19301113	19301113	19301113	19301113

2014 COPO Camaro Service Parts – Manual and Automatic Transmission Application

		2014			
Item	**QTY**	**427/430 HP**	**396/390 HP**	**350/350 HP**	**350 SC/530 HP**
Long Block ASM	1	19328698	19301614	19301615	19328600
Intake Kit	1	17802810	19301195	19301195	N/A
Supercharger Kit	1	N/A	N/A	N/A	19299308
Throttle Body	1	19301616	19301616	19301616	19300083
TPS Sensor	1	17123852	17123852	17123852	17123852
Throttle Cable Bracket	1	19299618	19299618	19299618	19299623
Valve Cover Breather Cap	2	19299619	19299619	19299619	19299619
Block ASM	1	19213580	12623967	19213580	19260093
Crank	1	19299608	19301270	19301559	19302944
Rods	8	17802817	19301271	17802816	17802816
Piston	8	N/A	19301556	N/A	19302939
Piston, .005" O.S.	8	19303524	N/A	19303523	N/A
Ring Kit, Piston	8	17802822	19301557	17802822	19302367
Oil Pump	1	19301144	19301144	19301144	19301144
Damper ASM	1	19299313	19299313	19299313	17802805
Pick-Up Tube	1	19301149	19301149	19301149	19301149
Head w/Valves	2	17802818	12629063	12629063	19301209
Head ASM	1	17802804	19302061	19302061	19301208
Retainer, Intake	4	17802819	17802819	17802819	17802819
Retainer, Exhaust	4	17802819	12596508	12596508	17802819
Push Rods	16	12593344	19301617	19331657	19328609
Valve Cover	2	19301147	19301147	19301147	19301147
Oil Dipstick Tube	1	19301148	19301148	19301148	19301148

2013 COPO Camaro Service Parts – Manual Transmission Application

		2013			2012		
Item	**QTY**	**427**	**396**	**350**	**427**	**327 w/2.9 SC**	**327 w/4.0L**
Engine Assembly	1	17802825	19301608	19301609	17802825		
Exhaust Gaskets	2	12617944	12617944	12617944	12617944	12617944	12617944
Bolt, Exhaust Manifold	16	12552344	12552344	12552344	12552344	12552344	12552344
Harness, Engine Control	1	19301111	19301111	19301111	19299289	19299289	19299289
Harness, Engine Control Map Jumper	1	19301112	19301112	19301112	19299610	19299290	19299290
Harness 327/4.0 Tps Jumper	1	N/A	N/A	N/A	N/A	N/A	19299291
Harness, Injector	1	19299611	19299611	19299611	19299611	19299612	19299612
Module, Engine Control	1	19302703	19302704	19302705	19299292	19299293	19299294
Fuel Rail Fittings	4	19301143	19301143	19301143	19301143	New P/N	New P/N
Air Induction Tube	1	19299621	19299621	19299621	19299621	19299624	19300087
Mount Kit, Alternator	1	19299546	19299546	19299546	19299546	19299546	19299546
Alternator	1	19329258	19329258	19329258	19329258	19329258	19329258
Alternator Pulley	1	19328593	19328593	19328593	19328593	19328593	19328593
Map Sensor	1	12591290	12591290	12591290	N/A	N/A	N/A
Harness, Alternator Excite	1	19301113	19301113	19301113	19301113	19301113	19301113

2013/2012 COPO Camaro Service Parts – Automatic Transmission Application

		2013			2012		
Item	**QTY**	**427**	**396**	**350**	**427**	**327 w/2.9 SC**	**327 w/4.0L**
Engine Assembly	1	17802825	19301608	19301609	17802825	17802826	17802827
Exhaust Gaskets	2	12617944	12617944	12617944	12617944	12617944	12617944
Bolt, Exhaust Manifold	16	12552344	12552344	12552344	12552344	12552344	12552344
Harness, Engine Control	1	19301111	19301111	19301111	19299289	19299289	19299289
Harness, Engine Control Map Jumper	1	19301112	19301112	19301112	19299610	19299290	19299290
Harness 327/4.0 TPS Jumper	1	N/A	N/A	N/A	N/A	N/A	19299291
Harness, Injector	1	19299611	19299611	19299611	19299611	19299612	19299612
Module, Engine Control	1	19301200	19301610	19301611	19299292	19299293	19299294
Fuel Rail Fittings	4	19301143	19301143	19301143	19301143	New P/N	New P/N
Air Induction Tube	1	19299621	19299621	19299621	19299621	19299624	19300087
Air Filter	1	19299622	19299622	19299622	19299622	19299625	19300088
Mount Kit, Alternator	1	19299546	19299546	19299546	19299546	19299546	19299546
Alternator	1	19329258	19329258	19329258	19329258	19329258	19329258
Alternator Pulley	1	19328593	19328593	19328593	19328593	19328593	19328593
Map Sensor	1	12591290	12591290	12591290	12591290	12223861	12223861
Harness, Alternator Excite	1	19301113	19301113	19301113	19301113	19301113	19301113

2013/2012 COPO Camaro Service Parts – Automatic Transmission Application

		2013			2012		
Item	**QTY**	**427**	**396**	**350**	**427**	**327 w/2.9 SC**	**327 w/4.0L**
Long Block ASM	1	19299607	19301614	19301615	19299607	17802803	17802803
Intake Kit	1	17802810	19301195	19301195	17802810	N/A	N/A
Supercharger Kit	1	N/A	N/A	N/A	N/A	19299308	19299308
Throttle Body	1	17802828	19301616	19301616	17802828	19300083	19300085
TPS Sensor	1	17123852	17123852	17123852	17123852	17123852	17123852
Throttle Cable Bracket	1	19299618	19299618	19299618	19299618	19299623	N/A
Valve Cover Breather Cap	2	19299619	19299619	19299619	19299619	19299619	19299619
Block ASM	1	19213580	12623967	19213580	19213580	19260093	19260093
Crank	1	19299608	19301270	19301559	19299608	17802815	17802815
Rods	8	17802817	19301271	17802816	17802817	17802816	17802816
Piston	8	17802821	19301556	19301558	17802821	17802823	17802823
Piston, .005" O.S.	8	19303524	N/A	19303523	19303524	N/A	N/A
Ring Kit, Piston	8	17802822	19301557	17802822	17802822	17802824	17802824
Oil Pump	1	19301144	19301144	19301144	19301144	19301144	19301144
Damper ASM	1	19299313	19299313	19299313	19299313	17802805	17802805
Pick-Up Tube	1	19301149	19301149	19301149	19301149	19301149	19301149
Head w/Valves	2	17802818	12629063	12629063	17802818	19301209	19301209
Head ASM	1	17802804	19302061	19302061	17802804	19301208	19301208
Retainer, Intake	4	17802819	17802819	17802819	17802819	17802819	17802819
Retainer, Exhaust	4	17802819	12596508	12596508	17802819	17802819	17802819
Push Rods	16	12593344	19301617	19301617	12593344	12593344	12593344
Valve Cover	2	19301147	19301147	19301147	19301147	19301147	19301147
Oil Dipstick Tube	1	19301148	19301148	19301148	12570787	12570787	12570787

NOTE: *COPO Licensed Parts are not serviced by Chevrolet Performance. To order, contact COPO Parts Direct at: 855.267.6685 or www.COPOpartsdirect.com.*

CRATE ENGINES & COMPONENTS

More Choices with New Technologies and Classic Combinations

No other manufacturer offers the range of factory-engineered crate engines you'll find with Chevrolet Performance. Each is designed, validated and built with the same quality and performance standards that go into GM production engines.

Chevrolet Performance also supports builders and installers with a comprehensive lineup of components to help finish off the installation and get the engine running sooner!

New for 2016 is the supercharged, 650-hp LT4 engine from the Corvette Z06, as well as the ZZ6. Rated at 405 hp, it's the ultimate ZZ 350-based crate engine…with modern looks to match modern horsepower.

For the ultimate in crate-engine convenience, Chevrolet Performance's Connect & Cruise powertrain systems match a high-performance LS crate engine with a factory-match transmission – including all the necessary controllers and installation hardware. We also offer the emissions-friendly line of E-ROD crate engine packages, which are CARB-approved for pre-1996 vehicles in California.

We know selecting a crate engine is one of the biggest decisions and most important investments you'll make for your project vehicle. Chevrolet Performance pioneered the concept more than 40 years ago, so you can trust us with the performance you want and the durability you can depend on!

Featured on this spread:

NEW ZZ6 Turn-Key Crate Engine

NEW LT1 CNC Cylinder Head

LSX Bowtie Block (Standard Deck)

NEW LT1 Camshaft

Crate Engine Quick Reference Charts

Chevy Small-Block V-8

Part Number	Description	Engine Size	Weight	hp	Torque	Trans*	Page	Warranty
19244450	350/290 Deluxe Kit	350 cu in	518	300	335	A	112	
12499529	350/290 – Economy Performance Engine	350 cu in	352	300	335	A	113	
19210009	350 HO Turn-Key – with Iron Vortec Heads	350 cu in	575	333	381	A	114	
19210008	350 HO Deluxe – with Iron Vortec Heads	350 cu in	481	333	381	A	115	
19210007	350 HO Base – with Iron Vortec Heads	350 cu in	298	333	381	A	115	
12499120	Ram Jet 350 – PFI with Iron Vortec Heads	350 cu in	517	351	403	A	116	
19333157	SP350 Base	350 cu in	510	385	405	A	118	
12670966	SP/ZZ Partial Engine	350 cu in	540	N/A	N/A	A	119	
19333158	SP350 Turn-Key	350 cu in	410	385	405	A	120	
19351532	ZZ6 Base	350 cu in	405	405	406	A	122	
19351533	ZZ6 Turn-Key	350 cu in	410	405	406	A	124	
19332529	HT383 Base – Performance Engine	383 cu in	405	323	444	A	126	
19332527	383 Partial Engine	383 cu in	335	N/A	N/A	A	127	
19332531	HT383E	383 cu in	450	323	444	A	128	
19332532	SP383 Deluxe	383 cu in	410	435	445	A	130	

Çhevy Circle Track Racing Engines

Part Number	Description	Engine Size	Weight	hp	Torque	Trans*	Page	Warranty
19258602	CT350	350 cu in	451	350	396	N/A	134	
19318604	CT400	350 cu in	466	404	406	N/A	136	
19331563	CT525	376 cu in	415	533	477	N/A	138	

Chevy LS/LT Small-Block V-8

Part Number	Description	Engine Size	Weight	hp	Torque	Trans*	Page	Warranty
19301326	LS3 6.2L – Corvette Gen IV V-8	6.2L	415	430	425	A	200	
19301358	LS376/480 – EFI LS3 Gen IV V-8	6.2L	415	495	473	B	202	
19301359	LS376/515 – Carbureted LS3 Gen IV V-8	6.2L	415	533	477	B	204	
19301360	LS376/525 – EFI LS3 Gen IV V-8	6.2L	415	525	486	B	206	
19329008	DR525 with Gen IV F-car oil pan	376 cu in	415	525	498	B	208	
19329009	DR525 with muscle car oil pan	376 cu in	415	525	494	B	208	
19331507	LSA 6.2L SC	6.2L	435	556	551	C	210	
19260165	LS9 6.2L SC	6.2L	435	638	604	N/A	212	
19244098	LS7 7.0L – Corvette Z06	7.0L	440	505	470	B	214	
19328728	LT1 with wet sump 6.2L	6.2L	425	460	465	E	216	
19329997	LT1 with dry sump 6.2L	6.2L	425	460	465	E	216	
19332621	LT4 with wet sump 6.2L SC	6.2L	N/A	650	650	N/A	218	
19332702	LT4 with dry sump 6.2L SC	6.2L	N/A	650	650	N/A	218	
19328837	LTG 2.0L Turbocharged	2.0L	390	272	295	D	220	

*Recommended Transmissions

Trans	Part Number	Description	Page
A	19260380	Hydra-Matic 4L65-E Four-Speed Automatic	366
B	19299055	SuperMatic™ 4L70-E Four-Speed Automatic	366
C	19300175	SuperMatic™ 4L85-E Four-Speed Automatic	366
D	19328976	Production LTG 6-Speed Manual	375
E	19329645	SuperMatic™ 4L70-E Four-Speed Automatic – LT1	366

Chevy LSX Small-Block V-8

Part Number	Description	Engine Size	Weight	hp	Torque	Trans*	Page	Warranty
19260831	LSX376-B8	6.2L	531	476	475	C	236	
19299306	LSX376-B15	6.2L	539	473	444	C	238	
19260833	LSX454 – Base Assembly	7.4L	525	627	586	N/A	240	
19260835	LSX454R	7.4L	597	776	649	N/A	242	

Chevy Big-Block V-8

Part Number	Description	Engine Size	Weight	hp	Torque	Trans*	Page	Warranty
19166393	ZZ427/480	427 cu in	520	480	490	C	298	
12568774	454 HO – with Iron Heads and Roller Cam	454 cu in	590	438	500	C	300	
12498778	454 Partial Engine	454 cu in	361	N/A	N/A	C	301	
19331574	ZZ454/440 – 440 Horsepower with Aluminum Heads	454 cu in	522	469	519	C	302	
88890534	HT502 – Truck Replacement Engine	502 cu in	557	406	541	C	304	
12568782	502 Partial Engine	502 cu in	402	N/A	N/A	C	305	
12568778	502 HO – with Iron Heads and Roller Cam	502 cu in	602	461	558	C	306	
19331579	ZZ502 Deluxe – Assembled Kit, with Aluminum Heads	502 cu in	611	508	580	C	308	
12371171	ZZ502 Deluxe – Unassembled Kit, with Aluminum Heads	502 cu in	602	508	580	C	309	
19331576	ZZ502 Base Engine, with Aluminum Heads	502 cu in	504	508	580	C	310	
19331578	ZZ502 Base – Unassembled Kit, with Aluminum Heads	502 cu in	532	508	580	C	311	
12499121	Ram Jet 502 – PFI with Aluminum Heads	502 cu in	608	502	568	C	312	
19331583	ZZ572/620 Deluxe	572 cu in	580	621	645	C	314	
19331581	ZZ572/620 Base	572 cu in	514	621	645	C	315	
19331585	ZZ572/720R Deluxe	572 cu in	677	727	680	C	316	
19328586	Vortec 8.0L	484 cu in	602	N/A	N/A	–	318	

GM Parts Crate Engines**

Description	Engine Size	Weight	hp	Torque	Trans*	Page	Warranty
2.2L L61	134 cu in	–	135–143	142	N/A	377	
2.8L I-4	2.8L	–	175	185	N/A	377	
3.5L LX9	3.5L	–	200	220	N/A	377	
3.8L V-6	3.8L	–	200	230	N/A	377	
4.2L LL8	256 cu in	–	275	275	N/A	378	
4.3L LU3	262 cu in	–	180–200	245–260	N/A	378	
4.8L LR4	292 cu in	–	275	285–290	N/A	378	
5.3L LM7/L59	325 cu in	–	285	325–330	N/A	378	
5.7L Gen 0	350 cu in	–	195	N/A	N/A	379	
5.7L Gen 1	350 cu in	–	N/A	N/A	N/A	379	
5.7L Gen 1e	350 cu in	–	N/A	N/A	N/A	379	
7.4L L19/L29	454 cu in	–	230–270	N/A	N/A	379	
8.1L L18	496 cu in	–	225–340	350–455	N/A	376	

NOTE: *Weights include crates and all packaging material. Approximate crate weight is 30 lbs.*

***This is a sample listing of GM Parts Crate Engines. Please see your GM dealer for the entire GM engine portfolio.*

Warranty Information

Chevrolet Performance Crate Engines include a 24-month or 50,000-mile limited warranty.

Chevrolet Performance Parts include a 12-month/unlimited mile limited warranty.

Chevrolet Performance Racing Crate Engines are excluded from limited warranty.

GM Parts Engines offer a 36-month or 100,000-mile limited warranty when the engine is installed in a recommended application.

Torque Converter Quick Reference Chart

Automatic Transmission Torque Converter Match Listing

Engine P/N	Description	Displac.	hp	Torque	4L60 Family		4L80 Family	
					Fits SuperMatic 4L65-E and 4L70-E (LS bell)		Fits SuperMatic 4L85-E	
					Converter P/N	Stall Range	Converter P/N	Stall Range
Chevy Small-Block V-8								
19244450	350/290 Deluxe	350 cu in	300	335	19299800	2,400-2,800	N/A	N/A
19210009	350 HO Turn-Key – with Iron Vortec Heads	350 cu in	333	381	19299800	2,400-2,800	N/A	N/A
12499120	Ram Jet 350 – PFI with Iron Vortec Heads	350 cu in	351	403	19299800	2,400-2,800	19299804	2,400-2,800
19333157	SP350 Base	350 cu in	385	405	19299801	3,000-3,400	19299805	3,000-3,400
19333158	SP350 Turn-Key	350 cu in	385	405	19299801	3,000-3,400	19299805	3,000-3,400
19351532	ZZ6 Base	350 cu in	405	406	19299801	3,000-3,400	19299805	3,000-3,400
19351533	ZZ6 Turn-Key	350 cu in	405	406	19299801	3,000-3,400	19299805	3,000-3,400
19332529	HT383 Base – Performance Engine	383 cu in	323	444	19299800	2,400-2,800	19299804	2,400-2,800
19332532	SP383 Deluxe	383 cu in	435	445	19299801	3,000-3,400	19299805	3,000-3,400
Chevy LS/LT/LSX V-8								
19301326	LS3 – Corvette Gen IV V-8	6.2L	430	425	19299802	2,400-2,800	19299806	2,400-2,800
19257230	LS3 – E-Rod Kit, Automatic	6.2L	430	425	19299802	2,400-2,800	19299806	2,400-2,800
19301358	LS376/480 – LS3 Gen IV V-8	6.2L	495	473	19299803	3,000-3,400	19299807	3,000-3,400
19301359	LS376/515 – Carbureted LS3 Gen IV V-8	6.2L	533	477	19299803	3,000-3,400	19299807	3,000-3,400
19301360	LS376/525 – LS3 Gen IV ASA Camshaft	6.2L	525	486	19299803	3,000-3,400	19299807	3,000-3,400
19329008	DR525 (with Gen IV F car oil pan)	6.2L	525	498	N/A	N/A	N/A	N/A
19329009	DR525 (with muscle car oil pan)	6.2L	525	494	N/A	N/A	N/A	N/A
19331507	LSA 6.2L SC – Gen IV V-8	6.2L	556	551	N/A	N/A	19299806	2,400-2,800
19260165	LS9 6.2L SC – Gen IV V-8	6.2L	638	604	N/A	N/A	19299806	2,400-2,800
19244098	LS7 7.0L – Corvette Z06	7.0L	505	470	19299803	3,000-3,400	19299807	3,000-3,400
	Optional LS7 (depending on application)	7.0L	505	470	19299802	2,400-2,800	19299806	2,400-2,800
19260831	LSX376 – B8	6.2L	476	475	19299802	2,400-2,800	19299806	2,400-2,800
19299306	LSX376 – B15	6.2L	473	444	N/A	N/A	N/A	N/A
19260833	LSX454	7.4L	627	586	N/A	N/A	19299807	3,000-3,400
19260835	LSX454R	7.4L	776	649	N/A	N/A	N/A	N/A
19328728	LT1 (with wet sump)	6.2L	460	465	19299802	N/A	19299806	N/A
19329997	LT1 (with dry sump)	6.2L	460	465	19299802	N/A	19299806	N/A
Chevy Big-Block V-8								
19166393	ZZ427/480	427 cu in	480	490	19299801	3,000-3,400	19299805	3,000-3,400
12568774	454 HO – with Iron Heads and Roller Cam	454 cu in	438	500	19299800	2,400-2,800	19299804	2,400-2,800
19351574	ZZ454/440 – 440 Horsepower with Aluminum Heads	454 cu in	469	519	19299800	2,400-2,800	19299804	2,400-2,800
88890534	HT502 – Truck Replacement Engine	502 cu in	406	541	19299800	2,400-2,800	19299804	2,400-2,800
12568778	502 HO – with Iron Heads and Roller Cam	502 cu in	461	558	19299800	2,400-2,800	19299804	2,400-2,800
19331576	ZZ502/502 Base Engine–with Aluminum Heads	502 cu in	508	580	19299801	3,000-3,400	19299805	3,000-3,400
19331579	ZZ502 Deluxe – (Deluxe/Assembled) with Aluminum Heads	502 cu in	508	580	19299801	3,000-3,400	19299805	3,000-3,400
12499121	Ram Jet 502 – PFI with Aluminum Heads	502 cu in	502	568	19299801	3,000-3,400	19299805	3,000-3,400
19331583	ZZ572/620 Deluxe	572 cu in	621	645	N/A	N/A	19299805	3,000-3,400
19331585	ZZ572/720R Deluxe	572 cu in	727	680	N/A	N/A	19299805	3,000-3,400

Engine Power and Torque Ratings Test Procedures

All Chevrolet Performance crate engines were tested in a controlled environment on a dynamometer following the Society of Engineers (SAE) standard test procedures J1349 for net power testing or J1995 for gross power testing. Atmospheric correction factors for J1349 use a temperature of 77°F and a barometric pressure of 29.31 inHg. The J1995 correction factors are derived from SAE test J607 correcting to standard temperature and pressure conditions of 60°F and 29.92 inHg. Formally declared values meet the requirements within SAE test standard J2723.

Different Levels of Engine Assemblies

Recognizing that each customer has unique needs, Chevrolet Performance offers four distinct levels of Crate Engines, covering the gamut from starter Partial engines to complete Turn-Key engines that are ready to be dropped into your favorite vehicle. This variety gives builders the opportunity to customize an engine as much or as little as they need to meet their expectations.

Partial Engine
This is for the builder who wants to start essentially from the block up. These engines typically include the block and reciprocating assembly. It allows the builder to choose the heads, cam and intake combination he/she wants.

Base
The Base engine assembly typically includes, block, crank, pistons, cam, heads and valve covers, but allows the builder to pick the carburetor/injection system and intake manifold they desire.

Deluxe
The Deluxe crate engines are essentially ready to fire up, as they ship with the distributor installed, harmonic balancer bolted on and the carburetor in the crate. All you need to do is put the parts together and go!

Turn-Key
We told our engineers to have some fun and assemble engines the way they think it should be done … we then took their combinations, built them up and put them in a crate that ships right to your dealer. The Turn-Key engines represent an outstanding value, and they are perfect for enthusiasts who have built a chassis and need reliable power to get it down the road.

LT4 6.2L SC

Advanced Technology Delivers Supercharged Supremacy

When it comes to advanced technology and high performance, the all-new LT4 6.2L SC delivers unmatched capability from a production-based crate engine. It's the power behind the track-focused Corvette Z06, using a state-of-the-art supercharger to squeeze more than 9 pounds of boost – at 20,150 rpm – into the direct-injected combustion chambers. The result is 650 horsepower and 650 lb.-ft. of torque. That makes it the most powerful production engine ever from Chevrolet.

Image shown includes:

LT4 6.2L SC Dry-Sump Crate Engine 19332702

Add the following additional Chevrolet Performance parts to get up and running in less time:

LT4 Controller Kit 19331517

LT4 Dry-Sump Accessory Drive System 19322614

To learn more about this engine, please turn to page 218.

NOTE: *Engine may not come with all the parts shown in photo. See your dealer for more details*

CORVETTE
LT4

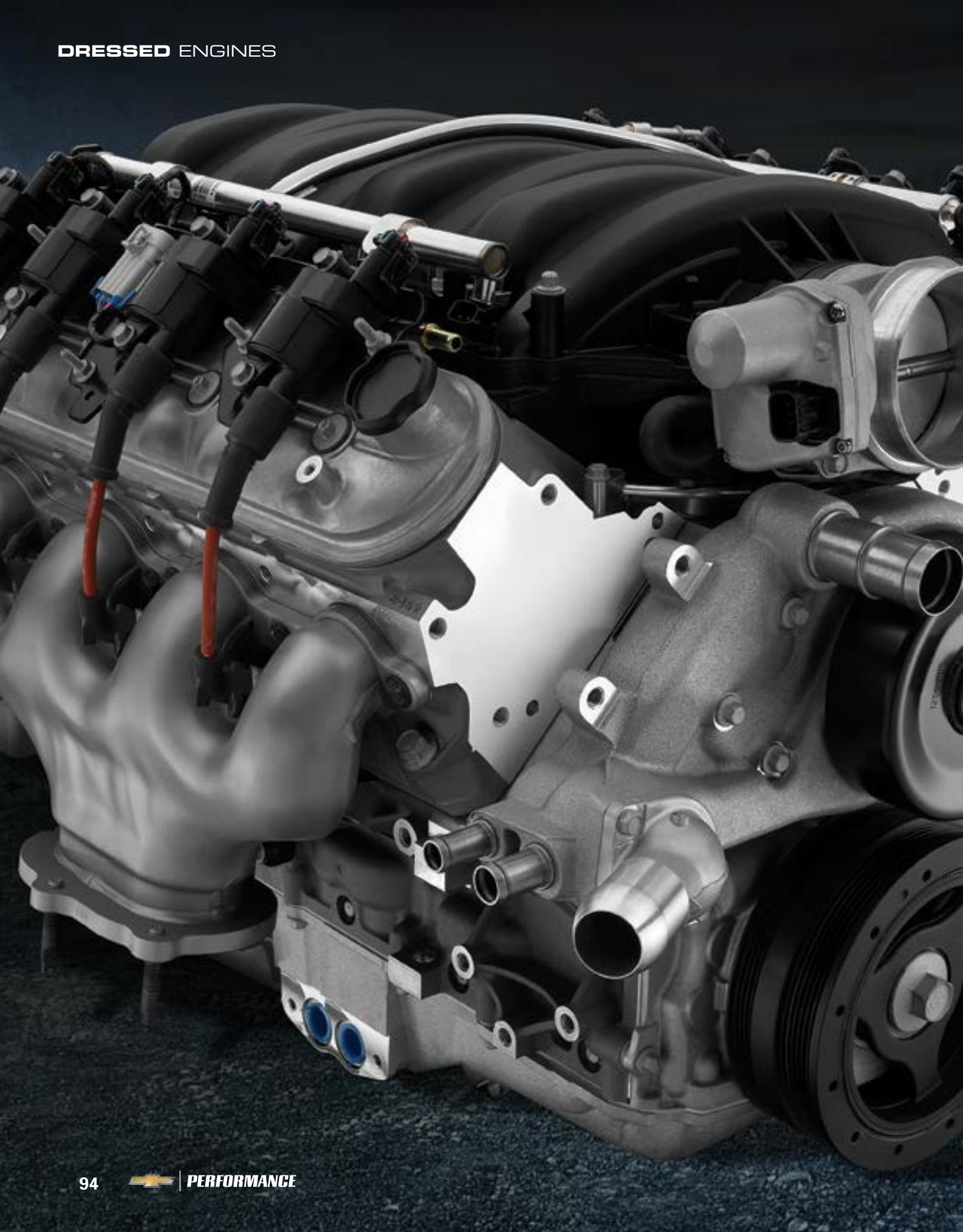

LS7 7.0L

A Legend in Its Own Time

With a pedigree forged on the racetrack, the 7.0L LS7 was the heart of the world-renowned C6 Corvette Z06 and the Gen 5 Camaro Z/28, delivering 505 horsepower with the help of exotic, lightweight components that enhanced its exceptional airflow capabilities. In fact, the deep-breathing, high-winding LS7 helped drive the Z/28 to Motor Trend's Best Driver's Car award for 2014 – the first American-brand car to win the award.

Image shown includes:

LS7 7.0L Crate Engine **19244098**

Add the following additional Chevrolet Performance parts to get up and running in less time:

LS7 Controller Kit **19258553**

Corvette Accessory Drive System **19155067**

LS-Series Starter **10465385**

To learn more about this engine, please turn to page 214.

NOTE: *Engine may not come with all the parts shown in photo. See your dealer for more details*

ZZ6

The Next Chapter in the 'ZZ' Legacy

Chevrolet Performance's all-new ZZ6 Small-Block advances the legacy of the "ZZ" series that launched the factory-performance crate engine market. Using the latest technologies, our engineers have pushed the classic 350 Small-Block to 405 naturally aspirated horsepower using aluminum Fast Burn heads, with big 2.00/1.55-inch valves, and a low-friction roller camshaft with more than 0.500-inch lift – and it is distinguished by Chevrolet Performance's all-new, premium valve cover design. In short, it's the ultimate 350 and it's sure to be a future classic – just like our original ZZ4!

Image shown includes:

ZZ6 Turn-Key Crate Engine..... 19351533

NOTE: *Image does not show the FEAD System, which is included on the Turn-Key engine. See page 124 for full description of included components.*

Add the following additional Chevrolet Performance parts to get up and running in less time:

High-Torque Mini Starter.....12361146

Hydra-Matic 4L65-E Four-Speed Automatic Transmission 19260380

Torque Converter..... 19299800

To learn more about this engine, please turn to page 124.

NOTE: *Engine may not come with all the parts shown in photo. See your dealer for more details*

CHEVROLET
CHEVROLET

LSA 6.2L SC

'Intoxicating' Power from the Camaro ZL1

Powered by the 556-horsepower supercharged LSA engine, the Gen 5 Camaro ZL1 could sprint from 0-60 in 4 seconds, eclipse the quarter-mile in 11 seconds and run all the way up to a 184-mph top. Car and Driver said it best, describing the 2015 Camaro ZL1 as delivering "linear and intoxicating power" – and that power is available in this updated crate engine package. It is based on the ZL1 application, for easier and more attractive retro-fit installations.

Image shown includes:

LSA 6.2L SC Crate Engine..... 19331507

Add the following additional Chevrolet Performance parts to get up and running in less time:

LSA Controller Kit 19259293

LSA Accessory Drive System 19243525

LSA Accessory Drive System AC add-on Kit 19244106

To learn more about this engine, please turn to page 210.

NOTE: *Engine may not come with all the parts shown in photo. See your dealer for more details*

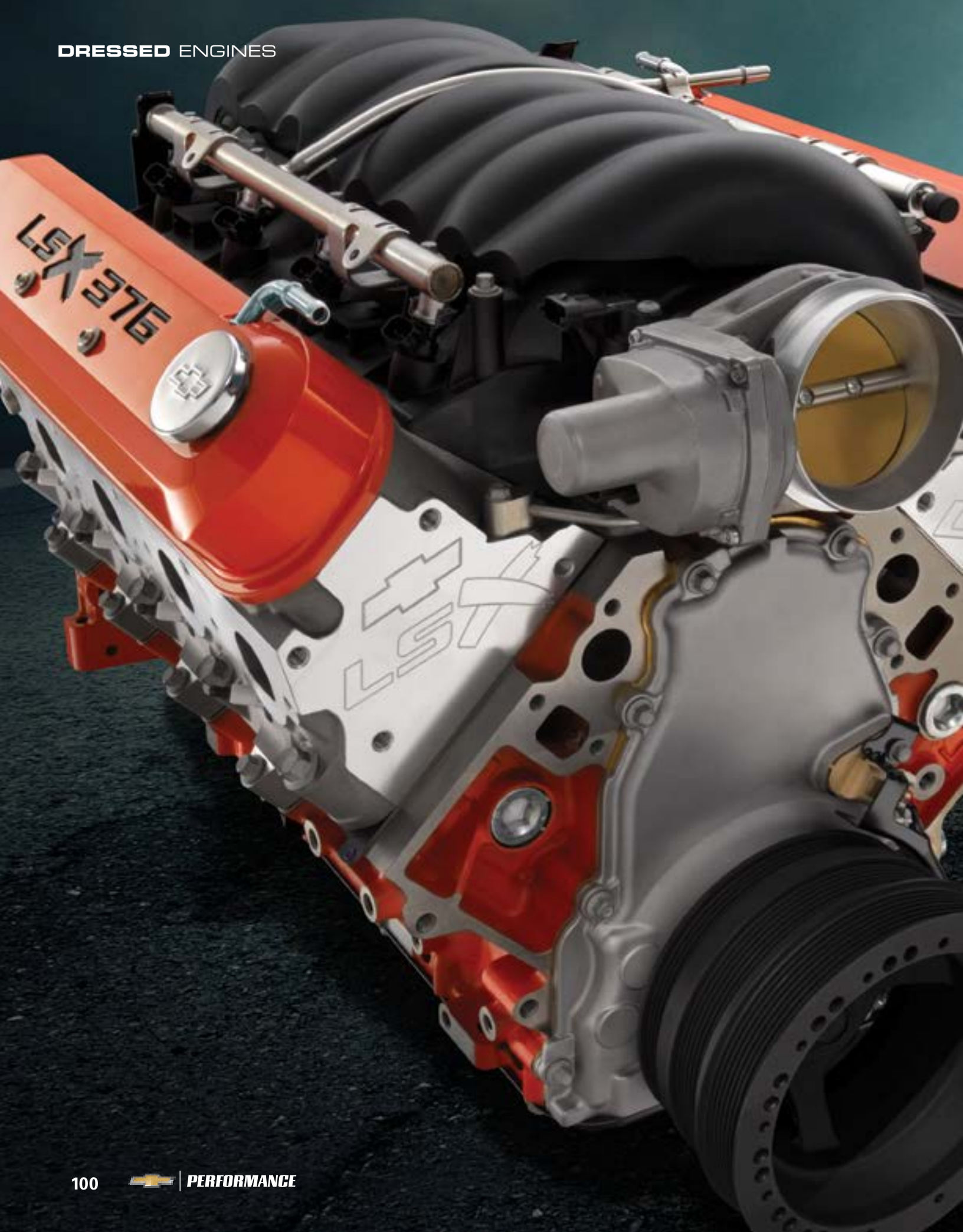
LSX376
LS7

LSX 376-B15

A Strong Foundation Built for Boost

Chevrolet Performance developed the boost-capable LSX376-B series expressly to offer economical long block-style assemblies ready to accept the supercharger or turbo system of the builder's choice. This LSX376-B15 is capable of supporting forced induction systems producing up to 15 pounds of boost, thanks to strong features starting with the LSX cast iron block and including a forged steel crankshaft, low-compression pistons and LSX-LS3 heads that have a six-bolt design, for exceptional sealing under pressure. If you've got the blower, this is your foundation for big performance!

Here's what you need to build the LSX 376-B15 as shown:

LSX3765-B15 Crate Engine..... 19299306

LS3 Intake Manifold Assembly..... 12638197

To learn more about this engine, please turn to page 238.

NOTE: *Engine may not come with all the parts shown in photo. See your dealer for more details*

DR525

The Only Sealed Drag Racing Crate Engine Is from Chevrolet Performance

Chevrolet Performance's groundbreaking DR525 sealed, racing crate engine was developed for NMCA's LS Stock class in the LSX Shootout Series, bringing the approach to value-driven racing we established in circle track competition. Based on the proven and capable LS3 engine, the DR525 is rated at 525 horsepower and features tamper-proof fasteners for class compliance. It's also legal for other classes, making it the perfect, dependable racing engine to help you go rounds and win races!

Image shown includes:

DR525 Crate Engine with Gen IV Oil Pan 19329008

Add the following additional Chevrolet Performance parts to get up and running in less time:

DR525 Engine Controller Kit 19329003

DR525 Accessory Drive System 19329418

Starter 10465385

To learn more about this engine, please turn to page 208.

NOTE: *Engine may not come with all the parts shown in photo. See your dealer for more details*

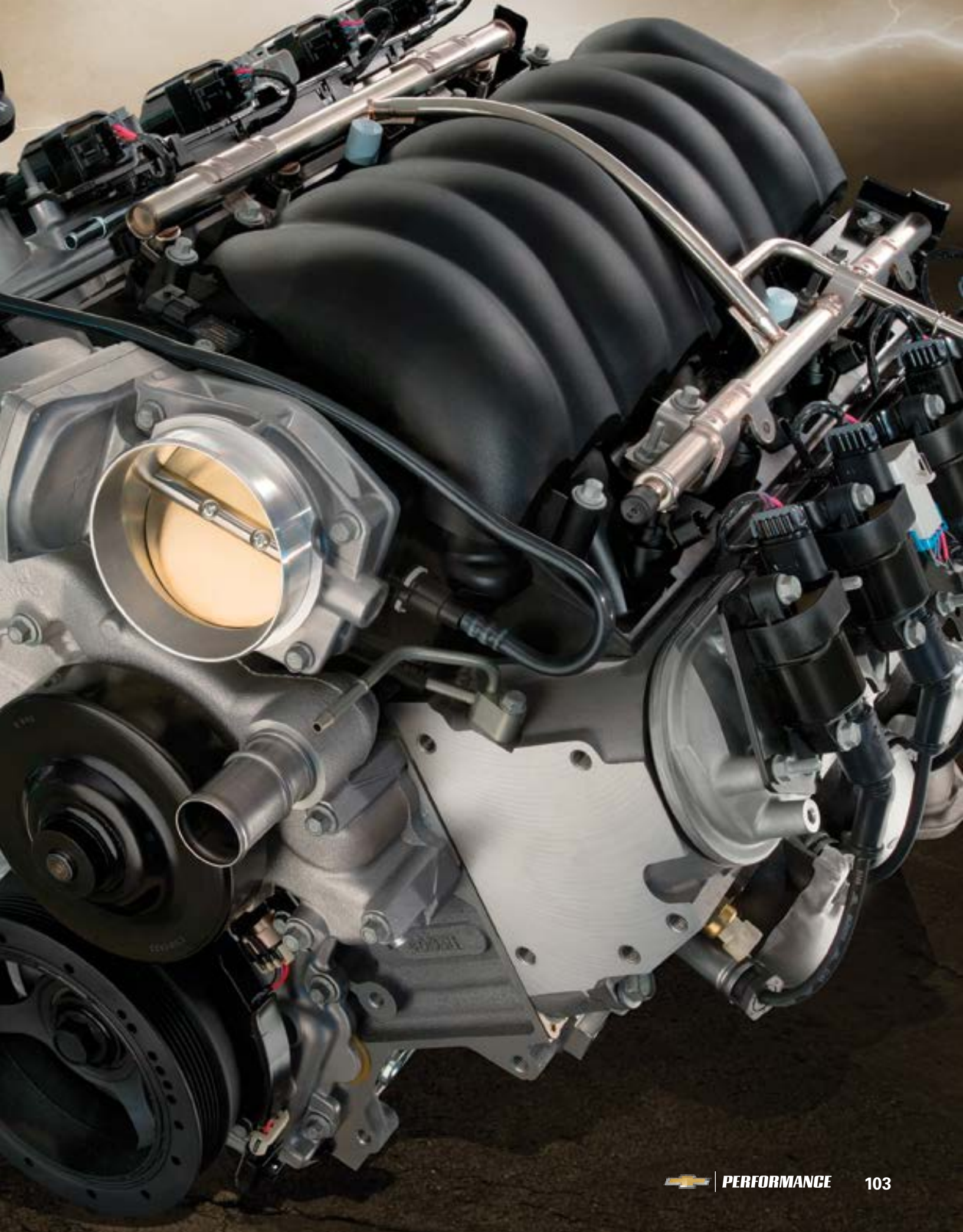

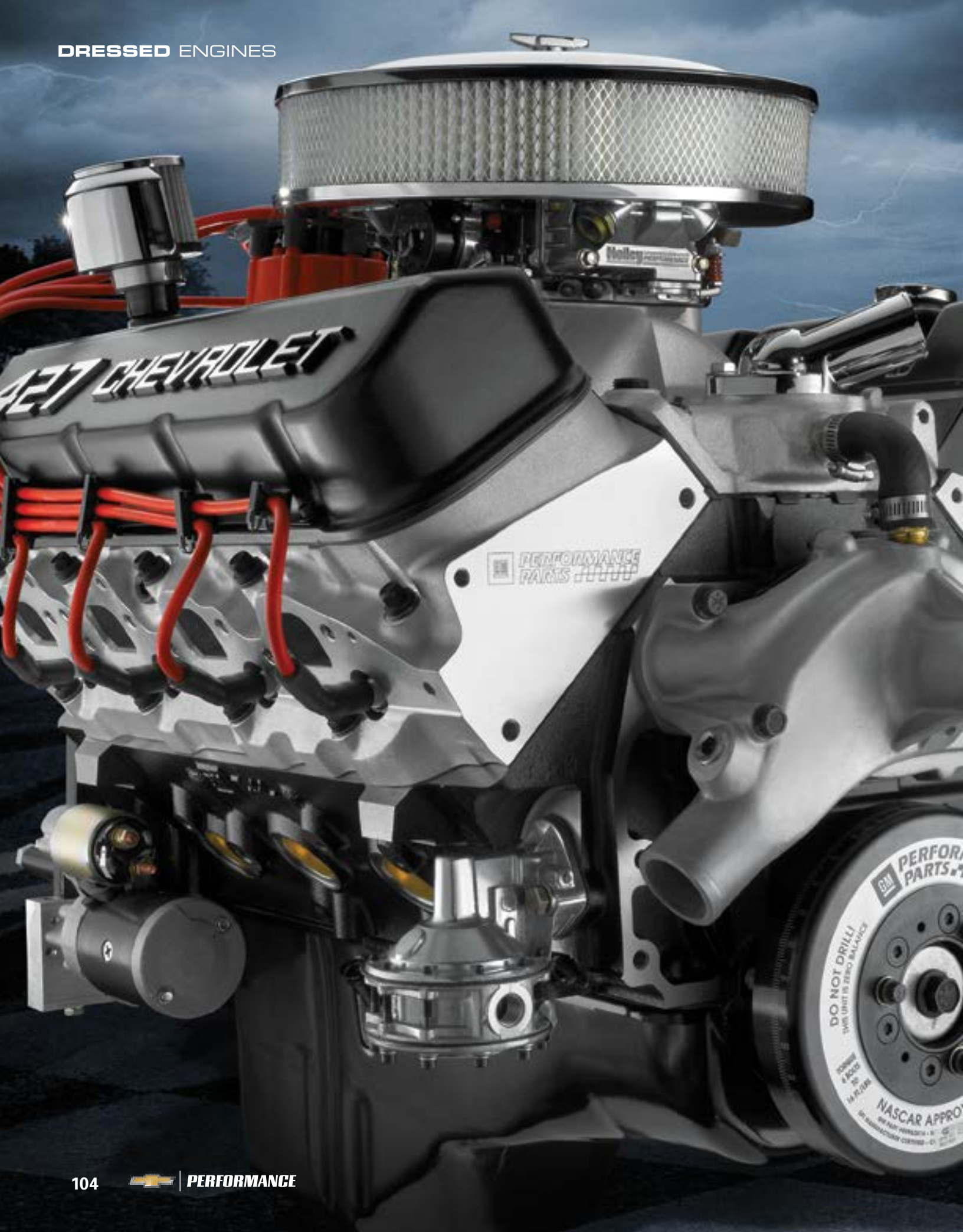
427 CHEVROLET
PERFORMANCE PARTS
DO NOT DRILL!
NASCAR APPROV

ZZ427/480

A Contemporary Twist on a Classic Big-Block

Inspired by the legendary L88 427 Big-Block of the late-1960s, the unique ZZ427 crate engine honors it with the classic combination of lightweight aluminum heads on the strong iron block, drawing its breath through a single four-barrel carb. We've updated the design with a hydraulic roller cam for greater drivability and pump-gas-friendly 10:1 compression. It's rated at 480 horsepower, with a bottomless reserve of that signature Big-Block torque. It's what your Camaro, Corvette or Chevelle has been craving!

Here's what you need to build the ZZ427/480 as shown:

ZZ427/480 Crate Engine	**19166393**
Chrome Air Cleaner	**12342080**
Chrome Water Neck	**12342024**
High Torque Mini Starter	**12361146**
Street Performance Fuel Pump	**12355614**

To learn more about this engine, please turn to page 298.

NOTE: *Engine may not come with all the parts shown in photo. See your dealer for more details*

CT525

Dependable Performance that Helps Win Races

On the track, you need more than horsepower to win. You need dependability. That's exactly what Chevrolet Performance offers with the CT525 crate engine. Rated at a strong 533 horsepower and 477 lb.-ft. of torque, it's based on the durable and proven production LS3 engine. It is adapted for circle track racing with a carbureted intake manifold, 6-quart racing oil pan and more – and those deep-breathing LS3 cylinder heads provide the high-rpm performance to keep you ahead of the pack. Power and dependability – Chevrolet Performance's winning combination!

Image shown includes:

CT525 Crate Engine **19331563**

Add the following additional Chevrolet Performance parts to get up and running in less time:

LSX Ignition Controller **19171130**

Air Cleaner, Classic Design **12342071**

LS-Series Starter **10465385**

To learn more about this engine, please turn to page 138.

NOTE: *Engine may not come with all the parts shown in photo. See your dealer for more details*

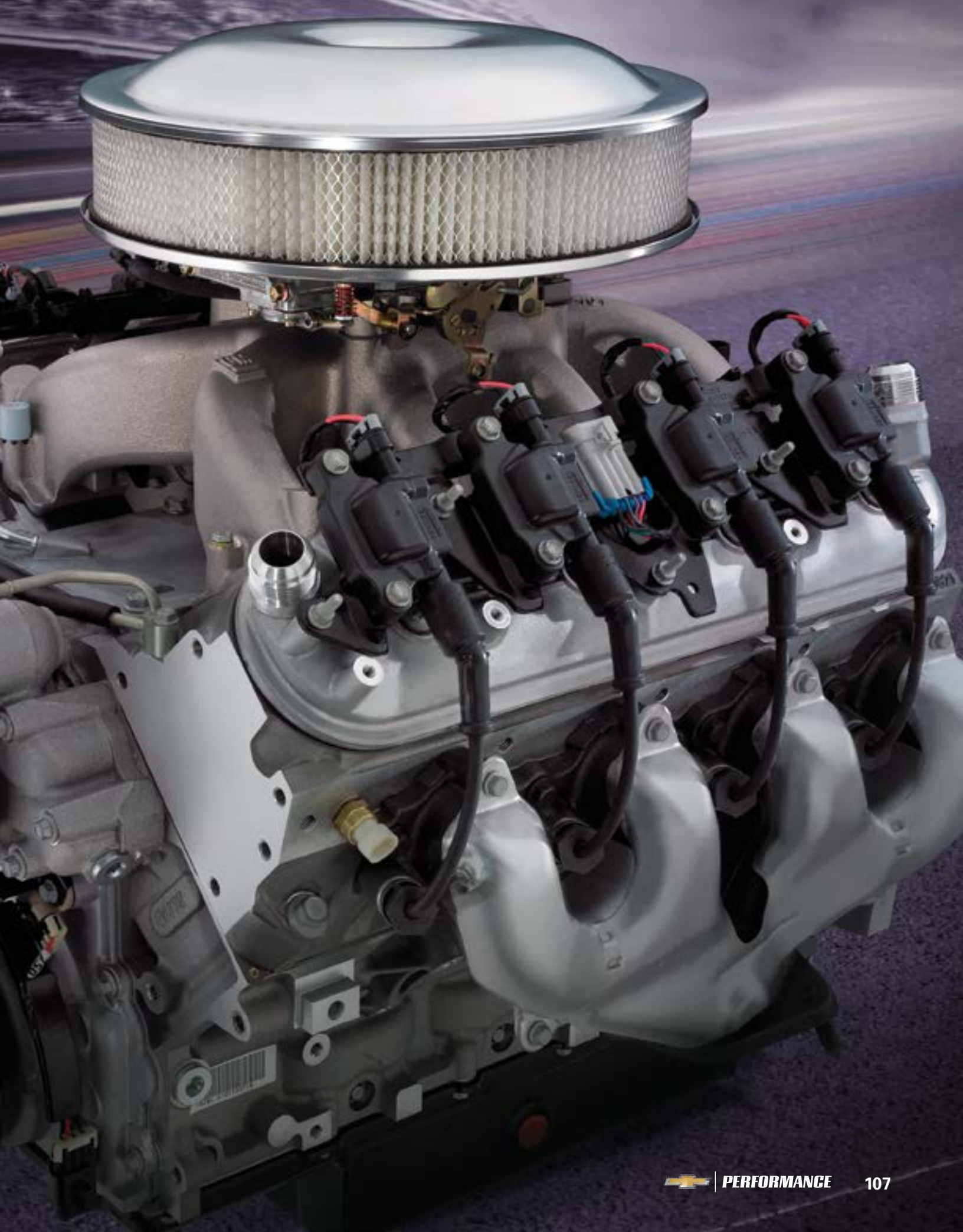

LSX454R

The Ultimate LS-Based Drag Racing Engine

Chevrolet Performance's LSX454R is more than our most powerful crate engine – it's also designed for dependability on the track, offering drag racers the performance they need to win in a reliable, low-maintenance package. For the record, this 13.1:1, naturally aspirated LS engine is officially rated at 776 horsepower at 7,000 rpm and 649 lb.-ft. of torque at 5,100 rpm. An all-forged rotating assembly and six-bolt LSX heads help ensure its durability, while supporting its unprecedented output. Yeah, your race car could use this!

Image shown includes:

LSX454R Crate Engine **19260835**

Add the following additional Chevrolet Performance parts to get up and running in less time:

LSX Ignition Controller **19171130**

Muscle Car Oil Pan Kit **19212593**

LS-Series Starter **10465385**

To learn more about this engine, please turn to page 242.

NOTE: *Engine may not come with all the parts shown in photo. See your dealer for more details*

LSX 454R

SMALL-BLOCK Crate Engines

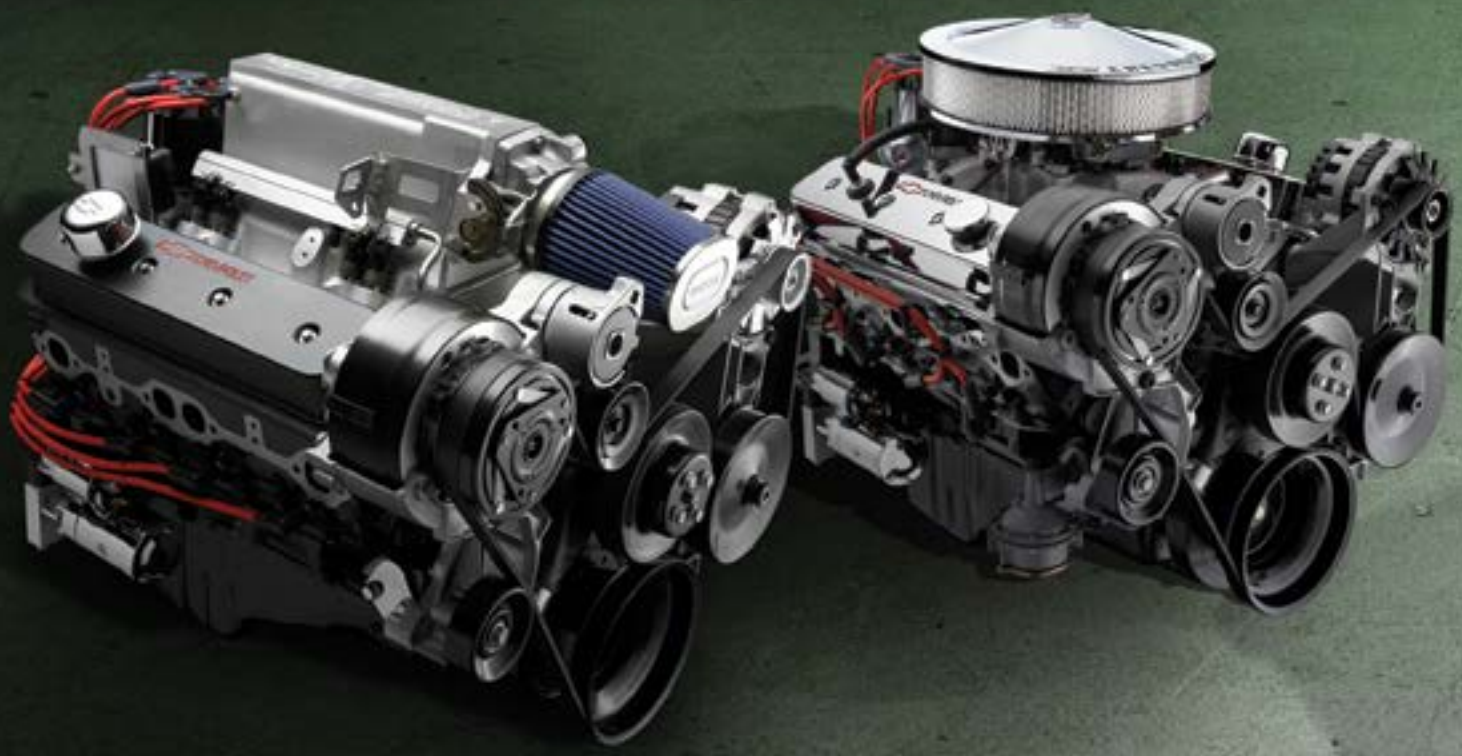

New Engines, More Choices for the Iconic American V-8

The Chevrolet Small-Block fundamentally changed the world of performance more than six decades ago and that icon of American horsepower is pulling stronger than ever in Chevrolet Performance's diverse range of crate engines.

For 2016, we've added the all-new ZZ6 – a high-winding, 405-hp entrant in the historic "ZZ" crate engine family – as well as the SP350 and SP383 engines. Each uses the latest valvetrain technology to rev higher and move more air, for a great balance of low-rpm torque and high-rpm horsepower.

All of our Small-Block crate engines are built with brand-new parts, from the cylinder block and rotating assembly to the heads and all the supporting accessories – and just about every engine uses a block with four-bolt main caps, for great strength and durability.

The Small-Block's legacy is unmatched in the industry and nobody knows how to build them better than Chevrolet Performance!

You can find these Chevrolet Performance Small-Block Engines on the following pages:

350/290 Deluxe ..... **Page 112**
350 HO Turn-Key ..... **Page 114**
Ram Jet 350 ..... **Page 116**
SP350 Base ..... **Page 118**
SP350 Turn-Key ..... **Page 120**
ZZ6 Base ..... **Page 122**
ZZ6 Turn-Key ..... **Page 124**
HT 383 ..... **Page 126**
HT383E ..... **Page 128**
SP383 Deluxe ..... **Page 130**

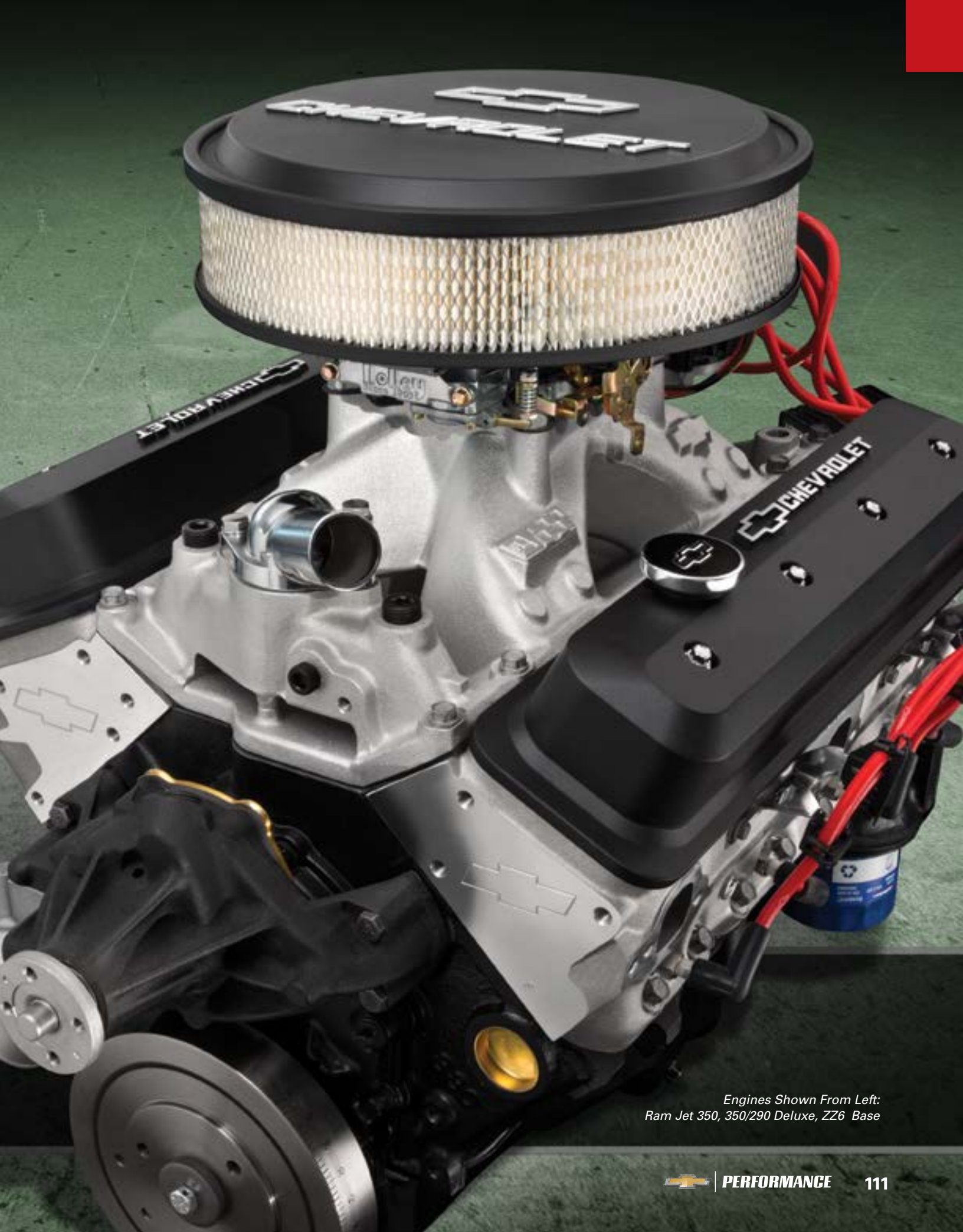

Engines Shown From Left:
Ram Jet 350, 350/290 Deluxe, ZZ6 Base

350/290 Deluxe

19244450

300 hp @ 5,100 rpm / **335 lb.-ft.** @ 4,200 rpm

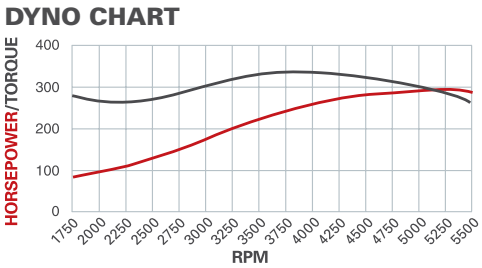

An Affordable Icon

The 350 Small-Block is the cornerstone of the performance world the most popular high-performance Small-Block crate engine. The 350/290 Deluxe, with 300 hp and 335 lb.-ft. of torque, adds an aluminum intake manifold* and chrome dress-up kit to create one of the most stylish and value-driven engines on the market.

Like all Chevrolet Performance Small-Block crate engines, the engine is built with a cast-iron block. It's got four-bolt main caps – a feature that's almost impossible to find in cores – and it's filled with a tough rotating assembly featuring aluminum pistons delivering an 8.0:1 compression ratio. This recipe delivers a strong 300 hp and 335 lb.-ft. of torque that you can feel in the driver's seat.

Chevrolet Performance has all the parts needed to get your hot rod engine running, from the carburetor to the starter and distributor to the plug wires and more.

**Holley 670-cfm carburetor P/N 19170092 recommended (not included).*

NOTE: *Refer to page 91 for the complete horsepower and torque testing procedures.*

TECH SPECS

Part Number:	19244450
Engine Type:	Chevy Small-Block V-8
Displacement (cu in):	350
Bore x Stroke (in):	4.000 x 3.480
Block (P/N 10066034):	Cast-iron with 4-bolt main caps
Crankshaft (P/N 93426651):	Nodular iron
Connecting Rods (P/N 10108688):	Powdered metal steel
Pistons (P/N 93422884):	Cast-aluminum
Camshaft Type (P/N 3896962):	Hydraulic flat tappet
Camshaft Lift (in):	.450 intake /.460 exhaust
Camshaft Duration (@.050 in):	222° intake / 222° exhaust
Cylinder Heads (P/N 93438648):	Iron; 76cc chambers
Valve Size (in):	1.94 intake / 1.50 exhaust
Compression Ratio:	8.0:1
Rocker Arms (P/N 10089648):	Stamped steel
Rocker Arm Ratio:	1.5:1
Recommended Fuel:	Regular pump
Ignition Timing:	34° Total @ 4,000 rpm
Maximum Recommended rpm:	5,100
Balanced:	Internal

INSTALLATION NOTES

- Use neutral balance harmonic damper P/N 12551537
- Use internally balanced flexplate P/N 471529 for automatic transmission or flywheel P/N 14085720 for manual transmission (not included)
- Power ratings based on tests with Holley 670-cfm carburetor P/N 19170092 (not included)
- Does not accept Chevrolet Performance roller lifter assemblies
- Designed for pre-1976 street vehicles or any off-road vehicle
- Not intended for marine applications
- See the Valve Covers section on page 164 for selection of chrome, polished and aluminum valve covers
- Pre-1986-style 2-piece rear main seal block
- Recommended for use in vehicles with 6,000 GVW or less

Chevrolet Performance Crate Engines include a 24-month or 50,000-mile/80,000-kilometer limited warranty.

Chevrolet Performance does not utilize any used or remanufactured parts in this crate engine, except for the starter, alternator and power steering pump.

Shown with 670-cfm carburetor (not included)

12499529

350/290 Base

The 350/290 crate engine is also available without the manifold and chrome dress-up kit. Use this even more economical version to build the final combination to your specifications.

19260380

Hydra-Matic 4L65-E Four-Speed Automatic Transmission

Electronically controlled four-speed overdrive transmission. Suitable for engines producing up to 430 lb.-ft. of torque.

See page 364 for torque converter application

AVAILABLE ENGINE-RELATED PARTS & ACCESSORIES

See page 140 for our complete line of Small-Block components

93440806
HEI Distributor
Page 178

12361146
High-Torque Mini-Starter
Page 186

19299800
Torque Converter
Page 364

19170092
Carburetor, Holley 670-cfm
Page 188

19332781
Transmission Installation Kit
Page 367

19332775
Transmission Controller
Page 369

350 HO Turn-Key

19210009

333 hp @ 5,100 rpm / **381 lb.-ft.** @ 3,700 rpm

DYNO CHART

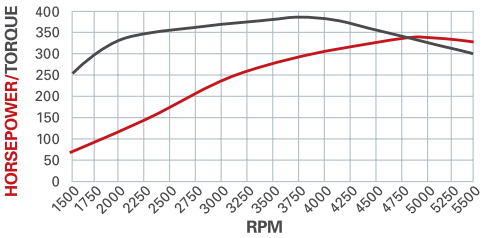

The Classic 350 Ready to Rock!

Forget rebuilding! Our 350 HO is assembled with all-new parts and high-flow heads, giving you more power than just about any production-spec Small-Block ever installed at the factory: 333 hp and a satisfying 381 lb.-ft. of torque. It's affordable power with dependability you can count on.

A cast-iron block with four-bolt main caps is the foundation for the 350 HO, which is topped with iron Vortec heads fitted with 1.94/1.50-inch valves. Its durable rotating assembly has aluminum pistons delivering a 9.0:1 compression ratio, while a hydraulic flat-tappet camshaft requires no periodic lash adjustments.

As one of our Turn-Key crate engines, the 350 HO Turn-Key comes with the intake manifold and distributor installed. It also includes the carburetor, front-accessory kit, starter, fuel pump and spark plug wires (not installed).

NOTE: *Refer to page 91 for the complete horsepower and torque testing procedures.*

TECH SPECS

Part Number:	19210009
Engine Type:	Chevy Small-Block V-8
Displacement (cu in):	350
Bore x Stroke (in):	4.000 x 3.480
Block (P/N 10105123):	Cast-iron with 4-bolt main caps
Crankshaft (P/N 14088526):	Nodular iron
Connecting Rods (P/N 10108688):	Powdered metal steel
Pistons (P/N 12514101):	Cast-aluminum
Camshaft Type (P/N 24502476):	Hydraulic flat tappet
Camshaft Lift (in):	.435 intake / .460 exhaust
Cylinder Heads (P/N 12558060):	Vortec iron; 64cc chambers
Valve Size (in):	1.940 intake / 1.500 exhaust
Compression Ratio:	9.0:1 nominal
Rocker Arms (P/N 10089648):	Stamped steel
Rocker Arm Ratio:	1.5:1
Water Pump (P/N 88894341):	Cast iron, long-style
Flexplate (P/N 14088765):	12.750"
Recommended Fuel:	Premium pump
Ignition Timing:	32° Total @ 4,000 rpm
Maximum Recommended rpm:	5,100
Balanced:	External

INSTALLATION NOTES

- Comes with externally balanced flexplate for automatic transmission; requires externally balanced flywheel for manual transmission. See chart on page 173
- Has right-side oil dipstick
- Requires fuel line from fuel pump to carburetor
- Fuel pump pressure is pre-set; fuel pressure regulator not required
- Some assembly and minor engine tuning required
- Designed for pre-1976 street vehicles or any off-road vehicle
- Not intended for marine applications

Chevrolet Performance Crate Engines include a 24-month or 50,000-mile/80,000-kilometer limited warranty.

Chevrolet Performance does not utilize any used or remanufactured parts in this crate engine, except for the starter, alternator and power steering pump.

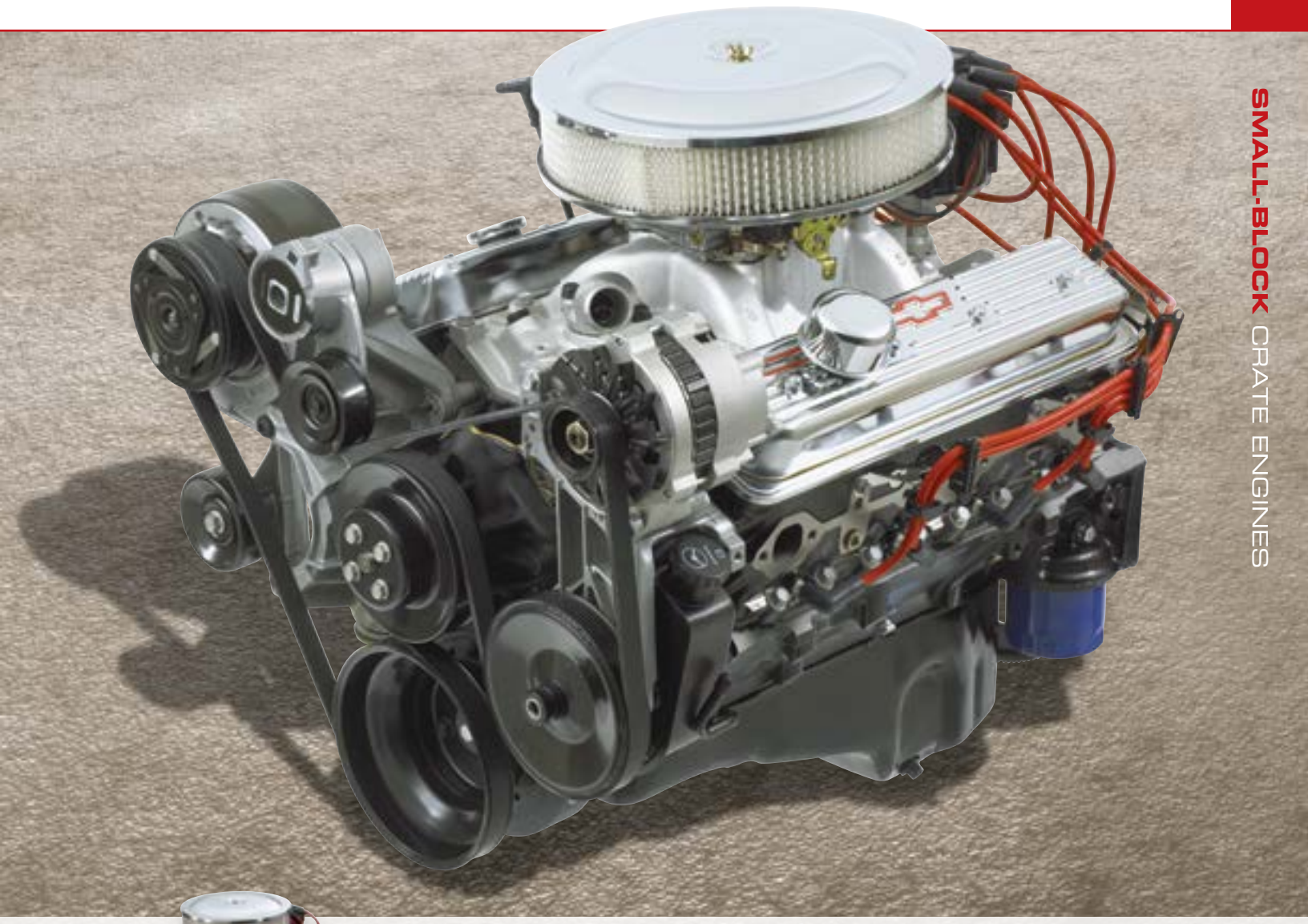

19210008

350 HO Deluxe

Like the 350 HO Turn-Key crate engine, the 350 HO Deluxe is rated at 333 horsepower and 381 lb.-ft. of torque. The intake manifold, carburetor and distributor are included, but not installed.

19210007

350 HO Base

All the same important, power-building elements as the Turn-Key and Deluxe versions, but it comes without an intake manifold, carburetor or distributor.

AVAILABLE ENGINE-RELATED PARTS & ACCESSORIES

See page 140 for our complete line of Small-Block components

19260380
Hydra-Matic 4L65-E Automatic Transmission
Page 366

12497985
Aluminum Chrome Valve Covers
Page 164

12361146
High-Torque Mini-Starter
Page 186

19299800
Torque Converter
Page 364

19332781
Transmission Installation Kit
Page 367

19332775
Transmission Controller
Page 369

Ram Jet 350

12499120

351 hp @ 5,000 rpm / **403 lb.-ft.** @ 3,600 rpm

DYNO CHART

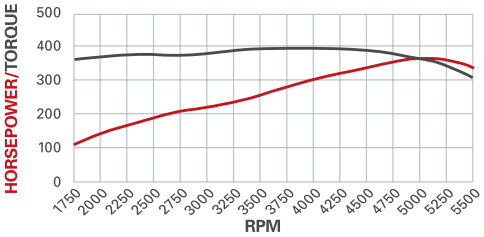

Vintage Style and Modern Performance

Chevrolet Performance's unique Ram Jet 350 combines the classic look of the original Rochester mechanical injection system with the dependability and optimized performance of contemporary port fuel injection. It's the perfect combination for a resto-mod hot rod, producing 351 hp and 403 lb.-ft. of torque, to get down the highway!

A cast-iron engine block is matched with a durable rotating assembly that delivers a pump-gas-friendly 9.0:1 compression ratio, as well as a smooth hydraulic roller camshaft that complements power delivery with a great idle quality. The engine's unique intake manifold and plenum is 9.75 inches tall, offering plenty of clearance to fit under the hood of most vehicles without modifications.

The Ram Jet 350 crate engine kit includes a MEFI 4 engine controller, wiring harness and a detailed instruction guide to make adding this retro-style EFI system a complete DIY project. Additional components are required, including a high-pressure fuel pump and front-end accessory drive system.

NOTE: *Refer to page 91 for the complete horsepower and torque testing procedures.*

TECH SPECS

Part Number:	12499120
Engine Type:	Chevy Small-Block V-8
Displacement (cu in):	350
Bore x Stroke (in) :	4.000 x 3.480
Block:	Cast-iron with 2-bolt main caps
Crankshaft (P/N 10243068):	Cast-iron
Connecting Rods (P/N 10108688):	Powdered metal steel
Pistons (P/N 12571703):	Hypereutectic aluminum
Camshaft Type (P/N 14097395):	Hydraulic roller
Camshaft Lift (in):	.460 intake / .481 exhaust
Camshaft Duration (@.050 in):	196° intake / 206° exhaust
Cylinder Heads (P/N 12528913):	Vortec iron; 64cc chambers
Valve Size (in):	1.940 intake / 1.500 exhaust
Compression Ratio:	9.0:1 nominal
Rocker Arms (P/N 12367346):	Aluminum roller style
Rocker Arm Ratio:	1.6
Recommended Fuel:	Premium pump
Ignition Timing:	34° Total @ 4,000 rpm
Maximum Recommended rpm:	5,200
Balanced:	External

NOTE: *Distributor with melonized steel gear MUST be used with long-blocks and Partial engines with steel camshafts, or engine damage will occur.*

INSTALLATION NOTES

- Comes with externally balanced, manual transmission flywheel; change to externally balanced flexplate for automatic transmission applications. See chart on page 173
- Installer to supply 12-volt power source and fuel pump
- See instructions for fuel pump recommendation
- Designed for pre-1976 street vehicles or any off-road vehicle
- Not intended for marine applications
- IMPORTANT! For a safe, proper and trouble-free engine break-in, the MEFI 4 computer has a "green" mode that controls rpm during the break-in period. During this period, engine speed is limited to 4,000 rpm in the first hour, 4,500 rpm in the second hour and 5,500 rpm in the third hour

Chevrolet Performance Crate Engines include a 24-month or 50,000-mile/80,000-kilometer limited warranty.

Chevrolet Performance does not utilize any used or remanufactured parts in this crate engine, except for the starter, alternator and power steering pump.

19260380
Hydra-Matic 4L65-E Four-Speed Automatic Transmission
Electronically controlled four-speed overdrive transmission. Suitable for engines producing up to 430 lb.-ft. of torque.

See page 364 for torque converter application

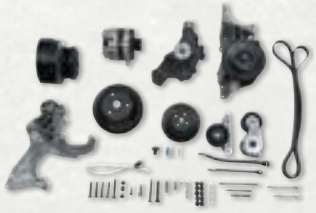

12497698
Serpentine Accessory Drive System
The complete kit you need to finish off the crate engine in your vehicle.

See page 176 for details.

AVAILABLE ENGINE-RELATED PARTS & ACCESSORIES

See page 140 for our complete line of Small-Block components

10465143
Lightweight Starter (remanufactured)
Page 186

12497979
Aluminum Black Crinkle Valve Covers
Page 165

12361146
High-Torque Mini-Starter
Page 186

19299800
Torque Converter
Page 364

19332781
Transmission Installation Kit
Page 367

19332775
Transmission Controller
Page 369

SP350 Base

19333157

385 hp @ 5,600 rpm / **405 lb.-ft.** @ 3,600 rpm

DYNO CHART

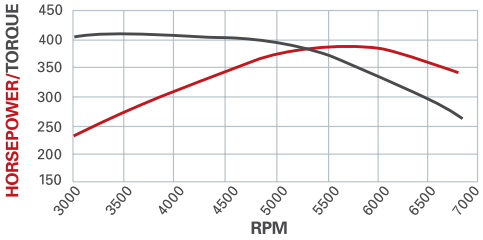

The Foundation for a High-Revving 350 Small-Block!

Our new SP350 crate engine incorporates modern technologies such as a beehive-type valve springs to take the classic 350 Small-Block to new levels of high-rpm performance – without sacrificing the signature torque that has made it the benchmark of V-8 engines for nearly half a century.

In fact, the 385 hp rating of the engine is complemented by excellent low-rpm torque, with the SP350 generating 405 lb.-ft. of torque at 3,600 rpm. It's all due to the high-flow, lightweight aluminum cylinder heads. They're based on the proven Fast Burn design, with large intake runners and 2.00/1.55-inch valves. The beehive valve springs enable greater high-rpm performance and durability, allowing the engine to rev higher to make the most of every cubic foot of air drawn through it.

As with all of Chevrolet Performance's Small-Block crate engines, the SP350 is built with a cast-iron block with four-bolt mains. It also features a forged steel crankshaft, an aggressive hydraulic roller camshaft and durable, high-silicon pistons. In this value-driven Base crate engine package, it also includes the intake manifold, distributor, water pump, damper and flexplate. Other accessories are required to finish it – all available from Chevrolet Performance.

NOTE: *Refer to page 91 for the complete horsepower and torque testing procedures.*

TECH SPECS

Part Number:	19333157
Engine Type:	Chevy Small-Block V-8
Displacement (cu in):	350
Bore x Stroke (in):	4.000 x 3.480
Block (P/N 10105123):	Cast-iron with 4-bolt main caps
Crankshaft (P/N 12556307):	Forged steel
Connecting Rods (P/N 10108688):	Powdered metal
Pistons (P/N 10159436):	Hypereutectic aluminum
Camshaft Type (P/N 10185071):	Hydraulic roller
Camshaft Lift (in):	.474 intake / .510 exhaust
Camshaft Duration (@.050 in):	208° intake / 221° exhaust
Cylinder Heads (P/N 19300955):	Fast Burn aluminum; 62cc chambers
Valve Size (in):	2.000 intake / 1.550 exhaust
Compression Ratio:	9.6:1 nominal
Rocker Arms (P/N 10089648):	Stamped steel
Rocker Arm Ratio:	1.5:1
Recommended Fuel:	Premium pump
Ignition Timing:	36° Total @ 4,000 rpm
Maximum Recommended rpm:	5,800
Balanced:	External

NOTE: *Distributor with melonized steel gear MUST be used with long-blocks and Partial engines with steel camshafts, or engine damage will occur.*

INSTALLATION NOTES

- Use the Holley 770-cfm four-barrel carburetor P/N 19170093 to achieve the listed horsepower and torque
- Requires four-barrel carburetor, spark plug wires and additional components to complete assembly
- Comes with 12.750" externally balanced 153-tooth automatic transmission flexplate. Change to externally balanced flywheel for manual transmission applications.
- Requires fuel line from fuel pump to carburetor
- Designed for pre-1976 street vehicles or any off-road vehicle.
- Some assembly and minor engine tuning required
- Not intended for marine application

Chevrolet Performance Crate Engines include a 24-month or 50,000-mile/80,000-kilometer limited warranty.

Chevrolet Performance does not utilize any used or remanufactured parts in this crate engine, except for the starter, alternator and power steering pump.

NEW

12670966

SP/ZZ Partial Engine

The SP350 Partial is based on the popular ZZ4 partial engine assembly and includes the forged steel crankshaft, high-silicon pistons and connecting rods.

19260380

Hydra-Matic 4L65-E Four-Speed Automatic Transmission

Electronically controlled four-speed overdrive transmission. Suitable for engines producing up to 430 lb.-ft. of torque.

See page 364 for torque converter application

AVAILABLE ENGINE-RELATED PARTS & ACCESSORIES

See page 140 for our complete line of Small-Block components

19210728
Roller Rocker Arm Set, 1.5:1 Ratio
Page 163

19170093
Carburetor, Holley 770-cfm
Page 188

12361146
High-Torque Mini-Starter
Page 186

19299800
Torque Converter
Page 364

19332781
Transmission Installation Kit
Page 367

19332775
Transmission Controller
Page 369

SP350 Turn-Key

19333158

385 hp @ 5,600 rpm / **405 lb.-ft.** @ 3,600 rpm

DYNO CHART

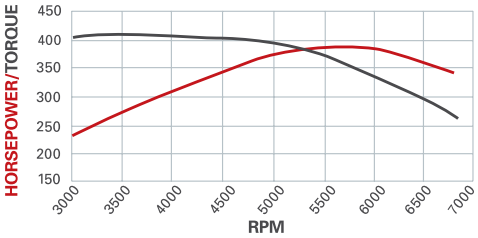

The Classic 350 Small-Block with Modern Features

As part of Chevrolet Performance's new line of Street Performance engines, the SP350 offers contemporary engine features on the classic Small-Block architecture, for a unique blend of the low-rpm torque 350 engines have always been known for, and is also higher-rpm performance comparable.

The SP350's unique capability lies in its lightweight aluminum cylinder heads, which feature a valvetrain with beehive-style valve springs, similar to the design of the high-revving LS engine family. They enable greater high-rpm performance and durability, allowing the the engine to rev higher and maximize the airflow capability of the heads – all without sacrificing the 350's signature torque.

Our SP350 Turn-Key package comes complete with the distributor and balancer installed. The carburetor, starter, fuel pump air conditioning pump, alternator, front-end accessory drive kit and more are also included, ready to bolt on.

NOTE: *Refer to page 91 for the complete horsepower and torque testing procedures.*

TECH SPECS

Part Number:	19333158
Engine Type:	Chevy Small-Block V-8
Displacement (cu in):	350
Bore x Stroke (in):	4.000 x 3.480
Block (P/N 10105123):	Cast-iron with 4-bolt main caps
Crankshaft (P/N 12556307):	Forged steel
Connecting Rods (P/N 10108688):	Powdered metal
Pistons (P/N 10159436):	Hypereutectic aluminum
Camshaft Type (P/N 10185071):	Hydraulic roller
Camshaft Lift (in):	.474 intake / .510 exhaust
Camshaft Duration (@.050 in):	208° intake / 221° exhaust
Cylinder Heads (P/N 19300955):	Fast Burn aluminum; 62cc chambers
Valve Size (in):	2.000 intake / 1.550 exhaust
Compression Ratio:	9.6:1 nominal
Rocker Arms (P/N 10089648):	Stamped steel
Rocker Arm Ratio:	1.5:1
Recommended Fuel:	Premium pump
Ignition Timing:	36º Total @ 4,000 rpm
Maximum Recommended rpm:	5,800
Balanced:	External

NOTE: *Distributor with melonized steel gear MUST be used with long-blocks and Partial engines with steel camshafts, or engine damage will occur.*

INSTALLATION NOTES

- SP350 Base Engine, P/N 19333157 is also available
- Comes with 12.750" externally balanced 153-tooth automatic transmission flexplate. Change to externally balanced flywheel for manual transmission applications.
- Requires fuel line from fuel pump to carburetor
- Designed for pre-1976 street vehicles or any off-road vehicle
- Some assembly and minor engine tuning required
- Not intended for marine application

Chevrolet Performance Crate Engines include a 24-month or 50,000-mile/80,000-kilometer limited warranty.

Chevrolet Performance does not utilize any used or remanufactured parts in this crate engine, except for the starter, alternator and power steering pump.

NEW

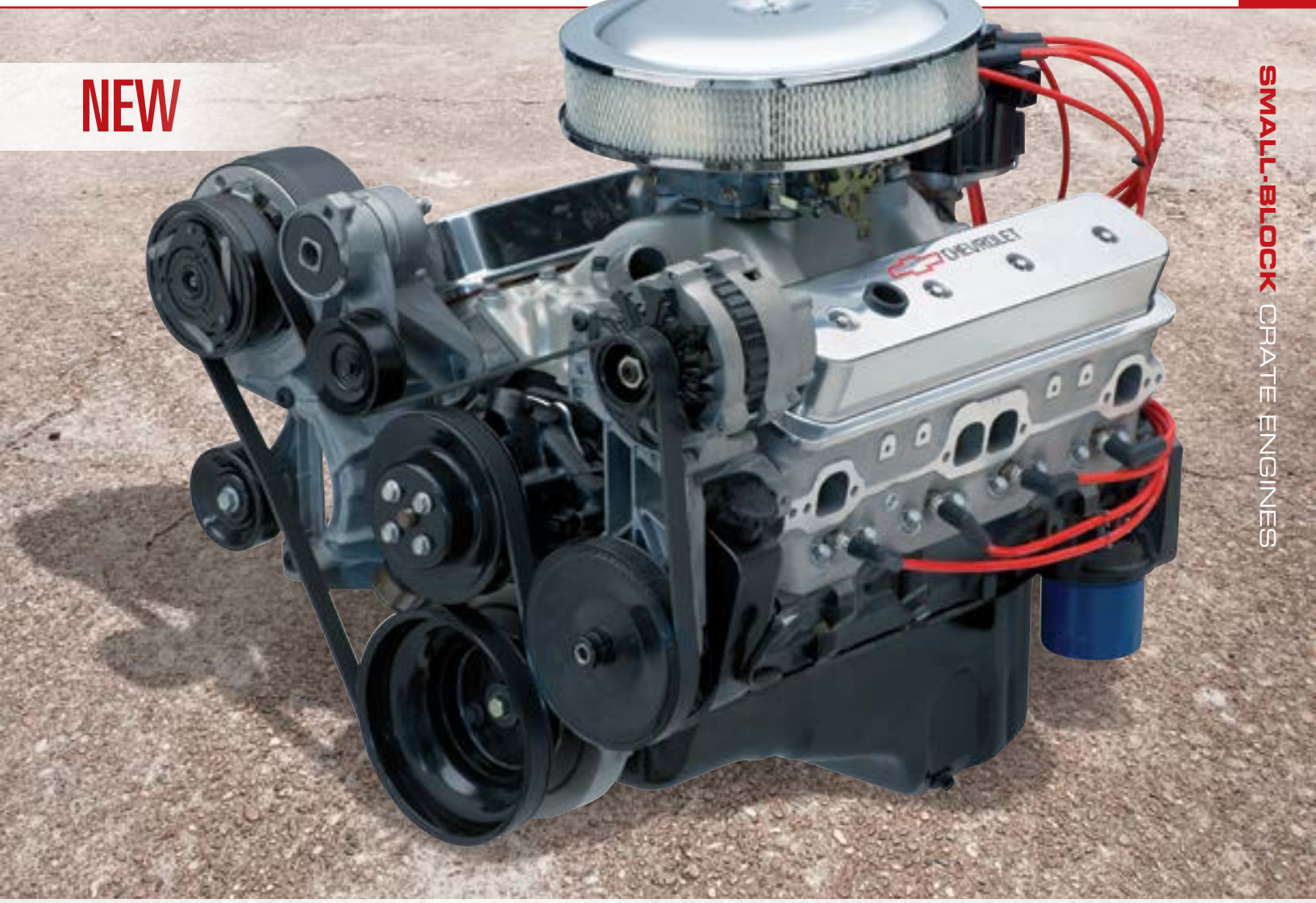

12670966

SP/ZZ Partial Engine

The SP350 Partial is based on the popular ZZ4 partial engine assembly and includes the forged steel crankshaft, high-silicon pistons and connecting rods.

19260380

Hydra-Matic 4L65-E Four-Speed Automatic Transmission

Electronically controlled four-speed overdrive transmission. Suitable for engines producing up to 430 lb.-ft. of torque.

See page 364 for torque converter application

AVAILABLE ENGINE-RELATED PARTS & ACCESSORIES

See page 140 for our complete line of Small-Block components

19210728
Roller Rocker Arm Set, 1.5:1 Ratio
Page 163

12497979
Aluminum Black Crinkle Valve Covers
Page 165

12361146
High-Torque Mini-Starter
Page 186

19299800
Torque Converter
Page 364

19332781
Transmission Installation Kit
Page 367

19332775
Transmission Controller
Page 369

ZZ6 Base

19351532

405 hp @ 5,600 rpm / **406 lb.-ft.** @ 4,600 rpm

DYNO CHART

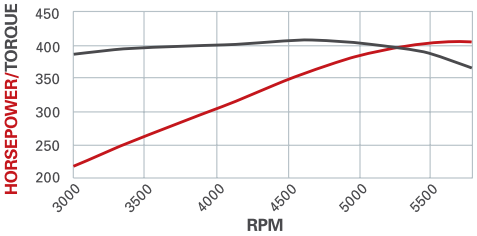

The Iconic 350-Based "ZZ" Engine Family from Chevrolet Performance has a New Member for 2016

Chevrolet Performance's new ZZ6 delivers more power than any 350 Small-Block ever installed in a production vehicle. Rated at 405 hp and 406 lb.-ft. of torque, it derives its range-topping performance from unique, lightweight aluminum cylinder heads that enable optimal airflow at high rpm.

The cylinder head casting is based on the proven Fast Burn design, with large intake runners and 2.00/1.55-inch valves. Beehive-style valve springs deliver greater high-rpm performance and durability. Their egg-shaped profiles have less reciprocating mass in motion, require less spring pressure for greater valve control and handle valvetrain stresses more efficiently. They allow the ZZ6 to rev higher to make the most of every cubic inch of air drawn through it.

The ZZ6 also uses an aggressive hydraulic roller camshaft that supports the engine's high-rpm airflow capability while maintaining excellent low-speed drivability. This Base crate engine kit includes the intake manifold, distributor, water pump, damper and flexplate – and the distinctive, racing-inspired valve covers that distinguish this crate engine as the latest in the ZZ legacy!

NOTE: *Refer to page 91 for the complete horsepower and torque testing procedures.*

TECH SPECS

Part Number:	19351532
Engine Type:	Chevy Small-Block
Bore x Stroke (in.):	4.000 x 3.48
Block (P/N 10105123):	Cast-iron with 4-bolt Mains
Crankshaft – (P/N 12556307):	Forged steel
Connecting Rods (p/n 10108688):	Forged powder metal
Pistons (P/N 10159436):	Hypereutectic aluminum
Intake Manifold (P/N 12496822):	Single-plane aluminum
Carburetor (P/N 19170093):	770 cfm Holley
Camshaft (P/N 10185071):	Steel hydraulic roller
Valve Lift (in):	.474 intake/.510 exhaust
Camshaft Duration (@.050 in):	208° intake/221° exhaust
Cylinder Heads (p/n 19300955):	Fast Burn aluminum; 62cc chambers
Valve Size (inches):	2.000 intake / 1.550 exhaust
Compression Ratio:	9.72:1 nominal
Rocker Arms (p/n 19210724):	Aluminum roller style
Rocker Arm Ratio:	1.5:1
Recommended Fuel:	Premium pump
Distributor (P/N 93440806):	HEI
Ignition timing:	36° Total @ 4,000 rpm
Maximum Recommended RPM:	5,800 rpm
Balance:	External

NOTE: *Distributor with melonized steel gear MUST be used with long-blocks and Partial engines with steel camshafts, or engine damage will occur.*

INSTALLATION NOTES

- Requires four-barrel carburetor, spark plug wires and additional components to complete assembly
- Comes with 12.750" externally balanced 153-tooth automatic transmission flexplate. Change to externally balanced flywheel for manual transmission applications.
- Requires fuel line from fuel pump to carburetor
- Designed for pre-1976 street vehicles or any off-road vehicle.
- Some assembly and minor engine tuning required
- Not intended for marine application

Chevrolet Performance Crate Engines include a 24-month or 50,000-mile/80,000-kilometer limited warranty.

Chevrolet Performance does not utilize any used or remanufactured parts in this crate engine, except for the starter, alternator and power steering pump.

NEW

12670966

SP/ZZ Partial Engine

The ZZ6 is based on the popular ZZ4 partial engine assembly and includes the forged steel crankshaft, high-silicon pistons and connecting rods.

19260380

Hydra-Matic 4L65-E Four-Speed Automatic Transmission

Electronically controlled four-speed overdrive transmission. Suitable for engines producing up to 430 lb.-ft. of torque.

See page 364 for torque converter application.

AVAILABLE ENGINE-RELATED PARTS & ACCESSORIES

See page 140 for our complete line of Small-Block components

12361146
High-Torque Mini-Starter
Page 186

12361051
Spark Plug Wire Set
Page 187

19170093
Carburetor, Holley 770-cfm
Page 188

19299800
Torque Converter
Page 364

19332781
Transmission Installation Kit
Page 367

19332775
Transmission Controller
Page 369

ZZ6 Turn-Key

19351533

405 hp @ 5,600 rpm / **406 lb.-ft.** @ 4,600 rpm

DYNO CHART

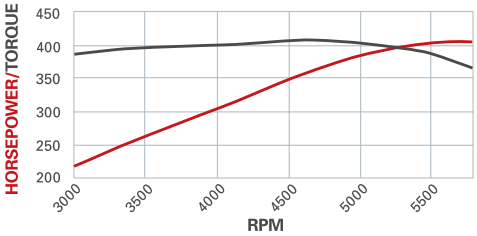

The Ultimate 'ZZ' 350-Based Crate Engine from Chevrolet Performance!

Chevrolet Performance's all-new ZZ6 is one of the most powerful 350-based crate engines in the more than 25-year history of the 'ZZ' crate engine lineup. It uses aluminum Fast Burn cylinder heads equipped with LS-style beehive valve springs for greater high-rpm performance. It's rated at 405 horsepower and 406 lb.-ft. of torque – more than any Small-Block engine ever offered in a production Chevrolet muscle car or Corvette!

The ZZ6 is built with a cast-iron block with four-bolt mains, along with a forged steel crankshaft, an aggressive hydraulic roller camshaft and durable, high-silicon pistons. All-new, motorsports-inspired valve covers distinguish this new crate engine at a glance, too – along with Chevy "Bowtie" insignias in the ends of the cylinder heads that let everyone know you've got the latest Chevrolet Performance hardware under the hood.

This Turn-Key engine package includes the distributor, and balancer installed. The carburetor, starter, fuel pump, air conditioning pump, alternator, single belt front-end accessory drive kit and more are also included. Chevrolet Performance offers the ZZ6 350 base engine (P/N 19351532) at a lower price, allowing you to finish the engine yourself.

NOTE: *Refer to page 91 for the complete horsepower and torque testing procedures.*

TECH SPECS

Part Number:	19351533
Engine Type:	Chevy Small-Block
Bore x Stroke (in.):	4.000 x 3.48
Block (P/N 10105123):	Cast-iron with 4-bolt mains
Crankshaft – (P/N 12556307):	Forged steel
Connecting Rods (p/n 10108688):	Forged powder metal
Pistons (P/N 10159436):	Hypereutectic aluminum
Intake Manifold (P/N 12496822):	Single-plane aluminum
Carburetor (P/N 19170093):	770 cfm Holley
Camshaft (P/N 10185071):	Steel hydraulic roller
Valve Lift (in):	.474 intake/.510 exhaust
Camshaft Duration (@.050 in):	208° intake / 221° exhaust
Cylinder Heads (p/n 19300955):	Fast Burn aluminum; 62cc chambers
Valve Size (inches):	2.000 intake / 1.550 exhaust
Compression Ratio:	9.72:1 nominal
Rocker Arms (p/n 19210724):	Aluminum roller style
Rocker Arm Ratio:	1.5:1
Recommended Fuel:	Premium pump
Distributor (P/N 93440806):	HEI
Ignition timing:	36° Total @ 4,000 rpm
Maximum Recommended RPM:	5,800 rpm
Balance:	External

NOTE: *Distributor with melonized steel gear MUST be used with long-blocks and Partial engines with steel camshafts, or engine damage will occur.*

INSTALLATION NOTES

- Comes with 12.750" externally balanced 153-tooth automatic transmission flexplate. Change to externally balanced flywheel for manual transmission applications.
- Requires fuel line from fuel pump to carburetor
- Designed for pre-1976 street vehicles or any off-road vehicle
- Some assembly and minor engine tuning required
- Not intended for marine application

Chevrolet Performance Crate Engines include a 24-month or 50,000-mile/80,000-kilometer limited warranty.

Chevrolet Performance does not utilize any used or remanufactured parts in this crate engine, except for the starter, alternator and power steering pump.

NEW

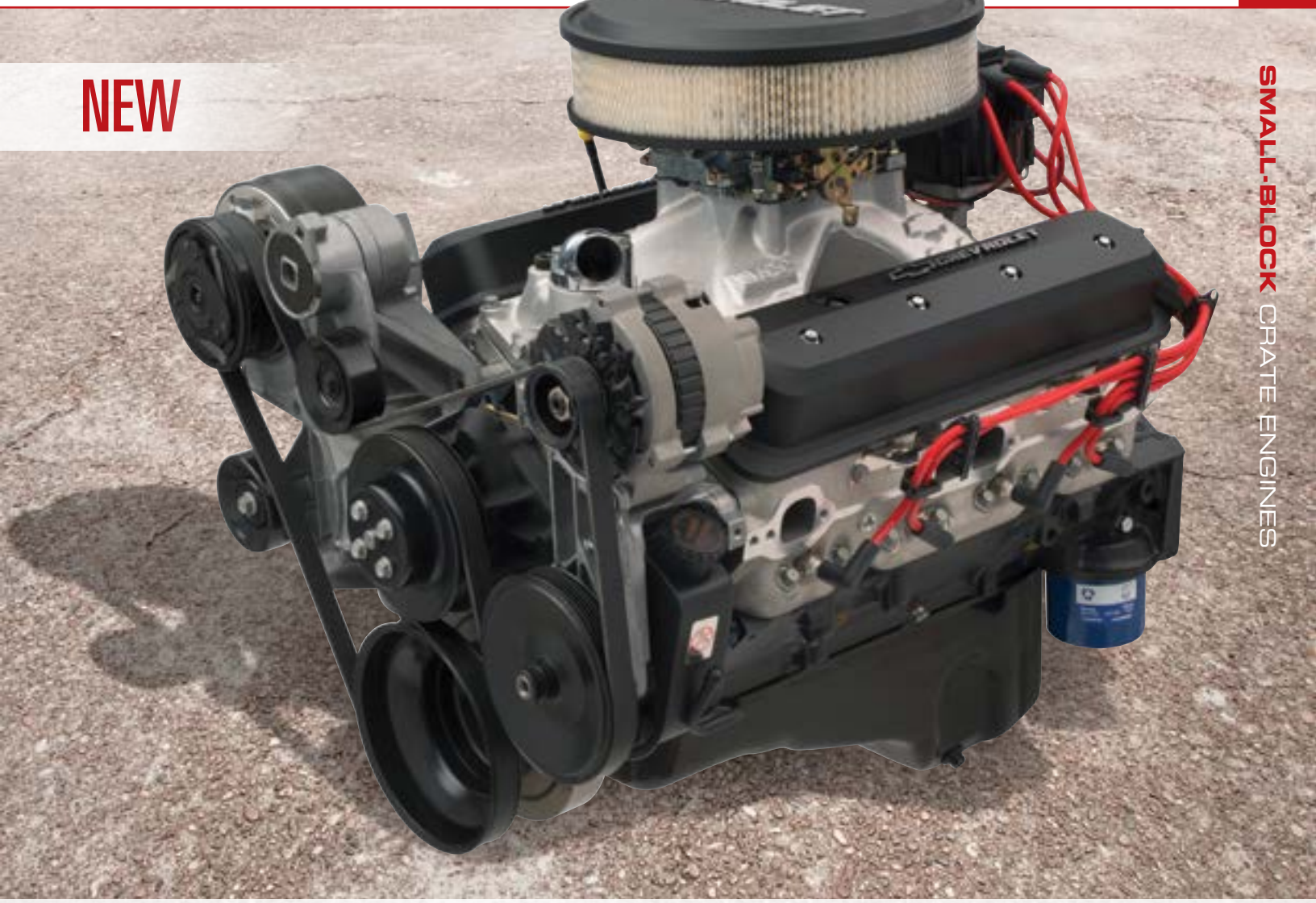

12670966

SP/ZZ Partial Engine

The ZZ6 is based on the popular ZZ4 partial engine assembly and includes the forged steel crankshaft, LT1-style high-silicon pistons and connecting rods.

19260380

Hydra-Matic 4L65-E Four-Speed Automatic Transmission

Electronically controlled four-speed overdrive transmission. Suitable for engines producing up to 430 lb.-ft. of torque.

See page 364 for torque converter application.

AVAILABLE ENGINE-RELATED PARTS & ACCESSORIES

See page 140 for our complete line of Small-Block components

12361146
High-Torque Mini-Starter
Page 186

12497985
Aluminum Chrome Valve Covers
Page 164

12480127
Short Aluminum Valve Covers
Page 164

19299800
Torque Converter
Page 364

19332781
Transmission Installation Kit
Page 367

19332775
Transmission Controller
Page 369

HT383

19332529

323 hp @ 4,200 rpm / **444 lb.-ft.** @ 3,000 rpm

DYNO CHART

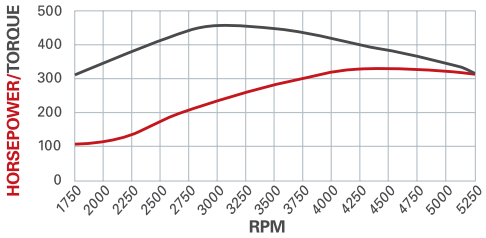

Big Torque for Your Truck

Got a pre-1980 GM truck with a tired Small-Block? Forget the rebuild and take your trusty truck's capability to the next level with our big-torque HT383 crate engine. Its extra displacement and unique parts are designed to build a wide, flat torque curve that maintains at least 400 lb.-ft. between 2,500 and 4,000 rpm. The 323 hp and 444 lb.-ft. of torque is power you simply won't get with a stock-type rebuild.

Built for true truck strength, the engine starts with a cast-iron block with four-bolt main caps – a strength-enhancing feature most production truck blocks don't have. We then fill the block with a forged steel crankshaft and a smooth hydraulic roller camshaft, then top it off with iron Vortec heads. Its 9.1:1 compression ratio is perfect for regular gasoline at all altitudes and engine loads.

We deliver the HT383 with an aluminum intake manifold, ready for you to swap over the accessories from your tired engine. It's also backed by a 24-month/50,000-mile (80,000 km) limited warranty.

NOTE: *Refer to page 91 for the complete horsepower and torque testing procedures.*

TECH SPECS

Part Number:	19332529
Engine Type:	Chevy Small-Block V-8
Displacement (cu in):	383
Bore x Stroke (in):	4.005 x 3.800
Block (P/N 88962516):	Cast-iron with 4-bolt main caps
Crankshaft (P/N 12489436):	4340 forged steel
Connecting Rods (P/N 12497624):	Heavy-duty PM steel
Pistons (P/N 12499103):	Hypereutectic aluminum
Camshaft Type (P/N 14097395):	Hydraulic roller
Camshaft Lift (in):	.431 intake / .451 exhaust
Camshaft Duration (@.050 in):	196° intake / 206° exhaust
Cylinder Heads (P/N 12558060):	Vortec iron; 64cc chambers
Valve Size (in):	1.940 intake / 1.500 exhaust
Compression Ratio:	9.1:1
Rocker Arms (P/N 10089648):	Stamped steel
Rocker Arm Ratio:	1.5:1
Water Pump (P/N 88894341):	Cast iron
Recommended Fuel:	Regular pump
Ignition Timing:	32° Total @ 4,000 rpm
Maximum Recommended rpm:	5,000
Balanced:	External

NOTE: *Distributor with melonized steel gear MUST be used with long-blocks and Partial engines with steel camshafts, or engine damage will occur.*

INSTALLATION NOTES

- Requires addition of carburetor, ignition and starter (not included)
- Rochester Quadrajet or Holley 670-cfm carburetor recommended
- Comes with 12.75" externally balanced 153-tooth automatic transmission flexplate. Requires externally balanced flywheel for manual transmission. See chart on page 173
- Has right-side oil dipstick
- Designed for pre-1976 street vehicles or any off-road vehicle
- Not intended for marine applications

Chevrolet Performance Crate Engines include a 24-month or 50,000-mile/80,000-kilometer limited warranty.

Chevrolet Performance does not utilize any used or remanufactured parts in this crate engine, except for the starter, alternator and power steering pump.

19332527

383 Partial Engine

The heart of the HT383 comes with 4.005-inch-bore/3.800-inch-stroke reciprocating assembly already installed, including a forged steel crankshaft, heavy-duty connecting rods and durable aluminum-alloy pistons.

19260380

Hydra-Matic 4L65-E Four-Speed Automatic Transmission

Electronically controlled four-speed overdrive transmission. Suitable for engines producing up to 430 lb.-ft. of torque.

See page 364 for torque converter application

AVAILABLE ENGINE-RELATED PARTS & ACCESSORIES

See page 140 for our complete line of Small-Block components

93440806
HEI Distributor
Page 178

12497985
Aluminum Chrome Valve Covers
Page 164

19299800
Torque Converter
Page 364

19170092
Carburetor, Holley 670-cfm
Page 188

19332781
Transmission Installation Kit
Page 367

19332775
Transmission Controller
Page 369

HT383E

19332531

323 hp @ 4,200 rpm / **444 lb.-ft.** @ 3,000 rpm

- / GREATER TORQUE
- / ENHANCED TOWING
- / BETTER ALTERNATIVE TO A REBUILD
- / INCLUDES ALL NEW PARTS

Emissions-Legal Stroker for Trucks

Chevrolet Performance's HT383E crate engine is an affordable and more powerful direct replacement for the tired 350 engine in your 1996-99 full-size GM truck or SUV. The larger displacement delivers up to 323 hp at 4,200 rpm and a whopping 444 lb.-ft. of torque. It is extra power you won't get with a stock-type rebuild or reconditioned used engine.

Like our standard HT383, this crate engine starts with a cast-iron block with four-bolt main caps, a forged steel crankshaft, a smooth hydraulic roller camshaft and a set of iron Vortec heads. Its 9.1:1 compression ratio is perfect for regular gasoline at all altitudes and engine loads. It also includes a new distributor, water pump and other components that would need to be replaced during a rebuild.

The HT383E is designed to replace the L31 5.7-liter engine in half-ton models of the Silverado, Suburban, Tahoe, Sierra and Yukon. Simply swap the intake manifold, throttle body, exhaust manifolds and other accessories from the original 350.

NOTE: *Refer to page 91 for the complete horsepower and torque testing procedures.*

TECH SPECS

Part Number:	19332531
Engine Type:	Chevy Small-Block V-8
Displacement (cu in):	383
Bore x Stroke (in):	4.005 x 3.800
Block (P/N 88962516):	Cast-iron with 4-bolt main caps
Crankshaft (P/N 12489436):	4340 forged steel
Connecting Rods (P/N 12497624):	Heavy-duty PM steel
Pistons (P/N 12499103):	Hypereutectic aluminum
Camshaft Type (P/N 14097395):	Hydraulic roller
Camshaft Lift (in):	.431 intake / .451 exhaust
Camshaft Duration (@.050 in):	196° intake / 206° exhaust
Cylinder Heads (P/N 12558060):	Vortec iron; 64cc chambers
Valve Size (in):	1.940 intake / 1.500 exhaust
Compression Ratio:	9.1:1
Rocker Arms (P/N 10089648):	Stamped steel
Rocker Arm Ratio:	1.5:1
Water Pump (P/N 88894341):	Cast-iron
Recommended Fuel:	Regular pump
Maximum Recommended rpm:	5,000
Balanced:	External

NOTE: *Distributor with melonized steel gear MUST be used with long-blocks and Partial engines with steel camshafts, or engine damage will occur.*

INSTALLATION NOTES

- Requires the reuse of the stock intake manifold, wiring harness, and fuel injection system
- Due to calibration variances between half, three-quarter- and one-ton vehicles, this engine is designed for half-ton trucks and SUVs only
- This engine is not emissions-legal in CA or states that have adopted CA emissions regulations
- Comes with 12.75" externally balanced 153-tooth automatic transmission flexplate. Requires externally balanced flywheel for manual transmission. See chart on page 173
- Has right-side dipstick
- Not available as a Partial Engine
- Performance recalibration of OEM ECU will significantly increase torque and horsepower

Chevrolet Performance Crate Engines include a 24-month or 50,000-mile/80,000-kilometer limited warranty.

Chevrolet Performance does not utilize any used or remanufactured parts in this crate engine, except for the starter, alternator and power steering pump.

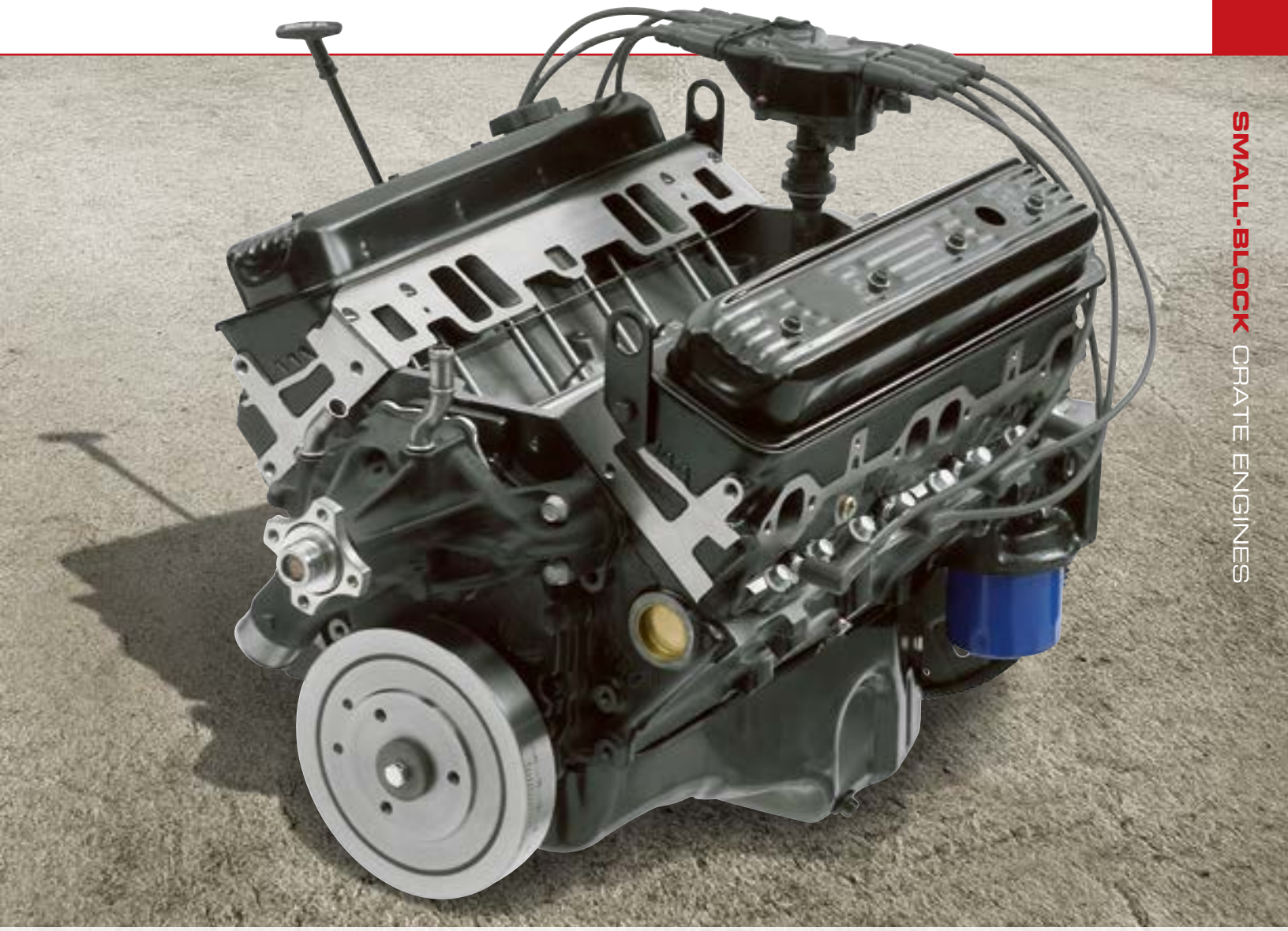

19260380

Hydra-Matic 4L65-E Four-Speed Automatic Transmission

Electronically controlled four-speed overdrive transmission. Suitable for engines producing up to 430 lb.-ft. of torque.

See page 364 for torque converter application

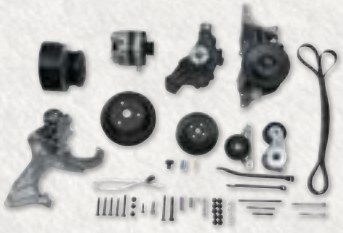

12497698

Serpentine Accessory Drive System

The complete kit you need to finish off the crate engine in your vehicle.

See page 176 for details

AVAILABLE ENGINE-RELATED PARTS & ACCESSORIES

See page 140 for our complete line of Small-Block components

12497979

Aluminum Black Crinkle Valve Covers

Page 165

19210728

Roller Rocker Arm Set, 1.5:1 Ratio

Page 163

19299800

Torque Converter

Page 364

19332781

Transmission Installation Kit

Page 367

24502521

Spark Plug Wires 135° Boot

Page 187

19332775

Transmission Controller

Page 369

SP383 Deluxe

19332532

435 hp @ 5,600 rpm / **445 lb.-ft.** @ 4,600 rpm

DYNO CHART

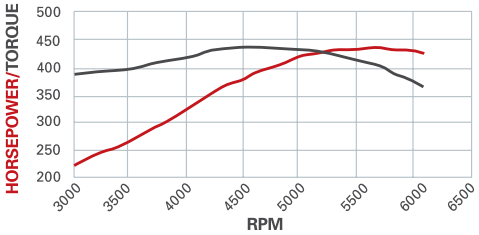

Our Latest Twist on the Big-Torque 383 Stroker!

When it comes to cranking serious torque from the classic Small-Block, it's hard to beat the 383 stroker combination, which uses a long, 3.800-inch stroke with 4.000-inch bores to generate exceptional low-end pulling power and surprising high-rpm horsepower.

Chevrolet Performance's stroker crate engine is part of our range of Street Performance engines and is designed for optimal performance on the street and the occasional trip down the quarter-mile.

It features lightweight aluminum cylinder heads based on the proven Fast Burn design, with large intake runners and 2.00/1.55-inch valves. Beehive-style valve springs enable great high-rpm performance and durability, allowing the SP383 to rev higher and build more horsepower. The result is 435 exhilarating horsepower and 445 lb.-ft. of seat-tugging torque.

Like all of our crate engines, it is built with a cast-iron block with four-bolt mains. It also features a forged steel crankshaft, an aggressive hydraulic roller camshaft and a high-flow, aluminum intake manifold. Use the Holley 770-cfm four-barrel carburetor part number 19170093 to achieve the listed horsepower and torque ratings.

NOTE: *Refer to page 91 for the complete horsepower and torque testing procedures.*

TECH SPECS

Part Number:	19332532
Engine Type:	Chevy Small-Block V-8
Displacement (cu in):	383
Bore x Stroke (in):	4.005 x 3.800
Block (P/N 88962513):	Cast-iron with 4-bolt main caps
Crankshaft (P/N 12489436):	Forged steel
Connecting Rods (P/N 12497624):	Heavy-duty PM steel
Pistons (P/N 12499103):	Hypereutectic aluminum
Camshaft Type (P/N 19210723):	Hydraulic roller
Valve Lift (in):	.509 intake / .528 exhaust
Camshaft Duration (@.050 in):	222° intake / 230° exhaust
Cylinder Heads (P/N 19300955):	Fast Burn aluminum; 62cc chambers
Valve Size (in):	2.000 intake / 1.550 exhaust
Compression Ratio:	9.6:1
Rocker Arms (P/N 10089648):	Aluminum roller style
Rocker Arm Ratio:	1.5:1
Recommended Fuel:	Premium pump
Ignition Timing:	36° Total at 4,000 rpm
Maximum Recommended rpm:	6,000
Balanced:	External

NOTE: *Distributor with melonized steel gear MUST be used with long-blocks and Partial engines with steel camshafts, or engine damage will occur.*

INSTALLATION NOTES

- Requires addition of carburetor, ignition, fuel pump, and starter (not included)
- 435 horsepower rating achieved during GM testing with high-rise single-plane intake manifold (P/N 12496822) and a 770-cfm carburetor with vacuum secondaries (P/N 19170093)
- Chevrolet Performance dual-plane intake manifold (P/N 12366573) may be used to avoid hood clearance problems, but peak power may decrease by approximately 15-20 horsepower
- Comes with 12.75" externally balanced 153-tooth automatic transmission flexplate. Requires externally balanced flywheel for manual transmission. See chart on page 173
- Designed for pre-1976 street vehicles or any off-road vehicle
- Not intended for marine applications

Chevrolet Performance Crate Engines include a 24-month or 50,000-mile/80,000-kilometer limited warranty.

Chevrolet Performance does not utilize any used or remanufactured parts in this crate engine, except for the starter, alternator and power steering pump.

NEW

19332527

383 Partial Engine

The heart of the SP383 comes with 4.000-inch-bore/3.800-inch-stroke reciprocating assembly already installed, including a forged steel crankshaft, heavy-duty connecting rods and durable aluminum-alloy pistons.

19260380

Hydra-Matic 4L65-E Four-Speed Automatic Transmission

Electronically controlled four-speed overdrive transmission. Suitable for engines producing up to 430 lb.-ft. of torque.

See page 364 for torque converter application

AVAILABLE ENGINE-RELATED PARTS & ACCESSORIES

See page 140 for our complete line of Small-Block components

93440806
HEI Distributor
Page 178

12497698
Serpentine Accessory Drive System
Page 176

19170093
Carburetor, Holley 770-cfm
Page 188

19299800
Torque Converter
Page 364

19332781
Transmission Installation Kit
Page 367

19332775
Transmission Controller
Page 369

CIRCLE TRACK

Crate Engines

Engines Shown From Left:
CT400, CT350, CT525

The Power to Win and the Durability to Last

You race to win. Chevrolet Performance Circle Track crate engines are engineered to perform – and perform reliably. That means less time under the hood and more time chasing the checkered flag.

From our CT350 engine and enhanced CT400 Small-Block engines – with high-flow cylinder heads and high-rpm, beehive-style valve springs on the CT400 – to the LS-based CT525, Chevrolet Performance Circle Track crate engines are designed to match your performance needs with series requirements.

Importantly, Chevrolet Performance Circle Track crate engines are built with brand-new parts, from the oil pan to the intake manifold and the entire rotating assembly. In fact, our 350 engines feature blocks with four-bolt mains – a strength-enhancing feature you won't find on most used blocks.

You have the desire to win. Chevrolet Performance has the horsepower to do it – and the dependability to keep on winning!

You can find these Chevrolet Performance Circle Track Engines on the following pages:

CT350 ..... **Page 134**

CT400 ..... **Page 136**

CT525 ..... **Page 138**

CT350

19258602

350 hp @ 5,400 rpm / **396 lb.-ft.** @ 3,800 rpm

DYNO CHART

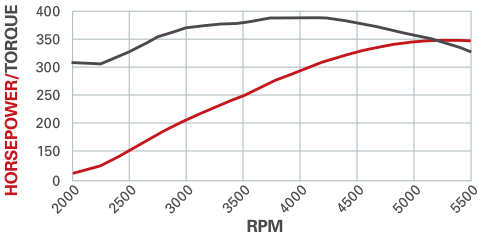

Powerful, Durable and Affordable!

Chevrolet Performance's durable CT350 is the engine budget-conscious racers can depend on for competitive performance and low maintenance. At 350 hp, it is a perfect fit for a large number of short track racers.

It is based on our popular 350 HO high-performance street crate engine and features a strong four-bolt-main block and iron Vortec cylinder heads. A unique dual-pattern camshaft helps deliver more than 300 lb.-ft. of torque between 2,000 and 5,500 rpm – peaking at 396 lb.-ft. at 3,800 rpm. With that much pulling power, you can hold a gear longer, keeping the engine in its sweet spot for quicker laps.

We assemble the CT350 with an 8-quart circle track racing oil pan, balancer, HEI distributor and an aluminum high-rise, dual-plane intake manifold. Add your carburetor, starter, spark plugs, wires and water pump – all available from Chevrolet Performance – and you'll be ready for the green flag!

NOTE: *Refer to page 91 for the complete horsepower and torque testing procedures.*

TECH SPECS

Part Number:	19258602
Engine Type:	Chevy Small-Block V-8
Displacement (cu in):	350
Bore x Stroke (in):	4.000 x 3.480
Block (P/N 10105123):	Cast-iron with 4-bolt main caps
Crankshaft (P/N 10243068):	Nodular iron
Connecting Rods (P/N 10108688):	Powdered metal steel
Pistons (P/N 94672680):	Hypereutectic aluminum
Camshaft Type (P/N 24502476):	Hydraulic flat tappet
Camshaft Lift (in):	.435 intake / .460 exhaust
Camshaft Duration (@.050 in):	212° intake / 222° exhaust
Cylinder Heads (P/N 12558060):	Vortec iron; 64cc chambers
Valve Size (in):	1.940 intake / 1.500 exhaust
Compression Ratio:	9.12:1 Nominal
Rocker Arms (P/N 10089648):	Stamped steel
Rocker Arm Ratio:	1.5:1
Recommended Fuel:	Premium pump
Ignition Timing:	34° Total @ 4,000 rpm
Maximum Recommended rpm:	5,500
Balanced:	External

NOTE: *Distributor with melonized steel gear MUST be used with long-blocks and Partial engines with steel camshafts, or engine damage will occur.*

INSTALLATION NOTES

- Requires addition of carburetor, starter, water pump, plug wires and exhaust system (not included)
- Requires an externally balanced flywheel (not included). See page 173 for flywheel selection
- The 8-quart circle track oil pan is 8 inches deep at the sump. It will clear most GM rear-steer chassis with stock engine location
- For Circle Track Racing only – Not intended for street use
- Circle Track racing engines from Chevrolet Performance include anti-tampering seals installed

Chevrolet Performance Racing Crate Engines are excluded from limited warranty.

Chevrolet Performance does not utilize any used or remanufactured parts in this crate engine, except for the starter, alternator and power steering pump.

AVAILABLE ENGINE-RELATED PARTS & ACCESSORIES

See page 140 for our complete line of Small-Block components

88894341
Water Pump, Long Style
Page 175

12361146
High-Torque Mini Starter
Page 186

12342071
Air Cleaner, Classic Design
Page 188

12355612
Fuel Pump, Street Performance
Page 189

19170092
Carburetor, Holley 670-cfm
Page 188

12361051
Spark Plug Wire Set
Page 187

CT400

19318604

404 hp @ 5,600 rpm

406 lb.-ft. @ 4,600 rpm

DYNO CHART

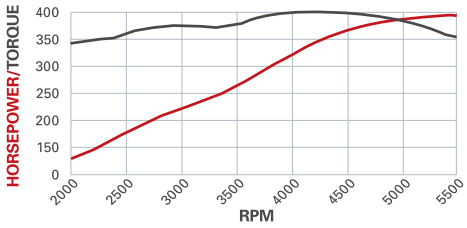

High-Revving Performance and Durability

Chevrolet Performance's CT400 racing crate engine now features Fast Burn cylinder heads with LS-style beehive valve springs that enable greater high-rpm performance and durability. They allow the engine to rev higher to make the most of every cubic inch of air drawn through it. The result is a durable engine with 404 hp at 5,600 rpm and 406 lb.-ft. of torque at 4,600 rpm.

The beehive springs are part of the lightweight aluminum cylinder head assemblies, which are based on the proven Fast Burn design, with large intake runners and 2.00/1.55-inch valves. The CT400 also has a tough bottom end, anchored by a forged steel crankshaft and strong aluminum pistons installed in a brand-new block with four-bolt mains.

The assembly also includes an open-plenum high-rise intake manifold, a racing-only 8-quart circle track oil pan with a dual kick-out design, a valve cover breather kit and aluminum roller rocker arms.

NOTE: *Refer to page 91 for the complete horsepower and torque testing procedures.*

TECH SPECS

Part Number:	19318604
Engine Type:	Chevy Small-Block V-8
Displacement (cu in):	350
Bore x Stroke (in):	4.000 x 3.480
Block (P/N 10105123):	Cast-iron with 4-bolt main caps
Crankshaft (P/N 12556307):	Forged steel
Connecting Rods (P/N 10108688):	Powdered metal
Pistons (P/N 10159436):	Hypereutectic aluminum
Camshaft Type (P/N 10185071):	Steel hydraulic roller
Valve Lift (in):	.474 intake / .510 exhaust
Camshaft Duration (@.050 in):	208° intake / 221° exhaust
Cylinder Heads (P/N 19300955):	Fast Burn aluminum; 62cc chambers
Valve Size (in):	2.000 intake / 1.550 exhaust
Compression Ratio:	9.72:1 Nominal
Rocker Arms (P/N 19210724):	Aluminum; roller style
Rocker Arm Ratio:	1.5:1
Recommended Fuel:	Premium pump
Ignition Timing:	36° Total @ 4,000 rpm
Maximum Recommended rpm:	5,800
Balanced:	External

NOTE: *Distributor with melonized steel gear MUST be used with long-blocks and Partial engines with steel camshafts, or engine damage will occur.*

INSTALLATION NOTES

- Requires addition of carburetor, starter, ignition, plug wires, water pump, distributor and exhaust system (not included)
- Requires an externally balanced flywheel (not included). See page 173 for flywheel selection
- The 8-quart circle track oil pan is 7 inches deep at the sump. It will clear most GM rear-steer chassis with stock engine location
- For Circle Track Racing only – Not intended for street use
- Circle Track racing engines from Chevrolet Performance include anti-tampering seals installed

Chevrolet Performance Racing Crate Engines are excluded from limited warranty.

Chevrolet Performance does not utilize any used or remanufactured parts in this crate engine, except for the starter, alternator and power steering pump.

AVAILABLE ENGINE-RELATED PARTS & ACCESSORIES

See page 140 for our complete line of Small-Block components

88961867
Distributor, Aluminum Billet HEI
Page 178

12361146
High-Torque Mini Starter
Page 186

12342071
Air Cleaner, Classic Design
Page 188

12355612
Fuel Pump, Street Performance
Page 189

19170092
Carburetor, Holley 670-cfm
Page 188

12361051
Spark Plug Wire Set
Page 187

CT525

19331563

533 hp @ 6,600 rpm

477 lb.-ft. @ 5,200 rpm

DYNO CHART

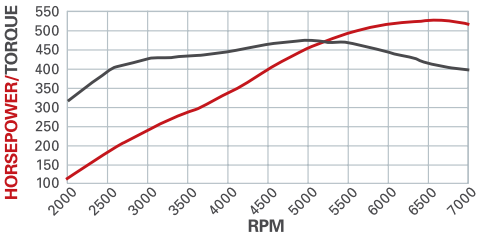

Lightweight, High-RPM LS Power!

Chevrolet Performance's deep-breathing, high-revving CT525 6.2L crate engine is based on the LS engine family and delivers serious power for serious racing series, including Super Late Model and modifieds.

It is similar to the 6.2L LS3, but we've adapted it to circle track racing with a carbureted intake manifold, 6-quart racing oil pan and more. The engine is lightweight and strong, using an aluminum block with cross-bolted 6-bolt main caps and high-flow LS3 rectangular-port cylinder heads. This combination produces 533 hp at 6,600 rpm and a hefty 477 lb.-ft. of torque at 5,200 rpm.

The CT525 6.2L comes with coil-on-plug ignition, and an SFI-certified balancer. All that's needed to complete the assembly is a carburetor, starter and our LSX ignition controller P/N 19171130 – all available from Chevrolet Performance.

NOTE: *Refer to page 91 for the complete horsepower and torque testing procedures.*

TECH SPECS

Part Number:	19331563
Engine Type:	LS-Series Gen IV Small-Block V-8
Displacement (cu in):	376 (6.2L)
Bore x Stroke (in):	4.065 x 3.62 (103.25 x 92mm)
Block (P/N 12623967):	Cast-aluminum with 6-bolt, cross-bolted main caps
Crankshaft (P/N 12597569):	Nodular Iron
Connecting Rods (P/N 12607475):	Powdered metal
Pistons (P/N 19207287):	Hypereutectic aluminum
Camshaft Type (P/N 88958770):	Hydraulic roller
Valve Lift (in):	.525 intake / .525 exhaust
Camshaft Duration (@.050 in):	226° intake / 236° exhaust
Cylinder Heads (P/N 12629063):	LS3 rectangular port; aluminum as-cast with 68cc chambers
Valve Size (in):	2.165 intake / 1.590 exhaust
Compression Ratio:	10.7:1 Nominal
Rocker Arms (P/N 12569167 int):	Investment-cast, roller trunnion
Rocker Arms (P/N 10214664 exh):	Investment-cast, roller trunnion
Rocker Arm Ratio:	1.7:1
Recommended Fuel:	Premium pump
Reluctor Wheel:	58x
Maximum Recommended rpm:	6,700
Balanced:	Internal

INSTALLATION NOTES

- Use LSX ignition controller P/N 19171130 (not included, shown on next page)
- Requires addition of carburetor, starter, exhaust system, and front accessory drive system
- The 6-quart circle track oil pan is designed to clear most GM rear-steer chassis with stock engine location. Requires external oil filter and cooler (will increase capacity to approximately 8 quarts)
- For Circle Track Racing only – Not intended for street use.
- For 2016, the CT525 does not include a water pump or factory exhaust manifolds
- Circle Track racing engines from Chevrolet Performance include anti-tampering seals installed

Chevrolet Performance Racing Crate Engines are excluded from limited warranty.

Chevrolet Performance does not utilize any used or remanufactured parts in this crate engine, except for the starter, alternator and power steering pump.

NOTE: Final production version may differ slightly in content from photo shown.

*For 2016, the CT525 **does not** include a water pump or factory exhaust manifolds*

AVAILABLE ENGINE-RELATED PARTS & ACCESSORIES

See page 244 for our complete line of LS-Series components

19171130
LSX Ignition Controller
Page 294

12342071
Air Cleaner, Classic Design
Page 291

19170092
Carburetor, Holley 670-cfm
Page 291

10465385
LS-Series Starter
Page 290

SMALL-BLOCK Engine Components

All-New Parts Engineered to Perform – and Last

When it comes to building the Small-Block engine that will power the street rod, muscle car or truck of your dreams, you don't want to sacrifice performance or durability – and that's why you should put your trust in Chevrolet Performance.

We've been designing, testing and manufacturing Small-Block parts longer than anyone and our engineers know what works and what doesn't when it comes to delivering horsepower with dependability. Our latest parts, such as beehive-style valve springs and high-flow aluminum heads, leverage the high-flow attributes of the LS family to offer an unprecedented level of Small-Block capability.

Better still, all of our Small-Block parts, from tough four-bolt cylinder blocks and forged rotating parts to intake manifolds and more are brand new. That means there's no reason to settle for used, reconditioned or "seasoned" parts, because Chevrolet Performance parts are competitively priced, while also offering great peace of mind.

Check out our comprehensive lineup of blocks, heads, rotating parts and more and you'll find exactly what you need to build your perfect engine, because when it comes to Small-Block power, nobody beats Chevrolet Performance!

You can find these Chevrolet Performance Small-Block Engine Components on the following pages:

Blocks and Components ..... **Page 142**
Cylinder Heads ..... **Page 150**
Valve Components ..... **Page 161**
Valve Covers ..... **Page 164**
Camshafts ..... **Page 169**
Pistons and Piston Rings ..... **Page 171**
Crankshafts ..... **Page 172**
Oil Pans, Oil Pumps, Gaskets and Components ..... **Page 176**
Intake Manifolds ..... **Page 179**
Fuel and Electrical Components ..... **Page 186**

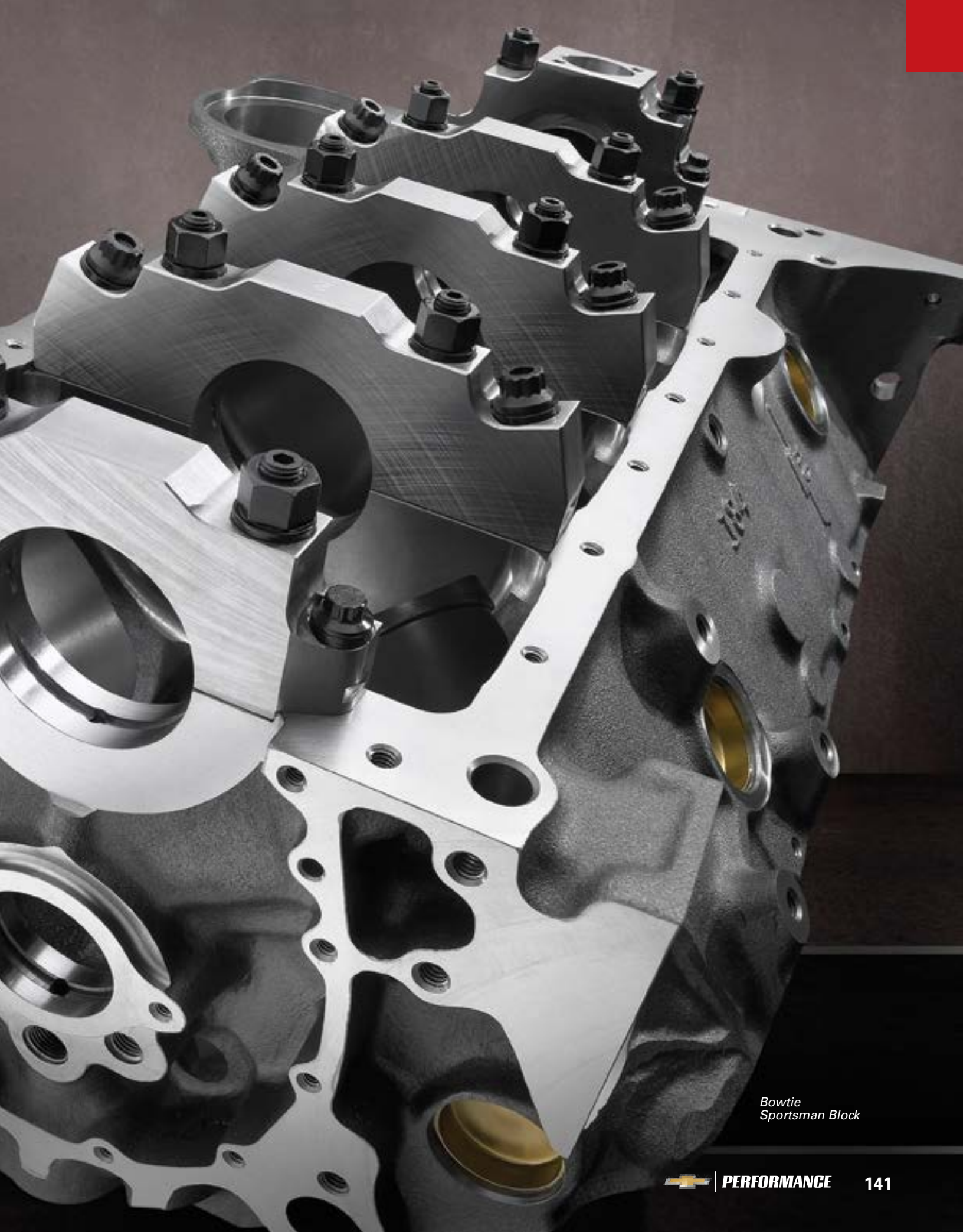

Bowtie Sportsman Block

Chevy Small-Block Quick Reference Chart

Cast-Iron Small-Blocks

Part Number	Cast #	Deck Height	Lifter Pattern	Cyl Wall	Bore Range	Main Bolt	Main Bolt Degree	Cap Material	Crank Jnl Size	Oiling	Seal Type	Max Stroke	Weight (lbs)	Max HP	Usage	Page Number
10243869	10243878	9.025"	Std	Open	3.737" – 3.840"	2	Straight	Iron	350	Wet	1 pc	3.750"	185	350	Street	142
10105123	14093638	9.025"	Std	Open	4.000" – 4.030"	4	Straight	Gray iron	350	Wet	1 pc	3.750"	181	350	Street	143
19171109	—	9.025"	Std	Open	4.004" – 4.030"	4	Straight	Gray iron	350	Wet	1 pc	3.800"	181	450	Street	143
10066034	—	9.025"	Std	Open	4.000" – 4.030"	4	Straight	Gray iron	350	Wet	2 pc	3.750"	181	350	Street	143
12480174	10051184	9.025"	Std	Siamese	3.980" – 4.155"	4	20°	Nodular	350	Wet	1 pc	3.750"	196	500	Amateur	144
12480047	10051184	9.025"	Std	Siamese	3.980" – 4.155"	4	20°	Nodular	350	Wet	2 pc	3.750"	208	500	Amateur	145
12480175	10051184	9.025"	Std	Siamese	4.117" – 4.155"	4	20°	Nodular	350	Wet	1 pc	3.750"	196	500	Amateur	145
12480157	10051184	9.025"	Std	Siamese	4.117" – 4.155"	4	20°	Nodular	350	Wet	2 pc	3.750"	196	500	Amateur	145
12480049	10051184	9.025"	Std	Siamese	3.980" – 4.155"	4	20°	Nodular	400	Wet	2 pc	3.750"	208	500	Amateur	145
12480159	10051184	9.025"	Std	Siamese	4.117" – 4.155"	4	20°	Nodular	400	Wet	2 pc	3.750"	196	500	Amateur	145
24502503	10051184	9.025"	Std	Siamese	3.980" – 4.155"	4	20°	Steel	350	Wet	2 pc	3.750"	208	700	Pro	146

Short-Deck Cast-Iron Small-Blocks

Part Number	Cast #	Deck Height	Lifter Pattern	Cyl Wall	Bore Range	Main Bolt	Main Bolt Degree	Cap Material	Crank Jnl Size	Oiling	Seal Type	Max Stroke	Weight (lbs)	Max HP	Usage	Page Number
24502650	24502650C	8.325"	None	Siamese	3.980" – 4.185"	4	20°	Steel	283	Dry	2 pc	3.250"	167	800	Pro	147

Aluminum Small-Blocks

Part Number	Cast #	Deck Height	Lifter Pattern	Cyl Wall	Bore Range	Main Bolt	Main Bolt Degree	Cap Material	Crank Jnl Size	Oiling	Seal Type	Max Stroke	Weight (lbs)	Max HP	Usage	Page Number
10185075	10134398	9.025"	Std	Siamese	3.986" – 4.135"	4	20°	Steel	350	Wet	2 pc	3.750"	90	800	Pro	Disc.
10134400	10134398	9.025"	Std	Siamese	4.117" – 4.135"	4	20°	Steel	400	Dry	2 pc	3.750"	89	800	Pro	148
24502495	24502495	9.525"	Std	Siamese	4.117" – 4.135"	4	20°	Steel	400	Dry	2 pc	4.125"	101	850	Pro	148

A. 10243869

What's Old is New Again!

Original 305 V-8 Production Block

(re-introduced for Sprint Car Spec Racing)

- Original, standard-bore block
- Uses production Small-Block components
- Fully machined
- Original 2-bolt cast-iron main cap design
- Economical alternative to expensive aftermarket design

A 305 V-8 Production Block (top, front)

A 305 V-8 Production Block (bottom, rear)

Production-Based Block (front) B

Production-Based Block (rear) B

Straight 4-Bolt Mains B

Production-Based Block (front, top) B

Deck Height Diagram

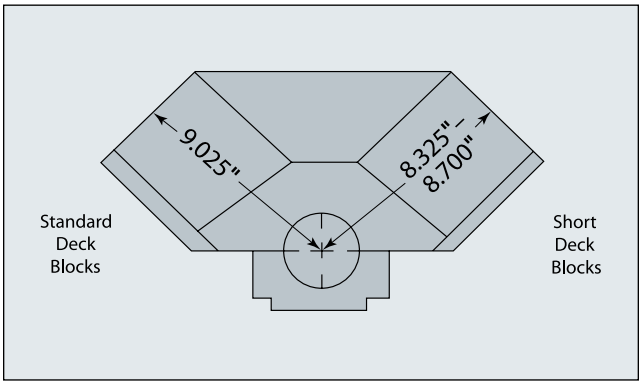

PRODUCTION-BASED BLOCKS

When building a mild Small-Block performance engine or a replacement for a stock engine, production-based blocks from Chevrolet Performance give you strength, accuracy and peace of mind that can't be assured in a rebuilt core. And unlike so many of the used cores, nearly all of ours feature four-bolt main caps for extra strength. Each cylinder block is machined to production-spec tolerances and is manufactured to the exact specifications of pre-1986 or 1986-later engines.

Production-Based Block Technical Notes:

- Standard 350 main journal sizes
- Non-siamese bores
- Production-spec cylinder wall thickness
- Lifter valleys machined for hydraulic-roller and flat-tappet valvetrains

See the chart on page 142 for complete specifications

B. 10105123

350 Bare Block (1986 – Later Style), 1-Piece Rear Main Seal

- Cast-iron 4-bolt block
- 4.000" bore
- Machined for hydraulic roller or flat tappets

19171109

383 Bare Block (1986 – Later Style), 1-Piece Rear Main Seal

- Cast-iron 4-bolt block
- 4.004" bore
- Torque plate honed
- Clearanced for 3.800" stroker crankshaft
- Machined for hydraulic roller or flat tappets

10066034

350 Bare Block (Pre-1986 Style), 2-Piece Rear Main Seal

- Cast-iron 4-bolt block
- 4.000" bore
- Can be used for 302, 327, or 350 engines
- Machined for flat tappets only
- Used in 1973-1985 GM Goodwrench 350 engines

BOWTIE SPORTSMAN BLOCKS

Step up to serious street/strip performance when you choose a Chevrolet Performance Sportsman Block. These iron blocks provide a rock-solid foundation for any application in the 350 – 500-horsepower range, be it drag strip, circle track or high-performance street machine. These highly versatile blocks are available in a variety of finish options that enable maximum flexibility for building a wide range of engine combos. Most of the blocks have siamesed cylinder walls[1] and 4-bolt main caps[2] that are secured with Grade-8 bolts. Chevrolet Performance Bowtie Sportsman Blocks have 9.025-inch deck heights.

NOTE: *Bowtie blocks are called out by main journal sizes (i.e., 283, 350 or 400) and then by bore size (i.e., 283, 305, 350 or 400) if the bore is not standard to the main size. Example: P/N 24502650 – "283 Main-350 Bore size"– has standard 283 main journal sizes; however the bore is standard 350 size.*

Bowtie Sportsman Block Technical Notes:

- Standard 9.025-inch deck height
- Nominal cylinder wall thickness is 0.340-inch
- Minimum cylinder wall bore thickness on 4.155-inch bore is 0.225-inches (excluding P/N 10051181, 10051183, and 10185047)
- Extra-thick deck surfaces have blind-tapped bolt holes for improved head gasket sealing
- Priority main oiling system
- Main bearing bulkheads are 0.900-inch thick and use Grade-8 bolts
- All five cam bearing locations require 2.000-inch O.D. (1.867-inch I.D.) bearings P/N 12370843 (except block P/N 10051183)
- Tall lifter bore blocks may require clearancing the top of the lifter bores for some roller lifters
- Lifter valley oil scavenging boss below bell housing flange is present, but not drilled and tapped
- Oil dipstick holes are not drilled
- Timing system clearance must be checked

See the chart on page 142 for complete specifications.

4-Bolt 350 Main Blocks

A. 12480174

350 Bowtie Sportsman Block, 1-Piece Rear Main Seal

- CNC-machined cast-iron competition block
- +/-0.001" machining tolerances
- 4-bolt nodular mains, splayed caps on center 3 mains
- 3.980" finished bore
- 4.155" max bore (siamesed cylinder bores)
- Extra-smooth gasket surfaces for better seal
- Tall lifter bores
- Comes with rear seal adapter

[1] *Siamesed cylinder walls have thicker cylinder wall material with no water between the bores. This allows for a bigger bore; a bigger bore allows for more cubic inches and more power!*

[2] *4-bolt mains have more material and more fasteners holding the crank in the block (4-bolts per main instead of just 2). 4-bolt mains help maintain the integrity of the block when you drop the hammer!*

A Sportsman Block (front)

A Sportsman Block (rear, for use with 1-piece seal adapter)

A 2-Piece Rear Main Seal

A 4-Bolt Splayed Main Caps

350 Bowtie Sportsman Block, 2-Piece Rear Main Seal B

350 Bowtie Sportsman Block, 2-Piece Rear Main Seal B

350 Bowtie Sportsman Block, Valley (top front) B

B. 12480047

350 Bowtie Sportsman Block, 2-Piece Rear Main Seal

- CNC-machined cast-iron competition block
- +/-0.001" machining tolerances
- 4-bolt nodular mains, splayed caps on center three mains
- 3.980" finished bore
- 4.155" max bore (siamesed cylinder bores)
- Extra-smooth gasket surfaces for better seal
- Tall lifter bores

12480175

350 Main, 400 Bore Size Bowtie Sportsman Block, 1-Piece Rear Main Seal (not shown)

- CNC-machined cast-iron competition block
- +/-0.001" machining tolerances
- 4-bolt nodular mains, splayed caps on center three mains
- 4.117" finished bore
- 4.155" max bore (siamesed cylinder bores)
- Extra-smooth gasket surfaces for better seal
- Tall lifter bores
- Comes with rear seal adapter

12480157

350 Main, 400 Bore Size Bowtie Sportsman Block, 2-Piece Rear Main Seal (not shown)

- CNC-machined cast-iron competition block
- +/-0.001" machining tolerances
- 4-bolt nodular mains, splayed caps on center three mains
- 4.117" finished bore
- 4.155" max bore (siamesed cylinder bores)
- Extra-smooth gasket surfaces for better seal
- Tall lifter bores

4-Bolt 400 Main Blocks

12480049

400 Main, 350 Bore Size Bowtie Sportsman Block, 2-Piece Rear Main Seal (not shown)

- CNC-machined cast-iron competition block
- +/-0.001" machining tolerances
- 4-bolt nodular mains, splayed caps on center three mains
- 3.980" finished bore
- 4.155" max bore (siamesed cylinder bores)
- Extra-smooth gasket surfaces for better seal
- Tall lifter bores

12480159

400 Bowtie Sportsman Block, 2-Piece Rear Main Seal (not shown)

- CNC-machined cast-iron competition block
- +/-0.001" machining tolerances
- 4-bolt nodular mains, splayed caps on center three mains
- 4.117" finished bore
- 4.155" max bore (siamesed cylinder bores)
- Extra-smooth gasket surfaces for better seal
- Tall lifter bores

CHEVROLET PERFORMANCE RACE BLOCKS

Chevrolet Performance Race Blocks are all about serious horsepower. Precision is the operative word for them, from start to finish, so you can depend on them to get you to the finish line first. Chevrolet Performance Race Blocks use only the highest-grade materials and machining techniques. The blocks are CNC-machined[1] with closer tolerances than Bowtie blocks. Race blocks feature full race-prep machining and 4-bolt splayed[2] main caps. Chevrolet Performance Race Blocks have proven themselves repeatedly in NASCAR and NHRA-sanctioned races. Chevrolet Performance race blocks have the power and reliability to put your car in the winner's circle.

See the chart on page 142 for complete specifications.

Chevrolet Performance Race Block Technical Notes:

- Precision CNC-machining means +/- 0.001-inch tolerances.
- Cylinder bore wall thickness is 0.225" minimum at 4.155" bore. A sonic bore check data sheet is provided with block
- Nominal wall thickness of cylinder bores is 0.340"
- Cylinder decks, front and rear of case, oil pan rail surfaces and head dowel pins are blueprinted
- Extra-thick deck surfaces have blind-tapped head bolt holes for superior head gasket sealing
- Enlarged cam bosses allow custom machining for larger bearings
- Non-standard cam bearings are required (see each block for details)
- Extra-thick main bearing bulkhead is machined at 5°
- Bearing cap inner bolts are spread 0.210" to allow machining for 400 journal crankshafts
- Premium quality main studs and SAE 8620 steel main bearing caps
- Priority main oiling system
- Billet wet sump rear main cap can be adapted to dry sump with plugs
- 2-piece rear main crankshafts and pre-1986 oil pans are required
- Use of some aftermarket mechanical roller lifters may require clearancing top of lifter bores
- Timing system clearance should be checked before engine assembly
- Lifter valley oil scavenging boss below bell housing flange is not drilled or tapped
- Oil dipstick holes are not drilled

24502503

350 Cast-Iron Bowtie Race Block (not shown)

- Cast-iron competition block right out of the box
- 4-bolt steel mains, 20° splayed caps on center three mains
- 2.000" O.D. cam bearings (1.867" I.D.) required at all five locations
- 3.980" finished bore
- 4.155" max bore (siamesed cylinder bores)
- 9.025" deck height
- Oil galleries for dry sump system are oversized and tapped for pipe plugs
- Supplied with sonic data sheet
- Tested to over 700 horsepower!

[1] CNC (computer numerical controlled) machining guarantees exact tolerances. Chevrolet Performance Parts offers more CNC-machined blocks than anyone.

[2] Splayed main caps have additional material for added strength in securing the crankshaft. This reduces the chance of "throwing" a crankshaft.

A Short-Deck Race Block (top front)

A Short-Deck Race Block (top rear)

A 2-Piece Rear Main Seal

A 4-Bolt Splayed Main Caps

Short-Deck Race Block (bottom front) A

Short-Deck Race Block (bottom rear) A

2-Piece Rear Main Seal A

A. 24502650

283 Main, 350 Bore Size Short-Deck Bowtie Race Block

- CNC cast-iron competition block designed for drag racing, road racing or restricted oval track racing!
- 4-bolt steel mains, 20° splayed caps on center three mains
- 8.325" deck (Standard deck blocks are 9.025 inches), can be machined to 8.200" deck height
- Camshaft is raised 0.433" to 4.955"
- Cam bearing bores machined for 2.250" O.D. x 1.875 roller bearings
- 3.980" rough bore
- 4.185" max bore (minimum of .250" cylinder bore wall thickness)
- Integral oil restrictors
- Must use Big-Block water pump, must raise water pump with adapters for balancers larger than 6"
- Olds Aurora V-8 bell housing bolt pattern (12.25" max flywheel diameter)
- Lifter holes and cylinder head bolt holes are not drilled
- Will accept standard, SB2.2 and splayed valve lifter patterns
- Can be machined to accept any Small-Block Chevy cylinder head
- Shorter-than-production pushrods required
- Tested to over 800 horsepower!
- Water jacket core plugs are 1.5" press-in
- Oil galley plugs are AN O-ring style

ALUMINUM RACE BLOCKS

Less weight and the same great horsepower are the benefits of a Chevrolet Performance Aluminum Race Block. Chevrolet Performance Aluminum Race Blocks provide the same competition-level strength and reliability of our cast-iron Race Blocks, but their lighter weight improves chassis dynamics. The super-tough A-356 aluminum competition blocks are CNC-machined to +/- 0.001-inch tolerances. Chevrolet Performance Aluminum Race Blocks are ideal for road racing applications or high horsepower turbocharged engines.*

See chart on page 142 for complete specifications.

Chevrolet Performance Aluminum Race Block

Technical Notes:
- Extra-thick deck surfaces with blind-tapped head bolt holes for improved head gasket sealing
- Centrifugally spun cast-iron cylinder sleeves
- 2-piece rear-main crankshafts and pre-1986 oil pans required
- Enlarged cam bosses allow machining for larger cam bearings
- 2.000" O.D. (1.867" I.D.) cam bearings P/N 12370843 required
- Blocks may require clearancing at top of lifter bores (0.842") for some roller lifters
- Timing system clearance should be checked before engine assembly
- Extra-thick main bearing bulkhead machined at 5°
- Premium main studs and steel main bearing caps
- Priority main oiling system
- Billet wet sump rear main cap can be converted to dry sump with plugs
- Oil dipstick holes not drilled
- Comes with dowel pins

A. 10134400

400 Aluminum Bare Block
- A-356 aluminum competition block
- CNC-machined
- Siamesed bores with increased wall thickness
- 4.117" rough-finished bore
- 4.135" maximum bore
- 3.750" maximum stroke
- Splayed 4-bolt steel mains
- 400 main size
- Dry sump use only
- Tested to more than 800 horsepower!

24502495

400 Aluminum Tall Deck Bare Block (not shown)
- A-356 aluminum competition block
- CNC-machined
- Siamesed bores with increased wall thickness
- 4.117" rough-finished bore
- 4.135" maximum bore
- 4.125" maximum stroke
- Splayed 4-bolt steel mains
- 400 main size
- Dry sump use only
- Tested to more than 800 horsepower!

** Proposed applications have not been specifically tested or validated by Chevrolet Performance.*

A 400 Aluminum Race Block (front)

A 400 Aluminum Race Block (rear)

A 400 Aluminum Race Block (bottom)

Universal Engine Lift Brackets **B**

Freeze Plug, 1-5/8" brass **C** Cylinder Sleeve (standard) **D**

Main Bearing Kit 383 Engine (standard) **E**

Main Bearing Kit, Sportsman Blocks **F**

CYLINDER BLOCK COMPONENTS

B. 12363238

Universal Engine Lift Brackets

- Designed to bolt to the end of cylinder heads for removal and installation of the engine
- Made from 0.200" steel and have .880" x 1.000" hook slots
- Use with 3/8" or 7/16" bolts
- Includes two brackets and two 7/16" bolts

C. 88891749

Freeze Plug, 1-5/8" Brass

- Corrosion-resistant brass freeze plug is recommended for marine applications

10121044

Rear Oil Seal, 2-Piece Design (not shown)

- Rear oil seal for V-8 and V-6 engines with pre-1985 style 2-piece oil seal design
- Used by many NASCAR teams for superior leak protection

D. 12480004

Cylinder Sleeve (standard)

- Standard-bore steel cylinder sleeve for late-design aluminum Small-Block V-8 and 90° V-6 aluminum blocks, including P/N 10134400, P/N 10134351, P/N 10185075, and P/N 10134371

NOTE: *Sleeve has 3.980" bore; can be overbored to 4.135".*

12480018

Oil Galley Plugs, Aluminum Blocks (not shown)

- Replacement oil galley plugs for all GM aluminum engine blocks, size AN -06

E. 12499102

Main Bearing Kit, 350 Engine (standard)

- Complete main bearing kit for 350-cubic-inch Small-Block V-8 with standard-size mains

F. 12480108

Main Bearing Bolt Kit, Sportsman Blocks

- Sturdy main bearing cap bolts designed specifically for the following Chevrolet Performance Sportsman Racing Blocks: P/N 12480047, P/N 12480049, P/N 12480157, P/N 12480159, P/N 12480174 and P/N 12480175
- Bolts are Grade-8 with 12-point heads and black oxide-coated

FRONT COVER, TIMING POINTERS, FUEL PUMP BLOCK-OFF PLATE

A. 3991435

Timing Pointer, 6.750" and 7" Balancer

- Steel timing pointer bolts onto engines with 6.750" or 7" balancers
- Pointer is not chrome

B. 12342089

Small-Block Chrome Timing Cover

- Attractive chrome cover for 1969–1991 Small-Block V-8 and all 90° V-6 engines
- Direct replacement for covers that use bolt-on timing pointer
- Supplied with GM oil seal (replacement oil seal P/N 10111769)

C. 12562818

Front Cover

- With crank trigger plug
- Includes bolts, seal and gasket

D. 12341998

Small-Block Fuel Pump Block-Off Plate

- Plate has stamped Bowtie logo
- Special non-asbestos gasket included

A Timing Pointer, 6.75" & 7" Balancer

B Small-Block Chrome Timing Cover

C Front Cover with Bolts, Seal and Gasket

D Small-Block Fuel Pump Block-Off plate

Timing Covers: Additional Required Components

Part Number	Bolts (Quantity)	Seals (Quantity)	Gasket (Quantity)	Bolt Grommets (Quantity)	Engine Application
12342089	11561767 (10)	14090906 (1)	10108435 (1)	N/A	19258602, 19210009, 19210007, 19210008
12562818	10213293 (6) 12551135 (2)	10228655 (1)	N/A	10213294 (8)	12499101, 12499106, 12499101, 19318604, 19301294, 19301295 19301293, 24502609, 88958603, 19201330

Small-Block Cylinder Heads: Quick Reference Chart

Part Number	Description	Casting Number	Material	Port Size	Port Type	Valve Angle	Chbr CC's	Int Vlv	Exh Vlv	Exh Port	Plug Type	Heat Riser	Rocker Stud	Notes	Page Number
12363287	LT4	12555690	Alum	195	—	23	54.4	2.000	1.550	LT4	Angled	No	Screw-in	For LT1 or LT4	154
19300956	Fast Burn ZZ6	12367712	Alum	210	Vortec	23	62	2.000	1.550	LT4	Angled	No	Screw-in	Bare 19300955	N/S
19300955	Fast Burn ZZ6	12367712	Alum	210	Vortec	23	62	2.000	1.550	LT4	Angled	No	Screw-in	Assembly	155
12556463	ZZ4	10088113	Alum	163	—	23	58	1.940	1.500	LT4	Angled	No	Screw-in	ZZ4 Assembly	153
12529093	Vortec	10239906 or 12558062	Iron	170	Vortec	23	64	1.940	1.500	LT4	Straight	No	Press	Bare 12558060	N/S
12558060	Vortec	10239906 or 12558062	Iron	170	Vortec	23	64	1.940	1.500	LT4	Straight	No	Press	Assembly	151
25534351	Small-Port Vortec Bowtie	25534351	Iron	185	Vortec	23	66	2.000	1.550	LT4	Straight	No	Screw-in	Bare 25534421	N/S
19331473	Large-Port Vortec Bowtie	25534371	Iron	225	Vortec	23	66	2.000	1.550	LT4	Straight	No	Screw-in	Bare 25534446	N/S
19331470	Small-Port Vortec Bowtie	25534351	Iron	185	Vortec	23	66	2.000	1.550	LT4	Straight	No	Screw-in	Assembly	152
19331472	Large-Port Vortec Bowtie	25534371	Iron	225	Vortec	23	66	2.000	1.550	LT4	Straight	No	Screw-in	Assembly	152
24502580	18° Semi	10134363	Alum	215	18°	18	60	—	—	18°	Angled	No	Shaft	No seats/guides	156
24502615	15°	10134363	Alum	210	18°	15	35-37	—	—	18°	Angled	No	Shaft	No seats/guides	156
12480129	SB2.2	12480011	Alum	—	SB2.2	SB2.2	48	2.150	1.625	SB2.2	Angled	No	Shaft	No seats/guides	159
12480011	SB2.2 Bare	12480011	Alum	—	SB2.2	SB2.2	48	2.150	1.625	SB2.2	Angled	No	Shaft	No seats/guides	159
88958667	ROX SB2.2	88958667	Alum	—	SB2.2	SB2.2	28	2.150	1.625	SB2.2	—	—	Shaft	No seats/guides	N/S
12480146	Rough Bare Splay	10185040	Alum	—	Splayed	Splay	45	2.200	1.650	Splayed	Angled	No	Shaft	Rough mach 24502517	157
12480147	Semi-Machined Splay	10185040	Alum	—	Splayed	Splay	45	2.200	1.650	Splayed	Angled	No	Shaft	Semi-mach 12480146	157
24502517	Splayed Valve	10185040	Alum	—	Splayed	Splay	45	2.200	1.650	Splayed	Angled	No	Shaft	No seats/guides	157
12480153	ROX Splayed	12480153	Alum	—	Splayed	Splay	—	—	—	Splayed	—	—	Shaft	No seats/guides	158

Cast-Iron Vortec Cylinder Head (exhaust) E

Cast-Iron Vortec Cylinder Head (intake) E

Cast-Iron Vortec Cylinder Head (combustion chamber) E

SERVICE REPLACEMENT HEADS

These cylinder heads are direct replacements for OEM heads on 1987-and-newer GM Small-Block V-8 engines. Save time and worry by replacing tired or damaged cylinder heads with new ones from Chevrolet Performance.

Service Replacement Head Technical Notes:

- Cast-Iron
- Use 1.940"/1.500" valves
- Straight spark plug design
- No heat risers provided

93438649 ⓘ

Cylinder Head Assembly With Valves For 290 HP (not shown)

This cast-iron cylinder head is for use on 350/290 hp crate engines and Goodwrench base 350 V-8 (P/N 10067353).

- Bare head P/N 93438648
- Standard 6-bolt intake manifold pattern
- 76cc combustion chamber

This head is assembled with the following components:

12550909	Exhaust Valves	**10241744**	Intake Spring Retainer
10241743	Intake Valves	**14042575**	Exhaust Spring Retainer
94666580	Valve Springs	**10212810**	Intake Seals
24503856	Valve Locks	**12564852**	Exhaust Seals

VORTEC CYLINDER HEADS

An easy way to gain 20-40 horsepower on any 1955-and-newer Small-Block Chevrolet V-8 (except later-style LT1/LT4 engines with reverse-flow cooling) is by installing a set of Vortec cylinder heads. These value-priced cast-iron cylinder heads use modified combustion chambers and high velocity port technology to provide improved performance. Vortec cylinder heads significantly outflow non-Vortec service replacement cylinder heads and earlier OEM cast-iron heads. These cylinder heads are ideal for applications up to 350 horsepower, but they require Vortec-specific intake manifolds.

E. 12558060 ⓘ

Cast-iron Vortec Cylinder Head Assembly

- Completely assembled with 1.940"/1.500" valves
- Uses bare head 12529093
- 64cc combustion chamber
- Straight spark plugs
- No heat risers
- Requires Vortec-specific intake manifold
- Camshafts with more than 0.475" lift require machining valve guide bosses and checking valve seal to valve spring retainer clearance
- Can be machined for 2.020"/1.600" valves
- Rocker arm studs can be pinned or drilled and tapped to 3/8"
- Valve spring seat diameter is 1.280"
- Casting number 10239906 or 12558062

This head is assembled with the following components

10241743	Intake Valves	**10241744**	Valve Spring Retainer
12550909	Exhaust Valves	**10212810**	Intake Seals
10212811	Valve Springs	**12564852**	Exhaust Seals
24503856	Valve Locks		

ⓘ *Additional components required for installation. See page 159.*

VORTEC BOWTIE CYLINDER HEADS

Vortec Bowtie cylinder heads are the most powerful cast-iron heads offered by Chevrolet Performance. These upgraded production cylinder heads are ideal for 400-450 horsepower street and racing (great for circle track applications) engines. Vortec Bowtie cylinder heads come with bigger valves, a thicker deck surface and 66cc combustion chambers. The heads provide outstanding low-lift flow numbers (the more air you flow, the more potential power) and Fast Burn performance all in an affordable, cast-iron head.

Vortec Bowtie Cylinder Head Technical Notes:

- Cast-iron small runner or large runner cylinder heads*
- 66cc combustion chambers
- 0.450" deck thickness
- Hardened exhaust valve seats
- Machined for 2.000"/1.550" valves
- Maximum 0.530" valve lift (without modifications)
- Straight spark plug design
- No heat risers
- Drilled and tapped for 7/16"-14 screw-in studs
- Dual bolt patterns for Vortec and early style intake manifolds (early model P/N 10051103; Vortec intakes P/N 12366573,12496820,12496821, 12496822 or 12489371)
- Use intake gasket P/N 89017465 for Vortec intakes or dual pattern intake gasket P/N 19301685 for early model intakes or Vortec design intake manifolds
- Dual bolt patterns for perimeter-style and center-bolt valve covers
- Vortec intake manifold three-step torque specs: 2 lb.-ft.; 9 lb.-ft.; 11 lb.-ft.

A. 19331470

Small-Port Vortec Bowtie Cylinder Head Assembly

- Completely assembled, ready to bolt on
- 185cc intake ports
- 65cc exhaust ports
- Use Fel-Pro® P/N 1470 exhaust gasket
- Bare head P/N 19331471, available separately

19331472

Large-Port Vortec Bowtie Head Assembly (not shown)

- Completely assembled, ready to bolt-on
- Improved air flow (281 cfm @ 0.600")
- 225cc intake ports
- 77cc exhaust ports
- 65cc combustion chambers
- Use Fel-Pro® P/N 1470 exhaust gasket (minor trimming may be necessary)
- Bare head P/N 19331473, available separately

This head is assembled with the following components:

12363757	Intake Valves	19169661	Valve Spring Retainers
12363758	Exhaust Valves	10212810	Valve Stem Seals
12551483	Valve Springs	24503856	Valve Locks
12552126	3/8" Rocker Studs		

**Larger intake and exhaust ports allow for a greater volume of air to pass through the engine. The more air you flow, the more power you can make.*

BUILDER'S TIP

MACHINING THE VORTEC HEAD FOR GREATER VALVE LIFT

The Small-Block Vortec cylinder head delivers great airflow, but is limited to valve lift of about 0.450-inch in stock form – otherwise the valve stem seals will be crushed. The valve guide bosses can be easily machined down to provide greater stem seal clearance. You'll want about 0.050-inch stem-to-retainer clearance at maximum valve lift. Also, the spring seats are easily machined to accept larger-diameter valve springs that are necessary to complement a higher-lift camshaft.

A Small-Port Vortec Bowtie Heads (intake) (Bare head shown)

A Small-Port Vortec Bowtie Head (exhaust) (Bare head shown)

A Small-Port Vortec Bowtie Head (chamber)

ZZ4 Aluminum Cylinder Head Assembly (intake) B

ZZ4 Aluminum Cylinder Head Assembly (exhaust) B

ZZ4 Aluminum Cylinder Head Assembly (combustion chamber) B

THE ZZ4 ALUMINUM HEAD

The revolutionary lightweight ZZ4 aluminum cylinder head was a key component of the highly successful Corvette L98 Small-Block V-8 engine (1985-1990). Chevrolet Performance offers that same cylinder head as a complete assembly, with D-shaped exhaust ports[1] (they increase post-combustion scavenging for increased power), high-velocity exhaust runners and centrally located spark plugs[2] that improve air/fuel mixture burn efficiency for increased power potential. The ZZ4 aluminum cylinder head is ideal for a great variety of engine applications.

B. 12556463 ⓘ

ZZ4 Aluminum Cylinder Head Assembly

- Aluminum performance head – used on ZZ4 engines
- Completely assembled with 1.940"/1.500" valves
- 163cc intake port
- 58cc combustion chamber
- No heat riser
- Angled spark plugs (5/8" hex, 3/4" reach, tapered plugs)
- 1.48" Valve spring seat diameter
- Screw-in studs (3/8" top, 7/16" bottom)
- Use head gaskets with stainless steel fire rings
- Raised, machined rocker rails
- Raised exhaust ports .100", requires Fel-Pro® gasket P/N 1470
- Use rail type rockers P/N 10089648, or kit P/N 19210728 (roller rockers!)
- Casting P/N 10088113

This head is assembled with the following components:

12550909	Exhaust Valves	**19169661**	Valve Spring Retainers
10241743	Intake Valves	**10212810**	Intake Valve Stem Seals
12551483	Valve Springs (16)	**10212810**	Exhaust Valve Stem Seals
10212809	Valve Spring Shims	**24503856**	Valve Locks
12552126	3/8" Rocker Studs		

NOTE: *Limited to supply on hand. Casting is discontinued.*

[1]D-shaped exhaust ports increase the scavenging of the exhaust after combustion. The quicker you can get the exhaust out, the quicker you can get the air/fuel mixture into the combustion chamber. And, that equals big power!

[2]Centrally-located spark plugs allow for a more efficient flame front and air/fuel mixture burn during combustion, greatly increasing the power potential of the cylinder head.

THE GEN II LT4 ALUMINUM HEAD

The LT4 aluminum cylinder head represents another benchmark in Chevrolet high performance engine technology. This premium-quality aluminum cylinder head is designed for use on 1992-and-newer LT1 and LT4 Small-Block engines with reverse-flow cooling systems. LT4 aluminum cylinder heads are key components of any contemporary high-horsepower GM Small-Block engine buildup.

A. 12363287

GEN II LT4 Aluminum Cylinder Head Assembly

- Aluminum performance head
- Can only be used on 1992-1996 LT1 and LT4 engines
- Completely assembled with 2.000"/1.550" valves
- 195cc intake port
- 54.4cc combustion chamber
- No heat riser
- Angled spark plugs (5/8" hex, 3/8" reach, tapered plugs)
- 1.480" Valve spring seat diameter
- Screw-in studs (3/8" top, 7/16" bottom)
- Use head gaskets with stainless steel fire rings
- Raised, machined rocker rails
- Raised exhaust ports .100", requires Fel-Pro® gasket P/N 1470
- Use rail type rockers P/N 10089648, or kit P/N 12370838 (roller rockers!)

This head is assembled with the following components:

12555331	Intake Valves	**19169661**	Valve Spring Retainers
12551313	Exhaust Valves	**10212810**	Valve Stem Seals
12551483	Valve Springs	**10212809**	Valve Spring Shims
12552126	3/8" Rocker Studs	**24503856**	Valve Locks

A LT4 Aluminum Cylinder Head Assembly (intake)

A LT4 Aluminum Cylinder Head Assembly (exhaust)

A LT4 Aluminum Cylinder Head Assembly (combustion chamber)

Fast Burn Cylinder Head B

Fast Burn Cylinder Head (intake) B

Fast Burn Cylinder Head (exhaust) B

Fast Burn Cylinder Head (combustion chamber) B

ALUMINUM FAST BURN HEADS

Chevrolet Performance's Fast Burn 23-degree cylinder heads deliver maximum performance for Small-Block engines. An aluminum head casting – distinguished by Chevy Bowtie logos at each end – and a valvetrain with high-rpm, LS-style beehive-type valve springs stretches the performance range of the heads to enable greater power at a higher rpm! Fast Burn technology delivers more horsepower by increasing cylinder pressures, which maximizes the air/fuel mixture's combustion. The 62cc combustion chamber is designed for use with flat-top pistons. The CNC-machined Fast Burn heads require no additional porting for optimal performance, so all you need to do is bolt them onto your Small-Block and go! They can be used on any Small-Block engine with at least 4.000-inch bores and the standard-flow coolant system. Not for use on Gen II 1992-96 LT1/LT4 engines with reverse-flow cooling system.

B. 19300955 (!)

Fast Burn Aluminum Cylinder Head Assembly

- CNC-machined aluminum performance cylinder head
- Completely assembled with 2.000"/1.550" valves
- 210cc intake port, roof raised .240"
- 78cc D-shaped exhaust ports, raised .200" – requires Fel-Pro® exhaust gasket P/N 1470 (may require minor trimming)
- 62cc combustion chamber, .400" deck (can be milled to .060")
- No heat riser
- Angled spark plugs (5/8" hex, 3/4" reach, tapered plugs)
- 1.48" valve spring seat diameter
- Use head gaskets with stainless steel fire rings
- Raised, machined rocker rails
- .530" maximum valve lift (without modifications)
- Screw-in studs (3/8" top, 7/16" bottom)
- New "time-serts" prevents oil migration through rocker studs
- Dual bolt patterns for perimeter-bolt and center-bolt valve covers
- Dual bolt patterns for Vortec and early-model intake manifolds
- Use bare head P/N 19300956
- Use production intake gasket P/N 19301685

This head is assembled with the following components:

12555331	Intake valves (4)	**19301708**	Valve spring retainers (8)
12551313	Exhaust valves (4)	**19301709**	Valve stem key (16)
12625033	Valve springs (8)	**12552126**	Valve rocker arm studs (8)
19301707	Valve spring seats (8)	**10168519**	Valve guides (8)
10212810	Valve stem seals (8)	**12346004**	Valve rocker arm stud sealer

(!) *Additional components required for installation. See page 159.*

ALUMINUM RACING CYLINDER HEADS

The same superior Chevrolet Performance technology that professional NASCAR and NHRA racers have used to win races for decades is available for you to use in your racecar. The Chevrolet Performance Aluminum Racing Cylinder Heads are part of an extensive family of high-performance inline-valve heads, designed specifically for race-winning engines.

Chevrolet Performance Aluminum Racing Cylinder Heads start with castings designed with thicker decks and manifold flange areas. The combustion chambers are designed for competition and air passages are maximized for high-velocity airflow. These cylinder heads thrive on high compression and high rpm. Used in conjunction with optimized short-block, intake and valvetrain combos, these heads are part of an "instant-on" powerplant – the kind of engine that will put you in the winner's circle.

Chevrolet Performance engineers dramatically altered the valve architecture to improve airflow and maximize efficiency. These aluminum racing cylinder heads are only available unported, so you must have them custom-ported to your specific requirements.

Aluminum Racing Head Technical Notes:

- Made of 355-T7 aluminum
- Extra-thick decks for angle milling or heavy flat milling
- Extra port material for professional porting
- Recommended for use with 4.000" to 4.155" cylinder bores
- Revised location angled spark plugs (14mm, 5/8" hex, 3/4" reach, gasketed plugs)
- Raised and revised location intake and exhaust ports for superior airflow above 0.600" valve lift
- Modified valve angles (not production 23°)
- Longer-than-stock valves required
- Designed for aftermarket shaft-mount rocker systems
- Perimeter-bolt-pattern-type valve covers required
- Specific 18°/15° intake manifold bolt patterns
- Recommended intake manifolds: P/N 24502481 or 24502653 (with valley plate P/N 24502654)
- Intake manifold gasket P/N 10185007

A. 24502580

Semi-Finished 18° Cylinder Head

- Fully machined, semi-finished, no seats or guides
- Non-CNC ports and combustion chamber are "as-cast"
- 60cc "as-cast" combustion chambers
- Designed for up to 2.200"/1.625" valves
- 215cc "as-cast" intake ports
- .080" extra material on deck face, and .055" on intake face

24502615

Semi-Finished 15° Cylinder Head (discontinued)

- Fully machined, semi-finished, no seats or guides
- Non-CNC ported, ports and combustion chamber are "as-cast"
- Great head for NHRA Comp-Eliminator, both V-8 and 4-cylinder applications!
- Casting has been "rolled" 2°, Valve-guides are also tipped 1°
- 210cc "as-cast" intake ports
- 35-37cc "as-cast" combustion chamber
- Capable of over 900 horsepower
- Multi-NHRA world records

A 15°/18° Cylinder Head (exhaust)

A 15°/18° Cylinder Head (intake)

A 15°/18° Cylinder Head (combustion chamber)

SPLAYED-VALVE ALUMINUM RACE CYLINDER HEADS

Chevrolet Performance Splayed-Valve Aluminum Race Cylinder Heads are extremely aggressive, all-out competition heads and not intended for street use. Splayed valves point both intake and exhaust valves at the center of the cylinder bore. As the valves open, they move away from the edges of the bore. That allows maximum-size valves to be installed without increasing bore size. The result is dramatically increased airflow, compared to inline-valve-design cylinder heads.

The castings have a 0.240-inch minimum port wall thickness, which leaves ample room for extensive custom porting. Intake valves are angled 16-degrees to the deck surface and splayed 4-degrees. Exhaust valve angles are 11-degrees with a 4-degree splay. Making more than 1,000 naturally aspirated horsepower with these cylinder heads is easily achievable.

Aluminum Splayed Valve Race Head Technical Notes:

- Made of 355-T7 aluminum
- No valve seats or guides provided
- Extra-thick decks for angle milling or heavy flat milling
- Extra port material (0.240") for professional porting
- Completely revised intake and exhaust ports provide ultimate airflow potential
- 45cc "as-cast" combustion chambers
- Modified valve angles (16° x 4° intake, and 11° x 4° exhaust)
- Designed for longer-than-stock 2.200" and 1.650" valves
- Valve spring pads accommodate 1.625" diameter springs
- Revised location angled spark plugs (14mm, 5/8" hex, 3/4" reach, gasketed plugs)
- Designed for aftermarket shaft-mount rocker systems
- Custom-fabricated intake manifold required
- P/N 10185042 intake manifold gasket required
- Valve cover gaskets P/N 10185043 required

Splayed-Valve Head (exhaust) **B**

Splayed-Valve Head (intake) **B**

Splayed-Valve Head (combustion chamber) **B**

12480146

Rough-Machined Splayed-Valve Aluminum Cylinder Head (not shown)

- Main surfaces are machined, exhaust bolt pattern is machined
- Head bolt and dowel holes, intake bolt holes, spark plug holes and pushrod holes are not machined
- Valve guides, valve seats, valve spring seats and rocker stands are not machined
- Valve locations and angles may be relocated
- 240cc "as-cast" intake ports
- 78cc "as-cast" exhaust ports
- 45cc "as-cast" combustion chambers

12480147

Semi-Machined Splayed-Valve Aluminum Cylinder Head (not shown)

- Main surfaces are machined; exhaust bolt pattern, valve guides and spark plug holes are machined
- Head bolt holes, dowel holes, intake bolt holes, pushrod holes are not machined
- Valve seats, spring seats and rocker stands are not machined
- 240cc "as-cast" intake ports
- 78cc "as-cast" exhaust ports
- 45cc "as-cast" combustion chambers
- Same casting as P/N 12480146

B. 24502517

Splayed-Valve Aluminum Cylinder Head

- Semi-machined aluminum race head
- 240cc "as-cast" intake ports
- 78cc "as-cast" exhaust ports
- 45cc "as-cast" combustion chambers
- Same casting as P/N 12480146

Splayed-Valve Aluminum Race Cylinder Heads Continued

A. 12480153

Splayed-Valve 4.500 Bore Center Aluminum Cylinder Head

- Semi-machined aluminum race head
- Great for NHRA competition with dual carburetors
- As-cast ports and combustion chambers for professional finishing
- Use mid-deck block with 4.500" main bore machining
- Special larger head-bolt pattern, 3/8" fasteners, 19 holes
- 240cc "as-cast peanut" intake ports
- 78cc "as-cast peanut" exhaust ports
- 40cc "as-cast" combustion chambers

88958684

Splayed-Valve 4.500 Bore Center Aluminum Cylinder Head Cubed (not shown)

- Great for NHRA competition with dual carburetors
- 240cc "as-cast peanut" intake ports
- 78cc "as-cast peanut" exhaust ports
- "Cubed" aluminum race head
- Bare head, no seats or guides

A Splayed-Valve 4.500 Bore Center Cylinder Head (exhaust)

A Splayed-Valve 4.500 Bore Center Cylinder Head (intake)

A Splayed-Valve 4.500 Bore Center Cylinder Head (combustion chamber)

SB2.2 Cylinder Head (exhaust) B

SB2.2 Cylinder Head (intake) B

SB2.2 Cylinder Head (combustion chamber) B

SB2.2 NASCAR RACE CYLINDER HEADS

The Chevrolet Performance SB2.2 NASCAR racing head was designed to improve durability, simplify preparation procedures, and reduce the overall cost of building and maintaining a Small-Block Chevrolet racing engine. It is ideal for single-four-barrel carburetor applications due to having "mirror" design intake ports and all eight ports being angled toward the center of the engine. Spark plug holes were moved toward the bore center for improved combustion efficiency. 48cc combustion chambers permit 12.1:1-compression-ratio flat-top pistons.

Aluminum SB2.2 NASCAR Race Head Technical Notes:

- 355-T7 X-rayed and "hipped"* aluminum competition cylinder heads
- Extra-thick decks for heavy flat milling
- Extra material around ports for professional porting
- Combustion chambers are very small, shallow and wedge shaped
- Precision T-washers installed in all four center head bolt bosses
- Designed for longer-than-stock 2.150" and 1.625" valves
- Valve spring pads accommodate 1.625" diameter springs
- Modified valve angles, 11° x 4° intake and 8° x 0° exhaust
- Designed for aftermarket shaft-mount rocker systems
- Revised location angled spark plugs (14mm, 5/8" hex, 3/4" reach, gasketed plugs)
- Requires specific left- and right-hand pistons
- Valve cover P/N 12480006
- Replacement AN -08 intake port plugs available as P/N 12480171

B. 12480011

Semi-Finished SB2.2 Aluminum Cylinder Head

- Aluminum NASCAR-accepted head
- Bare head, no seats or guides installed
- Standard .500" guide holes
- As cast "peanut" ports
- 48cc "as-cast" combustion chamber

12480129

Semi-Finished SB2.2 Aluminum Cylinder Head (not shown)

- Aluminum NASCAR-accepted head
- Bare head, no seats or guides
- Reduced size .375" diameter guide holes
- "As-cast peanut" ports
- 48cc "as-cast" combustion chamber

**HIP is the acronym for Hot Isostatic Pressure. This process puts the heads in a sealed vessel where a vacuum is first used to remove room air and any possible contaminants. The vessel is filled with high pressure nitrogen (up to 30,000-psi) and then heated to the required temperature and sustained for a determined amount of time. The cooling process is also a controlled procedure to ensure maximum strength and proper heat treat. This extreme high pressure and heat removes almost 100% of the internal porosities that are generated during the casting process. The material integrity, strength and fatigue life increases significantly.*

Cylinder Heads: Additional Required Components

Part Number	Head Gaskets (Quantity)	Bolts (Quantity)	Spark Plug	Engine Application
93438649	10105117 (2)	10168525 (14), 10168526 (4), 10168527 (16)	N/A	12499529
93438648	10105117 (2)	10168525 (14), 10168526 (4), 10168527 (16)	N/A	12499529
12558060	10105117 (2) OR 12557236 (2)	10168525 (14), 10168526 (4), 10168527 (16)	19300749	19258602, 19210009, 12499101, 19210007, 19210008
19300955	10105117 (2) OR 12557236 (2)	10168525 (14), 10168526 (4), 10168527 (16)	5614210	19318604, 19301295, 19301293, 19301294
12556463	12557236 (2)	10168525 (14), 10168526 (4), 10168527 (16)	5614210	24502609, 88958603, 19201330
25534446	10105117 (2), 10185054 (2) or 12363763 (2)	10168525 (14), 10168526 (4), 10168527 (16)	N/A	12366573, 12496820, 12496822, 12496820

OVERHAUL GASKET KITS

A. 19201171

Rebuild Gasket Kit

- Fits 350 HO, HT383 and Circle Track engine P/N 88958602 and P/N 19258602

This kit includes the following items:

Part Number	Description	Quantity
10105117	Head Gaskets	2
10108676	Oil Pan Gasket Set	1
12555771	Rear Main Seal Housing Gasket	1
89017465	Intake Manifold Gasket Set	1
10105135	Water Outlet Gasket	1
10108435	Front Cover Gasket	1
12560223	Fuel Pump Adapter Gasket	1
3754587	Water Pump Gaskets	2
10108445	Distributor Gasket	1
10046089	Valve Cover Gaskets	2
12554314	Crankshaft Rear Main Seal	1

B. 19201172

Rebuild Gasket Kit

- Fits Fast Burn 385, ZZ5, SP350, ZZ6, ZZ383, SP383 and Circle Track engines P/N 88958604 and P/N 19318604

This kit includes the following items:

Part Number	Description	Quantity
12557236	Head Gaskets	2
10108676	Oil Pan Gasket Set	1
12555771	Rear Main Seal Housing Gasket	1
19301685	Intake Manifold Gasket Set	1
10105135	Water Outlet Gasket	1
12560223	Fuel Pump Adapter Gasket	1
3754587	Water Pump Gaskets	2
10108445	Distributor Gasket	1
10046089	Valve Cover Gaskets	2
12554314	Crankshaft Rear Main Seal	1
12554314	Crankshaft Rear Main Seal	1

CYLINDER HEAD GASKETS AND HEAD BOLTS

Chevrolet Performance cylinder head gaskets, cylinder head bolts and cylinder head studs are the finest-quality parts available. Their superior construction ensures optimum sealing between cylinder heads and the engine block.

Gasket packages contain one gasket unless otherwise specified. Head gaskets are available in a variety of materials and thicknesses. Use the proper gasket to maintain compression ratios and minimum piston-to-cylinder-head clearances.

C. 10105117

Composition Head Gasket

- Composition head gasket with stainless steel fire ring
- For stock or mildly modified engines with 4.0" cylinder bores
- Fits cast-iron or aluminum heads
- Used on Ram Jet 350
- 0.028" compressed thickness

3830711

Steel Shim Head Gasket (not shown)

- For stock and mildly modified engines with 4.0" cylinder bores
- 0.026" compressed thickness

12557236

Composition Head Gasket (not shown)

- Stainless steel fire rings
- Fits aluminum or cast-iron heads
- Used on ZZ4 and 350 HO engines
- 0.051" compressed thickness

D. 10185054

Heavy-Duty Composition Head Gasket

- Teflon-coated
- Pre-flattened wire O-rings around each cylinder
- For competition engines with cylinder bores of 4.0" to 4.125"
- 0.041" compressed thickness

NOTE: *Drill steam holes when used on 400-ci Small-Blocks. Gasket does not require re-torquing.*

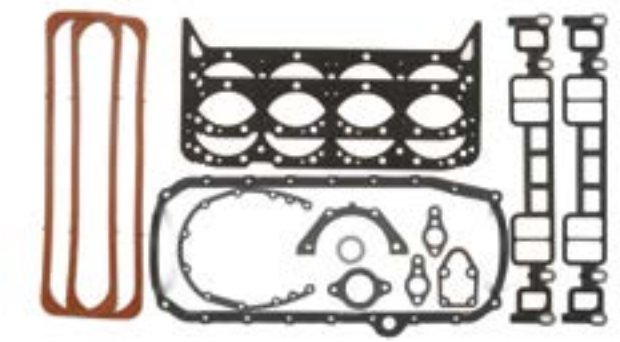

A Rebuild Gasket Kit

B Rebuild Gasket Kit

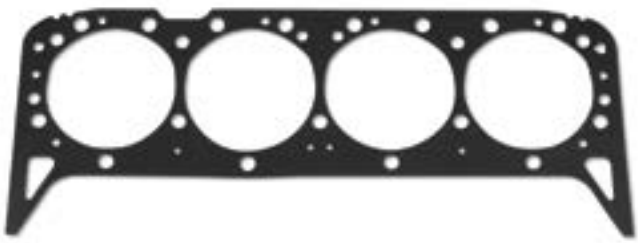

C Composition Head Gasket

D Heavy-Duty Composition Head Gasket

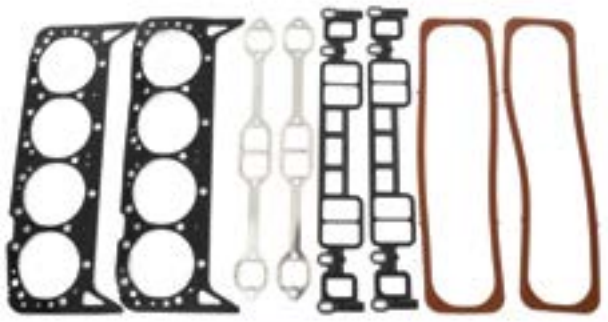

Cylinder Head Installation Kit **E**

Hardened Washer **F**

Cylinder Head Stud Nut **G**

Cylinder Head Dowel Pin **H**

Cylinder Head Bolt Kit **I**

Intake Valve **J** Exhaust Valve **K**

10168457

LT1 Head Gasket (Aluminum Head, not shown)

- Composition gasket for 1992-2001 aluminum head LT1 engines
- 0.050" compressed thickness

E. 12499223

Cylinder Head Installation Kit (5.7L L31 Engine)

- Comprehensive kit
- Includes 2 cylinder head gaskets, 2 valve cover gaskets, 2 intake manifold gasket sets and 2 exhaust manifold gaskets
- 0.028" compressed thickness

Part Number	Description	Quantity
10105117	Cylinder Head Gaskets	2
10046089	Valve Cover Gaskets	2
89017465	Intake Manifold Gaskets	2
12550033	Exhaust Manifold Gaskets	2

HEAD BOLTS AND STUDS

14011040

Hardened Washer (not shown)

- 0.450" I.D. x 0.778" O.D.
- Sold individually

F. 10051155

Hardened Washer

- 0.450" I.D. x 0.750" O.D.
- Sold individually
- For Phase 6 and raised-runner aluminum heads

G. 14044866

Cylinder Head Stud Nut

- Magnafluxed 12-point 4037 steel 7/16"-20 nut
- Sold individually

H. 585927

Cylinder Head Dowel Pin

- Dowel pin 5/16" diameter by 9/16" long
- For all Small-Block V-8 and 90° V-6 engines

I. 12495499

Cylinder Head Bolt Kit

- For iron or aluminum heads
- Includes 14 of P/N 10168525, 4 of P/N 10168526, 16 of P/N 10168527, and thread sealant

SMALL-BLOCK VALVES

J. Intake Valves

Part Number	Valve Size	Stem Size	Description
10241743	1.940"	11/32"	Stock replacement valve used in all of our crate engines except CT350/400, Fast Burn 385 and ZZ383/425
12555331	2.000"	11/32"	Stock replacement valve used in the 1996 LT4 engine, and in our CT400, Fast Burn 385 and ZZ383/425 also in LT4 and Fast Burn heads
12363757	2.000"	11/32"	Stainless steel valves with undercut stems to improve air flow, single groove design, chrome plated stems to reduce wear, hardened tips to withstand high loads

K. Exhaust Valves

Part Number	Valve Size	Stem Size	Description
12550909	1.500"	11/32"	Stock replacement valve used in all of our crate engines except CT350/400, Fast Burn 385 and ZZ383/425
12551313	1.550"	11/32"	Stock replacement valve used in the 1996 LT4 engine, and in our CT400, Fast Burn 385 and ZZ383/425; also in LT4 and Fast Burn heads

SMALL-BLOCK VALVE SPRINGS

Part Number	Spring Type	Outside Diameter	Pressure at Installed Height	Solid height	Average Weight (lbs @ in)	Retainer Part Number	Valve Seal kit	Technical Notes
94666580	Single w/ damper	1.241"	80# @ 1.700"	1.150"	267	14003715	10132715	Production spring for 350/290 HP engines
10134358	Single w/ damper	1.273"	110# @ 1.700"	1.160"	356	14003974	10132715	Chrome silicone steel; use with aluminum heads P/N 12556463; orange color code
330585	Dual	1.379"	140# @ 1.750"	1.150"	325	—	10132715	Use with cam P/N 3927140, and all moderate lift racing cams
10206040	Single spring	1.300"	85# @ 1.780"	1.260"	373	10168424	N/A	1992–1993 LT1 production Corvette engine
12625033	Single spring	1.320"	101# @ 1.780"	1.220"	332	19301708	N/A	CT400, ZZ5 and ZZ383 engines (Beehive Spring)
12499224	Spring kit	1.320"	101# @ 1.780"	1.220"	332	19301708	N/A	Kit of 16 springs P/N 12625033 (Beehive Spring)
10212811	Single spring	1.250"	80# @ 1.700"	1.200"	256	10241744	N/A	CT350/350, 350HO engines
19154761	Spring kit	1.250"	80# @ 1.700"	1.200"	256	10241744	N/A	Kit of 16 Springs P/N 10212811 (see above)

▲

19300952

Beehive Spring Conversion Kit

Convert the valvetrain on your aluminum Fast Burn heads to the beehive-type system used on Chevrolet Performance's latest Fast Burn heads (P/N 19300955) – and used on the SP350, ZZ5, ZZ6, SP383 and ZZ383 crate engines, and CT400 – to gain greater high-rpm capability and valvetrain stability. The springs, retainers and other hardware are direct replacements for the conventional springs and hardware, with no machining of the valve spring seat required. The engine's existing intake and exhaust valves are retained, allowing installation without cylinder head removal if compressed air or another method is used to hold the valves closed. The engine's existing rocker arms are also retained. The kit comes with components to convert a pair of cylinder heads, including:

Part Number	Description	Quantity
12625033	Spring	16
19301708	Cap	16
19301707	Seat	16
19301709	Keeper	32

NOTE: *The conversion kit is intended only for Fast Burn heads and is not compatible with Vortec heads because of insufficient room for the spring seats.*

Service Kit Includes:

Part Number	Description	Quantity
12499224	Spring	16
19303149	Cap	8
19303150	Seat	8
19302868	Keeper	16

NOTE: *Must use with P/N 19210728 or P/N 1921079 Rocker Arms for adequate clearance.*

VALVE SPRING COMPONENTS

Part Number	Description	Technical Notes
10212809	LT4 Valve Spring Shim	Lightweight shims as used on 1996 LT4 Corvette special LT service heads P/N 12363287, and Fast Burn heads. Use with spring P/N 12551483
10185066	Spring Shim	Used on ZZ3 series 350 HO engines. Spacer is 1.350" O.D. x 0.561" I.D. x .050" thick
3875916	Spring Shim	55/64" I.D. x 1-31/64" O.D. x 0.015" thick
10212810	Valve Stem Seal	Used on LT4 and ZZ4 heads as well as Chevrolet Performance Parts head assemblies P/N 25534421, 25534431, 12363287 and 12464298
12511890	Valve Stem Seal Kit	Late-model V-8 seal kit for 11/32" diameter valve stems. Includes eight intake seals, eight exhaust seals and 16 oil stem seals ***NOTE:*** Check for seal-to-guide interference with high-lift cams
10241744	Valve Spring Retainer	Used on 350 HO, 350 Ram Jet and HT383
10045007	Valve Spring Retainer	For all ZZ3 series engines. ***NOTE:*** When converting ZZZ, ZZ1 or ZZ2 engines to ZZ3 series cap, valve spring shield must be removed and add cap P/N 10045007, seal P/N 460483, and spacer P/N 10185066.
19171528	LT4 Valve Spring Cap Kit	Kit for 5.7L LT4 engines. Includes 16 P/N 10212808 lightweight retainers. Use with spring kit P/N 12495494 and key kit P/N 12495503 Used on ZZ4, Fast Burn, LT4 and iron Vortec Bowtie heads
19169661	Heavy Duty Vortec Valve Spring Retainer	Fits Fast Burn and Vortec Bowtie cylinder heads. Designed for circle track racing
12495503	Valve Spring Key Kit	Kit includes 32 keys of P/N 24503856 for 11/32" valve stems. Use on all Small-Block V-8 engines

Rocker Arm Kit, Steel, 1.5 Ratio **A**

Roller Rocker Arm Set **B**

Rocker Arm (top) with adjuster nut **B**

Rocker Arm (bottom) **B**

Adjuster Nut for Roller Rocker Arm **C**

"Kool Nut" **D**

ROCKER ARMS

A. 12495490

Rocker Arm Kit, Steel, 1.5 Ratio (set of 16)

- Self-aligning, high-quality rockers have a nominal 1.5:1 ratio
- Includes 16 stamped steel rockers with pivot balls and nuts
- Use P/N 10089648 for single service part; for 3/8" studs

NOTE: *Not recommended for mechanical lifter camshafts.*

Aluminum Roller Rocker Arm 3/8" Studs

These Chevrolet Performance aluminum roller rocker arms resemble the ones used in the 1996 Corvette LT4 engine, except the trunnions have been machined to fit early-model 3/8-inch rocker studs. The arms are self-aligning with improved stiffness. They will accommodate up to 0.575" valve lift. They are available in 1.5:1 and 1.6:1 ratios.

B. 19210728

Roller Rocker Arm Set, 1.5:1 Ratio

- Set of 16, 3/8" stud 1.5:1 ratio roller rockers
- Use P/N 19210724 for single service part

19210729

Roller Rocker Arm Set, 1.6:1 Ratio (not shown)

- Set of 16, 3/8" stud 1.6:1 ratio roller rockers
- Use P/N 19210725 for single service part

NOTE: *When using a high-lift camshaft, check valve spring coil bind, retainer-to-seal clearance and piston-to-valve clearance. Check for adequate pushrod clearance when using on cast-iron heads. It may be necessary to remove valve cover drippers for proper rocker arm clearance.*

NOTE: *P/N 19210729 cannot be used on ZZ3 engines with orange valve springs.*

C. 19210725

Adjuster Nut for Roller Rocker Arm

- 3/8" adjustment nut
- Used on both aluminum rocker arm kits P/N 12370838 and P/N 12370839

D. 19210731

"Kool Nut" (single)

- Special rocker arm nuts are used on GM Circle Track engine P/N 19258602, 88958602
- Can be used with any stamped steel rocker arm

VALVE COVERS

People can't see the beautiful porting artistry inside your Chevrolet Performance aluminum cylinder heads, but they can, and do, see the valve covers. To make sure your GM engine looks as great as it runs, Chevrolet Performance offers a wide selection of precision-engineered, branded valve covers. The valve covers are either aluminum or stamped steel. They're designed to seal tightly and minimize the chance of oil leakage. Taller competition valve covers are made to easily clear high performance valvetrain components.

NOTE: *Valve covers are sold in pairs unless otherwise specified. Valve covers cannot be used with 15° or 18° heads unless otherwise stated.*

A. 10185064

Tall Aluminum Valve Covers

- Competition racing valve cover displays the Chevrolet name and Bowtie logo
- Natural cast finish
- No holes for PCV or oil fill, but has bosses for drilling them
- Designed for pre-1986 engines with perimeter hold downs
- Can be used with 15° and 18° heads
- Use P/N 10185052 for single service part

B. 12480127

Short Aluminum Valve Covers

- Cast-aluminum Chevy Bowtie-design valve cover is similar to P/N 10185064 except it is a short style with a PVC hole in both covers (grommets included)
- Natural cast finish
- Designed for pre-1986 engines with perimeter hold downs
- Covers have oil baffle
- Not to be used with the 350/290 crate engine

NOTE: *For use with 1.5 ratio stamped rocker arms only.*

C. 24502466

Tall Valve Covers, No Logo

- Create your own custom valve covers!
- Cast-aluminum valve cover is similar to P/N 10185064, but has no logo
- Cast with extra material to permit milling a custom logo

NOTE: *Sold as single piece. Order 2 per engine.*

D. 12341670

Chrome Short Valve Covers

- Short chrome valve covers, with baffle
- For use on pre-1986 engines with perimeter hold downs
- Chevrolet and the Bowtie logo are embossed on top

NOTE: *For use with 1.5 ratio stamped rocker arms only.*

E. 12497978

Polished Aluminum Valve Covers, Center Bolt Design

- Die-cast aluminum valve covers
- Polished to a bright shine
- Approximately 1/4" taller than production covers
- For use on 1986-and-newer engines with center hold-downs
- Kit includes bolts, washers and seals
- Installed on ZZ5 and SP350 crate engines

NOTE: *Use valve cover gasket P/N 10046089 and replacement bolt and seal kit P/N 12497980.*

12497985

Chrome-Finish Aluminum Valve Covers, Center Bolt Design (not shown)

- Die-cast with chrome finish
- Approximately 1/4" taller than production covers
- For use on 1986-and-newer engines with center hold-downs
- Kit includes bolts, washers and seals

NOTE: *Use valve cover gasket P/N 10046089 and replacement bolt and seal kit P/N 12497980.*

A Tall Aluminum Valve Covers

B Short Aluminum Valve Covers

C Tall Valve Covers, No Logo

D Chrome Short Valve Covers

E Polished Aluminum Valve Covers, Center Bolt Design

Aluminum Black Crinkle Valve Covers, Center Bolt Design **F**

Original Corvette V-8 Valve Covers **G**

Mid-Year Corvette Valve Covers **H**

NEW!

Black Slant-Edge Valve Covers **I**

NEW!

Natural Gray Slant-Edge Valve Covers **J**

F. 12497979 ⓘ

Aluminum Black Crinkle Valve Covers, Center Bolt Design

- Die-cast with black crinkle finish
- Approximately 1/4" taller than production covers
- For use on 1986-and-newer engines with center hold-downs
- Kit includes bolts, washers and seals
- Factory installed on new SP383 crate engines

NOTE: *Use valve cover gasket P/N 10046089 and replacement bolt and seal kit P/N 12497980.*

G. 3726086

Original Corvette V-8 Valve Covers

- 1956-1959 V-8
- Off-set bolt holes will not fit newer V-8 heads

NOTE: *Sold as single piece. Order 2 per engine.*

H. Mid-Year Corvette Valve Covers

- These mid-year, finned Corvette valve covers are polished to a high luster

474208

- 1970-1977
- Has breather hole with Corvette "crossed flag" emblem

474207

- 1970-1977
- Has breather hole and an oil-filler cap provision
- Cap not included

I. 19351534 NEW!

Black Slant-Edge Valve Covers

- Includes bolt kit P/N 19351801 and gromet kit P/N 12341988
- Factory installed on new ZZ6 crate engines
- Die cast with black crinkle finish
- For use on 1986-and-newer engines with center hold-downs
- Fits Fast Burn aluminum and Bowtie cast iron heads with center hold-downs

J. 19351803 NEW!

Natural Gray Slant-Edge Valve Covers

- Includes bolt kit P/N 19351801 and gromet kit P/N 12341988
- Die cast with natural finish
- For use on 1986-and-newer engines with center hold-downs
- Fits Fast Burn aluminum and Bowtie cast iron heads with center hold-downs

Valve Covers Continued

A. 25534359

Circle Track Valve Covers, Center Bolt Design

- Sheet metal valve cover kit designed for Gen I design circle track engines equipped with center hold-down cylinder heads
- Covers equipped with 2 breather pipes on 1 cover and no pipes on the other

NOTE: *Use breather kit P/N 25534355 (2 come in kit).*

B. 25534420

Pontiac 301-455 Valve Covers

- Stylish covers fit 301-455 cubic-inch Pontiac engines manufactured from 1965-1979
- Designed for stock valvetrains and may not clear aftermarket rocker arms, springs or stud girdles
- Each cover has one 1.220" hole on left side for oil fill cap; or grommet for PCV or fresh air inlet
- Covers have a natural aluminum finish with machined Pontiac name and logo
- Includes 2 covers and grommet kit P/N 12341988

NOTE: *Does not fit Small-Block Chevy head*

ADAPTERS, HARDWARE AND BREATHERS

C. 12497980

Chrome Bolt Kit, Center Bolt Design

- Service replacement parts for 1986-and-newer center hold-down design, die-cast aluminum valve covers in chrome, crinkle, and polished finishes
- Will not fit production valve covers

12356818

Chrome Hold-Down Bolt (not shown)

- Chrome valve cover hold-down bolt
- Used on all 1986-and-newer engines with center hold-down design stamped valve covers

NOTE: *Package contains 1 bolt. Order 4 per valve cover.*

10066008

Black Hold-Down Bolt (not shown)

- Black valve cover hold-down bolt
- Used on all 1986-and-newer engines with center hold-down design stamped valve covers

NOTE: *Package contains 1 bolt. Order 4 per valve cover.*

D. 88962074

Oil Baffle Tube

- Pushes easily into most valve covers that have an oil baffle
- Requires breather P/N 25534355; used on ZZ572 engines

E. 25534355

Circle Track Breather

- Special breathers are for circle track valve covers used on circle track and ZZ572 engines
- Chrome breathers are 1-3/8", hose-clamp-style with the Bowtie logo on top
- Installs on the left-side of each valve cover
- Kit includes two breathers

A Circle Track Valve Covers, Center Bolt Design

B Pontiac 301-455 V-8 Valve Covers

C Chrome Bolt Kit, Center Bolt Design

D Oil Baffle Tube

E Circle Track Breather

Valve Covers: Additional Required Components

Part Number	Gaskets (Qty)	Bolts (Qty)	Grommets (Qty)	Oil Fillers (Qty)	Engine Application
25534359	10046089 (2)	N/A	3989350 (1)	93439687 (1)	19258602, 88958603, 88958604, 19318604
12497979	10046089 (2)	12497980 (8)	12341988 (8)	N/A	Small-Block
12497985	10046089 (2)	12497980 (8)	12341988 (8)	N/A	Small-Block
12497978	10046089 (2)	12497980 (8)	12341988 (8)	N/A	Small-Block

Push-In Oil Filler Cap **F**

Hold-Down Clamps **G**

Spring Bar Retainer **H**

Spring Bar Retainer, Chrome-Plated **I**

F. 12341993

Push-In Oil Filler Cap

- For valve covers with 1.22" hole

19131218

Chrome Push-In Breather (not shown)

- 2-3/4" O.D. x 1-1/2" tall with 3/4" nipple
- Used on our Fast Burn 385, ZZ4 and 350 engines

G. 12341986

Hold-Down Clamps

- Clamps to minimize distortion of valve cover flanges on 1955-1986 Chevrolet Small-Block V-8 and 90° V-6 engines
- 4 clamps per package; order 2 per engine

H. 14082321

Spring Bar Retainer

- Special steel retainers prevent oil leaks
- Use under the valve cover bolts
- Distribute clamping force over a large area and prevent deformation of the flanges
- Narrow retainers are engineered to fit pre-1986 engines with perimeter-style hold downs

NOTE: *Package contains 1 retainer. Order 4 per valve cover.*

I. 14044820

Spring Bar Retainer, Chrome-Plated

- Similar to retainer P/N 14082321 described above
- Chrome-plated to match chrome valve covers

NOTE: *Package contains 1 retainer. Order 4 per valve cover.*

3933964

Valve Cover Gasket (not shown)

- Cork-type gasket
- Fits all valve covers with perimeter hold-down bolts
- 1 gasket per package

10046089

Valve Cover Gasket (not shown)

- For '86 and newer center hold down design valve covers

SMALL-BLOCK PUSHRODS

Pushrods are that critical connection between the camshaft and the rocker arms. These seemingly innocuous parts play a very important role in the combustion process. That's why Chevrolet Performance pushrods are designed for heavy-duty street and competition applications. They are case-hardened for use with pushrod guideplates.

Pushrods are available in standard and 0.100-inch extended lengths. The longer pushrods can be used to restore correct valvetrain geometry when using a high-lift camshaft with a small base circle. They are also recommended when longer-than-stock valves are installed.

Heavy-Duty Pushrod Kit (0.100" longer than stock)

Part Number	Material	Diameter	Length	Usage	Description
14044874	1010 steel	5/16"	7.724"	Flat tappet	(1) Heavy-duty heat-treated .075" wall, hardened tip inserts; standard length.
366277	1010 steel	5/16"	7.824"	Flat tappet	(1) Heavy-duty heat-treated .075" wall, hardened tip inserts. +.100 long
10046173	1010 steel	5/16"	7.122"	Hyd. roller	(1) Heavy-duty heat-treated .060" wall, standard length; for use in early ZZ-series engines with guideplates
12371041	1010 steel	5/16"	7.122"	Hyd. roller	(16) Heavy-duty .060" wall, standard length; for use in 2nd design ZZ-series engines without guideplates Use P/N 10241740 for single piece
10241740	1010 steel	5/16"	7.122"	Hyd. roller	(1) Heavy-duty .060" wall, standard length; for use in 2nd design ZZ-series engines without guideplates

SMALL-BLOCK GUIDEPLATES

3973418 (not shown)

Pushrod Guideplate (cast-iron head)

- For use with production and Bowtie cast-iron cylinder heads with screw-in studs
- Can also be used with aluminum Bowtie V-6 head
- Should not be used with self-aligning rockers
- Pushrod slots are 0.325"
- For 90° V-6, use on cylinders 1, 2, 5 and 6; guideplate must be ground to clear valve cover hold-down bolts
- Four required per head

ROCKER ARM STUDS

3921912 (not shown)

Screw-In Rocker Stud (7/16" Big-Block style)

- Beefy 7/16" Big-Block V-8 rocker studs
- Improve valvetrain stability of any Small-Block V-8 or 90° V-6 racing engine by minimizing rocker stud flex
- Fits any Small-Block V-8 or 90° V-6 cylinder head machined for screw-in studs
- Requires rocker arm for 7/16" stud

A. 12371058

Screw-In Rocker Stud Kit (LT1, LT4 style)

- 3/8" studs are used on all late-model LT1, LT4.
- Kit includes 16 pieces; for single stud usage, use P/N 12552126
- Lower thread section is 7/16-14

VALVE LIFTERS AND COMPONENTS

B. 12371042

Hydraulic Roller Lifter Kit

- Designed for 1986-and-later engines
- Second-design lifters are used in late-model 350 HO engines and use a higher checkball spring preload
- Includes 16 lifters of P/N 17120735, 8 valve lifter guides, 1 valve lifter guide retainer, 4 retainer bolts, and 4 retainer washers
- This lifter kit plus pushrod kit P/N 12371041 and a roller-tappet design camshaft converts your engine to a roller-lifter engine
- For single lifter usage, use P/N 17120735

C. 88958652

Valve Lifter Guide, "Quick Cam"

- For use on Gen I GM Small-Blocks (block must be drilled and tapped)
- For use with hydraulic roller lifters only
- Makes it possible to remove the camshaft without removing the intake and lifters
- Enough friction in the guide to hold the lifters in place if the rocker arms are backed off and the camshaft is rotated two full revolutions to push up the lifters

NOTE: *Package services one lifter bank.*

D. 12371044

Hydraulic Lifter Kit (set of 16)

- Used on 1986-and-older Gen I and Gen II-style engines
- Kit includes 16 hydraulic flat tappet lifters of P/N 5232720, and is designed for use with standard-length pushrod kit P/N 12495491 or 0.100" longer kit P/N 12371057
- Use P/N 5232720 for single lifter pieces

A Screw-In Rocker Stud Kit (LT1, LT4 style)

B Hydraulic Roller Lifter Kit

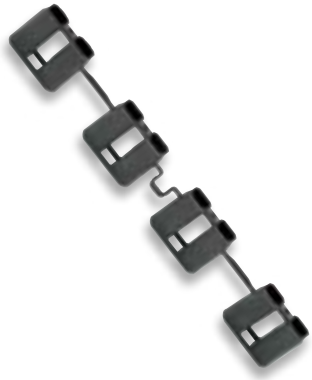

C Valve Lifter Guide, "Quick Cam"

Flat Tappet Lifter

D Hydraulic Lifter Kit

SMALL-BLOCK CAMSHAFTS AND COMPONENTS

A great deal of exacting engineering, extensive development/testing, and precision manufacturing practices go into every Chevrolet Performance camshaft. In many ways, the camshaft can be considered the heart of a high-performance engine. This vital function is why Chevrolet Performance puts so much effort into making sure its camshafts deliver maximum power and drivability.

NOTE: *IMPORTANT! Distributor with melonized steel gear MUST be used with steel camshafts or engine damage will occur.*

Part Number	Description	Duration @ .050" Lift (deg)	Maximum Lift (in) w/1.5 rocker*	Lobe Centerline (deg)	Technical Notes
3896962	Hydraulic flat tappet	I: 222 / E: 222	I: .450 / E: .460	114	Used in 350/290 HP crate engine
24502476	Hydraulic flat tappet	I: 212 / E: 222	I: .435 / E: .460	112.5	Used in 350 HO and CT350 engines
14097395	Hydraulic roller design	I: 196 / E: 206	I: .431 / E: .451	109	For the HT383 truck engine with 1.5 rockers
10185071	Hydraulic roller tappet	I: 208 / E: 221	I: .474 / E: .510	112	For ZZ3, 350 HO, ZZ4, Fast Burn 385 engines; use with spring P/N 10134358 or 12551483
24502586 (1.5 rocker)	Hydraulic roller (LT4 hot cam)	I: 218 / E:228	I: .492 / E: .492	112	Service only; for all V-8 engines with roller cams. (See note below chart)
24502586 (1.6 rocker)	Hydraulic roller (LT4 hot cam)	I: 218 / E:228	1.6 rocker I: .525 / E: .525	112	Service only; for all V-8 engines with roller cams. (See note below chart)
12480002 (1.6 rocker)	Hydraulic roller (LT4 hot cam kit)	I: 218 / E:228	1.6 rocker I: .525 / E: .525	112	Same as P/N 24502586 except this is a kit that includes 1.6 ratio aluminum rockers, valve springs, and retainers (See below for content)
19210723	Hydraulic roller design	I: 222 / E: 230	I: .509 / E: .528	112	Off-highway use only; contains eccentric for mechanical fuel pump
19244485	Hydraulic roller design	I: 234 / E: 242	I: .539 / E: .558	112	Off-highway use only; contains eccentric for mechanical fuel pump

**Unless otherwise specified*

NOTE: *The LT4 camshaft P/N 24502586 was designed to be used in many different engines. The following change may be necessary for correct engine assembly: For LT1 and L98 engines (pre-1996) the dowel pin in the end of the camshaft must be pushed in so extension from end of cam is .30"+/- .01". For 1996 LT1 and LT4 engines, the dowel pin is in the correct position extending .620" from the end of the camshaft. This cam has a fuel pump lobe.*

CAMSHAFT KITS, RETAINERS AND REAR COVER KITS

Part Number	Description	Technical Notes
12499229	5.7L Vortec Camshaft Install Kit (not shown)	Convenient, inclusive kit. Includes 2 water pump gaskets, intake manifold gasket set, 2 valve cover gaskets, a distributor gasket and a front crankshaft seal assembly
10088128	Camshaft Retainer (not shown)	First design with 3.620" bolt center as used on ZZZ, ZZ1 and ZZ2 engines
10168501	Camshaft Retainer (not shown)	Second design with 3.294" bolt center as used on ZZ3 and ZZ4 engines
24502459	Camshaft Rear Cover Kit (not shown)	Cover and O-ring gasket for sealing rear camshaft hole on all "CNC" aluminum and iron blocks. Includes bolts

12480002

350 Hot Cam Kit

Off-highway kit converts production LT1 engine for showroom stock racing. Improves Small-Block originally equipped with roller tappet camshaft for significant horsepower gains. For roller lifter blocks only. Lifters are not included (re-use original roller lifters).

This kit includes the following items:

Part Number	Description	Quantity
24502586	Camshaft	1
19210729	Roller Rocker Arms	16
12551483	Valve Springs	16
19169661	Retainers	16
24503856	Valve Keys	16
10212809	Valve Spring Shims	16

CONNECTING RODS AND COMPONENTS

A. 12495071

Connecting Rod Kit

- High-quality, 5.700" powdered metal (PM) connecting rods
- For competition or street applications below 500 horsepower
- Replaces the old "pink rods" and are the same rods used in LT1 and LT4 Corvette engines
- Includes 8 P/N 10108688 rods, available individually

19332460

383 Connecting Rod Kit, 3rd Design (not shown)

383-cubic-inch engines

- Third design, PM rod machined for clearance
- Standard 0.927" pin and 2.100" rod journal
- Cap retained by stud and nut, not standard type bolt
- Use P/N 19332460 for single service part

B. 17800761

Connecting Rod Bearing Kit, 350 and 383 Engine (standard)

- 8 heavy-duty bearings
- Second design, without chamfer
- For all 383-cubic-inch engines

C. 12491166

Connecting Rod Stud and Nut Kit, 383 Engine

- Studs and 12-point nuts (16 each) for all 383-cubic-inch engines
- Use with connecting rod P/N 12497624

A Connecting Rod Kit

B Connecting Rod Bearing Kit, 350 and 383 Engine

C Connecting Rod Stud and Nut Kit, 383 Engine

PISTONS AND PISTON RINGS

Compressing the air/fuel mixture and dealing with the explosive forces inside an engine's cylinders isn't a job for weak parts. That's why Chevrolet Performance pistons are premium quality and factory-tested to withstand the rigors of high-performance street and competition engines. Chevrolet Performance pistons are available in a variety of compression ratios and bore sizes. They're sold individually, unless otherwise specified, and wrist pins are included.

Pistons

Part Number	Engine Size	Compression Ratio	Head Chamber Volume	Size	Pin Type	Technical Notes
93422884	350	8.5:1	76cc	Standard	Pressed	350/290 HP
10159436	350	10:1	58cc	Standard	Pressed	5.7L HO, ZZ4 and LT1; high silicon aluminum
12514101	350	9.1:1	64cc	Standard	Pressed	350-cid 300 hp and 330 hp service engine with "SP" ID
88962542	383	9.1:1 / 9.7:1*	64cc / 62cc	Standard	Pressed	383 engine, first or second design
88962748	383	9.1:1 / 9.7:1*	64cc / 62cc	+0.005	Pressed	383 engine, second design
88962749	383	9.1:1 / 9.7:1*	64cc / 62cc	+0.030	Pressed	383 engine, first or second design
12499103	383	9.1:1 / 9.7:1*	64cc / 62cc	+0.005	Pressed	Kit containing 8 of P/N 88962748 (383 engine, second design)
12499104	383	9.1:1 / 9.7:1*	64cc / 62cc	+0.030	Pressed	Kit containing 8 of P/N 88962749 (383 engine, second design)

**Compression Ratio based on .028" thick head gasket.*

Piston Rings

Part Number	Bore Size	Oversize	Ring Thickness	Description
12528817	4.000"	Standard	—	Low tension rings for ZZ4, LT1, and LT4 engines
12499135	4.000"	Standard	—	Premium quality standard-size rings for 1st design 383 engines
12499136	4.000"	+.030"	—	Premium quality rings for 383 engines
12499107	4.000"	+.005"	—	Set of 8 ring packs
12499231	4.000"	Standard	—	Set of 8 ring packs of P/N 12528817

BUILDER'S TIP

CAST VS. FORGED – PICKING THE RIGHT PISTONS

It's the classic engine builder's dilemma: cast or forged pistons? Conventional wisdom holds that forged aluminum pistons are hands-down the stronger option. And while it's true they are generally stronger than hypereutectic cast aluminum pistons, it's not to say cast pistons are weak. In fact, modern hypereutectic pistons are made with higher silicon content and offer exceptional strength, as well as thermal properties that generally make them quieter. When determining which piston material to use on your project, a good rule of thumb is this: go forged if the engine is targeted at more than 550 horsepower and/or uses a power-adder, such as a supercharger, turbo or nitrous. Otherwise, save a little money and use the sturdy, modern hypereutectic pistons.

CRANKSHAFTS

A crankshaft is that massive piece of convoluted steel that holds the whole engine together. An engine is essentially a pump, and without a strong crankshaft, the pump won't work. Chevrolet Performance puts the same top-quality engineering and manufacturing processes into its crankshafts as it does all its parts. These crankshafts are the same ones used in Chevrolet Performance crate engines. The crankshafts are available in cast-iron and forged steel. Forged crankshafts should be used for higher-horsepower applications.

Part Number	Description	Technical Notes
14088526	Crankshaft, Cast-iron (not shown)	Nodular cast-iron with 3.480" stroke and 2.100" diameter rod journals. 1-piece rear main seal crankshaft for 300- and 330-horsepower engines. ***NOTE:*** *This crank does not have a pilot bearing.*
12670965	Crankshaft, Forged Steel (used in late-style ZZ4, ZZ5 and ZZ6 engine; not shown)	Forged 1053 steel crankshaft used in post-November 1998 ZZ4 engines. Replaces all cast or steel ZZ4 crankshafts. ***NOTE:*** *Must be used with connecting rod P/N 10108688 and piston P/N 10159436.*
12489436	Crankshaft, 383-Cubic-Inch Forged Steel (shown above)	Forged 4340 steel crankshaft used to create 383-cubic-inch engines with 3.800" stroke. Rod journals are 2.100". Mains are standard 350 size. ***NOTE:*** *Should be used with connecting rods P/N 19169670, bearing kit P/N 17800761, standard pistons P/N 88962748 or 0.030" oversize pistons P/N 88962749, balancer P/N 12498008, and 1986-and-later one-piece crank seal design flywheel or flexplate.*
14061685	Roller Pilot Bearing (not shown)	Used in high-performance manual transmission applications

ZZ6 and CT400 Engine Balancer (P/N 19301706)

383 Crate Engine Balancer w/1-Piece Crank Seal (P/N 12498008)

Racing Balancer (P/N 24502534 & 24502535)

BALANCERS AND PULLEYS

Balancers are relatively small parts that play a big role in how smooth an engine runs. Balancers are also known as torsional dampers or harmonic balancers, which is indicative of how they help control unwanted crankshaft vibrations. By controlling vibrations, Chevrolet Performance balancers help engines run smoothly, which also extends engine life.

Small-Block Balancers

Part Number	Engine Application	Outside Diameter	Technical Notes
12551537	1969-up 305 and 350; 90V-6 competition (not shown)	6.750"	Smaller size for limited clearance. Timing mark is 10 degrees before keyway centerline. Use with timing pointer P/N 3991435
19301706	1970-74 350; ZZ6 and CT 400 crate engine	8"	Nodular iron. Inertia ring is 1-11/16" wide. Use with timing pointer P/N 3991436. For externally balanced engines
12498008	383 crate engine with 1-piece crank seal	8"	Use with 383 engine components and crankshaft P/N 12489436. For externally balanced engines. Counter weight can be removed for neutral balance
24502534	All racing. Accepts standard pulleys	7.074"	NASCAR-approved and specially tuned up to 9,000 rpm. Uses standard crank hub diameter
24502535	All racing	7.074"	NASCAR-approved and specially tuned. Use with large-diameter 1.598" crankshaft hub

Pulleys and Bolts

Part Number	Engine Application	Technical Notes
3858533	Crankshaft Pulley, 6-5/8" (not shown)	Two-groove, high-rpm, 6-5/8" pulley. For engines with short water pump. ***NOTE:*** *Can be used with a water pump pulley and belt P/N 9433722 without an idler pulley or alternator.*
9440024	Crankshaft Bolt (not shown)	Positive retention 7/16"-20 x 2-1/4" bolt for engines with tapped crank snouts. Use with washer P/N 14001829

Lightweight Flywheel, 1986-up

Standard-Weight Flywheel, 1986-up

12-3/4" Flexplate

14" Flexplate

FLYWHEELS AND FLEXPLATES

At the opposite end of the crankshaft from the balancer are flywheels and flexplates, which connect the engine to either manual (flywheels) or automatic (flexplates) transmissions. Chevrolet Performance offers both internally and externally balanced flywheels and flexplates. It is critical that you use the correct design for your engine application.

IMPORTANT: *All Chevy Small-Block and Big-Block engines with one-piece crankshaft seal require an externally balanced flywheel or flexplate.*

Small-Block Flywheels

Part Number	Year of Engine	Outside Diameter	Crank Flange Bolt Pattern	Clutch Diameter	Starter Ring Gear Teeth	Technical Notes
14085720	1955–1985	12.750"	3.580"	10.400"	153	For 2-piece crank seal. Lightweight nodular iron; weighs approximately 15 pounds
3991469	1955–1985	14"	3.580"	10.400"; 11.000"	168	For 2-piece crank seal
14088646	1986–up	12.750"	3.000"	10.000"	153	For 1-piece crank seal. Lightweight nodular iron; weighs approximately 17 pounds
14088650	1986–up	12.750"	3.000"	10.400"	153	Standard-weight flywheel for 1-piece crank seal
14088648	1986–up	14"	3.000"	11.000"; 11.850"	168	For 1-piece crank seal

Small-Block Flexplates

Part Number	Year of Engine	Outside Diameter	Crank Flange Bolt Pattern	Clutch Diameter	Starter Ring Gear Teeth	Technical Notes
471598	1955–1985	14"	3.580"	10.750"; 11.500"	168	For internally balanced engine with 2-piece crank seal
471529*	1955–1985	12.750"	3.580"	9.750"; 10.750"	153	For internally balanced engine with 2-piece crank seal
14088765*	1986–up	12.750"	3.000"	10.750"	153	For externally balanced 1-piece crank seal
12554824	1986–up	14"	3.000"	11.500"	168	Heavy-duty flexplate with increased thickness for 1-piece crank seal, externally balanced
14088761	1986–up	14"	3.000"	10.750"; 11.500"	168	For 1-piece crank seal, externally balanced

**Will not work with new SuperMatic™ torque converters*

Bolts

Part Number	Description	Technical Notes
12337973	Flywheel Bolt (not shown)	Fits all Chevy Small-Block V-8, Big-Block V-8 and 90° V-6 engines. Sold individually; 6 required per engine
3727207	Flexplate Bolt (not shown)	Fits all Chevy Small-Block V-8, Big-Block V-8 and 90° V-6 engines. Sold individually; 6 required per engine

BUILDER'S TIP

SMALL-BLOCK OIL PUMP OVERKILL

Over the years, many engine builders have employed Big-Block oil pumps on high-performance Small-Blocks. Unless you're building a dedicated racing engine, that's not necessarily a great idea. There are advantages to the Big-Block pump, but with its 3/4-inch pickup tube, it's very easy to suck all the oil out of a standard-capacity Small-Block oil pan, starving the engine at higher rpm. For most street/strip combinations, a Small-Block pump with the standard 5/8-inch pickup tube is adequate. If you're going to try the Big-Block pump, make sure to use a large-capacity pan and don't let the oil level get low!

TIMING CHAINS AND SPROCKETS

The timing chain connects the crankshaft to the camshaft and ensures those two key components work in a synchronized manner. Chevrolet Performance's strong, accurate timing chains and sprockets provide top performance and dependable service.

A. 12371043

Single Roller Timing Chain Kit

- Performance kit for all 1987-and-newer engines with roller lifter camshaft, except LT1, LT4 and LS-Series
- Includes chain P/N 14088783, crank sprocket P/N 14088784, cam sprocket P/N 12552129, retainers and bolts

NOTE: *Will not work with flat tappet camshafts or LT1 and LT4 engines.*

B. 12370835

Extreme-Duty Timing Chain Kit, LT1 and LT4 Engines

- Performance upgrade, extreme-duty timing chain kit for 1995-and-newer LT1 and LT4 engines
- Includes roller timing chain P/N 14088783, crankshaft sprocket P/N 14088784, camshaft sprocket P/N 10214880 and water pump gear P/N 12551728
- Use with pin-drive camshaft only

14088783

Roller Timing Chain (not shown)

- Heavy-duty, single-roller chain for ZZ-design 350 HO engine
- Use with crank sprocket P/N 14088784 and cam sprocket P/N 12552129

14088784

Crankshaft Sprocket (not shown)

- Single-roller-type for ZZ-design 350 HO engine

12552129

Camshaft Sprocket (not shown)

- Single-roller-type for ZZ-design 350 HO engine

C. 9424877

Camshaft Bolt

- 5/16"-18 x 0.750" bolt (3 required)

12554553

Camshaft Dowel Pin (not shown)

12555887

LT4 Timing Chain (not shown)

- Quiet roller design for all LT4 engines
- Use with crank sprocket P/N 12555886 and cam sprocket P/N 12555885

D. 12367600

LT1/LT4 Front Cover Plug

- Covers the hole on the front cover of a 1996 LT4 engine when original distributor is removed and replaced with rear-mounted distributor
- Must be used with 1995 to 1997 timing covers. Will not fit the earlier covers that had non-vented opti-spark units

A Single Roller Timing Chain Kit

B Extreme Duty Timing Chain Kit, LT1 and LT4 Engines

C Camshaft Bolt

D LT1/LT4 Front Cover Plug

Water Pump, Long-Style **E**

Aluminum Water Pump, Short-Style **F**

Water Pump Pulley **G**

WATER PUMPS, PULLEYS AND COMPONENTS

E. 88894341

Water Pump, Long-Style

- Late-style cast-iron pump with long mounting legs, reinforced snout and 3/4" diameter shaft
- End of shaft is reduced to 5/8" diameter
- Use with 350 HO, 383 and ZZ4 engines

F. 19168604

Aluminum Water Pump, Short-Style

- Saves weight over comparable iron pump
- Casting has short-style mounting legs used on pre-1982 Corvettes
- Pump has reinforced 3/4" diameter snout and a large hub with dual bolt patterns

***NOTE**: Pump housing has a boss which can be drilled and tapped for a cam stop. Can be used with the ZZ4 engine with composite front timing cover by exchanging the bolts that hold the rear sheet metal plate to the pump with pan-head bolts P/N 14010976 or equivalent aftermarket bolts.*

***NOTE:** Cam stop boss may interfere on engines with 8" damper. Some clearancing may be required.*

25534390

R0X Water Pump Housing with Cassette (not shown)

- Housing bolts directly to the block
- Block openings are spread to 9.400"
- Standard front inlet and outlet openings
- Includes Water Pump Cassette P/N 25534391

G. 3942992

Water Pump Pulley

- Fits 1971-and-newer and short-leg water pumps with large hubs

***NOTE:** Must be modified to fit water pump with 3/4" shaft.*

ACCESSORY DRIVE SYSTEMS

A. 12497698

Serpentine Accessory Drive System (with Air Conditioning)

- Fits Gen I-style engines
- Deluxe kit includes all the components and hardware necessary to install on an engine with air conditioning, including water pump, alternator, power steering pump and idler bracket; belt included

The system includes:

10055800	Secondary Air Injector Pump Bracket
88964863	Air Compressor Assembly (CR4)
10129569	Idler Belt Pulley Bracket
19201601	Water Pump Kit
10055880	Water Pump Pulley
10055879	Crankshaft Pulley
19152464	Alternator Assembly – 105 AMP (reman)
88987962	Alternator Connector (with lead)
10055798	Drive Belt Tensioner Assembly
88986814	Belt (fan, water pump, A/C, power steering pump, and alternator)
10105212	Alternator and Power Steering Bracket
19319858	Power Steering Pump (reman)
12605677	Power Steering Pulley

12497697

Serpentine Accessory Drive System (without Air Conditioning, not shown)

- Fits Gen I-style engines
- Deluxe kit includes all the components and hardware necessary to install on an engine without air conditioning, including water pump, alternator, power steering pump and idler bracket; belt included
- Includes all components from above kit, minus air compressor assembly

OIL PANS, OIL PUMPS, GASKETS AND COMPONENTS

Oil is your engine's lifeblood and a high-quality Chevrolet Performance oil pan keeps it where it belongs. Our properly designed and manufactured oil pans fit right and, along with matching gaskets, prevent leaks for years of trouble-free service. Chevrolet Performance has oil pans for street and competition applications.

(Oil pans are sold without dipsticks or other hardware unless otherwise specified.)

It's important to note that Chevrolet V-8 and V-6 engines were redesigned in 1986 to include a one-piece rear main seal. That change required a correspondingly new oil pan design. For pre-1986 engines, there is a newer one-piece pan gasket available. Oil pans and gaskets are not interchangeable between early and late design engines. Blocks that have been machined for a one-piece real main seal require seal adapter P/N 10051118 and must use the newer-style oil pan and gasket.

B. 12557558

Oil Pan, 1986-1992 F-Car and ZZ4

- Four-quart pan used on ZZ4 crate engines and 1986-92 Camaro and Firebird
- Internal baffling and right-hand dipstick
- Designed for 1-piece rear main and 1-piece oil pan gasket
- Fits with crankshaft seal adapter P/N 10051118 (discontinued)

NOTE: *Use with oil pan rail reinforcement P/N 12553058 (LH) and 12553059 (RH).*

C. 360450

Oil Pan, Z/28-Style (2-Piece Rear Main Seal)

- Four-quart oil pan fits 1970-79 Camaro and 1979 Corvette
- Internal baffling and a left-hand dipstick
- Use with 2-piece rear main seal on 1955–1979 blocks
- Requires gasket P/N 14079399

A Serpentine Accessory Drive System (with air conditioning)

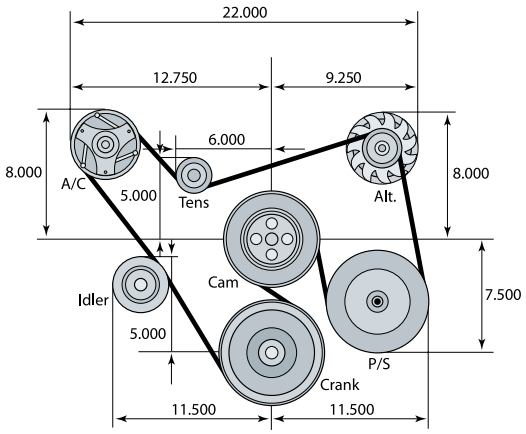

A Serpentine Accessory Drive System (with air conditioning)

B Oil Pan, 1986–1992 F-car and ZZ4

C Oil Pan, Z/28-Style

Circle Track "Late Model" Oil Pan **D**

Windage Tray **E**

Windage Tray **F**

25534353

Circle Track "Factory Stock" Oil Pan (not shown)

- Special black-powder-coated 8-quart circle track pan is used in the Circle Track engine P/N 19258602
- 8" sump has a single 3.5" kickout on the right-hand side
- Includes a fully louvered windage tray, oil scraper, three trap doors, oil level plug, and 3/4" oil pick-up tube
- 8" deep

D. 25534354

Circle Track "Late-Model" Oil Pan

- Special black-powder-coated, 8-quart circle track pan is used in the factory stock engines P/N 88958603 and P/N 19318604
- 7" sump has a 3.500" kickout on both sides
- Includes a fully louvered windage tray, three crankshaft scrapers, six trap doors, two runners, an oil temperature fitting provision, oil level plug, and 5/8" oil pick-up tube
- 7" deep
- Oil pickup tube available separately P/N 19171997

10108676

Oil Pan Gasket, 1-Piece Rear Main Seal (not shown)

- Neoprene 1-piece gasket for 1986-and-newer engines

E. 3927136

Windage Tray

- Separates the oil in the pan sump from the rotating crank assembly to reduce aeration of the oil
- Aids in oil control and minimizes oil slosh under hard braking
- Use with oil pan P/N 360450

NOTE: *Requires five mounting studs P/N 14087508 for 1968-and-later blocks. Use mounting studs P/N 3872718 with pre-1968 blocks. On 400-cubic-inch Small-Blocks the baffle requires modifying by elongating mounting holes. Check tray clearance with long-stroke crankshafts and/or non-stock connecting rods.*

F. 12554816

Windage Tray

- Flat oil pan baffle used with 1986-1996 Corvette pan P/N 10055765
- For 1968-and-newer blocks, use five mounting studs P/N 14087508
- For pre-1968 blocks, use studs P/N 3872718

Oil Filter Adapter

Oil Pump, High Volume

OIL PUMPS & FILTERS

Part Number	Description	Technical Notes
93427692	Oil Pump, High-Pressure LT1/LT4-Style (not shown)	Production-style high-pressure 1993-1997 LT1/LT4 oil pump with 1.200" gears. Produces 60-70-psi oil pressure; screen not included
14044872	Oil Pump, High Volume	High-volume pump has 1.500" gears for increased volume. Approximately 25 percent more capacity than a production pump at standard pressure; pick-up not included
10046007	Oil Pump Bolt (not shown)	Fits all models, 7/16"-14 x 2 3/8"
3998287	Oil Pump Shaft (not shown)	Fits all 1959-and-newer engines
3764554	Oil Pump Shaft Retainer (not shown)	Fits all 1959-and-newer engines. Use with oil pump shaft P/N 3998287
3848911	Oil Pump Spring (not shown)	Regulates oil pressure at approximately 70 psi. Use with high-volume pump, P/N 93427692 ***NOTE:*** *Minimum recommended oil pressure for off-highway use is 65 psi at engine operating speed.*
19299222	Oil Filter Adapter	Mounts a spin-on cartridge for Gen I and II Small-Block V-8s. Contains a filter bypass valve and requires two attaching bolts, P/N 3951644
24241872	Magnetic Drain Plug (not shown)	Catches and holds small pieces of metal before they can cause engine damage

DISTRIBUTORS AND COMPONENTS

High-quality, durable and dependable Chevrolet Performance distributors optimize the performance of your GM engine. These distributors are interchangeable among standard GM Small-Block and Big-Block V-8s. For tall-deck engines, use adjustable slip collar distributor P/N 10093387.

NOTE: *Melonized distributor gear P/N 10456413 is required on all Chevrolet Performance crate engines, or serious damage will occur.*

A. 93440806

Distributor, HEI

- Cast aluminum distributor for all Small-Block and Big-Block V-8 engine assemblies
- High-performance mechanical advance curve
- Vacuum advance canister included
- Use connector P/N 12167658 to attach tachometer and 12-volt power supply wire to distributor
- Includes module P/N 19180771, cap P/N 19110931 and rotor P/N 19110934

B. 88961867

Distributor, Billet HEI

- CNC-machined billet aluminum housing provides great strength
- Ball-bearing guide, oversized shaft and long sintered bushing for stability
- Offers mechanical advance and vacuum advance
- Includes brass terminal cap
- Use connector P/N 12167658 to attach tachometer and 12-volt power supply wire to distributor

C. 1104060

Distributor, Ram Jet 350 and Ram Jet 502

- Used on the fuel-injected Ram Jet 350 and Ram Jet 502
- Includes ignition module P/N 10482830, cap P/N 19166099 and rotor P/N 10477219

1103952

Distributor, Late-Model EFI (not shown)

- Used on late-model V-8 engines with fuel injection and computer controls
- Kit includes ignition module, cap and rotor

D. 10093387

Distributor, Adjustable Slip Collar

- Designed for competition use
- Billet aluminum housing
- Ball-bearing guide
- Adjustable mechanical advance
- Magnetic pickup
- Uses standard cap and rotor
- Adjustable slip collar for tall-deck blocks or to compensate for cylinder head or block machining

19052845

Distributor Gear (not shown)

- Melonized gear for distributor P/N 1103952

10456413

Distributor Gear (not shown)

- Melonized iron gear is required on all Chevrolet Performance crate engines
- Failure to use this gear will affect the engine warranty

NOTE: *Supplied on distributor P/N 93440806.*

12167658

Connector, HEI Distributor Power and Tachometer (not shown)

- Used to attach the power and tachometer wires to the cap of the HEI distributor

12498335

Coil, HEI (not shown)

- Production HEI coil

A Distributor, HEI

B Distributor, Billet HEI

C Distributor, Ram Jet 350 & Ram Jet 502

D Distributor, Adjustable Slip Collar

INTAKE MANIFOLDS, GASKETS AND COMPONENTS

Intake manifolds distribute the air/fuel mixture to the appropriate cylinders. Intake manifold design is geared toward the end usage, whether that is a street performance engine or an all-out competition application. The wide range of Chevrolet Performance intake manifolds means there is an ideal manifold for your every need. There are cast-iron and aluminum intake manifolds for carbureted and fuel injected applications. Chevrolet Performance intake manifolds were designed specifically for GM engines, so you know they will deliver O.E. performance.

Intake Manifold, ZZ Series **E**

E. 10185063

Intake Manifold, ZZ Series

- Aluminum manifold used on all 350 HO engines
- Can be used on all Small-Blocks through 1986
- Dual-pattern carburetor flange is approximately 1/2" lower than the 1970 LT1 intake, yet produces the same horsepower
- Provisions for all late-model accessory brackets, EGR, and an integral hot-air choke
- A heat shield can be mounted underneath for improved performance

NOTE: *Open carburetor spacer is not recommended for use with dual-plane intake manifolds.*

Intake Manifold, Vortec Head Design **F**

F. 12366573

Intake Manifold, Vortec Head Design

- Designed for 283-400-cubic-inch engines using Vortec cylinder heads P/N 12558060, P/N 19300956, P/N 19300955, P/N 19331470, or P/N 19331472
- Has 4-bolts per side to attach it to these cylinder heads
- Aluminum high-rise design maximizes horsepower and delivers a broad torque curve
- Accepts a square-bore 4150-style carburetor and includes externally plumbed hot water crossover passage
- Use manifold gasket P/N 89017465 and eight attachment bolts, P/N 12550027

NOTE: *Vortec heads were originally released on 1996-1999 truck engines. Check for hood clearance, especially with Corvette.*

NOTE: *Open carburetor spacer is not recommended for use with dual-plane intake manifolds.*

Intake Manifold, Vortec Head Design (Dual-Pattern Carb Mount) **G**

G. 12496820

Intake Manifold, Vortec Head Design

(Dual-Pattern Carb Mount)

- This dual-bolt-pattern aluminum manifold will work with all Vortec cylinder heads P/N 12529093, P/N 12558060, P/N 19300956, P/N 19300995, P/N 19331470, or P/N 19331472
- Will accept Holley or Quadrajet-style carburetors
- Will accept an EGR valve, P/N 17052693
- To block EGR port, use P/N 12556596
- Requires intake manifold gasket kit P/N 19301685 and 8 special manifold bolts, P/N 12550027

NOTE: *Open carburetor spacer is not recommended for use with dual-plane intake manifolds.*

Intake Manifolds, Gaskets and Components Continued

A. 12496821

Intake Manifold, Vortec Head Design for TBI

- Designed for throttle-body fuel injection
- Aluminum intake will work with all Vortec cylinder heads, including P/N 12558060, P/N 19300956, P/N 19300955, P/N 19331470, or P/N 19331472
- Also accepts EGR

NOTE: *The exhaust manifold from 1996-and-newer pickup trucks with RPO L31 350 engine, P/N 12557828, is drilled and tapped to accept an EGR tube. EGR pipe P/N 10220275 can be used with EGR Valve P/N 19210662 and gasket P/N 12337972. This manifold is primarily intended for use with Vortec heads on pre-1996 engine blocks. Blocks manufactured in 1995 or earlier have thermostat bypass passage from the block directly to the water pump. If manifold is used on 1996 and later engines (which do not have the bypass in the block), you must run a coolant bypass line from the manifold to the 5/8" hose nipple on the water pump (passenger's side). Suggested routing is from the 3/8 NPSF boss on manifold to the water pump.*

B. 12496822

Intake Manifold, Eliminator Vortec Head Design

- Designed to deliver the most power and torque with Vortec cylinder head P/N 12529093, P/N 12558060, P/N 19300956, P/N 19300955, P/N 19331470 or P/N 19331472
- Use intake manifold gasket kit P/N 19301685 and 8 special manifold bolts P/N 12550027

C. 24502592

LT1 Intake Manifold

- Fits 1992-1996 Gen II LT1 engines and permits the use of a carburetor
- Long runners increase engine torque up to 30 lb.-ft. without sacrificing top-end horsepower
- There are no water coolant holes on this manifold

NOTE: *Open carburetor spacer is not recommended for use with dual-plane intake manifolds.*

A Intake Manifold, Vortec Head Design for TBI

B Intake Manifold, Eliminator Vortec Head Design

C LT1 Intake Manifold

Bowtie Intake Manifold, Raised Runner **D**

Bowtie Intake Manifold, Standard Runner **E**

Ram Jet Fuel Injection Manifold Kit (less electronics) **F**

D. 10051103

Bowtie Intake Manifold, Raised Runner

- Runners of this single-plane aluminum intake manifold are raised .200" to match the ports of Bowtie cylinder head P/N 10051101 (discontinued)
- Air gap beneath the runners isolates the intake charge from hot engine oil
- A 2" carburetor spacer is recommended
- Accepts standard-flange 4-bbl carb
- For competition use only, as there are no heat riser passages

E. 10051102

Bowtie Intake Manifold, Standard Runner

- This standard-runner manifold is based on the raised-runner intake P/N 10051103 (see above)

F. 12498032

Ram Jet Fuel Injection Manifold Kit (less electronics)

- Retro-fit fuel injection kit will fit V-8 engines using Vortec cylinder heads P/N 12558060, P/N 19300956, P/N 19300955, P/N 19331470, or P/N 19331472
- Must be used with an aftermarket ECU and wiring harness with the proper calibration
- The same as used on Ram Jet 350 engine P/N 12499120. (MEFI with ECU and Wire Harness Kit P/N 12499116 is not calibrated for anything other than Ram Jet 350.)

Kit includes the following (as well as brackets, sensors, bolts, nuts, gaskets, and other small parts):

17096144	Throttle Body	**12489371**	Intake Manifold
12097982	Ignition Wire	**12598697**	Coil
12498951	Air Cleaner	**1104060**	Distributor
19244617	8 Fuel Injectors	**12553918**	Injector Rail
10456126	Knock Sensor	**12614973**	MAP Sensor
17123897	Fuel Pressure Regulator	**15326386**	Engine Temp Sensor

NOTE: *It does not include ECU or wiring harness, which must be sourced separately.*

12489371 ⓘ

Ram Jet 350 Intake Manifold (not shown)

- Used on the Ram Jet 350 engine assembly P/N 12499120
- Bare manifold only – no throttle body, injector rails, injectors, bracket or other components
- See P/N 12498032 for complete manifold kit

RAM JET ELECTRONICS

Part Number	Description	Technical Notes
88962717	MEFI 4 ECU, Ram Jet 350 (not shown)	Replacement ECU for all Ram Jet 350 crate engines, MEFI 3 P/N 12495515 or MEFI 4 P/N 12499120 MEFI 4 Ram Jet engine is a closed-loop system that gives a much smoother idle and improved performance ***NOTE:*** *Replacing the ECU on MEFI 3 Ram Jet engine P/N 12495515 requires using new wire harness kit P/N 12499116, or use jumper wire P/N 88963118 to use MEFI 4 ECU as an open-loop system.*
12499116	MEFI 4 ECU and Wire Harness Kit, Ram Jet 350 (not shown)	Use to convert a Ram Jet 350 from MEFI 3 to the newer MEFI 4 design, which provides a better idle through closed-loop operation. Includes ECU module P/N 88962717, wire harness P/N 88961967, oxygen sensor P/N 19178918, intake air temp sensor P/N 25036751, and oxygen sensor fitting P/N 15156588 ***NOTE:*** *ECU is programmed with a "green mode" that controls the rpm for the break-in period. During this period, engine speed is limited to 4,000 rpm in the first hour, 4,500 rpm in the second hour and 5,500 rpm in the third hour.*
88961967	MEFI 4 ECU Wire Harness, Ram Jet 350 (not shown)	Designed to be used with the MEFI 4 Ram Jet 350 P/N 12499120 and MEFI 4 ECU P/N 88962717
15156588	Fitting, Oxygen Sensor (not shown)	Used on all MEFI 4 electronic controlled ignition systems. Should be welded into the exhaust pipe so the oxygen sensor can be screwed into the exhaust system
12489492	MEFI 3 ECU Wire Harness, Ram Jet 350 (not shown)	Designed for use with the MEFI 3 350 Ram Jet engine P/N 12495515 using ECU P/N 12489488

BOWTIE COMPETITION MANIFOLDS

A. 24502481

Intake Manifold, 18° Competition

- Developed for NASCAR's shorter tracks and works well on Trans-Am-series engines
- Features smaller runners and less plenum volume, which enhances mid-range torque
- Aluminum intake fits 18° heads casting
- Manifold is ideal for 310-cubic-inch road racing and 358-cubic-inch short track engines
- Manifold flanges are 0.590" thick to promote a good gasket seal
- An auxiliary water line boss at the rear of the casting improves water flow
- Weight 22.5 lbs
- Volume 2700cc

B. 24502653

Intake Manifold, Spider Design

- A 2-piece 'dry' aluminum manifold "spider" consisting of the runners and plenum only
- The runners, called the spider assembly by racers, along with valley plate assembly – the common term for the bottom section of the intake (see P/N 24502654 below) – are designed for use with the 18° cylinder heads with a date code of June 1996 or newer

C. 24502654

Valley Plate Assembly

- Universal aluminum valley plate is designed for use with 18° cylinder heads
- Can be used with dedicated 2-piece manifold spiders, existing 1-piece intake manifolds which have been properly machined for use as a dry manifold, or fabricated manifold designs
- Valley plate has cast-in integral passages to equalize coolant flow from the front and the rear of the cylinder heads
- Fits heads dated June 1996 and later

NOTE: *Important information about gasket matching: Gasket flanges are machined to provide the proper port alignment with standard runner locations. Runners in heads and manifold must be matched by engine builder. Often, the gasket will line up with the top of the port so removal is required at the bottom of the port. Gaskets that can be used with this manifold are: Fel-Pro® P/N 1205 and P/N 1206, and Mr. Gasket® P/N 102. Always match the gasket to the cylinder head you plan to use to ensure a correct fit.*

A Intake Manifold, 18° Competition

B Intake Manifold, Spider Design

C Valley Plate Assembly

Intake Manifold, Spider Restrictor Design – SB2.2 **D**

Intake Manifold, Spider Design – SB2.2 **E**

Valley Plate Assembly, SB2.2 **F**

NASCAR INTAKE MANIFOLDS

D. 12480096

Intake Manifold, Spider Restrictor Design – SB2.2

- Aluminum manifold has more material in the runners and plenum to accept more flexibility in porting
- Designed for NASCAR restrictor-plate racing and is used with valley plate assembly P/N 12370840 (see below)

E. 88958617

Intake Manifold, Spider Design – SB2.2

- Designed for NASCAR-style racing and high-rpm engines
- Additional aluminum in the runners and plenum allows more flexibility in porting
- Must be used with valley plate assembly P/N 12370840 or P/N 88958659

12370840

Valley Plate Assembly, SB2.2 (not shown)

- Aluminum valley cover is used with manifold runners P/N 12480096 and P/N 88958617 on SB2.2 cylinder heads for NASCAR racing

F. 88958659

Valley Plate Assembly, SB2.2

- Aluminum valley cover is used with manifold runners P/N 12480096, P/N 88958617 and P/N 88958691
- Does not incorporate an inspection cover, but has revised integral water passage for improved coolant flow from the front and rear of the cylinder heads
- Uses AN -24 fitting for water outlet; can use reducer for -20 fitting

88958670

Valley Plate Assembly, R0X (not shown)

- Fits R0X manifold and R0X head P/N 88958667

Intake Manifolds: Additional Required Components

Part Number	Gaskets (Quantity)	Bolts (Quantity)	Engine Application
12366573	89017465 (1)	12550027 (8)	19258602, 19351532, 19351533
12496820	89017465 (1)	12550027 (8)	19210009, 19332529, 19210008
12496822	89017465 (1)	12550027 (8)	19318604, 19351532, 19351533, Vortec Heads
10185063	12525810 (1)	14091544 (8), 88891769 (2)	24502906, 88958603
12489371	89017465 (1)	12550027	12499120,12499120
12496821	89017465 (1)	12550027 (8)	Vortec Head for TBI
24502481	10185007	N/A	18° high-port racing heads
24502653	10185007	N/A	18° high-port racing heads
24502654	10185007	N/A	18° high-port racing heads

COVERS AND PLUGS

A. 14094792

Choke Hole Cover

- Covers the choke hole on the 350 HO manifold P/N 10185063
- Use gasket P/N 14096848 and screw P/N 9442184 with washer P/N 9439511

B. 6269414

Cover, EGR Valve

- Covers the EGR valve port on the 350 HO manifold P/N 10185063
- Use gasket P/N 12554530 and screw P/N 9442184 with washer P/N 9439511

C. 12556596

Plug, EGR Pipe Hole

- 7/8"-15 plug is used to seal off EGR pipe holes on intake manifold P/N 12496820 and P/N 12496821

CHROME WATER NECKS

D. 12370184

Water Neck

- Chrome water neck with neoprene O-ring and chrome bolts
- For 1966-1975 full-size Chevrolet, Camaro, and Chevelle V-8 engines

10108470

Aluminum Water Outlet (not shown)

A Choke Hole Cover

B Cover, EGR Valve

C Plug, EGR Pipe Hole

D Water Neck

Gasket Kit, 1971-1986 and ZZ350 **E**

Gasket Kit, Fast Burn Aluminum Vortec Design **F**

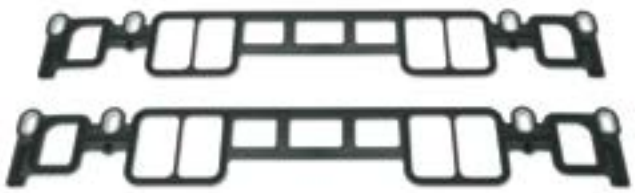

Gasket Kit, Production Vortec Design **G**

Gasket Kit, LT4 **H**

INTAKE MANIFOLD GASKETS

E. 10147994

Gasket Kit, 1971-1986 and ZZ350

- For 302-350 high-performance Small-Blocks built from 1971-1986, and all ZZ350 high-performance engines
- Gaskets fit standard intake port location
- Do not use with raised runner cylinder heads
- Includes 2 gaskets

F. 19301685

Gasket Kit, Fast Burn Aluminum Vortec Design

- Designed for Vortec heads, P/N 12558060, P/N 19300955 and P/N 19300956 only
- Gasket thickness is 0.120" (1/8"), post size is 1.080" x 2.160" with tapered wall, Print-O-Seal design
- Has both early style 6-bolt pattern and Vortec 4-bolt pattern
- Includes 2 gaskets

G. 89017465

Gasket Kit, Production Vortec Design

- Production gasket for all Vortec-design cylinder heads (4-bolt attachment to cylinder heads P/N 12529093 and P/N 12558060)
- Requires the use of GM attachment bolt P/N 12550027, because the bolt has a ball design on the end that seats in the head so it will not crush the intake manifold gasket
- Includes 2 gaskets

H. 12528884

Gasket Kit, LT4

- Used on the LT4 engine P/N 12371172
- Can be used with all LT4 heads and is designed not to cover part of the cylinder head opening – as production gaskets do
- Includes 2 gaskets

10185042

Gasket Kit, Splayed-Valve (not shown)

- Used only on the splayed-valve V-8 cylinder heads P/N 24502517
- Includes 2 gaskets

10185007

Gasket Kit, 18-Degree High Port Heads (not shown)

- Used only with V-8 18° high port cylinder heads P/N 10134363 and P/N 24502580
- Includes 2 gaskets

12524653

Gasket Kit, LT1 4-bbl Conversion (not shown)

- Required when installing a 4-bbl manifold on any LT1 engine
- Includes 2 gaskets

STARTERS AND ALTERNATORS

Flywheels with two different diameters are used on Chevrolet Small-Block, Big-Block, and 90° V-6 engines. Large flywheels are 14" in diameter and have 168 teeth on the starter ring gear. Small-diameter flywheels are 12.750" in diameter, with 153 teeth on the ring gear.

This difference in flywheel diameters requires two distinct starter housings. Starter noses used with large-diameter flywheels have two offset bolt holes, while starters for small flywheels have two bolt holes that are parallel to the back of the block. Most Chevy blocks are drilled for both types of starters.

Starters

A. 12361146

High-Torque Mini Starter

- Gear reduction starter is designed for 1958-1996 V-8 and all 90° V-6 engines
- Compact design provides increased clearance
- Weighs only 10.5 pounds and has a gear reduction of 3.75:1
- Equipped with a dual bolt pattern for 12.750" (153-tooth) and 14" (168-tooth) flywheels
- Housing can be rotated to clear exhaust systems
- Includes starter, mounting bolts, shims, gaskets and electrical connectors

NOTE: *Not recommended for competition use.*

B. 12363128

High-Torque Mini Starter, Chrome

- Same as starter P/N 12361146 (see above), but with a chrome housing

C. 10465143

Lightweight Starter (remanufactured)

- Lightweight high-performance starter was originally used on 1993-1997 Camaros and Firebirds with the LT1 engine
- Can be used on any Small-Block or Big-Block engine with a 12.750", 153-tooth flywheel

D. 19302919

Lightweight Starter, Big-Block and Small-Block

- Gear reduction starter can be used on Big-Block and Small-Block engines with a 14", 168-tooth flywheel

Alternators

88958690

Alternator, 90-Amp (Competition Use, not shown)

- Proven in NASCAR use
- CS121 design housing
- Serpentine belt pulley
- Hand-assembled and dyno-tested

A High-Torque Mini Starter

B High-Torque Mini Starter, Chrome

C Lightweight Starter 12.750" Flywheel (remanufactured)

D Lightweight Starter 14" Flywheel

Starters: Additional Required Components

Part Number	Bolts (Quantity)	Engine Application
12361146	14097279 (1), 14097278 (1)	Small-Block (except LT or LS Engines)
10465143	14097279 (1), 14097278 (1)	Small-Block (except LT or LS Engines) and 19210009, 19351533
12363128	14097278 (1)	Small-Block (except LT or LS Engines)
19302919	12338064 (2)	Big-Block and 12499121, 19331579, 12499121, 12371171

Additional components required for installation.

Rev Limiter for CD Ignition Controller **E**

Chevrolet Bowtie Spark Plug Wire Set (90° Boots Shown) **F**

Spark Plug Wire Set (135° Boot Shown) **G**

Wire Loom Kit **H**

ELECTRONIC CONTROL REV LIMITER

E. 10037379

Rev Limiter for CD Ignition Controller

- Plugs directly into the GM High Performance CD Ignition Controller P/N 10037378
- The rpm limit is set with plug-in rpm modules
- Kit is supplied with 6,000, 7,000, and 8,000 rpm modules

CHASSIS WIRING HARNESS

If you're building a hot rod or restoring an old muscle car, Chevrolet Performance inclusive wiring harness kits make a great replacement for old, worn or damaged wires. These universal wiring kits come with the wires pre-installed on the fuse block, so wiring the vehicle is simply a matter of mounting the fuse block and routing the wires. Each wire is preprinted with the necessary application and is GM-color-coded. The kits also come with all necessary fuses, flashers, horn relay, tach leads, wire ties and grommets. High-temperature, 275°F wire is used – one size larger than factory specs. In all, it's everything you need to electrify your vintage GM car or truck!

12355691

12-Circuit Wiring Harness (not shown)

- Basic system is wired for: heat/air conditioning, brake lights, coil, electric fan, emergency flashers, gauges/dash instruments, headlamps, horn, radio, turn signals, wipers, dome light and third brake light.

NOTE: *These universal systems will re-wire any car, truck or competition vehicle using a GM-keyed column. Kits come with extra-long wire to accommodate almost any vehicle.*

SPARK PLUG WIRES

F. 12361051 ❗

Chevrolet Bowtie Logo Wires

Chevrolet Performance spark plug wire kits are designed to fit your GM engine, eliminating the guesswork in selecting the correct length. These performance 8mm spark plug wires exhibit only 600 ohms per foot of resistance, with high noise suppression capabilities. Features include red wires with white Chevrolet insignia and black boots. Manufactured with double-wall silicone construction.

- Kits include a 10" coil wire for engines, such as Ram Jet 350 and ZZ572 engines that have remote-coil HEI, plus four wire separators and HEI terminals and boots for the distributor cap.
- Custom-fit set designed to be used with black wire loom P/N 12495502 or chrome wire loom P/N 12342049.

G. 24502521 ❗

GM Racing Wires

- Superior quality racing plug wires used by NASCAR teams. Designed to route over the valve cover, with 135° spark plug boots.

H. 12496806

Wire Loom Kit

- Stainless-steel supports with the Bowtie logo laser-cut in each of the six supports.
- Twelve retainers, bolts and washers are supplied to bolt to the side of the head.
- Use with spark plug wire set P/N 12361051.

❗ Spark Plug Wires: Additional Required Components

Part Number	Engine Type	Loom Number	Logo	Ends	Routing	Engine Application
12361051	Small-Block	12496806	Bowtie	90°	Below valve covers	Small-Block with 90° spark plug boots
24502521	NASCAR	N/A	None	135°	Over valve covers	

CARBURETORS AND THROTTLE BODIES

Chevrolet Performance has the right carburetor or throttle body to complete your new crate engine, or give life to your rebuilt engine. All carburetors feature show-car-quality polished finish and include all necessary bolts and gaskets.

Carburetors

19170097

Carburetor, Holley 650-cfm (not shown)

- Holley 4150-style 650-cfm 4-bbl carburetor
- Mechanical secondaries
- Manual choke
- Four-corner idle adjustment
- Power valve blowout protection
- Replaces Holley 4160 600-cfm carburetor P/N 12497147

A. 19170092

Carburetor, Holley 670-cfm

- Holley 4160-style 670-cfm 4-bbl carburetor
- Dual-feed fuel bowls with center-hung floats
- Vacuum secondaries
- Electric choke
- Power valve blowout protection
- Quick-change adjustable vacuum secondary

19170093

Carburetor, Holley 770-cfm (not shown)

- Holley 4160-style 770-cfm 4-bbl carburetor
- Dual-feed fuel bowls with center-hung floats
- Vacuum secondaries
- Automatic electric choke
- Quick-change adjustable vacuum secondary
- Recommended for Small-Block and Big-Block engines, including street, competition, towing and off-road vehicles
- Replaces Holley 4160 750-cfm carburetor P/N 12485506

Throttle Bodies

17096144

Throttle Body, Ram Jet 350 (not shown)

- Used on the Ram Jet 350 crate engine
- Use throttle body gasket P/N 12551240 and bolt P/N 11588714 for installation
- Single 75mm blades

AIR CLEANERS

B. 12342071

Air Cleaner, Chevrolet-Logo Classic Design

- 14" round classic-style air cleaner
- Has chrome lid with embossed Chevrolet name and Bowtie attaching nut
- Fits most 4-bbl and 2-bbl carburetors
- Does not fit Dominator-style carburetors

C. 12342080

Air Cleaner, Chevrolet-Logo High-Performance Design

- 14" round high-performance-style air cleaner
- Has chrome lid with embossed Chevrolet name
- Fits most 4-bbl and 2-bbl carburetors
- Does not fit Dominator-style carburetors

NOTE: *Check clearance between hood and top of air cleaner. Minimum clearance is 3.750" from top of carburetor gasket area to underside of hood.*

D. 19351805 NEW!

Air Cleaner, Low-Profile Bowtie Chevrolet Design

- Cast aluminum flat lid with hidden carb stud mount
- Flat black with machined logo
- 14" round high-performance style
- Fits most 4-bbl and 2-bbl carburetors
- Matches black slant-edge valve cover P/N 19351534

A Carburetor, Holley 670-cfm

B Air Cleaner, Chevrolet Logo Classic Design

C Air Cleaner, Chevrolet Logo High-Performance Design

NEW!

D Air Cleaner, Low-Profile Bowtie Chevrolet Design

Air Cleaner, Ram Jet 350 **E**

Fuel Pump, High Capacity **F**

Fuel Pump, Street Performance **G**

Fuel Pump, Competition **H**

Fuel Filter **I**

Small-Block Fuel Pump Block-Off Plate **J**

Electric Fuel Pump **K**

Electric Fuel Pump, High-Output **L**

E. 12498951

Air Cleaner, Ram Jet 350

- Designed for use with throttle body on Ram Jet 350 crate engine
- Can be used on other applications

FUEL PUMPS AND COMPONENTS

F. 6415325

Fuel Pump, High Capacity, Small-Block

- For use on carbureted engines
- Pump has 7 psi shutoff pressure and free flowing rate of 30 gph
- Lower housing can be rotated to reposition inlet and outlet ports

G 12355612

Fuel Pump, Street Performance, Small-Block

- For use on carbureted engines
- Pump has 7 psi shutoff pressure and a free-flow rating of 110 gph
- Lower housing can be rotated to reposition inlet and outlet ports
- 3/8" - 18 inlet

H. 12355613

Fuel Pump, Competition, Small-Block

- For use on carbureted racing engines
- Pump has 9 psi shutoff pressure and a free-flow rating of 115 gph
- Lower housing can be rotated to reposition inlet and outlet ports
- 1/2" - 14 inlet

I. 854619

Fuel Filter

- High-capacity in-line filter
- Suitable for all high-performance carbureted applications
- 5/16" inlet and outlet

J. 12341998

Small-Block Fuel Pump Block-Off Plate

- Plate has stamped Bowtie logo
- Special non-asbestos gasket included

ELECTRIC FUEL PUMPS

K. 6472657

Electric Fuel Pump

- For use on all carbureted engines
- Flows 30-40 gph at 6-9 psi

L. 25115899

Electric Fuel Pump, High-Output

- Heavy-duty 12-volt electric rotary pump
- Flows 72 gph at 6-8 psi

Small-Block LS/LT-SERIES Crate Engines

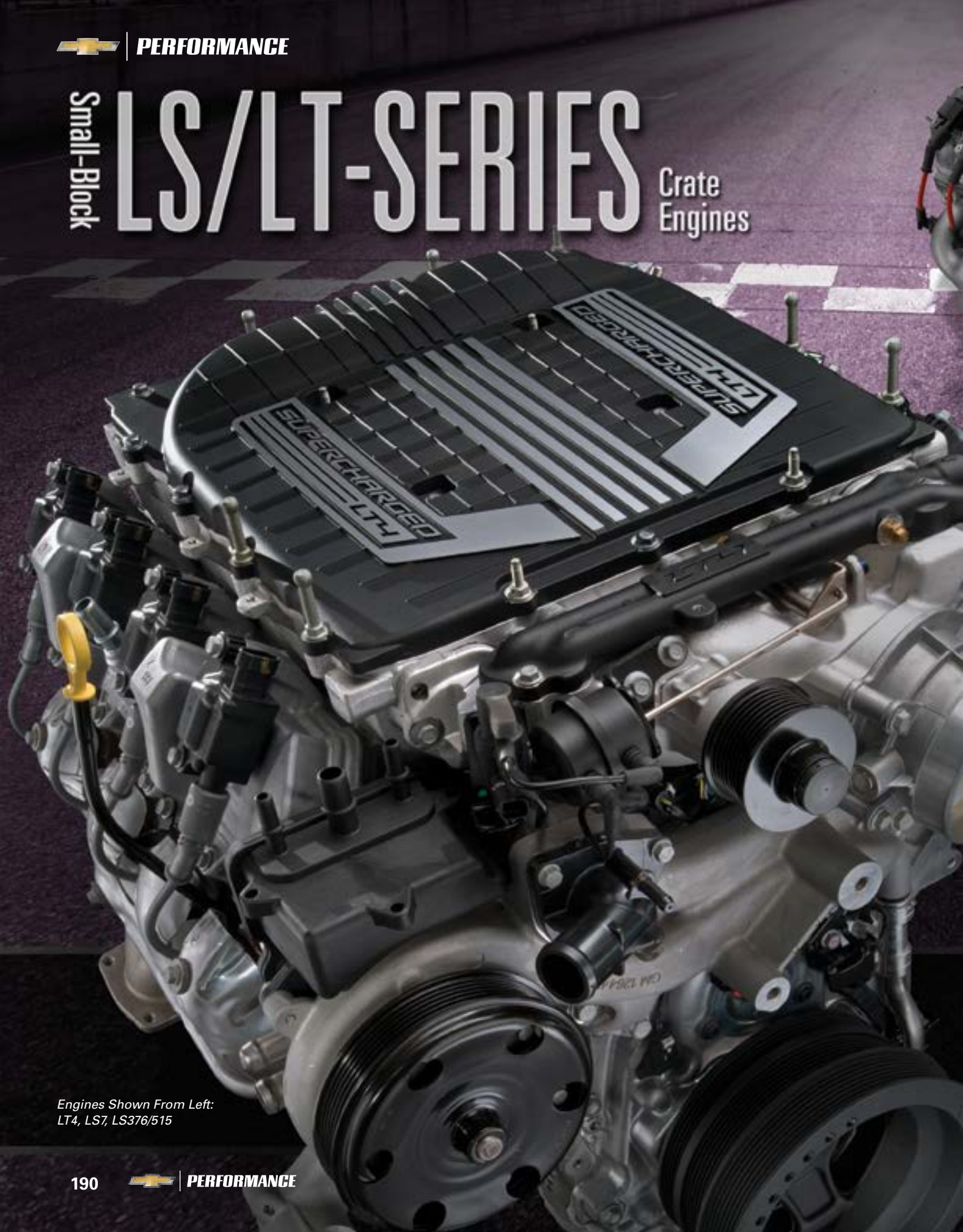

Engines Shown From Left:
LT4, LS7, LS376/515

More Choices for the Hottest Crate Engines in Hot Rodding

The high-revving, high-performance LS engine family is the hottest trend in hot rodding and nobody offers more LS crate engines – and new LT engines – than Chevrolet Performance!

From production-based engines like the popular 6.2L LS3 and big-displacement 7.0L LS7 to custom engines such as the LS376/525, which blends a proven and economical production foundation with track-tested high-performance parts, we've got the crate engine to transform your street rod, muscle car, vintage truck and more.

And when only the latest, most technologically advanced performance will do, the LT1 and all-new supercharged LT4 crate engines offer next-generation features that balance great power with surprising efficiency.

When it's time for your LS or LT swap, turn to Chevrolet Performance. Nobody offers more choices to match your performance goal and budget.

You can find these Chevrolet Performance Small-Block LS-Series Engines on the following pages:

LS3 ..... **Page 200**
LS376/480 ..... **Page 202**
LS376/515 ..... **Page 204**
LS376/525 ..... **Page 206**
DR525 ..... **Page 208**
LSA ..... **Page 210**
LS9 ..... **Page 212**
LS7 ..... **Page 214**
LT1 ..... **Page 216**
LT4 ..... **Page 218**
LTG 2.0L Turbocharged ..... **Page 220**
E-ROD Systems ..... **Page 222**
Connect & Cruise Systems ..... **Page 226**

The LS Engine Family Tree

Everything you wanted to know about GM's 21st-century Small-Block, but were afraid to ask!

LS HERITAGE

The engine family commonly called the LS series debuted in 1997. General Motors called it the Gen III Small-Block, with the iron-block versions in trucks and the all-aluminum LS1 version introduced in the then-new C5 Corvette. A year later, the LS1 replaced the Gen II LT1 Small-Block in Camaros and Firebirds. The LS1 displaced 5.7 liters, similar to the previous-generation Small-Block, but the cubic-inch measurement differed slightly: 346 for the LS1 vs. the traditional 350 cubes.

In 1999, the Gen III platform spawned the higher-performance LS6 that was standard in the Corvette Z06. In 2005, the Gen IV branch of the LS family was born, differing from the Gen III with cast-in provisions for fuel-saving cylinder deactivation, larger displacements and revised camshaft sensing. The performance versions of the Gen IV include the LS2, LS3, LS9 supercharged and LS7.

GM has continued to refer to its modern V-8 engine family as Gen III and Gen IV, but to the enthusiasts who quickly grasped the tremendous performance potential of the engines, every engine based on the platform is nicknamed "LS." The range of production engines from the LS platform is wide. On the truck side, iron-block engines have included 4.8L and 5.3L versions, as well as all-aluminum 6.0L and 6.2L premium engines. Car engines include 5.3L, 5.7L, 6.0L, 6.2L and 7.0L displacements – including some configured for front-wheel-drive.

GEN III VS GEN IV

Despite some significant differences between Gen III and Gen IV cylinder blocks, all LS engines share common traits that include:

- 4.400" bore centers (like the original Small-Block)
- 6-bolt, cross-bolted main bearing caps
- Center main thrust bearing
- 9.240" deck height
- 4-bolt-per-cylinder head bolt pattern
- 0.842" lifter bores
- Distributorless, coil-near-plug ignition system

The most distinguishing differences between Gen III and Gen IV cylinder blocks are larger bores (on some engines), different camshaft position sensor locations – front timing cover area on Gen IV blocks and top-rear position on Gen III blocks – and, on most Gen IV blocks, cast-in provisions for GM's Active Fuel Management cylinder deactivation system.

There is great interchangeability between all LS engines, including between Gen III and Gen IV versions. Cylinder heads, crankshafts, intake manifolds and more can be mixed and matched – but the devil is in the details. Not every head matches every intake manifold and not every crankshaft works with every engine combination. Will Handzel's "How to Build High-Performance Chevy LS1/LS6 V-8s" – P/N 88958786 – is a great reference source that outlines the more specific differences and interchangeability among Gen III-based engines.

LS1/LS6

LS1 5.7L (346-cu-in) engines were produced between the 1997 and 2004 model years in the United States (Corvette, Camaro, Firebird and GTO) and stretching into 2005 in other markets (primarily Australia). The LS6 was introduced in 2001 in the Corvette Z06 and was manufactured through 2005, where it also was found in the Cadillac CTS-V. The LS1 and LS6 share a 5.7L displacement, but the LS6 production engine uses a unique block casting with enhanced strength, greater bay-to-bay breathing capability and other minor differences. The heads, intake manifolds and camshaft also are unique LS6 parts.

LS2/L76/L77

In 2005, the LS2 6.0L (364 cu in) engine and the Gen IV design changes debuted. In GM performance vehicles, it was offered in the Corvette, GTO and even the heritage-styled SSR roadster. It was the standard engine in the Pontiac G8 GT (L76) and is now the V-8 offered in the new Chevrolet Caprice Police Pursuit Vehicle (L77). This engine is one of the most adaptable in the LS family, as LS1, LS6, LS3 and L92/L94 cylinder heads work well on it.

LS3/L99

Introduced on the 2008 Corvette, the LS3 brought LS-based performance to an unprecedented level: 430 horsepower from 6.2L (376 cu in). The LS3 block not only had larger bores than the LS2, but a strengthened casting to support more powerful applications, including the LS9 supercharged engine of the Corvette ZR1. The LS3 was also the standard engine in the fifth-generation Camaro SS and was offered in the Pontiac G8 GXP. The L99 version was equipped with GM's fuel-saving Active Fuel Management cylinder deactivation system and was standard on fifth-gen Camaro SS models equipped with an automatic transmission. A unique version of the LS3 used in some Corvette Grand Sport applications incorporated a dry-sump oiling system.

LS4

Perhaps the most unique application of the LS engine in a car, the LS4 was a 5.3L version used in the front-wheel-drive Chevrolet Impala SS and Pontiac Grand Prix GXP. The LS4 had an aluminum block and unique, low-profile front-end accessory system, including a "flattened" water pump, to accommodate the transverse mounting position within the Impala and Grand Prix. It was rated at 303 horsepower and 323 lb.-ft. of torque.

LS7

A legend in its own time. The LS7 was the standard engine in the C6 Corvette Z06 and fifth-generation Camaro Z/28. Its 7.0L displacement (427 cubic inches) made it the largest LS engine offered in production vehicles. Unlike LS1/LS6, LS2 and LS3 engines, the LS7 uses a Siamese-bore cylinder block design, which was required for its big, 4.125-inch bores. Competition-proven heads and lightweight components, such as titanium rods and intake valves, made the LS7 a street-tuned racing engine, with 505 horsepower. Chevrolet Performance's crate engine reflects the Camaro Z/28 version, which features a unique Tri-Y exhaust manifold design.

LS9

The LS9 was the 6.2L supercharged and charge-cooled engine of the C6 Corvette ZR1, rated at 638 horsepower. The LS9 used a strengthened 6.2L block with stronger, Rotocast cylinder heads and a sixth-generation 2.3L Roots-type supercharger. Like the LS7, it used a dry-sump oiling system.

LSA

This supercharged 6.2L engine powered the 2009-15 Cadillac CTS-V series and the 2012-15 Camaro ZL1. Although similar to the LS9 in design, it was built with several differences, including hypereutectic pistons vs. the LS9's forged pistons; and a smaller, 1.9L supercharger. It also has an eight-bolt flywheel vs. the LS9's nine-bolt pattern. The LSA has a unique charge-cooler design on top of the supercharger – with differences between the Cadillac and Camaro ZL1 applications. It was rated at 556 horsepower in the CTS-V and 580 horsepower in the Camaro ZL1. Chevrolet Performance's crate engine reflects the Camaro ZL1 application.

GEN III & GEN IV VORTEC TRUCK ENGINES

Although performance car engines have typically carried "LS" designations, truck engines built on this platform have been dubbed Vortec. They are generally distinguished by iron cylinder blocks and smaller displacements than car engines. Interestingly, a 5.7L Vortec "LS" engine has never been offered. Here's a quick rundown of the previous and current-production LS truck engines:

- 4.8L – The smallest-displacement LS engine (293 cu in); it uses an iron block with 3.78-inch bores and aluminum heads.

- 5.3L – The most common LS truck engine, it uses the same iron block with 3.78-inch bores as the 4.8L, but with a larger, 3.62-inch stroke (327 cu in). Later versions equipped for Active Fuel Management and 2010-and-newer versions feature variable valve timing (cam phasing). Manufactured with iron and aluminum cylinder blocks.

Gen III, IV, Small-Block Crate Engines

Part Number	Description	Liters	CID	Block Material	HP	Torque	Bore	Stroke
19165628	LS327/327	5.3	327	CI	327	347	3.780	3.622
17801267 (discontinued)	LS1	5.7	346	AL	350	365	3.898	3.622
19165484 (discontinued)	LS2	6.0	364	AL	400	400	4.000	3.622
17802134 (discontinued)	LS364/440	6.0	364	AL	440	404	4.000	3.622
19301358	LS376/480	6.2	376	AL	495	473	4.065	3.622
19301359	LS376/515	6.2	376	AL	533	477	4.065	3.622
19301360	LS376/525	6.2	376	AL	525	486	4.065	3.622
19301326	LS3	6.2	376	AL	430	425	4.065	3.622
19331507	LSA	6.2	376	AL	556	551	4.065	3.622
19260165	LS9	6.2	376	AL	638	604	4.065	3.622
19271821*	CT525	6.2	376	AL	533	477	4.065	3.622
19244098	LS7	7.0	427	AL	505	470	4.125	4.000
19260831	LSX376 B-8	6.2	376	CI	476	475	4.060	3.620
19299306	LSX376 B-15	6.2	376	CI	473	444	4.060	3.620
19260833	LSX454	7.4	454	CI	627	586	4.185	4.125
19260835	LSX454R	7.4	454	CI	776	649	4.185	4.125

**For circle-track racing only. Not for street use.*

• 6.0L – Used primarily in ¾-ton and 1-ton trucks, the 6.0L (364 cu in) uses an iron block (LY6) or aluminum block (L76) and aluminum heads, with provisions for Active Fuel Management; some equipped with variable valve timing.

• 6.2L – Commonly referred to by its L92, L9H or L94 engine codes, the 6.2L (376 cu in) engine uses an aluminum block and heads, and incorporates advanced technology including variable valve timing. The L92 is used primarily as a high-performance engine for the Cadillac Escalade and GMC Yukon Denali.

MORE ABOUT THE VORTEC 5.3L

With more than 10 years in service in millions of Chevy and GMC trucks, vans and SUVs, the Vortec 5.3L engine is poised to become the classic 350 Small-Block of the LS engine family. With millions in service, they are readily available and affordable on the used-engine market. Most feature iron cylinder blocks, but some have an aluminum engine block that is about 80 pounds lighter. Adapting a 5.3L to a hot rod project is easier with Chevrolet Performance's 5.3L controller kit, part number 19256514, which is tailored to retro-fit installations by "turning off" some of the production features that are unnecessary for a vintage car, including the cylinder-deactivating Active Fuel Management. It covers 2007-2009 applications (non-cam-phased) with the following engine codes:

• LC9 (2007-2009) • LH8 (2008-2009) • LMG (2007-2009)

• LY5 (2007-2009) • LMF (2008-2009)

LSX CRATE ENGINES

Chevrolet Performance LSX series of crate engines is based on the LSX Bowtie Block and uses a number of production-based and LSX high-performance parts to deliver ultimate-performance engines that were never offered in production vehicles. They include:

• LSX376-B8 – An economical crate engine that uses the LSX block, LS3 rotating parts and the LS3 cylinder heads. It is offered without an oil pan or induction system, so that they can be tailored for the project vehicle.

• LSX376-B15 – Designed to accommodate additional power adders, or boost up to 15 PSI, includes forged pistons, forged crank and 6-bolt LSX-LS3 cylinder heads.

• LSX454 – The displacement of the classic big-block, with an all-forged rotating assembly and LSX-LS7 six-bolt cylinder heads. It is rated at 627 hp with a carburetor and 580 with an LS7 fuel injection system.

• LSX454R – A high-compression (13.1:1) version of the LSX454 designed for drag racing, featuring a mechanical roller cam, high-rise intake and more. It is capable of more than 750 horsepower.

NON-PRODUCTION CYLINDER BLOCKS

C5R: Developed for the factory-backed Corvette racing program, the C5R cylinder block has been manufactured in comparatively small quantities since 2000. They are manufactured with a unique aluminum alloy for greater strength and undergo a variety of specialized machining and inspection processes, including "hipping" to increase strength and X-raying that ensures against unacceptable porosity. A Siamese bore design with 4.117-inch finished bores enables 7.0L (427-cu-in) displacements. The C5R uses billet steel main caps with premium, 4340 fasteners. Racing-quality head studs are also included. All LS series heads will work with the C5R block, but maximum performance depends on maximum airflow.

LSX Bowtie Block (standard and tall-deck): Introduced in 2007, the LSX Bowtie Block is a durable and affordable cast iron casting that was designed to support extreme high-performance combinations, including provisions for six-bolts-per-cylinder head fastening. It has a Siamese bore design with 3.880-inch bores that must be finished to 3.898-inches – with a 4.200-inch recommended maximum bore. Maximum stroke can reach 4.25-inches, but rotating assembly interference on the cylinder must be taken into account for strokes greater than 4.125-inches; heavy metal is required for crankshaft balancing of larger-stroke combinations. Standard versions feature decks 0.020-inch taller than LS production blocks, with the tall-deck version manufactured with a 9.720-inch semi-finished deck height. The oiling system is a true priority-main system and all LS small-block heads work with the engine. Higher-airflow heads, such as LS7, LSX-DR, LSX-CT and C5R, are recommended.

CRANKSHAFTS

Generally, LS crankshafts are similar in design, with identical 2.100-inch rod and 2.560-inch main journal sizes and a common rear main seal. All LS engines use iron crankshafts except the LS7, LS9, LSA and LSX454; they used forged steel cranks (4.00-inch stroke on the LS7; 3.62-inch stroke on the LS9 and LSA; and 4.125-inch on the LSX454).

The crankshaft sensing function of the distributorless ignition system depends on reading the toothed reluctor wheel on the crankshaft. Early LS engines mostly used 24-tooth wheels and upgraded a few years ago to 58-tooth (also known as 58x) wheels. When building an LS engine, it is imperative the correct reluctor wheel is used with the compatible crankshaft position sensor and ignition controller.

The crankshafts are mostly interchangeable, but the snouts on LS7 and LS9 crankshafts are approximately 1-inch longer to accommodate their two-stage oil pumps that work with the engines' dry-sump oiling systems – the same goes for certain Corvette applications of the LS3, which was available with a dry-sump system, as well. These forged crankshafts can be used on wet-sump engines by using a few specific components and/or modifications.

The LS Engine Family Tree Continued on next page

The LS Engine Family Tree Continued

SPECIAL NOTE ABOUT CRANKSHAFT BOLT PATTERNS

Almost all LS-engine crankshafts use a 6-bolt flywheel/flexplate bolt pattern, but the LS9 uses a 9-bolt pattern and the LSA, LT1, LT4 and LSX454 engines use an 8-bolt pattern.

CONNECTING RODS

LS connecting rods are very similar and interchangeable. Most are made of forged powdered metal, while the LS7 and LS9 rods are forged titanium – with the LS9 rods featuring a unique forging designed for the pressure and power level of forced induction. Rods lengths are similar, too, at 6.098-inch for 5.3L, 5.7L, 6.0L and 6.2L (including LSA) engines. The 4.8L engine uses 6.275-inch rods and the LS7 uses 6.067-inch rods. The LS9 uses 5.990-inch rods. Since 2006, LS rods use bushed small ends. Also, LS6 rod bolts, P/N 11600158, offer a strength-enhancing upgrade to pre-2000 engines.

PISTONS

The LS9 is the only production LS engine with forged aluminum pistons; all the others use hypereutectic (cast) aluminum alloy pistons – varied mostly by diameter to accommodate various bore sizes. LS cast pistons shouldn't be used on applications greater than approximately 550 horsepower. Also, the LS7 piston's inner bracing requires the use of the matching LS7 connecting rod.

GEN V SMALL BLOCK: ENTER THE 'LT' ENGINES

Introduced on the seventh-generation C7 Corvette Stingray and GM's full-size trucks and SUVs for 2014, the Gen V Small Block ushered in the next era of historic engine family.

Dubbed EcoTec3 in the new trucks – including a 4.3L V-6, 5.3L V-8 and 6.2L V-8 – and carrying historic "LT" designations in the Corvette, the Gen V engine family delivers greater efficiency, performance and durability, thanks to a combination of advanced technologies including direct injection, Active Fuel Management (cylinder deactivation) and camshaft phasing (variable valve timing) that support an advanced combustion system.

Structurally, the Gen-V small-block is similar to the Gen III/IV engines, including a deep-skirt cylinder block. Refinements and new or revised components are used throughout, including a revised cooling system and all-new cylinder heads. The engine is also designed to accommodate an engine-driven high-pressure fuel pump for the direct-injection system.

As builders adapt the LT1 – the supercharged LT4 variant – to their project cars, it's logical to ask about the differences between the LS family and the new LT engines and whether parts interchangeability is as easy – or even possible – as it was between the Gen III and Gen IV engines.

The short answer is no. Despite significant similarities in the basic architecture, there are a number of key differences between the new LT family and the LS family that prohibit simple interchangeability.

Here's a look at how the LT and LS families differ in those key areas, comparing the LT1 to the LS3 – with most of the LT1 features also matching the features on the supercharged LT4:

***NOTE:* While structurally similar, almost none of the parts and components from the Gen V are interchangeable with Gen III and Gen IV engines.**

CYLINDER BLOCK AND OILING SYSTEM

Like every Small Block generation before it, the Gen V cylinder block shares a 90-degree cylinder angle and 4.400-inch bore centers. The LT1's bore and stroke dimensions are: 4.06-inches x 3.62-inches – the same as the LS3. Compared to the Gen IV versions, the Gen V's aluminum cylinder block casting is all-new, but based on the same basic architecture. It was refined and modified to accommodate the mounting of the engine-driven fuel pump and vacuum pump. It also incorporates new engine mount attachments, new knock sensor locations, improved sealing and oil-spray piston cooling.

The oiling system is revised and features a new, dual-pressure-control and variable-displacement vane pump with increased flow capacity. As with the Gen-III/Gen-IV engines, the oil pump is driven by the crankshaft. Variable displacement enables the pump to efficiently deliver oil pump flow as demanded.

All Gen-V engines feature oil-spray piston cooling, in which oil-spraying jets in the engine block drench the underside of each piston and the surrounding cylinder wall with an extra layer of cooling, friction-reducing oil.

CAMSHAFT DESIGN AND CAMSHAFT PHASING

As with the LS3, the LT1 uses is a hydraulic roller-lifter camshaft. It is also located in the same position relative to the crankshaft as the LS3, but importantly the LT1's camshaft features an all-new "trilobe" at the rear to drive the engine-mounted, high-pressure fuel pump for the direct-injection combustion system. There's no such extra lobe on the LS3 camshaft, which negates cam swaps between the engines.

For the record, the LT1 camshaft's specifications lift include: 0.551/0.524-intake/exhaust lift, 200/207 degrees intake/exhaust duration at 0.050 tappet lift and a 116.5-degree lobe separation angle. The LS3's cams specs are: 0.511/0.525-inch lift, 204/211 degrees duration and a 117-degree lobe separation angle.

Camshaft phasing (variable valve timing), which works with Active Fuel Management to enhance fuel economy, optimizes engine performance for given demands and conditions. A vane-type phaser is installed on the front of the camshaft to change its angular orientation relative to the sprocket, thereby adjusting the timing of valve operation on the fly. It is a cam phasing system that adjusts camshaft timing at the same rate for both intake and exhaust valves. The system allows linear delivery of torque, with near-peak levels over a broad rpm range, and high specific output (horsepower per liter of displacement) without sacrificing overall engine response, or driveability. It also provides another effective tool for controlling exhaust emissions. The vane phaser is actuated by hydraulic pressure and flow from engine oil, and managed by a solenoid that controls oil flow to the phaser.

ROTATING ASSEMBLY AND WINDAGE TRAY

Within the LT1 block is a durable rotating assembly that includes a strong, 1538MV forged steel crankshaft and 6.125-inch-long, powder-metal connecting rods, as well as high-strength, hypereutectic pistons.

Most LS3 production engines have an admittedly tough nodular iron crankshaft that is known to support high horsepower levels, even under higher boost levels. The crankshafts in C6 Corvette models with the Z51 handling package included a dry-sump oiling system that necessitated a longer crank snout to accommodate the unique oil pump. Those cranks were forged steel.

If you order the production-based Chevrolet Performance LS3 crate engine – part number 19258770 – you'll get the standard oil pump and cast crankshaft.

The LT1's 6.125-inch connecting rod length is the same length as the LS3, but the profile of the rod itself is slightly different to enhance strength.

As for the piston design, the LS3 features conventional flat-top design, while the LT1 has a unique head topography that is essential to the direct injection system. The "bowl" and shape of the top of the piston head is designed to promote thorough mixing of the air and fuel – a dished center section helps direct the fuel spray from the injector, which protrudes into the combustion chamber rather than into the intake manifold on the LS3's conventional port injection design.

The crankshaft in the LT1 Small-Block is located with nodular main bearing caps, which is a significant upgrade over the LS3's conventional gray iron main caps. They're stronger and can better absorb vibrations and other harmonics to help produce smoother, quieter performance. They also maintain the optimal cranksase "windows" that were perfected on the LS3's Gen IV architecture.

A redesigned windage tray is also used with the LT1, which features a unique oil scraper designed to enhance performance and efficiency by improving oil flow control and bay-to-bay crankcase breathing.

CYLINDER HEAD DESIGN

The Gen V's all-new cylinder head design builds on the excellent, racing-proven airflow attributes of previous small-block heads and matches it with an all-new direct-injection combustion system. It supports tremendous airflow at higher rpm for a broad horsepower band, along with strong, low-rpm torque.

Compared to the LS3 cylinder head design, the LT1 head features a smaller, 59cc combustion chamber, which is designed to complement the volume of the piston dish. The smaller chamber size and dished pistons work together to produce an 11.5:1 compression ratio vs. the LS3's 10.7:1 compression ratio.

The spark plug angle and depth have been modified with the LT1 head, too, to protrude farther into the chamber, placing the electrode closer to the center of the combustion to support the direct injection system. In addition to the new combustion chamber design, the Gen V head features large, straight and rectangular intake ports that feature a slight twist to enhance mixture motion. This is complemented by a reversal of the intake and exhaust valve positions as compared to the Gen-Gen III/IV design. The exhaust port shapes are optimized for the new valve locations, with new port opening locations at the manifold face.

VALVES AND VALVETRAIN

Large, lightweight intake and exhaust valves are used in the LT1 heads, with 2.13-inch hollow intake and 1.59-inch hollow sodium exhaust valves. The lightweight valves enable the engine to rev quickly and capably to greater than 6,000 rpm. LS3 valves measure 2.165 inches intake and 1.59 inches exhaust.

The LT1's valves are held at new 12.5 degrees intake/12 degrees exhaust angles vs. the LS3's 15-degree angle. Additionally, the valves are splayed at 2.61 degrees intake/2.38 degrees exhaust to reduce shrouding and enable greater airflow.

Roller-pivot rocker arms are used in the LT1 and feature a 1.8 ratio vs. the 1.7 ratio of LS3 rockers. The LT1's reversed valve location also eliminates the offset design of the LS3's intake-side rocker arms. Also: the LT1 uses 8.7mm (outside diameter) pushrods that provide greater stiffness than the LS3's 7.9mm design. That enables improved high-speed valvetrain performance.

DIRECT INJECTION FUEL SYSTEM

Direct injection is featured on all Gen V engines. The technology moves the point where fuel feeds into an engine closer to the point where it ignites, enabling greater combustion efficiency. It fosters a more complete burn of the fuel in the air-fuel mixture, and it operates at a lower temperature than conventional port injection. That allows the mixture to be leaner (less fuel and more air), so less fuel is required to produce the equivalent horsepower of a conventional, port injection fuel system.

This represents one of the fundamental differences between the engines. The LT1 features direct injection, with injectors positioned in the cylinder heads, while the LS3 features a conventional port injection system, with injectors located in the intake manifold. That difference alone makes it impossible to simply swap heads and intakes between the LT and LS families.

The pistons play an integral role in the direct injection system, as they feature dished heads designed to direct the fuel spray for a more complete combustion. Design of this advanced combustion system was optimized after thousands of hours of computational analysis, representing one of the most comprehensively engineered combustion systems ever developed by General Motors.

The direct injection system features very high fuel pressure, up to 2,175 psi (15 MPa) on most engines and as high as 2,900 psi (20 MPa) on the supercharged LT4 variant, requiring a high-pressure, engine-driven fuel pump in addition to a conventional, fuel-tank-mounted pump. On all Gen V engines, the pump is mounted in the "valley" between cylinder heads – beneath the intake manifold. It is driven by the camshaft at the rear of the engine.

LT1-SPECIFIC FEATURES

In addition to the features that compare and contrast with the LS3, the new LT1 has a number of unique components that simply aren't shared with previous LS engines, including:

- PCV-integrated rocker covers designed to reduce oil consumption
- Cylinder deactivation that shuts down four cylinders in certain light-load driving conditions – and featuring unique, "collapsible" valve lifters for the deactivating cylinders
- Four-into-one short-header-type exhaust manifolds similar to the LS7 design, but made of cast iron
- Single-bore 87mm throttle body
- Revamped cooling system with a new, offset water pump design
- The use of electric power steering on production models means there's no provision for a conventional power steering pump on the accessory drive system.

In summary, the lineage between the LS3 and the LT1 is clear, but where the LS3 was an evolution of previous LS engines, the LT1 is more of new species. Therefore, mixing and matching parts between the LT and LS families isn't practical or, in most cases, feasible.

LV3 4.3L

The 4.3L V-6 is the smallest Gen 5 engine and is based on the V-8 versions, but with two fewer cylinders – a design lineage that dates back to the previous 4.3L V-6, which was itself a Gen-II Small-Block with a pair of cylinders removed. The bore and stroke dimensions are 3.92-inch (99.6 mm) bore x 3.62-inch (92 mm) stroke, for a displacement of 262 cubic inches. It is used in the Chevrolet Silverado 1500 and GMC Sierra 1500, where it is rated at 285 horsepower and 305 lb.-ft. of torque.

L83 5.3L

The L83 is the workhorse of GM's full-size trucks and SUVs, including the Chevrolet Silverado 1500, Tahoe and Suburban, as well as the GMC Sierra 1500 and Yukon lineups. It has a smaller bore – 3.78 inches (96 mm) – than other Gen V engines, but the same 3.62-inch (92 mm) stroke shared by all of them. It is rated at 355 hp and 383 lb.-ft. of torque.

L86 6.2L

The L86 6.2L is the largest, most powerful Gen 5 engine offered in GM's trucks and SUVs, delivering 420 hp and 460 lb.-ft. of torque. A forged steel crank is unique among the truck engines, along with its larger 4.06 (103.25 mm) bore diameter. This engine is available in the Silverado 1500 and Sierra 1500, and is standard in the GMC Yukon and Cadillac Escalade.

LT1 6.2L

It's the standard engine in the C7 Corvette Stingray, where it is rated at up to 460 horsepower and 465 lb.-ft. of torque (with the optional exhaust system). It shares the same basic configuration and 4.065 x 3.622 bore/stroke dimensions as the L86, but features other unique components to generate its higher output.

LT4 6.2L SUPERCHARGED

The supercharged LT4 engine is the power behind the C7 Corvette Z06, delivering a stunning 650 hp and 650 lb.-ft. of torque. Each component of the rotating assembly, from the crankshaft to the piston rings, is unique to the LT4 to support the cylinder pressures the boosted engine is capable of generating, as well as the unique requirements for a lower compression ratio. The cylinder heads are unique, too, and it also uses a new, more compact and more efficient 1.7L Eaton TVS supercharger, which spins faster to make boost quicker.

Gen V Small-Block Crate Engines

RPO Code	Displacement (cu/in/Liters)	Compression Ratio	Horsepower	Torque (lb.-ft.)
LV3	262 / 4.3	11.0:1	285 @ 5300 rpm	305 @ 3900 rpm
L83	325 / 5.3	11.0:1	355 @ 5600 rpm	383 @ 4100 rpm
L86	376 / 6.2	11.5:1	420 @ 5600 rpm	460 @ 4100 rpm
LT1	376 / 6.2	11.5:1	460 @ 6000 rpm	465 @ 4600 rpm
LT4	376 / 6.2	10.0:1	650 @ 6400 rpm	650 @ 3600 rpm

A Cathedral Intake Port and Bolt Pattern

B LS3 Intake Port and Bolt Pattern

CYLINDER HEADS – INTAKE PORT DESIGN

Cylinder head interchangeability enables great parts mixing to build custom LS engine combinations, but the heads must be matched with intake manifolds that have compatible intake port configurations. The port sizes and shapes include:

Cathedral port

Introduced on the LS1 engine and used also on the LS6 and LS2, cathedral-port heads are named for the unique shape of the top of the intake port. Intake manifolds for LS1, LS2, LS6 and Vortec engines with cathedral-port heads are mostly interchangeable. (Photo A)

Rectangular port – LS7-style

The second LS intake runner design debuted on the Corvette Z06's LS7 engine. This rectangular design supports the straight-through airflow design of the heads. They feature 270cc intake ports and the ports and combustion chambers are CNC-ported from the factory. Use only with the LS7 intake manifold. The LSX-LS7 head features the same port design, but with six-bolt clamping vs. the production four-bolt pattern. (Photo C)

Rectangular port – L92/LS3 style

Similar to the LS7 design, but the ports are a little taller and a little narrower. They flow more than cathedral-port heads, but not as much as LS7 heads. In addition to the L92 6.2L engines, this port shape is also used on LS3 engines and some 6.0L truck engines, as well as the Corvette ZR1's LS9 and Cadillac CTS-V's LSA supercharged engines. Intake manifold bolt patterns are unique to this port design. (Photo B)

C5R heads

These heads pioneered the rectangular-port design, but because they are designed for professional finishing, their final shape and size depends on whomever is performing the porting (not shown).

CYLINDER HEADS – VALVES AND RECOMMENDED APPLICATIONS

Each LS cylinder head has specific valve sizes, locations and valve angles. Here's an overview of them:

Cathedral-port heads

Designed for smaller-displacement engines, these heads have the smallest valves; 2.000-inch intake and 1.500-inch exhaust, and they're held at a 15-degree angle. They also have the closest valve spacing, which limits the maximum valve size. LS6 valves include lightweight hollow-stem intake and sodium-filled exhaust parts; all others in this family feature solid-stem construction. (Photo A)

LS Compatibility—Heads vs. Intakes

INTAKES				HEADS						
Engine	Part Number	Manifold Type	Port Type	12559855 Std LS1	12564824 (discontinued) Std LS6/LS2	12562319 Std LQ9	88958622 (discontinued) CNC LS6	12629064 Std L76/L92	12629063 Std LS3	88958758 CNC LS3
LS1/LS6	**88894339**	EFI	Cathedral	Yes	Yes	Yes	Yes	No	No	No
LS2/LQ4	**88958675**	4-bbl	Cathedral	Yes	Yes	Yes	Yes	No	No	No
LS3	**12638197**	EFI	L92	No	No	No	No	Yes	Yes	Yes
L92/LS3	**25534416**	4-bbl w/inj	L92	No	No	No	No	Yes	Yes	Yes
L92/LS3	**25534401**	4-bbl	L92	No	No	No	No	Yes	Yes	Yes
L92/LS3	**19244037**	LSX 4-bbl	L92	No	No	No	No	Yes	Yes	Yes
L92/LS3	**19244035**	LSX 4-bbl	L92	No	No	No	No	Yes	Yes	Yes
LS7	**12644568**	EFI	LS7	No	No	No	No	No	No	No
LS7	**25534413**	4-bbl w/inj	LS7	No	No	No	No	No	No	No
LS7	**25534394**	4-bbl	LS7	No	No	No	No	No	No	No
LSX454	**19244033**	LSX 4-bbl	LS7	No	No	No	No	No	No	No
LSX-CT	**19257854**	LSX 4-bbl	LSX-CT	No	No	No	No	No	No	No
LSX454R	**19257851**	LSX 4-bbl	LSX-DR	No	No	No	No	No	No	No

No=not compatible Yes=direct compatibility

C LS7 Intake Port and Bolt Pattern

D LSX-CT and LSX-DR Ports

L92/LS3 heads

Similar in design to the LS7 head, the L92 heads don't flow quite as much and the valves are correspondingly smaller: 2.165-inch on the intake side and 1.590-inch on the exhaust side. They are held at a 15-degree angle and also require offset rocker arms. These heads/valves require at least a 4.00-inch bore, but work best on an engine with a 4.065-inch bore. Valve-to-piston clearance must be checked when using them on an engine originally equipped with cathedral-port heads. (Photo B)

LS7 heads

Using LS-Series' largest production valves – 2.200-inch on the intake side and 1.610-inch on the exhaust – the LS7 heads offer tremendous airflow, but they require an engine with no less than 4.100-inch bores. The intake valves are made of titanium and the exhaust valves are sodium-filled; they are held at a 12-degree angle. That and their large size require offset rocker arms on the intake side. Valve-to-piston clearance must be checked when using these heads with pistons not designed for the LS7 engine. (Photo C)

C5R

Designed for engines with at least 4.125-inch bores, these heads can accommodate 2.200-inch intake and 1.650-inch exhaust valves; they are held at an 11-degree angle and their spacing is unique. When using on an engine not originally designed for C5R pistons, valve-to-piston clearance must be checked. (not shown)

LSX-CT and LSX-DR

CT and DR are in-line heads, with a valve angle of 11 degrees. The CT head was designed specifically for 410 CID sprint car applications, with 2.200-inch intake and 1.610-inch exhaust valve sizes, with valve placement modified and optimized for 4.125-inch bores. DR heads were designed for 410-plus CID, high rpm drag racing applications. Valve placement was spread from the CT to allow up to 2.280-inch and 1.620-inch valves. Larger valve sizes require a 4.165-inch minimum bore. (Photo D)

LS Compatibility—Heads vs. Intakes (Continued)

INTAKES				HEADS						
Engine	Part Number	Manifold Type	Port Type	19201807 LSX-L92 Small Bore	19201805 LSX-LS3	19213963 LSX-LS9	12578450 Std CNC LS7	19201806 LSX-LS7	19166981 LSX-CT	19166979 LSX-DR
LS1/LS6	**88894339**	EFI	Cathedral	No	No	No	No	No	No	No
LS2/LQ4	**88958675**	4-bbl	Cathedral	No	No	No	No	No	No	No
LS3	**12638197**	EFI	L92	Yes	Yes	Yes	No	No	No	No
L92/LS3	**25534416**	4-bbl w/inj	L92	Yes	Yes	Yes	No	No	No	No
L92/LS3	**25534401**	4-bbl	L92	Yes	Yes	Yes	No	No	No	No
L92/LS3	**19244037**	LSX 4-bbl	L92	Yes	Yes	Yes	No	No	No	No
L92/LS3	**19244035**	LSX 4-bbl	L92	Yes	Yes	Yes	No	No	No	No
LS7	**12644568**	EFI	LS7	No	No	No	Yes	Yes	No	No
LS7	**25534413**	4-bbl w/inj	LS7	No	No	No	Yes	Yes	No	No
LS7	**25534394**	4-bbl	LS7	No	No	No	Yes	Yes	No	No
LSX454	**19244033**	LSX 4-bbl	LS7	No	No	No	Yes	Yes	No	No
LSX-CT	**19257854**	LSX 4-bbl	LSX-CT	No	No	No	No	No	Yes	Yes
LSX454R	**19257851**	LSX 4-bbl	LSX-DR	No	No	No	No	No	Yes	Yes

No=not compatible Yes=direct compatibility

A LS6 Rockers

B L92 Rockers

VALVETRAIN

LS-Series valvetrain systems are very universal. All production engines use investment-cast rockers with roller trunnions. They attach to a bolt-down mounting bracket (except for LS7 and LSX applications that have machined pedestals) that makes installation fast and easy. All production engines feature 1.7-ratio rockers, except the LS7, which uses 1.8-ratio rockers. Rockers are specific to their cylinder head families. Here's a look at the various applications:

Cathedral-port heads

Use interchangeable rockers on the intake and exhaust sides P/N 10214664. (Photo A)

L92 heads

Use specific, offset intake rockers P/N 12569167 and non-offset exhaust rockers P/N 10214664. (Photo B)

LS7 heads

Use specific, offset intake rockers P/N 12579615 and non-offset exhaust rockers (P/N 12579617). (Photo C)

LSX-DR heads

LSX-DR heads require racing-style shaft mount rocker systems. Chevrolet Performance offers a 1.90:1-ratio rocker arm kit (P/N 19201808). (Photo D)

LS Compatibility—Heads vs. Blocks

BLOCKS			HEADS						
Engine	Part Number	Bore Size	12559855 Std LS1	12564824 (discontinued) Std LS6/LS2	12562319 Std LQ9	88958622 (discontinued) CNC LS6	12629064 Std L76/L92	12598594 Std LS3	88958758 CNC LS3
LS1/LS6	**12561166**	3.890"	Yes	Yes	Yes	Yes	No	No	No
LS2/L76	**12602691**	4.000"	Yes	Yes	Yes	Yes	Yes	Yes	Yes
L92/LS3	**12623967**	4.065"	Yes	Yes	Yes	Yes	Yes	Yes	Yes
LSA	**12623968**	4.065"	Yes	Yes	Yes	Yes	Yes	Yes	Yes
LS9	**12621983**	4.065"	Yes	Yes	Yes	Yes	Yes	Yes	Yes
LS7	**19213580**	4.125"	Yes	Yes	Yes	Yes	Yes	Yes	Yes
C5R	**12480030**	4.120" - 4.160"	Yes	Yes	Yes	Yes	Yes	Yes	Yes
LSX Std. Deck[1]	**19260093**	3.890"	Yes	Yes	Yes	Yes	*	*	*
LSX Tall Deck[1]	**19260100**	3.890" - 4.200"	*	*	*	*	*	*	*
LSX376	**19260095**	4.085"	Yes	Yes	Yes	Yes	Yes	Yes	Yes
LSX454	**19260099**	4.185"	Yes	Yes	Yes	Yes	Yes	Yes	Yes

*No=not compatible Yes=direct compatibility *4.00" minimum bore*
[1]LSX Semi-Finished - needs finish bore/hone and deck height machined

BUILDER'S TIP

ENSURING WINDAGE TRAY CLEARANCE ON LS ENGINES

When building a custom LS engine combination, care must be taken to make sure the connecting rods don't interfere with the windage tray. To do that, set the windage tray over the installed rotating assembly carefully and rotate the crankshaft. If any of the connecting rods touch the tray, you'll have to use a specially designed windage tray for longer-stroke cranks.

C LS7 Rockers

D LSX-DR Rocker Stand Pads

HEAD-TO-BLOCK COMPATIBILITY

Because of their comparatively small bores – 3.89 inches – LS1 and LS6 engines can only use LS1, LS6 and LS2 heads. Using heads designed for larger engines will cause valve-to-block interference. The larger, 4.00-inch bore of the LS2 enables it to use LS1/LS6 heads, as well as L92-style heads (including LS3, LS9 and LSA engines). The 6.2L engines (LS3, L92, etc.) can use any head, except for the LS7 and C5R, while the 7.0L LS7 and C5R blocks can use any LS-series head. LS7 blocks should be matched with heads designed for at least 4.10-inch bores; and 4.125-inch bores are preferred.

Most LS production cylinder blocks share the came cylinder head bolt pattern and the same size head bolts – four 11mm bolts per cylinder (20 in total) and five upper, 8mm bolts. Early LS1 and LS6 engines used different-length 11mm bolts, but engines from 2004 and later use same-length bolts. LS9 engines use stronger, 12mm head bolts.

Non-production blocks, such as Chevrolet Performance's LSX block and the C5R, offer the same head-bolt pattern as production blocks. All LS heads will bolt up to them, but care must be taken to select the most compatible heads based on the appropriate bore size. Because of their large bores, heads designed for at least 4.10-inch bores should be used and 4.125-inch bores are preferred, such as the L92/LS3 or LS7 heads.

Chevrolet Performance's LSX cylinder heads use 10 11mm and 13 8mm head bolts, or eight more than a regular-production LS head. That's more than 50 percent more head bolts than production heads, supplying superior clamping strength.

All cylinder heads used with the LSX tall-deck block require the appropriate intake mainfold designed for tall-deck applications because the higher deck of the block widens the dimension between the heads' manifold-mounting positions.

LS Compatibility—Heads vs. Blocks (Continued)

BLOCKS			HEADS						
Engine	Part Number	Bore Size	12559855 Std LS1	12564824 (discontinued) Std LS6/LS2	12562319 Std LQ9	88958622 (discontinued) CNC LS6	12629064 Std L76/L92	12598594 Std LS3	88958758 CNC LS3
LS1/LS6	**12561166**	3.890"	Yes	No	No	No	No	No	No
LS2/L76	**12602691**	4.000"	Yes	Yes	Yes	No	No	No	No
L92/LS3	**12623967**	4.065"	Yes	Yes	Yes	No	No	No	No
LSA	**12623968**	4.065"	Yes	Yes	Yes	No	No	No	No
LS9	**12621983**	4.065"	Yes	Yes	Yes	No	No	No	No
LS7	**19213580**	4.125"	Yes	Yes	Yes	Yes	Yes	Yes	Yes
C5R	**12480030**	4.120" - 4.160"	Yes	Yes	Yes	Yes	Yes	Yes	Yes
LSX Std. Deck[1]	**19260093**	3.890"	**	**	**	**	**	**	**
LSX Tall Deck[1]	**19260100**	3.890" - 4.200"	**	**	**	**	**	**	**
LSX376	**19260095**	4.085"	Yes	Yes	Yes	No	No	No	No
LSX454	**19260099**	4.185"	Yes	Yes	Yes	Yes	Yes	Yes	Yes

*No=not compatible Yes=direct compatibility *4.00" minimum bore **4.125" minimum bore*

BUILDER'S TIP

PRIMING THE LS ENGINE

If you're used to building classic Small-Block and Big-Block engines, you've probably used an electric drill or similar tool in the distributor hole to drive the oil pump and prime the engine prior to start-up. LS engines don't use distributors, so engine priming must be performed in other ways. First of all, fill the oil pump pickup with oil when assembling the engine. That will ensure a quantity of oil is in the pump when the engine is started for the first time. Also, disconnect either the fuel supply or ignition system when it's time to start the engine and allow the engine to "roll over" for approximately 30 seconds. That allows oil to circulate through the engine without the engine running. Removing spark plugs will allow the engine to prime faster with less load on the bearings. Then, reconnect the fuel or ignition and fire up your LS engine!

LS3

19301326

430 hp @ 5,900 rpm

425 lb.-ft. @ 4,600 rpm

DYNO CHART

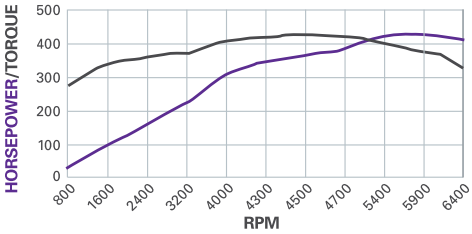

A New Classic!

As the standard engine in the fifth-generation Camaro SS and C6 Corvette, the high-revving, deep-breathing LS3 6.2L is poised to go down in history as one of Chevrolet's best and most versatile engines. It's no surprise that enthusiasts and builders have made it one of the most popular LS swap engines.

The LS3 is filled with components designed for high performance and longevity. The aluminum block is filled with a sturdy reciprocating assembly that combines with L92-type rectangular-port heads to deliver a 10.7:1 compression ratio. A high-lift, hydraulic roller camshaft complements the LS3's tremendous airflow capability and enhances its broad torque curve. Out-of-the-crate Horsepower is 430, with an impressive 425 lb.-ft. torque.

Our LS3 crate engine comes complete from the SS-specific oil pan to the ignition system. It also includes the intake manifold assembly with injectors and throttle body, exhaust manifolds, water pump, balancer, 58x reluctor wheel and 14-inch automatic-transmission flexplate. The SS oil pan doesn't suit all applications. Use the vehicle-specific oil pan for original LS-powered vehicles or Chevrolet Performance's Muscle Car Oil Pan Kit P/N 19212593 for older vehicles.

NOTE: *Refer to page 91 for the complete horsepower and torque testing procedures.*

TECH SPECS

Part Number:	19301326
Engine Type:	LS-Series Gen IV Small-Block V-8
Displacement (cu in):	376 cu in (6.2L)
Bore x Stroke (in):	4.065 x 3.622 (103.25 x 92mm)
Block (P/N 12623967):	Cast-aluminum with 6-bolt, cross-bolted main caps
Crankshaft (P/N 12597569):	Nodular iron
Connecting Rods (P/N 12649190):	Powdered metal
Pistons (P/N 19207287):	Hypereutectic aluminum
Camshaft Type (P/N 12623063):	Hydraulic roller
Valve Lift (in):	.551 intake / .522 exhaust
Camshaft Duration (@.050 in):	204° intake / 211° exhaust
Cylinder Heads (P/N 12629063):	Aluminum L92-style port; as cast with 68cc chambers
Valve Size (in):	2.165 intake / 1.590 exhaust
Compression Ratio:	10.7:1
Rocker Arms (P/N 12569167 int):	Investment-cast, roller trunnion
Rocker Arms (P/N 10214664 exh):	Investment-cast, roller trunnion
Rocker Arm Ratio:	1.7:1
Recommended Fuel:	Premium pump
Maximum Recommended rpm:	6,600
Reluctor Wheel:	58x
Balanced:	Internal

INSTALLATION NOTES

- Assembly does not include any electronics
- Use LS3 Controller Kit, P/N 19258270 for engine operation. Kit includes electronic throttle pedal, which is required for throttle input to the ECU (see page 293)
- Includes Chevy SS wet sump oil pan
- Intended for pre-1976 street vehicles or any off-road vehicle
- Not intended for marine applications
- Front-end accessory drive kits are available in several configurations (see page 277 for application).

Chevrolet Performance Crate Engines include a 24-month or 50,000-mile/80,000-kilometer limited warranty.

Chevrolet Performance does not utilize any used or remanufactured parts in this crate engine, except for the starter, alternator and power steering pump.

Also available as an E-ROD system
See page 225 for details

19260380

SuperMatic™ 4L65-E Four-Speed Automatic Transmission

A durable, easy-cruising four-speed overdrive automatic transmission; electronically controlled for more precise, fuel-saving performance.

See page 364 for torque converter applications.

19302405

Transmission Controller

Required when using a GM electronically controlled automatic transmission. Includes wiring harness, software and connector for laptop computer.

See page 369 for details.

AVAILABLE ENGINE-RELATED PARTS & ACCESSORIES

See page 244 for our complete line of LS-Series components

19258270
LS3 Controller Kit
Page 293

19329795
T56 Super Magnum Six-Speed Manual Transmission
Page 370

19329620
LS/LT Bell Housing
Page 370

19299802
SuperMatic™ Torque Converter
Page 364

19155067
Corvette Accessory Drive Kit
Page 277

19301246
Air Inlet Kit for LS-Based Crate Engine Installation
Page 287

LS376/480

19301358

495 hp @ 6,200 rpm

473 lb.-ft. @ 5,000 rpm

DYNO CHART

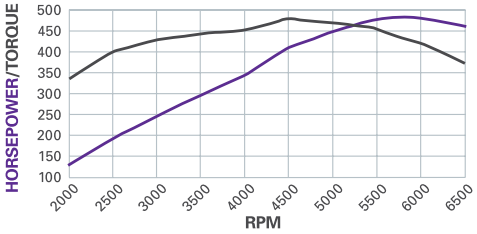

The Hot Cam Adds Heat to the LS3

Our engineers took a production LS3 6.2L (376 cubic inches) and swapped the stock camshaft for the racing-inspired LS Hot Cam (P/N 88958753), which delivered a stunning 495 horsepower and 473 lb.-ft. of torque. That's nearly 14 percent more power and torque from a simple camshaft change!

We wasted no time in adding that terrific combination – dubbed LS376/480 – to our crate engine portfolio. The key to the power boost is the Hot Cam's 0.525-inch lift on both the intake and exhaust sides, along with 219-degree/228-degree duration specs. That's less lift on the intake side than the stock LS3 cam, but considerably more duration, allowing the valves to stay open longer to draw in more air from the rectangular-port L92-style heads.

The crate engine package includes the intake manifold, throttle body and fuel rail, along with the ignition system and exhaust manifolds. Use it with the LS376/480 with controller kit P/N 19258267, which includes a special pedal for use with the engine's electronically controlled throttle.

NOTE: *Refer to page 91 for the complete horsepower and torque testing procedures.*

TECH SPECS

Part Number:	19301358
Engine Type:	LS-Series Gen IV Small-Block V-8
Displacement (cu in):	376 cu in (6.2L)
Bore x Stroke (in):	4.065 x 3.622 (103.25 x 92mm)
Block (P/N 12623967):	Cast-aluminum with 6-bolt, cross-bolted main caps
Crankshaft (P/N 12597569):	Nodular iron
Connecting Rods (P/N 12649190):	Powdered metal
Pistons (P/N 19207287):	Hypereutectic aluminum
Camshaft Type (P/N 88958753):	Hydraulic roller
Valve Lift (in):	.525 intake / .525 exhaust
Camshaft Duration (@.050 in):	219° intake / 228° exhaust
Cylinder Heads (P/N 12629063):	Aluminum L92-style port; as cast with 68cc chambers
Valve Size (in):	2.165 intake/ 1.590 exhaust
Compression Ratio:	10.7:1
Rocker Arms (P/N 12569167 int):	Investment-cast, roller trunnion
Rocker Arms (P/N 10214664 exh):	Investment-cast, roller trunnion
Rocker Arm Ratio:	1.7:1
Recommended Fuel:	Premium pump
Maximum Recommended rpm:	6,600
Reluctor Wheel:	58x
Balanced:	Internal

INSTALLATION NOTES

- Assembly does not include any electronics
- Use LS376/480 Controller Kit, P/N 19258267 for engine operation. Kit includes electronic throttle pedal, which is required for throttle input to the ECU (see page 293)
- Includes Chevy SS wet sump oil pan
- Intended for pre-1976 street vehicles or any off-road vehicle
- Not intended for marine applications
- Front-end accessory drive kits are available in two configurations (see page 277 for application).

Chevrolet Performance Crate Engines include a 24-month or 50,000-mile/80,000-kilometer limited warranty.

Chevrolet Performance does not utilize any used or remanufactured parts in this crate engine, except for the starter, alternator and power steering pump.

19299055

SuperMatic™ 4L70-E Four-Speed Automatic Transmission

A durable, easy-cruising four-speed overdrive automatic transmission; electronically controlled for more precise, fuel-saving performance.

See page 364 for torque converter applications.

19302405

Transmission Controller

Required when using a GM electronically controlled automatic transmission. Includes wiring harness, software and connector for laptop computer.

See page 369 for details.

AVAILABLE ENGINE-RELATED PARTS & ACCESSORIES

See page 244 for our complete line of LS-Series components

19258267
LS376/480 Controller Kit
Page 293

19329795
T56 Super Magnum Six-Speed Manual Transmission
Page 370

19212593
Muscle Car Oil Pan Kit
Page 285

19299803
SuperMatic™ Torque Converter
Page 364

19155067
Corvette Accessory Drive Kit
Page 277

19301246
Air Inlet Kit for LS-Based Crate Engine Installation
Page 287

LS376/515

19301359

533 hp @ 6,600 rpm

477 lb.-ft. @ 5,200 rpm

DYNO CHART

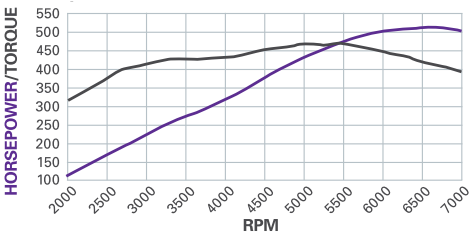

Big Power for the Street or Track

Using the LS3 engine as its foundation, the LS376/515 crate engine adds Chevrolet Performance's racing-derived ASA Hot Cam and a carbureted intake system to produce 533 horsepower at a high-revving 6,600 rpm and 477 lb.-ft. of torque at 5,200 rpm. It's a great engine for resto-mod classic and late-model muscle cars.

The assembly includes an SS oil pan and LS3 cylinder heads, with high-flow, rectangular-port intake passages, as well as our unique, spider-type carburetor intake manifold. At the heart of the engine is the ASA Hot cam, which extends the performance range of the LS3 with more duration. That means it holds open the valves longer, enabling greater airflow at higher rpm. Wind it out yourself and you'll see what we mean!

You'll need our LSX controller P/N 19171130 and Holley 770-cfm carburetor P/N 19170093 to get the engine running. And if you're installing it in an older vehicle, use our Muscle Car Oil Pan kit P/N 19212593.

NOTE: *Refer to page 91 for the complete horsepower and torque testing procedures.*

TECH SPECS

Part Number:	19301359
Engine Type:	LS-Series Gen IV Small-Block V-8
Displacement (cu in):	376 cu in (6.2L)
Bore x Stroke (in):	4.065 x 3.622 (103.25 x 92mm)
Block (P/N 12623967):	Cast-aluminum with 6-bolt, cross-bolted main caps
Crankshaft (P/N 12597569):	Nodular iron
Connecting Rods (P/N 12649190):	Powdered metal
Pistons (P/N 19207287):	Hypereutectic aluminum
Camshaft Type (P/N 88958770):	Hydraulic roller
Valve Lift (in):	.525 intake / .525 exhaust
Camshaft Duration (@.050 in):	226° intake / 236° exhaust
Cylinder Heads (P/N 12629063):	Aluminum L92-style port; as cast with 68cc chambers
Valve Size (in):	2.165 int / 1.590 exhaust
Compression Ratio:	10.7:1
Rocker Arms (P/N 12569167 int):	Investment-cast, roller trunnion
Rocker Arms (P/N 10214664 exh):	Investment-cast, roller trunnion
Rocker Arm Ratio:	1.7:1
Recommended Fuel:	Premium pump
Maximum Recommended rpm:	6,600
Reluctor Wheel:	58x
Balanced:	Internal

INSTALLATION NOTES

- Assembly does not include any electronics
- Use LSX ignition controller P/N 19171130 (includes harness) (page 294)
- Includes Chevy SS wet sump oil pan
- Intended for pre-1976 street vehicles or any off-road vehicle
- Not intended for marine applications
- 770-cfm carb P/N 19170093 recommended for daily street use
- Front-end accessory drive kits are available in two configurations (see page 277 for application).

Chevrolet Performance Crate Engines include a 24-month or 50,000-mile/80,000-kilometer limited warranty.

Chevrolet Performance does not utilize any used or remanufactured parts in this crate engine, except for the starter, alternator and power steering pump.

19299055

SuperMatic™ 4L70-E Four-Speed Automatic Transmission

A durable, easy-cruising four-speed overdrive automatic transmission; electronically controlled for more precise, fuel-saving performance.

See page 364 for torque converter applications.

19332775

Transmission Controller

Required when using a GM electronically controlled automatic transmission. Includes wiring harness, software and connector for laptop computer.

See page 369 for details.

AVAILABLE ENGINE-RELATED PARTS & ACCESSORIES

See page 244 for our complete line of LS-Series components

19170093
Carburetor, Holley 770-cfm
Page 291

19171130
LSX Controller
Page 294

19212593
Muscle Car Oil Pan Kit
Page 285

19299803
SuperMatic™ Torque Converter
Page 364

19155067
Corvette Accessory Drive Kit
Page 277

19301246
Air Inlet Kit for LS-Based Crate Engine Installation
Page 287

LS376/525

19301360

525 hp @ 6,200 rpm

486 lb.-ft. @ 5,200 rpm

DYNO CHART

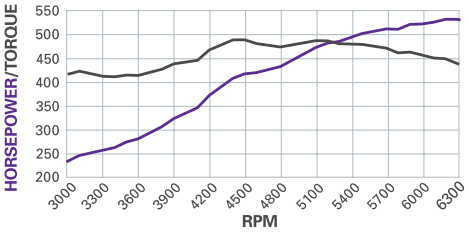

Our Most Powerful Naturally Aspirated 6.2L!

With Chevrolet Performance's aggressive ASA camshaft – developed for the high-rpm world of circle-track racing – installed in the LS3 6.2L engine, it comes alive with 525 uncompromising horsepower. That makes it the most powerful naturally aspirated 6.2L street engine in our portfolio – and one that has an edge to it. You'll notice it in the idle quality and you'll feel it when the revs quickly climb.

The ASA camshaft is a hydraulic roller with .525-inch lift on both sides, along with 226 degrees duration on the intake side and 236 degrees on the exhaust side. Coupled with a tight, 110-degree lobe separation angle, it helps the engine deliver excellent throttle response and breathe exceptionally well at high rpm. And for durability, we complement the cam with higher-rate valve springs.

You'll need tuning to make the most of the engine in a late-model GM vehicle. If you plan to use the engine in a vintage car, you'll need controller kit P/N 19259261, which includes the throttle pedal to match its electronically controlled throttle body.

NOTE: *Refer to page 91 for the complete horsepower and torque testing procedures.*

TECH SPECS

Part Number:	19301360
Engine Type:	LS-Series Gen IV Small-Block V-8
Displacement (cu in):	376 cu in (6.2L)
Bore x Stroke (in):	4.065 x 3.622 (103.25 x 92mm)
Block (P/N 12623967):	Cast aluminum with 6-bolt, cross-bolted main caps
Crankshaft (P/N 12597569):	Nodular iron
Connecting Rods (P/N 12607475):	Powdered metal
Pistons (P/N 19207287):	Hypereutectic aluminum
Camshaft Type (P/N 88958770):	Hydraulic roller
Valve Lift (in):	0.525 intake / 0.525 exhaust
Camshaft Duration (@0.050 in):	226° intake / 236° exhaust
Cylinder Heads (P/N 12629063):	Aluminum L92-style port; as cast with 68cc chambers
Valve Size (in):	2.165 intake / 1.590 exhaust
Compression ratio:	10.7:1
Rocker Arms (P/N 12569167 int):	Investment cast, roll trunnion
Rocker Arms (P/N 10214664 exh):	Investment cast, roll trunnion
Rocker Arm Ratio:	1.7:1
Recommended Fuel:	Premium pump
Maximum Recommended RPM:	6,600
Reluctor Wheel:	58x
Balanced:	Internal

INSTALLATION NOTES

- Assembly does not include any electronics
- Use Engine Controller Kit for engine operation P/N 19259261 (page 293)
- Includes Chevy SS wet sump oil pan
- Intended for pre-1976 street vehicles or any off-road vehicle
- Not intended for marine applications
- Front-end accessory drive kits are available in several configurations (see page 277 for application).

Chevrolet Performance Crate Engines include a 24-month or 50,000-mile/80,000-kilometer limited warranty.

Chevrolet Performance does not utilize any used or remanufactured parts in this crate engine, except for the starter, alternator and power steering pump.

19299055

SuperMatic™ 4L70-E Four-Speed Automatic Transmission

A durable, easy-cruising four-speed overdrive automatic transmission; electronically controlled for more precise, fuel-saving performance.

See page 364 for torque converter applications.

19302405

Transmission Controller

Required when using a GM electronically controlled automatic transmission. Includes wiring harness, software and connector for laptop computer.

See page 369 for details.

AVAILABLE ENGINE-RELATED PARTS & ACCESSORIES

See page 244 for our complete line of LS-Series components

19259261
LS376/525 Controller Kit
Page 293

19329795
T56 Super Magnum Six-Speed Manual Transmission
Page 370

19212593
Muscle Car Oil Pan Kit
Page 285

19299803
SuperMatic™ Torque Converter
Page 364

19155067
Corvette Accessory Drive Kit
Page 277

19301246
Air Inlet Kit for LS-Based Crate Engine Installation
Page 287

DR525

19329009	525 hp @ 6,200 rpm	494 lb.-ft. @ 4,400 rpm	with muscle car oil pan
19329008	525 hp @ 6,200 rpm	498 lb.-ft. @ 4,400 rpm	with Gen 4 F-car oil pan (not shown)

Big Power for LSX Stock Drag Racing

Chevrolet Performance's DR525 sealed drag racing crate engine signals an important advancement for drag racing, enabling exciting heads-up racing at a lower cost than custom-built engines. It's an approach Chevrolet Performance implemented in a number of circle track racing series, providing racers a high-performance engine at a great value.

The DR525 is designed as the spec engine for NMCA's LS Stock racing class in the LSX Showdown Challenge Series. The 6.2L (376 cubic inches) naturally aspirated engine is rated at 525 horsepower with 498 lb.-ft.torque, and features several tamper-proof seals to ensure class compliance. And while it is the spec engine for the LS Stock class, it is legal in other NMCA/LSX Showdown Challenge classes – and other drag racing series.

It is offered with two part numbers: 19329009 (includes Chevrolet Performance's muscle car oil pan) or 19329008 (includes fourth-generation F-body oil pan). Chevrolet Performance's custom-calibrated E67-type engine control system – P/N 19329003 (sold separately) – must be used with the DR525 in the LS Stock class. It features a tamper-proof engine control unit.

NOTE: *Refer to page 91 for the complete horsepower and torque testing procedures.*

TECH SPECS

Part Number:	19329009 (w/muscle car oil pan) 19329008 (w/Gen 4 F-car oil pan)
Engine Type:	LS-Series Gen IV Small-Block V-8
Displacement (cu in):	376 cu in (6.2L)
Bore x Stroke (in):	4.065 x 3.622 (103.25 x 92mm)
Block (P/N 12623967):	Cast aluminum with 6-bolt, cross-bolted main caps
Crankshaft (P/N 12597569):	Nodular iron
Connecting Rods (P/N 12607475):	Powdered metal
Pistons (P/N 19207287):	Hypereutectic aluminum
Camshaft Type (P/N 88958770):	Hydraulic roller
Valve Lift (in):	0.525 intake / 0.525 exhaust
Camshaft Duration (@0.050 in):	226° intake / 236° exhaust
Cylinder Heads (P/N 12629063):	Aluminum L92-style port; as cast with 68cc chambers
Valve Size (in):	2.165 intake / 1.590 exhaust
Compression ratio:	10.7:1
Rocker Arms (P/N 12569167 int):	Investment cast, roller trunnion
Rocker Arms (P/N 10214664 exh):	Investment cast, roller trunnion
Rocker Arm Ratio:	1.7:1
Recommended Fuel:	Premium pump
Maximum Recommended RPM:	6,600
Reluctor Wheel:	58x
Balanced:	Internal

INSTALLATION NOTES

- Assembly does not include electronics
- Use DR525 Engine Controller Kit for engine operation, P/N 19329003 (See page 293)
- Intended for off-road, drag racing vehicles
- Not intended for marine applications
- Front-End Accessory Drive Kit, P/N 19329418, not included with engine assembly (See page 281)

Chevrolet Performance Series Crate Engines are covered for 24 months or 50,000 miles/80,000 kilometer limited warranty.

Chevrolet Performance does not utilize any used or remanufactured parts in this crate engine, except for the starter, alternator and power steering pump.

DR525 with muscle car oil pan
P/N 19329009

AVAILABLE ENGINE-RELATED PARTS & ACCESSORIES

See page 244 for our complete line of LS-Series components

19329003
Controller and Harness
Page 293

10465385
LS-Series Starter
Page 290

19301246
Air Inlet Kit for LS-Based Crate Engine Installation
Page 287

LSA

19331507

556 hp @ 6,100 rpm

551 lb.-ft. @ 3,800 rpm

DYNO CHART

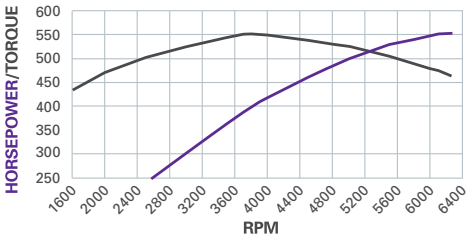

ZL1 Camaro Power for Your Hot Rod!

Chevrolet Performance's LSA 6.2L SC supercharged crate engine is an increasingly popular choice for hot rod builders, thanks to its great balance of performance and value.

For 2016, we've updated the LSA package with the production variant from the fifth-generation Camaro ZL1 featuring 556 horsepower and 551 lb.-ft. of torque. The ZL1-based assembly also has different intercooler assembly with repositioned coolant inlet and outlet ports, which makes installation easier for many retro-fit applications.

What hasn't changed are the core components that made the original engine tough and refined, including a unique aluminum cylinder block casting that's home to a forged steel crankshaft and super-tough reciprocating parts, and integrated piston-cooling oil jets. It also features high-flow cylinder heads that support the airflow pushed by a 1.9L Eaton TVS supercharger.

Our ZL1 supercharged crate engine package comes fully dressed, from the top of the charge-cooled supercharger assembly to the ignition system, water pump, balancer and more.

It also includes an 8-bolt crankshaft flange that may require an adapter for use with some transmissions. Use with LSA Controller Kit part number 19259293.

NOTE: *Refer to page 91 for the complete horsepower and torque testing procedures.*

TECH SPECS

Part Number:	19331507
Engine Type:	LS-Series Gen IV Small-Block V-8
Displacement (cu in):	376 cu in (6.2L)
Bore x Stroke (in):	4.065 x 3.622 (103.25 x 92mm)
Block (P/N 12623968):	Cast-aluminum with 6-bolt, cross-bolted main caps
Crankshaft (P/N 12603616):	Forged steel with 8-bolt flange
Connecting Rods (P/N 12604857):	Powdered metal
Pistons (P/N 12625119):	Hypereutectic aluminum
Camshaft Type (P/N 12623064):	Hydraulic roller
Valve Lift (in):	.492 intake / .480 exhaust
Camshaft Duration (@.050 in):	198° intake / 216° exhaust
Cylinder Heads (P/N 12626958):	Aluminum L92-style port; as cast with 68cc chambers
Valve Size (in):	2.160 intake / 1.590 exhaust
Compression Ratio:	9.1:1
Rocker Arms (P/N 12569167 int):	Investment-cast, roller trunnion
Rocker Arms (P/N 10214664 exh):	Investment-cast, roller trunnion
Rocker Arm Ratio:	1.7:1
Recommended Fuel:	Premium pump
Maximum Recommended rpm:	6,600
Reluctor Wheel:	58x
Balanced:	Internal

INSTALLATION NOTES

- Assembly does not include any electronics or accessory drive components
- Use LSA Controller Kit P/N 19259293, available for non-original applications. Kit includes ECM, wiring harness, O^2 sensors and throttle pedal for ETC operation.
- Coolant pump included P/N 22901367
- Intended for pre-1976 street vehicles or any off-road vehicle
- 8-bolt crank flange
- Not intended for marine applications
- Includes flexplate
- See page 278 for LSA Accessory Drive System
- Assembled w/ZL1 Camaro wet sump oil pan

Chevrolet Performance Crate Engines include a 24-month or 50,000-mile/80,000-kilometer limited warranty.

Chevrolet Performance does not utilize any used or remanufactured parts in this crate engine, except for the starter, alternator and power steering pump.

19300175

SuperMatic™ 4L85-E Four-Speed Automatic Transmission

Features five-pinion gearsets, heat-treated stator shaft splines, induction-hardened turbine shaft, seven-plate clutch and specific valve-body calibration.

See page 364 for torque converter applications.

19302410

Transmission Controller

Required when using a GM electronically controlled automatic transmission. Includes wiring harness, software and connector for laptop computer.

See page 369 for details.

AVAILABLE ENGINE-RELATED PARTS & ACCESSORIES

See page 244 for our complete line of LS-Series components

19259293
LSA Controller Kit
Page 293

19243525
LSA Accessory Drive System w/o AC
Page 278

19212593
Muscle Car Oil Pan Kit
Page 285

19299806
SuperMatic™ Torque Converter
Page 364

19244106
LSA Accessory Drive System AC add-on kit
Page 278

19301246
Air Inlet Kit for LS-Based Crate Engine Installation
Page 287

LS9

19260165

638 hp @ 6,500 rpm

604 lb.-ft. @ 3,800 rpm

DYNO CHART

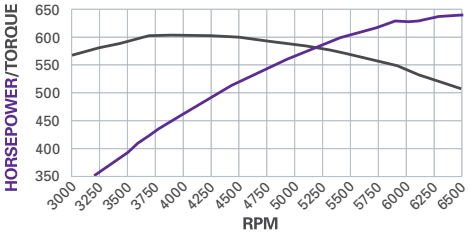

The Last of a Legend!

When the C6 Corvette ZR1 went out of production, so did its unique LS9 supercharged engine. Chevrolet Performance acquired a finite number of them for use as crate engines and when they're gone, they're gone! Rated at 638 hp and 604 lb.-ft. of torque, the LS9 is a beast!

The engine is a technological marvel. High-rpm-validated lightweight reciprocating parts, including titanium intake valves, are used, along with high-flow cylinder heads that draw the charge forced on them by a sixth-generation supercharger. It has a high-helix (twist) design that helps the "blower" deliver greater power at the low end and sustains it longer through the rpm band for broad, on-demand power whether off-idle or at speed.

Our crate engine assembly includes the dry sump oil pan and provisions for the charge cooler's liquid cooling system. You'll need an external oil tank (not available from Chevrolet Performance), external coolant tank (for the charge cooler) and our LS9 controller kit, P/N 19299462, to get it running in your project vehicle. It also includes a 9-bolt crankshaft flange that may require an adapter for use with some transmissions.

NOTE: *Refer to page 91 for the complete horsepower and torque testing procedures.*

TECH SPECS

Part Number:	19260165
Engine Type:	LS-Series Gen IV Small-Block V-8
Displacement (cu in):	376 cu in (6.2L)
Bore x Stroke (in):	4.065 x 3.622 (103.25 x 92mm)
Block:	Cast-aluminum with 6-bolt, cross-bolted main caps
Crankshaft (P/N 12641693):	Forged steel with 9-bolt flange
Connecting Rods (P/N 12624231):	Forged titanium
Pistons (P/N 19180414):	Forged aluminum
Camshaft Type (P/N 12621774):	Hydraulic roller
Valve Lift (in):	.562 intake / .558 exhaust
Camshaft Duration (@.050 in):	211° intake / 230° exhaust
Cylinder Heads (P/N 12621774):	Aluminum L92-style ports; as cast with 68cc chambers
Valve Size (in):	2.160 titanium intake / 1.590 hollow, sodium-filled exhaust
Compression Ratio:	9.1:1
Rocker Arms (P/N 12569167 int):	Investment-cast, roller trunnion
Rocker Arms (P/N 10214664 exh):	Investment-cast, roller trunnion
Rocker Arm Ratio:	1.7:1
Recommended Fuel:	Premium pump
Maximum Recommended rpm:	6,600
Reluctor Wheel:	58x
Balanced:	Internal

INSTALLATION NOTES

- 14" manual transmission flywheel included
- Assembly does not include any electronics - use LS9 Controller Kit P/N 19299462 to operate engine
- Forged pistons with oil-spray cooling
- Includes Corvette dry sump oil pan - requires production or aftermarket oil lines and oil tank (not included)
- Intended for pre-1976 street vehicles or any off-road vehicle
- Not intended for marine applications
- Crankshaft has unique 9-bolt flywheel mounting pattern

Chevrolet Performance Crate Engines include a 24-month or 50,000-mile/80,000-kilometer limited warranty.

Chevrolet Performance does not utilize any used or remanufactured parts in this crate engine, except for the starter, alternator and power steering pump.

Includes LSA/LS9 Intercooler Fluid Pump P/N 22901367

19329795
T56 Super Magnum Six-Speed Manual Transmission
Designed for retro-fit installations, with 700 lb.-ft. capacity.
Page 370

19331083
Transmission Installation Kit
For LS9 engines with 9-bolt flange. Includes bell housing, clutch, flywheel and hardware.
Page 373

AVAILABLE ENGINE-RELATED PARTS & ACCESSORIES

See page 244 for our complete line of LS-Series components

19243524
LS9 Accessory Drive System w/AC
Page 279

19299462
LS9 Controller Kit *Page 293*

19301246
Air Inlet Kit for LS-Based Crate Engine Installation
Page 287

LS7

19244098

505 hp @ 6,300 rpm

470 lb.-ft. @ 4,800 rpm

DYNO CHART

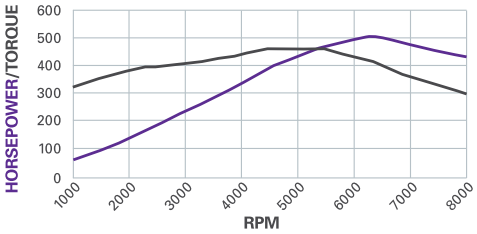

A Future Classic

The LS7 7.0L will go down in history as a benchmark in naturally aspirated power. It powered the world-beating C6 Corvette Z06 and has become a popular engine for enthusiasts who want its uncompromising performance in their project vehicle. At 505 hp with 470 lb.-ft. torque, it's a hot-rodder's dream!

Within its classic 427-cu-in displacement, it features a unique, big-bore cylinder block that is anchored with a forged crankshaft, featherweight titanium connecting rods and friction-coated pistons. But it's the airflow capability of the cavernous, CNC-ported heads that enables its tremendous power. Large-volume, straight-passage intake runners channel air directly through 2.20-inch titanium intake valves.

Chevrolet Performance's LS7 crate engine package includes a production-style engine with the dry sump oil pan. You'll need to supply the external oil supply and oil lines to the engine, but the rest of the assembly is fully dressed, including the manifold assembly with injectors and electronically controlled throttle body, and exhaust manifolds. Use our controller kit P/N 19258553 to get it running in your project vehicle.

NOTE: *Refer to page 91 for the complete horsepower and torque testing procedures.*

TECH SPECS

Part Number:	19244098
Engine Type:	LS-Series Small-Block V-8
Displacement (cu in):	427 (7.0L)
Bore x Stroke (in):	4.125 x 4.000 (104.8 x 101.6mm)
Block (P/N 12602689):	Cast-aluminum with 6-bolt steel main bearing caps
Crankshaft (P/N 12641692):	Forged steel
Connecting Rods (P/N 12586258):	Forged titanium
Pistons:	Hypereutectic aluminum
Camshaft Type (P/N 12638426):	Hydraulic roller
Camshaft Lift (in):	.593 intake / .588 exhaust
Camshaft Duration (@.050 in):	211° intake / 230° exhaust
Cylinder Heads (P/N 12578449):	CNC ported LS7-style ports 70cc CNC combustion chambers
Valve size (in):	2.200 titanium intake, 1.610 sodium-filled exhaust
Compression Ratio:	11.0:1
Rocker Arms:	Investment-cast, roller trunnion
Rocker Arm Ratio:	1.8:1 (offset, intake only)
Recommended Fuel:	Premium pump
Maximum rpm:	7,000
Reluctor Wheel:	58x
Balanced:	Internal

INSTALLATION NOTES

- Assembly does not include any electronics
- Use LS7 Controller Kit P/N 19258553 for engine operation. Kit includes electronic throttle pedal, which is required for throttle input to the ECU (see page 293)
- Comes assembled with 14" Corvette Z06 168-tooth manual transmission flywheel
- LS7 is the same size and mounts the same as other LS-Series engines
- Includes Corvette dry sump oil pan – requires production or aftermarket oil lines and oil tank (not included)
- Use oil hose adapters P/N 25534412 to adapt to AN -12 fittings
- Intended for pre-1976 street vehicles or any off-road vehicle
- Not intended for marine applications
- See page 277 for front end accessory drive kit options

Chevrolet Performance Crate Engines include a 24-month or 50,000-mile/80,000-kilometer limited warranty.

Chevrolet Performance does not utilize any used or remanufactured parts in this crate engine, except for the starter, alternator and power steering pump.

19299055

SuperMatic™ 4L70-E Four-Speed Automatic Transmission

A durable, easy-cruising four-speed overdrive automatic transmission; electronically controlled for more precise, fuel-saving performance.

See page 364 for torque converter applications.

19302405

Transmission Controller

Required when using a GM electronically controlled automatic transmission. Includes wiring harness, software and connector for laptop computer.

See page 369 for details.

AVAILABLE ENGINE-RELATED PARTS & ACCESSORIES

See page 244 for our complete line of LS-Series components

19258553
LS7 Controller Kit
Page 293

19155067
Corvette Accessory Drive Kit
Page 277

10465385
LS-Series Starter
Page 290

19299803
SuperMatic™ Torque Converter
Page 364

25534412
Oil Hose Adapters
Page 290

19301246
Air Inlet Kit for LS-Based Crate Engine Installation
Page 287

LT1

19328728	460 hp @ 6,000 rpm	465 lb.-ft. @ 4,600 rpm	with wet sump
19329997	460 hp @ 6,000 rpm	465 lb.-ft. @ 4,600 rpm	with dry sump (shown)

The Next Generation is Here!

Introduced on the seventh-generation Corvette Stingray, the LT1 6.2L opened the next chapter in the long, historic legacy of the Small-Block engine – and gives your project vehicle a high-tech heart transplant with an unprecedented balance of performance and efficiency!

The LT1 6.2L is architecturally similar to the LS family of Small-Block engines, but with a unique block casting, cylinder head design, oiling system and more. It also combines advanced technologies including direct injection, Active Fuel Management[1] (cylinder deactivation) and continuously variable valve timing to support an advanced combustion system.

Our LT1 6.2L crate engine is rated at 460 horsepower and 465 lb.-ft. of torque; and it is offered with a wet-sump or dry-sump oiling system. A controller specially designed for retro-fit application using an automatic transmission is available.

[1]Chevrolet Performance Parts control kits do not utilize the AFM components on this crate engine

NOTE: *Refer to page 91 for the complete horsepower and torque testing procedures.*

TECH SPECS

Part Numbers:	19328728 (wet sump) 19329997 (dry sump)
Engine Type:	Direct Injection spark ignition Gen V Small-Block V-8
Displacement (cu in):	376 cu in 6.2L
Bore x Stroke (in):	4.065 x 3.622 (103.25 x 92mm)
Block (P/N 12619171):	Cast-aluminum with 6-bolt nodular iron main bearing caps
Crankshaft:	Forged steel
Connecting Rods:	Forged powdered metal
Pistons (P/N 12662802):	Hypereutectic aluminum
Camshaft Type (P/N 12629512):	Billet steel roller
Valve Lift (in):	0.561 intake / 0.531 exhaust
Camshaft Duration (@0.050 in):	242° intake / 244° exhaust
Cylinder Heads (P/N 12620544):	Aluminum, rectangular port D/I
Valve Size (in):	2.130 intake / 1.590 exhaust
Compression ratio:	11.5:1
Rocker Arms (P/N 12619829 int):	Investment-cast, roller trunnion
Rocker Arms (P/N 12619829 exh):	Investment-cast, roller trunnion
Rocker Arm Ratio:	1.81:1
Recommended Fuel:	Premium pump
Maximum Recommended RPM:	6600
Reluctor Wheel:	58x
Balanced:	Internal

INSTALLATION NOTES

- Engines shipped with high-pressure direct-injection fuel pump installed
- Dry Sump Engine, P/N 19329997, requires production or after-market oil lines and external oil tank (not included).
- Dry sump engine, P/N 19329997, comes with a Corvette oil pan. Use oil hose adaptors P/N 25534412 to adapt AN-12 fittings
- Assembly does not include electronics
- Use LT1 Controller Kit, P/N 19303137 for engine operation. Kit includes electronic throttle pedal, which is required for throttle input to the ECU.
- Intended for pre-1976 street vehicles, or any off-road vehicle
- Not intended for marine applications
- Front-End Accessory Drive Kit, P/N 19329990, can be ordered separately (See page 281)
- 8-bolt crankshaft flange
- Shipped with 14" flexplate

Chevrolet Performance Crate Engines include a 24-month or 50,000-mile/80,000-kilometer limited warranty.

Chevrolet Performance does not utilize any used or remanufactured parts in this crate engine, except for the starter, alternator and power steering pump.

19329795

T56 Super Magnum Six-Speed Manual Transmission

Designed for retro-fit installations, with 700 lb.-ft. capacity.

Page 370

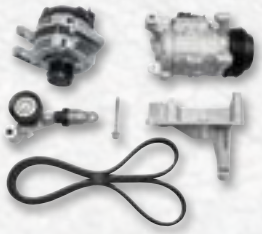

19329990

LT1 Accessory Drive System

Includes alternator, AC compressor and more to complete engine assembly.

Page 281

AVAILABLE ENGINE-RELATED PARTS & ACCESSORIES

See page 244 for our complete line of LS-Series components

19329620
LS/LT Manual Bell Housing
Page 370

19329635
LS/LT Dual-Disc Clutch
Page 371

19125817
Aluminum Automatic Bell Housing
Page 367

19303137
LT1 Controller Kit
Page 293

25534412
Oil Hose Adapters
Page 290

10465385
LS-Series Starter
Page 290

LT4

19332621

650 hp @ 6,000 rpm / **650 lb.-ft.** @ 4,600 rpm / *with wet sump (shown)*

19332702

650 hp @ 6,000 rpm / **650 lb.-ft.** @ 4,600 rpm / *with dry sump*

Supercharged Power from the C7 Corvette Z06!

As heart of the Corvette Z06, the supercharged LT4 6.2L SC is the most powerful engine ever offered in a regular-production Chevrolet. It features a more-efficient, more-compact 1.7L Eaton R1740 TVS supercharger, which spins at up to 20,000 rpm. That's enough to generate more than 9 pounds of boost and help produce 650 horsepower and 650 lb.-ft. of torque.

The LT4 is based on the same Gen V Small-Block architecture as the LT1 engine, with several unique features designed to support its higher output and the greater cylinder pressures created by forced induction. They include Rotocast A356T6 aluminum cylinder heads that are stronger and handle heat better than conventional castings, lightweight titanium intake valves and stronger forged aluminum pistons.

NOTE: *Refer to page 91 for the complete horsepower and torque testing procedures.*

TECH SPECS

Part Number:	19332621 (wet sump) 19332702 (dry sump)
Engine Type:	Gen V Small-Block V-8
Displacement (cu in):	376 cu in (6.2L)
Bore x Stroke (in):	4.065 x 3.622 (103.25 x 92mm)
Block:	Cast aluminum with 6-bolt, cross-bolted main caps
Crankshaft:	Forged steel
Connecting Rods:	Forged powdered-metal steel
Pistons:	Forged aluminum
Camshaft Type:	Hydraulic roller
Valve Lift (in):	0.492 intake / 0.551 exhaust
Camshaft Duration (@0.050 in):	189° intake / 223° exhaust
Cylinder Heads:	A356T6 Rotocast aluminum; as cast with 65.5cc chambers
Valve Size (in):	2.130 intake / 1.590 exhaust
Compression ratio:	10:1
Rocker Arms (P/N 12619829):	Investment cast, roller bearing trunnion
Rocker Arm Ratio:	1.81:1
Recommended Fuel:	Premium pump
Maximum Recommended RPM:	6,600
Reluctor Wheel:	58x
Balanced:	Internal

NOTE: *Distributor with melonized steel gear MUST be used with long-blocks and Partial engines with steel camshafts, or engine damage will occur.*

INSTALLATION NOTES

- Assembly does not include electronics - use P/N 19331517 LT4 controller kit to operate engine
- Dry sump engine requires production or after-market oil lines and oil tank (not included)
- Flywheel included
- Intended for pre-1976 street vehicles or any off-road vehicles
- Not intended for marine applications
- Crankshaft has 8-bolt flywheel mounting pattern
- Engine includes direct injection, VVT and Active Fuel Management

Chevrolet Performance Crate Engines include a 24-month or 50,000-mile/80,000-kilometer limited warranty.

Chevrolet Performance does not utilize any used or remanufactured parts in this crate engine, except for the starter, alternator and power steering pump.

NEW

Includes LSA/LS9 Intercooler Fluid Pump P/N 22901367

19329795

T56 Super Magnum Six-Speed Manual Transmission

Designed for retro-fit installations, with 700 lb.-ft. capacity.

Page 370

19329912

Transmission Installation Kit

For LS/LT engines with 8-bolt flange. Includes bell housing, clutch and flywheel and hardware needed to operate wet or dry sump engines.

Page 373

AVAILABLE ENGINE-RELATED PARTS & ACCESSORIES

See page 244 for our complete line of LS-Series components

19332590
LT4 Wet Sump Accessory Drive System
Page 282

19332614
LT4 Dry Sump Accessory Drive System
Page 282

12652772
LT4 Starter
Page 290

19331517
LT4 Controller Kit
Page 293

25534412
Oil Hose Adapters
Page 290

19301246
Air Inlet Kit for LS-Based Crate Engine Installation
Page 287

LTG 2.0L Turbocharged

19328837

272 hp @ 5,500 rpm | ***295 lb.-ft.*** @ 3,000 rpm

Turbocharged Excitement in a Small Package

Used in many performance sedans throughout General Motors' global portfolio, the LTG 2.0L Turbocharged four-cylinder is one of the most power-dense engines in the industry. And thanks to advanced technologies, such as direct injection, it is a surprisingly efficient performer. It's a great choice for custom tuner cars or to make a statement in your hot rod, with its compact – and lightweight – capabilities.

The LTG is rated at 272 horsepower at 5,500 rpm and 295 lb.-ft. of torque at 3,000 rpm. Its torque curve is broad and robust, delivering 90 percent (260 lb.-ft.) of its peak torque from 1,700 rpm to 5,500 rpm – for a great feeling of immediate power at all speeds. Peak torque is sustained from 3,000 to 4,600 rpm.

The turbocharger generates up to 20 pounds of boost and its twin-scroll design helps optimize the usable power from the engine, virtually eliminating turbo lag and helping deliver a broad power band. Electronically controlled supporting components, including the wastegate and bypass, help optimize performance and efficiency.

NOTE: *Refer to page 91 for the complete horsepower and torque testing procedures.*

Additional engine features include:

- Aluminum engine block with cast-in-place iron liners
- Forged steel crankshaft
- Pistons with jet-spray cooling
- Modular balance shaft system in the oil pan
- Rotocast aluminum cylinder head with sodium-filled exhaust valves
- Dual overhead camshafts with continuously variable valve timing
- Direct injection with cam-driven high-pressure fuel pump
- Two-stage variable-displacement oil pump
- Assembly shipped with flywheel and clutch assembly (installed)
- Engine is configured for rear-wheel-drive applications

NOTE: *Use with Chevrolet Performance engine controller kit P/N 19328839 (see on page 293), for manual-transmission applications only. Fabrication is required to incorporate a charge cooler for the air-to-air intercooling system. A high-pressure fuel pump suitable for direct injection is also required.*

Chevrolet Performance Crate Engines include a 24-month or 50,000-mile/80,000-kilometer limited warranty.

Chevrolet Performance does not utilize any used or remanufactured parts in this crate engine, except for the starter, alternator and power steering pump.

AVAILABLE ENGINE-RELATED PARTS & ACCESSORIES

See page 244 for our complete line of LS-Series components

19328976
LTG 4-Cylinder 6-Speed Manual Transmission
Page 375

19328839
LTG Engine Controller Kit
Page 293

19329020
LTG Accessory Drive System
Includes alternator, AC compressor and more to complete engine assembly.

19332838
LTG RWD Engine Completion Kit
- Includes required PCV hose
- Includes duct assembly for turbo inlet, throttle body inlet and turbo outlet tubes
- Includes all clamps and inlet air pressure sensor
- Does not include charge air cooler

E-ROD CRATE ENGINE SYSTEMS

***LC9 5.3L** - CARB EO# D-126-31* / ***LS3 6.2L** - CARB EO# D-126-32* / ***LSA 6.2L** - CARB EO# D-126-33*

High-Performance Emissions Compliance – Only From Chevrolet Performance!

Chevrolet Performance pioneered the high-performance crate engine and we're leading the industry again with the exclusive E-ROD crate engine packages – the only OEM solutions that enable authorized, emissions-compliant high-performance engine replacements for pre-1996 vehicles in California, regardless of the make, model or original powertrain.

From the economical E-ROD LC9 5.3L, with 320 HP and the E-ROD LS3, with 430 HP, to the incomparable supercharged E-ROD LSA, with 556 HP, we've got the engine to power your project vehicle with worry-free CARB compliance – and all the power you want.

The E-ROD engines are also available as complete Connect & Cruise crate powertrain systems, which include an automatic transmission and all the necessary wire harnesses and controllers. See page 226 for complete Connect & Cruise details.

It's performance with purpose from the pioneer in crate engines – Chevrolet Performance!

E-ROD LC9 5.3L System

E-ROD Systems Have it All

Each E-ROD crate engine system carries an official California Air Resources Board (CARB) E.O. number and includes complete emissions equipment, along with the engine controller and harness needed to get the engine running. The primary elements of each kit include:

- **Chevrolet Performance crate engine**
- **Engine control module**
- **Exhaust manifolds**
- **Catalytic converters**
- **Mass airflow sensor and sensor boss**
- **Oxygen sensors and sensor bosses**
- **Air filter**
- **Accelerator pedal**
- **Evaporative emissions canister**
- **Instruction manual**

E-Rod LC9 5.3L System

- **CARB EO#: D-126-31**
- **Horsepower: 320 hp @ 5,400 rpm**
- **Torque: 335 lb.-ft. @ 4,000 rpm**

With the same displacement as the classic 327 engines from the 1960s, the E-ROD LC9 5.3L is a great choice for building an emissions-compliant resto-mod Corvette or early Chevy II – and as our most affordable E-ROD package, it's a great value for any street rod, classic truck or muscle car. The LC9 5.3L was originally developed as a truck engine, so it delivers strong torque over a broad rpm range, giving you a great feeling of immediate power on demand. Match it with a 4L65-E transmission for the ultimate combination – which you can do with our Connect & Cruise E-ROD crate powertrain system.

Part Number	Description
19258004	w/40-Tooth Reluctor Wheel Transmission*
19258008	w/17-Tooth Reluctor Wheel Transmission*
CPSLC9EROD4L65E	w/Connect & Cruise Package - 2WD
CPSLC9EROD4L70E	w/Connect & Cruise Package - 4WD

BUILDER'S NOTE

To facilitate a complete E-ROD installation, the builder will need to source additional components to complete the assembly and get the vehicle running, including:

- Fuel tank
- Fuel lines (re-circulating or returnless)
- Fuel pump – 58 psi (400 kPa) for LC9 and LS3 or 65 psi (450 kPa) for LSA
- Fuel tank vent line from the tank to the evaporative emissions canister
- Purge line from the canister to the engine purge solenoid
- Air induction system that incorporates the mass airflow sensor
- Exhaust system behind the catalytic converters.

All E-ROD engines require a front-end accessory drive system suitable to the vehicle. The instruction manual included with each kit offers recommendations for the accessory drive kit, as well as the transmission, gear ratios and more. Chevrolet offers several configurations of accessory drive systems to suit different applications; and each allows the installer to easily delete air conditioning. See pages 276-283 for applications and part numbers.

Chevrolet Performance recommends the LS1 Engine Installation Guide P/N 88959384, which illustrates basic procedures and offers helpful tips on installing an LS engine into older vehicles.

E-ROD systems do not come with a transmission. Chevrolet Performance recommends the SuperMatic™ 4L70-E – P/N 19244043 – four-speed automatic overdrive transmission, along with Chevrolet Performance's SuperMatic™ transmission controller P/N 19257634, for LC9 and LS3 systems. The LSA, with higher torque output, should use the SuperMatic™ 4L85-E, P/N 19300175, along with the SuperMatic™ transmission controller, P/N 19302410.

**GM automatic transmissions are typically equipped with 40-tooth reluctor wheels for vehicle speed sensor output. GM late-model manual transmissions are typically equipped with a 17-tooth reluctor wheel. The Chevrolet Performance T56 Super Magnum six-speed manual (P/N 19329795) is equipped with a 40-tooth reluctor wheel.*

E-Rod LS3 6.2L System

- **CARB EO#: D-126-32**
- **Horsepower: 430 @ 5,900 rpm**
- **Torque: 425 lb.-ft. @ 4,600 rpm**

Rated at a strong 430 hp, the original E-ROD crate engine delivers big power with California emissions compliance for countless pre-1995 cars, trucks and SUVs. Along with great power, its aluminum block and heads, and composite intake manifold, make it a lightweight performer, too, meaning your project vehicle will likely enjoy weight balance – with less weight over the front axle. We recommend the 4L65-E transmission to match with the E-ROD LS3, which Chevrolet Performance also offers as an inclusive Connect & Cruise E-ROD crate powertrain system.

Part Number	Description
19257230	w/40-Tooth Reluctor Wheel Transmission*
19257234	w/17-Tooth Reluctor Wheel Transmission*
CPSLS3EROD4L65E	w/Connect & Cruise Package

See page 200 for complete engine details.

E-Rod LSA 6.2L SC System

- **CARB EO#: D-126-33**
- **Horsepower: 556 @ 6,100 rpm**
- **Torque: 551 lb.-ft. @ 3,800 rpm**

The Cadillac CTS-V's 6.2L supercharged LSA engine delivers 556 hp with refinement that is rare in the world of high performance. It is smooth, quiet and well-balanced – all while delivering breathtaking power. The engine features a unique aluminum cylinder block casting that houses a forged steel crankshaft and integrated piston-cooling oil jets, along with high-flow cylinder heads that support the airflow enabled by a 1.9L supercharger with four-lobe, high-twist rotors. The E-ROD LSA comes fully dressed, from the top of the charge-cooled supercharger assembly to the ignition system.

Part Number	Description
19257456	w/40-Tooth Reluctor Wheel Transmission*
19257460	w/17-Tooth Reluctor Wheel Transmission*
CPSLSAEROD4L85E	w/Connect & Cruise Package

See page 210 for complete engine details.

About the E-ROD Engine Controller

The engine control module included with each E-ROD crate engine system is designed for true stand-alone performance in older vehicles. It does not engage a number of features associated with production-model systems, eliminating the possibility of "trouble codes" being set. It also includes a SES (service engine soon) LED indicator embedded in the fuse box.

All that's needed to get a vehicle running with the engine controller are power and ground sources, a high-pressure fuel pump and an electric cooling fan.

CONNECT & CRUISE

CRATE POWERTRAIN SYSTEMS

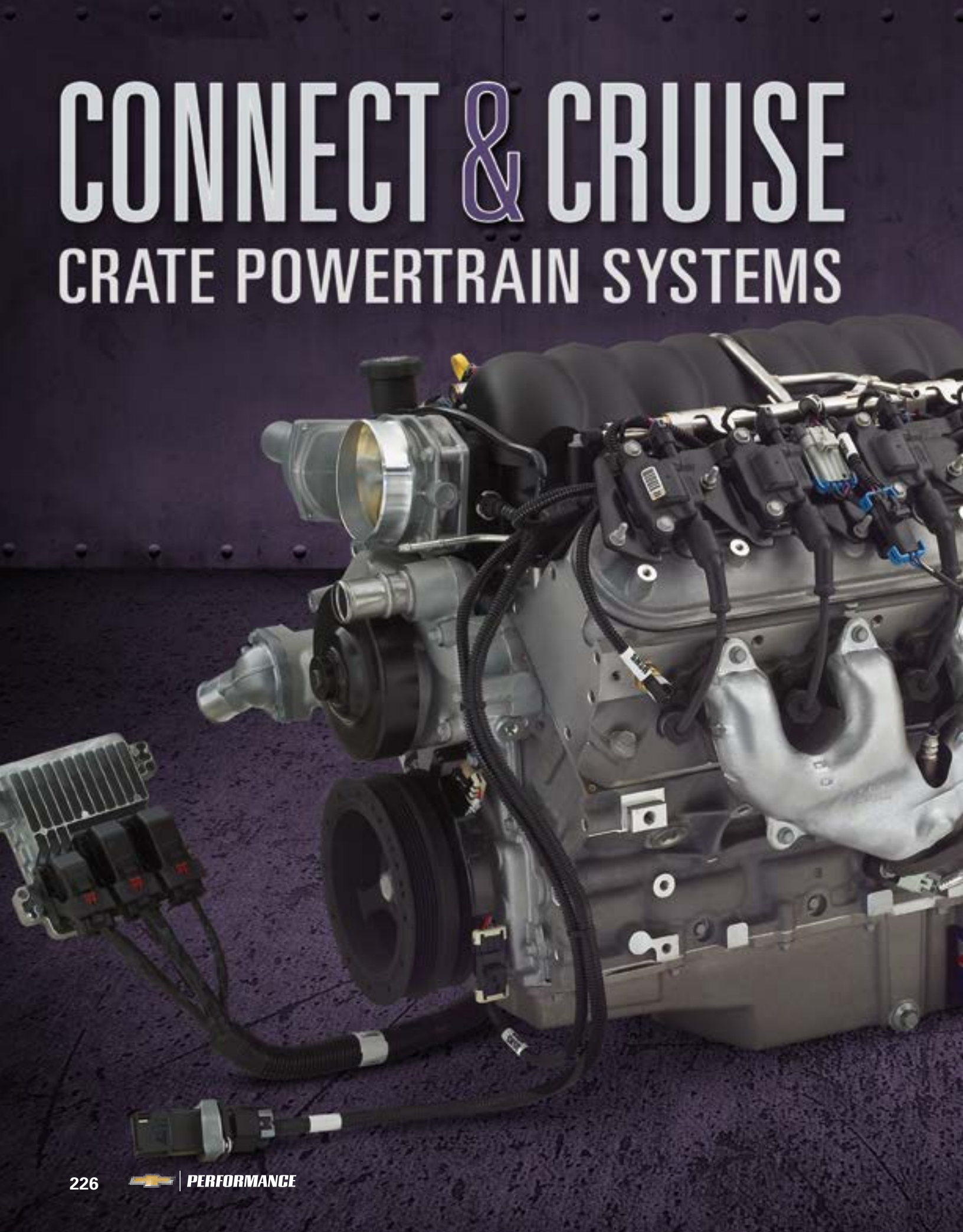

The Complete Performance Package!

When it comes to factory-engineered performance and convenience, nothing beats Chevrolet Performance's industry-exclusive Connect & Cruise crate powertrain systems. With one package you get the engine, automatic or manual transmission, electronic controllers and all the necessary wire harnesses.

Our engineers matched the engines and transmissions for optimal performance and durability. The specially calibrated controllers are designed for retrofit installations in older vehicles, for easier and quicker installation – and more importantly – operation without the need for third-party tuning.

The Connect & Cruise lineup even includes emissions-compliant E-ROD LC9, LS3 and LSA systems. (See page 222 for details about E-ROD kit contents.)

Our engineers did all the hard work of designing and calibrating perfectly matched powertrain systems – and we've covered them with a 24-month/50,000-mile limited warranty (see chevrolet.com/performance or your Chevrolet Performance retailer for complete details).

Chevrolet Performance pioneered the performance crate engine, so when it comes to performance innovations that save time, money and guesswork, we once again lead the way!

Connect & Cruise is available in the following engine configurations:

***LC9 5.3L / LS3 6.2L / LS376/480 6.2L / LS376/525 6.2L / LSA 6.2L SC / LS7 7.0L / LS9 6.2L SC** (manual)*

LT1 6.2L / Ram Jet 350 / ZZ427/480 / ZZ452/440 / ZZ502/502 / Ram Jet 502 / ZZ572/620

LS3 6.2L Connect & Cruise System w/Automatic Transmission

LS3 6.2L Engine

Hydra-Matic 4L65-E Four-Speed Automatic Transmission

Engine Controller Module & Harness

SuperMatic™ Torque Convertor

SuperMatic™ Transmission Controller

Connect & Cruise Builder's Guide

Each Chevrolet Performance Connect & Cruise crate powertrain system includes:

- **Instruction sheet**
- **Brand-new, fully assembled crate engine**
- **Brand-new, automatic or manual transmission**
- **SuperMatic™ transmission control module and harness**
- **Calibrated engine control module**
- **Two oxygen sensors and mounting bosses (for installation in the exhaust system)**
- **Mass airflow meter and mounting boss (for installation in the air intake system)**
- **Throttle pedal assembly (for use with the electronically operated throttle)**
- **Assembled wiring harness with fuse box and necessary cam sensor and MAP sensor jumpers**
- **Oil pressure sensor that is compatible with the harness**

NOTE: *All components, engine, transmission, torque converter and controllers are ordered and delivered separately.*

To facilitate a complete installation, the builder will need to source additional components to complete the engine assembly and get the vehicle running, including:

- Fuel tank and fuel lines (re-circulating or returnless)
- Fuel pump – 58 psi (400 kPa) for all engines except LSA / 65 psi (450 kPa) for LSA
- Air induction system that incorporates the mass airflow sensor.

Additionally, all engines require a front-end accessory drive system. The instruction manual included with each kit offers recommendations and Chevrolet Performance offers several configurations to suit different applications. Each allows the installer to easily delete air conditioning. See pages 276-283 for applications and part numbers.

Chevrolet Performance recommends the LS1 Engine Installation Guide P/N 88959384, which illustrates basic procedures and offers helpful tips on installing an LS engine into older vehicles.

LC9 5.3L Connect and Cruise Powertrain System

The LC9 5.3L engine shares the same displacement as the original 327-cubic-inch Small-Block of the 1960s, making it a great choice for those who want a 21st-century edition of the classic engine. And because the LC9 was originally engineered for truck applications, it offers a broad, flat torque curve that's ideal for giving older trucks and full-size hot rods an excellent feeling of low-end performance. It is paired with the 4L65-E four-speed transmission in 2WD applications and the 4L70-E in 4WD applications, for a great balance of performance and highway-cruising efficiency. This combination is also available as an E-ROD system, for all the builders in California.

LC9 5.3L Connect & Cruise Systems w/Automatic Transmission

System Components	Part Numbers			
	LC9 5.3 L Auto - 2WD	LC9 5.3L Auto - 4WD	LC9 5.3L Auto 2WD E-ROD*	LC9 5.3L Auto 4WD E-ROD*
Engine	19259918	19259918	19258004	19258004
Engine Control System	19259914	19259914	(included)	(included)
Automatic Transmission	19260380	19260961	19260380	19260961
Torque Converter	9299802	19299802	19299802	19299802
Transmission Control System	19302405	19302405	19302405	19302405
Transmission Installation Kit	19259117	19259117	19259117	19259117

LC9 5.3L Connect & Cruise Systems w/Manual Transmission

System Components	Part Numbers	
	LC9 5.3L Manual - 2WD	LC9 5.3L Manual - 2WD E-ROD*
Engine	19259918	19258004
Engine Control System	19259914	(included)
Manual Transmission	19329795	19329795
Transmission Installation Kit	19301625	19301625

ENGINE SPECS:
– LC9 5.3L (327 cu in)
– 320 hp @ 5,400 rpm
– 335 lb.-ft. @ 4,400 rpm
– 9.5:1 compression ratio

TRANS SPECS 2WD:
– 4L65-E four-speed automatic
– Five-pinion gearsets
– 3.06 first gear ratio, 0.70 overdrive ratio
– 30.75 inches long (approx.)

TRANS SPECS 4WD:
– 4L70-E four-speed automatic
– Five-pinion gearsets
– 3.06 first gear ratio, 0.70 overdrive ratio

TRANS SPECS MANUAL:
– T56 Super Magnum six-speed manual
– Slip-yoke design, 40-tooth reluctor ring
– 2.66 first gear ratio, 0.63 overdrive ratio
– 33.6 inches long (approx.)

Available as an E-ROD system

LS3 6.2L Connect and Cruise Powertrain System

The deep-breathing, high-revving LS3 is rated at 430 hp in our Connect & Cruise kit, offering the lightweight advantage of an aluminum cylinder block, aluminum heads and a composite intake manifold, which can reduce the curb weight and improve the weight balance of your older vehicle. It's backed by the 4L65-E four-speed overdrive automatic, which enables great highway cruising performance and fuel economy with the durability of hardened internal parts and five-pinion gearsets. It is also available as an E-ROD system.

LS3 6.2L Connect & Cruise Systems w/Automatic Transmission

System Components	Part Numbers	
	LS3 6.2L Auto - 2WD	LS3 6.2L Auto - 2WD E-ROD*
Engine	19301326	19257230
Engine Control System	19258270	(included)
Automatic Transmission	19260380	19260380
Torque Converter	19299802	19299802
Transmission Control System	19302405	19302405
Transmission Installation Kit	19259117	19259117

LS3 6.2L Connect & Cruise Systems w/Manual Transmission

System Components	Part Numbers	
	LS3 6.2L Manual - 2WD	LS3 6.2L Manual - 2WD E-ROD*
Engine	19301326	19257230
Engine Control System	19258270	(included)
Manual Transmission	19329795	19329795
Transmission Installation Kit	19301625	19301625

**All E-ROD systems include complete emissions equipment, including catalytic converters and a fuel tank evaporative emissions canister, along with an engine control module calibrated for a balance of performance and efficiency.*

ENGINE SPECS:
– LS3 6.2L (376 cu in)
– 430 hp @ 5,900 rpm
– 425 lb.-ft. @ 4,600 rpm
– 10.7:1 compression ratio

TRANS SPECS 2WD:
– 4L65-E four-speed automatic
– Five-pinion gearsets
– 3.06 first gear ratio, 0.70 overdrive ratio
– 30.75 inches long (approx.).

TRANS SPECS MANUAL:
– T56 Super Magnum six-speed manual
– Slip-yoke design, 40-tooth reluctor ring
– 2.66 first gear ratio, 0.63 overdrive ratio
– 33.6 inches long (approx.)

Available as an E-ROD system

CPSLSA4LMAN Connect & Cruise Kit with LSA 6.2L Engine and Manual Transmission

LSA 6.2L Connect and Cruise Powertrain System

Powering the Cadillac CTS-V Series and the Chevy Camaro ZL1, the LSA is a supercharged powerhouse that's good for 556 horsepower. It uses a high-helix, high-efficiency Twin Vortices supercharger to expand the effective boost range from low to high rpm. The 4L85-E four-speed overdrive transmission channels the LSA's torque to the axle with exceptional strength and precision. It's a supercharged combo for all hot rods! It's also available as an E-ROD system.

LSA 6.2L Connect & Cruise Systems w/Automatic Transmission

System Components	Part Numbers	
	LSA 6.2L SC Auto - 2WD	LSA 6.2L SC Auto - 2WD E-ROD*
Engine	19331507	19257456
Engine Control System	19259293	(included)
Automatic Transmission	19300175	19300175
Torque Converter	19299806	19299806
Transmission Control System	19302410	19302410
Transmission Installation Kit	19259119	19259119

LSA 6.2L Connect & Cruise Systems w/Manual Transmission

System Components	Part Numbers	
	LSA 6.2L SC Manual - 2WD	LSA 6.2L SC Manual - 2WD E-ROD*
Engine	19331507	19257456
Engine Control System	19259293	(included)
Manual Transmission	19329795	19329795
Transmission Installation Kit	19329912	19329912

**All E-ROD systems include complete emissions equipment, including catalytic converters and a fuel tank evaporative emissions canister, along with an engine control module calibrated for a balance of performance and efficiency.*

ENGINE SPECS:

– LSA 6.2L (376 cu in) supercharged
– 556 hp @ 6100 rpm
– 551 lb.-ft. @ 3800 rpm
– 9.1:1 compression ratio

TRANS SPECS 2WD:

– 4L85-E four-speed automatic
– High-performance valve body and clutches
– 2.48 first gear ratio,0.75 overdrive ratio
– 32.6875 inches long (approx.)

TRANS SPECS MANUAL:

– T56 Super Magnum six-speed manual
– Slip-yoke design, 40-tooth reluctor ring
– 2.66 first gear ratio, 0.63 overdrive ratio
– 33.6 inches long (approx.)

Available as an E-ROD system

LS376/480 Connect and Cruise Powertrain System

Mixing the capable LS "Hot Cam" with the powerful LS3 6.2L takes affordable performance to a great level – 480 horsepower and 475 lb.-ft.that will wake up your resto-mod muscle car, street rod or classic truck. The 4L70-E four-speed overdrive transmission backs the LS376/480 with strength and durability. Put this combo to work in your classic cruiser and enjoy a great balance of performance and efficiency!

LS376/480 Connect & Cruise Systems

System Components	Part Numbers	
	LS376/480 Auto	LS376/480 Manual
Engine	19301358	19301358
Engine Control System	19258267	19258267
Transmission	19299055	19329795
Torque Converter	19299803	N/A
Transmission Control System	19302405	N/A
Transmission Installation Kit	19259117	19301625

Engine Specs:
– LS376/480 (376 cu in)
– 495 hp @ 6,200 rpm
– 473 lb.-ft. @ 5,000 rpm
– 10.7:1 compression ratio

Trans Specs 2WD:
– 4L70-E four-speed automatic
– Five-pinion gearsets
– 3.06 first gear ratio, 0.70 overdrive ratio
– 30.75 inches long (approx.)

Trans Specs Manual:
– T56 Super Magnum six-speed manual
– Slip-yoke design, 40-tooth reluctor ring
– 2.66 first gear ratio, 0.63 overdrive ratio
– 33.6 inches long (approx.)

LS376/525 Connect and Cruise Powertrain System

We've matched the aggressive ASA camshaft – developed for the high-rpm world of circle-track racing – with the great-breathing LS3 to create the LS376/525. This high-revving powerhouse is one of our most powerful production-based crate engines and it's backed by the tough, smooth-shifting 4L70-E automotive overdrive transmission for a great balance of power on demand and highway efficiency.

LS376/525 Connect & Cruise Systems

System Components	Part Numbers	
	LS 376/525 Auto	LS 376/525 Manual
Engine	19301360	19301360
Engine Control System	19259261	19259261
Transmission	19299055	19329795
Torque Converter	19299803	N/A
Transmission Control System	19302405	N/A
Transmission Installation Kit	19259117	19301625

Engine Specs:
– LS376/525 (376 cu in)
– 525 hp @ 6,200 rpm
– 486 lb.-ft. @ 5,200 rpm
– 10.7:1 compression ratio

Trans Specs 2WD:
– 4L70-E four-speed automatic
– Five-pinion gearsets
– 3.06 first gear ratio, 0.70 overdrive ratio
– 30.75 inches long (approx.)

Trans Specs Manual:
– T56 Super Magnum six-speed manual
– Slip-yoke design, 40-tooth reluctor ring
– 2.66 first gear ratio, 0.63 overdrive ratio
– 33.6 inches long (approx.)

LS7 7.0L Connect and Cruise Powertrain System

The legendary 7.0L LS7 made the C6 Corvette Z06 an icon and delivers 427 cubic inches of high-rpm horsepower that makes the ultimate resto-mod statement in a classic Corvette, Chevelle or Camaro. We match it with the strong 4L70-E four-speed automatic to ensure all 470 lb.-ft. are transmitted to the Tarmac with dependability.

LS7 Connect & Cruise Systems

System Components	Part Numbers	
	LS7 7.0L Auto	LS7 7.0L Manual
Engine	19244098	19244098
Engine Control System	19258553	19258553
Transmission	19299055	19329795
Torque Converter	19299802 or 19299803	N/A
Transmission Control System	19302405	N/A
Transmission Installation Kit	19259117	19301625

Engine Specs:
– LS7 (427 cu in)
– 505 hp @ 6,300 rpm I 470 lb.-ft. @ 4,800 rpm
– 11.0:1 compression ratio

Trans Specs 2WD:
– 4L70-E four-speed automatic
– Five-pinion gearsets
– 3.06 first gear ratio, 0.70 overdrive ratio
– 30.75 inches long (approx.)

Trans Specs Manual:
– T56 Super Magnum six-speed manual
– Slip-yoke design, 40-tooth reluctor ring
– 2.66 first gear ratio, 0.63 overdrive ratio
– 33.6 inches long (approx.)

LS9 6.2L SC Connect & Cruise Powertrain

The supercharged LS9 was the power behind the 205-mph C6 Corvette ZR1 – a world-class supercar built in Bowling Green, KY. With high-rpm-validated lightweight reciprocating parts, including titanium intake valves, and high-flow cylinder heads accepting the forced air charged from an Eaton TVS supercharger, this hand-built powerhouse is rated at 638 hp and 604 lb.-ft. of torque. It was offered only with a manual transmission in the ZR1 and that's the only way we offer it as a Connect & Cruise Powertrain!

LS9 Connect & Cruise System w/Manual Transmission NEW

System Components	Part Numbers	System Components	Part Numbers
Engine	19260165	Transmission Installation Kit	19331083
Engine Control System	19331083	Transmission	19329795

Engine Specs:
– LS9 6.2L (376 cu in)
– 638 hp @ 6,500 rpm
– 604 lb.-ft. @ 3,800 rpm
– 9.1:1 compression ratio

Trans Specs Manual:
– T56 Super Magnum six-speed manual
– Slip-yoke design, 40-tooth reluctor ring
– 2.66 first gear ratio, 0.63 overdrive ratio
– 33.6 inches long (approx.)

LT1 6.2L Connect & Cruise Powertrain

Representing the fifth generation of the iconic Chevy Small-Block, the LT1 6.2L is a technologically advanced V-8 featuring direct injection, camshaft phasing (variable valve timing) and Active Fuel Management (cylinder deactivation). It's a combination that supports an exceptional balance of performance – 460 hp and 465 lb.-ft. – and efficiency. Our new LT1 Connect & Cruise Powertrain systems are offered in wet- or dry-sump versions, and with manual or automatic transmissions.

LT1 Connect & Cruise Systems NEW

System Components	Part Numbers			
	Automatic		Manual	
	Wet Sump	Dry Sump	Wet Sump	Dry Sump
Engine	19328728	19329997	19328728	19329997
Engine Control System	19303137	19303137	19303137	19303137
Transmission	19329645	19329645	19329795	19329795
Torque Converter	19299802	19299802	N/A	N/A
Transmission Control System	19302405	19302405	N/A	N/A
Transmission Installation Kit	19329416	19329416	19329912	19329912

Engine Specs:
– LT1 6.2L (376 cu in)
– 460 hp @6,000 rpm
– 465 lb.-ft. @ 4,600 rpm
– 11.5:1 compression ratio

Trans Specs 2WD:
– 4L70-E four-speed automatic
– Five-pinion gearsets
– 3.06 first gear ratio, 0.70 overdrive ratio
– 30.75 inches long (approx.)

Trans Specs Manual:
– T56 Super Magnum six-speed manual
– Slip-yoke design, 40-tooth reluctor ring
– 2.66 first gear ratio, 0.63 overdrive ratio
– 33.6 inches long (approx.)

All-New 'Old School' Connect & Cruise Powertrain Systems

Chevrolet Performance has expanded the Connect & Cruise Powertrain lineup for 2016 with all-new systems pairing Gen I Small-Block, Big-Block and even carbureted LS engines with the T56 Super Magnum six-speed manual transmission. Each system includes the engine, transmission and transmission installation kit. They're comprehensive packages designed to make your powertrain selection easier and installation in your project faster! Check out the offerings below and turn to the separate crate engine pages to get more details on each engine.

	Ram Jet 350	LS 376/515	ZZ427/480	ZZ454/440	ZZ502/502	Ram Jet 502	ZZ572/620
Engine	12499120	19301359	1966393	1248777	19201332	12499121	19201333
Installation Kit	19329900	19301625	19329902	19329901	19329901	19329901	19329902
Transmission	19329795	19329795	19329795	19329795	19329795	19329795	19329795

About Chevrolet Performance Engine and Transmission Controllers

The Connect & Cruise engine controller and SuperMatic™ transmission controller are designed for true stand-alone performance in older vehicles. All that's needed to get a vehicle running with the engine controller are power and ground sources, a high-pressure fuel pump and an electric cooling fan. For all engines except the LSA, Chevrolet Performance recommends a 58-psi (400 kPa) fuel pump. The LSA requires a 65-psi (450 kPa) pump.

Chevrolet Performance's specially calibrated engine controller does not utilize a number of features associated with production-model systems, eliminating the possibility of "trouble codes" being set. It also includes a SES (service engine soon) LED indicator embedded in the fuse box.

The SuperMatic™ transmission controller is the most fully integrated and user-friendly transmission control system on the market. Only a few connections are required to get the transmission ready for operation in your vehicle – andit is designed for tuning-free compatibility for the Connect & Cruise systems' engine control modules.

NOTE: *Installing an electronically controlled automatic transmission in an older vehicle with a mechanical speedometer requires an aftermarket signal converter.*

Engine Controller Module and Harness

SuperMatic™ Transmission Controller

Real-World LS Swap—A 'DIY' Perspective

George Walz is an unabashed "G-body" fan – those GM midsize coupes from the 1980s. He owns six of them and the crown jewel of the collection is a 1985 Monte Carlo SS, featuring Chevrolet Performance's LS376 Connect & Cruise crate powertrain system.

The inclusive crate engine-and-transmission system includes the LS3-based LS376 engine rated at 525 horsepower and a 4L70-E four-speed automatic overdrive transmission, as well as the engine and transmission controllers.

A typical do-it-yourself enthusiast, Walz tackled the installation project in his home shop and his experience offers insights for other DIY builders contemplating an LS-engine swap into their older vehicle.

"The Connect & Cruise package had everything – the engine, the transmission and the wiring harnesses – and that's what I wanted," he says. "I knew there was going to be some fabrication involved and I was up for that, but buying a 500+ horsepower engine and matched transmission with the all the necessary harnesses saved a ton of time."

"LS swaps are very common these days, but there's a lot of details, big and small, that you don't necessarily hear about," says Walz. "We made our own engine and transmission mounts and the frame had to be notched to clear the front-end accessories; and of course we had to make the air intake system and hook up the new gas pedal assembly for the electronically controlled throttle."

Additional installation details included everything from a custom exhaust system and careful placement of the floor-mounted shifter to fuel tank modifications to support the high-pressure port fuel injection system that replaced the Monte Carlo's original carburetor.

"All of the necessary changes are attainable and they shouldn't scare anyone away from doing an LS swap in an older car," he says. "You just have to do a little homework to learn what the vehicle needs to support the electronically controlled engine and transmission."

"My goal for this car was to retain the great styling of the Monte Carlo SS, but update everything and give it modern performance," says Walz. "I'm thrilled with how it turned out. LS engines are the best thing to come along in high-performance in decades and an engine swap like this was the best decision I could have made."

Small-Block LSX-SERIES Crate Engines

Race-Proven Performance for the Street and Strip

Chevrolet Performance's LSX crate engines take LS power to the next level, with racing-engineered combinations that deliver power with factory-validated durability. Each is based on the high-performance LSX Bowtie block, which is designed to support extreme performance combinations, including supercharging, turbocharging and nitrous.

Chevrolet Performance's LSX376-8 and LSX376-15 engines are specially designed for the high-pressure demands of forced induction on the street or strip, while our LSX454R is the biggest, baddest LS engine in Chevrolet Performance's arsenal – a high-compression, 770-hp naturally aspirated drag strip assault weapon.

If the ultimate in LSX capability is what you're looking for, look to Chevrolet Performance. Nobody does it better.

You can find these Chevrolet Performance LSX Engines on the following pages:

LSX376-B8 ..... **Page 236**
LSX376-B15 ..... **Page 238**
LSX454 ..... **Page 240**
LSX454R ..... **Page 242**

Note: *LSX376-B8, LSX376-B15 and LSX454 engines do not include intake manifolds.*

Engines Shown From Left:
LSX376-B8 , LSX454 , LSX454R

LSX376-B8

19260831

476 hp @ 5,900 rpm

475 lb.-ft. @ 4,700 rpm

DYNO CHART

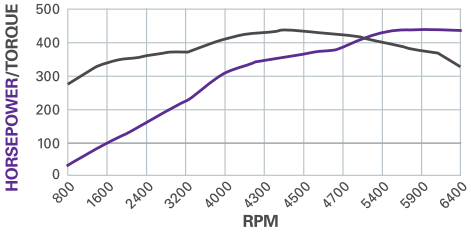

Build Boost on a Budget

Chevrolet Performance takes the economical LSX Bowtie standard-deck block, adds blower-friendly 9.0:1 forged pistons and combines them with the LS3's high-flow, rectangular-port heads to create an affordable foundation for supercharged and turbocharged combinations.

The LSX376-B8 is designed for lower-boost applications, up to about 8 pounds. That's suitable for most supercharger and turbo kits that are designed to be used with production-based applications. This engine is delivered without an intake manifold and other accessories to enable the installer to tailor the induction system to suit the blower or turbo system. Our 476 horsepower and 475 torque ratings are based on testing with the production-style, normally aspirated fuel injection system. Horsepower and torque will vary with a supercharger or turbo system.

If your forced induction system is projected to create more than 8 pounds of boost, Chevrolet Performance recommends the LSX376-B15 (P/N 19299306 – see page 238).

NOTE: *Refer to page 91 for the complete horsepower and torque testing procedures.*

TECH SPECS

Part Number:	19260831
Engine Type:	LSX-Series Gen IV Small-Block V-8
Displacement (cu in):	376 cu in (6.2L)
Bore x Stroke (in):	4.065 x 3.622 (103.25 x 92 mm)
Block (P/N 19260832):	LSX cast-iron with 6-bolt, cross-bolted main caps
Crankshaft (P/N 12597569):	Nodular iron
Connecting Rods (P/N 12649190):	Powdered metal
Pistons (P/N 19244016):	Forged aluminum
Camshaft Type (P/N 12603063):	Hydraulic roller
Valve Lift (in):	0.551 intake / 0.522 exhaust
Camshaft Duration (@0.050 in):	204° intake / 211° exhaust
Cylinder Heads (P/N 12629063):	LS3 rectangular port; with "as cast" 68cc chambers
Valve Size (in):	2.160 intake / 1.590 exhaust
Compression ratio:	9.0:1
Rocker Arms (P/N 12569167 int):	Investment-cast, roll trunnion
Rocker Arms (P/N 10214664 exh):	Investment-cast, roll trunnion
Rocker Arm Ratio:	1.7:1
Recommended Fuel:	Regular pump
Maximum Recommended RPM:	6,600
Reluctor Wheel:	58x
Balanced:	Internal

INSTALLATION NOTES

- Assembly does not include any electronics
- Intended for pre-1976 street vehicles or any off-road vehicle
- Not intended for marine applications
- Requires LSX Ignition Controller P/N 19171130 for carbureted applications
- Standard LS 6-bolt crank flange
- Assembly shipped without intake manifold or oil pan (dust shield installed for shipment)
- Recommended max boost - 8 psi

Chevrolet Performance Crate Engines include a 24-month or 50,000-mile/80,000-kilometer limited warranty.

Chevrolet Performance does not utilize any used or remanufactured parts in this crate engine, except for the starter, alternator and power steering pump.

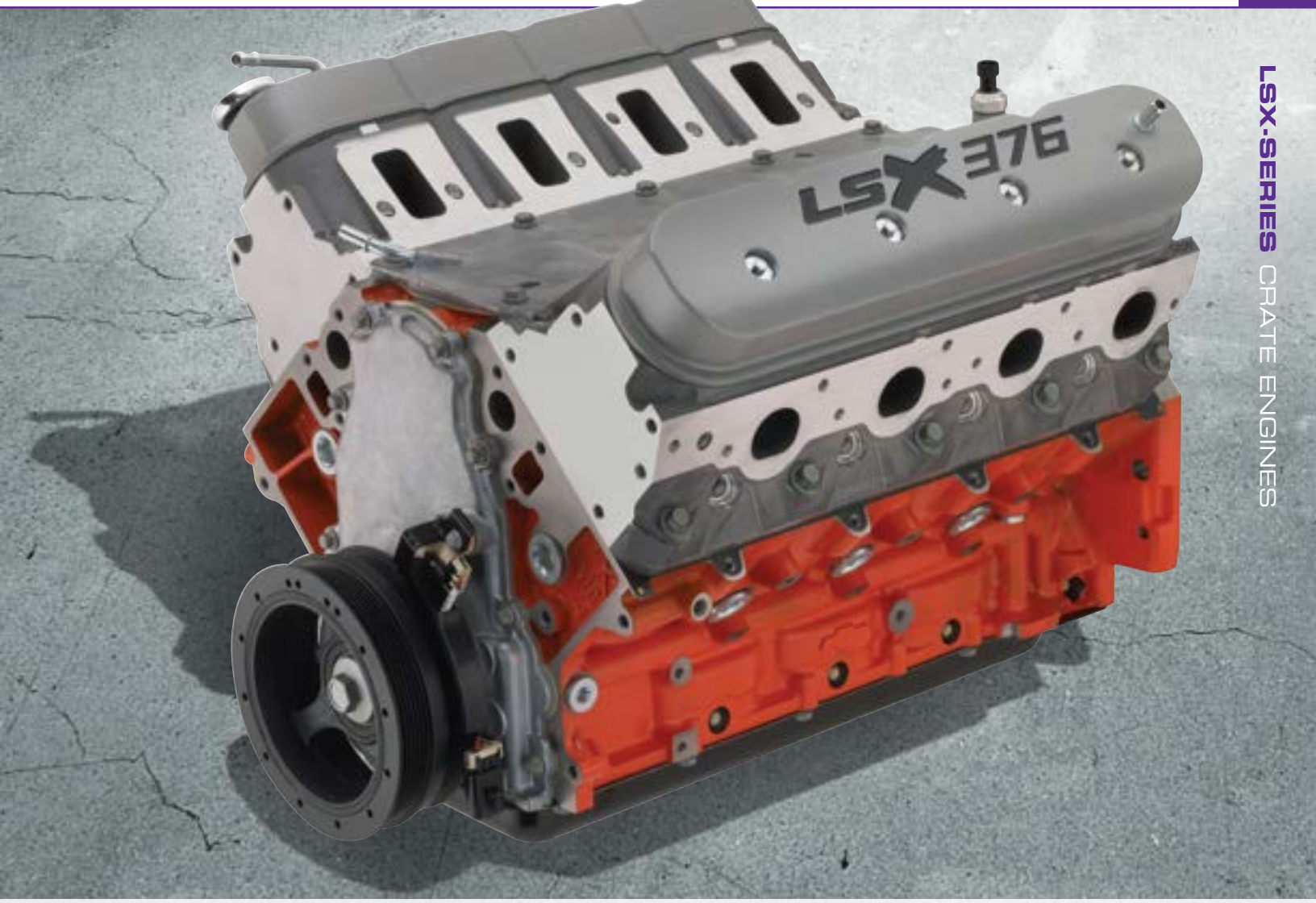

19300175

SuperMatic™ 4L85-E 4-Speed Transmission

Features five-pinion gearsets, heat-treated stator shaft splines, induction-hardened turbine shaft, seven-plate clutch and specific valve-body calibration.

See page 364 for torque converter applications.

19212657

Transmission Controller

Required when using a GM electronically controlled automatic transmission. Includes wiring harness, software and connector for laptop computer.

See page 369 for details.

AVAILABLE ENGINE-RELATED PARTS & ACCESSORIES

See page 244 for our complete line of LS-Series components

19244035
LSX-LS3 Single-Plane Standard Deck 4-bbl Manifold
Page 288

19301246
Air Inlet Kit for LS-Based Crate Engine Installation
Page 287

12638197
LS3 Intake Manifold Assembly
Page 286

19212593
Muscle Car Oil Pan Kit
Page 285

LSX376 Completion Components

Electronic Fuel Injection

LS3 intake manifold	**12638197**
Ignition coil kit	**19257878**
Engine controller kit	**19258270**
High flow / 60PSI (400kPa) fuel pump (not available from Chevrolet Performance)	

Carburetor Fuel System

Intake manifold (Single-plane)	**19244035**
Intake manifold (Dual-plane)	**19244037**
Carburetor	**19170095**
Air cleaner	**12342071**
Ignition controller	**19171130**
Ignition coil kit	**19257878**
Fuel pump	**6472657**

LSX376-B15

19299306

473 hp @ 6,000 rpm

444 lb.-ft. @ 5,000 rpm

DYNO CHART

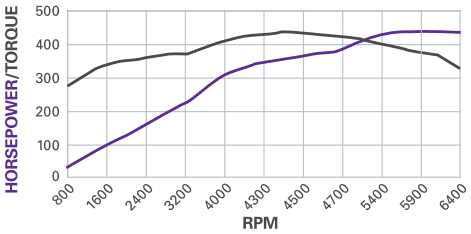

Forged Internals Support More Boost!

For builders who want to stretch the performance of a turbocharged or supercharged combination, Chevrolet Performance's LSX376-B15 is the foundation they need! Its durable, all-forged rotating assembly supports up to 15 pounds of boost. Our ratings of 473 hp and 444 lb.-ft. are only an indication fo what the engine is capable of.

Additionally, the engine is topped off with high-flow, LSX-LS3 6-bolt rectangular-port heads to create an affordable foundation for supercharged and turbocharged combinations. We deliver the LSX376-B15 without an intake manifold and other accessories, allowing you to tailor the induction system and other features to suit the forced-induction setup of your choice.

Our horsepower and torque ratings are based on testing with the production-style, normally aspirated fuel injection system. The power you make with a supercharger or turbo will vary.

NOTE: *Refer to page 91 for the complete horsepower and torque testing procedures.*

TECH SPECS

Part Number:	19299306
Engine Type:	LSX-Series Gen IV Small-Block V-8
Displacement (cu in):	376 cu in (6.2L)
Bore x Stroke (in):	4.065 x 3.622 (103.25 x 92 mm)
Block (P/N 19260095):	LSX cast-iron with 6-bolt, cross-bolted main caps
Crankshaft (P/N 12603616):	Forged steel
Connecting Rods (P/N 12604857):	Forged powdered metal
Pistons (P/N 19259381):	Forged aluminum
Camshaft Type (P/N 12638426):	Hydraulic roller
Valve Lift (in):	0.560 intake / 0.555 exhaust
Camshaft Duration (@0.050 in):	210° intake / 230° exhaust
Cylinder Heads (P/N 19201805):	LSX-LS3 rectangular port; with "as cast" 68cc chambers and 6-bolt attachment
Valve Size (in):	2.160 intake / 1.550 exhaust
Compression ratio:	9.0:1
Rocker Arms (P/N 12569167 int):	Investment-cast, roll trunnion
Rocker Arms (P/N 10214664 exh):	Investment-cast, roll trunnion
Rocker Arm Ratio:	1.7:1
Recommended Fuel:	Regular pump
Maximum Recommended RPM:	6,600
Reluctor Wheel:	58x
Balanced:	Internal

INSTALLATION NOTES

- Assembly does not include any electronics
- Intended for pre-1976 street vehicles or any off-road vehicle
- Not intended for marine applications
- Requires LSX Ignition Controller P/N 19171130 for carbureted applications
- LSX 8-bolt crank flange
- Assembly shipped without intake manifold or oil pan (dust shield installed for shipment)
- Recommended max boost - 15 psi

Chevrolet Performance Crate Engines include a 24-month or 50,000-mile/80,000-kilometer limited warranty.

Chevrolet Performance does not utilize any used or remanufactured parts in this crate engine, except for the starter, alternator and power steering pump.

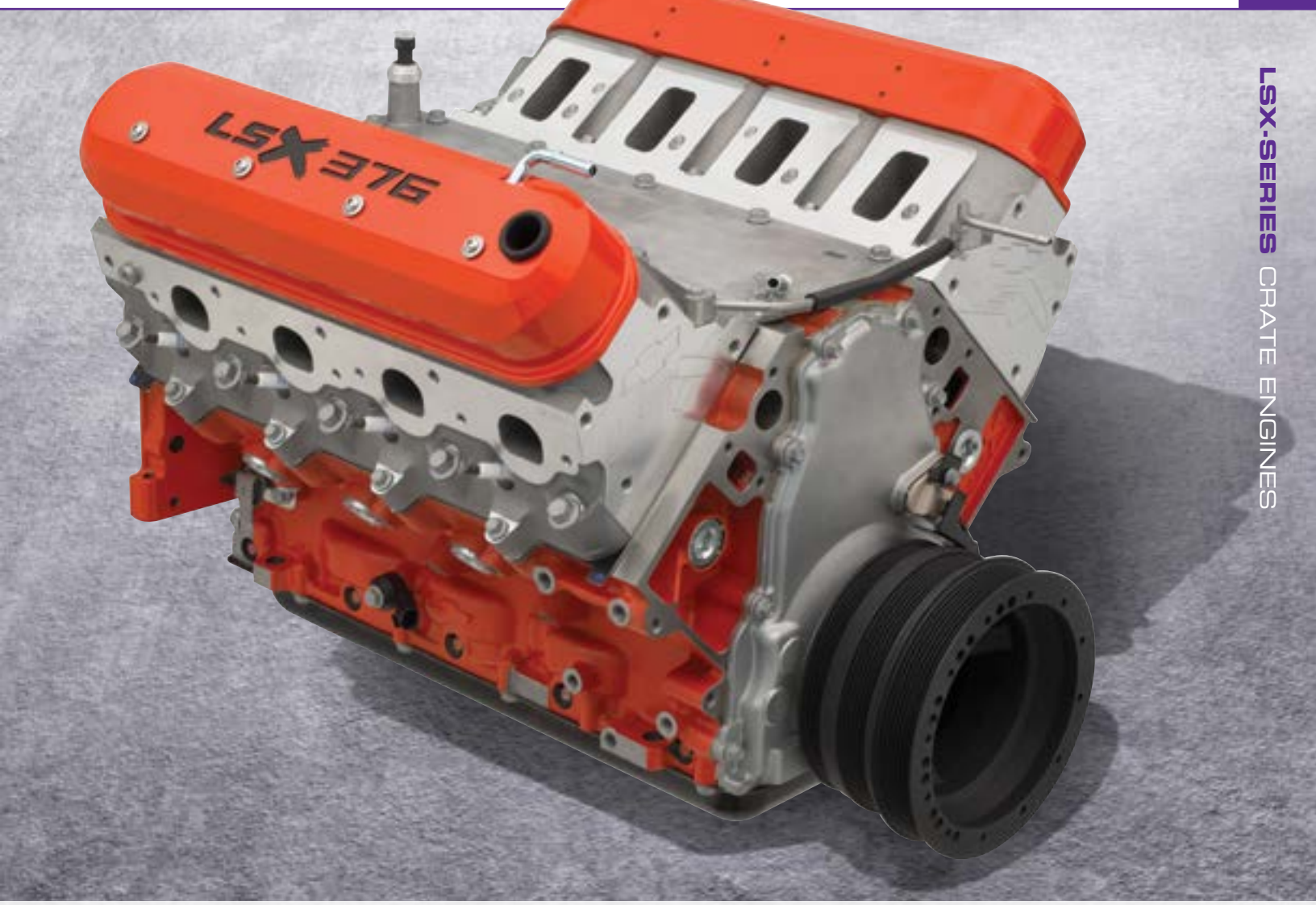

19300175

SuperMatic™ 4L85-E 4-Speed Transmission

Features five-pinion gearsets, heat-treated stator shaft splines, induction-hardened turbine shaft, seven-plate clutch and specific valve-body calibration.

See page 364 for torque converter applications.

19212657

Transmission Controller

Required when using a GM electronically controlled automatic transmission. Includes wiring harness, software and connector for laptop computer.

See page 369 for details.

AVAILABLE ENGINE-RELATED PARTS & ACCESSORIES

See page 244 for our complete line of LS-Series components

19244035
LSX-LS3 Single-Plane Standard Deck 4-bbl Manifold
Page 288

19301246
Air Inlet Kit for LS-Based Crate Engine Installation
Page 287

22901367
LSA Intercooler Fluid Pump
Page 287

12638197
LS3 Intake Manifold Assembly
Page 286

19212593
Muscle Car Oil Pan Kit
Page 285

19329795
T56 Super Magnum Six-Speed Manual Transmission
Page 370

LSX454

19260833

627 hp @ 6,300 rpm

586 lb.-ft. @ 5,100 rpm

DYNO CHART

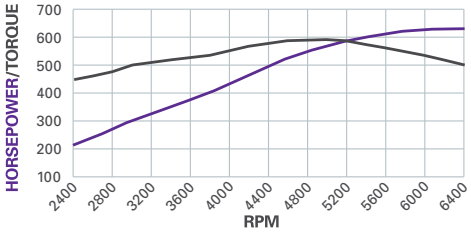

An LSX with Big-Block Power!

With the LSX Bowtie block, we've built a 21st century 454 with the latest technology. It's lighter and more compact than an original Big-Block 454 – while delivering Big-Block output of 627 hp and 586 lb.-ft. – but requires no more space under the hood than a production LS engine.

The LSX454 is filled with an all-forged, super-tough rotating assembly and features a pair of our deep-breathing LSX six-bolt cylinder heads. It also comes dressed with great-looking, orange powder-coated valve covers with engraved "LSX454" logos.

Chevrolet Performance delivers the engine without an intake manifold and other accessories. Use LSX-LS7 single-plane carbureted intake manifold P/N 19244033. The LSX454 valve covers do not include provisions for mounting ignition coil brackets. Aftermarket or custom relocation brackets must be obtained. It also includes an 8-bolt crankshaft flange that may require an adapter for use with some transmissions.

NOTE: *Refer to page 91 for the complete horsepower and torque testing procedures.*

TECH SPECS

Part Number:	19260833
Engine Type:	LSX-Series Gen IV Small-Block V-8
Displacement (cu in):	454 cu in (7.4L)
Bore x Stroke (in):	4.185 x 4.125 (106.3 x 104.8 mm)
Block (P/N 19260099):	LSX cast-iron with 6-bolt, cross-bolted main caps
Crankshaft (P/N 19244018):	4340 forged steel with 8-bolt flange
Connecting Rods (P/N 19166964):	4340 forged steel
Pistons (P/N 19166958):	Forged aluminum
Camshaft Type (P/N 19166972):	Hydraulic roller
Valve Lift (in):	0.648 intake / 0.648 exhaust
Camshaft Duration (@0.050 in):	236° intake / 246° exhaust
Cylinder Heads (P/N 19201806):	Aluminum LSX-LS7 port; with "as cast" 70cc chambers
Valve Size (in):	2.200 titanium intake/1.610 hollow, sodium-filled exhaust
Compression ratio:	11.0:1
Rocker Arms (P/N 12579615 int):	Investment-cast, roll trunnion
Rocker Arms (P/N 12579617 exh):	Investment-cast, roll trunnion
Rocker Arm Ratio:	1.8:1
Recommended Fuel:	Premium pump
Maximum Recommended RPM:	6,500
Reluctor Wheel:	58x
Balanced:	Internal

INSTALLATION NOTES

- Assembly does not include any electronics
- Requires LS7 pattern intake manifold
- Intended for pre-1976 street vehicles or any off-road vehicle
- Not intended for marine applications
- Requires LSX Ignition Controller P/N 19171130 when using a carburetor
- Requires the purchase and installation of an oil pan (see page 285) (dust shield installed for shipment)
- LSX 8-bolt crank flange
- Requires premium fuel

Chevrolet Performance Crate Engines include a 24-month or 50,000-mile/80,000-kilometer limited warranty.

Chevrolet Performance does not utilize any used or remanufactured parts in this crate engine, except for the starter, alternator and power steering pump.

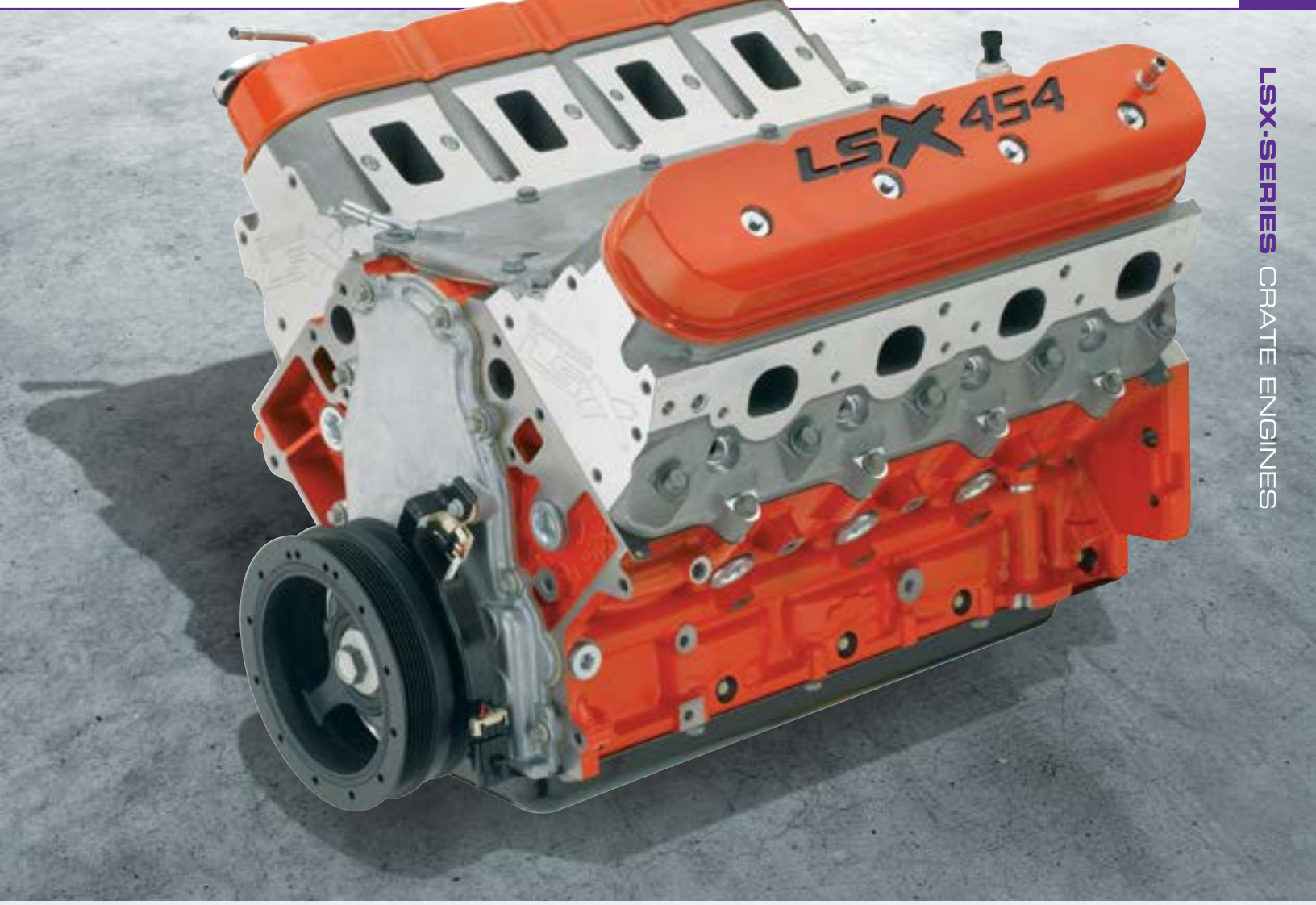

19300175

SuperMatic™ 4L85-E 4-Speed Transmission

Features five-pinion gearsets, heat-treated stator shaft splines, induction-hardened turbine shaft, seven-plate clutch and specific valve-body calibration.

See page 364 for torque converter applications.

19244481 Manual
19299840 Automatic

LSX454 Engine Controller Kit

See page 293

AVAILABLE ENGINE-RELATED PARTS & ACCESSORIES

See page 244 for our complete line of LS-Series components

12644568
LS7 Production Intake Manifold Assembly
Page 286

19301246
Air Inlet Kit for LS-Based Crate Engine Installation
Page 287

19171130
LSX Controller
Page 294

19244033
LSX-LS7 Standard Deck 4-bbl Manifold
Page 288

LSX454 Completion components

Electronic Fuel Injection

LS7 intake manifold	**12644568**
Ignition coil kit	**19257878**
Engine controller kit	**19244481 or 19299840**

High flow / 60 psi (400kPa) fuel pump (not available from Chevrolet Performance)

Carburetor Fuel System

Intake manifold (Single-plane)	**19244033**
Carburetor	**19170095**
Air cleaner	**12342071**
Ignition controller	**19171130**
Ignition coil kit	**19257878**
Fuel pump	**6472657**

LSX454R

19260835

776 hp @ 7,000 rpm / **649 lb.-ft.** @ 5,100 rpm

DYNO CHART

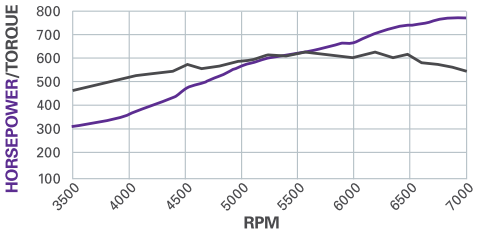

Our Most Powerful Engine Ever!

Quite simply, the LSX454R drag racing engine is the most powerful crate engine ever from Chevrolet Performance – and it's designed to do one thing: help you win races with great durability.

For the record, this 13.1:1, naturally aspirated and single Dominator-fed big-inch LS engine is officially rated at 776 horsepower at a 7,000 rpm and 649 lb.-ft. of torque at 5,100 rpm. It breathes through our high-flow LSX DR six-bolt cylinder heads that have 313cc intake runners. More than power, this engine was built for durability. Its bottom end includes our tough LSX Bowtie cylinder block and it's filled with an all-forged rotating assembly.

During development, engineers simulated the equivalent of 600 back-to-back drag strip passes on the engine dyno, ensuring it would stand up to years of performance without the need for major maintenance. It's an engine you can depend on to go round after round, season after season!

NOTE: *Refer to page 91 for the complete horsepower and torque testing procedures.*

TECH SPECS

Part Number:	19260835
Engine Type:	LS-Series Small-Block V-8
Displacement (cu in):	454 cu in (7.4L)
Bore x Stroke (in):	4.185 x 4.125 (106.3 x 104.8 mm)
Block (P/N 19260099):	LSX cast iron with 6-bolt cylinder head attachment
Crankshaft (P/N 19244018):	4340 forged steel
Connecting Rods (P/N 19166964):	4340 forged steel
Pistons: (P/N 19166958):	4032 forged aluminum
Camshaft Type (P/N 19166975):	Mechanical roller
Camshaft Lift (in):	.738 intake / .738 exhaust
Camshaft Duration (@.050 in):	250° intake / 270° exhaust
Cylinder Heads (P/N 19166979):	Drag race cylinder heads 6-bolt LSX aluminum
Valve size (in):	2.250 x 6.370 intake 1.625 x 6.400 exhaust
Compression Ratio:	13.1:1
Rocker Arms (P/N 19201808):	Shaft mounted with needle bearing fulcrum and tip
Rocker Arm Ratio:	1.9:1
Recommended Fuel:	Race fuel (110 octane minimum)
Maximum rpm:	7,100
Reluctor Wheel:	58x
Balanced:	Internal

INSTALLATION NOTES

- Intended for off-road use only!
- Requires Race Fuel (110 Octane Minimum)
- Not intended for Marine Use
- Requires LSX Ignition Controller P/N 19171130
- Oil pan not included (see page 285)
  (Dust shield installed for shipment)
- LSX 8-bolt crank flange
- Uses 4500-series carburetor (included)

Chevrolet Performance Racing Crate Engines are excluded from limited warranty.

Chevrolet Performance does not utilize any used or remanufactured parts in this crate engine, except for the starter, alternator and power steering pump.

AVAILABLE ENGINE-RELATED PARTS & ACCESSORIES

See page 244 for our complete line of LS-Series components

19171130
LSX Controller *Page 294*

19212593
Muscle Car Oil Pan Kit *Page 285*

10465385
LS-Series Starter *Page 290*

Small-Block LS/LT/LSX-SERIES Engine Components

The Industry's Only Factory-Engineered LS/LT/LSX Performance Parts

It's simple: No one knows more about LS/LT/LSX muscle than Chevrolet Performance and no other manufacturer comes close to matching our range of LS/LT/LSX parts – all GM validated for uncompromising performance and production-quality fit.

Our lineup of factory-engineered parts has you covered from the throttle body to the oil pan, including production-based blocks, heads, cams and more – as well as the portfolio of LSX maximum-performance blocks, six-bolt cylinder heads, forged rotating parts, intakes and more.

We've also added LT performance parts for 2016, including CNC-ported cylinder heads and a hot camshaft for the LT1.

And when it comes to rounding out your engine with installation accessories and even the control system to get it running, we've got you covered. That makes Chevrolet Performance your one-stop source for LS, LT and LSX power!

You can find these Chevrolet Performance LS/LT/LSX Engine Components on the following pages:

Blocks and Components ..... **Page 246**
Cylinder Heads ..... **Page 258**
Valve Components ..... **Page 267**
Valve Covers ..... **Page 268**
Camshafts ..... **Page 271**
Pistons and Piston Rings ..... **Page 273**
Crankshafts ..... **Page 274**
Accessory Drive Systems ..... **Page 276**
Oil Pans, Oil Pumps, Gaskets and Components ..... **Page 285**
Intake Manifolds ..... **Page 286**
Fuel and Electrical Components ..... **Page 290**
Engine Control Modules ..... **Page 292**

LSX Bowtie Block

Chevy LS/LT/LSX-Series Blocks Quick Reference Chart

LS/LT/LSX-Series Blocks

Origin	Part Number	Material	Deck Height	Bore	Main Bolt	Cap Material	Crank Jnl Dia.	Oiling	Rear Main Seal	Max Stroke	Max HP	Usage	Page Number
LS1/LS6	**12561166**	Alum	9.240"	3.898"	6	Iron	Std. LS (2.56")	Wet/Dry	1 pc	4.00"	450	Street	247
Gen IV 6.0L	**12609999**	Iron	9.240"	4.000"	6	Iron	Std. LS (2.56")	Wet/Dry	1 pc	4.00"	500	Street	248
LS2	**12602691**	Alum	9.240"	4.000"	6	Iron	Std. LS (2.56")	Wet/Dry	1 pc	4.00"	450	Street	249
LS3/L92	**12623967**	Alum	9.240"	4.065"	6	Iron	Std. LS (2.56")	Wet/Dry	1 pc	4.00"	525	Street	249
LSA	**12623968**	Alum	9.240"	4.065"	6	Nodular Iron	Std. LS (2.56")	Wet/Dry	1 pc	4.50"	800	Street/Pro	250
LS9	**12623969**	Alum	9.240"	4.065"	6	1045 Steel	Std. LS (2.56")	Wet/Dry	1 pc	4.50"	900	Street/Pro	250
LS7	**19213580**	Alum	9.240"	4.125"	6	Steel	Std. LS (2.56")	Wet/Dry	1 pc	4.10"	550	Street	251
LT1	**19329617**	Alum	9.240"	4.065"	6	Nodular Iron	Std. LS (2.56")	Wet/Dry	1 pc	4.125"	465	Street	252
C5R	**12480030**	Alum	9.240"	4.117"–4.160"	6	Steel	Std. LS (2.56")	Wet/Dry	1 pc	4.10"	900	Pro	253
LSX	**19260093***	Iron	9.260"	3.880"	6	1045 Steel	Std. LS (2.56")	Wet/Dry	1 pc	4.25"	1500+	Street/Pro	255
LSX	**19260100***	Iron	9.720"	3.880"	6	1045 Steel	Std. LS (2.56")	Wet/Dry	1 pc	4.50"	1500+	Street/Pro	255
LSX	**19260095****	Iron	9.240"	4.065"	6	1045 Steel	Std. LS (2.56")	Wet/Dry	1 pc	4.25"	1500+	Street/Pro	255
LSX	**19260099****	Iron	9.240"	4.185"	6	1045 Steel	Std. LS (2.56")	Wet/Dry	1 pc	4.25"	1500+	Street/Pro	255

**Semi-finished block*
***Full machined block*

BUILDER'S TIP

TECH SPOTLIGHT: LS AND LT CYLINDER BLOCK DESIGN

One of the biggest design differences between the original Gen I/Gen II Small-Block and the Gen III/Gen IV "LS" engines and the recently introduced Gen V "LT" Small-Block is the long-skirt block casting of the LS and LT versions.

Also known as a Y-block design, because of the profile it creates, it's defined by the casting's extension below the centerline of the crankshaft. The primary reasons for it are strength and rigidity. By extending the block below that dimension, the crankshaft's location is secured further with cross-bolted main bearing caps. The Gen I/Gen II Small Block main caps are located with two or four vertical fasteners. With the LS and LT blocks, there are four conventional vertical fasteners, along with two additional horizontally located cross bolts.

Additionally, the long-skirt design adds rigidity to the block – particularly with the cross-bolted main caps – that contributes to smoother overall performance. Evolution of the basic LS/LT block has improved the bay-to-bay breathing capability between the sections of the block separated by the main caps, meaning there's less power-robbing windage in the latest versions, which optimizes performance in blocks design to support great power capability with strength and refinement.

This same design is incorporated into the GEN IV-style LSX iron block from Chevrolet Performance. This rugged design also incorporates a 6-bolt cylinder head to apply additional clamp load for nitrous, turbo-charged and supercharged applications. The Ultimate LS block!

Gen I/Gen II-Style Block

Gen III/Gen IV-Style Block

Gen V-Style Block

LS1/LS6 5.7L Bare Block (rear) **A**

LS1/LS6 5.7L Bare Block (bottom) **A**

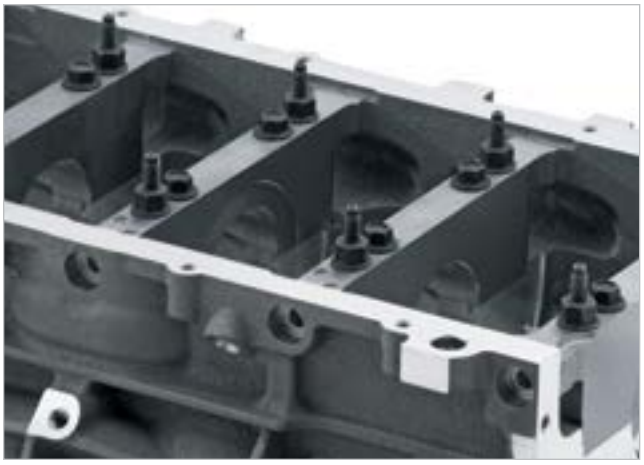

LS1/LS6 5.7L Block – Aluminum Block with 6-Bolt Main Caps **A**

Deck Height Diagram

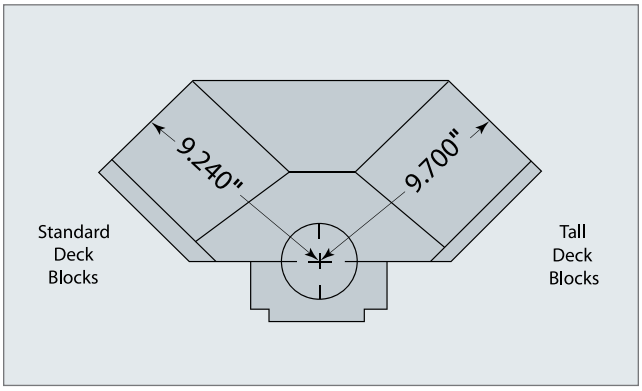

PRODUCTION CYLINDER BLOCKS

The LS-Series cylinder block is the foundation for the serious performance achievements that are driving a new generation of street and racing enthusiasts. Features include a deep-skirt casting (the block side extends below the crankshaft centerline); 6-bolt cross-bolted main caps, strong and lightweight aluminum alloy casting (most production blocks) and provisions for the latest in engine control management. The cam-in-block configuration brings inherent torque to every LS engine, with production-based blocks capable of supporting combinations of 500 horsepower or more. The Corvette ZR1's unique 6.2L block, for example, supports the engine's 638-horsepower rating. Chevrolet Performance's high-performance iron LSX cylinder block supports more than 2,000 forced-induction horses!

Whether you're building a mild street engine or an Outlaw racing engine, starting with a strong LS cylinder block brings the assurance that you'll make the power you need with a durable foundation.

A. 12561166
LS1/LS6 5.7L Bare Block

- Direct replacement for 2001-2004 LS1 and LS6 Corvette 5.7L
- Production 319-T5 aluminum block with iron sleeves
- Production oiling system
- 6-bolt iron main bearing caps
- 9.240" deck height
- Use LS1/LS6 cylinder heads only
- 3.898" finished bore (99.0mm)
- No provision for Active Fuel Management
- Tested to over 400 horsepower!

LS-Series Blocks Continued

A. 12609999
Gen IV 6.0L Cast-Iron Block

- Direct replacement for LY6 and L96 production engines
- Production cast-iron block
- Production oiling system
- 6-bolt iron main bearing caps
- 4.000" Bore
- 9.240" deck height
- No provision for Active Fuel Management
- Supports 500+ horsepower!

A Gen IV 6.0L Cast-Iron Block (top, front)

A Gen IV 6.0L Cast-Iron Block (bottom, rear)

A Gen IV 6.0L Cast-Iron Block (bottom, front)

LS3/L92 Aluminum 6.2L Bare Block (front) **B**

LS3/L92 Aluminum 6.2L Bare Block (bottom) **B**

LS3/L92 Aluminum 6.2L Bare Block (rear) **B**

LS3/L92 Aluminum 6.2L Bare Block (top) **B**

LS3/L92 Aluminum 6.2L Bare Block (bottom) **B**

12602691
LS2 Aluminum 6.0L Bare Block (not shown)

- Direct replacement for 2005-2008 LS2 Corvette, SSR, GTO 6.0L and TrailBlazer SS
- Production 319-T5 aluminum block with iron sleeves
- Production oiling system
- Forged powdered metal 6-bolt main bearing caps
- 9.240" deck height
- Use only LS1, LS6, LS2, L92/LS3-style cylinder heads
- 4.000" finished bore (101.6mm)
- Provisions for Active Fuel Management
- Great for stroker cranks for even more cubes
- Tested to over 450 horsepower!

B. 12623967
LS3/L92 Aluminum 6.2L Bare Block

- Direct replacement for:
  2009-2012 L9H
  2010-2012 L94
  2008-2013 LS3
  2010-2013 L99
  2007-2008 L92
- Production aluminum block with iron sleeves
- Production oiling system
- Forged powdered metal 6-bolt main bearing caps
- 9.240" deck height
- Use only LS1, LS6, LS2, L92/LS3-style cylinder heads
- 4.065" finished bore (103.25mm)
- Provisions for Active Fuel Management
- Great for stroker cranks for even more cubes
- Tested to over 500 horsepower!

LS-Series Blocks Continued

12623968
LSA 6.2L Bare Block (not shown)

- Direct replacement for 2009-2012 Cadillac CTS-V 6.2L supercharged engine and 2012 ZL1 Camaro
- Production cast-aluminum block with iron sleeves
- Production oiling system
- 6-bolt iron main bearing caps
- 9.240" deck height
- Not for use with LS7 or LSX-LS7 heads
- 4.065" finished bore (103.25mm)
- Includes oil squirters (8) for piston cooling
- No provision for active fuel management
- Rated for more than 550 horsepower

A. 12623969
LS9 6.2L Bare Block

- Direct replacement for 2009-2012 Corvette ZR1 6.2L supercharged engine
- Production cast-aluminum block with iron sleeves
- Deck plate honed
- Production oiling system
- 6-bolt steel main bearing caps with dowel pins
- 9.240" deck height
- Not for use with LS7 or LSX/LS7 heads
- 4.065" finished bore (103.25mm)
- Includes oil squirters (8) for piston cooling
- No provision for Active Fuel Management
- Rated for more than 635 horsepower

A LS9 6.2L Bare Block (rear)

A LS9 6.2L (bottom)

A LS9 6.2L (front)

A LS9 6.2L (rear, top))

A LSA-LS9 6.2L Piston Oilers

LS7 7.0L Corvette Bare Block (bottom, rear) **B**

LS7 7.0L Corvette Bare Block (bottom, front) **B**

LS7 7.0L Corvette Bare Block (rear) **B**

B. 19213580

LS7 7.0L Corvette Bare Block

- Direct replacement for 2006-2014 7.0L LS7 engine
- Production 319-T5 aluminum block with pressed-in iron sleeves
- Production oiling system
- 6-bolt dowel located steel main bearing caps
- 9.240" deck height
- For use with any LS or LSX series head
- 4.125" finished bore (104.78mm), deck plate honed
- Siamese cylinder bores for large bore size
- No provision for active fuel management
- Based on C5R block development
- Tested to over 500 horsepower!

Parts required to complete your LS7 Block:

Part Number	QTY	Description
12570471	1	Valley Cover
11588949	6	Plug
12589016	1	Camshaft Retainer
11611351	1	Plug
11610259	1	Plug, Cylinder Head
11515756	5	M8 x 1.25 Flanged Hex Head Bolt
12570326	4	Dowel, Cylinder Head Locating
12639250	1	Rear Cover Assembly
12573460	1	Oil Plug
12618422	1	Windage Tray
09427693	4	Plug
01453658	2	Dowel, Bell housing Locating
12561663	1	Plug
12616646	1	Oil Pressure Sensor
12585546	1	Crankshaft Position Sensor
12598293	1	Cover
12585673	1	Seal - Front Cover
12633904	1	Gasket - Front Cover
11515758	8	Bolt
12591720	1	Sensor
11588712	1	Bolt

25534412

Oil Hose Adapters (shown on page 256)

- Kit adapts the production LS7 oil pan to aftermarket AN-style hoses for aftermarket dry sump oil tanks
- Bolts directly to LS7 oil pan, and has AN male outlet for AN -12 fittings
- Includes 1 adapter, 2 fittings, 2 bolts, and 2 sealing gaskets

LS-Series Blocks Continued

A. 19329617
LT1/LT4 Aluminum 6.2L Bare Block **NEW!**

- Direct replacement for 2014-2015 Stingray LT1
- Production aluminum block with iron sleeves
- Production oiling system
- Equipped with oil squirters for piston cooling
- 9.240" deck height
- Nodular Iron 6-bolt main bearing caps
- Use only with LT1-style cylinder heads
- 4.065" finished bore (103.25mm)
- Provisions for Active Fuel Management
- Provision for direct fuel injection

NEW!

A LT1/LT4 Aluminum 6.2L Bare Block (top, front)

NEW!

A LT1/LT4 Aluminum 6.2L Bare Block (bottom, rear)

A Hole Detail

A Squirters Detail

Aluminum C5R Racing Block (bottom, rear) **B**

Aluminum C5R Racing Block (bottom, front) **B**

Aluminum C5R Racing Block (front) **B**

B. 12480030
Aluminum C5R Racing Block

The ultimate GM aluminum LS block, the C5R was originally designed for Chevrolet's factory-backed Corvette racing program. It was developed to support more than 440 cubic inches and up to 900 horsepower – and it proved itself by powering the Corvette team to wins at LeMans, Daytona and nearly every track they encountered. This is a non-production, purpose-built cylinder block manufactured with proprietary materials and machined to the highest tolerances – and using premium, racing-spec hardware. If you're looking for the ultimate aluminum cylinder block to support your horsepower desires, the race-proven C5R is it!

- Premium "hipped"* and X-rayed 356-T6M aluminum-alloy block casting
- 9.240" deck height
- Production-style oiling system
- 6-bolt dowel-located steel main bearing caps
- 4340 premium main cap fasteners
- For use with any LS or LSX series head
- Unique cylinder liner material for maximum durability
- Siamesed cylinders to support larger bores
- 4.117" finished bore
- 4.160" maximum bore
- Fully blueprinted and squared
- Production camshaft location and cam bores
- Includes premium head studs
- Anodized aluminum O-ring core plugs
- No Active Fuel Management provisions
- Supports more than 900 horsepower

**HIP is the acronym for Hot Isostatic Pressure. This process puts the blocks in a sealed vessel where a vacuum is first used to remove room air and any possible contaminants. The vessel is filled with high pressure nitrogen (up to 30,000-psi) and then heated to the required temperature and sustained for a determined amount of time. The cooling process is also a controlled procedure to ensure maximum strength and proper heat treat. This extreme high pressure and heat removes almost 100% of the internal porosities that are generated during the casting process. The material integrity, strength and fatigue life increases significantly.*

LSX BOWTIE BLOCK

Delivering the seemingly impossible combination of professional racing-level strength and entry-level affordability, the LSX Bowtie Block is the next revolution in high-performance engine-building. This durable iron-block casting is based primarily on GM's production LS7 block, but designed with more material in key areas – including a thicker deck and bores – to support displacements of 454 cubic inches or more, and unique six-bolts-per-cylinder-head-clamping capability that enables forced-induction and nitrous combinations of greater than 2,000 horsepower.

Because the LSX Bowtie block is based on production LS blocks, all of the LS-Series Gen IV cylinder heads, crankshafts, oil pans, camshafts, and accessories bolt right up to it. There is also a tall-deck version for building even larger engines. Chevrolet Performance delivers the LSX Bowtie Block semi-finished, allowing you to finish it to your needs. Whether you're building a "tame" 500-horse street engine for your hot rod or a 1,700 horsepower turbo engine for an Outlaw drag racer, the LSX Bowtie Block is the foundation for an unbeatable combination – at an unbeatable price!

LSX Bowtie Block specs and features include:

- CNC-machined cast-iron block
- True priority main oiling
- 6-head bolts per cylinder
- Standard 4.400" bore spacing
- Extra-thick siamese cylinder bores
- Semi-finished, machined thicker decks
- LS7-style, 6-bolt dowel-located billet main bearing caps
- Wet-sump and dry-sump oiling capability
- Production-style deep-skirt head bolt holes
- Production bolt hole and thread sizes
- Maintains production exterior accessory mounting provisions
- Front motor plate mounting holes added
- Additional material cast around cam bearings for greater strength
- 8mm exterior/interior fifth- and sixth-head bolt holes
- Standard 0.842" lifter bores
- Accommodates all LS oil pumps and oil pans
- External oil pump feed (rear of block)
- Main web bay-to-bay breathing holes to support greater horsepower
- Includes unique cam retainer, rear cover and lifter retainers

For the advanced LSX competition engine builder, you will fully enjoy the following features of the new LSX Bowtie Block:

- Front oil feed holes can be plugged/restricted for mechanical flat tappet or mechanical roller lifter applications
- Can be machined safely to 9.200" deck height
- Maximum 4.200" bore at .200" minimum wall thickness (naturally aspirated applications)
- Head bolt holes can be machined for 1/2" studs
- Cam bores can be machined to accept 60mm roller bearings
- Can be machined for larger diameter lifters and/or 1.060" bronze bushings
- Front oil feed lines can be plugged and external oil pump and/or aftermarket dry sump systems can be used via oil pump feed at rear of block – may be required with certain large stroke/aluminum rod combinations
- Belt cam drive systems can be accommodated – some machining will be required
- Front motor plate can be used for racing chassis applications (sprint car, drag racing, truck pulling, etc.).
- Threaded water plugs can be used for external heaters or coolers
- Extra stock for main bearing align-honed
- 400 mPa tensile strength iron

A LSX Bowtie Block (bottom, front)

A LSX Bowtie Block (top, rear)

A LSX Bowtie Block (front)

LSX Bowtie Block (bottom, front) A

Lifter Boss Detail A

Bay-to-Bay Breathing Pocket Detail A

Deck Detail A

Semi-Finished Blocks

A. 19260093

LSX Bowtie Block (Standard Deck)

- 3.880" finished siamese cylinder bores
- 9.260" semi-finished standard deck height (ready to be decked)
- 4.250" maximum stroke (professional engine builders only!)
- Capable of 364- to 482-cubic-inch displacements
- Orange powder-coated finish
- Accepts all LS and LSX Series heads, cranks, cams, etc.
- Approximate finished weight is 225 pounds

19260100

LSX Tall Deck Block (not shown)

- 3.880" finished siamese cylinder bores
- 9.720" semi-finished standard deck height (ready to be decked)
- 4.500" maximum stroke (small base circle camshafts required)
- Capable of 364- to 500-cubic-inch displacements or more!
- Orange powder-coated finish
- Accepts Gen IV LS and LSX Series heads, cranks, cams, etc.
- Approximate finished weight is 250 pounds

LSX Blocks include the following:

19244460	Cam Thrust Plate
19166179	Rear Cover
19166182	Tappet Guides

Other service parts for your LSX Block:

19166178	Cam Thrust Plate, O-Ring, Gasket
19166180	Rear Cover, O-Ring
19166181	Rear Cover, O-Ring Seal
19211434	Main Cap Dowel (10-piece kit)

Finished Blocks

LSX finished blocks are completely machined and are ready for assembly. Save time and money.

19260095

LSX376 Production Block (not shown)

- 4.065" bore
- Fully CNC machined
- Deck plate honed
- Align-honed main bearings
- Deck height 9.240" (production)
- Billet-steel main caps
- Includes all hardware
- Used in LSX376 crate engine

19260099

LSX454 Production Block (not shown)

- 4.185" bore
- Fully CNC machined
- Deck plate honed
- Align-honed main bearings
- Deck height 9.240" (production)
- Billet-steel main caps
- Includes all hardware
- Used in LSX454 crate engine

CYLINDER BLOCK COMPONENTS

A. Gen III Bare Block Completion Components

Part Number	QTY	Description
12577927	1	Valley Cover
12561211	1	Cam Sensor
12561243	1	Front Cover (with seal)
1453658	2	Transmission Alignment Dowel
12589016	1	Cam Retainer Plate
11561455	4	Cam Retainer Bolts
12588670	1	Timing Chain Damper
12560228	1	Crankshaft Sensor
12570326	4	Head Locating Dowels
2595365	4	Lifter Guide
12639250	1	Rear Cover (with seal)
varies	-	Required Water and Oil Plugs
varies	-	Required Mounting Bolts

A Bare Block Completion Components, Gen III

B. 19299099

Gen IV Block Completion Kit - Non D.O.D.

- Complete your LSX or GEN IV production engine with production components

Part Number	QTY	Description
12633906	1	Front Engine Cover
12599296	1	Valley Cover
12570326	4	Head Locator Dowels
12585546	1	Crankshaft Sensor
11515756	1	Crank Sensor Bolt
12588670	1	Timing Chain Damper

B LSX Block Completion Kit

C. 25534412

Oil Hose Adapters

- Kit adapts the production LT1 and LS7 Oil Pan to aftermarket AN-style hoses for aftermarket dry sump oil tanks
- Bolts directly to oil pan, and has AN male outlet for AN -12 fittings
- Includes 1 adapter, 2 fittings, 2 bolts, and 2 sealing gaskets

C Oil Hose Adapter

LS2, LS3 Front Timing Cover **D**

LS Front Distributor Drive Cover **E**

Rear Block Cover **F**

FRONT COVERS

12561243
LS1, LS6 Front Timing Cover (not shown)
- For LS1 and LS6 engines
- No cam sensor

D. 12633906
LS2, LS3 Front Timing Cover
- Includes seals and bolts
- For LS2 and LS3 engines
- Gen IV cam sensor included

12594939
L92 Front Timing Cover (not shown)
- For engines with VVT such as L92
- Gen IV cam sensor included

NOTE: *Cover only. Does not come with cam sensor, bolts, or seals.*

12598293
LS7 Front Timing Cover (not shown)
- Also fits LS9 engines
- Required for 2-stage oil pump clearance
- Gen IV cam sensor included

NOTE: *Cover only. Does not come with cam sensor, bolts, or seals.*

E. 88958679
LS Front Distributor Drive Cover
- Assembly is manufactured for applications where a 4-bbl carburetor and distributor are required
- For all LS-Series engines except LS7 and LS9

NOTE: *Distributor and mechanical fuel pump not included. Uses Small-Block Ford-style distributor and mechanical fuel pump. Special water pump, accessory drive and damper required.*

12633904
Front Cover Gasket (not shown)
- For all LS-Series engines

12585673
Front Crank Seal (not shown)
- For all LS-Series engines

11515758
Front Cover Bolt (not shown)
- Requires 8 per engine
- For all LS-Series engines

REAR COVERS

F. 12639250
Rear Block Cover
- Includes seals and bolts
- For all production LS engine blocks (will not work on LSX blocks)

19166179
LSX Rear Block Cover (not shown)
- Does not include bolts or seals
- For use on LSX blocks only

89060436
Rear Crank Seal (not shown)
- For all LS-Series engines

LS/LT/LSX-Series Cylinder Heads

Part Number	Description	Material Size	Port Size	Valve Angle	Chamber Vlv.	Int Vlv.	Exh Type	Int Port Type	Ex Port Type	Rocker	Notes	Page Number
12629049	Bare LS2 & LS6	Aluminum	210	15 deg	64.5	2.000	1.550	Cathedral	Std LS	Bolt-down	Bare LS2/LS6	N/S
12629051	Bare L92	Aluminum	260	15 deg	70	2.165	1.590	L92	Std LS	Bolt-down	Bare L92	N/S
12629064	Stock L92	Aluminum	260	15 deg	70	2.165	1.590	L92	Std LS	Bolt-down	Solid stem valves	259
12629063	Stock LS3	Aluminum	260	15 deg	68.4	2.165	1.590	L92	Std LS	Bolt-down	Hollow/solid	259
12629051	Bare LS3	Aluminum	260	15 deg	70	2.165	1.590	L92	Std LS	Bolt-down	Bare LS3	N/S
88958758	CNC LS3	Aluminum	276	15 deg	68.5	2.165	1.590	L92	Std LS	Bolt-down	Hollow/solid	259
12578450	Bare LS7	Aluminum	270	12 deg	70	2.200	1.610	LS7	Std LS	Bolt-down	Bare LS7	N/S
12578449	Stock LS7	Aluminum	270	12 deg	70	2.200	1.610	LS7	Std LS	Bolt-down	Titanium/sodium-filled valves	260
19328743	LS9 CNC	Aluminum	276	15 deg	68.4	2.165	1.590	L92	Std LS	Bolt-down	Titanium/sodium-filled valves	259
12626958	LSA Cylinder Head	Aluminum	260	15 deg	68.4	2.185	1.590	L92	Std LS	Bolt-down	CTS-V and Z-28 Assembly	260
19329839	LT1 CNC Cylinder Head	Aluminum	N/A	Splayed	N/A	2.130	1.590	LT-1	LT-1	Bolt-down	CNC Runners	261
12620544	LT1 Cylinder Head	Aluminum	N/A	Splayed	N/A	2.130	1.590	LT-1	LT-1	Bolt-down	Corvette Assembly	261
25534393	C5R	Aluminum	210	11 deg	38	2.180	1.630	C5R	Std LS	Shaft	As-cast, no seats/guides	260
19201807	LSX-L92 Small Bore	Aluminum	260	15 deg	70	2.000	1.550	L92	Std LS	Bolt-down	Solid/solid valves	262
19201805	LSX-LS3	Aluminum	260	15 deg	70	2.160	1.590	L92	Std LS	Bolt-down	Hollow/solid valves	262
19328843	LSX-LS7	Aluminum	270	12 deg	70	2.200	1.610	LS7	Std LS	Bolt-down	Titanium/sodium-filled valves	263
19166977	LSX-LS7 Bare	Aluminum	N/A	12 deg	70	2.200	1.610	LS7	LS7	LS7	N/A, As-cast	263
19257879	LSX-LS7	Aluminum	270	12 deg	70	2.200	1.610	LS7	Std LS	Bolt-down	Fully CNC-machined	262
19329962	LSX-LS7 Assembly	Aluminum	270	12 deg	70	2.200	1.610	LS7	Std LS	Bolt-down	Fully CNC-machined bare head	263
19166981	LSX-CT	Aluminum	302	11 deg	45	2.200	1.610	LSX-CT	LSX-CT/DR	Shaft	Fully CNC-machined bare head	265
19202985	LSX-CT Cylinder Head	Aluminum	N/A	11 deg	–	–	–	–	–	Shaft	As-cast, not machined	265
19166979	LSX-DR	Aluminum	313	11 deg	50	2.250-2.280	1.600-1.650	LSX-DR	LSX-CT/DR	Shaft	Fully CNC-machined bare head	263
19202986	LSX-DR Cylinder Head	Aluminum	N/A	11 deg	–	–	–	–	–	Shaft	As-cast, not machined	264

THE LS FAMILY PRODUCTION AND C5R ALUMINUM HEADS

Great cylinder-head airflow has been a key enabler of the LS-Series' exceptional performance. Chevrolet Performance delivers those power-building attributes to you with a range of production-style aluminum heads – from the LS6 heads for smaller-displacement engines to LS7 style heads for 427-inch-and-larger combinations, our aluminum heads benefit from Chevrolet Performance's extensive research and development program, ensuring maximum airflow without compromises. In fact, many professional builders use our heads as straight bolt-ons, with no further machining. Many of our assembled heads use premium machining and materials, including CNC finishing and porting, along with lightweight, hollow-stem valves, sodium-filled exhaust valves and – on some heads – light-weight titanium intake valves.

NOTE: *Chevrolet Performance heads will not fit 4.8L and 5.3L engines, due to their smaller bore sizes.*

Aluminum LS Family Head Technical Notes:

- Manufactured from 319-T5 aluminum alloy
- High-efficiency combustion chambers
- Symmetrical intake and exhaust ports
- Angled spark plugs (14mm; 5/8" hex; 3/4" reach; taper-seat plugs)
- 15° valve angle (except C5R and LS7)
- Bolt-down-type rocker arms (except LSX-DR, LSX-CT)
- Center-bolt valve cover hold-downs
- Fits Gen III and Gen IV Small-Blocks only

BUILDER'S TIP

TIERED PERFORMANCE CYLINDER HEAD STRATEGY DELIVERS OPTIONS

Cylinder head selection is one of the most important contributors to an engine's performance, because it ultimately determines how much air the engine can process to generate horsepower. The heads for regular-production LS-family engines are renowned for exceptional airflow attributes and offer significant power-building capability with traditional machining that enhances the volume of the intake ports and/or reduces restriction within the ports.

Chevrolet Performance's tiered strategy for LS cylinder head performance offers builders choices to fit a variety of performance goals and budgets. The first tier is our production-based heads, such as the LS3 head (P/N 12629063), which offer good out-of-box performance and are an excellent upgrade for earlier LS engines (as long as they have at least a 4.000" bore). The next tier is ported production heads, such as the LS3 CNC-ported head (P/N 88958758), which deliver significantly greater intake-port airflow at a value-driven cost.

For production-based engines using forced induction – supercharging or turbocharging – the LS9 CNC-ported heads are the ultimate solution, delivering greater strength and heat management properties through a unique production process with the A356T6 alloy.

The top tier of Chevrolet Performance's cylinder head ladder is the maximum-performance LSX heads, which are based on the design of production heads but include strength-enhancing features such as thicker decks, to support high-horsepower street and racing combinations. They also have a six-bolts-per-cylinder design vs. the four-bolt design of production LS heads, for exceptional clamping strength with supercharging, turbocharging and nitrous oxide. The six-bolt heads must be used with Chevrolet Performance LSX Bowtie cylinder block.

With Chevrolet Performance cylinder heads, there's a choice for every horsepower aspiration and budget.

LS3 CNC-Ported Cylinder Head Assembly (exhaust) **A**

LS3 CNC-Ported Cylinder Head Assembly (intake) **A**

LS3 CNC-Ported Cylinder Head Assembly (combustion chamber) **A**

LS3 CNC-Ported Cylinder Head Assembly (exhaust detail) **A**

LS3 CNC-Ported Cylinder Head Assembly (intake detail) **A**

12629064

L92 Cylinder Head Assembly (not shown)

- Aluminum performance head
- Fits any LS family engine with 4.000" bore or larger
- 2.165" solid stem intake, and 1.590" solid stem exhaust valves
- .510" max valve lift
- As-cast L92 style intake ports
- D-shaped exhaust ports
- As-cast combustion chambers

Head P/N 12629064 assembled with the following:

12627970	Intake Valves	**10166344**	Valve Spring Retainers
12582719	Exhaust Valves	**12482063**	Intake Valve Stem Seals
12589774	Valve Springs	**12482062**	Exhaust Valve Stem Seals
10166345	Valve Locks		

L92 Head Flow Data (4.000" Bore):

Lift	0.200"	0.300"	0.400"	0.500"	0.600"
Intake	151	208	256	294	316
Exhaust	111	152	174	183	189

12629063

LS3 Cylinder Head Assembly (not shown)

- Aluminum performance head
- Fits any LS family engine with 4.000" bore or larger
- 2.165" hollow stem intake, and 1.590" solid stem exhaust valves
- .550" max valve lift
- As-cast L92 style intake ports
- D-shaped exhaust ports
- As-cast combustion chambers
- Uses bare head P/N 12629051

A. 88958758

LS3 CNC-Ported Cylinder Head Assembly

- CNC-ported version of the LS3 cylinder head
- Flows about 10-percent more than the production head – more than 350 cfm (intake side) at .600" lift
- 276cc intake runners and 92cc exhaust ports
- Fits all LS engines with 4.000" bore or larger
- 2.165" hollow stem intake, and 1.590" solid stem exhaust valves
- .550" max valve lift
- D-shaped exhaust ports

Heads 12629063 and 88958758 assembled with the following:

12569427	Intake Valves	**10166344**	Valve Spring Retainers
12582719	Exhaust Valves	**12482063**	Intake Valve Stem Seals
12625033	Valve Springs	**12482062**	Exhaust Valve Stem Seals
10166345	Valve Locks		

19328743

LS9 CNC-Ported Head Assembly (not shown)

- Special A356T6 aluminum Roto-cast head casting for greater strength. The mold is rotated during production to create a more solid casting that virtually eliminates porosity
- Reinforced webbing and thicker deck (for minimal distortion) makes it an excellent choice for supercharged and turbo-charged engine combinations
- CNC-ported for approximately 10 percent greater airflow (intake side) than the regular-production cylinder head (similar to LS3 CNC-ported head P/N 88958758)
- As-cast 66.5cc combustion chamber volume
- Fully assembled with production LS9 2.165" (55mm) titanium intake valves and sodium-filled 1.590" (40mm) exhaust valves; and beehive-type valve springs
- Valve springs rated for .570" max lift
- Can be used on LS engines with at least a 4.000" bore using standard 11mm head bolts in place of the LS9's 12mm head bolts

Head P/N 19328743 assembled with the following:

12605524	Titanium Intake Valve (2.165")	**12596508**	Valve Spring Caps
12605525	Sodium Filled Exhaust Valve (1.590")	**10166345**	Valve Stem Keys
1265033	LS9 Beehive Valve Spring	**12582717**	Valve Seal-Intake (Integral Seal & Spring Seat)
12582718	Valve Seal-Exhaust (Integral Seal & Spring Seat)	**12596509**	Rocker Arm Wear Pads (Intake valve only)

Additional components required for installation. See page 261.

LS-Series Cylinder Heads Continued

A. 12578449

LS7 CNC-Ported Cylinder Head Assembly

- 356-T6 aluminum head
- Fully CNC'd ports and chambers
- LS7 rectangle port design
- Assembled with 2.200" titanium intake and 1.610" sodium-filled exhaust valves
- 12° valve angle
- Minimum 4.100" bore
- 270cc CNC'd intake ports, 85cc CNC'd exhaust ports
- 70cc CNC'd combustion chambers
- Capable of over 600 horsepower
- Bare head P/N 12578450 available separately

Head P/N 12578449 assembled with the following:

12591644	Intake Valves	**12596508**	Valve Spring Retainers
12578455	Exhaust Valves	**12482063**	Intake Valve Stem Seals
12621428	Valve Springs	**12482062**	Exhaust Valve Stem Seals
10166345	Valve Locks	**12596509**	Intake Valve Lash Cap

LS7 Head Flow Data:

Lift	0.100"	0.200"	0.300"	0.400"	0.500"	0.550"	0.600"	0.700"
Intake	71	145	222	271	315	332	348	352
Exhaust	60	120	159	192	207	214	219	221

12626958

LSA Cylinder Head Assembly (not shown)

- CTS-V and ZL1 6.2L production cylinder head assembly
- High-strength aluminum casting for supercharged application
- Premium steel intake and exhaust valves
- Completely Assembled

NOTE: *Uses ten 8mm & twenty 11mm head bolts*

B. 25534393

Bare C5R Racing Cubed Cylinder Head

- The images (C) to the left represent a machined version of the P/N 25534393 cubed (unmachined) product. Chevrolet Performance does not supply a fully machined version of the C5R head. Image is for reference only.
- 355-T7 "as-cast" Aluminum racing head
- Professional porting and machining of combustion chambers required
- No seats or guide machining
- C5R rectangle-port design – requires aftermarket rectangle-port intake manifolds
- Designed for big bore (4.100" min) LS7/C5R/LSX blocks
- 210cc "as-cast" intake ports
- 70cc "as-cast" exhaust ports, same as production LS6
- 30cc "as-cast" combustion chambers
- All fasteners are metric
- Capable of over 800 horsepower!
- Standard LS exhaust port design

A LS7 CNC-Ported Cylinder Head Assembly (exhaust)

A LS7 CNC-Ported Cylinder Head Assembly (intake)

B Bare C5R Racing Cylinder Head (exhaust)

B Bare C5R Racing Cylinder Head (intake)

B Bare C5R Racing Cylinder Head (combustion chamber)

NEW!

LT1 CNC Cylinder Head Assembly (exhaust) C

NEW!

LT1 CNC Cylinder Head Assembly (intake) C

NEW!

LT1 CNC Cylinder Head Assembly (combustion chamber) C

12620544 ⓘ
LT1 Cylinder Head Assembly (not shown)
- Replacement for production cylinder head assembly
- Fully assembled
- Machined for direct fuel injection

C. 19329839 ⓘ NEW!
LT1 CNC Cylinder Head Assembly
- Fully assembled
- Machined for direct fuel injection
- CNC machine-ported intake and exhaust runners
- Included in P/N 19333525 Head and Hot Cam Kit (See page XXX)

ⓘ LS-Series Cylinder Heads: Additional Required Components

Part Number	Gaskets (Quantity)	Bolts (Quantity)	Spark Plug	Engine Application
88958622	12589226 (2) OR 19170418	11562524 (20), 12558840 (10)	12571164	CNC LS6
12629064	12610046 (2) OR 19170419	11562524 (20), 12558840 (10)	12571164	L9H
12629063	12610046 (2) OR 19170419	11562524 (20), 12558840 (10)	12571164	LS3
88958758	12610046 (2) OR 19170419	11562524 (20), 12558840 (10)	12571164	CNC LS3
12578449	12582179 (2) OR 19170419	11562524 (20), 12558840 (10)	12571165	MY06/07 LS7
12626958	12610046 (2) OR 19170419	11562524 (20), 12558840 (10)	12571164	LSA
19328743	12610046 (2) OR 19170419	11562524 (20), 12558840 (10)	12571164	LS9
25534393	12582179 (2) OR 19170419	11562524 (20), 12558840 (10)	12571164	C5R

LSX CYLINDER HEADS

Extending the performance range of the LSX platform are Chevrolet Performance's 6-bolt LSX cylinder heads. Many are capable of flowing more than 400 cfm and their 6-bolts-per-cylinder clamping design gives them bomb-proof strength. Your horsepower-building potential is nearly unlimited with LSX heads.

These aluminum masterpieces of performance feature port and chamber designs based on popular and performance-proven production-style heads, such as the LS3/L92 and LS7 heads. They are easily identified by the engraved LSX logo on the ends.

All LSX heads are made of 356-T6 aluminum and feature a 5/8" thick deck that allows plenty of room for builder-specified combinations. Additional features include:

- Uses 11mm (10) and 8mm (13) head bolts (not included, see drawing on page 265)
- Accommodates production valvetrain components (except for Drag Race and Circle Track heads)
- Includes premium beehive-type valve springs (except for Drag Race and Circle Track heads)
- Extra material cast in the port areas to accommodate professional porting
- Valve guides for 8mm valve stems, except DR & CT

Racing-specific LSX-DR (Drag Racing) and LSX-CT (Circle-Track) heads feature raised runner designs and other unique features designed to maximize performance at the track.

LSX Street Heads

Four LSX street head configurations are offered: The LSX-LS7 head, the LSX-LS3 head, the LSX-LS9 head and the LSX-L92 Small Bore head. The LSX-L92 head features smaller combustion chambers that are compatible with smaller-bore LS1 and LS6 engines. The street heads accommodate valve springs with up to 1.37" diameter bases, but can be machined for larger springs.

19201807
LSX-L92 Small Bore Cylinder Head (not shown)

- LS3/L92 Port Configuration
- "As cast" runners and combustion chamber
- 15° valve angle
- Assembled with 2.00" intake and 1.55" exhaust valves
- 250cc intake port and 80cc exhaust port
- 70cc combustion chamber
- Intake flow – 280 cfm@ .600" lift / Exhaust flow – 180 cfm@ .700" lift
- Beehive valve springs
- Uses LS3/L92 style rocker arms (offset)
- 3.890" minimum bore size
- Uses LS3/L92 style intake manifold

19201805
LSX-LS3 Cylinder Head (not shown)

- L92 style rectangle port design
- Assembled with 2.165" hollow stem intake and 1.590" solid stem exhaust valves
- 15° valve angle
- Minimum 4.000" bore
- 260cc "as-cast" intake ports, 80cc "as-cast" exhaust ports
- 70cc "as-cast" combustion chambers
- Uses LS3 rocker arms/LS7 bolts

19257879
LSX-LS7 CNC-Ported Bare Cylinder Head (not shown)

- Fully CNC Ported
- 6-bolt per cylinder bolt pattern
- LS7 style rectangle port design
- 12° valve angle
- Minimum 4.100" bore
- 70cc "as-cast" combustion chambers
- Uses LS7 rocker arms/LS7 bolts
- 397 cfm@0.700" intake, 230 cfm@0.700" exhaust

A LSX-LS7 Cylinder Head Assembly (exhaust)

A LSX-LS7 Cylinder Head Assembly (intake)

A LSX-LS7 Cylinder Head Assembly (combustion chamber)

LSX-DR CNC-Ported Cylinder Head (exhaust) **B**

LSX-DR CNC-Ported Cylinder Head (intake) **B**

LSX-DR CNC-Ported Cylinder Head (combustion chamber) **B**

19329962
LSX-LS7 CNC-Ported Cylinder Head Assembly (not shown)

- Fully CNC Ported
- 6-bolt per cylinder bolt pattern
- LS7 style rectangle port design
- Assembled with 2.200" titanium intake and 1.610" sodium-filled exhaust valves
- 12° valve angle. Minimum 4.100" bore
- 70cc "as-cast" combustion chambers
- Handles .650" lift with premium springs
- Uses LS7 rocker arms/LS7 bolts
- Uses P/N 19257879 bare head (shown)
- 397 cfm@0.700" intake, 230 cfm@0.700" exhaust

A. 19328843
LSX-LS7 Cylinder Head Assembly – As Cast

- 6-bolt per cylinder bolt pattern
- LS7 style rectangle port design
- Assembled with 2.200" titanium intake and 1.610" sodium-filled exhaust valves
- 12° valve angle. Minimum 4.100" bore
- 270cc "as-cast" intake ports, 85cc "as-cast" exhaust ports
- 70cc "as-cast" combustion chambers
- Handles .650" list with premium springs
- Uses LS7 rocker arms/LS7 bolts

19166977
LSX-LS7 Bare Cylinder Head – As Cast (not shown)

- Used in P/N 19201806

19213963
LSX-LS9 Cylinder Head Assembly (not shown)

- L92 style rectangle port design
- Assembled with 2.165" titanium intake and 1.590" sodium-filled exhaust valves
- 15° valve angle. Minimum 4.000" bore
- 260cc "as-cast" intake ports, 80cc "as-cast" exhaust ports
- 70cc "as-cast" combustion chambers
- Uses LS3 rocker arms/LS7 bolts

LSX-DR and LSX-CT Heads

The LSX-CT (Circle-Track) and LSX-DR (Drag Racing) cylinder heads feature raised-runner designs for improved airflow. Intake port configuration is similar to the competition-derived C5R head, but the ports are raised an amazing 10mm and the intake manifold bolt pattern is spread to accommodate additional port configurations. Additional features include:

- 11° valve angle (same as C5R head)
- Accommodates up to 1.660" diameter valve springs
- Raised rocker rails
- Requires shaft-mount rockers
- May require special valve covers to clear shaft-mount rockers
- Provisions for down-nozzle machining
- 9° intake manifold angle – requires new LSX DR or LSX CT intake manifolds
- Unique LSX-CT/DR exhaust bolt pattern

B. 19166979
LSX-DR CNC-Ported Cylinder Head

- Fully CNC ported
- 356-T6 aluminum racing head. 5/8" thick deck
- LSX-DR rectangle intake port design – requires LSX-DR intake manifold
- LSX-CT/DR spread port exhaust port pattern
- Cast-in down-nozzle bosses (not machined)
- Designed for up to 2.280" intake and 1.620" exhaust valves (4.165" minimum bore)
- Machined for 1.660" valve springs; 11° valve angle
- Minimum 4.125" bore
- 313cc CNC'd intake ports. 116cc CNC'd exhaust ports
- 50cc CNC'd combustion chambers
- Requires 19201808 shaft-mount Rocker Kit
- Capable of over 900 naturally aspirated horsepower!
- Installed on LSX454R engine assembly

LSX Cylinder Heads Continued

A. 19202986
LSX-DR Cylinder Head

- Rough machined seats and guides for cylinder head porters to work their magic!
- 356-T6 aluminum racing head. 5/8" thick deck
- LSX-DR rectangle intake port design – requires LSX-DR intake manifold
- LSX-CT/DR spread port exhaust port pattern
- Cast-in down-nozzle bosses (not machined)
- Designed for up to 2.280" intake and 1.620" exhaust valves (4.165" minimum bore)
- Machined for 1.660" valve springs. 11° valve angle
- Minimum 4.125" bore
- Requires 19201808 shaft-mount Rocker Kit
- Capable of over 900 naturally aspirated horsepower!
- Installed on LSX454R engine assembly

A LSX-DR Cylinder Head (exhaust)

A LSX-DR Cylinder Head (intake)

A LSX-DR Cylinder Head (combustion chamber)

LSX-CT CNC-Ported Cylinder Head (exhaust) **B**

LSX-CT CNC-Ported Cylinder Head (intake) **B**

LSX-CT CNC-Ported Cylinder Head (combustion chamber) **B**

B. 19166981
LSX-CT CNC-Ported Cylinder Head

- Fully CNC-ported
- 356-T6 aluminum racing head
- 5/8" thick deck
- LSX-CT rectangle-intake port design – requires LSX-CT intake manifold
- LSX-CT/DR spread-port exhaust port pattern
- Cast-in down-nozzle bosses (not machined)
- Designed for 2.200" intake and 1.610" exhaust valves
- Machined for 1.625" valve springs
- 11° valve angle
- Minimum 4.125" bore
- 302cc CNC'd intake ports
- 109cc CNC'd exhaust ports
- 45cc CNC'd combustion chambers
- Capable of over 850 naturally aspirated horsepower!

19202985
LSX-CT Cylinder Head (not shown)

- Rough machined seats and guides
- Ready for custom porting

LS/LSX HEAD-BOLT PATTERNS

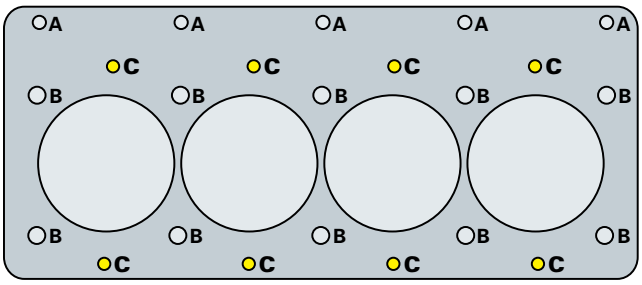

A	Standard LS	8mm	Bolt/Stud
B	Standard LS	11mm	Bolt/Stud
C	LSX	8mm	Bolt/Stud

BUILDER'S TIP

BUILDING A CARBURETED LS ENGINE

For some vintage cars, a carbureted induction system is more aesthetically appropriate, while some racecars depend on a carburetor, based on class rules or other reasons. Building a carbureted LS engine is just as easy as assembling a production-style fuel injected version. You'll still need all the sensors of an injected engine, but you simply replace the injection manifold with one of the Chevrolet Performance carbureted intakes – they're available for LS1/LS2/LS6-style cathedral-port heads, L92/LS3-style heads and LS7 heads. Then, add your favorite four-barrel and plug it all into one of our pre-programmed controllers. Add a 12-volt power source and your carbureted LS engine will deliver a balanced combination of vintage looks and modern engine management dependability!

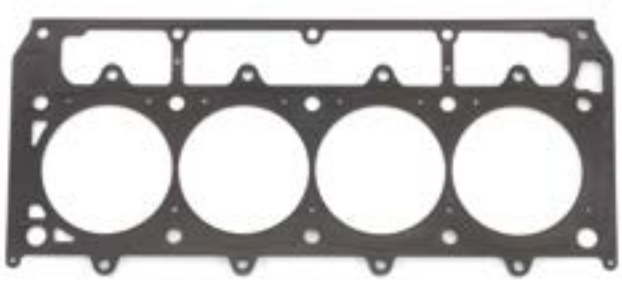

LSX 4.100" Bore MLS Head Gasket Kit

LS1 Cylinder Head Installation Kit (F-Car)

CYLINDER HEAD GASKET AND BOLT KITS

Part Number	Description	Technical Notes
12498543	Cylinder Head Gasket Kit (not shown)	2 head gaskets for 1997-2001 LS1 Camaro/Firebird and Corvette engines. Also fits 2001 LS6 Corvette engine.
12498544	Cylinder Head Gasket Kit (not shown)	2 head gaskets for 2002-2004 LS1Camaro/Firebird and Corvette engines.
19170418	LSX 4.100 Bore MLS Head Gasket Kit	Multi-layer steel gaskets for naturally aspirated and forced induction applications. 0.051" thick. Includes 1 LH and 1 RH gasket. For standard LS and LSX 6-bolt pattern blocks and heads. For bores up to 4.100"
19170419	LSX 4.200 Bore MLS Head Gasket Kit (not shown)	Multi-layer steel gaskets for naturally aspirated and forced induction applications. 0.051" thick. Includes 1 LH and 1 RH gasket. For standard LS and LSX 6-bolt pattern blocks and heads. For bores up to 4.200"
19170420	LSX 4.250 Bore MLS Head Gasket Kit (not shown)	Multi-layer steel gaskets for naturally aspirated applications. 0.051" thick. Includes 1 LH and 1 RH gasket. For standard LS and LSX 6-bolt pattern blocks and heads. For bores up to 4.250"
12498545	Cylinder Head Bolt Kit (1997-2003, not shown)	Kit of 15 head bolts for 1998-2003 LS1 Camaro/Firebird and 1997-2003 Corvette; and 2001-2003 LS6 Corvette. 1 kit per cylinder head; order 2 per engine. Head bolts cannot be reused on these engines. ***NOTE:*** *IMPORTANT! LS-Series engines produced from January 2004 forward have a new "short-style" head bolt design. Earlier head bolts will not fit. Order P/N 17800568 for engines produced from January 2004 and later.*
17800568	Cylinder Head Bolt Kit, Gen III and Gen IV (not shown)	Kit of 15 bolts for LS-Series engines produced from January 2004 and later. Bolts are 5mm shorter than previous design. Services single engine head only
19257453	Cylinder Head Bolt Kit - Std. Deck LSX Block (not shown)	Contains additional bolts for standard-deck LSX 6-bolt heads. Contains bolts for 2 heads (1-engine). ***NOTE:*** *Engine set requires 2 - 17800568 bolt sets for conventional GEN III & GEN IV engines. For complete LSX set, order: 2 - 17800568 - GEN III & GEN IV bolt kits, 1 - 19257453 - LSX Standard Deck Bolt Kit.*
19257452	Cylinder Head Bolt Kit - Tall Deck LSX Block (not shown)	Contains additional bolts for tall-deck LSX 6-bolt heads. Contains bolts for 2 heads (1-engine). ***NOTE:*** *Engine set requires 2 - 17800568 bolt sets for conventional GEN III & GEN IV engines. For complete LSX set, order: 2 - 17800568 - GEN III & GEN IV bolt kits, 1 - 19257452 - LSX Tall Deck Bolt Kit.*
12499217	LS1 Cylinder Head Installation Kit (F-Car)	Comprehensive cylinder head installation kit for 2002 Camaro and Firebird models equipped with the LS1 engine. Kit includes 2 head gaskets, 2 valve cover gaskets, 8 intake manifold gaskets, 2 exhaust manifold gaskets, 2 intake manifold-to-block seals, 20 long-head bolts and 10 short-head bolts.
12589226	LS1/LS6 Head Gasket (not shown)	Single gasket, 2 required. For naturally aspirated LS1 and LS6 5.7L engines. 0.051" thick. 3.920" max bore. Standard LS bolt pattern.
12589227	LS2, L76 Head Gasket (not shown)	Single gasket, 2 required. For naturally aspirated LS2 and L76 6.0L engines. 0.051" thick. 4.020" max bore. Standard LS bolt pattern.
12610046	LS3, L92 Head Gasket (not shown)	Single gasket, 2 required. For naturally aspirated LS3/L92 6.2L engines. 0.051" thick. 4.080" max bore. Standard LS bolt pattern.
12582179	LS7 Head Gasket (not shown)	Single gasket, 2 required. For naturally aspirated LS7 7.0L engines. 0.051" thick. 4.140" max bore. Standard LS bolt pattern.

LSX454R Rocker Arm Kit

ROCKER ARMS AND ROCKER ARM BOLTS

Part Number	Description	Technical Notes
12669993	Rocker Arm (not shown)	For LS1, LS2 and LS6 intake and exhaust valves. For L92, LS9 and LS3 exhaust valves Straight design, no offset. 1.7:1 ratio.
12569167	Rocker Arm (not shown)	Intake rockers for L92, LS9 and LS3 style heads only. Offset design. 1.7:1 ratio
12579615	Rocker Arm (not shown)	Intake rockers for LS7 style heads only. Offset design. 1.8:1 ratio
12579617	Rocker Arm (not shown)	Exhaust rockers for LS7 style heads only. Straight design, no offset. 1.8:1 ratio
12560961	Rocker Arm Bolts (not shown)	For cathedral port and L92 style heads. 16 required per engine
11588791	Rocker Arm Bolts (not shown)	For LS7 & LSX style heads. 16 required per engine
12552203	Rocker Arm Stand (not shown)	For LS1, LS2 and LS6 style heads only. Sold individually. Requires 1 per cylinder head.
12600936	Rocker Arm Stand (not shown)	For L92, LS9 and LS3 style heads only. Sold individually. Requires 1 per cylinder head
19201808	LSX454R Rocker Arm Kit	1.9:1 ratio. Fits DR head only. Full-roller bearing tips. Full-roller bearing trunnion. Set is for two heads. Requires special valve cover for clearance

LS-SERIES PUSHRODS

Part Number	Material	Diameter	Length	Usage	Description
12593344	1010 steel	3/8"	7.750	LS7	Production pushrod, individually packed
10238852	1010 steel	5/16"	7.325	LS1, LS2, LS3, LS6, L92	Production pushrod, individually packed

LS-SERIES INTAKE VALVES

Part Number	Valve Size	Stem Size	Description
12617533	2.165"	8mm	Stock replacement valve used in L92 engines
12605223	2.165"	8mm	Stock replacement solid-stem valve used in LSA engines
12569427	2.165"	8mm	Stock replacement hollow-stem valve used in LS3 engines
12605524	2.165"	8mm	Stock replacement titanium valve used in LS9 engines
12591644	2.200"	8mm	Stock replacement titanium valve used in LS7 engines

LS-SERIES EXHAUST VALVES

Part Number	Valve Size	Stem Size	Description
12563064	1.500"	8mm	Stock replacement solid-stem valve used in LS2 engines
12582719	1.590"	8mm	Stock replacement solid-stem valve used in L92 and LS3 engines
12605525	1.590"	8mm	Stock replacement sodium-filled stem valve used in LS9 engines
12618110	1.610"	8mm	Stock replacement sodium-filled stem valve used in LS7 engines

VALVE SPRINGS AND SPRING KITS

Part Number	Description	Technical Notes
12499224	LS Valve Spring Kit (not shown)	Beehive style springs. Used on LS3, LS2/LS6 cylinder heads. Installed height - 1.800" @ 90 lbs. pressure. Max lift .550". 1.250" @ 295 lbs. pressure. Includes 16 of P/N 12625033
12625033	Valve Springs (not shown)	Beehive style springs. Standard LS6/LS3 springs. Use cap P/N 10166344. 1.250" @ 295 lbs. pressure. Installed height - 1.800" @ 90 lbs. pressure. Max lift - .550"
12589774	Valve Springs (not shown)	Beehive style springs. Standard L76/L92 springs. Installed height - 1.800" @ 90 lbs. pressure. Max lift - .520". 1.300" @ 264 lbs. pressure
12621428	Valve Springs (not shown)	Beehive style springs. Used on LS7 cylinder heads. Installed height - 1.960" @ 101 lbs. pressure. 1.368" @ 310 lbs. pressure. Max lift - .600"

LS VALVE COVERS

Nothing finishes off your engine like a great-looking set of valve covers straight from GM. Our new collection of LS valve covers allows you to personalize your LS-powered project with a custom look. Choose from 8 great styles, available in natural, powder-coated, polished and chrome finishes, with callouts for your favorite nameplate, vehicle and more. These valve covers are designed and built to production specs and include a production-type O-ring gasket for a leak-free fit. No matter if you're driving a new Corvette or a Pro-Touring-style, LS3-powered '61 Chevy, we've got the perfect set of valve covers for it.

NOTE: *The valve covers feature the standard bolt pattern, but DO NOT have provisions for production-style coil mounts. Aftermarket or custom coil relocation brackets must be used. Additional features include:*

- PCV system (except 25534398 and 25534399)
- Sold in pairs (except 25534398 and 25534399)
- Integrated oil fill
- Accommodates tall-style rockers
- Includes hardware and O-ring gasket

A. 19156433
Valve Cover Kit – CHEVROLET, Chrome
- Chrome finish with black CHEVROLET lettering

B. 19156430
Valve Cover Kit – CAMARO, Natural
- Silver finish with black CAMARO lettering

19156428
Valve Cover Kit – CORVETTE, Polished (not shown)
- Polished finish with black CORVETTE lettering

19171497
Valve Cover Kit – LSX454 (not shown)
- Black finish with red LSX logo

C. 19171502
Valve Cover Kit – Polished
- Polished finish with no logos

A Valve Cover Kit – Chevrolet, Chrome

B Valve Cover Kit – Camaro, Natural

C Valve Cover Kit – Polished

Valve Cover Kit – LSX376, Orange/Black **D**

Valve Cover Kit – LSX454, Orange/Black **E**

LS Center-Bolt Competition Valve Cover (with breather hole) **F**

LS Center-Bolt Competition Valve Cover **G**

19171270
LSX376 (not shown)
- Grey/Black
- Used on LSX376-B8 engine

D 19332317
LSX376
- Orange/Black
- Used on LSX376-B15 engine

E. 19332313
LSX454
- Orange/Black
- Used on LSX454 engine

19259058
LSX454R (not shown)
- Orange/Black
- Used on LSX454R engine

F. 25534398
LS Center-Bolt Competition Valve Cover (with breather hole)
- Lightweight aluminum valve cover designed for production center-bolt LS-Series cylinder heads
- Includes bolts and seal
- Sold individually
- Natural finish

G. 25534399
LS Center-Bolt Competition Valve Cover
- Lightweight aluminum valve cover designed for production center-bolt LS-Series cylinder heads
- Includes bolts and seal
- Sold individually
- Natural finish

HARDWARE AND BREATHERS

Part Number	Description	Technical Notes
12341993	Push-In Oil Filler Cap	Round oil filler cap with Bowtie logo for valve covers with 1.220" diameter hole
12573338	Oil Fill Cap	Production / For LS1 engines
12573337	Oil Fill Cap	Production / For L92 engines
12643759	Oil Fill Cap	Production / For LS3 engines
12577215	Valve Cover Bolt	Requires 4 per valve cover / For L92 engines
12560961	Valve Cover Bolt	Requires 4 per valve cover / For LS1, LS2 and LS6 engines
11588791	Valve Cover Bolt	Requires 4 per valve cover / For LS7 engines
12637683	Valve Cover Gasket	Requires 1 per valve cover For LS1, LS2, LS6, LS7 and L92 engines

VALVE LIFTERS AND COMPONENTS

12499225
LS-Series Camshaft Lifter Kit (not shown)
- Set of 16 lifters for LS-Series engines
- Same lifter used in LS2 and LS7 P/N 17122490 (single lifter)

12595365
Lifter Guide (not shown)
- Works in Gen III and IV applications (except with AFM)

Valve Lifters and Components Continued

88958689

Racing Hydraulic Roller Lifter Kit

If your Gen III or Gen IV application calls for sustained high-rpm's, this Racing Hydraulic Roller Lifter Kit is a must. It features reduced mass internal componentry for higher limiting speeds and to accommodate aggressive camshaft designs. Improved valvetrain dynamics and stability deliver more horsepower and better high rpm performance – tested to 8,000 rpm! Set includes 16 lifters.

19257324

LS9 Valvetrain Kit

A convenient way to get all the high-quality, lightweight components you need for your LS9 Cylinder Head build (P/N 12621773)! This kit can be used with other LS Rectangular Port Heads, as well, except for the LS7 and small-bore LSX. Note that two kits are required to assemble a pair of heads.

This Kit Includes:

Part Number	Description	QTY
12605524	Titanium Intake Valve (2.165")	4
12605525	Sodium Filled Exhaust Valve (1.590")	4
12625033	LS9 Beehive Valve Spring	8
12565209	Valve Seal-Exhaust (Integral Seal & Spring Seat)	8

Part Number	Description	QTY
12596508	Valve Spring Caps	8
10166345	Valve Stem Keys (not shown)	16
12565208	Valve Seal-Intake (Integral Seal & Spring Seat)	8
19302366	Rocker Arm Wear Pads (Intake valve only)	4

NOTE: *Components are used in the LS9 CNC-ported Cylinder Head Assembly (P/N 19328743).*

NEW!

▲

19333525

LT1 Head Cam Kit* NEW!

Increase your already-strong LT1 with these CNC ported heads and camshaft designed specifically for direct injection.This is the first "Hot Cam" for the Gen V LT1. (See warranty statement on page 35.)

**Expected availability 2nd Quarter 2016*

***NOTE**: Installation of this kit will affect engine variable valve timing and Active Fuel Management operation. Recalibration is required for accurate engine operation (not available from GM).*

This Kit Includes:

Part Number	Description	QTY
19303897 NEW!	Camshaft	1
12595365	Valve Lifter Guide	4
12648846	Valve Lifters	8
19329839 NEW!	CNC Cylinder Head Assembly	2

LS/LT-SERIES CAMSHAFTS

All LS camshafts are compatible with production-style LSX and C5R blocks, as well as all of our cylinder heads – although piston-to-valve clearance must be checked on some applications. We offer a broad range of production and racing-style camshafts that are factory-engineered to deliver maximum performance when paired with our high-flow cylinder heads. Save yourself the time and expense of going to an aftermarket camshaft supplier and build your LS engine with a genuine GM cam. We've also got the valvetrain components you need to finish the engine, including lightweight components designed for high-rpm performance.

Part Number	Description	Duration @ .050" Lift (deg)	Maximum Lift (in) w/1.7 rocker**	Lobe Separation (deg)	Technical Notes
12565308	2002-2004 LS6 Cam	I: 204 / E: 218	I: .550 / E: .550	117.5	Cam requires valve spring P/N 12586484
88958770	ASA Cam	I: 226 / E: 236	I: .525 / E: .525	110	Cam requires valve spring P/N 12586484; "ASA" cam for off-highway use
12480033	Hot Cam Kit	I: 219 / E: 228	I: .525 / E: .525	112	Kit includes 16 LS6 valve springs retainers
88958753	LS Hot Cam	I: 219 / E: 228	I: .525 / E: .525	112	Same cam as in kit P/N 12480033
19166972	LSX454 Cam (shown)	I: 236 / E: 246	I: .612 / E: .612	110	Max lift with 1.8 rockers .648/.648, 3-bolt design. ***NOTE:** Not compatible with production-style variable-valve timing configurations or production valve springs.*
88958766	Showroom Stock Cam	I: 239 / E: 251	I: .570 / E: .570	106.5	Showroom Stock racing design; requires hollow-stem intake valves P/N 12565311, hollow-stem exhaust valves P/N 12565312, valve springs P/N 12586484, and aftermarket notched pistons OR machined stock pistons
12638426	LS7	I: 211 / E: 230	I: .558 / E: .558	121	Stock LS7 camshaft, will not work on Gen III engines. Max lift with 1.8 rockers .593/.588
12561721	LQ9: 2002-2006 LS1: 2001-2004	I: 196 / E: 201	I: .467 / E: .479	116	Stock cam for 2002-2006 LQ9 and 2001-2004 LS1 engines
88958772	LS Stage 2 Cam	I: 227 / E: 239	I: .551 / E: .551	108	Max lift with 1.8 rockers .583/.583
88958773	LS Stage 3 Cam	I: 233 / E: 276	I: .595 / E: .595	107	Max lift with 1.8 rockers .630/.630
12623064	LSA Cam	I: 198 / E: 216	I: .480 / E: .480	122.5	Stock LSA Cam
12638427	LS9 Cam	I: 211 / E: 230	I: .562 / E: .562	122.5	Stock LS9 Cam
19303897	LT1 Hot Cam NEW!	I: .577 / E: .577	I: 228 / E: 248	116.5	Design for 1.81:1 rocker arms; requires non-afm lifters (See warranty statement on page 35)

**Except where otherwise noted in Technical Notes.

LS CONNECTING RODS & COMPONENTS

A. 12568734

1997-2004 Connecting Rod

- Connecting rod for use on all 1997-2004 production Corvettes and 1998-2002 Camaro/Firebird with LS1/LS6
- Press fit design
- 6.098" C-C length
- Sold individually

12649190

Connecting Rod (not shown)

- Connecting rod used in 2005-2007 LS2 and 2008-2012 LS3 engines has bronze bushing
- 6.098" C-C length
- Sold individually

11610158

LS6 Rod Bolts (not shown)

- Recommended for use in performance Gen III engines
- Bolts have greater strength than pre-2000 rod bolts
- 1 bolt per package; order 2 per connecting rod

89017573

Rod Bearing (not shown)

- 1 required per connecting rod
- For all LS-Series engines, except LS7 and LS9

89017811

LS7 Rod Bearing (not shown)

- 1 required per connecting rod
- For LS7 and LS9 engines only

Main Bearings - LS Engines (not shown)

Part Number	Position	Per Engine	Description
89017877	1, 2, 4, 5	4	LS7 or LS9
89017808	3 (thrust)	1	LS7 or LS9
89017571	1, 2, 4, 5	4	Non-LS7 or LS9
89017572	3 (thrust)	1	Non-LS7 or LS9

LSX CONNECTING RODS

Like our new crankshafts, the new LSX connecting rods from Chevrolet Performance are made of high-strength, 4340 forged steel to deliver worry-free performance for your high-horsepower, high-revving LS engine. Additional strength comes in the rod's I-beam design and its chamfered big end fits great with filleted cranks, like our LSX crankshafts.

B. 19166964

LSX Connecting Rod Kit, 6.000"

- 2.100" journals (big end)
- 0.866" bushed small ends
- MUST be used with LSX forged pistons – not compatible with production pistons
- Includes 7/16" 12-point, SAE 8740 rod bolts
- Caps are dowel located
- Weight-matched, sold in sets of 8

C. 19259254

LSX454 Rotating Assembly

Build your own "LSX Stroker" with this rotating assembly used in our powerful LSX454 crate engine. Order LSX fully-machined block P/N 19244057 to build your own engine.

Kit Includes:

Part Number	QTY	Description
19244018	1	Crankshaft, 4340 Forged Steel with 8-bolt flange (4.125" stroke)
19166964	8	Connecting Rods, 4340 Forged Steel
19166958	8	Pistons, Forged Aluminum with coated skirts (4.185" bore)

NOTE: *Also includes performance piston rings, rod and main bearings (not shown).*

A 1997-2004 Connecting Rods

B LSX Connecting Rod Kit, 6.000"

C LSX454 Rotating Assembly

LSX376 Piston (dished), 4.065" bore

LSX454 Piston, 4.185" bore

LSX PISTONS

Complete your all-LSX rotating assembly with LSX forged aluminum pistons from Chevrolet Performance. They're lightweight and tough, enabling higher revs and dependable performance, even with high-boost and nitrous-assisted applications. They're made of 4032 forged aluminum and available in 4.065" and 4.185" bores. Additional details include:

- Flat-top or dished designs with valve relief cut-outs
- High-tech skirt coating
- Forced pin oiling
- Pistons come with wrist pins and rings

Part Number	Description	Technical Notes
19244016	LSX376 Piston, 4.065" bore	14cc dish that lowers compression to approx. 9:1 (with most standard LS cylinder heads). Optimized for supercharged and turbocharged combinations. Use with stock-type connecting rods only
19166958	LSX454 Piston, 4.185" bore	Forged dished piston with valve reliefs. Must be used with LSX rods. Lightweight, includes rings and wrist pins. 4.185" bore, .866" wrist pin size. 1.2mm compression ring lands and a 2.0mm oil control ring land. ***NOTE:*** *Not compatible with production-style LS connecting rods. Must be used only with new LSX connecting rods with 0.866" wrist pin bores.*

LS-SERIES PISTONS AND PISTON RINGS

Premium-quality hypereutectic aluminum alloy pistons are used on most production LS engines (the LS9 supercharged uses forged aluminum). They are lightweight, durable and promote quieter operation. Chevrolet Performance offers production and oversized pistons for many applications. They're sold individually, unless otherwise specified. Check the accompanying chart for part numbers, specs, sizes and applications.

LS-Series Pistons

Part Number	Engine Size	Bore Size	Oversize	Rod Length	Pin Type	Comp Ratio	With Chamber	Description
88984245	5.7L	3.898"	—	Standard	Pressed	—	65	Hypereutectic LS1 and LS6 replacement
88984246	5.7L	3.898"	+.010"	Standard	Pressed	—	65	Hypereutectic LS1 and LS6 replacement
19178305	6.0L	4.000"	—	Standard	Floated	10.9	65	Hypereutectic LS2 and LQ9 replacement
89017479	6.0L	4.000"	+.020"	6.098"	Floated	10.9	65	Hypereutectic LS2 and LQ9 replacement

LS-Series Rings

Part Number	Bore Size	Oversize	Ring Thickness	Description
89017484	4.000"	—	1.2, 1.5, 2.5mm	Production ring pack for '05-'06 LS2, '06 L76
88894243	4.000"	—	1.5, 1.5, 3.0mm	Production ring pack for '05-'06 LQ9
89017776	4.125"	—	1.2, 1.2, 2.0mm	Production ring pack for '06 LS7
89017777	4.125"	+.020"	1.2, 1.2, 2.0mm	Oversize LS7 ring pack

Crankshaft Assembly 1997-2004

Reluctor Wheel, 24x

LS CRANKSHAFTS AND COMPONENTS

Our LS crankshafts are strong, precision-machined components that will support your high-horsepower aspirations. Choose from our nodular cranks up to 3.622-inch-stroke and our premium, forged-steel 4.125-inch-stroke crankshafts for larger-displacement combinations – and don't forget the proper reluctor wheel!

Part Number	Description	Technical Notes
12588612	LS2 Crankshaft Assembly	Nodular cast 3.622" stroke crankshaft assembly has 58x reluctor wheel installed. Used on 2006-2007 Corvettes. Balanced for 4.000" bore engines
89060436	Rear Crank Seal	Requires 1 per engine. For all LS-Series engines
12557583	Roller Pilot Bearing	Used in high-performance manual transmission applications. Use when input shaft protrudes 3-6mm (.079-.112") beyond bell housing
14061685	Roller Pilot Bearing	Used in high-performance manual transmission applications. Use when input shaft protrudes 23-24mm (.906-.945") beyond bell housing
12611649	LS7 Forged Steel Crankshaft	Forged 4" stroke crankshaft for LS7 engine. Includes 58x reluctor wheel. Rebalancing required if LS7 rods and pistons are not used. Machine .886" from snout for use in wet-sump applications
12559353	Reluctor Wheel, 24x (shown)	24-tooth crankshaft position sensor timing wheel for 1997-2005 engines
12586768	Reluctor Wheel, 58x	58-tooth crankshaft position sensor timing wheel for 2006 and newer engine
12641691	LSA Crankshaft	Forged 3.622" stroke. 8-bolt flexplate/flywheel pattern
12623492	Gen V LT1 (Wet Sump) Crankshaft	Forged 3.622" stroke. 8-bolt flywheel pattern
12629940	Gen V LT1 (Dry Sump) Crankshaft	Forged 3.622" stroke. 8-bolt flywheel pattern
12663801	Gen V LT4 (Wet Sump) Crankshaft	Forged 3.622" stroke. 8-bolt flywheel pattern
12663794	Gen V LT4 (Dry Sump) Crankshaft	Forged 3.622" stroke. 8-bolt flywheel pattern

LSX Crankshaft, 4.125" stroke

LSX Windage Tray Kit, for 4.125" strokes

LSX CRANKSHAFTS AND COMPONENTS

Chevrolet Performance LSX crankshafts are made from 4340 forged steel (most production LS cranks are cast) and have generous fillets. Our LSX forged crankshafts deliver exceptional strength and durability, whether you're building an engine for the street or track. Additional features include:

- 2.100" rod journals
- 8-bolt flexplate/flywheel pattern
- Comes with 58x reluctor wheel
- Reluctor wheel can be swapped for use with LS1/LS2/LS6 controller
- Designed for internal balancing (must be balanced prior to use in engine)
- Requires the use of chamfered rods (see our LSX connecting rod selection)

Part Number	Description	Technical Notes
19244018	LSX Crankshaft, 4.125" stroke	4340 premium steel. 4.125" stroke. Requires balancing. Includes 58x reluctor wheel. 8-bolt flexplate/flywheel required
19244049	LSX Windage Tray Kit (not shown)	For 4.000" strokes. Includes all matching hardware. Some notching may be required
19202609	LSX Windage Tray Kit	For 4.125" strokes. Includes all matching hardware. Some notching may be required depending on application

FLYWHEELS AND FLEXPLATES

At the opposite end of the crankshaft from the balancer are flywheels and flexplates, which connect the engine to either manual (flywheels) or automatic (flexplates) transmissions. Chevrolet Performance offers both internally and externally balanced flywheels and flexplates. It is critical you use the correct design for your engine application.

NOTE: *For Transmission Installation kits, see pages 367-375*

LS Engine Flywheels

Part Number	Year of Engine	Outside Diameter	Crank Flange Bolt Pattern	Converter Bolt Pattern Diameter	Starter Ring Gear Teeth	Technical Notes
12571611	1997 - up	14" (359mm)	6-bolt LS pattern 3.110" (79mm)	11.5" Single Disc	168	Flywheel used for LS engines with 6-bolt crankshaft flange
24240678	2009 - up	14"	8-bolt	9.5" Dual Disc	168	LSA Production Dual Mass with 8-bolt crankshaft flange (also fits LSX454)
12598613	2009 - up	14"	9-bolt	10" Dual Disc	168	LS9 Production with 9-bolt crankshaft flange

LS Engine Flexplates

Part Number	Year of Engine	Outside Diameter	Crank Flange Bolt Pattern	Converter Bolt Pattern Diameter	Starter Ring Gear Teeth	Technical Notes
12654640	1997 - up	14"	6-bolt LS pattern 3.110" (79mm)	11.062" (281mm)	168	Flexplate used for LS engines - fits stock LS-4L60 family torque converter
19260102	1997 - up	14"	6-bolt LS pattern 3.110" (79mm)	11.5" (292.1mm)	168	Flexplate only used together with Spacer 12563532 and Bolts 19257940 (4L80 family)
12636325	2009 - up	14"	8-Bolt	11.062" (281mm)	168	LSA Production Flexplate (also fits LSX-454)
19125691	2009 - up	14"	8-Bolt	11.5" (291.1mm)	168	Modified LSA 12636325 Flexplate (see above) for use in flywheel kit 19125597
12620099	2014 - up	14"	8-Bolt LS/LT pattern	11.062" (281mm)	168	Production Gen V truck flexplate

TIMING CHAINS AND SPROCKETS

Part Number	Description	Technical Notes
12588670	LS2 Timing Chain Damper (not shown)	Production LS2 damper. Will not fit LS1 and LS6 blocks fitted with P/N 88958607 (P/N 88958607 is no longer serviced). For use with standard oil pumps
12581276	Timing Chain Damper (not shown)	Production LS7 damper. 1.1mm thinner than P/N 12588670. For use with LS7 2-stage oil pump
12576407	1X Camshaft Sprocket (not shown)	Fits all LS cams with 3-bolt design. 1X camshaft gear. 3-bolt design; uses 3 bolts P/N 12556127
12586481	Camshaft Sprocket (not shown)	Fits all LS cams with 3-bolt design. 4X camshaft gear. 3-bolt design; uses 3 bolts P/N 12556127
12585994	VVT Camshaft Sprocket (not shown)	Combination camshaft sprocket and VVT activator. Production on 2007-2008 Cadillac Escalade L92 engines. Single-bolt design; use bolt P/N 12588151. 4X camshaft gear
12556582	Crankshaft Sprocket (not shown)	Fits non-LS7/LS9 applications. For standard single-stage oil pumps. Works with both cam sprockets P/N 12576407 and 12586481
12581278	Crankshaft Sprocket (not shown)	For use with 2-stage LS7 or LS9 oil pump only. Works with cam sprockets P/N 12576407 and P/N 12586481
12646386	Timing Chain (not shown)	Fits 1997-2009 LS-based engines
12626407	Timing Chain Tensioner (not shown)	Requires 1 per engine. Includes retainer and bolts. For L92 and LS3 engines
12556127	Camshaft Sprocket Bolt (not shown)	For use with 3-bolt (non-VVT) cams. For LS1, LS2, LS6, LS9 and early LS7 engines
11561283	Camshaft Sprocket Bolt (not shown)	For use with single-bolt cams and non-VVT timing covers. For 2008-2009 LS3 and LS7 engines
12588151	Camshaft Sprocket Bolt (not shown)	Combination bolt and valve for Variable Valve Timing (VVT) engines. For L92 engines. Use with VVT camshaft sprocket P/N 12585994

BOLTS, DOWELS AND BEARINGS

Part Number	Description	Technical Notes
11569956	Flywheel Bolt (not shown)	Requires 6 per engine. For LS1, LS2, LS3, LS6, LS7 and L92 engines. Use for both automatic flexplates and manual flywheels
11505820	Flywheel Dowel (not shown)	For all LS-Series engines. Locating dowel pin for pressure plate
12561465	Pressure Plate Bolts (not shown)	6 pieces. 6 needed per flywheel. Used on all GM LS engine manual flywheels
14061685	Pilot Bearing (not shown)	Use with manual transmissions if the input shaft extends beyond the bell housing more than 20mm
12557583	Pilot Bearing (not shown)	Use with manual transmissions if the input shaft extends beyond the bell housing 5mm or less (or recessed slightly)

ACCESSORY DRIVE SYSTEMS

The easiest and most convenient way to finish your LS engine and get it ready to run in your vehicle is with one of our serpentine accessory drive systems. They include the accessories, brackets, drive belts and hardware your engine needs, saving you the time of sourcing them individually. They're all-inclusive systems that bolt right onto the engine for a factory fit and appearance.

A. 19155066
CTS-V Accessory Drive System, with A/C - Fixed Displacement Compressor

- Does not work on LS9 and LSA supercharged engines
- Most harmonic balancers do not line up correctly with the accessory drive system; damper P/N 12620556 is strongly recommended
- Air conditioning has separate belt; to delete air conditioning, do not install the belt, compressor or tensioner
- Fits all LS type engines, except production iron block applications
- Direct bolt-on for LS3 and LS7 engines

NOTE: *Will not work with a cam-phased engine.*
NOTE: *Will not work on LS327 with cast-iron block.*
NOTE: *Water pump P/N 89018052 NOT included with kit.*
NOTE: *Includes fixed displacement compressor.*
NOTE: *Use P/N 19299069 for A/C add-on if Variable Displacement Compressor is needed.*

The system includes:

Part Number	QTY	Description
12578548	1	Bracket–Air Conditioning
19130461	1	Compressor–Air Conditioning
12595289	1	Tensioner–Air Conditioning Belt
12578549	1	Belt–Air Conditioning Compressor
12578551	1	Bracket–Power Steering Pump
21997867	1	Pump–Power Steering
12578552	1	Pulley–Power Steering Pump
21997866	1	Reservoir–Power Steering Fluid
21997868	1	Hose–Power Steering Fluid Reservoir With Clamps
12578550	1	Bracket–Generator
25766345	1	Generator
12568996	1	Pulley–Belt Idler
12569301	1	Tensioner–Drive Belt
12578553	1	Belt–Water Pump/Generator/ Power Steering
11515768	6	Bolt, Transaxle Br
11516360	4	Bolt - 10 x 1.50 x 90mm
11588751	3	Bolt - Hvy HX Acorn Flg Hd
11588744	2	Bolt - Hvy HX Acorn Flg Hd
11518075	3	Bolt - Hex Flg HD
11588747	3	Bolt, Gen
11515760	2	Bolt Hvy Hex Flg

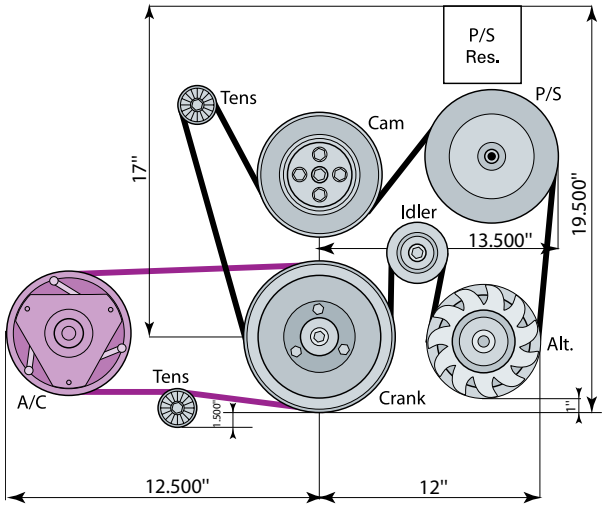

A CTS-V Accessory Drive System, with A/C - Fixed Displacement Compressor

B. 19299070
CTS-V Accessory Drive System, without A/C

- Does not work on LS9 and LSA supercharged engines
- Most harmonic balancers do not line up correctly with the accessory drive system; damper P/N 12620556 is strongly recommended
- Fits all LS type engines, except production iron block applications
- Direct bolt-on for LS3 and LS7 engines

NOTE: *Will not work with a cam-phased engine.*
NOTE: *Will not work on LS327 with cast iron block.*
NOTE: *Water pump P/N 89018052 NOT Included with kit.*

The system includes:

Part Number	QTY	Description
12578551	1	Bracket–Power Steering Pump
21997867	1	Pump–Power Steering
12578552	1	Pulley–Power Steering Pump
21997866	1	Reservoir–Power Steering Fluid
21997868	1	Hose–Power Steering Fluid Reservoir With Clamps
12578550	1	Bracket–Generator
25766345	1	Generator
12568996	1	Pulley–Belt Idler
12569301	1	Tensioner–Drive Belt
12578553	1	Belt–Water Pump/Generator/ Power Steering
11515768	2	Bolt, Transaxle Br
11588751	3	Bolt - Hvy HX Acorn Flg Hd
11588744	2	Bolt - Hvy HX Acorn Flg Hd
11518075	3	Bolt - Hex Flg HD
11588747	3	Bolt, Gen
11515760	2	Bolt Hvy Hex Flg

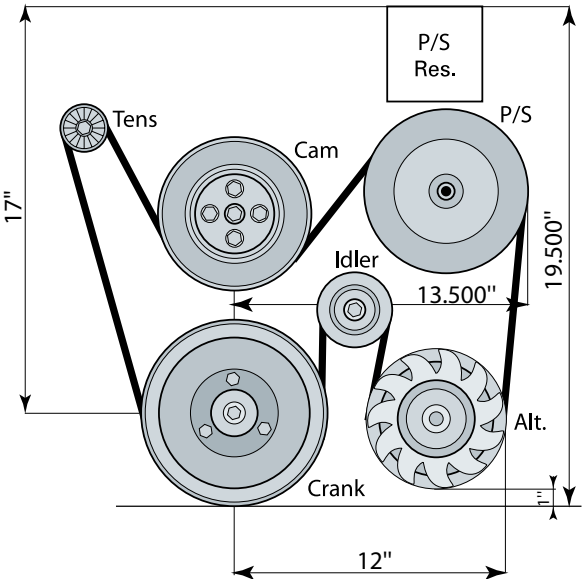

B CTS-V Accessory Drive System, without A/C

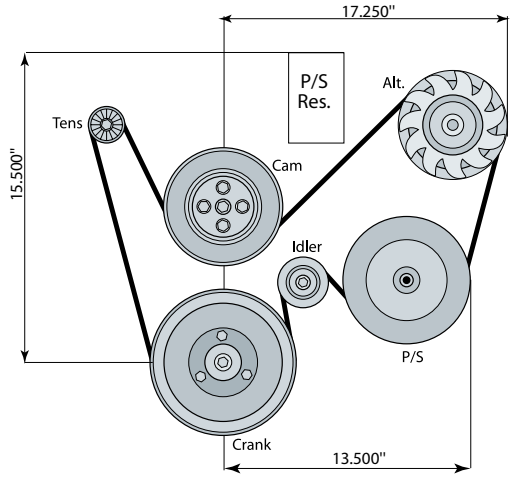

Corvette Accessory Drive System without A/C **C**

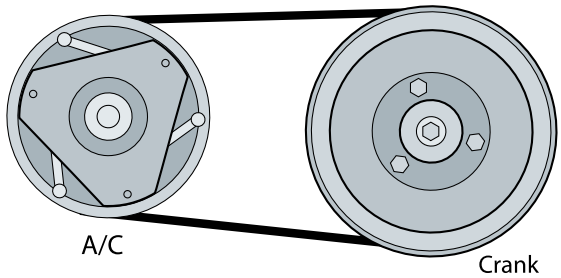

Corvette Accessory Drive System A/C Add-on **D**

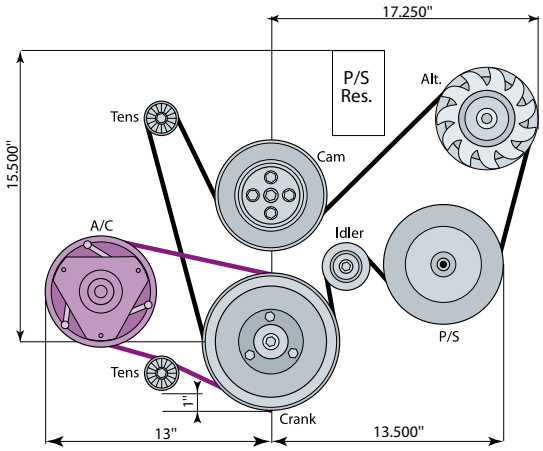

Corvette Accessory Drive System, with A/C **E**

C. 19257325
Corvette Accessory Drive System, without A/C

- Fits all Non-LSA and LS9 LS-type engines
- Most harmonic balancers do not line up correctly with the accessory drive system; damper P/N 12620556 is strongly recommended
- Direct bolt-on for LS3 & LS7 engines

NOTE: *Use on LS327 iron block engine requires harmonic balancer P/N 12601402.*

NOTE: *Water pump P/N 89018052 NOT Included with kit.*

NOTE: *Will not work with cam-phased engine.*

The system includes:

Part Number	QTY	Description
12555222	1	Bracket–Power Steering Fluid Reservoir
12578067	1	Bracket–Generator and Power Steering Pump
25888970	1	Generator
25960709	1	Pump–Power Steering
12568997	1	Pulley–Power Steering Pump
12555693	1	Brace–Power Steering Pump Front
15907878	1	Hose–Power Steering Fluid Reservoir With Clamps
26046502	1	Reservoir–Power Steering Fluid
12569301	1	Tensioner–Drive Belt
12568996	1	Pulley–Belt Idler
12636226	1	Belt–Water Pump/Generator/Power Steering Pump
11515768	2	Bolt-10x1.5x40MM- 15MM Drive
11098341	1	Bolt-10x1.5x110MM- 15MM Drive
12552922	1	Bolt-10x1.5x160MM- 15MM Drive
11516357	3	Bolt-10x1.5x75MM- 15MM Drive
11588745	1	Bolt-10x1.5x65MM- 15MM Drive
11588751	2	Bolt-10x1.5x95MM- Drive
11515758	2	Bolt-8x1.25x30MM- 12MM Drive
10317982	1	Cap-Power Steering Fluid Reservoir
11516697	2	Bolt-8x1.25x85MM- 13MM Drive

D. 19299069
Corvette Accessory Drive System, A/C Add-on
Components needed to add A/C to your LS-equipped vehicle.

- Kit includes mounting bracket, bolts, belt, A/C compressor and instruction sheet
- Intended to be used in conjunction with P/N 19257325 GMPP kit for non-A/C applications. Not verified to work with any non-GM FEAD kit
- Includes variable displacement compressor

The system includes:

Part Number	QTY	Description
12556447	1	Stud-10 x 1.5x127MM - 7MM Drive
12569286	1	Bracket-Air Conditioning Compressor
11515768	1	Bolt-10x1.5x40MM- 15MM Drive
89019337	1	Compressor-Air Conditioning
15709703	1	Nut- 10x1.5MM - 15MM Drive
11098341	1	Bolt-10x1.5x110MM- 15MM Drive
12552922	1	Bolt-10x1.5x160MM- 15MM Drive
11516360	1	Bolt-10x1.5x90MM- 15MM Drive
12595289	1	Tensioner-Air Conditioning Compressor Belt
12636225	1	Belt-Air Conditioning Compressor (1040MM - Long)

E. 19155067
Corvette Accessory Drive System, with A/C
Includes all components in Kits #19257325 and #19299069.

- Fits all Non-LSA and LS9 LS-type engines
- Most harmonic balancers do not line up correctly with the accessory drive system; damper P/N 12620556 is strongly recommended
- Air conditioning has separate belt; to delete air conditioning, do not install the belt, compressor or tensioner
- Direct bolt-on for LS3 & LS7 engines

NOTE: *Use on LS327 iron block engine requires harmonic balancer P/N 12601402.*

NOTE: *Water pump P/N 89018052 NOT Included with kit.*

NOTE: *Will not work with cam-phased engine.*

Accessory Drive Systems Continued

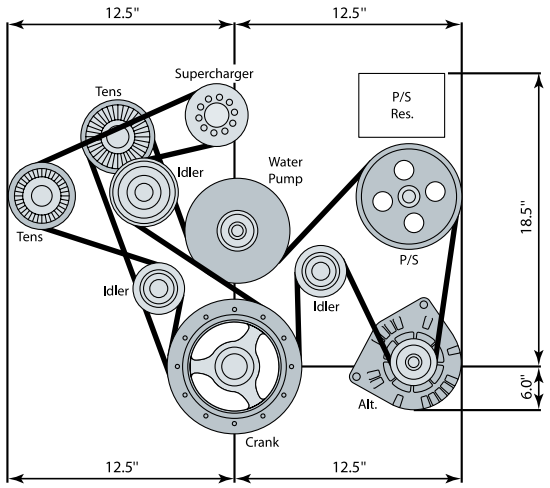

▲

19243525

LSA Accessory Drive System, without A/C

The front engine assembly dress components used in the CTS-V, without A/C for installations in other vehicles.

- Includes all brackets, bolts, tensioners, pulleys, belts, alternator, P/S pump and instruction sheet

The system includes:

Part Number	QTY	Description
12578550	1	Bracket–Gen
23480515	1	Generator Asm
11588744	4	Bolt–Hvy Hx Acorn Flg Hd
11588751	3	Bolt–Hvy Hx Acorn Flg Hd
12611905	1	Bracket–P/S Pump
11515760	2	Bolt–Rad Upr Mt
12611906	1	Pulley–P/S Pump
20806165	1	Pump Asm–P/S
22768353	1	Reservoir Asm–P/S Fluid
15224351	1	Hose Asm–P/S Fluid Rsvr Otlt
11588747	3	Bolt–Gen
11570082	4	Bolt–Hfh, M8x1.25x29, 19 Th
12606501	1	Bracket–Belt Idler Pulley
11610074	3	Bolt–Hvy Hx Acorn Flg Hd
12606500	1	Bracket–Drv Belt Tensr
11588749	2	Bolt–Hvy Hx Acorn Flg Hd
11588742	1	Bolt–Hvy Hx Acorn Flg Hd
12628025	1	Tensioner Asm–Drv Belt
11571051	2	Bolt–Hex Washer Hd
12606031	1	Pulley Asm–Spchg Belt Idler
12606032	1	Pulley Asm–Belt Idler
12622452	1	Tensioner Asm–Spchg Belt
11588753	1	Bolt–Hvy Hx Acorn Flg Hd
12568996	1	Pulley Asm–Belt Idler
12628027	1	Belt–w/Pmp & Gen & P/S Pump
12636227	1	Belt–Spchg

19244106

LSA Accessory Drive System A/C Add-on kit (not shown)

Components needed to add A/C to your LSA-equipped vehicle.

- Kit includes mounting bracket, bolts, belt, A/C compressor and instruction sheet
- Intended to be used in conjunction with P/N 19243525 kit for non-A/C applications. Not verified to work with any non-GM FEAD kit

Part Number	QTY	Description
11516360	4	Bolt–Hex Flg Hd
12612514	1	Bracket–AC Cmpr
11571051	4	Bolt–Hex Washer Hd
19130461	1	Compressor Asm–AC
12623615	1	Tool–AC Cmpr Belt
19180340	1	Belt–AC Cmpr

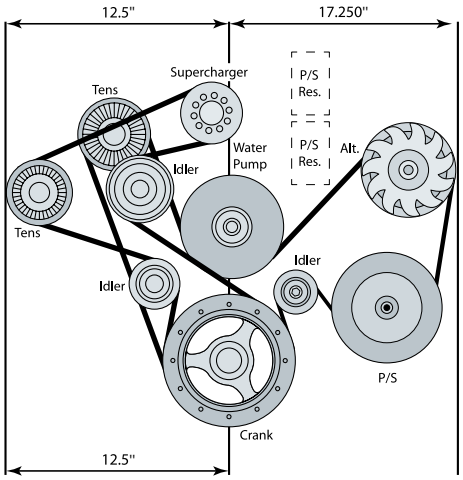

▲

19303242

Modified LSA Accessory Drive System, without A/C

Similar to LSA Accessory Drive Kit P/N 19243525, but designed for retro-fit applications with a relocated alternator and power steering pump to provide chassis clearance in older vehicles

- Includes power steering pump and two remote-mount reservoirs; builder to use the reservoir that provides the best fit for the application
- Requires fabrication of reservoir mounting bracket
- Requires reservoir-to-pump hose
- Can be used with either LSA A/C add-on or Corvette A/C add-on kit

The system includes:

Part Number	QTY	Description
12646194	1	Belt-w/pmp & Gen & P/S Pump
12628025	1	Tensioner ASM-DRV Belt
11571051	2	Bolt/Screw-DRV Belt Tensr
12568996	1	Pulley ASM-Belt Idler
12636227	1	Belt-SPCHG
12622452	1	Tensioner ASM-SPCHG Belt
11588753	1	Bolt/Screw-SPCHG Belt Tensr
12606500	1	Bracket-SPCHG Belt Tensr
11588742	1	Bolt/Screw-SPCHG Belt Tensr Brkt
11588749	2	Bolt/Screw-SPCHG Belt Tensr Brkt
12606031	1	Pulley ASM-SPCHG Belt Idler
12606032	1	Pulley ASM-SPCHG Belt Idler
11588744	2	Bolt/Screw Belt Idler Pul
12606501	1	Bracket-SPCHG Belt Idler Pul
11570082	1	Bolt/Screw-SPCHG Belt Idler Pul Brkt
11610074	3	Bolt/Screw-SPCHG Belt Idler Pul Brkt
12578067	1	Bracket-Gen/P/STG/ Pump
11516357	3	Bolt/Screw-Gen Brkt
12555693	1	Brace-P/S Pump
11588745	1	Bolt/Screw
11588751	2	Bolt/Screw
11515758	2	Bolt/Screw
11516697	2	Bolt/Screw
12568997	1	Pulley-P/S Pump
25960709	1	P/S Pump
25888970	1	Generator
22768353	1	P/S Pump Reservoir
26046502	1	P/S Pump Reservoir
10317982	1	Cap - P/S Reservoir
12555222	1	P/S Pump Reservoir Bracket
15306009	1	Connector

LS9 Accessory Drive System with A/C **A**

LS9 Accessory Drive System with A/C **A**

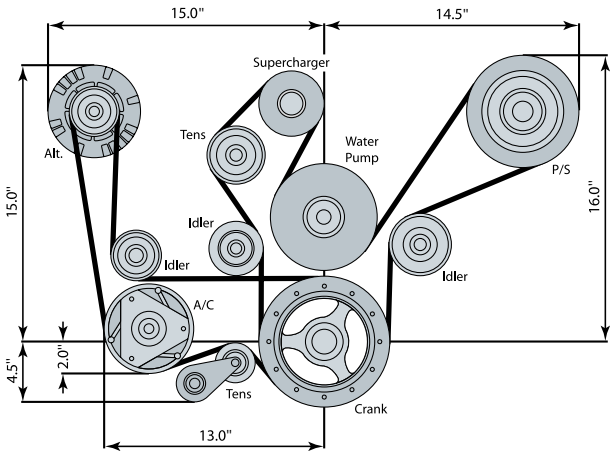

LS9 Accessory Drive System with A/C **A**

A. 19243524

LS9 Accessory Drive System with A/C

The Chevrolet Performance FEAD kit for the powerful LS9 is complete, as used in the ZR1 Corvette.

- It consists of all brackets, bolts, tensioners, pulleys, belts, alternator, P/S pump, idlers, and AC brackets, compressor and instruction sheets

The system includes:

Part Number	QTY	Description
15857665	1	Pump Asm–P/S
11588733	2	Bolt–Hvy Hx Acorn Flg Hd
12625875	1	Bracket Asm–P/S Pump
11518634	6	Bolt–Hvy Hx Acorn Flg Hd
15285644	1	Reservoir Asm–P/S Fluid
12598653	1	Pulley Asm–Belt Idler
11588745	1	Bolt–Drv Belt Tensr
12598654	1	Pulley Asm–Belt Idler
11588743	1	Bolt–Hvy Hx Acorn Flg Hd
12623061	1	Tensioner Asm–Drv Belt
11515767	5	Bolt–Trans Br Brkt
12602288	1	Bracket–AC Cmpr
12556447	1	Stud–Special M10 X 1.5 X 127
11571051	3	Bolt–Hex Washer Hd
12623062	1	Tensioner Asm–AC Cmpr Belt
12568996	1	Pulley Asm–Belt Idler
89019339	1	Compressor Asm–AC
11514597	1	Nut–Gen
12552922	1	Bolt/Screw–AC Cmpr
11588751	2	Bolt–Hvy Hx Acorn Flg Hd
11588754	1	Bolt–Hvy Hex Acorn Flg Hd
25888947	1	Generator Asm
11588744	2	Bolt–Hvy Hx Acorn Flg Hd
12602289	1	Bracket–Gen & Drv Belt Tensr
12637321	1	Belt–Spchg & w/Pmp & P/S Pump
12627522	1	Belt–AC Cmpr

NOTE: *This kit includes the generator bracket and bolts that are already attached to a Chevrolet Performance LS9 Crate Engine. This bracket must be bolted on the cylinder head prior to installing the water pump. If you do not have a Chevrolet Performance LS9 Crate Engine, you will also need to purchase separately the LS9 water pump kit (12622036), the LS9 lifter valley cover (12605719) and LS9 coolant air bleeds (12606242 and 1260 6243) to use this FEAD kit. If you have a Chevrolet Performance LS9 Crate Engine, you do not need any of these additional parts.*

Accessory Drive Systems Continued

A. 19258433

LC9 5.3L Accessory Drive System without A/C

The workhorse 5.3L LC9 engine assembly comes with an alternator bracket attached. To complete the installation of your engine, the parts listed below will complete the factory-installed FEAD assembly.

These components are engineered for heavy-duty work-truck use, and will provide years of reliable service in your performance vehicle.

The system includes:

Part Number	QTY	Description
12626222	1	Drive Belt
12669569	1	Idler Pulley w/Bolt
22781131	1	Alternator
11516360	2	Alternator Bolts
20756714	1	P/S Pump
12554032	1	P/S Brace
11514597	2	P/S Brace Nuts
11515764	1	P/S Brace Bolt
12605677	1	P/S Pump Pulley
11515767	3	Stg Pump Mtg Bolt
19257882	1	Bolt 3/8" x 16
09440957	1	Nut 3/8" x 16
19258317	1	Washer

Power Steering Pump Pulley Install Tool (included)

NOTE: *This kit is designed to include the necessary parts to install the complete kit on a Chevrolet Performance 5.3L Crate Engine. If you do not have a Chevrolet Performance 5.3L Crate Engine, you may need some additional hardware. The following parts are included with the Chevrolet Performance 5.3L Crate Engine and are not part of this kit:*

Part Number	QTY	Description
11588747	2	Bolt, Tensioner
12609719	1	Tensioner
12554030	1	Bracket, Steering/Generator
11516744	4	Bolt, Bracket
19300488	1	Balancer
12557840	1	Bolt, Balancer
19208815	1	Kit, Water Pump (includes gaskets)
12551926	6	Bolt, Water Pump

B. 19260892

LC9 5.3L Accessory Drive System A/C Add-on Kit

Components needed to add A/C to your LC9-equipped vehicle.

- Kit includes mounting bracket, bolts, belt, AC compressor and instruction sheet
- Intended to be used in conjunction with P/N 19258433 kit for non-AC applications. Not verified to work with any non-GM FEAD kit

The system includes:

Part Number	QTY	Description
25891791	1	AC Compressor
12643257	1	Mtg Bracket
11515767	3	Bracket Bolts
11516109	3	Comp Bolts–Long
11516503	1	Comp Bolt–Short
19210691	1	Belt Kit (w/Tool) AC

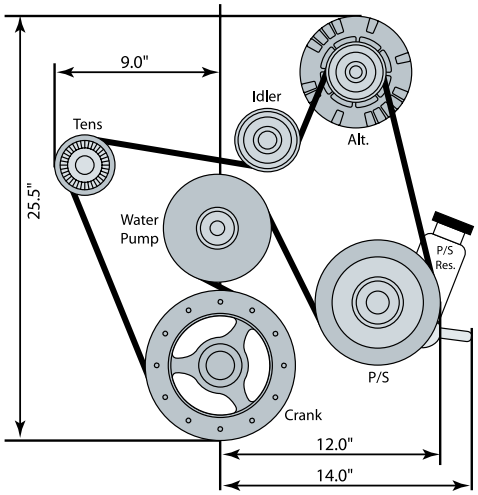

A LC9 5.3L Accessory Drive System

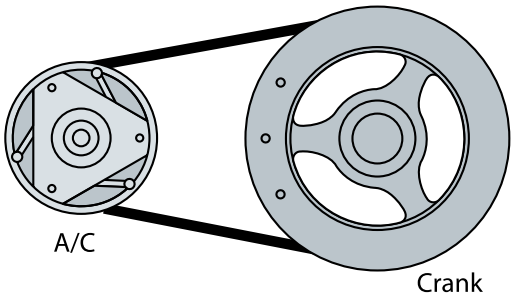

B LC9 5.3L A/C Add-On Kit

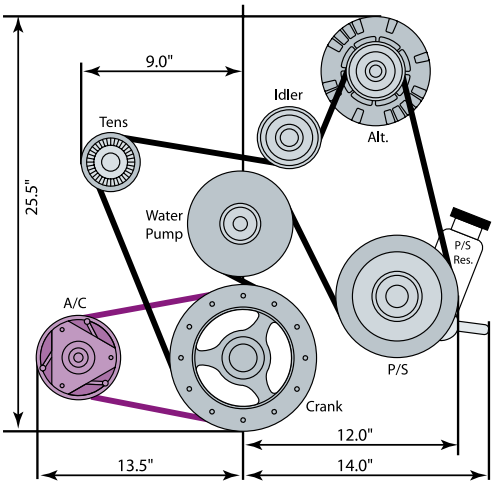

LC9 5.3L Accessory Drive System, with A/C Add-on Kit

NEW!

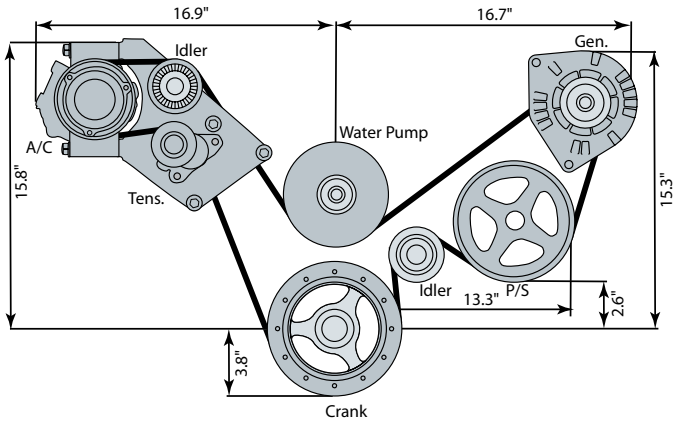

LS3 Accessory Drive System (diagram) **C**

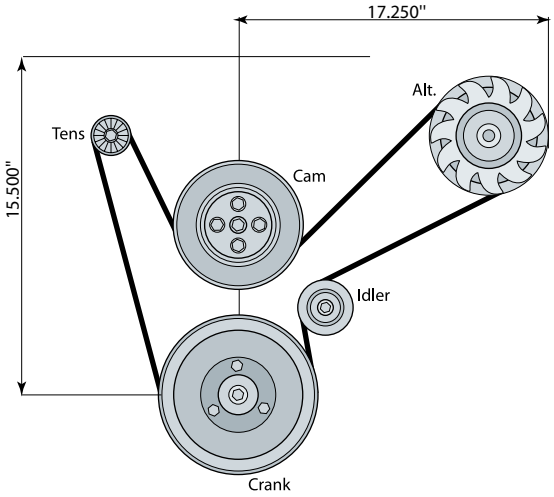

DR525 Accessory Drive System **D**

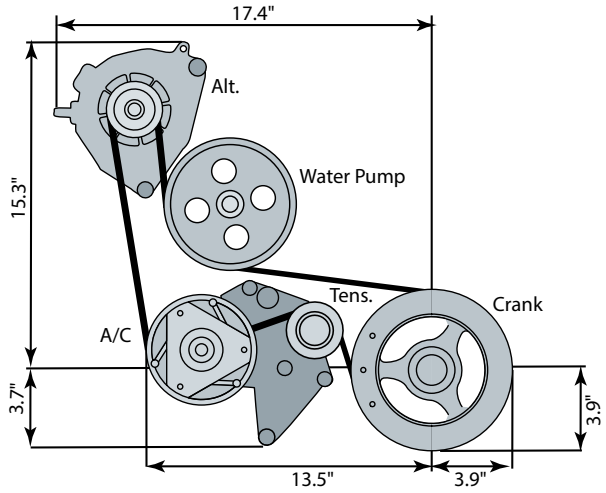

LT1 Accessory Drive System **E**

C. 19331505 NEW!
LS3 Accessory Drive System

- High mount A/C provides clearance to frame
- Fits most non-LSA and non-LS9 SC engines

The system includes:

Part Number	QTY	Description
19331504	1	Belt
19331502	1	Bracket
12568996	1	Pulley-Belt Idler
12647765	1	Tensioner-Drive Belt
25960709	1	Pump-Power Steering
10317982	1	Cap ASM-P/S Fluid Reservoir
26046502	1	Reservoir ASM-P/S Fluid
12555222	1	Bracket ASM-P/S Fluid Reservoir
12578067	1	Bracket ASM-Gen & P/S Pump
11516357	3	Bolt-P/S Gen Bracket, M10x1.5x75
11516697	2	Bolt-P/S Pump to Bracket, M8x1.25x85
11515758	2	Bolt-Brace (12555693) & P/S Pump (25960709), M8x1.25x30
12568997	1	Pulley-P/S Pump
25888970	1	Generator
11588745	1	Bolt-Gen P/S Bracket to Blk, M10x1.5x65
15907878	1	Hose-P/S Fluid Reservoir with clamps
20762515	1	Compressor-Air Conditioning
22942442	1	Emblem
11588752	3	Bolt-Compressor to Bracket (2), M10x1.5x100
11588741	2	Bolt-Bracket to Head, M10x1.5x45
11588726	2	Bolt-Tensioner to Bracket (2), M8x1.25x45
11588751	4	Bolt-Compressor Bracket to Head (2), Generator Mount, M10x1.5x95
12555693	1	Brace-P/S Pump Front
12569301	1	Tensioner-Reuse Pulley and Bolt

D. 19329418
DR525 Accessory Drive System

- Fits all Non-LSA and LS9 LS-type engines
- Most harmonic balancers do not line up correctly with the accessory drive system; damper P/N 12620556 is strongly recommended
- Direct bolt-on for LS3 & LS7 engines

NOTE: *Use on LS327 iron block engine requires harmonic balancer P/N 12601402.*

NOTE: *Water pump P/N 89018052 NOT Included with kit.*

NOTE: *Will not work with cam-phased engine.*

The system includes:

Part Number	QTY	Description
12569301	1	Tensioner–Drive Belt
12568996	1	Pulley–Belt Idler
88984194	1	Belt–Water Pump/Generator
11515768	2	Bolt-10x1.5x40mm- 15mm Drive
11098341	1	Bolt-10x1.5x110mm- 15mm Drive
12552922	1	Bolt-10x1.5x160mm- 15mm Drive
11516357	3	Bolt-10x1.5x75mm- 15mm Drive
11588745	1	Bolt-10x1.5x65mm- 15mm Drive
11588751	2	Bolt-10x1.5x95mm- Drive
11515758	2	Bolt-8x1.25x30mm- 12mm Drive
11516697	2	Bolt-8x1.25x85mm- 13mm Drive

E. 19329990
LT1 Accessory Drive System

This package includes production mounting brackets, hardware and drive belt to mount the alternator and A/C compressor in the same configuration as the LT1 equipped Stingray.

NOTE: *Power steering is not included, as the production car has electric assist.*

The system includes:

Part Number	QTY	Description
22868687	1	Generator
11546413	3	Bolt - Gen (2), Tensioner (1)
12668977	1	Tensioner
11588730	3	Bolt - Tensioner (1) Compressor (2)
12639512	1	Bracket, A/C Compressor
12651112	1	Belt - Generator & A/C Compressor
11612159	1	Stud - A/C Compressor Bracket
11610091	1	Nut - M8x1.25
23370609	1	Compressor
11588694	1	Bolt - A/C Compressor to Bracket - Long bolt
11610074	1	Bolt - A/C Bracket
22942442	1	Emblem

Accessory Drive Systems Continued

A. 19332590

LT4 Wet Sump Accessory Drive System NEW!

- Fits GEN V LT4 Wet Sump engines
- Includes generator, water pump, tensioners, brackets, belts, pulleys, bolts and instruction sheet
- Air conditioning has a separate belt – see kit P/N 19332591
- Production version of 2016 CTS-V

The system includes:

Part Number	QTY	Description
12643218	1	Belt-Water Pump and Generator
12668317	1	Belt-Supercharger
12668983	1	Bracket
11588732	2	Bolt-M8x1x70
11610074	4	Bolt-M8x1.25x45
22949467	1	Generator
11588754	3	Bolt-M10x1.5x105
12669076	1	Tensioner
12668046	1	Pulley
12665845	1	Pulley
12642705	1	Pulley
12663624	1	Tensioner
11588753	2	Bolt-M10x1.5x105
12667164	1	Bracket
11588730	2	Bolt-M8x1.25x60

B. 19322614

LT4 Dry Sump Accessory Drive System NEW!

- Fits GEN V LT4 Dry Sump engines
- Includes generator, water pump, tensioners, brackets, belts, pulleys, bolts and instruction sheet
- Includes variable displacement compressor, does not require 19332591 A/C Add-on Kit
- Production version of 2016 Corvette

The system includes:

Part Number	QTY	Description
12651112	1	Belt-Water Pump and Generator
12639512	1	Bracket-Comp/Tensioner
11516413	3	Bolt-M10x1.5x85
22868687	1	Generator
23105946	1	Compressor
12658273	1	Tensioner
11610074	1	Bolt-M8x1.25x45
11588694	1	Bolt-M8x1.25x120.8
11588730	7	Bolt-M8x1.25x60
11612159	1	Stud
11610091	1	Nut-M8x1.25
12663625	1	Belt-Supercharger
12642705	1	Pulley
12642706	2	Pulley
12668046	1	Pulley
12663624	1	Tensioner
12663102	1	Bracket-Tensioner
11588725	2	Bolt-M8x1.25x35
11518634	2	Bolt-M10x1.5x80

NEW!

A LT4 Wet Sump Accessory Drive System

NEW!

B LT4 Dry Sump Accessory Drive System

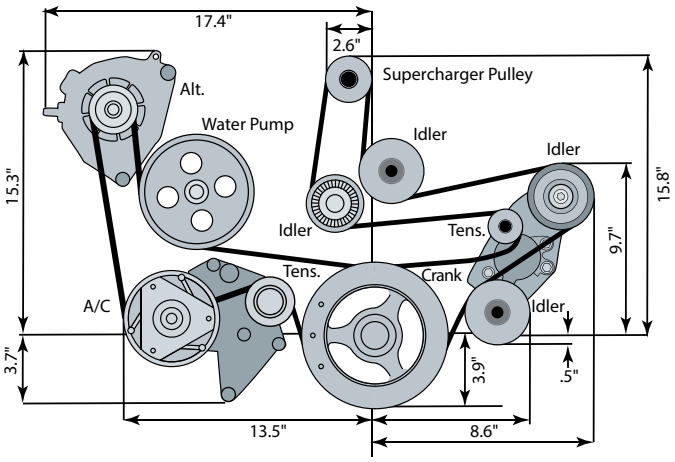

B LT4 Accessory Drive System – Dry Sump with A/C

NEW!

LT4 A/C Add-on Kit C

C. 19332591

LT4 A/C Add-on Kit NEW!

- Kit includes mounting bracket, bolts, belt, compressor and instruction sheet
- Intended to be used in conjunction with 19332590 Chevy Performance kit
- Includes variable displacement compressor
- Production version of 2016 CTS-V

The system includes:

Part Number	QTY	Description
12643219	1	Belt
23323121	1	Compressor Unit
11588735	1	Bolt-M8x1.25x100
11588732	1	Bolt-M8x1x70
11561936	1	Stud
11610091	1	Nut-M8x1.25
12643221	1	Bracket
11610074	1	Bolt-M8x1.25x45
11588741	4	Bolt-M10x1.5x45

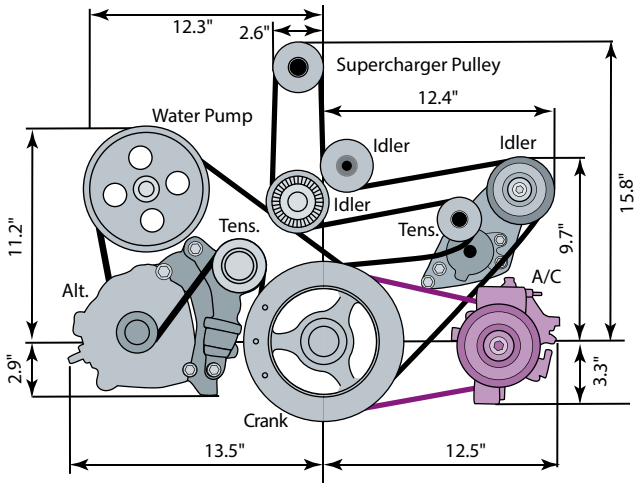

LT4 Wet Sump Accessory Drive System (19332590)
with LT4 A/C Add-on Kit (19332591)

Rear FEAD Clearance Dimensions

FEAD Part Number (Original Equipment Application)	Belt Track (front of block to rear edge of main drive bolt)		Belt Track (front of block to rear edge of supercharger belt)	
19299070 (CTS-V Non-Supercharged)	3"	6 Groove	—	—
19155066 (CTS-V Non-Supercharged)	3"	6 Groove	—	—
19155067 (Corvette Non-Supercharged)	3"	6 Groove	—	—
19257325 (Corvette Non-Supercharged)	3"	6 Groove	—	—
19329418 (Corvette Non-Supercharged)	3"	6 Groove	—	—
19243525 (CTS-V LSA Supercharged)	3"	6 Groove	4.5"	8 Groove
19243524 (Corvette LS9 Supercharged)	1.75"	6 Groove	2.75"	11 Groove
19258433 (Truck)	4.5"	6 Groove	—	—
Gen 4 Camaro/Firebird (LS1) (production)	4"	6 Groove	—	—
Gen 5 Camaro (LS3/L99) (production)	4.75"	6 Groove	—	—

AC Compression for FEADS

Part Number	Application	Style	Belt Track (front of block to rear edge of belt)	
19130461	CTS-V	Fixed Disp	1.5"	4 Groove
89019337	Corvette	Variable Disp	1.5"	4 Groove
89019339	Corvette	Variable Disp	1.75"	6 Groove
25891791	Truck	Fixed Disp	3.5"	4 Groove

BALANCERS

A smooth-running engine depends on an effective balancer or torsional damper. Our dampers not only help LS engines run smoothly, they can extend engine life. Pick the right damper for your project from the list below.

19300488
Harmonic Balancer (not shown)
- Originally used on L92 engines
- For use in truck applications
- WILL NOT work with our Serpentine Accessory Drive Systems

A. 12553118
Harmonic Balancer
- Originally used on LS1 and LS2 engines
- For use in F-Car and GTO applications

B. 12599862
Harmonic Balancer
- Originally used on LS7 engines
- For use in Corvette applications
- Works with Chevrolet Performance Serpentine Accessory Drive System P/N 19155066 or P/N 19155067

12635649
Harmonic Balancer (not shown)
- For LS3 engines
- Works with Chevrolet Performance Serpentine Accessory Drive System P/N 19155066 or P/N 19155067

BALANCER BOLTS AND WASHERS

12557840
Balancer Bolt (not shown)
- For LS1, LS2, LS3, LS6 and L92 engines

11570163
Balancer Bolt (not shown)
- For LS7 engines

12603843
Friction Washer (not shown)
- For LS2, LS3, L99, LS7 and L92 engines

WATER PUMPS AND COMPONENTS

19208815 (not shown)
Water Pump
- '07 - '10 LS2 Trucks, Vans and SUVs

C. 89018052
Water Pump
- '05 - '07 LS2
- '08 LS3
- '07 - '08 LS7

D. 19180610
Water Pump
- '09 - '10 LSA (CTS-V)
- '09 - '10 LS3 (Corvette)
- '09 L76 SRX
- '09 - 10 LS7 (Corvette)

12630223
Water Pump Gasket (not shown)
- Requires 2 per engine
- For LS1, LS2, LS3, LS6, LS7 and L92 engines

12551926
Water Pump Bolt (not shown)
- Requires quantity of 6
- For LS1, LS2, LS3, LS6, LS7 and L92

A Harmonic Balancer – LS1 and LS2

B Harmonic Balancer – LS7

C Water Pump – LS2, LS3 and LS7 Engines

D Water Pump – 2009 LSA, LS3/LS7, L76 SRX Engines

Corvette Oil Pan – 2002-2004 LS6 **E**

F-Car Oil Pan **F**

LS Circle Track Oil Pan **G**

Muscle Car Oil Pan Kit **H**

High Volume LS Oil Pump Kit **I**

OIL PANS, OIL PUMPS, GASKETS AND COMPONENTS

E. 12561828
Corvette Oil Pan (2002-2004 LS6)
- Used on 2002-2004 Corvettes with LS6

F. 12628771
F-Car Oil Pan
- Used on 1998-2002 Camaro and Firebird LS1
- Uses PF48 oil filter

G. 19243065
LS Circle Track Oil Pan
- Used on CT525 P/N 19171821
- 6-quart capacity (8-quart with remote filter and adapter)
- Requires remote oil filter and adaptor
- Uses oil pan gasket P/N 12558760 (not included)

H. 19212593
Muscle Car Oil Pan Kit
- Fits virtually all 1955-1995 GM front engine, RWD, V-8 cars
- 5-quart capacity
- Includes oil pan, dipstick and tube, gaskets, pickup tube, windage tray, and all mounting hardware
- Wet sump design
- Max stroke 3.620 w/windage tray

24241872
Magnetic Drain Plug (not shown)
- Catches and holds small pieces of metal before they can cause damage

12612350
Oil Pan Gasket (not shown)
- Requires 1 per engine
- Fits all LS-Series engines except LS7 and LS9

12612351
Oil Pan Gasket (not shown)
- Requires 1 per engine
- For LS7 and LS9 engines

11515758
Oil Pan Bolt (not shown)
- M8 x 30mm long
- Requires 12 per engine (use 13 with LS7 and LS9 engines)
- For LS1, LS2, LS6, LS7 and L92 engines

12554990
Oil Pan Bolt (not shown)
- M6 x 136mm long
- Requires 2 per engine
- For all LS-Series engines

12612289
Oil Pump (not shown)
- For L92 engines

I. 17801830
High Volume LS Oil Pump Kit
- High volume pump assembly for LS-Series engines (except LS7 and LS9 applications)
- Pump pick-up seal included

12623097
Oil Pump (not shown)
- 2-stage pump for LS7 engines
- Will not work on standard LS crankshafts
- Must use crank sprocket (P/N 12581278), timing damper (P/N 12581276), LS7 pickup tube (P/N 12580855), LS7 oil pan (P/N 12596689), and LS7 timing cover (P/N 12598292)

11519133
Oil Pump Bolt (not shown)
- Requires 4 per engine
- For all LS-Series engines

LS INTAKE MANIFOLDS

A. 12644568
LS7 Production Intake Manifold Assembly

- Gen IV fuel injection nylon manifold used on the 2009 Corvette Z06 LS7 engine
- Fully assembled with injectors, fuel rail, 93mm ETC throttle body and gaskets
- For use only with LS7 and LSX/LS7-style cylinder heads

NOTE: *Must use Controller Kit P/N 19243066.*

B. 12638197
LS3 Intake Manifold Assembly

- Gen IV fuel-injection nylon manifold used on the 2009 Corvette LS3
- Fully assembled with injectors, fuel rail, 92.8mm ETC throttle body and gaskets
- For use with LS3/L92 style cylinder heads

C. 19244103
LS9 Supercharger

- Original Equipment on ZR1 Corvette
- Eaton twin-rotor 2.3L displacement
- Integrated dual-brick air-to-liquid intercooler
- Highly efficient 4-lobe rotor design
- Generates maximum boost pressure of 10.5 PSI
- Assembly includes:
  – Supercharger intake system with injectors
  – Cast cover and intercooler
  – Front pulley
  – Throttle body (not shown)
  – Gasket Set
  – Injector Harness (not shown)
  – Injectors (not shown)
  – Fuel Rails (not shown)

D. 19300534
ZL1 Supercharger

- Original equipment on LSA-powered 2012-2014 ZL1 Camaro
- Highly efficient Eaton Twin-Vortices, high-helix rotors
- 1.9L displacement
- Integrated air-to-liquid intercooler with front-facing lines
- Approximately 9lbs. psi boost on 6.2L engine
- Assembly includes:
  – Supercharger
  – Intake system with injectors
  – Ribbed cast cover and intercooler
  – Front pulley
  – Throttle body
  – Gasket set

A LS7 Production Intake Manifold Assembly

B LS3 Intake Manifold Assembly

C LS9 Supercharger

D ZL1 Supercharger

LS9/LSA Intercooler Fluid Pump **E**

Air Inlet Kit **F**

LS2 4-bbl Intake Manifold **G**

LS7 4-bbl Intake Manifold **H**

LS3/L92 Style 4-bbl Intake Manifold **I**

E. 22901367
LS9/LSA Intercooler Fluid Pump

- Includes pump assembly
- Additional hoses and clamps required to connect pump inline with coolant circuit

F. 19301246
Air Inlet Kit for LS-Based Crate Engine Installation

- Designed for universal LS and LSX EFI crate engine installations
- Kit contains intake tubes with provisions for mass airflow meter and vacuum line, along with a reusable, high-performance air filter and mounting hardware
- Straight and elbow tubes provide the optimal distance between throttle opening and mass airflow meter, including the minimum length of straight tubing required for accurate mass airflow meter operation
- Includes polished intake tubes, couplers, worm-style clamps and a vacuum hose.
- Mass airflow meter provision accepts all GM production meters,(must be purchased separately).

NOTE: *This is a universal kit and may not fit every application. Additional fabrication may be required, but the length of the straight tube must be maintained for accurate mass airflow meter operation.*

G. 88958675 ❗
LS2 4-bbl Intake Manifold

- Allows you to install a 4-bbl carburetor on an LS-Series engine with cathedral ports (LS1, LS2, LS6)
- Cast aluminum open-plenum intake manifold accepts a 4150-style square-bore carburetor
- Bosses for EFI injectors for custom applications
- Bolts and instructions supplied

NOTE: *LSX Ignition Controller P/N 19171130 is required for carbureted applications.*

H. 25534394 ❗
LS7 4-bbl Intake Manifold

- Lightweight GM Racing design for use on LS7-style heads
- Reduced mass design, porting not recommended
- Includes mounting bolts and instructions
- Uses LS7 carb intake gasket set P/N 19172113
- Machined for 4150-style carburetors and has 3/8" NPT vacuum boss
- Also available with injector bosses, P/N 25534413

NOTE: *LSX Ignition Controller P/N 19171130 is required for carbureted applications.*

I. 25534401 ❗
LS3/L92 Style 4-bbl Intake Manifold

- Lightweight GM Racing design for use on LS3/L92-style cylinder heads
- Reduced mass design, porting not recommended
- Includes mounting bolts P/N 11609577 and instructions
- Uses L92 carb intake gasket set, P/N 19172114
- Machined for 4150-style carburetors and has 3/8" NPT vacuum boss
- Also available with injector bosses P/N 25534416

NOTE: *LSX Ignition Controller P/N 19171130 is required for carbureted applications.*

❗ *Additional components required for installation. See page 289.*

LSX INTAKE MANIFOLDS

The best way to feed an LSX engine is with air channeled through one of our LSX intake manifolds. They're designed to match the performance capability of our LSX heads and big-displacement rotating assemblies. LSX intake manifolds have a high-flow, spider-type design and are made of lightweight aluminum. They're cast with plenty of material for builder-specified port work; and the flanges are a minimum of 0.5"-thick to accommodate machining. Additional features include:

- Standard-deck and tall-deck versions
- Natural finish with LSX and GM logos
- Injector/nitrous bosses cast in place
- Comes with installation hardware

A. 19244037
LSX-LS3 Dual-Plane Standard Deck 4-bbl Manifold

- Dual-plane for low- and mid-range torque
- L92-style ports
- Injector/nitrous bosses cast-in
- Extra thick for professional porting
- 4150-style carb. mounting provision
- Uses OEM O-ring gaskets and bolts (included)
- Tall-deck version available as P/N 19244036

B. 19244035
LSX-LS3 Single-Plane Standard Deck 4-bbl Manifold

- Single-plane design for mid-range and top-end power
- L92-style ports
- Injector/nitrous bosses cast-in
- Extra thick for professional porting
- 4150-style carb. mounting provision
- Uses OEM O-ring gaskets and bolts (included)
- Tall-deck version available as P/N 19244034

C. 19244033
LSX-LS7 Single-Plane Standard Deck 4-bbl Manifold

- Single-plane design for mid-range and top-end power
- LS7-style port
- Injector/nitrous bosses cast-in
- Extra thick for professional porting
- 4150-style carb. mounting provision
- Uses OEM O-ring gaskets and bolts (included)
- Tall deck version available as P/N 19244032

D. 19257854
LSX-CT Single-Plane Standard Deck 4-bbl Manifold

- No-holds-barred single-plane design for large displacement or high-rpm applications
- LSX-CT/DR-style port; minor port matching required for optimal port match
- Two-sets of injector/nitrous bosses are cast-in for extreme power capability
- Extra thick for professional porting and/or boosted applications
- 1/2" raised 4150-style carb. mounting pad
- Tall deck version available as P/N 19257853

A LSX-LS3 Dual-Plane Standard Deck Manifold

B LSX-LS3 Single-Plane Standard Deck 4-bbl Manifold

C LSX-LS7 Standard Deck 4-bbl Manifold

D LSX-CT Standard Deck 4-bbl Manifold

LSX-DR Standard Deck 4-bbl Manifold **E**

LS Front Distributor Drive Cover **F**

LS7 Carb Intake Gasket **G**

L92/LS3 Carb Intake Gasket **H**

LS Header Flange **I**

E. 19257851
LSX-DR Single-Plane Standard Deck 4-bbl Manifold

- The ultimate drag racing single-plane for large displacement or high-rpm applications
- LSX-CT/DR-style port; minor port matching required for optimal port match
- Two-sets of injector/nitrous bosses are cast-in for extreme power capability
- Extra thick for professional porting and/or boosted applications
- 1" raised 4500 style carb. mounting pad
- Tall-deck version available as P/N 19257852

F. 88958679
LS Front Distributor Drive Cover

- Assembly is manufactured for applications where a 4-bbl carburetor and distributor are required
- Can be combined with GM's Bowtie valve covers, P/N 25534398 and P/N 25534399, for a complete traditional-looking engine package
- For all LS-Series engines except LS7 and LS9

NOTE: *Distributor and mechanical fuel pump not included. Uses Small-Block Ford-style distributor and mechanical fuel pump. Special water pump, accessory drive and damper required.*

INTAKE MANIFOLD GASKETS AND COMPONENTS

G. 19172113
LS7 Carb Intake Gasket

- For use with intake manifold P/N 25534394 or P/N 25534413
- Includes 2 gaskets

H. 19172114
L92/LS3 Carb Intake Gasket

- For use with intake manifold P/N 25534401 or P/N 25534416
- Includes 2 gaskets

19156564
LS2 Carb Intake Gasket (not shown)

- For use with intake manifold P/N 88958675
- Includes 2 gaskets

EXHAUST MANIFOLD/HEADER

I. 12480130
LS Header Flange

- These 3/8" thick steel header flanges are a great way to start a fabricated set of LS-Series headers for a racecar or street rod
- For stock LS1, LS2, LS3, LS6, LS7 and L92 (may require clearancing) exhaust ports
- Sold individually

Intake Manifolds: Additional Required Components

Part Number	Gaskets (Quantity)	Bolts (Quantity)	Engine Application
88894339	12533587 (1)	12552344 (10)	MY04/05 LS1 and LS6
25534394/25534413	19172113	Included with manifold	LS7 Carb Applications
25534401/25534416	19172114	Included with manifold	L76/L92 and LS3 Carb Applications
88958675	19156564	Included with manifold	LS2 Carb Applications

DRY SUMP COMPONENTS

A. 25534412

Dry Sump Oil Hose Adapters

- Kit adapts the production LT1, LT4, LS7 and LS9 oil pan to aftermarket AN-style hoses for aftermarket dry sump oil tanks
- Bolts directly to oil pan, and has AN male outlet for AN -12 fittings
- Includes 1 adapter, 2 fittings, 2 bolts, and 2 sealing gaskets

12603281

Oil Tank (not shown)

- Fits Z06 Corvette

15210122

Oil Inlet Hose (not shown)

- Fits Z06 Corvette

15210117

Oil Outlet Hose (not shown)

- Fits Z06 Corvette

A LS7 Oil Hose Adapters

STARTERS

B. 10465385 ⓘ

LS-Series Starter

- Works with all LS-Series and Gen IV V-8 engines, including the LS1, LS2, LS3, LS6, LQ9, LQ4 and LS7

12652772

LT4 Starter (not shown)

- For 2015-2016 Z06 Corvette applications

89017844

Starter (reman, not shown)

- Requires 1 per engine
- For L92 engines

89017664

Starter (reman, not shown)

- Requires 1 per engine
- For 2005 Corvette applications
- For LS2 engines

89017847

Starter (reman, not shown)

- Requires 1 per engine
- For 2006-2007 Corvette applications
- For LS2, LS3 and LS7 engines

NOTE: *All LS starters require one bolt P/N 11610787, and one bolt P/N 12561848.*

B LS-Series Starter

ⓘ Starters: Additional Required Components

Part Number	Bolts (Quantity)	Engine Application
10465385	11610787 (1), 12561848 (1)	LS-Series

ⓘ *Additional components required for installation.*

Carburetor, Holley 670-cfm **C**

Carburetor, Holley 850-cfm **D**

Carburetor, Holley 870-cfm **E**

Air Cleaner, Chevrolet-Logo High-Performance Design **F**

Air Cleaner, Chevrolet-Logo Classic Design **G**

CARBURETORS AND AIR CLEANERS

Chevrolet Performance has the right carburetor or throttle body to complete your new crate engine, or give life to your rebuilt engine. Then, top off your engine with one of our great-looking air cleaners.

Carburetors

C. 19170092
Carburetor, Holley 670-cfm

- Holley 4160-style 670-cfm 4-bbl carburetor
- Features show-car-quality polished finish
- Dual-feed center-hung fuel bowls
- Vacuum secondaries
- Electric choke
- Power valve blowout protection
- Quick-change adjustable vacuum secondary
- Bolts and gaskets included

19170093
Carburetor, Holley 770-cfm (not shown)

- Holley 4160-style 770-cfm 4-bbl carburetor
- Features show-car-quality polished finish
- Dual feed, center-hung float bowls
- Vacuum secondaries
- Automatic electric choke
- Quick-change adjustable vacuum secondary
- Recommended for Small-Block and Big-Block engines, including street, competition, towing and off-road vehicles
- Bolts and gaskets included
- Replaces Holley 4160 750-cfm carburetor P/N 12485506

D. 19170095
Carburetor, Holley 850-cfm

- Holley 4150-style 850-cfm 4-bbl carburetor
- Features show-car-quality polished finish
- Mechanical secondaries
- Electric choke
- Four-corner idle adjustment
- Power valve blowout protection
- Custom-calibrated for the ZZ572/620 crate engine
- Recommended for 502 crate engines and suitable for Big-Block engines, including street, competition, towing and off-road vehicles
- Bolts and gaskets included
- Replaces Holley 4160 850-cfm carburetor P/N 88961560

NOTE: *Carburetor can only be recalibrated for use with other large-displacement engines.*

E. 19170094
Carburetor, Holley 870-cfm

- Holley 4160-style 870-cfm 4-bbl carburetor
- Features show-car-quality polished finish
- Dual feed, center-hung float bowls
- Vacuum secondaries
- Automatic electric choke
- Quick-change adjustable vacuum secondary
- Recommended for 502 crate engines and suitable for Big-Block engines, including street, competition, towing and off-road vehicles
- Bolts and gaskets included
- Replaces 4150-style 850-cfm carburetor P/N 12366996

Air Cleaners

F. 12342080
Air Cleaner, Chevrolet-Logo High-Performance Design

- 14" round high-performance-style air cleaner
- Chrome lid with embossed Chevrolet name
- Fits most 4-bbl and 2-bbl carburetors

NOTE: *Check clearance between hood and top of air cleaner. Minimum clearance is 3.75" from top of carburetor gasket area to underside of hood.*

G. 12342071
Air Cleaner, Chevrolet-Logo Classic Design

- 14" round classic-style air cleaner
- Chrome lid with embossed Chevrolet name and Bowtie attaching nut
- Fits most 4-bbl and 2-bbl carburetors

Engine Control Modules and Harnesses

The engine control module is the is the brain of your Gen III/IV LS- or Gen V LT-powered project vehicle and Chevrolet Performance is your source for controllers designed for easy, "plug-and-play" installation and, in most applications, no need for third-party tuning adjustments.

Unlike controllers from regular-production vehicles, which may or may not come with a used engine, Chevrolet Performance controllers are uniquely calibrated for installation in older vehicles. That means many features required for late-model production vehicles are "turned off," because they're not required in older cars and trucks. That prevents the unnecessary triggering of diagnostic trouble codes that could possibly affect performance or require additional calibration adjustments.

Our inclusive kits deliver all the components required to plug into the engine and get it running – from the controller itself and the accompanying wire harness to the mass airflow sensor, oxygen sensors and even a throttle pedal assembly for engines equipped with an electronic throttle body. The kits also include detailed instructions to help you do it right the first time, even if you have no experience.

Most kits include:

- ***Two oxygen sensors***
- ***Two oxygen sensor mounting bosses (for installation in the exhaust system)***
- ***A mass airflow meter***
- ***A mass airflow meter mounting boss (for installation in the air intake system)***
- ***A throttle pedal assembly (for use with the electronically operated throttle)***
- ***A specific oil pressure sensor that is compatible with the harness (when needed)***
- ***A complete wiring harness with fuse box and necessary cam sensor and MAP sensor jumpers***
- ***Fuel pump power module***
- ***Fuel pressure sensor***
- ***The programmed controller***
- ***An instruction sheet.***

Each Chevrolet Performance controller kit is a true stand-alone system. All that's needed to get a vehicle running with it are power and ground sources, a high-pressure fuel pump and an electric cooling fan.

ENGINE CONTROLLER KITS AND COMPONENTS

Part Number	Description	Technical Notes
19256514	LC9 5.3L Engine Controller Kit	Specially programmed for retrofit applications, for quicker and easier adaptation of GM's popular 5.3L V-8 for countless hot rod projects. Works with 2007-2009 5.3L engines with the following engine codes: LC9 (2007-2009), LH8 (2008-2009), LY5 (2007-2009), LMF (2008-2009) and LMG (2007-2009) – non-cam-phased engines. Does not engage cylinder-deactivating Active Fuel Management and other features not required for retrofit installations. For individual engine controller, use P/N 19256515 (included in kit)
19259914	LC9 5.3L Engine Controller Kit	Specially programmed for late model 5.3L LC9 Cam Phased engines (2010 and newer). Does not engage cylinder-deactivating Active Fuel Management and other features not required for retrofit installations. For individual engine controller, use P/N 19259916 (included in kit). This is the optimum off road kit for the LC9 5.3L engine, P/N 19259918
19166568	LS2 Engine Controller Kit	Includes all the components required to run your LS2 crate engine. Max rpm 6,600. For individual engine controller, use P/N 19166570 (included in kit). Only works with 58x reluctor wheel engines
19258270	LS3 Engine Controller Kit	Includes all the components required to run the LS3 crate engine. Max rpm 6,600. For individual engine controller, use P/N 19258271 (included in kit)
19258267	LS376/480 Engine Controller Kit	Includes all the components required to run your LS376/480 crate engine, P/N 19301358. Max rpm 6,600 For individual engine controller, use P/N 19258268 (included in kit)
19259261	LS376/525 Engine Controller Kit	Includes all the components required to run LS376/525 crate engine, P/N 19301360. Max rpm 6,600. For individual engine controller, use P/N 19259291 (included in kit)
19258553	LS7 Engine Controller Kit	Includes all the components required to run your 2006-2013 LS7 crate engine, P/N 19244098. For individual engine controller, use P/N 19258554 (included in kit). Will run all M/Y LS7s with MAP sensor 12615801. Max rpm 7,100
19259293	LSA Engine Controller Kit	Includes all the components required to run LSA crate engine, P/N 19260164. Max rpm 6,200. For individual engine controller, use P/N 19259294 (included in kit)
19299462	LS9 Engine Controller Kit	Includes all components required to run LS9 crate engine, P/N 19260165. Max rpm 6,600. For individual engine controller, us P/N 19299463 (included in kit)
19303137	LT1 Engine Controller Kit	Includes all components needed to run LT1 crate engines, P/N 19329997 (dry sump); P/N 19328728 (wet sump). Includes E-92 controller, fuel pump power module and fuel pressure sensor for direct injection
19331517	LT4 Engine Controller Kit **NEW!**	Includes all components needed to run LT4 crate engines, P/N 19332621 (wet sump); P/N 19332702 (dry sump). Includes E-92 controller, fuel pump power module and fuel pressure sensor for direct injection
19328839	LTG Engine Controller Kit	Includes all components needed to run LTG crate engine P/N 19328837. Includes E-92 controller, fuel pump power module and fuel pressure sensor for direct injection
19329003	DR525 Engine Controller Kit	Engine controller and harness kit for operating DR525 racing engines P/N 19329009 and P/N 19329008. Includes throttle pedal for electronic throttle body communication. Note: The engine controller in this kit is a "factory-sealed unit, incorporating a tamper-proof design" to comply with rules mandated by the NMCA
19244481	LSX454 Engine Controller Kit for Manual Transmission	Includes all the components required to run LSX454 crate engine, P/N 19244611. Max rpm 7,100. For individual engine controller, use P/N 19244482 (included in kit)
19299840	LSX454 Engine Controller Kit for Automatic Transmission	Includes all the components required to run LSX454 crate engine, P/N 19244611. Max rpm 7,100. For individual engine controller, use P/N 19299841. NOTE: The controller will not function in a production vehicle unless all kit components are used. These controllers will not operate any of the production gauges. Aftermarket gauges are required
12480112	ECU, LS1 V-8 (not shown)	Calibrated for the LS1 Camaro/Firebird engine and can be used in a street rod or other early-model vehicles ***NOTE:*** *Use with Camaro/Firebird LS1 engine and wire harness P/N 12480113*
12480054	ECU, LS1/ASA Racing (not shown)	LS1 ECU is similar to P/N 16238212, but is calibrated for ASA racing only. Use with wire harness P/N 12480055
12480055	Wire Harness, LS1, ASA Racing (not shown)	Designed for ASA racing ECU P/N 12480054 only

QUICK INSTALLATION TIPS

Installing the ECM – The ECM is weather-resistant and can be mounted under the hood, but it should be placed to avoid extreme heat and away from potential splash. Chevrolet Performance does not recommend mounting it directly to the engine.

ACCELERATOR PEDAL – Chevrolet Performance's controller kits are designed for use with factory-type electronic throttles (no conventional throttle cable) that require a matched accelerator pedal. The pedal contains an electronic sensor that conveys to the controller when and how much to open the throttle. The pedal should me mounted at least 2.5 inches to the right of the brake pedal and 2 inches below it. There should be at least 0.75-inch clearance between the pedal and the transmission tunnel/center console. The pedal has a wire harness that connects to the controller, requiring it to be fed through the firewall – possibly requiring a new hole. Use a grommet on the hole to prevent chafing of the harness.

MAF – The mass airflow meter that comes with some controller kits must be mounted in a 4-inch-diameter tube that has at least a 6-inch-long straight section. The kit includes the bracket and mounting bosses onto which the meter is secured on the tube – the tube must be cut to allow the meter to hang inside of it. The meter sensor must be mounted at the center of the straight section, making sure that is at least 10 inches from the throttle body. Orienting the MAF is essential for proper operation. The meter's sensor should be mounted with the connector end pointed between horizontal and fully upright. Chevrolet Performance's universal air induction kit – P/N 19301246 – works for most applications.

OXYGEN SENSORS – The oxygen sensors (one for each side of the exhaust) must be inserted in the exhaust stream ahead of the catalytic converters (if used). Holes are simply drilled into the exhaust tubing and the mounting bosses welded to them. After that, the oxygen sensors simply screw onto the mounting bosses and are connected to the wire harness.

A. 19171130
LSX Ignition Controller
- Distributorless plug-in ignition system for carbureted LS engines with 58x reluctor wheel
- Several pre-programmed timing curves provided
- Supplied software allows you to create custom vacuum advance curves, timing curves, program low and high rpm rev limiter and step retard
- Plugs into stock sensors (not provided)
- MAP sensor provided
- Compatible with all LS-Series ignition coils

SPARK PLUGS

12571165
Spark Plug (not shown)
- Requires 8 per engine
- AC 41-101
- For LS7 engines

12621258
Spark Plug (not shown)
- Requires 8 per engine
- AC 41-985
- For LS1, LS2, LS6 and L92 engines

19329681
Spark Plug Wire Shield (not shown)
- Requires 8 per engine
- For all LS-Series engines

SPARK PLUG WIRES

Chevrolet Performance spark plug wire kits are designed to fit your GM engine, eliminating the guesswork in selecting the correct length.

B. 12495519
Spark Plug Wire Set, LS-Series V-8
- Direct-fit wire set with factory-style boots and terminals
- Designed for over-valve-cover installation

FUEL PUMPS AND COMPONENTS

C. 6472657
Electric Fuel Pump
- For use on all carbureted engines
- Flows 30-40 gph at 6-9 psi

A LSX Ignition Controller

B Spark Plug Wire Set, LS Series V-8 (90° boot shown)

C Electric Fuel Pump

Camaro ZL1 Fuel Pump Module **D**

Electric Fuel Pump, High Output **E**

Fuel Filter **F**

D. 19303293
Camaro ZL1 Fuel Pump Module

- Production fuel pump module for the 2012 Camaro ZL1 with supercharged LSA engine
- Supports approximately 600 horsepower
- Direct replacement for 2010+ Camaro SS fuel pump modules
- 250 liters per hour capacity at 65 psi
- Pulse-width modulated, eliminates need for conventional pressure regulator
- Kit includes fuel pump module/sender assembly tank seal and instruction sheet

NOTE: *When combined with service part P/N 23193422 and P/N 22756514 fuel pickups, you can expand the amount of fuel available during road course usage on your Camaro.*

E. 25115899
Electric Fuel Pump, High-Output

- Heavy-duty 12-volt electric rotary pump
- Flows 72 gph at 6-8 psi

F. 854619
Fuel Filter

- High-capacity in-line filter
- Suitable for all high-performance carbureted applications
- 5/16" inlet and outlet

19239926
LS Fuel Filter (not shown)

- 99-03 Corvette stock fuel filter
- Built-in fuel pressure regulator
- Mounts to frame
- Supplies constant 55-61 PSI of fuel to engine and returns excess to fuel tank

BIG-BLOCK Crate Engines

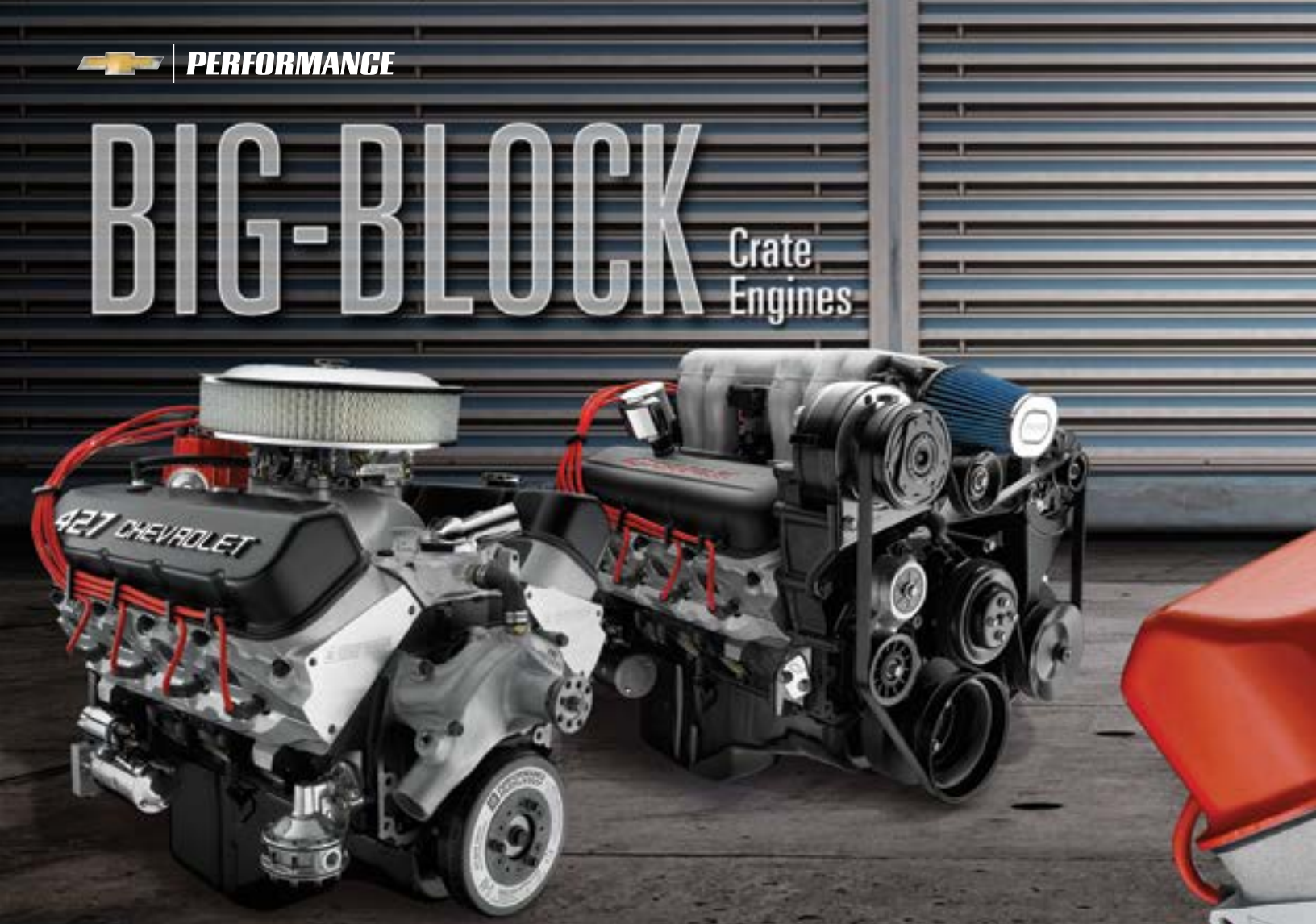

Big Torque and Dependability for the Street, Strip or Towing

Chevrolet Performance is the only source for Big-Block crate engines built with brand-new parts – and each is built with the latest cylinder block casting, which is stronger in many key ways than previous production engines.

Our lineup of assembled, ready-to-install engines offers something for every budget and project – and you'll be on the road quicker. Use our 454 HO for your classic cruiser, our 502 HO to re-power your truck for great towing capability. Our 427/480 crate engines make great additions to classic Corvettes and COPO Camaro tributes, while racing engines like the ZZ572/720R arm your drag racer with formidable firepower!

Each engine builds on more than half a century of design, validation and manufacturing expertise, offering an uncompromising balance of durability with the incomparable capability that comes only from the legendary Chevy Big-Block.

When you need big torque, look no further. Nobody knows the Big-Block like Chevrolet Performance!

You can find these Chevrolet Performance Big-Block Engines on the following pages:

ZZ427/480 ..... **Page 298**
454 HO ..... **Page 300**
ZZ454/440 ..... **Page 302**
HT502 ..... **Page 304**
502 HO ..... **Page 306**
ZZ502/502 Deluxe ..... **Page 308**
ZZ502/502 Base ..... **Page 310**
Ram Jet 502 ..... **Page 312**
ZZ572/620 ..... **Page 314**
ZZ572/720R ..... **Page 316**
Vortec 8.0L ..... **Page 318**

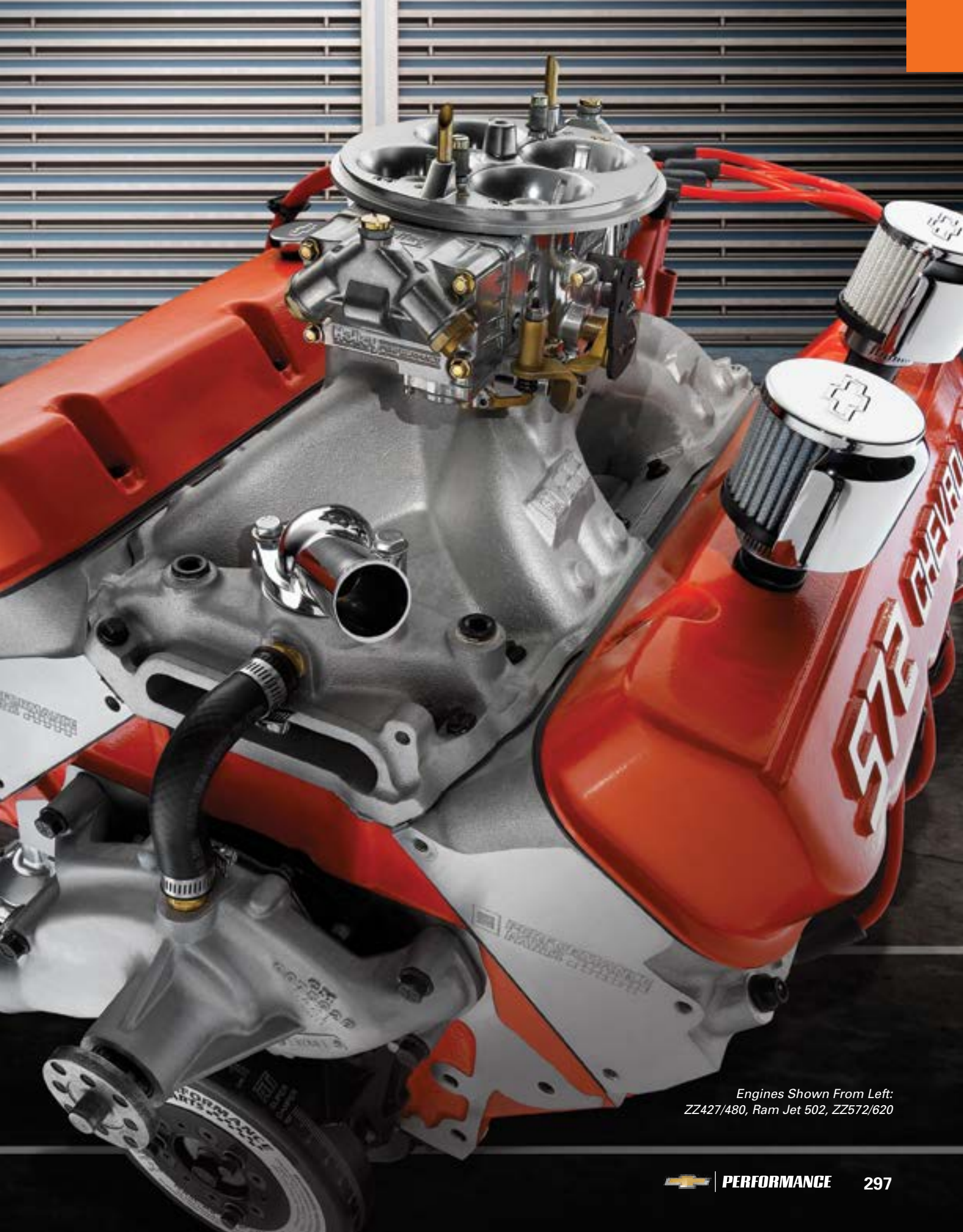

Engines Shown From Left:
ZZ427/480, Ram Jet 502, ZZ572/620

ZZ427/480

19166393

480 hp @ 6,000 rpm

490 lb.-ft. @ 3,800 rpm

DYNO CHART

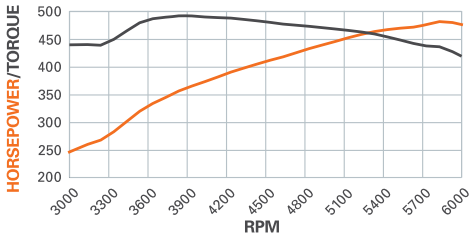

A Modern Take on the Classic L88

The L88 427 was the ultimate expression of Chevy's production Big-Block power, combining a rigid iron cylinder block with lightweight aluminum cylinder heads and a single, four-barrel carburetor. Our engineers have recreated that classic, raspy rat engine, but with updated components that enhance drivability – and performance!

Our engine assembly features the latest-generation block casting with four-bolt main caps, an all-forged rotating assembly for exceptional strength and durability, and a hydraulic roller camshaft instead of the original L88's flat-tappet cam, for greater drivability and a broader performance range. It also features aluminum oval-port cylinder heads with 2.19/1.88-inch valves and a pump-gas-friendly 10.0:1 compression ratio.

Whether you're building a '69 COPO Camaro resto-mod tribute, a modified mid-year Corvette or a street-tire class winner, this heritage-inspired crate engine delivers the performance that built the Big-Block's legendary reputation.

NOTE: *Refer to page 91 for the complete horsepower and torque testing procedures.*

TECH SPECS

Part Number:	19166393
Engine Type:	Chevy Big-Block V-8
Displacement (cu in):	427
Bore x Stroke (in):	4.250 x 3.750
Block (P/N 19170538):	Cast-iron with 4-bolt main caps
Crankshaft (P/N 19171620):	Forged steel
Connecting Rods: (P/N 19211226):	Forged steel
Pistons (P/N 19171618):	Forged aluminum
Camshaft Type (P/N 12366543):	Hydraulic roller
Valve Lift (in):	.527 intake / .544 exhaust
Camshaft Duration (@.050 in):	224° intake / 234° exhaust
Cylinder Heads: (P/N 19331423):	Aluminum oval port, 110cc chambers
Valve Size (in):	2.190 intake / 1.880 exhaust
Compression Ratio:	10.1:1
Rocker Arms (P/N 19210726):	Aluminum roller style
Rocker Arm Ratio:	1.7:1
Distributor (P/N 19212081):	HEI type
Carburetor (P/N 19170093):	770-cfm
Water Pump (P/N 19168602):	Aluminum short-style
Spark Plugs and Wires:	Included
Flexplate (P/N 12561217):	14"
Recommended Fuel:	Premium pump
Ignition Timing:	36° Total at 4,000 rpm
Maximum Recommended rpm:	6,400
Balanced:	Internal

NOTE: *Distributor with melonized steel gear MUST be used with long-blocks and Partial engines with steel camshafts, or engine damage will occur.*

INSTALLATION NOTES

- Due to crate fitment, the carburetor is shipped in a separate box and needs to be installed by an engine installer
- Requires addition of starter and fuel pump (not included)
- Clutch linkage bosses are drilled and tapped. When using cast-iron exhaust manifolds, lower head bolts may need to be replaced with bolts with shorter heads, for clearance
- Comes with an internally balanced 14" automatic transmission flexplate. See page 349 for a listing of manual transmission flywheels offered by Chevrolet Performance. Requires flywheel designed for internally balanced engines.
- Designed for pre-1976 street vehicles or any off-road vehicle
- Not intended for marine applications

Chevrolet Performance Crate Engines include a 24-month or 50,000-mile/80,000-kilometer limited warranty.

Chevrolet Performance does not utilize any used or remanufactured parts in this crate engine, except for the starter, alternator and power steering pump.

19300175

SuperMatic™ 4L85-E Four-Speed Transmission

Direct bolt-on for Gen I Small-Block and all Big-Blocks. Improved valve body for firmer shifts. Includes additional clutch plates. Add up to 685 lb.-ft. torque.

See page 364 for torque converter applications.

19332780

Transmission Controller

Required when using a GM electronically controlled automatic transmission. Includes wiring harness, software and connector for laptop computer.

See page 369

AVAILABLE ENGINE-RELATED PARTS & ACCESSORIES

See page 320 for our complete line of Big-Block components

19299805
Torque Converter
Page 364

19332784
Transmission Installation Kit
Page 367

12361146
High-Torque Mini Starter
Page 358

12342024
Chrome Water Neck
Page 357

19172805
Serpentine Accessory Drive Belt System With Air Conditioning
Page 350

12342071
Air Cleaner
Page 360

454 HO

12568774

438 hp @ 5,300 rpm

500 lb.-ft. @ 3,500 rpm

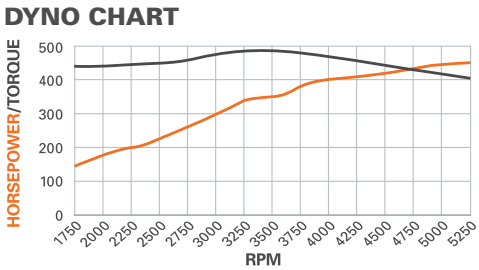

Big Torque on a Budget

Chevrolet Performance's 454 HO crate engine is a Big-Block bargain – an affordable engine with performance specs that will make you think it's 1970 all over again, including 438 horsepower and 500 asphalt-wrinkling lb.-ft. of torque.

A latest-generation block casting with four-bolt main caps is the Big-Block engine's foundation and features an all-forged rotating assembly for great strength and durability. It also uses a smooth hydraulic roller camshaft for excellent drivability and a broad performance range. Rectangular-port cylinder heads with large, 2.19/1.88-inch valves, round out the assembly.

The engine package includes a water pump, balancer, 14-inch flexplate and an aluminum intake manifold. Simply add a carburetor, ignition system and starter and the engine will be ready to roar. All of the necessary parts are available from Chevrolet Performance.

NOTE: *Refer to page 91 for the complete horsepower and torque testing procedures.*

TECH SPECS

Part Number:	12568774
Engine Type:	Chevy Big-Block V-8
Displacement (cu in):	454
Bore x Stroke (in):	4.250 x 4.000
Block (P/N 19170538):	Cast-iron with 4-bolt main caps
Crankshaft (P/N 14096983):	Forged steel
Connecting Rods (P/N 19170198):	Forged steel
Pistons (P/N 10215228):	Forged aluminum
Camshaft Type (P/N 24502611):	Hydraulic roller
Camshaft Lift (in):	.510 intake / .540 exhaust
Camshaft Duration (@.050 in):	211° intake / 230° exhaust
Cylinder Heads (P/N 12562920):	Iron rectangular port; 118cc chambers
Valve Size (in):	2.190 intake / 1.880 exhaust
Compression Ratio:	8.75:1
Rocker Arms (P/N 19260993):	Stamped steel
Rocker Arm Ratio:	1.7:1
Water Pump (P/N 19168606):	Cast-iron, long-style
Flexplate (P/N 10185034):	14"
Recommended Fuel:	Premium pump
Ignition Timing:	36° Total at 4,000 rpm
Maximum Recommended rpm:	5,500
Balanced:	External

NOTE: *Distributor with melonized steel gear MUST be used with long-blocks and Partial engines with steel camshafts, or engine damage will occur.*

INSTALLATION NOTES

- Requires addition of carburetor, starter, fuel pump, distributor and ignition system (not included)
- Clutch linkage bosses are now drilled and tapped. When using cast-iron exhaust manifolds, lower head bolts may need to be replaced with bolts with shorter heads, for clearance
- Comes with an externally balanced 14" automatic transmission flexplate; use flywheel P/N 14096987 and 11" clutch assembly for manual transmission applications
- Designed for pre-1976 street vehicles or any off-road vehicle
- Not intended for marine applications

Chevrolet Performance Crate Engines include a 24-month or 50,000-mile/80,000-kilometer limited warranty.

Chevrolet Performance does not utilize any used or remanufactured parts in this crate engine, except for the starter, alternator and power steering pump.

12498778

454 Partial Engine

The sturdy foundation of the complete engine is the starting point of a custom engine build. Use externally balanced flywheel for manual transmission applications.

19300175

SuperMatic™ 4L85-E Four-Speed Transmission

Direct bolt-on for Gen I Small-Block and all Big-Blocks. Improved valve body for firmer shifts. Includes additional clutch plates. Add up to 685 lb.-ft. torque.

See page 364 for torque converter applications.

AVAILABLE ENGINE-RELATED PARTS & ACCESSORIES

See page 320 for our complete line of Big-Block components

19299805
Torque Converter
Page 364

19170093
Carburetor, Holley 770-cfm
Page 359

19302919
Lightweight Starter
Page 358

93440806
HEI Distributor
Page 353

19332784
Transmission Installation Kit
Page 367

19332780
Transmission Controller
Page 369

ZZ454/440

19331574

469 hp @ 5,500 rpm

519 lb.-ft. @ 3,700 rpm

DYNO CHART

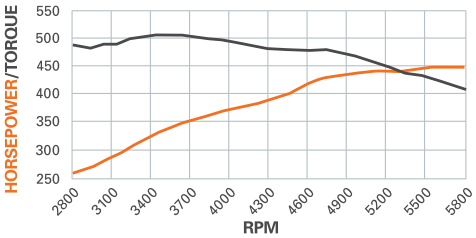

Aluminum Heads Add Big Power!

Our engineers took the tough 454 HO and matched it with a set of higher-flow, oval-port aluminum cylinder heads to pick up an additional 30 horses – while still delivering an awesome 519 lb.-ft. of torque. It's an affordable high-performance Big-Block for your project vehicle!

Aluminum oval-port cylinder heads with 2.19/1.88-inch valves process the airflow through this big-power Big-Block and save weight over iron heads. They're mounted on our latest-generation block casting with four-bolt main caps, which is filled with an all-forged rotating assembly for exceptional strength and durability. There's also a high-lift hydraulic roller camshaft for excellent drivability and a broad performance range.

The crate engine package includes a water pump, balancer, aluminum intake manifold and a 14-inch flexplate. Your Chevrolet Performance dealer can hook you up with the carburetor, starter, ignition system and other accessories required to get this big-power Big-Block up and running.

NOTE: *Refer to page 91 for the complete horsepower and torque testing procedures.*

TECH SPECS

Part Number:	19331574
Engine Type:	Chevy Big-Block V-8
Displacement (cu in):	454
Bore x Stroke (in):	4.250 x 4.000
Block (P/N 19170538):	Cast-iron with 4-bolt main caps
Crankshaft (P/N 14096983):	Forged steel
Connecting Rods (P/N 19170198):	Forged steel
Pistons (P/N 10215228):	Forged aluminum
Camshaft Type (P/N 24502611):	Hydraulic roller
Camshaft Lift (in):	.510 intake / .540 exhaust
Camshaft Duration (@.050 in):	211° intake / 230° exhaust
Cylinder Heads (P/N 19331424):	Aluminum oval port; 110cc chambers
Valve Size (in):	2.190 intake / 1.880 exhaust
Compression Ratio:	9.6:1
Rocker Arms (P/N 12368082):	Stamped steel
Rocker Arm Ratio:	1.7:1
Water Pump (P/N 19168606):	Cast-iron, long-style
Flexplate (P/N 10185034):	14"
Recommended Fuel:	Premium pump
Ignition Timing:	36° Total at 4,000 rpm
Maximum Recommended rpm:	5,500
Balanced:	External

NOTE: *Distributor with melonized steel gear MUST be used with long-blocks and Partial engines with steel camshafts, or engine damage will occur.*

INSTALLATION NOTES

- Requires addition of carburetor, starter, fuel pump, distributor and ignition system (not included)
- Clutch linkage bosses are now drilled and tapped. When using cast-iron exhaust manifolds, lower head bolts may need to be replaced with bolts with shorter heads, for clearance
- Comes with an externally balanced 14" automatic transmission flexplate; use flywheel P/N 14096987 and 11" clutch assembly for manual transmission applications
- Designed for pre-1976 street vehicles or any off-road vehicle
- Not intended for marine applications

Chevrolet Performance Crate Engines include a 24-month or 50,000-mile/80,000-kilometer limited warranty.

Chevrolet Performance does not utilize any used or remanufactured parts in this crate engine, except for the starter, alternator and power steering pump.

12498778

454 Partial Engine

The sturdy foundation of the complete engine is the starting point of a custom engine build. Use externally balanced flywheel for manual transmission applications.

19300175

SuperMatic™ 4L85-E Four-Speed Transmission

Direct bolt-on for Gen I Small-Block and all Big-Blocks. Improved valve body for firmer shifts. Includes additional clutch plates. Add up to 685 lb.-ft. torque.

See page 364 for torque converter applications.

AVAILABLE ENGINE-RELATED PARTS & ACCESSORIES

See page 320 for our complete line of Big-Block components

19299805
Torque Converter
Page 364

19170093
Carburetor, Holley 770-cfm
Page 359

19302919
Lightweight Starter
Page 358

19332784
Transmission Installation Kit
Page 367

88961867
Distributor, Aluminum Billet HEI
Page 353

19332780
Transmission Controller
Page 369

HT502

88890534

406 hp @ 4,200 rpm

541 lb.-ft. @ 3,200 rpm

DYNO CHART

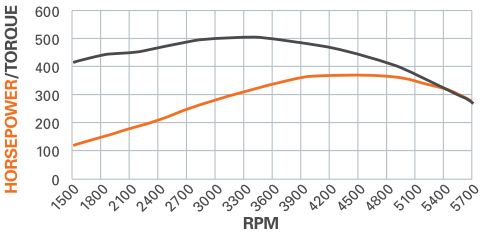

A Big-Inch Alternative to Rebuilding

Don't bother repowering your trusty Big-Block-powered truck with a rebuild or reconditioned used engine. Our HT502 crate engine is an affordable alternative with more power and greater durability, including a whopping 541 lb.-ft. of trailer-tugging torque. That's more than the factory ever offered and more than you'll get with a stock-type rebuild.

It is uniquely suited to pre-1978 trucks, but is adaptable to a variety of applications, and it's built with our latest-generation block casting with four-bolt main caps. An all-forged rotating assembly delivers exceptional strength and durability, while a mild 8.75:1 compression ratio is suitable for regular pump gasoline at all altitudes and engine loads.

Our assembly comes with the heads and a balancer installed. An induction system, ignition, starter, water pump and other accessories are required to finish the engine. All necessary components are available from Chevrolet Performance.

NOTE: *Refer to page 91 for the complete horsepower and torque testing procedures.*

TECH SPECS

Part Number:	88890534
Engine Type	Chevy Big-Block V-8
Displacement (cu in):	502
Bore x Stroke (in):	4.47 x 4.00
Block (P/N 19170540):	Cast-iron with 4-bolt main caps
Crankshaft (P/N 10183723):	Forged steel
Connecting Rods (P/N 19170198):	Forged steel, shot peened
Pistons (P/N 12533507):	Forged aluminum
Camshaft Type (P/N 12552296):	Hydraulic roller
Camshaft Lift (in):	.480 intake / .483 exhaust
Camshaft Duration (@.050 in):	204° intake / 209° exhaust
Cylinder Heads (P/N 12562917):	Iron oval port; 118cc chambers
Valve Size (in):	2.07 intake / 1.73 exhaust
Compression Ratio:	8.75:1
Rocker Arms (P/N 19260993):	Stamped steel
Rocker Arm Ratio:	1.7:1
Flexplate (P/N 10185034):	14"
Recommended Fuel:	Regular pump
Ignition Timing:	34° Total at 4,000 rpm
Maximum Recommended rpm:	5,500
Balanced:	External

NOTE: *Distributor with melonized steel gear MUST be used with long-blocks and Partial engines with steel camshafts, or engine damage will occur.*

INSTALLATION NOTES

- Requires the addition of carburetor, intake manifold, water pump, fuel pump, starter, distributor and ignition system (not included)
- Clutch linkage bosses are now drilled and tapped. When using cast-iron exhaust manifolds, lower head bolts may need to be replaced with bolts with shorter heads, for clearance
- 502 engines now have a mechanical fuel pump boss! *(NOTE: There is NO fuel pump lobe behind the boss)*
- Comes with an externally balanced 14" automatic transmission flexplate. Use externally balanced flywheel P/N 14096987 and 11" clutch assembly for manual transmission applications
- Designed for pre-1976 street vehicles or any off-road vehicle
- Not intended for marine applications

Chevrolet Performance Crate Engines include a 24-month or 50,000-mile/80,000-kilometer limited warranty.

Chevrolet Performance does not utilize any used or remanufactured parts in this crate engine, except for the starter, alternator and power steering pump.

12568782

502 Partial Engine

This brand-new Partial engine includes forged reciprocating components, as well as the balancer, oil pan and timing chain set.

19300175

SuperMatic™ 4L85-E Four-Speed Transmission

Direct bolt-on for Gen I Small-Block and all Big-Blocks. Improved valve body for firmer shifts. Includes additional clutch plates. Add up to 685 lb.-ft. torque.

See page 364 for torque converter applications.

AVAILABLE ENGINE-RELATED PARTS & ACCESSORIES

See page 320 for our complete line of Big-Block components

19299805
Torque Converter
Page 364

19170093
Carburetor, Holley 770-cfm
Page 359

19302919
Lightweight Starter
Page 358

19332784
Transmission Installation Kit
Page 367

19168602
Aluminum Water Pump, Short-Style
Page 350

19332780
Transmission Controller
Page 369

502 HO

12568778

461 hp @ 5,100 rpm

558 lb.-ft. @ 3,400 rpm

DYNO CHART

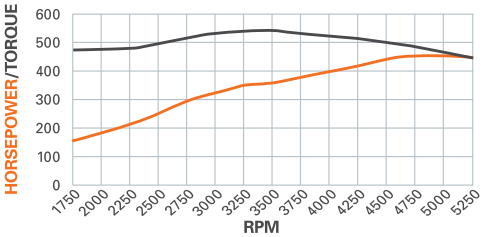

An Affordable Powerhouse!

What will you do with 461 horsepower and 558 lb.-ft. of torque from Chevrolet Performance's value-driven 502 HO crate engine? Whether you use it on the street, strip or even pulling a trailer with your workhorse truck, its performance range offers unlimited possibilities. In fact, it makes nearly 500 lb.-ft. by only 1,500 rpm, meaning it has all the low-rpm grunt you can use!

To support all that torque, we build this Big-Block with our latest-generation block casting with four-bolt main caps and complement it with an all-forged rotating assembly for exceptional strength and durability. A hydraulic roller camshaft is used for excellent drivability and a broad performance range; and an 8.75:1 compression ratio is suitable for regular pump gasoline at all altitudes and engine loads.

Our crate engine assembly includes an aluminum, dual-plane intake manifold, a water pump, 14-inch flexplate, balancer and more. You add the carburetor, starter and ignition system – all available from Chevrolet Performance.

NOTE: *Refer to page 91 for the complete horsepower and torque testing procedures.*

TECH SPECS

Part Number:	12568778
Engine Type:	Chevy Big-Block V-8
Displacement (cu in):	502
Bore x Stroke (in):	4.470 x 4.000
Block (P/N 19170540):	Cast-iron with 4-bolt main caps
Crankshaft (P/N 10183723):	Forged steel
Connecting Rods (P/N 19170198):	Forged steel, shot peened
Pistons (P/N 12533507):	Forged aluminum
Camshaft Type (P/N 24502611):	Hydraulic roller
Camshaft Lift (in):	.510 intake / .540 exhaust
Camshaft Duration (@.050 in):	211° intake / 230° exhaust
Cylinder Heads (P/N 12562920):	Iron rectangular port; 118cc chambers
Valve Size (in):	2.190 intake / 1.880 exhaust
Compression Ratio:	8.75:1
Rocker Arms (P/N 19260993):	Stamped steel
Rocker Arm Ratio:	1.7:1
Water Pump (P/N 19168606):	Cast-iron, long-style
Flexplate (P/N 10185034):	14"
Recommended Fuel:	Regular pump
Ignition Timing:	32° Total at 4,000 rpm
Maximum Recommended rpm:	5,500
Balanced:	External

NOTE: *Distributor with melonized steel gear MUST be used with long-blocks and Partial engines with steel camshafts, or engine damage will occur.*

INSTALLATION NOTES

- Requires addition of carburetor, fuel pump, starter, distributor and ignition system (not included)
- Clutch linkage bosses are now drilled and tapped. When using cast-iron exhaust manifolds, lower head bolts may need to be replaced with bolts with shorter heads, for clearance
- 502 engines now have a mechanical fuel pump boss!
- Comes with an externally balanced 14" automatic transmission flexplate. Use flywheel P/N 14096987 and 11" clutch assembly for manual transmission applications
- Designed for pre-1976 street vehicles or any off-road vehicle
- Not intended for marine applications

Chevrolet Performance Crate Engines include a 24-month or 50,000-mile/80,000-kilometer limited warranty.

Chevrolet Performance does not utilize any used or remanufactured parts in this crate engine, except for the starter, alternator and power steering pump.

12568782

502 Partial Engine

This brand-new Partial engine includes forged reciprocating components, as well as the balancer, oil pan and timing chain set.

19300175

SuperMatic™ 4L85-E Four-Speed Transmission

Direct bolt-on for Gen I Small-Block and all Big-Blocks. Improved valve body for firmer shifts. Includes additional clutch plates. Add up to 685 lb.-ft. torque.

See page 364 for torque converter applications.

AVAILABLE ENGINE-RELATED PARTS & ACCESSORIES

See page 320 for our complete line of Big-Block components

19172805
Serpentine Accessory Drive Belt System With Air Conditioning
Page 350

19170093
Carburetor, Holley 770-cfm
Page 359

19302919
Lightweight Starter
Page 358

19299805
Torque Converter
Page 364

19332784
Transmission Installation Kit
Page 367

19332780
Transmission Controller
Page 369

ZZ502/502 Deluxe

19331579

508 hp @ 5,200 rpm

580 lb.-ft. @ 3,600 rpm

DYNO CHART

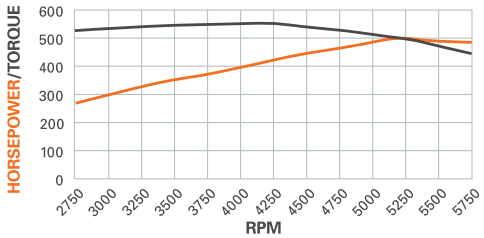

Our Most Popular Big-Block

The ZZ502/502 is one of the industry's benchmark crate engines, offering excellent value with a proven combination of performance that is suitable for the street or strip. With more than 500 horsepower and 580 lb.-ft. of torque, it demands your full attention and a chassis that is strong enough to harness its frame-straining twisting power.

Thanks to a combination of high-flow aluminum oval-port cylinder heads with 2.25/1.88-inch valves and a hydraulic roller camshaft designed to support low-rpm torque production, this torque monster tops the 500 lb.-ft. mark by approximately 2,500 rpm and doesn't dip below it until about 5,000 rpm. It also features a latest-generation block casting with four-bolt main caps and an all-forged rotating assembly for exceptional strength and durability.

Our Deluxe package comes complete from the oil pan to the carburetor, including an HEI distributor, plug wires, starter, water pump, balancer and an aluminum intake topped with a Holley 870-cfm four-barrel carburetor.

NOTE: *Refer to page 91 for the complete horsepower and torque testing procedures.*

TECH SPECS

Part Number:	19331579
Displacement (cu in):	502
Bore x Stroke (in):	4.470 x 4.000
Block (P/N 19170540):	Cast-iron with 4-bolt main caps
Crankshaft (P/N 10183723):	Forged steel
Connecting Rods (P/N 19170198):	Forged steel, shot peened
Pistons (P/N 12533507):	Forged aluminum
Camshaft Type (P/N 12366543):	Hydraulic roller
Camshaft Lift (in):	.527 intake / .544 exhaust
Camshaft Duration (@.050 in):	224° intake / 234° exhaust
Cylinder Heads (P/N 19331425):	Aluminum oval port; 110cc chambers
Valve Size (in):	2.250 intake / 1.880 exhaust; stainless steel
Compression Ratio:	9.6:1
Rocker Arms (P/N 12368082):	Stamped steel
Rocker Arm Ratio:	1.7:1
Distributor (P/N 93440806):	HEI type
Carburetor (P/N 19170094):	870-cfm
Water Pump (P/N 19168602):	Aluminum, short-style
Spark Plugs and Wires:	Included
Starter (P/N 19302919):	Included
Flexplate (P/N 10185034):	14"
Recommended Fuel:	Premium pump
Ignition Timing:	32° Total at 4,000 rpm
Maximum Recommended rpm:	5,800
Balanced:	External

NOTE: *Distributor with melonized steel gear MUST be used with long-blocks and Partial engines with steel camshafts, or engine damage will occur.*

INSTALLATION NOTES

- Due to crate fitment, the carburetor is shipped in a separate box and needs to be installed by an engine installer
- Clutch linkage bosses are now drilled and tapped. When using cast-iron exhaust manifolds, lower head bolts may need to be replaced with bolts with shorter heads, for clearance
- 502 engines now have a mechanical fuel pump boss!
- Comes with an externally balanced 14" automatic transmission flexplate. Use flywheel P/N 14096987 and 11" clutch assembly for manual transmission applications
- Designed for pre-1976 street vehicles or any off-road vehicle
- Not intended for marine applications

Chevrolet Performance Crate Engines include a 24-month or 50,000-mile/80,000-kilometer limited warranty.

Chevrolet Performance does not utilize any used or remanufactured parts in this crate engine, except for the starter, alternator and power steering pump.

See page 310 for ZZ502 Base Engine details

12568782

502 Partial Engine

This brand-new Partial engine includes forged reciprocating components, as well as the balancer, oil pan and timing chain set.

12371171

ZZ502 Deluxe Kit

Chevrolet Performance offers the ZZ502 Deluxe kit for those who want to build their own deluxe engine. Includes partial engine and components (not assembled).

AVAILABLE ENGINE-RELATED PARTS & ACCESSORIES

See page 320 for our complete line of Big-Block components

19172805
Serpentine Accessory Drive Belt System With Air Conditioning
Page 350

19300175
SuperMatic™ 4L85-E Four-Speed Transmission
Page 366

12363128
Chrome High Torque Mini Starter
Page 358

19299805
Torque Converter
Page 364

19332784
Transmission Installation Kit
Page 367

19332780
Transmission Controller
Page 369

ZZ502/502 Base

19331576

508 hp @ 5,200 rpm

580 lb.-ft. @ 3,600 rpm

DYNO CHART

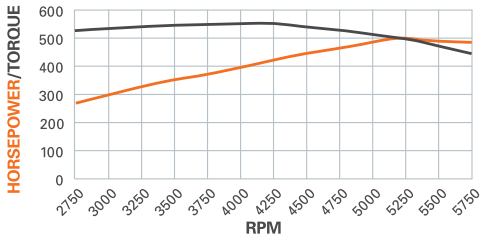

A DIY Foundation for Big Torque!

We offer the ZZ502/502 Base crate engine for the builder who wants the super-strong bottom end and high-flow aluminum oval-port cylinder heads, but also wants to finish the engine his or her way. It's a great foundation and it's up to you to make the most of it!

Like our complete ZZ502/502 Deluxe crate engine, a set of high-flow aluminum oval-port cylinder heads and a hydraulic roller camshaft designed to support low-rpm torque production enable it to hit the 500 lb.-ft. mark by approximately 2,500 rpm and hold it above the mark until around 5,000 rpm. It also features a latest-generation block casting with four-bolt main caps and an all-forged rotating assembly for exceptional strength and durability.

We rate the ZZ502/502 Base engine at 508 horsepower and 580 lb.-ft. of torque when it is finished with Chevrolet Performance aluminum intake manifold P/N 12363406 and Holley 870-cfm carburetor P/N 19170094. The other parts you need to complete the engine – including chrome dress-up parts – are available from Chevrolet Performance.

NOTE: *Refer to page 91 for the complete horsepower and torque testing procedures.*

TECH SPECS

Part Number:	19331576
Engine Type:	Chevy Big-Block V-8
Displacement (cu in):	502
Bore x Stroke (in):	4.470 x 4.000
Block (P/N 19170540):	Cast-iron with 4-bolt main caps
Crankshaft (P/N 10183723):	Forged steel
Connecting Rods (P/N 19170198):	Forged steel, shot peened
Pistons (P/N 12533507):	Forged aluminum
Camshaft Type (P/N 12366543):	Hydraulic roller
Camshaft Lift (in):	.527 intake / .544 exhaust
Camshaft Duration (@.050 in):	224° intake / 234° exhaust
Cylinder Heads (P/N 19331425):	Aluminum oval port; 110cc chambers
Valve Size (in):	2.250 intake / 1.880 exhaust; stainless steel
Compression Ratio:	9.6:1
Rocker Arms (P/N 12368082):	Stamped steel
Rocker Arm Ratio:	1.7:1
Recommended Fuel:	Premium pump
Ignition Timing:	32° Total at 4,000 rpm
Maximum Recommended rpm:	5,800
Balanced:	External

NOTE: *Distributor with melonized steel gear MUST be used with long-blocks and Partial engines with steel camshafts, or engine damage will occur.*

INSTALLATION NOTES

- Clutch linkage bosses are now drilled and tapped. When using cast-iron exhaust manifolds, lower head bolts may need to be replaced with bolts with shorter heads, for clearance
- 502 engines now have a mechanical fuel pump boss!
- Comes with an externally balanced 14" automatic transmission flexplate. Use flywheel P/N 14096987 and 11" clutch assembly for manual transmission applications
- Designed for pre-1976 street vehicles or any off-road vehicle
- Not intended for marine applications

Chevrolet Performance Crate Engines include a 24-month or 50,000-mile/80,000-kilometer limited warranty.

Chevrolet Performance does not utilize any used or remanufactured parts in this crate engine, except for the starter, alternator and power steering pump.

See page 308 for ZZ502 Deluxe Engine details

12568782

502 Partial Engine

This brand-new Partial engine includes forged reciprocating components, as well as the balancer, oil pan and timing chain set.

19331578

ZZ502 Base Kit

Nothing is quite as satisfying as building your own high-performance Big-Block. With the ZZ502 Base Kit, every part is engineered to work together to deliver 502 horses!

AVAILABLE ENGINE-RELATED PARTS & ACCESSORIES

See page 320 for our complete line of Big-Block components

19172805
Serpentine Accessory Drive Belt System With Air Conditioning
Page 350

19300175
SuperMatic™ 4L85-E Four-Speed Transmission
Page 366

19170094
Carburetor, Holley 870-cfm
Page 359

19299805
Torque Converter
Page 364

19332784
Transmission Installation Kit
Page 367

19332780
Transmission Controller
Page 369

Ram Jet 502

with calibrated controller and wiring harness

12499121

502 hp @ 5,300 rpm

568 lb.-ft. @ 3,600 rpm

DYNO CHART

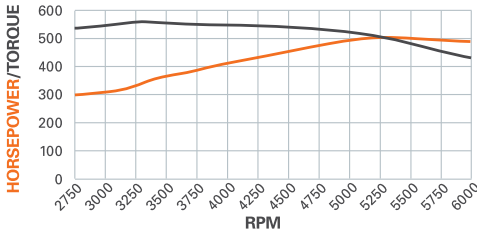

Make a Statement Under the Hood!

The Ram Jet 502 blends the legendary torque and performance of the Big-Block with a modern port fuel injection system and tunnel ram-style high-rise intake manifold. It's a combination that offers uncompromising performance – including 502 hp and 568 lb.-ft. of torque – in a visually stunning presentation.

The unique Ram Jet fuel injection system stands 11 inches tall at its highest point and consists of a two-piece manifold/plenum assembly, eight injectors, a throttle body, and an updated MEFI 4 controller. Setup instructions are included, making it a simple, "plug-and-play" installation.

Supporting the Big-Block's style and performance is a robust bottom end featuring an all-forged rotating assembly installed in a strong, latest-generation block casting with four-bolt main caps. It also has high-flow aluminum oval-port cylinder heads with 2.25/1.88-inch valves, and the engine package includes an aluminum short-style water pump and HEI distributor.

NOTE: *Refer to page 91 for the complete horsepower and torque testing procedures.*

TECH SPECS

Part Number:	12499121
Engine Type:	Chevy Big-Block V-8
Displacement (cu in):	502
Bore x Stroke (in):	4.470 x 4.000
Block (P/N 19170540):	Cast-iron with 4-bolt main caps
Crankshaft (P/N 10183723):	Forged steel
Connecting Rods (P/N 19170198):	Forged steel, shot peened
Pistons (P/N 12533507):	Forged aluminum
Camshaft Type (P/N 12366543):	Hydraulic roller
Camshaft Lift (in):	.527 intake / .544 exhaust
Camshaft Duration (@.050 in):	224° intake / 234° exhaust
Cylinder Heads (P/N 12363390):	Aluminum oval port; 110cc chambers
Valve Size (in):	2.250 intake / 1.880 exhaust; stainless steel
Compression Ratio:	9.6:1
Rocker Arms (P/N 12368082):	Stamped steel
Rocker Arm Ratio:	1.7:1
Distributor (P/N 1104060):	HEI type
Throttle Body (P/N 17113524):	Included
Water Pump (P/N 19168602):	Aluminum, short-style
Flexplate (P/N 10185034):	14"
Recommended Fuel:	Premium pump
Ignition Timing:	35° Total at 4,000 rpm
Maximum Recommended rpm:	5,800
Balanced:	External

NOTE: *Distributor with melonized steel gear MUST be used with long-blocks and Partial engines with steel camshafts, or engine damage will occur.*

INSTALLATION NOTES

- Requires a 12-volt power source (and ground), coolant, exhaust system, fuel feed and fuel return line (to the fuel tank). An in-tank fuel pump is recommended
- Clutch linkage bosses are now drilled and tapped. When using cast-iron exhaust manifolds, lower head bolts may need to be replaced with bolts with shorter heads, for clearance
- Designed for pre-1976 street vehicles or any off-road vehicle
- Not intended for marine applications
- IMPORTANT! For a safe, proper and trouble-free engine break-in, the MEFI 4 computer has a "green" mode that controls rpm during the break-in period. During this period, engine speed is limited to 4,000 rpm in the first hour, 4,500 rpm in the second hour and 5,500 rpm in the third hour

Chevrolet Performance Crate Engines include a 24-month or 50,000-mile/80,000-kilometer limited warranty.

Chevrolet Performance does not utilize any used or remanufactured parts in this crate engine, except for the starter, alternator and power steering pump.

19300175

SuperMatic™ 4L85-E Four-Speed Transmission

Direct bolt-on for Gen I Small-Block and all Big-Blocks. Improved valve body for firmer shifts. Includes additional clutch plates. Add up to 685 lb.-ft. torque.

See page 364 for torque converter applications.

19332780

Transmission Controller

Required when using a GM electronically controlled automatic transmission. Includes wiring harness, software and connector for laptop computer.

See page 369

AVAILABLE ENGINE-RELATED PARTS & ACCESSORIES

See page 320 for our complete line of Big-Block components

19172805
Serpentine Accessory Drive Belt System With Air Conditioning
Page 350

25534374
Orange Powder-Coated Valve Covers
Page 342

19302919
Lightweight Starter
Page 358

19299805
Torque Converter
Page 364

25534323
Black Powder-Coated Valve Covers
Page 342

19332784
Transmission Installation Kit
Page 367

ZZ572/620 Deluxe

19331583

621 hp @ 5,400 rpm

645 lb.-ft. @ 4,200 rpm

DYNO CHART

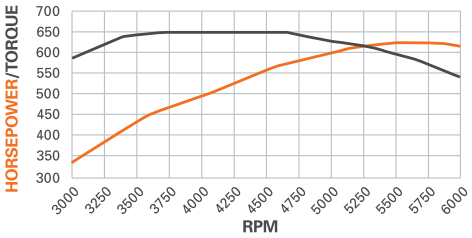

Our Baddest Big-Block Street Engine

Proving the adage there's no replacement for displacement, the ZZ572/620 is the ultimate expression of Chevrolet Performance's engineering capability, wrapped up in a soul-stirring combination of performance and attitude. We build the ZZ572/620 with huge 4.560-inch bores and a 4.375-inch stroke to help it deliver 621 hp and a stunning 645 lb.-ft. of grunt!

Strength comes from a latest-generation tall-deck block casting with four-bolt main caps and an all-forged rotating assembly, while high-flow aluminum rectangular-port cylinder heads with massive 310cc intake passages, 118cc raised exhaust ports and 118cc combustion chambers process tremendous airflow. A hydraulic roller camshaft with incredible 0.632/0.632-inch lift and 254/264-degree duration specifications optimizes the airflow volume enabled by the large-port heads.

Chevrolet Performance delivers this Big-Block with an 850-cfm carburetor, HEI distributor, aluminum water pump and distinctive orange powder-coated valve covers that proudly proclaim the 572 legend.

NOTE: *Refer to page 91 for the complete horsepower and torque testing procedures.*

TECH SPECS

Part Number:	19331583
Engine Type:	Chevy Tall-Deck Big-Block V-8
Displacement (cu in):	572
Bore x Stroke (in):	4.560 x 4.375
Block (P/N 19212195):	Cast-iron with 4-bolt main caps
Crankshaft (P/N 88961554):	Forged steel
Connecting Rods (P/N 88962926):	Forged steel, shot peened
Pistons (P/N 88962925):	Forged aluminum
Camshaft Type (P/N 19210721):	Hydraulic roller
Camshaft Lift (in):	.632 intake / .632 exhaust
Camshaft Duration (@.050 in):	254° intake / 264° exhaust
Cylinder Heads (P/N 19331429):	Aluminum rectangular port, 118cc chambers
Valve Size (in):	2.250 intake / 1.88 exhaust; stainless steel
Compression Ratio:	9.6:1
Rocker Arms (P/N 19210726):	Aluminum roller style
Rocker Arm Ratio:	1.7:1
Distributor (P/N 88961867):	HEI
Carburetor (P/N 19170095):	850-cfm
Water Pump (P/N 19168602):	Aluminum, short-style
Spark Plugs and Wires:	Included
Flexplate (P/N 12561217):	14"
Recommended Fuel:	Premium pump
Ignition Timing:	36° Total at 4,000 rpm
Maximum Recommended rpm:	6,000
Balanced:	Internal

NOTE: *Distributor with melonized steel gear MUST be used with long-blocks and Partial engines with steel camshafts, or engine damage will occur.*

INSTALLATION NOTES

- Due to crate fitment, the carburetor is shipped in a separate box and needs to be installed by an engine installer
- Clutch linkage boss is now drilled and tapped. When using cast-iron exhaust manifolds, lower head bolts may need to be replaced with bolts with shorter heads, for clearance
- Requires addition of starter and fuel pump (not included)
- Gen VI tall-deck block has machined mechanical fuel pump boss
- Comes with a 14" automatic transmission flexplate. Requires internally balanced flywheel for manual transmission applications
- Designed for pre-1976 street vehicles or any off-road vehicle
- Not intended for marine applications
- You do have a strong transmission and rear axle, don't you?

Chevrolet Performance Crate Engines include a 24-month or 50,000-mile/80,000-kilometer limited warranty.

Chevrolet Performance does not utilize any used or remanufactured parts in this crate engine, except for the starter, alternator and power steering pump.

19331581

ZZ572/620 Base Engine

The ZZ572/620 features rectangular-port aluminum cylinder heads that deliver 9.6:1 compression ratio in a pump-gas-friendly package.

19300175

SuperMatic™ 4L85-E Four-Speed Transmission

Direct bolt-on for Gen I Small-Block and all Big-Blocks. Improved valve body for firmer shifts. Includes additional clutch plates. Add up to 685 lb.-ft. torque.

See page 364 for torque converter applications.

AVAILABLE ENGINE-RELATED PARTS & ACCESSORIES

See page 320 for our complete line of Big-Block components

19172805
Serpentine Accessory Drive Belt System With Air Conditioning
Page 350

19332784
Transmission Installation Kit
Page 367

12361146
High-Torque Mini Starter
Page 358

19299805
Torque Converter
Page 364

12342024
Chrome Water Neck
Page 357

19332780
Transmission Controller
Page 369

ZZ572/720R Deluxe

19331585

727 hp @ 6,300 rpm

680 lb.-ft. @ 4,900 rpm

DYNO CHART

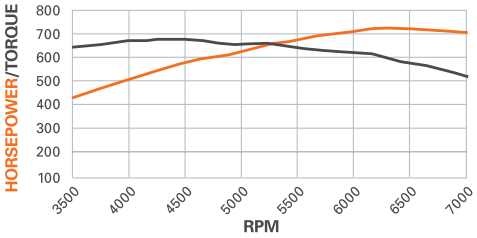

An Assault Weapon for the Strip!

Don't wait weeks or months for a custom drag racing engine. The ZZ572/720R is the king of all Rat engines and is capable of pulling your bracket racer or heads-up challenger down the drag strip in the 9-second range. We deliver it fully assembled. You simply bolt on the included Dominator-style 1090-cfm carburetor, along with a starter and fuel pump (not included) and you're ready to go! With 727 hp at 6,300 rpm and 680 lb.-ft. at 4,900 rpm, you'll make quite an impression.

The engine assembly is all-business, starting with a latest-generation tall-deck block casting with four-bolt main caps, and an all-forged rotating assembly for exceptional strength and durability. A unique mechanical roller camshaft with 0.714/0.714-inch lift and 278/282-degree duration specifications complements high-flow aluminum rectangular-port cylinder heads with massive 310cc intake passages, 118cc raised exhaust ports and 118cc combustion chambers, moving big air through the engine efficiently to make huge power!

NOTE: *Refer to page 91 for the complete horsepower and torque testing procedures.*

TECH SPECS

Part Number:	19331585
Engine Type:	Chevy Tall-Deck Big-Block V-8
Displacement (cu in):	572
Bore x Stroke (in):	4.560 x 4.375
Block (P/N 19212195):	Cast-iron with 4-bolt main caps
Crankshaft (P/N 88961554):	Forged steel
Connecting Rods (P/N 88962926):	Forged steel, shot peened
Pistons (P/N 88963227):	Forged aluminum
Camshaft Type (P/N 19210722):	Mechanical roller
Camshaft Lift (in):	.714 intake / .714 exhaust
Camshaft Duration (@.050 in):	278° intake / 282° exhaust
Cylinder Heads (P/N 19331430):	Aluminum rectangular port, 118cc chambers
Valve Size (in):	2.250 intake / 1.880 exhaust stainless steel
Compression Ratio:	12:1
Rocker Arms (P/N 19210726):	Aluminum roller style
Rocker Arm Ratio:	1.7:1
Distributor (P/N 10093387):	Electronic ignition
Carburetor (P/N 19170096):	1150-cfm Dominator
Water Pump (P/N 19168602):	Aluminum, short-style
Spark Plugs and Wires:	Included
Recommended Fuel:	Race gas
Ignition Timing:	35° Total at 4,000 rpm
Maximum Recommended rpm:	6,750
Balanced:	Internal

NOTE: *Distributor with melonized steel gear MUST be used with long-blocks and Partial engines with steel camshafts, or engine damage will occur.*

INSTALLATION NOTES

- Due to crate fitment, the carburetor is shipped in a separate box and needs to be installed by an engine installer
- Clutch linkage boss is now drilled and tapped. When using cast-iron exhaust manifolds, lower head bolts may need to be replaced with bolts with shorter heads, for clearance
- Requires addition of starter, ignition coil, and fuel pump (not included)
- Gen VI tall-deck block has machined mechanical fuel pump boss
- Requires internally balanced flywheel for manual transmission applications
- Requires 110 octane or higher gasoline
- Designed for pre-1976 street vehicles or any off-road vehicle
- Not intended for marine applications
- Big sticky slicks will help hook up this monster!

Chevrolet Performance Racing Crate Engines are excluded from limited warranty.

Chevrolet Performance does not utilize any used or remanufactured parts in this crate engine, except for the starter, alternator and power steering pump.

19300175

SuperMatic™ 4L85-E Four-Speed Transmission

Direct bolt-on for Gen I Small-Block and all Big-Blocks. Improved valve body for firmer shifts. Includes additional clutch plates. Add up to 685 lb.-ft. torque.

See page 364 for torque converter applications.

19332780

Transmission Controller

Required when using a GM electronically controlled automatic transmission. Includes wiring harness, software and connector for laptop computer.

See page 369

AVAILABLE ENGINE-RELATED PARTS & ACCESSORIES

See page 320 for our complete line of Big-Block components

12341999
Fuel Pump Block-Off Plate
Page 331

19172805
Serpentine Accessory Drive Belt System With Air Conditioning
Page 350

19302919
Lightweight Starter
Page 358

19299805
Torque Converter
Page 364

19332784
Transmission Installation Kit
Page 367

12561217
14" Flexplate
Page 349

Vortec 8.0L

19328586

Truck Power with Gas, CNG or LPG

When it comes to grunt work – like pulling your car hauler or offshore racing boat – Chevrolet Performance's heavy-duty 8.0L Big-Block does the job like no other gas engine. It's designed to accommodate gasoline, CNG or LPG fuels, and because it's a Big-Block, it delivers strong, low-rpm torque.

A tall-deck version (10.2-inch deck height) of the latest block casting, featuring full-length water jackets, thicker main bearing webs and four-bolt main caps, is the 8.0L's foundation and it's used with a forged steel crankshaft and forged connecting rods for great strength. A long, 4.250-inch stroke helps maximize torque. It also features a crank-triggered ignition system, with 4x camshaft and 58x crankshaft reluctor wheels.

Our assembly comes with heads and a balancer installed. An induction system, ignition, starter, water pump and other accessories are required to finish the engine. The engine requires an intake manifold designed for a tall-deck block, such as Chevrolet Performance manifold P/N 88961161. Conventional Big-Block intake manifolds can be used with spacers (not included).

NOTE: *The engine can support fuel injection and also has a provision for a mechanical fuel pump (the production 8.0L camshaft does not have a fuel pump lobe).*

NOTE: *Refer to page 91 for the complete horsepower and torque testing procedures.*

TECH SPECS

Part Number:	19328586
Engine Type:	Chevy Big-Block V-8
Displacement (Litre):	8.0L
Displacement (cu in):	488
Bore x Stroke (in):	4.270 x 4.250
Block (P/N 19256820):	Tall deck (10.2")
Fuel Requirements:	LPG/CNG
Crankshaft (P/N 19300876):	Forged steel
Connecting Rods (P/N 19256831):	Forged steel
Firing Order:	1-8-7-2-6-5-4-3
Connecting Rod Ratio:	1.58:1
Pistons (19256829):	Hypereutectic w/anodized top ring land
Camshaft Type (P/N 12556291):	Hydraulic roller
Cylinder Heads (P/N 19256827):	Fast Burn iron
Damper (P/N 19256830)	Cast iron
Valve Train:	Fully adjustable
Compression Ratio:	9.9:1 nominal
Crankcase capacity:	8 qts
Maximum Recommended rpm:	4,500
Balanced:	Internal

NOTE: *Distributor with melonized steel gear MUST be used with long-blocks and Partial engines with steel camshafts, or engine damage will occur.*

INSTALLATION NOTES

- Designed for gasoline or CNG/LPG on-highway applications
- Tall-deck block design (10.2" deck height)
- Full-length water jackets (non-siamesed cylinders)
- Thicker main bearing webs with four-bolt main caps
- Forged steel crankshaft and connecting rods
- Double-row roller timing chain
- Anodized pistons with full floating wrist pins offer CNG/LPG capability
- Hardened valve seats (intake and exhaust) for CNG/LPG durability
- Stainless steel intake and exhaust valves for CNG/LPG durability
- Adjustable valve train
- "Fast Burn" cylinder heads for fuel efficiency and power
- 58x Crankshaft positioning sensor capability
- 4x Camshaft positioning sensor capability
- Flat-response knock sensor capability
- Coil-near-plug configuration

Chevrolet Performance Crate Engines include a 24-month or 50,000-mile/80,000-kilometer limited warranty.

Chevrolet Performance does not utilize any used or remanufactured parts in this crate engine, except for the starter, alternator and power steering pump.

NOTE: *Spark Plugs not included*

88961161
Intake Manifold, Tall-Deck
Page 355

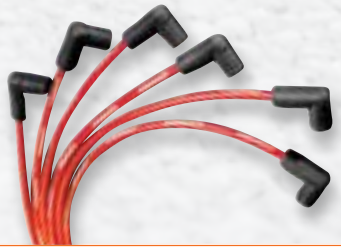

12368384
Spark Plug Wire Set
Page 360

AVAILABLE ENGINE-RELATED PARTS & ACCESSORIES

See page 320 for our complete line of Big-Block components

93440806
HEI Distributor
Page 353

19172805
Serpentine Accessory Drive Belt System w/Air Conditioning *Page 350*

12495502
Wire Loom Kit, Big Block
Page 360

502 Mark IV/GenVI Bare Block

BIG-BLOCK Engine Components

Factory-Engineered Parts for Uncompromising Power and Durability

Building your Big-Block for maximum performance and durability is easier with factory-engineered, matched components that have been tested on the dyno, the street and on the drag strip. That's what you get from Chevrolet Performance.

It all starts with a cast-iron GM cylinder block that's stronger than previous production designs. It combines design elements of the Mark IV and Gen V designs, along with architecture improvements that give the block greater strength. We've even got an updated version of the iconic aluminum ZL1 block!

Chevrolet Performance matches our strong blocks with equally tough, competitively priced rotating parts and great-performing cylinder heads, including lightweight aluminum versions of the legendary rectangular-port and oval-port cylinder heads.

When it comes to Big-Block power, Chevrolet Performance has more experience than anyone in the industry, so you can trust that our parts will deliver dependable, winning performance – on the street or strip!

You can find these Chevrolet Performance Big-Block Engine Components on the following pages:

Blocks and Components ..... **Page 322**
Cylinder Heads ..... **Page 332**
Valve Components ..... **Page 339**
Valve Covers ..... **Page 342**
Camshafts ..... **Page 346**
Pistons and Piston Rings ..... **Page 346**
Crankshafts ..... **Page 348**
Oil Pans, Oil Pumps, Gaskets and Components ..... **Page 351**
Intake Manifolds ..... **Page 354**
Fuel and Electrical Components ..... **Page 361**

A Better Big-Block

The classic Chevy Big-Block production engine was introduced in 1965. In the late 1980s, a new version arrived, designed for marine and fuel-injected applications. The early-style engines are known as Mark IV Big-Blocks, while the later style is referred to as the Gen V (and Gen VI) Big-Block. You can tell them at a glance by checking for a mechanical fuel pump mounting pad. If it has one, it's a Mark IV. If there's no fuel pump pad, it's a Gen V block.

Despite the fuel pump mounting pad difference in their castings, the cylinder blocks of the Mark IV and Gen V are based on the same design architecture. However, there are several other differences—particularly in the water jackets near the deck surfaces—that make some Mark IV and Gen V parts incompatible, including crucial components such as the cylinder head gaskets.

Within the last few years, Chevrolet Performance revised the basic Big-Block architecture to commonize the Mark IV and Gen V, creating an all-new cylinder block casting that combines the features of both generations. It also incorporates significant updates and strength-enhancing features that make the Big-Block a stronger engine foundation with provisions to support 21st-century performance.

Although the basic Big-Block architecture is revised, Chevrolet Performance continues to offer two versions, each differentiated by performance and displacement capability. The Bowtie block continues to be the block of maximum performance. All of our crate engines use the revised Big-Block design.

Here is what distinguishes the latest Chevrolet Performance Big-Blocks from earlier castings:

- Water jackets are revised near the deck surfaces so that Mark IV or Gen V head gaskets can be used interchangeably
- Oil pressure feed holes are added to the oil filter boss and front bulkhead to support oil feeds for superchargers, turbochargers, etc.
- The oil hole next to the camshaft bore at the front of the block is repositioned to enable safe machining of the cam bore to accept a 50mm roller camshaft bearing
- A mechanical fuel pump mounting pad is included, similar to the Mark IV
- A boss next to the distributor hole in the valley supports hardware for digital ignition equipment
- The front bulkhead is thicker and stronger, with marked provisions for a 10-bolt timing cover (non-Bowtie blocks are delivered with drilled and tapped holes for 6-bolt covers; remaining holes must be drilled and tapped at the prescribed positions)
- Non-Bowtie blocks are machined for 4-bolt parallel main caps; Bowtie blocks are machined for 4-bolt splayed caps
- Revised rear-of-block allowed for the machining of 1- or 2-piece main seals (similar to Gen V design)
- A front clutch boss is included for older muscle car applications
- 454 blocks have a slightly beefier main web than previous blocks
- All blocks are made with the standard production roller camshaft and lifter machining
- 502 and Bowtie blocks share the same main web, which is strengthened considerably from the Mark IV and the first-generation Gen V Bowtie block
- Bowtie blocks feature a distinctive water jacket design to allow up to 4.600" bores. These blocks can be identified by a "B" suffix behind the casting number

Two additional core plugs are featured in the rear bulkhead. They enhance the manufacturing process at the foundry and help improve overall quality. Also, a "Bowtie" logo and other identifying marks are incorporated on the Bowtie block, distinguishing it from previous generations.

Chevy Big-Block Quick Reference Chart

Production-Based Cast-Iron Blocks

Part Number	Casting Number	Deck Height	F Pump Boss	Cyl Wall	Bore Range	Main Bolt	Main Blt Degree	Cap Material	Crank Jnl Dia.	Oiling	Seal Type	Max Stroke	Weight (lbs)	Max HP	Usage	Page Number
19170538	—	9.800"	Yes	Open	4.250"–4.310"	4	Straight	Cast-iron	2.750"	Wet	1 pc	4.250"	247	700	Street	324
19170540	—	9.800"	Yes	Siamese	4.470"–4.500"	4	Straight	Cast-iron	2.750"	Wet	1 pc	4.250"	269	700	Mod	324

Bowtie Cast-Iron Big-Blocks

Part Number	Casting Number	Deck Height	F Pump Boss	Cyl Wall	Bore Range	Main Bolt	Main Blt Degree	Cap Material	Crank Jnl Dia.	Oiling	Seal Type	Max Stroke	Weight (lbs)	Max HP	Usage	Page Number
19212191	24502504B	9.800"	Yes	Siamese	4.494"–4.600"	4	16°	Nodular	2.750"	Wet	2 pc	4.500"	258	800	Sport	325
19212192	24502504B	9.800"	Yes	Siamese	4.494"–4.600"	4	16°	Nodular	2.750"	Wet	1 pc	4.500"	258	800	Sport	325
19212193	24502506B	10.200"	Yes	Siamese	4.494"–4.600"	4	16°	Nodular	2.750"	Wet	1 pc	4.500"	263	800	Sport	326
19212194	24502506B	10.200"	Yes	Siamese	4.494"–4.600"	4	16°	Nodular	2.750"	Wet	2 pc	4.500"	263	800	Sport	326
19212195	24502506B	10.200"	Yes	Siamese	4.560"–4.600"	4	16°	Nodular	2.750"	Wet	1 pc	4.500"	263	800	Sport	326
19212196	24502504B	9.800"	Yes	Siamese	4.240"–4.600"	4	16°	Steel	2.750"	Wet	2 pc	4.500"	281	1200	Pro	328
19212197	24502506B	10.200"	Yes	Siamese	4.240"–4.600"	4	16°	Steel	2.750"	Wet	2 pc	4.500"	296	1200	Pro	328

Aluminum ZL1 Block

Part Number	Casting Number	Deck Height	F Pump Boss	Cyl Wall	Bore Range	Main Bolt	Main Blt Degree	Cap Material	Crank Jnl Dia.	Oiling	Seal Type	Max Stroke	Weight (lbs)	Max HP	Usage	Page Number
12370850	3946053	9.800"	Yes	Siamese	4.240"–4.300"	4	16°	Steel	2.750"	Wet	2 pc	4.375"	110	650	Pro	327
88958696*	88958695	9.800"	Yes	Siamese	4.250"–4.300"	4	16°	Steel	2.750"	Wet	1 pc	4.375"	110	650	Pro	N/A

**Used in Anniversary 427 P/N 19166392. Not available for service.*

DRCE Blocks

Part Number	Casting Number	Deck Height	F Pump Boss	Cyl Wall	Bore Range	Main Bolt	Main Blt Degree	Cap Material	Crank Jnl Dia.	Oiling	Seal Type	Max Stroke	Weight (lbs)	Max HP	Usage	Page Number
24502572	1A626	9.525"–9.000"	No	Siamese	4.500"–4.700"	4	16°	Steel	2.750"	Dry	2 pc	4.600"	255	1400+	Pro	329
25534406	CG	9.250"–9.000"	No	Siamese	4.590"–4.700"	4	22°	Steel	2.500"	Dry	2 pc	4.600"	N/A	1400+	Pro	329
25534400	CG	9.250"–9.000"	No	Siamese	4.590"–4.700"	4	22°	Steel	2.500"	Dry	2 pc	4.600"	N/A	1400+	Pro	329

BUILDER'S TIP

THRUST BEARING ALIGNMENT

On Small-Block and Big-Block engines, the thrust bearing alignment on the important #5 bearing is performed by installing only the #5 main cap and tightening its fasteners. With cap in place, the crankshaft is tapped forward or backward with a rubber mallet. When this is done, crankshaft endplay can be measured. For Small-Blocks, you're looking for between 0.005- and 0.007-inch; for Big-Blocks, the spec is 0.0065-0.0075-inch.

Deck Height Diagram

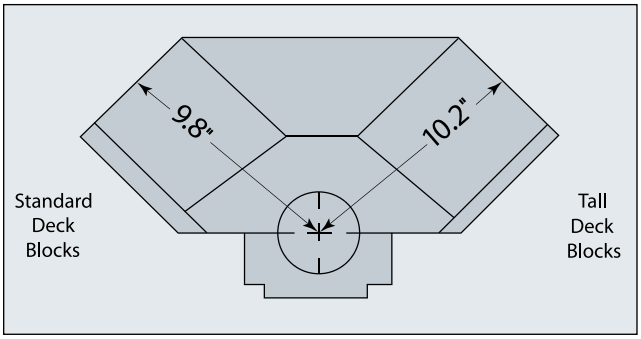

ENGINE BLOCKS

19170538
427/454 Bare Block (not shown)

- New design casting incorporating the best designs of Mark IV and Gen VI
- Production type cast-iron 4-bolt block
- 4.250" finished bore
- 4.310" max bore (non-siamese bore)
- Machined fuel pump pad
- New water jackets for use with Mark IV or Gen VI heads
- Revised oiling to allow for bigger cam bearings/cam lift
- Bolt boss (not machined) added near distributor hole like 8.1L
- Can be drilled for use with 10-bolt front timing cover
- Additional clearance added for roller timing chains
- Auxiliary oil pressure line added to front of block
- Racing style oil filter cast feature with added oil pressure port
- Additional boss for manual transmission clutch pivot (machined)
- Additional material added around lifter bosses

A. 19170540
502 Mark IV/Gen VI Bare Block

- New design casting incorporating the best designs of Mark IV and Gen VI
- Production-type cast-iron 4-bolt block
- Improved main bearing bulkheads–Bowtie block-style bulkhead
- Clearanced for bigger strokes
- 4.470" finished bore
- 4.600" max bore (siamese)
- Fuel pump pad has been added/machined
- New water jackets for use with Mark IV or Gen VI heads
- Revised oiling to allow for bigger cam bearings/cam lift
- Bolt boss (machined) added near distributor hole like 8.1L
- Can be drilled for use with 10-bolt front timing cover
- Additional clearance added for roller timing chains
- Auxiliary oil pressure line added to front of block
- Racing-style oil filter cast feature with added oil pressure port
- Two bosses added for manual transmission clutch pivot (machined)
- Additional material added around lifter bosses

A 502 Mark IV/Gen VI Bare Block (front)

A 502 Mark IV/Gen VI Bare Block (bottom)

A 502 Mark IV/Gen VI Bare Block (rear)

Bowtie Sportsman Block (front) **B**

Bowtie Sportsman Block (rear) **B**

Top: Splayed Main Cap
Bottom: Machined Bottom **C**

2-Piece Rear Main Seal **C**

BOWTIE SPORTSMAN BLOCKS

Big-Blocks with big power are what you get when you select a Chevrolet Performance Bowtie Sportsman block for your drag racing or extreme street-performance application. These blocks comprise a full line of high-quality, precision-machined components based on performance-proven GM designs. The extensive lineup of blocks makes choosing the perfect block easy – and our quality and precision machining is second to none.

The blocks are CNC-machined, an automated process that guarantees precise tolerances. There are no approximations on these blocks – they're exactly right, which is critical to obtaining maximum performance. Chevrolet Performance offers more CNC-machined blocks than anyone.

The highest-quality materials are used to cast our Sportsman Bowtie blocks. They are also available as tall decks, allowing you to make more cubic inches with larger-stroke crankshafts. These blocks can easily be bored and stroked to 500-or-more cubic inches. They can be fitted with one-piece or two-piece crankshaft seals for a smaller chance of oil leaks (one-piece seals) or more aftermarket components attachments (two-piece seals).

The Bowtie Sportsman blocks are available with splayed main caps, which have additional material holding the crankshaft in place. The caps are splayed at 16 degrees. Chevrolet Performance uses splayed main caps throughout the entire line of performance-built Big-Blocks.

Chevrolet Performance Bowtie Sportsman Blocks are ideal for drag racers or street machines where the goal is 800 horsepower and long-lasting reliability.

Bowtie Sportsman Block Technical Notes:

- Available in short deck (9.800") or tall deck (10.200") configurations
- Blocks have clearance for 4.500" stroke crankshafts
- CNC-machined to +/- .001" tolerance
- Siamese cylinder bores
- Bore finishes are ready to hone to size
- Machined for mechanical fuel pump
- Machined for hydraulic roller and flat tappets
- Nodular iron 4-bolt main caps splayed 16° on the three center mains
- Priority main oiling system
- Blocks with a 1-piece Rear Main Seal use the 6-bolt, Gen VI-style front cover (P/N 10230954) and Gen VI-style oil pan
- Blocks with a 2-piece Rear Main Seal use the 10-bolt, Mark IV-style front cover and Mark IV-style oil pan

See chart on page 323 for complete specifications.

Standard Deck Sportsman Blocks

B. 19212192
Standard Deck Bowtie Sportsman Block

- 1-piece rear main seal
- CNC-machined cast-iron 4-bolt block
- 4.494" finished bore
- 4.600" max bore
- Tested to 800 horsepower!

C. 19212191
Standard Deck Bowtie Sportsman Block

- 2-piece rear main seal
- CNC-machined cast-iron 4-bolt block
- 4.494" finished bore
- 4.600" max bore
- Tested to 800 horsepower!

TALL DECK SPORTSMAN BLOCKS

A. 19212193

Tall Deck Bowtie Sportsman Bare Block

- 1-piece rear main seal
- CNC-machined cast-iron 4-bolt block
- 4.494" finished bore
- 4.600" max bore
- Tested to 800 horsepower!

19212194

Tall Deck Bowtie Sportsman Bare Block (not shown)

- 2-piece rear main seal
- CNC-machined cast-iron 4-bolt block
- 4.494" finished bore
- 4.600" max bore
- Tested to 800 horsepower!

19212195

Tall Deck 572 Bowtie Sportsman Bare Block (not shown)

- 1-piece rear main seal
- Uses Mark IV style front cover and oil pan mounting
- CNC-machined cast-iron 4-bolt block
- 4.560" fully honed bore
- 4.600" max bore
- Powder coated Chevy orange
- 5 windage tray bolts installed
- Tested to 800 horsepower!
- This is the block used for our 572 engines

A Tall Deck Bowtie Sportsman Bare Block (front)

A Tall Deck Bowtie Sportsman Bare Block (rear)

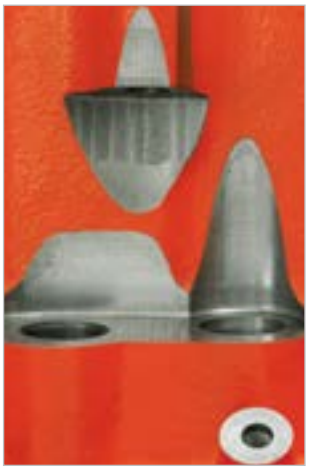

A Machined Lifter Valley Detail

A 1-Piece Rear Main Seal

ZL1 Aluminum Big-Block (front) B

ZL1 Aluminum Big-Block (rear) B

ZL1 Aluminum Big-Block, 4-Bolt Mains B

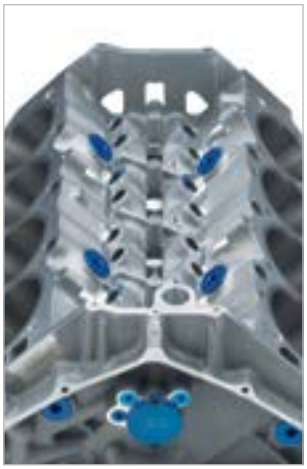

ZL1 Aluminum Big-Block, Lifter Valley B

ZL1 ALUMINUM BIG-BLOCK

ZL1 was the legendary regular production option (RPO) code that struck fear into all competitors who came up against 1969 Camaros – and a couple of Corvettes – that were equipped with this fearsome 427-cubic-inch Big-Block from the factory. The price to own an original ZL1 has exceeded the value of many homes, but you can build your own ZL1-powered supercar thanks to Chevrolet Performance. By reintroducing this fabled aluminum Big-Block, Chevrolet Performance has made it possible for mere mortals to experience the raw horsepower and tremendous torque of the ZL1. The Chevrolet Performance ZL1 aluminum block is made from premium materials and is precision machined to blueprinted specifications.

See chart on page 323 for complete specifications.

ZL1 Aluminum Block Technical Notes:

- 356-T6M Aluminum block
- Standard deck height (9.800")
- 4.300" maximum bore
- 4.240" finished bore
- 4.375" maximum stroke
- Siamesed cylinder walls
- Centrifugally spun cast-iron cylinder sleeves
- Steel 4-bolt main caps splayed 16° on the three center mains (dowel located)
- Provision for hydraulic roller camshafts
- AN O-ring oil and water plugs
- Tested to 650 horsepower

B. 12370850
ZL1 Aluminum Big-Block

- 4.240" finished bore
- 4.300" max bore
- 4.375" max stroke
- Use sleeve P/N 12480035 (see page 300)
- 2-piece rear main seal
- Uses Mark IV front timing cover

CAST-IRON BOWTIE RACE BLOCKS

If you're looking to build a drag racing engine capable of producing 1,200 horses or more, a Chevrolet Performance cast-iron Bowtie Race Block is your starting point. It is designed for engine builders who want to custom-machine their blocks for specific racing applications. Toward that end, these premium castings have thick deck surfaces, improved oiling, improved coolant flow and splayed 4-bolt steel bearing caps. Everything is secured with premium fasteners. The combination of a Chevrolet Performance cast-iron Bowtie Race Block and your unique engine building skills will put you down the track ahead of the competition.

See chart on page 323 for complete specifications.

Cast-iron Bowtie Race Block Technical Notes:

- Precision CNC-machining means +/- 0.001" tolerances
- Blocks are available in short deck (9.800") or tall deck (10.200")
- A sonic bore check data sheet is provided with each block
- Siamese cylinder bores
- Improved cooling around number-1 cylinder
- Accepts Mark IV or Gen V, VI cylinder heads
- Use Gen V head gaskets with Mark IV and Gen V cylinder heads
- Use Gen VI head gaskets with Gen VI cylinder heads
- Requires Mark IV design 2-piece rear main seal oil pans
- Requires Mark IV design crankshafts
- Can use Mark IV and Gen V, VI camshafts, timing sets, lifters and timing cover (aftermarket belt drive timing covers may require clearancing)
- Blind-tapped head bolt holes; extra inner head bolt bosses provided
- 4-bolt SAE 8620 main caps splayed 16° on the three center mains
- Priority main oiling wet-sump system
- Provisions for dry-sump oil line provided
- Honed camshaft and crankshaft bores
- 0.842" lifter bores (maximum 1.06") may be relocated
- Distributor gear clearance at bottom of number-8 cylinder bore should be checked
- Machined mechanical fuel pump pad

19212196
Standard Deck Bowtie Race Block (not shown)

- CNC-machined cast-iron 4-bolt block
- 4.240" finished bore
- 4.600" max bore (.250" min wall thickness)
- Standard deck height (9.800")
- Lifter bosses are .300" taller than standard blocks
- Tested to 1,200 horsepower!

A. 19212197
Tall Deck Bowtie Race Block

- CNC-machined cast-iron 4-bolt block
- 4.240" finished bore
- 4.600" max bore (.250 min wall thickness)
- Tall deck height (10.200")
- Lifter bosses are .300" taller than standard blocks
- Tested to 1,200 horsepower!

A Tall Deck Bowtie Race Bare Block (front)

A Tall Deck Bowtie Race Bare Block (rear)

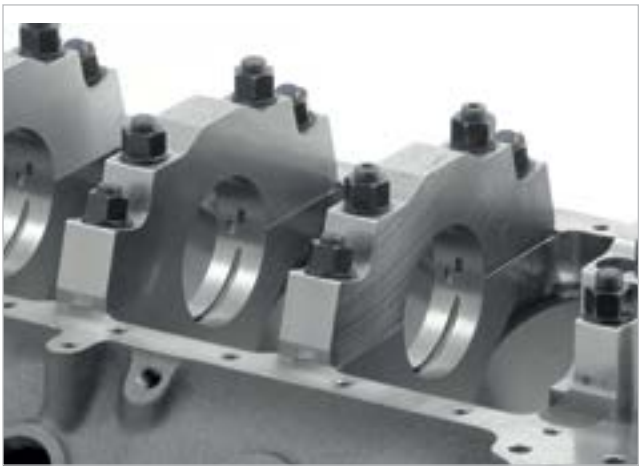

A Tall Deck Bowtie Race Bare Block, Nodular 4-Bolt Splayed Caps

DRCE 2 Bare Block (front) **B**

DRCE 2 Bare Block (rear) **B**

DRCE 2 Lifter Valley **B**

DRCE 2 Main Caps **B**

BIG-BLOCK DRCE BLOCKS

Chevrolet Performance Big-Block DRCE (Drag Racing Competition Engine) blocks are the foundation of many of the most powerful Pro Stock drag racing engines. The DRCE family of engine blocks was specifically designed with 500-cubic-inch Pro Stock engines in mind. They are the latest evolution of Pro Stock engine design. In order to build optimum performance, the DRCE blocks have bore spacing that allows for the preferable big bore/short-stroke crankshaft combination. The camshaft has been raised and the distributor moved.

The big-bore design un-shrouds the heads, which means bigger valves can be used. The result is maximized air/fuel mixtures. All DRCE blocks are sold solid, without lifter holes or head bolt holes, so any GM Big-Block cylinder heads may be used. The DRCE blocks are available in either gray iron or compacted graphite (an extremely high-strength material that helps the block combat bore distortion and crank deflection under stress).

See chart on page 323 for complete specifications.

DRCE Block Technical Notes:

- CNC-machined to +/- 0.001" tolerance
- Siamese cylinder bores with 4.900" spacing
- No lifter bosses, solid bar can be drilled as required
- No head bolt holes
- Numbers two and four main bearing bulkheads moved 0.060"
- Bellhousing bolt pattern accommodates Chevy and Pontiac/Olds transmissions
- Uses Big-Block Chevrolet crank, camshaft, balancer, flywheel and water pump
- Requires camshaft with distributor gear behind rear bearing
- Priority main oiling dry-sump system
- Dual starter mounting locations
- Front-engine mounts only
- Each block is supplied with sonic test data sheet

B. 24502572
DRCE 2 Bare Block, Gray Iron

- CNC-machined iron 4-bolt block
- 9.525" deck height, may be machined to 9.000"
- Camshaft raised to 5.750"
- Cam tunnel accommodates 55mm cam bearings
- 4.500" semi-finished bore
- 4.700" max bore
- 4-bolt steel main caps, 16° splayed-on center three mains
- Oil pan rails spread .400" per side for additional stroke clearance
- Tested to 1,400-plus horsepower!

25534406
DRCE 3 Bare Block, Compacted Graphite* (not shown)

- CNC-machined compacted graphite material 4-bolt block
- 9.250" deck height, can be machined to 9.000"
- Camshaft raised to 7.067"
- Cam tunnel accommodates (9) 60mm cam bearings
- Cam tunnel is closed (no oil drain to rotating assembly)
- 4.590" semi-finished bore
- 4.700" max bore
- 2.500" crankshaft main journal
- 4-bolt steel doweled-after-assembly main caps, 22° splayed-on center three mains
- Highest-available quality main studs
- Oil pan rails spread to 12"
- Oil and water plugs are AN O-ring-style
- Tested to 1,400-plus horsepower!

25534400 - Discontinued
DRCE 3 Bare Block, Compacted Graphite* (not shown)

- Same as P/N 25534406
- Cam tunnel accommodates (9) 70mm cam bearings
- Available until current inventory is depleted

**Compacted graphite is an extremely high strength material that helps the block combat bore distortion and crank deflection under heavy loads – like making 1,400-plus horsepower at 10,000 rpm!*

CYLINDER BLOCK COMPONENTS

A. 6264902
O-Ring Seal (sold individually)
- Use under the rear main bearing cap on all 1991-and-newer Gen V and Gen VI 454 and 502 engines

3859927
Outer Main Cap Bolt, Mark IV (not shown)
- Used with Mark IV (1965-1990) cast-iron Big-Blocks with 4-bolt mains
- Sold individually; order 10 per engine

B. 10106461
Inner Main Cap Bolt, Gen V and Gen VI
- Used with Gen V and Gen VI (1991-and-newer) Big-Blocks with 4-bolt mains
- Sold individually; order 10 per engine

3909834
Inner Main Cap Bolt, Mark IV (not shown)
- Used with Mark IV (1965–1990) cast-iron Big-Blocks with 4-bolt mains
- Sold individually; order 10 per engine

C. 88962212
Main Bearings, 572 Engine
- Complete main bearing kit for 572 block with standard-size mains

FREEZE PLUGS AND OIL PLUGS

Part Number	Description	Quantity
03999200	Plug, Camshaft Bearing Hole	1
00444776	Plug	8
14090911	Plug, Water Outlet	1
08654382	Plug, Automotive Hex Head Pipe	1
12558081	Pin, Cylinder Head Locationing	4
1453658	Pin, Transmission	2

D. 88891749
Freeze Plug, Brass (Gen V and Gen VI)
- Brass freeze plug for Gen V and Gen VI (1991-and-newer) engines
- Suitable for marine applications

12480035
Cylinder Sleeve (standard, not shown)
- Steel cylinder sleeve for aluminum block P/N 12370850 and P/N 88958696
- Sleeve has 4.240" bore and finish-bores to 4.250"

3902885
Windage Tray Stud (not shown)
- Used for mounting splash shield P/N 3967854

10224104
Windage Tray Stud, Gen V 454 and 502 (not shown)
- Used with Gen V 454 and 502 engines

E. 88958656
Windage Tray Bolt, 572
- Used with 572 engines

A O-Ring Seal

B Inner Main Cap Bolt (Gen V and Gen VI)

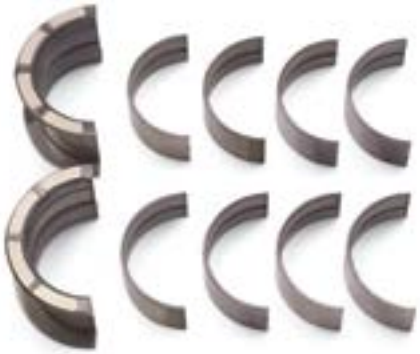

C Main Bearings, 572 Engine

D Freeze Plug, Brass (Gen V and Gen VI)

E Windage Tray Bolt, 572

Timing Chain Cover Gen V and Gen VI **F**

Big-Block Fuel Pump Block-Off Plate **G**

Big-Block Crank Trigger Ignition Conversion Kit **H**

FRONT COVERS, PLUGS AND BLOCK-OFF PLATES

F. 10230954
Timing Chain Cover, Gen V and VI
- Aluminum cover with timing indicator fits all 1996-and-newer Gen V and Gen VI engines
- Used on all Chevrolet Performance Big-Block crate engines

11609914
Front Oil Galley Plug (not shown)
- Fits front oil galley (cam tunnel) holes
- .030" oil squirter hole for cooling and lubricating the timing chain

G. 12341999
Big-Block Fuel Pump Block-Off Plate
- Plate has stamped Bowtie logo
- Special non-asbestos gasket included

H. 19260247
Big-Block Crank Trigger Ignition Conversion Kit
- Enables the use of the latest aftermarket electronic control systems
- 58x reluctor ring for installation on the front of the crankshaft timing gear
- 4x camshaft gear
- New design front cover with camshaft position and crankshaft position sensors
- Double-row timing chain for greater durability, stability and timing accuracy
- Requires aftermarket ignition controller capable of 58x signal (not included)
- Coil packs are not included

NOTE: *Minor machining of the cylinder block and the damper is required.*

Timing Covers: Additional Required Components

Part Number	Bolts (Quantity)	Seals (Quantity)	Gasket (Quantity)	Engine Application
10230954	10243771 (6)	10191640 (1)	10198910 (1)	12498793, 12498777, 12498778, 12371054, 12498827, 12498792, 12498826, 24502620, 12568779, 12568778, 12499121, 19201332, 12371054, 88890534, 24502618, 12568774, 12371204, 12568782, 12497323, 12496963, 12371171, 19166392, 19166393

BUILDER'S TIP

VALVE-TO-PISTON CLEARANCE CONSIDERATIONS

A custom engine combination should always raise the concern of valve-to-piston clearance. And while camshaft lift is commonly thought of as the primary culprit of valve/piston interference, the overlap period – when the piston nears top-dead center and the intake valve is starting to open and the exhaust valve is closing – brings the valves and piston closest together. So, don't assume the gross lift specs are all you have to worry about; duration and lobe separation are equally important, making a careful clearance inspection all the more important.

Big-Block Cylinder Heads

Part Number	Description	Casting Number	Material	Port Size	Port Type	Valve Angle	Chbr (cc)	Int Vlv (in)	Exh Vlv (in)	Ex Port	Plug Type	Heat Riser	Rocker Stud	Notes	Page Number
12562920	Gen V, VI BBC	12562934	Iron	325	Rect	BBC	118	2.180	1.880	Square	Std	yes	Screw-in	Ass'd 2925's	332
12562925	Gen V, VI BBC	12562934	Iron	325	Rect	BBC	118	2.180	1.880	Square	Std	yes	Screw-in	7/16 accy holes	332
12562926	Gen V, VI BBC	12562934	Iron	325	Rect	BBC	118	2.180	1.880	Square	Std	yes	Screw-in	3/8 accy holes	332
12562917	Gen V, VI BBC	12562932	Iron	—	Round	BBC	118	2.070	1.720	Square	Std	yes	Screw-in	HT 502 head	N/S
19331425	Oval alum	12363391	Alum	290	Oval	BBC	110	2.250	1.880	Square	Std	no	Screw-in	Semi-open, oval port	333
19331424	Oval alum	12363391	Alum	290	Oval	BBC	110	2.190	1.880	Square	Std	no	Screw-in	Semi-open, oval port	333
19331422	Oval alum	12363391	Alum	290	Oval	BBC	110	2.190	1.880	Square	Std	no	Screw-in	Bare 3392	333
19331427	NHRA L88	12363401	Alum	315	Rect	BBC	118	2.190	1.880	Square	Std	no	Screw-in	Bare, NHRA legal	334
19331428	Rect alum	12363401	Alum	300	Rect	BBC	118	2.250	1.880	Square	Std	no	Screw-in	Assembled	334
19331426	Rect alum	12363401	Alum	300	Rect	BBC	118	2.250	1.880	Square	Std	no	Screw-in	Bare 3400	334
12363425	BBC Bowtie	14044861	Alum	380	Rect	BBC	115	2.190	1.880	Square	Std	no	Screw-in	Bare, raised int/exh	335
19331429	572/620	—	Alum	310	Rect	BBC	118	2.250	1.880	Square	Std	no	Screw-in	ZZ572/620	335
19331430	572/720	—	Alum	310	Rect	BBC	118	2.250	1.880	Square	Std	no	Screw-in	ZZ572/720R	335
24502585	DRCE 2	—	Alum	—	Peanut	DRCE 2	—	—	—	DRCE	—	no	Shaft	Pro Stock–raw	336
25534404	DRCE 3	—	Alum	—	Peanut	DRCE 3	—	—	—	DRCE	—	no	Shaft	Pro Stock–raw	337

SERVICE REPLACEMENT HEADS

Chevrolet Performance service replacement cylinder heads are direct replacements on most 1990-and-later GM Big-Block 454-cubic-inch and 502-cubic-inch engines. These cylinder heads meet GM's stringent quality standards and provide excellent service and durability not found in used cylinder heads. The cylinder heads have rectangular intake ports.*

Service Replacement Head Technical Notes:

- Cast-iron
- Rectangular intake ports
- Machined for 2.180"/1.880" (3/8" stems) valves
- Non-adjustable rocker arm design
- Heads have heat risers
- Will not work on production Mark IV cylinder blocks

A. 12562925

Bare Cast-Iron Gen V and Gen VI Cylinder Head

- Bare cast-iron head
- 118cc combustion chambers
- 7/16" accessory bolt holes

12562926

Bare Cast-Iron Gen V and Gen VI Cylinder Head (not shown)

- Bare cast-iron head
- Machined for 2.180"/1.880" 3/8" stem valves
- 118cc combustion chambers
- 3/8" accessory bolt holes (otherwise identical to P/N 12562920)

12562920

Cast-Iron Gen V and Gen VI Cylinder Head Assembly (not shown)

- Cast-iron head
- Completely assembled with 2.180"/1.880" valves
- 118cc combustion chambers
- Uses P/N 12562925 bare casting

This head is assembled with the following components:

14097045	Intake Valves	**12550421**	Valve Spring Retainer
14097049	Exhaust Valves	**3947880**	Valve Locks
14097002	Valve Springs	**3875916**	Valve Spring Shims

NOTE: *Will not work on L29 engines.*

**Rectangular intake ports are larger in volume and designed to enhance high-rpm horsepower. They are an ideal street head for those Big-Block enthusiasts who want more power from a street car that sees a lot of drag-strip action.*

A Bare Cast-Iron Gen V and Gen VI Cylinder Head (exhaust)

A Bare Cast-Iron Gen V and Gen VI Cylinder Head (intake)

Bare Cast-Iron Gen V and Gen VI Cylinder Head (combustion chamber) **A**

Bowtie Oval-Port Aluminum Cylinder Head (intake) **B**

Bowtie Oval-Port Aluminum Cylinder Head (exhaust) **B**

Bowtie Oval-Port Aluminum Cylinder Head (combustion chamber) **B**

ALUMINUM BOWTIE STREET CYLINDER HEADS

Chevrolet Performance Bowtie high-performance street cylinder heads are an ideal combination of street drivability and drag-strip performance. They provide a broad power range with ample low-end torque, excellent throttle response, good mid-range torque and enough top-end power to beat your competitors to the finish line. Chevrolet Performance Bowtie street cylinder heads are designed for high-performance applications, with thick deck surfaces and high-velocity airflow passages. The heads are manufactured to precise machining tolerances.

Chevrolet Performance Bowtie street cylinder heads are available in either rectangular or oval intake port configurations. Rectangular intake ports are larger in volume and are designed to enhance high-rpm horsepower. These heads are best for vehicles that see frequent drag-strip action. Cylinder heads with oval intake ports are smaller in volume and are designed for greater low-rpm torque. Oval port heads are best for street applications where lots of bottom end, off-the-line power is desired.

Bowtie Street Cylinder Head Technical Notes:

- Made from 356-T6 aluminum
- Available in rectangular- or oval-port designs
- Will work on Mark IV and Gen V, VI blocks
- 9/16"-thick decks
- As-cast intake and exhaust ports
- No heat risers
- 1.55" valve spring seat diameter
- Heli-coiled 7/16" screw-in rocker stud holes
- Designed for use with 3/8" pushrods
- Use intake gasket P/N 12366985 and bolt kit P/N 12367959
- Use head gasket P/N 12363414 for bores to 4.370" and P/N 12363413 for bores 4.470" to 4.540" (Mark IV)
- Use head gasket P/N 12363412 for bores to 4.370" and P/N 12363411 for bores 4.470" to 4.540" (Gen V, VI)
- Use head bolt kit P/N 12367779

Oval Port Heads

19331422 ❗

Bowtie Oval-Port Aluminum Cylinder Head, Bare (not shown)

- Fully machined
- Semi-finished for 2.190"/1.880" valves
- Bronze guides can be finished to 11/32" or 3/8"
- 290cc high-velocity oval intake ports
- 110cc exhaust ports
- 110cc semi-open combustion chambers

B. 19331424 ❗

Bowtie Oval-Port Aluminum Cylinder Head Assembly

- Completely assembled with 2.190"/1.880" 11/32" stem valves
- 290cc oval intake ports
- 110cc exhaust ports
- 110cc combustion chambers

This head is assembled with the following components:

12366986	2.190" Intake Valves	**12366990**	Valve Spring Retainers
12366988	1.880" Exhaust Valves	**12366992**	Valve Locks
12462970	Valve Springs	**12495690**	Valve Seals
3875916	Valve Spring Shims	**3921912**	Rocker Arm Studs
3860038	Pushrod Guideplates		

19331425 ❗

Bowtie Oval-Port Aluminum Cylinder Head Assembly (not shown)

- Completely assembled with 2.250"/1.880" 11/32" stem valves
- 290cc oval intake ports
- 110cc exhaust ports
- 110cc combustion chambers

This head is assembled with the following components:

12366986	2.190" Intake Valves	**12366990**	Valve Spring Retainers
12366988	1.880" Exhaust Valves	**12366992**	Valve Locks
12462970	Valve Springs	**12495690**	Valve Seals
3875916	Valve Spring Shims	**3921912**	Rocker Arm Studs
3860038	Pushrod Guideplates		

Bowtie Street Heads Continued

19331427
Bowtie Rectangular-Port Aluminum Bare Cylinder Head (not shown)

This NHRA-legal aluminum cylinder head is a replacement for the L88 Big-Block cylinder heads used on 1968-1971 Corvettes and 1969 Camaros.

- Aluminum performance cylinder head
- 315cc rectangular intake ports
- Replacement head for P/N 14011076
- Machined for 2.250"/1.880" 11/32" valve stems
- 110cc exhaust ports
- 118cc combustion chambers

19331426
Bowtie Rectangular-Port Aluminum Bare Cylinder Head (not shown)

- Bare aluminum performance head
- Machined for 2.250"/1.880" valves
- 300cc rectangular intake port
- 110cc exhaust port
- 118cc combustion chamber

A. 19331428
Bowtie Rectangular-Port Aluminum Cylinder Head Assembly

- Aluminum performance head
- Completely assembled with 2.250"/1.880" 11/32" stem valves
- 300cc rectangular intake port
- 110cc exhaust port
- 118cc combustion chamber
- Uses bare head P/N 19331426

This head is assembled with the following components:

12366987	2.250" Intake Valves	**12366990**	Valve Spring Retainer Lock
12366988	1.880" Exhaust Valves	**12366992**	Valve Spring Retainer
12462970	Valve Springs	**12495690**	Valve Seals
3875916	Valve Spring Shims	**3921912**	Rocker Arm Studs
3860038	Pushrod Guideplates		

A Bowtie Rectangular-Port Aluminum Cylinder Head Assembly (intake)

A Bowtie Rectangular-Port Aluminum Cylinder Head Assembly (exhaust)

A Bowtie Rectangular-Port Aluminum Cylinder Head Assembly (combustion chamber)

Bowtie 572/620 Cylinder Head Assembly (intake) B

Bowtie 572/620 Cylinder Head Assembly (exhaust) B

Bowtie 572/620 Cylinder Head Assembly (combustion chamber) B

B. 19331429 ❗

Bowtie 572/620 Cylinder Head Assembly

- Aluminum head assembly
- Used in the 572/620 Chevrolet Performance crate engine
- Completely assembled with 2.250"/1.880" 11/32" stem valves
- Valve springs for hydraulic roller cams for up to .632" lift
- 310cc rectangular intake port
- 118cc exhaust port – raised 5/8"
- 118cc combustion chamber
- Not recommended for engines smaller than 572 cid

This head is assembled with the following components:

12366987	2.250" Intake Valves	**12366990**	Valve Spring Retainer Lock
88963128	1.880" Exhaust Valves	**12366992**	Valve Spring Retainer
88963934	Valve Springs	**88963936**	Valve Seals
88963937	Valve Spring Shims	**3921912**	Rocker Arm Studs
88963935	Valve Spring Locators	**3860038**	Pushrod Guideplates

19331430 ❗

Bowtie 572/720R Cylinder Head Assembly (not shown)

- Aluminum racing head assembly
- Used in the 572/720R Chevrolet Performance crate engine
- Completely assembled with 2.250"/1.880" 11/32" stem valves
- Mechanical roller valve springs – not for use with hydraulic roller cams
- Good to .720" valve lift
- 310cc rectangular intake port
- 118cc exhaust port – raised 5/8"
- 118cc combustion chamber
- Not recommended for engines smaller than 572 cid

This head is assembled with the following components:

12366987	2.250" Intake Valves	**12366990**	Valve Spring Retainer Lock
88963128	1.880" Exhaust Valves	**12366992**	Valve Spring Retainer
19172596	Valve Springs	**88963936**	Valve Seals
88963937	Valve Spring Shims	**3921912**	Rocker Arm Studs
88963935	Valve Spring Locators	**3860038**	Pushrod Guideplates

BOWTIE RACE CYLINDER HEADS

Monster-cubic-inch stroker Big-Blocks need lots of air to maximize their performance potential and Chevrolet Performance Bowtie race cylinder heads are designed for that task. They are made of 356-T6 aluminum with huge, raised intake ports, larger valves, smaller combustion chambers and two additional head bolts for increased clamping force. The runners are purposely left smaller, so there is ample room for custom porting by the engine builder.

Bowtie Race Head Technical Notes:

- 356-T6 Aluminum
- 9/16" thick decks
- No heat risers
- Will work on Mark IV cylinder block
- Heli-coiled 7/16" screw-in rocker stud holes
- As-cast intake and exhaust ports

12363425

Bowtie Racing Cylinder Head (not shown)

- Aluminum racing head
- Machined for 2.190"/1.880" valves (+.400" long required)
- 380cc rectangular intake ports – raised .100"
- 110cc exhaust port – raised .750", vanes in port floor ("W" port)
- 115cc "open chamber" combustion chamber
- Rocker cover rails raised .250"
- Two additional head bolt holes in valley
- Pushrod guide plates P/N 3860038 must be ground for clearance

DRCE PRO STOCK CYLINDER HEADS

Chevrolet Performance DRCE (Drag Racing Competition Engine) Pro Stock cylinder heads are the choice of NHRA Pro Stock champions, so you know these are the best heads available. When races are won by thousandths of a second there's no room for second-best parts. The Chevrolet Performance DRCE aluminum cylinder heads were specifically designed for the DRCE 2 engine block P/N 24502572 and intended for NHRA Drag Racing Pro Stock competition applications.

Special features of these heads include high-capacity water jackets, symmetrical-port layout, ample wall material for custom porting, thick deck surfaces (7/8") to facilitate angle milling and reduced weight casting to minimize CNC-machining time. A typical CNC-prepped cylinder head without valves or valvetrain weighs approximately 40 pounds.

DRCE Pro Stock Race Cylinder Head Technical Notes:

- T355-T7M aluminum construction
- Complies with NHRA Pro Stock 500-cid, 4.900" bore spacing rules
- Symmetrical intake port layout
- Intake and exhaust ports are extremely small "peanut ports"
- 7/8" thick decks allow for angle milling or heavy flat milling
- Requires professional porting and machining
- High-capacity self-purging water jackets
- Custom aftermarket rocker arm assemblies required

A. 24502585
DRCE 2 Raw Aluminum Cylinder Head

- Raw aluminum casting, not machined
- Accommodates 10°–14° x 5° intake and 5°–9° x 2.5° exhaust valve angles
- Designed to work on DRCE 2 block P/N 24502572

A DRCE 2 Raw Aluminum Cylinder Head (exhaust)

A DRCE 2 Raw Aluminum Cylinder Head (intake)

A DRCE 2 Raw Aluminum Cylinder Head (combustion chamber)

DRCE 3 Aluminum Cylinder Head Casting (exhaust) **B**

DRCE 3 Aluminum Cylinder Head Casting (intake) **B**

DRCE 3 Aluminum Cylinder Head Casting (combustion chamber) **B**

B. 25534404
DRCE 3 Aluminum Cylinder Head Casting

- Raw aluminum casting, not machined
- Newest design DRCE – rocker arm mounting pads and valve spring seat pads allow greater flexibility with valve angles and locations than DRCE 2
- Designed to work on DRCE 3 block and DRCE 2 P/N 24502572

25534387
DRCE 3 Water Jacket Plug (not shown)

- For ends of DRCE 3 cylinder head casting P/N 25534404
- Aluminum AN -16 with internal hex for Allen wrench
- Includes O-ring
- Sold individually; use 2 per head

25534388
DRCE 3 Water Jacket Plug (not shown)

- For water jacket access holes of DRCE 3 cylinder head casting P/N 25534404
- Aluminum AN -08 with internal hex for Allen wrench
- Includes O-ring
- Sold individually; use 8 per head

Cylinder Heads: Additional Required Components

Part Number	Gaskets (Quantity)	Bolts (Quantity)	Spark Plug	Engine Application
12562920	14097001 (2) OR 12555728 (2)	10141204 (24), 10141205 (8)	19157985	24502620, 12568778, 24502618, 12568774
12562926	14097001 (2) OR 12555728 (2)	10141204 (24), 10141205 (8)	19157985	24502620, 12568778, 24502618, 12568774
12562925	14097001 (2) OR 12555728 (2)	10141204 (24), 10141205 (8)	19157985	24502620, 12568778, 24502618, 12568774
19331425	12363411 (2)	12367779 (1 Kit)	19307141	12499121, 19201332, 12371204, 12497323, 12496963, 12371171, 19331579, 19331578, 19331576
19331424	12555728 (2)	88960333 (16), 88960334 (8)	19307141	12498777
19331422	12555728 (2)	88960333 (16), 88960334 (8)	19307141	12498777, 19331574
19331430	88961561 (2)	88960333 (16), 88960334 (8)	19302733	12498827, 12498826, 19201334, 19331585
19331429	88961561 (2)	88960333 (16), 88960334 (8)	19302731	12498792, 19331581

CYLINDER HEAD GASKETS

Secure sealing between the cylinder heads and the block is a critical component of making reliable horsepower, so Chevrolet Performance puts the same engineering excellence and manufacturing precision into their gaskets, head bolts, and cylinder head studs as the blocks and heads they secure. Big-Block cylinder head gaskets are available in a variety of materials and thicknesses. Piston-to-head clearances should be considered when selecting gaskets. Use Gen V for 1991-1992 applications. Gasket packages contain one gasket unless otherwise specified.

A. 12363414
Composition Head Gasket (1965-1990)
- With pre-flattened copper wire ring and permatorque/blue stripe coating for engines with aluminum heads
- Bore sizes between 4.250" and 4.370"
- Use with Mark IV (1965-1990) engines only
- Compressed thickness is 0.039"

12363412
Composition Head Gasket (1991-newer)(not shown)
- For 1991-and-newer Gen V and Gen VI Big-Blocks with aluminum heads and 4.250" to 4.370" bore size
- Has pre-flattened wire ring and stainless core which makes it ideal for saltwater marine use
- Compressed thickness is 0.039"

12555728
Head Gasket, 454 Engine (not shown)
- Head gasket for 1991–2000 Gen V 454 Big-Blocks

B. 12366984
Head Gasket Kit, 502 Engine
- For all Gen V and Gen VI 502 Big-Blocks with cast-iron heads
- Has additional water hole for improved cooling of siamesed cylinder walls
- Includes 2 gaskets (right and left) per package
- Compressed thickness is 0.041"

12363411
Composition Head Gasket (1991-newer)(not shown)
- For Gen V and Gen VI Big-Blocks with aluminum heads and 4.375" to 4.540" bore size
- Has pre-flattened wire ring and stainless core which makes it ideal for saltwater marine use
- Compressed thickness is 0.039"

C. 88961561
Head Gasket, 572 Engine
- With pre-flattened wire ring for all 572 Big-Blocks with either cast-iron or aluminum heads
- Compressed thickness is 0.030"

HEAD BOLTS AND STUDS

12367779
Cylinder Head Bolt Kit (not shown)
- Universal kit for cast-iron and aluminum Big-Block heads
- Includes (8) 7/16-14 x 2.08" bolts P/N 88960334, (24) 7/16-14 x 4.060" bolts P/N 88960333, (8) 7/16-14 x 5.06" bolts P/N 88960332, and (40) hardened washers P/N 14011040
- Use part numbers above for replacement parts
- Use thread sealant on all Big-Blocks except 502, due to blind bolt holes

A Composition Head Gasket (1965–1990)

B Head Gasket Kit, 502 Engine

C Head Gasket, 572 Engine

Intake Valve, 2.250" **D**

Exhaust Valve, 1.880" **E**

Big-Block Dual Valve Spring, 1.540" **F**

BIG-BLOCK VALVES

Intake Valves

12556317 (not shown)
- Valve Size: 2.190" / Stem Size: 3/8"
- Stock replacement valve for Gen V and Gen VI 454 and 502 HO engines.

12366986 (not shown)
- Valve Size: 2.190" / Stem Size: 11/32"
- Stainless-steel valve with undercut chrome-plated stems, single-groove design, hardened tips
- Used on ZZ454, ZZ427 and the Anniversary Edition 427 crate engines.

D. 12366987
- Valve Size: 2.250"/ Stem Size: 11/32"
- Stainless-steel valve with undercut chrome-plated stems, single-groove design, hardened tips
- Used on ZZ502 and ZZ572

Exhaust Valves

14097049 (not shown)
- Valve Size: 1.880" / Stem Size: 3/8"
- Stock replacement valve for Gen V and Gen VI 454 and 502 HO engines.

12366988 (not shown)
- Valve Size: 1.880" / Stem Size: 11/32"
- Stainless-steel valve with undercut chrome-plated stems, single-groove design, hardened tips
- Used on ZZ454, ZZ427 and the Anniversary Edition 427 crate engines.

E. 88963128
- Valve Size: 1.880"/ Stem Size: 11/32"
- Stainless-steel valve with undercut chrome-plated stems, single-groove design, hardened tips
- Used on ZZ502 and ZZ572

BIG-BLOCK VALVE SPRINGS

F. 88963934
Dual Spring
- Outside Diameter: 1.540"
- Pressure Installed at Height: 197# @1.800"
- Retainer P/N 12366990
- Valve Seal Kit P/N 88963936
- Used with 572/620 HP engines

19172596 (not shown)
Dual Spring
- Outside Diameter: 1.567"
- Pressure Installed at Height: 230# @2.000"
- Retainer P/N 12366990
- Valve Seal Kit P/N 88963936
- Used with 572/720 HP engines

Valve Spring Retainer

Valve Spring Key

VALVE SPRING COMPONENTS

Part Number	Description	Technical Notes
12550421	Valve Spring Retainer	For 1991-and-newer Gen V and Gen VI engines
3947880	Valve Spring Key	Hardened steel split locks for production and racing engines. Color-coded purple. Sold individually, order 32 per engine
12550422	Valve Stem Seal (not shown)	Seal for 1991-and-newer Gen V and Gen VI engines. The valve guide boss must be machined slightly for seal to retain clearance when using high-lift cams
88963936	Valve Spring Seal (not shown)	Use with all 572 engines
3875916	Spring Shim (not shown)	55/64" I.D. x 1 31/64" O.D. x 0.015" thick
88963937	Spring Shim (not shown)	Shim for all 572 engines
88963935	Valve Spring Locator (not shown)	Valve spring locator for setting the valve spring in the right location on all 572 engines

Roller Rocker Arm Set, 1.7:1 Ratio

ROCKER ARMS

Steel Rocker Arms - Steel rocker arms are designed for long-term durability. Chevrolet Performance steel rocker arms are intended for 454- and 502-cubic-inch Big-Blocks. Rocker arm kits include one rocker arm and ball.

Aluminum Roller Big-Block Rocker Arm for 7/16" Studs - Chevrolet Performance aluminum roller rocker arms have bearings and fulcrums with an extra-wide design for improved load distribution. The rockers are lubricated with pressurized oil. The rockers have a 1.7:1 ratio for 7/16" studs. The roller-tip axle is made from 4130 steel and the roller tip is machined and ground from 8620 steel.

NOTE: *Not for use with production-height valve covers.*

Part Number	Description	Technical Notes
19260993	Steel Rocker Arm Assembly (not shown)	Designed for use on Gen V and Gen VI design 454- and 502-cubic-inch HO engines. The rocker arms have long slots for high-lift camshafts. ***NOTE:*** *Kit includes rocker arm and ball. One rocker assembly per package; order 16 per engine.*
12368082	Steel Long-Slot Rocker Arm, 1.7:1 Ratio (not shown)	These 1.7:1 ratio hardened steel rocker arms have elongated slots to provide extra clearance for high-lift (.600" and greater) camshafts. Use with all 396-502 Big-Block heads with adjustable rockers. Each assembly includes rocker arm P/N 12368082 as well as the ball P/N 12556299 and nut P/N 3896648. ***NOTE:*** *Can be used on any Gen V or Gen VI by using rocker stud P/N 12368941.*
12368085	Steel Long-Slot Rocker Arm Kit (not shown)	Set of 16 rocker arms (P/N 12368082) with the balls and nuts.
19210726	Aluminum Roller Rocker Arm Set, 1.7:1 Ratio	Set includes 16 roller rocker arms and nuts for 7/16" studs. Used on 572-cubic-inch Big-Block engines. Use P/N 19244484 for single replacement part

Premium 7/16" Intake Pushrod

Intake Pushrod, Roller Lifter Style

PUSHRODS

Chevrolet Performance offers a complete line of premium-quality, heavy-duty pushrods for most GM Big-Block engines. Pushrods are that critical link between the camshaft and the rocker arms. These seemingly innocuous parts play a very important role in the combustion process. Two materials are used: 1010 mild steel for high-performance street cars, power boats, and limited competition applications, and 4130 chrome-moly steel for maximum-performance racing engines. Chevrolet Performance pushrods are case-hardened for use with pushrod guideplates. Pushrods are available in standard and extended lengths. Check the usage chart below to verify proper applications.

Part Number	Material	Diameter	Length	Usage	Port	Description
10227762	1010 steel	3/8"	7.592"	Hyd. roller	Intake	(1) heavy-duty heat-treated .060" for use in Gen VI 454 and 502 engines with hydraulic roller lifters
10227763	1010 steel	3/8"	8.569"	Hyd. roller	Exhaust	(1) heavy-duty heat-treated .060" for use in Gen VI 454 and 502 engines with hydraulic roller lifters
12368081	1010 steel	3/8"	7.592"–8.569"	Hyd. roller	—	Kit of (8) P/N 10227762 and (8) P/N 10227763
88961559	4130 steel	3/8"	7.900"	Hyd. roller	Intake	Chrome-moly 1-piece for 572/620 (Tall Deck Block)
88961558	4130 steel	3/8"	8.900"	Hyd. roller	Exhaust	Chrome-moly 1-piece for 572/620 (Tall Deck Block)
88962284	4130 steel	3/8"	8.550"	Mech. roller	Intake	Chrome-moly 1-piece for 572/720 (Tall Deck Block) for engines built May 2010 or prior
88962283	4130 steel	3/8"	9.525"	Mech. roller	Exhaust	Chrome-moly 1-piece for 572/720 (Tall Deck Block) for engines built May 2010 or prior
19330131	4130 steel	3/8"	9.750"	Mech. roller	Exhaust	Chrome-moly 1-piece for 572/720 (Tall Deck Block) built after May 2010
19330132	4130 steel	3/8"	8.750"	Mech. roller	Intake	Chrome-moly 1-piece for 572/720 (Tall Deck Block) built after May 2010

BUILDER'S TIP

SHIMMING THE WAY TO CORRECT VALVE SPRING HEIGHT

The correct valve spring height is important to prevent coil bind and ensure uniform spring pressure among all the valves. Don't assume the installed height (with the valve closed) is correct out of the box. Each spring's height should be carefully measured and recorded. Shims – typically sold in 0.015" heights – can be used to bring the springs to the manufacturer's specifications. The important thing about installing them is to be sure that they go beneath the spring seat. Don't simply slip them on over the top of the spring seat. With 16 valve springs to measure, it's a long, tedious process, but an important one for performance and engine longevity.

VALVE COVERS

Top off your high-performance Big-Block with a pair of handsome Chevrolet Performance valve covers. These stylish, precision-fit valve covers come in a variety of finishes and colors. They're made out of die-cast aluminum or heavy-gauge stamped steel. Quality construction methods provide better sealing and less chance of leakage from deflection caused by over-tightened fasteners. Competition valve covers are designed to clear taller valvetrains.

NOTE: *Valve covers are sold in pairs unless otherwise specified.*

A. 12342093
Short Chrome Bowtie Valve Covers

- Show-quality covers embossed with the famous Bowtie logo and Chevrolet name
- Standard height, for use with 1965-1994 engines
- May not clear brake booster on some Corvette models

B. 12495488
Custom Aluminum Valve Covers

- Die-cast aluminum valve covers are black with a brushed aluminum finish on top revealing the Chevrolet name and Bowtie logo
- Can be finished with a custom engine designation badge (see page 344) not included
- For use on 1965-1994 engines
- Includes 2 covers, 1 grommet P/N 10198941, 1 grommet P/N 10198949, oil cap P/N 15681150 and 14 retaining bolts

C. 12371244
Aluminum Competition Design Valve Covers

- Display the Chevrolet name and Bowtie logo in natural aluminum finish, or paint to match engine or vehicle color
- No holes for PCV or oil fill, but bosses for drilling them
- Can be used on most Big-Block Chevrolet cylinder heads
- Use P/N 12370836 for single replacement part

NOTE: *Use with valve cover gasket P/N 14085759.*

D. 25534323
Aluminum Competition Design Valve Covers, Black Powder-Coat

- Display the Chevrolet name and Bowtie logo in black powder-coated covers
- No holes for PCV or oil fill, but bosses for drilling them
- Can be used on most Big-Block Chevrolet cylinder heads

NOTE: *Use with valve cover gasket P/N 14085759.*

E. 25534374
Aluminum Competition Design Valve Covers, Orange Powder-Coat

- Display the Chevrolet name and Bowtie logo in orange powder-coated covers
- One hole each cover for PCV or oil fill
- Can be used on most Big-Block Chevrolet cylinder heads

NOTE: *Use with valve cover gasket P/N 14085759.*

A Short Chrome Bowtie Valve Covers

B Custom Aluminum Valve Covers (shown with badge)

C Aluminum Competition Design Valve Covers

D Aluminum Competition Design Valve Covers, Black Powder-Coat

E Aluminum Competition Design Valve Covers, Orange Powder-Coat

Valve Covers, "572 Chevrolet" F

Valve Covers, "427 Chevrolet", Natural Appearance G

Valve Covers, "427 Chevrolet", Black Powder-Coat H

F. 12499200
Valve Covers, "572 Chevrolet"
- Used on all 572-cubic-inch crate engines and can be used on most Big-Blocks
- Cast aluminum with "572 Chevrolet" as part of the casting
- One cover has oil fill and breather holes and the second cover has the breather hole only

NOTE: *Requires push-in oil cap P/N 12341993, breather P/N 25534355 and breather tube P/N 88962074 that incorporates a baffle in the tube.*

G. 19202588
Valve Covers, "427 Chevrolet", Natural Appearance
- Natural finish
- Used on the Anniversary Edition 427 crate engine
- Can be used on any Big-Block engine

H. 19202589
Valve Covers, "427 Chevrolet", Black Powder-Coat
- Used on the ZZ427/480 crate engine
- Can be used on any Big-Block engine

Valve Covers: Additional Required Components

Part Number	Gaskets (Qty)	Bolts (Qty)	Grommets (Qty)	Oil Fillers (Qty)	Engine Application
12342093	14085759 (2)	88961871 (4)	12341988 (1)	12341993 (1)	12499121, 19201332, 12371204, 12497323, 12496963, 12371171, 19331579, 19331578, 19331576, Mark IV, V, VI BB
12495488	14085759 (2), OR Mark IV, V, VI (2)	25520079	10198941 OR 3989350	15681150	12499121, 19201332, 12371204, 12497323, 12496963, 12371171, 19331579, 19331578, 19331576, Mark IV, V, VI BB
12371244	14085759 (2)	88961871 (4)	N/A	12341993 (1)	12498793, 12498827, 12498792, 12498826, 19201333, 19201334, 19311581
25534323	14085759 (2)	88961871 (4)	N/A	12341993 (1)	12498793, 12498827, 12498792, 12498826, 19201333, 19201334, 19311581
25534374	14085759 (2)	88961871 (4)	N/A	12341993 (1)	12498793, 12498827, 12498792, 12498826, 19201333, 19201334, 19311581
12499200	14085759 (2)	88961871 (4)	12341988 (1)	12341993 (1)	12498793, 12498827, 12498792, 12498826, 19201333, 19201334, 19311581
19202588	14085759 (2)	88961871 (4)	12341988 (1)	12341993 (1)	12498793, 12498827, 12498792, 12498826, 19201333, 19201334, 19311581
19202589	14085759 (2)	88961871 (4)	12341988 (1)	12341993 (1)	12498793, 12498827, 12498792, 12498826, 19201333, 19201334, 19311581

Additional components required for installation.

HARDWARE AND BREATHERS

88962074
Oil Baffle Tube (not shown)
- Pushes easily into most valve covers that have an oil baffle
- Requires breather P/N 25534355, used on ZZ572 engines

A. 25534355
ZZ572 Breather
- Special breathers for the ZZ572 valve covers
- Chrome breathers are 1-3/8", hose-clamp-style with the Bowtie logo on top
- Use with oil baffle tube P/N 88962074
- Includes 2 breathers

B. 12341993
Push-In Oil Filler Cap
- For valve covers with 1.220" hole

19131218
Chrome Push-In Breather (not shown)
- 2-3/4" O.D. x 1-1/2" tall with 3/4" nipple
- Use with rubber grommet P/N 3894337

3894337
Rubber Grommet, Bowtie Valve Covers (not shown)
- Has 15/16" I.D. x 17/32" O.D.
- Can be used to plug the oil filler hole in Bowtie valve covers or to mount a push-in breather

14085759
Valve Cover Gasket (not shown)
- Steel-reinforced gasket fits all Big-Block Chevy valve covers
- Order 2 per engine

VALVE COVER BADGES

Designed to fit mounting area on valve covers P/N 12495488 (see page 312), these good-looking badges will fit some other Big-Block valve covers.

NOTE: *1 badge per package. Order 2 per engine.*

C. 12366995
Valve Cover Badge, "454 GM Performance Parts"

12366994
Valve Cover Badge, "502 GM Performance Parts"

ROCKER ARM STUDS AND ACCESSORIES

D. 3896648
Rocker Adjusting Nut
- Positive locking 7/16"–20 nut for all Big-Block V-8s

A ZZ572 Breather

B Push-In Oil Filler Cap

C Valve Cover Badges

D Rocker Adjusting Nut

Pushrod Guide Plate (3/8") E

Hydraulic Lifter Kit F

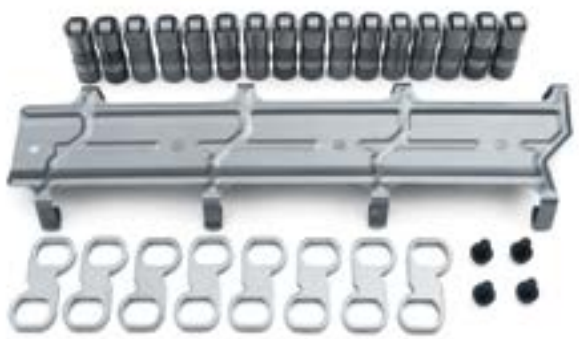

Hydraulic Roller Lifter Kit G

Mechanical Roller Lifter, ZZ572/720 H

BIG-BLOCK GUIDE PLATES

E. 3860038
Pushrod Guide Plate (3/8")

- Designed for all 1965-1990 iron and aluminum cylinder heads with 3/8" diameter pushrods
- Slotted style with hardened steel construction, aligns rocker arms with valve stem tips on Big-Block's splayed-valve head
- 8 required for each engine

NOTE: *Use with screw-in rocker stud P/N 3921912.*

3879620
Pushrod Guide Plate (7/16")(not shown)

- Similar to guide plate described above, but for use with heavy-duty 7/16" diameter pushrods

12562369
Pushrod Guide Plate (Gen V 454/502 style)(not shown)

- Used on all Gen V 454 and 502 engines with 3/8" diameter pushrods

VALVE LIFTERS AND COMPONENTS

F. 12371044
Hydraulic Lifter Kit (set of 16)

- For use on all 396, 427, 454, and 502 engines that use hydraulic flat tappet lifters
- For single-service replacement use P/N 5232720

17120060
Hydraulic Roller Lifter, ZZ572/620 (not shown)

- Roller valve lifters used on the ZZ572/620 engines
- Use with camshaft P/N 19210721, intake pushrod P/N 88961559, exhaust pushrod P/N 88961558 and rocker arm P/N 19210726

G. 12371056
Hydraulic Roller Lifter Installation Kit

- Hydraulic roller lifter retainer kit can be used on all Gen VI 454 and 502 engines that are machined for hydraulic roller lifters
- Includes 16 roller lifters P/N 17120061, 8 lifter guides, 1 lifter guide retainer and 4 retainer bolts
- For single-service replacement lifter, use P/N 17120061

NOTE: *These lifters allow more oil to the rocker arms than the late-model truck roller lifters.*

H. 19210719
Mechanical Roller Lifter, ZZ572/720

- Mechanical roller valve lifters used on the ZZ572/720 horsepower engines
- Use with camshaft P/N 19210722, intake pushrod P/N 88962284, exhaust pushrod P/N 88962283 and rocker arm P/N 19210726
- Kit of 16 lifters

12551397
Roller Tappet Guides (not shown)

- Roller tappet guides used with all 502 engines and 454 HO engines
- Used with roller camshaft engines
- Sold individually; order 8 per engine

12551399
Roller Tappet Guide Retainer (not shown)

- Roller tappet guide retainer used with all 502 engines and 454 HO engines
- Used with roller camshaft engines
- Order only 1 per engine

BIG-BLOCK CAMSHAFTS

The camshaft is one of the most important factors in determining an engine's overall performance profile and capability. The wide array of precision-engineered, extensively tested camshafts from Chevrolet Performance allows you to choose the best cam for your application. In order to avoid possible engine damage, a distributor with a melonized steel gear must be used with steel camshafts.

Part Number	Description	Duration @ .050" Lift (deg)	Maximum Lift (in)	Lobe Centerline (deg)	Technical Notes
12366543	Steel hydraulic roller	I: 224 / E: 234	I: .527 / E: .544	110	For 502/502 special engine. Must use distributor gear P/N 10456413.
24502611	Steel hydraulic roller	I: 211 / E: 230	I: .510 / E: .540	112	For 454 and 502 HO engines. Must use distributor gear P/N 10456413.
19210721	Steel hydraulic roller	I: 254 / E: 264	I: .632 / E: .632	112	For ZZ572/620 engine
19210722	Steel hydraulic roller	I: 278 / E: 282	I: .714 / E: .714	112	For ZZ572/720 engine

PISTONS AND PISTON RINGS

Pistons and rings operate in a very explosive environment, so they have to be extremely tough. Chevrolet Performance pistons and rings are designed to withstand the rigors of high-performance engines. The pistons are factory-tested for quality assurance. Chevrolet Performance pistons are sold in a variety of sizes and compression ratios. There are pistons for GM Big-Block engines ranging in displacement from 427 cubic inches to 572 cubic inches. Pistons are sold individually and are fitted with wrist pins.

NOTE: *Part numbers are for one piston; order eight per engine.*

Big-Block Pistons

Part Number	Engine Size	Bore Size	Oversize	Rod Length	Pin Type	Compression Ratio	Chamber Size	Ring Size	Description
12533507	502	4.470"	—	6.135"	Pressed	8.75:1	118cc	5/64", 1/16", 3/16"	Forged Gen V and Gen VI 502 replacement
88962925	572	4.560"	—	6.535"	Floating	9.6:1	118cc	1/16", 1/16", 3/16"	Forged 572/620
88963227	572	4.560"	—	6.535"	Floating	12.0:1	118cc	1/16", 1/16", 3/16"	Forged 572/720R

Big-Block Piston Rings

Part Number	Bore Size	Oversize	Ring Thickness	Description
12523921	4.250"	Standard	5/64", 5/64", 3/16"	Standard-size ring pack for Gen V 454 HO
12523923	4.250"	+.030"	5/64", 5/64", 3/16"	Oversize ring pack for Gen V 454 HO
12524293	4.470"	Standard	5/64", 1/16", 3/16"	Standard-size low-tension ring pack for all 502 engines
12524294	4.470"	+.030"	5/64", 1/16", 3/16"	Oversize low-tension ring pack for all 502 engines
12499212	4.560"	Standard	1/16", 1/16", 3/16"	Standard-size ring pack for 572 engines

Camshaft Bearings, 572 Engine **A**

Forged Steel Connecting Rod **B**

572 Connecting Rod **C**

572 Connecting Rod Bearing Kit **D**

CAMSHAFT COMPONENTS

A. 12499434
Camshaft Bearings, 572 Engine
- Five standard-size premium camshaft bearings for the ZZ572 engine

CONNECTING RODS AND COMPONENTS

B. 19170198
Forged Steel Connecting Rod
- Magnafluxed 4340 steel with heavy-duty 7/16" bolts
- Machined for pressed piston pins and color-coded white
- Used in Gen V 454 and 502 engines
- 6.135" c–c length

19211226
427 Forged Connecting Rod (not shown)
- 4340 Steel with 7/16" heavy duty bolts
- Machined for pressed piston pins
- Used in 427 Anniversary and ZZ427 engines
- Big end chamfered for large crank pin radius
- 6.135" c–c length

C. 88962926
572 Connecting Rod
- Forged 4340 steel H-beam for all 572 engines
- 6.535" c–c length
- Use rod bearing P/N 88961556

D. 88961556
572 Connecting Rod Bearing Kit
- Standard-size, premium connecting rod bearings
- Includes all 8 rod bearings

Crankshaft, Forged Steel (Gen V and Gen VI 502)

CRANKSHAFTS

Crankshafts are a critical, central component of any engine. Strength and durability are important traits of a great crankshaft. Chevrolet Performance crankshafts are precision-engineered to be both strong and durable. Chevrolet Performance understands how catastrophic crankshaft failure can be, so that's why our crankshafts are manufactured to such exacting specifications and tested to withstand the forces of high-performance engines. These crankshafts are the same tough parts used in Chevrolet Performance crate engines.

Part Number	Description	Technical Notes
3963524	Crankshaft, Forged Steel (454 and Mark IV 502-cubic-inches) (not shown)	Premium quality. Externally balanced. Nitride-treated 5140 forged steel with 4.000" stroke, cross-drilled 2.750" diameter main journals, and 2.200" diameter rod bearing journals. Used on 1965-1990 454 and 502 with 2-piece rear seal. ***NOTE:*** *Must be used with counterweighted torsional damper and flywheel or flexplate.*
14096983	Crankshaft, Forged Steel (Gen V and Gen VI 454) (not shown)	Externally balanced. Forged 1053 steel crankshaft with 1-piece rear main seal
10183723	Crankshaft, Forged Steel (Gen V and Gen VI 502)	Externally balanced. Cross-drilled. Nitride-treated forged 1053 steel crankshaft with 1-piece rear main seal. Forging P/N 14097044
19171620	Crankshaft, Forged Steel (Gen V and Gen VI 427)(not shown)	Steel crankshaft with 3.750" stroke for 1991-and-later. 427-cubic-inch engines. 1-piece rear main seal. Requires chamfered connecting rods (P/N 19211226 or 88962926) and rod. bearings P/N 88961556. Used in ZZ427 and Anniversary Edition 427 engines. Internally balanced
14061685	Roller Pilot Bearing (not shown)	Used in high-performance manual transmission applications

BALANCERS

Balancers are relatively small parts that play a big role in helping engines run smoothly. Balancers are also known as torsional dampers or harmonic balancers, which is indicative of how they help control unwanted crankshaft vibrations. By controlling vibrations, Chevrolet Performance balancers help engines run smoothly, which also extends engine life.

10216339
454 and 502 with 4.000" stroke crank, 1970 to present (not shown)
- 8" Outside Diameter
- Counterweighted for externally balanced engines

A. 88962814
572 Balancer
- 8" Outside Diameter
- This internal balance damper is designed with inner and outer shells
- Utilizes matched O-rings to control destructive crankshaft vibrations
- Black zinc chromate finish
- Laser engraved 360˚ timing marks

A 572 Balancer, P/N 88962814

14096987 Flywheel (see chart below)

12561217 Flexplate (see chart below)

FLYWHEELS AND FLEXPLATES

Chevrolet Performance offers both internally and externally balanced flywheels and flexplates. It is critical that you use the correct design for your specific engine application. Engines with one-piece crankshaft seals require externally balanced flywheels or flexplates (except for ZZ427, ZZ572/620, ZZ572/720R and the Anniversary Edition 427). Check the accompanying charts to find the correct parts for specific engine applications.

Big-Block Flywheels

Part Number	Year of Engine	Outside Diameter	Crank Flange Bolt Pattern	Clutch Diameter	Starter Ring Gear Teeth	Technical Notes
14085720	1965-present	12.750"	3.580"	10.4"	153	Lightweight nodular iron; weighs approximately 15 lbs; for internally balanced engines
3991469	1965-present	14"	3.580"	11"	168	Use with internally balanced engines
3993827	1970-1990	14"	3.580"	11"	168	Counterweighted for externally balanced 454 Mark IV 2-piece rear seal engines; use with balancer P/N 10216339
14096987	1991-present	14"	3.580"	11"	168	Lightweight nodular iron. For external balanced engines
12582964	1965-present	14"	3.580"	11.500"	168	Used with 427 or 572 crate engine. Internally balanced.

Big-Block Flexplates

Part Number	Year of Engine	Outside Diameter	Crank Flange Bolt Pattern	Converter Bolt Pattern	Starter Ring Gear Teeth	Technical Notes
10185034	1991-up	14"	3.580"	10.750" and 11.500"	168	Use with forged steel crank. Has dual-converter bolt pattern. (502 & 454 1-piece rear main seal)
12561217	1991-up	14"	3.580"	11.500"	168	427 ci crate engine production internally balanced .100" thick
471598	1965-present	14"	3.580"	10.750" and 11.500"	168	For internally balanced engines. Use with 572/620 crate engine. Has dual-converter pattern. .120" thick
14001992	1970-1990	14"	3.580"	11.500"	168	For externally balanced 454 Mark IV 2-piece rear main seal engines

Bolts and Dowels

Part Number	Description	Technical Notes
12337973	Flywheel Bolt (not shown)	Fits all Chevy Small-Block V-8, Big-Block V-8 and 90° V-6 engines. Sold individually; 6 required per engine
10046031	Flywheel Dowel (Big-Block, not shown)	Highly recommended for all high-performance and competition Big-Block engines
1453658	Bellhousing Dowel, Clutch Housing/Transmission Dowel (Big-Block) (not shown)	Use with Big-Block engine. Sold individually; 2 required per engine
3727207	Flexplate Bolt (not shown)	Fits all Chevy Small-Block V-8, Big-Block V-8 and 90° V-6 engines. Sold individually; 6 required per engine

Timing Chain Kit, 502 (second design Gen VI) **B**

Timing Chain, 502 (second design Gen VI) **C**

Camshaft Bolt **D**

TIMING CHAINS AND SPROCKETS

Chevrolet Performance's strong, accurate timing chains and sprockets provide top performance and dependable service.

B. 12371053
Timing Chain Kit, 502 (second design Gen VI)
- Heavy-duty timing chain kit for all second-design 502 Gen VI roller-lifter engines with aluminum front timing cover
- Kit includes chain P/N 10114177, crankshaft sprocket P/N 12550039, camshaft sprocket P/N 12551401, camshaft retainer and bolts
- Also used in 572

C. 10114177
Timing Chain, 502 (second design Gen VI)
- Single-roller design for all second-design 502 Gen VI engines
- Use with crankshaft sprocket P/N 12550039 and camshaft sprocket P/N 12551401

12554553
Camshaft Dowel Pin (not shown)

D. 9424877
Camshaft Bolt
- 5/16"-18 x 0.75" bolt

WATER PUMPS AND ACCESSORY DRIVE SYSTEMS

A. 19168602

Aluminum Water Pump, Short-Style

- Lightweight standard-rotation pump has reinforced snout and large-diameter hub with dual bolt patterns for early-and late-model pulleys
- Has short mounting legs
- Use with early-design V-belt drive rotation

B. 19168606

Cast-iron Water Pump, Long-Style

- Same standard-rotation pump used on all Chevrolet Performance 454 and 502 crate engines
- Not for use with a serpentine belt system

C. 19172805

Serpentine Accessory Drive Belt System With Air Conditioning

- Deluxe kit includes all the components and hardware necessary to install on a 9.800" deck or 10.200" tall deck engine (including bolts, nuts and spacer)
- Belt included

The system includes:

19152476	Alternator Assembly (cs130, reman)
19319858	Power Steering Pump (reman)
19168601	Water Pump Kit
88964862	A/C Compressor, R134a
10187612	A/C Compressor Bracket
10187613	A/C Compressor Bracket
10108470	Water Outlet
19245468	Crankshaft Pulley
88986828	Belt (water pump, A/C, alternator)
88986813	Belt (fan, water pump, A/C)
12552359	Tensioner
12552361	Idler Pulley
10085760	Fan and Water Pump Pulley
6272959	Thermal Bypass Hose Connector
1470030	Clamp
1485552	Heater Hose
12605677	Power Steering Pump Pulley
88961892	Power Steering Bracket (tall deck)
10187611	Alternator Bracket
10187610	Alternator/Power Steering Bracket

19172806

Serpentine Accessory Drive Belt System Without Air Conditioning (not shown)

- Deluxe kit includes all the components and hardware necessary to install on a 9.800" deck or 10.200" tall deck engine
- Kit includes hardware and belt

The system includes:

19152476	Alternator Assembly (cs130, reman)
19319858	Power Steering Pump (reman)
19168601	Water Pump Kit
10108470	Water Outlet
19245468	Crankshaft Pulley
88986828	Belt (water pump, A/C, alternator)
88986813	Belt (fan, water pump, A/C)
12552359	Tensioner
12552361	Idler Pulley
10085760	Fan and Water Pump Pulley
6272959	Thermal Bypass Hose Connector
1470030	Clamp
1485552	Heater Hose
12605677	Power Steering Pump Pulley
88961892	Power Steering Bracket (tall deck)
10187611	Alternator Bracket
10187610	Alternator/Power Steering Bracket
10055890	Idler Pulley

A Aluminum Water Pump, Short-Style

B Cast-iron Water Pump, Long-Style

C Serpentine Accessory Drive Belt System, with Air Conditioning

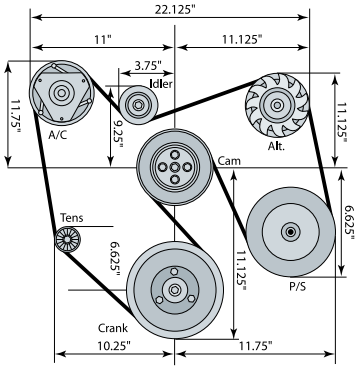

C Serpentine Accessory Drive Belt System, with A/C (Diagram)

Corvette Oil Pan (1965-1974) D

6-Quart Oil Pan E

6-Quart Oil Pan, Gen V and Gen VI F

4-Quart Oil Pan Kit, Gen V and Gen VI G

Dipstick Tube, 6-Quart H

Dipstick Tube, 4-Quart I

OIL PANS, OIL PUMPS, GASKETS AND COMPONENTS

Oil is an engine's lifeblood and a high quality Chevrolet Performance oil pan is what keeps it where it belongs. Properly designed and manufactured oil pans fit right, and when used with matching Chevrolet Performance gaskets, prevent leaks. We have oil pans for street and competition applications. Oil pans are sold without dipsticks or other hardware unless otherwise noted.

D. 14091356
Corvette Oil Pan (1965-1974)
- 5-quart pan has a trap-door baffle that controls oil slosh during cornering and heavy braking
- Windage tray is included and requires four mounting studs, P/N 3902885
- Used on LS7 engine assembly P/N 3965774

E. 14103141
6-Quart Oil Pan
- 6-quart pan fits all 1965-1990 engines

F. 10240721
6-Quart Oil Pan, Gen V and Gen VI
- Six-quart pan fits all 1991-and-newer Gen V and Gen VI, 427, 454, 502 and 572 engines

G. 12495360
4-Quart Oil Pan Kit, Gen V and Gen VI
- Fits 1991-and-newer Gen V and Gen VI 427, 454 and 502 engines
- Fits many early-model Chevelles and Camaros
- Includes a 4-quart oil pan, 4 main cap-bolts, oil pump screen, oil level tube, oil level gauge, and oil pan gasket
- Pan is not available separately

12557083
Dipstick, 6-Quart (not shown)
- For use with production 6-quart oil pan P/N 10240721 or P/N 14103141
- Use oil dipstick tube P/N 12550533 and seal P/N 274244

H. 12550533
Dipstick Tube, 6-Quart
- For use with production 6-quart oil pan P/N 10240721 or P/N 14103141
- Use oil dipstick P/N 12557083 and seal P/N 274244

274244
Oil Dipstick Tube Seal, 6-Quart (not shown)
- For use with the production 6-quart oil pan P/N 10240721 or P/N 14103141
- Use oil dipstick tube P/N 12550533 and dipstick P/N 12557083

3989391
Dipstick, 4-Quart (not shown)
- For use with 4-quart oil pan kit P/N 12495360 for all Gen V and Gen VI engines
- Use dipstick tube P/N 329231

I. 329231
Dipstick Tube, 4-Quart
- For use with 4-quart oil pan kit P/N 12495360
- Use oil dipstick P/N 3989391

Oil Pans, Oil Pumps, Gaskets and Accessories Continued

A. 14097040
Windage Tray
- Use with the Gen V and Gen VI 454 and 502 engines

B. 3967854
Windage Tray
- Separates the oil from the spinning crank assembly to reduce aeration of the oil, aids in oil control and minimizes oil slosh under hard braking
- Use with oil pan P/N 14091356
- Requires four mounting studs P/N 3902885

C. 88962187
Windage Tray, 572 Engine
- Used on all 572-cubic-inch engines
- Use with oil pan P/N 14091356
- Requires four mounting studs P/N 88958656

3969870
Oil Pump and Pick-Up (not shown)
- Heavy-duty pump
- 1.300" wide gears for increased volume; suitable for all Mark IV engines
- Distance from the pump mounting surface to the bottom of the pick-up tube screen is 4.940"
- Pick-up tube is tack-welded to the pump body
- Use with Corvette-style oil pan P/N 14091356

D. 19131250
Oil Pump and Pick-Up, 572 Engine
- For use with all 572-cubic-inch engines
- Use with oil pan P/N 10240721, oil pan gasket P/N 19213986 and windage tray P/N 88962187

E. 3865886
Oil Pump Shaft
- Heavy-duty all-metal
- Intermediate shaft fits all Big-Block engines

19210599
Oil Pump and Pick-Up, Gen V and Gen VI (not shown)
- For use with the Gen V and Gen VI 454 and 502 engines with 1-piece rear main seal
- Pump has 1.300" gears and will fit Mark IV engines
- Distance from the mounting surface to the bottom of the screen is 5.870"

NOTE: *Tack-welding pick-up tube to pump is recommended.*

3955281
Oil Pump Pick-Up (not shown)
- Distance from pump mounting surface to lowest point of screen is 4.880"

NOTE: *Weld or braze the pick-up tube to the pump cover for off-highway applications.*

F. 19299222
Oil Filter Adapter (fits Mark IV Blocks only)
- Mounts a spin-on cartridge oil filter
- Contains a filter bypass valve used on all V-8 engines

G. 25013759
Oil Cooler Bypass Valve
- For high-performance and Bowtie Big-Blocks with 4-bolt main bearing caps
- Must be installed in the rear hole behind the oil filter adapter bolt to route oil through the cooler

24241872
Magnetic Drain Plug (not shown)
- Catches and holds small pieces of metal before they can cause engine damage

A Windage Tray

B Windage Tray

C Windage Tray, 572 Engine

D Oil Pump and Pick-Up, 572 Engine

E Oil Pump Shaft

F Oil Filter Adapter

G Oil Cooler Bypass Valve

Distributor, HEI **H**

Distributor, Billet HEI **I**

Distributor, Ram Jet 350 & Ram Jet 502 **J**

Distributor, Adjustable Slip Collar **K**

DISTRIBUTORS AND COMPONENTS

The high-quality distributors in this group are interchangeable with Small-Block Chevrolet V-8 components. Chevrolet Performance distributors cannot be used with Tall-Deck Bowtie blocks, except adjustable distributor P/N 10093387.

H. 93440806
Distributor, HEI
- Cast aluminum
- High-performance mechanical advance curve
- Vacuum advance canister included
- Use connector P/N 12167658 to attach tachometer and 12-volt power supply wire to distributor
- Includes module P/N 19180771, cap P/N 19110931 and rotor P/N 19110934

I. 88961867
Distributor, Billet HEI
- Chevrolet Performance's most powerful and durable distributor
- For strength and high rpm stability the oversized shaft is guided by a sealed ball bearing and long sintered bushing
- Treated coating on the shaft provides low friction
- Advance assembly features chrome-moly weights that slide on nylon pads for smooth timing advancement through the entire rpm range
- Vacuum advance canister and billet aluminum housing is CNC-machined for greater accuracy
- Has melonized cam drive gear P/N 10456413 for steel roller camshafts
- High-quality cap with brass terminals

J. 1104060
Distributor, Ram Jet 350 and Ram Jet 502
- Used on the fuel-injected Ram Jet 350 and Ram Jet 502
- Includes ignition module P/N 10482830, cap P/N 19166099 and rotor P/N 10477219

1103952
Distributor, Late-Model EFI (not shown)
- Used on late-model V-8 engines with fuel injection and computer controls
- Kit includes ignition module, cap and rotor

K. 10093387
Distributor, Competition Adjustable Slip Collar
- Designed primarily for competition use
- Billet-aluminum housing, ball-bearing guide and adjustable mechanical-advance assembly
- Magnetic pickup provides accurate trigger signals to Chevrolet Performance Heavy Duty Ignition P/N 10037378 (not included)
- Uses a standard Chevrolet V-8 cap and rotor
- Will clear most induction systems
- Slip collar that can be adjusted to make up for block or head machining, or a tall-deck Bowtie block

19052845
Distributor Gear (not shown)
- Melonized iron gear is required on all crate engines and steel roller camshafts
- Assembly without using this gear may affect the warranty

10456413
Distributor Gear (not shown)
- Melonized iron gear is required on all Chevrolet Performance crate engines
- Failure to use this gear will affect the engine warranty

NOTE: *Supplied on distributor P/N 93440806.*

12167658
Connector, HEI Distributor Power and Tachometer (not shown)
- Used to attach the power and tachometer wires to the cap of the HEI distributor

12498335
Coil, HEI (not shown)
- Production HEI coil

INTAKE MANIFOLDS, GASKETS AND COMPONENTS

The wide range of Chevrolet Performance intake manifolds are cast-iron and aluminum for carbureted and fuel injected applications. These intake manifolds were designed specifically for GM engines so you know they will deliver optimum performance. Due to the profile of some Chevrolet Performance high-rise intake manifolds, hood clearance should be carefully checked before ordering an intake manifold.

A. 14097092
Intake Manifold – Oval-Port, iron, spread bore

- Economical iron 4-bbl intake manifold
- Fits all 396–502 engines with large oval-port heads

NOTE: *Open carburetor spacer is not recommended with use of dual-plane manifolds.*

B. 19131359
High-Rise Intake Manifold – Rectangular-Port, square bore, Holley Carburetors

- Aluminum, dual-plane manifold can be used with high-performance cast-iron or aluminum rectangular port heads
- Same as used on 454 HO and 502 HO engine assemblies

NOTE: *Ports do not match Bowtie cylinder heads P/N 14044861 and P/N 12363425.*

NOTE: *Open carburetor spacer is not recommended with use of dual-plane manifolds.*

C. 12363420
High-Rise Intake Manifold – Oval-Port

- Designed for all 396-502 engines with GM aluminum heads (1975 and earlier) and large oval-port iron heads
- Has a dual-plane design with spread bore flange and a dual-bolt pattern
- Has no provisions for a hot-air choke, but will accept a divorced choke or electric choke
- Accepts air conditioning and alternator brackets
- Use intake manifold gasket P/N 12366985 and bolt kit P/N 12367959

NOTE: *May not fit on many Corvette models. Manifold height is 6" at the rear and 4.5" in front. Check for hood clearance before ordering.*

NOTE: *Open carburetor spacer is not recommended with use of dual-plane manifolds.*

12363421
High-Rise CNC-Port-Matched Intake Manifold – Oval-Port, spread bore (not shown)

- Similar manifold design as P/N 12363420 (see above), but it is "CNC" port-matched to Chevrolet Performance oval-port aluminum cylinder heads

NOTE: *Open carburetor spacer is not recommended with use of dual-plane manifolds.*

D. 12363406
Intake Manifold – Oval-Port, square bore, Holley Carburetors

- Same as manifold P/N 12363420 (see above), but designed for use with a Holley carburetor
- Dual-plane design requires bolt kit P/N 12367959, which includes 16 bolts (8740 chrome-moly 3/8-16 x 1.5" with 3/8" hex head and 16 5/8" O.D. washers), and manifold gasket kit P/N 12366985
- Accepts air conditioning and alternator brackets and a late-model water neck

NOTE: *Will not fit production Corvettes, and may not fit Chevelles. Manifold carb flange height is 4.450."*

NOTE: *Open carburetor spacer is not recommended with use of dual-plane manifolds.*

A Intake Manifold, Oval Port (iron)

B High-Rise Intake Manifold, Rectangular Port

C High-Rise Intake Manifold, Oval Port

D Intake Manifold, Oval Port (Holley Carburetors)

CNC-Port-Matched Intake Manifold, Oval Port (Holley Carburetors) **E**

Intake Manifold, ZZ572/620 Engine **F**

Intake Manifold, ZZ572/720R Engine **G**

E. 12363407 ⓘ
CNC-Port-Matched Intake Manifold – Oval-Port, square bore, Holley Carburetors

- Same as P/N 12363406 (see previous page), except it has been CNC-port-matched for GM aluminum oval-port heads with large oval-port heads (1975-and-older), and all aluminum heads with oval-ports

NOTE: *Open carburetor spacer is not recommended with use of dual-plane manifolds.*

F. 88961161 ⓘ
Intake Manifold – ZZ572/620 Engine, square bore, Holley Carburetors

- Aluminum single-plane intake manifold is used on the ZZ572/620 engine
- The carburetor flange is for a 4150-style carburetor
- Use intake gasket P/N 88962213
- For tall-deck blocks

G. 88962218 ⓘ
Intake Manifold – ZZ572/720R Engine

- Aluminum single-plane intake manifold is used on the ZZ572/720R engine
- The carburetor flange is for a 4500 Dominator-style carburetor
- Use intake gasket P/N 88962213
- For tall-deck blocks

ⓘ Intake Manifolds: Additional Required Components

Part Number	Gaskets (Qty)	Bolts (Qty)	Engine Application
12464484	12366985 (1)	12497460 (1)	12499121
12464482	12366985 (1)	12367959 (1)	12499121
88961161	88962213 (1)	12367959 (1)	19201333, 19331583
12363420	12366985 (1)	12367959 (1)	12498777, 19331574, BB Oval Port High Rise
12363407	12366985 (1)	12367959 (1)	19201332, 12371171, 19331579, CNC version of 12363406
19131359	12506106 (2)	10198997 (14)	12568774, BB Dual Plane
88962218	88962213 (1)	12367959 (1)	19201334, 19331585

RAM JET 502 COMPONENTS

Ram Jet Fuel Injection Kit, with MEFI-4 Electronics

- Retro-fit fuel injection kit is calibrated for a 502/502 Chevrolet Performance engine and is the same as used on the Ram Jet 502 P/N 12499121
- May be used on other Big-Block applications by replacing the ECU unit with an aftermarket unit with the proper calibration
- Includes brackets, sensors, bolts, nuts, gaskets and other small parts, including:

Part Number	Description	Quantity
88962744	Instruction Manual	1
12489400	Diagnostic Trouble Code Tool	1
12555320	Intake Manifold Oil Shield	1
12366985	Gasket Package	1
12367959	Bolt/Screw Package	1
12489372	Upper Intake Manifold Gasket	1
12487372	Fuel Feed Hose	1
10216948	Tube Assembly–Fuel Press Regulator	1
88961968	Engine Harness Assembly	1
10456208	Knock Sensor	1
12489595	Bracket Assembly, Transmission Cable	1
12489596	Bracket Assembly, Transmission, Throttle Cable	1
12489597	Rod, Throttle Control	1
1104060	Distributor	2
1115491	Ignition Coil	1
12464482	Lower Intake Manifold	1
12464484	Upper Intake Manifold	1
17113524	Body Assembly Throttle	1
12490257	Air Filter Kit	1
12569240	MAP Sensor	1
25036751	Intake Air Temperature Sensor	1
17090919	Injector Assembly (discontinued)	8
17113222	Fuel Injector Retainer Kit	1
17120039	Rail Assembly, Multi-Port Fuel Injection	1
19245527	Fuel Pressure Regulator Assembly	1
88962718	Module Assembly Engine Cont.	1
15326386	Coolant Temperature Sensor	1
19178918	O2 Sensor	1
12487373	Connector, Fuel Rtn. Line	1

Electronic Control Units & Components

88962718
ECU, Ram Jet 502 (not shown)

- Replacement ECU for all Ram Jet 502 engines (MEFI 3 P/N 12497323 or MEFI 4 P/N 12499121)
- MEFI 4 Ram Jet engine is a closed-loop system that gives a much smoother idle and improved performance

***NOTE**: Replacing the ECU on MEFI 3 Ram Jet engine P/N 12497323 requires using new wire harness kit P/N 12499117, or jumper wire P/N 88963118 to use MEFI 4 ECU as an open-loop system.*

12499117
MEFI 4 ECU & Wire Harness Kit, Ram Jet 502 (not shown)

- Module/harness kit is used to convert a Ram Jet 502 from MEFI 3 to the newer MEFI 4 design, which offers improved idle and performance through a closed-loop system
- Includes module P/N 88962718, wire harness P/N 88961968, oxygen sensor P/N 19178918, intake air temp sensor P/N 25036751 and oxygen sensor fitting P/N 15156588

***NOTE:** The ECU is programmed with a "green mode" that controls the rpm for the break-in period. During this period, engine speed is limited to 4,000 rpm in the first hour, 4,500 rpm in the second hour and 5,500 rpm in the third hour.*

88963118
Jumper Harness, MEFI 3 to MEFI 4 (not shown)

- Allows an MEFI 4 module to be used with an MEFI 3 wiring system (to stay as an open-loop system)
- Fits both Big-Block and Small-Block engines

88961968
MEFI 4 ECU Harness, Ram Jet 502 (not shown)

- Used in the MEFI 4 Ram Jet 502 P/N 12499121 with the MEFI 4 closed-loop oxygen sensor-equipped system
- Use with MEFI 4 ECU P/N 88962718

Lower Manifold, 502 Ram Jet **A**

Upper Manifold, 502 Ram Jet **B**

Oil Shield **C**

Gasket, Aluminum Oval-Port Heads **D**

Bolt Kit, Intake Manifold **E**

Water Neck **F**

A. 12464482 ❗
Lower Manifold, 502 Ram Jet
- Aluminum lower portion of the intake manifold is used on Ram Jet 502 crate engine P/N 12499121
- Use with upper manifold P/N 12464484 (see below), upper manifold gasket P/N 12489372 and bolt package P/N 12497460

B. 12464484 ❗
Upper Manifold, 502 Ram Jet
- Aluminum upper portion of the intake manifold is used on Ram Jet 502 crate engine P/N 12499121
- Use with lower manifold P/N 12464482 (see above), upper manifold gasket P/N 12489372 and bolt package P/N 12497460

MANIFOLD GASKETS AND COMPONENTS

C. 12555320
Oil Shield
- Isolates hot engine oil from the air/fuel mixture

D. 12366985
Gasket, Aluminum Oval-Port Heads
- Designed for Big-Block aluminum heads P/N 12363390, P/N 12363392, P/N 12363399, P/N 19331425, P/N 19331424 and P/N 19331422
- Use with manifold P/N 12363406, P/N 12363407, P/N 12363420 or P/N 12363421

88962213
Intake Manifold Gasket (not shown)
- Use on all Big-Block engines with rectangular intake port heads 396 through 572-cubic-inch
- Includes 2 gaskets

12506106
Gasket, 454 and 502 Engines (not shown)
- Used on 454 and 502 engines; with restricted heat cross-over passages
- 1 gasket per package; order 2 per engine.

E. 12367959
Bolt Kit, Intake Manifold
- For any Big-Block Chevrolet engine
- Includes 16 bolts: 3/8"-16 x 1.5" with wide, underhead flange with a 7/16" hex head
- Rated at 170,000 psi and will give consistent torque load
- Includes 16 hardened flat washers

NOTE: *Four of these washers are smaller in diameter for use around the front water passages.*

CHROME WATER NECKS

F. 12342024
Water Neck
- Chrome water neck with neoprene O-ring and chrome bolts
- For 1966-1975 full-size Chevrolet, Camaro, and Chevelle V-8 engines

10108470
Aluminum Water Outlet (not shown)

STARTERS

Flywheels with two different diameters are used on Chevrolet Small-Block, Big-Block, and 90° V-6 engines. Large flywheels are 14" in diameter and have 168 teeth on the starter ring gear. Small-diameter flywheels are 12.750" in diameter, with 153 teeth on the ring gear.

This difference in flywheel diameters requires two distinct starter housings. Starter noses used with large-diameter flywheels have two offset bolt holes, while starters for small flywheels have two bolt holes that are parallel to the back of the block. Most Chevy blocks are drilled for both types of starters.

A. 12361146
High-Torque Mini Starter

- Gear reduction starter is designed for 1958-1996 V-8 and all 90° V-6 engines
- Compact design provides increased clearance
- Weighs only 10.5 pounds and has a gear reduction of 3.75:1
- Equipped with a dual bolt pattern for 12.750" (153-tooth) and 14" (168-tooth) flywheels
- Housing can be rotated to clear exhaust systems
- Includes starter, mounting bolts, shims, gaskets and electrical connectors

NOTE: *Not recommended for competition use.*

B. 12363128
High-Torque Mini Starter, Chrome

- Same as starter P/N 12361146 (see above), but with a chrome housing

C. 10465143
Lightweight Starter (remanufactured)

- Lightweight high-performance starter was originally used on 1993-1997 Camaros and Firebirds with the LT1 engine
- Can be used on any Small-Block or Big-Block engine with a 12.750", 153-tooth flywheel

D. 19302919
Lightweight Starter, Big-Block and Small-Block

- Gear reduction starter can be used on Big-Block and Small-Block engines with a 14", 168-tooth flywheel

A High-Torque Mini Starter

B High-Torque Mini Starter, Chrome

C Lightweight Starter 12.750" Flywheel (remanufactured)

D Lightweight Starter 14" Flywheel

Starters: Additional Required Components

Part Number	Bolts (Qty)	Engine Application
12361146	12338064 (2)	Big-Block
10465143	12338064 (2)	Big-Block
12606096, 19302919	12338064 (2)	Big-Block and 12499121, 12496962, 12497323, 12371171, 19201332
12363128	12338064 (2)	Big-Block

Additional components required for installation.

Carburetor, Holley 850-cfm **E**

Carburetor, Holley 870-cfm **F**

Carburetor, Holley Dominator 1150-cfm **G**

CARBURETORS AND THROTTLE BODIES

Chevrolet Performance has the right carburetor or throttle body to complete your new crate engine, or give life to your rebuilt engine. Then, top off your engine with one of our great-looking air cleaners.

Carburetors

19170093
Carburetor, Holley 770-cfm (not shown)

- Holley 4160-style 770-cfm 4-bbl carburetor
- Features show-car-quality polished finish
- Dual feed, center-hung float bowls
- Vacuum secondaries
- Automatic electric choke
- Quick-change adjustable vacuum secondary
- Recommended for Small-Block and Big-Block engines, including street, competition, towing and off-road vehicles
- Bolts and gaskets included
- Replaces Holley 4160 750-cfm carburetor P/N 12485506

E. 19170095
Carburetor, Holley 850-cfm

- Holley 4150-style 850-cfm 4-bbl carburetor
- Features show-car-quality polished finish
- Mechanical secondaries
- Electric choke
- Four-corner idle adjustment
- Power valve blowout protection
- Custom-calibrated for the ZZ572/620 crate engine
- Recommended for 502 crate engines and suitable for Big-Block engines, including street, competition, towing and off-road vehicles
- Bolts and gaskets included
- Replaces Holley 4160 850-cfm carburetor P/N 88961560

NOTE: *Carburetor can only be recalibrated for use with other large-displacement engines.*

F. 19170094
Carburetor, Holley 870-cfm

- Holley 4160-style 870-cfm 4-bbl carburetor
- Features show-car-quality polished finish
- Dual feed, center-hung float bowls
- Vacuum secondaries
- Automatic electric choke
- Quick-change adjustable vacuum secondary
- Recommended for 502 crate engines and suitable for Big-Block engines, including street, competition, towing and off-road vehicles
- Bolts and gaskets included
- Replaces 4150-style 850-cfm carburetor P/N 12366996

G. 19170096
Carburetor, Holley Dominator 1150-cfm

- Dominator-style 1150-cfm 4-bbl carburetor
- Features show-car-quality polished finish
- Mechanical secondaries
- Four-corner idle adjustment
- Power valve blowout protection
- Custom-calibrated for the ZZ572/720R crate engine
- Bolts and gaskets included
- Replaces 4500-style 1090-cfm carburetor P/N 88962217

Throttle Bodies

17113524
Throttle Body, Ram Jet 502 (not shown)

- Used on the Ram Jet 502 crate engine
- Use throttle body gasket P/N 10105379 and bolt P/N 11516344 for installation
- Dual 49.9mm blades

AIR CLEANERS

A. 12342080

Air Cleaner, Chevrolet-Logo High-Performance Design

- 14" round high-performance style air cleaner has chrome lid with embossed Chevrolet name
- Fits most 4-bbl and 2-bbl carburetors
- Will not fit Dominator-style carburetors
- Bowtie nut not included

NOTE: *Check clearance between hood and top of air cleaner. Minimum clearance is 3.750" from top of carburetor gasket area to underside of hood.*

B. 12342071

Air Cleaner, Chevrolet-Logo Classic Design

- 14" round classic-style air cleaner has chrome lid with embossed Chevrolet name and Bowtie attaching nut
- Fits most 4-bbl and 2-bbl carburetors
- Will not fit Dominator-style carburetors

12490257

Air Cleaner, Ram Jet 502 (not shown)

- Designed for use with throttle body on Ram Jet 502 crate engine
- Can be used on other applications

SPARK PLUG WIRES

C. 12368384

Chevrolet Bowtie Logo Wires

Chevrolet Performance spark plug wire kits are designed to fit your GM engine, eliminating the guesswork in selecting the correct length. These performance 8mm spark plug wires exhibit only 600 ohms per foot of resistance, with high noise suppression capabilities. Features include red wires with white Chevrolet insignia and black boots. Manufactured with double-wall silicone construction.

- Kits include a 10" coil wire for engines, such as Ram Jet 350 and ZZ572 engines that have remote-coil HEI, plus four wire separators and HEI terminals and boots for the distributor cap.
- Custom-fit set designed to be used with black wire loom P/N 12495502

WIRE LOOM KIT

D. 12495502

Wire Loom Kit, Big Block

- Used on late-model Big-Block trucks
- Supplied with one left-hand support P/N 12553397, one right-hand support P/N 12553398, three four-wire retainers P/N 88891792, two three-wire retainers P/N 12163607, two two-wire retainers P/N 12132229, and two single-wire retainers P/N 12132228

A Air Cleaner, Chevrolet Logo, High Performance Design

B Air Cleaner, Chevrolet Logo, Classic Design

C Spark Plug Wires, Chevrolet Bowtie Logo

D Wire Loom Kit, Big-Block

Electric Fuel Pump **E**

Camaro ZL1 Fuel Pump Module **F**

Electric Fuel Pump, High Output **G**

Fuel Filter **H**

ELECTRIC FUEL PUMPS AND COMPONENTS

E. 6472657
Electric Fuel Pump
- For use on all carbureted engines
- Flows 30-40 gph at 6-9 psi

F. 19303293
Camaro ZL1 Fuel Pump Module
- Production fuel pump module for the 2012 Camaro ZL1 with supercharged LSA engine
- Supports approximately 600 horsepower
- Direct replacement for 2010+ Camaro SS fuel pump modules
- 250 liters per hour capacity at 65 psi
- Pulse-width modulated, eliminates need for conventional pressure regulator
- Kit includes fuel pump module/sender assembly tank seal and instruction sheet

G. 25115899
Electric Fuel Pump, High-Output
- Heavy-duty 12-volt electric rotary pump
- Flows 72 gph at 6-8 psi

19245530
Fuel Pressure Regulator Kit (not shown)
- Used on Ram Jet 502 crate engine
- Fits other fuel-injected engines

H. 854619
Fuel Filter
- High-capacity inline filter
- Suitable for all high-performance carbureted applications
- 5/16" inlet and outlet

TRANSMISSIONS & Components

Factory-Engineered to Deliver Performance and Dependability

Chevrolet Performance's comprehensive range of transmissions, installation kits and related components supports high-performance engines with factory-matched torque capacity ratings and proven durability.

Our SuperMatic transmissions offer the ultimate in automatic transmission capability for Small-Block, Big-Block and LS/LT engines – and every Chevrolet Performance automatic transmission is backed by a 12-month warranty.

Chevrolet Performance's gearbox lineup also includes manual-transmission applications, including kits that adapt our TREMEC T56 Super Magnum six-speed to all engine families. They're perfect for mixing the classic four-speed looks with modern performance in a vintage muscle car, classic truck or street rod.

Our transmission controller kits complement the ready-to-run convenience of our crate engines, for quick plug-and-play operation. It all means that no matter if you're running an automatic or a manual, Chevrolet Performance will "gear" you straight!

IMPORTANT! *Chevrolet Performance does not include a torque converter with automatic transmissions. A variety of torque converters for 4L60- and 4L80-series transmissions tailored for the wide variety of our crate engines' performance specifications are available. Select the transmission that's just right for your project and select the torque converter to match its performance. See page 364 for more details.*

NOTE: *Chevrolet Performance's electronically controlled transmissions are not compatible with the mechanical speedometers in older vehicles. An aftermarket signal converter or electronically compatible replacement speedometer is required.*

HYDRA-MATIC TRANSMISSION FAMILY TREES

4L60-E Series

The Hydra-Matic 4L60/4L65/4L70 family of transmissions is differentiated primarily by gearset design. Each planetary gearset in the 4L60 has four pinion gears. There are five pinion gears in the 4L65 and 4L70, but the 4L70 has a higher torque rating. The external dimensions and mounting provisions are identical for each transmission in the 4L60 family. The maximum torque capacity for each includes:

4L60-E – 380 lb.-ft.

4L65-E – 430 lb.-ft.

4L70-E – 495 lb.-ft.

4L80-E Series

The production-based Hydra-Matic 4L80 and SuperMatic 4L85 transmissions are differentiated by gearset design. Each planetary gearset in the 4L80 has four pinion gears, while the 4L85 has five pinion gears. The external dimensions and mounting provisions are identical for each. The maximum torque capacity for each includes:

4L80-E – 440 lb.-ft.

4L85-E – 685 lb.-ft.

Parts shown clockwise from top:

SuperMatic™ 4L85-E Transmission

T56 Super Magnum Six-Speed Manual Transmission

Clutch Kit, Big-Block

SuperMatic™ Torque Converter

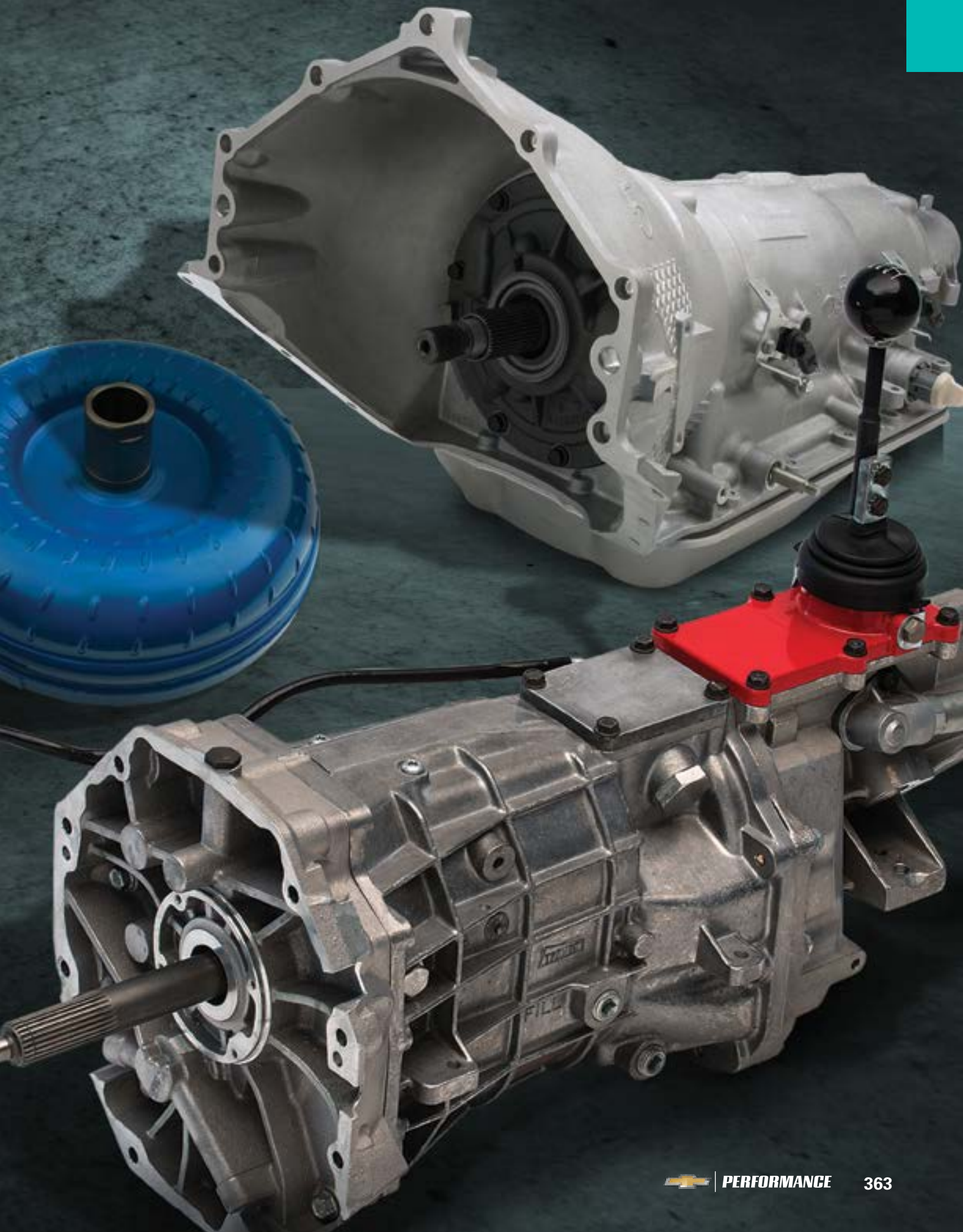

NOTE: *Must use 14" (168-tooth) Flexplate with SuperMatic™ Torque Converters.*

Performance SuperMatic™ Torque Converters

The SuperMatic™ Torque Converters from Chevrolet Performance are designed to provide long life when matched with a SuperMatic™ Transmission. Each converter incorporates the following features:

- **Steel billet front cover**
- **Custom stator**
- **Fully furnace brazed pump and turbine**
- **"Heavy-duty" lock-up clutch**
- **All internal components static balanced**
- **Fully vector balanced as an assembly**
- **Designed for Chevrolet Performance crate engines and automatic transmissions**
- **No external adapters needed to fit Chevrolet Performance crate engines.**

Part Number	Stall Range	Application
19299800	2,400-2,800 RPM stall	4L60/65/70E (late "LS" V-8 transmission) mate to early Gen 1 SB/BB (dual bolt pattern – 10.75" and 11.5") Note: Will not fit 153-tooth flexplate
19299801	3,000-3,400 RPM stall	4L60/65/70E (late "LS" V-8 transmission) mate to early Gen 1 SB/BB (dual bolt pattern – 10.75" and 11.5") Note: Will not fit 153-tooth flexplate
19299802	2,400-2,800 RPM stall	4L60/65/70E (late "LS" V-8 transmission) mate to LS V-8 engine (single bolt pattern – 11.062")
19299803	3,000-3,400 RPM stall	4L60/65/70E (late "LS" V-8 transmission) mate to LS V-8 engine (single bolt pattern – 11.062")
19299804	2,400-2,800 RPM stall	4L80E/4L85E – mate to early Gen 1 SB/BB (dual bolt pattern – 10.75" and 11.5")
19299805	3,000-3,400 RPM stall	4L80E/4L85E – mate to early Gen 1 SB/BB (dual bolt pattern – 10.75" and 11.5")
19299806	2,400-2,800 RPM stall	4L80E/4L85E – mate to LS V-8 engine (extended pilot) (single bolt pattern – 11.062")
19299807	3,000-3,400 RPM stall	4L80E/4L85E – mate to LS V-8 engine (extended pilot) (single bolt pattern – 11.062")

Converters are a kit that includes converter-to-flexplate bolts and instructions.

Torque Converter Quick Reference Chart

Automatic Transmission Torque Converter Match Listing

Engine P/N	Description	Displac.	hp	Torque	4L60 Family		4L80 Family	
					Fits SuperMatic 4L65-E and 4L70-E (LS bell)		Fits SuperMatic 4L85-E	
					Converter P/N	Stall Range	Converter P/N	Stall Range
Chevy Small-Block V-8								
19244450	350/290 Deluxe	350 cu in	300	335	19299800	2,400-2,800	N/A	N/A
19210009	350 HO Turn-Key–with Iron Vortec Heads	350 cu in	333	381	19299800	2,400-2,800	N/A	N/A
12499120	Ram Jet 350–PFI with Iron Vortec Heads	350 cu in	351	403	19299800	2,400-2,800	19299804	2,400-2,800
19333157	SP350 Base	350 cu in	385	405	19299801	3,000-3,400	19299805	3,000-3,400
19333158	SP350 Turn-Key	350 cu in	385	405	19299801	3,000-3,400	19299805	3,000-3,400
19351532	ZZ6 Base	350 cu in	405	406	19299801	3,000-3,400	19299805	3,000-3,400
19351533	ZZ6 Turn-Key	350 cu in	405	406	19299801	3,000-3,400	19299805	3,000-3,400
19332529	HT383 Base–Performance Engine	383 cu in	323	444	19299800	2,400-2,800	19299804	2,400-2,800
19332532	SP383 Deluxe	383 cu in	435	445	19299801	3,000-3,400	19299805	3,000-3,400
Chevy LS/LT/LSX V-8								
19301326	LS3–Corvette Gen IV V-8	6.2L	430	425	19299802	2,400-2,800	19299806	2,400-2,800
19257230	LS3–E-Rod Kit Automatic	6.2L	430	425	19299802	2,400-2,800	19299806	2,400-2,800
19301358	LS376/480–LS3 Gen IV V-8	6.2L	495	473	19299803	3,000-3,400	19299807	3,000-3,400
19301359	LS376/515–Carbureted LS3 Gen IV V-8	6.2L	533	477	19299803	3,000-3,400	19299807	3,000-3,400
19301360	LS376/525–LS3 Gen IV ASA Camshaft	6.2L	525	486	19299803	3,000-3,400	19299807	3,000-3,400
19329008	DR525 (with Gen IV F car oil pan)	6.2L	525	498	N/A	N/A	N/A	N/A
19329009	DR525 (with muscle car oil pan)	6.2L	525	494	N/A	N/A	N/A	N/A
19331507	LSA 6.2L SC–Gen IV V-8	6.2L	556	551	N/A	N/A	19299806	2,400-2,800
19260165	LS9 6.2L SC–Gen IV V-8	6.2L	638	604	N/A	N/A	19299806	2,400-2,800
19244098	LS7 7.0L–Corvette Z06	7.0L	505	470	19299803	3,000-3,400	19299807	3,000-3,400
	Optional LS7 (depending on application)	7.0L	505	470	19299802	2,400-2,800	19299806	2,400-2,800
19260831	LSX376–B8	6.2L	476	475	19299802	2,400-2,800	19299806	2,400-2,800
19299306	LSX376–B15	6.2L	473	444	N/A	N/A	N/A	N/A
19260833	LSX454	7.4L	627	586	N/A	N/A	19299807	3,000-3,400
19260835	LSX454R	7.4L	776	649	N/A	N/A	N/A	N/A
19328728	LT1 (with wet sump)	6.2L	460	465	19299802	N/A	19299806	N/A
19329997	LT1 (with dry sump)	6.2L	460	465	19299802	N/A	19299806	N/A
Chevy Big-Block V-8								
19166393	ZZ427/480	427 cu in	480	490	19299801	3,000-3,400	19299805	3,000-3,400
12568774	454 HO–with Iron Heads and Roller Cam	454 cu in	438	500	19299800	2,400-2,800	19299804	2,400-2,800
19351574	ZZ454/440–440 Horsepower with Aluminum Heads	454 cu in	469	519	19299800	2,400-2,800	19299804	2,400-2,800
88890534	HT502–Truck Replacement Engine	502 cu in	406	541	19299800	2,400-2,800	19299804	2,400-2,800
12568778	502 HO–with Iron Heads and Roller Cam	502 cu in	461	558	19299800	2,400-2,800	19299804	2,400-2,800
19331576	ZZ502/502 Base Engine–with Aluminum Heads	502 cu in	508	580	19299801	3,000-3,400	19299805	3,000-3,400
19331579	ZZ502 Deluxe–(Deluxe/Assembled) with Aluminum Heads	502 cu in	508	580	19299801	3,000-3,400	19299805	3,000-3,400
12499121	Ram Jet 502–PFI with Aluminum Heads	502 cu in	502	568	19299801	3,000-3,400	19299805	3,000-3,400
19331583	ZZ572/620 Deluxe	572 cu in	621	645	N/A	N/A	19299805	3,000-3,400
19331585	ZZ572/720R Deluxe	572 cu in	727	680	N/A	N/A	19299805	3,000-3,400

AUTOMATIC TRANSMISSIONS & COMPONENTS

19260380 ▶
Hydra-Matic 4L65-E Four-Speed Automatic Transmission – LS-Series V-8

- Similar in design to the 4L60-E
- Electronically controlled four-speed overdrive transmission
- Features five-pinion gearsets, heat-treated stator shaft splines, induction-hardened turbine shaft, seven-plate 3.4 clutch
- Gear ratios: 1st: 3.06, 2nd: 1.62, 3rd: 1.00, 4th: 0.70
- Use SuperMatic™ converter for direct bolt up to Gen I and Gen II engines
- Add up to 430 lb.-ft. torque
- Does not include torque converter. See pages 364-365 for options.

NOTE: *Use with electronic controller P/N 19332775 for carbureted and Ram Jet applications. Use with electronic controller P/N 19302405 with Chevrolet Performance LS fuel injected applications.*

4L65-E

19299055 Two-Wheel Drive (not shown)
19329645 Two-Wheel Drive, 2014-15 LT1 (not shown)
19260961 Four-Wheel Drive ▶
SuperMatic™ 4L70-E Four-Speed Automatic Transmission

- Based on the 4L60-E/4L65-E
- Increased horsepower and torque capacity
- Features five-pinion gearsets, heat-treated stator shaft splines, induction-hardened turbine shaft, seven-plate clutch and specific valve-body calibration
- Gear ratios: 1st: 3.06, 2nd: 1.62, 3rd: 1.00, 4th: 0.70
- Torque converter not included
- Add up to 495 lb.-ft. torque

NOTE: *Use with electronic controller P/N 19332775 for carbureted and Ram Jet applications. Use with electronic controller P/N 19302405 with Chevrolet Performance LS fuel injected applications.*

4L70-E

19300175 ▶
SuperMatic™ 4L85-E Four-Speed Transmission

- Improved valve body for firmer shifts
- Direct bolt-on for Gen I Small-Block and all Big-Blocks
- Does not include torque converter. See pages 364-365 for options.
- Includes additional clutch plates
- Gear ratios: 1st: 2.48, 2nd: 1.48, 3rd: 1.00, 4th: 0.75
- Add up to 690 lb.-ft. torque

NOTE: *Use with electronic controller P/N 19332780 for carbureted and Ram Jet applications. Use with electronic controller P/N 19302410 with Chevrolet Performance LS fuel injected applications. Torque converter not included. See automatic transmission torque converter match listing chart on page 365.*

4L85-E

Gen V LT1 A/T Bell Housing **A**

Transmission Installation Kit – 4L60 Series **B**

Transmission Installation Kit – 4L80 Series **C**

A. 19125817

Bell Housing Kit – LT Engine

- Unique bell housing kit enables 1996-later 4L60, 4L65 and 4L70 four-speed automatic transmissions to be matched with the Gen V LT1 engine.
- Use with 8-bolt flexplate kit P/N 19329416

Automatic Transmission Installation Kits – LS Engines

Whether you select one of Chevrolet Performance's electronically controlled automatic transmissions or the high-capacity T-56 Super Magnum 6-speed manual, we've got the parts you need to complete the installation with an LS engine. Select your transmission then match it with one of the installation kits below for a quicker, easier and hassle-free installation.

B. 19259117

Transmission Installation Kit – 4L60/4L70 Series

- Use with 4L60, 4L65 and 4L70 transmissions on LS engines with 6-bolt crankshaft flange
- Includes flexplate, flexplate covers, fasteners and instruction sheet
- Does not fit LSA, LSX454, LS9 or LT1 engines

19329416

Transmission Installation Kit – 4L60/4L70 Series (not shown)

- Use with 4L60, 4L65 and 4L70 transmissions on LS engines with 8-bolt crankshaft flange
- Includes flexplate, flexplate covers, fasteners and instruction sheet
- Fits LSA, LSX454, LT1

19332781 NEW!

Transmission Installation Kit – 4L60/4L70 Series (not shown)

- Use with 4L60, 4L65 and 4L70 transmissions on Small-Block and Big-Block crate engines with 6-bolt crankshaft flange
- Designed to be used with SuperMatic™ converters
- Does not include flexplate

C. 19259119

Transmission Installation Kit – 4L80 Series

- Use with all LS engines to mate transmission fully with the engine
- Includes flywheel cover, hardware and fastener torque specs
- Does not include flexplate
- Use flexplate 12654640 for 6-bolt crankshaft engines and SuperMatic™ converters
- Use flexplate 12636325 for 8-bolt crankshaft engines and SuperMatic™ converters
- All production converters must use crankshaft adapters (see kits on page 368)

19332784 NEW!

Transmission Installation Kit – 4L80 Series

- Use with all Big-Block crate engines to mate transmission fully with the engine
- Includes flywheel cover, hardware and fastener torque specs
- Designed to be used with Supermatic™ Convertors
- Does not include flexplate

Automatic Transmissions & Components Continued

A. 19125597

8-Bolt Crankshaft Adapter Kit – LSA/LSX454

- Use with LSA, LSX454 and LSX454R crate engines with 8-bolt crankshaft flange
- Includes flexplate, adapter hub and hardware
- Provides the correct converter pilot support for production 4L80/85 style torque converters
- Conventional 6-bolt flexplates do not bolt up to LSA and LSX454 engines

B. 6-Bolt Crankshaft Adapter Kit – LS Engine

- For use with Gen I style (Turbo 350/400, 700R4, 4L60, 4L60-E and 4L85-E) transmission on Gen III- and Gen IV-engines
- Flexplate 19260102 has only 11.5" (4L80-style) torque converter bolt pattern. Other applications may need to modify flexplate to use

For 6-Bolt Crankshaft Adapter, order the following parts:

Part Number	QTY	Part
12563532	1	Crankshaft Spacer
19260102	1	Flexplate
19257940	6	Mounting Bolts

NOTE: *For individual flywheel and flexplate components see pages 173, 275 and 349.*

NOTE: *Only 11.5" bolt circle.*

C. 19154766

Transmission Adapter Kit

- Allows installation of Gen III/IV-style 4L60-E/4L65-E transmission onto Gen I and II engine using production-style torque converter
- Includes spacer ring, shims, dowels, bolts and flexplate
- Works on one-piece rear main seal engines only (e.g., Ram Jet 350)

A 8-Bolt Crankshaft Adapter Kit

B 6-Bolt Crankshaft Adapter Kit

C Transmission Adapter Kit

SuperMatic™ Transmission Control System **D**

NEW!

SuperMatic™ Transmission Control System (Carbureted Engine Applications) **E**

Automatic Transmission Controller 4L60-E, 4L65-E, 4L70-E, 4L80-E and 4L85-E **F**

Transmission Control Systems

D. SuperMatic™ Transmission Control Systems for LS

- Pre-programmed – provides full function transmission operation after completing connections
- No laptop programming required
- Only compatible with E-67 based Chevrolet Performance electronic LS engine control systems
- Optional features for personal preferences
  – Gearshift timing
  – Multiple shift patterns
  – Manual shift mode
  – Supports most "Tap Shifters" or wheel-mounted paddles
  – On-Board data logging
- Connect and cruise – simple connections with no additional wiring required. Connect the clearly marked leads to the engine control harness, and you're ready to cruise!

19302405 (shown)

- 1996-2008 4L60-E family transmissions
- Compatible with P/N 19260380, 19299055 and 19260961 Chevrolet Performance SuperMatic™
- Revised, more compact design for easier installation in smaller areas
- Enhanced shift pressure performance for improved shift control
- Compatible with OBD-II code readers

19302410

- 1993-Up 4L80-E family transmissions
- Compatible with P/N 19300175 Chevrolet Performance SuperMatic™
- Revised, more compact design for easier installation in smaller areas
- Enhanced shift pressure performance for improved shift control
- Compatible with OBD-II code readers

E. SuperMatic™ Transmission Control Systems for Carbureted Small-Block, Big-Block and Ram Jet Engines NEW!

- Pre-programmed – provides full function transmission operation after completing connections
- No laptop programming required
- Only compatible with carbureted or Ram Jet engine applications
- Optional features for personal preferences
  – Gearshift timing
  – Multiple shift patterns
  – Manual shift mode
  – Supports most "Tap Shifters" or wheel-mounted paddles
  – On-Board data logging
- Connect and cruise – simple connections with no additional wiring required. Connect the clearly marked leads to the engine control harness, and you're ready to cruise!

19332775 NEW!

- 1996-2008 4L60-E family transmissions
- Compatible with P/N 19260380, 19299055 and 19260961 Chevrolet Performance SuperMatic™
- Revised, more compact design for easier installation in smaller areas
- Enhanced shift pressure performance for improved shift control
- Compatible with OBD-II code readers
- For Carbureted Small-Block, Big-Block and Ram Jet Engines

19332780 NEW!

- 1993-Up 4L80-E family transmissions
- Compatible with P/N 19300175 Chevrolet Performance SuperMatic™
- Revised, more compact design for easier installation in smaller areas
- Enhanced shift pressure performance for improved shift control
- Compatible with OBD-II code readers
- For Carbureted Small-Block, Big-Block and Ram Jet Engines

F. 19212657

Transmission Controller, 4L60-E, 4L65-E, 4L70-E, 4L80-E and 4L85-E Automatic

- Required when using a GM electronically controlled automatic transmission (see page 366)
- Includes wiring harness, software and connector for laptop computer
- Controller allows full programming of shifting, as well as part-throttle, wide-open throttle and shift firmness control
- Recommended for carburetor or Ram Jet applications

MANUAL TRANSMISSIONS AND COMPONENTS

A. 19329795

T56 Super Magnum Six-Speed Manual Transmission

- High-torque capacity TREMEC six-speed manual designed for custom, retro-fit installations with Chevrolet Performance crate engines
- 700 lb.-ft. maximum torque capacity
- Exterior case similar to fourth-generation F-body transmission with the stronger, high-capacity gear sets, input shaft and output shaft used in the TREMEC TR6060
- 26-spline input shaft
- 31-spline output shaft
- Gear ratios: 2.66 (1), 1.78 (2), 1.30 (3), 1.00 (4), 0.80 (5), 0.63 (6)
- Slip-yoke design
- 40-tooth reluctor ring that's necessary for use with electronic vehicle speed sensors used with Chevrolet Performance controllers
- Two-position shifter plate included, with third position built into the transmission
- Kit includes shifter handle and Chevrolet Performance-logo ball-type shift knob (See page 373)
- Approximately 33.6 inches long with bell housing attached (bell housing included in separate installation kits)

B. 19329025

Bell Housing Kit – Small-Block and Big-Block Engines

- Allows T56 Super Magnum transmission P/N 19329795 to bolt up to a Gen I Small-Block and all Big-Block engines
- SFI steel bell housing
- Includes Block-Saver Plate and attaching hardware
- 5.950" deep
- Clutch kit not included. Use clutch kit P/N 19329633 for Small-Block and P/N 19329634 for Big-Block
- Designed for hydraulic concentric slave cylinder release bearing P/N 24264182 (See page 373)

C. 19329620

Bell Housing Kit – LS and LT Engines

- Allows T56 Super Magnum transmission P/N 19329795 to bolt up to any Gen III/Gen IV LS engine or Gen V LT engine
- SFI steel bell housing
- Includes Block-Saver Plate and attaching hardware
- 5.555" deep
- Clutch kit not included. Use clutch kit P/N 19339635, for engines with 8-bolt flange, including LT engines, P/N 19331082, for engines with 9-bolt flange and P/N 19331079, for engines with 6-bolt flange
- Designed for hydraulic concentric slave cylinder release bearing P/N 24264182 (See page 373)

A T56 Super Magnum 6-Speed Manual Transmission

B Small-Block, Big-Block T56 Bell Housing

C LS/LT T56 Bell Housing

T56 Super Magnum Installtion Kit **D**

Clutch Kit – Small-Block **E**

Clutch Kit – Big-Block **F**

Clutch Kit, Dual-Disc – LS/LT (8-bolt Crank) **G**

D. 19301625

Transmission Installation Kit – TREMEC T56 Super Magnum for LS engines with 6-bolt flange

- Use with T56 Super Magnum transmission P/N 19329795 and LS engines except LSA, LSX376-B15, LSX454 and LSX454R
- LS7-style flywheel with 6-bolt flange
- LS7-style high-strength clutch and pressure plate
- Fourth-generation F-body-type bell housing and clutch release bearing included
- Kit includes dust covers, hardware and instructions

E. 19329633

Clutch Kit – Small-Block Engines

- High-performance single-disc clutch that fits production Small-Block flywheels
- Rated for 450 lb.-ft. of torque
- Fits 168-tooth flywheel, P/N 14088648
- Kit includes pressure plate and additional hardware

F. 19329634

Clutch Kit – Big-Block Engines

- High-performance single-disc clutch that fits production Big-Block flywheels
- Rated for 650 lb.-ft. of torque
- Fits 168-tooth flywheel:
  – P/N 14096987 - 454 & 502 crate engines (externally balanced)
  – P/N 12582964 - 427 & 572 crate engines (internally balanced)
- Kit includes pressure plate and additional hardware

G. 19329635

Clutch Kit – LS/LT Engines, 8-Bolt Crank

- High-performance dual-disc clutch and flywheel package for LS and LT engines with 8-bolt flywheel flange
- Will not fit LS engines with 6-bolt flange
- Rated for 800 lb.-ft. of torque
- Kit includes flywheel, pressure plate, clutch disc and additional hardware

19331082 NEW!

Clutch Kit – LS9 Engine, 9-Bolt Crank (not shown)

- High-performance dual-disc clutch and flywheel package for LS9 engines with 9-bolt flywheel flange
- Rated for 800 lb.-ft. of torque
- Kit includes flywheel, pressure plate, clutch disc and additional hardware

19331079 NEW!

Clutch Kit – LS3/LS7 Engines, 6-Bolt Crank (not shown)

- High-performance dual-disc clutch and flywheel package for all LS engines with 6-bolt flywheel flange
- Rated for 800 lb.-ft. of torque
- Kit includes flywheel, pressure plate, clutch disc and additional hardware

Manual Transmissions & Components Continued

A. 19329900

Transmission Installation Kit – TREMEC T56 Super Magnum for Small-Block

- Use with T56 Super Magnum transmission P/N 19329795 Small-Block engines with one-piece rear main seal
- Not for use with 350/290 HP (P/N 12499529) and 350/290 HP Deluxe (P/N 19244450) crate engines, which use a two-piece main seal
- Use transmission installation kit P/N 19329902 for 350/290 HP engines with two-piece main seal
- Super Magnum bell housing
- 1986-later flywheel
- High-strength clutch and pressure plate
- Kit includes dust covers, pilot bearing, hardware and instructions

B. 19329901

Transmission Installation Kit – TREMEC T56 Super Magnum for 454 and 502 Big-Block

- Use with T56 Super Magnum transmission P/N 19329795 and 454 and 502 crate engines (externally balanced)
- Not for use with 427/572 engines that are internally balanced
- Super Magnum bell housing
- Externally balanced flywheel
- High-strength clutch and pressure plate
- Kit includes dust covers, pilot bearing, hardware and instructions

C. 19329902

Transmission Installation Kit – TREMEC T56 Super Magnum for 427 and 572 Big Block

- Use with T56 Super Magnum transmission P/N 19329795 and 427 and 572 crate engines (internally balanced)
- Use also with 350/290 HP crate engines with two-piece main seal
- Not for use with 454 and 502 engines that are externally balanced
- Super Magnum bell housing
- Internally balanced flywheel
- High-strength clutch and pressure plate
- Kit includes dust covers, pilot bearing, hardware and instructions

A Transmission Installation Kit – TREMEC T56 Super Magnum for Small-Block

B Transmission Installation Kit – TREMEC T56 Super Magnum for 454 and 502 Big-Block

C Transmission Installation Kit – TREMEC T56 Super Magnum for 427 and 572 Big Block

Transmission Installation Kit – TREMEC T56 Super Magnum for LS w/6-bolt flange, LS/LT w/8-bolt flange and LS9 w/9-bolt flange **D**

Chevrolet Performance Shifter Handle Kit **E**

Chevrolet Performance-Logo Shifter Ball Kit **F**

Hydraulic Concentric Slave Cylinder Release Bearing **G**

D. 19329912

Transmission Installation Kit – TREMEC T56 Super Magnum for LS/LT engines with 8-bolt flange

- Use with T56 Super Magnum transmission P/N 19329795 and LSA, LSX376-B15, LSX454 and LSX454R engines
- Use with T56 Magnum transmission P/N 19329795 and new LT1 crate engines P/Ns 12657236 (wet sump) and 12657248 (dry sump)
- Super Magnum bell housing
- High-strength clutch and pressure plate
- Kit includes dust covers, pilot bearing, hardware and instructions

19331080 NEW!

Transmission Installation Kit – TREMEC T56 Super Magnum for LS engines with 6-bolt flange

- Use with T56 Super Magnum transmission P/N 19329795 and all LS engines
- Super Magnum bell housing
- High-strength clutch and pressure plate
- Kit includes hydraulic slave cylinder, pilot bearing, hardware and instructions

19331083 NEW!

Transmission Installation Kit – TREMEC T56 Super Magnum for LS9 engines with 9-bolt flange

- Use with T56 Super Magnum transmission P/N 19329795 and LS9 engines
- Super Magnum bell housing
- High-strength clutch and pressure plate
- Kit includes hydraulic slave cylinder, pilot bearing, hardware and instructions

E. 19301622

Chevrolet Performance Shifter Handle Kit

- Includes a black shifter handle and installation hardware

F. 19301623

Chevrolet Performance-Logo Shifter Ball Kit

- Give your Tremec® T56 or T56 Super Magnum six-speed-equipped project a distinctive, heritage-inspired look with a classic ball-style shift knob emblazoned with the Chevrolet Performance logo
- Includes the Chevrolet Performance-logo ball-style shift knob and installation hardware

G. 24264182

Hydraulic Concentric Slave Cylinder Release Bearing

Manual Transmissions & Components Continued

A. 92246731
TR6060 Six-Speed Manual Transmission
- A direct replacement transmission for your Camaro SS
- Rated to handle 420 lb.-ft. of torque
- Works with any Chevrolet Performance LS crate engines except LSA and LSX454
- Equipped with 26-spline input shaft and a fixed-yoke production style output shaft
- Includes release bearing
- Use with installation kit P/N 19259271
- Requires body mounted shifter (not included)

24264047
TR6060 Six-Speed Manual Transmission (not shown)
- High-torque-capacity transmission used in the Cadillac CTS-V Series with the 556-hp/551-lb.-ft. LSA supercharged 6.2L engine
- Direct fit with LSA and LSX454 crate engines with 8-bolt crankshaft flange
- Equipped with 26-spline input shaft and a fixed-yoke production style output shaft
- Includes release bearing
- Use with installation kit P/N 19259270
- Requires body mounted shifter (not included)

B. 19259270
Transmission Installation Kit – TREMEC TR6060 (MG9) – 8-Bolt Flange
- Use with TR6060 6-speed transmission P/N 24258817 only with LSA, LSX454 and LSX454R engines
- Includes flywheel with 8-bolt flange, high-strength clutch and pressure plate, dust covers, hardware and instruction sheet
- Clutch release bearing is included with the transmission assembly

C. 19259271
Transmission Installation Kit – TREMEC TR6060 (M10) – 6-Bolt Flange
- Use with TR6060 6-speed transmission P/N 92246731 on all LS engines except LSA, LS9, LSX454 and LSX454R
- Includes flywheel with 6-bolt flange, high-strength clutch and pressure plate, dust covers, hardware and instruction sheet
- Clutch release bearing is included with the transmission assembly

A TR6060 Six-Speed Manual Transmission

B Transmission Installation Kit – TREMEC TR6060 (MG9) – 8-Bolt Flange

C Transmission Installation Kit – TREMEC TR6060 (MG10) – 6-Bolt Flange

LSX/LS7 Clutch Kit **D**

LTG Transmission **E**

LTG Clutch Package **F**

D. 24255748
LSX/LS7 Clutch Kit
- 11.5" clutch single disc
- Fits 26-spline shaft
- Pressure plate and clutch disc

24260226
LS9 Clutch Kit (not shown)
- 10.5" clutch dual disc
- Fits 26-spline shaft
- Dual-mass clutch and pressure plate for LS9 Corvette ZR1

12570806
LS2 Clutch Kit (not shown)
- 11.5" clutch single disc
- Fits 26-spline shaft
- Flywheel, clutch and pressure plate kit for LS2 GTO engines

12581650
LS1 Clutch Kit (not shown)
- 11.5" clutch single disc
- Fits 26-spline shaft
- Flywheel with pressure plate and disc for LS1 Camaro engines

19210297
Release Bearing (actuator) (not shown)
** Included with Transmission Kit P/N 92246731*

24502513
4L60/700R4 Transmission Swap Kit (not shown)
- Adapts the 4L60 or 700R4 automatic transmission (non-electronic version) for use in early-model vehicles, with or without an engine management computer
- Includes instruction sheet, throttle valve spring for carbureted engines, a normally closed fourth-gear clutch switch and wiring connector for the torque converter

NOTE: *For individual flywheel and flexplate components see pages 173, 275 and 349.*

4-CYLINDER TRANSMISSIONS & COMPONENTS

E. 19328976
LTG Transmission
- Production 6-speed Manual Transmission
- RWD configuration

F. 24251131
LTG Clutch Package
- Production 6-speed Manual Clutch (included with LTG engine package)

193289788
LTG Manual Transmission Installation Kit (not shown)
- Includes all hardware and fasteners needed to make the transmission operational

Engines

New Life for Your Baby!

As part of General Motors, Chevrolet Performance is able to offer a wide and diverse range of crate engines and partial engines beyond our high-performance Small-Block, Big-Block and LS engines. They are based on regular-production engines and make great swap choices for replacing a tired engine, while also enabling creative engine builders to start with an economical production engine and add their preferred power-building accessories.

The engines are generally delivered fully assembled (minus the induction, ignition and starting systems) and each is backed by a 36-month or 100,000-mile/160,000-km warranty when installed in a recommended application.

See your GM dealer for more details and ordering information.

NOTE: *Engines depicted in photographs are representative of several part numbers and may not show all items included.*

8.1L L18

The largest regular-production Big-Block engine is the 8.1L L18 engine used in a variety of heavy-duty GM trucks. This workhorse uses durable cast-iron cylinder block and cylinder head castings and features later-style front camshaft sensing. Depending on the application, the L18 engine produces 225-330 horsepower and up to 450 lb.-ft. of tow-anything torque. Our 8.1L engine assemblies are remanufactured and all are certified for CNG and LPG use.

NOTE: *Engine assembly is shipped with intake manifold installed (not shown).*

GM Parts Crate Engines include a 36-month or 100,000-mile/160,000-kilometer limited warranty when installed in a recommended application.

2.2L L61/2.4L LE5

The 2.2L L61 and the 2.4L LE5 engine are used in thousands of GM small cars, such as the Cavalier, Cobalt, HHR, Sunfire, G5 and more. They come fully assembled and ready to install – or build it up to higher performance standards and turn your compact commuter car into a compact performer!

3.5L LX9

Introduced in 2004 in the Chevy Malibu, the 3500 3.5L V-6 is the standard engine in the Pontiac G6 V-6 and GT models, as well as GM's crossover sport vans: Chevrolet Uplander, Pontiac Montana SV6, Buick Terraza, and Saturn Relay. Rated at 200 hp (149 kw) and 220 lb.-ft. of torque (278 Nm), the engine has broad power bands that produce stirring performance for low-rpm acceleration and high-rpm responsiveness.

2.8/2.9L I-4/3.5/3.7L I-5

Striking a balance between four-cylinder economy and V-6 power, the Vortec four-cylinder (I-4) and Vortec five-cylinder (I-5) engines benefit from the broad, inherent torque and balance of an inline engine design. The I-4 is standard in the Chevrolet Colorado and GMC Canyon midsize pickups; the I-5 is available in both vehicles, as well as the H3 Hummer.

3.8L V-6

With its reputation for power and reliability, the 3800 Series III V-6 is the "Small-Block Chevy" engine of the V-6 world.

4.2L I-6 LL8

Introduced in GM's midsize SUVs, including the Chevy TrailBlazer and GMC Envoy, the unique 4.2L inline-six engine delivers exceptional torque (275 lb.-ft.) and responsive horsepower (275).

4.8L LR4/LY2/L20

This economical 4.8L LS-series engine serves as the entry-level V-8 in many GM full-size trucks, where it also is known as the Vortec 4800. It delivers all of the strength, durability and performance attributes of its larger-displacement cousins. It uses the same iron cylinder block as the 5.3L LS, but has a smaller stroke. It is rated at 275 horsepower. Available in new and remanufactured options for 2001-2015 applications.

4.3L LU3

Based on the architecture of the original Small-Block V-8, but minus two cylinders, the 4.3L V-6 – also known as the Vortec 4300 – is a popular and powerful motivator in thousands of GM trucks. Engine assemblies are available in new or economical remanufactured options, all built to the exacting standards of regular-production engines.

5.3L LM7/L59/LC9/LH8

Used in thousands of GM trucks, SUVs and vans since 1999, the 5.3L V-8 that's also known as the Vortec 5300, is respected for its great performance and efficiency. Horsepower is rated starting at 285, with torque at approximately 330 lb.-ft. GM Parts offers the 5.3L in new and economical remanufactured packages for 1999-2015 applications.

5.7L Gen 0 – P/N 10067353

All new - not remanufactured! The classic 350 is offered here in our most economical Small-Block engine assembly. Designed to replace production engines used from 1973-1985, it features a durable, yet value-driven, short-block assembly and iron cylinder heads with early-style perimeter hold-downs. Better still, it includes a stronger four-bolt main block and smooth flat tappet hydraulic camshaft.

5.7L Gen 1e

The 5.7L L31 Vortec 350 engine is found in thousands of 1996-2002 Chevrolet/GMC pick ups, sport utility vehicles and vans. All new, from oil pan to valve covers, they feature Vortec-style cast-iron cylinder heads for maximum power and efficiency, a one-piece rear main seal, hydraulic roller lifters and center-style valve cover hold-downs. The 12530282 features 2-bolt main caps, the 12530283 features 4-bolt main caps and heavy-duty cylinder heads. These are direct-replacement engines for 1996-2002 L31-equipped vehicles.

5.7L Gen 1 – P/N 12568758

All new – not remanufactured! This basic 5.7L/350-cubic-inch is designed for 1987-1995, 8,500lb and under, light-duty truck applications, as it uses the later-style one-piece rear main seal and cylinder heads with center-style valve cover hold-downs. But it is adaptable to almost unlimited Small-Block applications. The bottom end is durable, with two-bolt mains. Additional details include a gear-driven oil pump assembly and a machined fuel pump pad, but no hole for the fuel pump pushrod. (210HP@4,000 and 300 lb.-ft.@2,800.)

7.4L L19/L29

Our 7.4L engine assembly delivers the big torque you need for pulling a trailer and other heavy loads. A four-bolt main block enhances strength, and a later-style one-piece rear main seal reduces the chance of an oil leak. Designed for trucks, SUVs and vans built from 1980-2000; offered in new and remanufactured packages. CNG and LPG compatible variations are available.

CRUZE PERFORMANCE

A. Cruze Exhaust Systems

This low-restriction system and included dealer-installed calibration will provide 10 more HP (up to 148 HP) and 10% increase in torque (+15 ft.-lbs.). Kit includes exhaust system, calibration, premium fuel label and new 50 state legal emission certification label.

Part Number	Model Year	Detail
23494247	2012-2015	Exhaust Kit (1.4L turbo - Base, shown)
23233811	2012-2015	Exhaust Kit (1.4L turbo - RS)

19303797

Cruze Performance Clutch Kit (not shown)

This increased torque capacity system includes a larger-than-stock flywheel, clutch disk and pressure plate, along with new attaching bolts.

- Update for 2012-2014 MY (Production for 2015 MY)

NOTE: *Must be used on 2012-2014 Cruze's that have installed P/N's 23494247, 23233811 Stage Kits. (See above).*

COBALT APPEARANCE AND PERFORMANCE

Enhance the appearance and performance of your Cobalt with Genuine GM products from Chevrolet Performance.

B. 17802112

Performance Exhaust Tips

Add high-performance appearance to the Cat-Back Exhaust System on your Cobalt with one of these highly polished exhaust tips.

- Unique design
- Rolled lip
- Polished T-304 stainless steel

Part Number	Model Year	Description
17802112	2005-08	Bowtie Logo, Angle Cut
17802113	2005-08	Bowtie Logo, Straight Cut

NOTE: *Not for use on production exhaust systems.*

C. 19301371

16-Inch Wheel

- Chrome wheel for Cobalt, model years 2009-2010

A Cruze Exhaust Kit - 1.4L Turbo - Base

B Performance Exhaust Tips

C 16-Inch Wheel

18-Inch Wheel **D**

Cobalt Wheel-Hop Kit **E**

Cobalt Clutch Upgrade Kit **F**

D. 19301370
18-Inch Wheel

Personalize your Cobalt with attractive wheels.

- Chromed
- Available with matching center cap and lugnuts
- Validated to GM specifications
- P/N is for single wheel

Part Number	Model Year	Description
19301370	2005-08	AZ577, 16" Cast Chrome
19301371	2005-08	AP194, 18" Forged Polished

E. 19211782
Cobalt Wheel-Hop Kit

Under hard acceleration, wheel hop will slow you down and could lead to a broken or damaged transmission, axle, or other expensive parts. This kit is specially designed to eliminate wheel hop on your 2005-2007 Cobalt SS/SC or 2004-2007 ION Redline so that you can get all of your power to the ground.

F. 19212712
Cobalt Clutch Upgrade Kit

This kit utilizes stronger components to create a package that will be less susceptible to clutch failure in your 2005-2007 Cobalt SS/SC and 2004-2007 Ion Redline. This kit is capable of up to 300 horsepower and will give users better performance and more load capability because of increased surface area and extra clamping force.

Cobalt Appearance and Performance Continued

A. 17803229

Stage 2 Performance Upgrade Kit

Make that 2005-2007 Cobalt SS/SC sit up and beg with our Stage 2 Performance Kit. Building on the success of our Stage 1 Kit, our Chevrolet Performance engineers wanted to push the over-achieving four-banger just a little bit more. Stage 2 takes your Cobalt SS or ION Red Line from a stock rating of 205 horsepower all the way up to 241 horsepower.

The key to making that power is increasing the boost on the factory supercharger by swapping out the stock blower pulley. Increased boost means more air getting pumped into the high-revving Ecotec, and the increased airflow requires more fuel. That's why GM high-flow injectors are included in the kit. Together, this Performance Kit will keep your Cobalt/ION Red Line boosted ahead of the competition.

Kit Includes:

- High-flow injectors
- Supercharger pulley
- Supercharger belt (P/N 12597993)
- PCM reprogramming

NOTE: *Premium (93-octane) fuel is required for Stage 2.*

B. Stage 3 Kit for Cobalt SS/ION Red Line

Take your Cobalt SS or ION Red Line to the next level with our Stage 3 Off-Road Kit! The Stage 3 kit consists of the following:

- Smaller, 76mm supercharger pulley
- 2-pass intercooler end plate
- Unique PCM, which includes a calibration for the smaller pulley, an adjustable rev limiter, a 100-octane mode, and a nitrous control algorithm

Our Stage 3 Kit will take your supercharged Ecotec 2.0L engine to a whole new level of performance. Stage 3 takes horsepower output to 248 horsepower on 93 octane fuel and to 260 horsepower on 100 octane fuel. In addition to the power increase, you'll also get an adjustable rev limiter and calibration for a 50-shot of nitrous (nitrous kit not included). For best power, we recommend also installing a high-flow exhaust.

This PCM is equipped with a user-adjustable rev limit from 6,750 to 8,000 rpm. The rev limit is adjusted by pressing on the throttle pedal with the ignition on and engine off. At about 50 percent throttle, the tachometer will show the current rev limit. Pressing the throttle further will adjust the rev limit in 250 rpm increments. This PCM is also equipped with a control scheme for the equivalent of a 50-horsepower shot of nitrous. The PCM will automatically provide the proper spark and fuel for nitrous up to 500 rpm below the current selected rev limit when the trigger is activated.

NOTE: *The Stage 3 Kit is for off-road use only. The Stage 3 upgrades are meant for off-road use only and are not certified to be emissions-legal. The vehicle's air conditioning is disabled by the Stage 3 PCM.*

NOTE: *This kit is an upgrade to Stage 2. It requires the following parts from the Stage 2 Kit: high-flow fuel injectors, pulley adapter hub and serpentine belt.*

C. 19212670

Performance Turbocharger Upgrade Kit for Cobalt, Solstice, Sky and HHR

- For 2007-2009 Pontiac Solstice GXP, 2007-2009 Saturn Sky Redline, 2008-2010 HHR SS, 2008-2010 Cobalt SS
- Increases horsepower up to 290 @ 5,200 rpm and torque up to 340 lb.-ft.
- Includes new calibration (flashed by your local dealer) and two new MAP sensors
- Premium fuel required

A Stage 2 Performance Upgrade Kit, Cobalt SS/SC

Kit:

88958718	Stage 3 Kit, 2005 Cobalt SS Supercharged
88958719	Stage 3 Kit, 2006-2007 Cobalt SS Supercharged (shown above)
88958715	Stage 3 Kit, 2004 ION Red Line
88958716	Stage 3 Kit, 2005 ION Red Line
88958717	Stage 3 Kit, 2006-2007 ION Red Line

Parts List:

88958721	Intercooler Endplate, 2 Pass Style
12610641	PCM, Stage 3, 2004 ION Red Line
12610642	PCM, Stage 3, 2005 ION Red Line
12610643	PCM, Stage 3, 2006-2007 ION Red Line
12610644	PCM, Stage 3, 2005 Cobalt SS Supercharged
12610645	PCM, Stage 3, 2006-2007 Cobalt SS Supercharged

B Stage 3 Kit for Cobalt SS/ION Red Line

C Performance Calibration

V-6 90° Cylinder Head Quick Reference Chart

Part Number	Description	Casting Number	Material	Port Size	Port Type	Valve Spring	Chamber CC's	Int Vlv	Exh Vlv	Plug Type	Heat Riser	Rocker Stud	Notes
10134359	18° V-6	12480009	Aluminum	215	Raised	18°	43	2.150"	1.620"	Angled	No	Shaft	No seats/guides
12480009	18° V-6	12480009	Aluminum	215	Raised	18°	43	2.150"	1.620"	Angled	No	Shaft	As cast ports

18° Aluminum Cylinder Head (exhaust) **D**

18° Aluminum Cylinder Head (top/intake) **D**

18° Aluminum Cylinder Head (combustion chamber) **D**

V-6 90˚ CYLINDER HEADS

D. 10134359

18° Aluminum Cylinder Head

- Low-port 18° aluminum cylinder head for maximum-effort competition engines
- Offers significant improvements over conventional head designs with 18° valve angles (vs. older 23° angles) and 43cc combustion chambers
- Spark plug holes are centrally located and valve centerlines are relocated
- Exhaust ports are high-flow
- Head face has an extra 0.080" of material for 9.1:1 compression, and up to 2.200" intake valves can be used
- Shallow wedge-shaped combustion chambers allow builders to achieve high compression ratios with small piston domes
- Heads do not include valve seats or guides
- Aftermarket shaft-mounted rocker arm assemblies and pushrods are required
- Piston domes and valve pockets must be matched to the revised combustion chamber design

12480009

18° Aluminum Cylinder Head (not shown)

- Low-port 18° aluminum cylinder head for competition engines
- Identical to P/N 10134359 (see above), except that it has a new-design intake port for the Daytona Dash Racing Series

ECOTEC

A. 88958632
Exhaust Header Flange
- Use this 0.375" thick steel flange as the starting point for your custom header system

Camshafts

88958648
Ecotec Performance Camshaft Set (not shown)
- For increased power in naturally aspirated and turbocharged engines
- Duration @ 0.050" lift is 247° on the intake and 249° on the exhaust
- Maximum lift is 0.499" for the intake and 0.499" on the exhaust
- Lobe centerline is 116°

B. 88958612
Ecotec Exhaust Camshaft Blank
- Heat-treated camshaft blank for grinding custom-profile exhaust cam

C. 88958615
Ecotec Neutral Balance Shaft Set
- High-performance neutral balance shaft set (two shafts) used to replace stock balance shafts

Crankshafts

88958631
Ecotec Crankshaft Pulley (not shown)
- Billet pulley has a reduced diameter to minimize the horsepower-robbing drag of the alternator and air conditioning compressor

Intake Manifolds, Gaskets and Components

88958633
Ecotec Intake Manifold Flange Set (not shown)
- 0.555"-thick aluminum flanges can be used to fabricate your own custom intake manifold

A Exhaust Header Flange

B Ecotec Exhaust Camshaft Blank

C Ecotec Neutral Balance Shaft Set

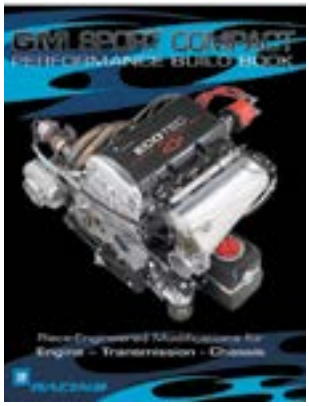

Sport Compact Build Book **D**

Ecotec 2.0L LSJ Power Book **E**

Front Rotors **F**

Rear Rotors **G**

Build Books

D. 88958728
Sport Compact Build Book

- Describes all the parts and procedures needed to transform your stock Ecotec engine into a high-performance racing engine for drag racing or drifting competition
- Also includes race modifications for a 4T65-E automatic transmission

E. 88958686
Ecotec 2.0L LSJ Power Book

Step-by-step guide to boosting the horsepower and torque in this versatile four-cylinder powerplant.

- Detailed instructions on engine removal/reinstallation
- Special instructions on Installing Stage 1 and Stage 2 upgrade kits
- Build a 300-plus horsepower Ecotec!

CHASSIS, SUSPENSION AND BRAKES

F. 88964607
Front Rotors

- Cross-drilled rotors for 2004-07 Cadillac CTS-V
- Sold as a pair

G. 88964608
Rear Rotors

- Cross-drilled rotors for 2004-07 Cadillac CTS-V
- Sold as a pair

Chassis, Suspension and Brakes Continued

Cobalt SS, Saturn ION Red Line

A. 88958710

Heavy-Duty Front Steering Knuckle for Chevrolet Cobalt SS, Saturn ION Red Line, Left-hand

- Designed to provide enhanced load capacity for off-road use
- Designed to use the existing interfaces to the bearing, brake caliper, strut and control arm
- Installation requires caliper mounting bolts P/N 11570091, lower ball joint bolt P/N 11589341 and nut P/N 11517996 included with the kit
- Bearing spacer plate needs modification for installation
- Specific suspension point geometry – may induce increased tire wear during street duty

B. 88958711

Heavy-Duty Front Steering Knuckle for Chevrolet Cobalt SS, Saturn ION Red Line, Right-hand

- See P/N 88958710 for description

W-Body: 2000-2005 Monte Carlo and Impala; 1997-2003 Grand Prix

C. 12498648

Strut Tower Braces

- Install these easy bolt-on braces on your car to reduce body flex for firmer feel when cornering
- Includes hardware and installation instructions

D. 12498642

Heavy-Duty Rear Stabilizer Bar

- Fits Pontiac Grand-Prix 1997-2003 and Chevrolet Monte Carlo 2000-2005
- For reduced body roll, install this thick, 19mm rear bar
- Includes bushings

E. 12498643

Heavy-Duty Front Stabilizer Bar

- Fits Pontiac Grand-Prix 1997-2003 and Chevrolet Monte Carlo 2000-2005
- Get the look and feel of performance with this sturdy 34mm front bar
- Includes bushings and end links

A Heavy-Duty Steering Knuckle, Left-Hand

B Heavy-Duty Steering Knuckle, Right-Hand

C Strut Tower Braces

D Heavy-Duty Rear Stabilizer Bar

E Heavy-Duty Front Stabilizer Bar

High-Performance Front Brake Upgrade Kit **F**

Heavy-Duty Front Brake Caliper Brackets **G**

F. 12498644

High-Performance Front Brake Upgrade Kit

- Fits Pontiac Grand-Prix 1997-2003 and Chevrolet Monte Carlo 2000-2005
- Attain increased braking performance with 12" vented disc rotors and high-performance brake pads
- Includes rotors, caliper mounting brackets, pads and bushings

NOTE: *Monte Carlo and Impala models already have this system installed as standard production. Will not fit stock Grand Prix "crosslace" wheels and spare tire may not fit. Heat generated by performance brake pads can cause rotor warping if not allowed to cool sufficiently between severe uses.*

G. 12498646

Heavy-Duty Front Brake Caliper Brackets

- Fits Pontiac Grand-Prix 1997-2003 and Chevrolet Monte Carlo 2000-2005
- Same brackets used in brake kit P/N 12498644 (see above)
- Includes brackets, bushings and pins
- Rotors equivalent to P/N 12498647 must be used

FACTORY ENGINEERED RACE PARTS F&Y CAR

Lightweight Racing Aluminum Driveshaft

Lose less power in the transfer from the transmission to the rear axle. These lightweight aluminum driveshafts are designed for F-cars equipped with the MM6 six-speed manual transmission:

12564004

Aluminum Driveshaft (not shown)

- 1998-1999 LS1 with MM6 transmission

12480094

SACHS Shock Absorber, Front (not shown)

- Tuned for use with the T1 suspension package (see below)
- Sold individually; order 2 per vehicle

12480095

SACHS Shock Absorber, Rear (not shown)

- Tuned for use with the T1 suspension package (see below)
- Sold individually; order 2 per vehicle

12480093

Camber Spacer Kit (not shown)

- 2 kits required per wheel

Kit includes one of each of the following:

12480071	Camber Plate, Large	**12480076**	Camber Plate, Small
15688857	Bolt, Lower Control Arm	**11516382**	Nut, Lower Control Arm

12480080

C5 Transmission Oil Cooler Kit (not shown)

- Intended for cars equipped with the six-speed manual transmission and has been updated for use on Z06 and export-model Corvettes
- Includes transmission pump, cooler assembly, wiring harness, plumbing kit, filter bracket, thermal switch, brackets and fasteners

25534430

C6 Corvette T1 Suspension Kit for C6 Corvette (not shown)

- Approved by the SCCA for racing in the T1 class
- Similar to the championship winning C5 kit, but made to fit the C6

Kit includes one of each of the following:

25534418	Spring–Front	**25534419**	Spring–Rear
12480065	Stabilizer Bar Front	**25534433**	Stabilizer Rear (4 required)
12480067	Link–Anti-Roll Bar (4 required)	**12480068**	Isolator–Front Anti-Roll Bar (2 required)
12480069	Isolator–Rear Anti-Roll (2 required)	**25534436**	Arm–Front Upper LH
25534437	Arm–Front Upper RH	**25534438**	Arm–Front Lower LH
25534439	Arm–Front Lower RH	**25534442**	Arm–Rear Lower LH
25534443	Arm–Rear Lower RH		

BOOKS AND MANUALS

Get the most from your vehicle and its Chevrolet Performance parts. These books and manuals provide insider information and technical tips from direct sources within General Motors. They are invaluable for building an engine for the street or race track.

A. 24502488
Chevrolet Power
- Seventh edition of the time-tested guide to building competition engines for oval track racing, drag racing, road racing and marine applications
- Includes information on Small-Block, Big-Block, 90° V-6 and 60° V-6
- Contains more than 600 photos, illustrations, blueprints and charts

B. 12486611
Service Manual, Ram Jet 350 (MEFI 3)
- Covers the installation and service of the MEFI 3 Ram Jet 350 P/N 12495515

88962723
Service Manual, Ram Jet 350 (MEFI 4) (not shown)
- Covers the installation and service of the MEFI 4 Ram Jet 350 P/N 12499120

C. 12486610
Service Manual, Ram Jet 502 (MEFI 3)
- Covers the installation and service of the MEFI 3 Ram Jet 502 P/N 12497323

88962724
Service Manual, Ram Jet 502 (MEFI 4, not shown)
- Covers the installation and service of the MEFI 4 Ram Jet 502 P/N 12499121

D. 88959384
LS1 Engine Kit Installation Guide
- Detailed instructions to help you install an LS1 engine in your older vehicle
- Includes notes and technical explanations for necessary parts, along with part numbers you can order from your GM dealer to get the job done easily

E. 88958786
High-Performance Chevy LS1/LS6 V-8s
- 160 pages discuss the LS-Series engine architecture and design, parts interchangeability along with step-by-step engine removal sequences for many GM vehicles with LS-Series engines
- Shows how to build, modify and tune LS engines

F. 88958764
LS-Series "How to Rebuild" Book
- A complete reference that shows how to rebuild an LS-Series engine
- Includes tips and modification procedures to improve power and economy
- More than 600 step-by-step color photos

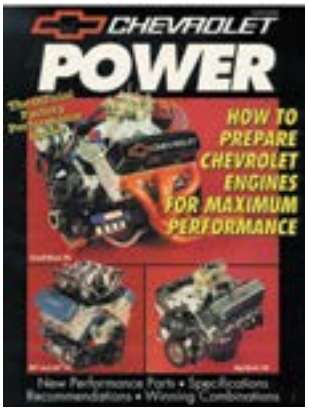

A Chevrolet Power

B Service Manual, Ram Jet 350 (MEFI 3)

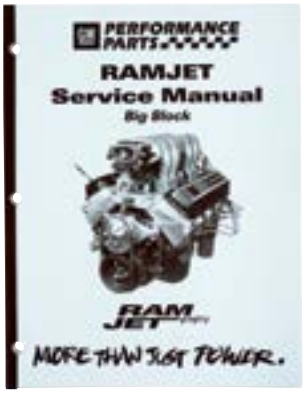

C Service Manual, Ram Jet 502 (MEFI 3)

D LS1 Engine Kit Installation Guide

E High-Performance Chevy LS1/LS6 V-8's

F LS-Series - How to Rebuild Book

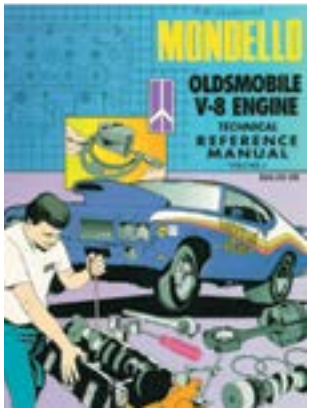

Oldsmobile High-Perf. Manual **G**

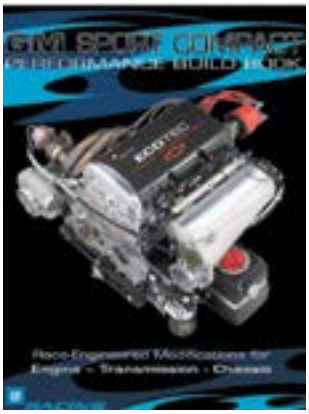

Sport Compact Build Book **H**

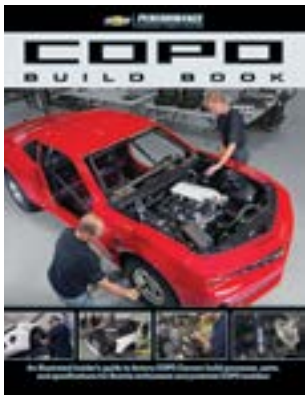

COPO Build Book **I**

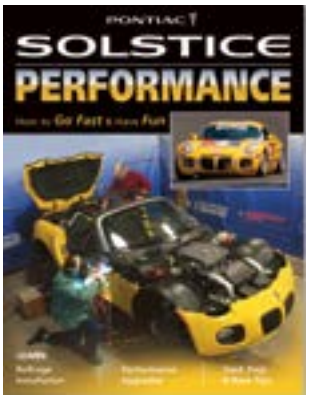

Solstice Performance **J**

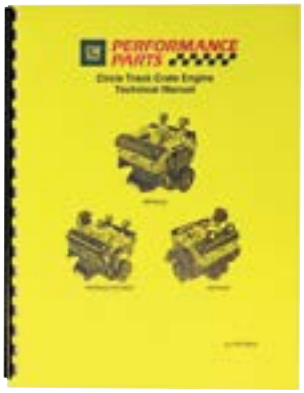

Circle Track Techbook **K**

Circle Track Techbook (CT525) **L**

G. 12480027
Oldsmobile High-Performance Manual
- Contains proven methods for building power in Olds V-8 engines
- Also contains a detailed list of casting numbers for most Oldsmobile V-8 engines

H. 88958728
Sport Compact Build Book
- Describes all the parts and procedures needed to transform your stock Ecotec engine into a high-performance racing engine for drag racing or drifting competition
- Also includes race modifications for a 4T65-E automatic transmission

I. 88958767
COPO Build Book
- The COPO Build Book provides all the information you need to build your own COPO Camaro including specs, part numbers and more. For the latest information, head to chevrolet.com/performance.

24502570
Motorsports Aurora V-8 Engine Handbook (not shown)
- Covers component selection and recommendations, as well as engine building procedures, for engines used in specific racing series

J. 88958697
Solstice Performance
- 132 pages show how to take advantage of the performance capabilities of the Pontiac Solstice
- Loaded with almost 900 images and detailed technical information to help everyone from the beginner to the expert
- Shows how a Sports Car Club of America (SCCA) road racing Solstice is created, along with the buildup of a 'drifting' Solstice and a brute-performance Solstice

K. 88958668
Circle Track Techbook
- Technical manual for GM Circle Track crate engines P/N 19258602, P/N 88958602, P/N 88958603, P/N 88958604 and P/N 19318604
- Covers all details regarding rebuilding specifications, including parts lists
- 47 pages with photos and details on valve machining, valve springs, camshafts and other factory specifications

L. 88958759
Circle Track Techbook (CT525)
- Technical manual for Chevrolet Performance CT525 Circle Track engine P/N 19271821
- Covers all engine specifications, component part numbers, installation tips and rebuilding specifications

GM Licensed Parts

NEW SLANT-EDGE VALVE COVERS & AIR CLEANERS!

NEW Slant-Edge Valve Covers

A NEW Valve Cover Look For Chevy Small Block 1987 – Pre LS Engines!

Enthusiasts with the center-bolt family of valve covers now can enjoy the wildly popular Slant-Edge look that Gen 1 and LS owners love. Generous internal clearance for larger valve train setups, and raised/recessed logos are the distinctive features of these new valve covers. Seven choices will be released with raised and recessed Chevrolet and Bowtie Logos, or no logos at all, for a completely customized look. Tall, with removable baffle. Grommets, and mounting bolts included. Sold in Pairs. U.S. Pat. D727,362.

Chevrolet Small-Block V-8, 1987-Pre LS

- Black Crinkle, raised logo 141-840
- Chevy® Orange, raised logo 141-841
- Cast Gray Crinkle, raised logo 141-842
- Polished, recessed red/black logo 141-843
- Chrome, recessed red/black logo 141-844
- Black Crinkle, recessed red logo 141-845
- Polished, no logo 141-846

NEW Slant-Edge Air Cleaners

A NEW Slant-Edge Air Cleaner to match your Slant-Edge Valve Covers!

New Slant-Edge Air Cleaners are the perfect way to complete your dress-up look in premium Slant-Edge style. Whether you have Slant-Edge valve covers, or a set from a different series, these air cleaners will bring your engine look together in head-turning fashion. They are supplied with genuine 3" GM air filter elements (GM P/N 6421746, AC Delco P/N A212CW) for maximum airflow. Each kit is supplied with necessary mounting hardware. Technical Note: After installing a new air cleaner, always lower the hood slowly to visually confirm sufficient clearance. Minimum clearance of 3-3/4" is require from the top of the carburetor gasket area to the underside of the hood. The air cleaner bases are recessed for a low profile appearance, maximum performance and hood clearance. Patent Pending.

Black Crinkle, raised logo (shown) 141-830
Chevy® Orange, raised logo (not shown) 141-831
Cast Gray Crinkle, raised logo (not shown) 141-832
Polished, recessed red/black logo (shown) 141-833
Black Crinkle, recessed red logo (not shown) 141-834
Chrome, recessed red/black logo (not shown) 141-835

NEW!

LS SLANT-EDGE VALVE COVERS

These new valve covers are taller than stock valve covers, and can accommodate a wide variety of large valvetrain applications. Oil fill hole, and cap (passenger side cover), PCV (driver's side cover) included. Threaded mounting holes for the Integrated Ignition Coil Bracket included. Sold in Pairs. U.S. Pat. D657,798.

LSX, CHEVROLET AND BOWTIE LOGOS

Fits GM LS engines (see FactoryPerformanceParts.com for dimensional information).

- Chevy® Orange, LSX®, raised logo 141-257
- Chevy Orange, raised logo 141-261
- Black Crinkle, raised logo 141-262
- Cast Gray, raised logo 141-263
- Polished, recessed red/black logo 141-264
- Chrome, recessed red/black logo 141-265
- Polished, no logo 141-266

INTEGRATED IGNITION COIL BRACKET

- Coil bracket for LS 1st Gen style coils 69520
- Coil bracket for LS 4th & 5th Gen style coils 69521

SPARK PLUG WIRES

- MSD 8.5mm Wires, P/N 39849, are recommended

COIL RELOCATION EXTENSION CORDS

- 18" Extension Cord 69525
- 46" Extension Cord 69526

LS Slant-Edge Valve Covers, LSX,Chevrolet and Bowtie Logos

GM LICENSED PARTS

Your engine is a source of pride. Show it off with accessories designed to complement its style and support its performance!

These parts are manufactured under license for General Motors and Chevrolet Performance. They meet strict dimensional and quality standards, ensuring you the highest-quality, best-fitting, top-performing components.

Finish your project your way with dress-up accessories and other licensed components from Chevrolet Performance.

Parts without images in this catalog may be viewed online.

Use coupon code CHEVYPERF16 at checkout for 15% Off on your first FactoryPerformanceParts.com order. One use per customer.

$10 CASH REBATE COUPON*

To receive your $10 cash rebate, please send (1) your name and mailing address legibly written (and optional email address in case questions arise), (2) this coupon cut from your 2016 catalog, (3) proof-of-purchase: a copy of your online order for $50 or more, excluding shipping, shipped to the same name and address as that to which the $10 should be sent (ordered through the www.FactoryPerformanceParts.com website) to: 2016 Chevrolet Performance Catalog Rebate, Factory Performance Parts, P.O. Box 306, Roseville, MI 48066. More information about this offer can be found under the "Chevrolet Performance Catalog" tab on the FactoryPerformanceParts.com website.

***NOTE:** Only the parts displayed on pages (390-399) are eligible for the $10 rebate from Factory Performance Parts.*

ORDERING INFORMATION

The licensed engine dress-up parts displayed on the following pages (390-399) may be purchased online through FactoryPerformanceParts.com, as well as from Chevrolet Performance Authorized Centers and participating GM dealers. To locate products, find additional product information, or receive technical support, please visit www.FactoryPerformanceParts.com and click on the "where to buy" link for a list of resellers.

***ATTENTION GM DEALERS:** The following pages of General Motors licensed products (390-399) may be ordered online from the licensee by visiting www.FactoryPerformanceParts.com and clicking on the "Dealer Login" button. These procedures are also referenced in Dealer Bulletin ACC08-035. Crate Engine/Dress-Up Parts Cash Rebate information is described in Dealer Bulletin GMP09-200*

SUPER-LIGHT, FABRICATED ALUMINUM VALVE COVERS

Precision-welded fabricated aluminum valve covers are available for racing applications (without breather holes and baffles). The valve covers have recessed Chevrolet and Bowtie logos, billet mounting rails (for maximum leak resistance), and weigh approximately three pounds less than stamped steel die-cast valve covers. Sold in pairs.

A. Chevrolet Small-Block V-8, 1958 – 1986

- Black anodized, tall, no baffle (shown, A)..... 141-802

DIE-CAST VALVE COVERS

These premium die-cast aluminum valve covers are manufactured to GM specifications and are equipped with internal oil drippers (Small-Block only) and baffles. The valve covers are highlighted with recessed and raised Bowtie and Chevrolet logos. Available in tall only. Sold in pairs.

B. Chevrolet Big-Block, 1965 – 1996

- Chrome, recessed logo (shown, B)..... 141-140
- Black crinkle, recessed logo (not shown)..... 141-141
- Polished, recessed logo (not shown) 141-142

C-D. Chevrolet Small-Block V-8, 1958 – 1986

- Polished, recessed logo (not shown) 141-108
- Black crinkle, recessed logo (not shown).....141-116
- Chrome, recessed logo (not shown).....141-117
- Chevy Orange, recessed logo (not shown).....141-118
- Black Crinkle, raised logo (shown, C) 141-119
- Chevy Orange, raised logo (shown, D)..... 141-120
- Carbon-Style, recessed logo (not shown) 141-121

LATE-MODEL DIE-CAST VALVE COVERS

Late-model valve covers are the tall, center hold-down-style and come with mounting bolts and appropriate washers. All late-model valve covers come with baffles and grommets. Sold in pairs.

E. Chevrolet Small-Block V-8, 1987 – Pre LS

- Polished, with baffle (not shown) 141-130
- Black crinkle, with baffle (not shown) 141-131
- Chrome, with baffle (shown, E)..... 141-132
- Replacement bolt and washer kit (not shown)..... 141-133
- Polished, no logo, with baffle (not shown) 141-134
- Polished, no logo, circle track w/vent tubes (not shown). 141-139

SLANT-EDGE DIE-CAST VALVE COVERS

These tall, slant-edge die-cast valve covers have a progressive design and a modern look. Offered with raised or recessed Chevrolet and Bowtie logos, plus no logo. The valve covers are baffled and sold in pairs. U.S. Pat. D580,954.

F–J. Chevrolet Small-Block V-8, 1958 – 1986

- Polished, raised logo (not shown) 141-920
- Black crinkle, raised logo (shown, H)..... 141-921
- Chrome, raised logo (shown, F) 141-922
- Metallic gray, recessed logo (not shown)..... 141-923
- Chevy® Orange, raised logo (not shown) 141-924
- Cast gray crinkle, raised logo (not shown) 141-925
- Polished, no logo (not shown)..... 141-926
- Polished, recessed red/black logo (not shown) 141-927
- Black crinkle, recessed logo (not shown)..... 141-928
- Chrome, recessed red/black logo (shown, J) 141-930
- Powdercoat-ready, raised logo (shown, I)..... 141-939

New Collector's Series

- Red, raised logo (shown, G)..... 141-931
- Blue, raised logo (not shown)..... 141-932
- Green, raised logo (not shown)..... 141-933
- Yellow, raised logo (not shown)..... 141-934
- White, raised logo (not shown) 141-935

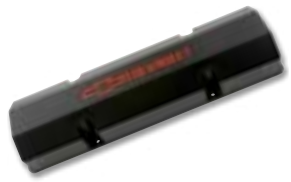

A 141-802

B 141-140

C 141-119

D 141-119

E 141-132

F 141-132

G 141-931

H 141-921

I 141-939

J 141-930

141-905 **K**

141-813 **L**

141-787 **M**

141-712 **N**

141-751 **O**

141-361 **P**

141-811 **Q**

141-784 **R**

STAMPED VALVE COVERS

These heavy-gauge stamped steel valve covers are designed to prevent leakage. The high-quality chromed covers feature Chevrolet and Bowtie logos. They are available in both tall and short (production height) designs. Some valve covers have oil baffles for PCV hookups. The valve covers are sold in pairs with necessary grommets, unless otherwise specified.

NOTE: *Production height Chevy Small-Block valve covers and valve covers with baffles will not clear most stud girdle applications.*

K, N, O, P, R

Chevrolet Small-Block V-8, 1958 – 1986

- Chrome, tall, no baffle (not shown) 141-101
- Chrome, short, with baffle (not shown) 141-102
- Chrome, tall, with baffle (not shown) 141-103
- Metallic gray, tall, with baffle (shown, P) 141-361
- Carbon-Style, tall, with baffle (shown N) 141-712
- Black crinkle, short, with baffle (not shown) 141-750
- Black crinkle, tall, with baffle (shown, O) 141-751
- Chevy® orange, tall, with baffle (shown R) 141-784
- Chrome, short, with baffle, black/red logo (not shown) ... 141-899
- Chrome, tall, with baffle, black/red (shown, K) 141-905

L, M, Q

Chevrolet Big-Block V-8, 1965 – 1996

- Chrome, short, with baffle (not shown) 141-114
- Chrome, tall, with baffle (not shown) 141-115
- Black crinkle, short, with baffle (not shown) 141-810
- Black crinkle, tall, with baffle (shown, Q) 141-811
- Chrome, short, with baffle, black/red logo (not shown) ... 141-812
- Chrome, tall, with baffle, black/red (shown, L) 141-813
- Chevy® orange, short, with baffle (not shown) 141-789
- Chevy® orange, tall, with baffle (shown, M) 141-787

TRANSMISSION OIL PAN

This stock-depth transmission oil pan has a drain plug for easier maintenance. The finned design aids cooling. There is a large GM logo stamped on the pan.

Transmission Oil Pan (not shown)

- Turbo 350 141-250

Personalize your engine with a distinctive component combo in three easy steps:

(1) Select your preferred color theme, choosing from various offerings in classic chrome, chrome with recessed painted logos, black crinkle, metallic gray, polished, clear anodized or one of the many new colors offered.

(2) Select your basic materials, choosing from stamped steel, die-cast aluminum, stamped aluminum, fabricated aluminum, or carbon fiber.

(3) Consider the importance of functionality, internal and external clearance, weight, mechanical strength, and surface finish characteristics.

...the result will be an appearance that is uniquely yours.

Plating more than four times thicker than some aftermarket parts.

2-PIECE DIE-CAST ALUMINUM VALVE COVERS

Valvetrain maintenance is greatly simplified with 2-piece die-cast aluminum valve covers. The top section has a diagonal cut and a retained gasket for a tight, leak-free seal. The valve covers feature oversized bolts for fast removal. These tall valve covers will clear roller rockers and stud girdles. These valve covers are available in a variety of styles/finishes with and without Bowties and/or Chevrolet logos. The valve covers are sold in pairs and include an Allen wrench and required grommets. U.S. Pat. Nos. 7,343,890, D543,998S

A–B. Chevrolet Small-Block V-8, 1958 – 1986

- Polished, recessed logo (shown, A) 141-910
- Black crinkle, recessed logo (shown, B)..... 141-911
- Chrome, recessed logo (not shown)..... 141-912
- Polished, raised logo (not shown) 141-913
- Black crinkle, raised logo (not shown)..... 141-914
- Polished, no logo (not shown)..... 141-915
- Replacement gasket kit (2) (not shown)..... 141-916

NOTE: *Will not fit cylinder head 12340034 or similar (with three rectangular raised internal sections near the valve cover mounting surface), unless such sections are milled off.*

LATE-MODEL STAMPED-STEEL VALVE COVERS

These short-style valve covers are the center hold-down design for later Small-Block engines. They have baffles and grommets, but are not supplied with mounting bolts (except 141-105). Sold in pairs.

C. Chevrolet Small-Block V-8, 1987 – Pre LS

- Chrome, tall (shown, C) 141-105
- Chrome, short (not shown) 141-107
- Black crinkle, short (not shown) 141-907
- Metallic gray, short (not shown)..... 141-908

NEW DRESS-UP KITS

Chevy Orange and Carbon-Style Engine Dress-up Kits are the latest looks for your small-block Chevy! These limited edition kits won't be around forever, so get one while you can. For more details about contents, please visit www.FactoryPerformanceParts.com.

NOTE: *Carbon-Style parts are stamped steel with a decorative finish.*

D–E. Chevrolet Small-Block V-8, 1958 – 1986

- Carbon-Style (shown, D) 141-710
- Chevy® Orange (shown, E)..... 141-780

DELUXE DRESS-UP KITS

These dress-up kits include one pair of tall valve covers, an air cleaner, timing chain cover, breather cap, 8 wing nuts and 8 hold-down clamps.

F–G. Deluxe Dress-Up Kits

- Metallic gray (not shown)..... 141-360
- Black crinkle (shown, G)..... 141-758
- Chrome, black/red logos (shown, F)..... 141-900

	141-360	141-758	141-900
Valve Covers	141-361	141-751	141-905
Air Cleaner	141-362	141-752	141-906
Timing Chain Cover	141-363	141-753	141-904
Air Breather Cap	141-365	141-754	141-616
8 wing Nuts	141-364 x2	141-756 x2	141-902 x2
8 hold-down Clamps	141-366 x2	141-757 x2	141-903 x2

H. Chevrolet Small-Block V-8, 1958 – 1986

- Includes 2 short baffled Bowtie valve covers (141-102), plus Bowtie timing chain cover with GM production oil seal installed (141-215), 2 black/red Bowtie 4-wire looms (141-636), 1 Bowtie push-in air breather (141-616), oil dipstick (141-550), timing tab for 8" Balancer (141-202), and 2 grommets (air breather cap and PCV) (not shown) 141-001
- Includes two short baffled Bowtie valve covers (141-102), plus 8 Bowtie valve cover wingnuts (141-600), 4 valve cover hold-down clamps (141-610), 2 black/red Bowtie 4-wire looms (141-636), 1 Bowtie push-in air breather cap (141-616), oil dipstick (141-550), and 2 grommets (air breather cap and PCV) (shown, H) 141-002

A 141-910

B 141-911

C 141-105

D 141-710

E 141-780

F 141-900

G 141-758

H 141-002

141-811 I

141-784 J

141-785 K

141-752 L

141-906 M

141-362 N

141-713 O

141-333 P

141-323 Q

141-369 R

AIR CLEANERS

These steel air cleaners are available in the classic GM style and the newer, high-performance look. They feature the Chevrolet logo and come with maximum flow ACDelco air filter elements* and mounting hardware. The classic air cleaners include die-cast Bowtie center nuts (except P/N 141-906). The air filter bases are recessed for a low profile and maximum hood clearance (a minimum of 3.750" from the top of carburetor gasket area to hood underside).

*14" x 3" Filter (A212CW), 10" x 2-53/64" Filter (A773)

I, K, L, M, N, O

14" Steel Air Cleaners

- 14" Classic with Bowtie center nut (shown, I)..... 141-302
- 14" High-performance (not shown)..... 141-307
- 14" Metallic gray (shown, N) 141-362
- 14" Black crinkle (shown, L)..... 141-752
- 14" Carbon-style (shown, O)..... 141-713
- 14" Chevy® Orange (shown, K)..... 141-785
- 14" Chrome, black/red logo (shown, M) 141-906

10" Steel Air Cleaners

- 10" High-performance (not shown)..... 141-315

SUPER-LIGHT 14" AIR CLEANERS

Weight savings can be had by using air cleaners made of aircraft aluminum, and carbon fiber. The aluminum air cleaners are available in clear anodized or black anodized finishes. These air cleaners come with a 3" tall ACDelco filter element, all necessary mounting hardware and standard wingnuts.

J. 14" Super-Light Air Cleaners

- Black anodized aluminum, no logo (not shown) 141-690
- Clear anodized aluminum, no logo (not shown) 141-691
- Black anodized aluminum, Chevrolet Bowtie logo (shown, J) 141-692
- Clear anodized aluminum, Chevrolet Bowtie logo (not shown)..... 141-693
- Carbon fiber, silver Bowtie logo (not shown) 141-790

AIR CLEANER CENTER NUTS

Add some extra flair to your custom air cleaner by topping it with a distinctive GM or Bowtie chrome plated zinc, or black crinkle die-cast center nut. The center nuts are available in small and large sizes. They fit both 1/4"-20 and 5/16"-18 studs.

P–R. Large and Small Air Cleaner Center Nuts

- Bowtie, small (not shown) 141-322
- Bowtie, large (shown, P) 141-333
- Bowtie, black crinkle, large (shown, R) 141-369
- Hi-tech Bowtie, small (not shown) 141-328
- Hi-tech Bowtie, large (shown, Q) 141-323
- Hi-tech GM, small (not shown)..... 141-332
- Hi-tech GM, large (not shown) 141-327

CHEVROLET PERFORMANCE LICENSED ENGINE BUILDER TOOLS (SHOWN BELOW)

Available only at FactoryPerformanceParts.com or GM Dealers

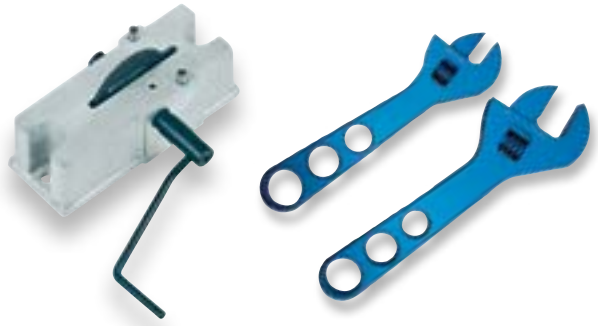

VALVE COVER MINI NUTS & WINGNUTS

These custom valve cover mini nuts and wingnuts feature a Bowtie logo on the top of each fastener. Separate studs are included for precise gasket positioning. The wingnuts fit Chevrolet Big-Block, Small-Block, and V-6 cylinder heads. Sold 4 per package.

A–E. Valve Cover Mini Nuts

- Chevy® Orange (shown, A)..... 141-601
- Polished aluminum (shown, B)..... 141-917
- Black crinkle (shown, C)..... 141-759
- Metallic gray (shown, D)..... 141-367
- Chrome, with red Bowtie (shown, E)..... 141-909

F–I. Valve Cover Wingnuts

- Chrome (shown, F)..... 141-600
- Metallic gray (shown, G)..... 141-364
- Black crinkle (shown, H)..... 141-756
- Chrome, with red Bowtie (shown, I)..... 141-902

AIR BREATHER CAPS

Air breather caps with raised Bowtie logos are available in a variety of finishes to complement die-cast or stamped valve covers. Use on valve covers with grommets fitting 1.220" holes unless otherwise specified. The breather caps are available in traditional domed-style and push-in, 3"-diameter air-filter-element style. Air breather/PCV grommet kit available: P/N 141-615.

Push-In, Rectangular

- Chrome (not shown)..... 141-619

J–L. Push-In, 3" Diameter

- Metallic gray (not shown)..... 141-365
- Chevy® Orange (shown, J)..... 141-786
- Chrome (shown, K)..... 141-616
- Black crinkle (shown, L)..... 141-754

Push-On, 3" Diameter, For Use with Oil Filler Tube, 1.820" Opening

- Chrome (not shown)..... 141-617

Twist-On, 3" Diameter

- Chrome (not shown)..... 141-618

These popular push-in filter air breathers, with the raised Bowtie logo stamped prominently in the top, are offered in two styles: with the heat-shield hood and without. 3" diameter. Fits valve covers with 1.220" holes.

M–N. Push-In Filter Air Breathers

- Black crinkle, with hood (shown, M)..... 141-613
- Black crinkle, without hood (shown, N)..... 141-614
- Chrome, with hood (not shown)..... 141-621
- Chrome, without hood (not shown)..... 141-622

Clamp-On Filter Air Breather, Fits 1-3/8th

- Chrome, with hood (not shown)..... 141-625

WATER NECKS

These Chevrolet water necks utilize neoprene O-ring gaskets instead of regular gaskets – eliminating leakage. Supplied with chrome bolts.

- V-8, 1955-1965, Chevy II V-8 1965, Corvette 1956-1963 (not shown)..... 141-500
- Chevrolet, Camaro, and Chevelle V-8s, 1966-1975 (not shown)..... 141-501

MASTER CYLINDER COVERS

These GM dual line master cylinder covers are offered for the most popular applications. Supplied with clips and a precisely positioned GM logo. PDB = Power Disc Brakes

- Single clip, 5" x 2-3/8", PDB (not shown)..... 141-225
- Single clip, 5-5/8" x 3", PDB or manual (not shown)..... 141-227

A 141-601 B 141-917 C 141-759 D 141-367 E 141-909

F 141-600 G 141-364 H 141-756 I 141-902

J 141-786 K 141-616 L 141-754

M 141-613 N 141-614

141-366 O 141-757 P 141-903 Q

141-363 R 141-753 S 141-904 T

141-215 U 141-216 V

141-217 W 141-730 X

VALVE COVER HOLD-DOWN CLAMPS

Valve cover hold-down clamps distribute the load over a wider area to minimize valve cover distortion and possible leakage. The clamps feature Bowtie logos and fit stamped valve covers for Chevrolet Small-Block V-8 and V-6/90-degree engines through 1986 (4 clamps per package).

O–Q. Hold-Down Clamps

- Chrome, no logo (not shown)..... 141-610
- Metallic gray (shown, O) 141-366
- Black crinkle (shown, P) 141-757
- Chevy® Orange (not shown)..... 141-782
- Chrome, red Bowtie (shown, Q) 141-903

TIMING CHAIN COVERS

Add a distinctive look to the front of any Chevrolet Small-Block or Big-Block engine with a custom timing cover that's accented with Chevrolet and Bowtie logos. These stamped-steel covers are engineered to GM specifications and come with a GM production oil seal pre-installed. The covers use bolt-on timing pointers.

NOTE: *Replacement oil seals: S/B GM 10111769, B/B GM 3860095.*

R–U. Chevrolet Small-Block V-8 1969 – 1991 and V-6/90°

- Chrome (shown, U)..... 141-215
- Metallic gray (shown, R)..... 141-363
- Black crinkle (shown, S) 141-753
- Chevy® Orange (not shown) 141-783
- Chrome, black/red logo (shown, T)..... 141-904

V. Chevrolet Big-Block 1965-1990

- Chrome (shown, V)..... 141-216

Striking die-cast timing covers, supplied with separate GM production oil seal. Bowtie logo directly cast into the upper surface.

W. Die-Cast Aluminum, Chevrolet Small-Block V-8 1965-1990

- Polished (shown, W)..... 141-217
- Chrome (not shown) 141-218

HARMONIC BALANCER COVERS

Enhanced looks and engine timing accuracy are benefits of installing a custom aluminum harmonic balancer cover. More than just a dress-up item, the precision-degreed Small-Block and Big-Block covers are mounted directly through the center hub, which eliminates any timing inaccuracies caused by outer inertia ring slippage. The balancer covers are marked with a Bowtie logo, Top Dead Center and proper timing degrees. They are available in black and chrome finishes.
U.S. Patent 5,675,078

Chevrolet Small-Block, 6-3/4"

- Black (not shown)..... 141-727
- Chrome (not shown) 141-725

Chevrolet Small-Block, 8"

- Black (not shown)..... 141-728
- Chrome (not shown) 141-726

X. Chevrolet Big-Block

- Black (shown, X)..... 141-730
- Chrome (not shown) 141-729

CHROME ALTERNATORS

These chrome (with red Bowtie logo) alternators are totally new with no rebuilt components, so they perform as well as they look. The quality is assured with generous over-spec amperage and an individual Quality Assurance graph that documents operating performance. The alternators include a machined pulley.

A. 100% New Chrome Alternators

- 1973-1986 internal regulator (not shown) 141-656
- 100 amp, 1-wire (shown, A) 141-657
- 60 amp, 1-wire (not shown) 141-658
- 80 amp, 1-wire (not shown) 141-659
- 120 amp, 1-wire (not shown)..... 141-660

ALTERNATOR BRACKETS

Alternator Brackets

- Top bracket bolts to manifold (not shown) 141-402
- Top bracket bolts to neck (not Corvette) (not shown) ... 141-403

HEI DISTRIBUTORS

These high quality, 100% new, and dependable HEI distributors set the standard in ignition, loaded with premium components like the original GM-melonized distributor gear and sintered steel weights to optimize GM engine performance. Includes an adjustable vacuum advance for fine-tuning the rate and amount of advance that will result in increased power and eliminate harmful detonation.

B. Chevrolet Small- and Big-Block, 1955 – 1982

- Yellow cap, with coil (not shown)..... 141-681
- Black cap, with coil (not shown)..... 141-682
- Red cap, with coil (shown, B)..... 141-683

BOWTIE HIGH PERFORMANCE ELECTRIC FANS

Auxiliary electric fans can improve engine performance and increase gas mileage, as well as prevent overheating in congested traffic. The fans are available in 10", 12", 14", heavy-duty 15" with thermostat, and 16" sizes to fit most popular cars and trucks. Their ultra-thin design is great for cramped locations. The 15" fan has an adjustable 180-240° F thermostat, and pulls 2,800 cfm, bolting to the radiator supports with supplied sturdy brackets. Installation is easy with basic hand tools. The fans feature a red Bowtie logo.

C-D. Bowtie High Performance Electric Fans

- 10" fan (not shown) 141-641
- 12" fan (not shown) 141-642
- 14" fan (shown, C) 141-644
- 15" fan with adjustable thermostat (shown, D) 141-647
- 16" fan (not shown) 141-646

ELECTRIC WATER PUMPS

Electric water pumps help race- and high-performance street engines save weight and eliminate high-rpm impeller drag. The lightweight, but durable, die-cast aluminum pumps are epoxy-powder-coated in four colors (plus chrome and polished finishes) for corrosion resistance. The flow rate is more than 35 gallons per minute. The units are decorated with a red Bowtie logo. A stepped fitting (1" pipe to 1.750" hose) and weather-tight connector are included.

E-G. Electric Water Pumps

	Big-Block	Small-Block
Polished	141-670 (shown, E)	141-654
Chrome	141-671	141-650
Red	141-672	141-652
Blue	141-673	141-653
Black	141-674	141-651 (shown, G)
Orange	141-675 (shown, F)	141-655

HEAVY-DUTY HIGH-TORQUE MINI STARTER

High-torque, gear-reduction design. 100% New, not rebuilt. Offset design results in more clearance between the oil pan and the starter, and can be rotated for additional chassis clearance. Has 15-to-1 compression for maximum cranking!

H. High-Torque Mini Starter

- Heavy-duty, 2.0 KW starter (shown, H)..... 141-684

A 141-657

B 141-683

C 141-644

D 141-647

E 141-670

F 141-675

G 141-651

H 141-684

141-232 I

141-233 J

141-629 K

141-212 L

141-714 M

141-636 N

141-200 O

141-550 P

BOWTIE LOGO FREEZE PLUG INSERTS

Make your engine block Bowtie all the way with decorative machined billet aluminum Bowtie logo freeze plug inserts. These are NOT freeze plug replacements. They fit all Chevy Small-Block engines except the LS-Series. Two per package.

I–J. Freeze Plug Inserts

- Black, raised logo (shown, I) 141-232
- Red, recessed logo (shown, J) 141-233

PUSH-IN OIL FILLER CAP

A raised, embossed Bowtie logo adorns the top of this push-in filler cap that fits valve covers with 1.220" holes.

K. Oil Filler Cap

- Black crinkle (shown, K) 141-629
- Chrome (not shown) 141-630

TWIST-ON OIL FILLER CAP

A large, white-on-blue epoxy-coated GM logo highlights this large, twist-on oil filler cap. It fits Chevrolet-style holes and includes a non-asbestos gasket.

Twist-On Oil Filler Cap

- Chrome with GM logo (not shown) 141-631

FUEL PUMP BLOCK-OFF PLATES

These Chevrolet V-8 fuel pump block-off plates feature a stamped Bowtie logo and come with a special non-asbestos gasket.

L. Fuel Pump Block-Off Plates

- Small-Block, chrome (not shown) 141-210
- Big-Block, chrome (not shown) 141-211
- Small-Block, black crinkle (shown, L) 141-212
- Big-Block, black crinkle (not shown) 141-213

LINEAR WIRE LOOMS

Messy spark plug wires can detract from an otherwise sharp engine, but those unruly wires can easily be tamed with Bowtie logo linear wire looms. The looms attach to the valve cover bolts and hold the wires in a neat parallel arrangement. A patented nylon wedge allows the wire holders to be opened and closed individually. One pair per package.

M. Linear Wire Looms

- Chrome, Small-Block V-8, 1959-1986 (not shown) 141-638
- Chrome, Big-Block V-8, 1965-1991 (not shown) 141-639
- Black Crinkle, Small-Block V-8, 1959-1986 (shown, M) 141-714

IGNITION WIRE LOOMS

These ignition wire looms feature black nylon separators with Bowtie and Chevrolet logos in red. They're mounted on chrome stems. They fit Small-Blocks from 1959-1986 and Big-Blocks from 1965-1991. Two per package.

N. Ignition Wire Looms

- Wire looms (shown, N) 141-636

TIMING POINTERS

Chrome, bolt-on timing pointers are available for 6.750" or 7" balancers and 8" balancers on Small-Block Chevrolet engines from 1969-1990 and Big-Blocks from 1965-1991.

O. Chevrolet Small-Block V-8 or V-6/90°, 1969 – 1990

- 6-3/4" or 7" balancer (shown, O) 141-200
- 8" balancer (not shown) 141-202

Chevrolet Big-Block, 1965 – 1991

- 8" balancer (not shown) 141-201

OIL DIPSTICK KITS

Chrome dipstick kits are available for a large variety of Chevrolet Small-Block and Big-Block engines. The kits include the dipstick tube and a hooked handle dipstick that has the Bowtie logo stamped near the fill indicator mark.

P. Chevrolet Oil Dipstick Kits

- Small-Block V-8, through 1977 (shown, P) 141-550
- Small-Block V-8, 1978-1981 (not shown) 141-551
- Big-Block V-8, 1965-1991 (not shown) 141-553

Chevrolet Bowtie and GM Performance Licensed Gauges From Auto Meter

AVAILABLE THROUGH YOUR GM DEALER

More GM Performance enthusiasts trust Auto Meter when it comes to monitoring their vehicle and accurately delivering the information they need to win. Auto Meter instrumentation is engineered and built in the USA and held to the highest manufacturing standards in the world. Since 1957, no name has been more synonymous with quality. When it comes to style, nobody offers you more great looking options than Auto Meter. You can make over your entire dashboard or supplement it with gauges from Auto Meter's huge selection of tachometers, speedometers, gauges, shift lights, and data acquisition systems. Auto Meter also has wiring kits, mounting solutions, and accessories you need for easy installation.

SEE YOUR GM DEALER FOR ORDERING INFORMATION

Speedometer
3688-00406

Tachometer
3699-00406

Fuel Level - 3613-00406

Voltmeter - 3692-00406

Water Temperature - 3655-00406

Oil Pressure - 3653-00406

BOWTIE LOGO GAUGES

Now that you've built your dream high-performance Chevrolet engine, let Chevrolet Performance keep tabs on all vital functions with handsome Chevrolet logo gauges. A wide variety of gauges and styles are offered by Auto Meter products with Chevrolet, Bowtie, and GM Performance Parts logos. These gauges are designed to withstand the rigors of racing or high-performance street use. Mounting hardware is included unless otherwise specified.

NOTE: *ATTENTION GM DEALERS: The following pages are General Motors' LICENSED PRODUCTS and must be ordered from the licensee. For detailed instructions, see Bulletin number ACC08-035 or visit the www.chevrolet.com/performance website, click on "Dealer Info," and then click on "Dealer Sites."*

Bowtie Logo Gauges:
- Red Bowtie logo
- White LED Through-the-dial lighting
- Black dial, white numbers

Part Number	Description
3613-00406	2-1/16" Fuel Level, 0-90 Ohms GM, Short Sweep Electrical
3627-00406	2-1/16" Oil Pressure, 0-100 PSI, Short Sweep Electrical
3637-00406	2-1/16" Water Temperature, 100-250° F, Short Sweep Electrical
3644-00406	2-1/16" Pyrometer Kit, 0-1,600° F, Full Sweep Electrical
3645-00406	2-1/16" Pyrometer Kit, 0-2,000° F, Full Sweep Electrical
3649-00406	2-1/16" Transmission Temperature, 100-250° F, Short Sweep Electrical
3653-00406	2-1/16" Oil Pressure, 0-100 PSI, Full Sweep Electrical
3655-00406	2-1/16" Water Temperature, 100-260° F, Full Sweep Electrical
3657-00406	2-1/16" Transmission Temperature, 100-260° F, Full Sweep Electrical
3659-00406	2-1/16" Boost, Vacuum 30 In Hg/30 psi, Full Sweep Electric
3674-00406	2-1/16" Nitrous, 0-1,600 psi, Full Sweep Electrical
3675-00406	2-1/16" Air/Fuel Ratio, Full Sweep Electrical
3688-00406	3-3/8" Electrical Speedometer, 160 mph Programmable
3690-00406	3-3/8" Tachometer, 10,000 rpm with Shift Light. 4-, 6-, and 8-cylinder compatible
3692-00406	2-1/16" Voltmeter, 8-18 Volt, Short Sweep Electrical
3697-00406	3-3/8" Tachometer, 10,000 rpm. 4-, 6-, and 8-cylinder compatible. In-dash mount
3699-00406	5" Tachometer, 10,000 rpm with Shift Light. 4-, 6-, and 8-cylinder compatible. In-dash or pedestal mount
3603-00406	2-1/16" Boost, Vacuum 30 in Hg/30 psi, Mechanical
3604-00406	2-1/16" Boost, 0-35 psi, Mechanical
3605-00406	2-1/16" Boost, 0-60 psi, Mechanical
3607-00406	2-1/16" Boost, Vacuum 30 in Hg/20 psi, Mechanical
3621-00406	2-1/16" Oil Pressure, 0-100 psi, Mechanical
3632-00406	2-1/16" Water Temperature, 120-240° F, Mechanical
3663-00406	2-1/16" Fuel Pressure, 0-100 psi, Full Sweep Electrical

VINTAGE BOWTIE LOGO GAUGES

A. 1300-00408

5-Piece Kit Box with Mechanical Speedometer

- Vintage logo
- White dial, black logo
- Perimeter lighting
- All 2" gauges feature chrome-embossed Bowtie bezel
- Orange pointer
- Includes speedometer, oil pressure, voltmeter, water temperature, fuel level gauges and all required sensors, sending units and mounting hardware

B. 1302-00408

5-Piece Kit Box with Electrical Speedometer

- Vintage logo
- White dial, black logo
- Perimeter lighting
- Orange pointer
- Includes speedometer, oil pressure, voltmeter, water temperature, fuel level gauges and all required sensors, sending units and mounting hardware

C. 1303-00408

5" Quad Gauge and Speedometer

- Vintage logo
- White dial, black logo
- Perimeter lighting
- Orange pointer
- Includes speedometer, oil pressure, voltmeter, water temperature, fuel level gauges and all required sensors and sending units

D. 1398-00408

3-1/8" Tachometer, 7,000 rpm

- Vintage logo
- White dial, black logo
- Perimeter lighting
- Orange pointer
- 4-, 6-, and 8-cylinder compatible

A 5-Piece Kit Box with Mechanical Speedometer – 1300-0048

B 5-Piece Kit Box with Electrical Speedometer – 1302-00408

C 5" Quad Gauge and Speedometer

D 3-1/8" Tachometer, 7000 rpm – 1398-00408

Example of 2-1/16" Chrome-Embossed Bowtie Bevel

Tachometer – 5899-00407 **E**

Speedometer – 5889-00407 **F**

Water Temperature – 5837-00407 **G**

Oil Pressure – 5827-00407 **H**

Volts – 5891-00407 **I**

Nitrous – 5828-00407 **J**

GM PERFORMANCE PARTS LOGO GAUGES

- GM Performance Parts logo
- Perimeter lighting
- White dial, black numbers

E. 5899-00407
5" Tachometer, 10,000 rpm with Shift Light
- 6- and 8-cylinder compatible
- Pedestal mount

F. 5889-00407
5" Electrical, Programmable Speedometer, 160 mph

G. 5837-00407
2-5/8" Water Temperature, 100-250° F, Short Sweep Electrical

H. 5827-00407
2-5/8" Oil Pressure, 0-100 psi, Short Sweep Electrical

I. 5891-00407
2-5/8" Voltmeter, 8-18 Volts

J. 5828-00407
2-5/8" Nitrous, 0-2,000 psi, Mechanical

5898-00407
5" Tachometer, 10,000 rpm In-Dash (not shown)
- 4-, 6-, and 8-cylinder compatible

5814-00407
2-5/8" Fuel Level (not shown)
- 0 Ohms empty, 90 Ohms full

5812-00407
2-5/8" Fuel Pressure, 0-100 psi, Mechanical (not shown)

5813-00407
2-5/8" Fuel Pressure, 0-15 psi with Isolator, Mechanical (not shown)

5821-00407
2-5/8" Oil Pressure, 0-100 psi, Mechanical (not shown)

5780-00407
3-3/4" Tachometer, 8,000 rpm (not shown)
- 4-, 6-, and 8-cylinder compatible

5795-00407
5" Electrical Tachometer, 10,000 rpm with Memory, Standard Ignition (not shown)
- 4-, 6-, and 8-cylinder compatible
- Pedestal mount

5832-00407
2-5/8" Water Temperature, 120-240° F, Mechanical (not shown)

BOWTIE LOGO GAUGES

- Red Bowtie logo
- Perimeter lighting
- White dial, black numbers

A. 5889-00406
5" Electronic Programmable Speedometer, 160 mph

B. 5832-00406
2-5/8" Water Temperature, 120-240° F, Mechanical

C. 5780-00406
3-3/4" Tachometer, 8,000 rpm
- 4-, 6-, and 8-cylinder compatible
- Pedestal mount

D. 5814-00406
2-5/8" Fuel Level, Short Sweep Electrical
- 0 Ohms empty, 90 Ohms full

E. 5837-00406
2-5/8" Water Temperature, 100-250° F, Short Sweep Electrical

F. 5827-00406
2-5/8" Oil Pressure, 0-100 psi, Short Sweep Electrical

G. 5828-00406
2-5/8" Nitrous, 0-2000 psi, Mechanical

5795-00406
5" Tachometer, 10,000 rpm with Memory, Standard Ignition (not shown)
- 4-, 6-, and 8-cylinder compatible
- Pedestal mount

5812-00406
2-5/8" Fuel Pressure, 0-100 psi, Mechanical (not shown)

5813-00406
2-5/8" Fuel Pressure, 0-15 psi with Isolator, Mechanical (not shown)

5821-00406
2-5/8" Oil Pressure, 0-100 psi, Mechanical (not shown)

A Speedometer – 5889-00406

B Water Temperature – 5832-00406

C Tachometer – 5780-00406

D Fuel Level – 5814-00406

E Water Temperature – 5837-00406

F Oil Pressure – 5827-00406

G Nitrous – 5828-00406

Tachometer – 880445 **H**

Water Temperature – 880446 **I**

Voltmeter – 880444 **J**

Fuel Pressure – 880449 **K**

Trans Temperature – 880448 **L**

Oil Pressure – 880447 **M**

Brake Pressure – 880450 **N**

GOLD BOWTIE LOGO GAUGES

- Gold Bowtie logo
- White LED Through-the-dial lighting
- Black dial, white numbers
- As installed on COPO Chevy Camaro

H. 880445
5" 10K RPM FSE Shift Light Tachometer

I. 880446
2-1/16" 100-260 F FSE Water Temperature

J. 880444
2-1/16" 8-18V SSE Voltmeter

K. 880449
2-1/16" 0-100 PSI FSE Fuel Pressure

L. 880448
2-1/16" 100-260 F FSE Trans Temperature

M. 880447
2-1/16" 0-100 PSI FSE Oil Pressure

N. 880450
2-1/16" 1600 PSI FSE Brake Pressure

GM Restoration Parts

The Most Authentic and Accurate Parts For Your Restoration

It was a chance find, based on a story recounted by a friend of a friend. But there it was – the classic muscle car you'd been searching for, hidden beneath a dusty tarp in an old barn. You worked hard, but finally convinced the stubborn farmer to sell it.

With the car safely in your garage, the exuberance of the thrill of the hunt morphs into the realization that a careful and accurate restoration is needed to bring that vintage car back to its original glory. That means more hunting for the right parts; everything from the carburetor to the clamps that hold the fuel lines in place.

GM knows it's the little things that count with a restoration. With countless resources for restoration components, assurance that you're getting the most authentic and best-fitting parts comes when you buy officially licensed GM Restoration Parts. They're made by manufacturers who build to GM's specifications and label them accordingly. Many even use original tooling for unparalleled accuracy in look, feel and performance.

You can find licensed GM Restoration Parts for everything from the grille badge for a 1969 Camaro to the body shell itself for that Camaro. That's right – an entire classic Camaro body!

Before purchasing any reproduction parts for your valuable project, make sure the manufacturer is licensed by GM Restoration Parts.

With mint condition on your mind, licensed GM Restoration Parts are the only parts that should go into your barn-find beauty.

GM RESTORATION PARTS – LICENSED MANUFACTURERS

Company	Phone	Website
BATTERIES		
The Antique Auto Battery Mfg.Co. Inc.	800-426-7580	www.antiqueautobattery.com
Axion Power Battery Mfg., Inc.	724-654-9300	www.turbostart.com
BELTS AND HOSES		
Ground Up Restorations, Inc.	203-235-1200	www.ss396.com
Quanta Products, LLC	410-658-5700	www.quantaproducts.com
Z-06 Products, LLC	616-426-4340	www.corvettecentral.com
BODY PARTS		
Auto Metal Direct	866-591-8309	www.autometaldirect.com
Dynacorn International, Inc.	805-486-2612	www.dynacorn.com
Fit-Rite Auto Body Parts Inc.	800-992-1064	www.keypartsonline.com/servlet/StoreFront
Golden Star Corporation	214-544-2395	www.goldenstarauto.com
Mar-K Specialized Manufacturing, Inc.	405-721-7945	www.mar-k.com/dealer_program.html
Triplus Co. Ltd.	011-886-2-27557686	www.triplus.com.tw
BUICK		
Bob's Automobilia	805-434-2963	www.bobsautomobilia.com
Bright Ideas	270-535-5623	
CAR Motorsports, LLC	877-367-2279	www.carmotorsports.com
CARS, Inc.	908-369-3666	www.carsinc.com
Highway Stars, Inc.	847-599-1600	www.highwaystars.org
The Parts Place, Inc.	630-365-1800	www.thepartsplaceinc.com
CADILLAC		
Beaulin Enterprises, Inc.	913-722-2783	www.mcveys.com
Cadillac King	818-890-0621	www.cadillacking.com
USA Parts Supply, Ltd.	304-724-6600	www.usapartssupply.com
CHEVROLET		
Ausley's (J'Leys and Co.)	336-228-6701	www.chevelle.com
Autocraft Investments, Inc., d/b/a (NPD)	352-378-2473	www.nationalparts.com
Carfre, Inc.	626-282-8381	www.genesmithparts.com
CHQ Reproductions	800-441-3866	www.chqreproductions.com
Clark's Corvair Parts, Inc.	413-625-9776	www.corvair.com
***Classic Industries Inc. (OER®)**	800-854-1280	www.classicindustries.com
D&R Classic Automotive, Inc.	630-393-0009	www.drclassic.com
Danchuk Manufacturing, Inc.	714-540-4363	www.danchuk.com
Dynacorn Classic Bodies, Inc.	805-486-2612	www.dynacorn.com
El Camino Manufacturing, Inc.	360-417-9201	www.elcaminomanufacturing.com
Heartbeat City, LLC	586-226-8811	www.heartbeatcity.com
Hubbard's Impala Parts, Inc.	336-227-1589	www.impalaparts.com
I&I Reproductions, Inc.	562-531-8117	www.iandireproduction.com
KNS Accessories/Grand General Accessories	310-631-2589	www.knsacc.com
Muscle Factory	714-635-2314	www.muscle-factory.com
Original Parts Group, Inc.	800-243-8355	www.opgi.com
Premier Street Rod Parts	800-447-5000	www.premierstreetrod.com
Real Deal Steel	407-585-1957	www.realdealsteel.com
United Pacific Industries, Inc.	310-638-5988	www.uapac.com
Vintique, Inc.	714-634-1932	www.vintiqueinc.com
***Woody's Custom Hot Rodz**	855-567-1957	www.woodyshotrodz.com
CORVETTE		
American Custom Industries (Bobbart)	800-822-8020	www.acivette.com
Auto Accessories of America	717-667-3004	www.corvetteamerica.com
Auto Pro USA, Inc.	310-637-4500	www.autoprousa.net
CC Industries, LLC, d/b/a Corvette Central	269-426-3342	www.corvettecentral.com
Corvette Specialties Manufacturing	410-795-3180	www.grilleteeth.com
Corvette Stainless Steel Brakes aka CSSB, Inc.	800-262-9595	www.cssbinc.com
DeWitt's Reproductions, Inc.	810-220-0181	www.dewitts.com
EC Products Design	805-466-4703	www.corvettepacifica.com
***Eckler Industries, LLC**	800-327-4868	www.ecklers.com
Just Corvette	636-947-6060	www.justcorvettes.com
Keen Parts, Inc.	513-353-3449	www.keenparts.com
Lone Star Caliper Company	903-873-8400	www.lonestarcaliper.com
Long Island Corvette Supply, Inc.	631-225-5030	www.licorvette.com
Melrose T-Top International	815-758-2783	www.melroset-tops.com
Mid America Motorworks	217-540-4301	www.madvet.com
Paragon Reproductions, Inc.	800-882-4688	www.corvette-paragon.com
Vette Masters, Inc.	757-575-8715	www.vettemasters.com
EMBLEMS/LENSES/DECALS/TRIM		
Bill's Birds, Inc.	631-667-3853	www.bb-ny.com
Bob's Antique	310-515-1089	www.bobsantiques.com
Counterpart Automotive, Inc.	714-771-1732	
Dobbins Restoration Publishing, Inc.	215-443-0779	www.yankeelady.com/dobbins
Drake Automotive Group, Inc.	702-853-2064	www.scottdrake.net
ECS Automotive Concpts, LLC	636-207-7767	www.ecsautomotive.com
Eurosport Daytona, Inc.	800-874-8044	www.eurosportdaytona.com
GT Performance Products	818-847-9611	www.gtperformanceproducts.com
Jim Osborn Reproductions, Inc.	770-962-7556	www.osborn-reproduction.com
Legendary Auto Interiors, Ltd.	800-363-8804	www.legendaryautointeriors.com
Millenium Industries, Inc.	708-895-1381	
Motor City Vinyl Graphics	586-243-0733	www.motorcityvinyl.com
Mutton Hollow Chevys, LLC	801-546-3274	www.muttonhollowchevys.com
Phoenix Graphix, Inc.	800-941-4550	www.phoenixgraphix.com
Sharpline Converting, Inc.	888-615-4214	www.sharpline.com
Specialty Reproductions	515-727-1310	
Stencils and Stripes Unlimited, Inc.	847-692-6893	www.stencilsandstripes.com
Technostalgia, Inc.	866-258-5670	www.cool-leds.com
TransAm Stripes	210-326-6503	www.transamstripes.net
***Trim Parts, Inc. (RPUI)**	513-934-0815	www.rpui.com
Year One, Inc.	800-950-9503	www.yearone.com
GLASS		
Pilkington North America, Inc.	614-443-0231	www.pilkingtonclassics.com
HARD / MECHANICAL PARTS		
Custom Autosound	714-535-1091	www.casmfg.com
Forever Sharp Products, Inc.	888-878-2156	www.foreversharp.com
Henry Nunn dba Nunnbetter Reproductions	405-364-0416	
Instrument Sales and Service, Inc.	503-286-3938	www.instrumentsales.com
Jim Carter's Antique Truck Parts	816-833-1913	www.oldchevytrucks.com
Ken Harrison	800-497-5294	
MB Marketing and Manufacturing	800-231-4125	www.mbmbrakeboosters.com
Shafer's Classic Reproductions, Inc.	813-628-0092	www.shafersclassic.com
Steele Rubber Products, Inc.	800-544-8665	www.steelerubber.com
Tedd Cycle, Inc.	914-565-2806	www.Vtwinmfg.com
The Right Stuff	614-440-9994	www.rightstuffdetailing.com
OLDSMOBILE		
Fusick Automotive Products, Inc.	860-623-1589	www.fusick.com/dwnldcat.htm
PONTIAC		
Leader Industries Inc., d/b/a The Fiero Store	860-684-6762	www.leaderind.com
Max Performance	267-638-3500	www.maxperformanceinc.com
PW Distribution, LLC	011-612-4257-1230	www.pontiworld.com.au
Resto-Perfect, LLC	201-218-8662	
Stephen R. Ames, d/b/a Ames Automotive Ent.	603-876-3932	www.amesperf.com
WHEELS PARTS		
Jae Enterprises, Inc.	800-626-3367	www.jaeeagle.com
Jenica Inc, d/b/a Excalibur Wheel Accessories	909-923-8300	www.excaliburwheel.com
Hubcap Kingdom, LLC	918-622-2277	www.hubcapkingdom.com
Revolution Supply Co., Inc.	877-738-9990	www.revolutionsupply.com
Roadster Wheels, LLC	310-503-8637	www.roadsterwirewheel.com
MISC		
Bryant Auto Sales	513-528-7452	
Gardner-Westcott, Co.	800-521-9805	www.gardner-westcott.com
Lectric Limited Inc.	708-563-0400	www.lectriclimited.com
QuietRide Solutions	209-942-4777	www.quietride.com
Retro Manufacturing, LLC	702-483-2222	www.retrosound.com
Strattec	414-247-3331	www.strattec.com
Undercover Innovations	661-325-4506	www.undercoverinnovations.com

See ad on the following pages

Get The OER® Advantage. . . It's Almost Unfair!

Authentic Quality Reproduction Parts for Classic American Muscle

ORIGINAL QUALITY • ORIGINAL APPEARANCE

Original Fit

Appearance is extremely important in reproduction parts, but just as important is the way the part fits. You will appreciate OER® reproductions. Parts are designed to fit as closely to the original as possible. Each part is checked and rechecked to ensure proper fit and function.

Superior Quality

It's one thing to manufacture a reproduction part, it's another to duplicate the quality. OER® uses the finest quality materials and workmanship to ensure the finished part meets or exceeds original equipment specifications. In fact, many OER® products are superior to the original.

Authentic Appearance

Each OER® part is manufactured to original specifications, down to the smallest detail. Consistent quality control methods ensure an exact duplicate every time.

OER® Officially Licensed Products

Many OER® products are officially licensed by the original manufacturers assuring the highest quality reproductions available.

GM Restoration Parts

OER ORIGINAL EQUIPMENT REPRODUCTION®

Manufacturing Authentic Products for The Restoration Industry

Learn more about OER online: **www.oerparts.com**

Ask for OER® at your local restoration parts supplier or any participating GM dealer

CHEVYMALL.COM

CHEVY PERFORMANCE & COPO APPAREL

DOUBLE OLD FASHIONED GLASS SET

DECORATIVE RACING HOOD

CHEVY PERFORMANCE & COPO CAPS

For these & other great products visit www.chevymall.com

Officially Licensed Chevrolet Merchandise

RPUI

Restoration Parts Unlimited, Inc.

LEADERS IN RESTORATION

OEM QUALITY RESTORATION PARTS MADE IN THE U.S.A.

Restoration Parts Unlimited, Inc. manufactures the highest quality restoration components available. From carpet and upholstery, to weatherstripping, brake lines, and period-correct emblems, every product is thoroughly inspected and comes with a 100% customer satisfaction guarantee.

www.RPUI.com | 513.934.0815

GM Restoration Parts

SAVE TIME. SAVE MONEY. START FRESH.

Every 1955 & 1957 Chevrolet Performance Licensed Body is hand built right here in the USA by the experts at Woody's Hot Rodz.

1955 Chevrolet 2-Door Sedan, Hardtop & Convertible.
1957 Chevrolet 2-Door Sedan, Hardtop & Convertible.
More information available online.

Woody's Hot Rodz is dedicated to the 1955-57 Tri-Five Chevrolet. At Woody's, Tri-Fives are all we do. We build Chevrolet Licensed Bodies and have sold more licensed bodies than anyone. Our award winning all-new turn-key builds are built with these Chevrolet Licensed Bodies. Quality and details like body gaps and welds set our bodies apart and provide a solid foundation to any build.

PERFORMANCE
OFFICIAL LICENSED PRODUCT

Woody's Hot Rodz Bright Indiana
THE TRI-FIVE EXPERTS

Our expert craftsmen build each body by hand, with great attention to detail. With each body we produce, we are fulfilling a desire to reconnect with the past, & making a dream a reality by creating memories that will connect with future generations. At Woody's Hot Rodz, we build more than just great bodies, we are building time machines that take us back to the 1950's.

Shown with optional door & decklid package.

Shown with optional door & decklid package.

From Fenders to Fins, We Have You Covered.

www.woodyshotrodz.com **1-855-567-1957**

Can a Speedometer Really Melt?

Yours Might After You Call Us.

Thousands of Performance and Restoration Parts at Your Fingertips

The broadest selection of performance, restoration, and upgrade parts has made us the industry leader. More than 50 years' experience helps, too.

Don't Get Left Behind

ECKLER'S®
Family of Automotive Parts Companies

1-800-284-3906 EcklersAutomotive.com

CORVETTE CAMARO Chevelle El Camino

TRUST IS EARNED

MAKERS KNOW

You have to believe in yourself when you make your own way. Working with the best helps me know I'll get every job done right, and keeps trust at the core of everything I do.

ACDelco is a premier supplier of automotive replacement and GM Original Equipment parts. With nearly 90,000 parts across 37 product lines, we have what it takes to help make earning trust easy. ACDelco parts can be found at your Chevrolet Performance dealer. **Visit chevrolet.com/performance to locate your closest Chevrolet Performance dealer.**

ACDelco

©2015 General Motors. All rights reserved. The marks appearing in this ad are the trademarks or service marks of GM, its subsidiaries, affiliates or licensors.

ACDelco® Auto & Equipment Tools

Most Powerful
Most Compact
Most Control

Do it right the first time. Do it right every time!

ETC (Electronic Torque Clutch) is a pre-programed torque setting tool that provides 5 settings plus maximum digital clutch for torque applications. Simply press the trigger and the impact will stop once the desired torque is reached. This prevents the risks of over-/ under-torqueing or unbalanced tightness which may cause the bolt to break apart causing critical safety issues. These ETC tools are designed to deliver controllable torque power at your fingertips.

ARI20120B ARI2064B ARI2060 ARI2044B

To Order Visit Us at:
www.ACDelco-tools.com

Or Call Toll Free: 877-693-8665

The Mechanic's Choice.

Li-ion 18V (From left to right)

ARD2081B	2-Speed Drill
ARI2061-3B	3/8" Impact
ARI20120B	3/8" ETC Impact
ARI2064B	1/2" ETC Impact
ARI2060	1/2" ETC Impact
ARI2044B	3/8" Angle Impact
ARL2025	LED Light
ARG2011	Grinder

Li-ion 12V

ARG1207	Rotary Tool
ARW1201	3/8" Ratchet
ARG1214	Angle Grinder
ARG1213	Straight Grinder
ARZ6056	Inspection Camera
ARZ604	Inspection Camera
ARS1210R	3" Polisher
ARS1209	3" Sander
ARD1296	2-Speed Drill
ARI1265	Impact
ARI1268-3	3/8" Wrench
ARI1278-3	3/8" Wrench

Li-ion 8V

ARD888	3/8" Drill
ARD847	Drill Driver
ARI809	Impact
ARI810	3/8" Wrench
ARI810-2	1/4" Wrench
ARL836	LED Light
ARW804	1/4" Ratchet

Digital Tool

ARM602-3	3/8" Torque Adapter
ARM602-4	1/2" Torque Adapter
ARM303-4A-340	1/2" Wrench
ARM601-4	1/2" Wrench
ARM601-3	3/8" Wrench

ACDelco, ACDelco Emblem and the ACDelco related graphics are General Motors Trademarks used under license to Mobiletron Electronics Co., Ltd.

ALABAMA

Company Name	Contact Name	Address	City	Zip	Phone	Website	Email Address
Edwards Chevrolet Co. Inc.	Larry McCary	1400 Third Ave N	Birmingham	35203	205.716.3436	downtown.chevyman.com	lmccary@chevyman.com
Rick Hendrick Chevrolet	John Moore	1620 Montgomery Hwy	Hoover	35216	205.823.5428	hooverautomall.com	john.r.moore@hendrickauto.com

ARIZONA

Company Name	Contact Name	Address	City	Zip	Phone	Website	Email Address
Thorobred Chevrolet, Inc.	Jerry Anderson	2121 N. Arizona Ave	Chandler	85225	480.899.1151	thorobredchevrolet.com	janderson@thorobredchevrolet.com
Sands Motor Company	Steve Baddgor	5418 NW Grand	Glendale	85301	623.842.5223	sandsglendale.com	sbaddgor@sandschevrolet.com
AutoNation Parts Center Phoenix	Todd Garrett	162 E. 1st Ave.	Mesa	85210	623.329.9434	autonationchevroletgilbert.com	garrettT@autonation.com
Courtesy Chevrolet	Ron Guy	1233 E. Camelback Rd	Phoenix	85014	602.604.3005	courtesychev.com	rguy@courtesychev.com
Midway Chevrolet Company	Mike Bigar	2323 W. Bell Rd	Phoenix	85023	602.760.3393	midwaychevy.com	mbigar@vtaig.com
Watson Chevrolet, Inc.	Terry Cunningham	625 W. Auto Mall Dr	Tuscon	85705	520.918.6366	watsonchevrolet.com	terryc@watsonchevrolet.com

CALIFORNIA

Company Name	Contact Name	Address	City	Zip	Phone	Website	Email Address
Dublin Chevrolet, Cadillac	Roy Wold	4200 John Monego Ct.	Dublin	94568	925.828.8251	dublinchevrolet.com	royw@cacargroup.com
Maita Chevrolet	Joseph DeVincenzi	9650 Auto Center Drive	Elk Grove	95757	916.691.2800	maitachevrolet.com	mcparts@maita.net
Mark Christopher Auto Center	Doug Reeves	2131 Convention Center Way	Ontario	91764	909.390.2900	markchristopher.com	dreeves@markchristopher.com
Rally Cad Chev Buick GMC	Brenden Herem	39012 Carriage Way	Palmdale	93551	800.585.0551	4rally.com	gmparts@4rally.com
Guaranty Chevrolet Motors, Inc	Carl Lutes	711 E. 17th Street	Santa Ana	92701	714.973.1711	occhevy.com	clutes@guarantychevrolet.com
Courtesy Chevrolet Center	Gerry Lefebvre	750 Camino Del Rio N.	San Diego	92108	619.297.3961	courtesysandiego.com	gerry@courtesysandiego.com
F. H. Dailey Motor Co.	Floyd Amerino	800 Davis Street	San Leandro	94577	510.351.5800	fhdailey.com	ccohen@fhdailey.com
Paradise Chevrolet Cadillac	Ruban Aranda	27360 Ynez Road	Temecula	92591	951.699.2699	paradiseautos.com	rubena@paradiseautos.com
John L Sullivan Chevrolet	Steve Smith	350 Automall Dr.	Roseville	95661	916.257.4227	www.chevyworld.com	steves@chevyworld.com
Crest Chevrolet	Bruce Lovejoy	909 W 21st St	San Bernardino	92405	800.233.3838	www.crestchevrolet.com	blovejoy@crestfleet.com

COLORADO

Company Name	Contact Name	Address	City	Zip	Phone	Website	Email Address
John Elway Chevrolet	Ken Casey	5200 S. Broadway	Englewood	80113	800.345.5744	elwaydealers.com	kcasey@elwaydealers.net

DELAWARE

Company Name	Contact Name	Address	City	Zip	Phone	Website	Email Address
Nucar Chevrolet	Bill Grasso	174 N. Dupont Hwy	New Castle	19720	302.218.3729	nucar.com	bgrasso@nucar.com

FLORIDA

Company Name	Contact Name	Address	City	Zip	Phone	Website	Email Address
Autonation Parts Center	Jim Kubisiak	15005 US Hwy 19 North	Clearwater	33764	800.888.2292	anpconline.com	kubisiakj@autonation.com
Jon Hall Chevrolet, Inc.	Tom Brammer	551 N. Nova Road	Daytona Beach	32114	386.236.4509	jonhallchevrolet.com	tom.brammer.com
Victory Layne Chevrolet	Jeff Reeves	3980 Fowler	Fort Myers	33901	800.226.7806	victorylaynechevrolet.com	vlreeves@hotmail.com
Phil Smith Chevrolet	Duane Tilton	1640 North State Rd. 7	Lauderhill	33313	800.381.7833	philsmithchevrolet.com	duanet@psmithchevrolet.com
Autonation Chev Of Coral Gables	Jason Armas	4181 South West 8th St.	Miami	33134	800.322.3389	autonationchevroletcoralgables.com	armasj@autonation.com
Stingray Chevrolet	Bill Annable	2002 N. Frontage Rd	Plant City	33563	800.575.5123	stingraychevrolet.com	bannable@stingraychevrolet.com

GEORGIA

Company Name	Contact Name	Address	City	Zip	Phone	Website	Email Address
Nesmith Chevrolet, Buick, GMC, Inc.	David Anderson	7334 Hwy 280 W	Claxton	30417	877.497.3624	nesmithnow.com	david@nesmithnow.com
Legacy Chevrolet, Cadillac	Chuck Ridgeway	3615 N. Manchester Express Way	Columbus	31909	706.322.8888	legacychevy.com	cridgeway@legacychevy.com
Nash Chevrolet Company	George Pittman	630 Scenic Highway	Lawrenceville	30045	770.963.9266	nashchevy.com	gkpittman@yahoo.com
John Thornton Chevrolet	Gary Ellis	1971 Thornton Rd	Lithia Springs	30122	770.941.8550	johnthornton.com	gellis@johnthornton.com

IDAHO

Company Name	Contact Name	Address	City	Zip	Phone	Website	Email Address
Edmark Chevrolet Cadillac	Bob Robinson	15700 Idaho Center Blvd	Nampa	83687	208.466.6000	edmarkchevrolet.com	partsroom@edmarksuperstore.com

ILLINOIS

Company Name	Contact Name	Address	City	Zip	Phone	Website	Email Address
Rock Chevrolet	Tom Rominski	1000 E. Belvidere Rd	Grayslake	60030	877.441.5150	crateenginedepot.com	tom@crateenginedepot.com
Uftring Weston Chevrolet, Cadillac	Bob Humphrey	1600 W. War Memorial	Peoria	61604	309.688.5940	uftringweston.com	bobhumphrey@uftringweston.com
Weir Chev-Buick-GMC	Chris Lutman	1107 S. Main	Red Bud	62278	800.334.1379	weirparts.com	chris.lutman@weirparts.com

INDIANA

Company Name	Contact Name	Address	City	Zip	Phone	Website	Email Address
Hirlinger Motors, Inc.	Jerry Joseph	158 Harrison Brookville Rd.	W. Harrison	47060	812.637.3222	hirlingerchevrolet.com	jerryj@hirlingerchevrolet.com
Hubler Chevrolet Inc.	Rick Bell	8220 S US 31	Indianapolis	46227	800.382.9992	www.hublerchevyauto.com	rbell@drivehubler.com

IOWA

Company Name	Contact Name	Address	City	Zip	Phone	Website	Email Address
Karl Chevrolet, Inc.	Adam Moore	1101 SE Oralabor Rd	Ankeny	50021	855.806.1147	karlperformanceparts.com	adamm@karlperformanceparts.com
Shottenkirk, GM Giant	Brad Richardson	5031 Ave O	Ft. Madison	52627	877.310.0513	shottenkirkfortmadison.com	gmparts@shottenkirk.com
Rydell Chevrolet, Inc.	Brian Tenley	1325 E. San Maran Dr.	Waterloo	50702	319.234.4601	rydellauto.com	brian@rydellauto.com

KANSAS

Company Name	Contact Name	Address	City	Zip	Phone	Website	Email Address
Hendrick Chevrolet Shawnee Mission	Jeff Kopp	8300 Shawnee Mission Pkwy	Shawnee Mission	66202	800.728.8267	superchevyperformance.com	jeff.kopp@hendrickauto.com

KENTUCKY

Company Name	Contact Name	Address	City	Zip	Phone	Website	Email Address
Bachman Auto Group, Inc.	Tom Finley	9650 Bluegrass Parkway	Louisville	40299	502.499.6161	bachmanchevrolet.com	tfinley@bachmanautogroup.com
Bob Hook Chevrolet, Inc.	Bob Maberry	4144 Bardstown Rd	Louisville	40218	800.274.4665	bobhook.com	bmaberry@bobhook.net

LOUISIANA

Company Name	Contact Name	Address	City	Zip	Phone	Website	Email Address
Chevyland	Jeral Lawler	7500 Youree Dr	Shreveport	71105	318.226.3277	www.chevyland.com	jlawler@chevyland.com

MICHIGAN

Company Name	Contact Name	Address	City	Zip	Phone	Website	Email Address
Ed Rinke Chevrolet Co.	Jim Hensley	26125 Van Dyke	Centerline	48015	586.754.7000	edrinke.com	jhensley@edrinke.com
Berger Chevrolet, Inc.	Kendall Tolan	2525 28th St SE	Grand Rapids	49512	616.575.9473	bergerchevy.com	ktolan@bergerchevy.com
LaFontaine Performance Center	Joe Sabo	2800 N. Milford Rd	Highland	48357	800.883.4627	lafontaineperformancecenter.com	jsabo@lafontaineauto.com

MINNESOTA

Company Name	Contact Name	Address	City	Zip	Phone	Website	Email Address
Suburban Chevrolet	Mike Kraft	12475 Plaza Drive	Eden Prairie	55344	800.642.2654	suburbanchev.com	mkraft@suburbanchev.com

MISSISSIPPI

Company Name	Contact Name	Address	City	Zip	Phone	Website	Email Address
Rogers-Dabbs Chevrolet, Inc.	Bo Weeks	1501 W Government St	Brandon	39042	601.824.5468	www.rogersdabbs.com	bweeks@rogersdabbs.com

MISSOURI

Company Name	Contact Name	Address	City	Zip	Phone	Website	Email Address
Cable-Dahmer Chevrolet, Inc.	Paul Casady	1834 S Noland Rd	Independence	64055	800.821.8467	www.cabledahmer.com	pcasady@cabledahmer.com

NEBRASKA

Company Name	Contact Name	Address	City	Zip	Phone	Website	Email Address
Friesens Chevrolet, Inc.	Jon Pedersen	806 Commercial Ave.	Sutton	68979	402.773.5538	friesenchevrolet.com	jon@friesenchevy.com

NEVADA

Company Name	Contact Name	Address	City	Zip	Phone	Website	Email Address
Fairway Chevrolet	Brad Oaks	3100 E. Sahara Ave	Las Vegas	89104	702.641.1446	fairwaychevy.com	bradoaks@fairwaychevy.com

NEW HAMPSHIRE

Company Name	Contact Name	Address	City	Zip	Phone	Website	Email Address
Banks Chevrolet, Cadillac, Inc.	Dave Corcoran	137 Manchester Street	Concord	03301	603.229.4051	banksautos.com	dcorcoran@banksautos.com
Quirk Chevrolet, Buick	Gary Philbin	2060 Brown Ave.	Manchester	03103	800.842.9600	quirkchevynh.com	gphilbin@quirkcars.com

NEW YORK

Company Name	Contact Name	Address	City	Zip	Phone	Website	Email Address
Hoselton Chevrolet, Inc.	Mike Fraser	909 Fairport Rd	East Rochester	14445	585.586.7373	hoseltonchevrolet.com	mikef@hoselton.com
Ruge's GMC	David Zitz	7293 South Broadway	Copake Falls	12571	845.876.1090x120	rugesparts.com	david@rugesparts.com
Eagle Chevrolet	Mike Migliore	1330 Old Country Rd.	Riverhead	11901	631.727.1900	www.eaglechevy.com	mikem@eagleautomall.com

NORTH CAROLINA

Company Name	Contact Name	Address	City	Zip	Phone	Website	Email Address
City Chevrolet	Darrell Langford	5101 E. Independence Blvd	Charlotte	28212	704.536.1410	citychevrolet.com	darrell.langford@hendrickauto.com
Modern Chevrolet Company	Chris Hege	5415 Kelley-Moore Dr	Winston-Salem	27120	800.334.0165	classicmuscle.com	chege@modernauto.com

NORTH DAKOTA

Company Name	Contact Name	Address	City	Zip	Phone	Website	Email Address
Rydell Chevrolet, Cadillac, Buick , GMC	Dan Stinar	2700 S. Washington	Grand Forks	58201	800.354.7278	autopartsnd.com	parts@rydellcars.com

OHIO

Company Name	Contact Name	Address	City	Zip	Phone	Website	Email Address
Coughlin Chevrolet Buick	Greg Jackson	15801 US Route 36	Marysville	43040	937.644.9000	coughlinmarysvillegm.com	gregjackson@coughlincars.com
Pace Performance	Chuck Fitch	50 Kargo Avenue	Youngstown	44446	800.748.3791	paceperformance.com	parts@paceperformance.com
Sweeney Buick GMC	Matt Fullerton	7997 Market Street	Youngstown	44512	330.726.2297	sweeneycars.com	mattf@sweeneycars.com

OKLAHOMA

Company Name	Contact Name	Address	City	Zip	Phone	Website	Email Address
Hudiburg Chevrolet Inc	Zach Hines	6000 Tinker Diagonal	Midwest City	73110	405.737.6641	hudiburggm.com	zach@hudiburg.com
Smicklas Chevrolet	Bruce Hoppe	3501 N. Santa Fe	Oklahoma City	73118	800.888.3827	smicklaschevrolet.com	bhoppe@bobhowardauto.com

OREGON

Company Name	Contact Name	Address	City	Zip	Phone	Website	Email Address
Kendall Chevrolet	Mike Romig	846 Goodpasture Island Rd	Eugene	97401	541.342.1121	kendallchevroletofeugene.com	mromig@kendallauto.com

PENNSYLVANIA

Company Name	Contact Name	Address	City	Zip	Phone	Website	Email Address
Fred Beans Cadillac, Buick, GMC	Darren McGettigan	131 Doyle Street	Doylestown	18901	877.385.5769	fbparts.com	dmcgettigan@fredbeans.com
Bowser Buick GMC	Dave McManus	Rte 51 & Lewis Run Rd	Pleasant Hills	15236	412.443.3176	powerofbowser.com	parts@powerofbowser.com
Rohrich Cadillac, Inc.	Paul Lilja	1000 Saw Mill Run Blvd	Pittsburgh	15220	412.427.2254	rohrichcadillac.com	plilja@rohrich.com
Apple Chevrolet, Cadillac	Jason Alwood	1200 Loucks Rd, PO Box 7767	York	17404	717.849.6588	applechevroletcadillac.com	jalwood@pplauto1.com

RHODE ISLAND

Company Name	Contact Name	Address	City	Zip	Phone	Website	Email Address
Tasca Buick GMC	David Kuronen	55 Fortin Drive	Woonsocket	02895	617.645.6942	www.tascabuickgmc.com	dkuronen@tasca.com

SOUTH DAKOTA

Company Name	Contact Name	Address	City	Zip	Phone	Website	Email Address
Billion Motors, Inc.	Dale Zimmer	600 West 41st St	Sioux Falls	57105	605.333.3436	billionauto.com	zimmer@billionauto.com

TENNESSEE

Company Name	Contact Name	Address	City	Zip	Phone	Website	Email Address
Freeland Chevrolet	Gordon Mangrum	5333 Hickory Hollow Pky	Antioch	37013	615.731.3000	freelandchevy.com	gordonm@freelandchevy.com
James Corlew Chevrolet	James West	722 College St	Clarksville	37040	931.552.2020	jamescorlewautomotive.com	jameswest@jamescorlew.com

TEXAS

Company Name	Contact Name	Address	City	Zip	Phone	Website	Email Address
Freedom Chevrolet	Randy Thorn	8008 Marvin D Love Fwy	Dallas	75237	214.708.9914	www.freedomchevydallas.com	rthorn@freedomchevydallas.com
Friendly Chevrolet Co.	Robert Fayette	2754 N. Stemmons Blvd	Dallas	75207	214.920.4199	friendlychevy.com	rfayette@friendlychevy.com
Don Hewlett Chevrolet, Buick	Jeff Gilbert	7601 S. Interstate 35	Georgetown	78626	512.681.3000	donhewlett.com	jeffg@donhewlett.com
Classic Chevrolet, Ltd.	Tom Cross	1101 Hwy 114	Grapevine	76051	800.259.1200	classicchevroletperformanceparts.com	tlcross@classicchevrolet.com
Scoggin-Dickey Chevrolet, Buick	Chris Storie	5901 Spur 327	Lubbock	79424	800.456.0211	sdparts.com	cstorie@sdparts.com
Classic Chevrolet	Ken Williams	13115 S.W. Freeway	Sugar Land	77478	281.263.1343	classicchevysugarland.com	kwilliams@classicchevysugarland.com
Tom Benson Chevrolet	Kevin Bellow	9400 San Pedro Ave	San Antonio	78216	210.889.9531	www.tombensonchevy.com	kbellow@tombenson.com
Mac Haik Chevrolet	Mike Sutton	11711 Katy Freeway	Houston	77079	281.596.6287	www.machaikchevy.com	msutton@machaikchevy.com

UTAH

Company Name	Contact Name	Address	City	Zip	Phone	Website	Email Address
Larry H. Miller Chevrolet Murray	Grant Martin	5500 S State St	Murray	84107	801.264.3333	www.larryhmillerchevrolet.com	gmartin@lhmauto.com

VIRGINIA

Company Name	Contact Name	Address	City	Zip	Phone	Website	Email Address
Radley Chevrolet	Chris Rogers	3670 Jefferson Davis Hwy	Fredericksburg	22408	540.538.9400	radleyauto.com	chrisrogers@radleyautogroup.com
Berglund Chevrolet Buick	Tim Clements	1824 Williamson Rd Ne	Roanoke	24012	540.344.1461	www.berglundchevroletbuick.com	tclements@berglundcars.com

WASHINGTON

Company Name	Contact Name	Address	City	Zip	Phone	Website	Email Address
McCurley Chevrolet, Cadillac	Dean Goody	1325 Auto Plex Way	Pasco	99301	509.547.5555	billmccurley.com	dean.goody@mccurley.net
Camp Automotive, Inc.	Rick Nowaski	101 Montgomery	Spokane	99207	800.776.9979	campchevrolet.com	richardnowaski@lithia.com

WISCONSIN

Company Name	Contact Name	Address	City	Zip	Phone	Website	Email Address
Broadway Automotive, Inc.	Corey Miller	2700 S. Ashland Ave	Green Bay	54304	920.496.3251	broadwayautomotive.com	corey.miller@broadwayautomotive.com
Ivan Gandrud Chevrolet, Inc.	Chris Slack	919 Auto Plaza Dr	Green Bay	54302	920.468.6800	gmperformancemotor.com	parts@gandrud.com
Holz Motors, Inc.	Chad Kallies	5961 S. 108 Place	Hales Corners	53130	414.209.1300	holzmotors.com	ckallies@holzmotors.com

A

ACCESSORY DRIVE KITS
Small-Block 176
LS-Series 276
Big-Block.... 350

AIR CLEANERS
Small-Block 188
LS-Series 291
Big-Block.... 360

ALTERNATORS
Small-Block 186

B

BALANCERS, PULLEYS, & COMPONENTS
Small-Block 172
LS-Series 284
Big-Block.... 348

BLOCKS (SEE CYLINDER BLOCKS)

BOOKS & MANUALS.... 388

C

CAMARO PARTS & ACCESSORIES 16

CAMSHAFTS & COMPONENTS
Small-Block 169
LS-Series 271
Big-Block.... 346

CARBURETORS
Small-Block 188
LS-Series 291
Big-Block.... 359

CHASSIS, SUSPENSION, BRAKES.... 385

CHEVY V-6 CYLINDER HEADS 383

COBALT APPEARANCE AND PERFORMANCE.... 380

COLORADO UPGRADES AND ACCESSORIES.... 66

CONNECT & CRUISE CRATE POWERTRAIN SYSTEMS.... 226

CONNECTING RODS & HARDWARE
Small-Block 170
LS-Series 272
Big-Block.... 347

COPO PROGRAM.... 70

CORVETTE UPGRADES & ACCESSORIES 42

CRANKSHAFTS & COMPONENTS
Small-Block 172
LS-Series 274
Big-Block.... 348

CRATE ENGINES
Small-Block Crate Engines
350/290 112
350 HO Turn-Key....114
Ram Jet 350....116
SP350 Base....118
SP350 Turn-Key 120
ZZ6 Base.... 122
ZZ6 Turn-Key.... 124
HT383.... 126
HT383E 128
SP383 Deluxe 130

Circle Track Crate Engines
CT350.... 134
CT400.... 136
CT525.... 138

LS-Series Crate Engines
LS3 6.2L 200
LS376/480 202
LS376/515 204
LS376/525 206
DR525 208
LSA 6.2L SC....210
LS9 6.2L SC 212
LS7 7.0L.... 214
LT1 6.2L.... 216
LT4 6.2L SC.... 218
LTG 2.0L.... 220
EROD Systems.... 222
Connect & Cruise Powertrain Systems.... 226

LSX-Series Crate Engines
LSX376-B8.... 236
LSX376-B15.... 238
LSX454 240
LSX454R.... 242

Big-Block Crate Engines
ZZ427/480.... 298
454 HO 300
ZZ454/440 302
HT502.... 304
502 HO 306
ZZ502/502 Deluxe 308
ZZ502/502 Base....310
Ram Jet 502.... 312
ZZ572/620 Deluxe 314
ZZ572/720R Deluxe.... 316
Vortec 8.0L 318

CRUZE UPGRADES & ACCESSORIES.... 54

CYLINDER BLOCKS
Small-Block 142
LS/LT-Series 246
LSX-Series.... 254
Big-Block.... 322

CYLINDER BLOCK COMPONENTS
Small-Block 149
LS-Series 256
Big-Block.... 330

CYLINDER HEADS
Small-Block 150
LS-Series 258
Big-Block.... 332

CYLINDER HEAD GASKETS & COMPONENTS
Small-Block 160
LS-Series 266
Big-Block.... 338

D

DISTRIBUTORS & COMPONENTS
Small-Block 178
Big-Block.... 353

E

ECOTEC 384

ECUs & COMPONENTS.... 292

ENGINE CONTROLLER MODULES.... 292

E-ROD PACKAGES 222

EXHAUST
Camaro 19, 40
Cobalt 380
Colorado 67
Cruze 54, 380
Silverado 61
Sonic 57

EXHAUST MANIFOLDS/HEADERS & COMPONENTS
LS-Series 289

F

FLYWHEELS/FLEXPLATES & COMPONENTS
Small-Block 173
LS-Series 275
Big-Block 349

FRONT COVERS & TIMING POINTERS
Small-Block 150
LS-Series 257
Big-Block 331

FUEL PUMPS
Small-Block 189
LS-Series 294
Big-Block 361

H

HEADS (SEE CYLINDER HEADS)

I

IGNITION SYSTEM & COMPONENTS
Small-Block 187
LS-Series 294

INTAKE MANIFOLDS, GASKETS & COMPONENTS
Small-Block 179
LS-Series 286
Big-Block 354

L

LICENSED PARTS
Dress Parts 390
Gauges & Accessories 400

O

OIL PANS & COMPONENTS
Small-Block 176
LS-Series 285
Big-Block 351

OIL PUMPS & COMPONENTS
Small-Block 177
LS-Series 285
Big-Block 352

P

PISTONS & PISTON RINGS
Small-Block 171
LS-Series 273
LSX-Series 273
Big-Block 346

R

ROCKER ARMS, STUDS & COMPONENTS
Small-Block 163
LS-Series 267
Big-Block 340

S

SERVICE MANUALS 388

SONIC UPGRADES & ACCESSORIES 56

SILVERADO UPGRADES & ACCESSORIES 60

SPARK PLUG WIRES & LOOM KITS
Small-Block 187
LS-Series 294
Big-Block 360

STARTERS
Small-Block 186
LS-Series 290
Big-Block 358

SUPERCHARGERS
LS-Series 286

T

TIMING CHAIN KITS & COMPONENTS
Small-Block 174
LS-Series 275
Big-Block 349

TOOLS 413

TORQUE CONVERTERS 364

TRANSMISSIONS, CONTROLLERS & COMPONENTS 362

V

VALVES, VALVE SPRINGS & SHIMS
Small-Block 161
LS-Series 267
Big-Block 339

VALVE COVERS
Small-Block 164
LS-Series 268
Big-Block 342

VALVE LIFTERS
Small-Block 168
LS-Series 269
Big-Block 345

W

WARRANTY INFORMATION 420

WATER PUMPS
Small-Block 175
LS-Series 284
Big-Block 350

WHEELS & ACCESSORIES
Camaro 23, 41
Cobalt 380
COPO 80
Corvette 53
Silverado 65
Sonic 59

GM SERVICE REPLACEMENT POWERTRAIN & CHEVROLET PERFORMANCE PARTS LIMITED WARRANTY FOR:

Engines, Engine Components, Transmissions, Transmission Components & Transfer Cases

General Motors Company ("GM") warrants to the purchaser for the time and/or mileage indicated below that it will repair or replace, at its option, any GM Parts Service Replacement Engine, Engine Component, Transmission/Transaxle, Transmission Component, Transfer Case or Short Block Assembly that fails due to a defect in material or workmanship. GM will use new or remanufactured parts for repair or replacement.

Warranty coverage is based on months/mileage, whichever comes first, and begins on the date of installation by an authorized GM dealer or by a qualified Independent Service Center (ISC). For all other over-the-counter sales, warranty begins on date of retail sale.

Genuine GM | Parts

Product	Cataloged Passenger Car & Light-Duty Truck (Series 10-30)[6]	Cataloged Medium-Duty Truck (Series 40-80) Class A Motor Home, Taxi & Police[6]	Non-Cataloged Passenger Car & Light-Duty Truck & Medium-Duty Truck[2,6]	Other[5] (Start-up Warranty)
Engines, Automatic Transmissions & Transfer Cases[3,4]	36 months or 100,000 miles[1,2]	18 months or 100,000 miles[1,2]	12 months or 12,000 miles	30 Days
Manual Transmissions & CVT	12 months or 12,000 miles[1,2]	12 months or 12,000 miles[1,2]	12 months or 12,000 miles	N/A
Engine & Transmission Components[5]	12 months/ unlimited miles	12 months/ unlimited miles	12 months/ unlimited miles	N/A

PERFORMANCE
VEHICLES • PARTS • RACING

Product	Passenger Car & Light-Duty Truck (Series 10-30)[6]	Other[5] (Start-up Warranty)
Performance Parts Engines[4]	24 months or 50,000 miles[1,2]	30 Days
E-ROD & E-ROD Connect & Cruise Crate Powertrain Systems[7]	36 months or 50,000 miles[1,2]	N/A
Connect & Cruise Crate Powertrain Systems7 (non-E-ROD)	24 months or 50,000 miles[1,2]	N/A
Performance Parts, Transmissions, Short Block Assemblies & Components[5]	12 months / unlimited miles	30 Days

*[1]**Parts and labor warranty** when installed by a **GM Dealer** or qualified installing Independent Service Center (ISC). [2]**Parts and labor warranty** when sold over the counter and **REPAIRED by a GM Dealer or qualified installing Independent Service Center (ISC), on-highway applications only**. Parts only warranty when consumer repaired or when installed in non-highway application. Coverage limited to defects in material and/or workmanship of the specific part only. [3]Includes Allison 1000 Series assemblies sold through GM Dealers. [4]Engine upgrades require appropriate associated parts to ensure proper engine and transmission cooling and torque capacity, fuel/air delivery and emission controls (upgrade example: 305 engine replaced with 350 engine). [5]**Parts-only warranty** when sold over the counter. [6]Must be installed in a "street legal" automotive application for use on public roads. [7]Warranty valid when all required components are installed on the same vehicle and purchased on one invoice.*

THIS WARRANTY DOES NOT COVER:

- Damage due to improper installation, negligence, alteration (including changes to engine controls), accident, or improper use. Proper vehicle use is discussed in the vehicle Owner's Manual.
- Any vehicle that has been used for racing (on or off track), stunt driving, performance testing, or used under other extreme operating conditions.
- Any vehicle where the odometer has been disconnected or the mileage reading has been altered.
- Damage caused by lack of proper maintenance as described in the vehicle's original Owner's Manual/ Maintenance Schedule, failure to follow Maintenance Schedule intervals, or failure to use or maintain proper type and levels of fluid, fuel, oil, and lubricants recommended in the Owner's Manual/Maintenance Schedule. Proof of proper maintenance is the owner's responsibility. Keep all receipts and be prepared to present them if questions arise about maintenance.
- Damage as a result of overheating, contamination or lack of lubrication.
- Damage caused by a turbocharger, supercharger, nitrous oxide, or similar product, which is not an approved Chevrolet Performance Part or Accessory.
- Racing engines and/or their components.
- Use of components in excess of maximum torque specification.
- Damage as a result of modification/replacement of torque converter that is part of transmission assembly.
- Loss of time, inconvenience, loss of use, or other economic loss.
- Vehicles registered and normally operated outside of the United States.
- This warranty does not apply to any unit installed under the General Motors New Vehicle Limited Warranty.

DOCUMENTATION REQUIREMENTS:

The GM Dealer or Independent Service Center must be furnished with the purchaser's original repair order or sales slip (or Dealer's photocopy). This warranty is transferable to subsequent owners, free of charge, by providing the above required documents to any purchaser of the vehicle in which the assembly/component was originally installed.

OBTAINING REPAIRS:

GM Dealer Installation – The GM Dealer who initially installed the assembly/component or any other GM Dealer may perform the repairs. You must allow a reasonable period of time for repairs following delivery of the vehicle to the GM Dealer.

Independent Service Center Installation – The Independent Service Center (ISC) that installed the assembly/component or any GM Dealer may perform repairs. Before any repairs can be performed under warranty by an Independent Service Center, the selling GM Dealer (or any GM Dealer) must first authorize needed repairs as a sublet service.

Towing – for GM Parts Engine, Transmission, and Transfer Case assemblies will be covered to the nearest GM Dealership or ISC who performed the installation, not to exceed $150.00, under the following conditions:
– The vehicle is inoperative.
– The failure was the result of the unit; not the installation.
*Chevrolet Performance Parts Engines and Transmissions are excluded.

Emergency Repairs (GM Dealers Only): Reimbursement to an owner for repairs performed by other than a GM Dealer will be considered when GM Dealer service was not available (e.g., weekends, evenings, etc.) or when repairs were made in a foreign country where warranty repairs by a GM Dealer are difficult to obtain.

OTHER TERMS:

GM sells other engines and transmissions in various states of completion. This warranty covers only those engines and transmissions that are marketed by GM as GM Parts or Chevrolet Performance Parts.

This warranty gives you specific legal rights, and you may also have other rights, which vary from state to state.

General Motors does not authorize any person to create for it any other obligations or liability in connection with these assemblies.

ANY IMPLIED WARRANTY OF MERCHANTABILITY OR FITNESS FOR A PARTICULAR PURPOSE APPLICABLE TO ASSEMBLIES OR PARTS IS LIMITED IN DURATION TO THE DURATION OF THIS WRITTEN WARRANTY. THE PERFORMANCE OF REPAIRS OR REPLACEMENT IS THE EXCLUSIVE REMEDY UNDER THIS WRITTEN WARRANTY OR ANY IMPLIED WARRANTY. GM SHALL NOT BE LIABLE FOR INCIDENTAL OR CONSEQUENTIAL DAMAGES RESULTING FROM BREACH OF THIS WRITTEN WARRANTY OR ANY IMPLIED WARRANTY.

Some states do not allow limitations on how long an implied warranty will last or the exclusion or limitation of incidental or consequential damages, therefore, the above limitation or exclusions may not apply to you.

SERVICE CHECKS:

Transmissions: It is important for you or a service technician to check the transmission/transaxle fluid level at regular intervals.

Engines: It is important for you or a service technician to perform these underhood checks at each fuel fill:

- Check engine oil level and add if necessary.
- Check engine coolant level in coolant reservoir and add if necessary.
- Check belts and hoses for visible wear and replace if necessary.

The parts listed in this catalog are intended primarily for use in race or "off-highway" vehicles only. Federal law restricts the removal, modification or knowingly making inoperative of any part or element of design installed in compliance with an applicable Federal Motor Vehicle Safety Standard or any part of federally required emission control systems on a motor vehicle used on public roads. Further, many states have enacted laws with various penalties for tampering with, or otherwise modifying any required emission or noise control system. Parts which have been granted an exemption by the California Air Resources Board (CARB) are noted as such.

***Unless specifically noted to the contrary herein, vehicles equipped with Chevrolet Performance Parts may not meet Federal Motor Vehicle Safety Standards and emissions regulations and should not be operated on public roads.** Chevrolet Performance customers are responsible for ensuring their use of Chevrolet Performance Parts complies with applicable federal, state and local laws, regulations and ordinances.*

Many parts intended for racing or other "off-highway" use are not designed or tested for crashworthiness or to meet the safety needs of the motoring public, and may adversely affect the original intended performance or handling characteristics of the vehicle. These parts are designed and intended to be used with experts supervising their installation and use, to help assure the proper and safe operation of the vehicle.

© 2016 General Motors Co. All rights reserved.

Direct any inquiries to: General Motors Co., Consumer Relations Dept., P.O. Box 33136, Detroit, MI 48232-5136

GM SERVICE REPLACEMENT POWERTRAIN & CHEVROLET PERFORMANCE LIMITED WARRANTY

Engines, Engine Components, Transmissions, Transmission Components & Transfer Cases

To retain the safety and dependability built into this product, it is essential that your product receives the scheduled maintenance at the recommended intervals contained in your vehicle Owner's Manual/Maintenance Schedule* or Chevrolet Performance Engine Instruction Sheet. Since emissions-related components vary by model and engine application, you should follow the emissions maintenance recommendations also contained in your vehicle's manuals.

General Motors of Canada Limited ("GM Canada") warrants to the purchaser for the time and/or mileage indicated below that it will repair or replace, at its option, any GM Parts Service Replacement Engine, Engine Component, Transmission/Transaxle, Transmission Component, Transfer Case or Short Block Assembly that fails due to a defect in material or workmanship. GM Canada will use new or remanufactured parts for repair or replacement.

Warranty coverage is based on months/mileage, whichever comes first, and begins on the date of installation by an authorized GM Canada -dealer or by a qualified Independent Service Center (ISC). For all other over-the-counter sales, warranty begins on date of retail sale.
GM Canada only warrants GM Canada supplied parts and components purchased in Canada from a GM Canada Dealer or Canadian qualified ISC.

GM Canada Parts

Product	Cataloged Passenger Car & Light-Duty Truck (Series 10-30)	Medium-Duty Truck (Series 40-80) Class A Motor Home, Taxi & Police	Non-Cataloged Passenger Car & Light-Duty Truck[2]	Other[5] (Start-up Warranty)
Engines, Automatic Transmissions & Transfer Cases[3,4]	36 months or 160,000 kilometers[1,2]	18 months or 160,000 kilometers[1,2]	12 months or 20,000 kilometers	30 Days
Manual Transmissions & CVT	12 months or 20,000 kilometers[1,2]	12 months or 20,000 kilometers[1,2]	12 months or 20,000 kilometers	N/A
Engine & Transmission Components[5]	12 months/ unlimited kilometers	12 months/ unlimited kilometers	12 months/ unlimited kilometers	N/A

PERFORMANCE
VEHICLES • PARTS • RACING

Product	Passenger Car & Light-Duty Truck (Series 10-30)[6]	Other[5] (Start-up Warranty)
Performance Parts Engines[4]	24 months or 80,000 kilometers [1,2]	30 Days
E-ROD & E-ROD Connect & Cruise Crate Powertrain Systems[7]	36 months or 80,000 kilometers[1,2]	N/A
Connect & Cruise Crate Powertrain Systems7 (non-E-ROD)	24 months or 80,000 kilometers[1,2]	N/A
Performance Parts, Transmissions, Short Block Assemblies & Components[5]	12 months / unlimited kilometers	30 Days

*[1]**Parts and labor warranty** when installed by a **GM Canada Dealer** or qualified installing Independent Canadian Service Center (ISC). [2]**Parts and labor warranty** when sold over the counter and **REPAIRED by a GM Canada Dealer or qualified installing Independent Canadian Service Center (ISC), on-highway applications only**. Parts only warranty when consumer repaired or when installed in non-highway application. Coverage limited to defects in material and/or workmanship of the specific part only. [3]Includes Allison 1000 Series assemblies sold through GM Dealers. [4]Engine upgrades require appropriate associated parts to ensure proper engine and transmission cooling and torque capacity, fuel/air delivery and emission controls (upgrade example: 305 engine replaced with 350 engine). [5]**Parts-only warranty** when sold over the counter. [6]Must be installed in a "street legal" automotive application for use on public roads. [7]Warranty valid when all required components are installed on the same vehicle and purchased on one invoice.*

WARRANTY BEGINS ON THE DATE OF INSTALLATION BY AN AUTHORIZED GM CANADA DEALER OR BY A CANADIAN QUALIFIED INDEPENDENT SERVICE CENTER. PARTS ONLY WARRANTY (NO LABOUR) APPLIES FOR WARRANTY REPAIRS NOT PERFORMED BY AN CANADIAN AUTHORIZED GM CANADA DEALER OR QUALIFIED INDEPENDENT SERVICE CENTER.

GM Canada sells other engines and transmissions in various states of completion. This warranty covers only those engines and transmissions that are marketed by GM Canada as Goodwrench or GM Parts.

THIS WARRANTY DOES NOT COVER:

- Damage due to improper installation, negligence, alteration, accident, improper use, or any use related to racing or competition. Proper vehicle use is discussed in the vehicle Owner's Manual. In addition, coverage does not apply if the odometer has been disconnected or the mileage reading has been altered.
- Damage caused by lack of proper maintenance as described in the vehicle's original Maintenance Schedule/Owner's Manual, failure to follow Maintenance Schedule intervals, or failure to use or maintain proper type and levels of fluid, fuel, oil and lubricants recommended in the Maintenance Schedule/Owner's Manual. Proof of proper maintenance is the owner's responsibility. Keep all receipts and be prepared to make them available if questions arise about maintenance.
- Damage as a result of overheating, contamination or lack of lubrication.
- Damage caused by a turbocharger, supercharger, nitrous oxide, or similar product, which is not an approved GM Performance Part or Accessory.
- Racing engines and/or their components.
- Use of components in excess of maximum torque specification.
- Damage as a result of modification/replacement of torque converter that is part of transmission assembly.
- Loss of time, inconvenience, loss of use, or other economic loss.
- Vehicles registered and normally operated outside of Canada.
- This warranty does not apply to any unit installed under the General Motors New Vehicle Warranty.

DOCUMENTATION REQUIREMENTS

The GM Canada dealer or independent service center must be furnished with this warranty statement, purchase receipt, installation date invoice and proof of proper maintenance. This warranty is transferable to subsequent owners by providing the above required documents to any purchaser of the vehicle in which the assembly/component was originally installed.

OBTAINING REPAIRS

GM Canada Dealer Installation—The GM Canada dealer who initially installed the assembly/component or any GM Canada dealer may perform the repairs. You must allow a reasonable period of time for repairs following delivery of the vehicle to the GM Canada dealer's place of business.

Independent Service Center Installation—The Canadian independent service center that installed the assembly/component or any GM Canada dealer may perform repairs. Before any repairs can be performed under warranty by a Canadian independent repair center, the selling GM Canada dealer (or any GM Canada dealer) must first authorize needed repairs as a sublet service.

OTHER TERMS

TO THE FULL EXTENT PERMITTED BY APPLICABLE CANADIAN LAW: The foregoing warranty is the only and the entire warranty provided by GM Canada and is in lieu of and excludes all other representations, warranties or conditions, express or implied (including any implied warranty or condition of merchantability or fitness for a particular purpose).

The performance of repairs, the provision of replacement parts, or reimbursement thereof, as described above, is the exclusive remedy under this written warranty or under any otherwise applicable implied warranty or condition.

GM CANADA DOES NOT AUTHORIZE ANY PERSON TO CREATE FOR IT ANY OTHER OBLIGATIONS or liability in connection with the products and no person is permitted to extend or enlarge this warranty on behalf of GM Canada by written, verbal or other representation and if made, such representation or warranty will not be enforceable against GM Canada.

DISCLAIMER OF LIABILITY: Except as provided in this limited warranty, GM Canada will not be liable in contract, tort or otherwise for any direct, indirect, economic, commercial, incidental, or consequential or special loss or damage or expense or claim howsoever caused, arising in connection with the sale, use, loss of use, performance or non-performance of the product.

NOTICE REGARDING LIMITATIONS: The terms contained in this limited warranty are not intended to limit or otherwise modify or exclude any warranty that by law cannot be limited, disclaimed or excluded. When and to the extent that any applicable Canadian law prohibits in a particular situation, any term contained in this warranty, such term will be considered severable and deemed deleted from this warranty in that situation.

Some provinces do not allow limitations on how long an implied warranty will last or the exclusion or limitation of incidental or consequential damages, therefore, the above limitation or exclusions may not apply to you.

SERVICE CHECKS:

Transmissions: It is important for you or a service technician to check the transmission/transaxle fluid level at regular intervals.

Engines: It is important for you or a service technician to perform these underhood checks at each fuel fill:

- Check engine oil level and add if necessary.
- Check engine coolant level in coolant reservoir and add if necessary.
- Check belts and hoses for visible wear and replace if necessary.

© 2016 General Motors Co. All rights reserved.

FIND NEW ROADS™

PERFORMANCE

A GAME-CHANGER THEN.
A GAME-CHANGER NOW.

In 1955, the Chevrolet small-block V8 engine changed the face of automotive engine history. To celebrate the **60th anniversary** of one of the most iconic engines of all time, we're proud to introduce the newest member of the small-block family, the ZZ6. Delivering an impressive 405 horsepower at 5600 rpm and 406 lb-ft of torque at 4600 rpm, the ZZ6 is the latest expression of Chevrolet Performance's engineering prowess.

THE LEGACY CONTINUES AT CHEVROLET.COM/PERFORMANCE

©2015 General Motors. All rights reserved. The marks appearing in this ad are the trademarks or service marks of GM, its subsidiaries, affiliates, or licensors.

PERFORMANCE
VEHICLES • PARTS • RACING

WWW.CHEVROLET.COM/PERFORMANCE

YOUR AUTHORIZED CHEVROLET PERFORMANCE CENTER

19351916

PP-CA-0016-16

©2016 General Motors Co. All rights reserved. Chevy™ GM® GM emblem® Chevrolet Performance™

PERFORMANCE