2004 STEERING

Power Steering System - TSX

SPECIAL TOOLS

Ref.No.	Tool Number	Description	Qty
①	07GAF-PH70100	Pilot Collar	1
②	07HAG-SF10100	Piston Seal Ring Guide	1
③	07HAG-SF1020A or 07HAG-SF10200	Piston Seal Ring Sizing Tool	1
④	07MAC-SL00200	Ball Joint Remover, 28 mm	1
⑤	07NAD-SR3020A	Cylinder End Seal Remover Attachment	1
⑥	07NAG-SR3090A	Valve Seal Ring Sizing Tool	1
⑦	07ZAB-S5A0100	Pulley Holder	1
⑧	07VAK-P8A011A	P/S Joint Adaptor (Pump)	1
⑨	07ZAK-S7CA100	P/S Joint Adaptor Plate (Pump)	1
⑩	07ZAK-S7CA200	P/S Joint Adaptor (Hose)	1
⑪	07ZAG-S5A0300	Cylinder End Seal Slider	1
⑫	07406-0010001 or 07406-001000A	P/S Pressure Gauge	1
⑬	07746-0010100	Attachment, 32 x 35 mm	1
⑭	07749-0010000	Driver	1
⑮	07916-SA50001	Locknut Wrench, 40 mm	1
⑯	07965-SA50500	Front Hub Dis/Assembly Tool	1
⑰	07974-SA5020A or 07974-SA50200	Sleeve Seal Ring Sizing Tool	1
⑱	07974-SA50800	Ball Joint Boot Clip Guide	1

G01822883

Fig. 1: Special Tools (1 Of 2)

cardiagn.com

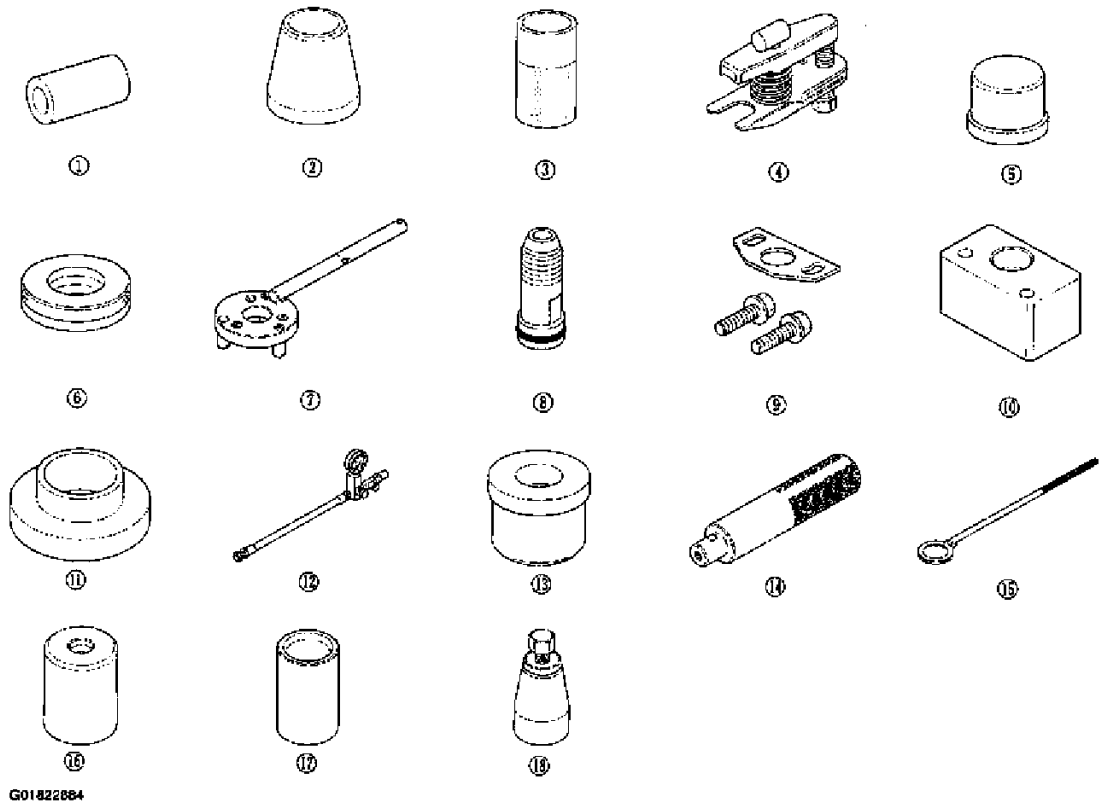

Fig. 2: Special Tools (2 Of 2)

COMPONENT LOCATION INDEX

cardiagn.com

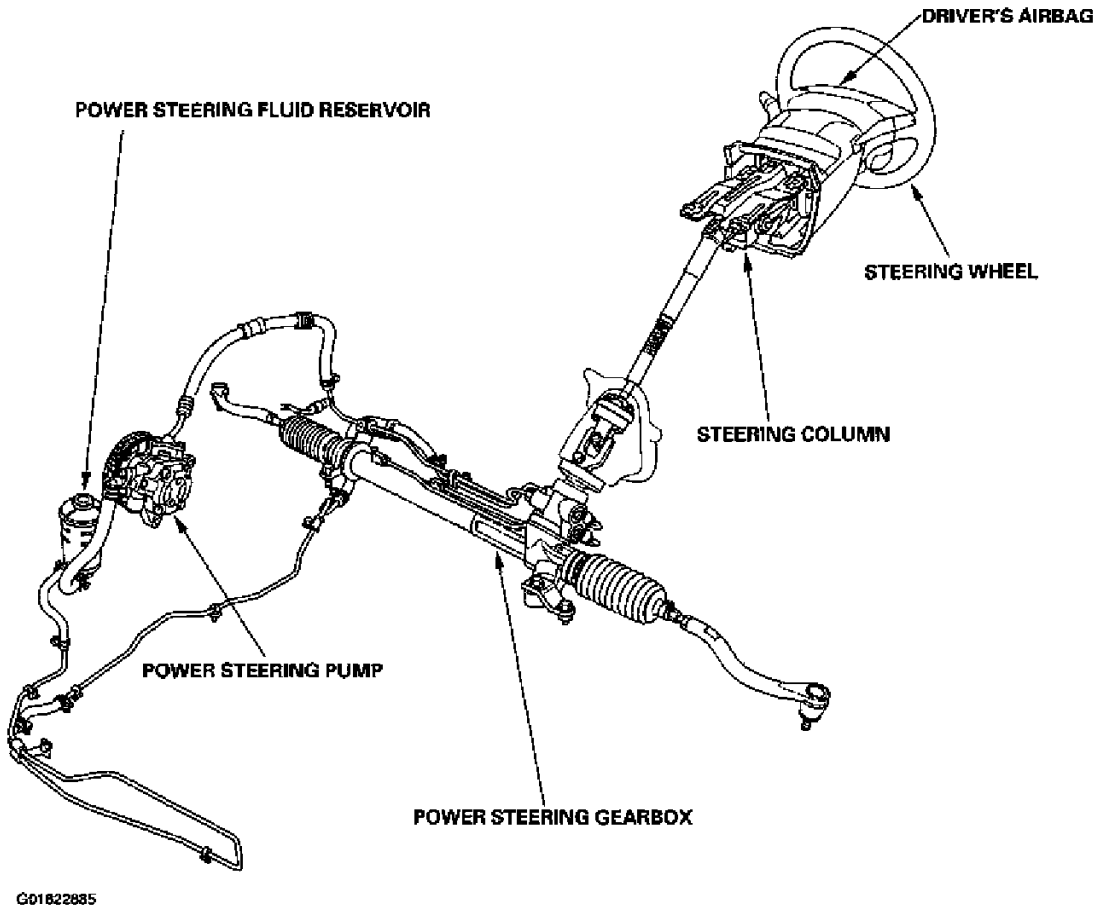

Fig. 3: Locating Power Steering Components

SYMPTOM TROUBLESHOOTING INDEX

Find the symptom in the chart below, and do the related procedures in the order listed until you find the cause.

cardiagn.com

Symptom	Procedure(s)	Also check for:
Hard steering	Troubleshoot the system.	• Modified suspension • Damaged suspension • Tire sizes, tire varieties, and air pressure
Assist (excessively light steering at high speed)	Check the rack guide adjustment.	Front wheel alignment
Shock or vibration when the steering wheel is turned to full lock	1. Check the rack guide adjustment. 2. Check the drive belt for slippage. 3. Check the power steering pump fluid pressure with T/N 07406-0010001 or T/N 07406-001000A. 4. Overhaul the steering gearbox.	
Steering wheel will not return smoothly	1. Check cylinder lines for deformation. 2. Check upper and lower ball joints for binding. 3. Check wheel alignment. 4. Overhaul the steering gearbox.	
Uneven or rough steering	1. Check the rack guide adjustment. 2. Check the drive belt. 3. Check low or erratic engine idle speed. 4. Check for air in the power steering system due to air entering inlet side of pump. 5. Check for low fluid level in the power steering reservoir due to possible leaks in system. 6. Overhaul the steering gearbox.	
Steering wheel kicks back during wide turns	1. Check the drive belt. 2. Check the power steering pump fluid pressure with T/N 07406-0010001 or T/N 07406-001000A.	
Humming noise from the power steering system	1. Check when the noise occurs. • If the noise is heard 2 – 3 minutes after starting the engine in cold weather, this is normal. • If the noise is heard when the wheel is turned with the vehicle stopped, this is normal due to the fluid pulsation. 2. Check for the high pressure hose touching the subframe or body. 3. Check for automatic transmission converter noise. 4. Check for air bubbles in the power steering fluid, leak on inlet side of pump. 5. Check for particle contamination of fluid and restricted filter in the reservoir.	Pump pressure
Power steering rack rattle or chattering	1. Check for loose steering components (tie-rod and ball joints). Tighten or replace as necessary. 2. Check the steering column shaft for wobbling. If the steering column wobbles, replace the steering column assembly. 3. Check the rack guide adjustment. 4. Check the power steering pump pulley. • If the pulley is loose, tighten it • If the pump shaft is loose, replace the pump.	
Hissing from the power steering system	• Check the fluid level. If low, fill the reservoir to the proper level and check for leaks. • Check the reservoir for leaks. • Check for crushed inlet hose or loose hose clamp allowing air into the suction side of the system. • Check the power steering pump shaft oil seal for leaks.	Air in the P/S fluid
Noise from the power steering pump	• Compare the pump noise at normal operating temperature to another like vehicle (pump noise up to 2 – 3 minutes after starting the engine in cold weather is normal). • Remove and inspect the pump for wear and damage	• P/S pump pressure • Air in the P/S fluid
Squeaking from the power steering pump	Check the drive belt.	
Fluid leaks from the steering gearbox	• Fluid leaks from the top of the valve body unit: Overhaul the valve body unit. • Fluid leaks from the left boot: Replace the valve oil seal on the pinion shaft. Replace the cylinder end seal on the gearbox side. • Fluid leaks from the right boot: Replace the right cylinder end seal. • Fluid leaks from pinion shaft near the lower steering joint bolt: Overhaul the valve body unit. • Fluid leaks from the steering damping valve covers on the valve body unit: Replace the valve housing.	
Fluid leaks from the power steering line	• Fluid leaks from the cylinder line connections (flare nuts): Tighten the connection and retest. • Fluid leaks from a damaged cylinder lines: Replace the cylinder line. • Fluid leaks from the pump outlet hose or return line fitting on the valve body unit (flare nuts): Tighten the fitting and retest. If it still leaks, replace the hose, the line, or valve body unit as necessary.	
Fluid leaks from the power steering pump	• Fluid leaks from the front oil seal: Replace the front oil seal. • Fluid leaks from the power steering pump housing: Replace the leaking O-rings or seals, and if necessary replace the power steering pump.	
Fluid leaks from the power steering reservoir	• Fluid leaks from around the reservoir cap: Fluid level is too high: drain the reservoir to the proper level. Aerated fluid: check for an air leak on the inlet side of pump. • Fluid leaks from reservoir: Check for the reservoir for cracks and replace as necessary.	
Fluid leaks from the power steering pump outlet hose (high pressure)	• Check the fitting for loose bolts. If the bolts are tight, replace the fitting O-ring. • Fluid leaks at the swagged joint: Replace the outlet hose.	
Fluid leaks from the power steering pump inlet hose (low-pressure)	Check the hose for damage, deterioration, or improper assembly. Replace or repair as necessary.	

G01822886

cardiagn.com

Fig. 4: Symptom Troubleshooting Index

SYMPTOM TROUBLESHOOTING

HARD STEERING

1. Check the power assist (see **POWER ASSIST CHECK**).

   Is the starting load more than 29 N (3.0 kgf, 6.6 lbf)?

   YES: Go to step 2.

   NO: Power assist is OK.

2. Measure steady-state fluid pressure from the pump at idle with T/N 07406-0010001 (see **PUMP PRESSURE TEST WITH T/N 07406-0010001**) or T/N 07406-001000A (see **PUMP PRESSURE TEST WITH T/N 07406-001000A**).

   Is the pressure 1,500 kPa (15 kgf/cm^2 , 213 psi) or less?

   YES: Go to step 3.

   NO: Go to step 7 .

3. Measure the pump relief pressure at idle with T/N 07406-0010001 (see step 10 of **PUMP PRESSURE TEST WITH T/N 07406-0010001**) or T/N 07406-001000A (see step 9 of **PUMP PRESSURE TEST WITH T/N 07406-001000A**).

   Is the pressure 7,850-8,550 kPa (80-87 kgf/cm^2 , 1,140-1,240 psi)?

   YES: Go to step 4.

   NO: Faulty pump assembly.

4. With a spring scale, measure the power assist in both directions, to the left and to the right.

   Are the two measurements within 2.9 N (0.3 kgf, 0.66 lbf) of each other?

   YES: Go to step 5.

   NO: Go to step 8 .

5. Measure the fluid pressure with both pressure gauge valves open (if so equipped), while turning the steering wheel fully to the left and fully to the right.

   Is the pressure 7,850-8,550 kPa (80-87 kgf/cm^2 , 1,140-1,240 psi)?

   YES: Go to step 6.

   NO: Faulty gearbox.

6. Adjust the rack guide (see **RACK GUIDE ADJUSTMENT**), and retest.

   Is the steering OK?

   YES: Repair is completed.

   NO: Faulty gearbox.

7. Check the feed and return lines between the pump and the gearbox for clogging and deformation.

   Are the lines clogged or deformed?

   YES: Repair or replace the lines.

   NO: Faulty valve body unit or pump.

cardiagn.com

8. Check the cylinder lines for deformation (see **FLUID LEAKAGE INSPECTION**).

   Are the lines deformed?

   YES: Replace the lines.

   NO: Go to step 9.

9. Check for a bent rack shaft or misadjusted rack guide (too tight).

   Is the rack shaft bent or the rack guide adjusted too tight?

   YES: Replace the rack shaft or readjust the rack guide.

   NO: Faulty valve body unit.

STEERING WHEEL ROTATIONAL PLAY CHECK

1. Turn the front wheels to the straight ahead position.
2. Measure how far you can turn the steering wheel left and right without moving the front wheels.
   - If the play is within the limit, the gearbox and linkages are OK.
   - If the play exceeds the limit, adjust the rack guide (see **RACK GUIDE ADJUSTMENT**). If the play is still excessive after rack guide adjustment, inspect the steering linkage and gearbox (see **STEERING LINKAGE AND GEARBOX INSPECTION**).

cardiagn.com

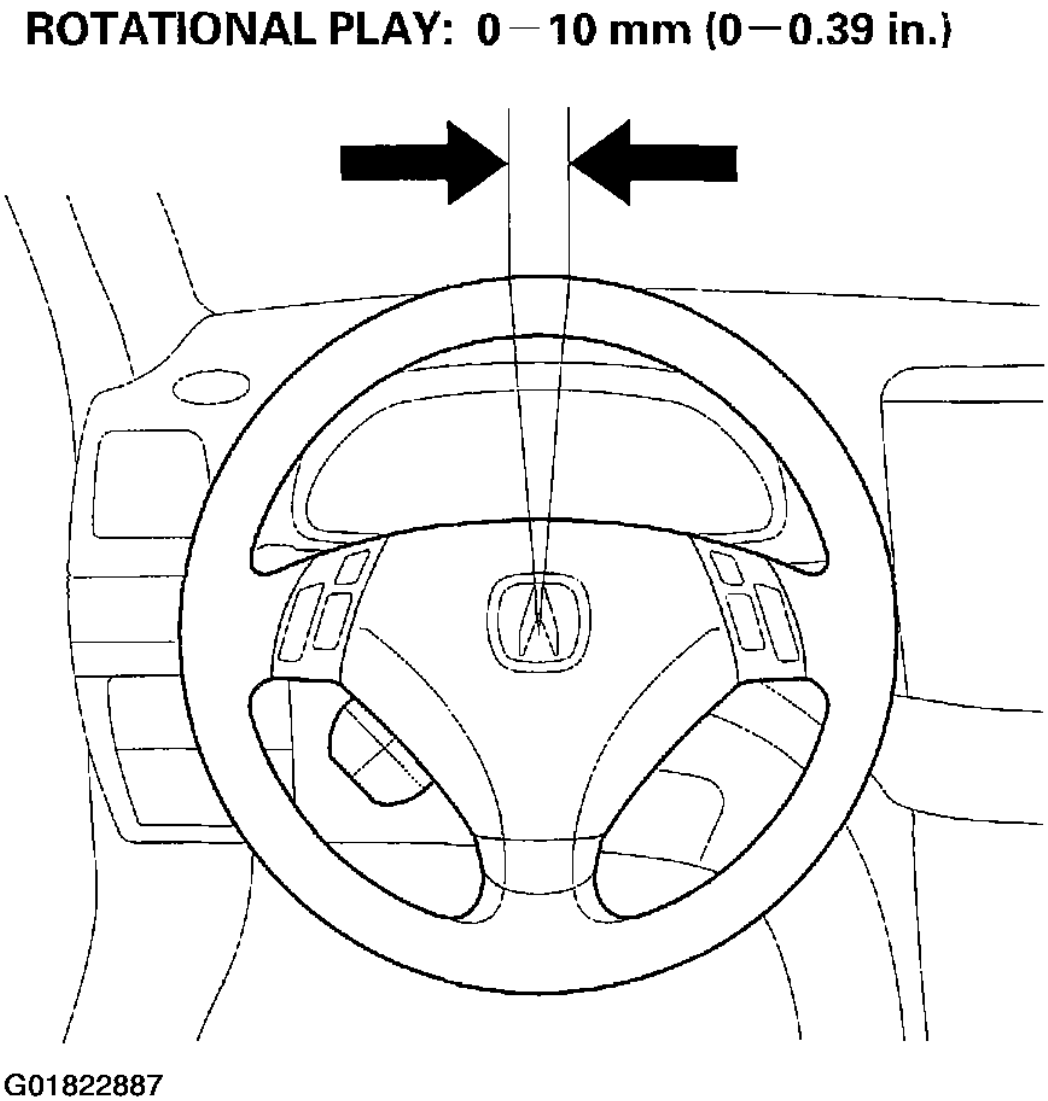

Fig. 5: Checking Steering Wheel Rotational Play

POWER ASSIST CHECK

NOTE: **This test should be done with original equipment wheels and tires at the correct tire pressure.**

1. Check the power steering fluid level (see **FLUID REPLACEMENT**).
2. Start the engine, let it idle, and turn the steering wheel from lock-to-lock several times to warm up the fluid.
3. Attach a commercially available spring scale to the steering wheel. With the engine idling and the vehicle

cardiagn.com

on a clean, dry floor, pull the scale as shown and read it as soon as the tires begin to turn.

- If the scale reads no more than specifications, the gearbox and pump are OK.
- If the scale reads more than specifications, troubleshoot the steering system (see **SYMPTOM TROUBLESHOOTING**).

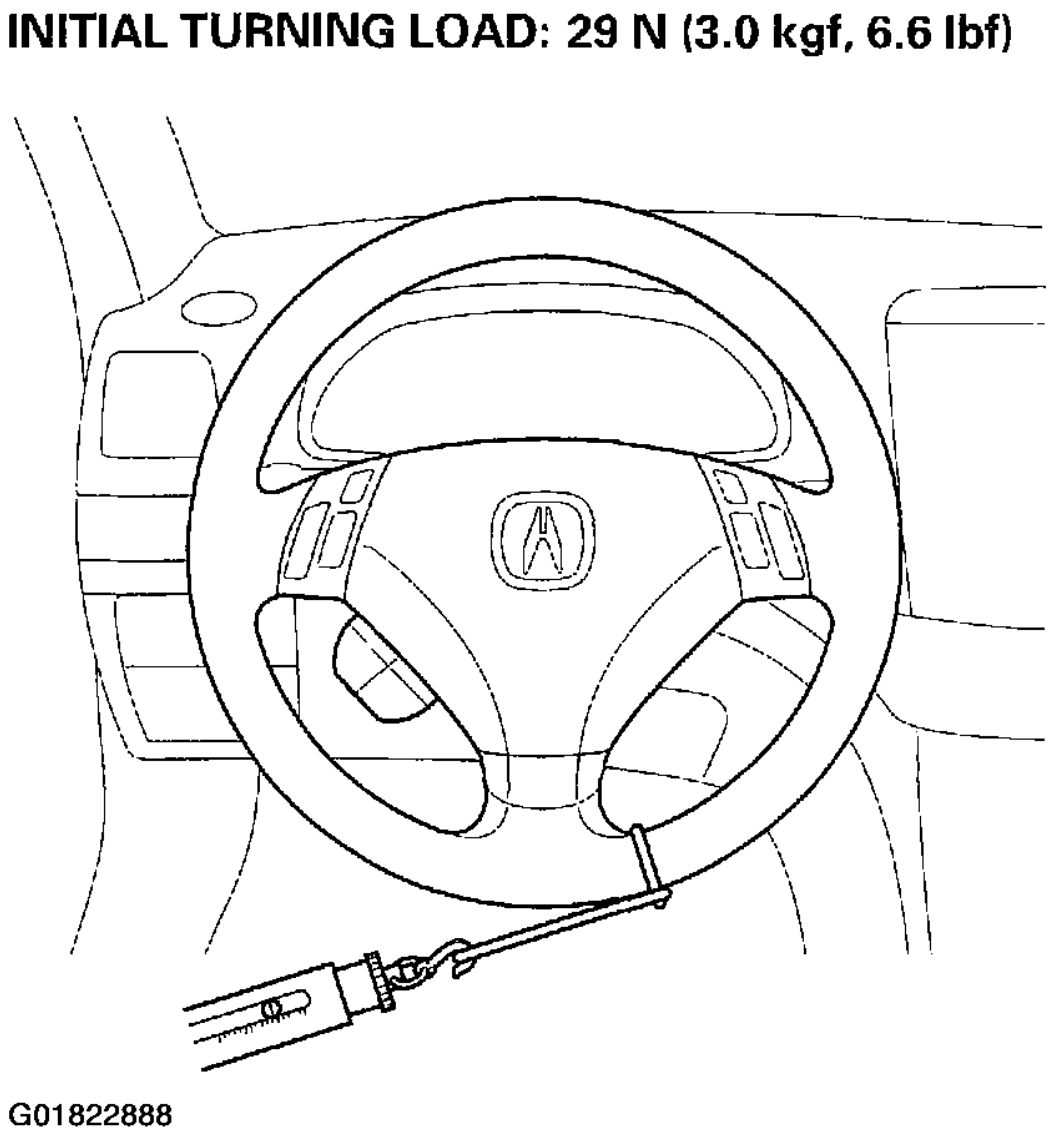

Fig. 6: Checking Power Assist

STEERING LINKAGE & GEARBOX INSPECTION

cardiagn.com

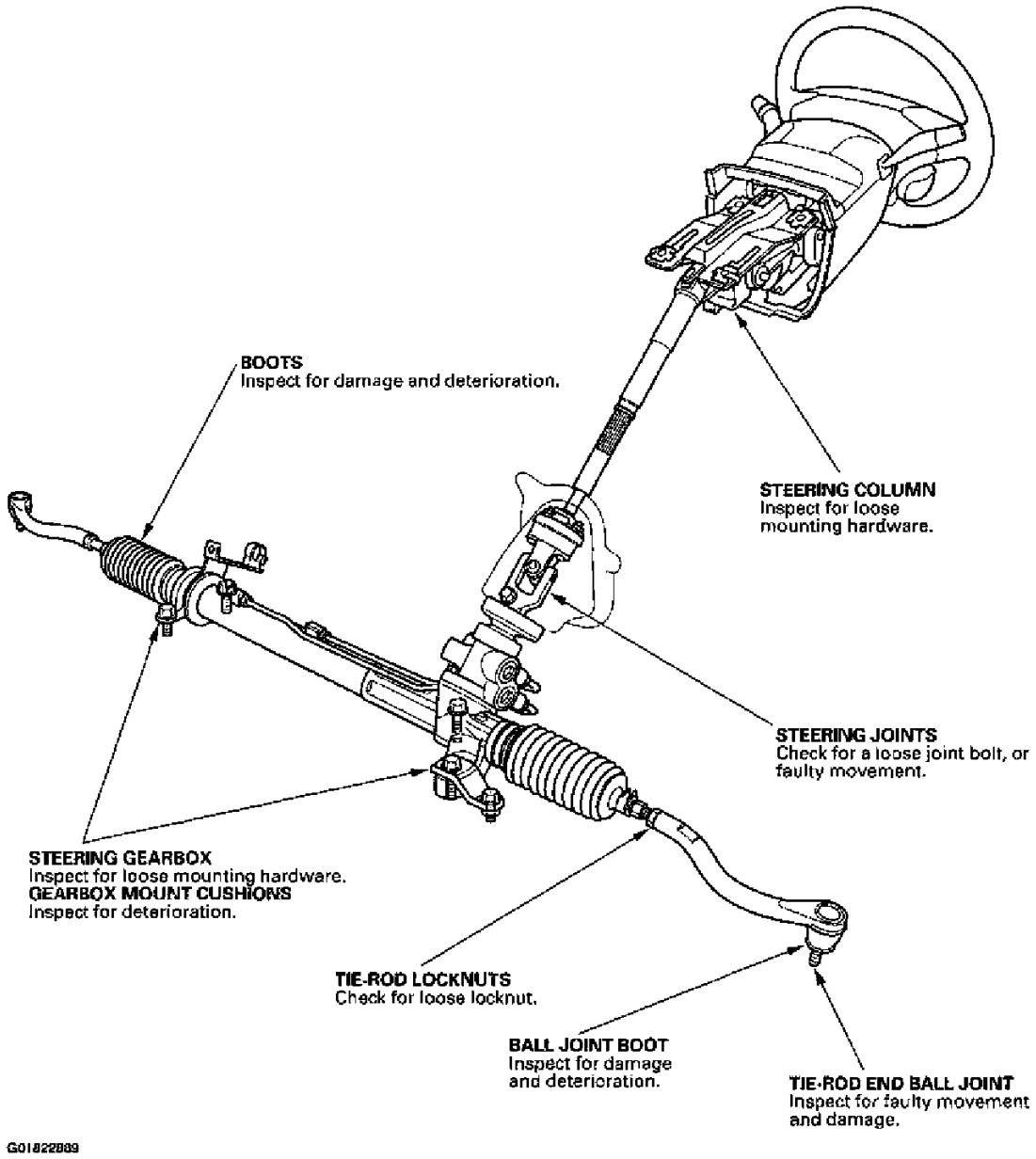

Fig. 7: Inspecting Steering Linkage & Gearbox

PUMP PRESSURE TEST WITH T/N 07406-0010001

Special Tools Required:

- P/S joint adapter (pump) 07VAK-P8A011A
- P/S joint adapter plate (pump) 07ZAK-S7CA100
- P/S joint adapter (hose) 07ZAK-S7CA200
- P/S pressure gauge 07406-0010001

cardiagn.com

Check the fluid pressure as follows to determine whether the trouble is in the pump or gearbox.

1. Check the power steering fluid level (see **FLUID REPLACEMENT**).
2. Disconnect the pump outlet hose (A) from the pump outlet with care so as not to spill the power steering fluid on the frame and other parts. Install the P/S joint adapter (pump) on the pump outlet (B).

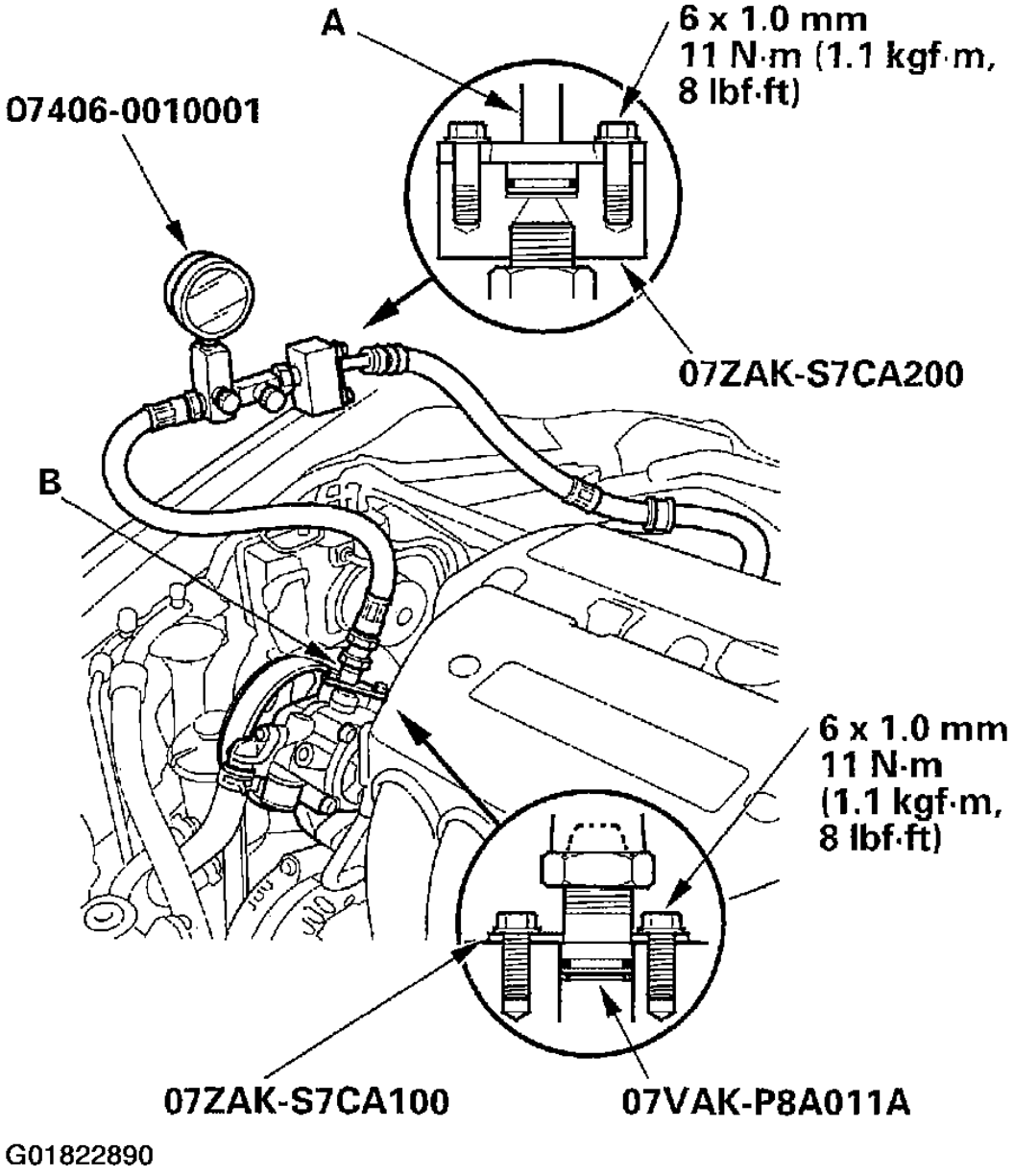

Fig. 8: Installing The P/S Joint Adapter (Pump) On The Pump Outlet

cardiagn.com

3. Connect the P/S joint adapter (hose) to the P/S pressure gauge, then connect the pump outlet hose (A) to the P/S joint adapter (hose).
4. Install the P/S pressure gauge to the P/S joint adapter (pump).
5. Fully open the shut-off valve (A).

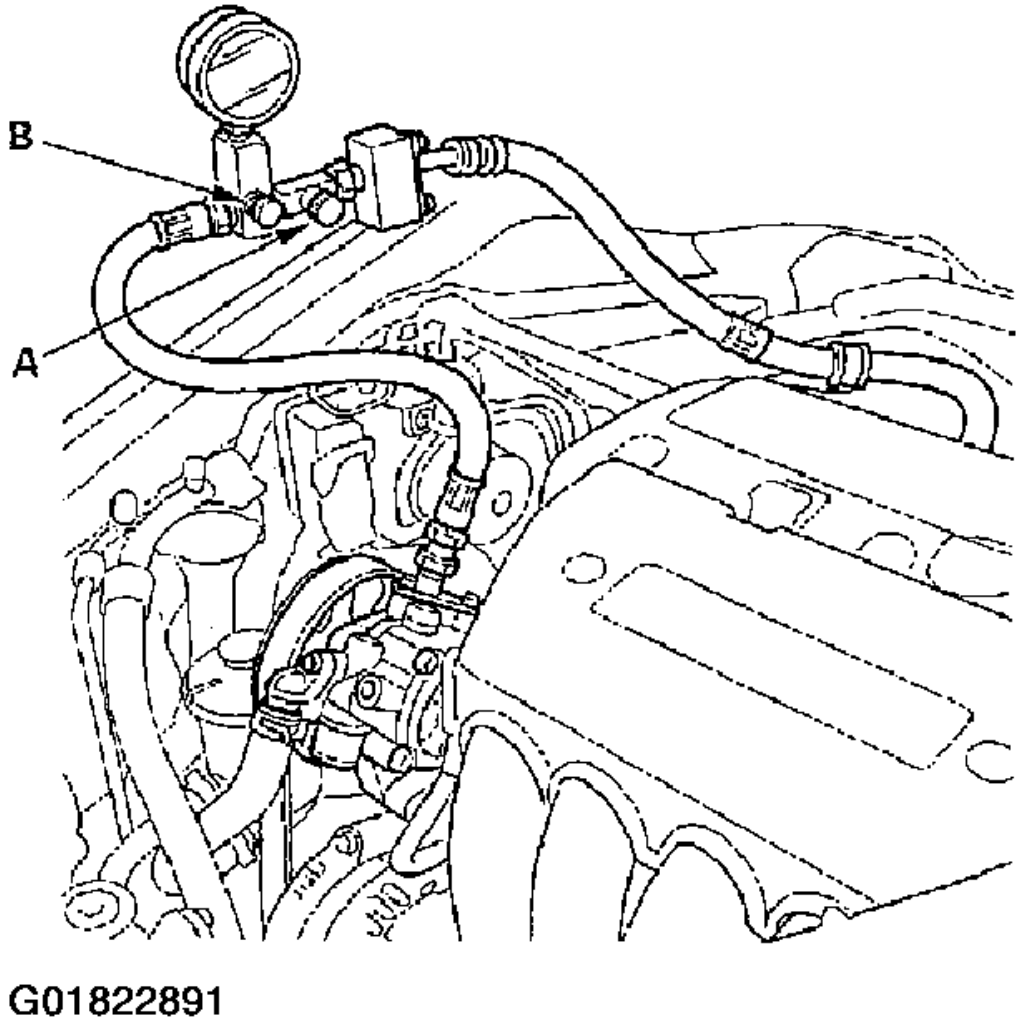

Fig. 9: Fully Open The Shut-Off Valve & The Pressure Control Valve

6. Fully open the pressure control valve (B).
7. Start the engine and let it idle.
8. Turn the steering wheel from lock-to-lock several times to warm the fluid to operating temperature at 158°F (70°C).

cardiagn.com

9. Measure steady-state fluid pressure while the engine is idling. If the pump is in good condition, the pressure should be no more than 1,500 kPa (15 kgf/cm^2 , 214 psi). If the pressure is too high, check the outlet hose or valve body unit (see Steering System Troubleshooting). Raise the engine speed to 3,000 RPM, and measure the fluid pressure. If the pump is in good condition, the pressure should be at least 1,500 kPa (15 kgf/cm^2 , 214 psi). If the pressure is too high, repair or replace the pump.
10. Lower the engine speed and let it idle. Close the shut-off valve, then close the pressure control valve gradually until the pressure gauge needle is stable. Read the pressure.

NOTE: Do not keep the shut-off valve closed more than 5 seconds or the pump could be damaged by over-heating.

11. Immediately open the pressure control valve fully. If the pump is in good condition and the valve is closed, the gauge should read at least this specification:

    7,850-8,550 kPa (80-87 kgf/cm^2 , 1,140-1,240 psi)

    A low reading means pump output is too low for full assist. Repair or replace the pump.

PUMP PRESSURE TEST WITH T/N 07406-001000A

Special Tools Required:

- P/S joint adapter (pump) 07VAK-P8A011A
- P/S joint adapter plate (pump) 07ZAK-S7CA100
- P/S joint adapter (hose) 07ZAK-S7CA200
- P/S pressure gauge 07406-001000A

Check the fluid pressure as follows to determine whether the trouble is in the pump or gearbox.

1. Check the power steering fluid level (see **FLUID REPLACEMENT**).
2. Disconnect the pump outlet hose (A) from the pump outlet with care so as not to spill the power steering fluid on the frame and other parts. Install the P/S joint adapter (pump) on the pump outlet (B).

cardiagn.com

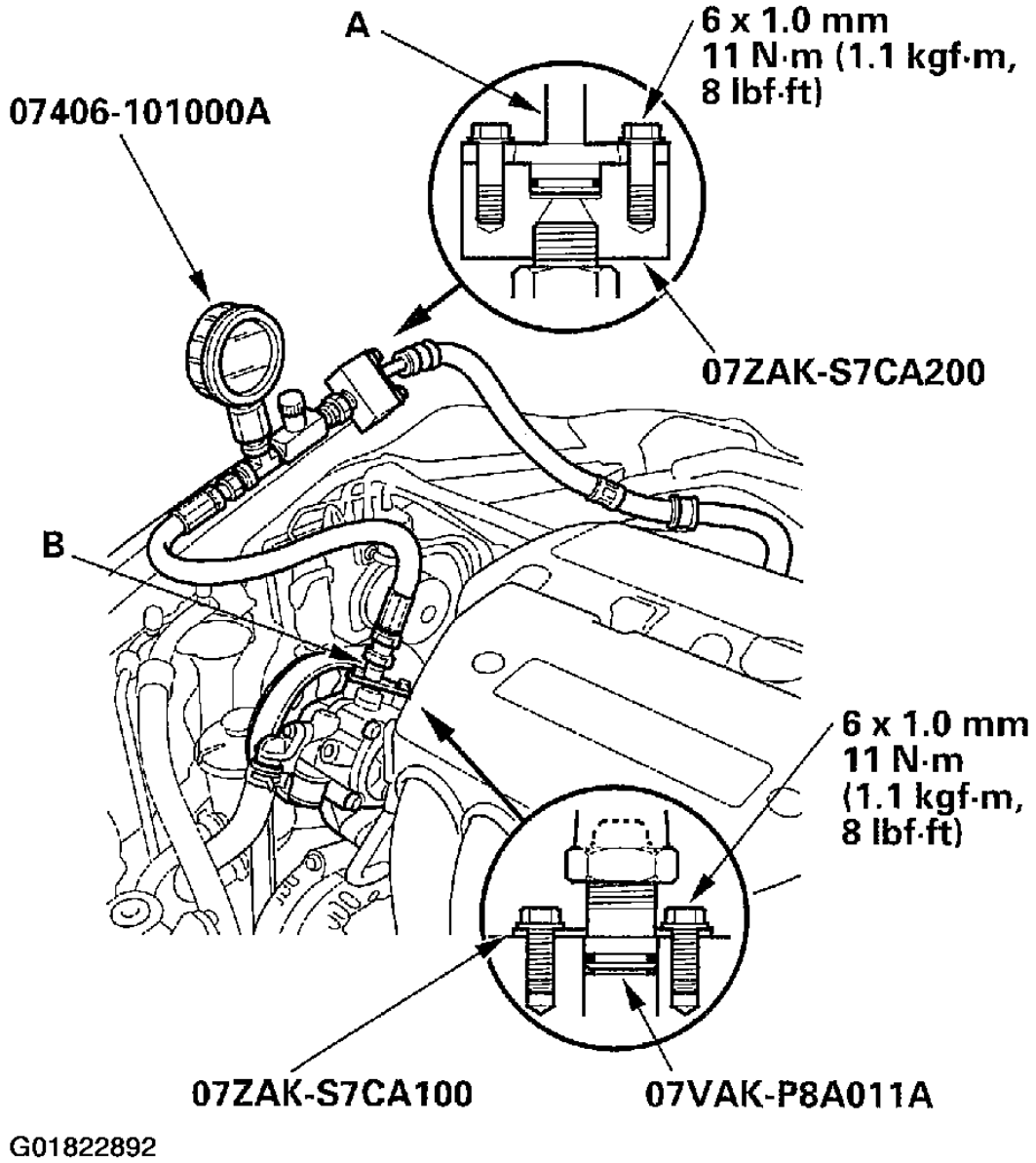

Fig. 10: Installing The P/S Joint Adapter (Pump) On The Pump Outlet

3. Connect the P/S joint adapter (hose) to the P/S pressure gauge, then connect the pump outlet hose (A) to the P/S joint adapter (hose).
4. Install the P/S pressure gauge to the P/S joint adapter (pump).
5. Open the pressure control valve (A) fully.

cardiagn.com

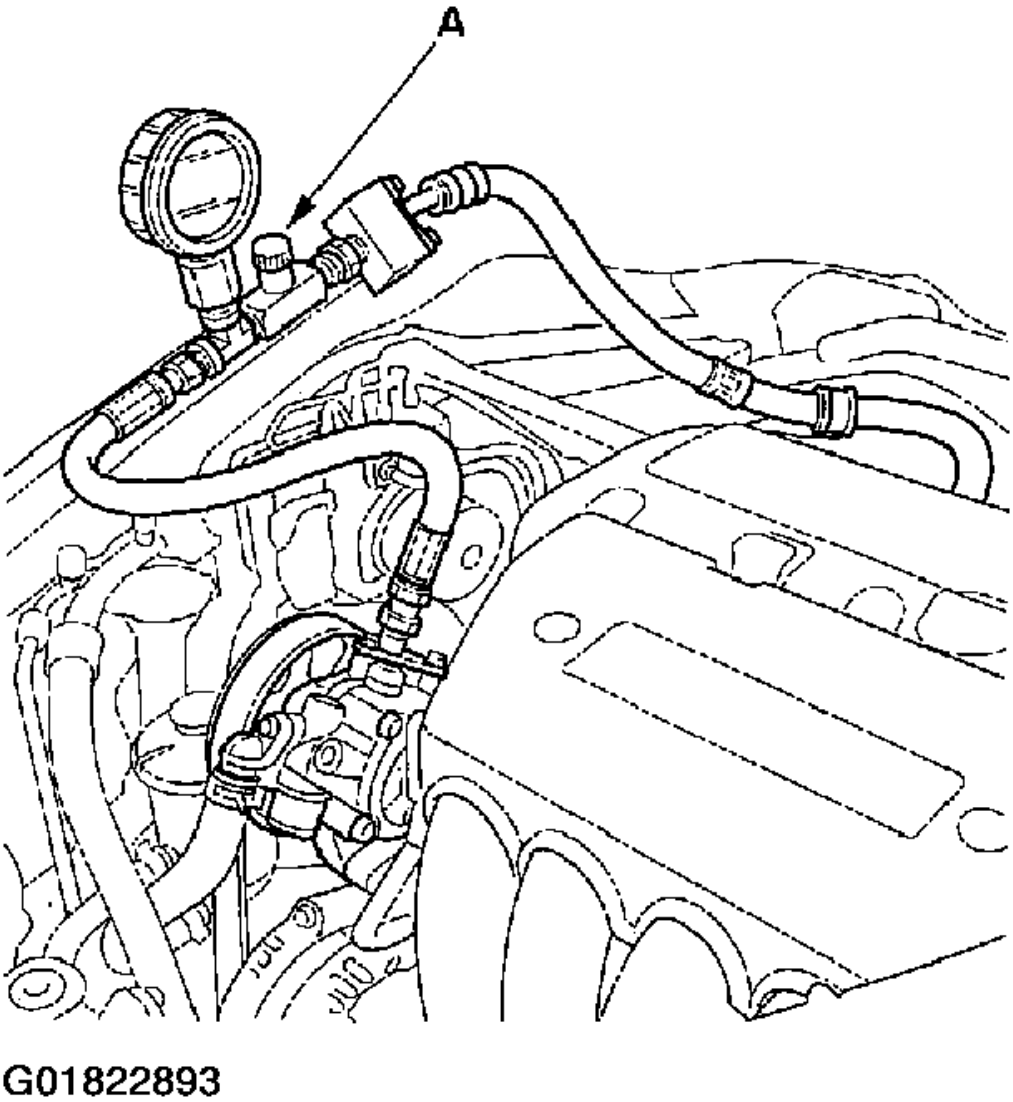

Fig. 11: Opening The Pressure Control Valve Fully

6. Start the engine and let it idle.
7. Turn the steering wheel from lock-to-lock several times to warm the fluid to operating temperature at 158°F (70°C).
8. Measure steady-state fluid pressure while the engine is idling. If the pump is in good condition, the pressure should be no more than 1,500 kPa (15 kgf/cm^2 , 214 psi). If the pressure is too high, check the outlet hose or valve body unit (see Steering System Troubleshooting). Raise the engine speed to 3,000 RPM, and measure the fluid pressure. If the pump is in good condition, the pressure should be at least

cardiagn.com

1,500 kPa (15 kgf/cm^2 , 214 psi). If the pressure is too high, repair or replace the pump.

9. Lower the engine speed and let it idle. Close the pressure control valve gradually until the pressure gauge needle is stable. Read the pressure.

NOTE: Do not keep the pressure control valve closed more than 5 seconds or the pump could be damaged by over-heating.

10. Immediately open the pressure control valve fully. If the pump is in good condition and the valve is closed, the gauge should read at least this specification:

7,850-8,550 kPa (80-87 kgf/cm^2 , 1,140-1,240 psi)

A low reading means pump output is too low for full assist. Repair or replace the pump.

FLUID LEAKAGE INSPECTION

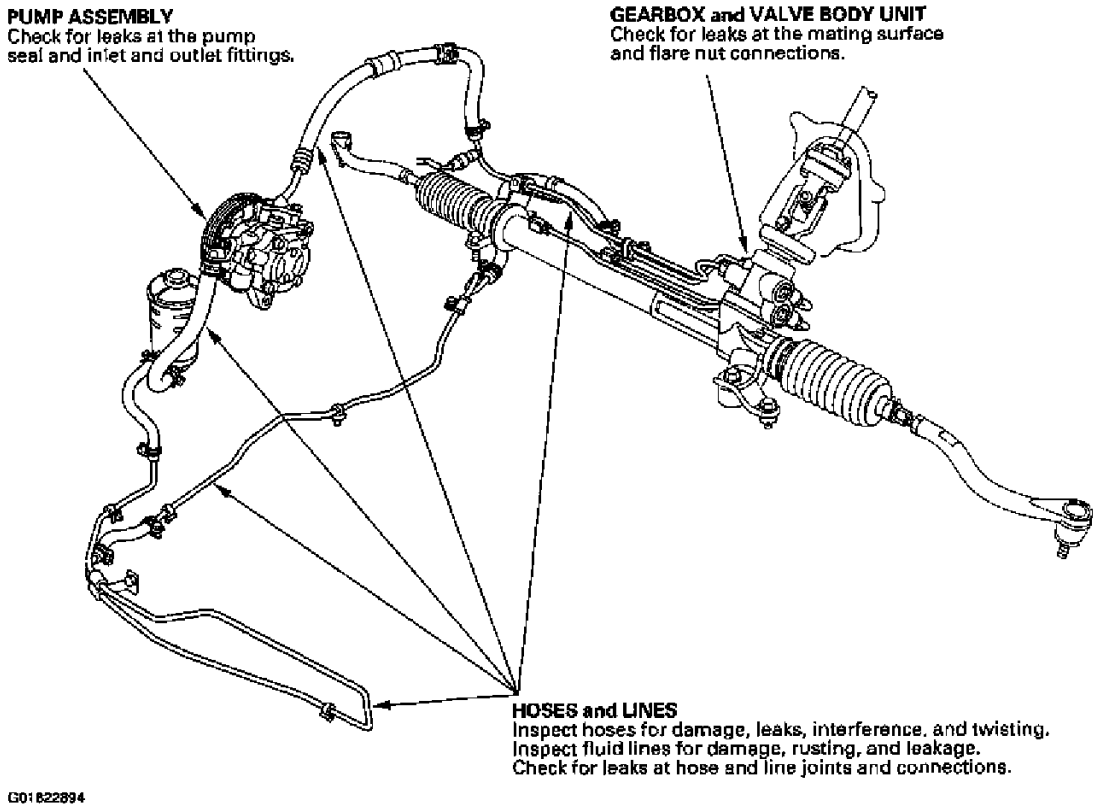

Fig. 12: Inspecting For Fluid Leakage

FLUID REPLACEMENT

Check the reservoir (A) at regular intervals, and add the recommended fluid as necessary. Always use Honda Power Steering Fluid. Using any other type of power steering fluid or automatic transmission fluid can cause

cardiagn.com

increased wear and poor steering in cold weather.

System Capacity: 1.1 L (1.16 US. qt) at disassembly
Reservoir Capacity: 0.4 L (0.42 US. qt)

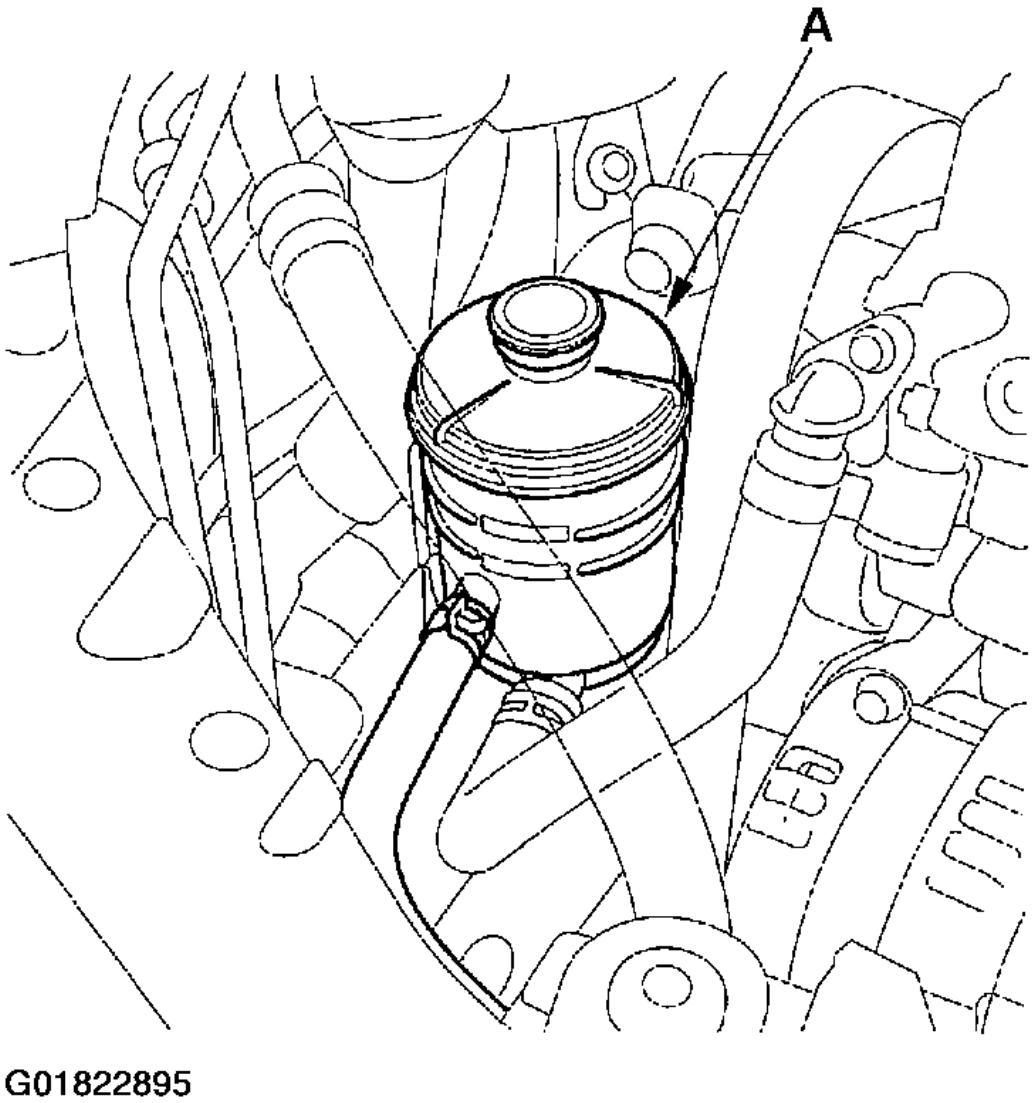

Fig. 13: Identifying Reservoir

1. Raise the reservoir, then disconnect the return hose (A) to drain the reservoir. Take care not to spill the fluid on the body and parts. Wipe off and spilled fluid at once.

cardiagn.com

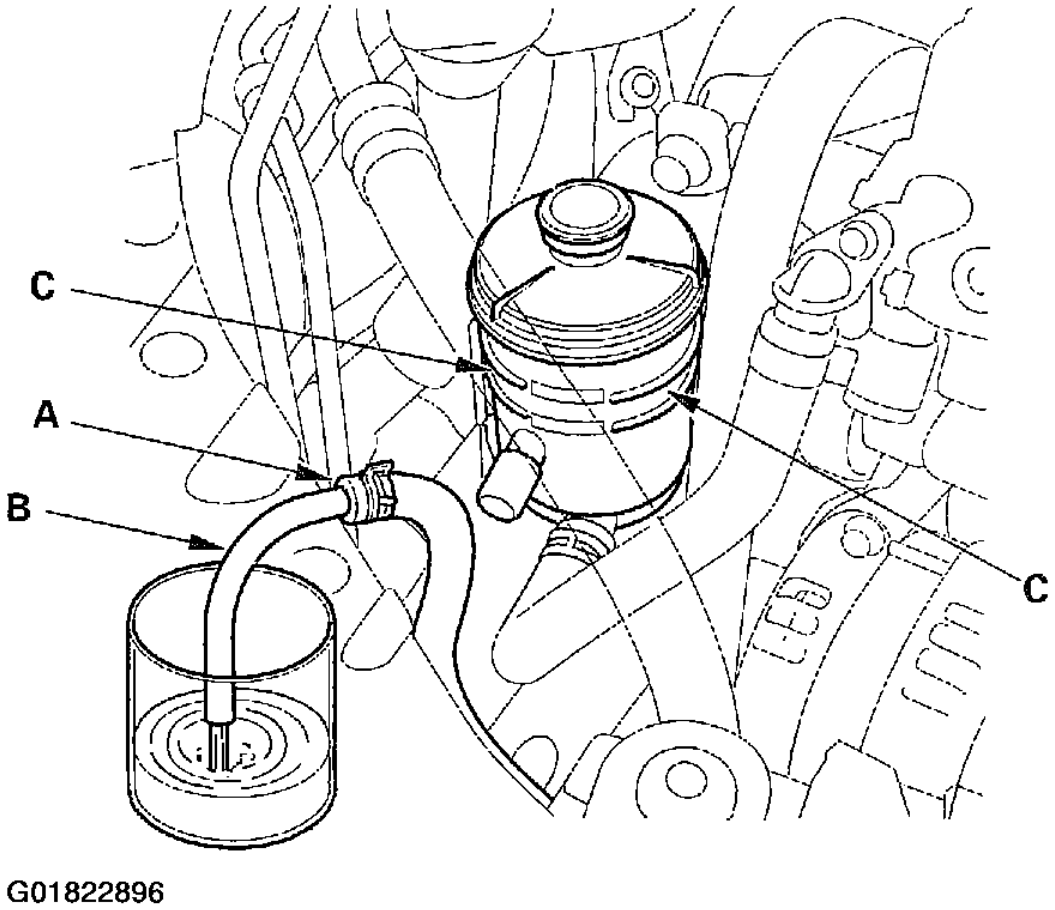

Fig. 14: Draining The Reservoir

2. Connect a hose (B) of suitable diameter to the disconnected return hose, and put the hose end in a suitable container.
3. Start the engine, let it run at idle, and turn the steering wheel from lock-to-lock several times. When fluid stops running out of the hose, shut off the engine. Discard the fluid.
4. Reinstall the return hose on the reservoir.
5. Fill the reservoir to the upper level line (C).
6. Start the engine and run it at fast idle, then turn the steering from lock-to-lock several times to bleed air from the system.
7. Recheck the fluid level and add more if necessary. Do not fill the reservoir beyond the upper level line.
8. If the fluid is contaminated, dark, or discolored, repeat procedure as necessary.

POWER STEERING HOSE, LINE & PRESSURE SWITCH REPLACEMENT

cardiagn.com

Note these items during installation:

- Connect each hose to the corresponding line securely until it contacts the stop on the line. Install the clamp or adjustable clamp at the specified distance from the hose end as shown.
- Check all clamps for deterioration or deformation; replace with the clamps NEW ones if necessary.
- Add the recommended power steering fluid to the specified level on the reservoir and check for leaks.

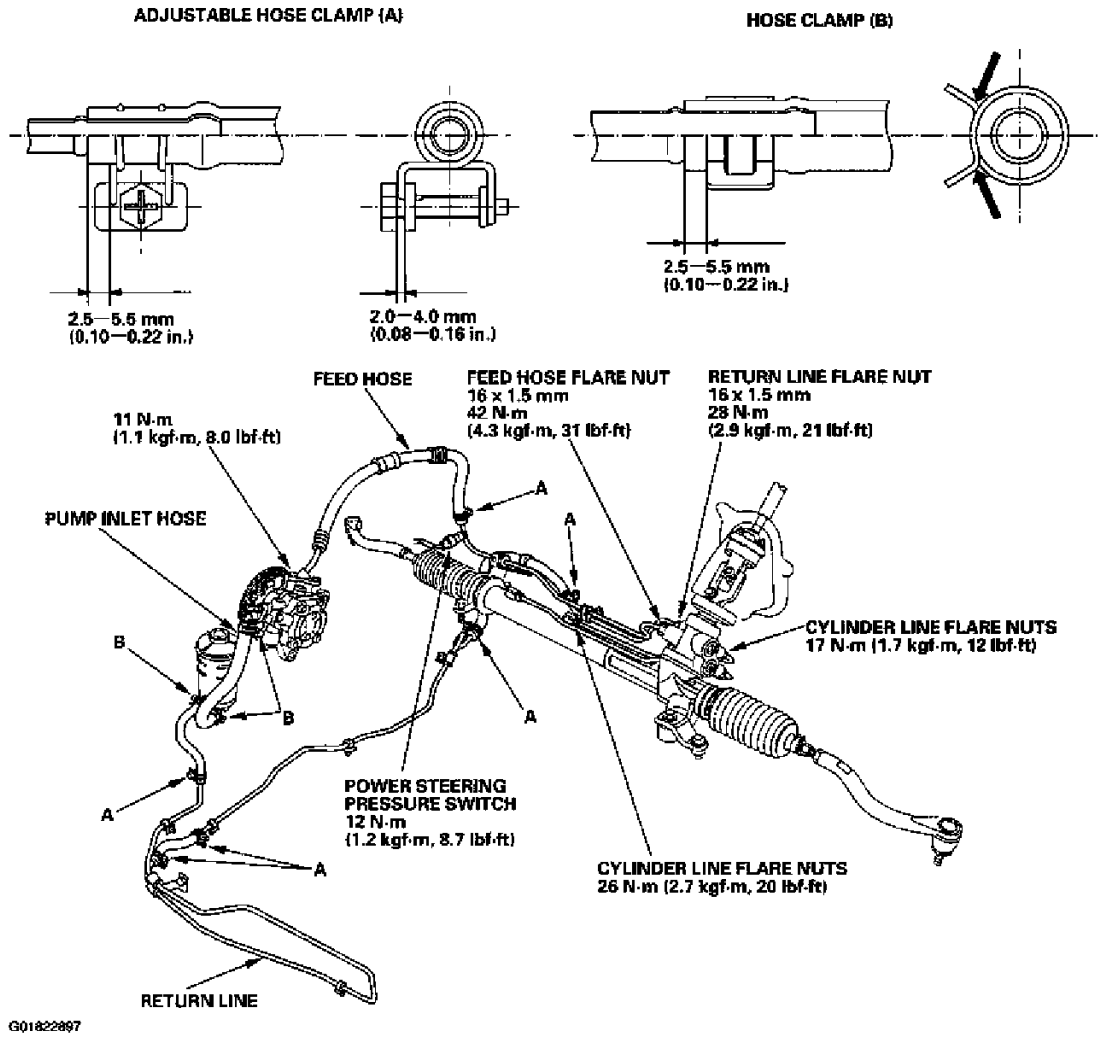

Fig. 15: Replacing Power Steering Hose, Line, And/Or Pressure Switch

PUMP REPLACEMENT

1. Place a suitable container under the vehicle.
2. Drain the power steering fluid from the reservoir.
3. Remove the drive belt (A) from the pump pulley (see **DRIVE BELT**).

cardiagn.com

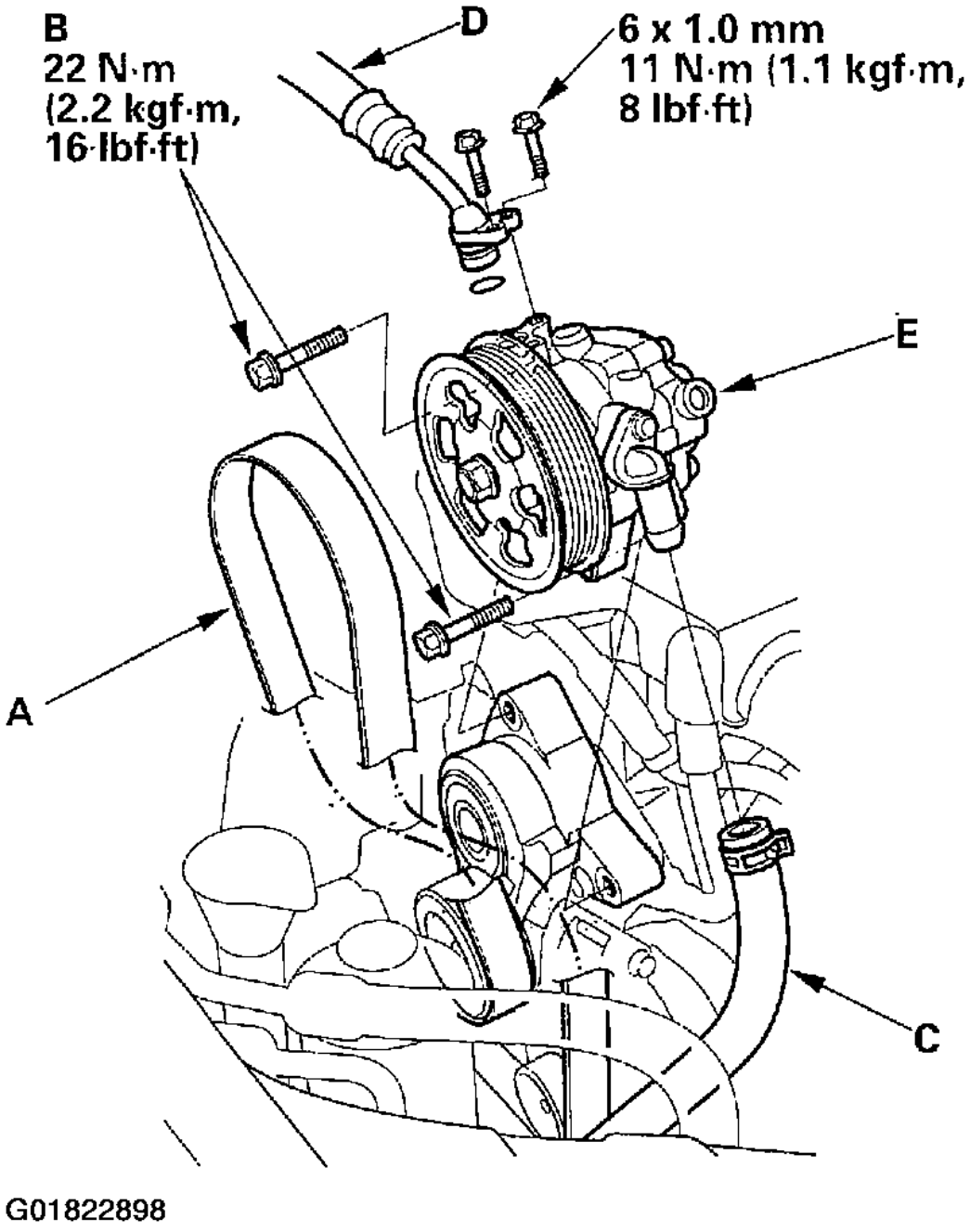

Fig. 16: Removing Pump

4. Remove the pump mounting bolts (B).
5. Cover the auto-tensioner, alternator, and A/C compressor with several shop towels to protect them from spilled power steering fluid. Disconnect the pump inlet hose (C) and jump outlet hose (D) from the pump

cardiagn.com

(E), and plug them. Take care not to spill the fluid on the body or parts. Wipe off any spilled fluid at once. Do not turn the steering wheel with the pump removed.

6. Cover the opening of the pump with a piece of tape to prevent foreign material from entering the pump.
7. Connect the pump inlet hose and pump outlet hose.
8. Loosely install the pump in the pump bracket with the mounting bolts, then tighten the pump fittings securely.
9. Install the drive belt (A). Note these item during belt installation:
   - Make sure that the belt is properly positioned on the pulleys (B).
   - Do not get power steering fluid or grease on the auto-tensioner, alternator, A/C compressor, and drive belt or pulley faces. Clean off any fluid or grease before installation.

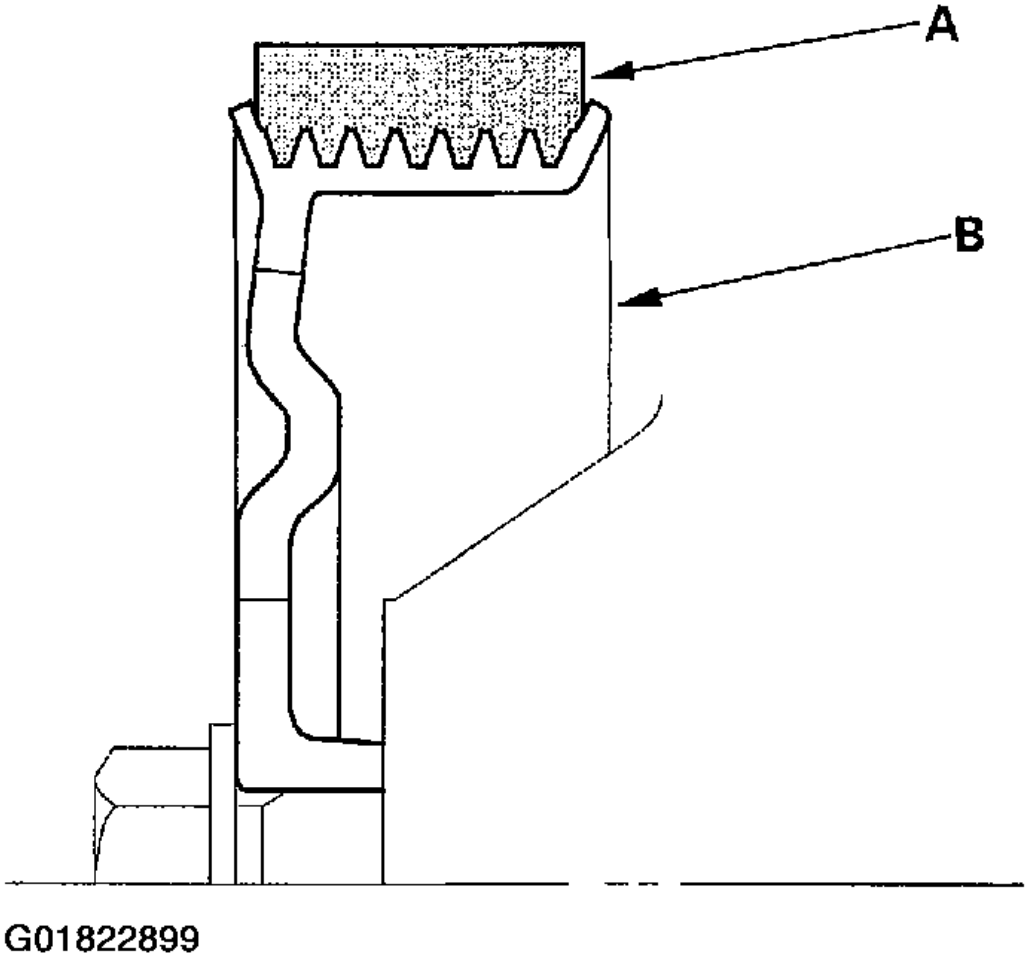

Fig. 17: Ensure That The Belt Is Properly Positioned On The Pulleys

cardiagn.com

10. Tighten the pump mounting bolts to the specified torque.
11. Fill the reservoir to the upper level line (see **FLUID REPLACEMENT**).

PUMP OVERHAUL

EXPLODED VIEW

Replace the pump as an assembly if the parts indicated with asterisk (*) are worn or damaged.

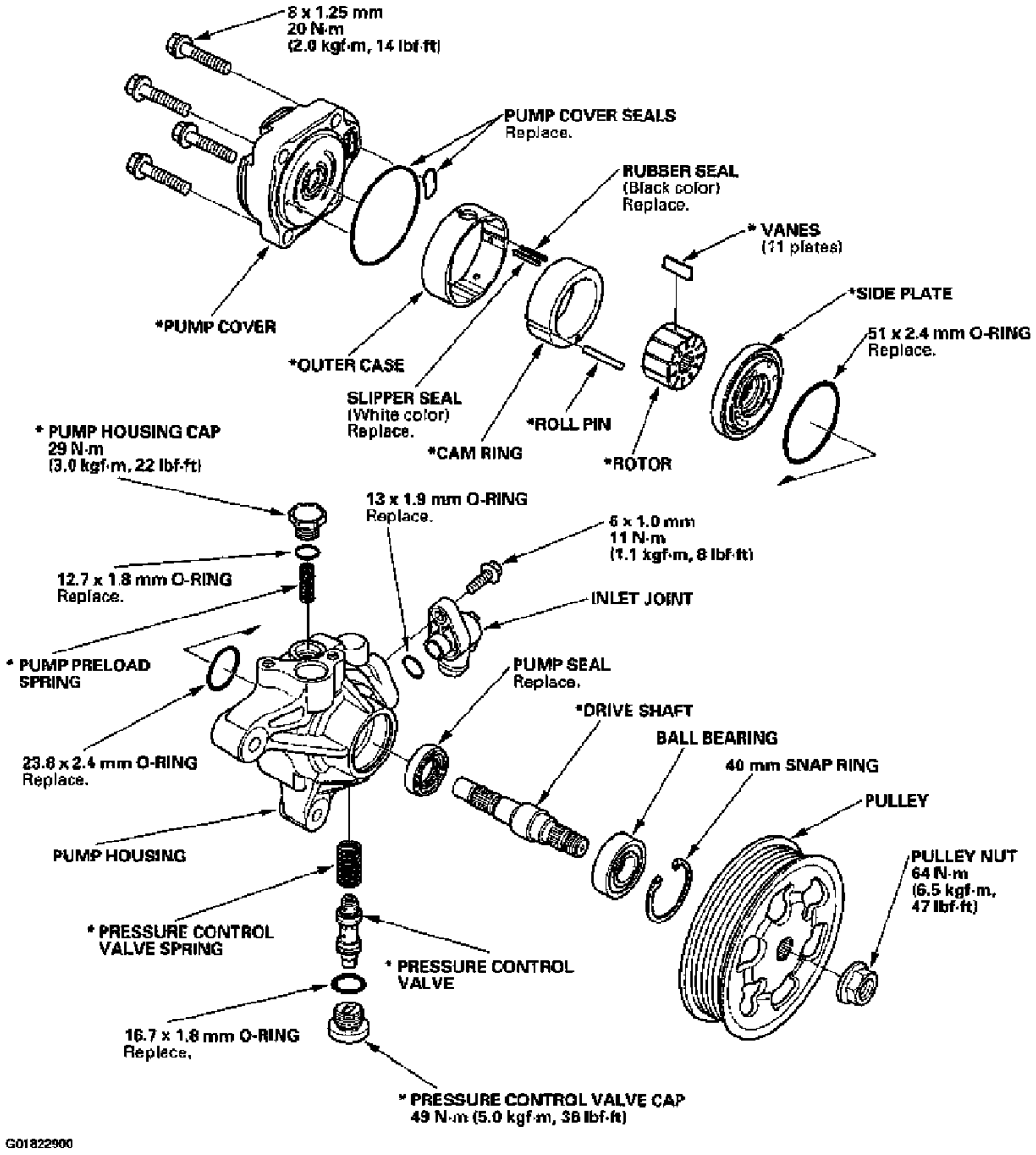

Fig. 18: Exploded View Of Pump

cardiagn.com

Special Tools Required:

- Attachment, 32 x 35 mm 07746-0010100
- Driver 07749-0010000
- Pulley holder 07ZAB-S5A0100

DISASSEMBLY

NOTE: Refer to the Exploded View as needed during the following procedure.

1. Remove the power steering pump (see **PUMP REPLACEMENT**).
2. Drain the fluid from the pump (see step 1 on **FLUID REPLACEMENT**).
3. Hold the power steering pump (A) in a vise with soft jaws (B), hold the pulley (C) with the special tool (D), and remove the pulley nut (E) and pulley. Be careful not to damage the pump housing with the jaws of the vise.

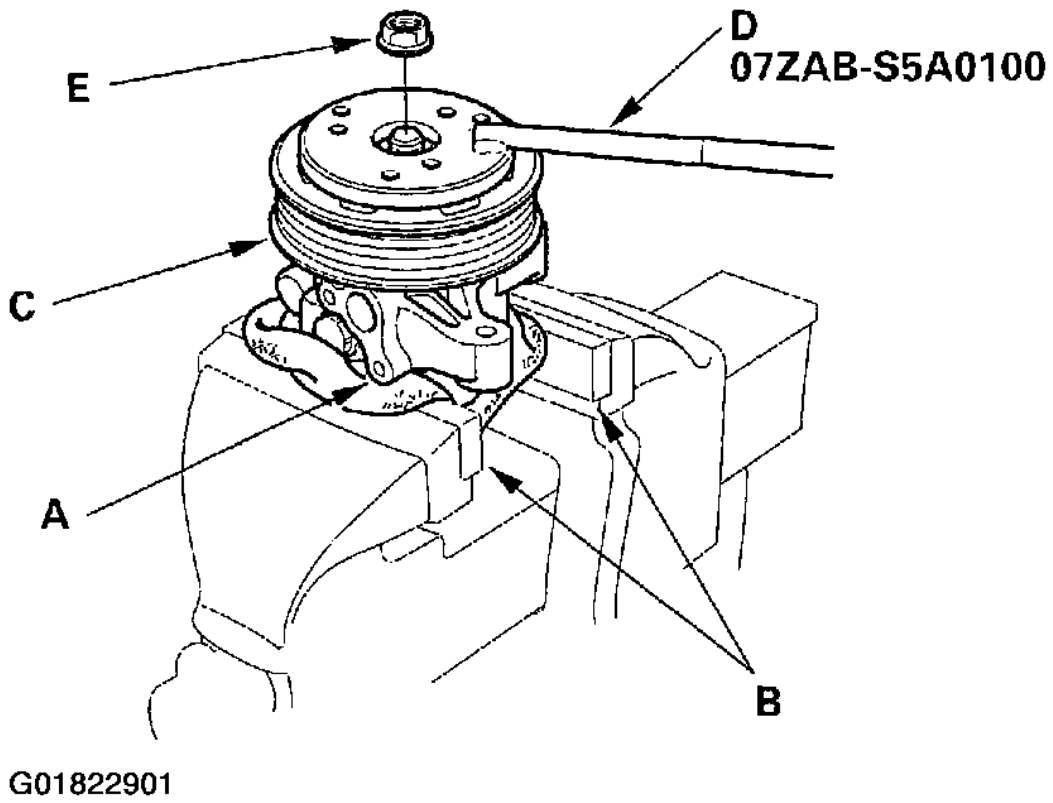

Fig. 19: Removing Pulley

4. Remove the inlet joint and O-ring.

cardiagn.com

5. Remove the pressure control valve cap, O-ring, valve spring, and pressure control valve.
6. Remove the pump housing cap, O-ring, and pump preload spring.
7. Remove the pump cover and pump cover seals.
8. Pull out the roll pin.
9. Remove the outer case, cam ring, rotor, vanes, and side plate.
10. Remove the rubber seal and slipper seal from the outer case.
11. Remove the O-rings from the bottom of the housing.
12. Remove the snap ring, then remove the drive shaft by tapping the shaft end with the plastic hammer.
13. Remove the seal from the pump housing.

Inspection

14. Check the pressure control valve for wear, burrs, and other damage to the edges of the edges of the grooves in the valve.

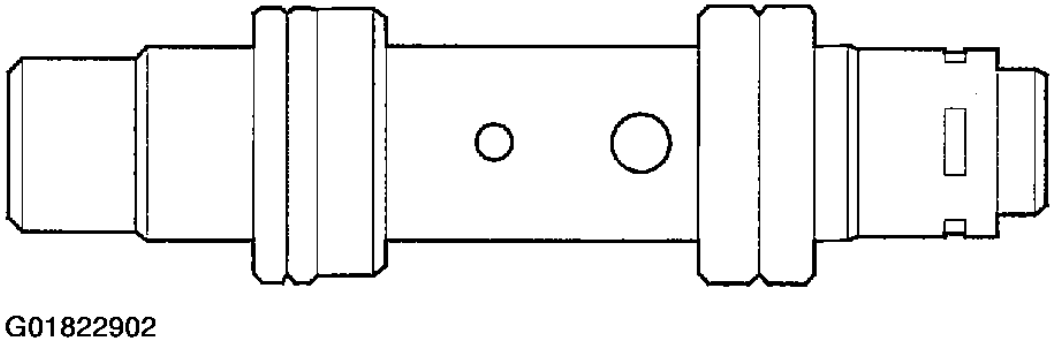

Fig. 20: Checking The Pressure Control Valve

15. Inspect the bore of the pressure control valve on the pump housing for scratches and wear.
16. Slip the pressure control valve back in the pump housing, and check that it moves in and out smoothly. If OK, go to step 17; if not, replace the pump as an assembly. The pressure control valve is not available separately.

cardiagn.com

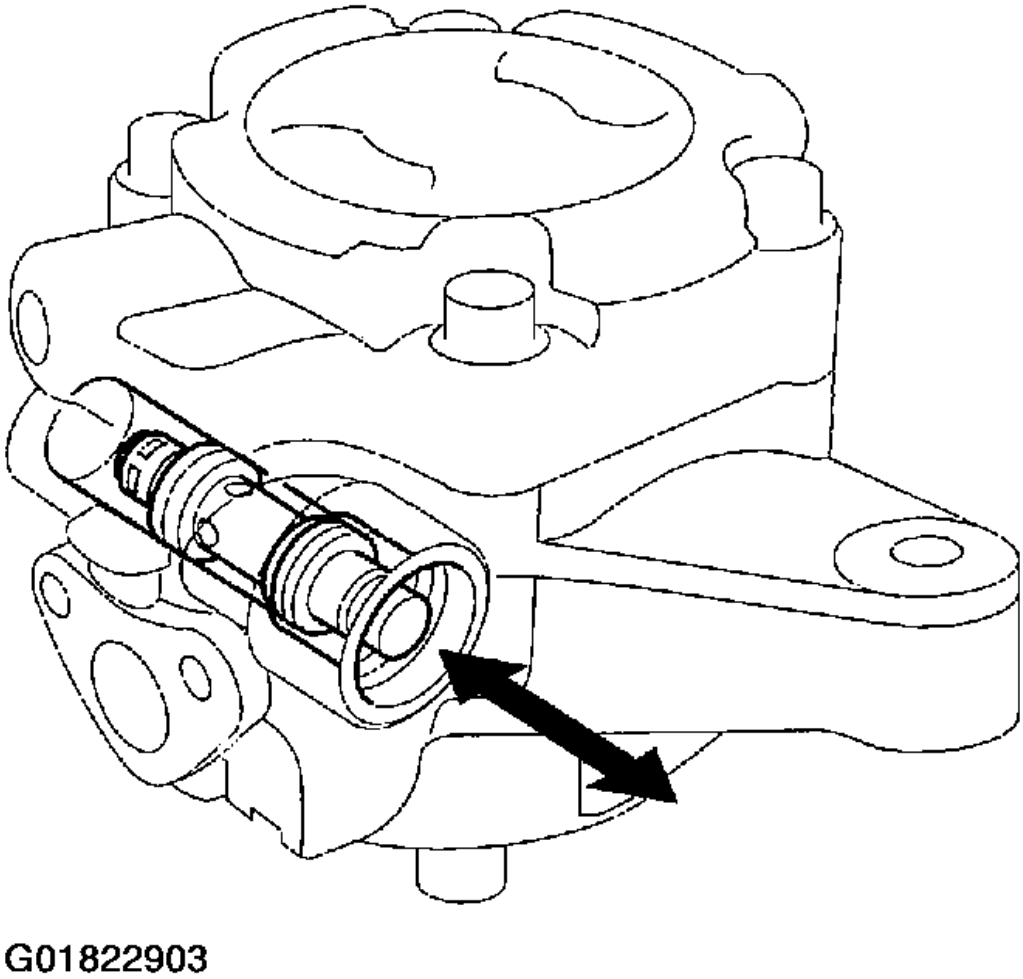

Fig. 21: Slipping The Pressure Control Valve Back In The Pump Housing

17. Attach a hose (A) to the end of the pressure control valve (B) as shown. Then submerge the pressure control valve in a container of power steering fluid or solvent (C), and blow in the hose.
    - If air bubbles leak through the valve at less than 98 kPa (1.0 kgf/cm^2 , 14.2 psi), replace the pump as an assembly. The pressure control valve is not available separately.
    - If the pressure control valve is OK, set it aside for reassembly later.

cardiagn.com

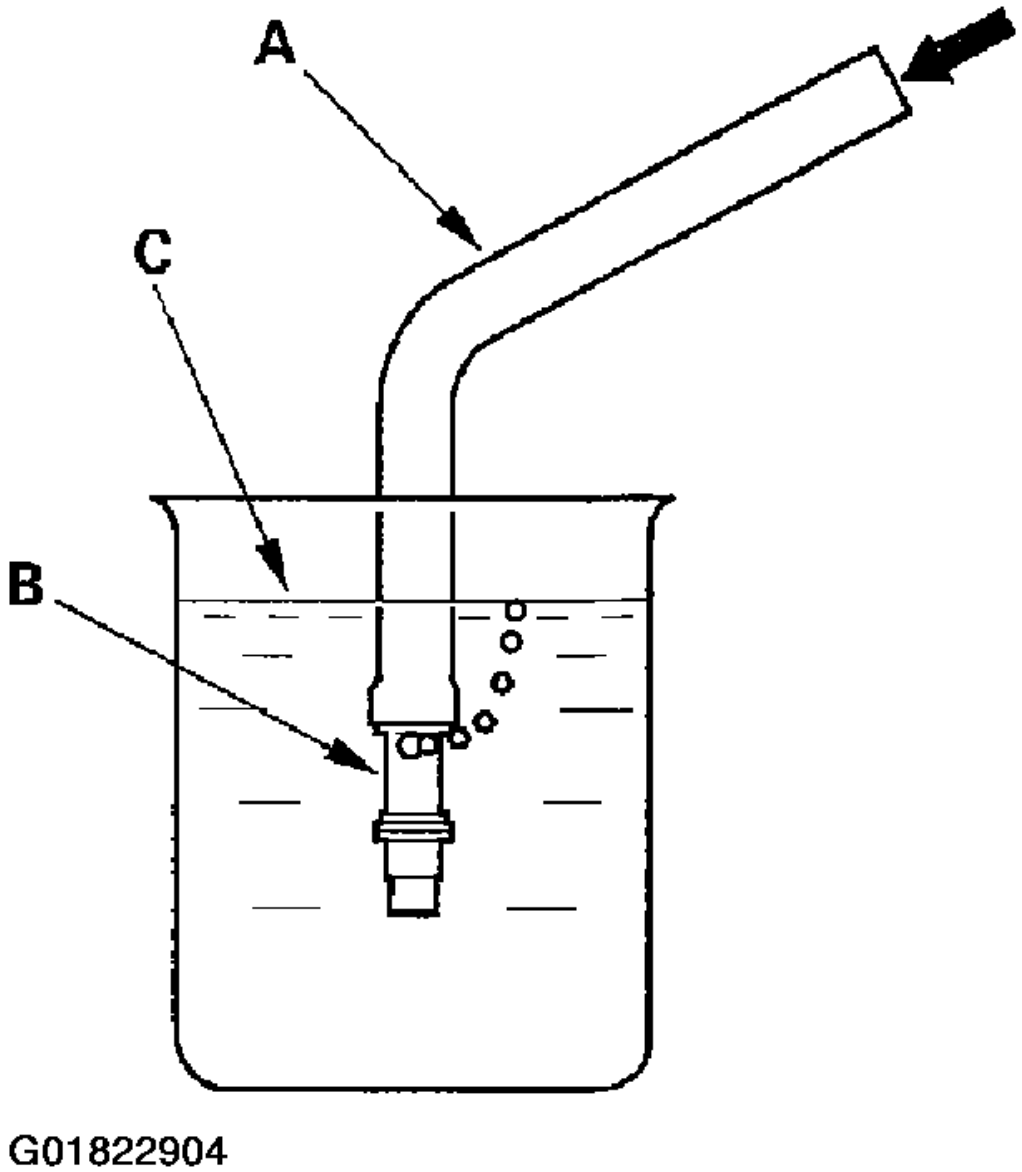

Fig. 22: Checking Pressure Control Valve

18. Inspect the ball bearing by rotating the outer race slowly. If you feel any play (axial or radial) or roughness, remove the faulty ball bearing (A), and install a NEW one (B).

cardiagn.com

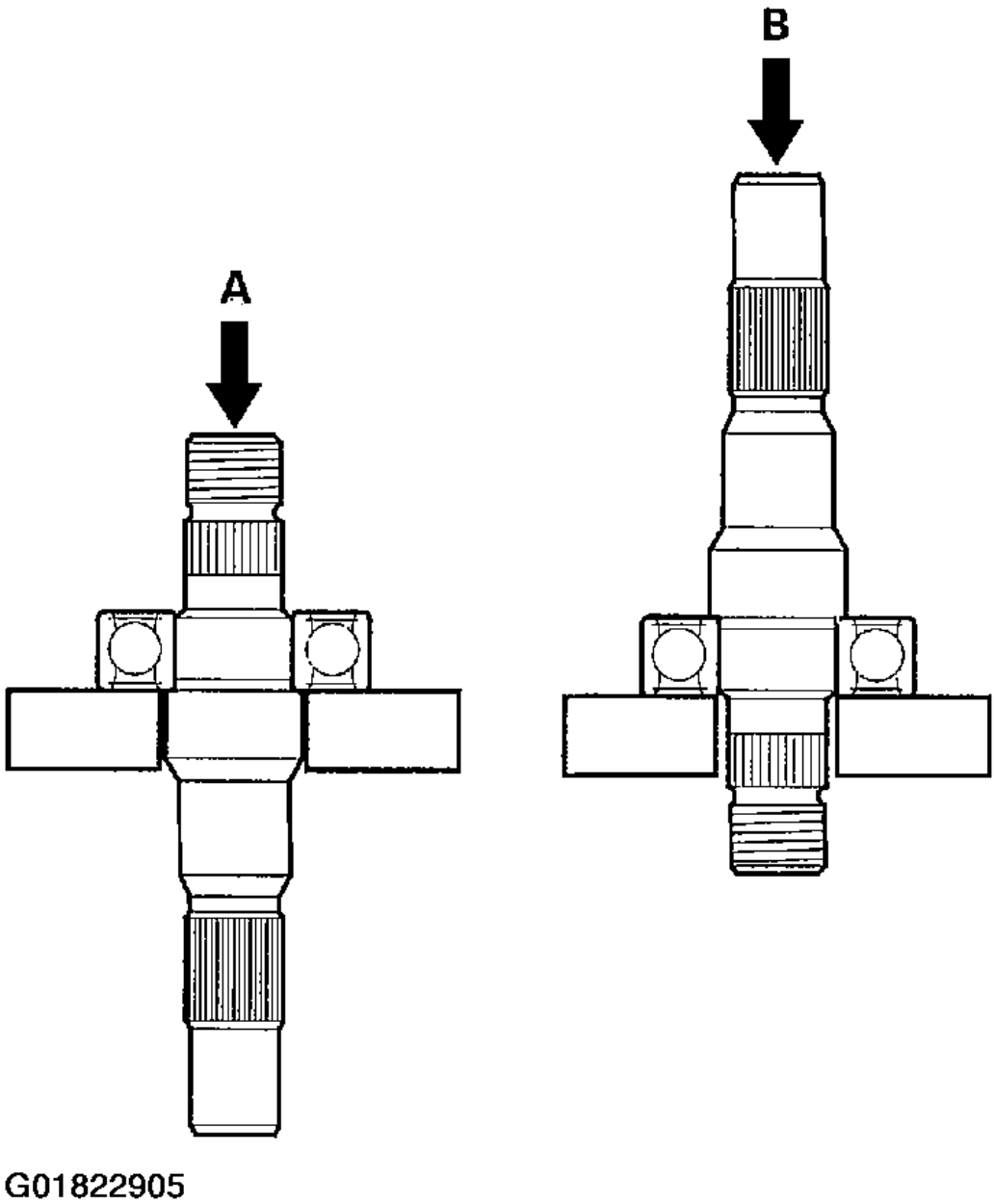

Fig. 23: Replacing The Ball Bearing

19. Inspect each part shown with an asterisk in the Exploded View; if any of them are worn or damaged, replace the pump as an assembly.

Reassembly

cardiagn.com

20. Install the NEW pump seal (A) (with its grooved side facing in) into the pump housing (B) by hand first, then drive it in using the special tools with until there is no step at the top of the pump seal, and the seal is fully seated in the pump housing.

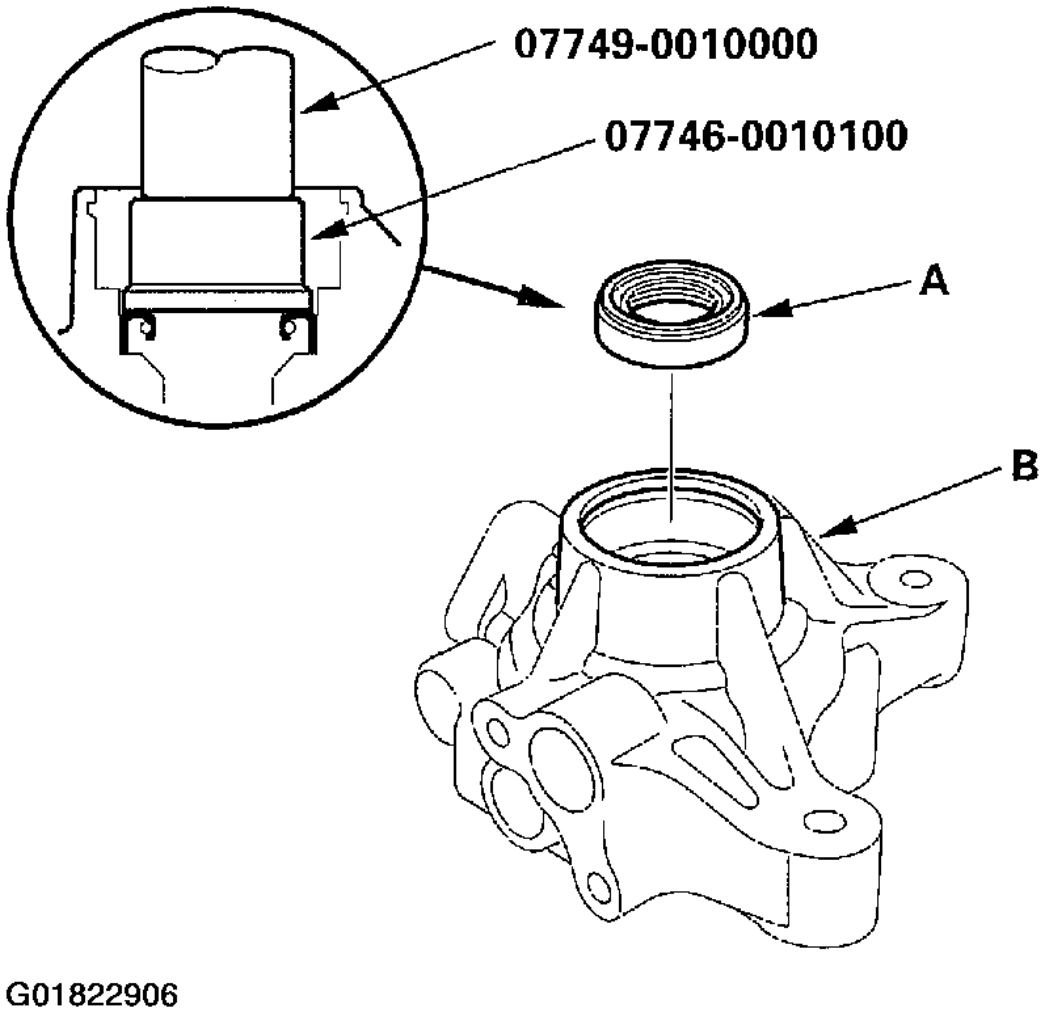

Fig. 24: Installing The NEW Pump Seal

21. Position the pump drive shaft (A) in the pump housing, then press it in with the appropriate size socket wrench (B) as shown. Do not apply more than 1,370 N (140 kgf, 308 lbf) of pressure.

cardiagn.com

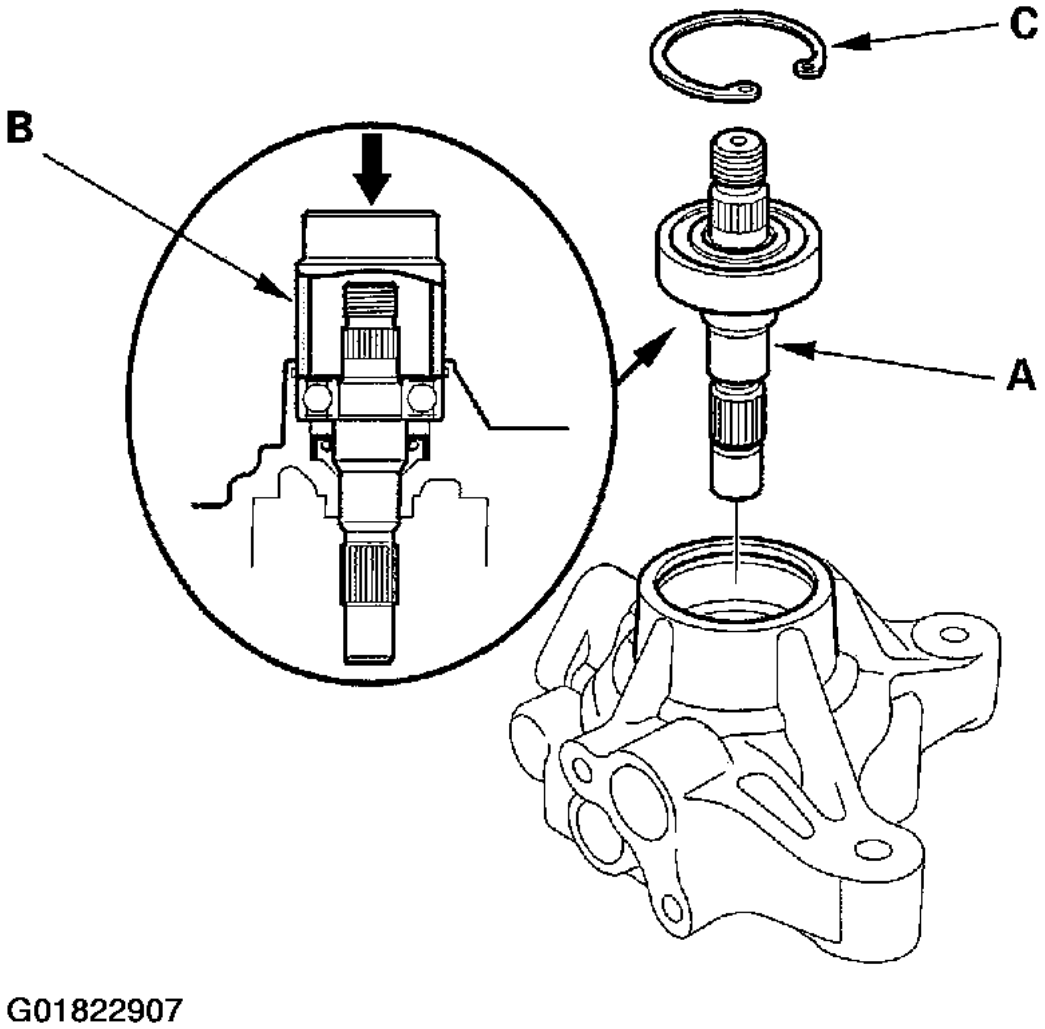

Fig. 25: Pressing Pump Drive Shaft Into The Pump Housing

22. Install the 40 mm snap ring (C) with its radiused edge facing out.
23. Coat the NEW 23.8 mm O-ring (A) with the power steering fluid, then position it on the bottom (B) of the pump housing.

cardiagn.com

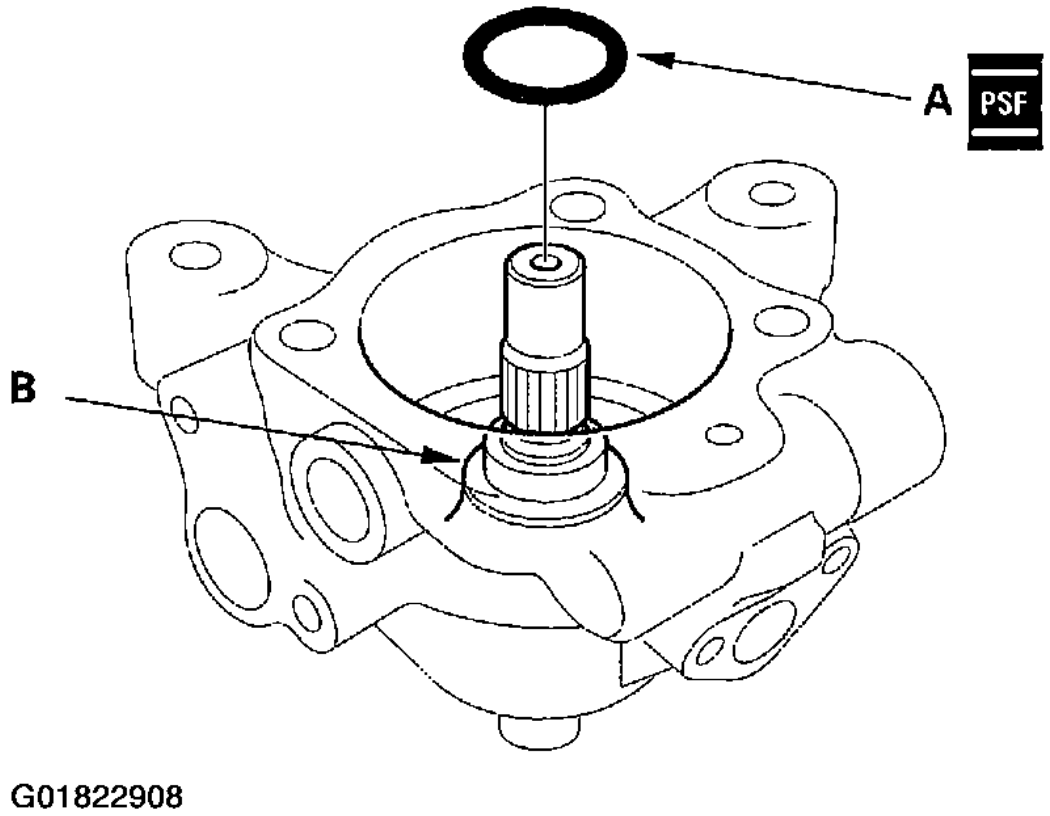

Fig. 26: Installing The NEW 23.8 mm O-Ring

24. Coat the NEW cover seals (A) and (B) with the power steering fluid, then position them into the grooves on the cover (C).

cardiagn.com

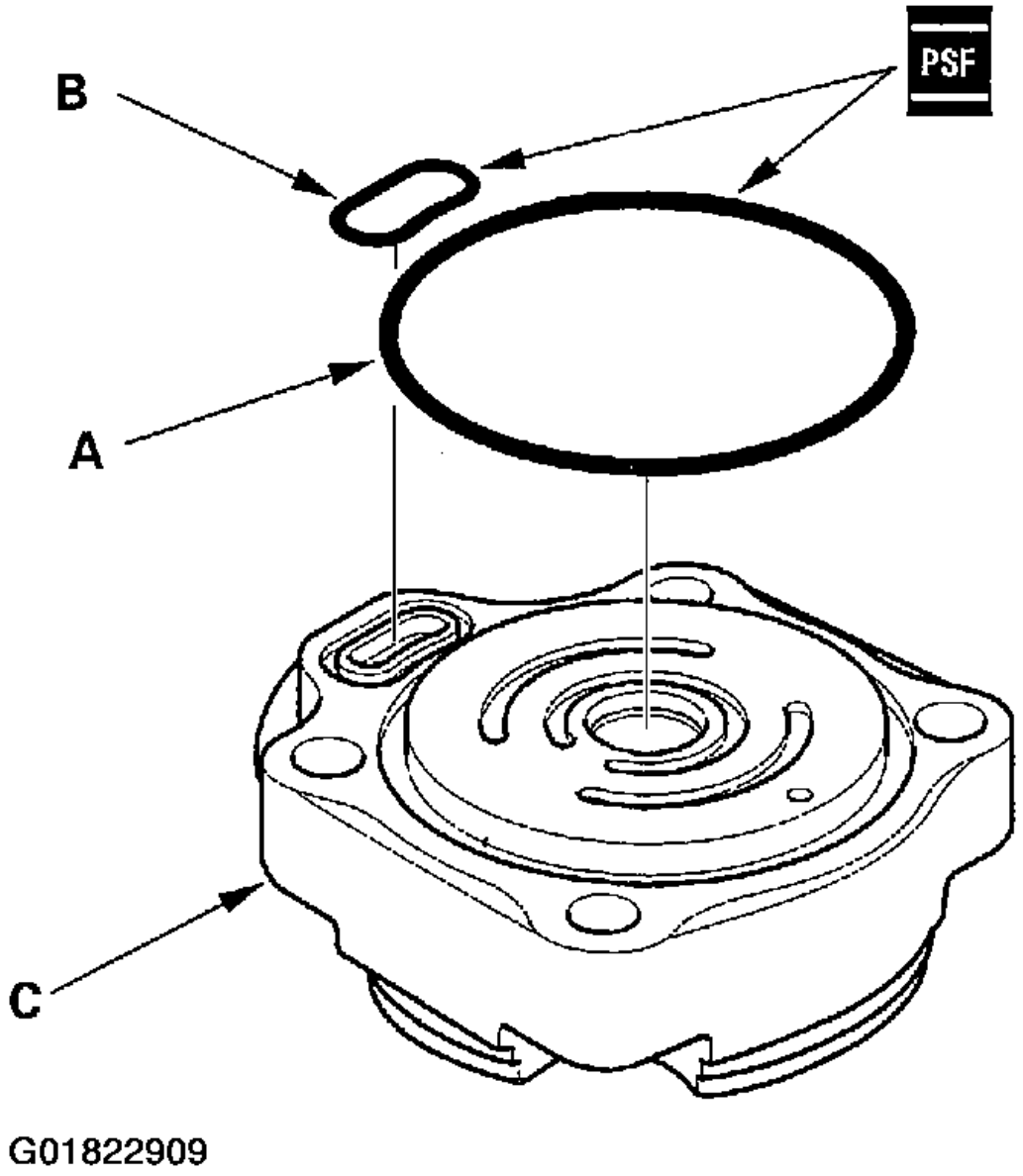

Fig. 27: Installing The NEW Cover Seals

25. Install the outer case (A) by aligning the slot (B) inside the outer case with the cover roll pin hole (C). Be sure that the slit (D) on the outer case is to direction shown.

cardiagn.com

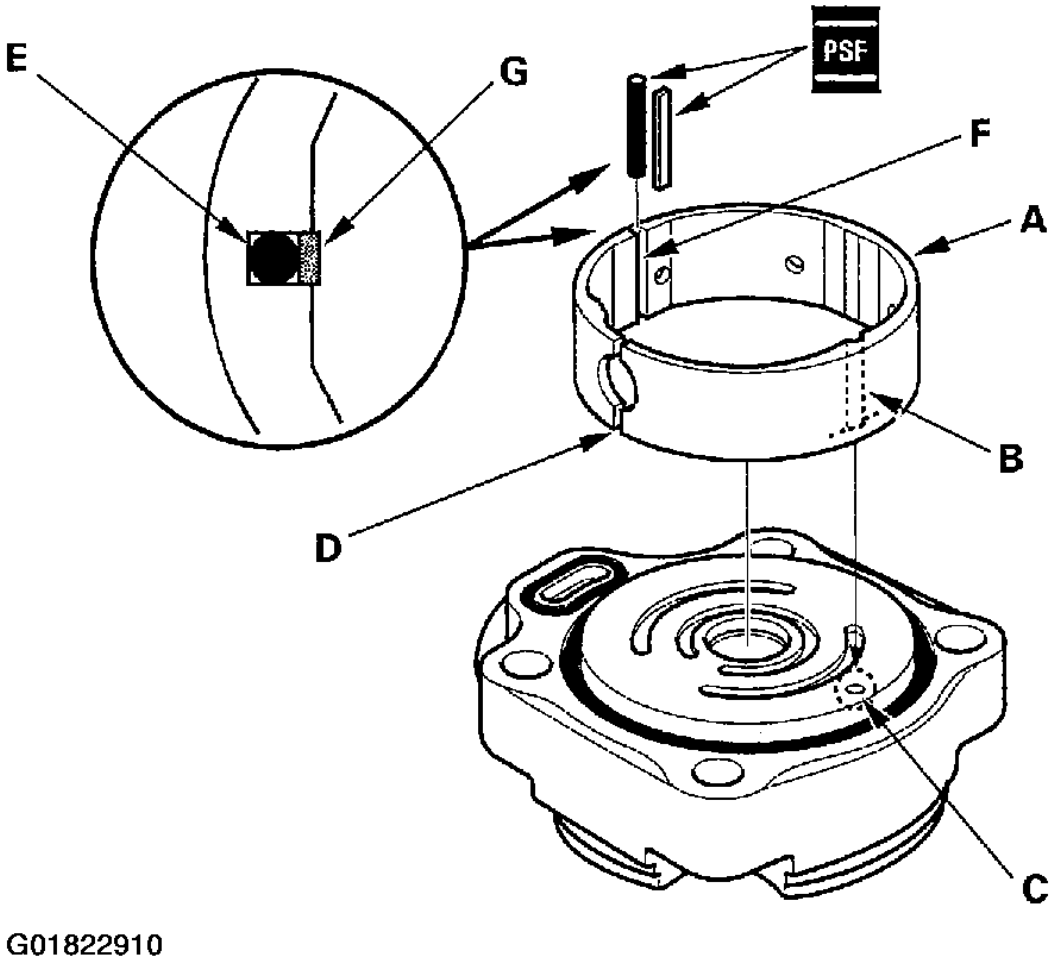

Fig. 28: Installing The Outer Case

26. Apply the power steering fluid to the rubber seal (E) (black), and install it in the slot (F) of the outer case.
27. Apply power steering fluid to the slipper seal (G) (white), and install it on top of the rubber seal you just installed.
28. Install the cam ring (A) with the "." mark (B) facing up. Align the slot (C) with the slot (D) in the outer case.

cardiagn.com

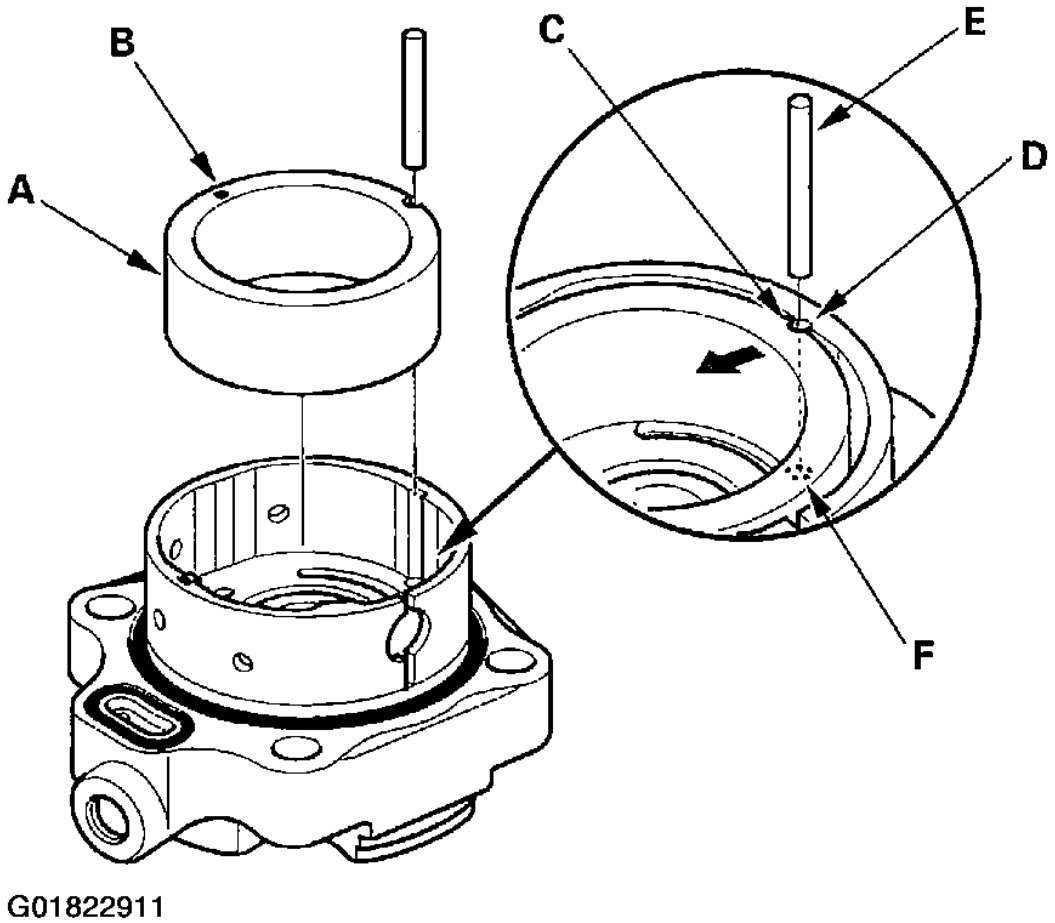

Fig. 29: Installing Components

29. Insert the roll pin (E) into the slots between the cam ring and outer case, then push the roll pin into the set hole (F).
30. Install the rotor (A) in the cam ring (B).

cardiagn.com

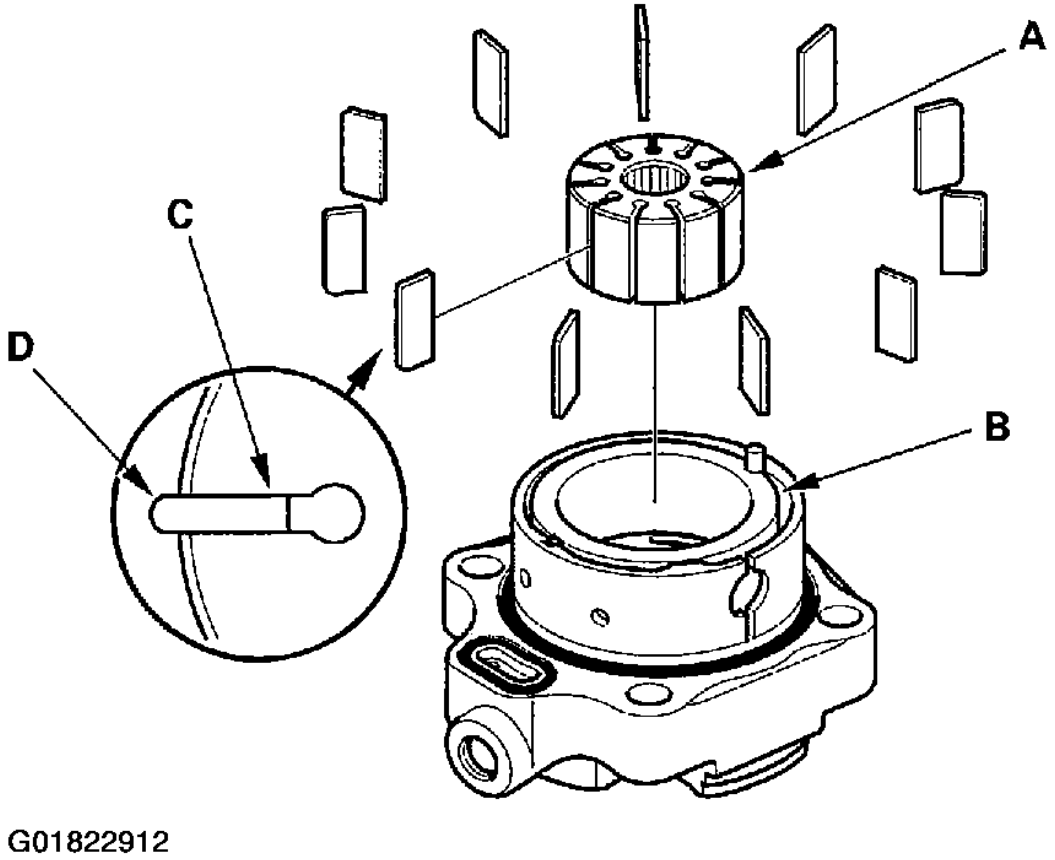

Fig. 30: Installing The Rotor In The Cam Ring & Vanes In The Grooves In The Rotor

31. Set the 11 vanes (C) in the grooves in the rotor. Make sure that the round ends (D) of the vanes are in contact with the sliding surface of the cam ring.
32. Place the side plate (A) on the cam ring, and aligning the roll pin set hole (B) in the side plate with the roll pin end (C).

cardiagn.com

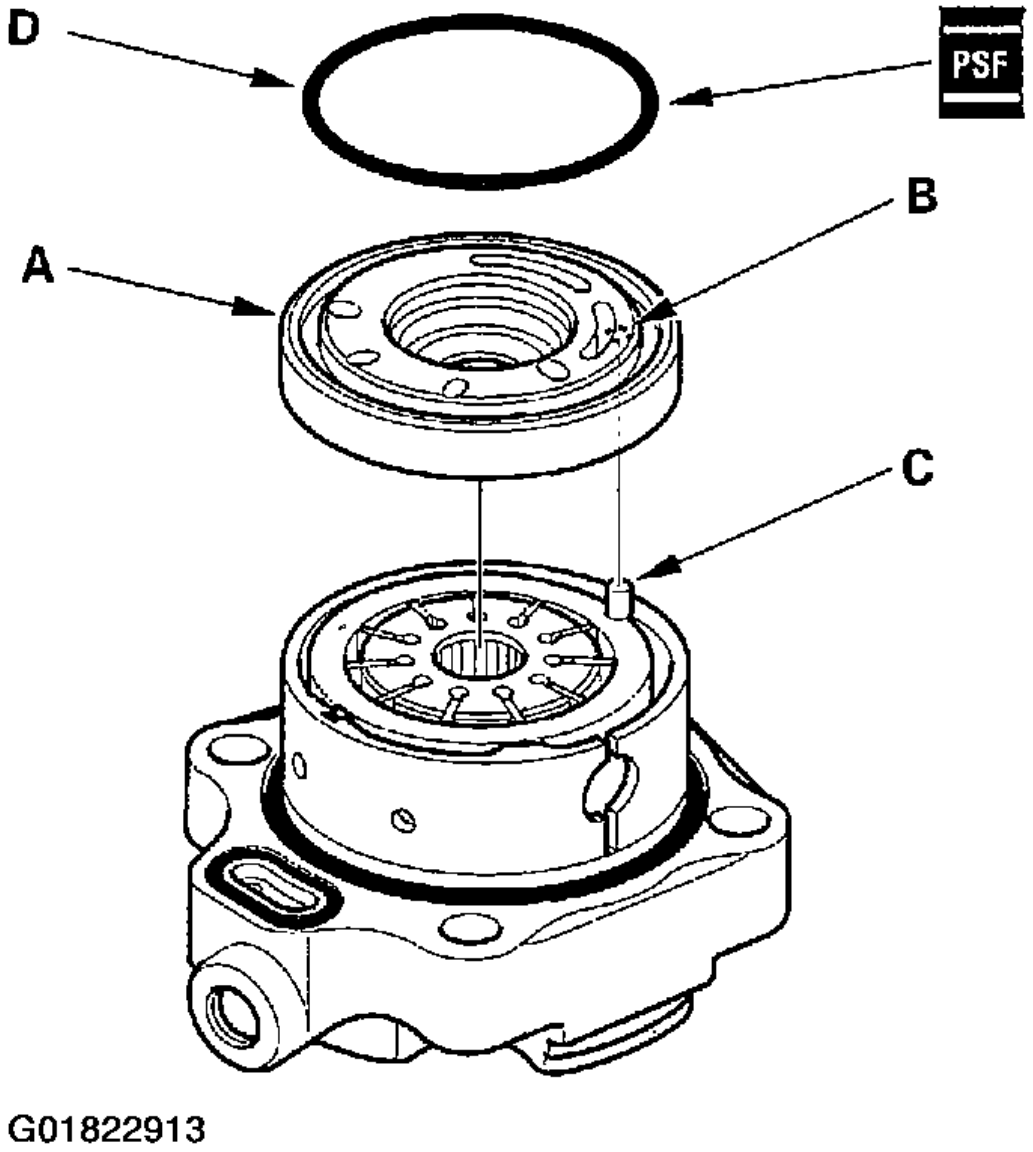

Fig. 31: Placing The Side Plate On The Cam Ring

33. Coat the NEW O-ring (D) with the power steering fluid, then position it into the groove on the side plate.
34. Install the pump housing (A) over the cover assembly (B).

cardiagn.com

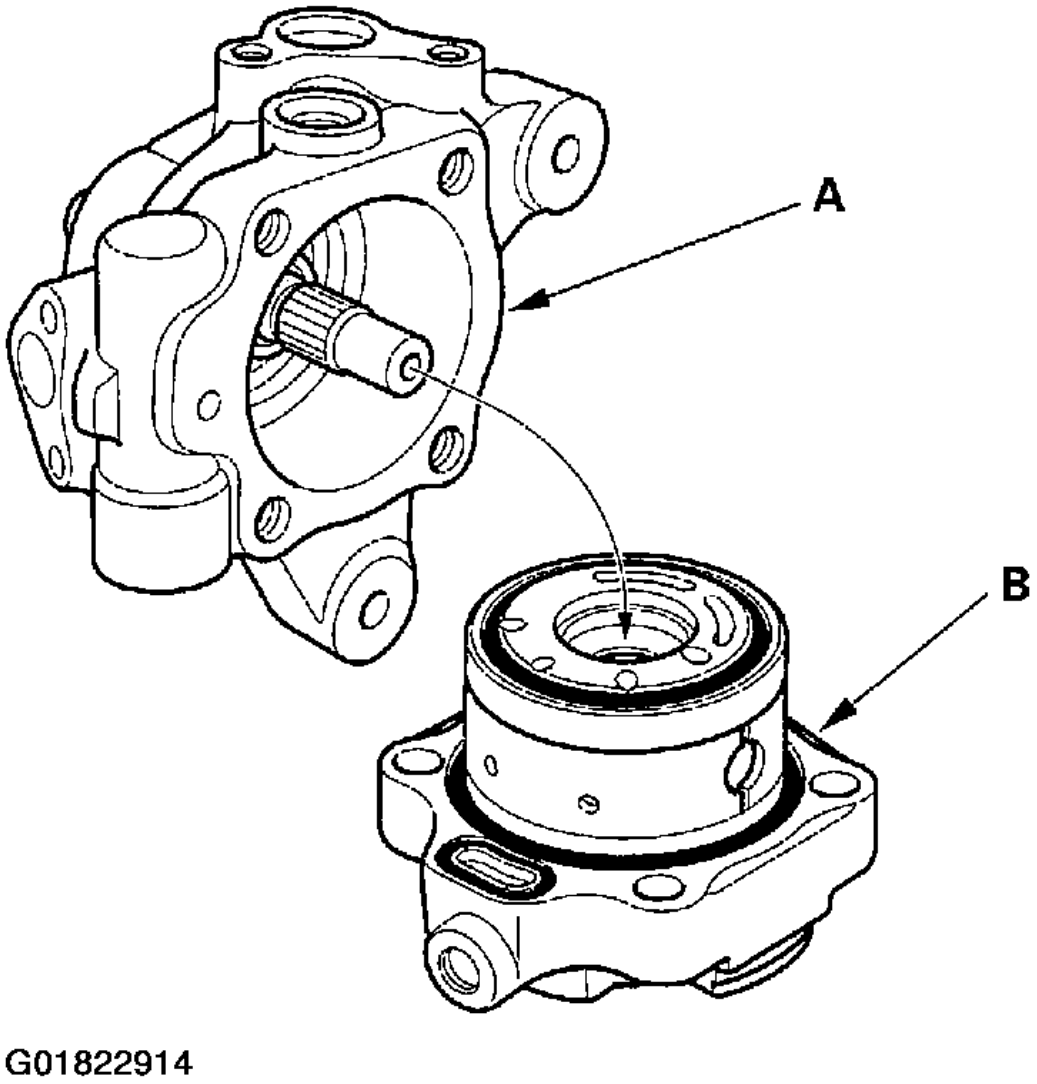

Fig. 32: Installing The Pump Housing Over The Cover Assembly

35. Align the bolt holes in the cover (A) with the threaded holes in the pump housing. Install the flange bolts loosely first, then torque the flange bolts in a crisscross pattern in two or more steps.

cardiagn.com

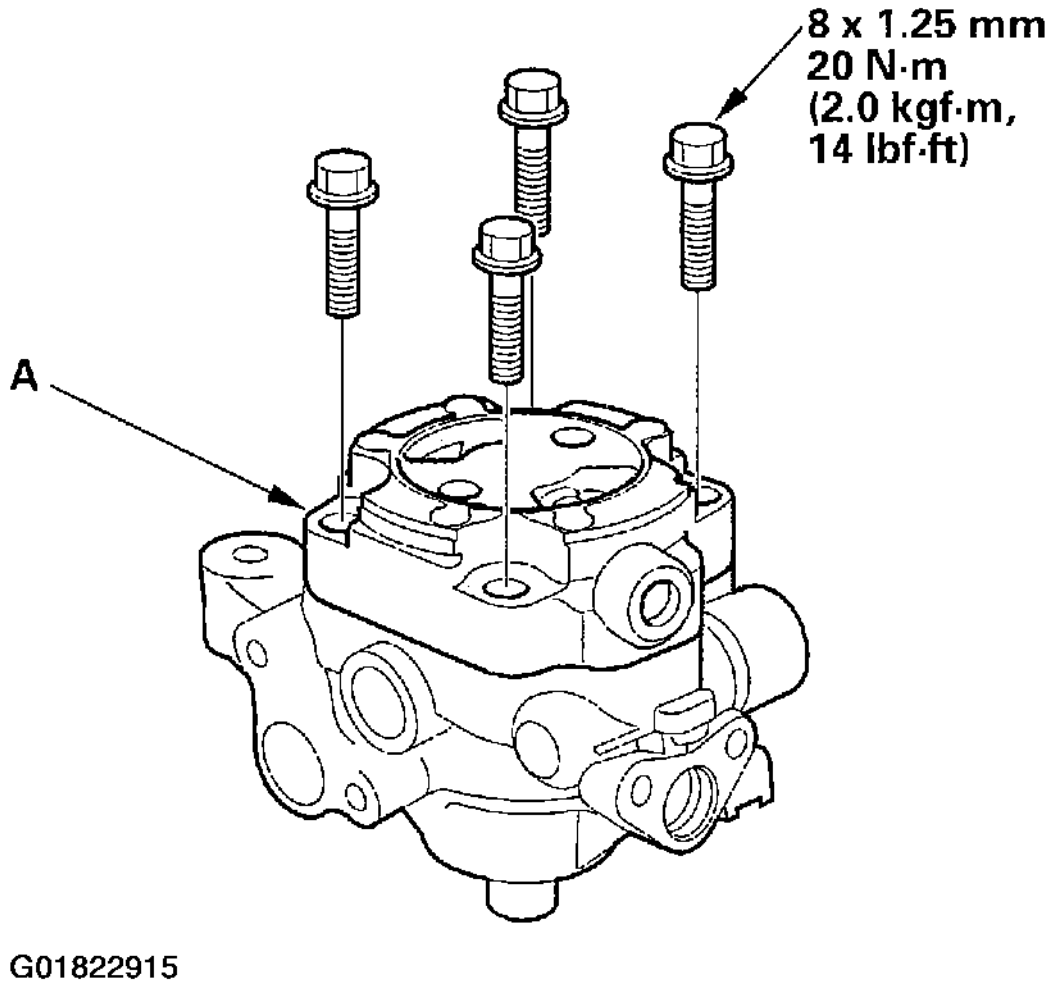

Fig. 33: Aligning The Bolt Holes In The Cover With The Threaded Holes In The Pump Housing

36. Push in the cam ring (A) from the pump housing cap hole (B) with a flat blade screwdriver, to make sure the cam ring is fully seated against the outer case.

cardiagn.com

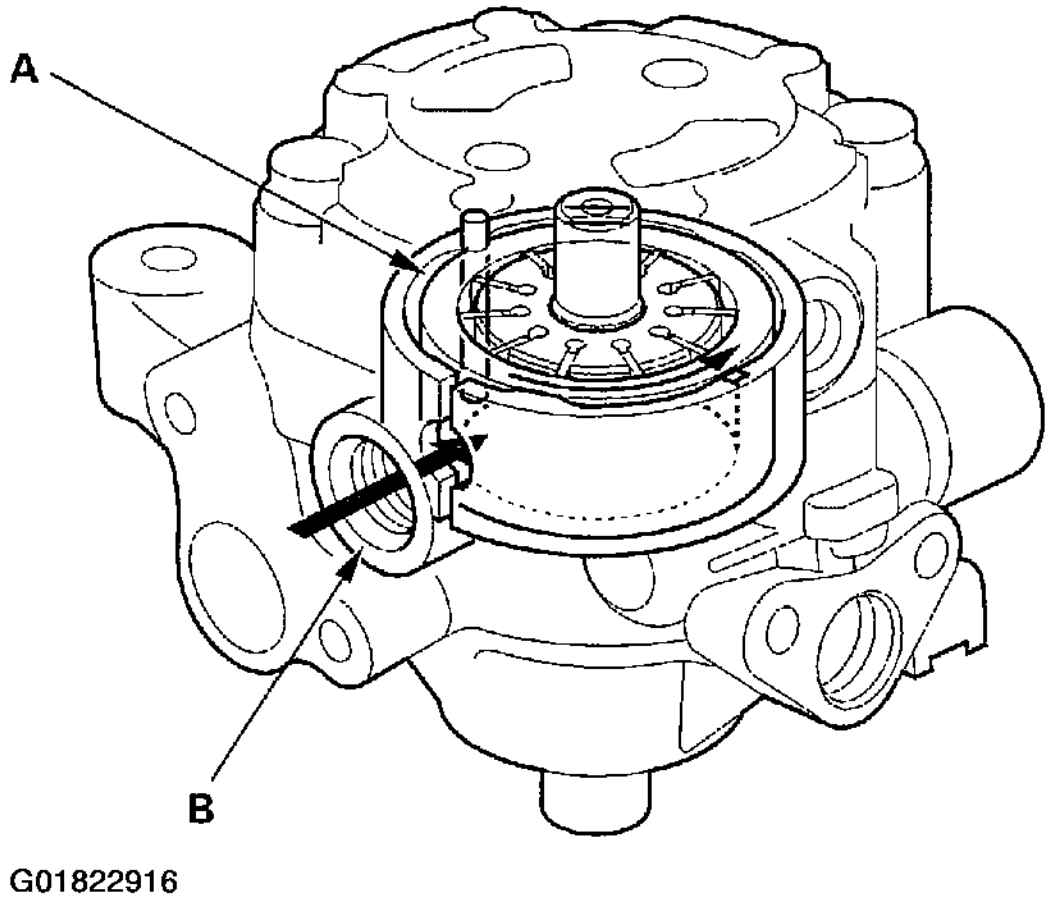

Fig. 34: Pushing In The Cam Ring From The Pump Housing Cap Hole

37. Install the pump preload spring (A) in the pump housing.

cardiagn.com

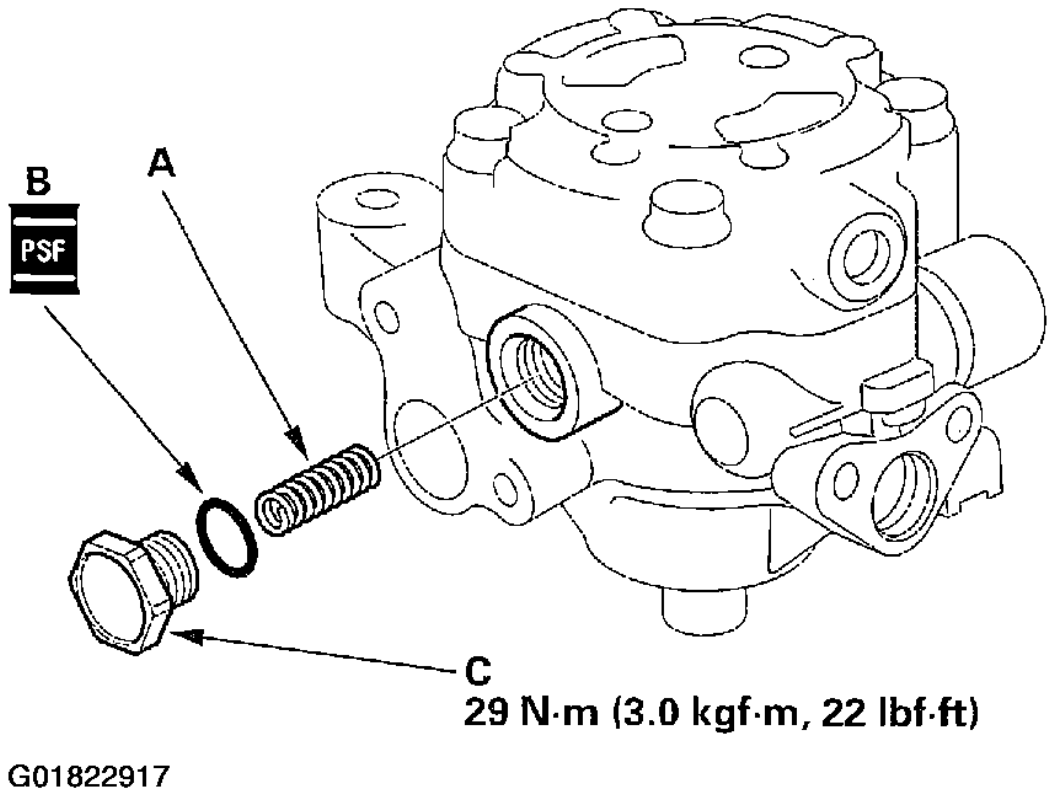

Fig. 35: Installing The Pump Preload Spring In The Pump Housing

38. Coat the NEW 12.7 mm O-ring (B) with power steering fluid, and install it on the pump housing cap (C).
39. Install the pump housing cap on the pump housing, and tighten it to specified torque.
40. Install the pressure control valve spring (A) in the pump housing.

cardiagn.com

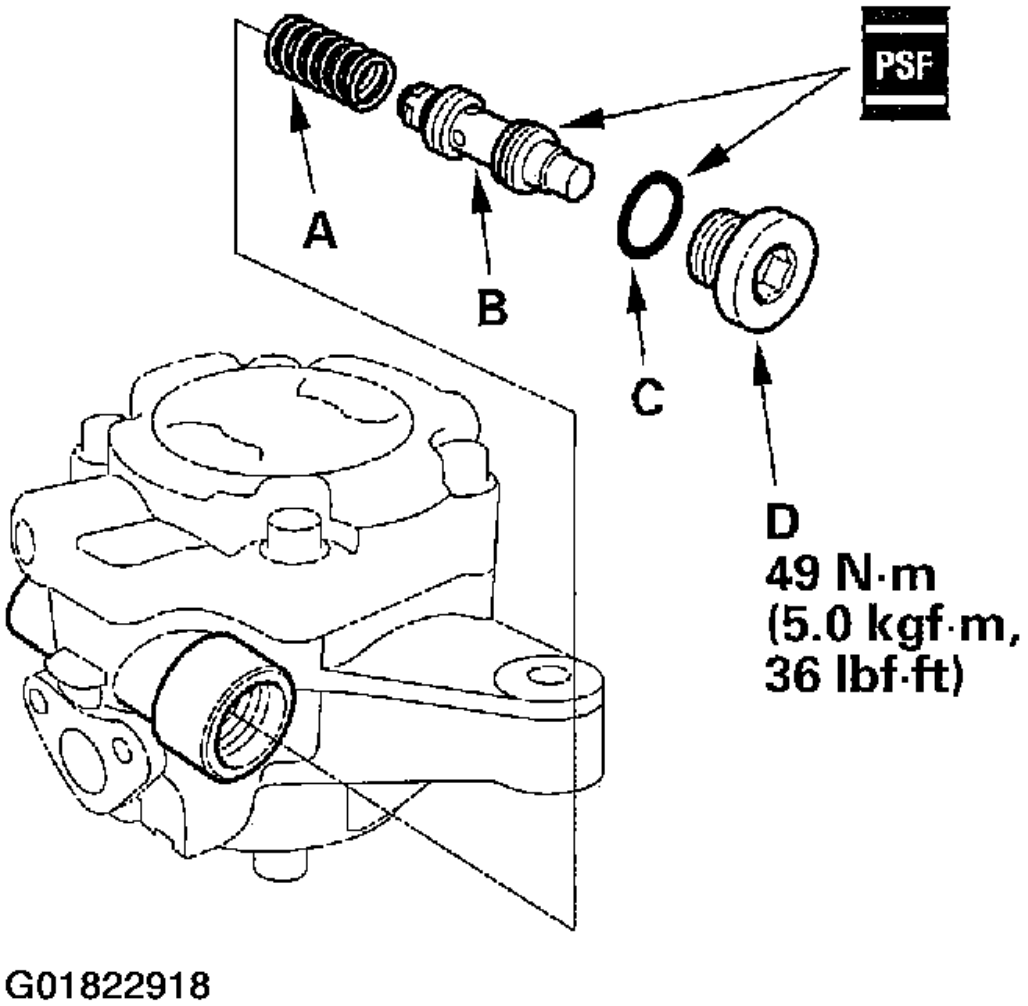

Fig. 36: Installing The Pressure Control Valve Spring In The Pump Housing

41. Coat the pressure control valve (B) with power steering fluid, and install it on the pump housing.
42. Coat the NEW 16.7 mm O-ring (C) with power steering fluid, and install it on the pressure control valve cap (D).
43. Install the pressure control valve cap on the pump housing, and tighten it to the specified torque.
44. Coat the NEW O-ring (A) with power steering fluid, and install it on the inlet joint (B).

cardiagn.com

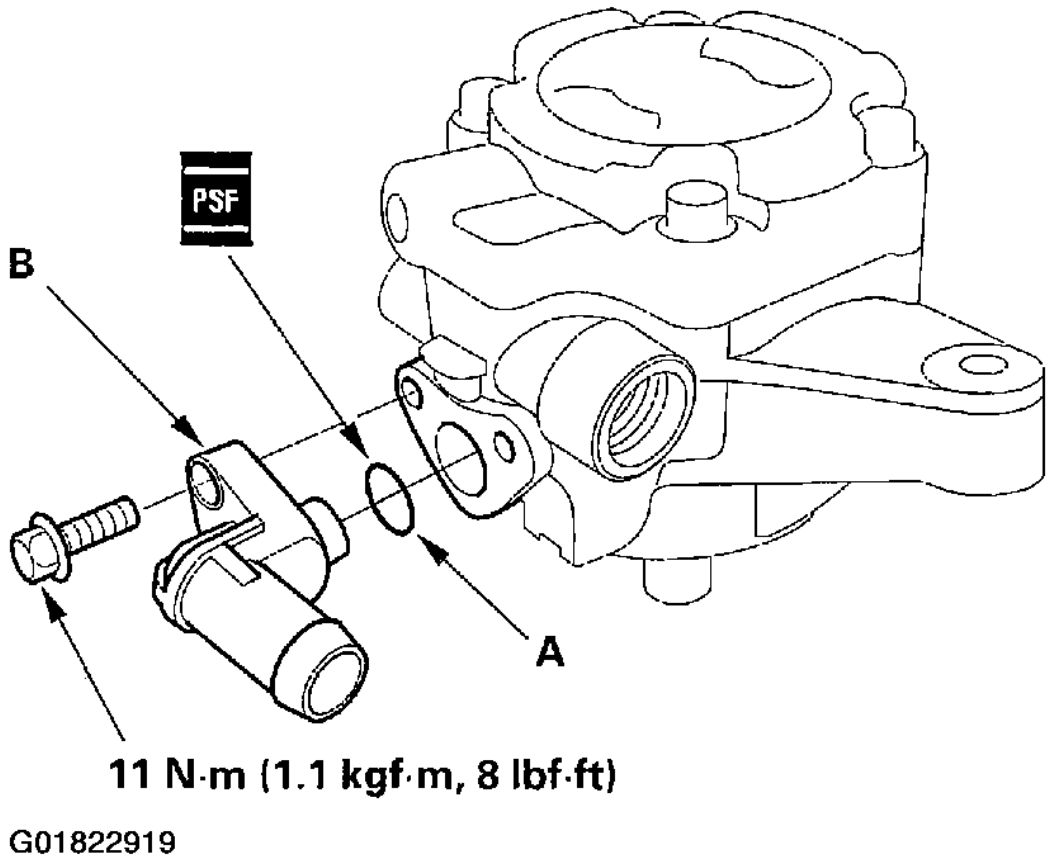

Fig. 37: Installing The Inlet Joint On The Pump Housing

45. Install the inlet joint on the pump housing.
46. Install the pulley (A), then loosely install the pulley nut (B). Hold the steering pump in a vise with soft jaws (C). Be careful not to damage the pump housing with the jaws of the vise.

cardiagn.com

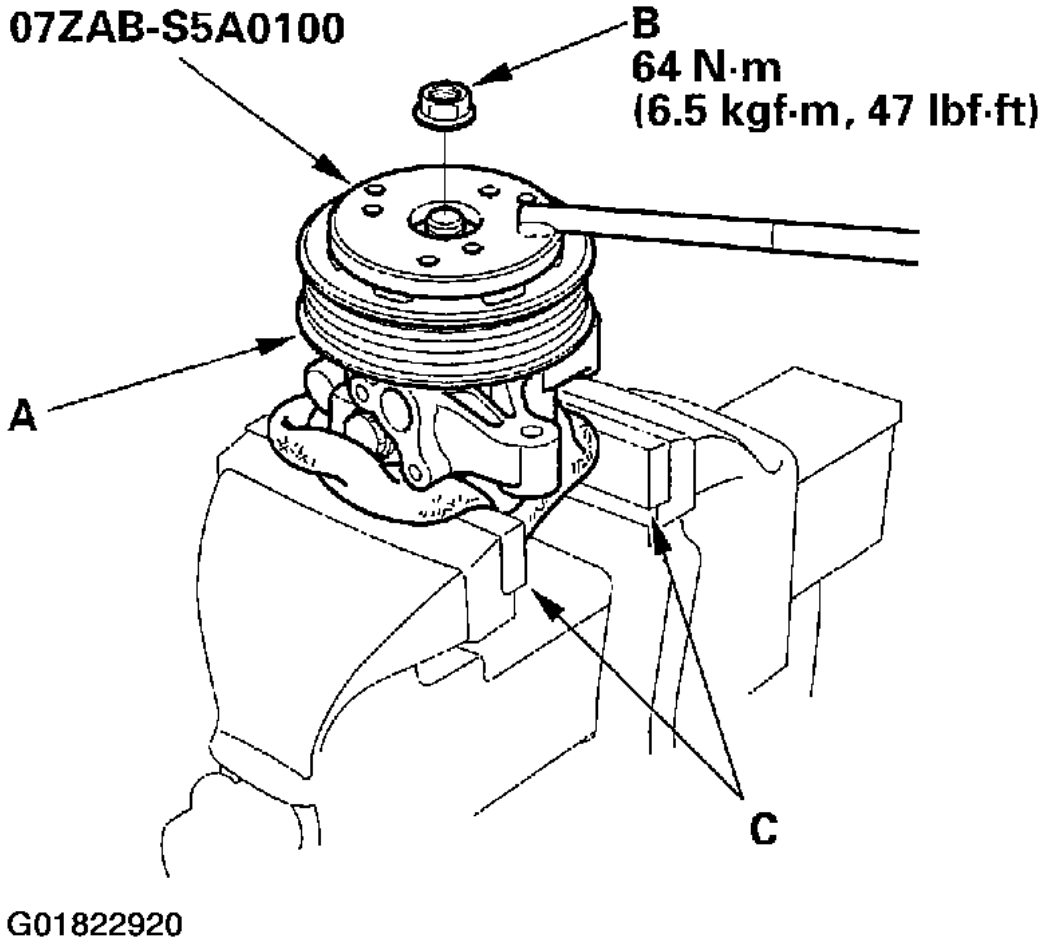

Fig. 38: Installing The Pulley

47. Hold the pulley with the special tool, and tighten the pulley nut to specified torque.
48. Check that the pump turns smoothly by turning the pulley. If it turns hard, loosen the four flange bolts on the cover, then retightening them in the same manner as in the step 35 . Turning the pump again by hand.

STEERING WHEEL REMOVAL

SRS components are located in this area. Review the SRS component locations and precautions and procedures in the SRS section before performing repairs or service. See **AIR BAG RESTRAINT SYSTEMS** .

1. Make sure you have the anti-theft codes for the radio and the navigation system, then write down the customer's radio station presets.
2. Align the front wheels straight ahead, then remove the driver's airbag from the steering wheel (see **AIR BAG RESTRAINT SYSTEMS**).

cardiagn.com

3. Disconnect the cruise control set/resume switch, audio remote switch and navigation guide switch connectors (if equipped).
4. Loosen the steering wheel bolt (A).

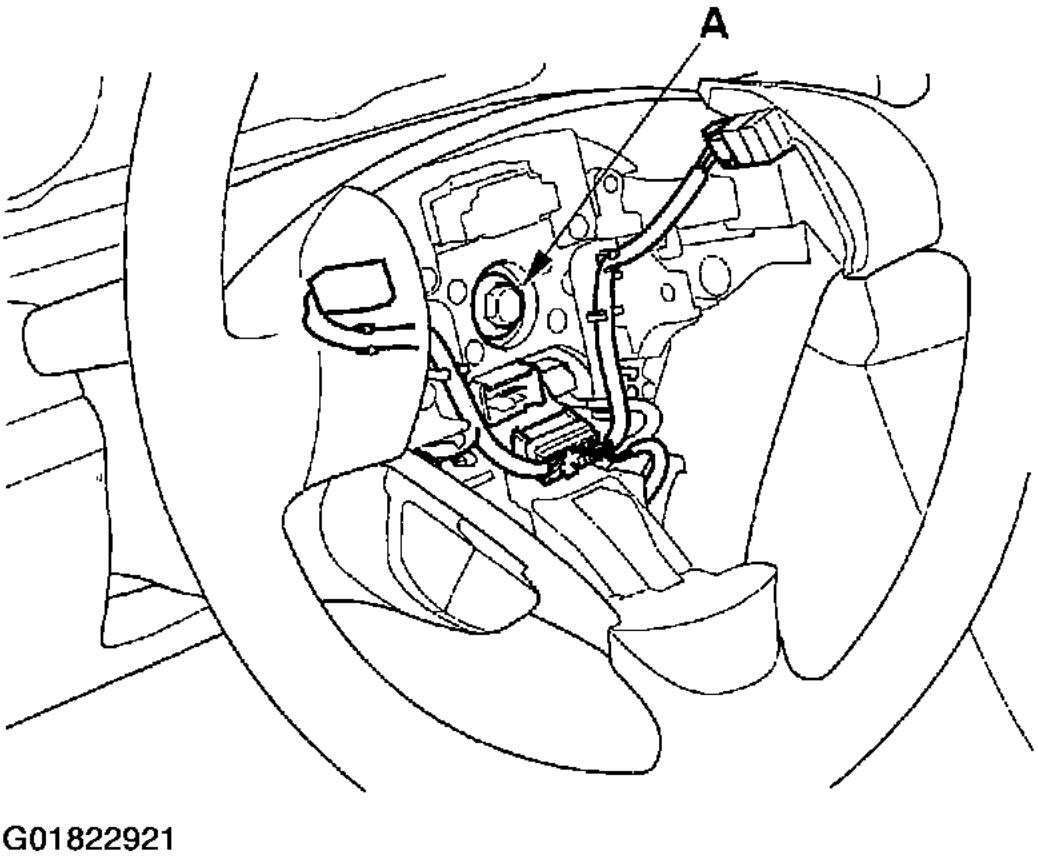

Fig. 39: Loosening The Steering Wheel Bolt

5. Install a commercially available steering wheel puller (A) on the steering wheel (B). Free the steering wheel from the steering column shaft by turning the pressure bolt (C) of the puller. Note these items when removing the steering wheel:
   - Do not tap on the steering wheel or the steering column shaft when removing the steering wheel.
   - If you thread the puller bolts (D) into the wheel hub more than five threads, the bolts will hit the cable reel and damage it. To prevent this, install a pair of jam nuts five threads up on each puller bolt.

cardiagn.com

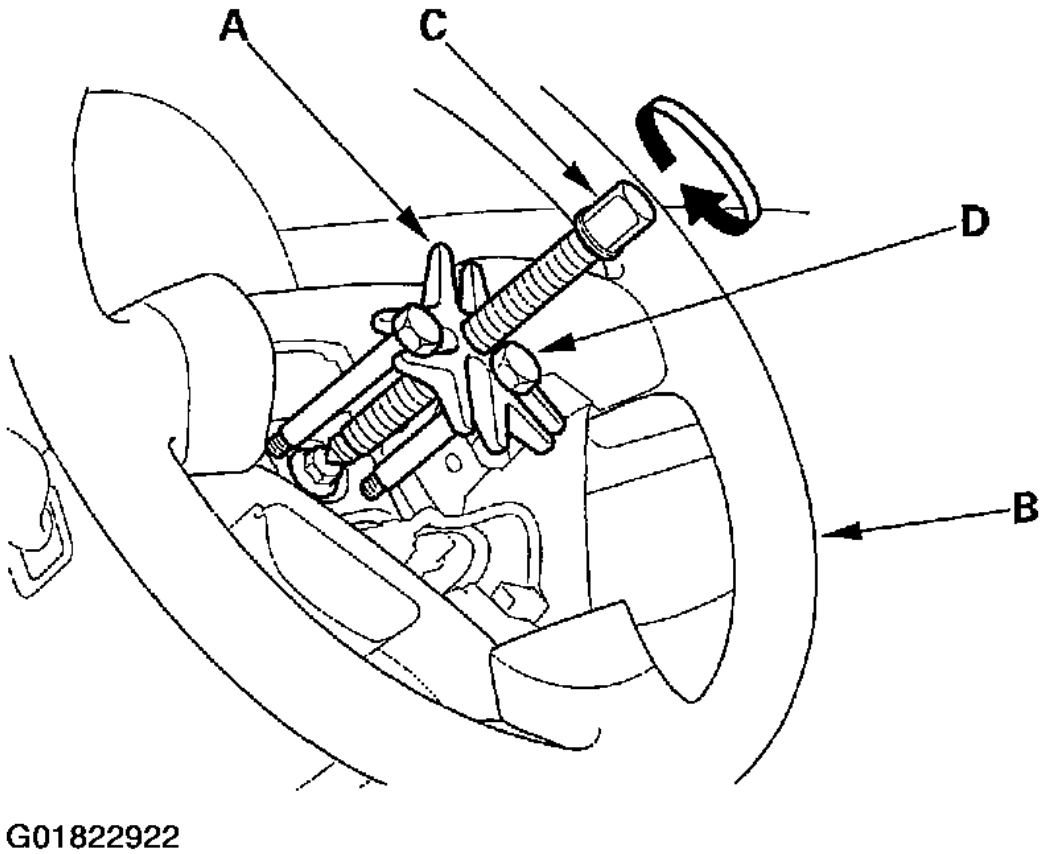

Fig. 40: Freeing The Steering Wheel From The Steering Column Shaft

6. Remove the steering wheel puller, then remove the steering wheel bolt and steering wheel from the steering column.

cardiagn.com

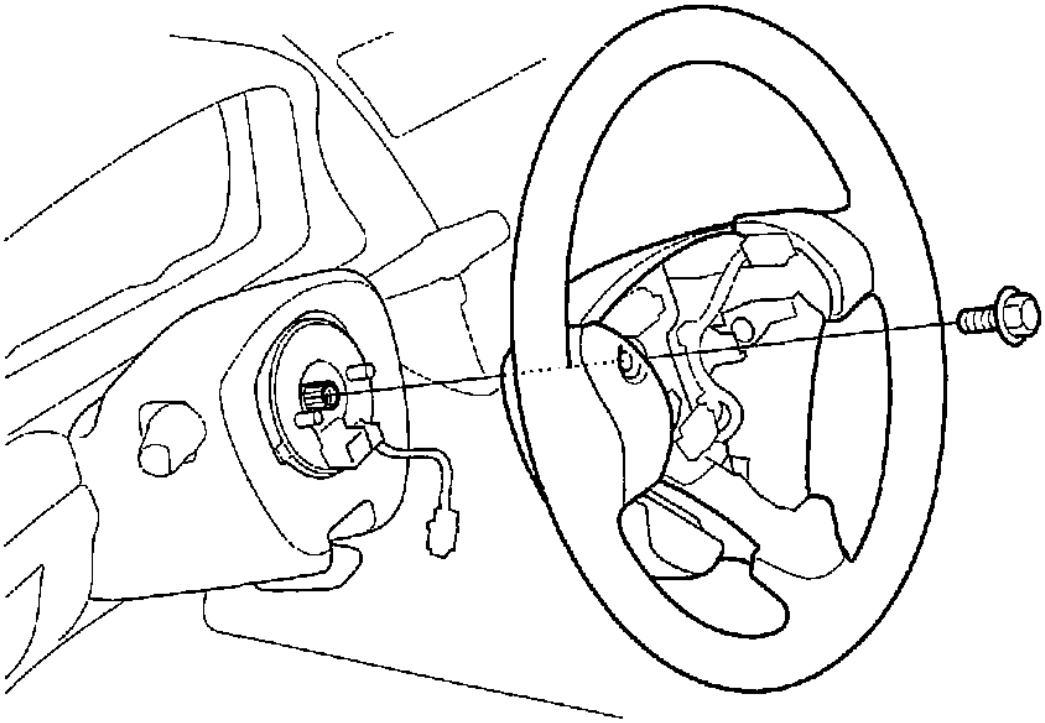

Fig. 41: Removing The Steering Wheel Bolt & Steering Wheel From The Steering Column

STEERING WHEEL DISASSEMBLY/REASSEMBLY

cardiagn.com

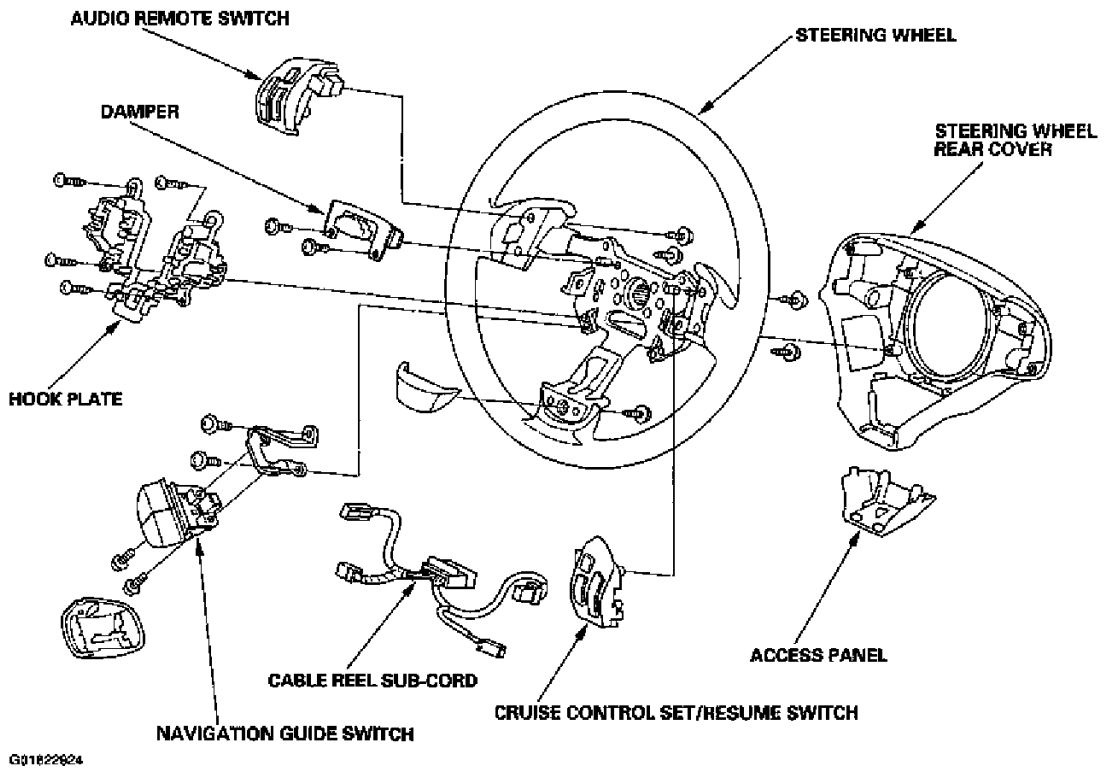

Fig. 42: Exploded View Of Steering Wheel Components

STEERING WHEEL INSTALLATION

1. Before installing the steering wheel, make sure the front wheels are aligned straight ahead, then center the cable reel (A). Do this by first rotating the cable reel clockwise until it stops. Then rotate it counterclockwise about three full turns. The arrow mark (B) on the cable reel label point should point straight up.

cardiagn.com

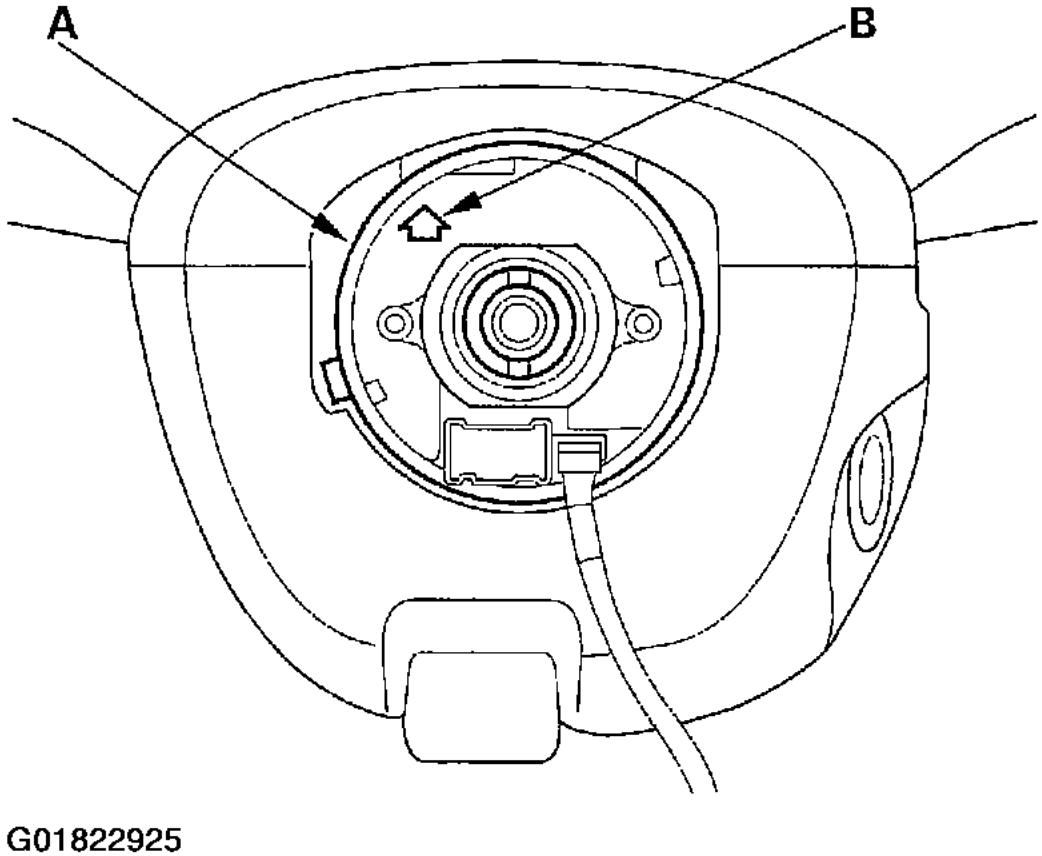

Fig. 43: Centering The Cable Reel

2. Position the two tabs (A) of the turn signal cancelling sleeve (B) as shown. Install the steering wheel on to the steering column shaft, making sure the steering wheel hub (C) engages the pins (D) of the cable reel and tabs of the cancelling sleeve. Do not tap on the steering wheel or steering column shaft when installing the steering wheel.

cardiagn.com

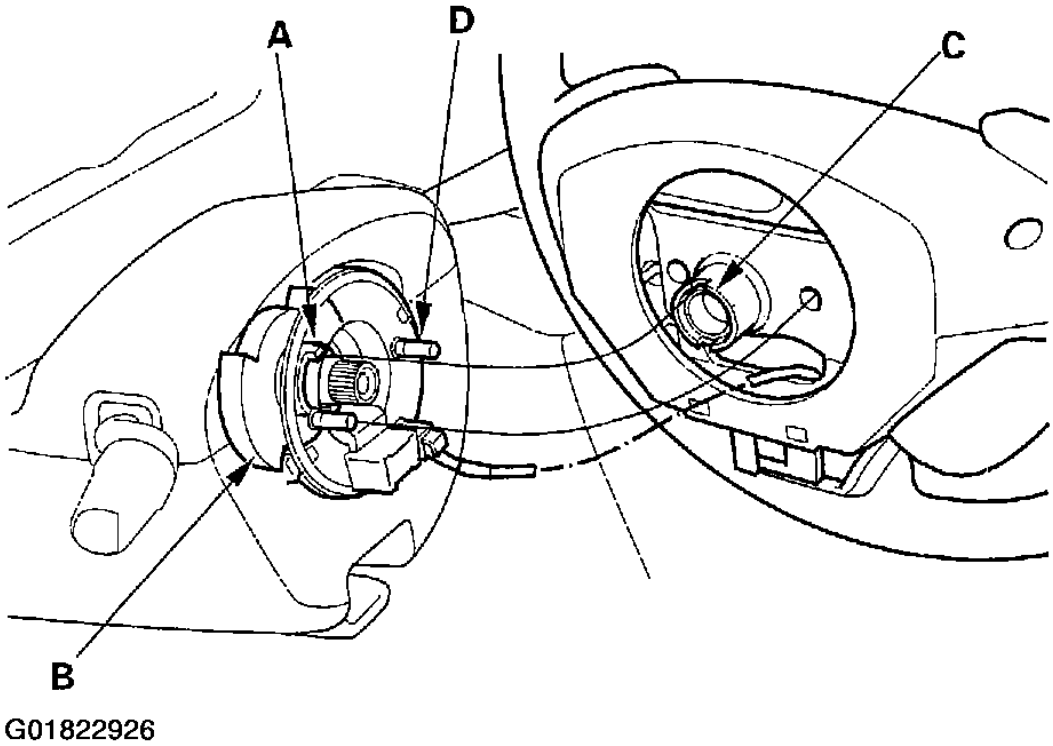

Fig. 44: Positioning The Two Tabs Of The Turn Signal Cancelling Sleeve

3. Install the steering wheel bolt (A) and tighten it to the specified torque. Connect the audio remote, navigation guide and cruise control set/resume switch connectors (if equipped). Make sure the wire harness is routed and fastened properly.

cardiagn.com

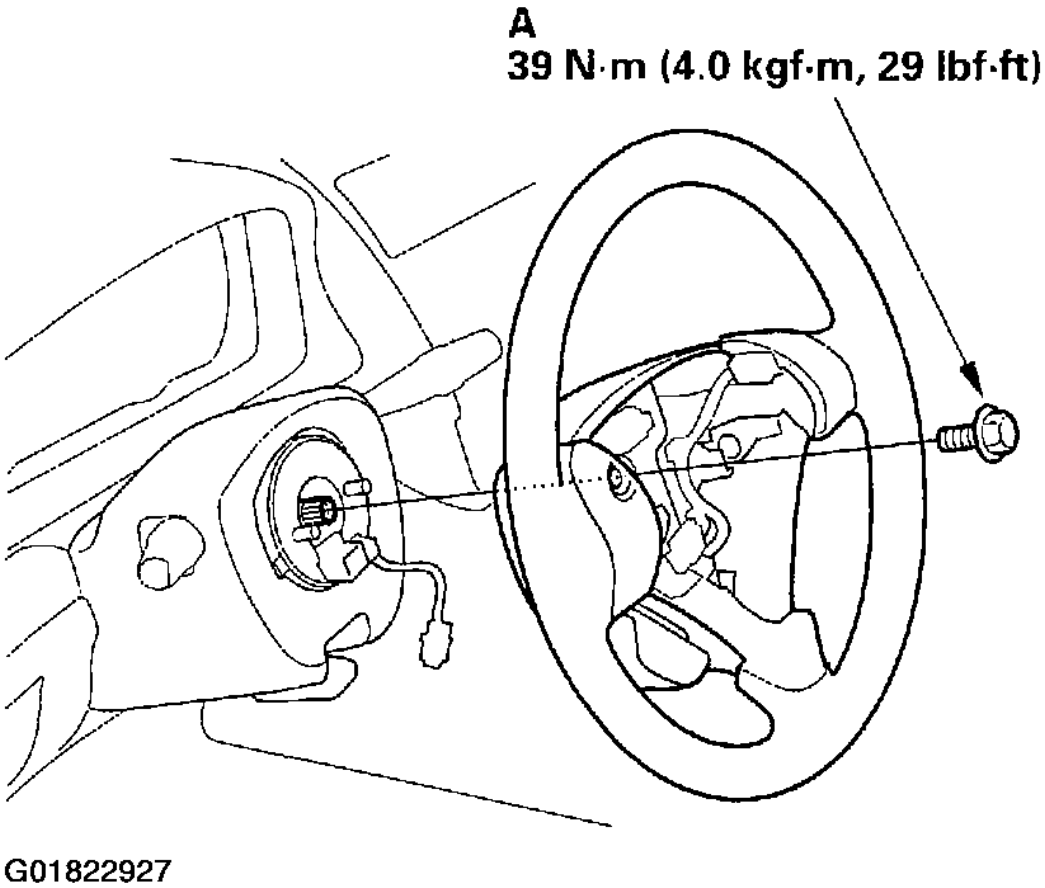

Fig. 45: Installing The Steering Wheel Bolt

4. Install the driver's airbag, and confirm that the system is operating properly (see **AIR BAG RESTRAINT SYSTEMS**).
5. Enter the anti-theft codes for the radio and the navigation system, then enter the customer's radio station presets. Reset the clock.
6. Check the cruise control, audio remote, navigation guide and turn signal cancelling for proper operation.

STEERING COLUMN REMOVAL & INSTALLATION

SRS components are located in this area. Review the SRS component locations and precautions and procedures in the SRS section before performing repairs or service. See **AIR BAG RESTRAINT SYSTEMS** .

REMOVAL

1. Make sure you have the anti-theft codes for the radio and the navigation system, then write down the customer's radio station presets.

cardiagn.com

2. Disconnect the negative cable from the battery.
3. Remove the driver's airbag assembly and the steering wheel (see **STEERING WHEEL REMOVAL**).
4. Remove the column covers.
5. Remove the steering joint cover A.

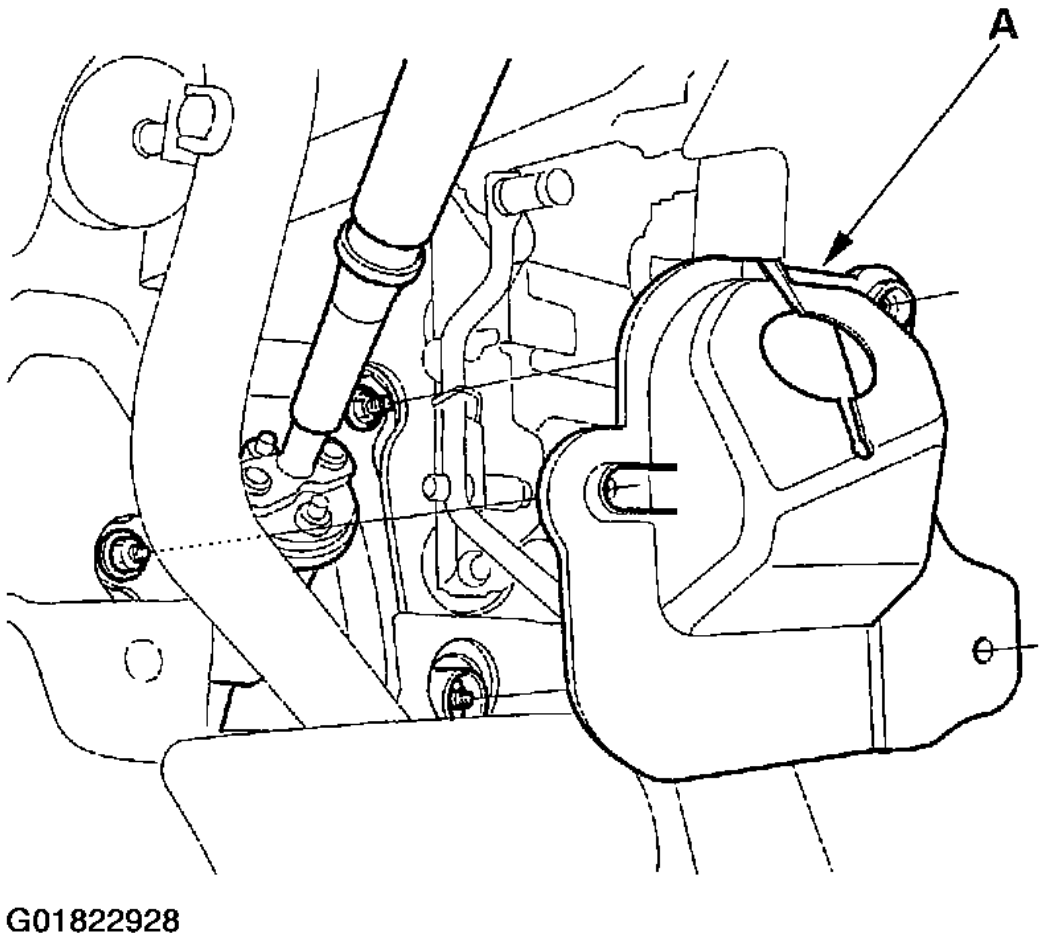

Fig. 46: Removing The Steering Joint Cover A

6. Release the tilt/telescopic lever, and adjust the steering column to full tilt up position, and to the full telescopic in position.
7. Tighten the tilt/telescopic lever.
8. Hold the slider shaft (A) on the column with a piece of wire (B) between the joint yoke (C) of the slider shaft and joint yoke (D) of the upper shaft to prevent the slider shaft from pulling out.

cardiagn.com

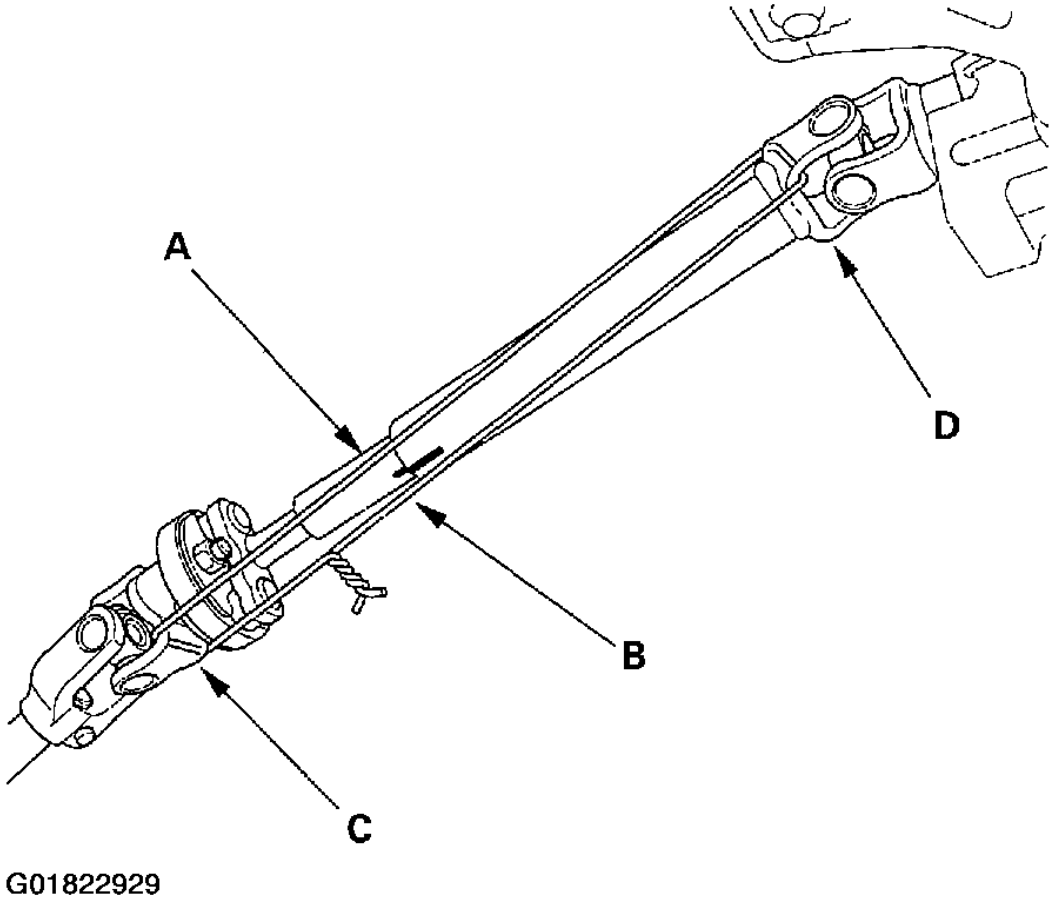

Fig. 47: Holding The Slider Shaft On The Column

9. Release the tilt/telescopic lever, and adjust the steering column to the full telescopic out position, then tighten the tilt/telescopic lever.
10. Disconnect the wire harness connectors from the combination switch assembly (A).

cardiagn.com

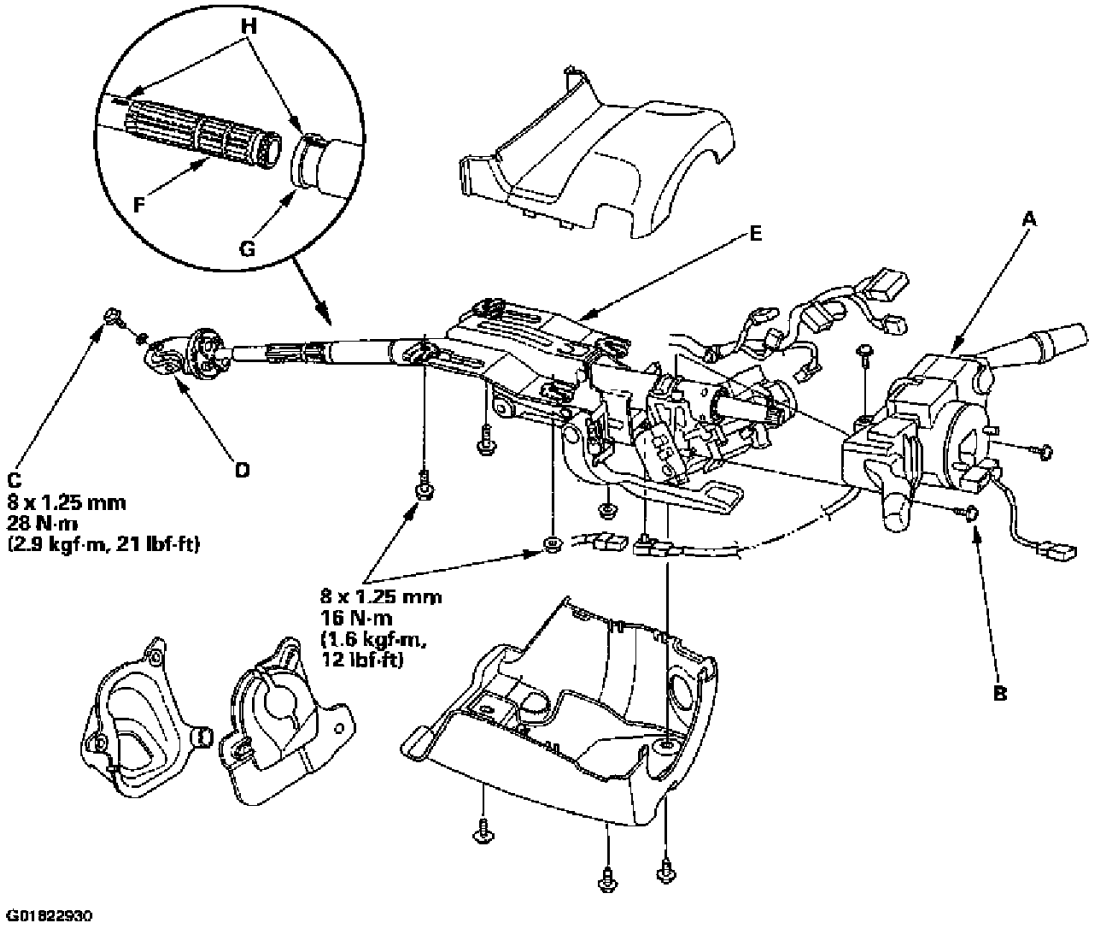

Fig. 48: Removing The Combination Switch Assembly & Steering Column

11. Remove the combination switch assembly from the steering column shaft by removing the screws (B).
12. Disconnect the connectors from the ignition switch, and release the wire harness clips from the steering column.
13. Remove the steering joint bolt (C), then disconnect the steering joint (D) from the pinion shaft.
14. Remove the steering column (E) by removing the attaching nuts and bolts. If the lower slide shaft (F) is removed, slip it into the upper shaft (G) by aligning the paint marks (H).

INSTALLATION

1. Install the steering column in the reverse order of removal, and note these items:
   - Make sure the wires are not caught or pinched by any parts.
   - Take care not to let the sliding capsules fall out of position during column installation.
2. Steering joint connection; center the steering rack within its stroke.
3. Install the steering joint (A) aligning the slit (B) of the steering joint with the tab (C) of the center guide. Position the angle of center guide as shown if necessary.

cardiagn.com

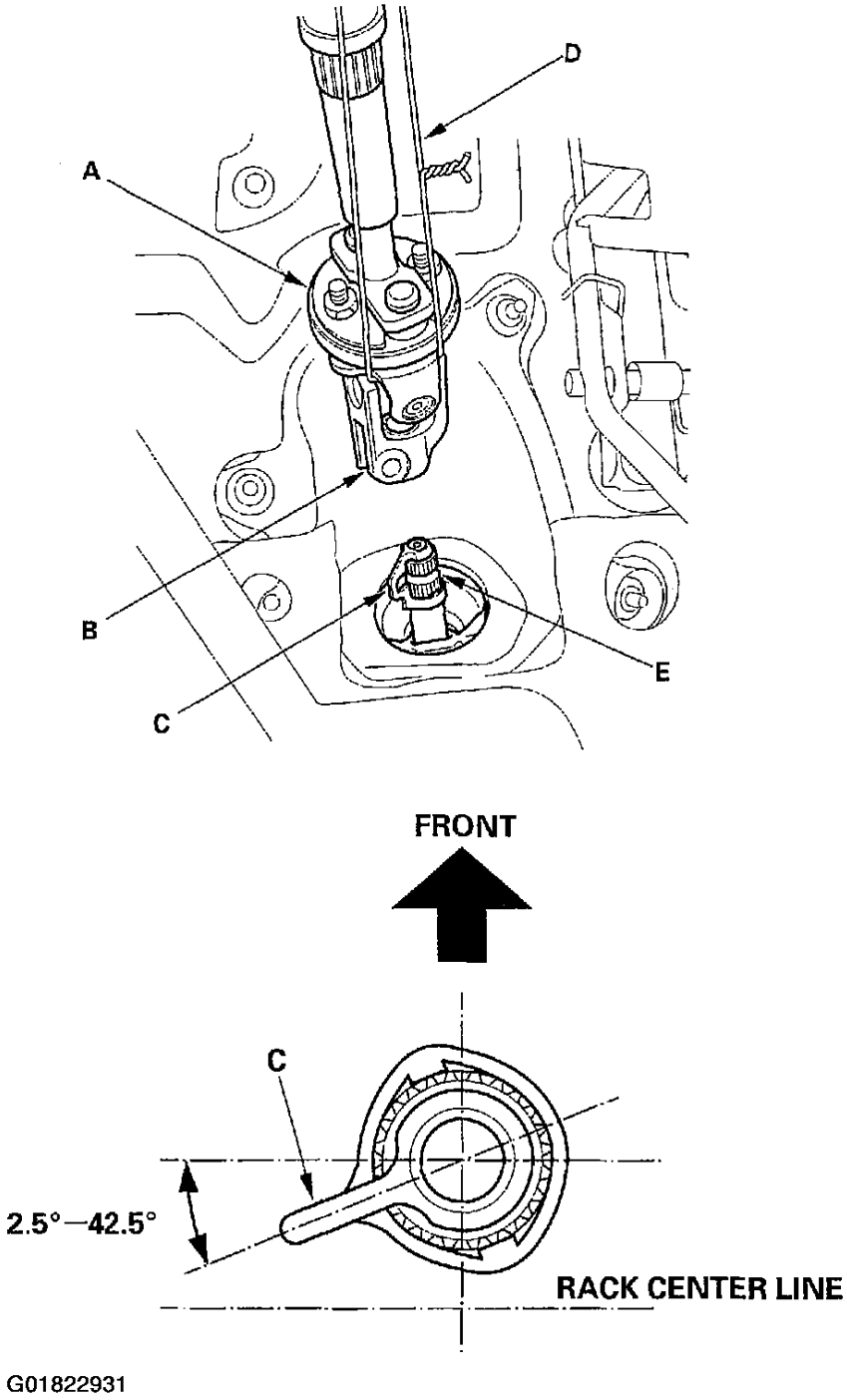

Fig. 49: Installing The Steering Joint Aligning The Slit Of The Steering Joint With The Tab Of The Center Guide

4. With the rack in the straight ahead driving position, cut the wire (D) and slip the lower end of the steering joint on to the pinion shaft (E).

cardiagn.com

5. Align the bolt hole (A) on the steering joint with the groove (B) around the pinion shaft, and loosely install the joint bolt (C). Be sure that the joint bolt is securely in the groove in the pinion shaft. Pull on the steering joint to make sure that the steering joint is fully seated. Tighten the steering joint bolt to specified torque.

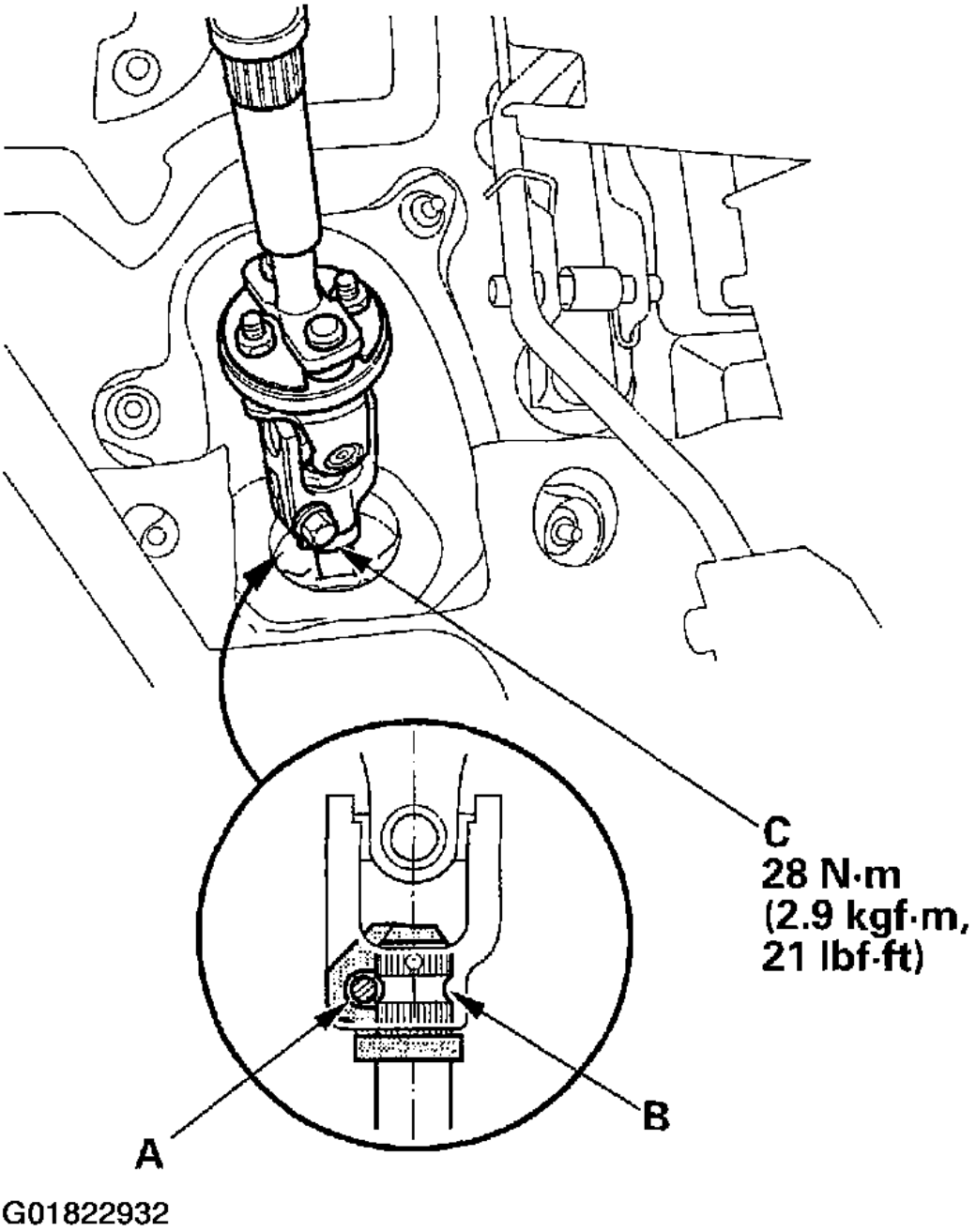

cardiagn.com

Fig. 50: Slipping The Lower End Of The Steering Joint On To The Pinion Shaft

6. Finish the installation, and note these items:
   - Make sure the connectors are properly connected.
   - Reinstall the steering wheel (see **STEERING WHEEL INSTALLATION**).
   - Reconnect the battery.
   - Enter the anti-theft codes for the radio and the navigation system, then the customer's radio station presets.
   - Set the clock.
   - Verify cruise control, audio remote, navigation guide and turn signal switch operation.
   - Make sure the steering wheel is centered.

STEERING COLUMN/TILT/TELESCOPIC INSPECTION

1. Check the steering column ball bearing (A) and the steering joint bearings (B) for play and proper movement. If any bearing is noisy or has excessive play, replace the steering column as an assembly.
2. Check the lower side shaft (C) for smooth movement in and out. If the lower slide shaft is removed, slip it into the upper shaft by aligning the paint marks (D). If it sticks or binds, replace the steering column as an assembly.
3. Check the sliding capsules (E) for distortion or breakage. If there is distortion or breakage, replace the steering column as an assembly.
4. Check the tilt mechanism and telescopic mechanism for movement and damage.

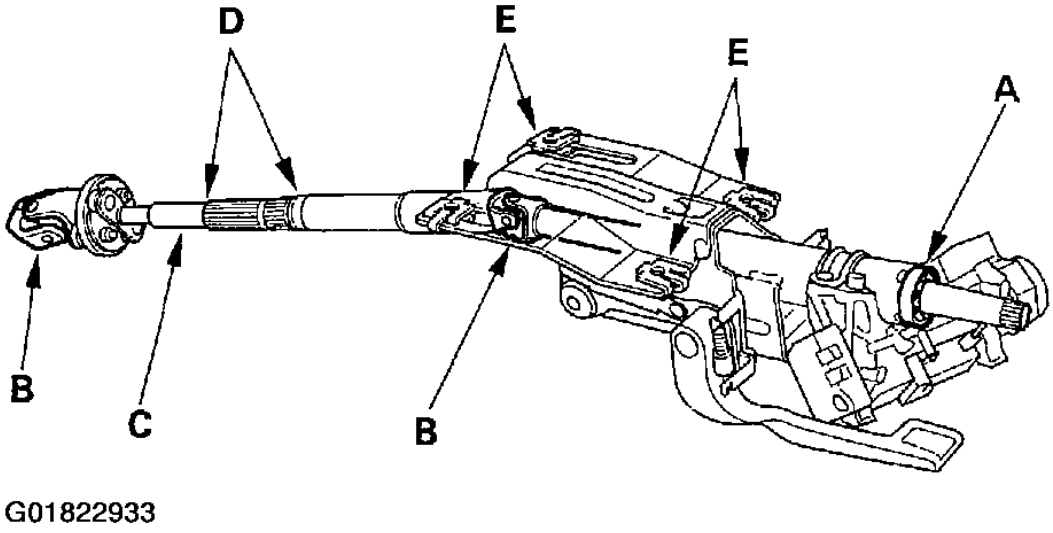

Fig. 51: Inspecting Steering Column/Tilt/Telescopic Components

cardiagn.com

STEERING LOCK REPLACEMENT

1. Remove the steering column (see **STEERING COLUMN REMOVAL AND INSTALLATION**).
2. Center-punch each of the two shear bolts, and drill their heads off with a 5 mm (3/16 in.) drill bit. Be careful not to damage the switch body when removing the shear bolts.

cardiagn.com

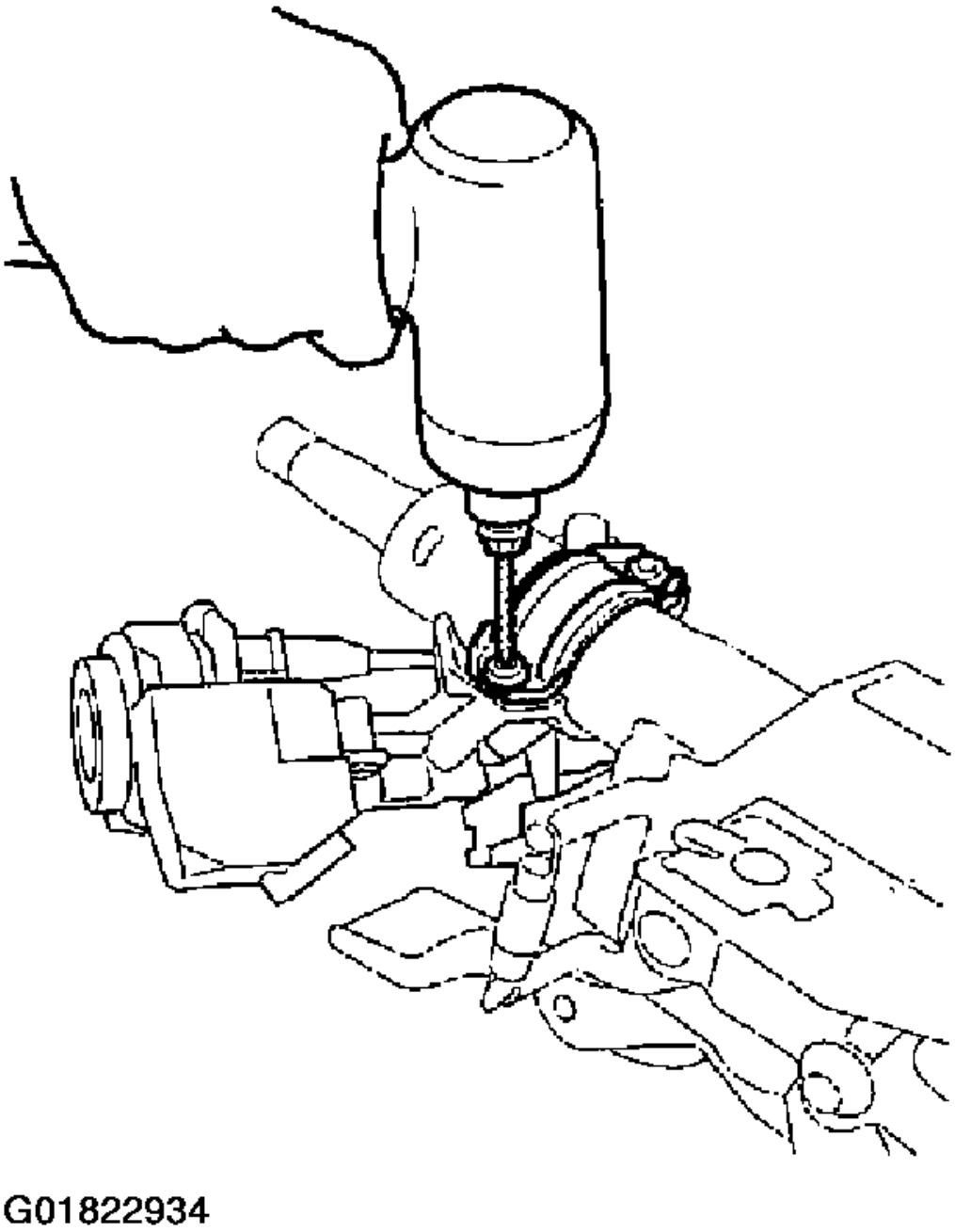

Fig. 52: Drilling Shear Bolt Heads

3. Remove the shear bolts from the switch body.
4. Install the switch body without the key inserted.

cardiagn.com

5. Loosely tighten the NEW shear bolts.
6. Insert the ignition key, and check for proper operation of the steering wheel lock and that the ignition key turns freely.
7. Tighten the shear bolts (A) until the hex heads (B) twist off.

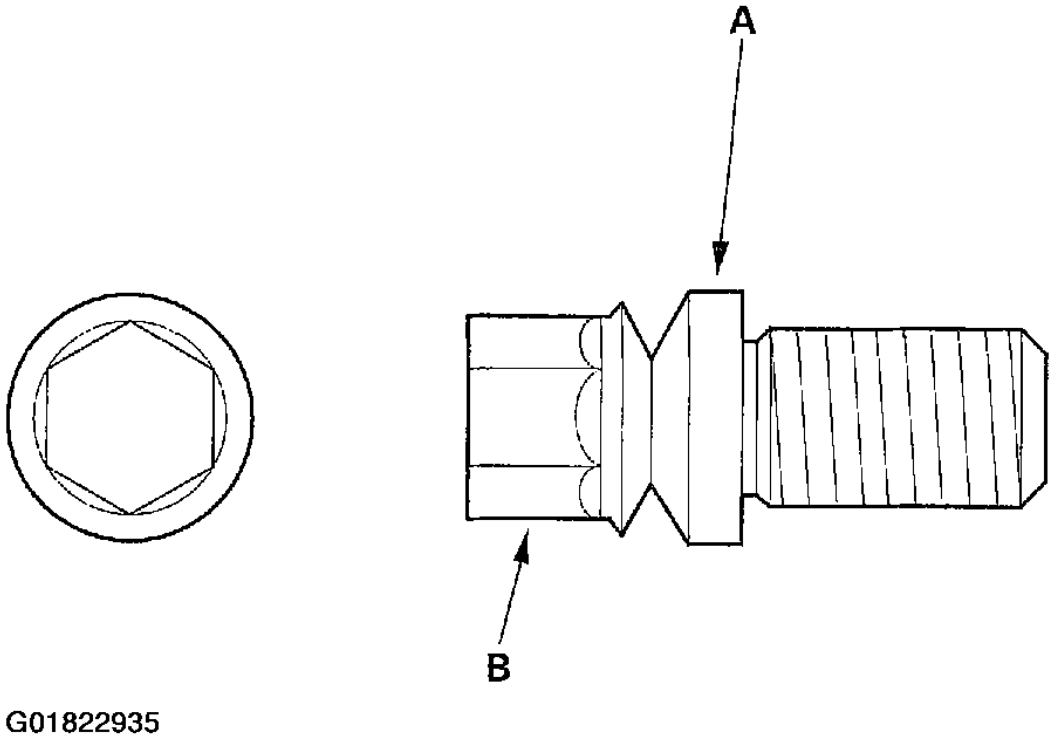

Fig. 53: Identifying The Shear Bolts With The Hex Heads

RACK GUIDE ADJUSTMENT

Special Tools Required: Locknut wrench, 40 mm, 07916-SA50001

1. Set the wheels in the straight ahead position.
2. Loosen the rack guide screw locknut (A) with the special tool, then remove the rack guide screw (B).

cardiagn.com

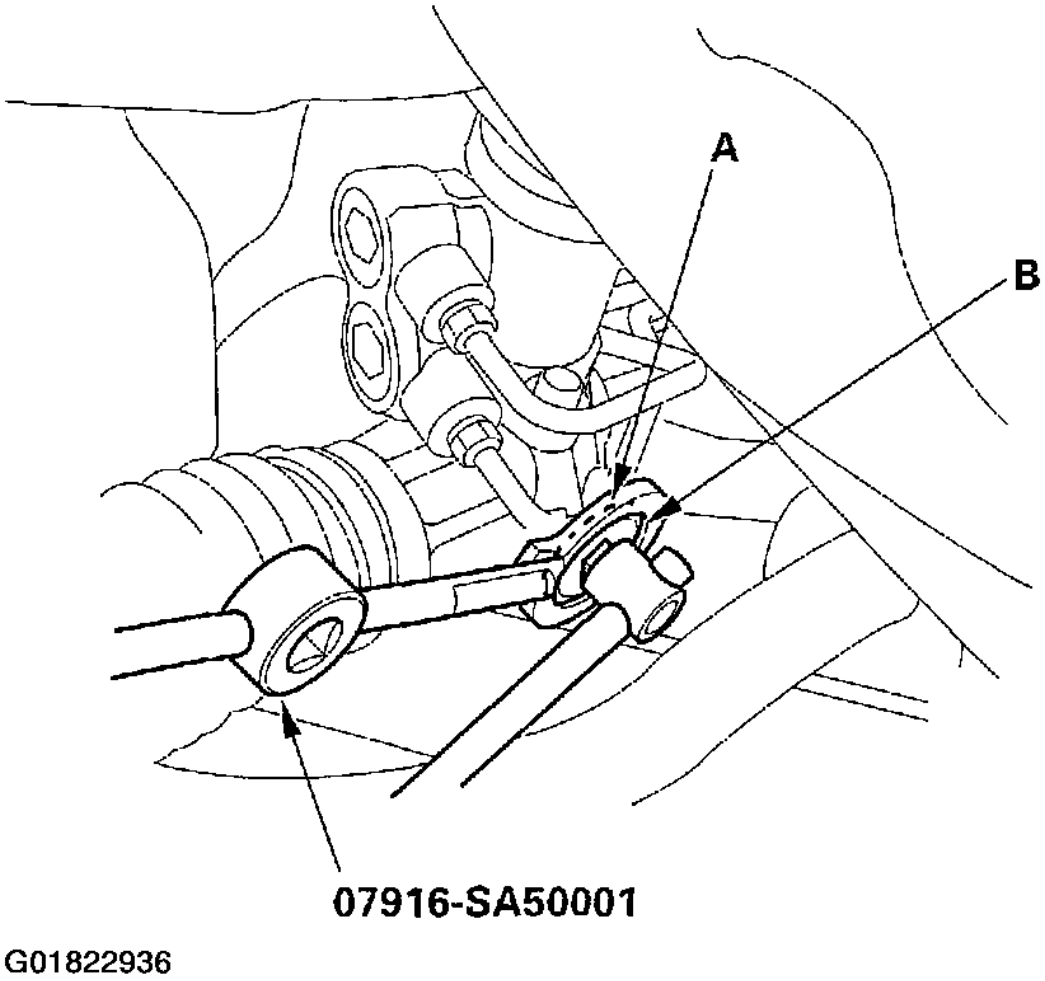

Fig. 54: Loosening The Rack Guide Screw Locknut

3. Remove the old sealant from the rack guide screw, and apply NEW sealant (Three Bond 1215 or Loctite 5699) to the middle of the threads. Loosely install the rack guide screw on the steering gearbox.

cardiagn.com

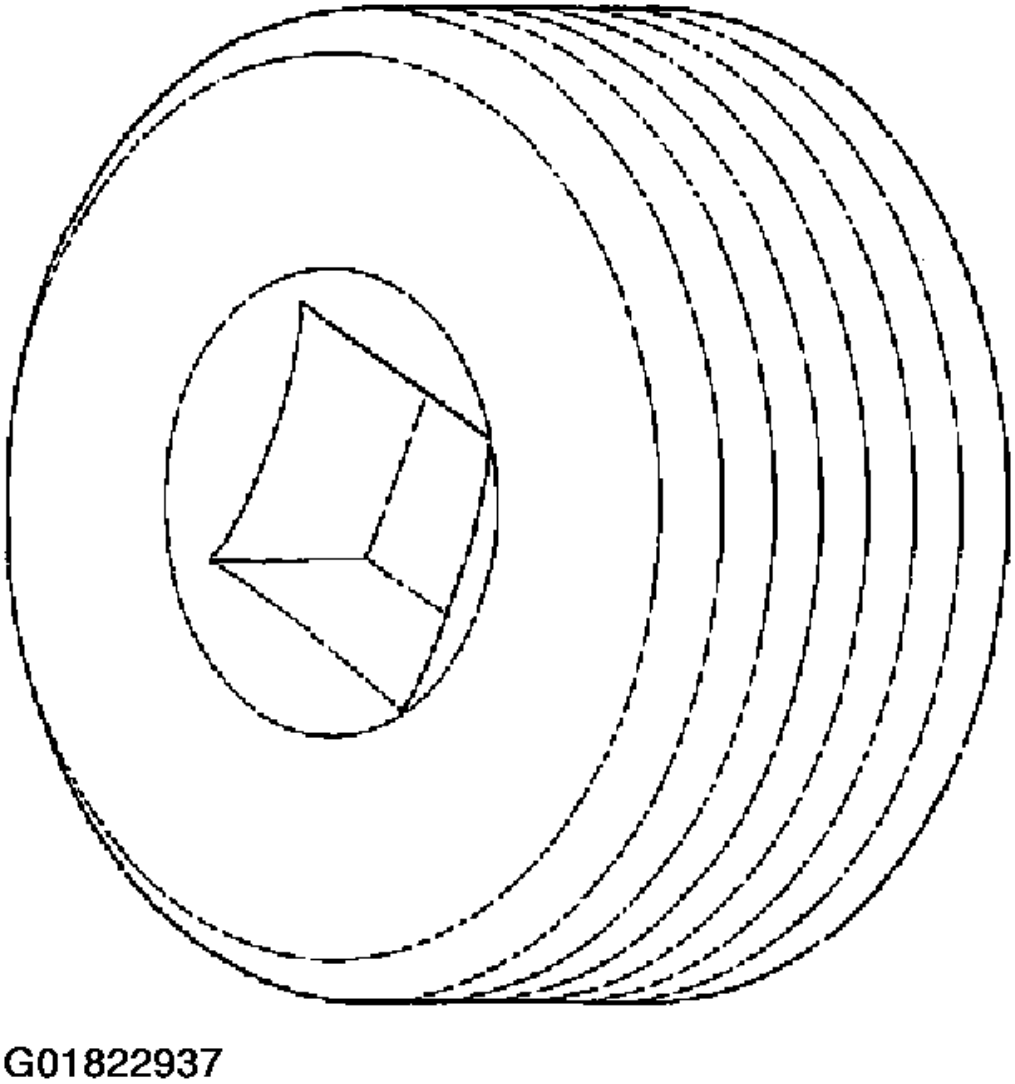

Fig. 55: Identifying Rack Guide Screw

4. Tighten the rack guide screw (A) to 25 N.m (2.5 kgf.m, 18 lbf.ft), then loosen it.

cardiagn.com

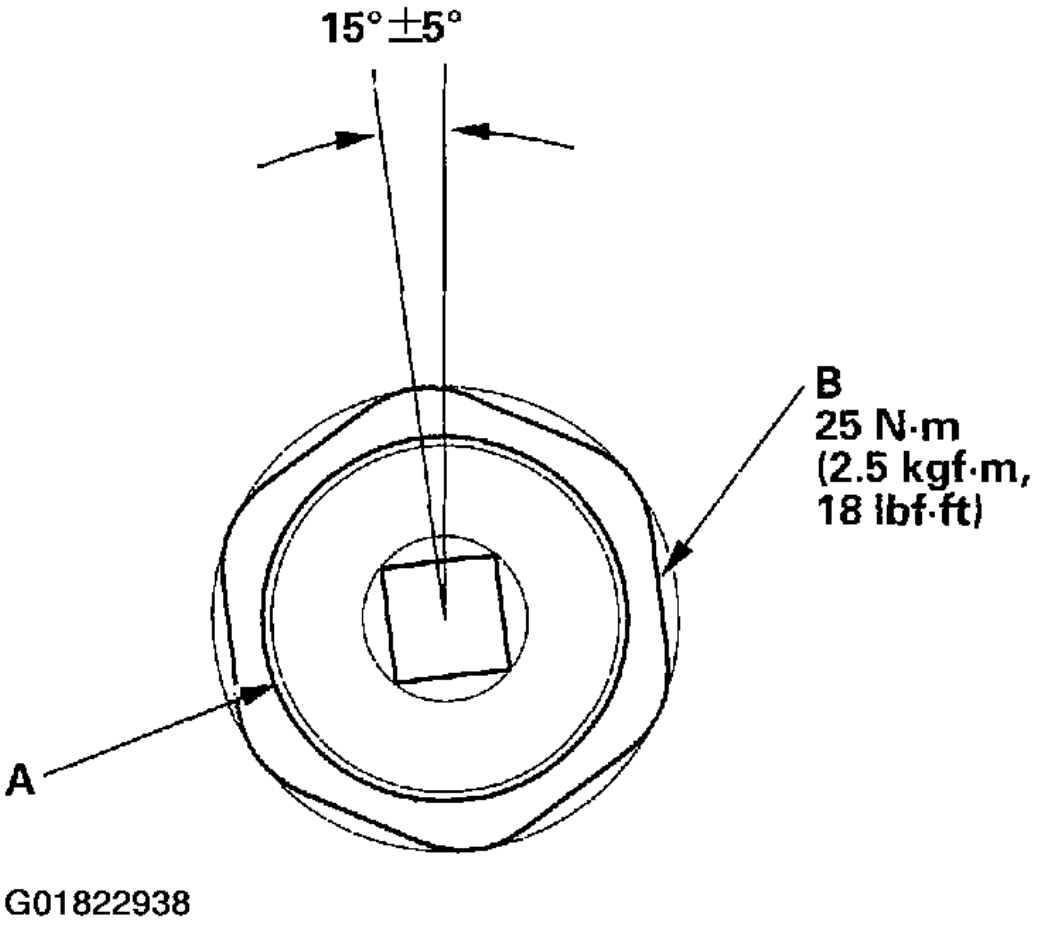

Fig. 56: Tightening The Rack Guide Screw

5. Retighten the rack guide screw to 3.9 N.m (0.4 kgf.m, 4 lbf.ft), then back it off to the specified angle.
   Specified Return Angle: 15° +/- 5°
6. Hold the rack guide screw stationary with a wrench, and tighten the locknut by hand until it's fully seated.
7. Install the special tool on the locknut (B), and hold the rack guide screw stationary with a wrench. Tighten the locknut an additional 30° with the special tool.
8. Check for unusual steering effort through the complete turning range.
9. Check the steering wheel rotation play and the power assist (see **POWER ASSIST CHECK**).

STEERING GEARBOX REMOVAL

Special Tools Required: Ball joint remover, 28 mm 07MAC-SL00200

cardiagn.com

Note these items during removal:

- Using solvent and a brush, wash any oil and dirt off the valve body unit, its lines, and the end of the gearbox. Blow dry with compressed air.
- Make sure to remove the steering wheel before disconnecting the steering joint. Damage to the cable reel can occur.

1. Drain the power steering fluid. (see **FLUID REPLACEMENT**).
2. Raise the front of vehicle, and support it with safety stands in the proper locations .
3. Remove the front wheels.
4. Remove the steering wheel (see **STEERING WHEEL REMOVAL**).
5. Remove the steering joint cover A.

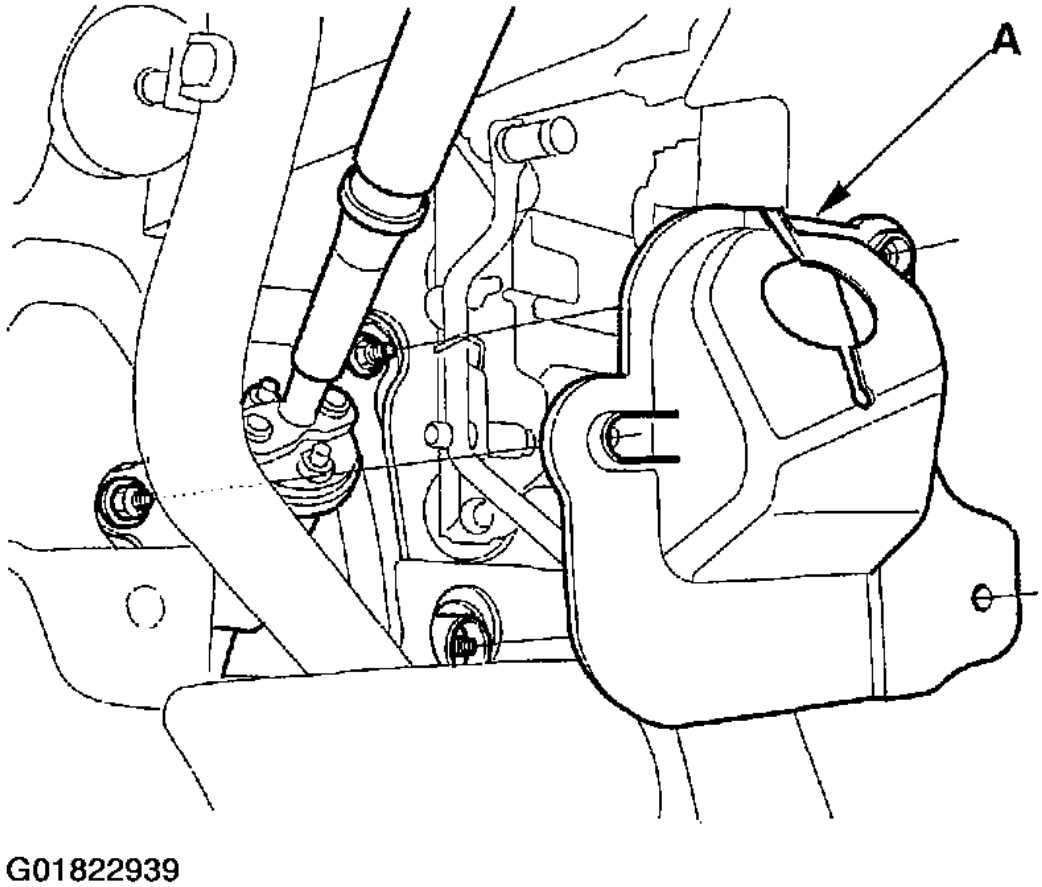

Fig. 57: Removing The Steering Joint Cover A

6. Remove the steering joint bolt (A), and disconnect the steering joint by moving the steering joint (B)

cardiagn.com

toward the column. Hold the slider shaft (C) on the column with a piece of wire (D) between the joint yoke (E) on the slider shaft to the joint yoke on the upper shaft (see **STEERING COLUMN REMOVAL AND INSTALLATION**).

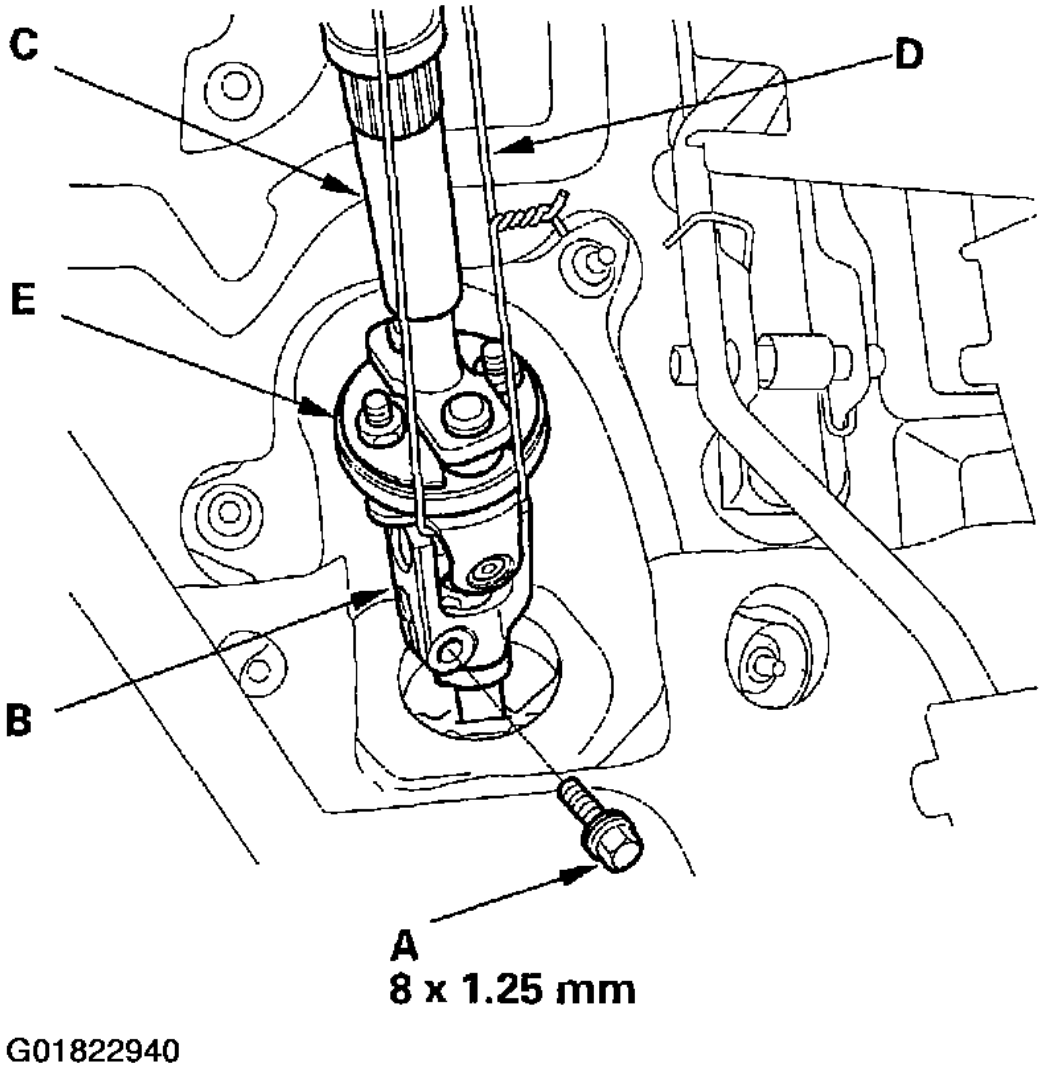

Fig. 58: Holding The Slider Shaft On The Column With A Piece Of Wire

7. Remove the center guide (A), and discard it.

cardiagn.com

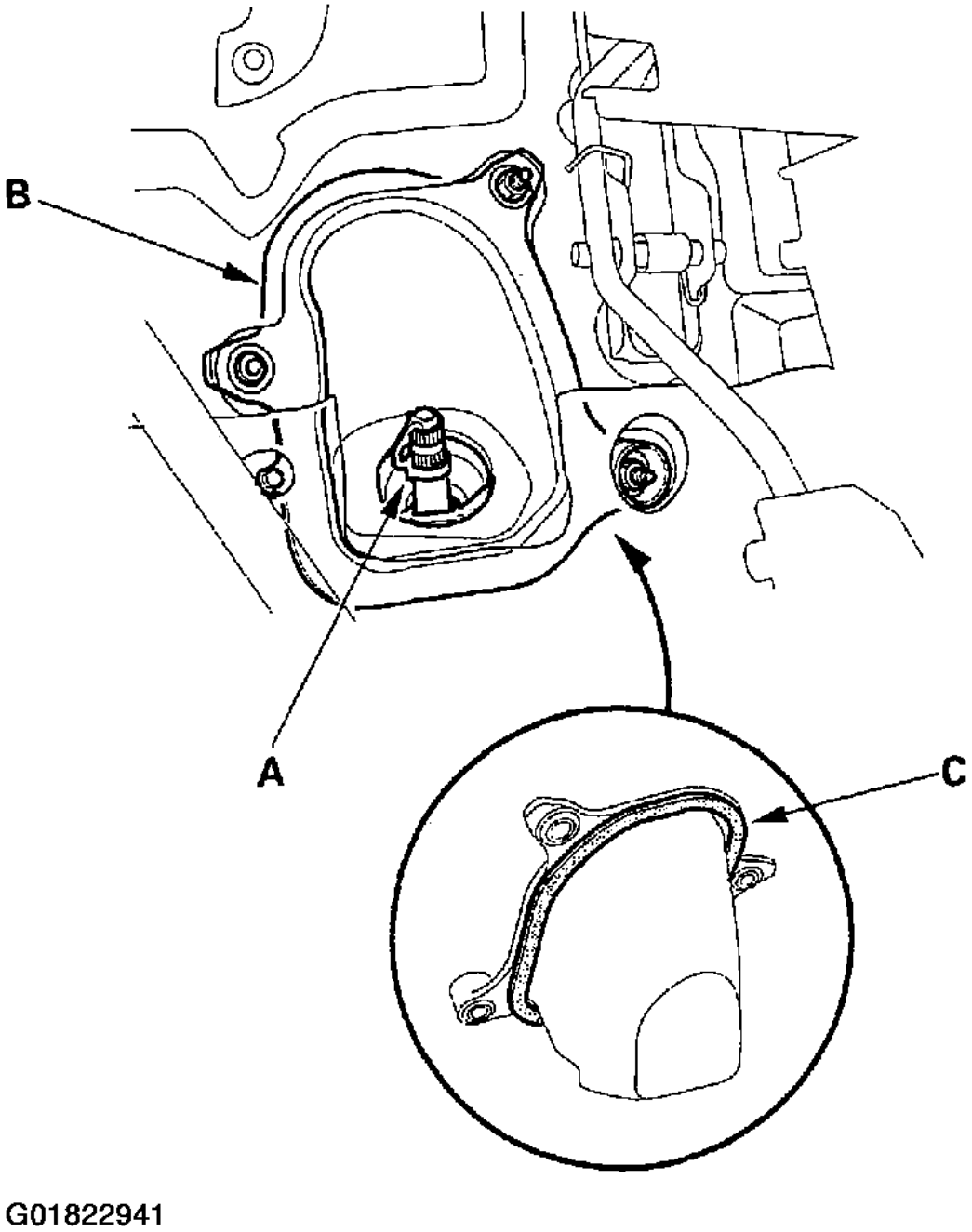

Fig. 59: Removing The Center Guide

8. Remove the steering joint cover B. Be careful not to damage the mating surface on the joint cover B and pinion shaft grommet. Replace the cover seal (C) if necessary.
9. Remove and discard the cotter pin (A) from the tie rod ball joint nut (B), then loosen the nut.

cardiagn.com

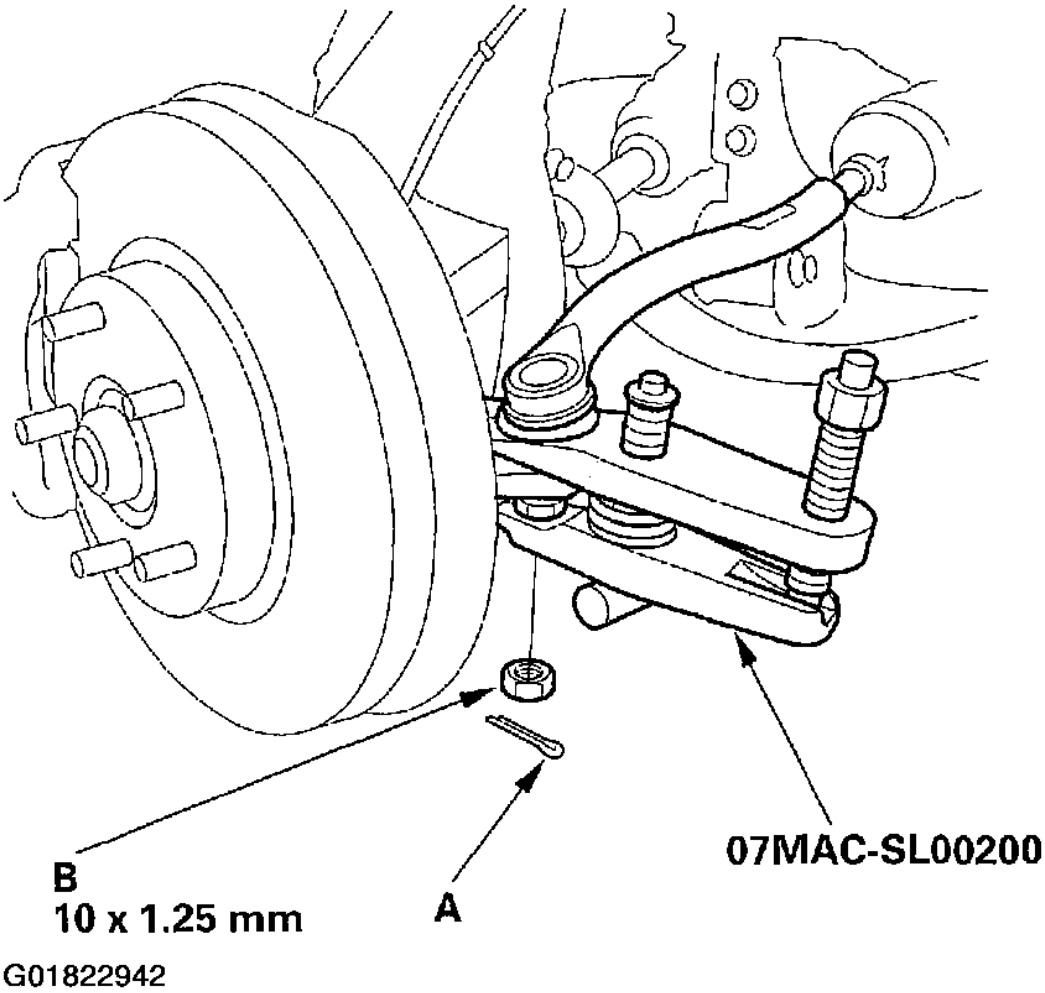

Fig. 60: Separating The Tie-Rod Ball Joint

10. Separate the tie-rod ball joint and knuckle using the special tool (see **BALL JOINT**).
11. Remove the P/S heat baffle plate (A).

cardiagn.com

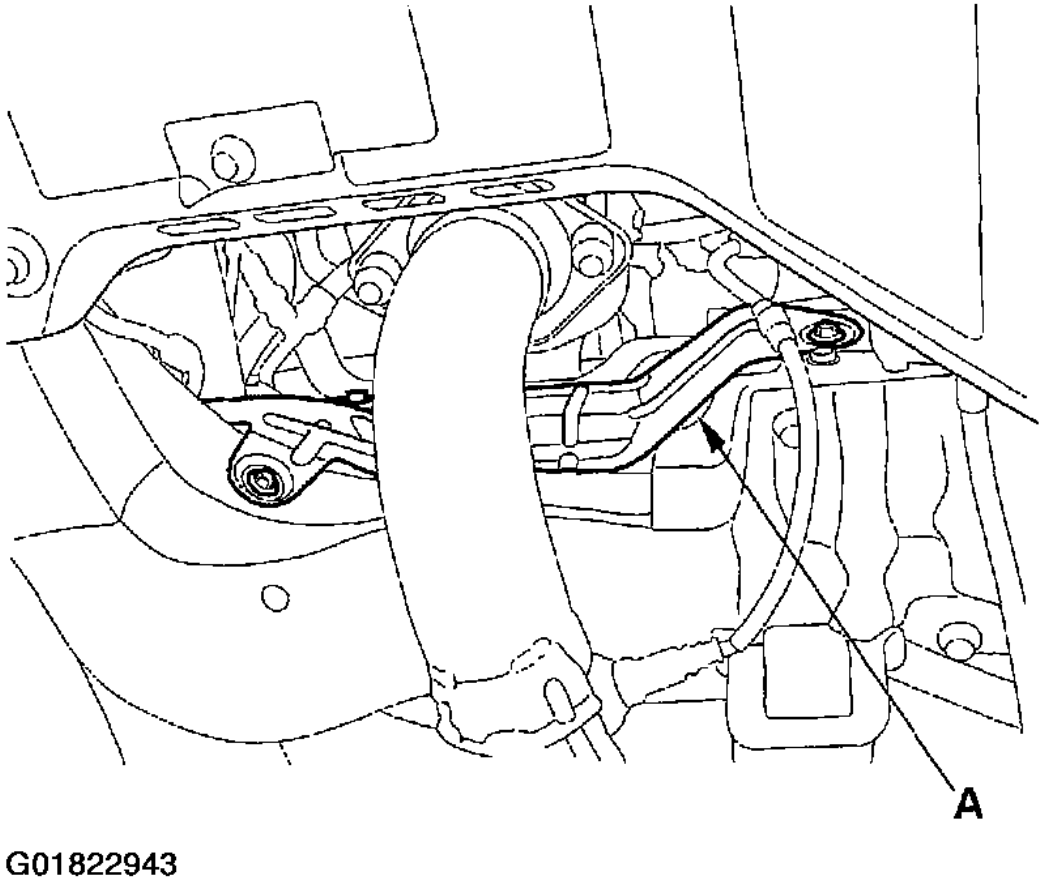

Fig. 61: Removing The P/S Heat Baffle Plate

12. Remove the feed line holder mounting bolt (A) on the front suspension subframe.

cardiagn.com

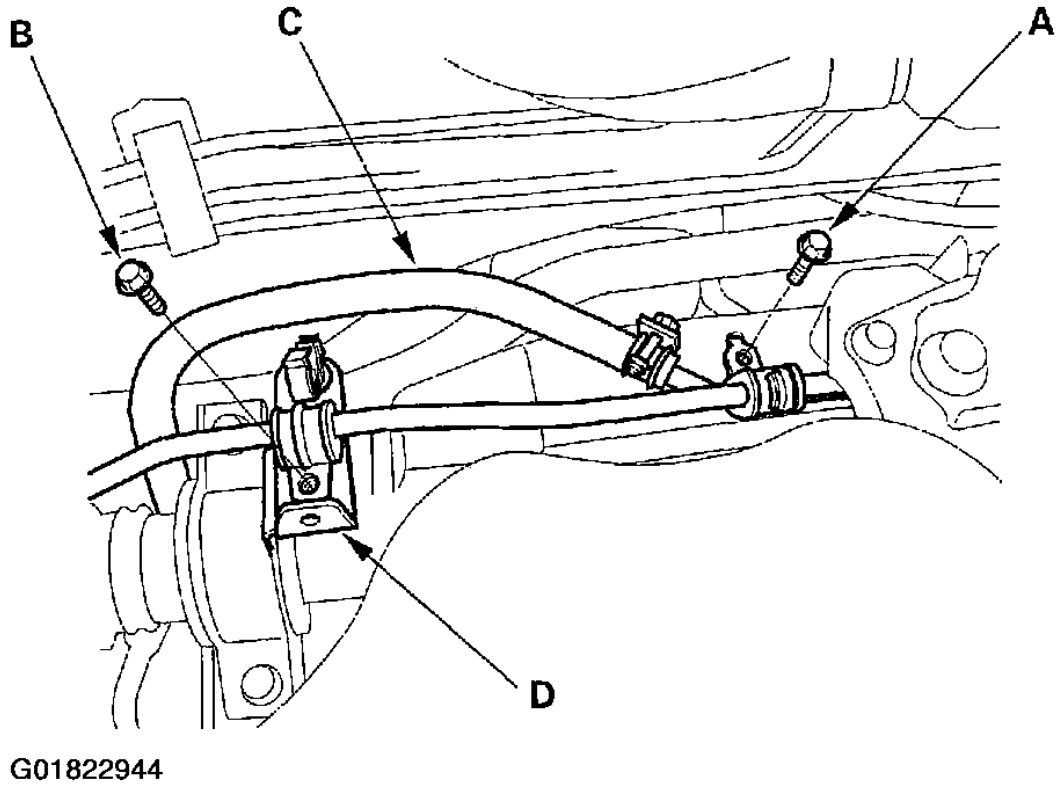

Fig. 62: Removing The Feed Line Holder Mounting Bolt

13. Remove the feed line holder mounting bolt (B) and return hose (C) from the gearbox mounting bracket (D).
14. Place several shop towels under the line connections, and cover the gearbox mounting part to protect it from the power steering fluid. Loosen the flare nut (A), and disconnect the feed line (B).

cardiagn.com

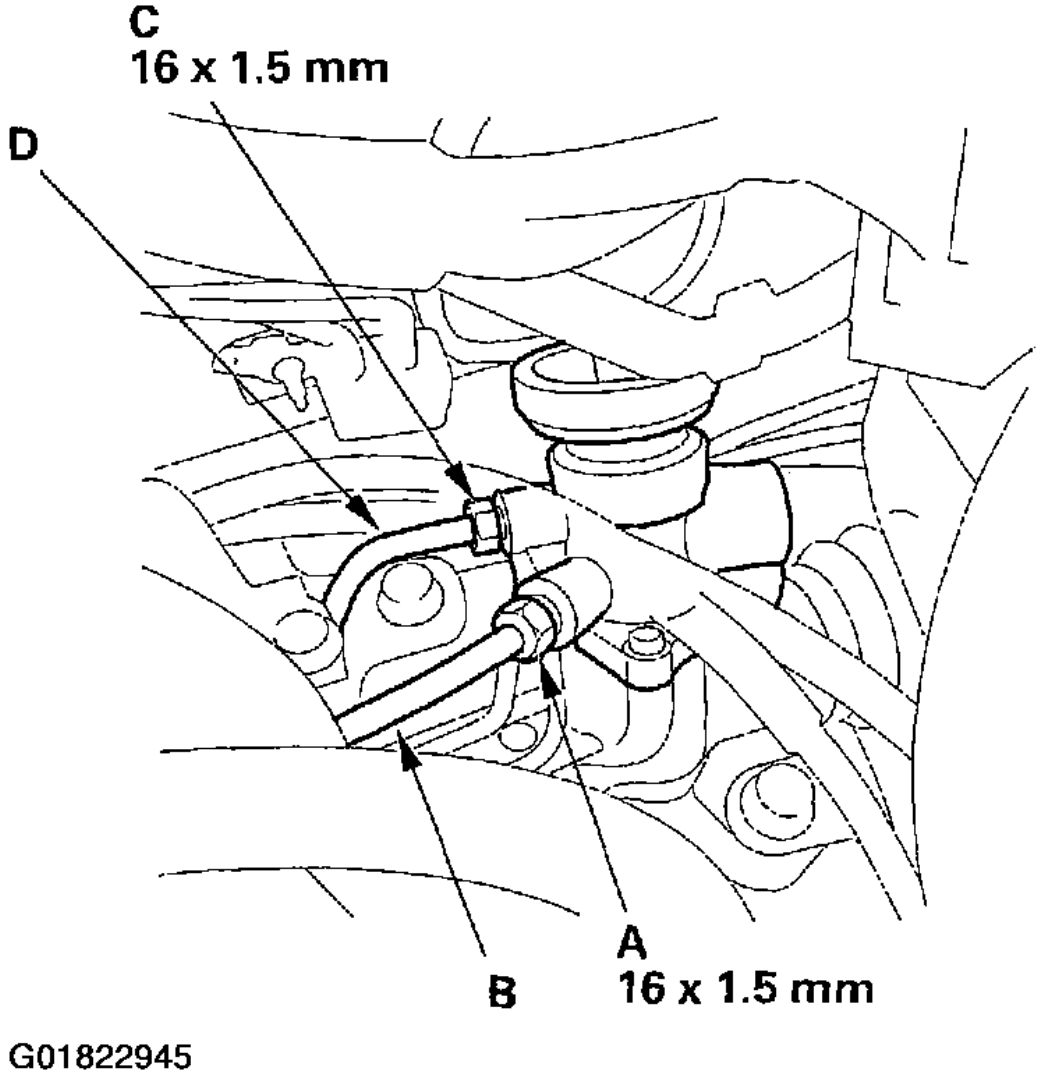

Fig. 63: Disconnecting The Feed & Return Lines

15. Loosen the flare nut (C), and disconnect the return line (D).
16. After disconnecting the lines, plug or seal them with a piece of tape or equivalent to prevent foreign materials from entering.

NOTE: **Do not loosen the cylinder line A and B between the valve body unit and the cylinder.**

17. Remove the front suspension subframe left mid and mount (A).

cardiagn.com

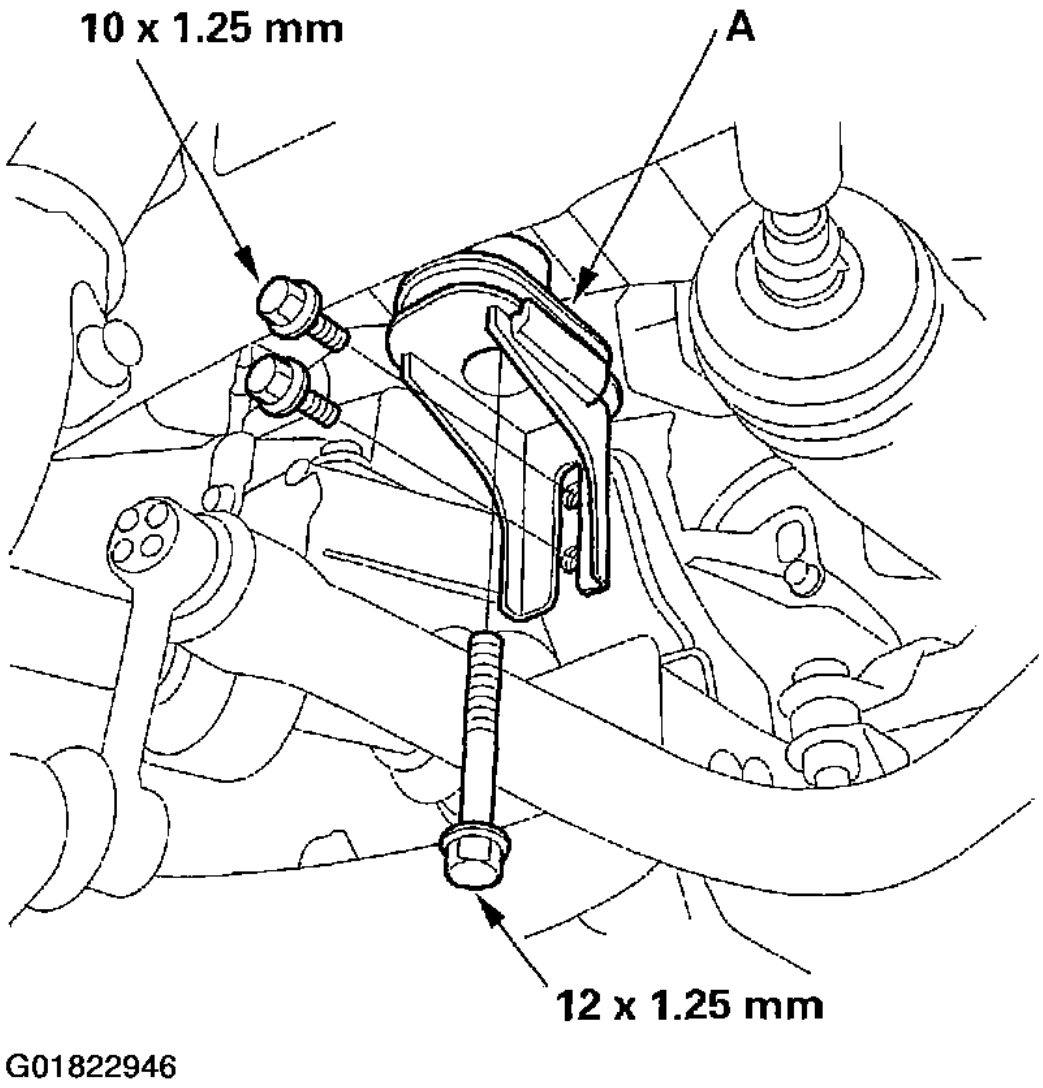

Fig. 64: Removing The Front Suspension Subframe Left Mid & Mount

18. Remove the steering gearbox mounting bolts on the left gearbox mount, and remove the steering stiffener plate (A).

cardiagn.com

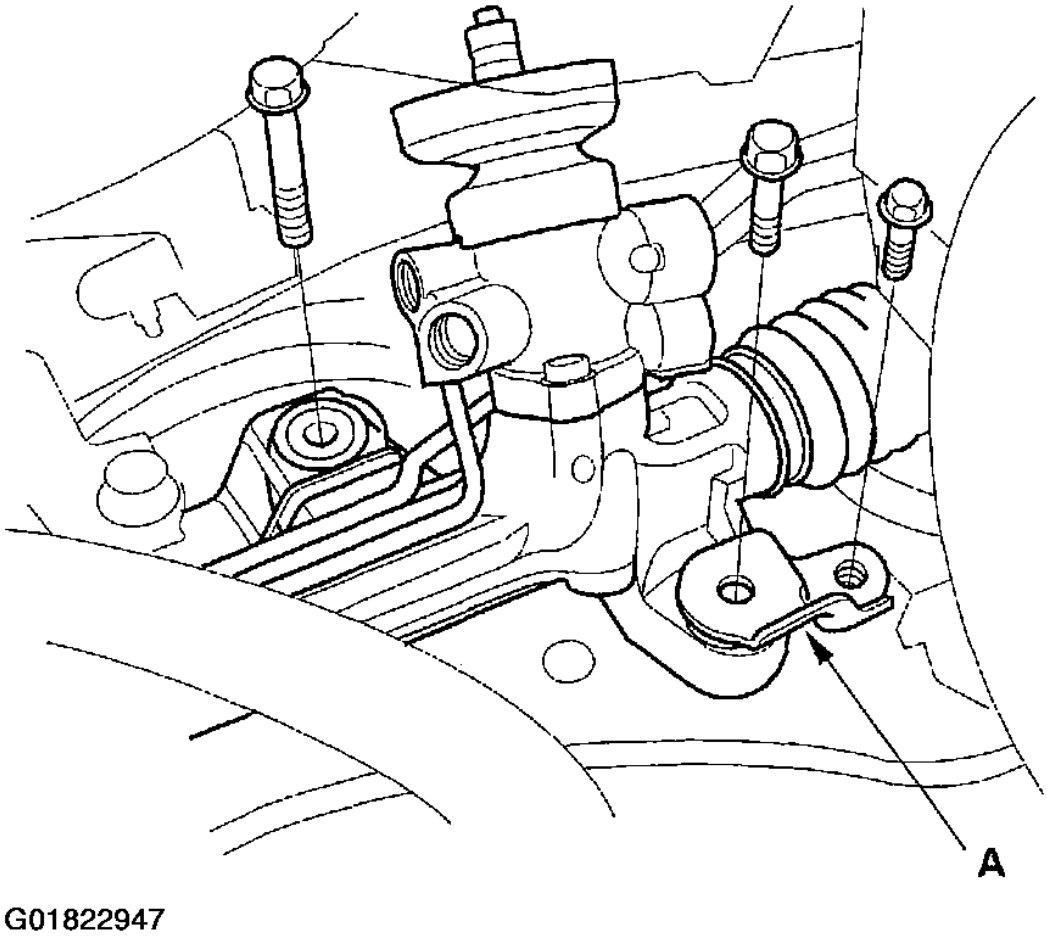

Fig. 65: Removing The Steering Gearbox Mounting Bolts

19. Remove the two flange bolts from the right side of the gearbox, then remove the gearbox mounting bracket (A) and cushion (B).

cardiagn.com

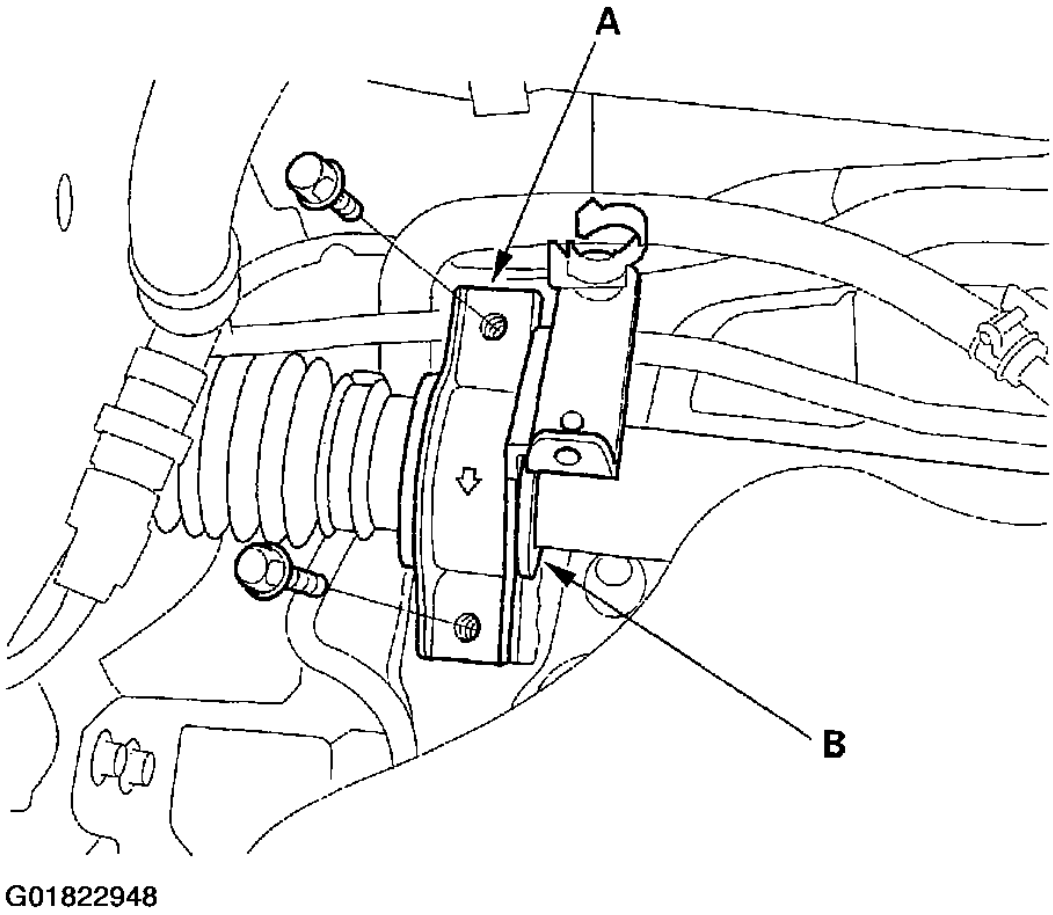

Fig. 66: Removing The Two Flange Bolts

20. Move the steering gearbox toward the front, and remove the pinion shaft grommet (A) from the top of the valve body unit.

cardiagn.com

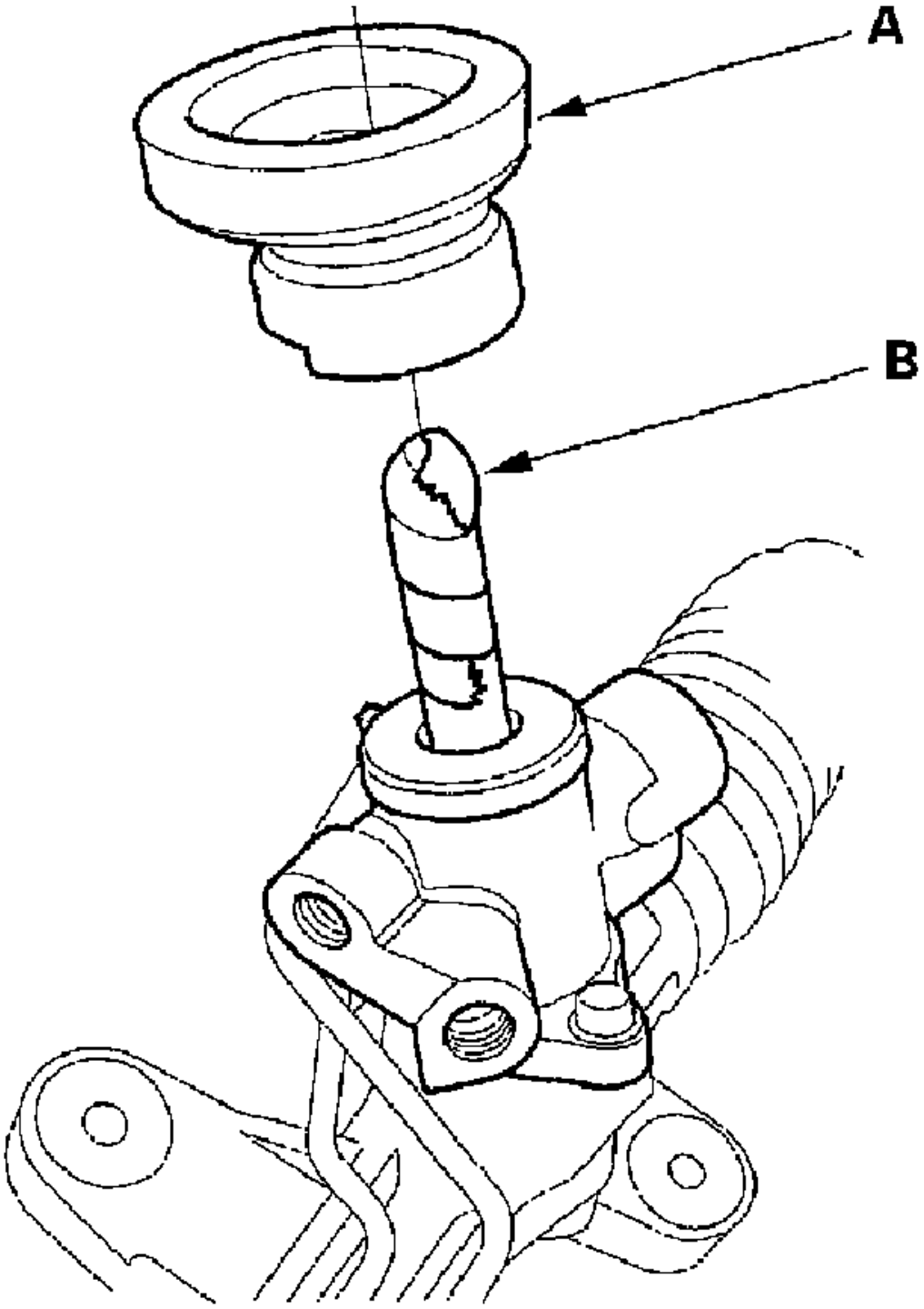

G01822949

cardiagn.com

Fig. 67: Removing The Pinion Shaft Grommet

21. Apply vinyl tape (B) to the splines on the pinion shaft.
22. Apply vinyl tape or equivalent material (A) to the brake lines to protect them from the pinion shaft.

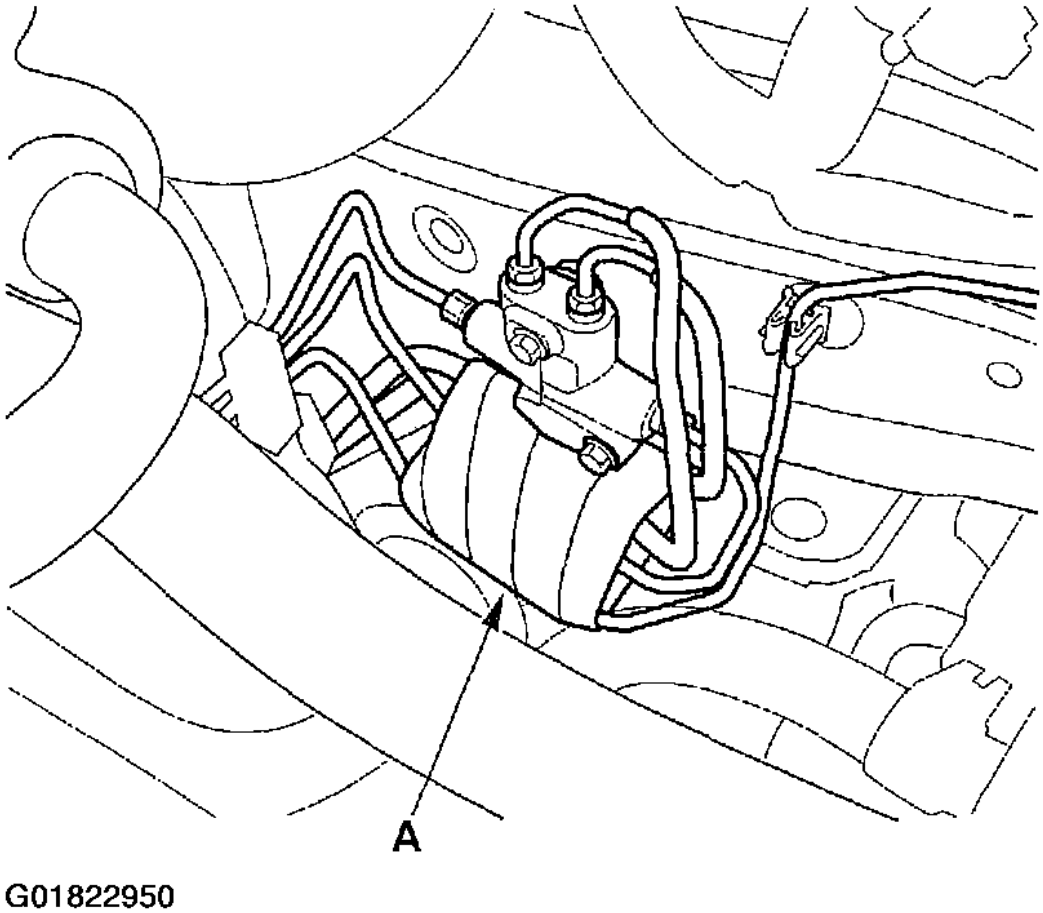

Fig. 68: Applying Vinyl Tape To The Brake Lines

23. Move the steering gearbox to the driver's side, and rotate it so the pinion shaft points toward the front of the vehicle.
24. Carefully move the steering gearbox as an assembly toward the driver's side of the vehicle until the pinion shaft clears the wheelwell opening. Be careful not to damage the brake lines with the pinion shaft.

cardiagn.com

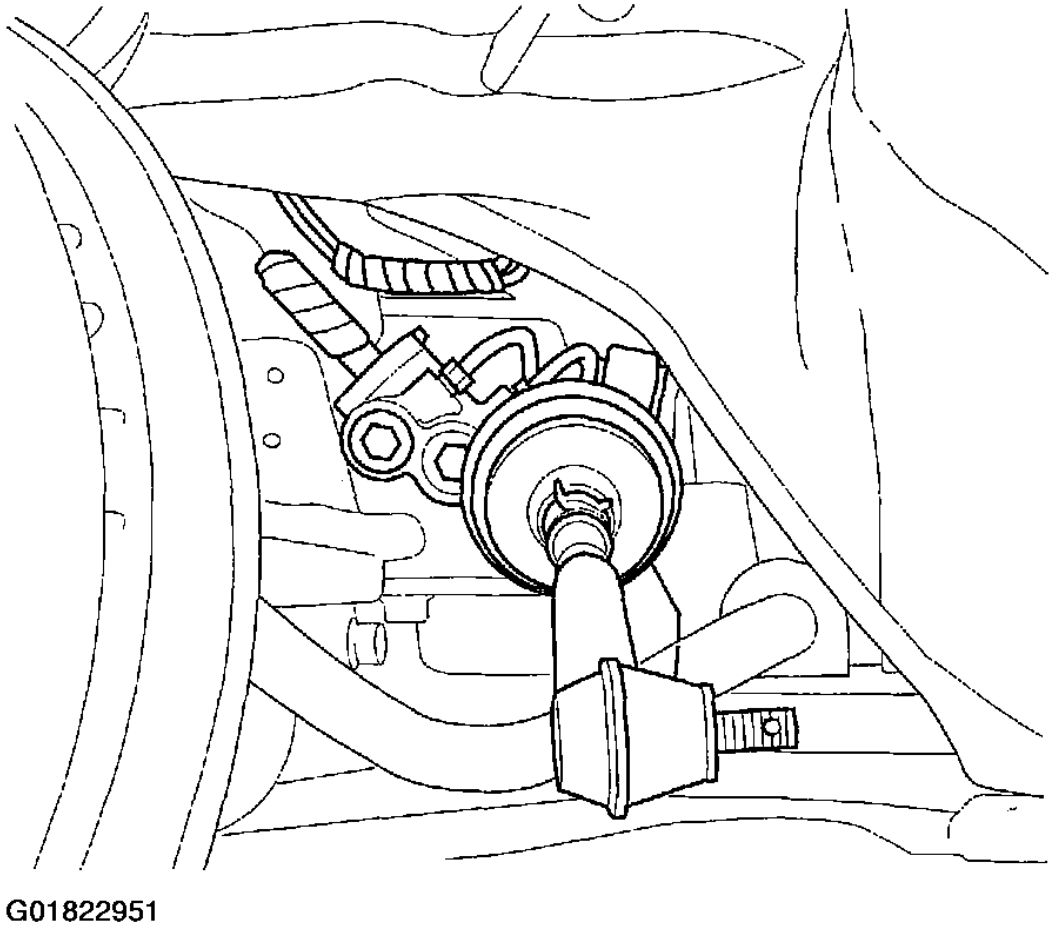

Fig. 69: Rotating Steering Gearbox So The Pinion Shaft Points Toward The Front Of The Vehicle

25. Remove the steering gearbox through the wheelwell opening on the driver's side.

cardiagn.com

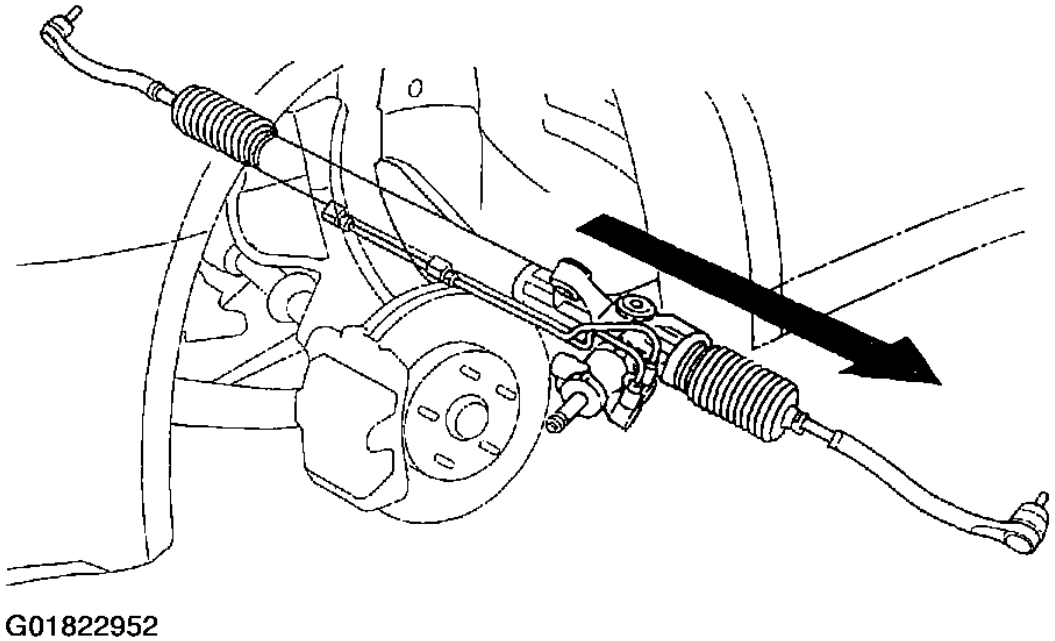

Fig. 70: Removing The Steering Gearbox

26. After removing the steering gearbox, make sure that no power steering fluid gets on the gearbox mount cushions, gearbox housing, surface of the subframe and stiffener. Wipe off any spilled fluid at once.

STEERING GEARBOX OVERHAUL

EXPLODED VIEW

cardiagn.com

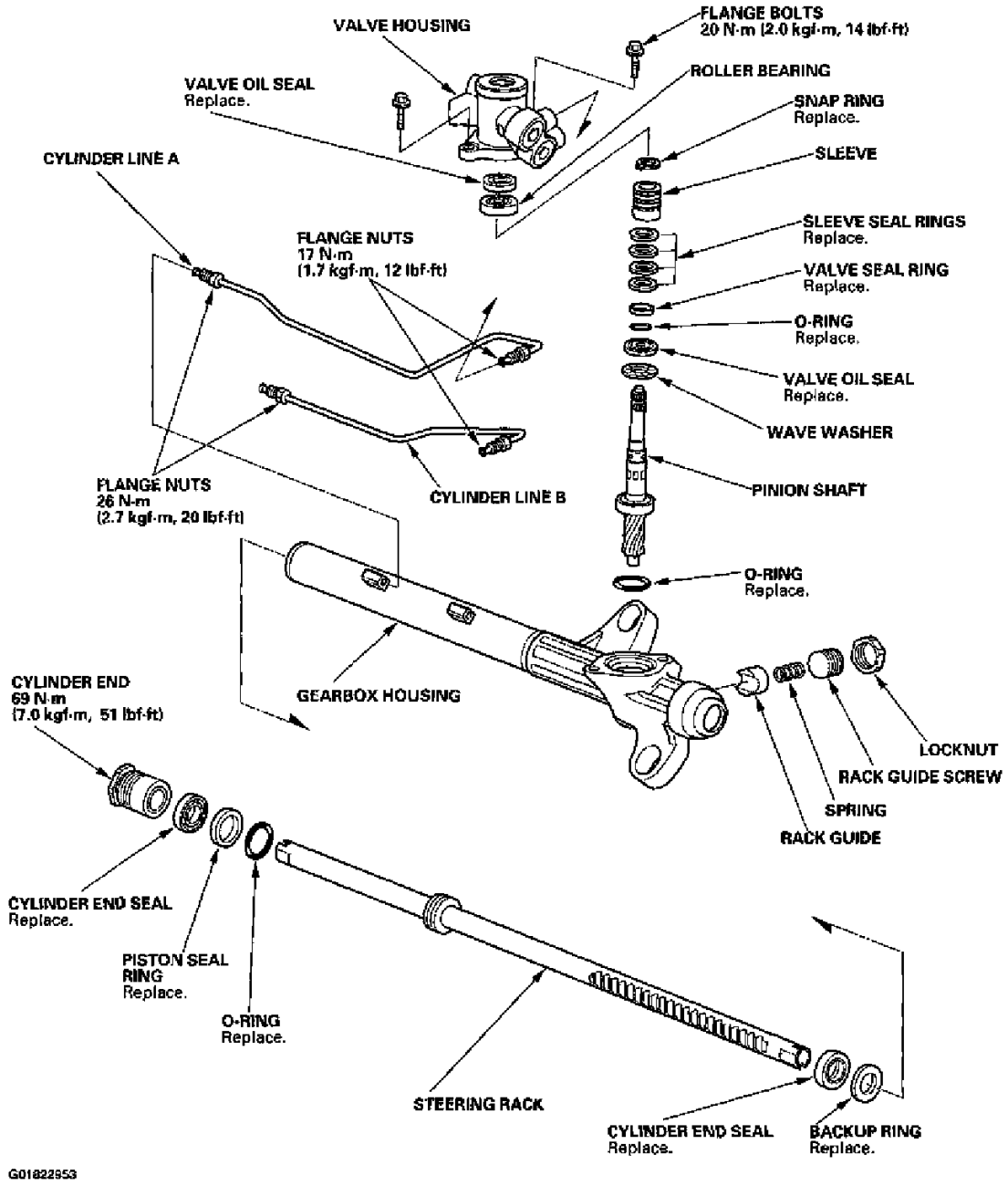

Fig. 71: Exploded View Of Steering Gearbox Components

Special Tools Required:

- Cylinder end seal remover attachment 07NAD-SR3020A
- Pilot collar 07GAF-PH70100
- Valve seal ring sizing tool 07NAG-SR3090A
- Ball joint boot clip guide 07974-SA50800

cardiagn.com

- Sleeve seal ring sizing tool 07974-SA5020A or 07974-SA50200
- Attachment, 32 x 35 mm 07746-0010100
- Driver 07749-0010000
- Piston seal ring guide 07HAG-SF10100
- Piston seal ring sizing tool 07HAG-SF1020A or 07HAG-SF10200
- Cylinder end seal slider 07ZAG-S5A0300
- Pincers Oetiker 1098 or equivalent, commercially available.

NOTE: Refer to the Exploded View as needed during this procedure.

Removal

1. Remove the steering gearbox (see **STEERING GEARBOX REMOVAL**).

Disassembly

2. Remove the boot bands (A) and tie-rod clips (B). Pull the boot away from the ends of the steering gearbox.

cardiagn.com

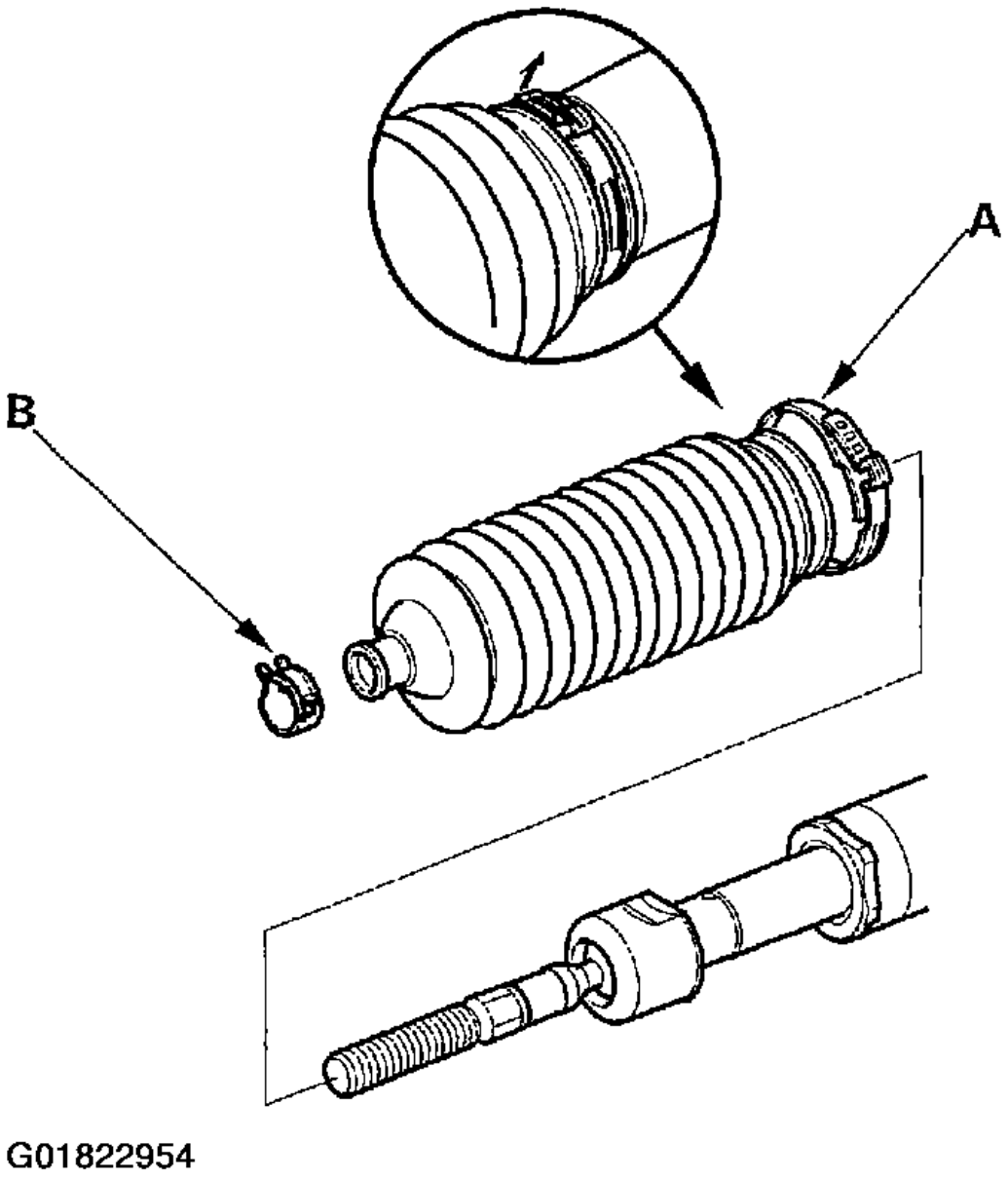

Fig. 72: Removing The Boot Bands & Tie-Rod Clips

3. Unbend the lock washers (A).

cardiagn.com

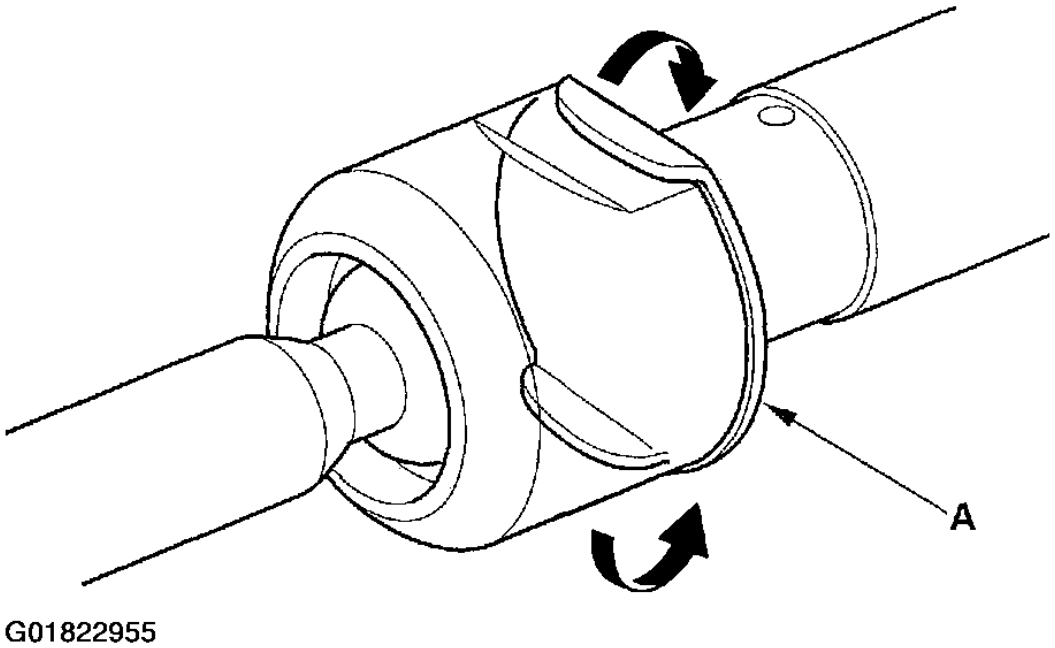

Fig. 73: Unbending The Lock Washers

4. Hold the flat surface sections (A) of the steering rack with a wrench (B), and unscrew both rack ends (C) with a wrench (D). Be careful not to damage the rack surface with the wrench.

cardiagn.com

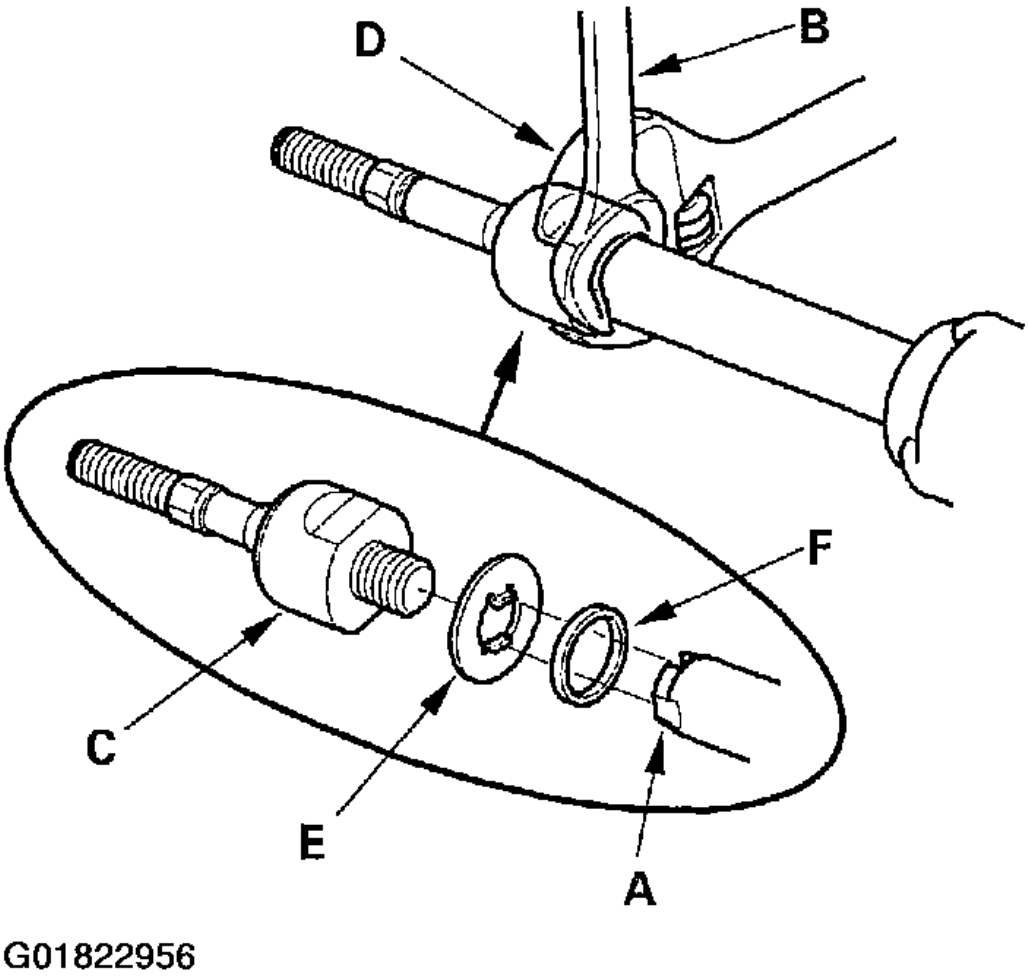

Fig. 74: Unscrewing Both Rack Ends

5. Remove the lock washer (E) and stop rubber (F).
6. Loosen the locknut (A), then remove the rack guide screw (B).

cardiagn.com

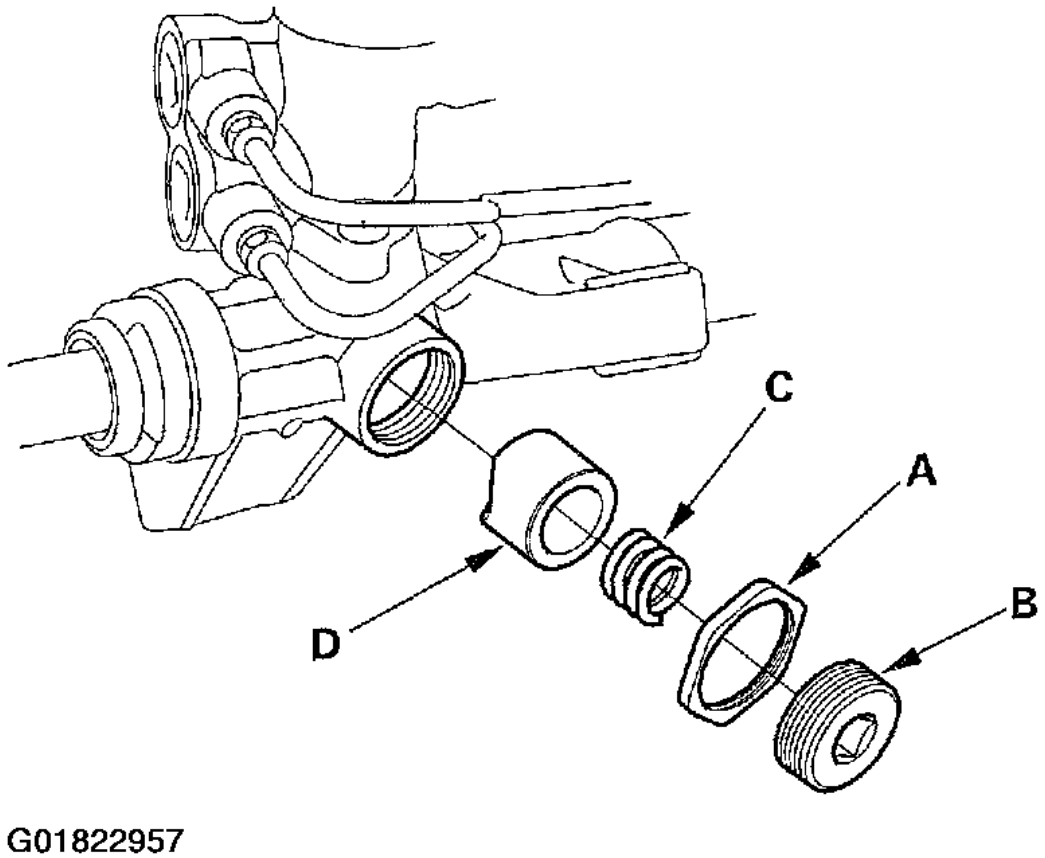

Fig. 75: Loosening The Locknut, Then Removing The Rack Guide Screw

7. Remove the spring (C) and the rack guide (D) from the gearbox housing.
8. Remove the cylinder lines from the gearbox.

cardiagn.com

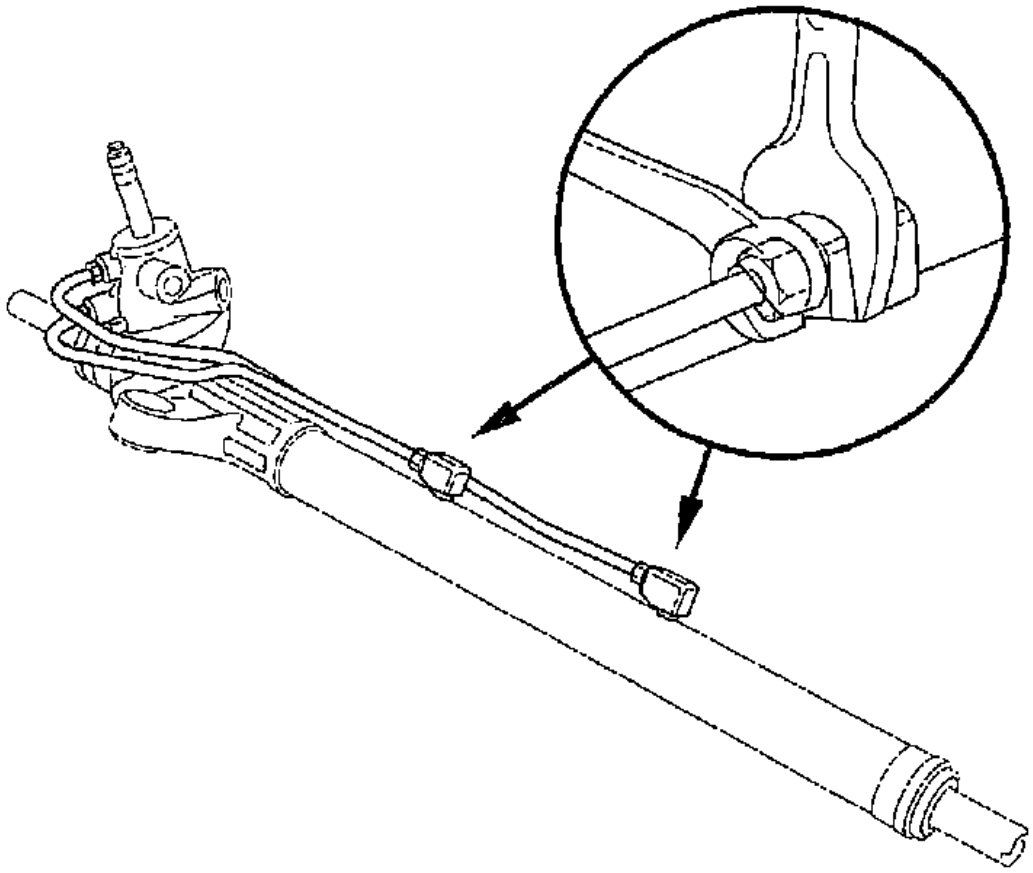

Fig. 76: Removing The Cylinder Lines From The Gearbox

9. Drain the fluid from the cylinder fittings by slowly moving the steering rack back and forth.
10. Remove the two flange bolts, then remove the valve body unit (A) from the gearbox (B). Remove the O-ring (C), and discard it.

cardiagn.com

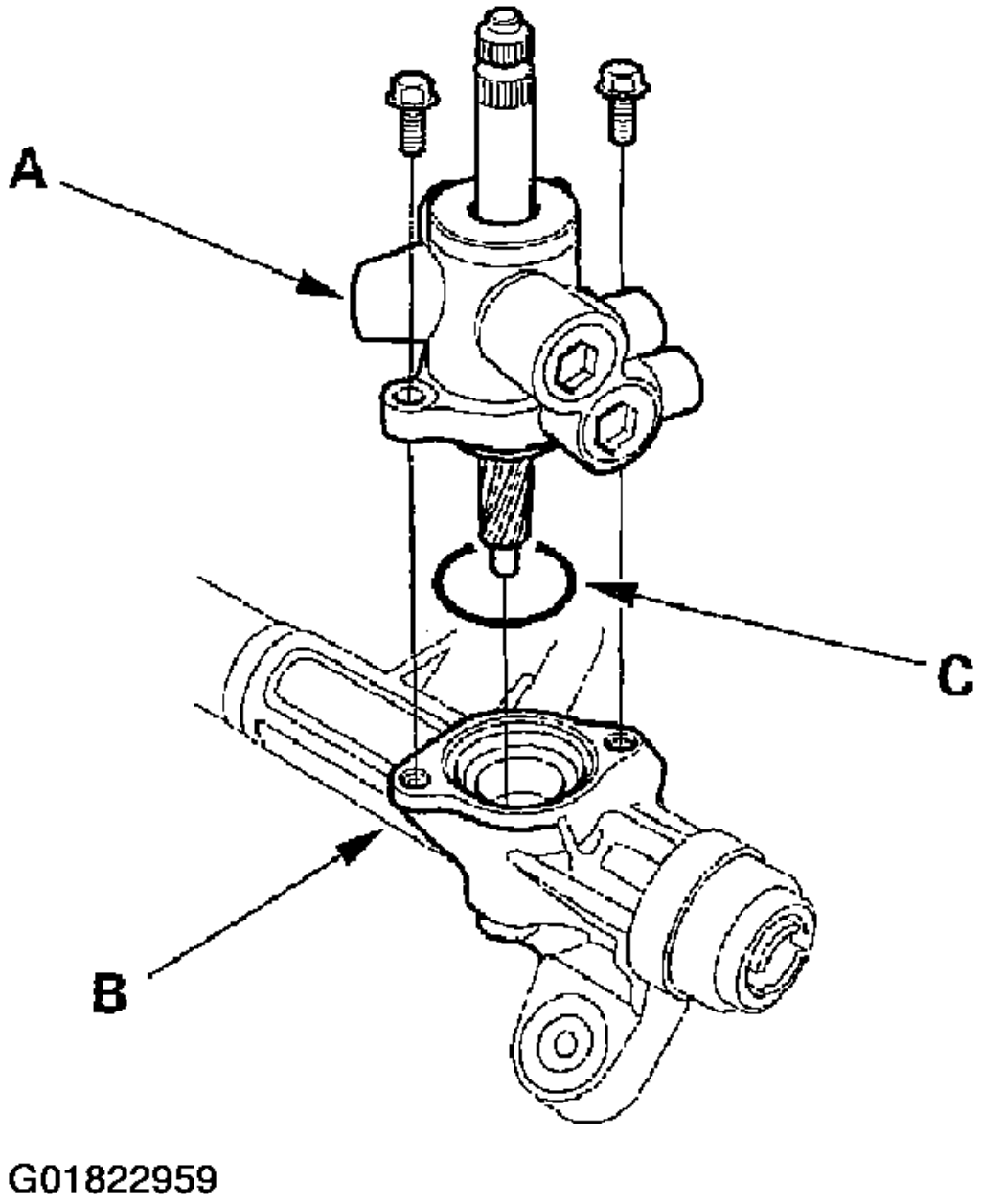

Fig. 77: Removing The Valve Body Unit From The Gearbox

11. Drill a 3 mm (0.12 in.) diameter hole about 2.5-3.0 mm (0.10-0.12 in.) in depth in the staked point (A) on the cylinder. Do not allow metal shavings to enter the cylinder side on the gearbox housing. After removing the cylinder end (B), remove any burrs at the staked point.

cardiagn.com

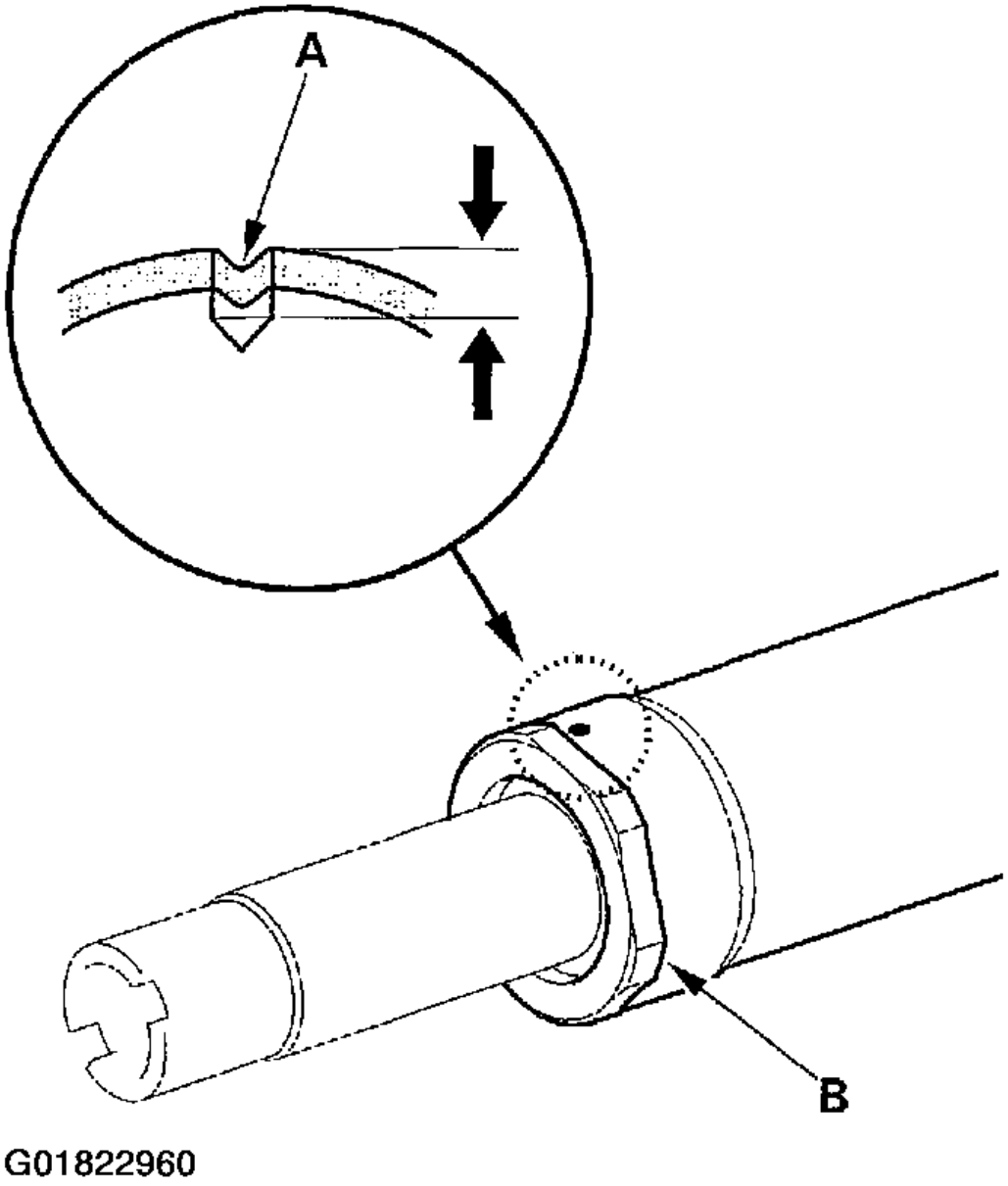

Fig. 78: Drilling A Hole In The Staked Point On The Cylinder

12. Hold the gearbox housing using a C-clamp (commercially available) (A) and the wooden blocks (B) as shown. Do not clamp the cylinder part of the gearbox housing in the vise. Then remove the cylinder end (C).

cardiagn.com

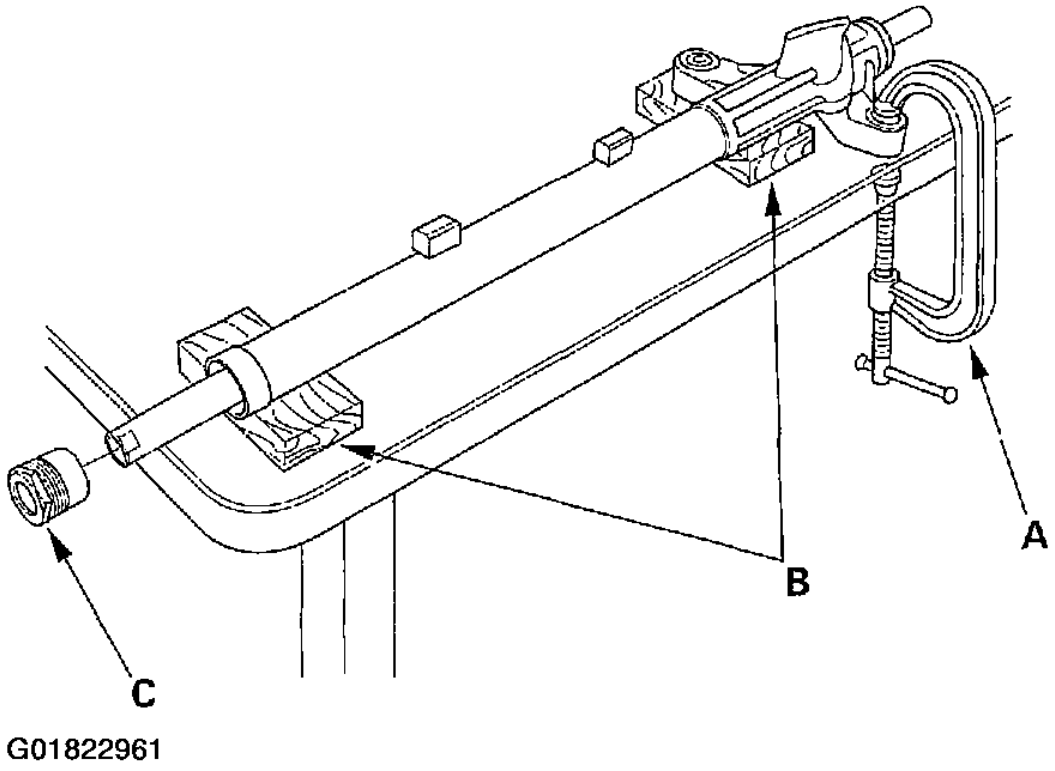

Fig. 79: Holding The Gearbox Housing Using A C-Clamp & The Wooden Blocks

13. Install a commercially available bearing separator (A) in the gearbox housing as shown.

cardiagn.com

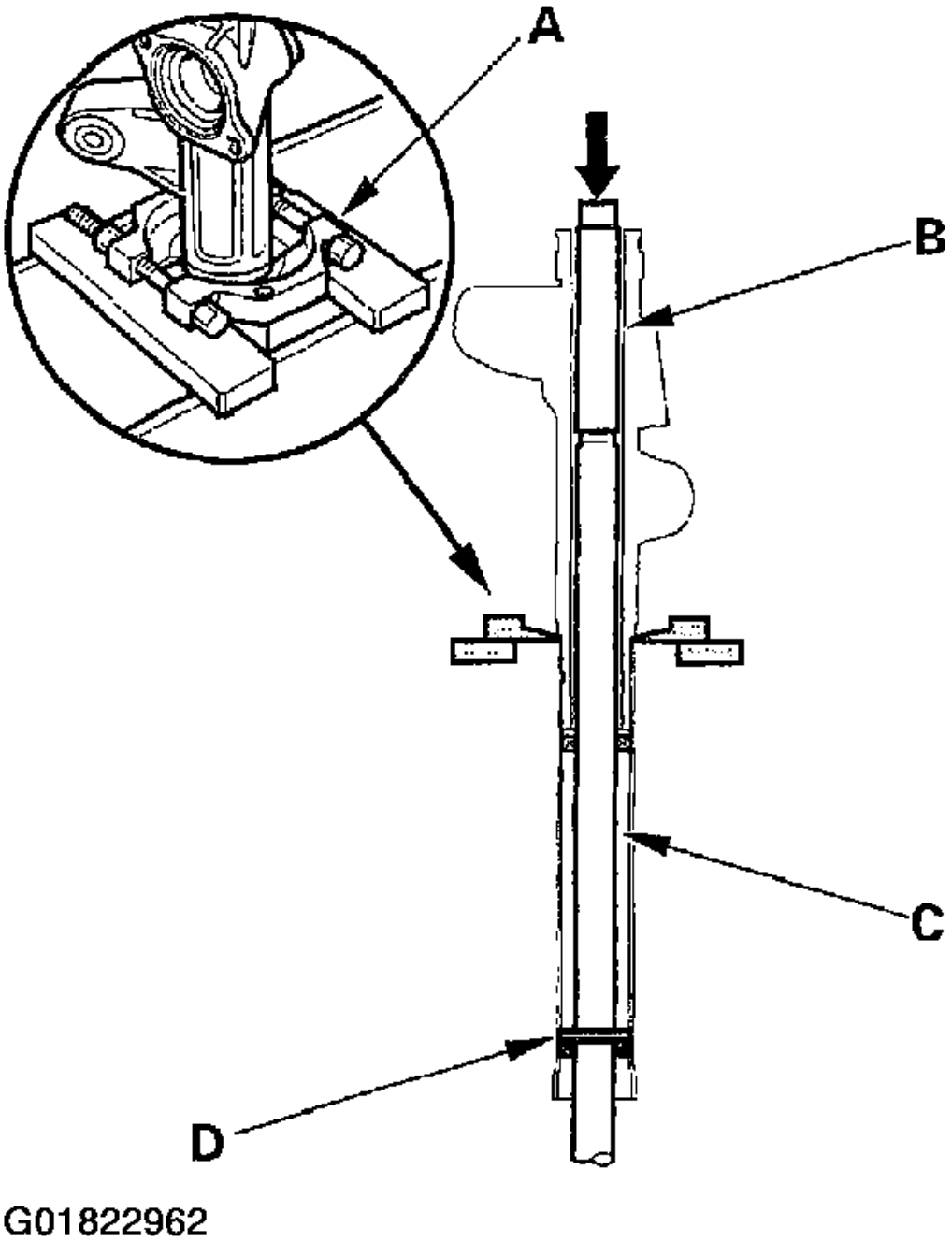

Fig. 80: Installing A Bearing Separator

14. Place an appropriate size deep socket wrench (B) on the steering rack (C).
15. Set the steering gearbox in a press so the gearbox housing side points upward, then press the cylinder end

cardiagn.com

seal (D) and steering rack out of the gearbox. Hold the steering rack to keep it from falling when pressed clear. Be careful not to damage the inner surface of the cylinder side on the gearbox housing with the tool.

16. Install the special tool so it will fit through the rack guide hole of the gearbox housing. Insert a 24" long, 3/8" drive extension (A), and install it on the special tool. Make sure the special tool is securely positioned on the backup ring edges. Be careful not to damage the inner surface of the cylinder with the special tool.

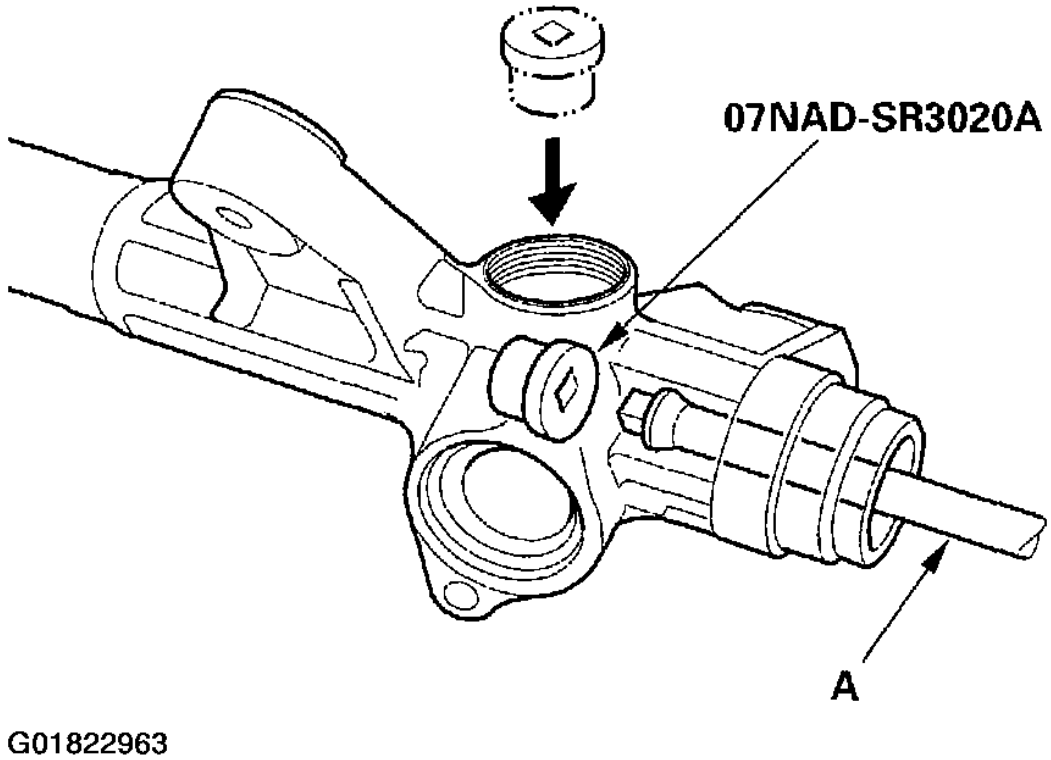

Fig. 81: Installing The Special Tool

17. Place the steering gearbox in a press, then remove the cylinder end seal (A) and backup ring (B) from the gearbox by pressing on the 24" long, 3/8" drive extension. Note these items when pressing the cylinder end seal:
    - Keep the tool straight to avoid damaging the cylinder wall. Check the tool angle, and correct it if necessary, when removing the cylinder end seal.
    - Use a press to remove the cylinder end seal. Do not try to remove the seal by striking the tool; striking the tool would brake the backup ring, and the cylinder end seal would remain in the gearbox.

cardiagn.com

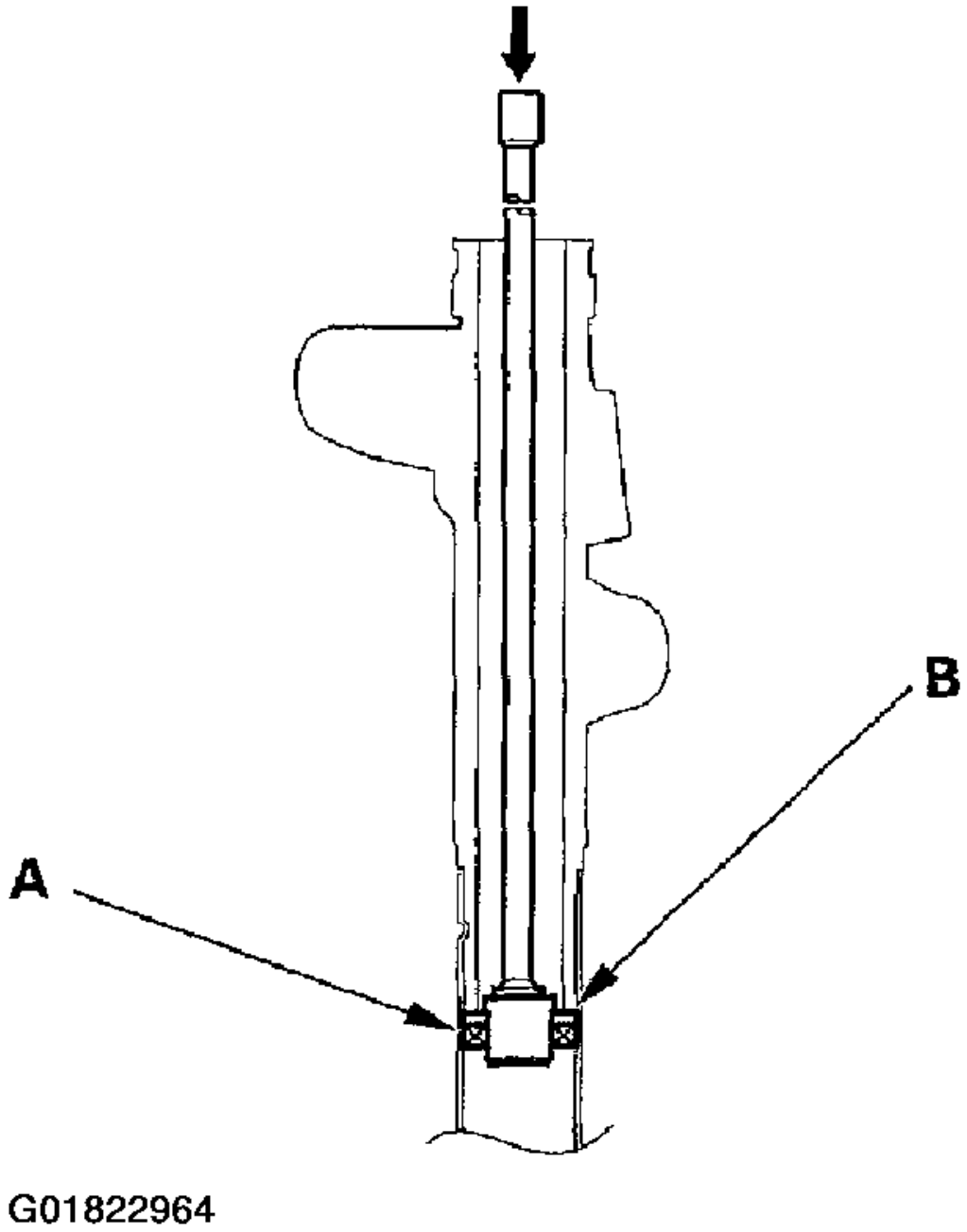

Fig. 82: Pressing The Cylinder End Seal & Backup Ring From The Gearbox

18. Carefully pry the piston seal ring (A) and O-ring (B) off the rack piston. Be careful not to damage the inside of the seal ring groove and piston edges when removing the seal ring.

cardiagn.com

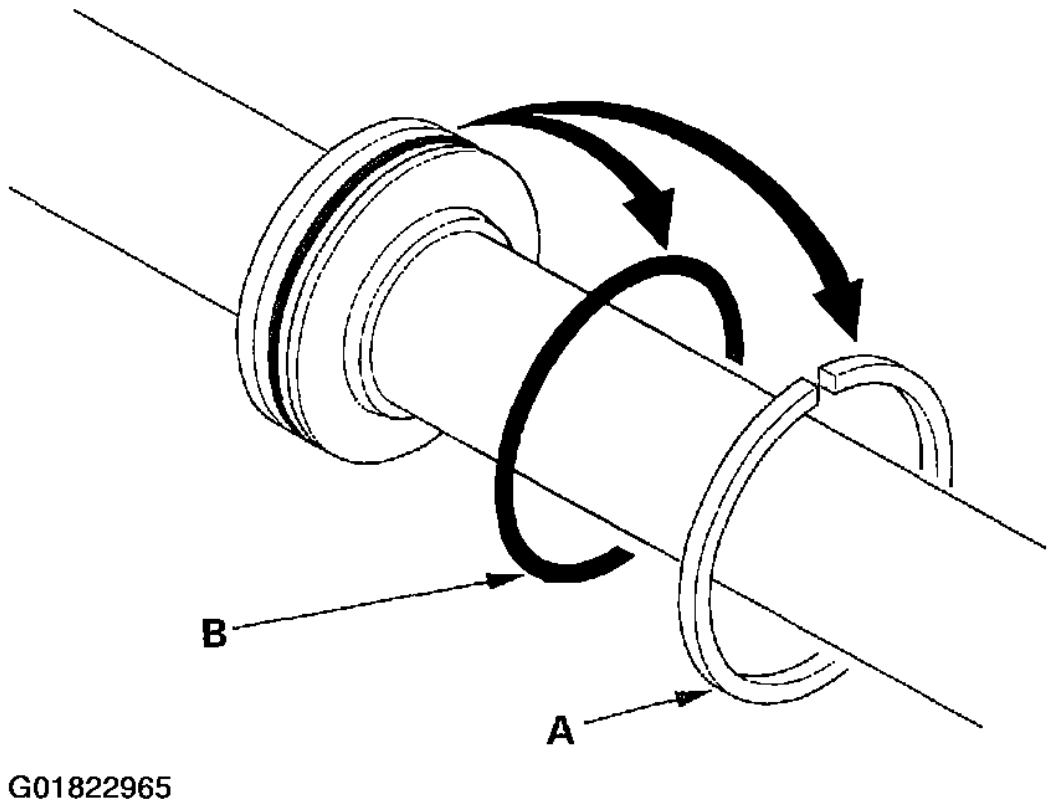

Fig. 83: Prying The Piston Seal Ring & O-Ring Off The Rack Piston

19. Before removing the valve housing (A), apply vinyl tape (B) to the splines on the pinion shaft.

cardiagn.com

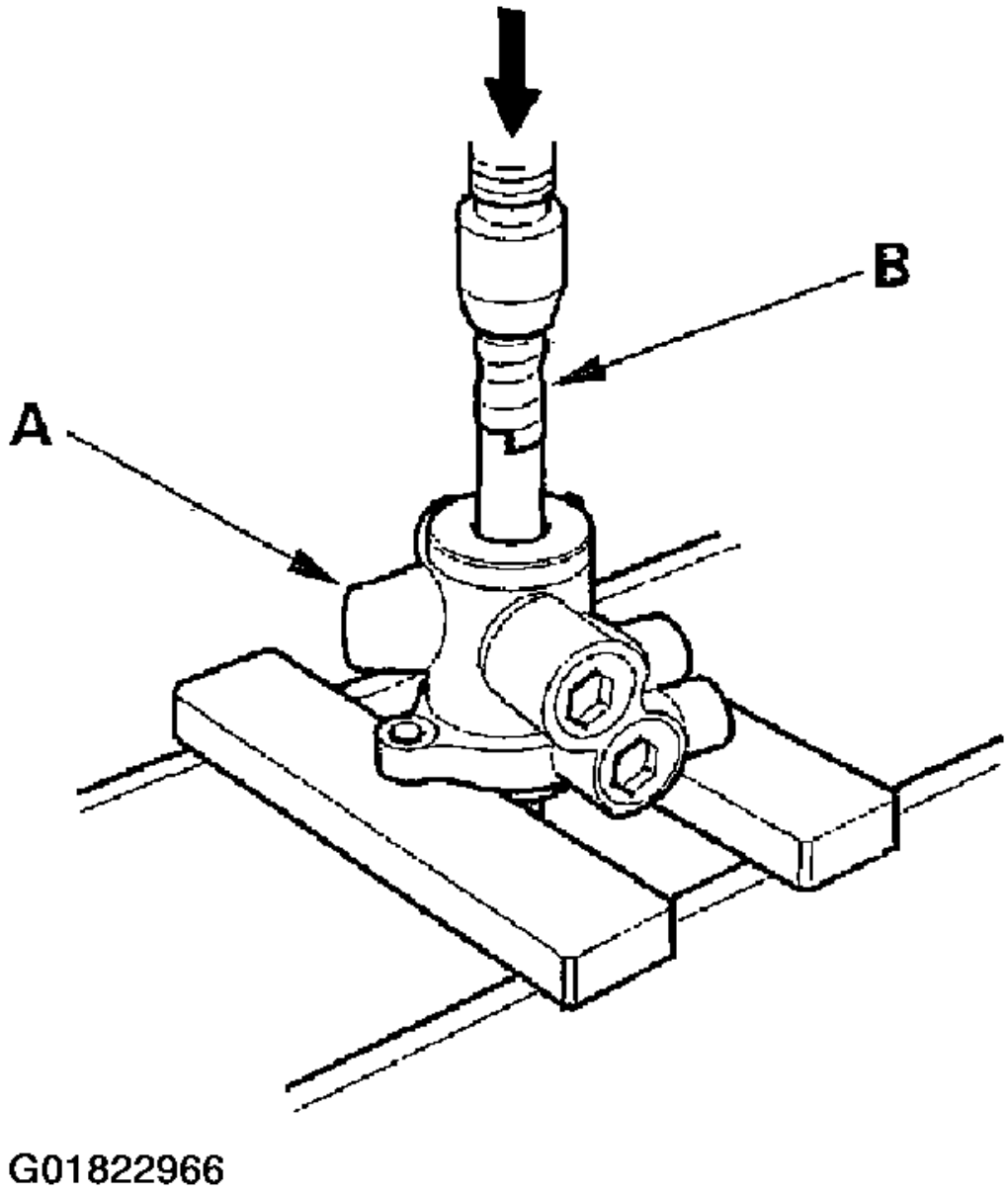

Fig. 84: Pressing Valve Housing From The Pinion Shaft/Valve

20. Separate the valve housing from the pinion shaft/valve using a press.
21. With your finger, check the inner wall of the valve housing where the seal ring slides. If there is a step in the wall, the housing is worn. Replace it.

NOTE: There may be sliding marks from the seal ring on the wall of the valve

cardiagn.com

housing. Replace the valve housing only if the wall is stepped.

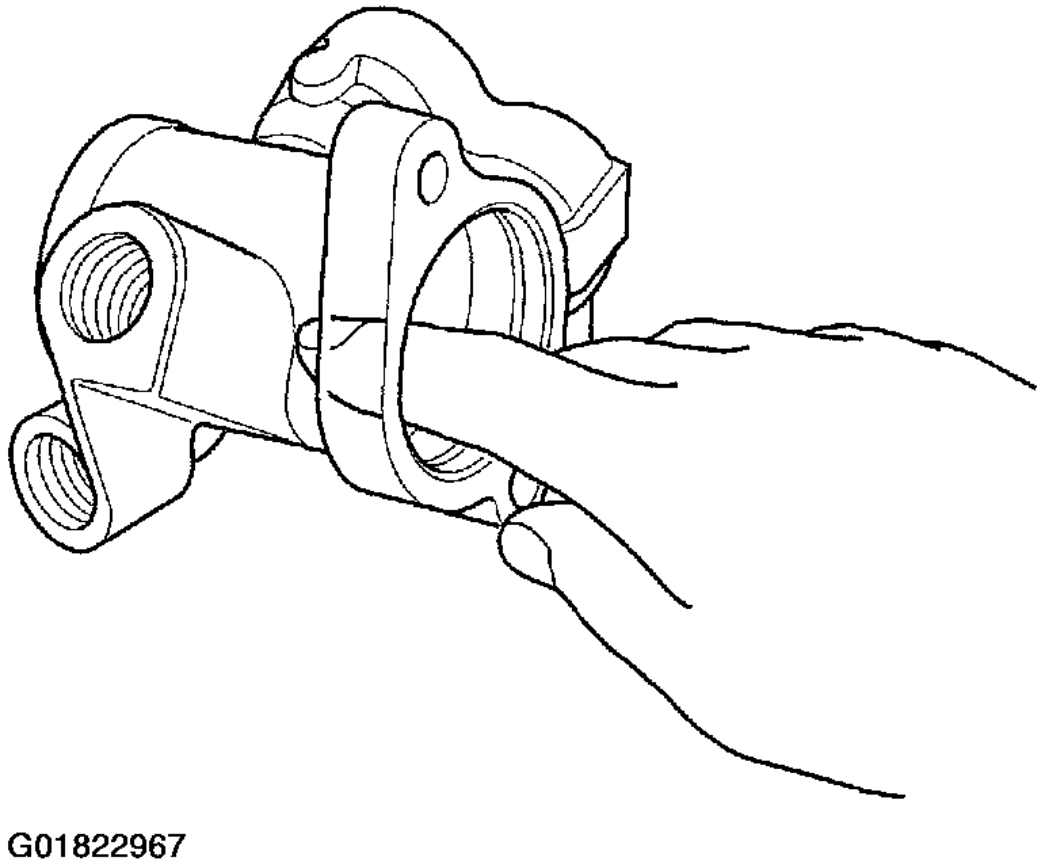

Fig. 85: Checking The Inner Wall Of The Valve Housing

22. Check for wear, burrs, and other damage to the edges of the grooves in the sleeve.

NOTE: **The pinion shaft and sleeve are a precision matched set. If either the pinion shaft or sleeve must be replaced, replace both parts as a set.**

cardiagn.com

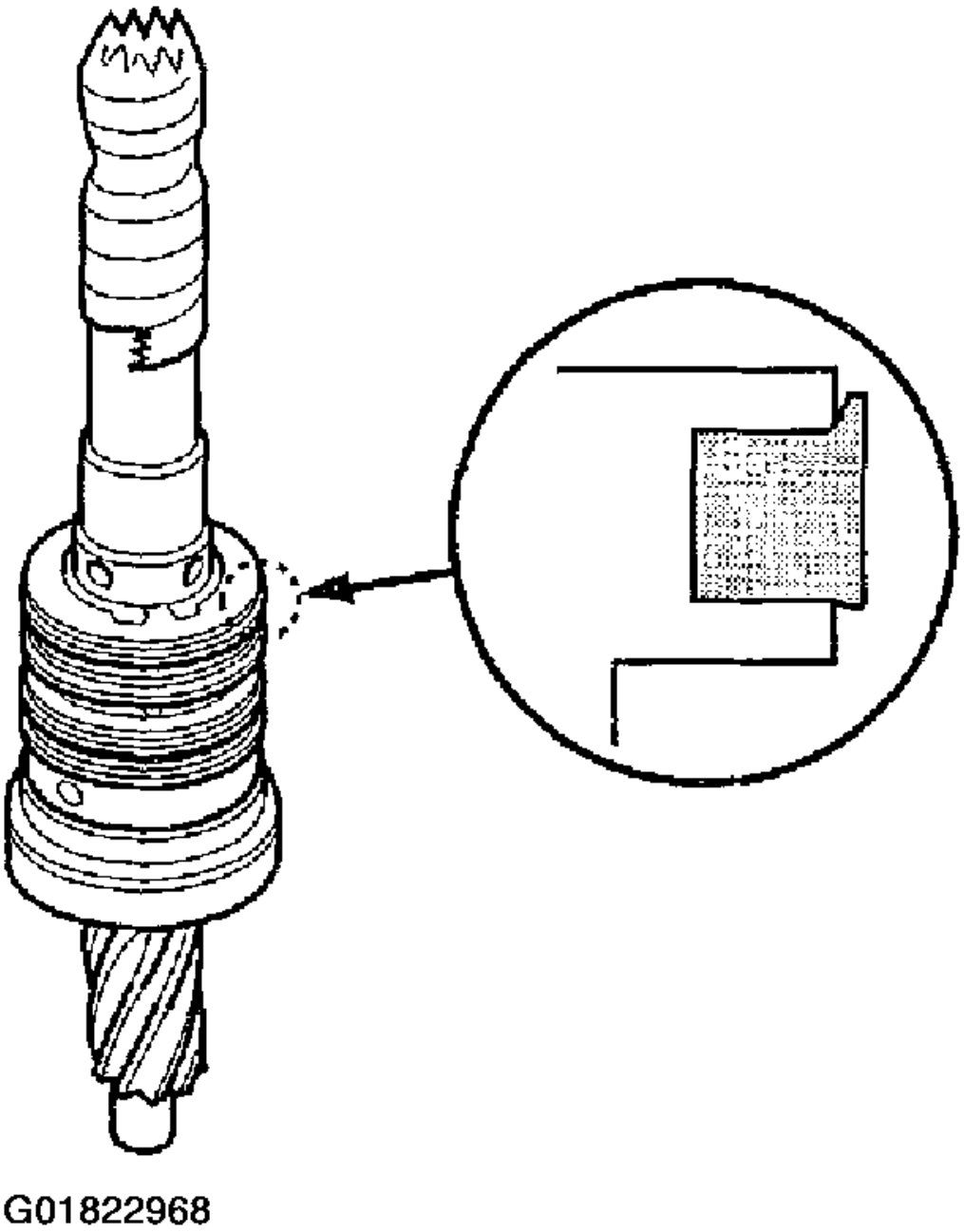

Fig. 86: Checking The Edges Of The Grooves In The Sleeve

23. Remove the snap ring (A) and sleeve (B) from the pinion shaft.

cardiagn.com

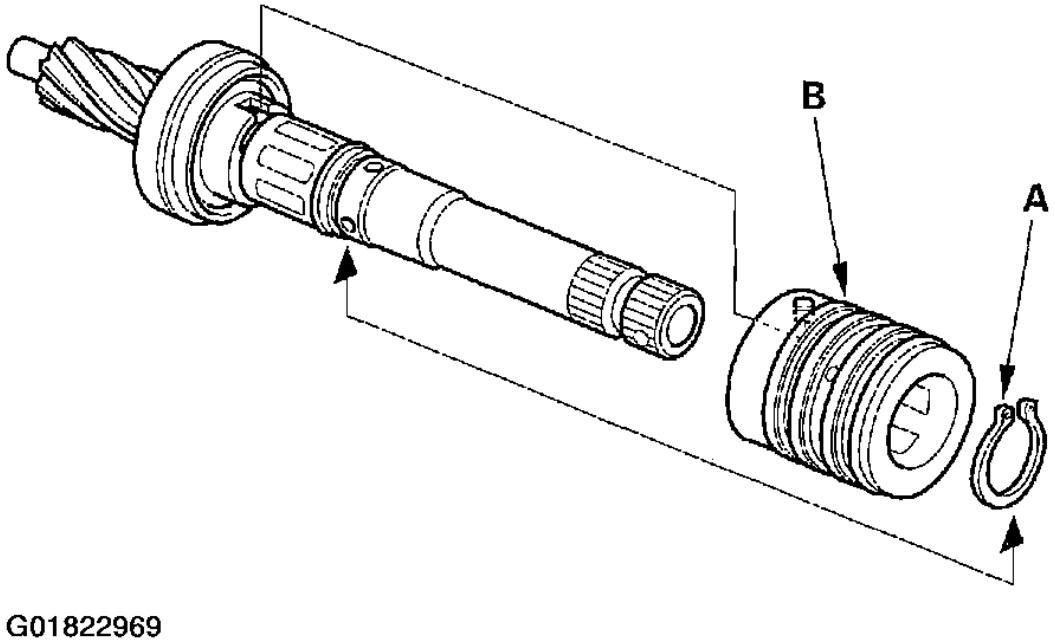

Fig. 87: Removing The Snap Ring & Sleeve From The Pinion Shaft

24. Using a cutter or an equivalent tool, cut and remove the four seal rings from the sleeve. Be careful not to damage the edges of the sleeve grooves and outer surface when removing the seal rings.

cardiagn.com

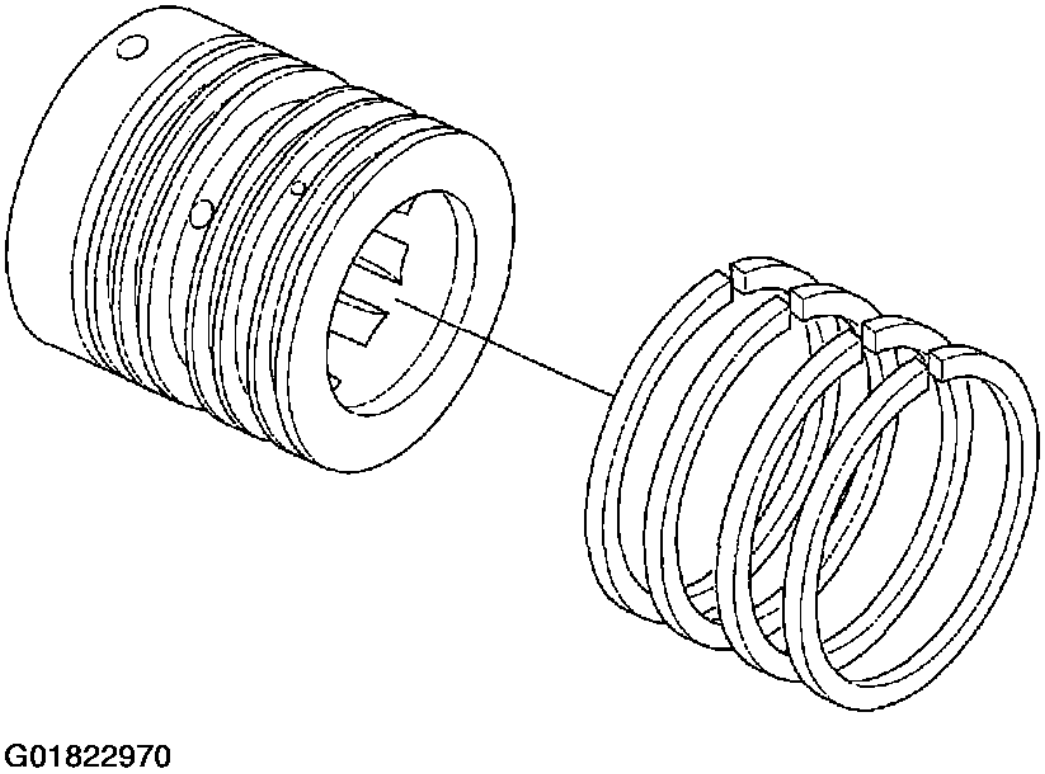

Fig. 88: Removing The Four Seal Rings From The Sleeve

25. Using a cutter or an equivalent tool, cut the valve seal ring (A) and O-ring (B) at the cutting groove position (C) in the pinion shaft. Remove the valve seal ring and O-ring. Be careful not to damage the edges of the pinion shaft groove and outer surface when removing the valve seal ring and O-ring.

cardiagn.com

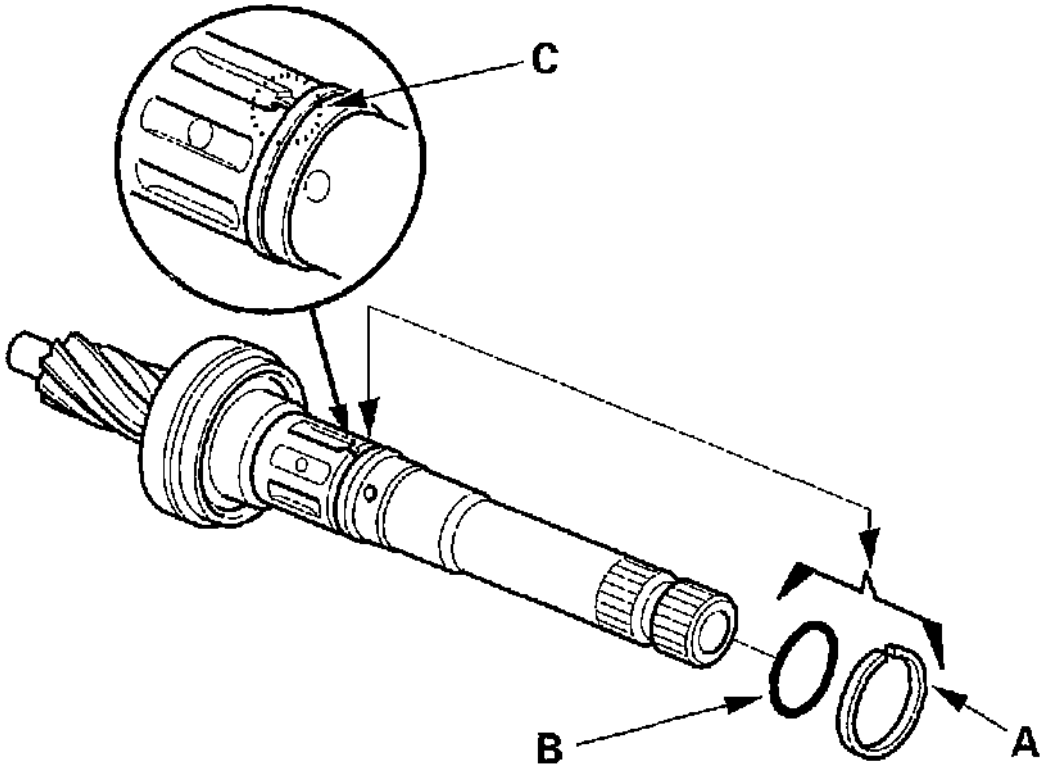

G01822971

Fig. 89: Removing The Valve Seal Ring & O-Ring

26. Remove the valve oil seal (A) and wave washer (B) from the pinion shaft. Note these items during disassembly:
    - Inspect the ball bearing (C) by rotating the outer race slowly. If there is any excessive play or wear, replace the pinion shaft and sleeve as an assembly.
    - The pinion shaft and sleeve are a precise fit; do not intermix old and NEW pinion shafts and sleeves.

cardiagn.com

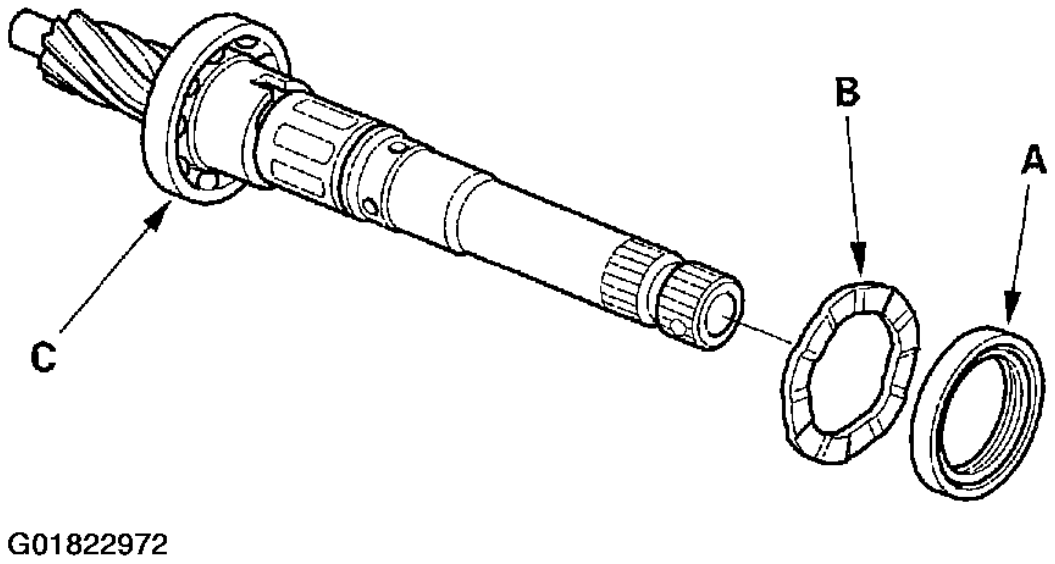

Fig. 90: Removing The Valve Oil Seal And Wave Washer From The Pinion Shaft

27. Press the valve oil seal (A) and roller bearing (B) out of the valve housing using a hydraulic press and special tool.

cardiagn.com

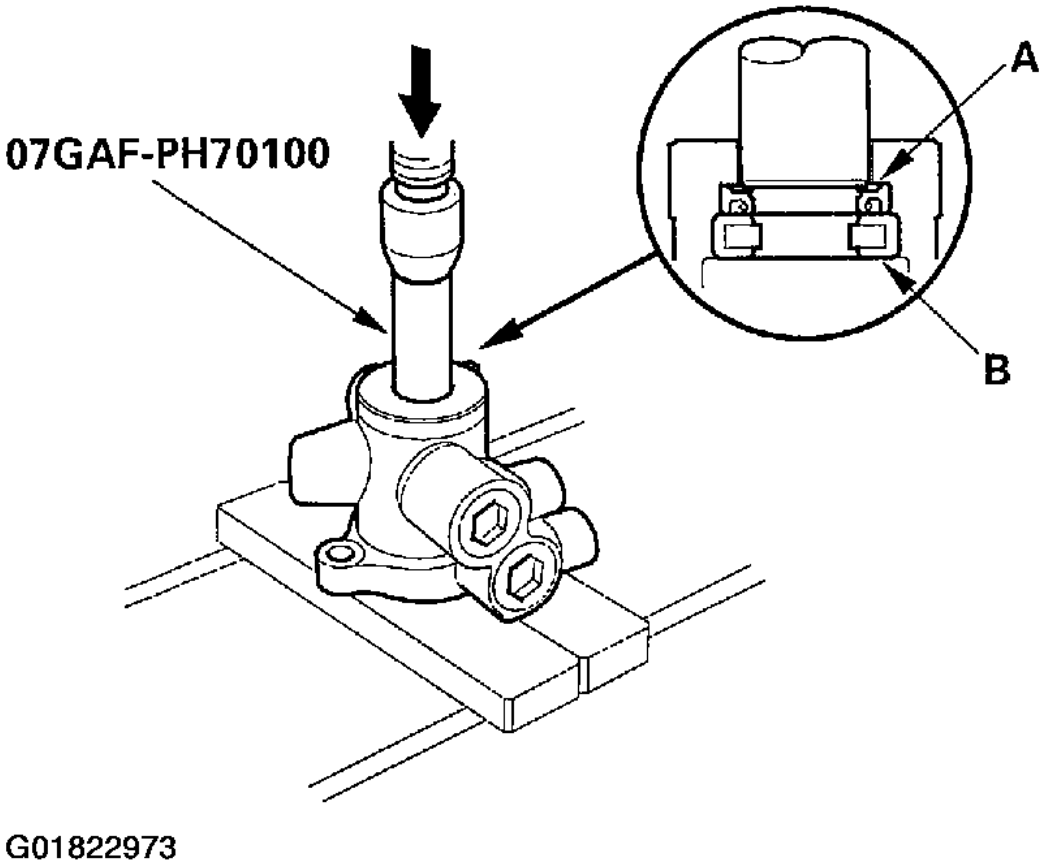

Fig. 91: Pressing The Valve Oil Seal And Roller Bearing Out Of The Valve Housing

28. Clean the disassembled parts with solvent, and dry them with compressed air. Do not dip rubber parts in the solvent.

Reassembly

29. Apply vinyl tape (A) to the stepped portion of the pinion shaft, and coat the surface of the vinyl tape with power steering fluid.

cardiagn.com

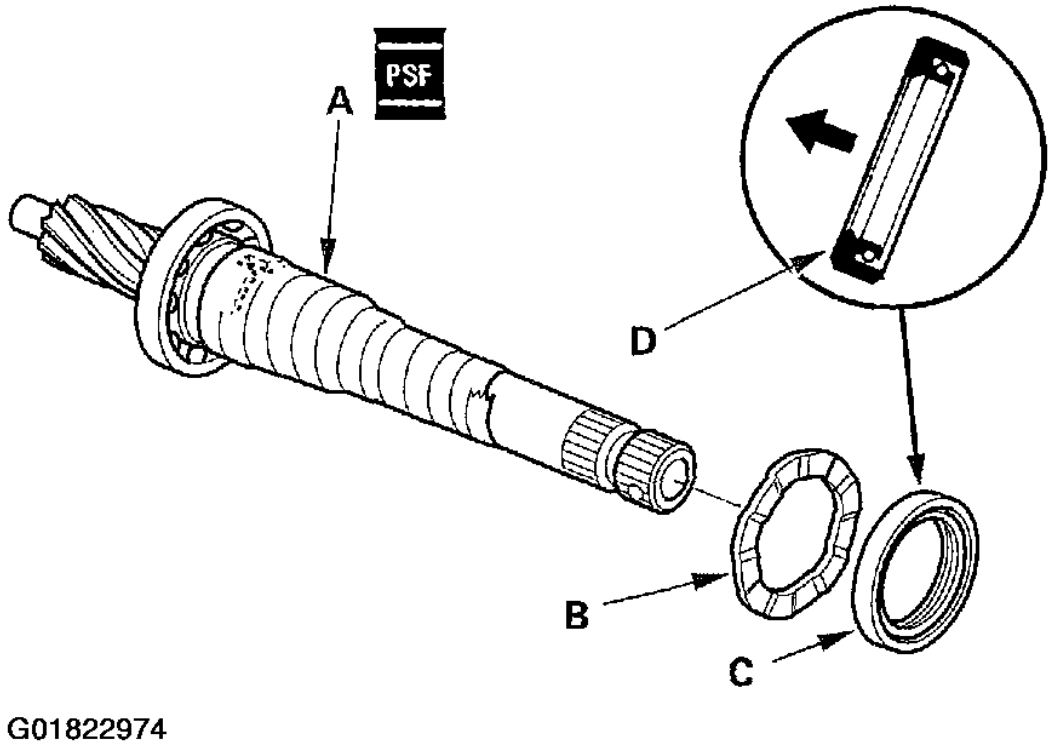

Fig. 92: Applying Vinyl Tape To The Stepped Portion Of The Pinion Shaft

30. Install the wave washer (B).
31. Coat the inside surface of the NEW valve oil seal (C) with power steering fluid, and install the seal with its grooved side facing opposite the bearing, then slide it over the pinion shaft, being careful not to damage its sealing lip (D).
32. Apply vinyl tape (A) to the splines and stepped portion of the shaft, and coat the surface of the vinyl tape with power steering fluid.

cardiagn.com

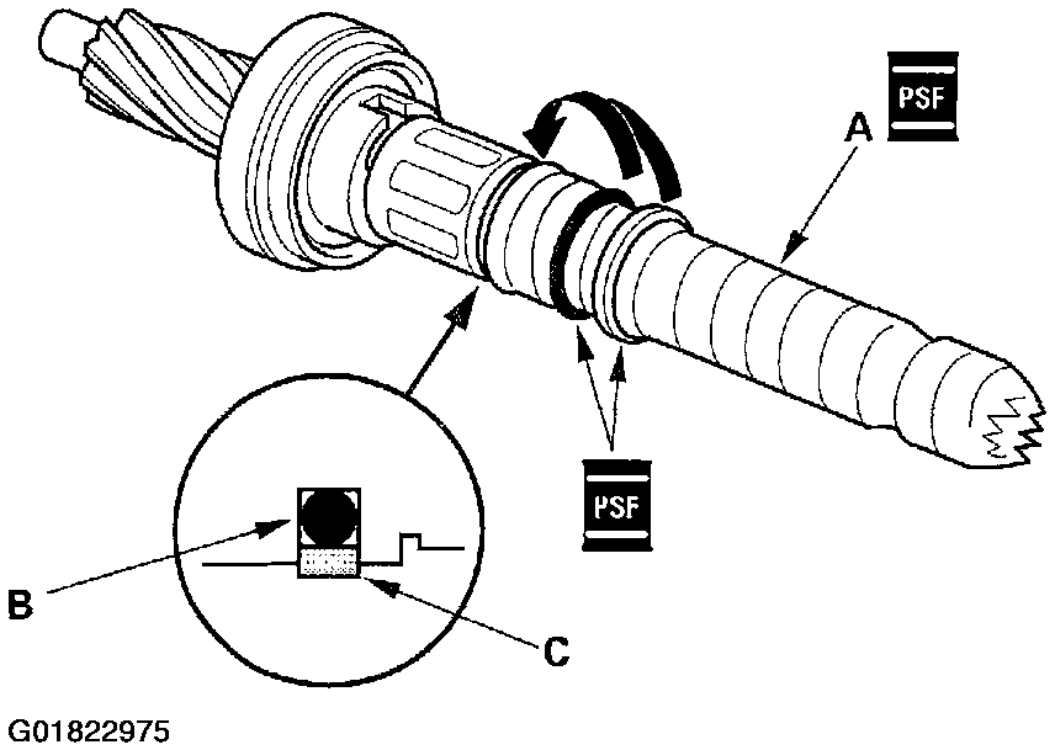

Fig. 93: Fitting The NEW O-Ring & The NEW Valve Seal Ring On The Pinion Shaft

33. Fit the NEW O-ring (B) in the groove of the pinion shaft. Then slide the NEW valve seal ring (C) over the shaft and in the groove on the pinion shaft.
34. Remove the tape, and apply power steering fluid to the surface of the valve seal ring (A).

cardiagn.com

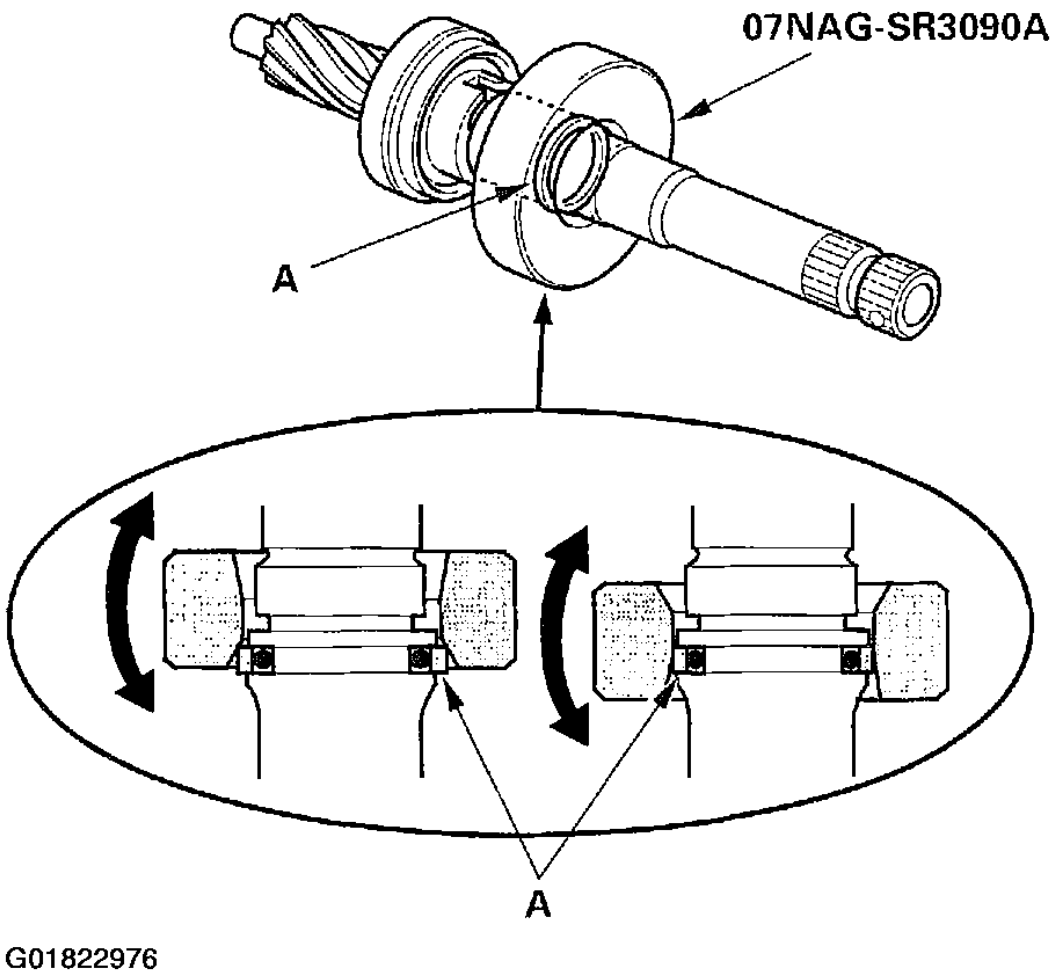

Fig. 94: Fitting Valve Seal Ring In The Pinion Shaft

35. Apply power steering fluid to the inside of the special tool. Set the larger diameter end of the special tool over the valve seal ring, and move the special tool up and down several times to make the valve seal ring fit in the pinion shaft groove.
36. Remove the special tool, turn it over, slide the smaller diameter end over the valve seal ring. Move it up and down several times to make the valve seal ring fits snugly in the pinion shaft groove.
37. Apply power steering fluid to the surface of the special tool. Slip two NEW seal rings (A) over the special tool from the smaller diameter end, and expand them. Install only two rings at a time from each end of the pinion shaft sleeve (B). Note these items when installing the seal ring:
    - Do not over-expand the seal ring. Install the resin seal rings with care so as not to damage them. After installation, make sure you contract the seal rings using the special tool (sizing tool).
    - There are two types of sleeve seal rings: black and brown. Do not mix the different types of rings as they are not compatible.

cardiagn.com

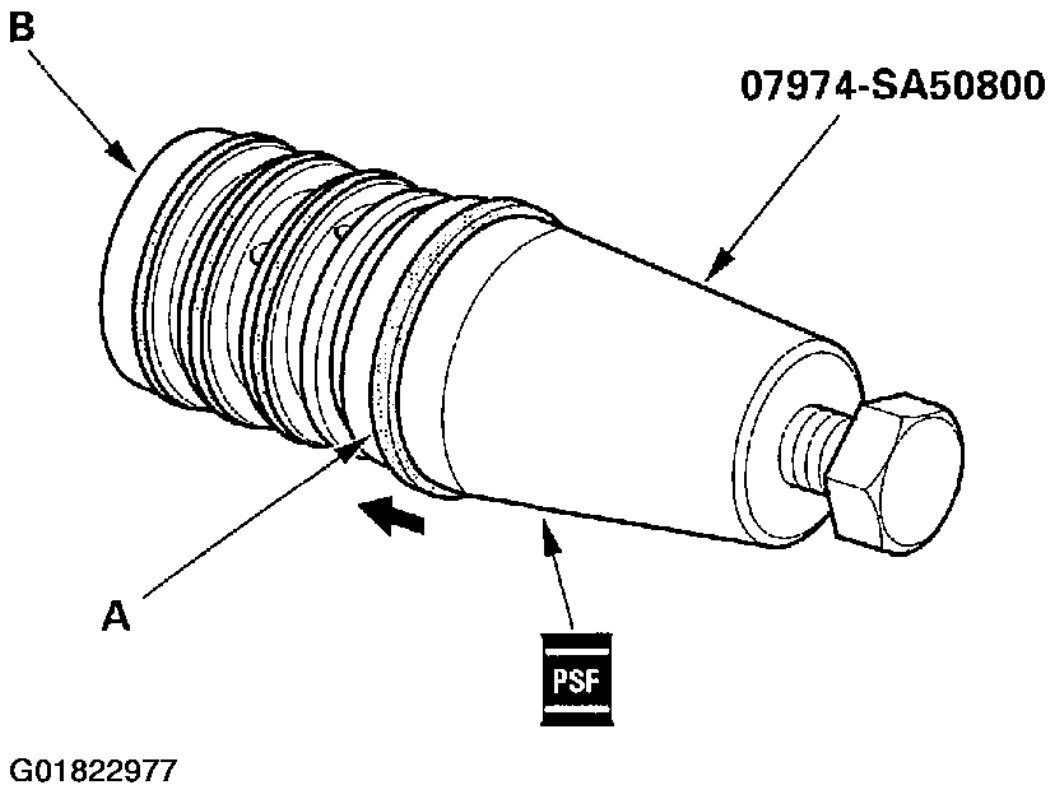

Fig. 95: Slipping NEW Seal Rings Over The Special Tool

38. Align the special tool with each groove in the sleeve, and slide a sleeve seal ring into each groove. After installation, compress the seal rings with your fingers temporarily.
39. Apply power steering fluid to the seal rings on the sleeve, and to the entire inside surface of the special tool, then slowly insert the sleeve into the special tool.

cardiagn.com

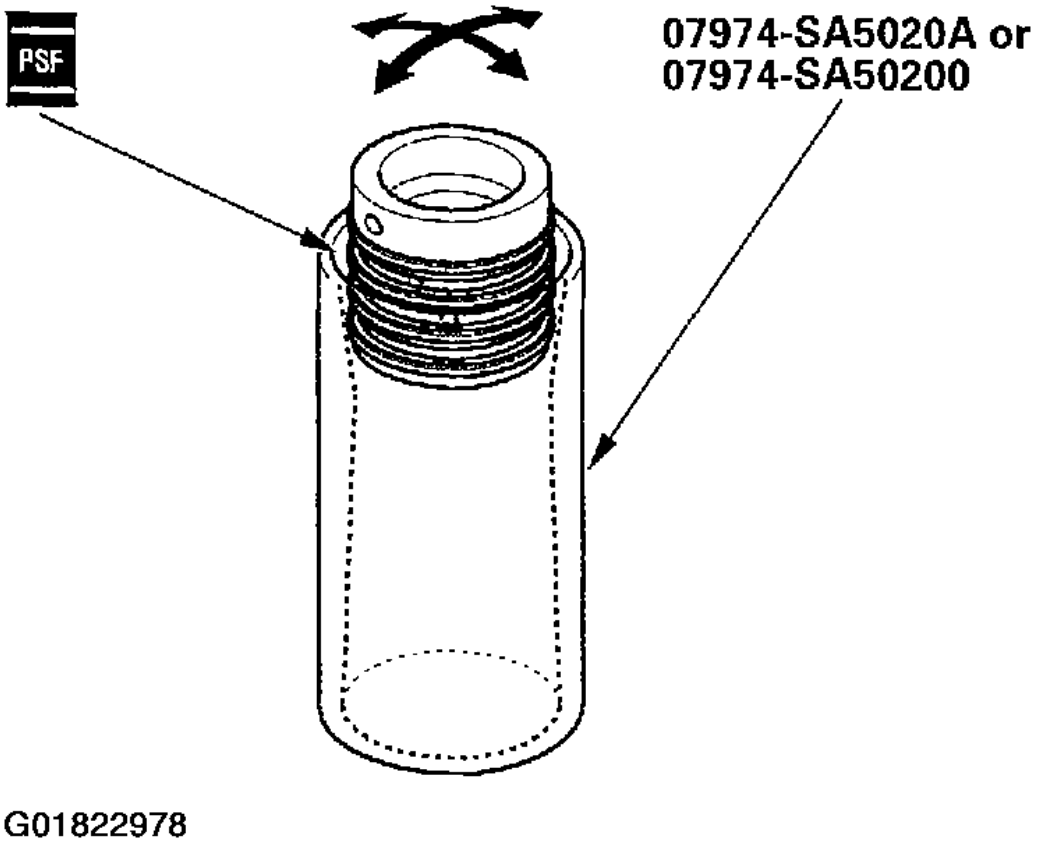

Fig. 96: Seating Seal Rings

40. Move the sleeve back and forth several times to make the seal rings snugly fit in the sleeve. Make sure the seal rings are not twisted.
41. Apply power steering fluid to the surface of the pinion shaft (A). Slide the sleeve (B) onto the pinion shaft by aligning the locating pin (C) on the inside of the sleeve with the cutout (D) in the shaft. Then install the NEW snap ring (E) securely in the pinion shaft groove. Be careful not to damage the valve seal ring when inserting the sleeve.

cardiagn.com

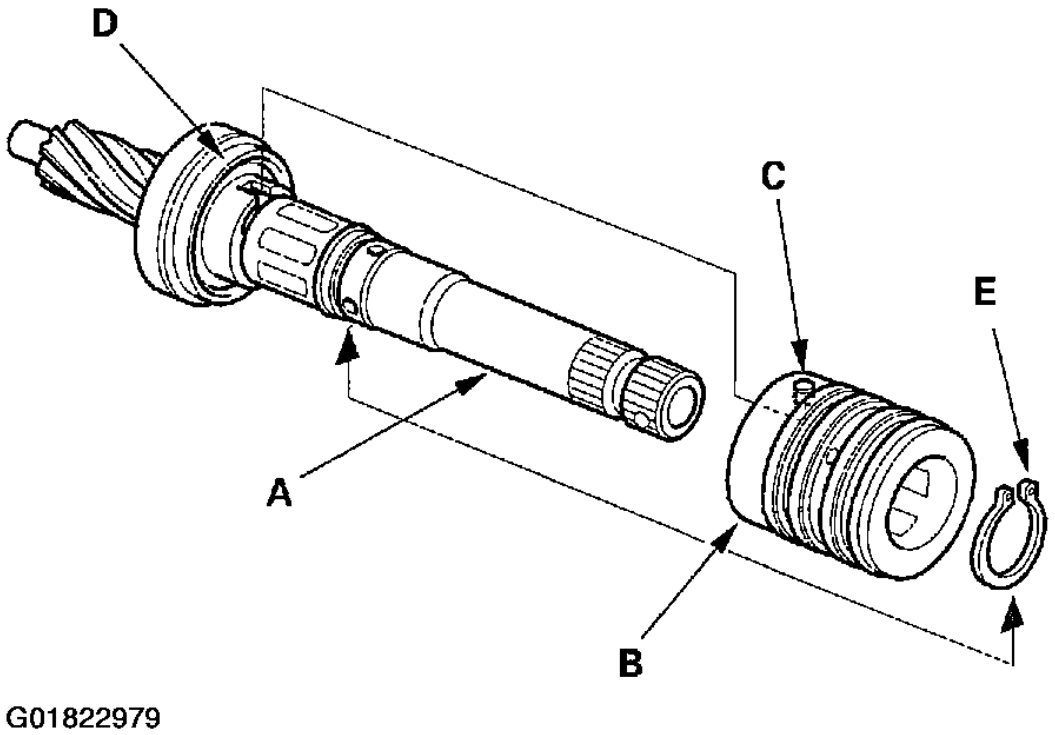

Fig. 97: Sliding The Sleeve Onto The Pinion Shaft

42. Apply power steering fluid to the seal ring lip of the NEW valve oil seal (A), then install the seal in the valve housing (B) using a hydraulic press and special tools. Install the seal with its grooved side facing the tool.

cardiagn.com

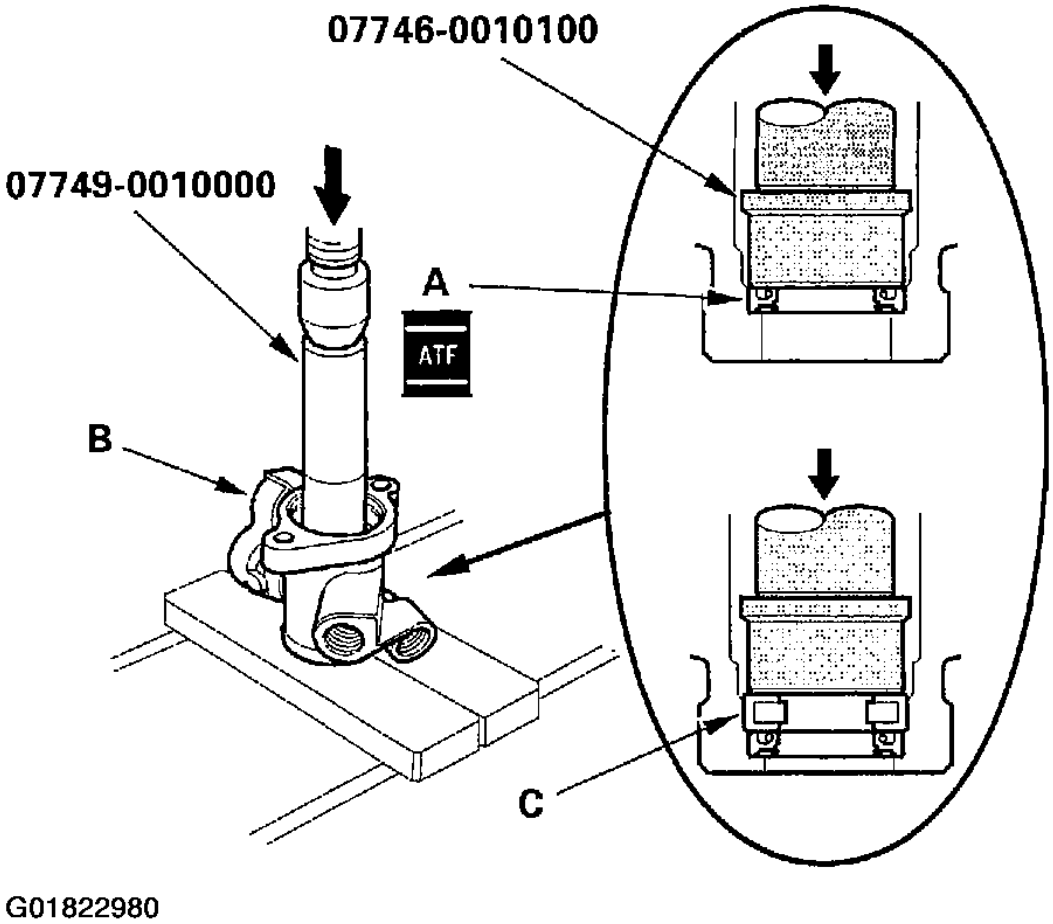

Fig. 98: Installing The Seal In The Valve Housing

43. Press the roller bearing (C) into the valve housing with a hydraulic press and special tool.
44. Apply vinyl tape (A) to the pinion shaft, then coat the vinyl tape with power steering fluid.

cardiagn.com

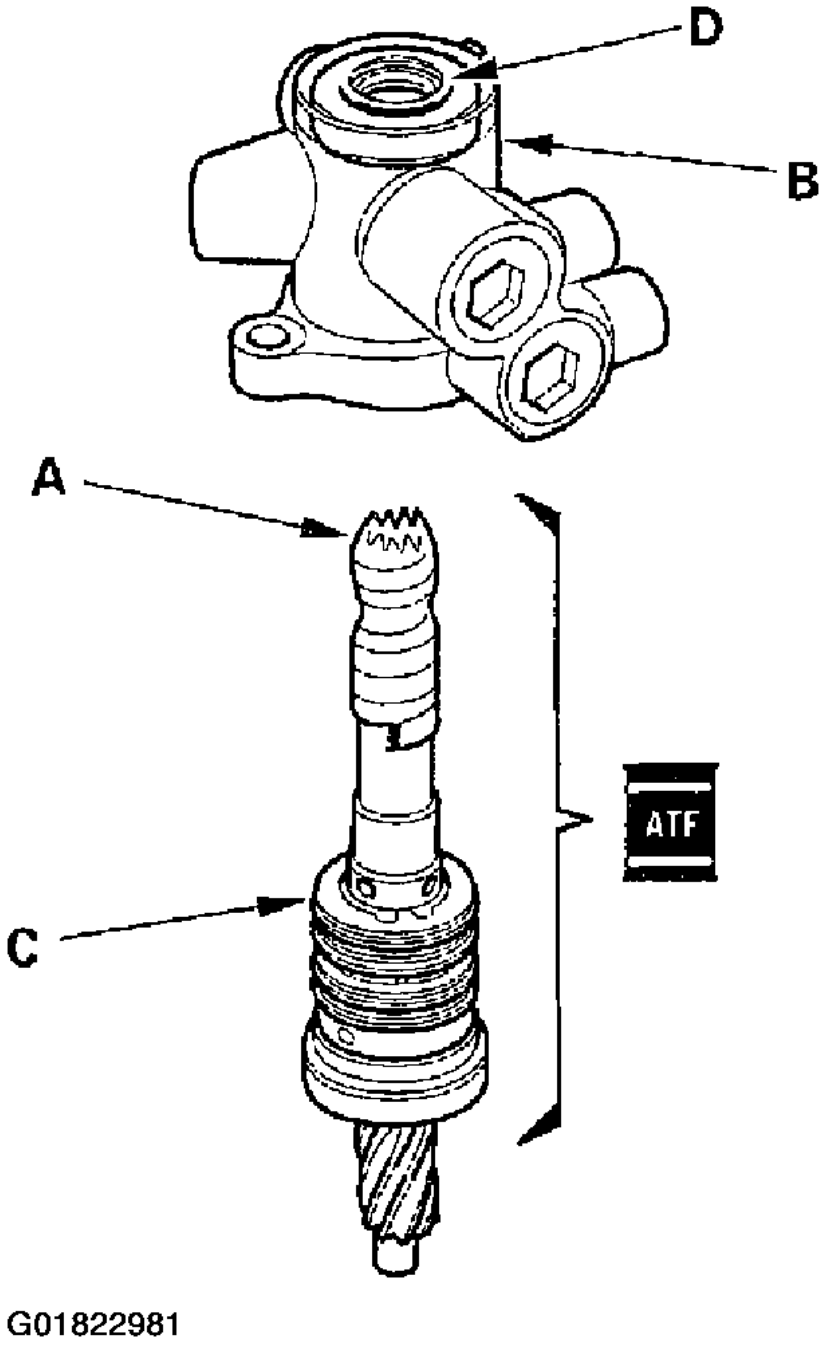

Fig. 99: Inserting The Pinion Shaft Into The Valve Housing

45. Insert the pinion shaft into the valve housing (B). Be careful not to damage the valve seal rings (C) and valve oil seal sealing lip (D).

cardiagn.com

46. Remove the vinyl tape from the pinion shaft, then remove any residue from the tape adhesive.
47. Press the pinion shaft/sleeve into the valve housing with a hydraulic press. Check that the pinion shaft/sleeve turns smoothly by hand after installing it.

cardiagn.com

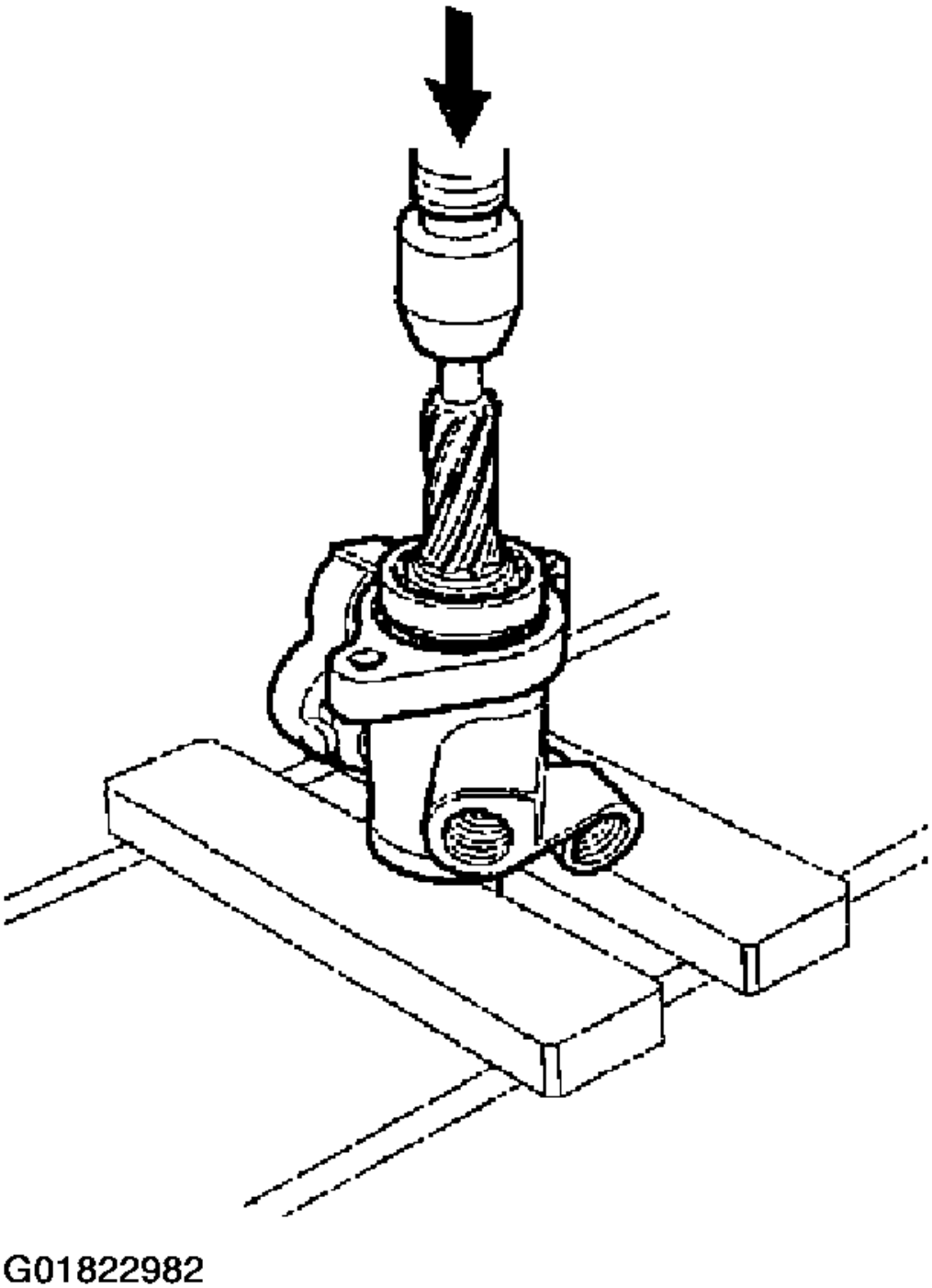

Fig. 100: Pressing The Pinion Shaft/Sleeve Into The Valve Housing

cardiagn.com

48. Coat the special tool with power steering fluid, then slide it onto the rack, big end first.
49. Position the NEW O-ring (A) and NEW piston seal ring (B) on the special tool, then slide them down toward the big end of the tool. Note these items during reassembly:
    - Do not over expand the resin seal rings. Install the resin seal rings with care so as not to damage them. After installation, make sure you contract the seal ring using the special tool (sizing tool).
    - Replace piston's O-ring and seal ring as a set.

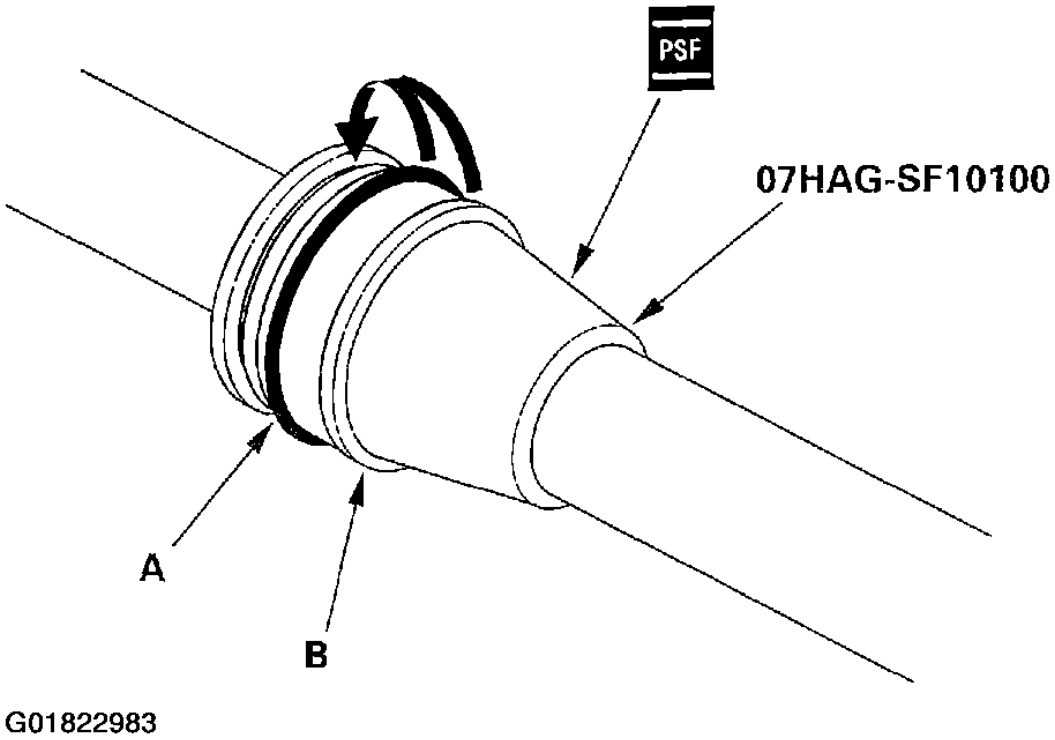

Fig. 101: Positioning The NEW O-Ring & NEW Piston Seal Ring On The Special Tool

50. Pull the O-ring off into the piston groove, then pull the piston seal ring off into the piston groove on top of the O-ring.
51. Coat the piston seal ring (A) and the inside of the special tool with power steering fluid, then carefully slide the tool onto the rack and over the piston seal ring.
52. Move the special tool back and forth several times to make the piston seal ring fits snugly in the piston.

cardiagn.com

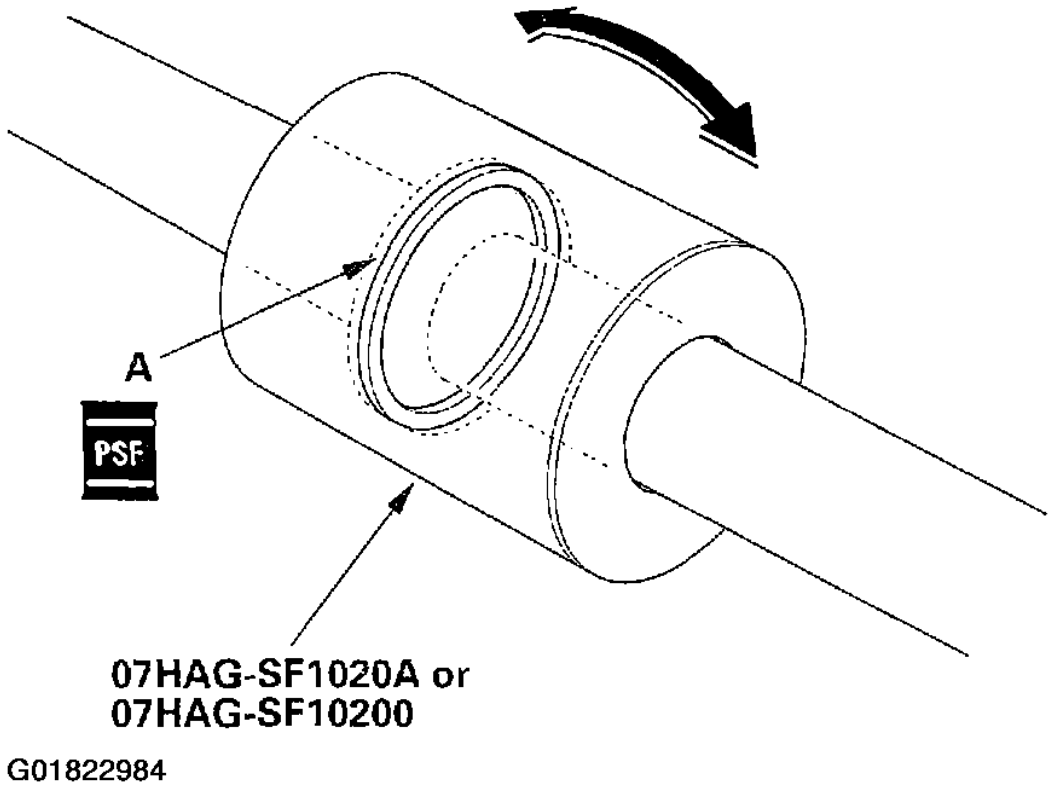

Fig. 102: Seating Piston Seal

53. Coat the sliding surface of the special tool (A) and NEW cylinder end seal (B) with power steering fluid. Place the seal on the special tool with its grooved side (C) facing opposite the special tool.

cardiagn.com

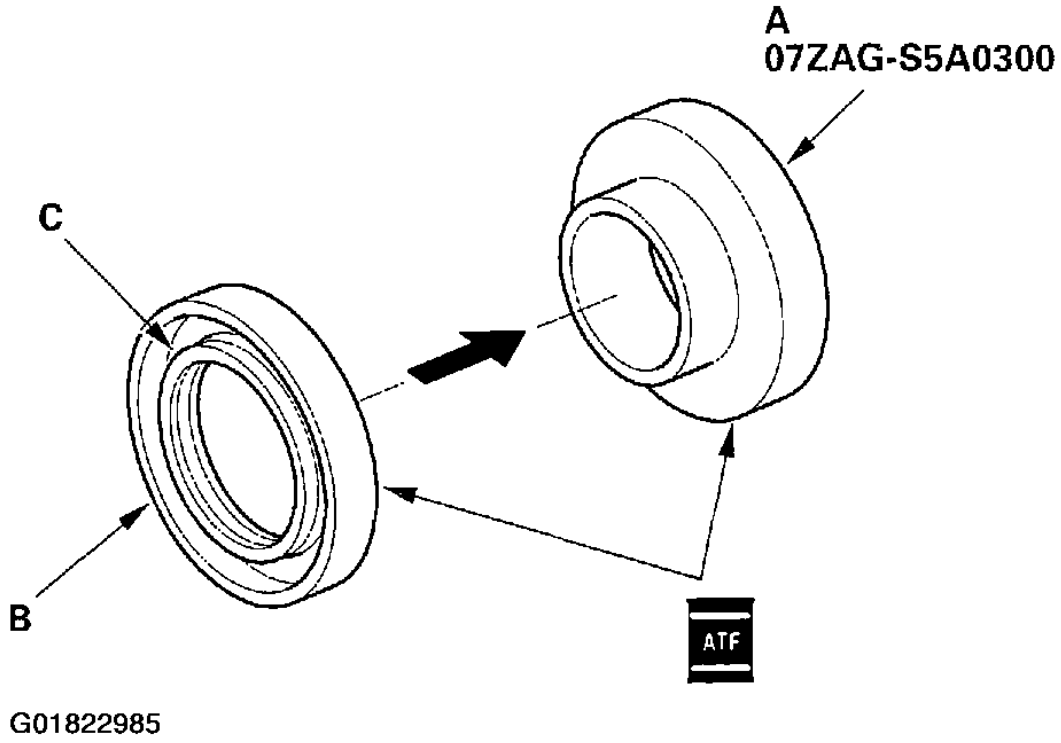

Fig. 103: Placing The Seal On The Special Tool

54. Coat the surface of the steering rack (A) with power steering fluid.

cardiagn.com

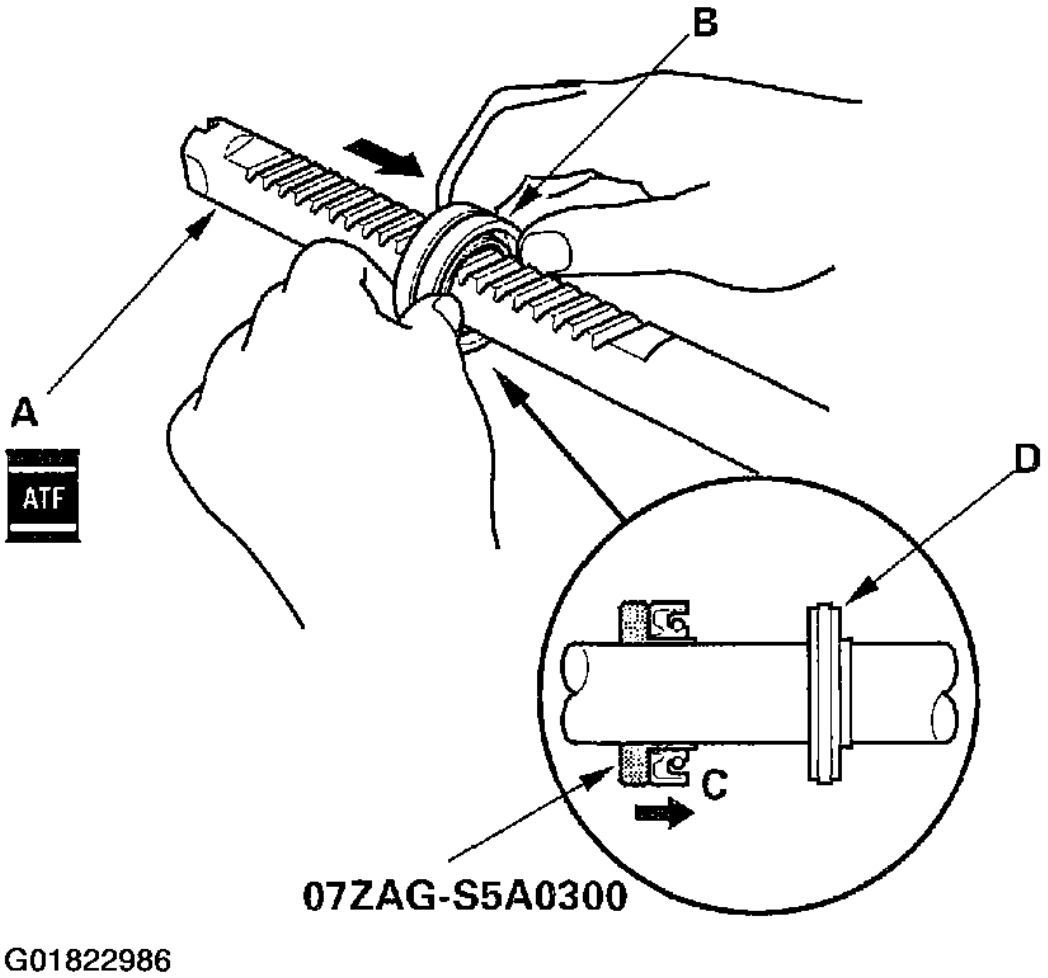

Fig. 104: Installing The Cylinder End Seal Onto The Steering Rack

55. Install the cylinder end seal (B) onto the steering rack with its grooved side (C) toward the piston (D).
56. Separate the cylinder end seal from the special tool, then remove the special tool.
57. Install the NEW backup ring (A) on the steering rack, then place the backup ring and cylinder end seal (B) against the piston (C).

cardiagn.com

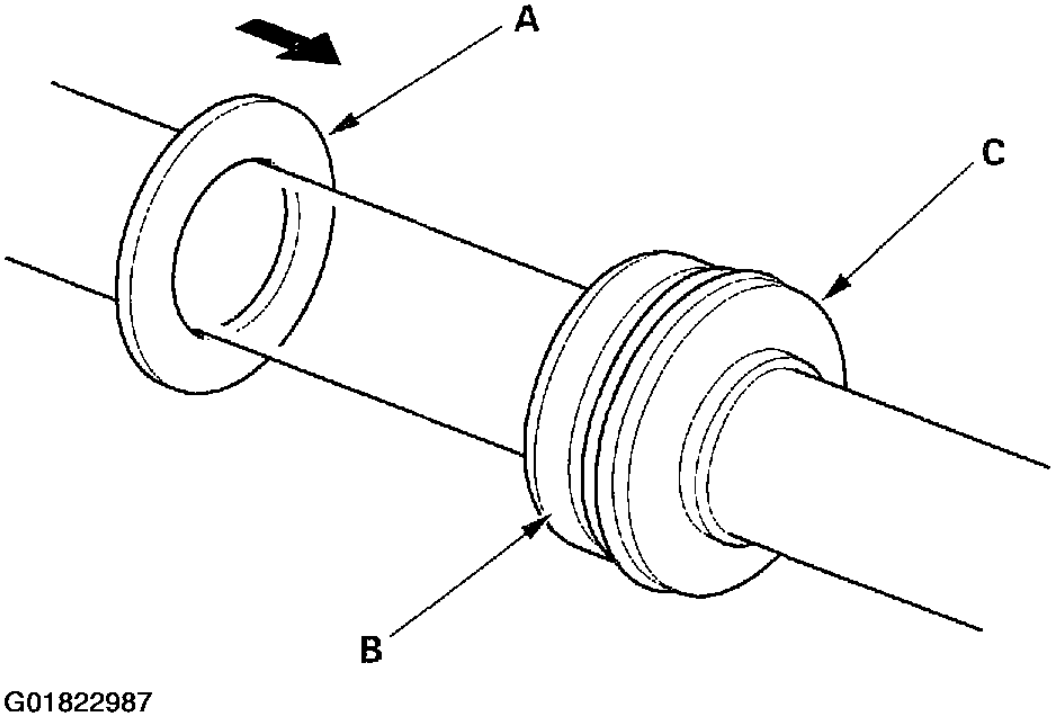

Fig. 105: Installing The NEW Backup Ring On The Steering Rack

58. Apply multipurpose grease to the steering rack teeth, then insert the steering rack into the gearbox housing. Be careful not to damage the inner surface of the cylinder wall with the rack edges.

cardiagn.com

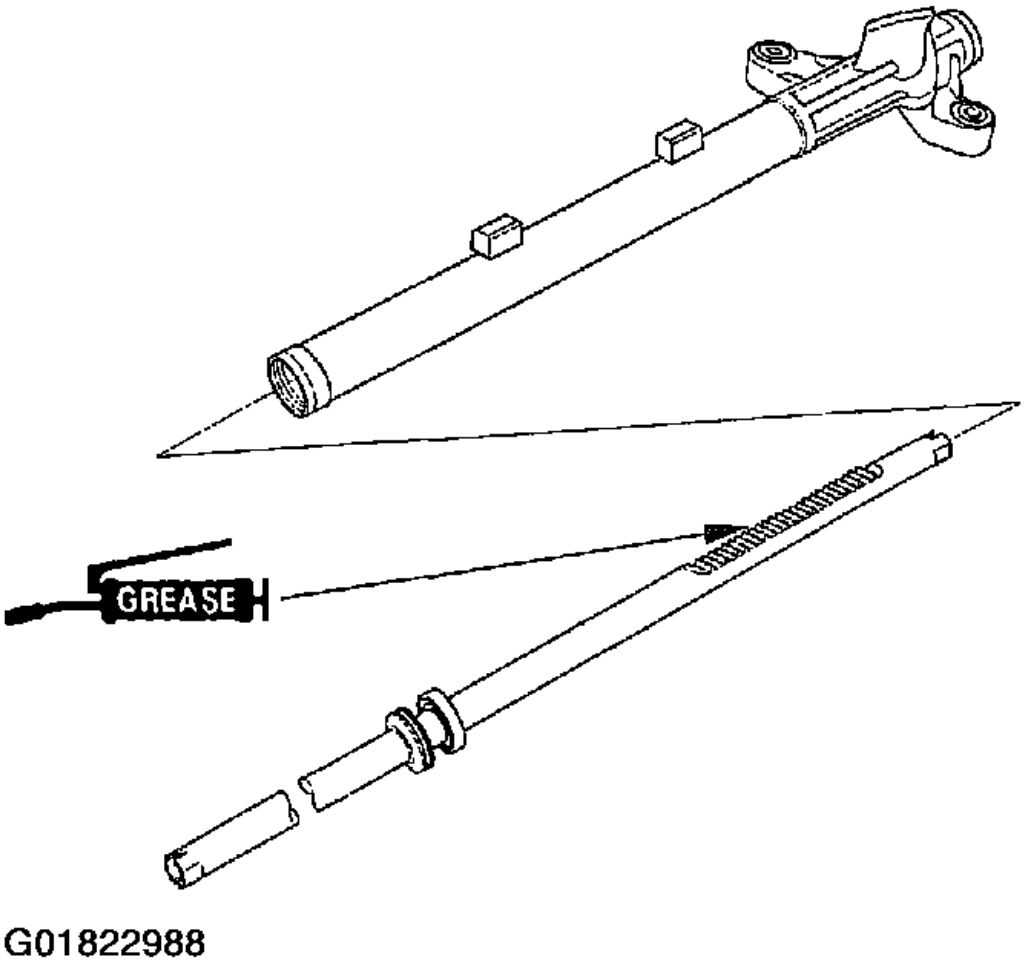

Fig. 106: Inserting The Steering Rack Into The Gearbox Housing

59. Insert an appropriate size deep socket wrench (A) onto the steering rack as shown.

cardiagn.com

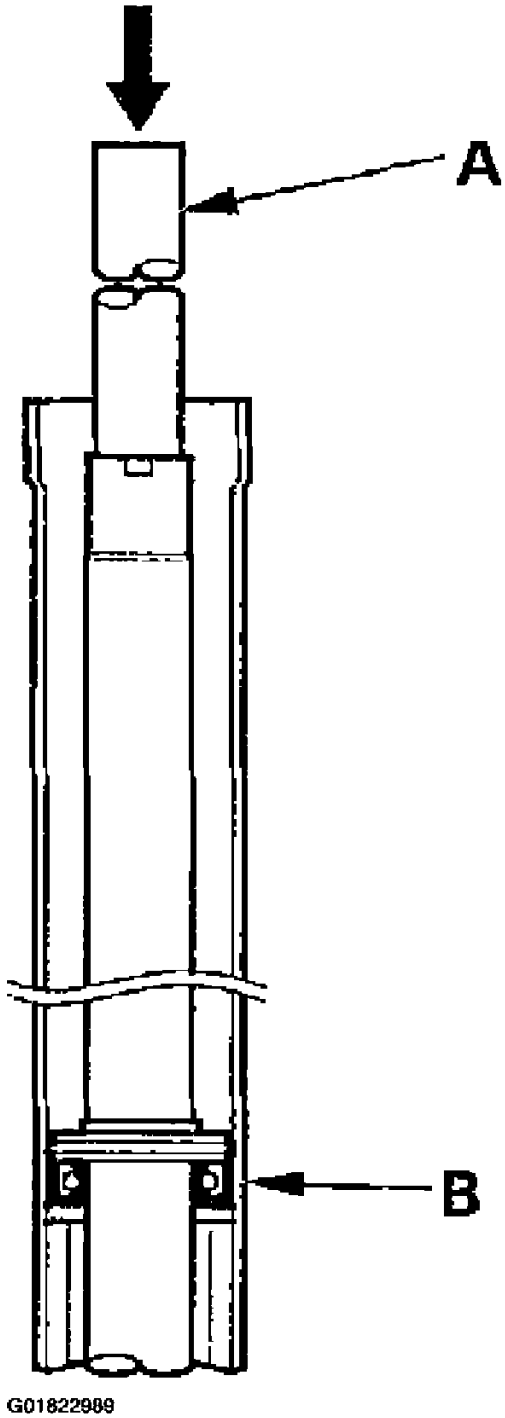

Fig. 107: Inserting An Appropriate Size Deep Socket Wrench Onto The Steering Rack

60. Install the cylinder end seal (B) into the bottom of the cylinder by pressing on the tool with a press. Do not push on the tool with excessive force as it may damage the cylinder end seal.
61. Remove the tool, and center the steering rack.

cardiagn.com

62. Coat the sliding surface of the special tool (A) and NEW cylinder end seal (B) with power steering fluid. Place the seal on the special tool with its grooved side (C) facing opposite the special tool.

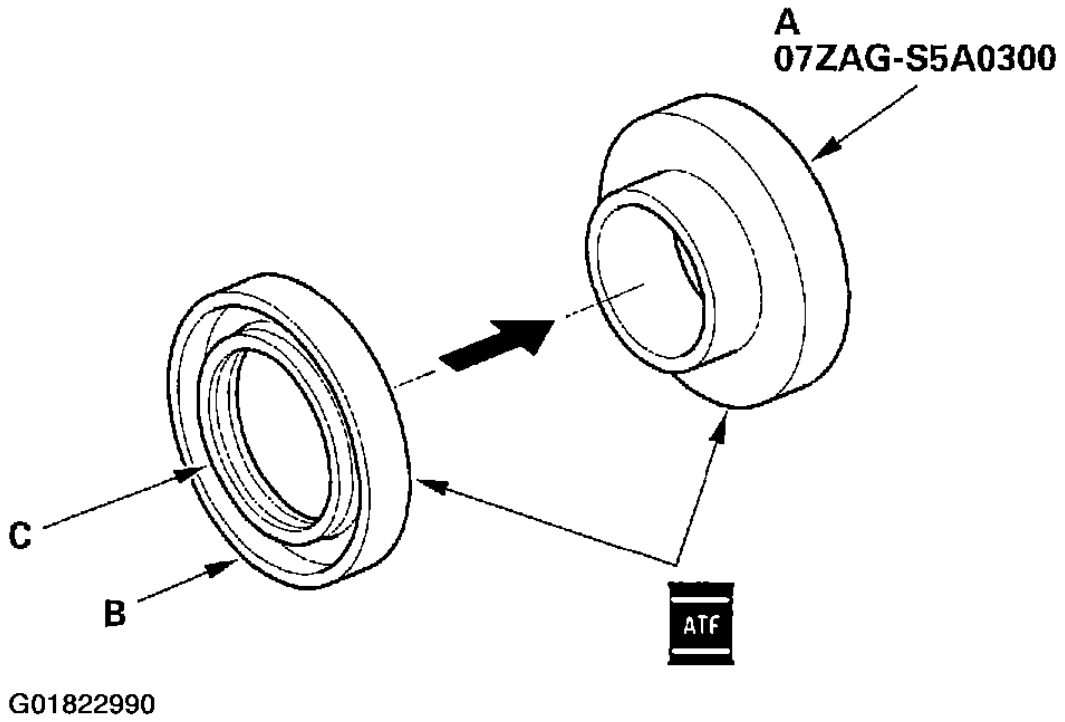

Fig. 108: Placing The Seal On The Special Tool

63. Coat the inside surface of the special tool and steering rack with power steering fluid, then install the cylinder end seal (A) onto the steering rack with its grooved side toward the cylinder.

cardiagn.com

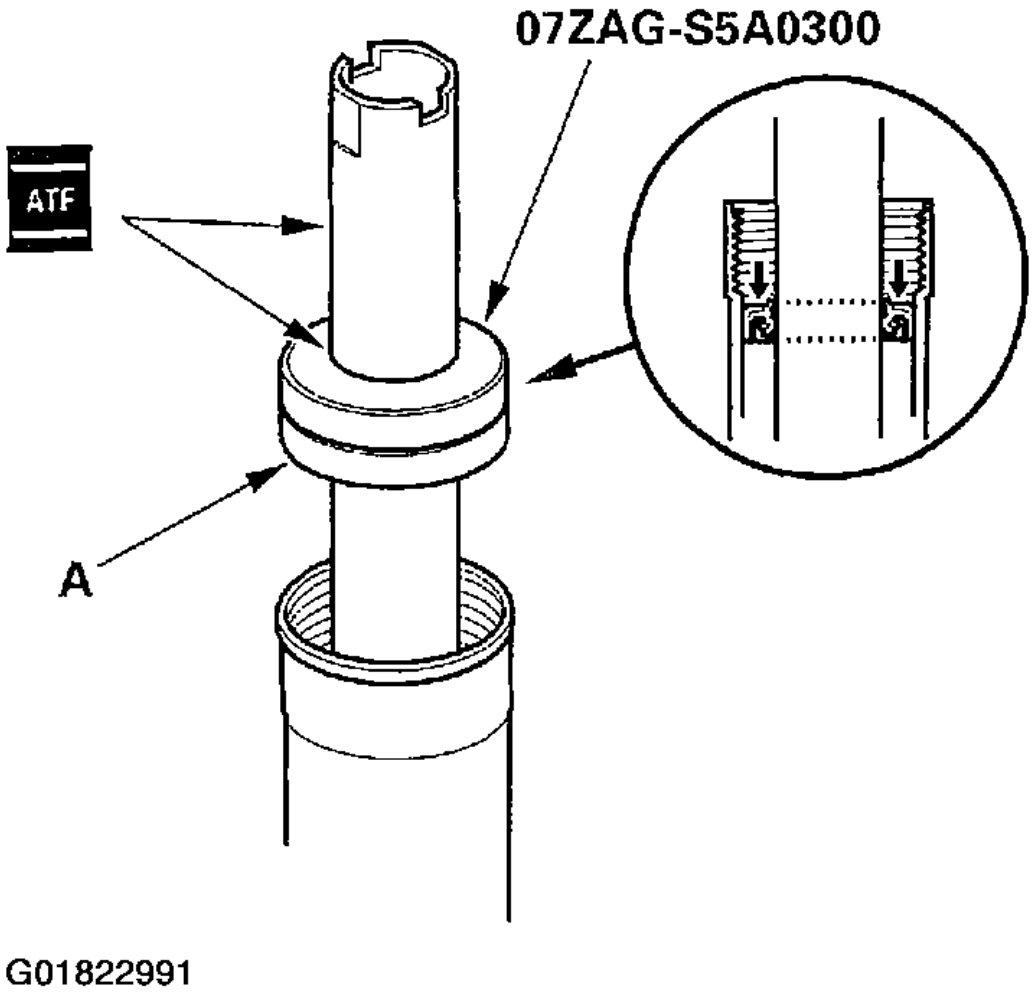

Fig. 109: Installing The Cylinder End Seal Onto The Steering Rack

64. Separate the cylinder end seal from the special tool, then remove the special tool.
65. Push in the cylinder end seal with your finger. Be careful not to damage the face of the seal with the threads and burrs at the staked position of the cylinder housing.
66. Hold the gearbox housing using a C-clamp (commercially available) (A) and wooden blocks (B). Do not clamp the cylinder part of the gearbox housing in the vise.

cardiagn.com

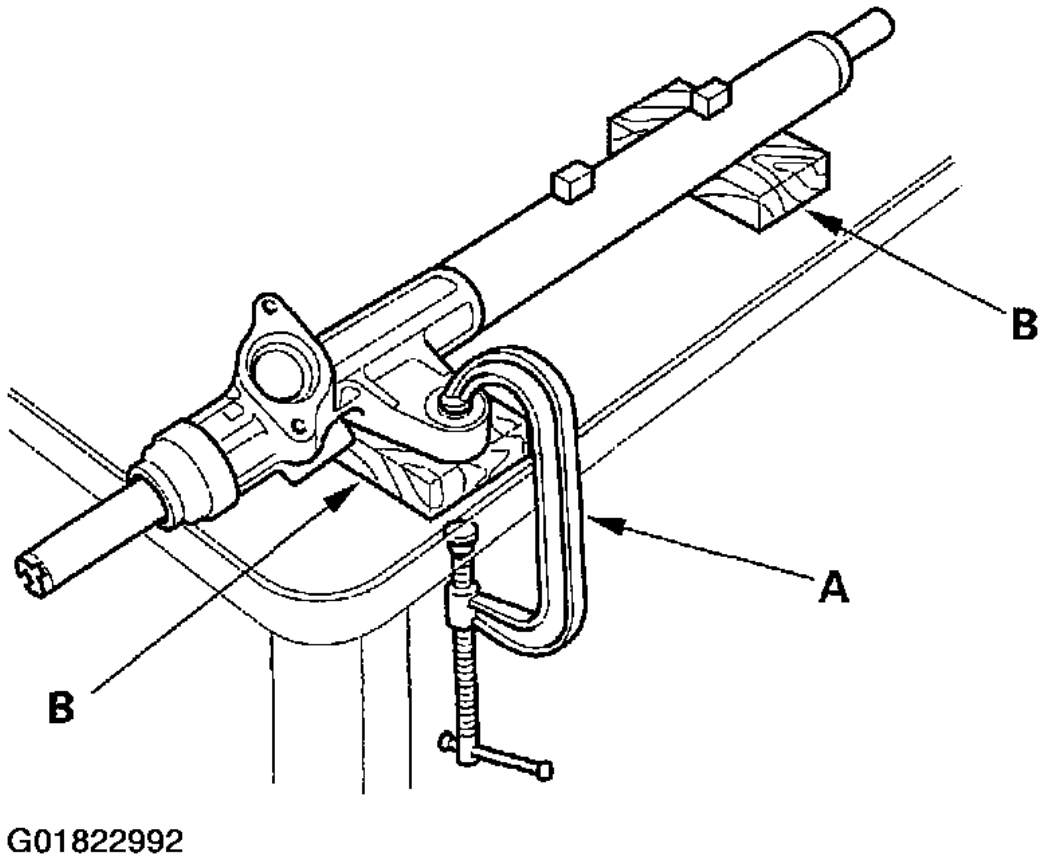

Fig. 110: Holding The Gearbox Housing Using A C-Clamp & Wooden Blocks

67. Coat the inside surface of the cylinder end (A) with power steering fluid, then install the cylinder end by screwing it into the cylinder (B). Tighten the cylinder end to the specified torque.

cardiagn.com

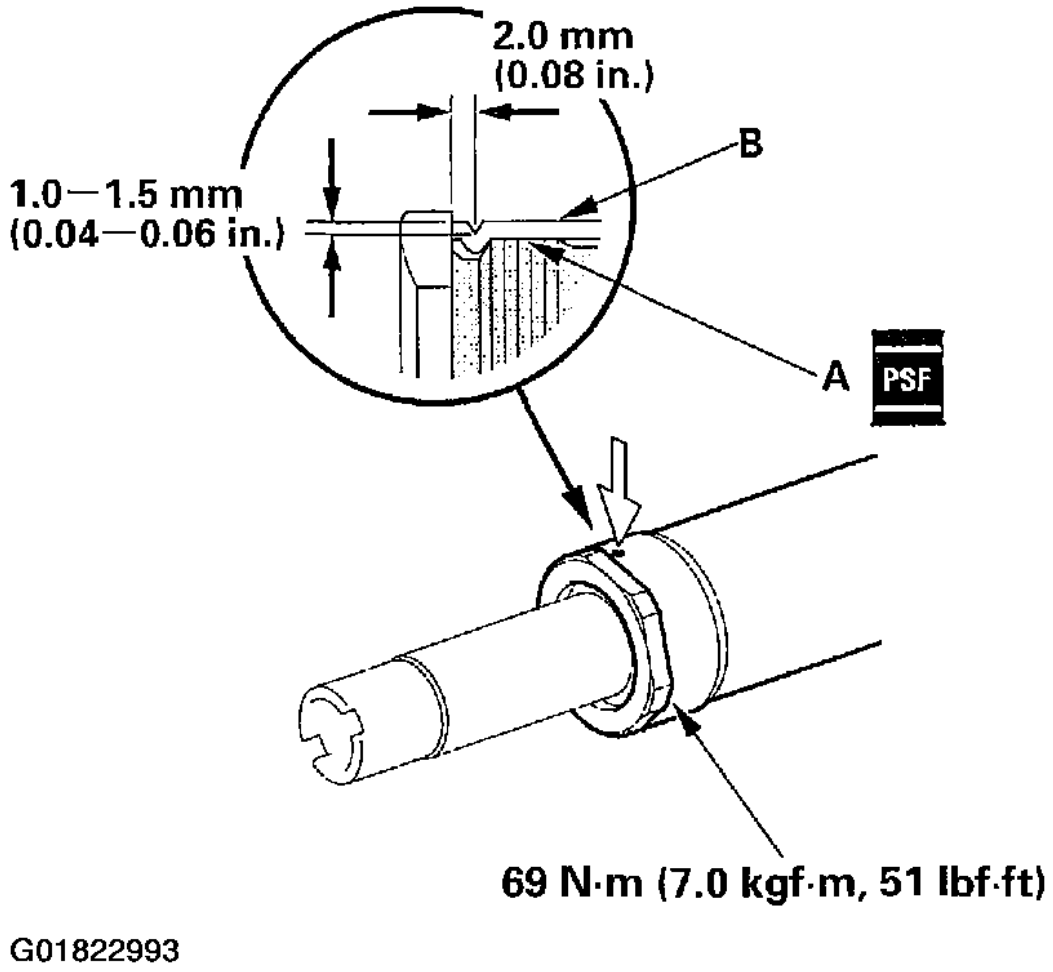

Fig. 111: Installing The Cylinder End By Screwing It Into The Cylinder & Staking

68. Stake the point of the cylinder shown (opposite from where the stake was removed during disassembly).
69. Coat the NEW O-ring (A) with multipurpose grease, and carefully fit it on the valve housing.

cardiagn.com

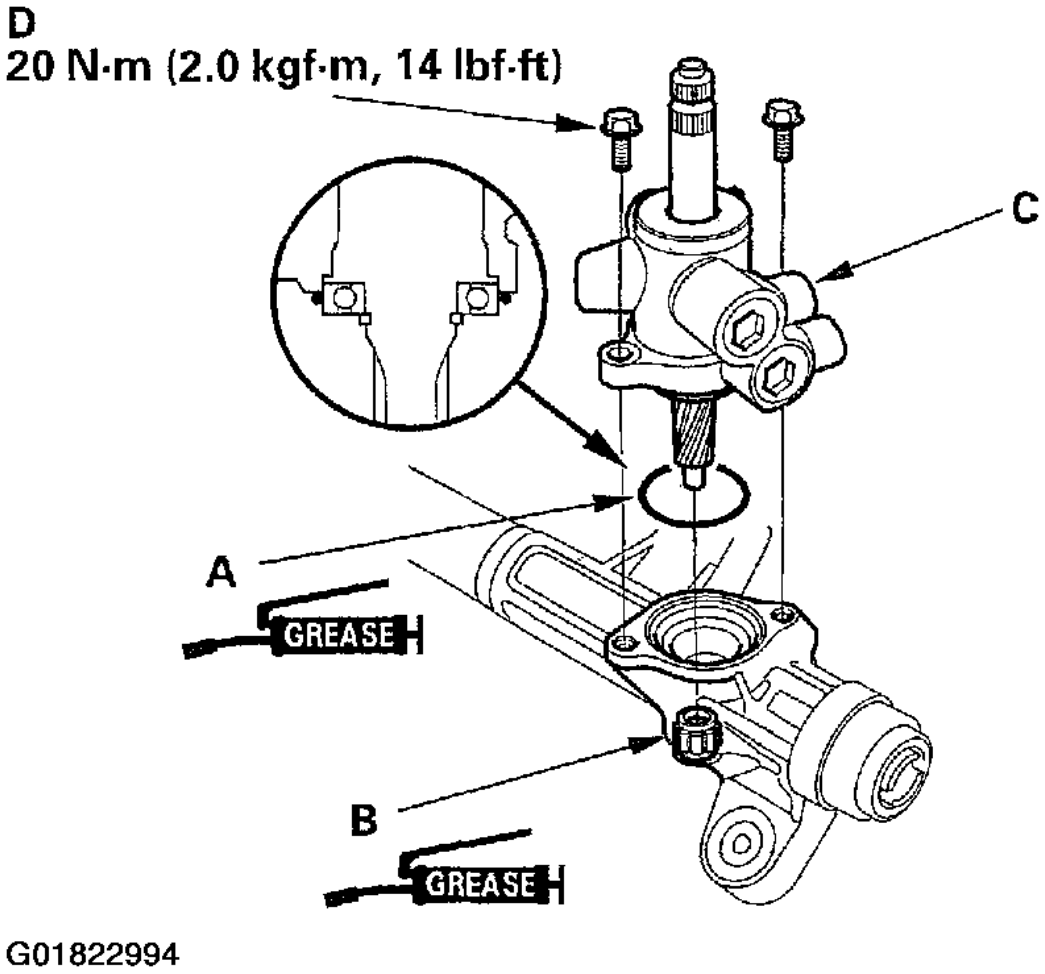

Fig. 112: Installing The Valve Body Unit By Engaging The Gears

70. Apply multipurpose grease to the needle bearing (B) in the gearbox housing, then install the valve body unit (C) by engaging the gears. Note the valve body unit installation position (direction of the line connections).
71. Tighten the flange bolts (D) to the specified torque.
72. Install the cylinder lines. Note these items during reassembly:
    - Thoroughly clean the joints of the cylinder lines. The joints must be free of foreign material.
    - Install the cylinder lines by tightening the flare nuts by hand first, then tighten the flare nuts to the specified torque.

cardiagn.com

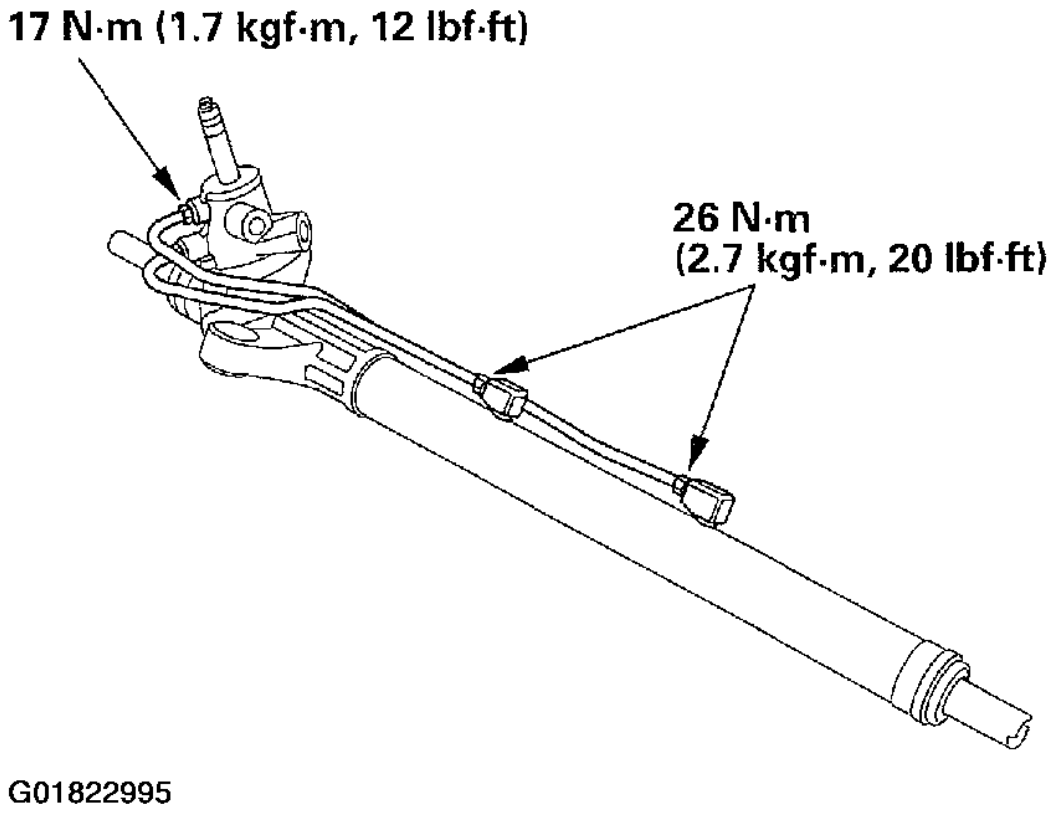

Fig. 113: Installing The Cylinder Lines

73. Apply multipurpose grease to the sliding surface and circumference of the rack guide (A), and install it onto the gearbox housing.

cardiagn.com

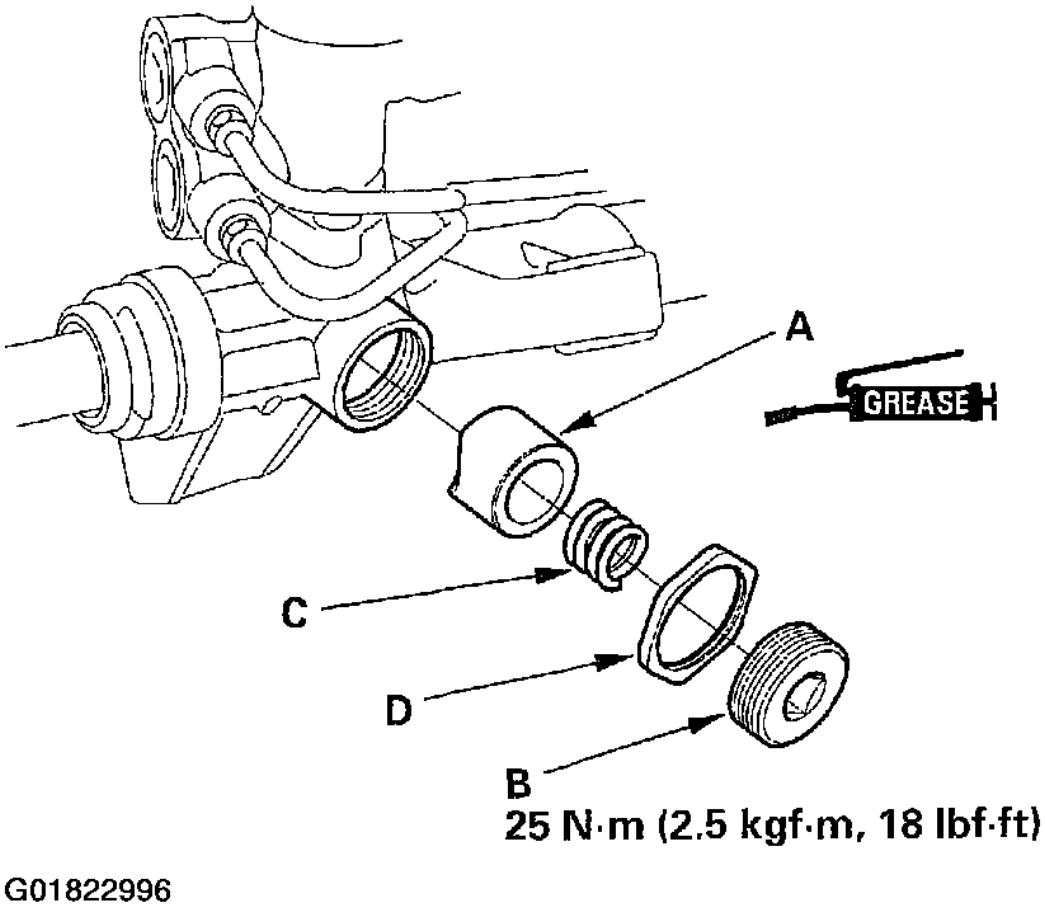

Fig. 114: Installing The Spring, Rack Guide Screw & Locknut

74. Apply NEW sealant (Three Bond 1215 or Loctite 5699) to middle of the threads on the rack guide screw (B), then install the spring (C) and rack guide screw.
75. Tighten the rack guide screw, and loosely install the locknut (D).
76. Adjust the rack guide screw (see **RACK GUIDE ADJUSTMENT**). After adjusting, check that the rack moves smoothly by sliding it right and left.
77. Install a NEW stop rubber (A) and a NEW lock washer (B). Align the lock washer tabs (D) with the slots (E) on the rack end (C) while holding the lock washer in place. Repeat this step for the other side of the rack.

cardiagn.com

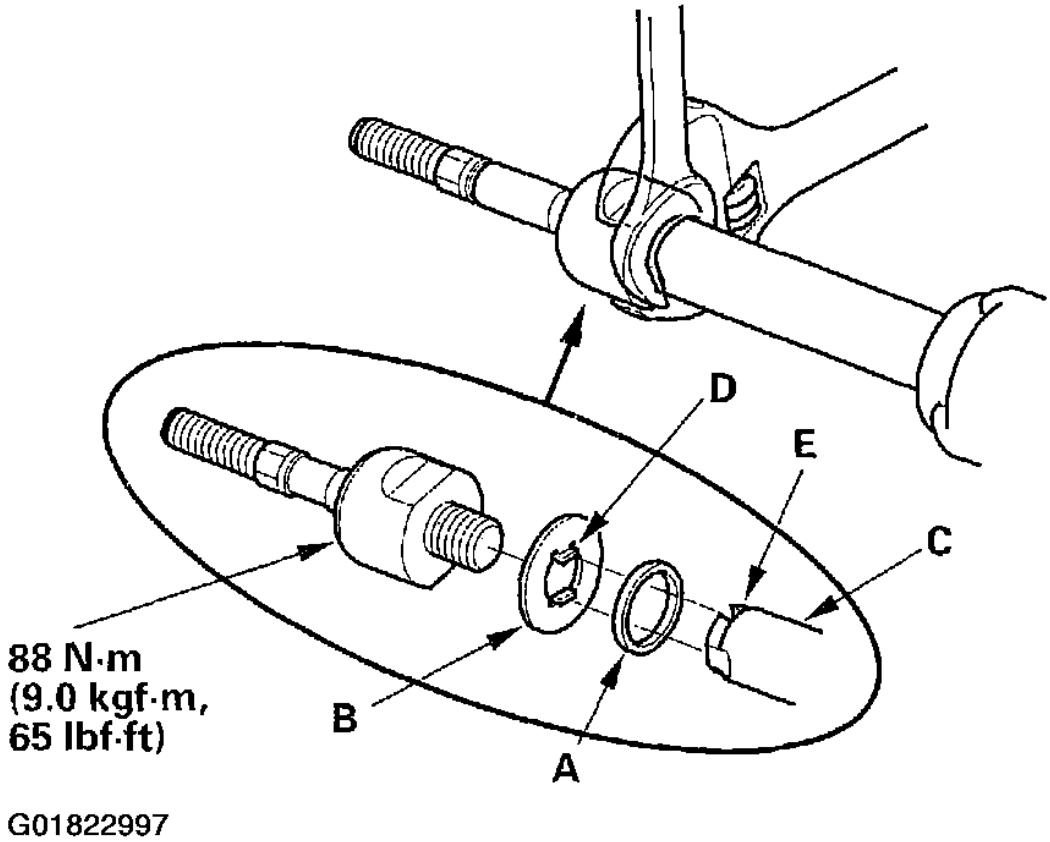

Fig. 115: Installing A NEW Stop Rubber & A NEW Lock Washer

78. Hold the flat surface sections of the steering rack with a wrench, and tighten both rack ends. Be careful not to damages the rack surface with the wrench.
79. Bend the lock washer (A) back against the flat spots on the rack end joint housing.

cardiagn.com

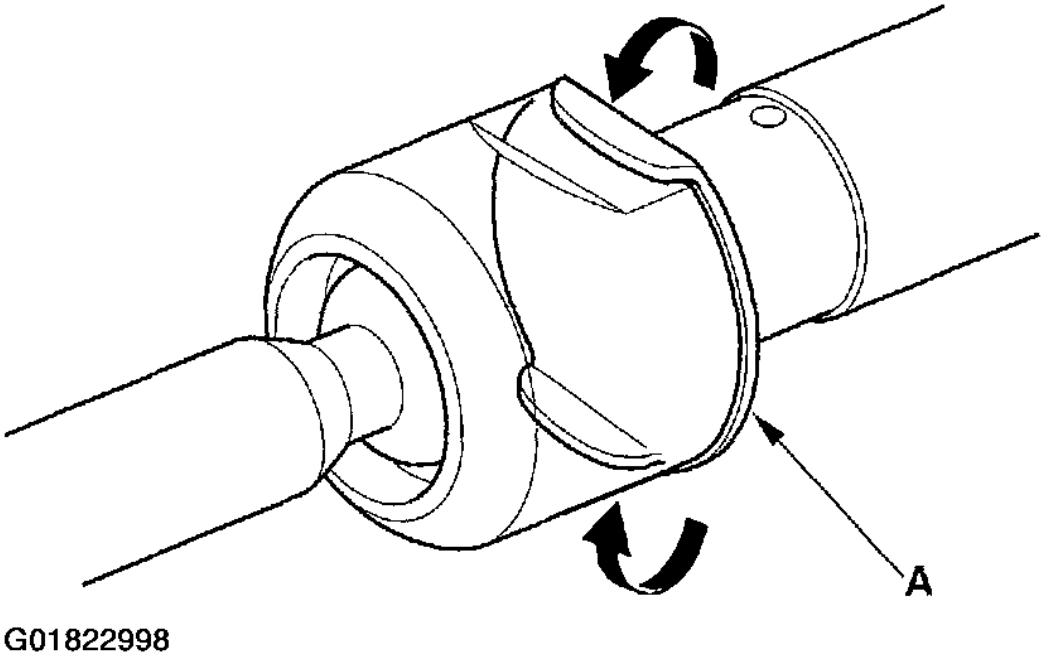

Fig. 116: Bending The Lock Washer Back Against The Flat Spots On The Rack End Joint Housing

80. Apply multipurpose grease to the circumference of the rack end joint housing (A).

cardiagn.com

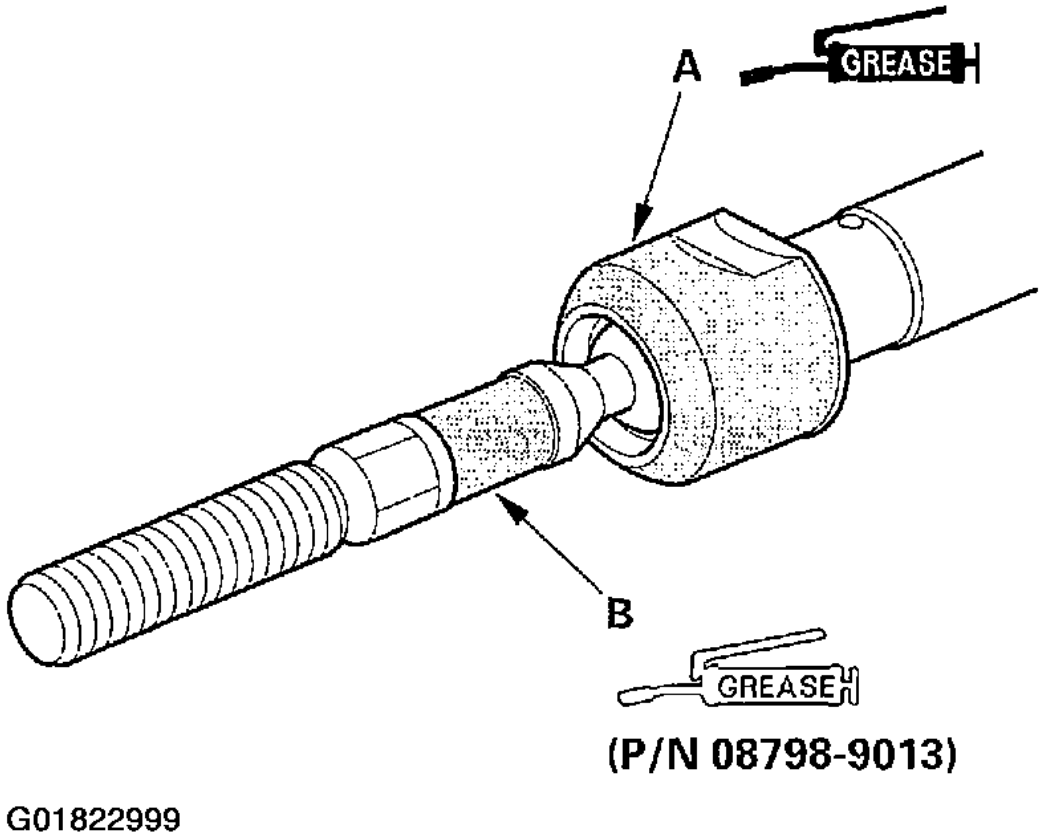

Fig. 117: Applying Multipurpose Grease To The Circumference Of The Rack End Joint Housing & Boot Grooves On The Rack Ends

81. Apply a light coat of silicone grease to the boot grooves (B) on the rack ends.
82. Center the steering rack within its stroke.
83. Clean off the any grease or contamination from the boot installation grooves (A) around on the gearbox housing. Install the boots (B) on the rack ends with the tie-rod clips (C), and fit the boot end in the installation grooves in the housing properly.

cardiagn.com

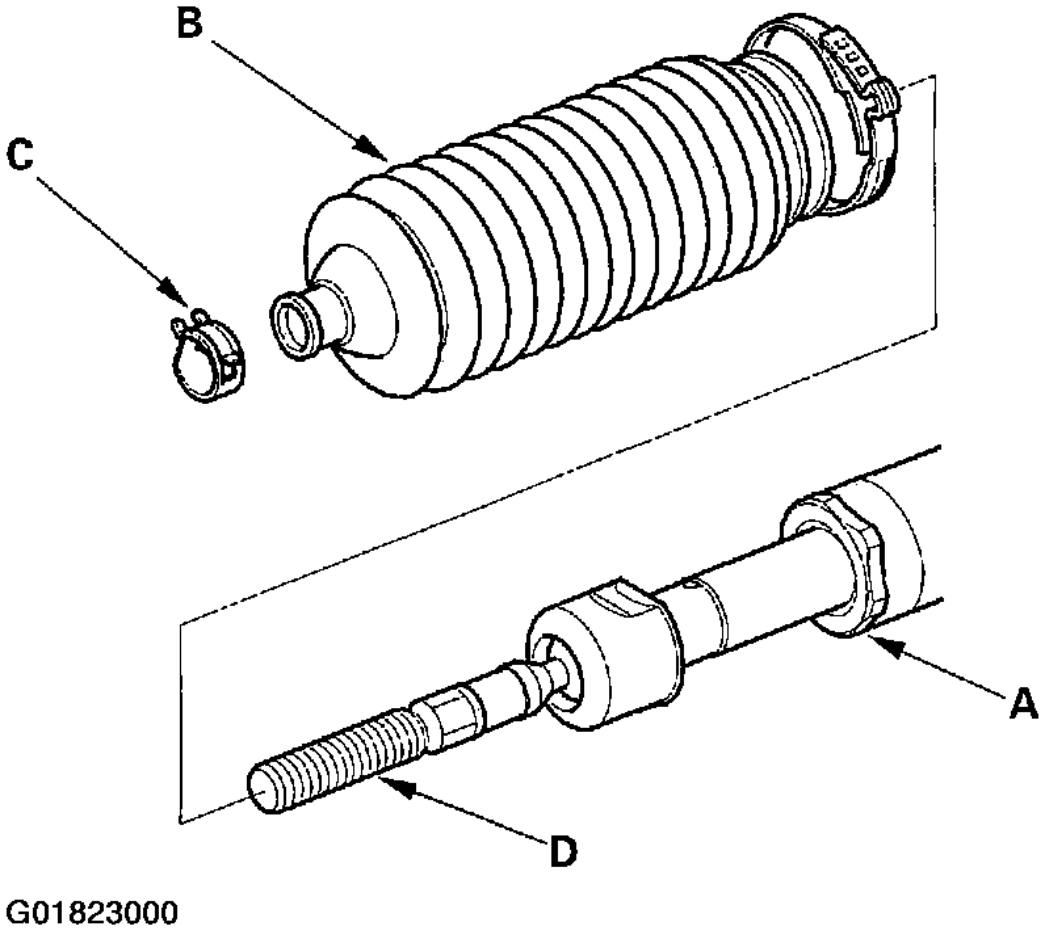

Fig. 118: Installing The Boots

84. After installing the boots, wipe the grease off the threaded section (D) of the rack end.
85. Install the NEW boot bands by aligning the tabs (A) with the holes (B) of the band.

cardiagn.com

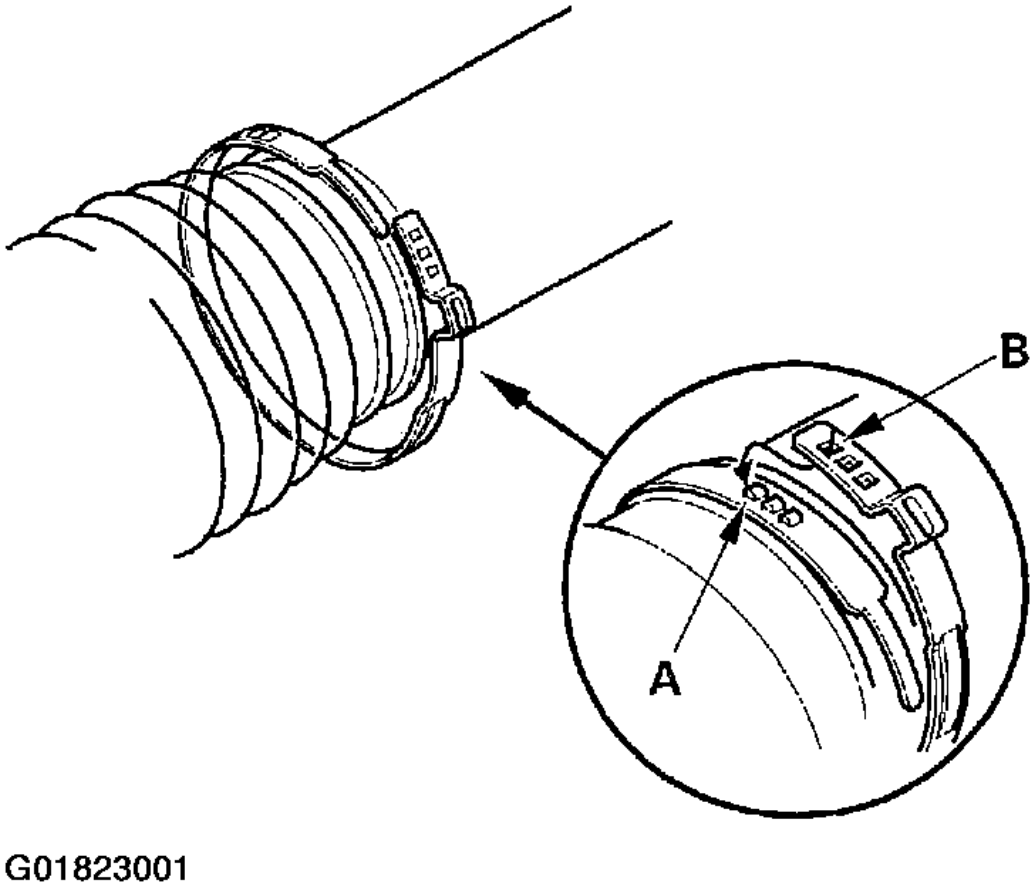

Fig. 119: Installing The NEW Boot Bands

86. Close the ear portion (A) of the band (B) with commercially available pincers, Oetiker 1098 or equivalent (C).

cardiagn.com

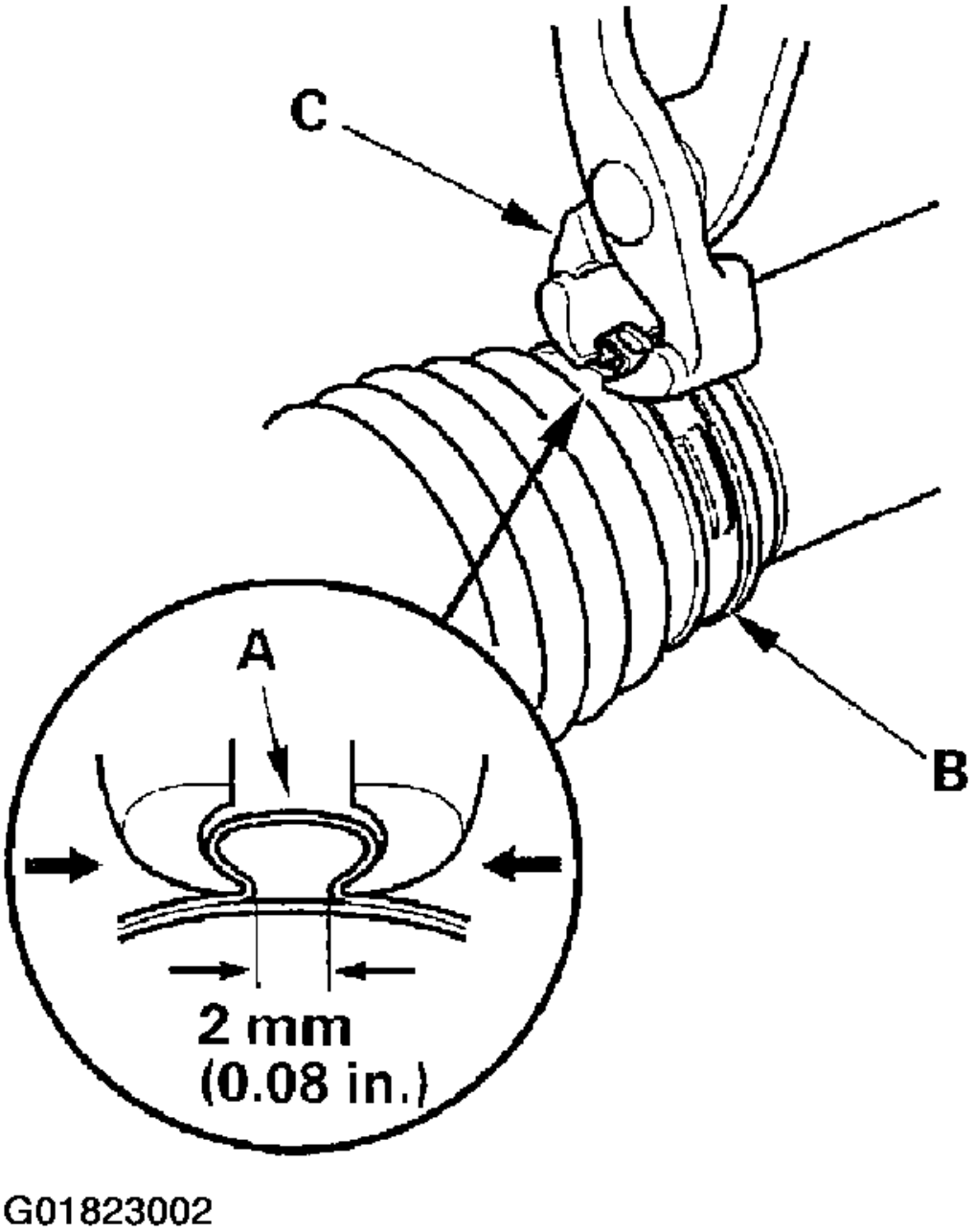

Fig. 120: Closing The Ear Portion Of The Band

87. Slide the rack right and left to be certain that the boots are not deformed or twisted.

STEERING GEARBOX INSTALLATION

cardiagn.com

1. Before installing the steering gearbox, make sure that no power steering fluid is on the mating surface of the gearbox and a front suspension subframe. To prevent the gearbox mounting bolts from loosening after the installation, remove the power steering fluid from the mount cushions and bolt holes.
2. Apply a mild soap and water solution to both side of the mount cushion mating surfaces (A).

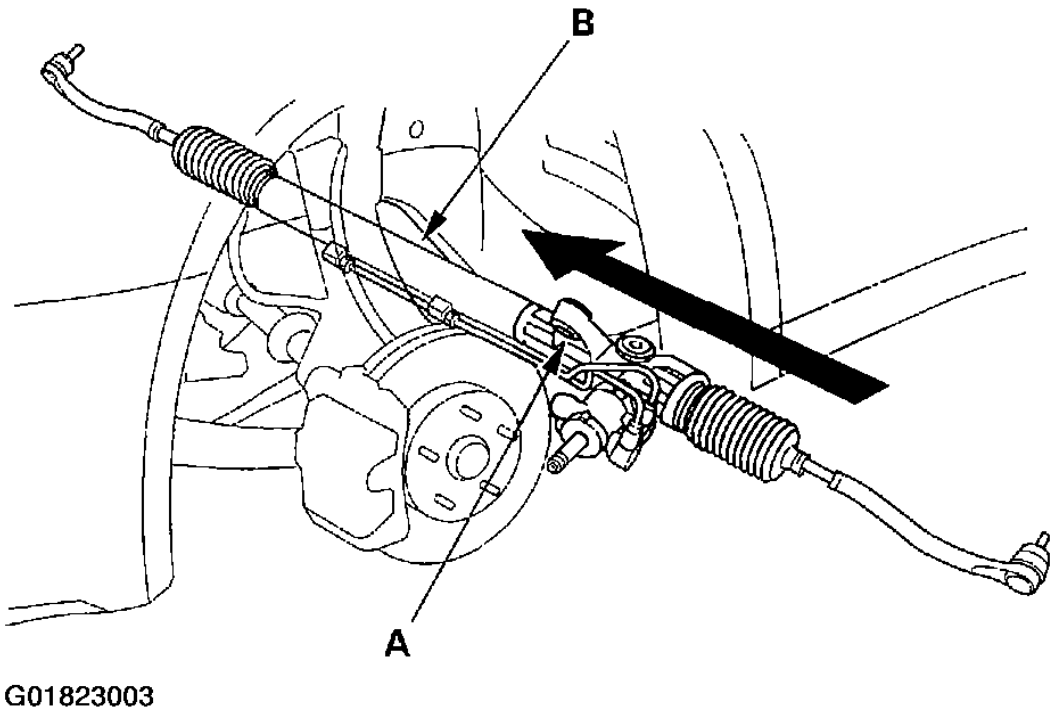

Fig. 121: Apply A Mild Soap & Water Solution To Both Sides Of The Mount Cushion Mating Surfaces & Pass The Steering Gearbox Through The Wheelwell Opening On The Driver's Side

3. Pass the cylinder of the steering gearbox (B) through the wheelwell opening on the driver's side.
4. Carefully move the steering gearbox toward the passenger's side until the pinion shaft clears the wheelwell opening on the body.
5. Rotate the steering gearbox so the pinion shaft (A) points upward.

cardiagn.com

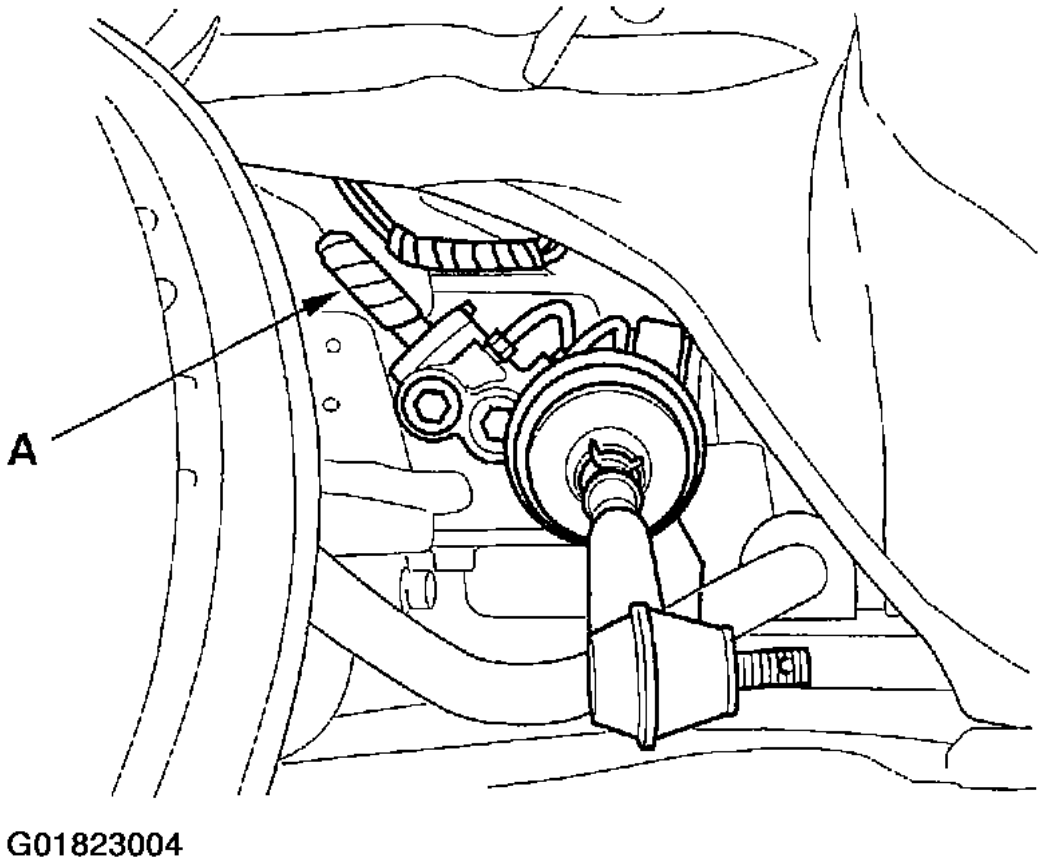

Fig. 122: Rotating The Steering Gearbox So The Pinion Shaft Points Upward

6. Continue moving the gearbox toward the passenger's side until the steering gearbox is in position. Make sure the power steering return line and feed line are routed above the gearbox.
7. Remove the vinyl tape from the pinion shaft, and install the pinion shaft grommet (A). Align the slot in the pinion shaft grommet with the lug portion (B) on the valve housing.

cardiagn.com

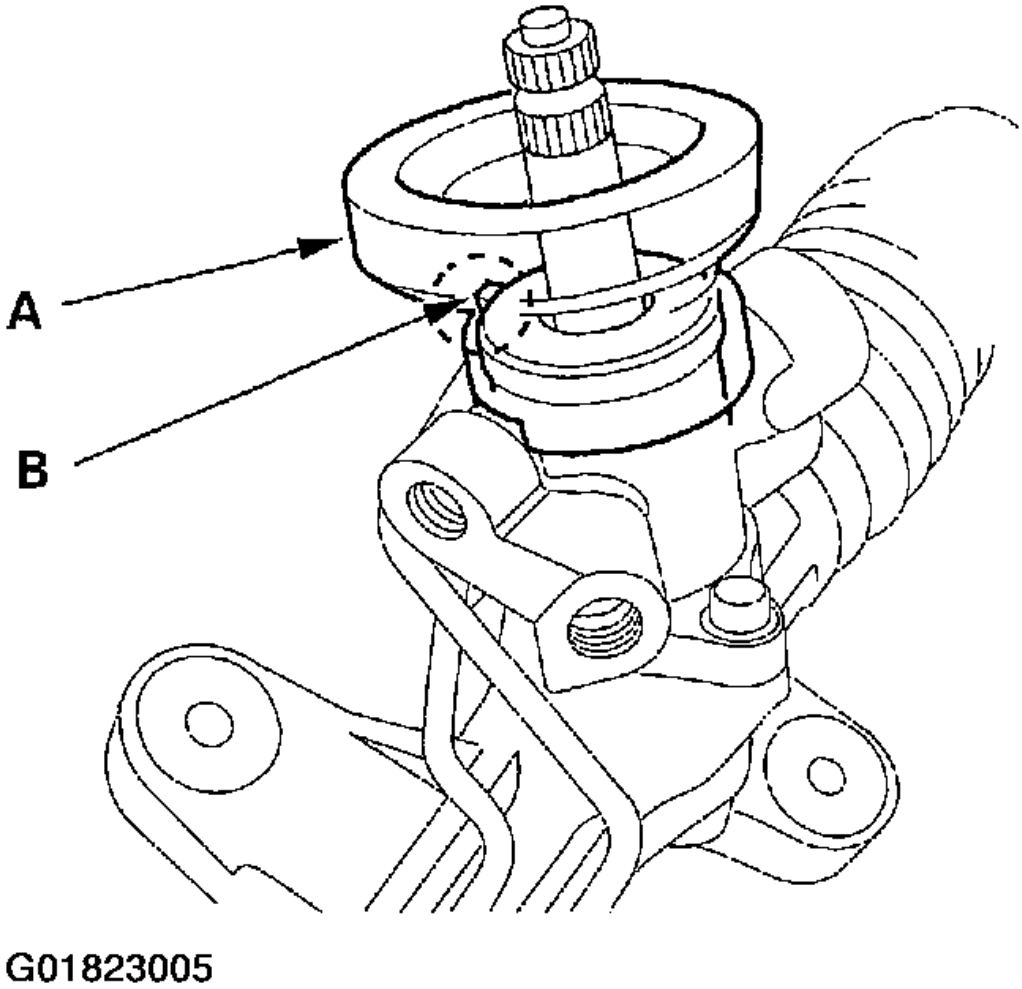

Fig. 123: Installing The Pinion Shaft Grommet

8. Position the cutout (A) on the mounting cushion (B) as shown, and install it on the cylinder of the gearbox securely.

cardiagn.com

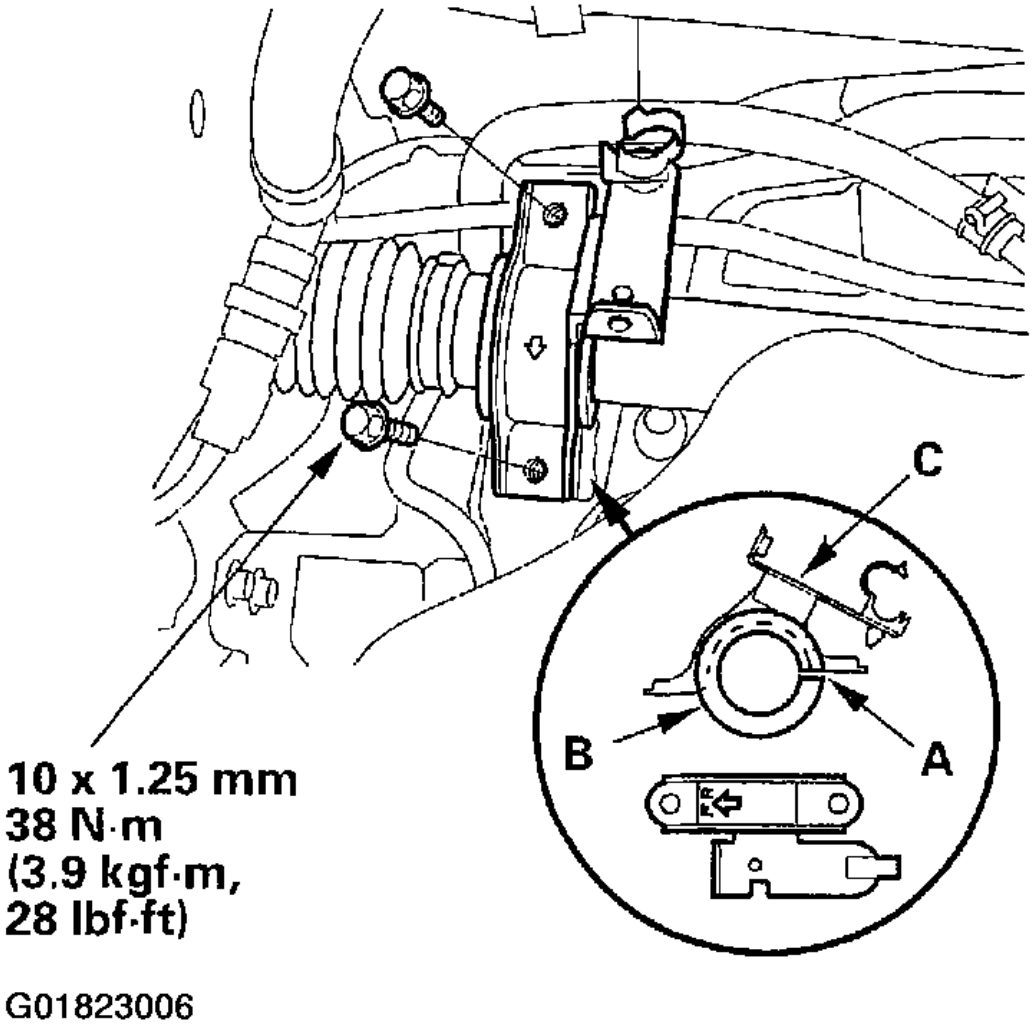

Fig. 124: Installing Mounting Cushion On The Cylinder Of The Gearbox

9. Install the gearbox mounting bracket (C) over the mounting cushion, and loosely install the two flange bolts.
10. Install the steering stiffener plate (A) and gearbox mounting bolts on the left side of the gearbox, then tighten them to the specified torque.

cardiagn.com

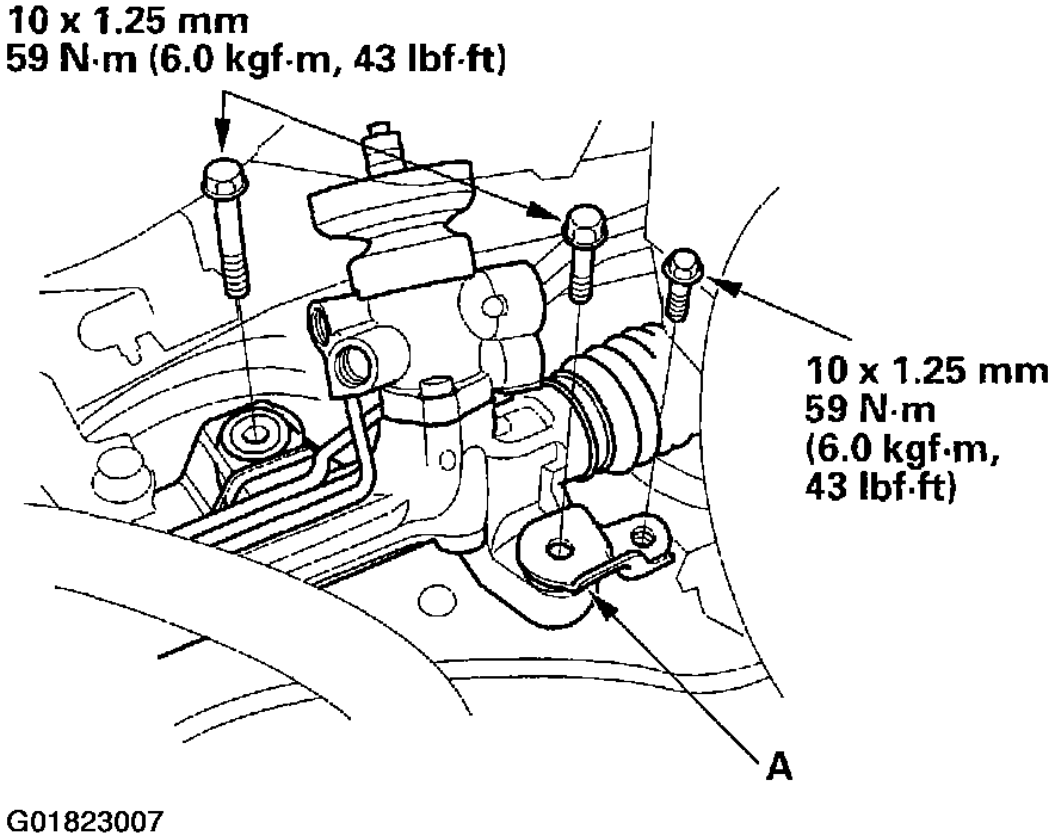

Fig. 125: Installing The Steering Stiffener Plate & Gearbox Mounting Bolts

11. Tighten the flange bolts on the right side of the gearbox to specified torque alternately in two or more steps.
12. Loosely connect the return line and feed line by hand securely.
13. Install the feed line holder (A) and return hose (B) on the gearbox mounting bracket (C)

cardiagn.com

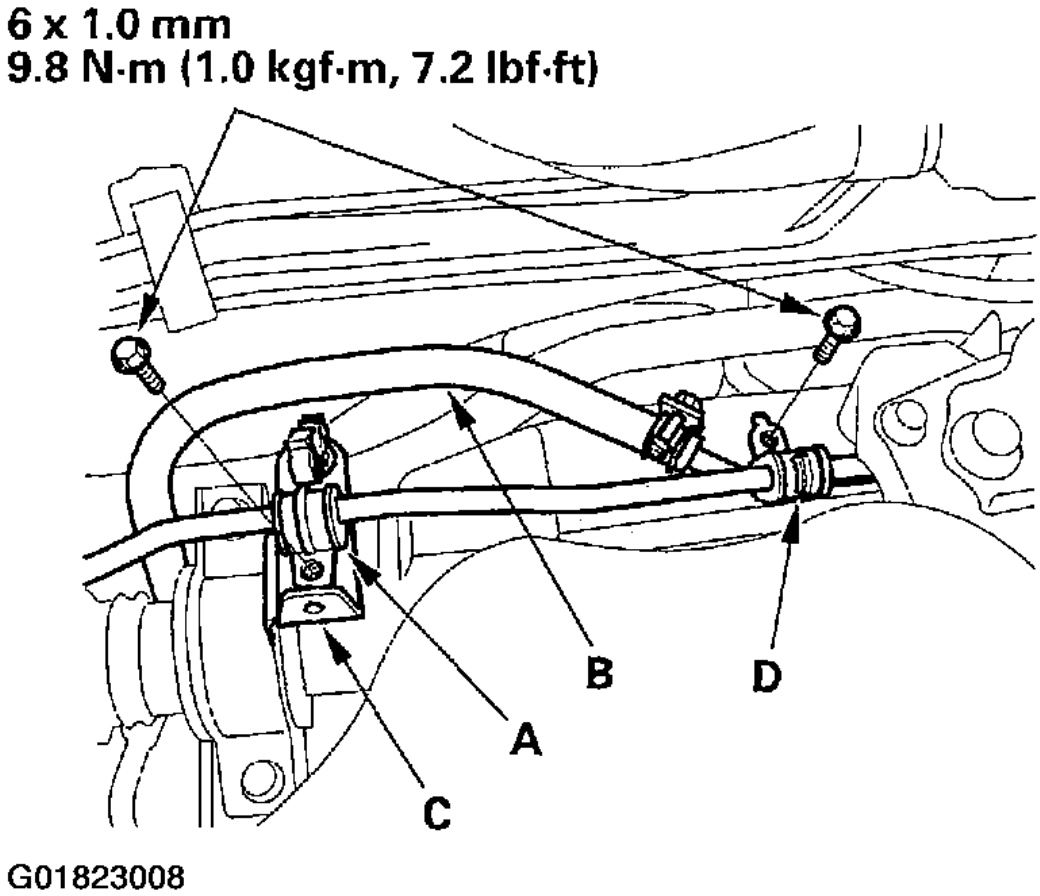

Fig. 126: Installing The Feed Line & Return Line

14. Install the feed line holder (D) on the front suspension subframe. Make sure that there is no interference between the feed and return lines and any other parts.
15. Retighten the return line flare nut (A) to the specified torque.

cardiagn.com

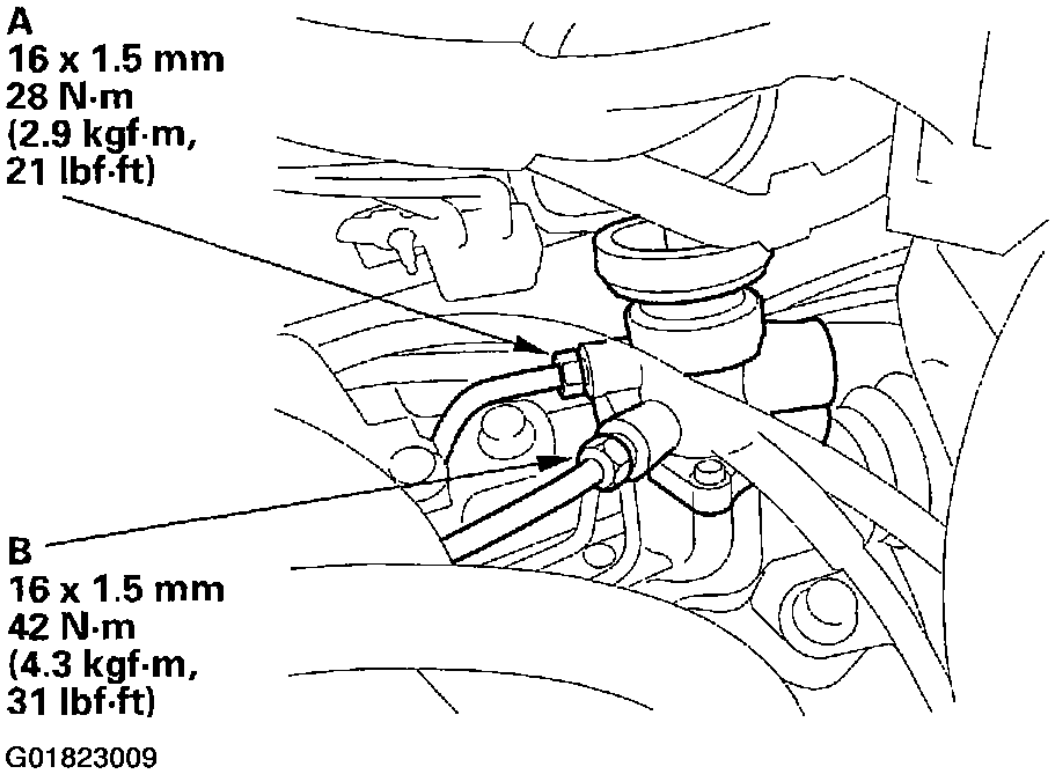

Fig. 127: Tightening The Feed Line & Return Line Flare Nuts

16. Retighten the feed line flare nut (B) to the specified torque.
17. Install the front suspension subframe left mid mount (A).

cardiagn.com

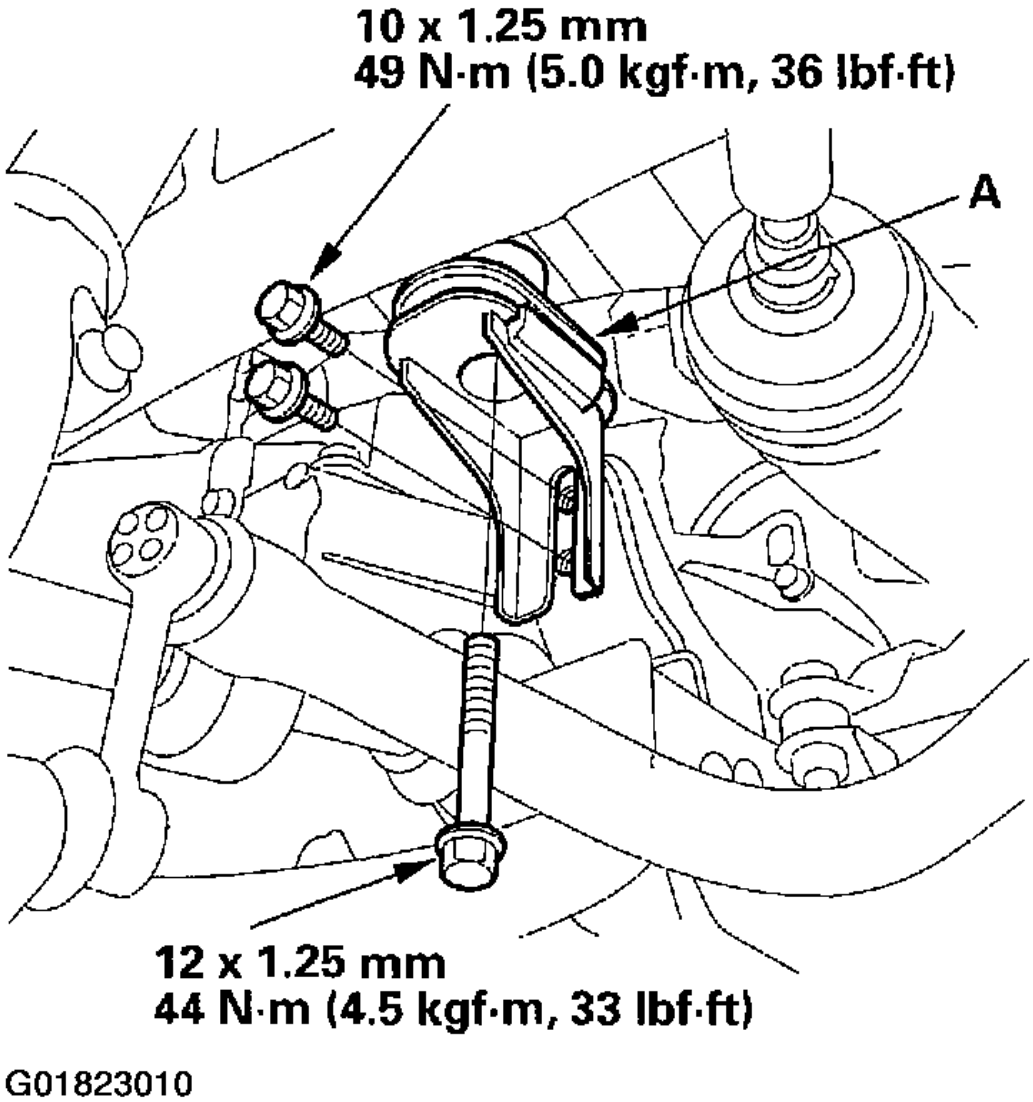

Fig. 128: Installing Front Suspension Subframe Left Mid Mount

18. Install the P/S heat baffle plate (A).

cardiagn.com

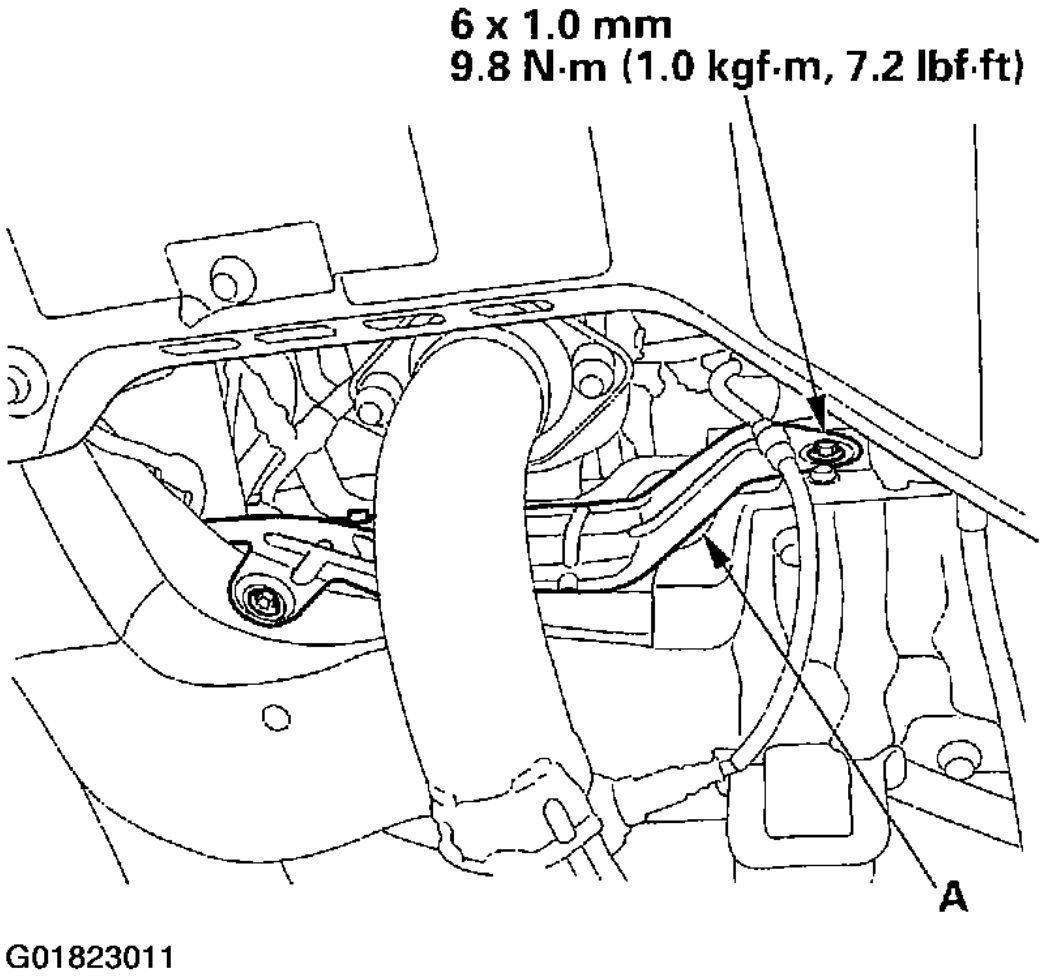

Fig. 129: Installing The P/S Heat Baffle Plate

19. Wipe off any grease contamination from the ball joint tapered section and threads. Then reconnect the tie-rod end (A) to the knuckle arms.

cardiagn.com

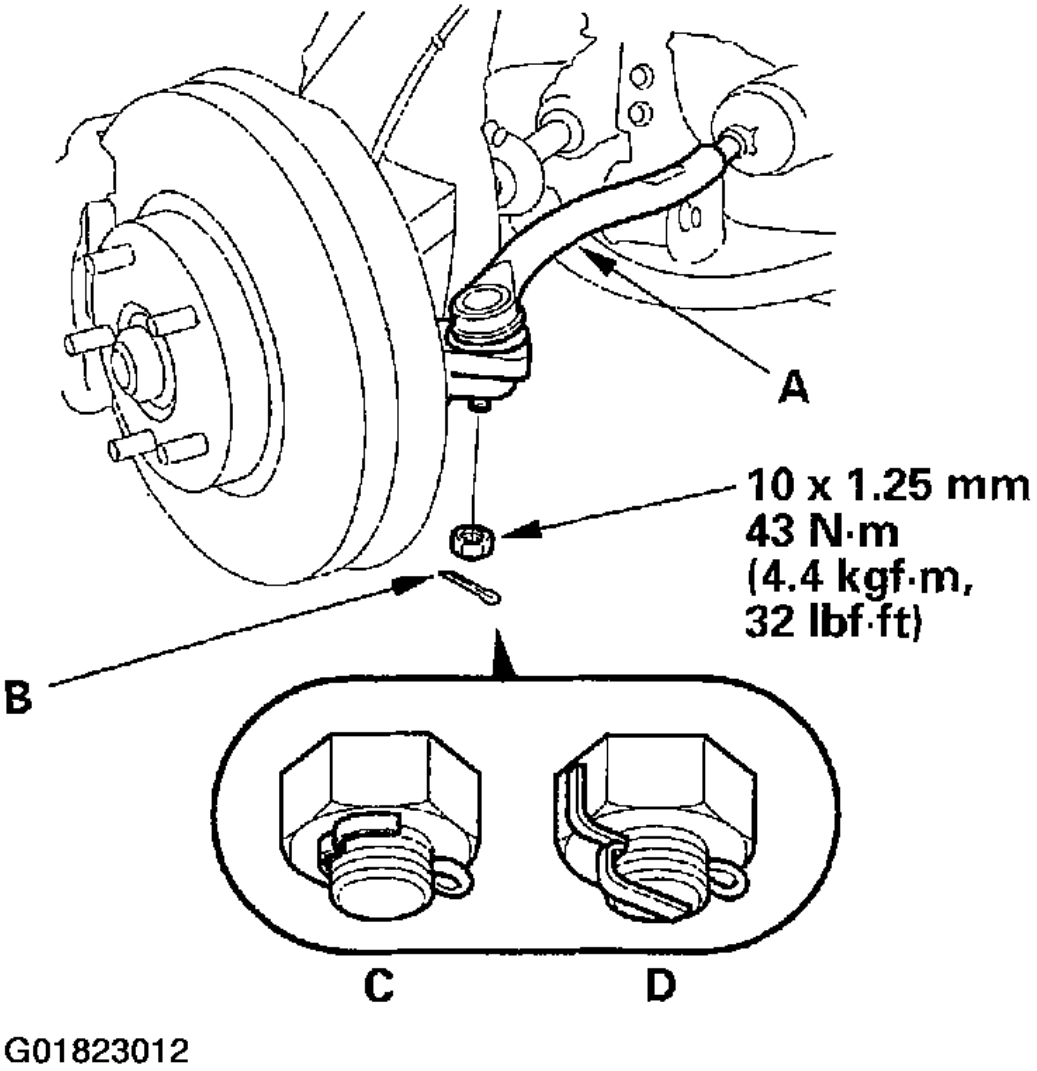

Fig. 130: Connecting Tie-Rod Ends To The Knuckle Arms

20. Install the tie-rod end ball joint nut, and tighten it to the specified torque. Then install the NEW cotter pin (B), and bend it as shown (C) or (D).
21. Install the NEW cover seal (A) all the way around in the steering joint cover B. Make sure there are no wrinkles in the seal, then install the steering joint cover B.

cardiagn.com

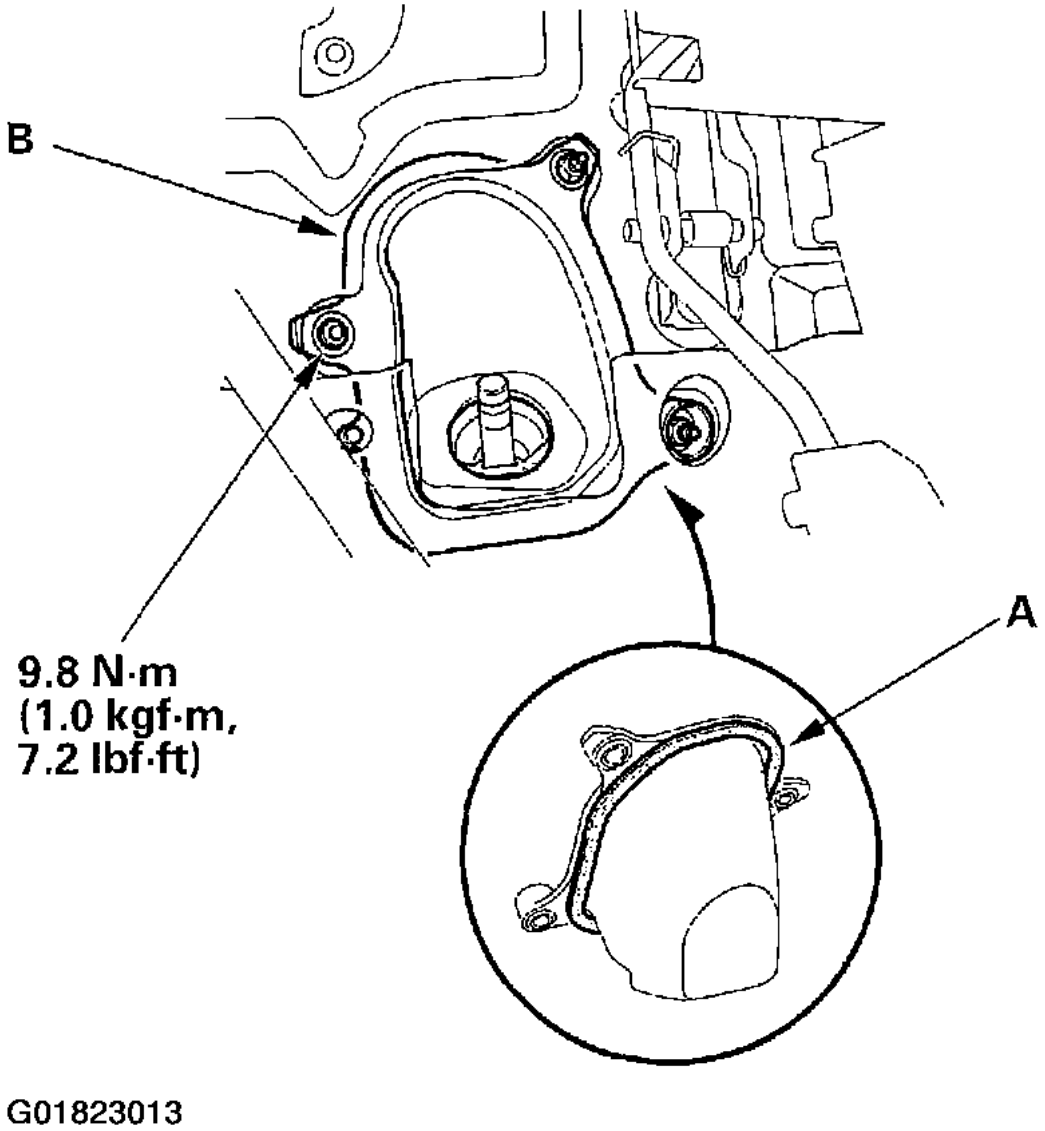

Fig. 131: Installing NEW Cover Seal & Steering Joint Cover B

22. Center the steering rack within its stroke.
23. Position the steering column joint (A) so the bolt (B) opposite to the notch (C) is within the range shown.

cardiagn.com

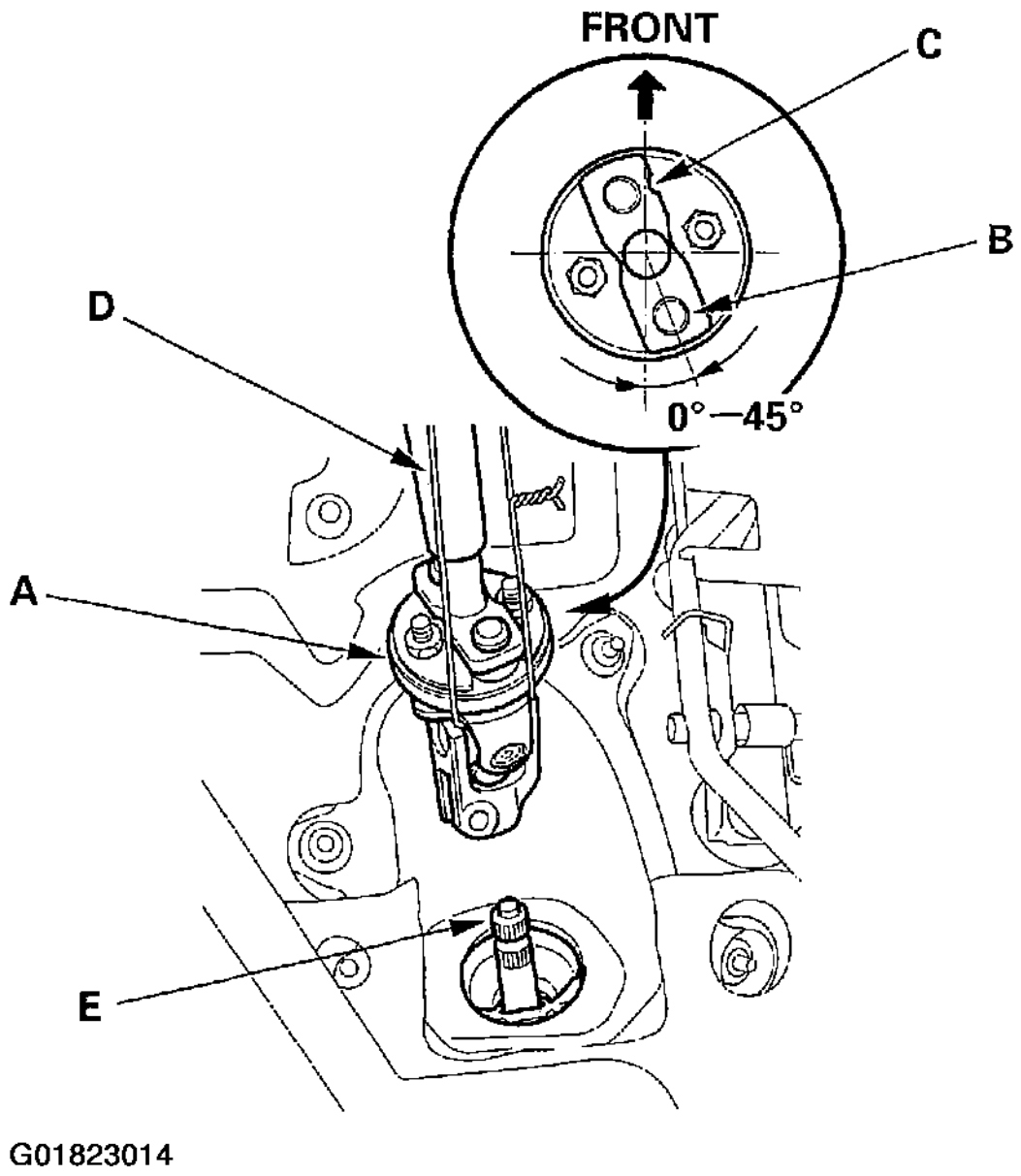

Fig. 132: Positioning The Steering Column Joint

24. With the rack in the straight ahead driving position, cut the wire (D) and slip the lower end of the steering joint on to pinion shaft (E).
25. Align the bolt hole (A) on the steering joint with the groove (B) around the pinion shaft, and loosely install the joint bolt (C). Make sure the joint bolt is securely in the groove in the pinion shaft. Pull on the steering joint to make sure the steering joint is fully seated.

cardiagn.com

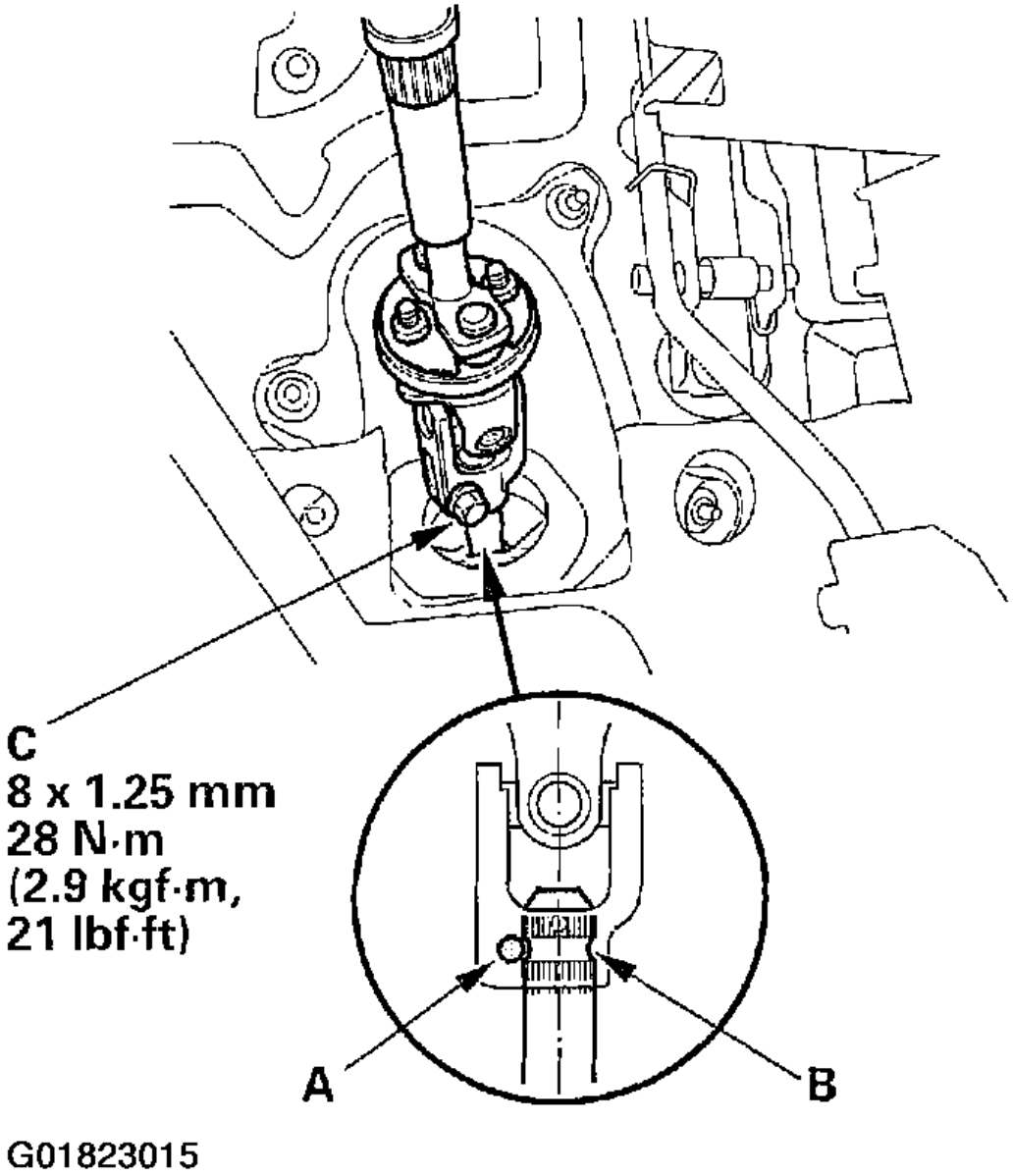

Fig. 133: Installing Steering Joint To The Pinion Shaft

26. Tighten the steering joint bolt to the specified torque.
27. Install the steering joint cover A.

cardiagn.com

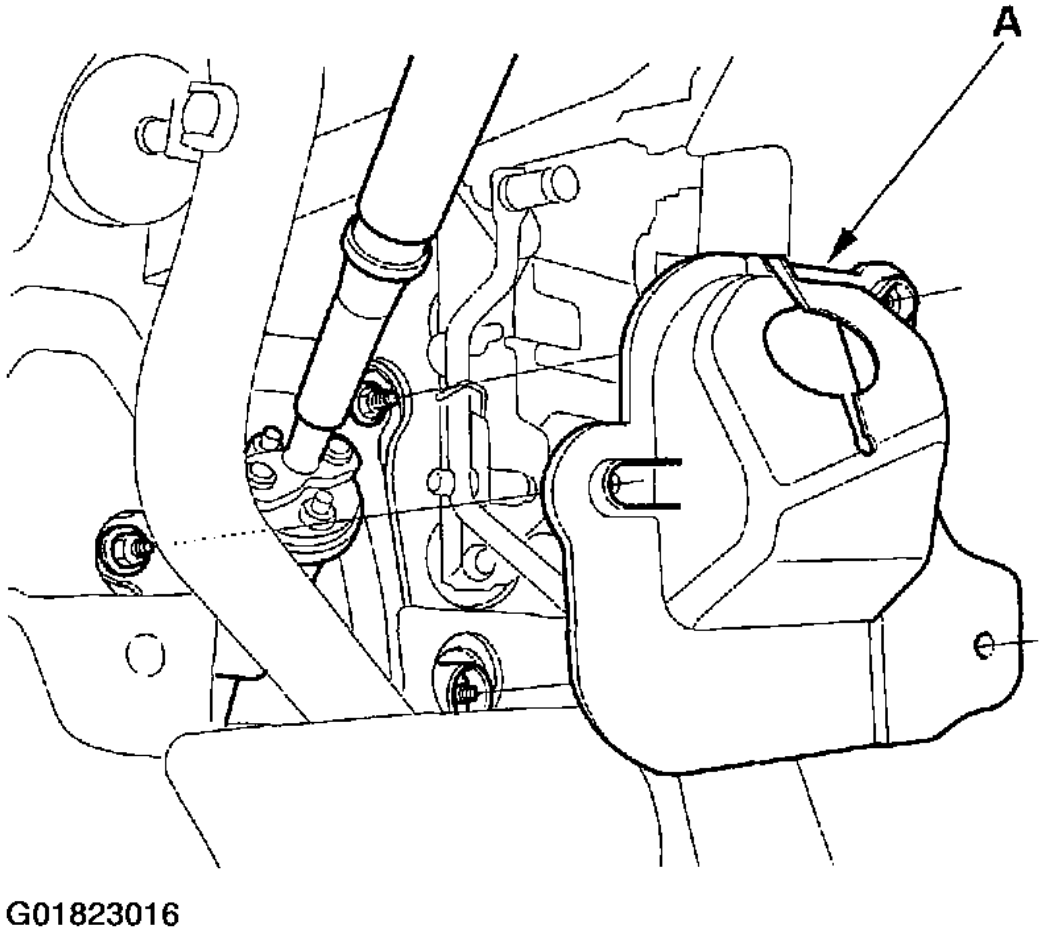

Fig. 134: Installing The Steering Joint Cover A

28. Install the front wheel, then set the wheels in the straight ahead position.
29. Center the cable reel by first rotating it clockwise until it stops. Then rotate it counterclockwise (about three full turns) until the arrow mark on the label points straight up. Reinstall the steering wheel (see **STEERING WHEEL INSTALLATION**).
30. Fill the system with power steering fluid, and bleed air from the system (see **FLUID REPLACEMENT**).
31. After installation, do the following checks:
    - Start the engine, allow it to idle, and turn the steering wheel from lock-to-lock several times to warm up to the fluid. Check the gearbox for leaks (see **FLUID LEAKAGE INSPECTION**).
    - Do the front toe inspection (see **WHEEL ALIGNMENT**).
    - Check the steering wheel spoke angle. If steering spoke angles to the right and left are not equal (steeling wheel and rack are not centered), correct the engagement of the joint/pinion shaft serrations, then adjust the front toe by turning the tie-rod ends, if necessary.

cardiagn.com

TIE-ROD BALL JOINT BOOT REPLACEMENT

Special Tools Required: Front hub dis/assembly tool, 07965-SA50500

1. Remove the boot from the tie-rod end, and wipe the old grease off the ball pin.
2. Pack the lower area of the ball pin (A) with fresh multipurpose grease.

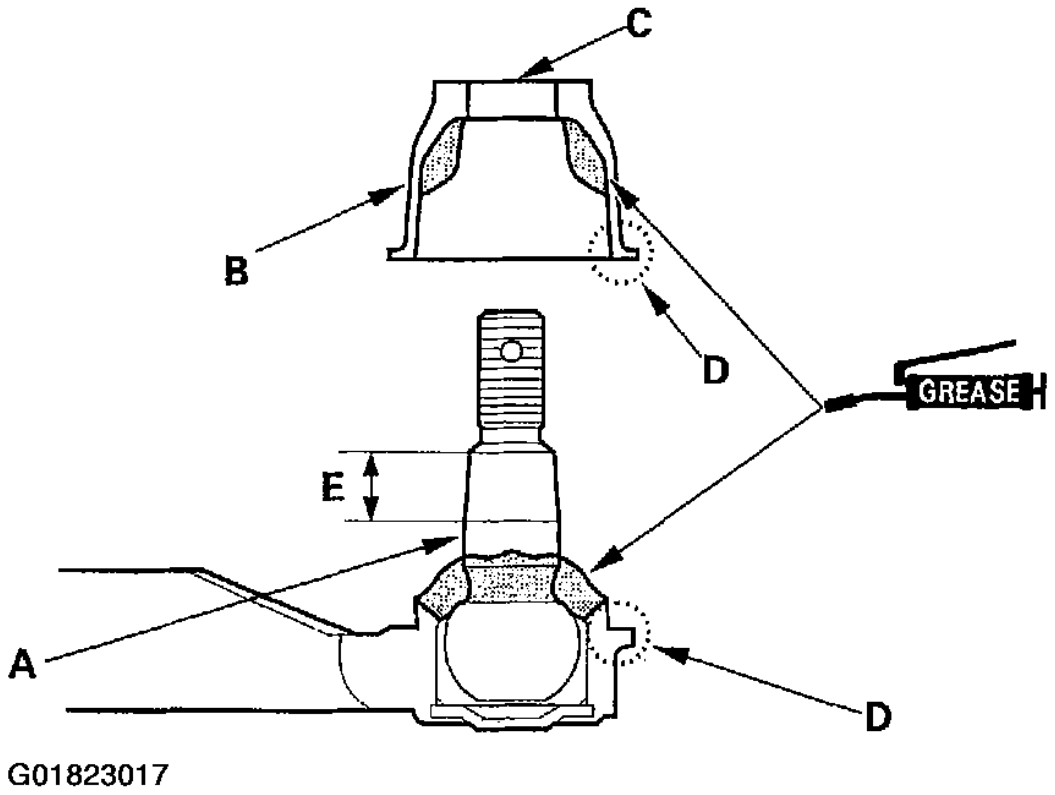

Fig. 135: Packing The Lower Area Of The Ball Pin With Fresh Multipurpose Grease

3. Pack the interior of the NEW boot (B) and lip (C) with fresh multipurpose grease. Note these items when installing NEW grease:
   - Keep grease off the boot mounting area (D) and the tapered section (E) of the ball pin.
   - Do not allow dust, dirt, or other foreign materials to enter the boot.
4. Install the NEW boot (A) using the special tool. The boot must not have a gap at the boot installation sections (B). After installing the boot, check the ball pin tapered section for grease contamination, and wipe it if necessary.

cardiagn.com

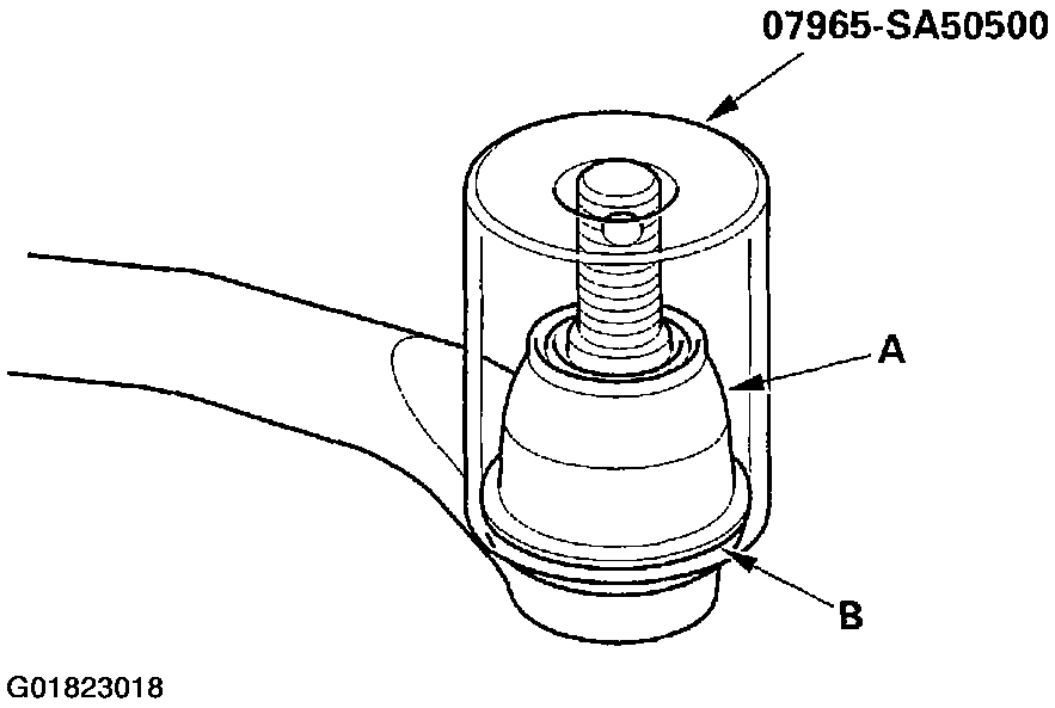

Fig. 136: Installing The NEW Boot Using The Special Tool

GEARBOX MOUNT CUSHION REPLACEMENT

1. Remove the steering gearbox (see **STEERING GEARBOX REMOVAL**).
2. Position the 34 mm socket wrench (A) on the flange part of the gearbox housing with a washer (B), 10 x 105 mm flange bolt (C) and the 10 mm nut (D) as shown.

cardiagn.com

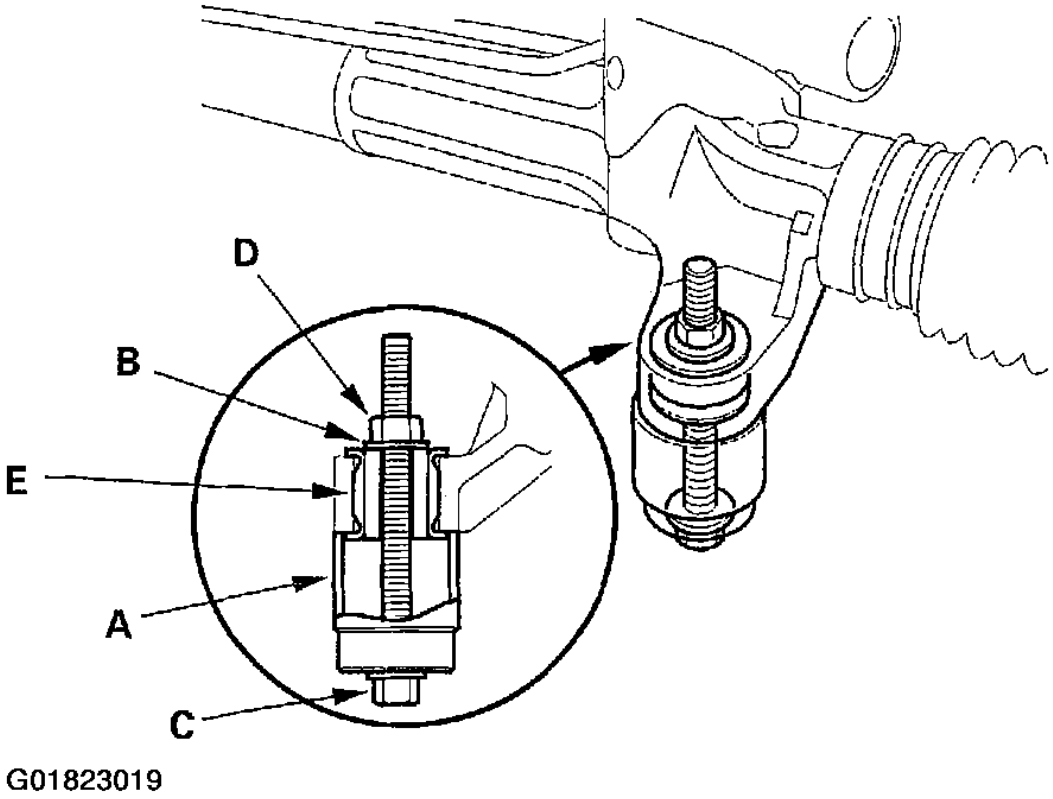

Fig. 137: Positioning The 34 mm Socket Wrench On The Flange Part Of The Gearbox Housing With A Washer, 10 X 105 mm Flange Bolt & The 10 mm Nut

3. Hold the flange bolt with a wrench, and tighten the nut with a wrench. Remove the gearbox mount cushion (E).
4. Apply a mild soap and water solution to the NEW gearbox mount cushion surface (A), then place it on the gearbox mounting cushion hole.

cardiagn.com

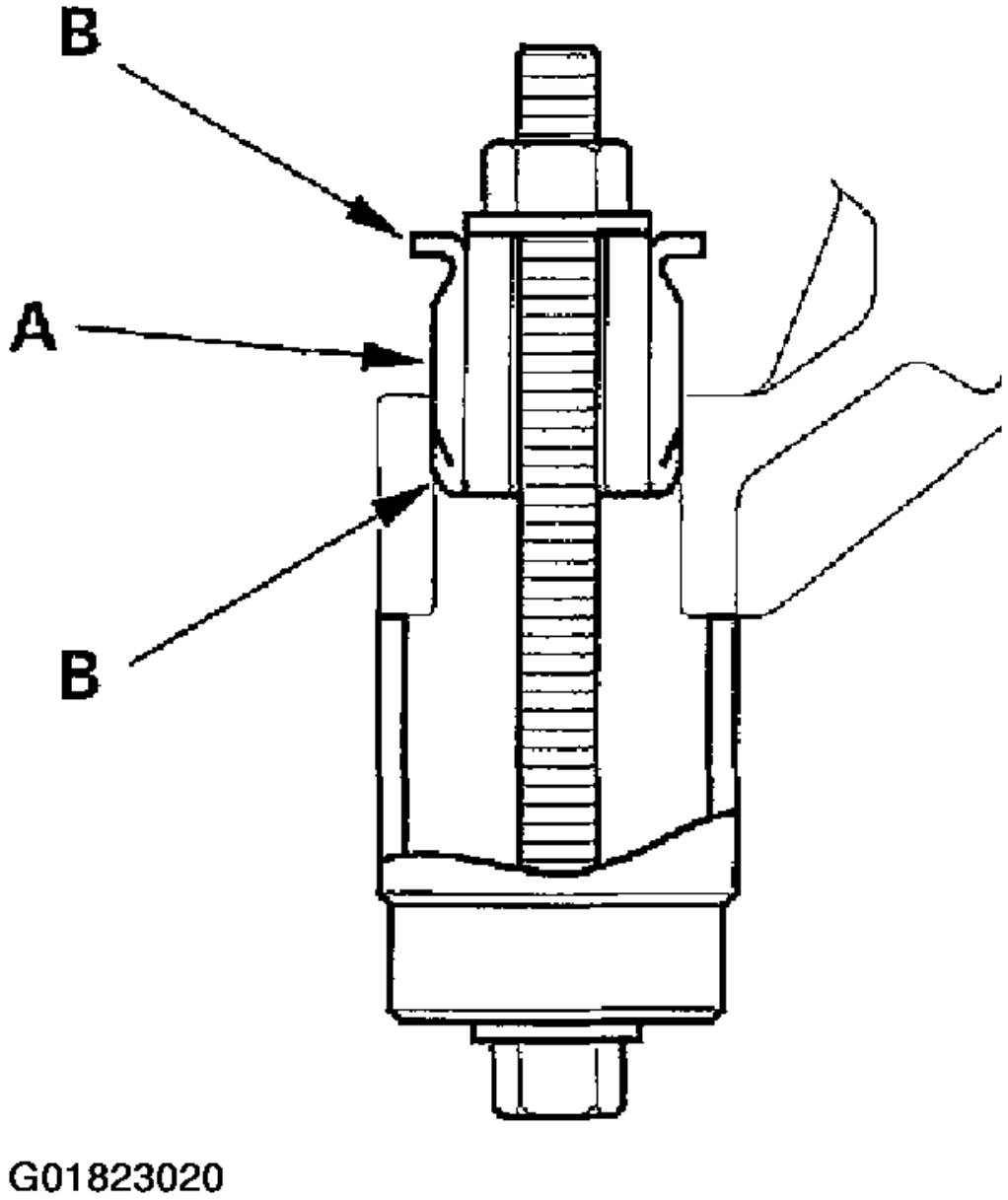

Fig. 138: Installing The NEW Gearbox Mount Cushion

5. Position the 34 mm socket wrench on the flange part of the gearbox housing with a washer, flange bolt, and the nut as shown.
6. Install the gearbox mount cushion by tightening the nut until the mount cushion edges (B) properly fit on the gearbox flange surface.

cardiagn.com