Workshop Manual
Audi A2 2001 ➢

TDI injection and glow plug system (3-cyl.)									
Engine ID	AMF	ANY	BHC	ATL					

Edition 08.2006

Protected by copyright. Copying for private or commercial purposes, in part or in whole, is not permitted unless authorised by AUDI AG. AUDI AG does not guarantee or accept any liability with respect to the correctness of information in this document. Copyright by AUDI AG.

List of Workshop Manual Repair Groups

Repair Group

23 - Mixture preparation - injection

28 - Glow plug system

Protected by copyright. Copying for private or commercial purposes, in part or in whole, is not permitted unless authorised by AUDI AG. AUDI AG does not guarantee or accept any liability with respect to the correctness of information in this document. Copyright by AUDI AG.

Technical information should always be available to the foremen and mechanics, because their careful and constant adherence to the instructions is essential to ensure vehicle road-worthiness and safety. In addition, the normal basic safety precautions for working on motor vehicles must, as a matter of course, be observed.

All rights reserved.
No reproduction without prior agreement from publisher.

Copyright © 2015 Audi AG, Ingolstadt

Contents

23 - Mixture preparation - injection 1
1 Safety precautions and rules for cleanliness 1
1.1 Safety precautions 1
1.2 Rules for cleanliness 1
1.3 To avoid injury and/or damage to the injection and glow plug system, note the following: 2
2 Injection system 3
2.1 Fitting locations overview, engine code AMF 3
2.2 Fitting locations overview, engine code ANY 5
2.3 Fitting locations overview, engine codes BHC and ATL 6
2.4 Air cleaner - exploded view of components 9
2.5 Removing and installing air filter element 11
2.6 Removing and installing air mass meter G70 12
2.7 Intake manifold for vehicles with engine code letters AMF, BHC - exploded view 12
2.8 Removing and installing intake manifold - vehicles with engine code letters AMF, BHC . . 13
2.9 Intake manifold for vehicles with engine code letters ATL - exploded view 16
2.10 Removing and installing intake manifold - vehicles with engine code letters ATL 17
2.11 Unit injector - exploded view 22
2.12 Removing and installing unit injector 22
2.13 Removing and installing O-rings for unit injector 26
2.14 Removing and installing electrical wiring harness for unit injectors and glow plugs 27
3 Engine control unit 29
3.1 Wiring and component check with test box V.A.G 1598/31 29
3.2 Renewing diesel direct injection system control unit J248 30

28 - Glow plug system 32
1 Checking glow plug system 32
1.1 Checking glow plugs (engine code AMF, ANY, BHC) 32
1.2 Checking glow plugs (engine code ATL) 33
1.3 Removing and installing glow plugs 34

Protected by copyright. Copying for private or commercial purposes, in part or in whole, is not permitted unless authorized by AUDI AG. AUDI AG does not guarantee or accept any liability with respect to the correctness of information in this document. Copyright by AUDI AG.

Protected by copyright. Copying for private or commercial purposes, in part or in whole, is not permitted unless authorised by AUDI AG. AUDI AG does not guarantee or accept any liability with respect to the correctness of information in this document. Copyright by AUDI AG.

23 – Mixture preparation - injection

1 Safety precautions and rules for cleanliness

1.1 Safety precautions

Note the following if testers and measuring instruments have to be used during a road test:

> **WARNING**
>
> - *Test equipment must always be secured on the rear seat and operated from that position by a second person.*
> - *If test and measuring instruments are operated from front passenger's seat and the vehicle is involved in an accident, the person sitting in this seat could be seriously injured when the airbag is triggered.*

To prevent injuries to persons and/or damage to the injection and glow plug system, the following must be noted:

- Switch off the ignition before connecting or disconnecting injection or glow plug system wiring or tester cables.
- If the engine has to be operated at starter cranking speed without actually starting, e.g. to test compression pressure, detach the multi-pin connector for the unit injectors on the cylinder head.

> **Caution**
>
> - *Observe notes on procedure for disconnecting the battery ⇒ Electrical system; Rep. Gr. 27 .*
> - *Always switch off the ignition before connecting or disconnecting the battery, otherwise the engine control unit may be damaged.*

Protected by copyright. Copying for private or commercial purposes, in part or in whole, is not permitted unless authorised by AUDI AG. AUDI AG does not guarantee or accept any liability with respect to the correctness of information in this document. Copyright by AUDI AG.

1.2 Rules for cleanliness

When working on the fuel supply/injection system, observe the following basic rules:

- Thoroughly clean all unions and surrounding areas before disconnecting.
- Place parts that have been removed on a clean surface and cover them over. Use plastic sheeting or paper. Use only lint-free cloths.
- Carefully cover or seal open components if repairs cannot be carried out immediately.
- Only install clean components; replacement parts should only be unpacked immediately prior to installation. Do not use parts that have been previously unpacked and stored away loose (e.g. in toolboxes, etc.).
- When the system is open: Do not work with compressed air if this can be avoided. Do not move the vehicle unless absolutely necessary.

- Also ensure that no diesel fuel comes into contact with the coolant hoses. Should this occur, the hoses must be cleaned immediately. Damaged hoses must be renewed.

1.3 To avoid injury and/or damage to the injection and glow plug system, note the following:

- Switch off the ignition before connecting or disconnecting injection or glow plug system wiring or tester cables.
- If the engine has to be operated at starter cranking speed without actually starting, e.g. to test compression pressure, detach the connector for the unit injectors on the cylinder head.
- Before disconnecting battery, obtain radio code for radios equipped with anti-theft coding.
- Always switch off the ignition before connecting or disconnecting the battery, otherwise the diesel direct injection system control unit may be damaged.
- Certain tests may lead to a fault being detected by the control unit and stored. The fault memory should therefore be interrogated and (if necessary) erased after completing the tests and any repair work that may be required.

Protected by copyright. Copying for private or commercial purposes, in part or in whole, is not permitted unless authorised by AUDI AG. AUDI AG does not guarantee or accept any liability with respect to the correctness of information in this document. Copyright by AUDI AG.

2 Injection system

2.1 Fitting locations overview, engine code AMF

Components A to I are not shown on the exploded view.

1 - Air mass meter -G70-

2 - Variable intake manifold flap change-over valve -N239-

3 - Exhaust gas recirculation valve -N18-

4 - Solenoid valve for charge pressure control -N75-

5 - Exhaust gas recirculation valve

- ❑ With intake manifold flap

6 - Coolant temperature sender -G62-

7 - Connector

- ❑ For unit injectors

8 - Fuel temperature sender -G81-

9 - Engine speed sender -G28-

10 - Connector

- ❑ For Hall sender -G40- , for camshaft position

11 - Connector

- ❑ For engine speed send-

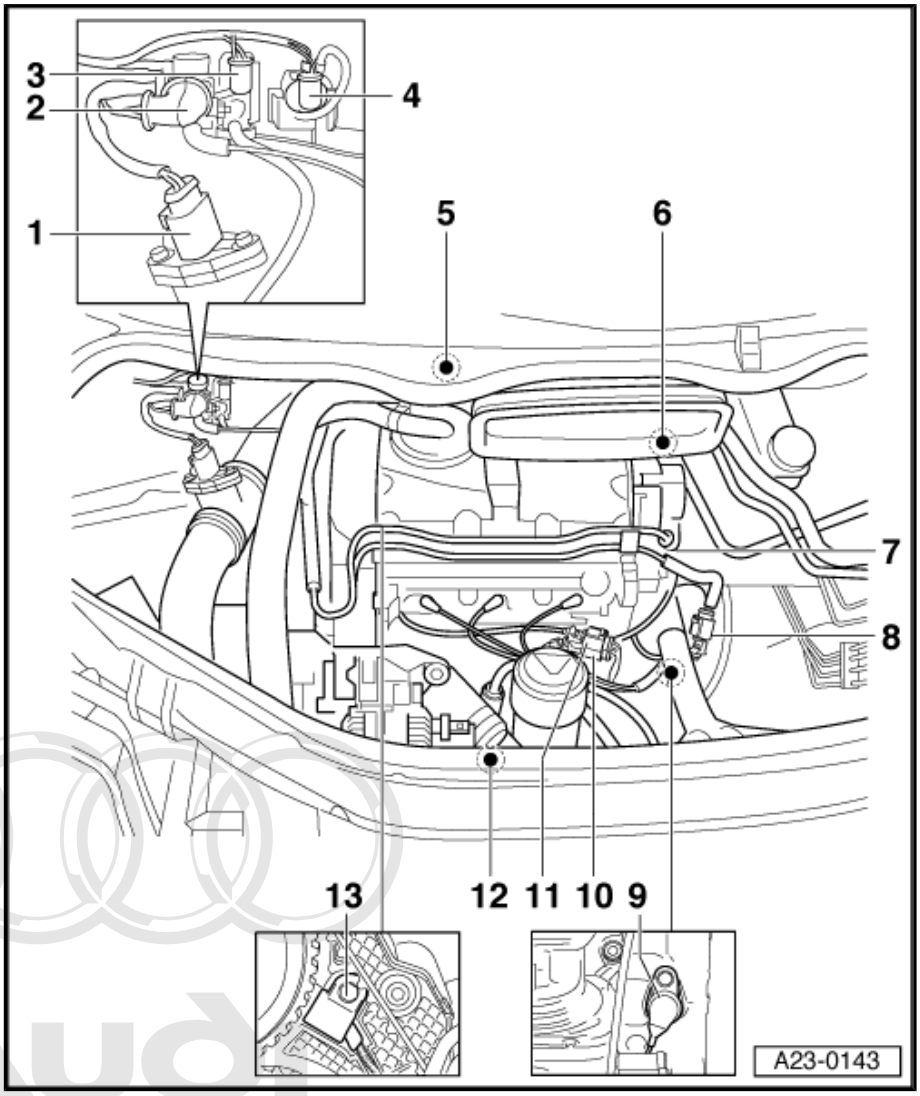

Protected by copyright. Copying for private or commercial purposes, in part or in whole, is not permitted unless authorised by AUDI AG. AUDI AG does not guarantee or accept any liability with respect to the correctness of information in this document. Copyright by AUDI AG.

er -G28-

12 - Intake manifold pressure sender -G71- and intake manifold temperature sender -G72-

13 - Hall sender -G40-

- ❑ For camshaft position

A - Brake pedal switch -F47-

- ❑ In footwell on brake pedal

B - Brake light switch -F-

- ❑ In footwell on brake pedal

C - Accelerator position sender -G79-

- ❑ In footwell on accelerator ⇒ Fuel supply system - diesel engines; Repair group 20; Servicing accelerator mechanism

D - Clutch pedal switch -F36-

- ❑ In footwell on clutch pedal

E - Diesel direct injection system control unit -J248-

- ❑ With altitude sender -F96-
- ❑ Renewing control unit ⇒ page 30

Protected by copyright. Copying for private or commercial purposes, in part or in whole, is not permitted unless authorised by AUDI AG. AUDI AG does not guarantee or accept any liability with respect to the correctness of information in this document. Copyright by AUDI AG.

F - Glow plug relay -J52-

- ❑ Fitting location ⇒ page 8

G - Terminal 30 voltage supply relay -J317-

- ❑ Fitting location ⇒ page 8

H - Low heat output relay -J359-

- ❑ Fitting location ⇒ page 9

I - High heat output relay -J360-

- ❑ Fitting location ⇒ page 9

Note

- *The low heat output relay -J359- (for the additional electric PTC heater) is only fitted in vehicles with no auxiliary heater (fuel-burning additional heater).*
- *A PTC heater with 1500 W is being phased in for model year 2003 onwards. Consequently the low heat output relay and the high heat output relay are not fitted.*
- *You will find information on which vehicles are fitted with a PTC heater with either 900 Watt or 1500 Watt capacity in the workshop manual "Additional heater". ⇒ Additional heater; Repair group 01*
- *The PTC heater with 1500 W (electrical additional heater) is activated via the auxiliary air heater control unit -J604- . This control unit is located in the additional heater.*

♦ *From model year 2003 onwards the auxiliary heater (fuel-burning additional heater) will be phased out gradually, there will be a PTC heater with 1500 Watt fitted.*

2.2 Fitting locations overview, engine code ANY

Components A to H are not shown on the exploded view.

1 - Air mass meter -G70-

2 - Variable intake manifold flap change-over valve -N239-

3 - Exhaust gas recirculation valve -N18-

4 - Solenoid valve for charge pressure control -N75-

5 - Exhaust gas recirculation valve

- ❑ With intake manifold flap

6 - Fuel temperature sender -G81-

7 - Coolant temperature sender -G62-

8 - Engine speed sender -G28-

9 - Connector

- ❑ For unit injectors

10 - Connector

- ❑ For Hall sender -G40- , for camshaft position

11 - Connector

- ❑ For engine speed send-

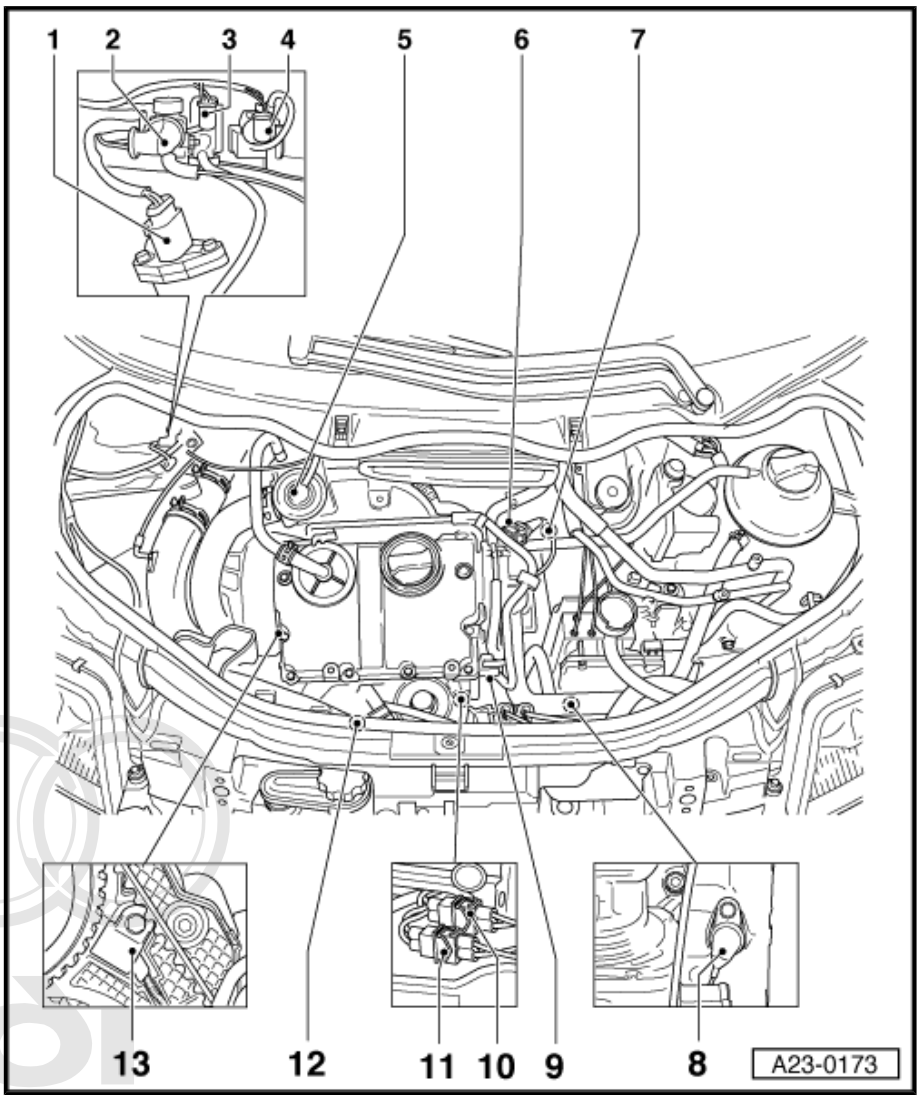

Protected by copyright. Copying for private or commercial purposes, in part or in whole, is not permitted unless authorised by AUDI AG. AUDI AG does not guarantee or accept any liability with respect to the correctness of information in this document. Copyright by AUDI AG.

er -G28-

12 - Intake manifold pressure sender -G71- with intake manifold temperature sender -G72-

13 - Hall sender -G40-

- For camshaft position

A - Brake pedal switch -F47-

- In footwell on brake pedal

B - Brake light switch -F-

- In footwell on brake pedal

C - Accelerator position sender -G79-

- In footwell on accelerator ⇒ Fuel supply system - diesel engines; Repair group 20; Servicing accelerator mechanism

D - Diesel direct injection system control unit -J248-

- Altitude sender -F96-
- Renewing control unit ⇒ page 30

E - Glow plug relay -J52-

- Fitting location ⇒ page 8

F - Terminal 30 voltage supply relay -J317-

- Fitting location ⇒ page 8

G - Low heat output relay -J359-

- Fitting location ⇒ page 9

H - High heat output relay -J360-

- Fitting location ⇒ page 9

Note

Vehicles with 1.2 ltr. TDI engine and emission standard "D4" (3 ltr. Öko for Germany).

2.3 Fitting locations overview, engine codes BHC and ATL

Components A to H are not shown on the exploded view.

Protected by copyright. Copying for private or commercial purposes, in part or in whole, is not permitted unless authorised by AUDI AG. AUDI AG does not guarantee or accept any liability with respect to the correctness of information in this document. Copyright by AUDI AG.

1 - Exhaust gas recirculation valve -N18- and charge pressure control solenoid valve -N75-

2 - Air mass meter -G70-

3 - Exhaust gas recirculation valve

- ❑ With intake manifold flap

4 - Coolant temperature sender -G62-

- ❑ Fitting location ⇒ page 9

5 - Connector

- ❑ For unit injectors

6 - Fuel temperature sender -G81-

7 - Engine speed sender -G28-

8 - Grey connector

- ❑ For engine speed sender -G28-

9 - Black connector

- ❑ For Hall sender -G40- , for camshaft position

10 - Intake manifold pressure sender -G71- with intake manifold temperature sender -G72- (BHC)

- ❑ Engine code ATL

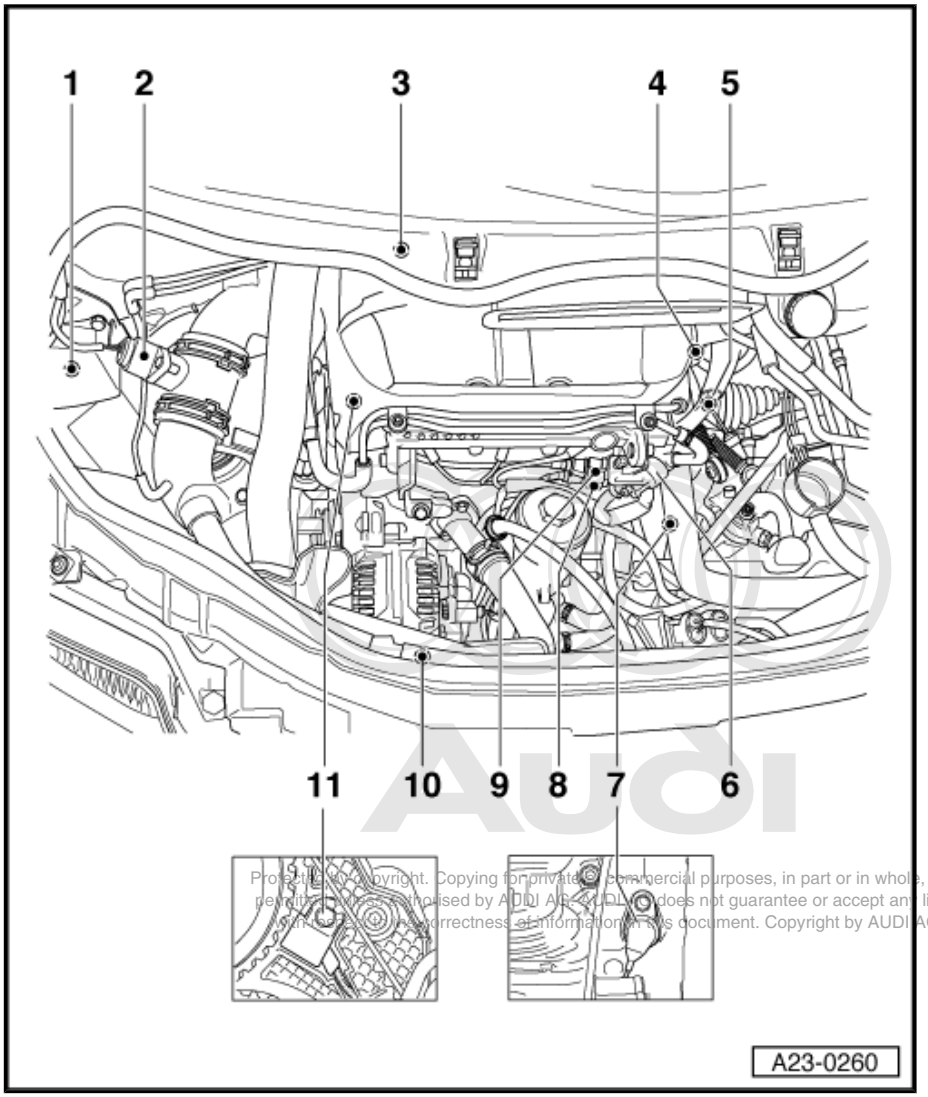

Protected by copyright. Copying for private or commercial purposes, in part or in whole, is not permitted unless authorised by AUDI AG. AUDI AG does not guarantee or accept any liability with respect to the correctness of information in this document. Copyright by AUDI AG.

⇒ page 9

11 - Hall sender -G40-

- For camshaft position

A - Brake pedal switch -F47-

- In footwell on brake pedal

B - Brake light switch -F-

- In footwell on brake pedal

C - Accelerator position sender -G79-

- In footwell on accelerator ⇒ Fuel supply system - diesel engines; Repair group 20; Servicing accelerator mechanism

D - Diesel direct injection system control unit -J248-

- With altitude sender -F96-
- Renewing control unit ⇒ page 30

E - Glow plug relay -J52-

- Only for engine code BHC
- Fitting location ⇒ page 8 , ⇒ page 8

F - Automatic glow period control unit -J179-

- Only for engine code ATL
- Fitting location ⇒ page 8 , ⇒ page 8

G - Terminal 30 voltage supply relay -J317-

H - Auxiliary air heater control unit -J604-

- Located in additional electric PTC heater

Relay in 3-way relay carrier in front left footwell (engine code AMF, ANY, BHC)

1 - Glow plug relay -J52-

2 - Terminal 30 voltage supply relay -J317-

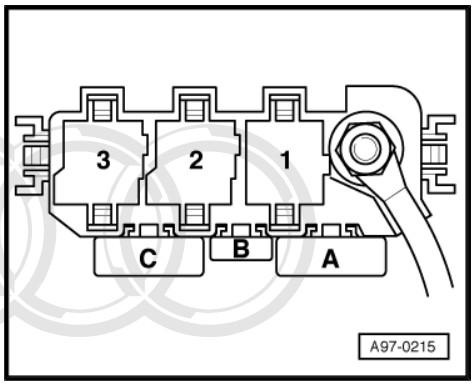

Relay in 3-way relay carrier in front left footwell (engine code ATL)

1 - Terminal 30 voltage supply relay -J317-

2 - Automatic glow period control unit -J179-

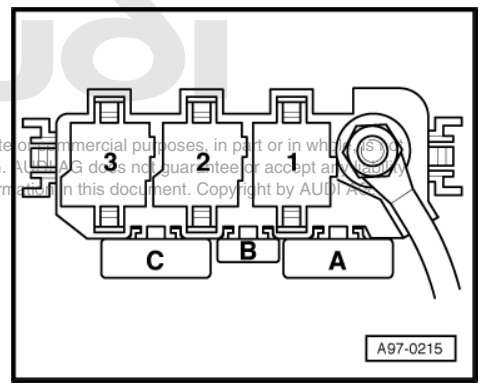

Protected by copyright. Copying for private or commercial purposes, in part or in whole, is not permitted unless authorised by AUDI AG. AUDI AG does not guarantee or accept any liability with respect to the correctness of information in this document. Copyright by AUDI AG.

Relay in 9-way relay carrier, dash panel on driver's side

1 - Low heat output relay -J359-

2 - High heat output relay -J360-

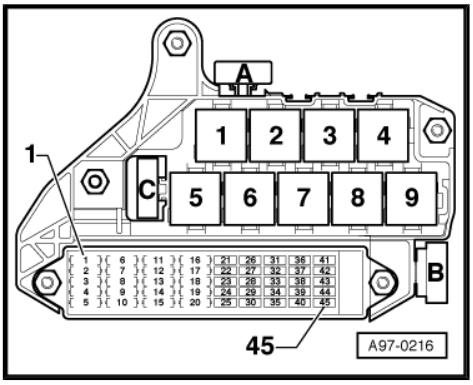

Coolant temperature sender -G62-

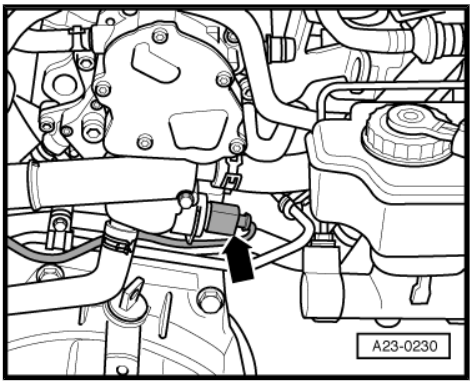

Intake manifold pressure sender -G71- and intake manifold temperature sender -G72-

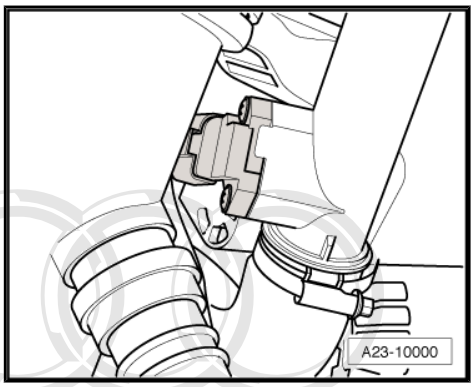

2.4 Air cleaner - exploded view of components

Protected by copyright. Copying for private or commercial purposes, in part or in whole, is not permitted unless authorised by AUDI AG. AUDI AG does not guarantee or accept any liability with respect to the correctness of information in this document. Copyright by AUDI AG.

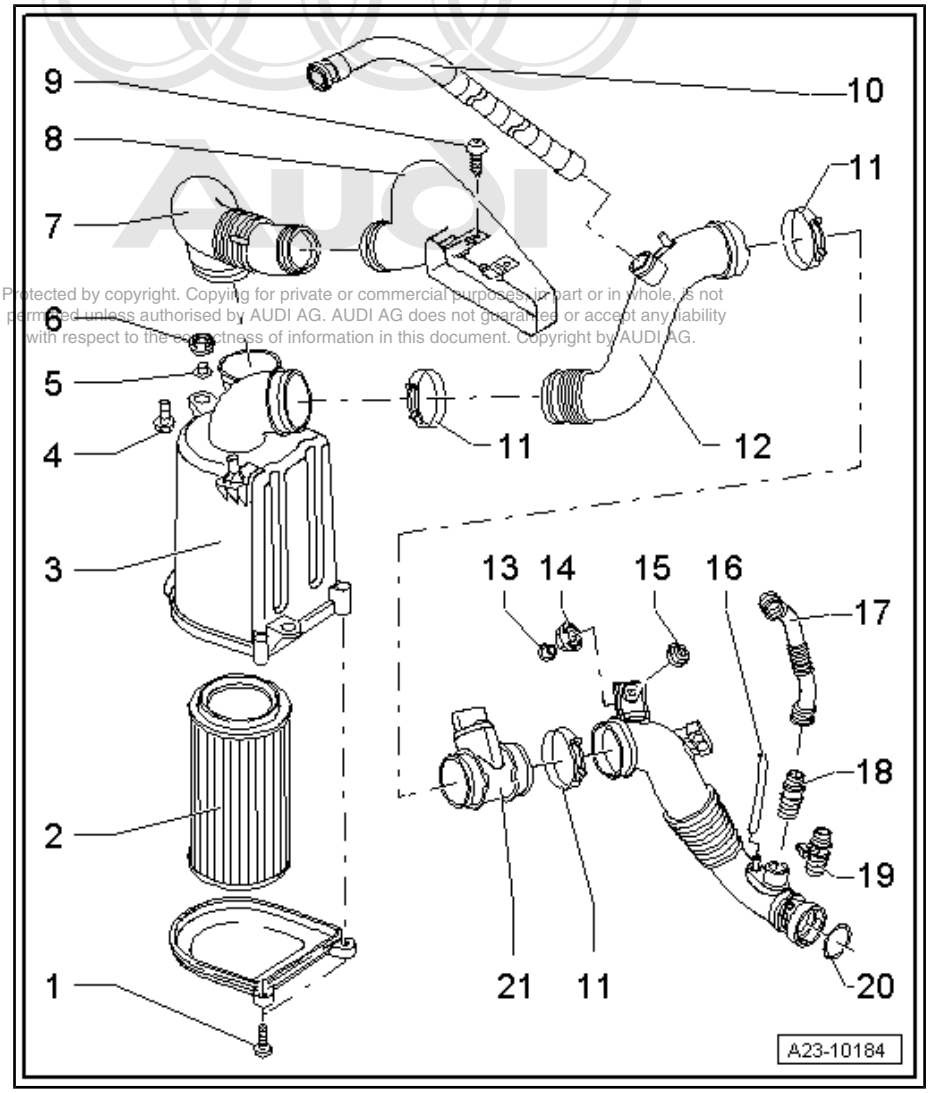

Protected by copyright. Copying for private or commercial purposes, in part or in whole, is not permitted unless authorised by AUDI AG. AUDI AG does not guarantee or accept any liability with respect to the correctness of information in this document. Copyright by AUDI AG.

1 - Bolt

2 - Air filter element

- ❑ Always use genuine part for air filter element
- ❑ Removing and installing ⇒ page 11
- ❑ Observe change intervals ⇒ Maintenance ; Booklet 809

3 - Air cleaner housing

- ❑ Clean any salt residue, leaves and dirt out of air cleaner housing

4 - Bolt

5 - Bush

6 - Grommet

7 - Intake air duct

- ❑ Clean any leaves and dirt out of intake air duct

8 - Intake air duct

- ❑ To lock carrier
- ❑ Clean any leaves and dirt out of intake air duct

9 - Bolt

10 - Intake hose

11 - Hose clip

12 - Air hose

- ❑ Check air intake hose for dirt and leaves

13 - Bush

14 - Grommet

15 - Nut

16 - Vacuum line

17 - Vacuum hose

18 - Connection

19 - Heating pipe

20 - Seal

- ❑ Renew if damaged

21 - Air mass meter -G70-

- ❑ Removing and installing ⇒ page 12

2.5 Removing and installing air filter element

Removing

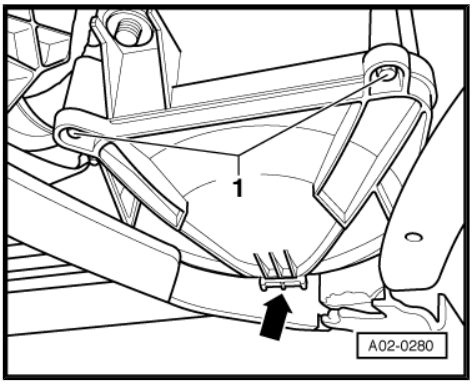

– Slacken bolts -1- and pull cover for air cleaner housing out of bracket -arrow-.

– Take out air filter element.

Installing

To ensure the proper function of the air mass meter it is important to observe the following notes and instructions.

Note

- *If the air filter element is very dirty or wet, dirt or water could reach the air mass meter and affect the air mass value. This would lead to loss of power, since a smaller injection quantity is calculated.*
- *Always use genuine part for air filter element.*
- *Hose connections and hoses for charge air system must be free of oil and grease before assembly. Do not use any lubricants containing silicone when assembling.*
- *The air cleaner housing MUST be clean.*
- *Secure all hose connections with the correct type of hose clips (same as original equipment) ⇒ Parts catalogue.*
- *To prevent malfunctions, cover all critical parts of the engine air intake tract (air mass meter, intake pipes, etc.) with a clean cloth when blowing out the air cleaner housing with compressed air.*
- *Please observe requirements for disposal.*

Protected by copyright. Copying for private or commercial purposes, in part or in whole, is not permitted unless authorised by AUDI AG. AUDI AG does not guarantee or accept any liability with respect to the correctness of information in this document. Copyright by AUDI AG.

– Check water drain hose (if fitted) for obstructions; clean if necessary. It is important that water can drain off easily.

– Clean salt residue, dirt and leaves out of air cleaner housing (top and bottom sections); use a vacuum cleaner if necessary.

– Check for salt residue, dirt and leaves in air mass meter and air intake hose (engine intake side).

– Check for dirt and leaves in air duct going from lock carrier to air cleaner housing.

– When installing the air filter element, check that it is properly centred in the retainer in the air cleaner housing (bottom section).

– Fit the top section of the air cleaner housing carefully on the bottom section, without using force. Make sure the top section of the air cleaner housing is fitted straight on the air filter element (note position of sealing lip on air filter element).

– Ensure secure fit of intake hose at air mass meter -G70- .

The remaining installation steps are carried out in the reverse sequence.

2.6 Removing and installing air mass meter -G70-

Removing

– Detach electrical connector at air mass meter -G70- .

– Open two hose clips and pull air mass meter -G70- out of intake hose.

Installing

To ensure the proper function of the air mass meter it is important to observe the following notes and instructions.

Note

- *Renew O-ring.*
- *If the air filter element is very dirty or wet, dirt or water could reach the air mass meter and affect the air mass value. This would lead to loss of power, since a smaller injection quantity is calculated.*
- *Always use genuine part for air filter element.*
- *Use silicone-free lubricant when fitting air intake hose.*
- *Secure all hose connections with the correct type of hose clips (same as original equipment) ⇒ Parts catalogue.*

– Check for salt residue, dirt and leaves in air mass meter and air intake hose (engine intake side).

– Check for dirt in air duct leading to air filter element. Clean salt residue, dirt and leaves out of top and bottom sections of air cleaner housing (wash out or vacuum out if necessary).

The remaining installation steps are carried out in the reverse sequence.

Copyright by AUDI AG. All rights reserved. Reproduction in part or in whole, is not permitted unless authorised by AUDI AG. AUDI AG does not guarantee or accept any liability with respect to the correctness of information in this document. Copyright by AUDI AG.

2.7 Intake manifold for vehicles with engine code letters AMF, BHC - exploded view

1 - Gasket
- ❑ Renew

2 - Nut
- ❑ 22 Nm

3 - Bolt
- ❑ 22 Nm

4 - Intake manifold
- ❑ Removing and installing ⇒ page 13

5 - Vacuum unit
- ❑ For intake manifold flap

6 - Bolt
- ❑ 8 Nm

7 - O-ring
- ❑ Renew

8 - Mechanical exhaust gas re-circulation valve
- ❑ With intake manifold flap

9 - Bolt
- ❑ 10 Nm

10 - Gasket
- ❑ For intake manifold
- ❑ Renew
- ❑ Installation position: straight edge of gasket faces upwards

11 - Gasket
- ❑ Renew

12 - Bolt
- ❑ 22 Nm

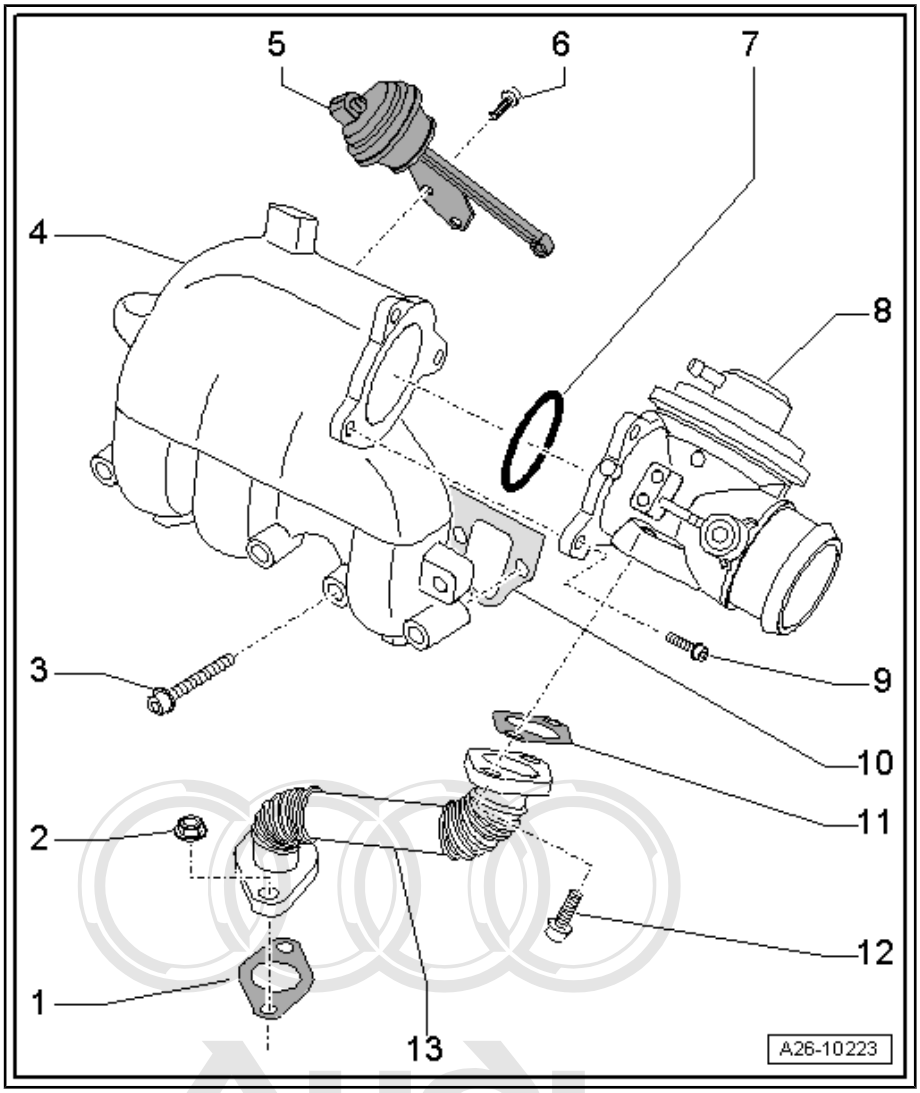

Protected by copyright. Copying for private or commercial purposes, in part or in whole, is not permitted unless authorised by AUDI AG. AUDI AG does not guarantee or accept any liability with respect to the correctness of information in this document. Copyright by AUDI AG.

13 - Connecting pipe for exhaust gas recirculation
- ❑ When installing, first tighten finger-tight and then tighten connections to specified torque

2.8 Removing and installing intake manifold - vehicles with engine code letters AMF, BHC

Special tools and workshop equipment required

♦ Hose clip pliers -VAS 6340-

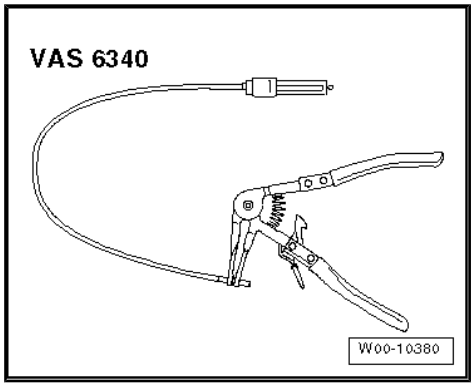

Removing

– Remove bonnet ⇒ Rep. Gr. 10 .
– If fitted, unclip bracket -1-.
– Take off engine cover panel -arrows-.
– Remove noise insulation beneath cover.

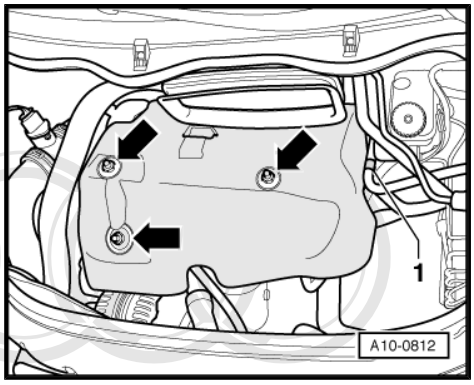

– Lever off caps -3- and -4- on two-piece windscreen wiper arm with a screwdriver.
– Slacken nuts on two-piece windscreen wiper arm a few turns.
– Release arms -1- and -2- one by one by tilting them slightly on the wiper shafts.
– Remove nuts completely and take off two-piece windscreen wiper arm.

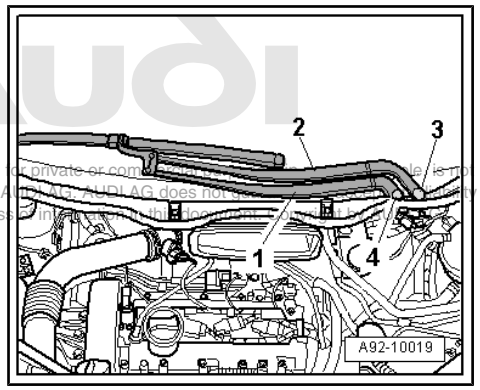

Protected by copyright. Copying for private or commercial purposes, in part or in whole, is not permitted unless authorised by AUDI AG. AUDI AG does not guarantee or accept any liability with respect to the correctness of information in this document. Copyright by AUDI AG.

– Disconnect washer fluid hose -3-.
– If fitted, unplug electrical connectors -4- and -5- for heated washer jets.
– Open hose clip -6- using hose clip pliers -V.A.G 1921- and detach water drain hose from cowl panel grille.
– Pull off rubber seal -1- on cowl panel grille.
– Disconnect cowl panel grille -2-.

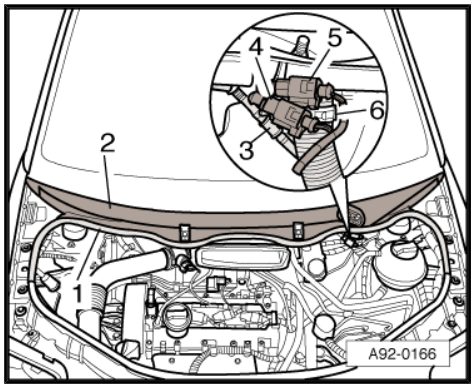

– Unscrew nuts and bolts -arrows-.
– Pull fresh air duct forwards and remove by turning it to right side of vehicle.

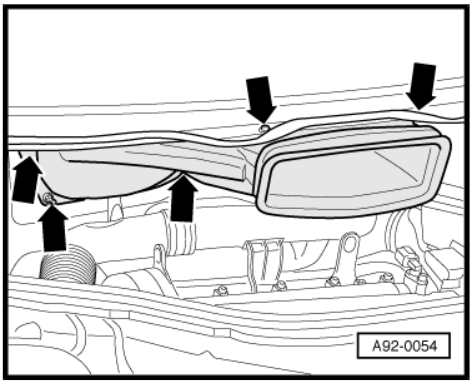

– Detach air hose -2- at mechanical exhaust gas recirculation valve and move clear to one side.
– Disconnect vacuum hose -3- at mechanical exhaust gas re-circulation valve.
– Disconnect vacuum hose -4- from vacuum unit for intake manifold flap.
– Detach crankcase breather hose -1- and move clear to one side.

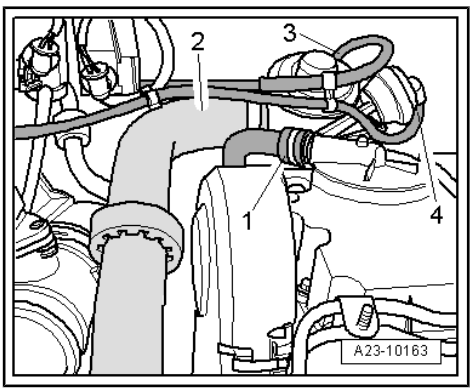

– Remove noise insulation -arrows-.

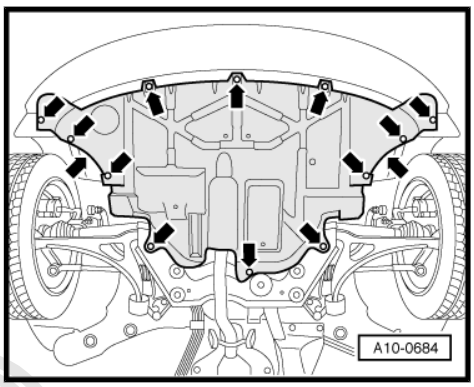

– Remove heat shield for exhaust manifold -arrows-.

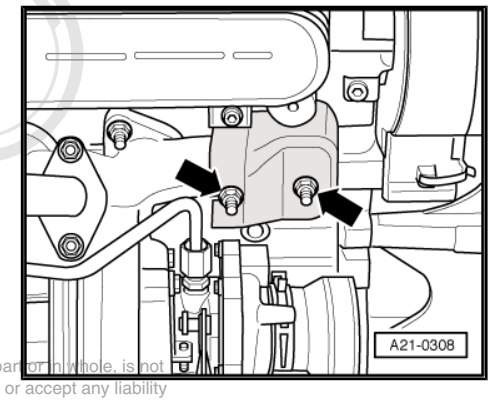

Protected by copyright. Copying for private or commercial purposes, in part or in whole, is not permitted unless authorised by AUDI AG. AUDI AG does not guarantee or accept any liability with respect to the correctness of information in this document. Copyright by AUDI AG.

– Remove connecting pipe for exhaust gas recirculation -arrows-.

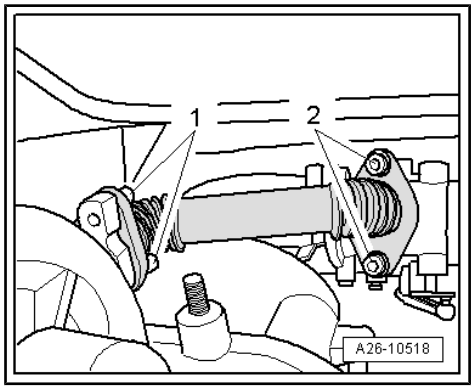

– Unscrew bolts -arrows- and remove intake manifold.

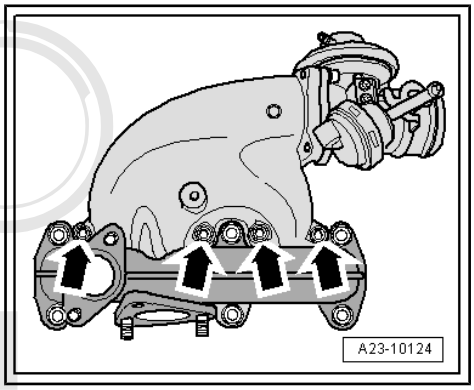

Installing

Installation is carried out in the reverse order; note the following:

Note

- *Renew gaskets, seals and self-locking nuts.*
- *Charge air system must be free of leaks.*
- *Hose connections and hoses for charge air system must be free of oil and grease before assembly.*
- *Secure all hose connections with the correct type of hose clips (same as original equipment) ⇒ Parts catalogue.*

Protected by copyright. Copying for private or commercial purposes, in part or in whole, is not permitted unless authorised by AUDI AG. AUDI AG does not guarantee or accept any liability with respect to the correctness of information in this document. Copyright by AUDI AG.

– Install windscreen wiper arm ⇒ Rep. Gr. 92 .

Tightening torques

Component		Nm
Intake manifold to cylinder head		22
Heat shield to exhaust manifold		22 1)
EGR connecting pipe to:	Mechanical exhaust gas recirculation valve	22
	Exhaust manifold	22 1)
Engine cover panel to bracket		5.5
• 1) Renew nuts.		

2.9 Intake manifold for vehicles with engine code letters ATL - exploded view

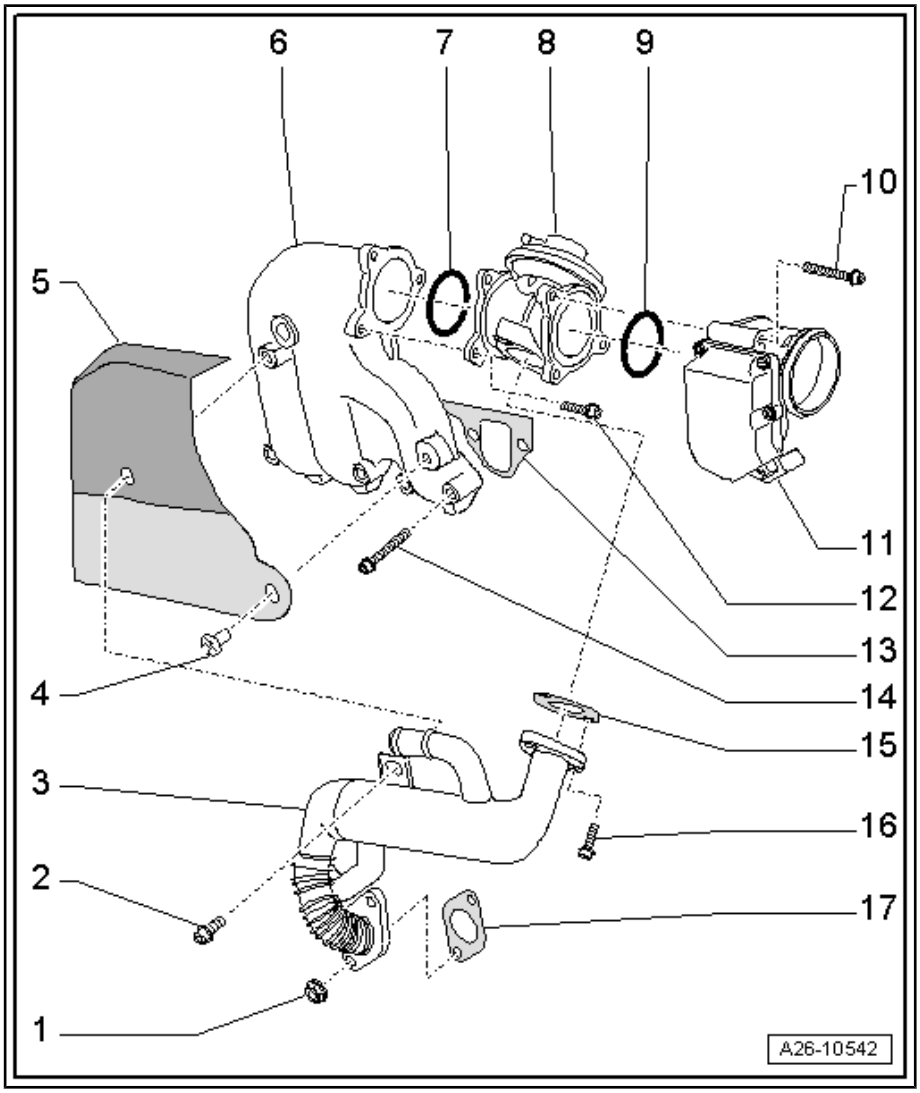

1 - Nut
- ❑ 22 Nm

2 - Bolt
- ❑ 20 Nm

3 - Exhaust gas recirculation cooler
- ❑ Removing and installing ⇒ Rep. Gr. 26

4 - Clip
- ❑ For heat shield

5 - Heat shield

6 - Intake manifold
- ❑ Removing and installing ⇒ page 17

7 - O-ring
- ❑ Renew

8 - Mechanical exhaust gas re-circulation valve

9 - O-ring
- ❑ Renew

10 - Bolt
- ❑ 10 Nm

11 - Intake manifold connection with intake manifold flap motor -V157-

12 - Bolt
- ❑ 10 Nm

13 - Gasket
- ❑ For intake manifold
- ❑ Renew
- ❑ Installation position: straight edge of gasket faces upwards

14 - 22 Nm

15 - Gasket
- ❑ Renew

16 - Bolt
- ❑ 22 Nm

17 - Gasket
- ❑ Renew

Protected by copyright. Copying for private or commercial purposes, in part or in whole, is not permitted unless authorised by AUDI AG. AUDI AG does not guarantee or accept any liability with respect to the correctness and completeness of this document or its contents.

2.10 Removing and installing intake manifold - vehicles with engine code letters ATL

Special tools and workshop equipment required

♦ Hose clamps for hoses up to 25 mm Ø -3094-

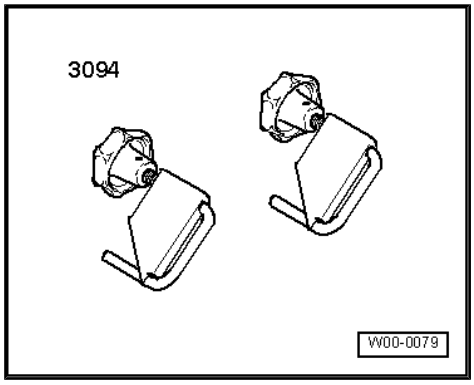

♦ Hose clip pliers -VAS 6340-

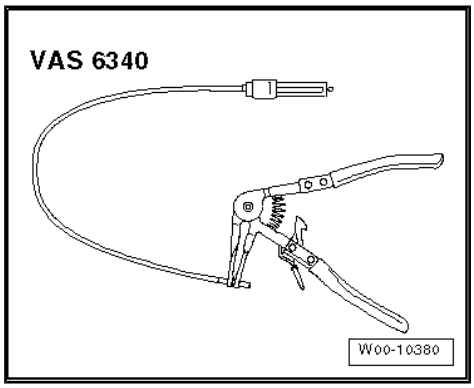

Removing

– Remove noise insulation -arrows-.

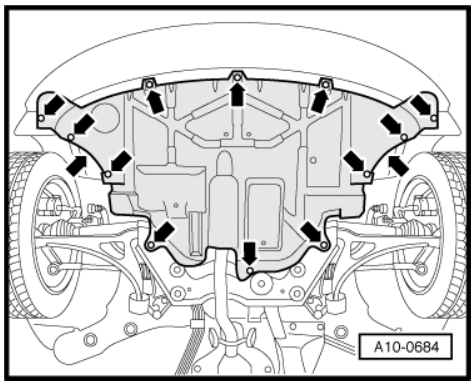

– Remove nuts -1-.

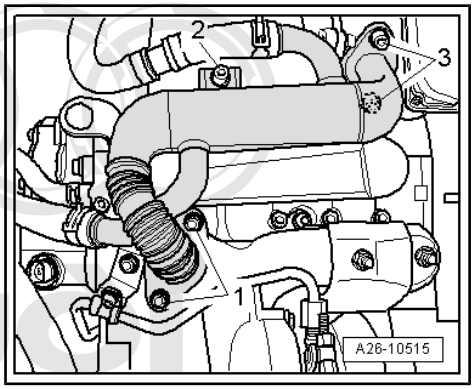

Note

♦ *Shown in illustration with engine removed.*

♦ *The bolts -2 and 3- are removed at a later stage.*

Protected by copyright. Copying for private or commercial purposes, in part or in whole, is not permitted unless authorised by AUDI AG. AUDI AG does not guarantee or accept any liability with respect to the correctness of information in this document. Copyright by AUDI AG.

– Remove heat shield for turbocharger -arrows-.
– Remove bonnet ⇒ Rep. Gr. 10 .

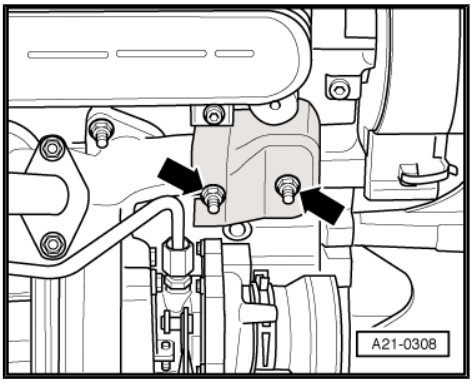

– If fitted, unclip bracket -1-.
– Take off engine cover panel -arrows-.
– Remove noise insulation beneath cover.

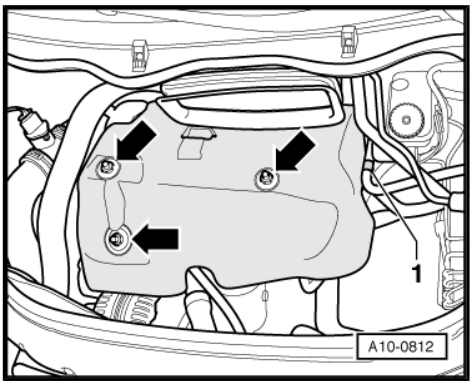

– Lever off caps -3- and -4- on two-piece windscreen wiper arm with a screwdriver.
– Slacken nuts on two-piece windscreen wiper arm a few turns.
– Release arms -1- and -2- one by one by tilting them slightly on the wiper shafts.
– Remove nuts completely and take off two-piece windscreen wiper arm.

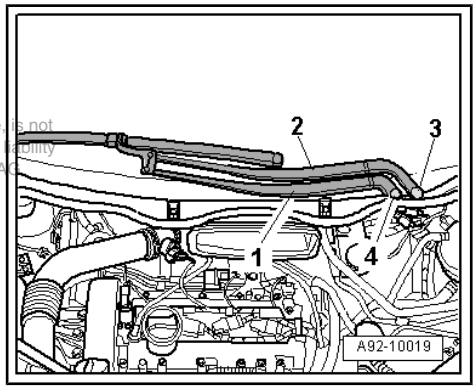

– Disconnect washer fluid hose -3-.
– If fitted, unplug electrical connectors -4- and -5- for heated washer jets.
– Open hose clip -6- using hose clip pliers -V.A.G 1921- and detach water drain hose from cowl panel grille.
– Pull off rubber seal -1- on cowl panel grille.
– Disconnect cowl panel grille -2-.

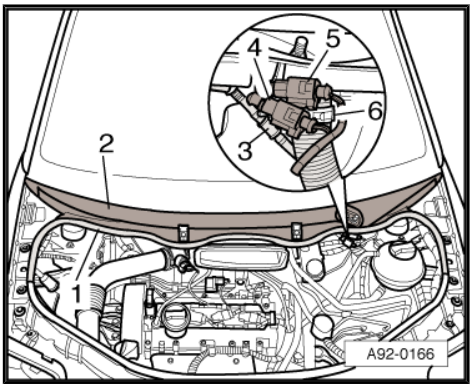

Protected by copyright. Copying for private or commercial purposes, in part or in whole, is not permitted unless authorised by AUDI AG. AUDI AG does not guarantee or accept any liability with respect to the correctness of information in this document. Copyright by AUDI AG.

– Unscrew nuts and bolts -arrows-.
– Pull fresh air duct forwards and remove by turning it to right side of vehicle.

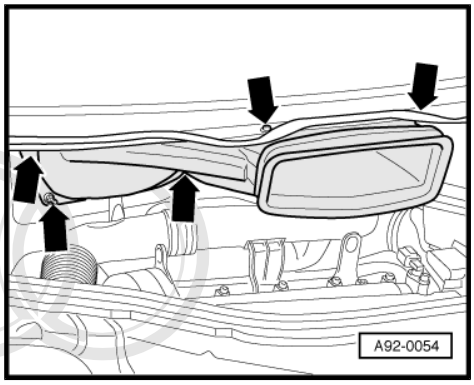

– Remove air hose -3- from intake manifold flap motor -V157- by lifting retaining clip slightly.
– Disconnect vacuum hose -1- at mechanical exhaust gas recirculation valve and move vacuum hose aside.

Protected by copyright. Copying for private or commercial purposes, in part or in whole, is not permitted unless authorised by AUDI AG. AUDI AG does not guarantee or accept any liability with respect to the correctness of information in this document. Copyright by AUDI AG.

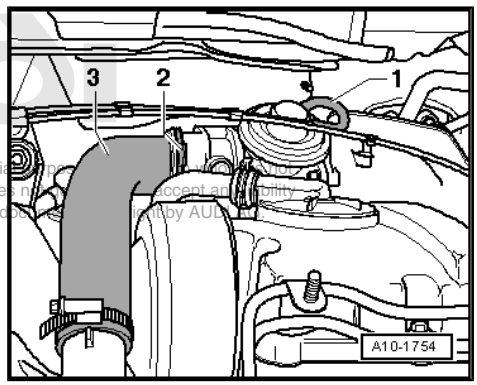

– Detach crankcase breather hose -4- at cylinder head cover and move clear to one side.

Note

Disregard -items 1 ... 3-.

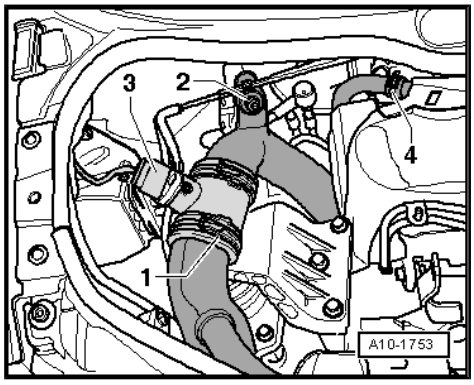

– Detach electrical connector -arrow- at intake manifold flap motor -V157- .
– Remove bolts -1 … 3- and take out intake manifold flap motor -V157- .

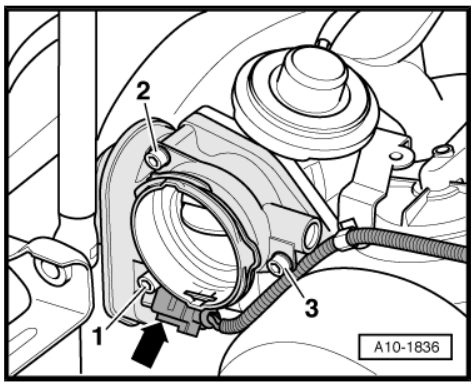

– Clamp off coolant hoses going to exhaust gas recirculation cooler using hose clamps -3094- .
– Detach coolant hoses at exhaust gas recirculation cooler.

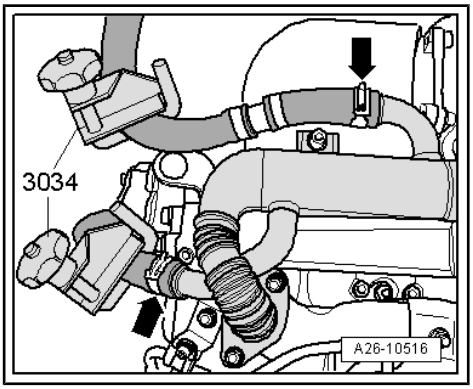

– Remove bolts -2 and 3- and detach exhaust gas recirculation cooler.

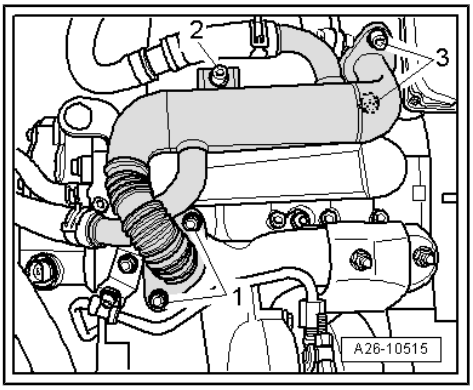

ected by copyright. Copying for private or commercial purposes, in part or in whole, is not
nitted unless authorised by AUDI AG. AUDI AG does not guarantee or accept any liability
with respect to the correctness of information in this document. Copyright by AUDI AG.

Note

Disregard -item 1-.

– Unscrew bolts -arrows- and remove intake manifold.

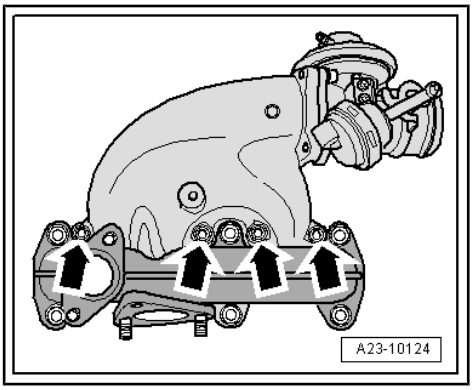

Installing

Installation is carried out in the reverse order; note the following:

Note

- *Renew gaskets, seals and self-locking nuts.*
- *Charge air system must be free of leaks.*
- *Hose connections and hoses for charge air system must be free of oil and grease before assembly.*
- *Secure all hose connections with the correct type of hose clips (same as original equipment) ⇒ Parts catalogue.*

– Install windscreen wiper arm ⇒ Rep. Gr. 92 .

Tightening torques

Component		Nm
Intake manifold to cylinder head		22
Heat shield to turbocharger		22 1)
Exhaust gas recirculation cooler to:	Mechanical exhaust gas recirculation valve	22
	Intake manifold	20
	Exhaust manifold	22 1)
Intake manifold flap motor -V157- to mechanical exhaust gas recirculation valve		10
Engine cover panel to bracket		5.5

• 1) Renew nuts.

2.11 Unit injector - exploded view

- Observe rules for cleanliness ⇒ page 1
- Always renew seals and O-rings

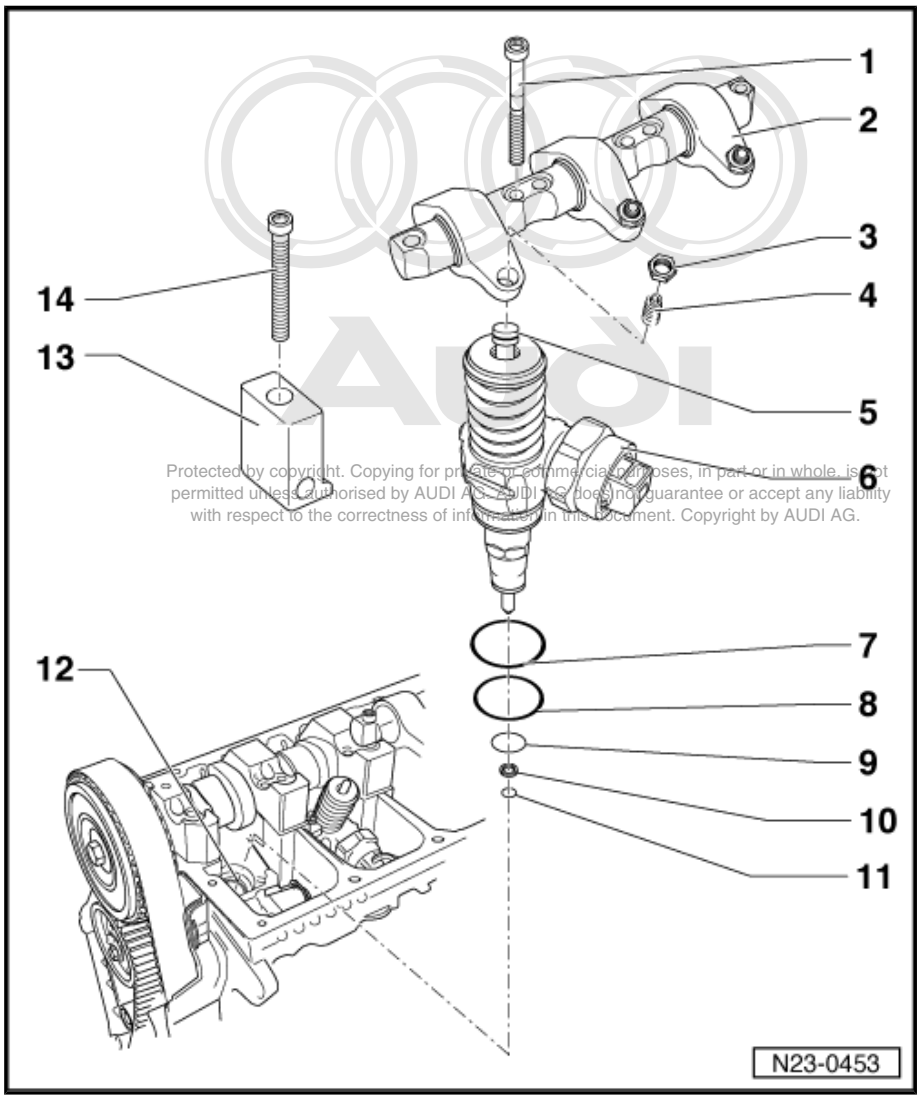

1 - Bolt
- ❑ 20 Nm + 90° (1/4 turn further).
- ❑ Renew

2 - Rocker arm shaft
- ❑ With rocker arms
- ❑ Removing and installing ⇒ page 22

3 - Lock nut

4 - Adjuster screw
- ❑ Renew when installing a new unit injector and if there are signs of wear

5 - Ball stud
- ❑ Renew

6 - Unit injector
- ❑ Removing and installing ⇒ page 22

7 - O-ring
- ❑ Renewing ⇒ page 26

8 - O-ring
- ❑ Renewing ⇒ page 26

9 - O-ring
- ❑ Renewing ⇒ page 26

10 - Insulating seal
- ❑ Renew

11 - Circlip

12 - Cylinder head

13 - Clamping block

14 - Bolt
- ❑ 12 Nm + 270° (3/4 turn further)
- ❑ Renew

2.12 Removing and installing unit injector

Special tools and workshop equipment required

- Universal dial gauge bracket -VW 387-
- Socket -3410-
- Special wrench, long reach -T10054-
- Puller -T10055-
- Torque wrench -V.A.G 1331-
- Workshop vernier caliper -VAS 5276-

♦ Torque wrench -V.A.G 1756-

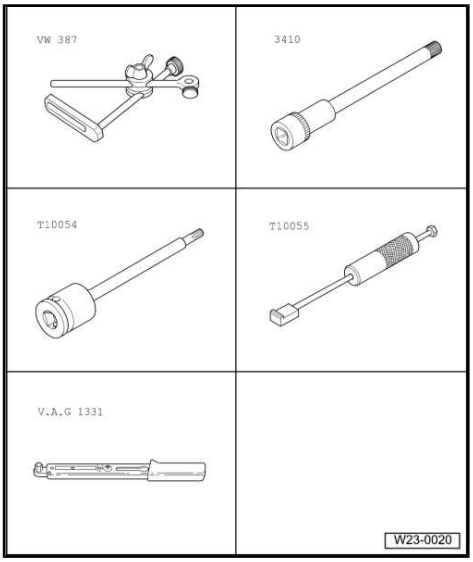

Copyright by AUDI AG. Copying for private or commercial purposes, in part or in whole, is not permitted unless authorised by AUDI AG. AUDI AG does not guarantee or accept any liability with respect to the correctness of information or the documentation contained in AUDI AG.

Removing

– Remove cylinder head cover: ⇒ Rep. Gr. 15.
– Turn crankshaft until both cams for the unit injector to be removed/installed point symmetrically upwards.
– Loosen lock nuts on adjuster screws -1- and turn adjuster screws anti-clockwise until the relevant rocker arm lies against the plunger spring of the unit injector.
– Unscrew bolts -2- for rocker arm shaft (working from outside inwards) using socket 3410 and detach rocker arm shaft.
– Remove clamping block securing bolt -3- with hexagon key -T10054- and remove clamping block.

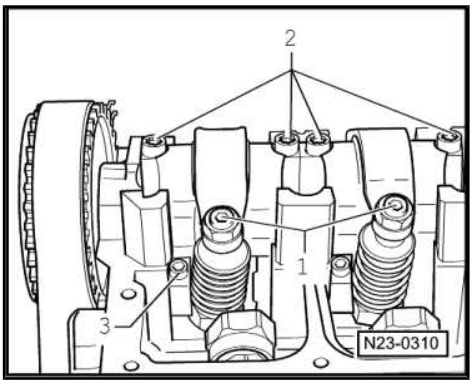

– Pry off connector from the unit injector using a screwdriver -arrow-. Press gently against the other side of connector with finger to prevent it from tilting.

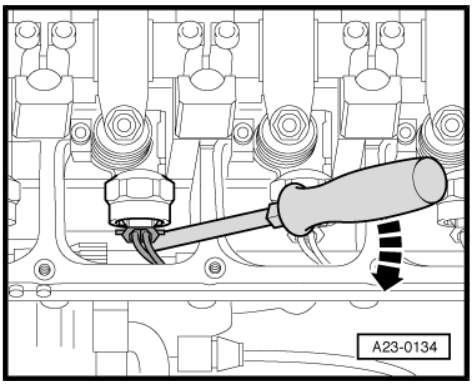

– Apply the puller -T10055- into the slot on the side of the unit injector in place of the clamping block.

– Pull unit injector out of cylinder head seat by gently tapping upwards.

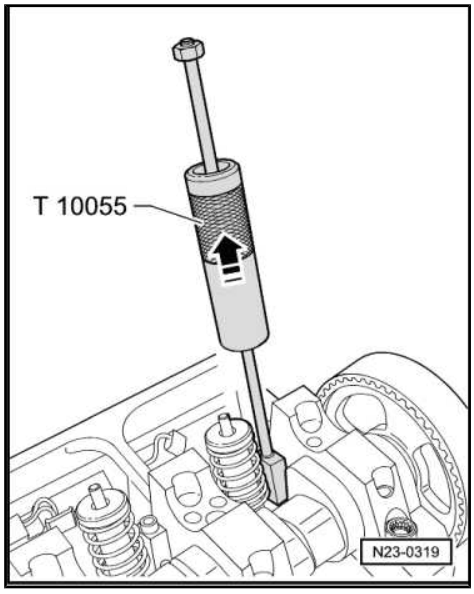

Installing

Note

- *Whenever an operation requires adjustment of a unit injector, the adjuster screw in the rocker arm and the ball stud of the unit injector must be renewed.*
- *New unit injectors are supplied with O-rings and insulating seals.*
- *When installing a new unit injector, you must also renew the appropriate adjuster screw in rocker arm.*
- *When reinstalling old unit injector, you must renew the O-rings and insulating seals* *⇒ page 26* *.*

– Before installing the unit injector, check the three O-rings, insulating seal and retaining ring for correct seating.

Note

The O-rings must not be twisted.

– Oil O-rings and fit unit injector in cylinder head seat very carefully.

– Whilst pressing evenly, slide unit injector into cylinder head seat as far as it will go.

– Insert the clamping block in the slot on the side of the unit injector.

Note

If the unit injector is not seated at a right angle to the clamping block, the securing bolt may come loose, resulting in damage to the unit injector or cylinder head.

– Therefore, align the unit injector as follows:

– Screw new securing bolt into clamping block, but do not tighten (it must still be possible to turn the unit injector slightly).

– Now align the unit injector at a right angle to the bearing pedestals of the camshaft.

Protected by copyright. Copying or distribution is prohibited without permission of AUDI AG. AUDI AG does not guarantee or accept any liability with respect to the correctness of information in this document. Copyright by AUDI AG.

– Using a workshop vernier caliper -VAS 5276- (measuring range at least 400 mm), check dimension “a” from outer edge of cylinder head to rounded surface of unit injector.

Unit injector nut with cylindrical collar:

Cylinder	Dimension “a”
1	244.2 ± 0.8 mm
2	152.8 ± 0.8 mm
3	64.8 ± 0.8 mm

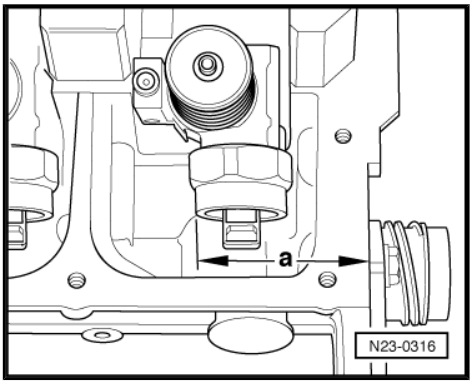

Unit injector nut with bevelled collar:

Cylinder	Dimension “a”
1	245.0 ± 0.8 mm
2	157.0 ± 0.8 mm
3	65.6 ± 0.8 mm

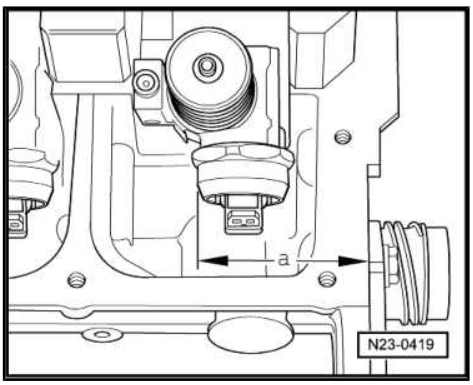

All models:

– Align unit injector as necessary and tighten securing bolt as follows:

♦ Tightening torque: 12 Nm + 270° ($^{3}/_{4}$ turn further).

– Fit rocker arm shaft and tighten new securing bolts as follows:

– First tighten inner bolts then outer bolts in several stages.

♦ Tightening torque in the same sequence: 20 Nm + 90° ($^{1}/_{4}$ turn further).

– Fit dial gauge onto adjuster screw of unit injector as shown.

– Turn crankshaft in direction of engine rotation until roller of rocker arm is located at tip of drive cam.

♦ Roller side -arrow A- positioned at highest point; dial gauge -arrow B- positioned at lowest point

– Remove dial gauge.

– Now turn the adjuster screw into rocker arm until significant resistance can be felt (unit injector is at limit stop).

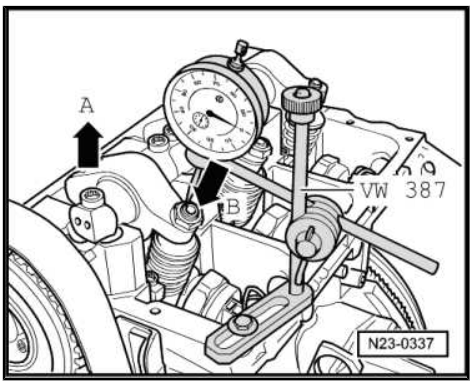

– Turn adjuster screw 180° back off limit stop using special tool torque wrench -V.A.G 1756- .

– Hold adjuster screw in this position and tighten lock nut.

♦ Tightening torque: 30 Nm

– Attach electrical connector for unit injector.

– Install cylinder head cover and toothed belt cover ⇒ Rep. Gr. 15 .

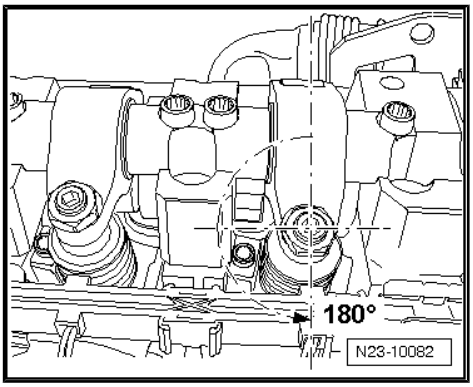

Protected by copyright. Copying for private or commercial purposes, in part or in whole, is not permitted unless authorised by AUDI AG. AUDI AG does not guarantee or accept any liability with respect to the correctness of information in this document. Copyright by AUDI AG.

2.13 Removing and installing O-rings for unit injector

Special tools and workshop equipment required

- Assembly sleeves -T10056-

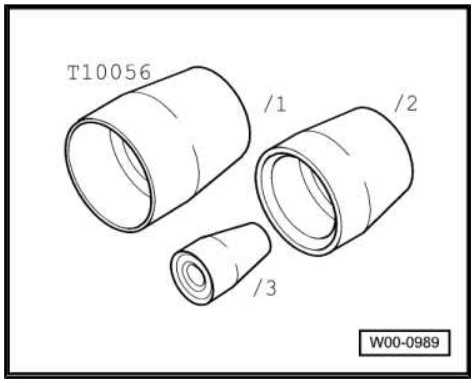

Removing

– Remove unit injector ⇒ page 22 .

– Lever old O-rings very carefully off unit injector.

– Above all, ensure that no burrs are formed at the O-ring seats.

Installing

Note

- *Always use the assembly sleeves to fit the O-rings. There is a danger of damaging the O-rings if the sleeves are not used.*
- *O-rings with no colour identification were phased in gradually. Make sure the correct O-rings are fitted in the different grooves: the thinner O-rings are fitted in the grooves closer to the injector nozzle.*
- *Push the O-rings into position when assembling; do not roll them on. They must not be twisted when seated on unit injector.*

Protected by copyright. Copying for private or commercial purposes, in part or in whole, is not permitted unless authorised by AUDI AG. AUDI AG does not guarantee or accept any liability with respect to the correctness of information in this document. Copyright by AUDI AG.

– Remove the insulating seal together with the retaining ring.

– Clean seating surfaces for O-rings on unit injector very carefully.

– Fit assembly sleeve -T10056/1- onto unit injector, pushing it to the limit stop.

– Push the upper, thicker O-ring carefully onto the assembly sleeve and into the seat on the unit injector.

– Remove assembly sleeve.

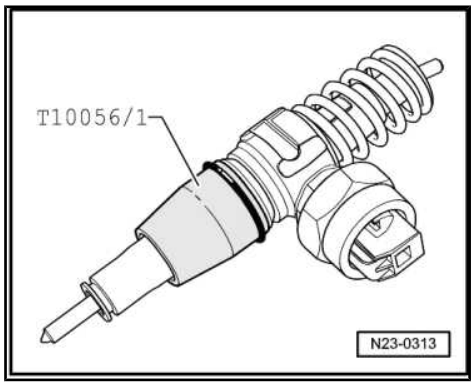

– Fit assembly sleeve -T10056/2- onto unit injector, pushing it to the limit stop.
– Push the middle, thinner O-ring carefully onto the assembly sleeve and into the seat on the unit injector.
– Remove assembly sleeve.

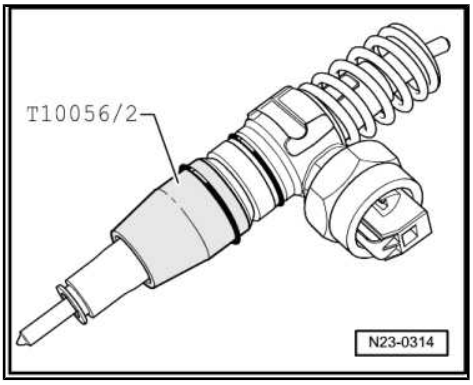

– Fit assembly sleeve -T10056/3- onto unit injector, pushing it to the limit stop.
– Push the lower O-ring carefully onto the assembly sleeve and into the seat on the unit injector.
– Remove assembly sleeve.
– Push on a new insulating seal together with the retaining ring.
– Install unit injector ⇒ page 22 .

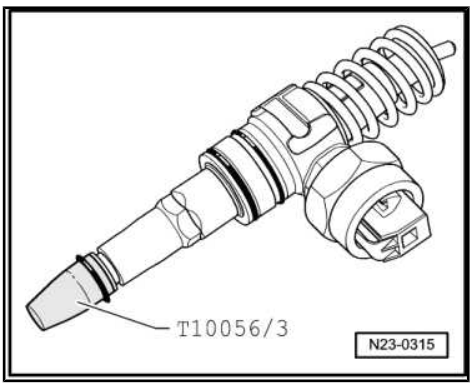

2.14 Removing and installing electrical wiring harness for unit injectors and glow plugs

Removing

– To unplug multi-pin connector for unit injectors and glow plugs, pull release pin -arrow 1- and slacken knurled nut -arrow 2-.
– Remove cylinder head cover ⇒ Rep. Gr. 15 .

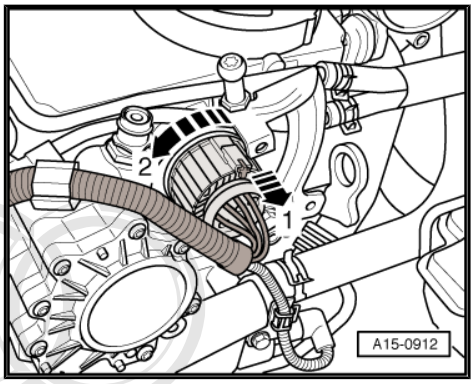

– Pry off connector from the unit injector using a screwdriver -arrow-. Press gently against the other side of connector with finger to prevent it from tilting.

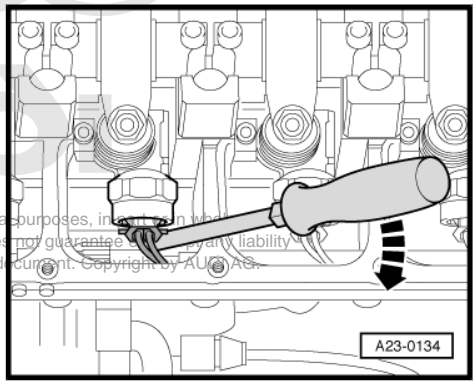

Protected by copyright. Copying for private or commercial purposes, in part or in whole, is not permitted unless authorised by AUDI AG. AUDI AG does not guarantee or accept any liability with respect to the correctness of information in this document. Copyright by AUDI AG.

– Unbolt multi-pin connector from cylinder head -arrows- and press it out of hole on cylinder head.

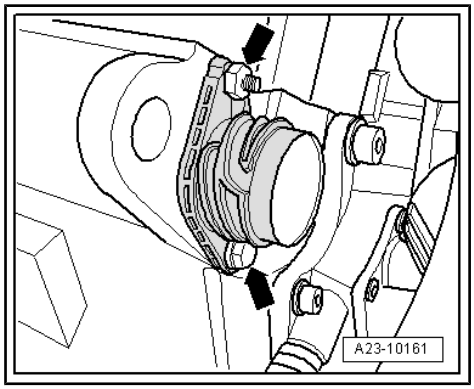

– Push wiring harness -2- together with connectors -1- out of cylinder head and unclip retaining clips at the same time.

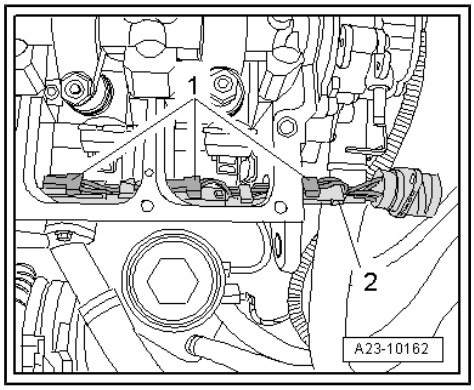

Installing

– Pull retaining clips -2- off new wiring harness.

– Insert connectors -1- into assembly guides to facilitate installation of wiring harness.

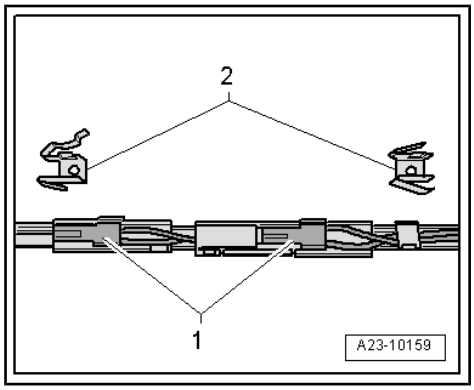

– Working from the bottom right side, slide wiring harness -2- into hole on cylinder head.

• Guide wiring harness so that electrical connectors -1- for unit injectors come to rest in the position shown in the illustration.

– Attach retaining clips and move wiring harness into installation position.

– Tighten bolts on multi-pin connector.

– Attach electrical connectors for unit injectors.

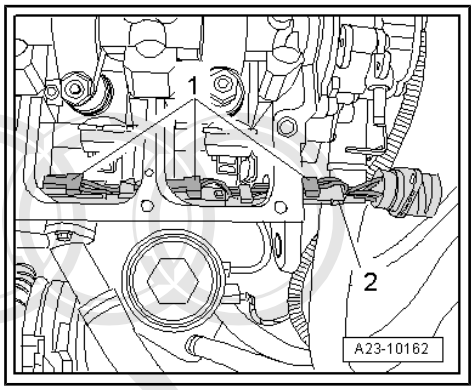

Remaining installation steps are carried out in reverse sequence; note the following:

– Remove cylinder head cover ⇒ Rep. Gr. 15 .

Tightening torque

Component	Nm
Multi-pin connector to cylinder head	10

Protected by copyright. Copying for private or commercial purposes, in part or in whole, is not permitted unless authorised by AUDI AG. AUDI AG does not guarantee or accept any liability with respect to the correctness of information in this document. Copyright by AUDI AG.

3 Engine control unit

3.1 Wiring and component check with test box -V.A.G 1598/31-

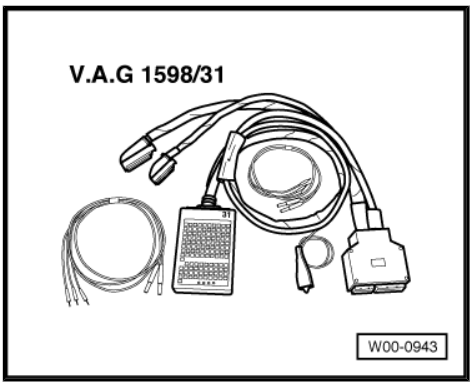

Note

- *Use the hand multimeter -V.A.G 1526C- or the multimeter -V.A.G 1715- and the voltage tester -V.A.G 1527 B- for the checks.*
- *To connect the testers to test box -V.A.G 1598/31- , always use the adapter leads from adapter set -V.A.G 1594 C- .*
- *When the engine control unit is disconnected, the learnt values are erased but the contents of the fault memory remain intact.*
- *Test box -V.A.G 1598/31- is designed so that it can be connected to the wiring harness for the engine control unit and to the engine control unit itself at the same time.*
- *The advantage of this is that the electronic engine control system remains fully functional when the test box is connected (for example, for measuring signals when the engine is running).*
- *The relevant test procedure will state whether it is necessary to also connect the engine control unit to the test box.*

WARNING

To prevent damage to the electronic components, select appropriate measuring range before connecting the measuring cables and observe the test requirements.

Connecting test box -V.A.G 1598/31-

– Lift the floor covering from the left footwell ⇒ Rep. Gr. 70 ; Removing and installing floor covering.

– Release retaining bolts -arrow- on cover.

– Detach cover.

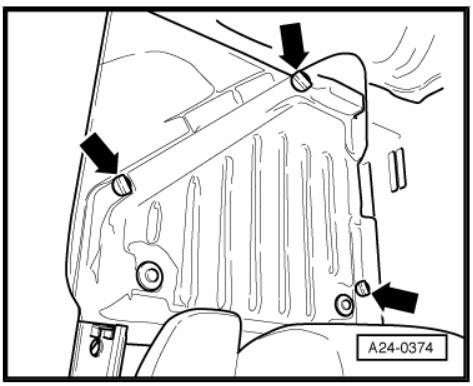

Protected by copyright. Copying for private or commercial purposes, in part or in whole, is not permitted unless authorised by AUDI AG. AUDI AG does not guarantee or accept any liability with respect to the correctness of information in this document. Copyright by AUDI AG.

– Release connectors on engine control unit -1- and unplug connectors.

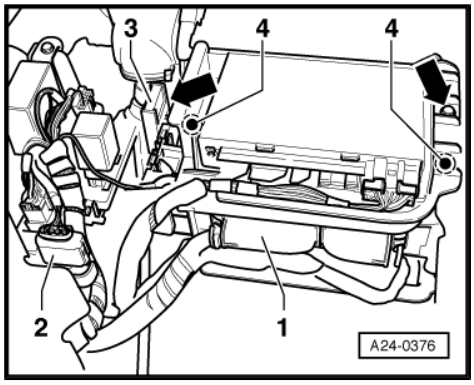

– Connect test box -V.A.G 1598/31- to wiring harness connector. Earth clip must be connected to earth.
– Carry out test as described in appropriate repair procedures.

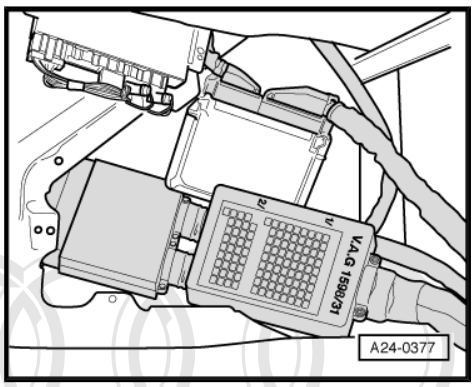

Perform the following operations after re-connecting engine control unit:

– Interrogate fault memory and erase as necessary.
♦ For this purpose, use vehicle diagnosis and service information system -VAS 5052- .

3.2 Renewing diesel direct injection system control unit -J248-

Note

♦ *Depending on which auxiliary air heater element -Z35- (version with 900 or 1500 Watt) is installed, different engine control unit versions are fitted.*
♦ *When the engine control unit is disconnected, the learnt values are erased but the contents of the fault memory remain intact.*

Protected by copyright. Copying for private or commercial purposes, in part or in whole, is not permitted unless authorised by AUDI AG. AUDI AG does not guarantee or accept any liability with respect to the correctness of information in this document. Copyright by AUDI AG.

Removing engine control unit

– Connect vehicle diagnosis and service information system -VAS 5052- and select engine electronics control unit by entering “address word” 01. When doing this, the ignition must be switched on.

The display on vehicle diagnosis and service information system -VAS 5052- will show the control unit identification and the coding -2-.

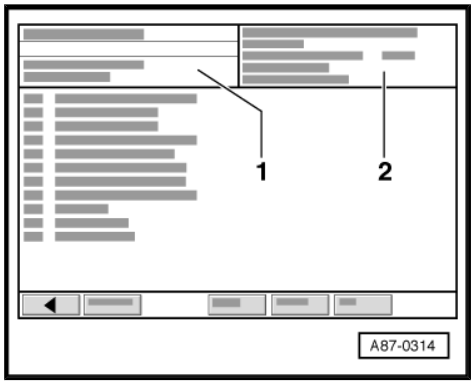

– Always start by displaying the control unit identification and printing it out.
– Switch off ignition.
– Lift the floor covering from the left footwell ⇒ Rep. Gr. 70 ; Removing and installing floor covering.

– Release retaining bolts -arrow- on cover.
– Detach cover.
– Remove fuse holder -3-.

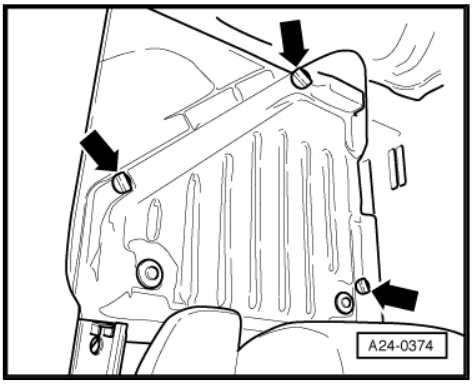

– Loosen bolts -arrow- and carefully remove control unit support.
– Carefully take out engine control unit -1- (push the retaining clips -4- in direction of arrow) -see next illustration-.

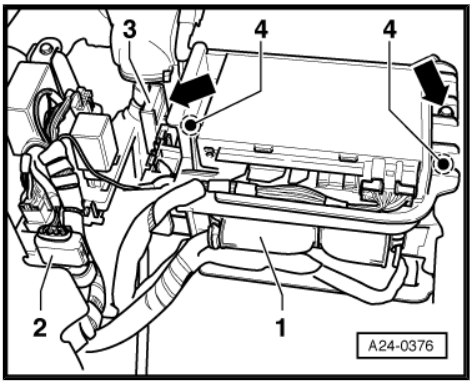

Retaining clip for engine control unit:

– Release connectors on engine control unit and unplug connectors.

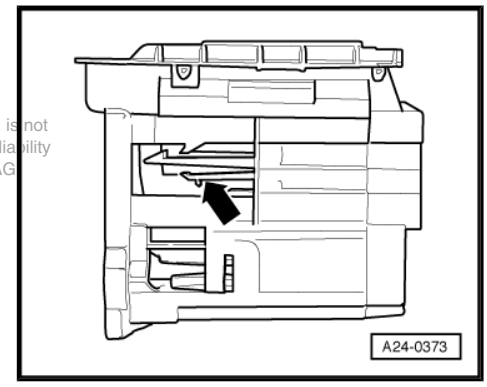

Protected by copyright. Copying for private or commercial purposes, in part or in whole, is not permitted unless authorised by AUDI AG. AUDI AG does not guarantee or accept any liability with respect to the correctness of information in this document. Copyright by AUDI AG.

Installing engine control unit

Installation is performed in the reverse sequence.

– Perform adaption of immobiliser to diesel direct injection system control unit -J248- (otherwise vehicle will not start)
– Perform coding of new engine control unit.
– On vehicles with cruise control system (identifiable by controls on steering column), activate the cruise control system via the engine control unit.

♦ For this purpose, use vehicle diagnosis and service information system -VAS 5052- .

– Select “Go to” button, “Function/component selection”, “Powertrain”, “Engine code”, “01 Self-diagnosis systems”, “Functions”, “J248 23 CU for diesel direct injection system” and “Renewing engine control unit” in the “Guided Fault Finding”.

The following step is only required on vehicles with automated manual gearbox 085 DS:

– Perform a basic setting for clutch travel sender -G162- located on slave cylinder.

♦ 5-speed manual gearbox 085 DS, Self-diagnosis ⇒ Rep. Gr. 01 ; Starting basic setting.

28 – Glow plug system

1 Checking glow plug system

Note

Checking the function of the glow plug system of engine code "ATL" is described in the "Guided Fault Finding". The glow plug system is activated via the automatic glow period control unit -J179- .

Protected by copyright. Copying for private or commercial purposes, in part or in whole, is not permitted unless authorised by AUDI AG. AUDI AG does not guarantee or accept any liability with respect to the correctness of information in this document. Copyright by AUDI AG.

. The automatic glow period control unit -J179- is capable of self-diagnosis. A fault is stored in the engine control unit if a fault occurs in the glow plug system.

The automatic glow period control unit -J179- is located in the 3-position relay carrier in the front left footwell on relay socket 2.
⇒ page 8

Checking operation

Special tools and workshop equipment required

- Hand-held multimeter -V.A.G 1526C-
- Auxiliary measuring set -V.A.G 1594C-

– Detach glow plug connectors from glow plugs.

– Connect hand-held multimeter -V.A.G 1526C- (voltage test range) to one glow plug connector and engine earth.

– Start final control diagnosis and activate glow plug relay.

- Specification: approx. battery voltage (every 5 seconds)

If specification is not obtained:

– Rectify any open/short circuit as necessary. ⇒ Current flow diagrams, Electrical fault finding and Fitting locations

– Check glow plug relay -J52- .

• For this purpose, use vehicle diagnosis and service information system -VAS 5052- .

1.1 Checking glow plugs (engine code AMF, ANY, BHC)

Checking the glow plugs of engine code "ATL" is described in the "Guided Fault Finding".

Note

On engine code "ATL" the glow plugs must not be checked for function or continuity with a power source which supplies constant voltage (e.g. 12 Volt battery). This can damage the glow plugs.

Special tools and workshop equipment required

- Auxiliary measuring set -V.A.G 1594 C-
- Voltage tester -V.A.G 1527 B-

♦ U/J extension and socket, 10 mm -VAS 3220-

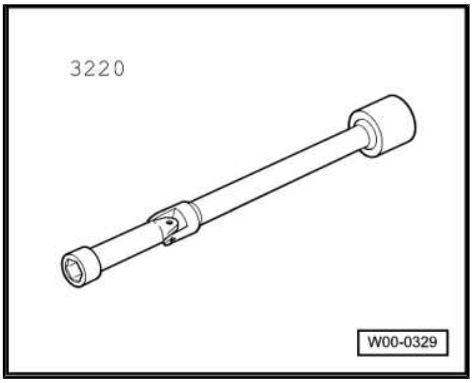

Test condition

- Battery voltage at least 11.5 Volt

– Switch off ignition.

– Detach glow plug connectors from glow plugs.

– Connect diode test lamp wire using auxiliary clips from auxiliary measuring set -V.A.G 1594 C- to battery positive (+).

– Place test probe of diode test lamp on each glow plug in turn.

If diode lights up: glow plug OK.

If diode does not light up:

– Remove and install glow plugs with U/J extension and socket, 10 mm -VAS 3220- .

– Place glow plug to be checked on fire-resistant surface.

– Connect pin on glow plug to positive terminal of a charged 12V battery.

– Connect thread of glow plug with negative terminal of battery.

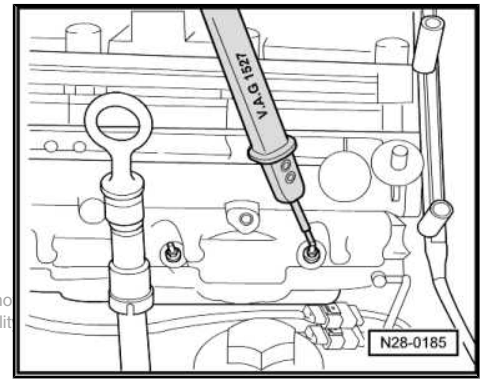

Copyright AUDI AG. ... or in whole, is not permitted unless authorised by AUDI AG. AUDI AG does not guarantee or accept any liability ... by AUDI AG.

Note

♦ *To connect glow plug, use wires with a minimum cross section of 2.5 mm².*

♦ *The leads have to have secure connecting clips.*

– Observe glow plug.

– Renew the glow plug if it does not glow or if only part of the heater element glows.

1.2 Checking glow plugs (engine code ATL)

Checking the glow plugs of engine code “ATL” is described in the “Guided Fault Finding”.

Note

On engine code “ATL” the glow plugs must not be checked for function or continuity with a power source which supplies constant voltage (e.g. 12 Volt battery). This can damage the glow plugs.

1.3 Removing and installing glow plugs

– Unplug the connector from the glow plug to be removed.

For removing and installing glow plugs use special tool U/J extension and socket, 10 mm -VAS 3220-

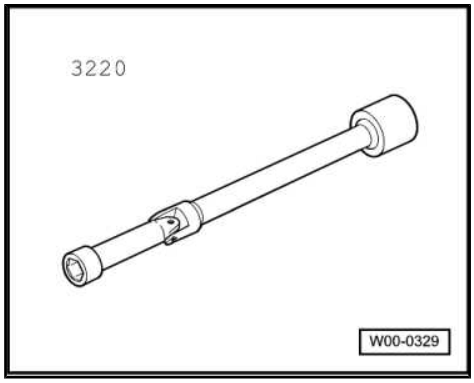

Tightening torque

Component	Nm
Glow plugs	15

Protected by copyright. Copying for private or commercial purposes, in part or in whole, is not permitted unless authorised by AUDI AG. AUDI AG does not guarantee or accept any liability with respect to the correctness of information in this document. Copyright by AUDI AG.