Contents

Chapter I Technical Characteristics of Engine 11
- **Section I Technical Requirements for Fuel, Oils, and Auxiliary Materials** 11
- **Section II Main Technical Specification of Engine** 14
- **Section III Performance Curve of Engine** 15
- **Section IV Main Checking and Adjustment Parameters** 16
- **Section V Tightening Torque for Critical Bolts of Engine** 17
- **Section VI Main Fitting Clearances and Allowable Wear Limits of Engine** 21
- **Section VII Specification of Main Attachments and Accessories** 24

Chapter II Maintenance for Main Structures of Engine 25
- **Section I Disassembly of Engine Assembly** 25
- **Section II Assembly of Engine** 43
- **Section III Crankshaft and Flywheel System** 68
- **Section IV Piston and Connecting Rod Group** 69
- **Section V Valve Distribution Mechanism** 70
- **Section VI Lubrication System** 71
- **Section VII Cooling System** 72
- **Section VIII Turbocharger and Inter-Cooler System** 73
- **Section IX EGR System** 75
- **Section X Exhaust System** 76

Chapter III Working Principle of Engine Control and Actuator Units 77
- **Section I Overview of Diesel Common Rail System** 77
- **Section II Working Principle of Low Pressure Fuel Line System** 79
- **Section III Working Theory of High Pressure Fuel Line** 82
- **Section IV Electronic Control Unit of High Pressure Common Rail System** 84

Chapter IV Engine Diagnosis 109
- **Section I. Precautions** 109
- **Section II. Maintenance Procedures** 111
- **Section III. Fault Diagnosis** 113
- **Section IV. DTC List** 115
- **Section V. Fault Diagnosis for Electronic-Controlled Common Rail Diesel Engines** 133

Downloaded from www.Manualslib.com manuals search engine

Chapter I Technical Characteristics of Engine

Section I Technical Requirements for Fuel, Oils, and Auxiliary Materials

I. Diesel

HFC4DA1-2C diesel engine adopts electronically controlled, high pressure common rail, fuel injection system and conforms to Euro-IV emission regulation and thus extends higher requirements over the fuel. To guarantee the reliability of the fuel supply system, make sure to use the qualified clean diesel produced by national well-established fuel company, in order to prevent the blockage or early wear of fuel injector due to poor fuel.

Add the fuel only at the well-established gas station. The use of poor diesel or other diesel intended for other than vehicle engine application is strictly prohibited.

Make sure to use the fuel conforming to national standard GB 19147. The grade number of the diesel chosen is related to the temperature of working environment. When the environment temperature is reduced, the paraffins within the diesel will precipitate to block the fuel pipeline, leading to difficult fuel supply and start failure of the engine. Therefore, choose different grade number of diesel depending on the environment temperature in different seasons and regions, in accordance with the table shown below.

Environment temperature	Above 5℃	Above -5℃	Above -10℃	Above -25℃
Recommended grade number of diesel	0# light diesel	-10# light diesel	-20# light diesel	-35# light diesel

Notice!

The cam of the high pressure fuel pump is being lubricated by the fuel. Never cause engine flameout due to depletion of fuel in the fuel tank, or it will lead to serious wear of the high pressure fuel pump. After adding new fuel, make sure to firstly use manual fuel pump to bleed the air from the fuel pipe and high pressure fuel pump and thoroughly fill the fuel pipe and high pressure fuel pump with fuel before starting the engine, in order to prevent the wear of high pressure fuel pump due to fuel shortage.

Procedure for air bleeding and refueling:

1. Loosen the air bleeding screw;

2. Push down the manual fuel pump with hand and then release. Repeat above operation, till there is no air bleeding out from the air bleeding screw;

3. Tighten the air bleeding screw and pump the fuel with manual fuel pump, till the fuel injection pump is thoroughly filled with fuel.

The diesel filter embodies the fuel-water separation function:

The water content in the diesel will bring about great harm to the fuel system. Upon the detection that the diesel filter water level warning lamp on the instrument panel lights up, it indicates the presence of waste water in the diesel filter. The waste water shall be drained timely, or it will lead to the rusting and wear of high pressure fuel pump, high pressure fuel rail, and fuel injector and bring about unnecessary losses.

Procedure for water drainage:

1. Unplug the water level sensor connector;

2. Loosen the water level sensor to drain the waste water, till the diesel flows out.

Downloaded from www.Manualslib.com manuals search engine

3. Tighten the water level sensor and plug the water level sensor connector.

II. Engine Oil

HFC4DA1-2C diesel engine shall use the diesel engine oil with the quality grade at API CH-4 or above, of which the viscosity is related to the environment temperature. When the environment temperature is reduced, the viscosity of the engine oil is increased to increase the start resistance so that the diesel engine can't reach the start speed and cause difficult start. Therefore, in different seasons and regions, choose the correct engine oil with different viscosity grade under different environment temperature, in accordance with the table below.

Environment temperature	-15℃~40℃	-20℃~30℃	-30℃~25℃	Extreme cold region
Engine oil trademark	10W-40/50 or 15W-40	10W-30/40/50	5W-40/50	0W-40/50

Check engine oil level:

- Stop the engine and wait for several minutes;
- Pull out the engine oil dipstick;
- Wipe the oil dipstick with clean cloth and re-insert the oil dipstick to the end;
- Pull out the oil dipstick again and observe the engine oil level. Check whether the oil level is between the upper and lower limits of the oil dipstick. If insufficient, add the engine oil.

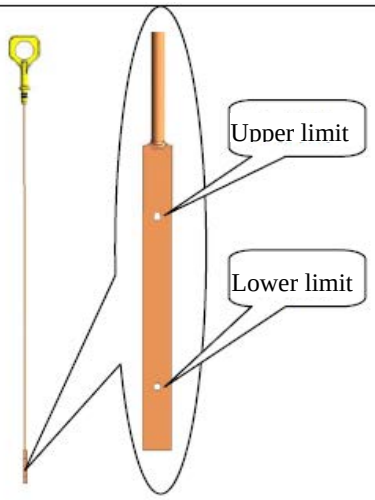

Notice: Make sure to horizontally park the vehicle while measuring the engine oil level. Stop the engine and wait for several minutes, till the engine oil can return to the oil sump.

Notice!

- Make sure to periodically check the engine oil level.
- The apparatus used for refueling shall be clean.
- In event of sudden rise or drop of engine oil level, check for cause immediately.

Downloaded from www.Manualslib.com manuals search engine

- Never mix different trademarks of engine oils.
- Periodically replace the engine oil as per the maintenance regulations.

III. Coolant

Make sure to use clean automotive antifreeze coolant featuring antifreeze in winter, anti-boiling in summer, and anti-corrosion, anti-rusting, and anti-scaling.

Take cautions during the operation:

a. Always use coolant throughout the year and pay attention to the use continuity of the coolant.

b. Depending on the temperature of the region in which the vehicle is used, choose the coolant with different freezing point. The freezing point of the coolant shall be at least 10ºC below the lowest temperature of the region, in order to maintain the antifreeze function.

c. Purchase the qualified coolant product, in order to prevent damaging the engine and causing unnecessary economic losses due to use of disqualified product.

d. Never mix different trademarks of coolants nor use such mixed coolant, in order to prevent the chemical reaction from impairing the respective comprehensive anti-corrosion performance.

e. Never add the hard water such as well water or running water. Upon the detection of suspended material, sediment, or smelliness phenomenon in the coolant, it indicates that the coolant is deteriorated and becomes ineffective due to chemical reaction. In such case, timely clean the cooling system and thoroughly replace the coolant.

f. The glycol coolant is one toxic substance and is harmful to the liver. Never swallow the coolant. In event of skin exposure to the coolant, thoroughly clean with water immediately. In addition, the nitrite anti-corrosion additive in the coolant is one carcinogenic substance. Do not dispose the used coolant randomly, in order to prevent contaminating the environment.

Notice!

- Upon the detection of sudden drop in coolant level, check for cause immediately.
- The cooling system is under pressurized state! Never open the cap of the coolant compensation tank or radiator while the engine is still hot, or it will lead to scalding danger!

Downloaded from www.Manualslib.com manuals search engine

Section II Main Technical Specification of Engine

Model	HFC4DA1-2C		
Type	Inline 4-cylinder, longitudinal layout, water-cooled, 4-stroke, turbocharged inter-cooler, high pressure common rail, and direct injection engine		
Nominal power/speed	85/3600（kw/rpm）		
Top torque/speed	250/1800～2800(Nm/rpm)		
Minimum fuel consumption of external characteristic	≤ 218g/kw·h	Top idling speed	4000rpm
Exhaust temperature (before turbine)	≤ 700℃	Idling speed	800±50 rpm
Number of cylinders × bore × stroke:	4×93 mm×102 mm	Total piston displacement	2.771 L
Compression ratio	17 ： 1	Fuel grade	-10#
Working sequence	1-3-4-2	Fuel supply advance angle	Electronically controlled
Flameout mode	Fuel cut-off	Engine mass	270kg
Emission limit (test value)	China-IV emission standard compliant	Noise limit	≤ 95dB(A)
Engine oil trademark	Above grade CH-4	Engine oil capacity	7.2L
Engine oil/fuel consumption ratio (24h at full speed)		≤ 0.10%	
Temperature of engine oil in oil sump (under nominal working condition)		≤130℃	
Engine oil pressure	Idling: ≥98 kPa		
Coolant capacity	30L	Applicable altitude	≤3500m
Thermostat type	Wax type	Maximum outlet temperature of coolant	≤ 110℃
Thermostat opening temperature	82℃	Thermostat full open temperature	95℃
Applicable temperature of diesel engine	With heated cold starter and with heater plug in engine		
Overall dimensions (L×W×H)	728.9mm×715.6mm×753.3mm	Length of cylinder block	479mm

Downloaded from www.Manualslib.com manuals search engine

Section III Performance Curve of Engine

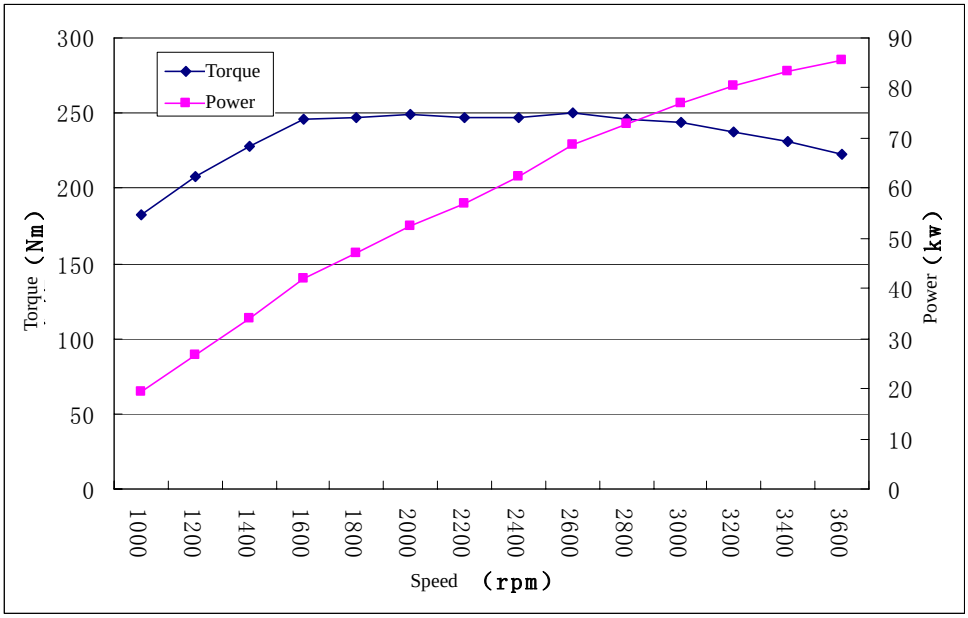

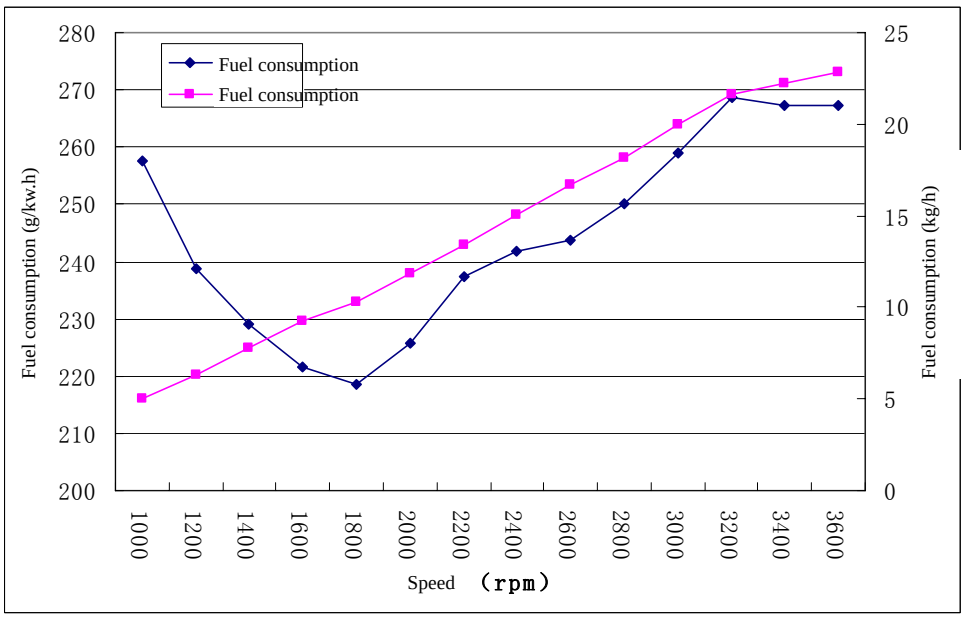

Downloaded from www.Manualslib.com manuals search engine

Section IV Main Checking and Adjustment Parameters

1、**At rated power:** (1) Exhaust temperature (master pipe) (ºC) (2) Thermostat opening temperature (ºC) (3) Thermostat full open temperature (ºC) (4) Temperature of engine oil in main oil way (ºC) (5) Engine oil pressure (kPa)	 ≤700 82 95 ≤130 400～600
2. Engine oil pressure at minimum stable speed (kPa)	≥98
3. Timing phase (in rotation angle of crankshaft) (1) Open of intake valve (before top dead center) (2) Close of intake valve (after bottom dead center) (3) Open of exhaust valve (before bottom dead center) (4) Close of exhaust valve (after top dead center)	 24.5° 55.5° 54° 26°
4. Valve clearance (mm)	0.3～0.4

Downloaded from www.Manualslib.com manuals search engine

Section V Tightening Torque for Critical Bolts of Engine

☆ Comparison Table of Tightening Torque for Critical Bolts

No.	Description	N．m
1	Fixing bolt of rockshaft	55
2	Heater plug	25
3	Nut and washer for fuel injector body	40
4	Fuel injector	34
5	Fixing bolt of thermostat housing assembly	25
6	Installation torque of rocker arm assembly	55
7	Camshaft thrust plate bolt	25
8	Camshaft timing gear bolt	110
9	Fixing bolt of rockshaft	50
10	Fixing bolt of engine oil pump filter screen assembly	20
11	Engine oil pump fixing bolt	20
12	Oil sump bolt	23.5
13	Flywheel baffle bolt	85
14	Flywheel bolt	25 for first step 70 for second step 120 for third step
15	Crankshaft bearing cap bolt	20 for first step 110 for second step 170 for third step
16	Tightening bolt of engine oil pump	25
17	Socket nut of engine oil pump	30
18	Torque for cylinder head bolt:	65 for first step 85 for second step 105 for third step
19	Rockshaft support bolt	55
20	Main bearing cap bolt	170
21	Torque for drive shaft nut	66
22	Transmission bracket nut	69
23	Clutch cover – flywheel housing bolt	M10：46 M12：91
24	Engine rear bracket nut and bolt	M10：40 M12：69
25	Front exhaust pipe bolt	37
26	Clutch working cylinder bolt	19

Downloaded from www.Manualslib.com manuals search engine

No.	Description	N．m
27	Belt pulley bolt	210
28	Fan pulley	12.5
29	Crankshaft bearing cap bolt	170
30	Connecting rod bearing cap bolt	25 for first step 85 for second step
31	Camshaft timing gear	110
32	Fuel injection pump nut	30
33	Idler gear bolt	20
34	Engine oil pipe perforated bolt	20
35	Crankshaft belt pulley bolt	210
36	Fan silicone oil clutch	12.5
37	Connecting rod bearing cap	20 for first step 85 for second step
38	Piston cooling oil pipe bolt	M8×1.25 25 M6×1.00 7.5
39	Oil pressure regulation valve	M6×1.5　30
40	Socket nut of engine oil pump	30
41	Engine oil pump assembly bolt	25
42	Oil sump bolt	23.5
43	Cylinder head bolt	65 for first step 85 for second step 105±5 for third step
44	Rockshaft support bolt	55
45	Tightening bolt of water outlet pipe	19
46	Protrusion size of water pump impeller	24.6mm
47	Fan center distance	79.2～79.8 m
48	Open temperature of thermostat valve	82 ℃
49	Full open temperature of thermostat valve	95℃
50	Open pressure of vacuum valve at center of radiator cap valve seat	88．2～117．6 kPa
51	Water pump fixing bolt	25 N.m
52	Alternator fixing bolt	40 N.m
53	Alternator adjustment plate fixing bolt	25 N.m
54	Lock nut, A/C compressor idler gear	27 N.m
55	Nut of engine oil cooler water pipe	25
56	Oil drainage plug	80
57	Fixing bolt of oil pump assembly	20

Downloaded from www.Manualslib.com manuals search engine

No.	Description	N．m
58	Tightening socket nut	30
59	Bolt and nut of starter motor	81
60	Fixing nut of starter cable	9
61	Exhaust branch pipe bolt	30
62	Bolt of heat shield	25
63	Support bolt	40
64	Front exhaust pipe nut	40
65	Crankshaft belt pulley bolt	210
66	Exhaust pipe nut	67
67	Torque of engine bracket bolt	M10：40 M12：69
68	Cylinder head cover nut	13
69	Connecting nut between turbocharger and exhaust manifold	25
70	Connecting bolt between exhaust manifold and cylinder head	30
71	Bolt of exhaust pipe heat shield	25
72	Connecting bolt of turbocharger air bleeding pipe	25
73	Perforated bolt of lubricating oil pipe	M12：41 M14：55

☆ Comparison Table for Standard Bolt Specification and Tightening Torque

Bolt Identification / Torque (N.m) / Specification	Less than grade 8.8 (low carbon steel)	Grade 8.8 (High carbon steel)	Grade 10.9 (Alloy steel)
M6×1.0	4~8	5~10	.....
M8×1.25	8~18	12~23	17~31
M10×1.25	21~35	28~47	38~64
M10×1.5	20~34	28~46	37~61
M12×1.25	50~75	62~93	77~116
M12×1.75	46~70	58~86	73~109
M14×1.5	78~117	95~142	116~174
M12×2.0	73~109	90~134	109~163
M16×1.5	106~160	138~208	163~245
M16×2.0	102~152	132~198	156~234
M18×1.5	154~230	199~299	234~352
M20×1.5	210~316	275~413	323~485

Downloaded from www.Manualslib.com manuals search engine

M22×1.5	256~422	370~555	433~649
M24×2.0	360~550	439~725	565~847

Downloaded from www.Manualslib.com manuals search engine

Section VI Main Fitting Clearances and Allowable Wear Limits of Engine

No.	Name	Standard Size (mm)	Fitting nature	Assembly Clearance for New Engine (mm)	Wear Limit (mm)
1	Contact width between valve and seat ring				
	Intake valve	1.7		2.2	
	Exhaust valve	2		2.5	
2	Valve sinkage				
	Intake valve	0.73		1.28	
	Exhaust valve	0.71		1.2	
3	Backlash	0.05-0.13		0.3	
4	Axial run-out clearance of idler gear A	0.07		0.2	
5	Outside diameter of tappet	$\Phi 13^{-0.010}_{-0.028}$	Clearance	0.01～0.046	0.10
	Tappet bore	$\Phi 13^{+0.018}_{0}$			
6	Radial run-out of push rod			0.3	
7	Deflection of rockshaft			0.3	
8	Outside diameter of rockshaft	$\Phi 19^{0}_{-0.02}$	Clearance	0.01～0.05	0.20
	Rocker arm bore	$\Phi 19^{+0.03}_{+0.01}$			
9	Rod diameter of intake valve	$\Phi 8^{-0.039}_{-0.054}$	Clearance	0.039～0.071	0.20
	Valve guide bore	$\Phi 8^{+0.017}_{0}$			
10	Rod diameter of exhaust valve	$\Phi 8^{-0.064}_{-0.079}$	Clearance	0.064～0.096	0.25
	Valve guide bore	$\Phi 8^{+0.017}_{0}$			
11	Free height of valve spring	48			
	Perpendicularity of valve spring	Φ1.4			
12	Outside diameter of idler gear A shaft	$\Phi 55^{-0.025}_{-0.055}$	Clearance	0.025～0.080	0.2
	Inside diameter of idler gear A bearing	$\Phi 55^{+0.03}_{0}$			
13	Cylinder sleeve bore	$\Phi 93^{+0.065}_{+0.020}$			

Downloaded from www.Manualslib.com manuals search engine

No.	**Name**	**Standard Size (mm)**	**Fitting nature**	**Assembly Clearance for New Engine (mm)**	**Wear Limit (mm)**
	Name	Standard Size (mm)	Fitting nature	Assembly Clearance for New Engine (mm)	Wear Limit (mm)
13	Protrusion height of cylinder sleeve	0～0.08			
14	Axial run-out clearance of camshaft		Clearance	0.05～0.13	0.20
	Cam height of camshaft	42.02±0.05			0.38
15	Inside diameter of camshaft bush	$\Phi 50^{+0.025}_{0}$	Clearance	0.025～0.080	0.12
	Diameter of camshaft journal	$\Phi 50^{-0.025}_{-0.055}$			
16	Deflection of cam bush			0.02	0.1
17	Outside diameter of piston pin	$\Phi 34^{0}_{-0.005}$	Clearance	0.002～0.015	0.03
	Piston pin bore	$\Phi 34^{+0.010}_{+0.002}$			
18	Thickness of connecting rod large end	$\Phi 33^{0}_{-0.07}$	Clearance	0.175～0.320	0.35
	Opening of crankshaft connecting rod journal	$\Phi 33^{+0.250}_{+0.175}$			
19	Clearance of intake and exhaust valves (cold state)		Clearance	0.3～0.4	
20	Main journal	$\Phi 70^{-0.068}_{-0.086}$	Clearance	0.031～0.066	0.11
	Main bush bore (after assembly)	$\Phi 70^{-0.003}_{-0.033}$			
21	Outside diameter of piston pin	$\Phi 34^{0}_{-0.036}$	Clearance	0.008～0.026	0.05
	Inside diameter of connecting rod bush	$\Phi 34^{+0.020}_{+0.038}$			
22	Crankshaft connecting rod journal	$\Phi 53^{-0.070}_{-0.085}$	Clearance	0.029～0.069	0.1
	Connecting rod bush bore (after assembly)	$\Phi 53^{-0.016}_{-0.041}$			
23	Grouping of piston outside diameter		Grouping clearance	0.053～0.075	
	Group A	92.957～92.968			
	Group B	92.968～92.979			
	Group C	92.979～92.990			
	Group D	92.990～93.001			

Downloaded from www.Manualslib.com manuals search engine

No.	Name	Standard Size (mm)	Fitting nature	Assembly Clearance for New Engine (mm)	Wear Limit (mm)
	Grouping of cylinder sleeve inside diameter (after pressed-in)				
	Group A	93.021～93.032			
	Group B	93.032～93.043			
	Group C	93.043～93.054			
	Group D	93.054～93.065			
24	Opening of piston ring				
	1st compression ring			0.2～0.4	1.5
	2nd compression ring			0.65～0.85	1.5
	Oil control ring			0.25～0.50	1.5
25	End clearance of piston ring				
	1st compression ring			0.078～0.139	0.15
	2nd compression ring			0.045～0.09	0.15
	Oil control ring			0.03～0.07	0.15

Downloaded from www.Manualslib.com manuals search engine

Section VII Specification of Main Attachments and Accessories

Lubrication system	Engine oil pump type	Externally engaged gear pump
	Flow rate of engine oil pump	≥ 23L/m (at 1,000r/m and 0.4MPa) ≥ 23L/m (at 1,800r/m and 0.44MPa)
	Open pressure of engine oil pump relief valve	0.7±0.08MPa
	Engine oil filter type	Filter element type
Cooling system	Water pump type	Centrifugal type
	Flow rate and head of water pump (water temperature at 80±5ºC)	Head ≥6.5m (at 3,000r/m) at 100L/min flow rate; Head ≥12m (at 4,000r/m) at 120L/min flow rate;
	Thermostat type	Pellet thermostat
	Temperature of thermostat	Initial open: 82ºC; full open: 95ºC
	Fan type	Independent electric fan
Electric system	Preheating plug type	Ceramic type
	Voltage of preheating plug	12V
	Starter specification	12V，2.8kW
	Alternator specification	14V，90A
	Battery voltage	12V
Intake system	Turbocharger	Radial flow variable section turbocharger The top speed of turbocharger is ≤220,000r/m, with turbocharger ratio at ≤2.2.
EGR	Type of EGR valve	Position feedback type
	Voltage of EGR valve position sensor	5V
Electronically controlled common rail fuel system	Fuel filter type	Spin-on type, with fuel-water separator, manual fuel delivery pump, and diesel heater
	High pressure fuel pump	BOSCH CP1H, radial three-plunger pump, with fuel delivery fuel pump and solenoid valve control
	Fuel injector	BOSCH CRI2.2, solenoid valve control
	High pressure common rail	Maximum rail pressure: 160MPa
	Electronic control unit (ECU)	BOSCH EDC17, with working voltage at 12V
	Crankshaft speed sensor	Working clearance: 0.5～1.2mm
	Camshaft position sensor	Working clearance: 0.5～1.5
	Air flowmeter	HFM6, with working voltage at 12V and flow measurement range at 40~840kg/h.
	Water temperature sensor	NTC type
	Rail pressure sensor	Voltage output: 0.5~4.5V
	Accelerator pedal position sensor	Voltage: 5V

Downloaded from www.Manualslib.com manuals search engine

Chapter II Maintenance for Main Structures of Engine

Section I Disassembly of Engine Assembly

I. Special Notices:

a) Before overhauling the engine, make sure to firstly disconnect the negative cable of the battery, or it will damage the harness and other electric units;

b) Unless otherwise specified, rotate the ignition switch to LOCK position;

c) Whenever the air cleaner is disassembled, make sure to plug the intake port, in order to prevent the ingress of foreign material, which may enter into cylinder and cause serious damage.

II. Disassembly Procedure

- Turn the ignition switch to LOCK position and disconnect the negative cable of the battery.
- Open the oil drainage bolt of the oil sump and fully drain and collect the oil.
- Fully drain the coolant.
- Disassemble the water inlet and outlet hoses of the engine.
- Disassemble the electronic control harness for engine ECU, engine, and complete vehicle.
- Disassemble the power supply wires for alternator, starter, and oil pressure and water temperature sensors.
- Remove the connecting hose between intake connecting pipe and air cleaner.
- Loosen the connecting pipe of inter-cooler.
- Shut off the fuel pipeline and unplug the fuel pipe and return pipe.
- Disconnect the power supply of the radiator fan and when necessary loosen the radiator bracket and take out the whole radiator.
- Loosen the clutch connecting pipe.
- Disassemble relevant connecting pipes of air conditioner and power steering pump.
- Disconnect the exhaust manifold and exhaust muffler pipe.
- Loosen the connecting mechanism between transmission and the complete vehicle.
- Loosen the fixing bolts between engine and transmission suspension bracket.
- Steadily lower the engine with elevator.
- Loosen the connecting bolts between engine and transmission and separate the transmission from the engine.

Downloaded from www.Manualslib.com manuals search engine

III. Illustration for Disassembly of Engine

1. Disassemble the flywheel.		
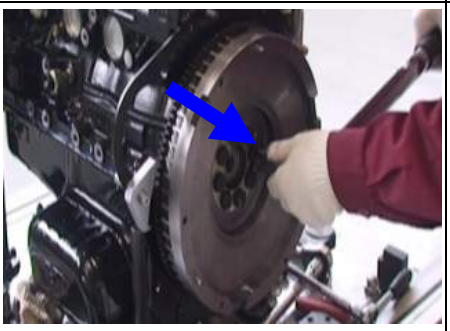 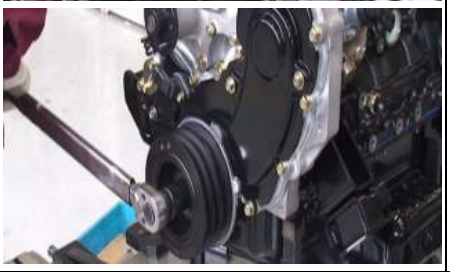		a. Block the flywheel with flywheel clamp, loosen the fixing bolts between damping pulley and flywheel, and disassemble the flywheel assembly.
2. Disassemble the belt, air conditioner compressor, and alternator and water pump pulleys.		
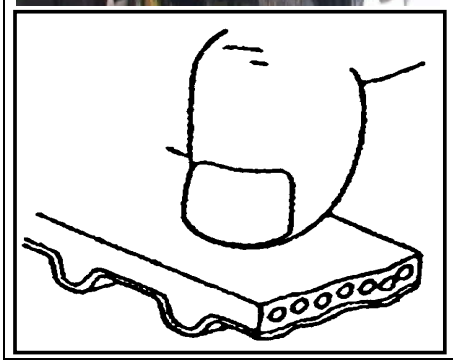		a. Use an open-end wrench to remove the fixing nuts of engine fan and remove the cooling fan of the engine. b. Loosen the alternator adjustment bolts and fixing bolts, remove the fan clutch pulley and alternator belt, and check the side face and toothed face of the belt for normal state. c. Remove the oil and vacuum pump oil return pipe connectors. d. Loosen the alternator fixing bolts and adjustment bolts and disassemble the alternator belt. Check the alternator belt for presence of aging, cracking, and abnormal wear. If yes, replace the belt. Arrange the parts disassembled orderly on the part shelf, remove the alternator, use hand to rotate the alternator pulley, and check the inside for presence of noise, stagnation, and unbalance. Check the alternator for presence of ablation and check the shaft for presence of abnormal wear noise. e. Disassemble the water pump pulley.

Downloaded from www.Manualslib.com manuals search engine

3. Disassemble the exhaust system.		
		a. Disassemble the fixing bolts of turbocharger lubricating oil pipe and disassemble the fixing clamp of return hose.
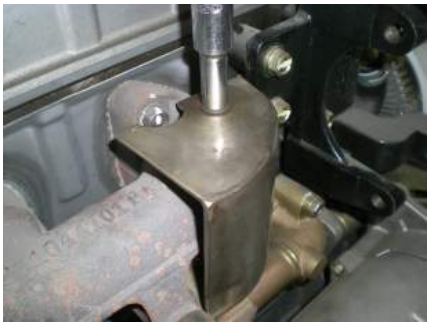		b. Remove the exhaust pipe shield.
		c. Remove the EGR cooler.
		d. Remove the exhaust pipe and turbocharger assembly. e. Remove the fixing bolts and nuts of exhaust pipe, remove the exhaust manifold and turbocharger subassembly, and remove the exhaust manifold gasket. f. Check: A) Whether the rotor of turbocharger rotates flexibly. B) Whether the air compressor wheel is damaged, observed from the inlet of air compressor. C) Whether the air compressor interferences with the housing, observed from the inlet of air compressor.
4. Disassemble the relevant accessories of fuel system.		

Downloaded from www.Manualslib.com manuals search engine

		a. Loosen the conical nut at fuel injector end and the conical nut on fuel injection pump side (one is to reversely tighten the fuel inlet of fuel injector and one is to loosen the nut of high pressure fuel pipe); Loosen the conical nut on fuel injection pump side (Two wrenches are used mainly for disassembly, of which one is to reversely tighten the fuel outlet of fuel injection pump and one is to loosen the nut of high pressure fuel pipe, in order to prevent the fuel outlet of the fuel injection pump from follow-up rotation). Remove the high pressure fuel pipe and install the high pressure fuel pipe protective sleeve; b. Remove the fuel injector return hose. c. Remove the fixing bolts of fuel injector pressure plate, remove the fuel injector body along with its support, and install the fuel injector protective sleeve.
4. Disassemble the fuel-gas separator subassembly		
		a. Remove the crankshaft breathe hose and fuel-gas separator return hose. b. Disassemble the fixing bolts of fuel-gas separator. c. Remove the fuel-gas separator.

Downloaded from www.Manualslib.com manuals search engine

		d. Remove the fixing bolts of fuel-gas separator housing and take out the fuel-gas separator filter element. Clean the fuel-gas separator housing, check the state of filter element, and when necessary replace the filter element.
		e. Disassemble the fixing bolts of fuel-gas separator bracket and remove the fuel-gas separator bracket.
4. Disassemble the intake manifold and other peripheral accessories.		

Downloaded from www.Manualslib.com manuals search engine

		a. Disassemble the fixing bolts of power steering pump and remove the power steering pump. b. Check the power steering pump for presence of oil leakage and check the belt pulley of power steering pump for presence of wear;
		c. Remove the EGR valve.
		d. Remove the fixing bolts of air intake pipe bracket.
		e. Remove the air intake pipe bracket and fuel-gas separator bracket.

Downloaded from www.Manualslib.com manuals search engine

		f. Remove the fuel rail and rail pressure sensor assembly and the rail bracket and install the fuel pressure rail protective sleeve; g. Disassemble
		h. Disassemble the fixing bolts of oil dipstick fixing sleeve and disassemble the oil dipstick conduit.
		i. Disassemble the fixing bolts and nuts of intake manifold. Remove the intake manifold;

Downloaded from www.Manualslib.com manuals search engine

		j. Remove the fixing bolts of compressor bracket and remove the compressor bracket;
		k. Remove the bypass rubber pipe, remove the thermostat housing and water outlet assembly; Disassemble the fixing bolts of thermostat housing and remove the thermostat housing.
		l. Remove the fixing bolts of cylinder head shield and remove the cylinder head shield;
		m. Remove the bolts and nuts of rocker arm support as per specified sequence and remove the rocker arm assembly. Sequence: 4-1-3-2 n. Notice: The failure to loosen the bolts of rocker arm support as per the specified sequence will damage the rockshaft*. o. Take out the push rod;

Downloaded from www.Manualslib.com manuals search engine

		p. Remove the cylinder head bolts by several times as per the specified sequence (front circle drawing method). q. The failure to disassemble by several times as per specified sequence will damage the cylinder head and impair the deflection of lower surface of cylinder head*.
		r. Remove the damping pulley. Remove the fixing bolts of water pump, remove the water pump, and check the water pump blades for presence of cracking and corrosion and check the blade shaft for presence of wear.
		s. Disassemble the fixing bolts of timing gear chamber cover and remove the timing gear chamber cover and cover gasket.
		t. Remove the engine left bracket. u. Loosen the bypass rubber hose clamp, loosen the fixing bolts of water inlet pipe weldment, and remove the water inlet pipe weldment.

Downloaded from www.Manualslib.com manuals search engine

		v. Disassemble the fixing bolts of engine oil filter and remove the engine oil filter.
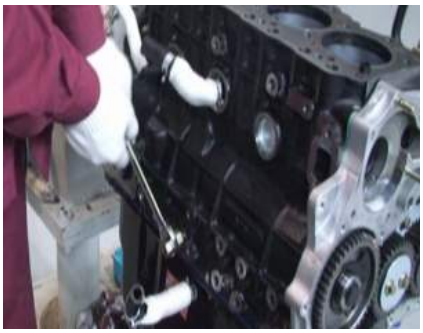		w. Use an open-end wrench to disassemble the engine oil pressure connector and remove the connector and lubricating oil pipe.
		x. Loosen the fixing nuts of fuel injection pump gear, remove the hexagon socket fixing bolts of fuel injection pump and the fixing nuts of fuel injection pump gear, knock lightly the fuel injection pump gear shaft with rubber hammer, remove the fuel injection pump and fuel injection pump gear, and install the fuel injection pump protective sleeve. The fuel injection pump shall be insulated from the air and dust.

Downloaded from www.Manualslib.com manuals search engine

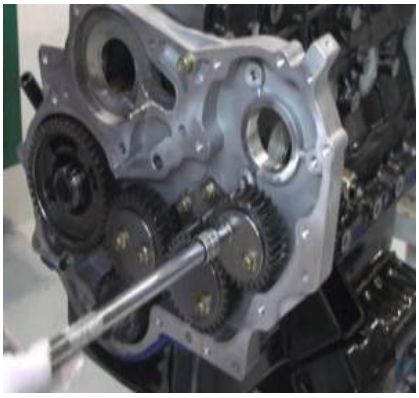		y. Remove the fixing bolts of idler gear pressure plate and remove the idler gear pressure plate, idler gear, and idler gear shaft.
		z. Remove the fixing bolts and fixing nuts of oil sump by one time as per the specified sequence and remove the oil sump.
		aa. Remove the fixing bolts of engine oil pump and pull out the engine oil pump.
		bb. Remove the fixing bolts of camshaft.

Downloaded from www.Manualslib.com manuals search engine

		cc. Pull out the camshaft.
		dd. Remove the nuts of connecting rod large end as per specified sequence and use piston installation tool to push out the piston. Position the piston orderly. Visually observe each piston for presence of cracking, scratch, and other excessive wear.
		ee. Disassemble the fixing bolts of timing gear chamber and the fixing bolts of idler gear lining plate and remove the idler gear lining plate.
		ff. Use a rubber hammer to knock lightly the timing gear chamber from both sides to remove the timing gear chamber.

Downloaded from www.Manualslib.com manuals search engine

		gg. Take out the crankshaft timing gear.
		hh. Rotate the bolts of master bearing cap as per specified sequence to pull out the bolts of master bearing cap and remove the main shaft bushes (Position the main shaft bushes orderly). ii. Overturn the crankshaft to take out the crankshaft thrust plate and remove the crankshaft and the crankshaft lower bushes. jj. Check the wear state of the crankshaft thrust plates.
		kk. Disassemble the piston cooling fuel injection pipe subassembly.
5. Check the parts.		
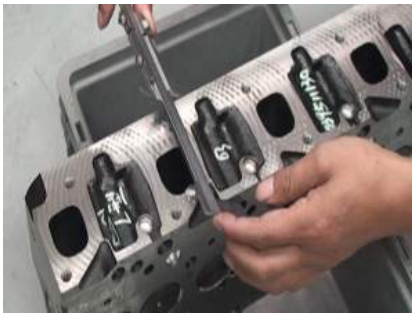	 	a. Check the lower surface of the cylinder head. Strict planeness tolerance is required for the fitting surface of the intake and exhaust branch pipes. b. These surfaces can be repaired by grinding. If the surface planeness is out of the specified tolerance, grind the surface to meet the technical requirements. If the planeness is excessively out of the technical requirements, replace the cylinder head. Deflection of cylinder head lower surface 0.05 or less Limit 0.20 Cylinder head height Standard value 92 Limit 91.55 c. Use ruler and feeler gauge to measure the deflection of fitting surface between exhaust branch pipe and

Downloaded from www.Manualslib.com manuals search engine

		cylinder head. If the measurement is between limit and standard value, re-grind the fitting surface between exhaust branch pipe and cylinder head. If the measurement is out of the specified limit, make sure to replace the branch pipe.
		d. Use a multimeter to measure the outside diameter of piston at the position 73.9mm reach from the piston crown. Standard value: A: 92.971~92.980mm B: 92.981~92.990mm C: 92.991~93.000mm D: 93.001~93.010mm
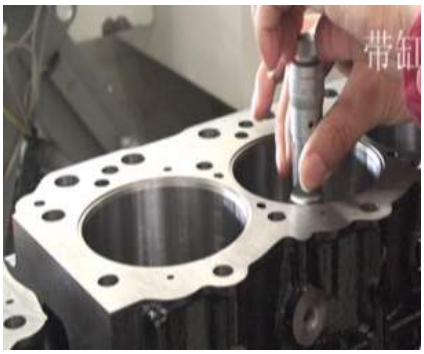		e. Use an inside micrometer to measure: Standard value for inside diameter of cylinder bore fitted with cylinder sleeve: A:93.021~93.030mm B:93.031~93.040mm C:93.041~93.050mm D:93.051~93.060mm
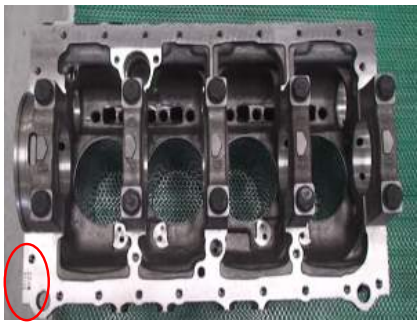		**f.** Subtract the inside diameter of cylinder bore from the outside diameter of piston to obtain the piston clearance. The clearance range of piston: 0.041~0.059mm. If the piston clearance is out of the specified range, check and replace the cylinder sleeve or piston, depending on the cylinder bore grouping and the outside diameter of piston. (The second line of the stamped code at the rear end of lower surface of new cylinder block indicates the inside diameter group of the cylinder bore).

Downloaded from www.Manualslib.com manuals search engine

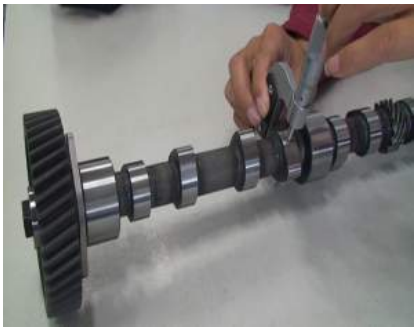		g. Measure the cam height of the camshaft. The standard value is 42.02±0.05mm and the limit is 41.65mm. If the measurement is out of the limit, make sure to replace the camshaft. h. Use a multimeter to measure the outside diameter of each camshaft journal. If any measurement is out of the limit, replace the camshaft. The standard value for outside diameter of journal is 49.945-49.975mm and the limit is 49.60mm. If any measurement is out of the limit, replace the camshaft.
		i. Use a feeler gauge to measure the axial run-out clearance of the camshaft. The axial run-out clearance of camshaft is 0.05~0.114mm.
		j. Use a multimeter to measure the outside diameter of valve stem. If the measurement is less than the specified limit, make sure to replace the valve and valve guide in pair. (Intake valve: 7.946-7.961mm; limit: 7.880mm) (Exhaust valve: 7.921-7.936mm; limit: 7.850mm)
		k. Use a multimeter to measure the inside diameter of valve guide and subtract the outside diameter of valve stem from the measurement to obtain the valve guide clearance. If the clearance obtained is out of specified limit, make sure to replace the valve and valve guide in pair. (Limit of intake valve guide clearance: 0.200mm) (Limit of exhaust valve guide clearance: 0.250mm)

Downloaded from www.Manualslib.com manuals search engine

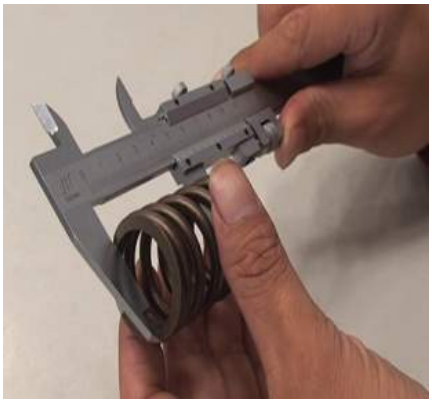		l. Measure the free height of valve spring. If the measurement is out of specified limit, make sure to replace the spring. The standard value is 0.05mm or less and the limit is 0.20mm.
		m. Use a feeler gauge to measure the clearance between piston ring groove and piston ring. If the clearance between piston ring groove and piston ring is out of specified limit, make sure to replace the piston.
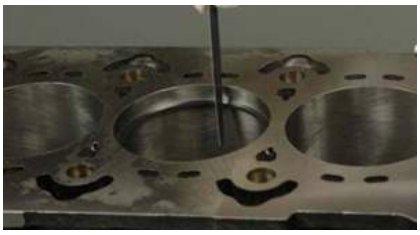		n. Use a feeler gauge to measure the opening gap of piston ring. If the opening gap of the piston ring is out of specified limit, make sure to replace the piston.
		o. Install the steel-strip oil ring.

Downloaded from www.Manualslib.com manuals search engine

		p. Install the oil ring bush ring.
Illustration of opening directions for piston rings 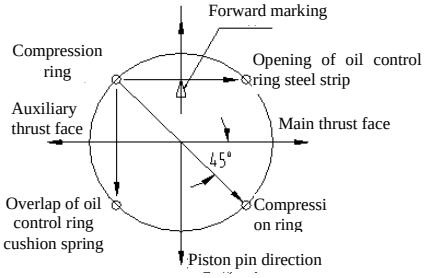		q. Use a piston ring expander to install the 2nd compression ring and the 1st compression ring. While installing the compression rings, face upward the marking N (The lip of 2nd compression ring shall face downward). The overlap position of oil control ring cushion spring and the opening of oil control ring steel strip shall be 180º away from each other and shall be 90º away from the 2nd compression ring.
		r. Measure the outside diameter of main journal and the inside diameter of main shaft bore.

Downloaded from www.Manualslib.com manuals search engine

		s. Measure the outside diameter of connecting rod journal and the inside diameter of bush bore of connecting rod fitted with bush. Calculate the clearance between main journal of crankshaft and the main bush bore of crankshaft: The difference between the diameter of main journal and the inside diameter of crankshaft main bush bore measured above is the fitting clearance. The wear limit shall not exceed 0.11mm. **Notice: While measuring the inside diameter of crankshaft main bush bore, install the bearing cap and bush onto the bearing block and tighten the bolts to specified torque. Use an inside multimeter to measure the inside diameter.** Calculate the clearance between crankshaft connecting rod journal and connecting rod bush bore: The difference between the diameter of connecting rod journal and the inside diameter of connecting rod bush bore measured above is the fitting clearance. The wear limit shall not exceed 0.10mm.

Downloaded from www.Manualslib.com manuals search engine

Section II Assembly of Engine

I. Basic Technical Requirements for Assembly

The assembly of the engine is one important step for service of the engine. The service performance of the engine is closely related to the assembly accuracy, assembly technical requirements, and the assembly quality. Make sure to pay attention to following items:

Before the assembly, make sure to thoroughly clean and thoroughly blow dry all parts and components. All friction surfaces of the parts with relative movement are applied with lubricating oil (grade CE diesel engine oil or above). Carefully remove all oil dirt and carbon deposit, till the base metal is exposed. Never use electric wire brush to clean the sealing surfaces of any sealing gasket. Remove the residues from all used sealing gaskets. It's absolutely prohibited to use wire brush to clean the piston.

a. Remove the carbon deposit, oil dirt, and water scale and clean all lubricating oil pipes and pipelines.

b. Check the wear state of valve, push rod, and rocker arm contact surfaces and when necessary repair or replace.

c. Check the wear state of piston rings, cylinder sleeves, connecting rod small end bushes, and connecting rod bushes and when necessary replace.

d. Check the wear state of main bushes and thrust plates.

e. Check the wear state of engagement surfaces of transmission mechanism and drive gear and measure the engagement clearance and when necessary repair or replace.

f. Check the wear state of intake and exhaust valves and intake and exhaust valve seats and repair, grind, and test the leakage and when necessary replace.

g. Check the mist injection state of the fuel injector and when necessary grind or replace the fuel injector coupler. While installing the used fuel injector, clean the carbon deposit with ultrasonic and do not wipe with silk or scrape with knife, in order to prevent damaging the injector nozzle and blocking the injector orifice.

h. Check the engine oil pump and disassemble for checking or measure the wearing parts and adjust accordingly.

i. Check the cylinder gasket and intake and exhaust pipe gaskets and replace any damaged or failed gasket.

j. Check the alternator and starter, clean all parts and bearings, blow dry and apply new lubricating grease, and check the wear state of starter gear and check the transmission mechanism for flexible functioning.

k. Check and clean the turbocharger.

Downloaded from www.Manualslib.com manuals search engine

II. Illustration for Assembly of Engine

1. Install the piston cooling fuel injector subassembly.		
	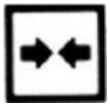	a. Install the piston cooling fuel injector subassembly: Install the piston cooling fuel injector subassembly onto the engine block; b. Tighten the hexagon socket screws to 12.5±2.5N.m;
2. Install the crankshaft, thrust plates, and main bearing caps.		
	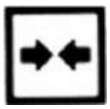	a. Install the upper and lower main bushes: Align the stop opening of upper main bush with the slip groove of the main bearing block bore of engine block and push 5 upper main bushes to place; **Notice: While installing the main bushes, make sure to differentiate the upper and lower bushes, of which the upper bush has oil grooves and the lower bush has not. Do not install the bushes reversely.**
	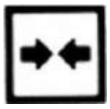	a. Apply an appropriate amount of clean engine oil onto the upper bearing bush; b. Lift up and place the crankshaft onto the engine block.

Downloaded from www.Manualslib.com manuals search engine

		c. Install the crankshaft thrust plates to the 3rd main journal portion (The surface with oil groove faces to crankshaft thrust surface and the oil groove shall be sprayed with lubricating oil).
		d. Spray oil to the main journal portion and install the 1~4 main bearing caps of crankshaft as per the marked sequence. The arrow markings on the bearing caps shall face to the front of the engine. e. Apply the liquid sealant onto the fitting surface between 5th bearing cap and cylinder block and install the 5th bearing cap * text: Notice: 1) Before applying the sealant, the fitting surface of main bearing cap shall be thoroughly free of any engine oil; 2) Never block the cylinder threaded holes and bearings by the sealant.

Downloaded from www.Manualslib.com manuals search engine

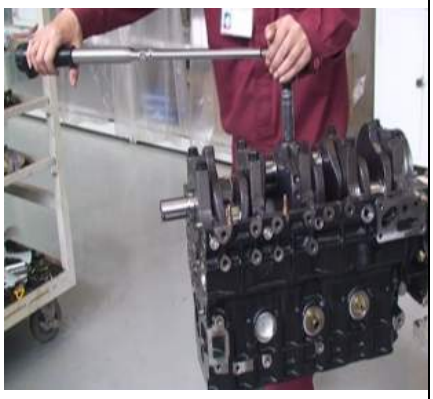		f. Apply engine oil onto the threads of main bearing cap bolts, install into the main bearing caps, and tighten the bolts to 170 N.m torque as per the specified sequence. Tighten to 20 N·m for the 1st step, to 120 N·m for the 2nd step, and 170 N·m for the 3rd step. **Tightening sequence: (From center to two sides)** 8415 9 7326 10
		g. Adhere the magnetic dial gauge onto the cylinder block, position the pointer of the dial gauge to the rear end face of crankshaft, and use a straight screwdriver to pry lightly the crankshaft to check the axial clearance of crankshaft (or push the crankshaft left and right and measure with feeler gauge). If the thrust clearance is out of the limit, replace the thrust bearings in pair. Standard value: 0.040mm-0.201mm; Limit: 0.30mm
		h. Rotate the crankshaft and check for flexible rotation and presence of noise. Alternatively, use a digital wrench to measure the net torque of crankshaft, listen for presence of noise, and check whether the torque is ≤6N.m.
		a Insert the lubricated tappets in turn into the tappet holes.

Downloaded from www.Manualslib.com manuals search engine

		b. Install the tappet anti-drop tool.
3. Install the piston connecting rod assembly.		
 		a. Spray one film of oil onto the cylinder bore. b. Spray oil onto the piston skirt, install the piston into the piston taper sleeve, insert into the cylinder bore, and use nylon bar and guide jig to install the piston. **Notice: (The connecting rod and bolts shall not come into contact with the cylinder bore and the large end bore of connecting rod shall be orthometric with the crankshaft journal.)** c. After installing the large end cap of the connecting rod, tighten the large end nut of connecting rod to 20N· m and 85N· m by two times. d. Use a feeler gauge to check the side play of large end of connecting rod. The side play range for large end of connecting rod: 0.175-0.29mm. e. After the installation of pistons for 1st and 4th cylinders, rotate the crankshaft for 180º and install the pistons for 2nd and 3rd cylinders.

Downloaded from www.Manualslib.com manuals search engine

4. Install the timing gear and related accessories.		
		a. Insert the lubricated tappets in turn into the tappet holes.
		b. Install the water manifold (The water manifold is paralleling with the cylinder block)

Downloaded from www.Manualslib.com manuals search engine

		c. Spray oil to the crankshaft gear and then install.
		d. Install the gasket of timing gear chamber.
		e. Install the timing gear chamber and idler gear lining plate and pre-tighten the fixing bolts.

Downloaded from www.Manualslib.com manuals search engine

		f. Spray lubricating oil onto the camshaft bush, add lubricating oil to the head of tappet, and spray lubricating oil onto the camshaft subassembly.
		g. Install the camshaft (with the bottom facing upward and the left facing forward).
		h. Tighten the fixing bolt subassembly of camshaft thrust plate to 25±5N.m.
		i. Install the engine oil pump outlet pipe subassembly and engine oil pump assembly with strainer.

Downloaded from www.Manualslib.com manuals search engine

		j. Install the idler gear shafts A and C onto the idler gear lining plate and use nylon bar for idler gear shaft to lightly knock into the idler gear lining plate.
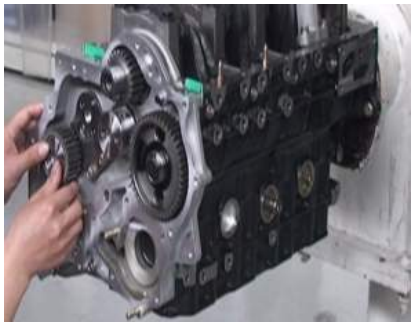		k. Apply oil onto the surface of idler gear C bush and lightly rotate into the idler gear shaft C. Then, apply oil onto the surface of idler gear A bush and use nylon bar to lightly knock into the idler gear shaft A. Take caution to apply the force lightly and uniformly, in order to prevent the abnormal wear of bush. l. While installing the idler gear A, take caution to adjust the installation position of idler gear A and "2 2” position of camshaft gear as per the “1 1” marking of crankshaft gear. (Timing photo)

Downloaded from www.Manualslib.com manuals search engine

		m. Apply oil onto the surface of idler gear B bush and lightly rotate into the idler gear shaft B. In event of difficult installation, slightly rotate the crankshaft to help installation.
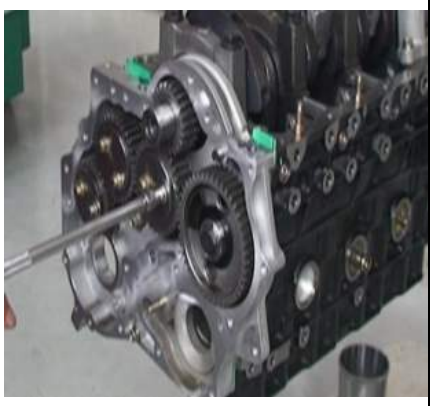		n. Use the hexagon flange bolts to install the idler gear pressure plates A, B, and C onto the idler gear shaft and tighten the fixing bolts of pressure plate and fixing bolts of idler gear lining plate to 25±5N. m torque.
5. Install the oil sump.		
		a. Use a scraper to remove the excessive portion of the gear chamber. b. Install and pre-tighten the stud * 12 of oil sump.

Downloaded from www.Manualslib.com manuals search engine

		c. Apply sealant to the lower end face of timing gear chamber and the lower rear end of engine block.
		d. Install the oil sump gasket. e. Apply the sealant for the second time to both sides of oil sump gasket.
		f. Install the oil sump assembly with oil drainage screw plug and use nylon bar to lightly knock the oil sump to ensure the steady installation of oil sump.

Downloaded from www.Manualslib.com manuals search engine

		g. As per the specified sequence, tighten the fixing bolts *10 of oil sump and the fixing nuts * 12 of oil sump to 23.5±3.5N.m torque. h. Use a cotton cloth to wipe away excessive sealant.
5. Install the timing gear chamber.		
		i. Pre-install the flange O-ring of fuel injection pump onto the fuel injection pump. j. Place the fuel injection pump into installation position, install and pre-tighten the hexagon socket fixing bolts of fuel injection pump, and install the fuel injection pump gear and fixing nuts of fuel injection pump.
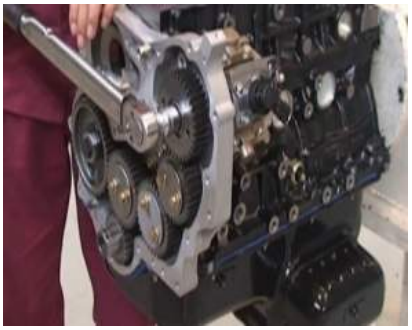		k. Tighten large fixing nuts of fuel injection pump to 70±5 N·m and tighten hexagon socket fixing bolts of fuel injection pump to 30±5 N·m.
		l. Install the water pump O-ring onto the water pump and use hand to rotate the impeller for two turns to ensure that the water pump rotates flexibly. m. Install the water pump assembly to the gear chamber.

Downloaded from www.Manualslib.com manuals search engine

		n. Install and tighten the bolts and nuts of water pump in diagonal manner to 25±5N.m.
		o. Install the timing gear chamber cover subassembly and attach and tighten the fixing bolts of gear chamber cover to 20±5 N.m. p. Torque for hexagon socket fixing bolt: 60±10 N.m.
		q. Install the damping pulley and attach and tighten the fixing bolts of damping pulley to 210±15 N·m.
6. Install the cylinder head and related accessories.		
		a. Check whether the upper surface of cylinder block is normal and the cylinder gasket is normal and install the cylinder gasket.

Downloaded from www.Manualslib.com manuals search engine

		b. Install the cylinder head onto the cylinder block.
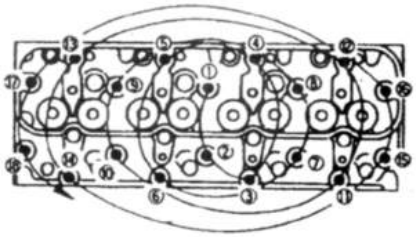		c. Immerse the thread portion of cylinder head bolts into oil and then install into the cylinder head and pre-tighten. d. Tighten the cylinder head bolts by steps from the center to two sides as per the specified sequence: 65N.m→85N.m→105N.m
		e. Install the thermostat housing and water outlet assembly and tighten the fixing bolts and hexagon socket fixing bolts.

Downloaded from www.Manualslib.com manuals search engine

7. Install the intake manifold and related accessories.		
		a. Use hexagon flange bolts to fix the fuel rail bracket onto the cylinder block and tighten to 37.5±9.5N.m.
		b. Use hexagon flange bolts to install the fuel rail assembly with rail pressure sensor onto the fuel rail bracket and tighten to 25±5N.m.
		c. Install the intake manifold gasket.
		d. Insert the oil dipstick into the cylinder block and tighten the fixing bolts and nuts of intake manifold as per the specified sequence.

Downloaded from www.Manualslib.com manuals search engine

		e. Install the intake manifold and install and tighten the fixing bolts, plain washers, and fixing nuts.
		f. Install the intake manifold harness bracket and intake pressure and temperature sensor.
8. Install the push rod rocker arm subassembly and adjust the valve clearance.		
		a. Dip the tip of push rod with oil and install into the cylinder head. Install the rocker arm and pre-tighten the rocker arm support bolts.
		b. Tighten the support bolts by steps. Sequence: 2-3-4-1; Torque: 55±5N.m

Downloaded from www.Manualslib.com manuals search engine

		c. Rotate the crankshaft, till the top dead center (TDC) line of crankshaft damping pulley is aligned with the timing pointer. In such case, either 1st cylinder piston or 4th cylinder piston is at top dead center (TDC) of compression stroke.
		d. Check the clearance of push rod for the intake valve and exhaust valve of 1st cylinder. If there is a clearance between 1st cylinder intake valve and valve push rod, the 1st cylinder piston is at top dead center of compression stroke (1236). If the 1st cylinder intake valve is pressed tightly by exhaust valve push rod, the 4th cylinder piston is at top dead center of compression stroke (4578).
		e. Valve clearance (under cold state): 0.3-0.4 mm f. Loosen the clearance adjustment screws for the valves, as shown in the figure. g. Insert the feeler gauge with appropriate thickness between rocker arm and valve rod end.
		h. Rotate the valve clearance adjustment screw, till a light resistance is felt on the feeler gauge. i. Securely tighten the lock nut.
		j. Rotate the crankshaft for 360º. k. Align the TDC marking of crankshaft damping pulley with the timing pointer. l. Adjust the clearance for other valves, as shown in the figure.

Downloaded from www.Manualslib.com manuals search engine

9. Install other peripheral accessories.		
		a. In turn install the fuel injection assembly with sealing gasket onto the cylinder head. b. Install the fuel injector fixing pressure plate and install and tighten the fuel injector pressure plate bolts to 8±2N.m+40～45°.
		c. Install the 1st cylinder high pressure fuel pipe assembly, 2nd cylinder high pressure fuel pipe assembly, fuel injection pump high pressure fuel pipe, 3rd cylinder high pressure fuel pipe assembly, and 4th cylinder high pressure fuel pipe assembly and tighten the corresponding nuts. Notice: 1. Notice the installation direction of high pressure fuel pipes; 2. The tightening torque for nuts at fuel injector end is 27±5N.m; 3. The tightening torque is 20±5N.m for nuts at high pressure fuel rail end, 27±2N.m for high pressure fuel pipe nuts at fuel pump end, and 20±2N.m for high pressure nuts at fuel rail end.
		d. Use accelerator cable bracket bolts to install the fuel return three-way valve onto the gear chamber and tighten to 7.5±2.5N.m.

Downloaded from www.Manualslib.com manuals search engine

		e. Install the engine oil filter and O-ring subassembly and tighten the fixing bolts of engine oil filter bracket to 25±5 N.m.
		f. Install the engine right bracket and shock absorber subassembly and install and pre-tighten the fixing bolts.
		g. Install the water inlet pipe gasket and water pump inlet pipe weldment subassembly, pre-tighten the bolt, spring, and plain washer subassembly (of water pump inlet pipe), and install and tighten the bracket fixing bolts at the lower end of water pump inlet pipe weldment.
		h. Install the engine left bracket and shock absorber assembly and tighten the fixing bolts.

Downloaded from www.Manualslib.com manuals search engine

		i. Check the cylinder head shield O-ring.
		j. Install the cylinder head shield and install and tighten the cylinder head shield bolts to 13±5N.m.
		k. Install the exhaust manifold gasket and install the exhaust manifold and turbocharger subassembly.
		l. Install the spring washers and hexagon nuts and tighten the fixing nuts and fixing bolts as per specified sequence.

Downloaded from www.Manualslib.com manuals search engine

Tighten bolts as per sequence shown in figure. 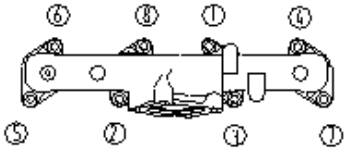		
		m. Install the EGR cooling steel pipe and tighten the fixing bolts.
		n. Install the EGR valve and tighten the fixing bolts.
		o. Apply sealant onto the thread of vacuum pump oil inlet pipe connecting bolts, install the connecting bolts onto the cylinder block oil outlet, and tighten to 18±2 N.m.
		p. Install the alternator belt and water pump pulley. q. Install the fan and clutch assembly and install and pre-tighten the clutch fixing nuts.

Downloaded from www.Manualslib.com manuals search engine

		r. Adjust the tension of alternator belt and tighten the alternator adjustment bolts and clutch fixing nuts. s. Tighten the alternator fixing nuts.
		t. Install the vacuum pump oil inlet pipe fixing bolts I (M8×20) and tighten the fixing bolts to 18±2N.m and 25±5N.m respectively.
		u. Install the exhaust pipe heat shield and install and tighten the fixing bolts.
		v. Install the power steering pump and tighten the fixing bolts of power steering pump.

Downloaded from www.Manualslib.com manuals search engine

		w. Install the compressor bracket and tighten the bracket fixing bolts.
		x. Use perforated bolts II and copper washers II to install the turbocharger oil inlet pipe assembly onto the turbocharger oil inlet and use perforated bolts I and copper washers I to install another end onto the cylinder block oil hole and tighten the perforated bolts I and II. 1. Tightening torque for perforated bolts I is 55±10N.m; 2. Tightening torque for perforated bolts II is 41±6N.m.
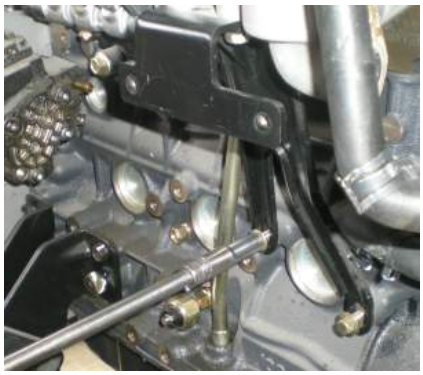		y. Install the fuel-gas separator bracket and intake manifold bracket.
		z. Install the fuel-gas separator assembly.

Downloaded from www.Manualslib.com manuals search engine

		aa. Install the VNT electromagnetic valve and connect various vacuum hoses.
10. Install the flywheel and related accessories.		
		a. Apply oil to the outer ring and lip of the crankshaft rear oil seal and use installation jig I to push the rear oil seal into the oil seal groove. Then install the installation jig II and knock with steel hammer lightly and uniformly to install the crankshaft rear oil seal to place.
		b. Install the flywheel baffle and fixing bolts and tighten the fixing bolts of flywheel baffle to 85±10 N.m.

Downloaded from www.Manualslib.com manuals search engine

  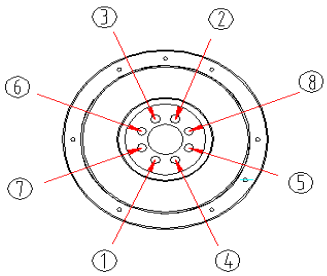		c. Install the flywheel. d. Install the flywheel fixing gasket and install and pre-tighten the fixing bolts of flywheel. e. As per the specified sequence, tighten the fixing bolts of flywheel to 25N.m→70N.m →140N.m by steps, in order to prevent the occurrence of false tightening torque. This tightening torque is really high and will easily lead to thread failure of the bolts.
		f. Install the lubricated guide ball bearings into the installation jig and knock with steel hammer uniformly into the rear end of crankshaft.
		g. Insert the clutch guide into the driven disc and install to the rear end of flywheel. Install the clutch cover and install and tighten the fixing bolts of clutch cover.

Downloaded from www.Manualslib.com manuals search engine

Section III Crankshaft and Flywheel System

- It works along with the connecting rod to convert the gas pressure applied onto the piston into rotating power and transmit to the transmission mechanism of the chassis. At the same time, it drives the valve distribution mechanism and other accessories, such as fan, water pump, and alternator.
- The crankshaft is made of medium carbon steel alloy forging. To improve the wear resistance and fatigue resistance, the journal surface is treated with high-frequency hardening or nitriding treatment and high-precision grounded to meet the higher surface hardness and surface roughness requirements.
- With fully supported structure and 8 balance weights, the crankshaft is cast to an integral structure with balance weights to improve the rigidity and bending strength of the crankshaft.
- The crankshaft is made of high strength steel alloy forging, with fillet rolled journals.
- Its front end adopts rubber-embedded crankshaft torsional shock absorber to reduce the crankshaft torsional shock generated during the running of the engine. The signal wheel of crankshaft position sensor is installed at the last crank.
- There are two pieces of crankshaft thrust plates installed on two sides of the 3rd main bearing block, with the face with oil groove facing to the thrust surface of the crankshaft.
- The grouping numbers for crankshaft main journal and connecting rod journal are stamped on the first crank of the crankshaft.
- The flywheel assembly is installed at the rear end of crankshaft and the flywheel is located by locating pin and connected by flywheel bolts.
- The crankshaft, flywheel, and clutch assembly qualified the dynamic balance test before the factory leave.

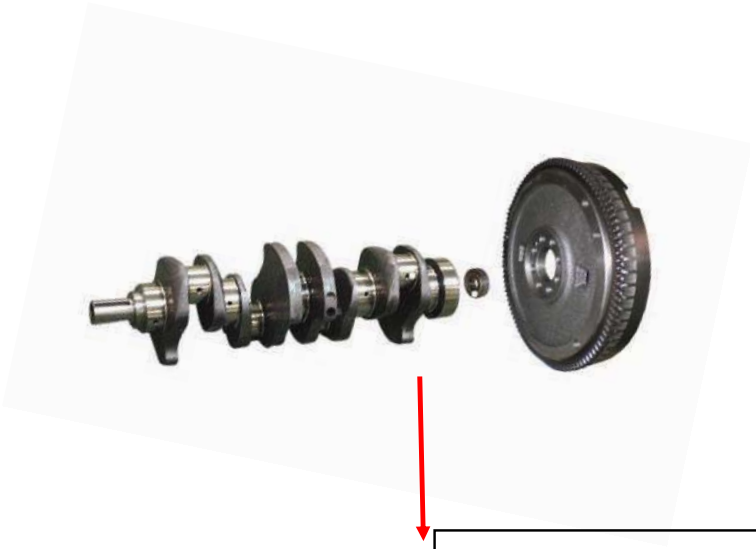

Signal gear of flywheel crankshaft position sensor

Downloaded from www.Manualslib.com manuals search engine

Section IV Piston and Connecting Rod Group

- The piston crown is of ω type combustion chamber;

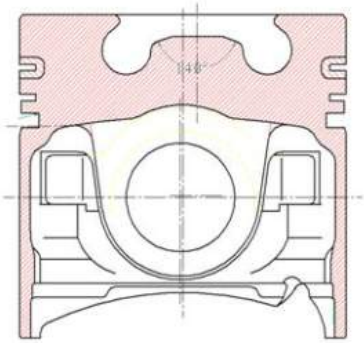

Depending on the performance and reliability requirements, the piston profile designed can guarantee the normal working of engine under high speed, high temperature, and high pressure conditions. The good skirt sizes can reduce the frictional power consumption of piston and improve the economic performance of the engine.

- The HFC4DA1-2C piston rings include two compression rings and one oil control ring:

The first ring adopts the trapezoid tubbish ring, which can effective reduce the consumption of engine oil.

The second compression ring adopts the torsional trapezoid ring to increase the flexibility of piston ring and improve the capability of piston ring for adapting to deformation of cylinder sleeve.

The oil control ring is of coil spring expander type and adopts the combined oil ring composed of two side guide rings (upper and lower) and the middle expander, featuring the advantages of low mass and outstanding oil scraping effect. It can reduce the consumption of engine oil and the grain emission while meeting the Euro-IV emission standard.

40~50% of the frictional power consumption of the engine is attributed to the pistons and piston rings. The piston rings of 4DA1 engine can effectively arrange the engine oil, reduce the friction power of piston subassembly, and improve the fuel economy.

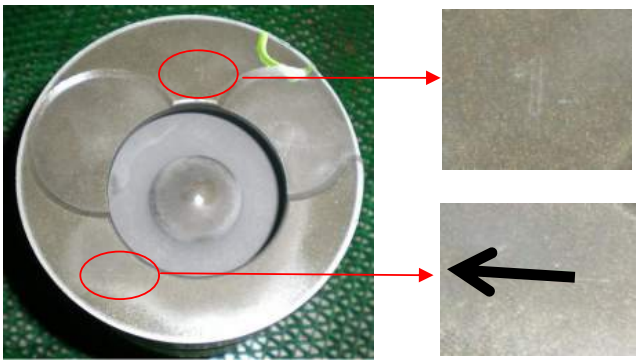

- The piston is stamped with mark, which shall face upward during assembly. During assembly, take caution to position the spring connector 180º away from the opening of oil control ring. Notice the opening direction of the ring while installing the cylinder sleeve. The openings of the piston rings shall separate 120º from each other and the ring opening shall not face towards the piston pin. Apply an appropriate amount of lubricating oil during the assembly. The piston rings shall rotate flexibly after being installed in the ring grooves.

a. The arrow on the piston crown shall point to the front of the engine.

b. It adopts variable section connecting rod to effectively reduce the force applied onto the connecting rod.

c. The piston pin is of full-floating structure and adopts retainer ring for limiting. The piston pin can be directly assembled during installation.

d. The body of connecting rod adopts H-shaped cross section, featuring good bending strength and light weight.

Downloaded from www.Manualslib.com manuals search engine

Section V Valve Distribution Mechanism

- It's a device that opens and closes at fixed times the intake and exhaust valves of all cylinder to enable the ingress of fresh air into cylinders and the exhaust of exhaust gas from the cylinders.
- The front valve distribution timing adopts gear drive, featuring stability and reliability.

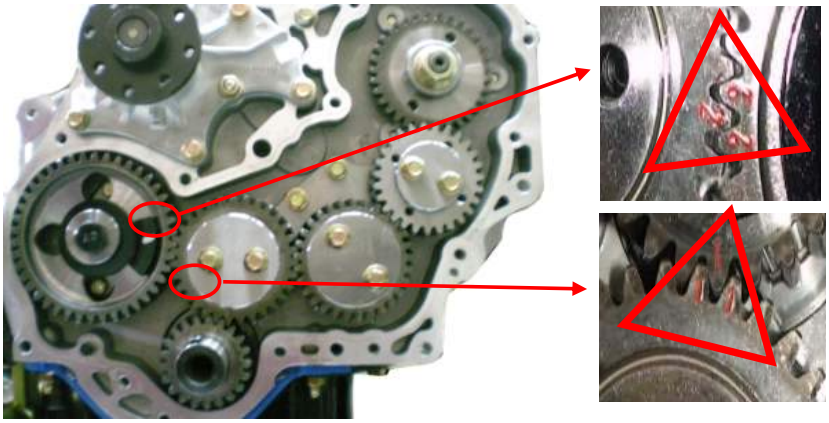

Downloaded from www.Manualslib.com manuals search engine

Section VI Lubrication System

While the engine is working, all motion parts apply one specific force onto another part and generate relatively high speed motion. With the relative motion, the friction is necessarily generated on the part surfaces, which will accelerate the wear. Therefore, to relieve the wear, reduce the friction resistance, and prolong the service life, the engine must be fitted with lubrication system.

- The engine oil filter is functioned to filter out the metallic wear dust, mechanical impurity, and engine oil oxide from the engine oil. The ingress of these impurities into the lubrication system along with the engine oil will speed up the wear of engine parts and may block the oil pipe or oil passage.
- The engine oil pump is of externally engaged gear pump and is driven by the crankshaft.
- The cooling nozzle of piston is arranged on the main oil passage to realize the stable oil spray for cooling. The spray of engine oil into the cold oil passage within the piston can effectively reduce the thermal load of the piston.

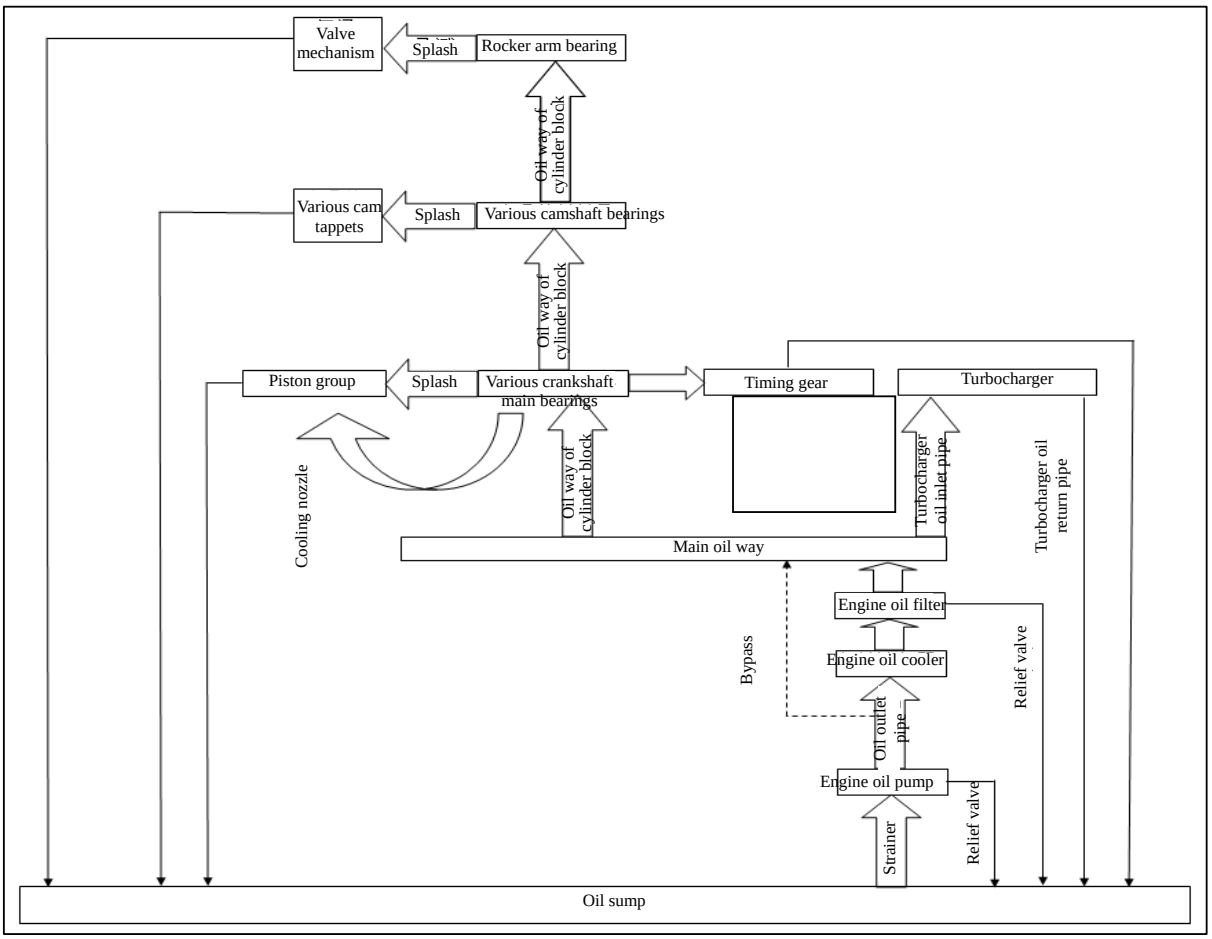

Downloaded from www.Manualslib.com manuals search engine

Section VII Cooling System

- The cooling system is functioned to maintain the engine within an appropriate temperature range under all working conditions.
- The cooling system can prevent the engine against overheating and prevent the engine from being too cold in winter.
- After the cold start of the engine, the cooling system can guarantee the rapid temperature rise of the engine to reach normal working temperature as soon as possible.
- Composition: Water pump, cooling fan, silicone oil fan clutch, thermostat, engine cylinder block, water jacket in cylinder head, and other accessories.
- The cooling system is of enclosed forced recirculation water cooling type. Its structure is mainly composed of radiator (water tank), water pump, fan, thermostat, cooling water jacket, and pipeline.
- The cooling recirculation of the heater system and engine oil cooler is always under working state and is not subject to the restraints of large or small recirculation.

Dual thermostat control: When the water temperature is less than 82ºC, the thermostat is under natural state (namely the cooling water from the water tank is closed and the cooling water from the cooling module is opened). In such case, the cooling circuit works in the small recirculation circuit and the cooling water from the cooling module enters into the engine block and cylinder head for recirculation through the water pump so that the temperatures of the water and oil in the engine block and the cylinder head will rise. When the water temperature reaches 82ºC, the thermostat starts to open. When the thermostat is opened, the small valve closes the small recirculation circuit. As the thermostat is not fully opened, the cooling water from water tank enters into the cylinder block for large recirculation through water pump. If the water temperature continues to rise to 95ºC, the thermostat valve is fully opened.

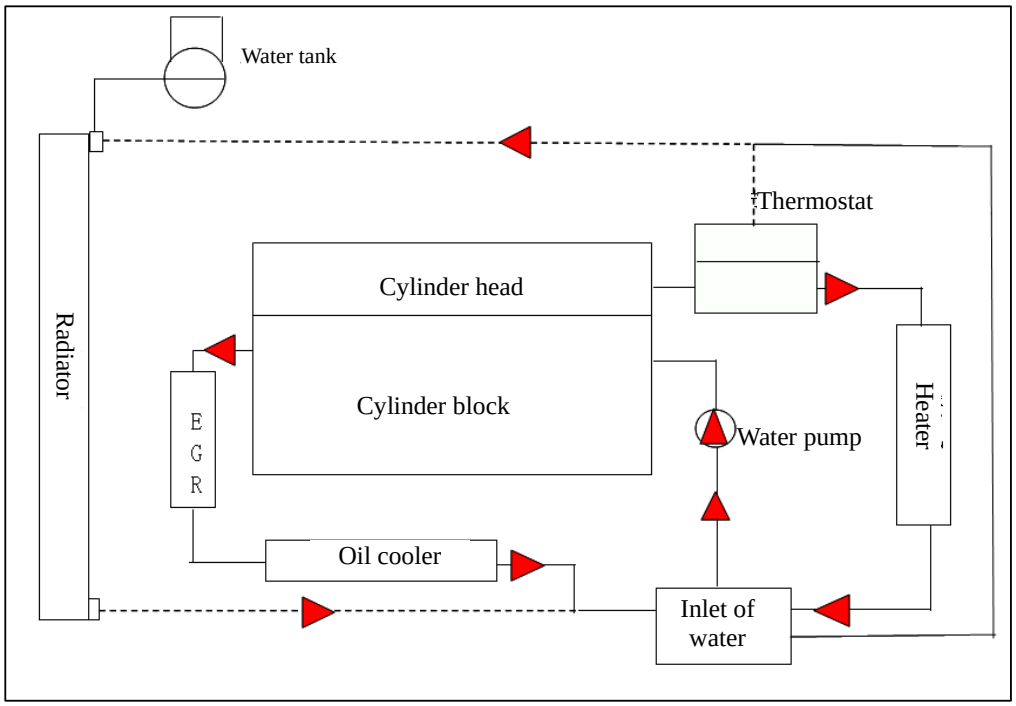

Downloaded from www.Manualslib.com manuals search engine

Section VIII Turbocharger and Inter-Cooler System

The turbocharger technology utilizes the motion energy of engine exhaust gas to drive the rotation of turbine. At the same time, the coaxial air compressor compresses the air and provides more air to the cylinder so that more fuel can combust to generate higher power, promote the engine torque, and reduce the fuel consumption.

The common turbocharger is of bypass valve turbocharger, which can't provide sufficient pressure while the engine is running at low speed and thus restrains the torque output at low speed and influences the engine performance. To change this situation, the 1.9CTI engine adopts variable nozzle turbocharger (VNT) control system to promote the turbocharger pressure at low speed of engine and at the same time adopts inter-cooler system to exert higher torque at low speed of engine and promote the engine performance.

Theory of inter-cooler: The temperature of the air compressed at high speed may reach 100~120ºC. The high temperature air will impair the intake efficiency of the engine and lead to power drop of the engine. Therefore, it's necessary to cool down the air to approximate 60ºC. The inter-cooler is located in front of the radiator or at windward position easily arranged, in order to reduce the temperature of air entering into the cylinder, further improve the combustion of diesel engine, and promote the performance and emission of the diesel engine.

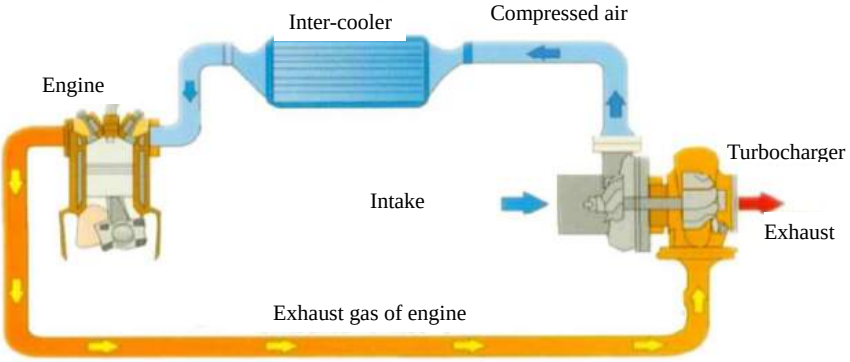

Variable nozzle turbocharger (VNT): The VNT is functioned similar to one turbine housing in which the size is varying steplessly. The VNT actuator can accurately control the nozzle area within the entire working condition range so that the engine can not only maintain the turbine efficiency at high speed, but also increase the turbine efficiency at low speed, promote the torques at low speed, maximum torque output, and nominal working condition, improve the cold start performance and low speed performance of turbocharged diesel engine, realize high specific power and low speed torque of the engine simultaneously, and greatly reduce the smoke intensity and improve the economy. Meanwhile, the VNT can reduce the turbine lag, improve the engine response, and enhance the braking capability and safety.

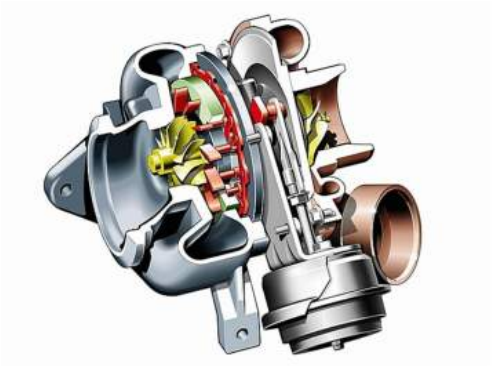

Adjustment theory for variable nozzle turbocharger (VNT): There are two passages, one is in constant section and one is in variable section. If the pressure is same for two passages, the speed of airflow passing through the variable

Downloaded from www.Manualslib.com manuals search engine

section passage is greatly higher than that passing through the constant section passage.

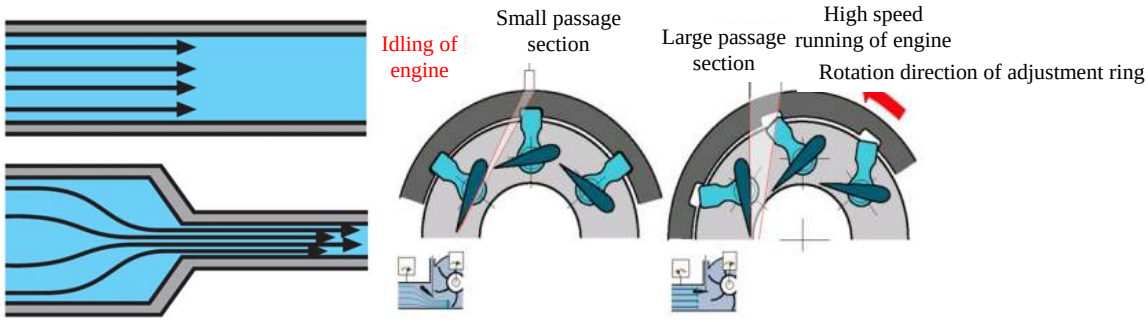

Downloaded from www.Manualslib.com manuals search engine

Section IX EGR System

The exhaust gas recirculation (EGR) introduces one small portion of exhaust gas from the exhaust pipe into the intake pipe that is mixed with the fresh intake air to artificially increase the exhaust amount in the fresh intake air and thus reduce the combustion temperature of engine and reduce the formation of NOx.

- The NOx is increased following the increasing of engine load and the EGR ratio shall increase accordingly.
- The EGR is not be performed when the engine coolant temperature is low;
- The EGR is not performed under idling or low load, as the NOx emission is not high in such case.
- The EGR is not performed under full load or acceleration;
- The water-cooled EGR further reduces the temperature of exhaust gas entering into the cylinder and further reduces the emission of NOx.

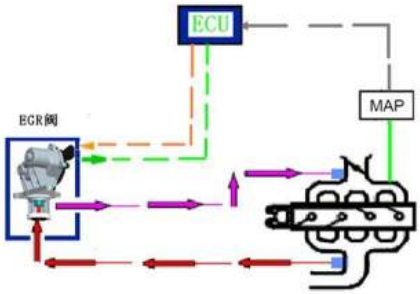

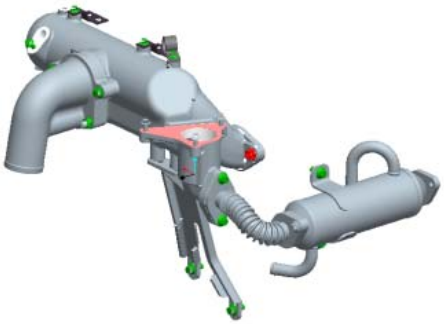

Downloaded from www.Manualslib.com manuals search engine

Section X Exhaust System

The exhaust pipe is composed of four exhaust manifolds leading to the exhaust master pipe and one manifold leading to the exhaust gas chamber of EGR valve. During the operation, the exhaust gas from the combustion chamber is introduced into the EGR valve by the manifold leading to the exhaust gas chamber of EGR valve through the EGR passage in the cylinder head. Under the control of the EGR valve, the exhaust gas is mixed with fresh air and enters into the combustion chamber to realize exhaust gas recirculation and reduce the emission.

4DA1-2C diesel engine real-time monitors the pressure drop of the exhaust gas post-treatment unit to determine whether the post-treatment system is working normally. Via two pressure ports on the sensor, the pressure on two sides of the exhaust gas post-treatment unit is introduced. The sensor converts the measurement into voltage value and feeds back to the control unit, which can guarantee the sufficient oxidization of grains and prevent the blockage of catalytic converter.

Downloaded from www.Manualslib.com manuals search engine

Chapter III Working Principle of Engine Control and Actuator Units

Section I Overview of Diesel Common Rail System

Diesel common rail injection system

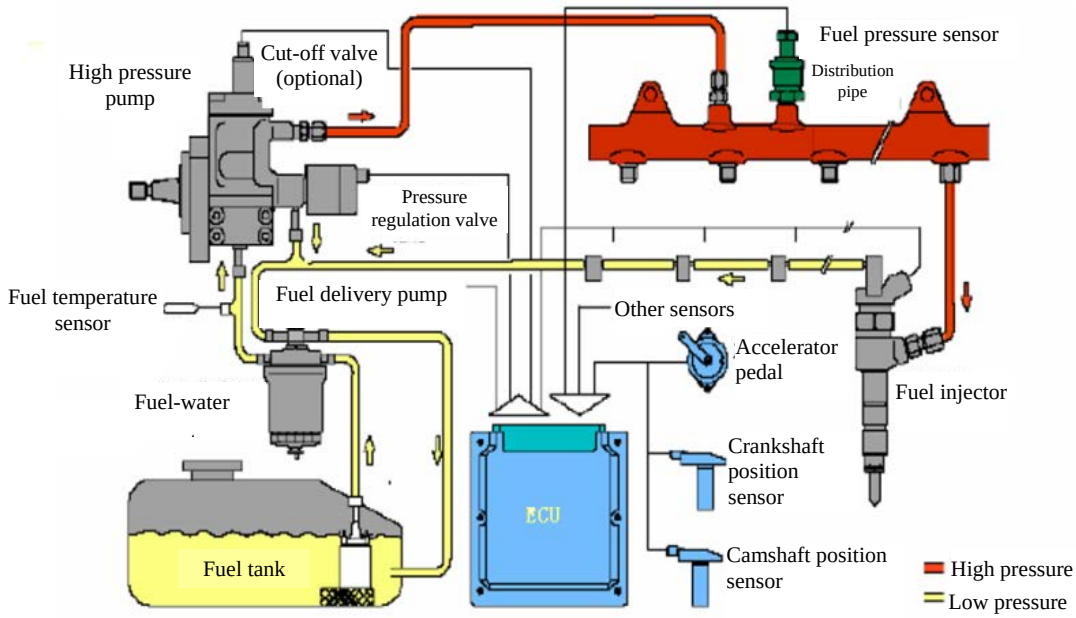

The electronically controlled high pressure common rail system means one fuel supply mode in which the generation of injection pressure and fuel injection are completely separated in the closed-loop system composed of high pressure fuel pump, pressure sensor, and ECU. The high pressure fuel pump generates high pressure fuel and conveys to the common rail pipe to realize precise control of fuel pressure within the common rail pipe. This fuel injection system can ensure that the fuel injection pressure will not vary following the variation of the engine speed and thus relieve the defect of traditional diesel engines. Instead of the common pulse theory, this system adopts the pressure-time measuring theory and combines the high pressure common rail with the control of fuel injection solenoid valves of all cylinders, in which the last pulse of the control unit introduces the injection signal into the solenoid valve to trigger one injection cycle and the injection amount is controlled by the accumulated pressure and the open duration of the injector. The injection pressure of EDC17 control system adopted by this engine is up to 1,600bar.

The electronically controlled common rail fuel injection technology of diesel engine integrates the computer control technology, modern sensing and measuring technology, and advanced fuel injection mechanism. The main characteristic of this technology is as below: The main parameters (including speed, torque, power, oil temperature, oil pressure, water temperature, and turbocharger pressure of the diesel engine) under actual working conditions of the diesel engine are measured by modern sensing and measuring technology and transmitted to the ECU and the ECU compares these measurements with the pre-inputted optimized running MAPs of the diesel engine and processes and calculates out the best values to control the pressure of common rail pipe and the open moment, duration, and injection frequency of the high speed solenoid valves of the fuel injectors, in order to realize the best working state of the diesel engine. The electric pulses generated by the ECU trigger the solenoid valves of the fuel injector as per specified sequence to determine the open and close moments of each fuel injection cycle of the engine and flexibly control the fuel injection speed and frequency. The common rail fuel injection mechanism forms directly or indirectly constant high pressure fuel and distributes to each fuel injector. The electronically controlled common rail fuel injection technology of the diesel engine can guarantee that the diesel engine achieves the best air-combustion ratio and excellent atomization.

Downloaded from www.Manualslib.com manuals search engine

The high pressure common rail system is composed of fuel tank, diesel filter, high pressure fuel pump, common rail pipe, electronically controlled fuel injector, high pressure fuel pipe, and low pressure fuel return pipeline.

- It adopts direct injection combustion chamber system and common rail fuel supply system to realize high performance, clean emission, low noise, and low vibration;
- Single camshaft and four-valve technology brings about higher air charging efficiency and improves the combustion;
- High power per liter design and compact design;
- Variable nozzle turbocharger (VNT) control;
- Exhaust Gas Recirculation (EGR);
- Electronic throttle control.

Downloaded from www.Manualslib.com manuals search engine

Section II Working Principle of Low Pressure Fuel Line System

I. Composition of low pressure fuel line:

The low pressure fuel line is functioned to supply sufficient fuel to the high pressure fuel line and is composed of:

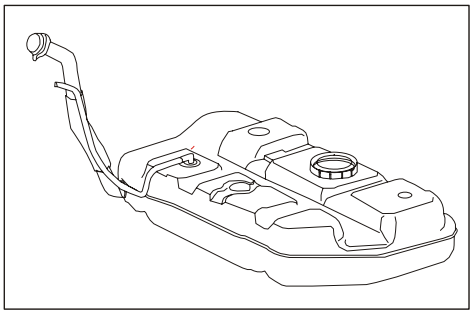

- Fuel tank (including filter screen)
- Fuel filter (including manual fuel delivery pump)
- Low pressure fuel delivery pump
- Other low pressure fuel hoses

II. Fuel tank

The fuel tank shall be fabricated from anti-corrosion material and shall maintain 0.3bar pressure under all working conditions and be free of fuel leakage under the application of the doubled working pressure. The fuel tank shall also set up appropriate opening or safety valve or adopt appropriate measures to relieve the excessive pressure whenever it's needed. When the motor vehicle is subject to slight vibration, makes turns or travels or parks on a slope, the fuel in the fuel tank shall not leak from the fuel tank cap or the pressure balancing device.

III. Fuel filter (including manual fuel delivery pump)

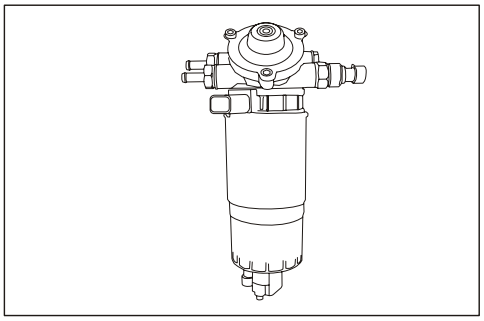

Sunray long-wheelbase model adopts two-stage diesel filter, including one primary filter and one fine filter. Compared with traditional diesel engines, it requires cleaner fuel supply. The impurities contained in the fuel will damage the fuel system including the high pressure pump, high pressure common rail, and fuel injector. The fuel filter purifies the fuel inputting into the high pressure fuel pump, in order to help the normal functioning of the high pressure pump. The contaminant, impurity, and particle in the fuel will lead to the damage of pump units, fuel supply valve, and fuel injector. Therefore, the use of fuel filter capable of meeting the fuel injector requirements becomes the premise for normal working of the engine and guarantee of service life. The water content in the diesel may exist in non-free radical form (emulsified fuel) or radical form (such as water condensate generated due to variation of temperature). If entering into the fuel injection system, this water content will lead to damage of parts due to corrosion. Similar to other fuel injection systems, common rail system requires the fuel filter with water collection chamber as well as the automatic water content alarm. When the alarm lamp lights up, make sure to drain the water from the water collection chamber.

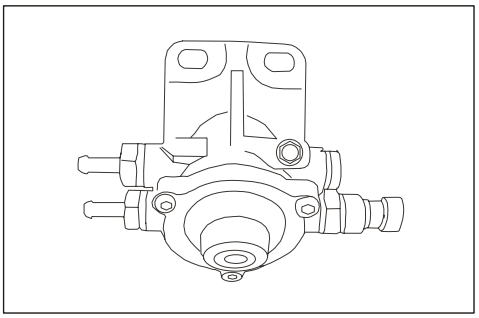

The fuel filter is composed of fuel temperature sensor, fuel heater, manual fuel pump, fuel-water separator, and water level sensor.

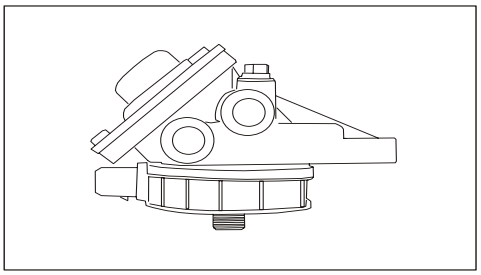

The fuel leakage during traveling or the air ingress into fuel pipeline after replacement of fuel filter may lead to start failure or poor functioning of the engine. Therefore, make sure to bleed the air from the low pressure fuel pipeline after the installation of manual fuel delivery pump. Installed on the fuel filter, the manual fuel delivery pump is the device for supplying fuel to the fuel filter and the device required to guarantee the first start of the engine. In event of the following conditions, press the manual fuel delivery pump, till the manual fuel delivery pump can’t be further pressed, before starting the

Downloaded from www.Manualslib.com manuals search engine

engine.

- After the fuel is used up.
- After the water drainage from the fuel-water separator.
- After the replacement of fuel filter

Replacement of fuel filter

1. Replacement interval of fuel filter: Once every 7,000km;

2. Water separation interval: Once every 5,000Km;

3. It's prohibited to use any used fuel filter.

IV. Low pressure fuel delivery pump

The low pressure fuel delivery pump is one gear pump and is stalled at the rear end within the high pressure pump housing. The low pressure fuel delivery pump continually supplies the required fuel amount to the high pressure pump from the fuel tank.

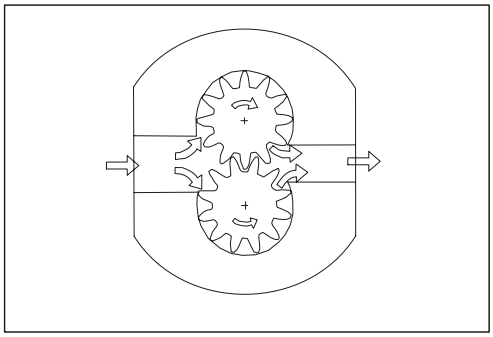

The fuel delivery pump is functioned to supply sufficient fuel supply to the high pressure pump under following conditions:

(1) Under any working condition;

(2) Under necessary pressure;

(3) Throughout the entire service life.

The low pressure fuel delivery pump is one mechanical gear pump and is installed at the rear end of high pressure pump and driven by the high pressure pump shaft. Its main parts are two gears rotating in opposite direction. While rotating, two gears engages to vacuumize the fuel into the chamber formed between gears and pump walls and then conveys to the outlet (pressure end). The closing line of the rotating gears realizes the sealing between vacuumization end and pressure end of the pump and prevents the fuel backflow.
The fuel supply amount of the gear pump is approximately in proportion to the engine speed. This is why the fuel supply amount of the gear pump can be reduced by means of the throttle valve at the inlet end or can be restrained by means of the relief valve at the outlet end.
No maintenance is required for the gear pump. Charge the fuel from the fuel system before the first start. When the fuel in the fuel tank is used up, operate the manual fuel delivery pump to charge fully the low pressure fuel line.

V. Fuel pipeline

Besides the steel pipe, the low pressure fuel line can also adopt flame-retardant braided and armored fuel hose. The fuel pipes shall be arranged in such manner to prevent the mechanical damage and that the fuel dripped or evaporated will not concentrate nor burn.

In event of vehicle distortion, engine displacement, or similar conditions, the functions of the fuel pipeline shall not be impaired. All fuel delivery pipelines shall have the radiation shield measures.

Downloaded from www.Manualslib.com manuals search engine

VI. Common malfunctions and troubleshooting for low pressure fuel line

No.	Malfunction	Troubleshooting	Remarks
1	Weak pumping of fuel	Retighten the connectors (temperature sensor, plug, and pile connector), in order to prevent the pumping failure due to ingress of air. If ineffective, replace the manual pump.	The tightening torque for connectors is 30-35N.m. Higher torque will lead to thread failure.
2	Fuel leakage of air bleeding screw	Check the screw hole of manual pump for presence of thread failure. If yes, replace the transitional thread insert and air bleeding screw and washer.	The tightening torque is 7~9N.m. Higher torque will lead to thread failure. While assembling the transitional thread insert, add an appropriate amount of thread sealant onto the thread. Prevent the ingress of sealant into the manual pump.
3	Fuel leakage of manual pump	Replace the manual pump	The knocking or improper use will lead to fuel leakage of manual pump
4	Slow acceleration and difficult start due to difficult fuel supply	The filter is blocked. Replace the filter. If the malfunction still occurs after replacement of fuel filter, check other engine parts.	The blockage of fuel filter will increase the pressure difference.
5	Failure for timely water drainage	Make sure to drain the water when the water level sensor indicator lamp lights up.	If the water is not drained, the water content in fuel will increase to impair the engine performance.
6	Light-up failure of water level sensor indicator lamp at engine start	1. Water level sensor is damaged. 2. Indicator lamp is damaged. 3. Circuit malfunction	
7	Working failure of heater	1. The heater is damaged. 2. Circuit malfunction 3. Low battery current 4. The heater is punctured due to high current	
8	Working failure of temperature sensor	Damage o temperature sensor Circuit malfunction	

Downloaded from www.Manualslib.com manuals search engine

Section III Working Theory of High Pressure Fuel Line

I. High pressure fuel line parts

The high pressure fuel line generates and accumulates sufficient fuel pressure required for the fuel injectors. The parts include: High pressure pump, fuel rail, high pressure fuel pipe, and fuel injector.

1. Drive shaft
2. Eccentric cam
3. Plunger pump
4. Fuel suction valve
5. Fuel outlet valve
6. Fuel inlet

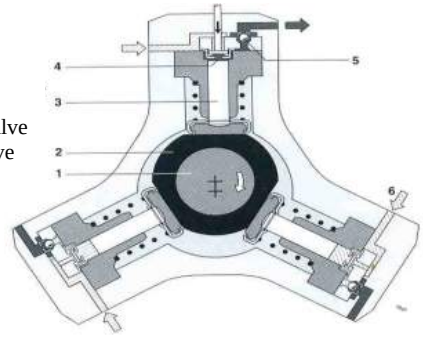

II. High pressure pump

The high pressure pump compresses the fuel to a system pressure of up to 1,450bar and then the fuel is transmitted to the tubular high pressure fuel accumulator (rail) via the high pressure pipe.

The high pressure pump is the interface between low pressure stage and high pressure stage. Under all working conditions, it can reliably supply sufficient high pressure fuel throughout the entire service life of the vehicle, including supplying addition fuel required for rapid start and the rapid establishment of pressure in the common rail. The high pressure pump continually generates the system pressure required for the high pressure accumulator (rail). Therefore, it means that, compared with traditional system, it's unnecessary to compress the fuel for each individual injection cycle.

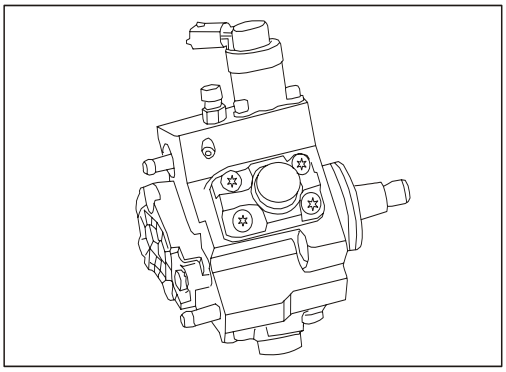

The fuel is compressed by three plunger pumps arranged radially at spacing of 120º from each other. As each rotation turn can generate three compression strokes and only generate low peak drive torque, the drive unit of the pump maintains uniform force application. As far as 16Nm torque is concerned, this torque is only 1/9 of the torque required for driving similar distribution pump. This means that, compared with traditional fuel injection systems, the common rail generates lower load onto the drive unit of the pump. The raising power of the drive pump is in proportion to the preset pressure of common rail and the speed of the fuel pump (fuel delivery amount).

Working mode:

Through one water separator, the fuel delivery pump pumps out the fuel from the fuel tank and the fuel enters into the lubricating and cooling lines of high pressure pump via the fuel inlet. The drive shaft with eccentric wheel drives three pump plungers for upward and downward movements along with the profile of the cam. The pump plungers move downward under the application of the fuel delivery pressure (fuel suction stroke). When the plungers overpass the bottom dead center, the fuel inlet valve is closed so that the fuel in the pump chamber will not leak out. In such case, the fuel is compressed so that the fuel pressure exceeds the fuel delivery pressure of the fuel delivery pump. In such case, once the pressure established exceeds the pressure in the common rail, the fuel outlet valve opens so that the fuel enters into the high pressure line. The pump plungers will continue the fuel supply, till the top dead center is reached (fuel delivery stroke). Then the pressure drops and the fuel outlet valve closes. The residual fuel is pressure relieved: The pump plungers move downward. When the pressure in the pump chamber is less than the fuel delivery pressure, the fuel inlet valve re-opens and the pumping process is started again.

III. Fuel rail (Common rail)

The high pressure accumulator (rail) stores the high pressure fuel and at the same time restrains the pressure variation generated during the fuel supply and fuel injection of the high pressure pump. The high pressure accumulator is shared by all cylinders and therefore is referred to as "common rail". Even when a great amount of fuel is drained, the common rail can maintain its internal pressure basically unchanged. Therefore it maintains the constant fuel injection pressure of the fuel injector.

Downloaded from www.Manualslib.com manuals search engine

The space of the common rail is always filled with high pressure fuel. It utilizes the fuel compressed due to high pressure to achieve the accumulator effect. When the fuel is departed from the common rail for injection, the pressure in the high pressure accumulator is basically constant. At the same time, the pressure variation generated by the pulsed fuel supply of high pressure pump is balanced and the pressure information is provided to the ECU.

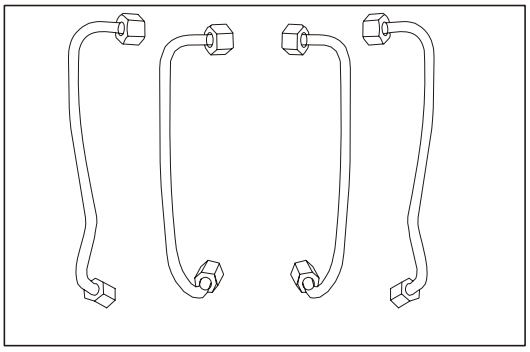

IV. High pressure fuel pipe

The high pressure fuel pipe is used to convey the high pressure fuel and is made of steel to endure the intermittent high frequency pressure variation under the maximum system pressure of the engine. The fuel pipe is generally 6mm in outside diameter and 2.4mm in inside diameter. All high pressure fuel pipes between fuel rail and fuel injectors are same in length, which means that the distances between the fuel rail and all fuel injectors are the same and the bending points compensate the corresponding length differences.

IV. Fuel injector

The fuel injectors are the core parts of the high pressure common rail and are installed on the high pressure common rail. In accordance with the directive of the ECU, the fuel injectors spray high pressure well-atomized fuel into the combustion chamber at specified moment and specified pressure for a specified duration.

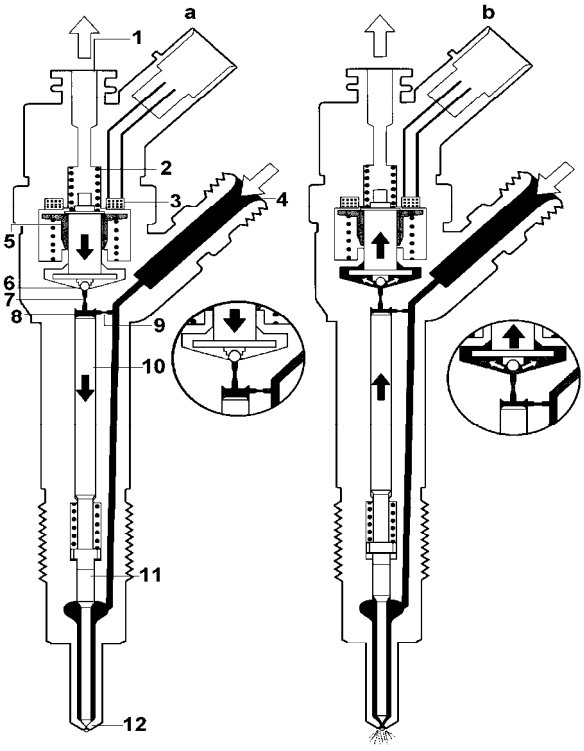

The fuel injector is mainly composed of fuel injector nozzle, hydraulic servo unit, and solenoid valve. When the coil control valve acquires control signal through the ECU, the control valve will depart from its seat ring so that the fuel pressure in the needle valve control chamber drops rapidly. As the pressure at the injector nozzle holder is maintained at similar pressure with common rail, the needle valve opens and the injection starts. When the current of the solenoid control valve drops to zero, as the control valve returns to the seat cushion under the application of coil spring, the pressure of the needle control chamber will increase to lightly higher than he pressure at the injector holder so that the needle valve closes the injector and the injection stops. The sealing copper washer beneath the fuel injector must be replaced once the fuel injector is disassembled or loosened. During the disassembly, use the special tools recommended or designated by JAC Multifunctional Commercial Vehicle Company. Note: Never disassemble the fuel injector by self in any case. All maintenances and services of the fuel injector body shall be fulfilled by Bosch relevant service stations or JAC designated service stations.

Downloaded from www.Manualslib.com manuals search engine

Section IV Electronic Control Unit of High Pressure Common Rail System

The EDC17 system of HFC4DA1-2C engine belongs to electronically controlled diesel injection system and incorporates the dynamic fuel injection timing system and air and fuel management system. It adopts the BOSCH diesel high pressure common rail system, with the rail pressure up to 1,600bar, and applies new technologies including VNT, electronically controlled EGR, and POC pressure difference control to meet the Euro-IV emission standard, with potential compliance for Euro-V emission standard.

The characteristics of this system is one single ECU, one set of fuel injection control system, and one set of sensor system. It's functioned to inject the fuel into the engine cylinder, with accurate injection timing and fuel amount, so that the fuel is mixed with air in the cylinder to achieve best combustion efficiency.

The electronic control unit of the diesel common rail system is mainly composed of three parts: sensor, ECU, and actuator.

① Sensor part: The sensors and rated value transmitters collecting the running state and rated values of the engine and complete vehicle, which convert various types of physical parameters into electric signals.

② ECU: It's functioned to process the information as per definite mathematic calculation method and issue the electric signals of the directives.

③ Actuator: It's functioned to convert the electric signals of the directives issued by the ECU into mechanical parameters.

I. Sensor part

1. Crankshaft position sensor

1) Overview

- The crankshaft position sensor is one electromagnetic sensor.
- The position of piston in the combustion chamber determines the start moment of fuel injection. As the engine piston is connected with crankshaft through connecting rod, the crankshaft position sensor can provide all data information for the piston position and the engine speed determines the revolution per minute of the crankshaft.
- Generation of signal: The crankshaft is connected with one 60-tooth ferromagnetic actuation gear. The actuation gear actually in use has two teeth missing. This large gap corresponds to one specified crankshaft position of 1st cylinder. The crankshaft position sensor records the tooth sequence of the actuation gear. It's composed of one permanent magnet and soft iron core with copper coil. The magnetic flux in the sensor varies along with the gear and gap passing through and generates one sine AC voltage, of which the amplitude rapidly increases following the speed of the engine (crankshaft). It can achieve sufficient amplitude even when the speed is at 50r/min.
- The crankshaft position sensor is situated on the rear clutch housing of the engine;
- Wiring terminals: 1. Signal terminal of crankshaft position sensor; 2. Grounding terminal of crankshaft position sensor;

Crankshaft speed sensor
1. Permanent magnet 2. Sensor housing
3. Engine outer cap 4. Soft iron core
5. Coil 6. Sensing gear

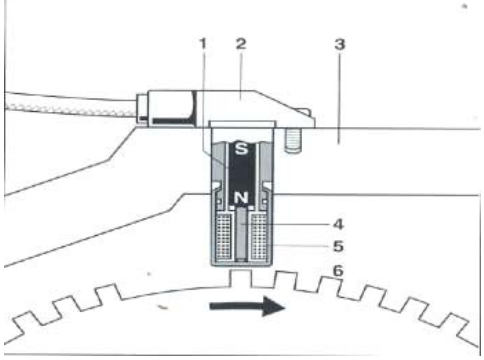

Downloaded from www.Manualslib.com manuals search engine

- Resistance: 860 Ohm;
- Clearance between sensor and top of signal gear: 0.5~1.2mm.

2) Working Principle

The electromagnetic sensor simulates the AC signal generator, namely such sensor generates AC signal, and is generally composed of a magnet wound by coil and two wiring terminals. These two coil terminals are the output terminals of the sensor. When the steel annular gear (sometimes referred to as magnetic resistance gear or target gear or signal gear) rotates to pass through this sensor, the magnetic flux of the magnet passing through the coil varies at certain level and the induction voltage is generated in the coil.

The same tooth profiles of the signal gear will generate continual pulses in same form. The pulses have consistent form amplitudes (peak-peak voltages) and are in proportion to the speed of crankshaft signal gear. The frequency of the output signal is based on the rotation speed of the magnetic resistance gear and the air gap between sensor magnetic pole and the magnetic resistance gear is of great influence over the amplitude of the sensor signal (Attention shall be paid to the backlash during the installation). During the production, removing the synchronous pulse generated by one tooth or two really close teeth from the sensor can determine the signal of top dead center, which will lead to the frequency variation of output signal. When the number of teeth is reduced, the voltage output amplitude will vary greatly. This pulse signal is transmitted to the ECU, based on which the ECU controls the fuel injection of the engine.

As the electromagnetic crankshaft position sensor is weak in signal and sensitive and is vulnerable to the electromagnetic interference by the electric devices such as car telephone, fan, and starter, it will lead to malfunction of traveling performance or generate trouble code. To prevent the occurrence of such phenomenon, two signal wires of the crankshaft position sensor adopt the twisted-pair structure in the manufacturing of engine harness, which can effectively guard the signal of crankshaft position sensor against the external signals and reduce the production cost.

3) Measurement analysis:

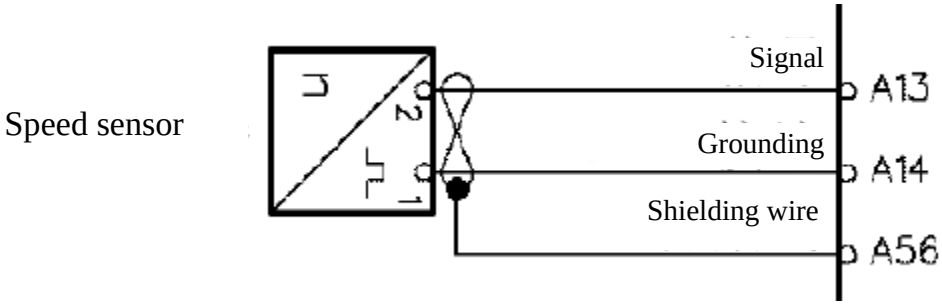

1 – Signal -; 2 – Signal +; Use a multimeter to measure the resistances for two signal terminals of the crankshaft position sensor. The resistance measurement shall be 860 Ohm.

4) Malfunction Mode:

- Short-circuit or open-circuit of sensor;
- Distorted, error, and suspicious signal;
- Unstable sensor signal;
- Sensor signal is out of range.

The crankshaft position and speed sensor is the main sensor of the engine electronic control system. In event of the malfunction of crankshaft position and speed sensor, the engine can’t start. If the malfunction occurs after the start of the engine, the engine will stop immediately.

5) Troubleshooting

Downloaded from www.Manualslib.com manuals search engine

Use diagnosis instrument to check the trouble code and determine the malfunction position. Mainly check whether the sensor is installed in place and whether the clearance is normal, check the sensor circuit whether there is short-circuit or open-circuit to grounding wire, check whether there is short-circuit or open-circuit to the power supply, and check whether the circuit is consistent with the given pin definition.

Notice: Take caution to install the sensor and make sure not to add any washer, or it may lead to signal distortion of sensor.

2. Camshaft position sensor

1) Overview

- The camshaft position sensor is one Hall sensor.
- The camshaft position sensor utilizes the Hall effect to determine the camshaft position. One steel actuation gear rotates along with the camshaft, the Hall effect integrated circuit is installed between actuation gear and permanent magnet, and the permanent magnet generates a magnetic field perpendicular to the Hall unit. If one tooth of actuation gear passes through the current-carrying linear sensor unit (semiconductor chip), it changes the strength of magnetic field perpendicular to the Hall unit. In such case, the electron driven by the voltage in major axis direction is offset in the direction perpendicular to the current direction to generate one temporary signal voltage (Hall voltage) so that the calculation circuit integrated with the sensor Hall integrated circuit will process the signal and output as square wave signal.
- The camshaft position sensor is installed on the cylinder head shield.
- Wiring terminals: 1. +5V power supply, 2. Signal output, 3. Grounding;
- The clearance between sensing end of sensor and the signal gear of camshaft: 0.5~1.5mm. Required torque: 8±0.5Nm

2) Working Principle

The camshaft controls the intake and exhaust valves of the engine, of which the speed is only half of the crankshaft speed. When the piston moves towards the top dead center, the camshaft position determines whether the piston is at compression stroke or the exhaust stroke and then judges the fuel injection or not. If the engine is under start stage, such data information can't be acquired from the crankshaft position. On the other hand, during the normal working of the engine, the data information generated by the crankshaft sensor is enough to determine the engine state. In other words, while the vehicle is traveling, even the camshaft sensor is failed, the ECU can still receive the data information of engine working state from the crankshaft sensor.

The camshaft sensor utilizes Hall effect to determine the camshaft position. One steel toothed part is fixed on the camshaft and rotates along with the camshaft. When this toothed part passes through the semiconductor chip of the camshaft sensor, its magnetic field will offset the electron of the semiconductor chip towards the current direction. Therefore, one temporary voltage signal (Hall voltage) is generated to remind ECU that the 1st cylinder enters into the compression stroke.

3) Measurement analysis

Wiring terminals: 1 - +5V, 2 – Signal +, 3 – Grounding

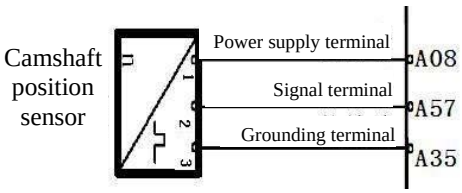

Downloaded from www.Manualslib.com manuals search engine

4) Malfunction Mode

- Short-circuit or open-circuit of sensor;
- Distorted, error, and suspicious signal;
- Unstable sensor signal;
- Sensor signal is out of range.

5) Troubleshooting

Use diagnosis instrument to check the trouble code and determine the malfunction position. Mainly check whether the sensor is installed in place and whether the clearance is normal, check the sensor circuit whether there is short-circuit or open-circuit to grounding wire, check whether there is short-circuit or open-circuit to the power supply, and check whether the circuit is consistent with the given pin definition.

3. Pressure difference sensor

1) Overview

- The pressure difference sensor is functioned to real-time monitor the pressure drop of the POC and determine whether the after-treatment system is working normally. The pressure at two ends of the POC is introduced via two pressure ports of the sensor and then the sensor converts the measurement into voltage value and feeds back to control unit. This can not only guarantee the sufficient oxidization of grains, but also prevent the blockage of catalytic converter.
- The pressure difference sensor and the POC are connected via stainless steel pipe and high temperature rubber hose. The pressure is introduced via stainless steel pipe, which is at least 250mm in length, from two sides of POC and then is led to the pressure difference sensor via high temperature rubber hose, which is capable of enduring more than 150ºC.

2) Working Principle

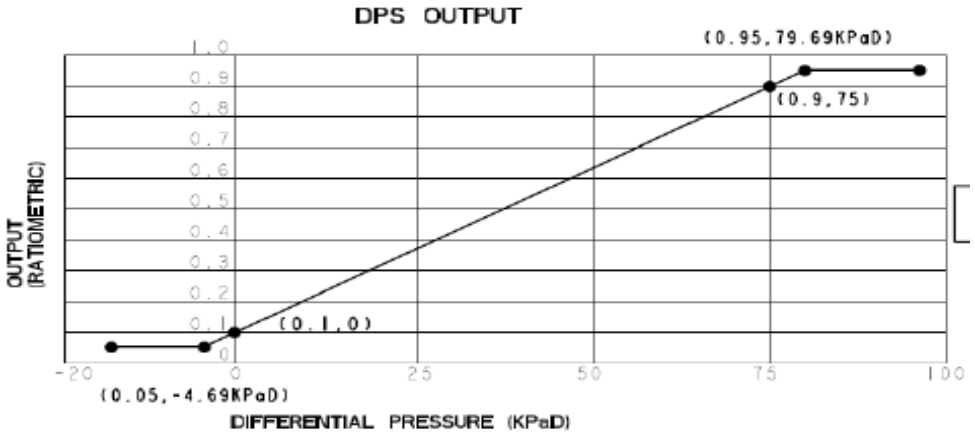

Downloaded from www.Manualslib.com manuals search engine

3) Test analysis

Wiring terminals: 1 - +5V, 2 – Signal +, 3 – Grounding

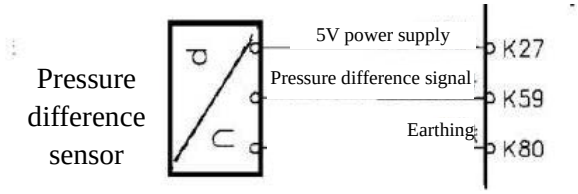

3. Turbocharger pressure sensor

1) Overview

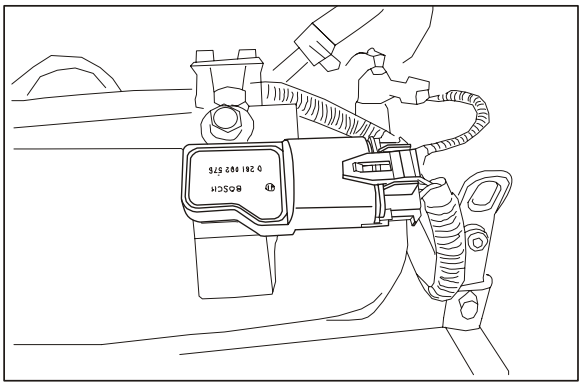

The turbocharger pressure sensor is connected to the intake pipe and is functioned to measure the absolute pressure of the intake pipe. This sensor is composed of one pressure unit with two sensing units and one evaluation circuit chamber. The sensing units and evaluation circuit are mounted on common ceramic substrate. Each sensing unit incorporates one horn-shaped diaphragm embodying the benchmark capacity for determination of internal pressure. The diaphragm moves towards large or small open extent as a function of charging pressure. The pressure sensitive resistor is mounted on the diaphragm surface, of which the resistance varies under the application of pressure. These resistors are connected to form a resistor bridge. Therefore, any movement of the diaphragm will change the balance of resistor bridge, namely the voltage of the resistor bridge is one measurement of turbocharger pressure. The evaluation circuit is functioned to amplify the bridge voltage and compensate the linear variation of temperature influence and pressure characteristic. The output signal of evaluation circuit is transmitted to ECU and then the turbocharger pressure is obtained by means of the programming characteristic curve.

- The temperature sensor incorporates one negative temperature coefficient (NTC) thermistor that is connected in the voltage division circuit of 5V power supply.
- The voltage drop on the resistor is inputted to the ECU via one analog and one digital converters (ADC), which is one measurement for evaluating the temperature. The ECU micro-processor embodies one characteristic curve, which defines the temperature as a function of given voltage.
- It's installed on the pressure stabilizing chamber of intake manifold and take the priority to measure the pressure.
- Wiring terminals: 1 – Grounding, 2 – Temperature signal, 3 – +5V, 4 – Pressure signal.

2) Working Principle

The turbocharger pressure sensor is connected in the intake pipe and is capable of measuring the absolute pressure of intake pipe at 0.5~3bar. This sensor is composed of one pressure unit with two sensing units and one evaluation circuit chamber. The sensing units and evaluation circuit are mounted on common ceramic substrate. Each sensing unit incorporates one horn-shaped diaphragm embodying the benchmark capacity for determination of internal pressure. The diaphragm moves towards large or small open extent as a function of charging pressure. The pressure sensitive

Downloaded from www.Manualslib.com manuals search engine

resistor is mounted on the diaphragm surface, of which the resistance varies under the application of pressure. These resistors are connected to form a resistor bridge. Therefore, any movement of the diaphragm will change the balance of resistor bridge, namely the voltage of the resistor bridge is one measurement of turbocharger pressure. The evaluation circuit is functioned to amplify the bridge voltage and compensate the linear variation of temperature influence and pressure characteristic. The output signal of evaluation circuit is transmitted to ECU and then the turbocharger pressure is obtained by means of the programming characteristic curve.

The voltage drop on the resistor is inputted to the ECU via one analog and one digital converters (ADC), which is one measurement for evaluating the temperature. The ECU micro-processor embodies one characteristic curve, which defines the temperature as a function of given voltage.

3) Measurement analysis

Wiring terminals: 1 – Grounding, 2 – Temperature signal, 3 – +5V, 4 – Pressure signal.

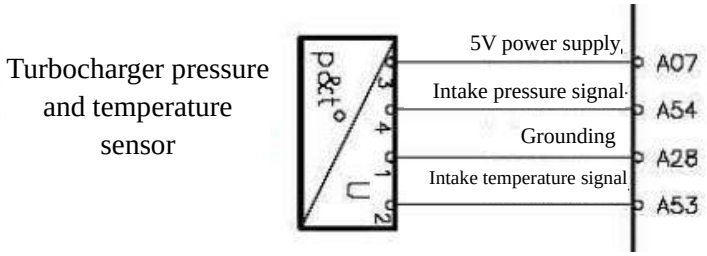

4) Malfunction Mode

The light-up of the engine malfunction indicator lamp indicates the presence of malfunction in the engine system and it's necessary to diagnose with diagnosis instrument. Use Sunray special diagnosis instrument to communicate with ECU of electronic injection system and read out the malfunction data in the ECU.

5) Troubleshooting

Use Sunray special diagnosis instrument to check the trouble code and determine whether there is short-circuit or open-circuit between circuit of malfunction position and the grounding wire, whether there is short-circuit or open-circuit to power supply, and whether the circuit is consistent with the given pin definition.

4. Thermal diaphragm air flowmeter

1) Overview

- The thermal diaphragm airflow sensor is one air mass sensor fitted with logic output. To obtain the air flow, the sensor diaphragm on the sensor is heated by the heating resistor installed in the middle and the temperature distribution on the diaphragm is measured by the temperature resistors installed paralleling with the heating resistor. The air flow passing through the sensor changes the temperature distribution on the diaphragm to cause resistance difference between two temperature resistors. The resistance difference depends on the direction and flow rate of the airflow so that the airflow sensor has high requirements over the flow rate and direction of the airflow. The sensor manufactured by micro-machinery features small size, low thermal capacity, and <15ms response time.
- The sensor is internally fitted with intake temperature sensor to measure the intake temperature.
- The air flowmeter is installed at the port of the air cleaner.
- Wiring terminals: 1. +12V power supply; 2. Grounding; 3. Air temperature signal; 4. Airflow rate signal.

Downloaded from www.Manualslib.com manuals search engine

2) Working Principle

This sensor is composed of two sensors, namely airflow sensor and intake temperature sensor, and is installed on the intake hose after the air cleaner. This type of sensor requires that there shall be free of air leakage from the sensor to the engine combustion chamber, or it will lead to unstable idling of engine or even engine flameout.

The airflow sensor integrates some micro-electronic units on a ceramic substrate. When the engine is working, the diaphragm will be heated. The intake airflow passing through the diaphragm will take away the heat and the Wheatstone bridge integrated on the diaphragm will increase the current to supplement the heat loss, which leads to the variation of electric signal. This signal is transmitted to the engine control unit ECU, based on which the ECU can obtain the load variation of the engine and thus control the fuel injection pulse width.

The intake temperature sensing unit is one negative temperature coefficient (NTC) thermistor. The sensor installs two same sensing units on two sides of the thermal diaphragm. When the intake airflow flows through the diaphragm, the temperature of the temperature sensing unit on the front of diaphragm is slightly lower than that of temperature sensing unit on the rear. Based on this characteristic, the ECU can judge the direction of airflow.

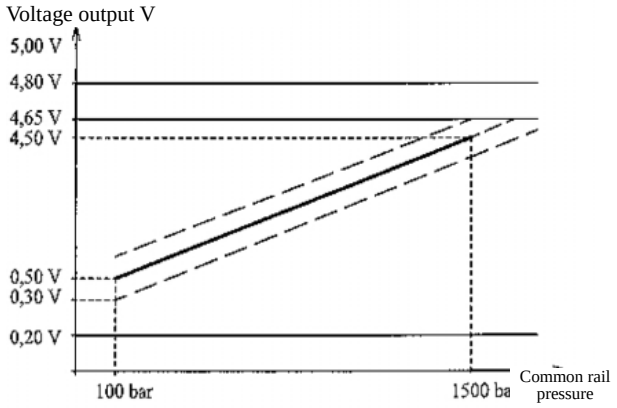

3) Measurement analysis

Wiring terminals: 1. +12V power supply; 2. Grounding; 3. Air temperature signal; 4. Airflow rate signal.

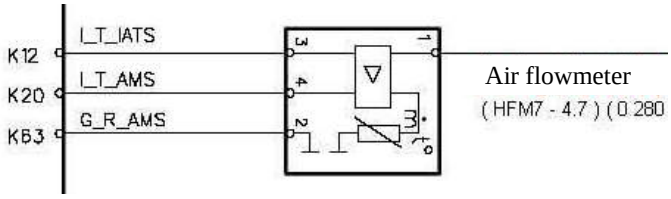

4) Malfunction Mode

The subsequent electronic device of the air flowmeter in the ECU can judge the malfunctions such as open-circuit or short-circuit of internal circuit and connecting circuit of air flowmeter and the damage of sensor. Upon the detection that the output signal of the sensor is out of its output characteristic curve, the ECU will judge as malfunction of sensor.

5) Troubleshooting

When the airflow sensor is failed, the engine cooling fan will run at high speed for one period after the ignition key is turned to Off. For instance: When the airflow rate is higher than the upper limit of airflow or less than the lower limit of airflow, the ECU will judge as malfunction of sensor (Though the intake airflow rate is less than lower limit (closing to zero) at the start of the vehicle, the ECU can judge the start condition) and at the same time light up the engine malfunction lamp and work under malfunction mode.

Downloaded from www.Manualslib.com manuals search engine

5. Rail pressure sensor

1) Overview

The resistance of the metal film installed on the diaphragm will change accordingly following the change of shape. This change of shape generated by the established system pressure (approximate 1mm under 1,500bar pressure) will change the resistance and lead to the change of voltage between two sides of 5V bridge composed of resistor units. This voltage change range is 0~70mv (depending on the applied pressure) and is amplified to 0.5~4.5V by the evaluation circuit.
The accurate measurement of rail pressure is of great importance to the effective working of the system. This is one of the causes for very strict tolerance over the rail pressure sensor during the pressure measurement. Under the scope of main working conditions, the measurement accuracy is approximately ±2% of the full scale reading.

Wiring terminals: 1. Grounding; 2. Rail pressure sensor signal; 3. +5V power supply.

2) Working Principle

It transmits one voltage signal to the ECU, depending on the fuel pressure. The rail pressure sensor must measure the instant pressure in the fuel rail and embody sufficient accuracy and rapid response capability. The rail pressure sensor is composed of following parts:
①Integrated sensing unit welded onto the pressure device
② Printed circuit board (PCB) with electric evaluation circuit
sensor housing with electric connector. The fuel flows into the rail pressure sensor via one hole on the common rail and the end of this hole is sealed by one sensor diaphragm. The fuel under high pressure reaches the sensor diaphragm via one blind hole. One sensing unit (semiconductor unit) is arranged on this diaphragm and converts the pressure into electric signal. This signal generated is transmitted via wire to evaluation circuit, which will amplify this signal and transmit to the ECU.

3) Test analysis

Wiring terminals: 1 - Grounding; 2 - Rail pressure sensor signal; 3 - +5V power supply.

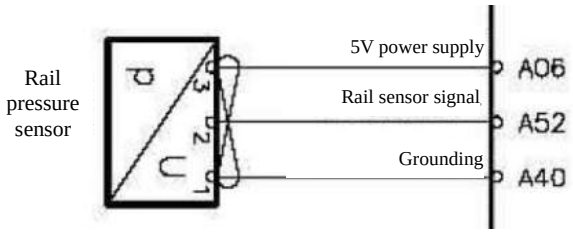

4) Malfunction Mode

The malfunction indicator lamp lights up if the voltage is higher or less than this limit. If the voltage is out of the normal working voltage range, but is not out of the limit, the malfunction indicator lamp will not light up.

5) Troubleshooting

The light-up of the engine malfunction indicator lamp indicates the presence of malfunction in the engine system and it’s necessary to diagnose with diagnosis instrument. Use JAC special diagnosis instrument to communicate with ECU of electronic injection system and read out the malfunction data in the ECU.

6. Engine coolant temperature sensor

1) Overview

- The sensor is installed on the cylinder head, closing to the water outlet. The body is made of brass to protect the resistor unit fabricated from negative temperature coefficient (NTC) resistor;

Downloaded from www.Manualslib.com manuals search engine

- The temperature resistor of the temperature sensor is one part of the 5V voltage division circuit. Two terminals of the temperature sensor is connected with the voltage charged circuit. When the temperature resistor of the temperature sensor changes along with the temperature, the voltage of the voltage charged circuit changes accordingly, which will be inputted to the analog/digital conversion circuit of ECU interface circuit. The relationship characteristic curve between voltage and temperature is stored in the ECU of engine management system;
- Sunray is equipped with 3-wire water temperature sensor to save the cost and guarantee the system unity.

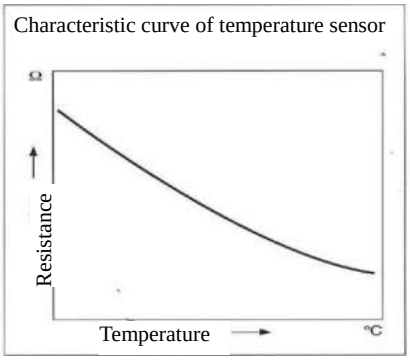

2) Working Principle

The coolant temperature sensor is used to measure the working temperature of the engine. The ECU will provide the engine with best control scheme, depending on different temperatures.

This sensor is one negative temperature coefficient (NTC) thermistor, of which the resistance reduces following the increasing of coolant temperature in a non-linear mode. The negative temperature coefficient thermistor is installed within one copper heat conducting sleeve. By means of one voltage division circuit, the ECU converts the resistance change of thermistor to one varying voltage and provides to the ECU and thus monitors the change of water temperature (internal structure of ECU).

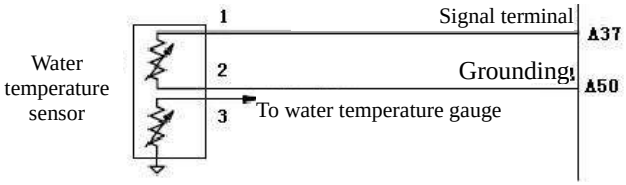

3) Measurement analysis

Wiring terminals: 1 – Temperature signal; 2 – Grounding

Reference values: -10℃ 8.642---10.152 kΩ

20℃2.351---2.649 kΩ

80℃0.313---0.332 kΩ

4) Malfunction Mode

Upon the detection that the water temperature signal is higher or less than the limit range, the ECU will light up the malfunction indicator lamp.

5) Troubleshooting

Sunray is fitted with one independent coolant temperature sensor to transmit the water temperature signal to the instrument for display of instrument water temperature alarm. If the water temperature alarm indicator lamp lights up, stop for cooling immediately. If the water temperature alarm indicator lamp lights up frequently, drive to the authorized service station of JAC Multifunctional Commercial Vehicle Company for service.

7. Water level sensor

1) Overview

- The fuel-water separator position sensor is functioned to measure the water content in the fuel filter;
- When the water content reaches a predefined level, the ECU will control the working of the engine. This sensor is installed on the bottom of the fuel filter;

Downloaded from www.Manualslib.com manuals search engine

- The fuel-water separator position sensor is installed on the bottom of the fuel filter;
- Wiring terminals: 1. Water level sensor; 2. Water level signal; 3. +12V power supply.

2) Working Principle

The grain substances are high-accuracy filtered by means of the interception and absorption of the filter medium and the water concentrated on the filter medium is separated by gravity force. The water separated is deposited in the water chamber at the lower portion of filter housing.

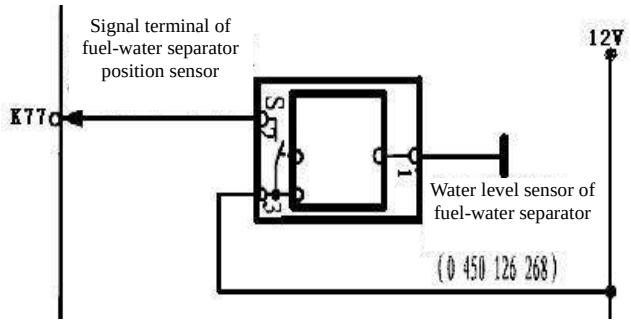

The water level sensor is installed at the lower portion of water chamber. When the water level reaches the sensing point of the sensor, the internal circuit of sensor is actuated to output signal to the ECU. At the same time, the signal is transmitted to the instrument to light up the water level alarm lamp.

3) Measurement analysis

Wiring terminals: 1 - Water level sensor; 2 - Water level signal; 3 - +12V power supply.

4) Malfunction Mode

- Short-circuit or open-circuit of sensor;
- Unstable sensor signal;
- Sensor signal is out of range.

1) Troubleshooting

Use Sunray special diagnosis instrument to check the trouble code and determine the malfunction position. Mainly check the circuit of sensor and determine whether there is short-circuit or open-circuit between circuit and the grounding wire, whether there is short-circuit or open-circuit to power supply, and whether the circuit is consistent with the given pin definition.

8. Accelerator pedal position sensor

1) Overview

The accelerator pedal position sensor is mounted on the accelerator pedal.

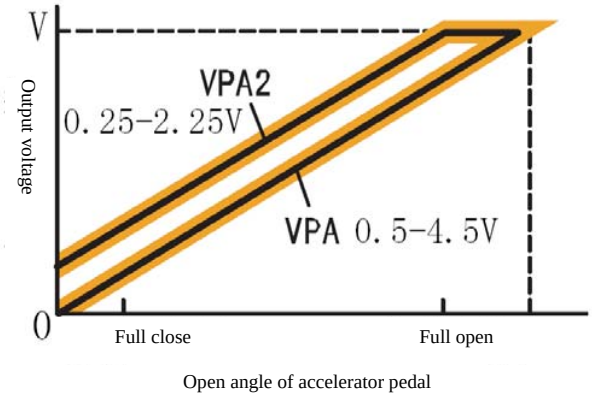

The accelerator pedal position sensor and the accelerator pedal form one integral part. The accelerator pedal position sensor internally incorporates two same potentiometer sensors to provide the driver's driving demand signal to the ECU. This process is completely same with the presently mechanical pedal in terms of operation, in order to adapt to the years of driving habit of the driver. Two same sensors provide the accelerator signal to the ECU respectively, which guarantees more safety and reliability of the system.

Wiring terminals: 1. +5V; 2. +5V; 3. Grounding of accelerator pedal 1; 4. Signal of accelerator pedal 1; 5. Grounding of accelerator pedal 2; 6. Signal of accelerator pedal 2.

Downloaded from www.Manualslib.com manuals search engine

2）Working Principle

The accelerator pedal position sensor internally adopts the damping structure and internally incorporates two same potentiometer sensors. The signal pointers of the sensors are coaxial with the pedal. When the accelerator pedal is stepped down, the potentiometer pointer will rotate coaxially with the pedal and, following the sliding of the potentiometer pointer, the signal terminals output different voltage or resistance signal. Two movable potentiometer sensors with different resistances within the position sensor output different resistances. However, there is a defined relationship between the resistances outputted by two sensors. The ECU adopts the voltage signals, instead of the resistance signals of the sensor, in order to prevent the signal distortion caused by the voltage fluctuation of the alternator. A comparison circuit is adopted to compare the signal voltage outputted by the sensor with the standard voltage and the ECU adopts the comparison result to judge the movement amplitude of the pedal. The ECU compares the signals inputted by the sensor 1 and sensor 2 and considers other sensors (engine speed, load, etc.) to jointly judge the trueness of the signals outputted by the sensors. If the signal distortion is judged in any of two sensors, the ECU controls the engine to actuate malfunction mode and adopt restrained driving measures.

The accelerator pedal position sensor provides one signal voltage varying along with the accelerator pedal position. The engine control unit (ECU) will provide independent 5V reference voltage and low level reference voltage to each accelerator pedal position sensor. When the accelerator pedal is stepped down, the signal voltage of the accelerator pedal position sensor 1 is increased, namely from approximate 0.7V at the free position to above 4V at the fully stepped down position. When the accelerator pedal is stepped down, the signal voltage of the accelerator pedal position sensor 2 is increased, namely from approximate 0.3V at the free position to above 2V at the fully stepped down position. Two data monitor mutually via control system.

3) Measurement analysis

Wiring terminals: 1 - +5V; 2 - +5V; 3 - Grounding of accelerator pedal 1; 4 - Signal of accelerator pedal 1; 5 - Grounding of accelerator pedal 2; 6 - Signal of accelerator pedal 2.

Working voltage of sensor: 5V

Malfunction Mode

Short-circuit or open-circuit of sensor 1;

Short-circuit or open-circuit of sensor 2;

Unstable sensor signal;

Sensor signal is out of range.

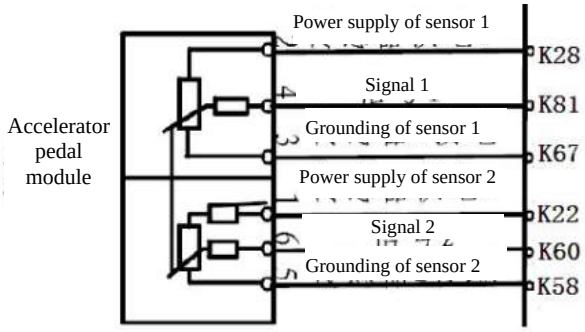

4) Troubleshooting

Use Sunray special diagnosis instrument to check the trouble code and determine the malfunction position. Mainly check the circuit of sensor and determine whether there is short-circuit or open-circuit between circuit and the grounding wire, whether there is short-circuit or open-circuit to power supply, and whether the circuit is consistent with the given pin definition.

Characteristic of sensor internal structure: Two potentiometer sensors within the sensor adopt independent power supply and independent grounding wire, which can guarantee the system safety. When one sensor is damaged, another sensor can still work. However, the engine system has already actuated the malfunction mode in such case and the electronic control system will adopt the restrained driving measures.

9. Vehicle speed sensor

1) Overview

The vehicle speed sensor is located at the rear portion of the transmission and is mainly functioned to provide speed signal to the engine control unit and instruments.

Downloaded from www.Manualslib.com manuals search engine

2）Working Principle

The signal of vehicle speed sensor provides vehicle speed signal to the ECU, based on which the ECU calculates the vehicle speed. It's internally composed of one Hall speed sensor. Please refer to the camshaft position sensor for the working principle.

3）Measurement analysis

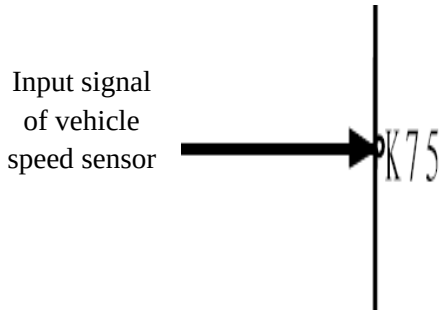

10. Clutch switch

1) Overview

The clutch switch is located on the upper portion of the clutch pedal and is mainly functioned for cruise control and engine torque smoothness control.

2) Working Principle

The clutch switch is installed at the clutch pedal and transmits the operation signal of clutch pedal to the engine ECU. Its inside is one two-pin contact switch. When the clutch pedal is stepped down, the lower central position of the clutch switch springs out. In such case, two pins of the clutch switch are connected. When the clutch pedal is released, two pins of the clutch switch are disconnected. Therefore, the engine can learn the operation state of the driver by measuring the electric level (high or low) of the clutch switch signal wire.

3) Measurement analysis

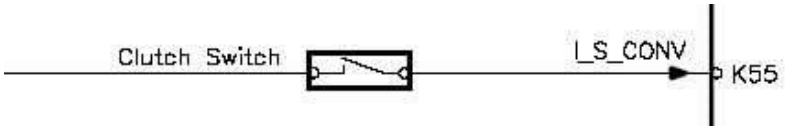

4) Malfunction Mode

Short-circuit or open-circuit of sensor;

Unstable sensor signal;

Sensor signal is out of range.

5) Troubleshooting

Use Sunray special diagnosis instrument to check the trouble code and determine the malfunction position. Mainly check the circuit of sensor and determine whether there is short-circuit or open-circuit between circuit and the grounding wire, whether there is short-circuit or open-circuit to power supply, and whether the circuit is consistent with the given pin definition.

Downloaded from www.Manualslib.com manuals search engine

11.Dual brake switch

1) Overview

The dual brake switch is located on the upper portion of the brake pedal and internally incorporates two independent switches.

2) Working Principle

The brake switch monitors the action of the brake pedal and transmits the signal measured to the engine ECU. The brake switch is equipped with two switching mechanisms, which are the main and secondary units of the brake switch. When the signals from both units are inputted, the engine ECU will judge as normal braking signal. These switching signals are related to the accelerator pedal and are used to control the fuel amount during the braking. This means that the operation of accelerator pedal will not lead to malfunction when the brake pedal is stepped down, but the operation of accelerator pedal will reduce the fuel amount when the brake pedal is stepped down.

3) Measurement analysis

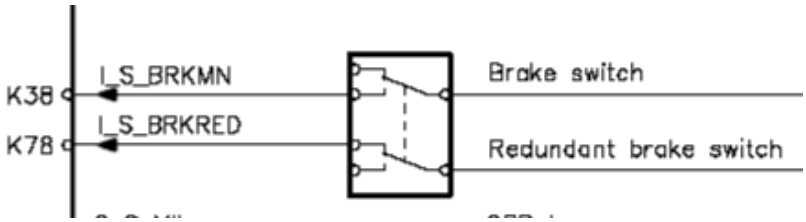

12. A/C switch

1) Overview

The A/C switch is located on the A/C control panel and is mainly functioned to transmit actuation directive of A/C compressor to the engine control unit.

2). Working Principle

A/C request is the input signal that the driver requests the working of A/C and controls the working of A/C relay as well as the speed promotion of the engine.

3) Measurement analysis

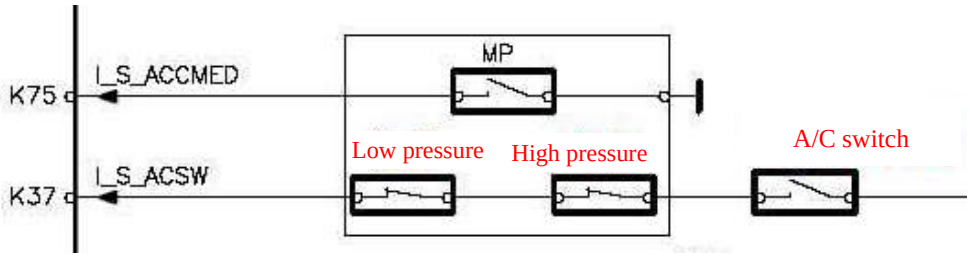

4) Malfunction Mode:

- Short-circuit or open-circuit of signal circuit;
- Unstable signal;
- The signal is out of range.

Downloaded from www.Manualslib.com manuals search engine

5) Troubleshooting

Use Sunray special diagnosis instrument to check the trouble code and determine the malfunction position. Mainly check the circuit of sensor and determine whether there is short-circuit or open-circuit between circuit and the grounding wire, whether there is short-circuit or open-circuit to power supply, and whether the circuit is consistent with the given pin definition.

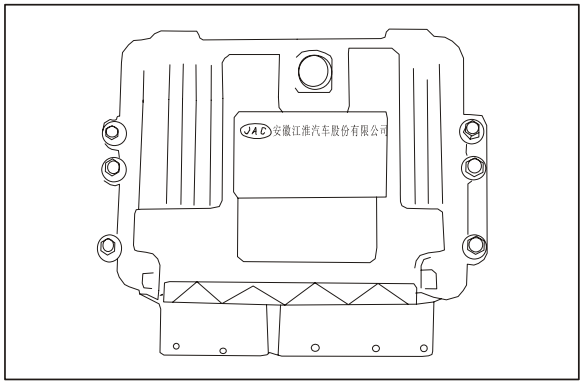

II. Engine control unit (ECU)

1) Overview

The engine control unit is located on the firewall on the back of the bottom of the glove box.

2) Working Principle

The ECU has one metal housing and the sensors, actuators, and power supply are connected to the ECU via multi-pole plug. The power supply parts for direct control of actuators are integrated in the ECU so that their heat can be effectively expanded to the ECU housing.

Requirements for ECU are as below:

- Surrounding (ambient) temperature: -40ºC~+85ºC

- Resistance to fuel, lubricating oil, etc.

- Resistance to moisture.

- The mechanical load has high requirements of the exposure to electromagnetic compatible (EMC) signal.

The ECU is used to calculate the signal received from the external sensors and control at the allowable voltage level. Based on these input data and stored characteristic graph, the microprocessor can calculate out the duration and accurate moment for fuel injection and convert into time-signal curve. The specific accuracy requirement and high dynamic response of engine require high level calculation capability.
The driver stage is actuated by means of the output signal and supplies proper power to the actuators to control the common rail pressure and the high pressure pump units. In addition, the actuators can control the engine functions (such as relays for exhaust gas recirculation actuator, turbocharger pressure actuator, and electronically controlled fuel pump) and other auxiliary functions (such as fan relay, auxiliary heater relay, and electric heating plug relay, and air conditioner). The driver stage has the short-circuit protection and the protection against damage due to current overload. These types of malfunctions and the open-circuit will be reported to the microprocessor. The diagnosis function of the fuel injector driver stage can identify the error signal curve occurred. In addition, one series of output signal can be transmitted to other vehicle systems via different interfaces. Within the specific safety concept framework, the ECU can monitor the entire injection system.
The actuation of fuel injector advances special requirements over the driver stage. Within the fuel injector, the current from the driver stage generates one magnetic field force in the magnetic coil that applies onto the hydraulic high pressure system. To ensure the accurate tolerance and high repeatability of the fuel injection amount, this coil must be actuated in front of a steep current wave. This requires ECU to form high voltage.

The actuation time (fuel injection duration) can be classified by the current control circuit into start current stage and holding stage. It must work accurately to ensure that the fuel injectors can guarantee the repeatability of fuel injection under all working conditions. In addition, it must reduce the energy loss in the ECU and the fuel injectors.

Downloaded from www.Manualslib.com manuals search engine

3) Measurement analysis

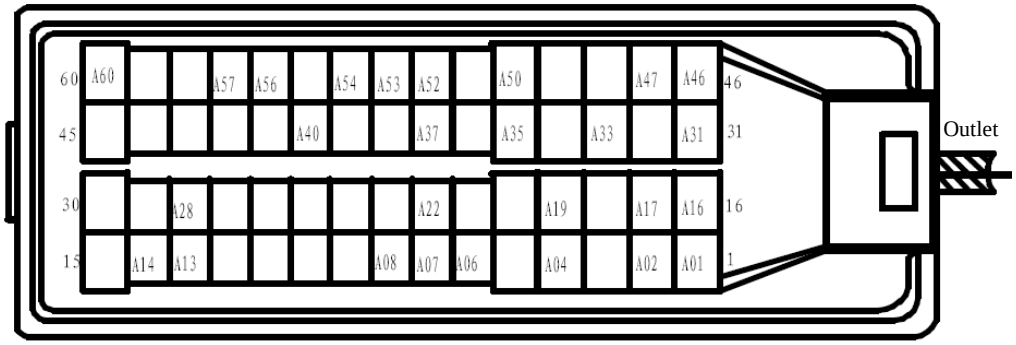

Interface A

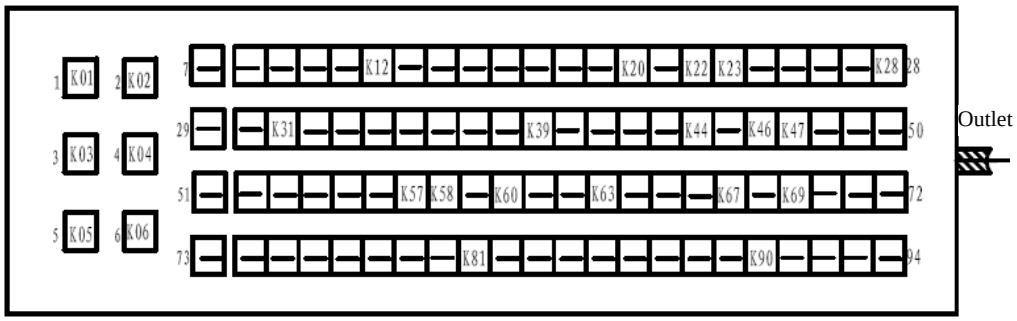

Interface K

Definition for ECU pins of EDC17 control system:

Terminal No.	Description	Terminal No.	Description
Interface A			
A01	High fuel injector of 3rd cylinder	A31	Low fuel injector of 2nd cylinder
A02	High fuel injector of 2nd cylinder	A32	
A03		A33	Low fuel injector of 4th cylinder
A04	Power supply of EGR actuator	A34	
A05		A35	Earthing of camshaft position sensor
A06	5V power supply of rail pressure sensor	A36	
A07	5V power supply of absolute pressure sensor	A37	High coolant temperature signal

Downloaded from www.Manualslib.com manuals search engine

Terminal No.	Description	Terminal No.	Description
A08	5V power supply of camshaft position sensor	A38	
A09		A39	
A10		A40	Earthing of rail pressure sensor
A11		A41	
A12		A42	
A13	Signal of crankshaft position sensor	A43	
A14	Earthing of crankshaft position sensor	A44	
A15		A45	
A16	High fuel injector of 1st cylinder	A46	Low fuel injector of 3rd cylinder
A17	High fuel injector of 4th cylinder	A47	Low fuel injector of 1st cylinder
A18		A48	
A19	Earthing of EGR actuator	A49	
A20		A50	Low coolant temperature signal
A21		A51	
A22	Air conditioner relay control	A52	Rail pressure sensor signal
A23		A53	Temperature signal of absolute pressure sensor
A24		A54	Pressure signal of absolute pressure sensor
A25		A55	
A26		A56	Shielding wire of crankshaft position sensor
A27		A57	Signal of camshaft position sensor
A28	Earthing of absolute pressure sensor	A58	
A29		A59	
A30		A60	Control of fuel metering unit
Interface K			
K01	Positive pole of battery	K48	Vehicle speed sensor output
K02	Negative pole of battery	K49	
K03	Positive pole of battery	K50	
K04	Negative pole of battery	K51	Cruise control lamp
K05	Positive pole of battery	K52	Cruise control mode
K06	Negative pole of battery	K53	Cruise control mode
K07		K54	Anti-theft cable
K08		K55	Clutch switch control
K09		K56	
K10		K57	Preheating feedback signal
K11		K58	Grounding of accelerator pedal sensor 2
K12	Intake temperature signal of air flowmeter	K59	Pressure difference sensor signal

Downloaded from www.Manualslib.com manuals search engine

Terminal No.	Description	Terminal No.	Description
K13		K60	Accelerator pedal sensor signal 2
K14		K61	
K15		K62	
K16		K63	Earthing signal of air flowmeter
K17		K64	
K18		K65	
K19	Vehicle speed signal input	K66	CAN communication
K20	Intake flow signal of air flowmeter	K67	Grounding of accelerator pedal sensor 1
K21	Exhaust brake switch control	K68	
K22	Power supply 2 of accelerator pedal sensor	K69	Control signal of turbocharger actuator
K23	5V power supply of EGR	K70	Malfunction indicator lamp
K24		K71	OBD indicator lamp
K25		K72	
K26		K73	
K27	5V power supply of pressure difference sensor	K74	Cruise control mode
K28	Power supply 1 of accelerator pedal sensor	K75	
K29	Exhaust brake relay control	K76	
K30	Anti-theft cable	K77	Water level signal
K31	Position signal of EGR	K78	Auxiliary brake switch
K32		K79	
K33		K80	Earthing of pressure difference sensor
K34		K81	Accelerator pedal sensor signal 1
K35		K82	
K36		K83	
K37	Air conditioner switch signal	K84	
K38	Main brake switch	K85	
K39	Earthing of EGR position sensor	K86	
K40	Cruise control mode	K87	CAN communication
K41		K88	
K42		K89	
K43	Engine speed signal output	K90	Preheating control signal
K44	Line K diagnosis	K91	Preheating indicator lamp
K45		K92	
K46	Ignition switch power switch control	K93	
K47	Main relay control	K94	

4) Malfunction Mode

Unstable idling, poor acceleration, start failure, high idling, out-of-tolerance of emission, difficult start, failure of air conditioner, control failure of fuel injector, engine flameout, etc.

Failure arising from the burnout of ECU internal parts due to electric overload of external devices; rusting of circuit

Downloaded from www.Manualslib.com manuals search engine

board due to water ingress of ECU.

5) Troubleshooting

Connect the plug and use engine data diagnosis cable to read the engine malfunction records; disconnect the plug and check whether the ECU connecting wire is intact. Mainly check whether ECU power supply and grounding circuit are normal, whether the external sensors are working normally, whether the output signal are reliable, and whether the circuit is intact.

Check whether the actuators are working normally and whether their circuits are intact. Finally replace the ECU for test.

III. Actuators

1. Fuel injector

1) Overview

The fuel injectors are located on the engine cylinder head and are mainly functioned to provide accurate fuel injection for the engine at the correct moment.

2) Working Principle

To realize effective fuel injection start point and accurate injection amount, the common rail system adopts the special fuel injector with hydraulic servo system and electronic control unit (solenoid valve). At the start of fuel injection process, the fuel injector needs to adopt a relatively high current to rapidly open the solenoid valve. Till the needle valve of the fuel injector nozzle reaches the maximum travel and the fuel injector nozzle is fully opened, the control current is reduced to a relatively low constant current. In such case, the fuel injection amount depends on the open moment and the pressure in the common rail. When the solenoid valve is no longer working and is closed, the fuel supply process is completed.

Fuel injector
a. Close of fuel injector (Still state) b. Open of fuel injector (Fuel injection)
1. Fuel return pipe 2. Electric connector 3. Control unit (electromagnetic field) 4. Rail fuel inlet (high pressure) 5. Ball valve 6. Fuel drainage hole 7. Fuel inlet hole 8. Valve control chamber 9. Valve control plunger 10. Fuel inlet groove to injector nozzle 11. Injector nozzle needle valve

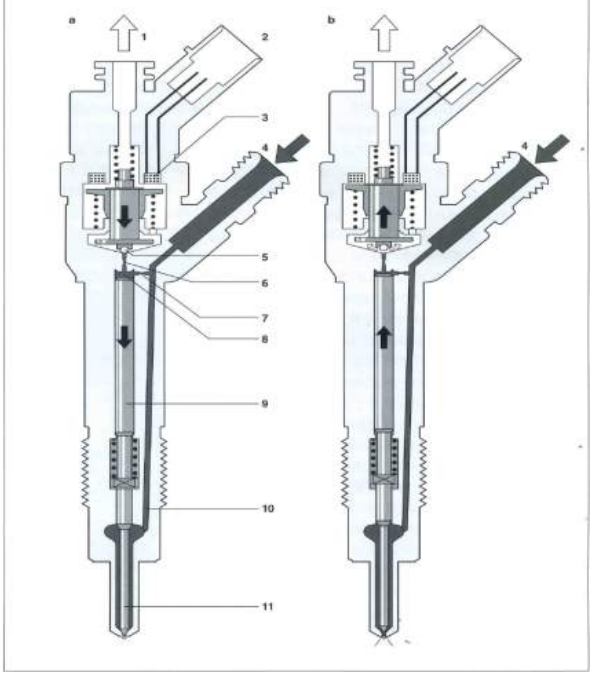

The fuel injection start moment and the fuel injection amount are regulated by the electronically controlled fuel injector. These fuel injectors substitute the fuel injector assembly (injector nozzle and fuel injector body). Similar to the fuel injector assembly of modern direct injection diesel engine, the holders are used to install the fuel injector on the cylinder head. In other words, it's unnecessary to make any large modification to the cylinder head to install the common rail fuel injectors onto the modern direct injection diesel engine.

Design structure

The fuel injector (figure) can be divided into several functional blocks:

- Injector nozzle

- Hydraulic servo system

- Solenoid valve

As shown in the figure, the fuel enters into nozzle through high pressure connecting pipe (4) and fuel inlet groove (10) and enters into the valve control chamber (8) through fuel inlet (7). The control chamber is connected with fuel return pipe (1) via fuel drainage hole (6) and the fuel drainage hole

Downloaded from www.Manualslib.com manuals search engine

is opened by solenoid valve. After the fuel drainage hole is closed, the hydraulic force applied onto the valve controlled plunger (9) exceeds the pressure on the pressure shoulder of injector nozzle needle valve (11). Therefore, the needle valve is pushed into the needle valve seat to block the high pressure passage to the combustion chamber.
When the solenoid valve of the fuel injector is actuated, the fuel drainage hole opens. In such case, the pressure in the control chamber drops and thus the force applied onto the plunger reduces. Once the hydraulic pressure is less than the force applied onto the pressure shoulder of the needle valve, the injector nozzle needle valve opens and the fuel injects into the combustion chamber via the injection hole. The cause to indirectly control the injector nozzle needle valve by hydraulic gain system is that the solenoid valve can't directly generate the force required to rapidly open the needle valve. The control amount required to open the injector nozzle needle valve is not included from the actual fuel injection amount and is conveyed to the fuel return pipe through the fuel drainage hole of the control chamber. Besides the control amount, the loss control fuel and the leak fuel at the injector nozzle needle valve and the valve plunger chamber are conveyed to the fuel tank via the fuel return pipe and the fuel collection pipe connecting the relief valve.
Depending on the working condition of the engine and the pressure generated by the high pressure fuel pump, the fuel injector can be classified to 4 working conditions:

- Close of fuel injector (due to application of high pressure)

- Open of fuel injector (start of fuel injection)

- Full open of fuel injector

- Close of fuel injector (complete of fuel injection)

These working conditions are generated by means of the pressure distribution applied onto the fuel injector parts. When the engine is stopped and there is no pressure in the common rail, the injector nozzle spring will close the fuel injector.

Close of fuel injector (still state):

The solenoid valve is not actuated under still state and thus the fuel injector is closed (a). When the fuel drainage hole is closed, the valve spring will press the ball vale of armature onto the fuel return orifice. The high pressure of common rail is formed in the valve control chamber. Afterwards, a similar pressure is formed within the injector nozzle chamber. The pressure applied onto the end face of control plunger by the rail pressure and the injector nozzle spring force work together against the open force applied onto the conical pressure bearing face of needle valve by fuel to maintain the needle valve at close state.

Open of fuel injector (start of fuel injection):

While the injector nozzle is at still state, the solenoid valve is actuated by the start current to ensure rapid open (b). The force generated by the actuated solenoid valve overcomes the spring force so that the armature opens the fuel drainage hole. Almost at the same time, the high start current drops to the low holding current required by the electric magnet. This is possible as the air cap of the magnetic circuit becomes really small. When the ball valve of the fuel drainage hole opens, the fuel flows from the valve control chamber to the empty chamber above and then returns to the fuel tank via the fuel return pipe. The fuel drainage hole makes the pressure not completely balanced so that the pressure in the valve control chamber drops. Therefore, the pressure in the valve control chamber is less than the pressure of the fuel rail, which is still maintained in the fuel injector chamber, and the pressure drop in the valve control chamber reduces the force applied onto the control plunger so that the injector nozzle needle valve opens and the fuel injection starts.

The open speed of the injector nozzle needle valve depends on the flow difference between the fuel drainage hole and the fuel inlet hole. The control plunger reaches its top dead center and then is held by one film of fuel, which is formed by the fuel flow between the fuel drainage hole and the fuel inlet hole. In such case, the injector nozzle completely opens and the fuel is injected into the combustion chamber at a pressure almost equaling to the fuel pressure in the common rail. The pressure distribution in the injector nozzle is similar to that at the open stage.

Close of fuel injector (complete of fuel injection):

When the solenoid valve is no longer actuated, the valve spring pushes down the armature so that the ball of the valve

Downloaded from www.Manualslib.com manuals search engine

closes the fuel drainage hole. The armature is of two-part design. Though the armature block is guided by the pressure shoulder during the downward movement, it can bounce back following the return spring and thus will not apply downward force onto the armature and the ball valve.
The close of fuel drainage hole enables the entry of fuel via fuel inlet hole into the control chamber for pressure establishment. This pressure is equivalent to the rail pressure and applies additional force onto the end face of the control plunger. The resultant force from this force and spring force overcomes the pressure in the injector nozzle chamber to close the injector nozzle needle valve.
The close speed of the injector nozzle needle valve depends on the flow passing through the fuel inlet hole. Once the injector nozzle needle valve hits its lower seat again, the fuel injection stops.

3) Measurement analysis

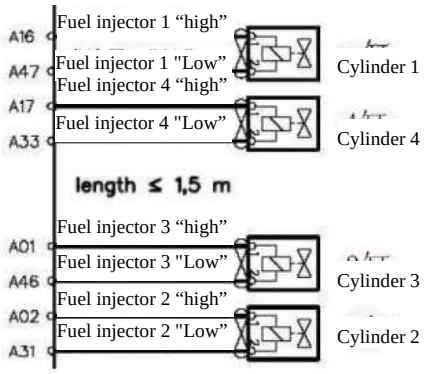

4) Matching of fuel injector

The matching of fuel injector must be performed in event of any of the following conditions:

- Replacement of fuel injector.
- Replacement of ECU
- Confusion of installation serial number before and after the maintenance.

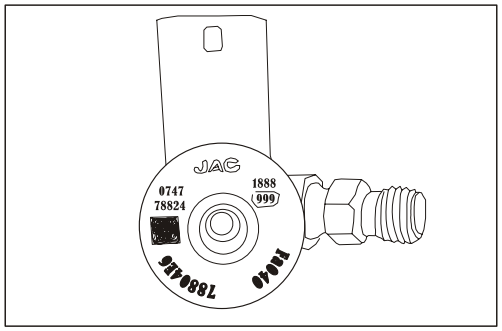

While performing the matching, input the matching code on the fuel injector (as shown in the figure) in order into the diagnosis instrument for matching.

2. EGR valve control system

1) Overview

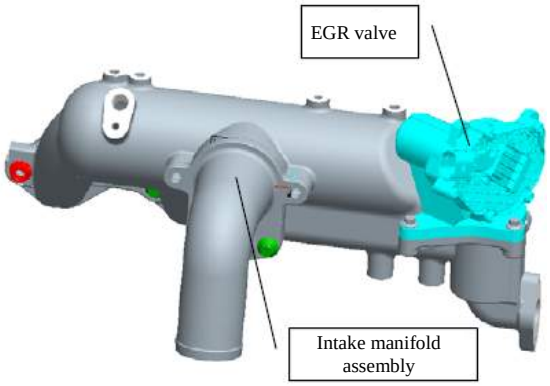

- The electronically controlled EGR valve controls the open extent of the valve by means of the positive and reverse rotation of the DC motor and performs the close-loop control as per the feedback signal of the position sensor.
- To guarantee the NOx emission of the engine, the ECU measures and calculates the EGR percentage as per the input parameters of the engine (such as speed and intake pressure) and the calibrated MAPs), issues control signal to the EGR valve, and performs the close-loop control via the position sensor.
- The EGR valve is installed on the intake manifold. The constant temperature of the EGR valve inlet emission

Downloaded from www.Manualslib.com manuals search engine

can't exceed 260ºC, with the peak temperature no more than 300ºC.

2) Measurement analysis

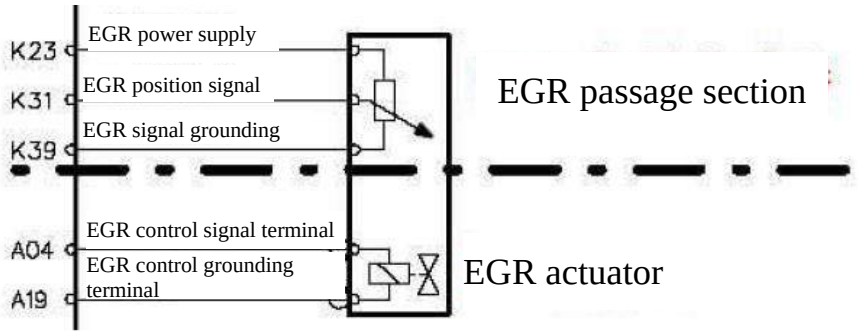

3. Variable nozzle turbocharger (VNT) control

1) Overview

- HFC4DA1-2C adopts variable section turbocharger technology so that the turbocharger and the engine are well matched under all working conditions to realize best engine performance.
- The blades of the VNT are connected to the control tie rod and the displacement of the control tie rod is controlled by the vacuum pressure of the vacuum chamber on the VNT. Changing the vacuum pressure of the vacuum chamber can change the position of VNT blades and control the flow area of the turbine. The vacuum pressure of the vacuum chamber is controlled by VNT solenoid valve, of which one port is connected to the vacuum chamber on the VNT, one port is connected to the vacuum pump, and another port is connected to the air. This connector in the engine is additionally fitted with filter to prevent the ingress of contaminant (such as dust) into the valve. The open extent of the VNT solenoid valve is regulated by the PWM wave issued by ECU and the solenoid valve is installed on the crossbeam of the body water tank.

2) Measurement analysis

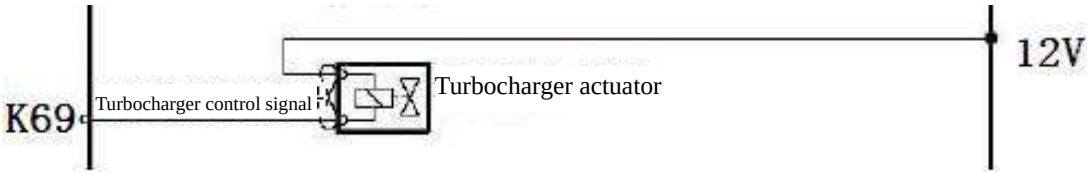

4. Fuel metering unit

1) Overview

The fuel metering unit is located on the high pressure fuel pump and is functioned to control the fuel amount from the low pressure pump to the high pressure pump.

2) Working Principle

The fuel metering valve is installed at the high pressure fuel inlet of high pressure fuel pump and is functioned to regulate the fuel supply amount and fuel pressure, of which the regulation requirement is subject to the control of ECU. The control coil of the metering valve is closed when not electrified, which cuts off the fuel supply to the plunger of high pressure fuel pump. The ECU changes the fuel inlet section area of metering unit by means of pulse signal to increase or reduce the fuel supply amount.

3) Measurement analysis

Wiring terminals: 1 – Signal terminal; 2 – 12V voltage.

Downloaded from www.Manualslib.com manuals search engine

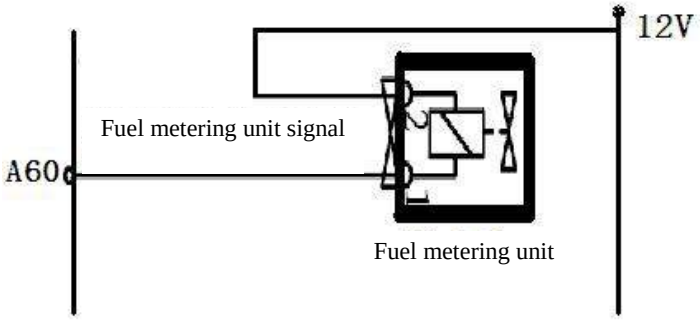

4) Malfunction Mode

Short-circuit or open-circuit of metering valve; damage of metering valve; contamination of metering valve.

5) Troubleshooting

Use Sunray special diagnosis instrument to check the trouble code and determine the malfunction position. Mainly check the circuit of metering valve and determine whether there is short-circuit or open-circuit between circuit and the grounding wire, whether there is short-circuit or open-circuit to power supply, and whether the circuit is consistent with the given pin definition.

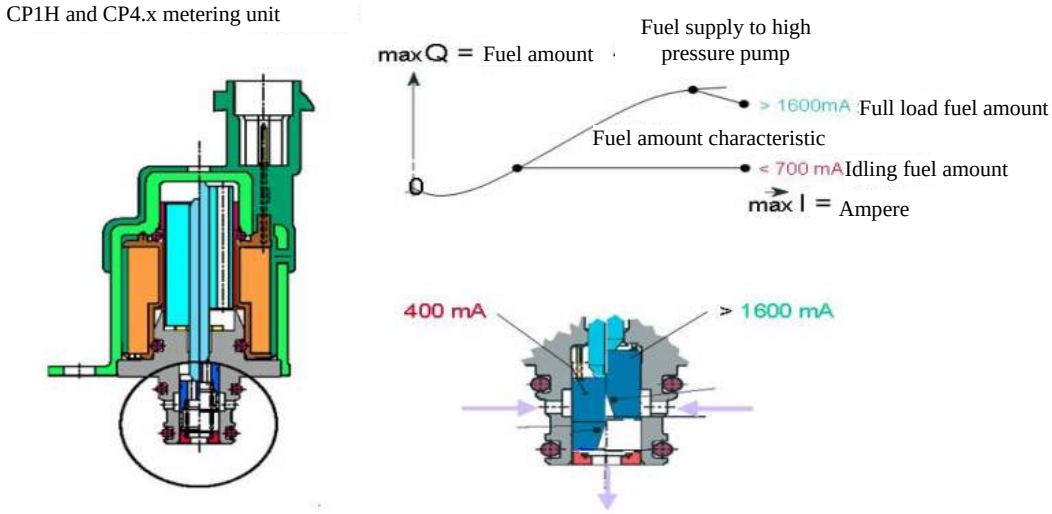

5. Preheating control unit

1) Overview

The preheating control unit is located in the engine compartment and is mainly functioned for the rapid start of engine under cold state.

2) Working Principle

The preheating control unit is functioned to ensure effective cold start and shorten the warm-up time, which is closely related to the exhaust emission. The preheating time is a function of coolant temperature. At the start of the engine or during the actual running, the turn-on duration of the electric heating plug depends on one series of parameters, including the fuel injection amount and engine speed. The control of the electric heating plug is realized by one power relay (GCU).

The main part of the electric heating plug is the tubular heating unit. The heating unit is firmly and air-tightly installed within the electric heating plug housing to guard against corrosion and thermal gas impact. The heating unit is one

Downloaded from www.Manualslib.com manuals search engine

helical metal wire embedded within the magnesium oxide powder (Figure). This helical metal wire is composed of two resistors in series connection and one heating oil and one control coil are installed on the tip of the heating tube. The heating coil maintains one resistance almost irrelevant to the temperature and the control coil is made of positive temperature coefficient (PTC) material. In the new generation heating plug (GSK2), the rise amplitude in the resistance of control coil is larger than common electric heating plug. With capability of rapidly reaching the temperature required for ignition (up to 850ºC within 4s) and relatively low constant temperature, new electric heating plug GSK features outstanding performance. Therefore, the temperature of the electric heating plug is restrained at one critical value. Therefore, after the start of the engine, the GSKZ electric heating plug can continue to maintain electrified for 3min. This after-combustion performance improves the noise and exhaust emission of start and warm-up stages.

The control instrument of the electric heating plug adopts one power relay and the electric switch set to control the electric heating plug, which control the heating time of electric heating plug and feature the protection and monitoring functions. Thanks to its diagnosis function, higher grade of electric heating plug control instrument can identify the malfunction of single electric heating plug and display to the driver. The control input terminal of the electric heating plug control instrument is connected to the electronic control unit (ECU) via multi-pole plug. To prevent the voltage drop, the series connection circuit connected to the electric heating plug adopts the threaded pin or connector.

The controlled preheating process and the start process are controlled by the electric heating plug starter switch. The preheating process is started when the key is turned to “ON” position. When the heating control lamp goes out, the electric heating plug reaches sufficient temperature and the start process can be conducted. In the subsequent start process, the fuel drips injected will be atomized and get combusted in the compressed hot air so that the heat released starts the combustion process.

The after-heating after the successful start can help the warm-up process to form one speed promotion and idle run with no interruption and little smoke. This can reduce the combustion noise at the cold start. In event of non-successful start, the protection circuit of the electric heating plug is turned off to prevent the excessive discharge of the battery.

3) Measurement analysis

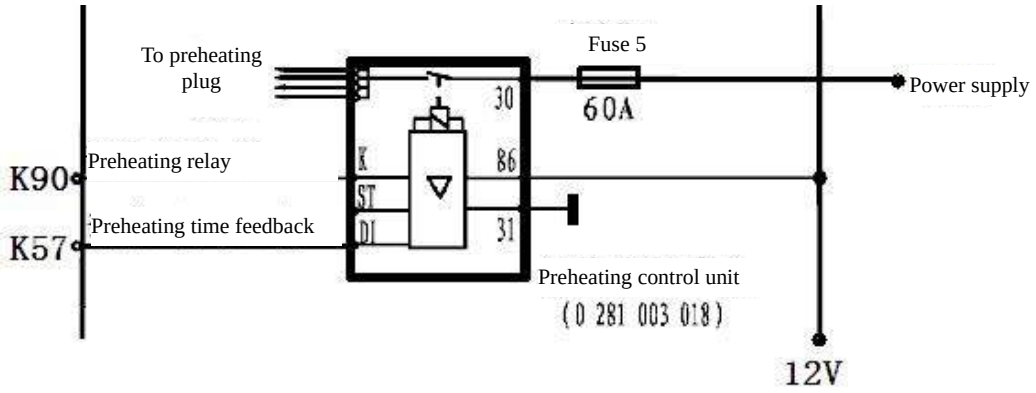

4) Malfunction Mode:

Short-circuit or open-circuit of preheating control unit;

Damage of preheating control unit;

5) Troubleshooting:

Use special diagnosis instrument to check the trouble code and determine the malfunction position. Mainly check the circuit of preheating control unit and determine whether there is short-circuit or open-circuit between circuit and the grounding wire, whether there is short-circuit or open-circuit to power supply, and whether the circuit is consistent with the given pin definition.

Downloaded from www.Manualslib.com manuals search engine

6. Malfunction indicator lamp

1) Overview

The malfunction indicator lamp is located on the instrument. In event of malfunction of engine control system units, the engine malfunction indicator lamp will light up to remind the driver for checking and service by the service station as soon as possible.

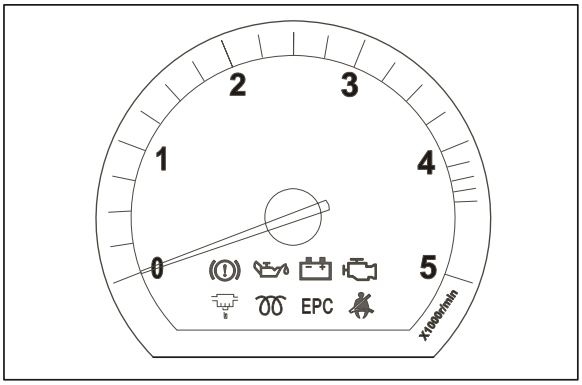

2) Working Principle

The malfunction indicator lamp (MIL) is located on the instrument panel and is directly powered by the voltage of battery. The engine control unit (ECU) lights up the malfunction indicator lamp by grounding the control circuit of malfunction indicator lamp. When the ignition switch is turned on but the engine is not started, the malfunction indicator lamp (MIL) shall light up for 5s and then go out.

Functions of malfunction indicator lamp:

- The malfunction indicator lamp reminds the driver of the occurrence of malfunction. The vehicle shall be serviced as soon as possible.
- The malfunction indicator lamp lights up during the test of the malfunction indicator lamp.
- If the diagnosis procedure requests to light up the malfunction indicator lamp, one diagnosis trouble code will be stored.

Light-up of malfunction indicator lamp

- When the ignition switch is turned on but the engine is not started, the malfunction indicator lamp will light up for 5s and then go out.
- The malfunction indicator lamp goes out after the engine is started.
- If any malfunction is detected by the self-diagnosis system, the malfunction indicator lamp will keep lighted up.
- If no malfunction is detected, the malfunction indicator lamp will go out.

3) Measurement analysis

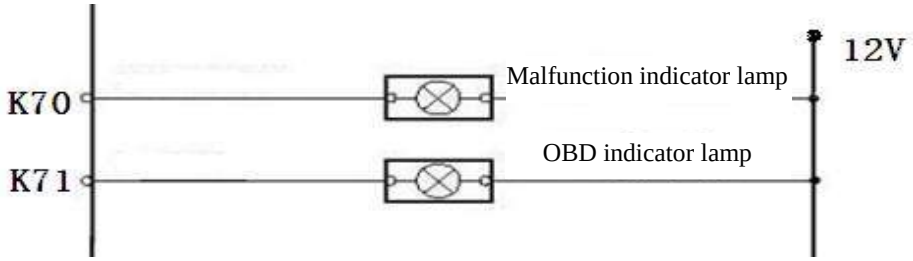

4) Malfunction Mode

Short-circuit or open-circuit between engine control unit to instrument circuit.

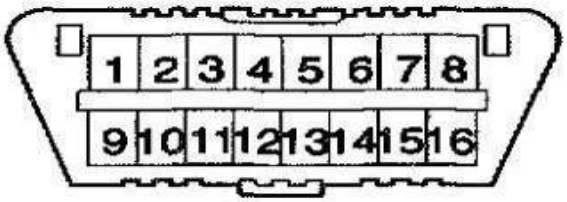

5) Troubleshooting:

Use Sunray special diagnosis instrument to check the trouble code and determine the malfunction position. Mainly check the circuit from engine control unit to

Downloaded from www.Manualslib.com manuals search engine

instrument circuit and determine whether there is short-circuit or open-circuit between circuit and the grounding wire, whether there is short-circuit or open-circuit to power supply, and whether the circuit is consistent with the given pin definition.

7. Diagnosis interface

1) Overview

The diagnosis interface is located in the electric box beneath the driver's side instrument panel and is used to connect the special diagnosis instrument.

2) Working Principle

This is one data transmission interface for communication with ECU and is one standard OBD interface.

3) Measurement analysis

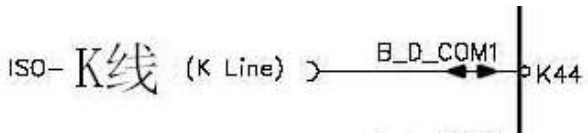

4) Malfunction Mode

Short-circuit or open-circuit between engine control unit and diagnosis interface.

Working failure of engine control unit.

5) Troubleshooting:

Use Sunray special diagnosis instrument to check the trouble code and determine the malfunction position. Mainly check the circuit from engine control unit to diagnosis interface circuit and determine whether there is short-circuit or open-circuit between circuit and the grounding wire, whether there is short-circuit or open-circuit to power supply, and whether the circuit is consistent with the given pin definition.

Downloaded from www.Manualslib.com manuals search engine

Chapter IV Engine Diagnosis

Section I. Precautions

1. Removal/Installation Requirements for Electronic Control Unit (ECU):

- Remove the controller before welding or baking finish;
- When removing the controller, turn off the ignition switch and disconnect the battery from the system at the same time, in order to avoid damaging the ECU.
- It is not allowed to remove power cord from the battery when the engine or the electrical system is working.
- Large-current equipment such as charger is not allowed to be directly connected to the starting motor.
- Note: The ambient temperature of ECU should not be greater than 75 degree.

2. Cleaning Requirements:

Please observe the following rules before the operation of fuel supply system and fuel injection system:

- The removed components should be placed at clean field and properly covered by the cloth other than fiber type (cotton cloth or gauze cloth)

3. All types of harness connectors and the connector for diagnostic instrument should be connected and disconnected only when the ignition switch is turned off:

- When measuring the power voltage or ground wire of the ECU, please ensure the wiring sequence and method is correct.
- Disconnecting the power cord or the ground wire of the battery from the system or removing ECU harness connector will result in the loss of diagnosis and self-learning information stored in ECU. (If the vehicle model is different, the time of retaining Pleas of the ECU is also different after the loss of power.)

4. Please pay attention to the following points when maintaining the fuel supply system (fuel supply pipe, fuel pump and fuel injection system):

- Please be very careful during installation/removal of fuel pump on the fuel tank with fuel.
- Prepare proper materials around the fuel tank opening to absorb a lot of fuel leaked from it timely..
- Avoid the fuel contacting your body.
- Thoroughly clean the part and its surrounding before loosening a connector.
- Please prevent any fuel from splashing from the loose part and place a rug around the connector.
- If the disassembled parts could not be timely repaired or properly treated, store the parts properly.
- Take the spare parts out of the package only when they are needed to be installed. Do not use unpacked spare parts and the spare parts in severe damaged package
- Do not damage the O-ring of return pipe when assembling fuel injector return pipe. Coat a little diesel oil on the O-ring for assembling convenience.
- Do not use the compressed air and do not move the vehicle after the fuel supply system is disassembled.

5. Safety Measures

To prevent the maintenance technicians from being injured and the fuel and ECU being damaged, please pay attention

Downloaded from www.Manualslib.com manuals search engine

to the following points:

- If the engine is working or at the starting speed, it is not allowed to check for any single cylinder failure by the way of disconnecting the fuel injector harness.
- If the engine needs to be dragged but not started by the starter, such as when you check the engine cylinder pressure, the harness plug should be disconnected from the crankshaft position (engine speed) sensor and camshaft position (phase) sensor. After inspection, all sensors should be well connected and system DTCs should be cleared by using the special diagnostic instrument for JAC commercial vehicles.
- It is not allowed to touch the engine gear train and rotating parts when the engine is at high speed;
- When the engine reaches normal operating temperature, the coolant temperature and pressure of cooling system is very high; therefore, stop the engine and let the cooling system fully cool down if it is needed to repair the engine cooling system.
- If the engine compartment relevant maintenance is necessary to be conducted in repairing engine fuel system, please do it after the engine compartment is fully cooled down.
- Don’t touch the engine cooling fan at any time when the system is normally electrified, for the cooling fan is likely to be started suddenly.

Downloaded from www.Manualslib.com manuals search engine

Section II. Maintenance Procedures

Fuel system of common rail engine consists of low-pressure delivery pipes and high-pressure oil pipes and maximum pressure of it is over 1800bar. Some components of fuel injector and HP pump are machined with accuracy of 0.1mm. Pressure regulation and fuel injection are controlled by engine ECU. In the case of stuck internal needle valve, fuel injector will maintain open and HP pump keeps operating to supply high-pressure fuel oil. Therefore, excessive fuel will be sprayed into combustion chamber and this will lead to rapid increase of combustion chamber internal pressure (over 250bar) and even serious engine damage.

Core component of fuel system possesses very high accuracy and will be easily influenced by dust or tiny foreign matters. Therefore, the following preparations and procedures should be carried out or there will be a lot of system failures.

Operation Procedures:

1. It is necessary to keep maintenance site clean (it should be free of dust especially);

2. It is necessary to keep maintenance tools clean (they should be free of oil and foreign matters);

3. Wear ethylene pinafore to prevent hairs, dust and foreign matters from entering engine fuel system. Wash your hands instead of wear gloves;

4. Prior to fuel system maintenance, carry out the following procedures:

Carefully listen to customer's description about symptoms and faults

⇩

Check appearance and connection of wire harness and connectors in engine compartment

⇩

Carry out test procedures with special diagnostic apparatus (carry out road test when necessary)

⇩

Confirm the fault. If the fault is in fuel system, please carry out Step1~3 above.

5. If the fault is in HP pump, fuel delivery line or fuel injector, prepare clean special tools and sealing covers and carry out relevant procedures for engine fuel system. Prior to maintenance, clean relevant areas to engine compartment completely;

6. Find out faulted parts according to the above operation procedures and replace these parts with parts from OEM;

Downloaded from www.Manualslib.com manuals search engine

Remove battery negative cable.

⇩

For safety reasons: Confirm whether system pressure is low prior to high-pressure system disassembly.

⇩

Apply special tools and torque wrenches in calibration.

In disassembly or replacement of fuel injector, it is necessary to apply new copper washers and tighten fixing bolts for fuel injector according to fixed torque at the same time. Otherwise, injection position of fuel injector will deviate from correct position and this will make engine operation out of control.

7. Apply clean and intact sealing covers on disassembled components and keep them well;

8. After fuel injector replacement, carry out fuel injector matching with special diagnostic apparatus;

9. Keep pressing manual oil delivery pump on oil-water separator to provide low-pressure line with fuel oil until the pump can not be pressed any longer.

Attention: Do not start the engine before the pump is filled up.

10. Recheck installed components, connect battery cable and start the engine for engine operation condition inspection;

11. Apply special diagnostic apparatus to check current faults for existence and eliminate historical faults.

Downloaded from www.Manualslib.com manuals search engine

Section III. Fault Diagnosis

1. Fault Information Record

Electronic control unit continually monitors sensors, actuators, relevant circuits, MILs, battery voltage and even its self and carries out reliability tests to sensor output signals, actuator drive signals and internal signals. Once there are faults in certain link or certain signal is unreliable, electronic control unit sets fault information record in RAM fault memory immediately. Fault information record is stored in the form of diagnostic trouble code (DTC) and shown in the sequence of fault occurrence.

Faults can be divided into “steady fault” and “random fault” (such as faults caused by temporary open circuit of harness or poor contact of connectors) according to fault occurrence frequency.

2. Fault Condition

If duration of an identified fault exceeds set stabilization time for the first time, ECU identifies it as a steady fault and stores it as a “steady fault”. If the fault disappears, ECU identifies it as a “random fault” and “nonexistent”. If the fault is identified once again, it is still a “random fault”. However, “existent” historical faults will not influence normal application of engine.

3. Fault Type

Short to power supply positive pole

Short or open to ground (In the case of pull-up or pull-down resistor for input stage, ECU will identify open circuit failure of input port as the fault of input port short to power supply positive pole or short to ground)

Unreliable signal

4. Fault Frequency Counter

For every identified fault, there is an individual frequency counter value (HZ). Frequency counter value (Hz) determines storage time of corresponding fault information record in the memory after fault disappearance (fault elimination).

For the first time fault identification, it (Hz) is set to be its initial value as 40. If fault condition does not change, this value will maintain the same forever.

Once identified fault has disappeared and then the condition has been maintained for certain period of time, the value (Hz) is reduced by 1 after every successful engine start (engine speed exceeds that of engine start completion). At this moment, ECU recognizes the fault has disappeared but fault information record still exists.

If the fault (such as fault caused by poor contact) appears and disappears frequently, the value (Hz) is increased by 1 but the value will not exceed set upper limit of 100.

When the value (Hz) becomes zero, all fault information records in the fault memory are cleared completely.

5. Fault Alarm

In the case of electronic control system, when there are faults in some important components such as ECU, coolant temperature sensor, phase sensor, boost pressure sensor, revolution speed sensor, air flow meter, fuel injector, fan relay and etc, ECU will give alarms via MIL flashing until faults are eliminated.

6. Fault Reading

Fault information records can be brought out from electronic control unit via fault diagnostic apparatus. However, some faults can be detected only when vehicle reaches corresponding operation condition.

Downloaded from www.Manualslib.com manuals search engine

7. Elimination of Fault Information Record

Fault information records in memory should be cleared after fault elimination. DTC can be cleared with ways as follows:

- When value of ECU frequency counter (Hz) becomes 0, fault information records in fault memory are all cleared automatically.
- In the case of “Fault memory zero clearing” command, fault information records can be cleared with the application of fault diagnostic apparatus.

8. Fault Detection

After obtaining fault information records with means above, only suspicious positions for fault occurrence are known. However, this does not mean faults have been detected. Therefore, cause for one fault may be damaged electrical component (like sensor or actuator or ECU, etc), wire in open circuit, wire short to ground or battery positive pole and even mechanical failure.

Faults are internal with their external expressions as various symptoms. When symptoms are detected, check fault information record for existence with fault diagnostic apparatus or flash code first of all and then eliminate corresponding faults. Finally, detect faults according to engine symptoms.

Downloaded from www.Manualslib.com manuals search engine

Section IV. DTC List

S/N	DTC	Meaning
1	P0030	The linear oxygen sensor heater circuit is open.
2	P0031	The linear oxygen sensor heater circuit is short to ground.
3	P0032	The linear oxygen sensor heater circuit is short to battery.
4	P0045	EGR valve circuit is open.
5	P0046	Overtemperature of EGR valve bridge-H chip
6	P0047	EGR valve circuit is short to ground.
7	P0048	EGR valve circuit is short to power supply.
8	P0068	Short-term drifting error in the process of throttle offset self-adaption
9	P0069	The absolute difference between intercooler downstream air pressure and ambient pressure is unreliable.
10	P0070	Reliability check function for ambient temperature
11	P0072	Too low ambient temperature
12	P0073	Too high ambient temperature
13	P0087	The minimum rail pressure is below the lower limit.
14	P0088	The maximum rail pressure is above the upper limit.
15	P0097	The signal level of intercooler downstream temperature is too low.
16	P0098	The signal level of intercooler downstream temperature is too high.
17	P00BE	The original value of fuel rail pressure is incoherent.
18	P0100	The supply voltage of air flow sensor exceeds the limit.
19	P0101	Timeout error of air flow sensor hardware signal
20	P0102	The sensitivity deviation of air flow sensor is below the lower limit.
21	P0103	The sensitivity deviation of air flow sensor is above the upper limit.
22	P010C	The signal level measured by air flow sensor is too low.
23	P010D	The signal level measured by air flow sensor is too high.
24	P0112	The voltage is below the lower limit of intake air temperature sensor.
25	P0113	The voltage is above the upper limit of intake air temperature sensor.
26	P0116	Error reported in dynamic reliability test of coolant temperature sensor
27	P0117	Coolant temperature signal level is too low (downstream).
28	P0118	Coolant temperature signal level is too high (downstream).
29	P0119	Error reported in static reliability test of coolant temperature sensor
30	P0122	The signal level of accelerator pedal position sensor 1 is relatively low.
31	P0123	The signal level of accelerator pedal position sensor 1 is relatively high.
32	P0127	The signal level of air temperature sensor is relatively high.

Downloaded from www.Manualslib.com manuals search engine

S/N	DTC	Meaning
33	P0128	Closed-loop control is actuated due to too low coolant temperature.
34	P0131	Oxygen sensor IAIPUNVG point is short to ground.
35	P0132	Oxygen sensor IAIPUNVG point is short to battery.
36	P0168	The signal level of fuel temperature sensor is relatively high.
37	P0182	The signal level of fuel temperature sensor is below the lower limit.
38	P0183	The signal level of fuel temperature sensor is above the upper limit.
39	P0191	The uncorrected rail pressure value is above the upper limit of drift.
40	P0192	The voltage of fuel rail pressure sensor is below the lower limit.
41	P0193	The voltage of fuel rail pressure sensor is above the upper limit.
42	P0194	The uncorrected rail pressure value is below the lower limit of drift.
43	P0195	Engine oil temperature signal fault on CAN
44	P0196	The oil temperature signal is unreliable.
45	P0197	The oil temperature signal level is too low.
46	P0198	The oil temperature signal level is too high.
47	P0201	The 1st cylinder fuel injector circuit is open.
48	P0202	The 2nd cylinder fuel injector circuit is open.
49	P0203	The 3rd cylinder fuel injector circuit is open.
50	P0204	The 4th cylinder fuel injector circuit is open.
51	P0205	The 5th cylinder fuel injector circuit is open.
52	P0206	The 6th cylinder fuel injector circuit is open.
53	P020A	An error is reported when the time for electrifying the 1st cylinder reaches to the maximum.
54	P020B	An error is reported when the time for electrifying the 2nd cylinder reaches to the maximum.
55	P020C	An error is reported when the time for electrifying the 3rd cylinder reaches to the maximum.
56	P020D	An error is reported when the time for electrifying the 4th cylinder reaches to the maximum.
57	P020E	An error is reported when the time for electrifying the 5th cylinder reaches to the maximum.
58	P020F	An error is reported when the time for electrifying the 6th cylinder reaches to the maximum.
59	P0215	Avoid resonance of double mass flywheel when stopping.
60	P0219	Overspeed protection for engine parts
61	P0222	The signal level of accelerator pedal position sensor 2 is relatively low.
62	P0223	The signal level of accelerator pedal position sensor 2 is relatively high.

Downloaded from www.Manualslib.com manuals search engine

S/N	DTC	Meaning
63	P022A	EGR valve circuit is open.
64	P022B	EGR valve circuit is short to ground.
65	P022C	EGR valve circuit is short to power supply.
66	P022E	The signal level at the output position of EGR cooling bypass valve position sensor is below the lower limit.
67	P022F	The signal level at the output position of EGR cooling bypass valve position sensor is above the upper limit.
68	P0234	The actual air intake flow is greater than the target set by system.
69	P0237	The original voltage of intercooler downstream air pressure sensor is below the lower limit.
70	P0238	The original voltage of intercooler downstream air pressure sensor is above the upper limit.
71	P023D	The long-term jitter of EGR valve exceeds the limit.
72	P023E	The short-term jitter of EGR valve exceeds the limit.
73	P024A	An error is reported when the temperature of EGR cooler bypass valve in electrifying phase is too high.
74	P024E	The signal level measured by EGR cooler bypass valve position sensor is below the limit.
75	P024F	The signal level measured by EGR cooler bypass valve position sensor is above the limit.
76	P0251	The fuel metering unit circuit is open.
77	P0252	The temperature of fuel metering unit driver module is too high.
78	P0253	The fuel metering unit circuit is short to ground.
79	P0254	The fuel metering unit circuit is short to power supply.
80	P0255	Poor contact between ECU and fuel metering unit
81	P025C	The voltage of fuel metering unit is below the lower limit.
82	P025D	The voltage of fuel metering unit is above the upper limit.
83	P0263	An error is reported when the electrifying time reaches to the maximum.
84	P0266	An error is reported when the electrifying time reaches to the maximum.
85	P0269	An error is reported when the electrifying time reaches to the maximum.
86	P0272	An error is reported when the electrifying time reaches to the maximum.
87	P0275	An error is reported when the electrifying time reaches to the maximum.
88	P0278	An error is reported when the electrifying time reaches to the maximum.
89	P0299.	The positive deviation of pressure controller is above the upper limit.
90	P0335	No signal from crankshaft
91	P0336	Crankshaft speed signal is irrational.
92	P0339	Camshaft speed signal is irrational.

Downloaded from www.Manualslib.com manuals search engine

S/N	DTC	Meaning
93	P0340	No signal from camshaft
94	P0341	The offset angle of camshaft is too large.
95	P0380	The preheating indicator light output circuit is high.
96	P0382	The preheating indicator light output circuit is low.
97	P0383	EGR valve circuit is short to ground.
98	P0384	EGR valve circuit is short to power supply.
99	P0401	The actual air intake flow is greater than the target set by system.
100	P0402	The actual air intake flow is less than the target set by system.
101	P0403	Overtemperature of EGR valve bridge-H chip
102	P0404	The short-term jitter of EGR valve exceeds the limit.
103	P0405	The original voltage of EGR valve sensor signal is below the lower limit.
104	P0406	The original voltage of EGR valve sensor signal is above the upper limit.
105	P0409	EGR valve circuit is open.
106	P040C	The signal level of EGR cooler downstream temperature sensor is relatively low.
107	P040D	The signal level of EGR cooler downstream temperature sensor is relatively high.
108	P0426	Upstream temperature fault of oxidation catalytic converter
109	P0427	The signal level of upstream temperature of oxidation catalytic converter is relatively low.
110	P0428	The signal level of upstream temperature of oxidation catalytic converter is relatively high.
111	P0480	EGR valve circuit is open.
112	P0481	EGR valve circuit is open.
113	P0483	Overtemperature of EGR valve bridge-H chip
114	P0484	Overtemperature of EGR valve bridge-H chip
115	P0487	CJ945 Power level no-load fault
116	P0488	CJ945 Overheating fault
117	P0489	EGR valve circuit is short to ground.
118	P0490	EGR valve circuit is short to power supply.
119	P0500	Wheel fault
120	P0501	Unreliable vehicle speed
121	P0503	Signal of speed sensor exceeds the upper limit.
122	P0504	Unreliable brake signal
123	P0520	Engine oil pressure signal fault on CAN
124	P0521	The maximum oil pressure signal is unreliable.
125	P0522	The signal level of oil pressure sensor is relatively low.

Downloaded from www.Manualslib.com manuals search engine

S/N	DTC	Meaning
126	P0523	The signal level of oil pressure sensor is relatively high.
127	P0524	The minimum oil pressure signal is unreliable.
128	P0532	The signal level measured by A/C coolant pressure sensor is too low.
129	P0533	The signal level measured by A/C coolant pressure sensor is too high.
130	P0537	The signal level of A/C evaporator's temperature is relatively low.
131	P0538	The signal level of A/C evaporator's temperature is relatively high.
132	P0562	The signal level of battery voltage sensor is too low.
133	P0563	The signal level of battery voltage sensor is too high.
134	P0571	False brake signal
135	P0575	The analog cruise control signal is unreliable.
136	P0576	The analog cruise control signal level is too low.
137	P0577	The analog cruise control signal level is too high.
138	P0578	The analog cruise control button is stuck.
139	P0607	Cy320 Hardware error reported
140	P060A	Error reported in monitoring too high voltage
141	P060D	The accelerator pedal voltage signal is unreliable.
142	P0611	The injection frequency is limited by system.
143	P061B	Error reported in torque comparison
144	P061C	The deviation difference between the engine speed signals obtained from the 1st level and the 2nd level is too large.
145	P061D	The set value of air system is limited by the torque limit of the function control unit.
146	P061F	Error reported in the process of throttle offset self-adaption
147	P0627	The control line of priming fuel pump is open.
148	P0628	The control line of priming fuel pump is short to ground.
149	P0629	The control line of priming fuel pump is short to power supply.
150	P062A	Overheating of priming pump
151	P062B	The set value of fuel injection amount is limited by the torque limit of the function control unit.
152	P062F	Error reported in EEP read-write
153	P0643	The sensor power supply monitoring fault 1
154	P0645	The compressor circuit is open.
155	P0646	The compressor circuit is short to ground in electrifying phase.
156	P0647	The compressor circuit is short to power supply in electrifying phase.
157	P0650	EGR valve circuit is open.
158	P0653	The sensor power supply monitoring fault 2

Downloaded from www.Manualslib.com manuals search engine

S/N	DTC	Meaning
159	P0660	The positive deviation of throttle controller exceeds the upper limit for a long time.
160	P0661	The Port 1 of EGR valve bridge-H chip is short to ground.
161	P0662	The Port 1 of EGR valve bridge-H chip is short to power supply.
162	P0663	Short circuit / overload of EGR valve bridge-H
163	P0664	The Port 2 of EGR valve bridge-H chip is short to ground.
164	P0665	The Port 2 of EGR valve bridge-H chip is short to power supply.
165	P0668	The voltage of ECU temperature sensor is below the lower limit.
166	P0669	The voltage of ECU temperature sensor is above the upper limit.
167	P0670	EGR valve circuit is open.
168	P0686	The main relay opens too early.
169	P0687	The main relay opens too late.
170	P0691	EGR valve circuit is short to power supply.
171	P0692	EGR valve circuit is short to ground.
172	P0693	EGR valve circuit is short to power supply.
173	P0694	EGR valve circuit is short to ground.
174	P0699	The sensor power supply monitoring fault 3
175	P0704	Clutch signal error
176	P0737	Then engine speed output signal circuit is open.
177	P0738	Then engine speed output signal circuit is short to ground.
178	P0739	Then engine speed output signal circuit is short to power supply.
179	P0A32	Parking counter error
180	P1000	The long-term jitter of EGR valve exceeds the limit.
181	P1001	The relief valve reaches to the maximum permissible opening position.
182	P1002	The relief valve reaches to the maximum permissible opening time.
183	P1003	The average fuel rail pressure regulated by relief valve is out of the range.
184	P1004	Check the flow equilibrium if the relief valve is opened normally.
185	P1005	The relief valve opens.
186	P1006	The relief valve is forced open to implement the pressure shock.
187	P1007	The torque in MAP for torque and fuel conversion does not increase along the fuel direction strictly and monotonically.
188	P1008	PhyMod_trq2qBas_MAP contains non-strict and non-monotonic Q curve.
189	P1011	The positive deviation of rail pressure is above the upper limit.
190	P1012	The negative deviation of rail pressure is below the lower limit.
191	P1013	The maximum negative deviation of rail pressure is below the lower limit.

Downloaded from www.Manualslib.com manuals search engine

S/N	DTC	Meaning
192	P1020	The heating drive circuit of fuel filter is open.
193	P1021	The heating drive circuit of fuel filter is short to power supply.
194	P1022	The heating drive circuit of fuel filter is short to ground.
195	P102A	The signal level of ambient pressure sensor is relatively high.
196	P102B	The signal level of ambient pressure sensor is relatively low.
197	P102C	The signal level of ambient temperature sensor is relatively high.
198	P102D	The signal level of ambient temperature sensor is relatively low.
199	P1030	Overtemperature of EGR valve bridge-H chip
200	P1031	Short circuit / overload of EGR valve bridge-H
201	P1032	Overcurrent of EGR valve bridge-H based on temperature
202	P1033	Under-voltage of EGR valve bridge-H
203	P1034	The EGR valve in closed status is stuck.
204	P1035	The EGR valve in open status is stuck.
205	P1036	The long-term jitter of EGR valve exceeds the limit.
206	P1037	An error is reported when the EGR valve is stuck in closing or opening.
207	P1038	The physical value of EGR valve position sensor is too high.
208	P1039	The physical value of EGR valve position sensor is too low.
209	P103A	The signal level of intercooler downstream temperature is relatively high.
210	P103B	The signal level of intercooler downstream temperature is relatively low.
211	P103C	EGR valve offset is unreliable.
212	P103D	The positive deviation of regeneration controller is above the limit.
213	P103E	The positive deviation of regeneration controller is below the limit.
214	P1040	Overheating of throttle bridge-H
215	P1041	Short circuit / overload of throttle bridge-H
216	P1042	Overtemperature caused by overcurrent of throttle bridge-H
217	P1043	Long-term deviation in the process of throttle self-adaption
218	P1044	Output circuit 2 of throttle bridge-H is short to ground.
219	P1045	Under-voltage of throttle bridge-H
220	P1046	Output circuit 2 of throttle bridge-H is short to power supply.
221	P1047	The physical value of throttle position is below the lower limit.
222	P1048	The throttle circuit is short to ground.
223	P1049	The physical value of throttle position is above the upper limit.
224	P104A	The throttle circuit is short to power supply.
225	P1060	OBD General fault 1

Downloaded from www.Manualslib.com manuals search engine

S/N	DTC	Meaning
226	P1061	OBD General fault 10
227	P1062	OBD General fault 11
228	P1063	OBD General fault 12
229	P1064	OBD General fault 13
230	P1065	OBD General fault 14
231	P1066	OBD General fault 15
232	P1067	OBD General fault 16
233	P1068	OBD General fault 2
234	P1069	OBD General fault 3
235	P106A	OBD General fault 4
236	P106B	OBD General fault 5
237	P106C	OBD General fault 6
238	P106D	OBD General fault 7
239	P106E	OBD General fault 8
240	P106F	OBD General fault 9
241	P1070	Blockage of particulate filter
242	P1100	The regulated idling value of air flow sensor is above the upper limit.
243	P1102	The duty cycle of air temperature sensor on the air flow meter is above the upper limit.
244	P1103	The duty cycle of air temperature sensor on the air flow meter is below the lower limit.
245	P1106	The time interval measured by the air temperature sensor on the air flow meter is above the upper limit.
246	P1107	The time interval measured by the air temperature sensor on the air flow meter is below the lower limit.
247	P110A	System degradation 0
248	P110B	Level-1 degradation
249	P110C	Level-2 degradation
250	P110D	Level-3 degradation
251	P110E	Vehicle performance limit function is activated.
252	P1110	The detected signal within physical range is relatively high.
253	P1111	The engine coolant temperature signal level is relatively low.
254	P1120	The correction of air flow sensor load exceeds the maximum deviation limit.
255	P1121	The physical value of air flow meter is above the upper limit.
256	P1122	The physical value of air flow meter is below the lower limit.

Downloaded from www.Manualslib.com manuals search engine

S/N	DTC	Meaning
257	P1123	The signal level of intake air temperature sensor (integrated inside the air flow sensor) is relatively low.
258	P1130	The signal level of fuel temperature sensor is relatively low.
259	P1131	The signal of fuel temperature is unreliable.
260	P113A	The signal of too high oil temperature is unreliable.
261	P113B	The signal level of oil temperature sensor is relatively high.
262	P113C	The signal level of oil temperature sensor is relatively low.
263	P1200	Short circuit between the high end and low end of the 1st cylinder fuel injector
264	P1201	Short circuit between the high end and low end of the 2nd cylinder fuel injector
265	P1202	Short circuit between the high end and low end of the 3rd cylinder fuel injector
266	P1203	Short circuit between the high end and low end of the 4th cylinder fuel injector
267	P1204	Short circuit between the high end and low end of the 5th cylinder fuel injector
268	P1205	Short circuit between the high end and low end of the 6th cylinder fuel injector
269	P1207	1st cylinder special error
270	P1208	2nd cylinder special error
271	P1209	3rd cylinder special error
272	P120A	4th cylinder special error
273	P120B	5th cylinder special error
274	P120C	6th cylinder special error
275	P1210	An error is reported when the time for electrifying the 1st cylinder reaches to the minimum.
276	P1211	An error is reported when the time for electrifying the 2nd cylinder reaches to the minimum.
277	P1212	An error is reported when the time for electrifying the 3rd cylinder reaches to the minimum.
278	P1213	An error is reported when the time for electrifying the 4th cylinder reaches to the minimum.
279	P1214	An error is reported when the time for electrifying the 5th cylinder reaches to the minimum.
280	P1215	An error is reported when the time for electrifying the 6th cylinder reaches to the minimum.
281	P1216	Maximum deviation error in the inner control circuit of electronic throttle
282	P1217	Minimum deviation error in the inner control circuit of electronic throttle
283	P1218	Maximum deviation error in the outer control circuit of electronic throttle
284	P1219	Minimum deviation error in the outer control circuit of electronic throttle
285	P121A	1st cylinder IQA error
286	P121B	2nd cylinder IQA error

Downloaded from www.Manualslib.com manuals search engine

S/N	DTC	Meaning
287	P121C	3rd cylinder IQA error
288	P121D	4th cylinder IQA error
289	P121E	5th cylinder IQA error
290	P121F	6th cylinder IQA error
291	P1220	The signal level of intercooler downstream temperature sensor is relatively high.
292	P1221	The signal level of intercooler downstream temperature sensor is relatively low.
293	P122A	The positive deviation of throttle controller exceeds the upper limit for a long time.
294	P122B	The negative deviation of throttle controller is below the lower limit for a long time.
295	P1230	Error reported in monitoring the OBDII maximum threshold correction
296	P1231	Error reported in monitoring the OBDII minimum threshold correction
297	P1245	System degradation information
298	P1250	An error is triggered when the ET time of the 1st cylinder reaches the maximum limit (when the ZEL comes into effect).
299	P1251	An error is triggered when the ET time of the 2nd cylinder reaches the maximum limit (when the ZEL comes into effect).
300	P1252	An error is triggered when the ET time of the 3rd cylinder reaches the maximum limit (when the ZEL comes into effect).
301	P1253	An error is triggered when the ET time of the 4th cylinder reaches the maximum limit (when the ZEL comes into effect).
302	P1254	An error is triggered when the ET time of the 1st cylinder reaches the minimum limit (when the ZEL comes into effect).
303	P1255	An error is triggered when the ET time of the 2nd cylinder reaches the minimum limit (when the ZEL comes into effect).
304	P1256	An error is triggered when the ET time of the 3rd cylinder reaches the minimum limit (when the ZEL comes into effect).
305	P1257	An error is triggered when the ET time of the 4th cylinder reaches the minimum limit (when the ZEL comes into effect).
306	P1400	EGR valve circuit is open.
307	P1401	Overtemperature of EGR valve bridge-H chip
308	P1402	EGR valve circuit is short to power supply.
309	P1403	EGR valve circuit is short to ground.
310	P140A	The signal level of the EGR cooler downstream temperature is relatively high.
311	P140B	The signal level of the EGR cooler downstream temperature is relatively low.
312	P1410	The positive deviation of throttle controller exceeds the upper limit for a long time.
313	P1411	The negative deviation of throttle controller is below the lower limit for a long time.
314	P1415	The time for transforming from RGN to NRM mode is too long.
315	P1418	The indicator actuator circuit for EGR bypass regulating valve is open.

Downloaded from www.Manualslib.com manuals search engine

S/N	DTC	Meaning
316	P1419	Overheating of indicator actuator for EGR bypass regulating valve
317	P141A	The indicator actuator circuit for EGR bypass regulating valve is short to battery.
318	P141B	The indicator actuator circuit for EGR bypass regulating valve is short to ground.
319	P141C	The relay actuator circuit for EGR bypass regulating valve is open.
320	P141D	Overheating of relay actuator for EGR bypass regulating valve
321	P141E	The relay actuator circuit for EGR bypass regulating valve is short to battery.
322	P141F	The relay actuator circuit for EGR bypass regulating valve is short to ground.
323	P1420	The maximum exhaust temperature signal of the 1st cylinder is too strong.
324	P1421	The maximum exhaust temperature signal of the 2nd cylinder is too strong.
325	P1422	The maximum exhaust temperature signal of the 3rd cylinder is too strong.
326	P1423	The maximum exhaust temperature signal of the 4th cylinder is too strong.
327	P1424	The maximum exhaust temperature signal of the 5th cylinder is too strong.
328	P1425	The maximum exhaust temperature signal of the 6th cylinder is too strong.
329	P1426	The minimum exhaust temperature signal of the 1st cylinder is too strong.
330	P1427	The minimum exhaust temperature signal of the 2nd cylinder is too strong.
331	P1428	The minimum exhaust temperature signal of the 3rd cylinder is too strong.
332	P1429	The minimum exhaust temperature signal of the 4th cylinder is too strong.
333	P142A	The minimum exhaust temperature signal of the 5th cylinder is too strong.
334	P142B	The minimum exhaust temperature signal of the 6th cylinder is too strong.
335	P1430	The exhaust temperature T0 in cold start is unreliable.
336	P1431	The exhaust temperature T1 in cold start is unreliable.
337	P1432	The exhaust temperature T2 in cold start is unreliable.
338	P1433	The exhaust temperature T3 in cold start is unreliable.
339	P1434	The exhaust temperature T4 in cold start is unreliable.
340	P1435	The exhaust temperature T5 in cold start is unreliable.
341	P1436	The exhaust temperature signal is unreliable.
342	P1437	Unreliable monitoring of the 1st cylinder exhaust temperature
343	P1438	Unreliable monitoring of the 2nd cylinder exhaust temperature
344	P1439	Unreliable monitoring of the 3rd cylinder exhaust temperature
345	P143A	Unreliable monitoring of the 4th cylinder exhaust temperature
346	P143B	Unreliable monitoring of the 5th cylinder exhaust temperature
347	P143C	Unreliable monitoring of the 6th cylinder exhaust temperature
348	P1440	Negative deviation error of oxygen sensor regulator
349	P1441	Positive deviation error of oxygen sensor regulator

Downloaded from www.Manualslib.com manuals search engine

S/N	DTC	Meaning
350	P1442	Conversion failure of oxygen sensor regulator
351	P1450	The particulate filter upstream temperature is unreliable.
352	P1451	The signal level of particulate filter upstream temperature is relatively high.
353	P1452	The signal level of particulate filter upstream temperature is relatively low.
354	P1453	The signal level of particulate filter upstream temperature sensor is relatively high.
355	P1454	The signal level of particulate filter upstream temperature sensor is relatively low.
356	P1455	Connection failure of particulate filter differential pressure sensor hose
357	P1456	The particulate filter differential pressure sensor is unreliable.
358	P1457	Maximum characteristic differential pressure of particulate filter
359	P1458	Minimum characteristic differential pressure of particulate filter
360	P1459	Minimum deviation of particulate filter
361	P145A	The signal level of particulate filter flow impedance is high.
362	P145B	Maximum deviation of particulate filter smoke mass
363	P145C	Minimum deviation of particulate filter smoke mass
364	P145D	Maximum value of particulate filter smoke mass
365	P145E	The signal level of particulate filter flow impedance is relatively high.
366	P145F	The signal level of particulate filter flow impedance is relatively low.
367	P1460	The maximum differential pressure signal of particulate filter is enhanced.
368	P1461	The minimum differential pressure signal of particulate filter is enhanced.
369	P1462	The dynamic differential pressure of particulate filter is unreliable.
370	P1463	The differential pressure self-adaption of particulate filter hose is unreliable.
371	P1464	Particulate filter differential pressure error
372	P146A	The physical value of differential pressure sensor for particulate oxidation catalyst exceeds the upper limit.
373	P146B	The physical value of differential pressure sensor for particulate oxidation catalyst falls below the lower limit.
374	P146C	CAN Signal error
375	P146D	CAN Signal error
376	P1470	Nernst signal error of oxygen sensor
377	P1471	The oxygen sensor is virtually grounded.
378	P1472	The dynamic signal level of oxygen sensor is relatively low.
379	P1473	Oxygen sensor heater coupling signal fault
380	P1474	The oxygen sensor heater signal is unreliable.
381	P1475	The oxygen sensor battery voltage is relatively low.
382	P1476	The calibration signal level of oxygen sensor is relatively high.

Downloaded from www.Manualslib.com manuals search engine

S/N	DTC	Meaning
383	P1477	The calibration signal level of oxygen sensor is relatively low.
384	P1478	The oxygen concentration of oxygen sensor exceeds the maximum threshold.
385	P1479	The oxygen concentration of oxygen sensor exceeds the minimum threshold.
386	P147A	Relatively high oxygen concentration is unreliable.
387	P147B	Relatively high oxygen concentration is unreliable.
388	P147C	Relatively high oxygen concentration is unreliable.
389	P147D	Relatively low oxygen concentration is unreliable.
390	P147E	Relatively low oxygen concentration is unreliable.
391	P147F	Relatively low oxygen concentration is unreliable.
392	P1480	The calibration value of oxygen sensor internal impedance is too high.
393	P1481	The calibration value of oxygen sensor internal impedance is too low.
394	P1482	The SPI battery voltage of oxygen sensor is too low.
395	P1483	The SPI signal of oxygen sensor is unreliable.
396	P1484	The oxygen sensor temperature is above the upper limit.
397	P1485	The oxygen sensor temperature is below the lower limit.
398	P1486	The oxygen sensor voltage in shunting exceeds the threshold.
399	P148A	The signal level of turbocharger upstream temperature sensor is relatively high.
400	P148B	The signal level of turbocharger upstream temperature sensor is relatively low.
401	P1500	The voltage signal level of vehicle speed sensor is relatively high.
402	P1501	The voltage signal level of vehicle speed sensor is relatively low.
403	P150A	Power supply diagnosis is disabled in electrifying phase due to overvoltage of battery.
404	P150B	Power supply diagnosis is disabled in electrifying phase due to under-voltage of battery.
405	P1510	The signal level measured by A/C coolant pressure sensor is too low.
406	P1511	The signal level measured by A/C coolant pressure sensor is too low.
407	P1512	The signal level measured by A/C coolant pressure sensor is too high.
408	P1513	The signal level measured by A/C coolant pressure sensor is too high.
409	P1514	Overtemperature of compressor torque reduction command circuit in electrifying phase
410	P1515	A/C switch CAN input signal is unreliable.
411	P1516	The compressor torque reduction command circuit in electrifying phase is short to ground.
412	P1517	The compressor torque reduction command circuit in electrifying phase is short to power.
413	P1520	Short circuit of turbocharger bridge-H

Downloaded from www.Manualslib.com manuals search engine

S/N	DTC	Meaning
414	P1521	Under-voltage of turbocharger bridge-H
415	P1522	Overcurrent of turbocharger bridge-H
416	P1523	Overtemperature of turbocharger bridge-H
417	P1524	Overcurrent of turbocharger bridge-H temperature sensor
418	P1525	The valve is stuck in deviation learning process.
419	P1526	Output circuit 1 of turbocharger bridge-H is short to ground.
420	P1527	Output circuit 1 of turbocharger bridge-H is short to ground.
421	P1528	Output circuit 1 of turbocharger bridge-H is short to battery.
422	P1529	Output circuit 2 of turbocharger bridge-H is short to battery.
423	P1601	EGR valve circuit is open.
424	P1602	Too high downstream temperature of coolant temperature sensor is unreliable.
425	P1603	EGR valve circuit is short to power supply.
426	P1604	EGR valve circuit is short to ground.
427	P1608	EGR valve circuit is short to power supply.
428	P1609	EGR valve circuit is short to ground.
429	P160A	EGR valve circuit is open.
430	P160B	Overtemperature of EGR valve bridge-H chip
431	P160C	Overcurrent of turbocharger bridge-H temperature sensor
432	P1610	Execute closing fuel injection under standard ICO mode.
433	P1613	The electrifying time detected by galloping prevention monitor is too long.
434	P1614	Several faults occur during SPI communication.
435	P1615	Time-out when trying to set up or cancel alarm task
436	P1617	Error reported in monitoring under-voltage
437	P1618	WDA works abnormally.
438	P1619	EGR valve circuit is short to power supply.
439	P161A	EGR valve circuit is short to ground.
440	P161B	EGR valve circuit is open.
441	P161C	EGR valve circuit is open.
442	P161D	Failure in software reset visibility
443	P161E	Failure in software reset visibility
444	P161F	Failure in software reset visibility
445	P1620	TTLAMP drive circuit is open.
446	P1621	The drive circuit for fuel consumption display is short to power supply.
447	P1622	The drive circuit for fuel consumption display is short to ground.

Downloaded from www.Manualslib.com manuals search engine

S/N	DTC	Meaning
448	P1623	The drive circuit for fuel consumption display is open.
449	P1624	Overtemperature of the drive circuit for fuel consumption display
450	P1625	TTLAMP drive circuit is short to power supply.
451	P1626	TTLAMP drive circuit is short to ground.
452	P1627	Overheating of TTLAMP drive circuit
453	P1633	The signal level of ECU temperature sensor is relatively high.
454	P1634	The signal level of ECU temperature sensor is relatively high.
455	P1635	The signal level of ECU temperature sensor is relatively low.
456	P1636	The signal level of ECU temperature sensor is relatively low.
457	P1637	The power supply voltage is too high.
458	P1638	The power supply voltage is too low.
459	P1639	The physical value of ECU temperature sensor exceeds the upper limit.
460	P163A	The physical value of ECU temperature sensor falls below the lower limit.
461	P163B	ECU temperature sensor SPI fault (LM71)
462	P1640	Compressor overtemperature in electrifying phase
463	P1643	Signal safety checkout error
464	P1645	The injection frequency is limited by the boosting electric quantity charging balance.
465	P1646	The injection frequency is limited by the high pressure fuel pump fuel quantity balance.
466	P1647	The injection frequency is limited by the runtime.
467	P164C	EGR valve circuit is open.
468	P164D	EGR valve circuit is short to power supply.
469	P164E	EGR valve circuit is short to ground.
470	P1650	EEP Clear Error
471	P1651	EEP Clear Error
472	P1652	An error is reported when the module’s data-writing is disabled for three times.
473	P165A	Null dataset identifier
474	P165B	Dataset switchover fault
475	P165C	EEPROM data-reading error
476	P1660	ADC open circuit pulse test fault
477	P1662	The voltage being transformed by ADC module exceeds the set range of test voltage.
478	P1663	The radiometry correction exceeds the set range.
479	P1664	Monitoring control communication fault
480	P1665	SPI Monitoring control communication fault

Downloaded from www.Manualslib.com manuals search engine

S/N	DTC	Meaning
481	P1666	Several faults occur when testing the whole ROM zone.
482	P1667	The number of responsive bytes obtained from CPU in monitoring mode is too small / Error of the set response time of monitoring mode
483	P1668	Error of the set response time of monitoring mode
484	P166A	OFF-route test time-out
485	P166B	The electrifying time for injection is unreliable.
486	P166C	The initial electrifying angle (SO E) is unreliable.
487	P166D	ZFC is unreliable.
488	P166E	Fuel injection monitoring mode 1
489	P166F	Fuel injection monitoring mode 2
490	P1670	Error reported in fuel injection correction
491	P1671	Unreliable rail pressure
492	P1672	The torque limit is set once any error is detected before the MoCSOP's error is generated.
493	P1673	Monitoring OFF-route forward test fault
494	P1674	Monitoring fault mode 3
495	P1675	The negative deviation of throttle controller is below the lower limit for a long time.
496	P1676	Open circuit of EGR valve bridge-H
497	P1677	Overload of EGR valve bridge-H
498	P1678	Overtemperature of EGR valve bridge-H chip
499	P167B	CY33X fault
500	P167C	The set value of rail pressure is limited by the torque limit of the function control unit.
501	P1680	The cruise indicator drive circuit is open.
502	P1681	Overtemperature of cruise indicator drive circuit
503	P1682	The cruise indicator drive circuit is short to power supply or high level.
504	P1683	The cruise indicator drive circuit is short to ground.
505	P1684	The grill heater is always ON.
506	P1685	DFC mechanical fault when turning on ignition switch
507	P1686	Fuel filter heating power level temperature fault
508	P1687	CJ945 Power level no load fault
509	P1688	CJ945 Power level no load fault
510	P1689	Overheating of intake air heater drive circuit
511	P168A	CJ945 Overheating fault
512	P168B	CJ945 Power level is short to battery.

Downloaded from www.Manualslib.com manuals search engine

S/N	DTC	Meaning
513	P168C	CJ945 Power level is short to battery.
514	P168D	CJ945 Power level is short to ground.
515	P168E	CJ945 Power level is short to ground.
516	P1700	Unreliable clutch signal / Clutch signal error
517	P1710	Overheating of engine speed sensor
518	P1720	Transmission neutral position signal
519	P2002	The particulate oxidation catalyst device is removed.
520	P2004	Overcurrent of EGR valve bridge-H based on temperature
521	P2008	EGR valve circuit is open.
522	P2009	EGR valve circuit is short to ground.
523	P2010	EGR valve circuit is short to power supply.
524	P2014	Under-voltage of EGR valve bridge-H
525	P2015	The turbocharger control valve is stuck.
526	P2072	The throttle valve is frozen.
527	P2076	An error is reported when the EGR valve is stuck in closing or opening.
528	P2077	The signal level of swirl valve position sensor is relatively low.
529	P2078	The signal level measured by the variable swirl valve position sensor is above the limit.
530	P207A	Overtemperature of EGR valve bridge-H chip
531	P207B	The short-term jitter of EGR valve exceeds the limit.
532	P2100	Open circuit of throttle bridge-H
533	P2101	Overcurrent of throttle bridge-H
534	P2102	Output circuit 1 of throttle bridge-H is short to ground.
535	P2103	Output circuit 1 of throttle bridge-H is short to battery.
536	P2135	Signals of accelerator pedal position sensor 1 and 2 are unreliable.
537	P213A	Open circuit of EGR valve bridge-H
538	P213B	Overload of EGR valve bridge-H
539	P213C	The Port 2 of EGR valve bridge-H chip is short to ground.
540	P213D	The Port 2 of EGR valve bridge-H chip is short to ground.
541	P2141	The Port 1 of EGR valve bridge-H chip is short to ground.
542	P2142	The Port 1 of EGR valve bridge-H chip is short to power supply.
543	P2146	Short circuit
544	P2149	Short circuit
545	P2157	Unreliable vehicle speed signal

Downloaded from www.Manualslib.com manuals search engine

S/N	DTC	Meaning
546	P2173	False positive deviation of throttle regulator
547	P2175	False negative deviation of throttle regulator
548	P2226	Fault of signal obtained from CAN by air pressure sensor
549	P2228	The signal value of ambient pressure is below the lower limit.
550	P2229	The signal value of ambient pressure is above the upper limit.
551	P2264	EGR valve circuit is open.
552	P2265	An error is reported when the moisture content in fuel is detected.
553	P2266	EGR valve circuit is short to ground.
554	P2267	EGR valve circuit is short to power supply.
555	P2268	EGR valve circuit is open.
556	P2269	The sensor self-checking signal level is above the upper limit.
557	P2290	The rail pressure is below the minimum set value.
558	P242F	The particulate filter smoke load exceeds the maximum.
559	P2454	The signal level of particulate filter differential pressure sensor is relatively low.
560	P2455	The signal level of particulate filter differential pressure sensor is relatively high.
561	P2458	Particulate filter regeneration permanent fault
562	P245A	EGR cooler bypass valve fault
563	P245B	Too low EGR cooling efficiency
564	P245D	The signal level of EGR cooler sensor is relatively high.
565	P250F	Danger is caused by too low fuel level and air ingress into hydraulic system.
566	P2519	A/C switch CAN input signal error
567	P2522	The compressor torque reduction command circuit in electrifying phase is open.
568	P2562	The turbocharger bridge-H chip circuit is open.
569	P2563	The turbocharger control valve is stuck.
570	P2564	The original voltage of EGR valve sensor signal is below the lower limit.
571	P2565	The original voltage of EGR valve sensor signal is above the upper limit.
572	P2621	The throttle signal level is relatively low.
573	P2622	The throttle signal level is relatively high.
574	P2626	The oxygen sensor pump current terminal IP is in open circuit.
575	B0020	Airbag collision status
576	U0121	ABS ECU main data loss
577	U0400	CAN received frame BCM1 message length error
578	U0415	CAN received frame ABS1 message length error

Downloaded from www.Manualslib.com manuals search engine

Section V. Fault Diagnosis for Electronic-Controlled Common Rail Diesel Engines

- Prior to disconnecting or reconnecting the power cord of engine control module (ECM), be sure to turn off the ignition switch, in order not to damage the ECM.
- All types of engine DTCs are stored in the ECM memory.
- The engine DTCs should be cleared after the maintenance.

Common DTCs and Troubleshooting Methods for Electronic Control Systems of Diesel Engines

1.

DTC	**P0475**	**The exhaust brake valve control line is open.**
	P0476	**The ECU internal driver module of exhaust brake valve control line is overheating.**
	P0477	**The exhaust brake valve control line is short to ground.**
	P0478	**The exhaust brake valve control line is short to high level.**

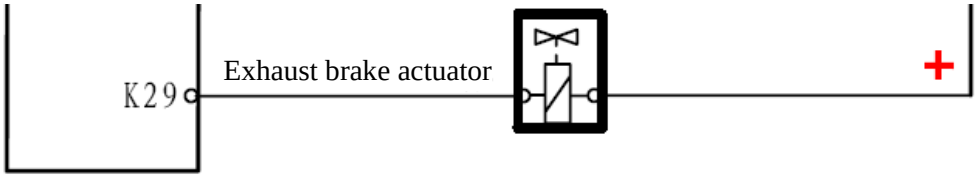

Fault Description: The engine control unit (ECU) shall actuate the exhaust braking after processing the signal received from the exhaust brake switch and also check if the exhaust brake feedback signal matches with the ECU control command. If not, DTC shall be reported.

Diagnosis Hint: The intermittent failure may be caused by poor contact of wire, abrasion of the insulation or damage of the wire inside insulation.

Check for the following conditions:

- Poor contact of ECU or exhaust brake valve – Check the harness connector

– Loose terminal

– Poor matching and connection

– Breakage of keeper

– Distortion or damage of terminal

– Poor contact between terminal and wire

- Damage of harness – Check the harness for any damage

Terminal	ECU	
	K29	Exhaust brake actuator

Downloaded from www.Manualslib.com manuals search engine

Fault Tree:

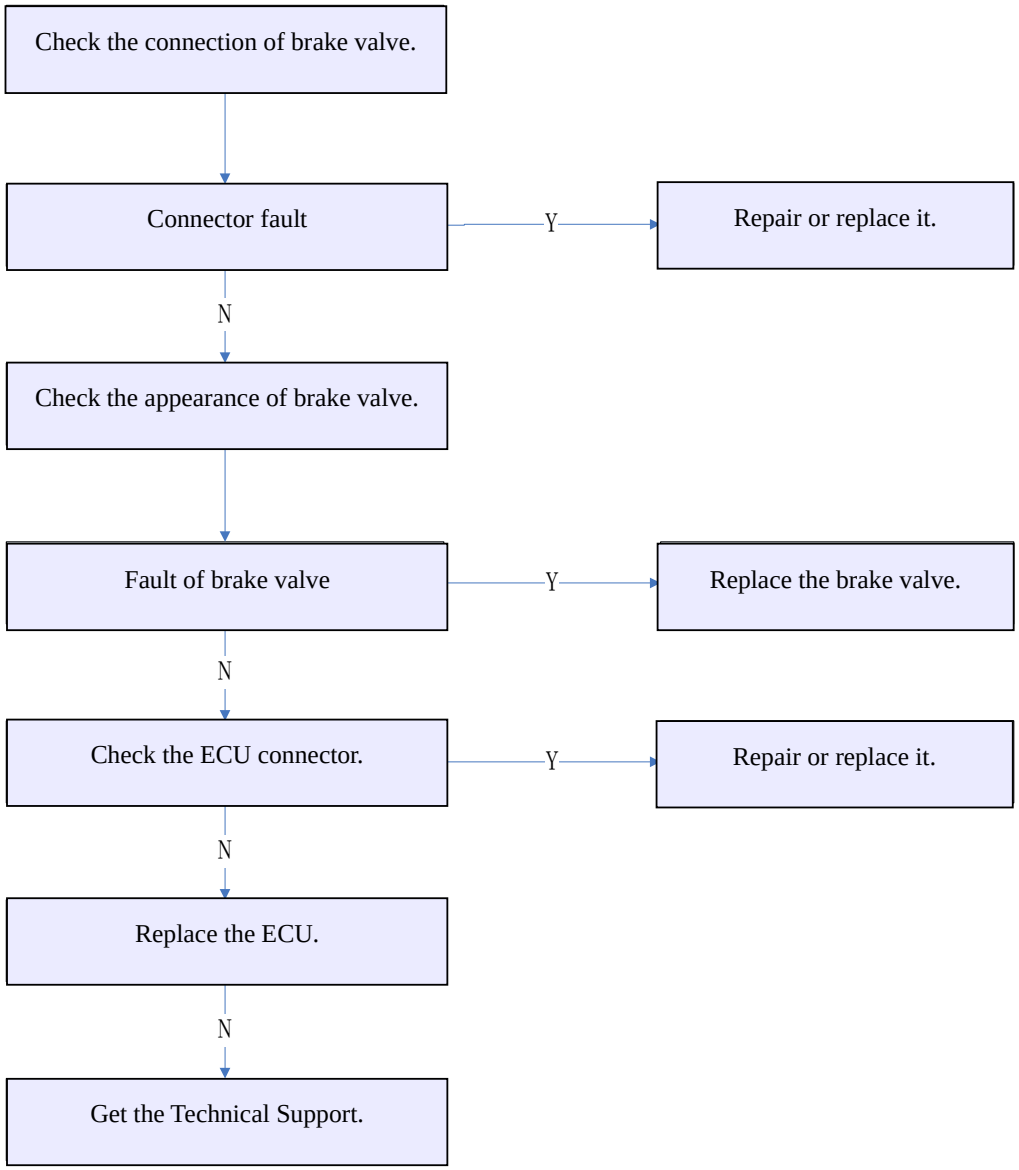

Downloaded from www.Manualslib.com manuals search engine

2.

DTC	**P0069**	**The boost pressure sensor drift**
	P0237	**The boost pressure sensor output voltage is below the lower limit (the wiring is short to ground).**
	P0238	**The boost pressure sensor output voltage is above the upper limit (the wiring is open or short to high level).**
	P0097	**The voltage of intake air temperature sensor is too low (the wiring is short to ground).**
	P0098	**The voltage of intake air temperature sensor is too high (the wiring is open or short to high level).**

Boost pressure / intake air temperature sensor

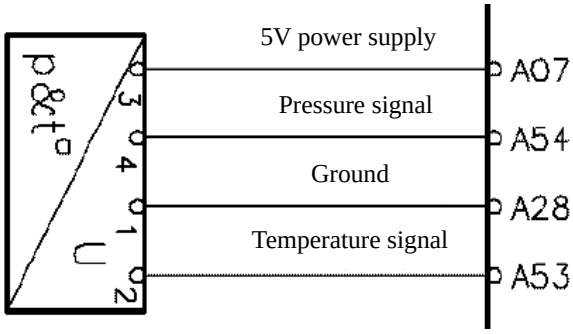

Fault Description: The boost pressure sensor shall make response to the pressure change of intake manifold. The pressure changes with the engine load. The ECU shall supply 5V voltage to the 5V reference voltage circuit of boost pressure sensor and also supply grounding for the low reference voltage circuit. The boost pressure sensor shall provide a signal that is related to the pressure change of intake manifold to ECU via the boost pressure sensor signal circuit. When the intake manifold pressure is relatively low (for example: during idling period), the low level signal voltage shall be detected by the ECU. When it is relatively high (for example: with the accelerator pedal fully open (WOT)), the high level signal voltage shall be detected. The boost pressure sensor is also for determining the barometric pressure (BARO). When the ignition switch is turned on without starting the engine, the following condition shall occur. As long as the accelerator pedal position sensor signal is more than 28%, the barometric pressure reading shall be updated. The boost pressure sensor includes the following circuits:

- A 5V reference voltage circuit
- A low reference voltage circuit
- A MAP sensor signal circuit

If the boost pressure sensor signal detected by ECU is beyond the set range, relevant DTC shall be generated.

The intake air temperature (IAT) sensor is a kind of variable resistor that can measure the temperature of air into the engine. The ECU shall supply 5V voltage to the signal circuit of IAT sensor and also supply grounding for the reference voltage circuit of IAT sensor. When the IAT sensor is in cold state, the sensor resistance is relatively high. When the air temperature increases, the sensor resistance shall decrease. When the sensor resistance is relatively high, the voltage of IAT sensor signal circuit detected by ECU shall be relatively high. With the decrease of sensor resistance, the voltage of IAT sensor signal circuit detected by ECU shall decrease also. If the signal voltage of IAT sensor detected by ECU is too low (indicating the temperature is too high), or too high (indicating the temperature is too low), relevant DTC shall be generated.

Downloaded from www.Manualslib.com manuals search engine

Diagnosis Hint:

The normal boost pressure sensor shall make quick response to the change of accelerator pedal position, so its slow action should not appear or it should not act slower than the change of accelerator pedal position.

For poor contact inspection between ECU and IAT sensor, please check the ECU harness connector for the following conditions:

− Loose terminal

− Poor matching and connection

− Breakage of keeper

− Distortion or damage of terminal

− Poor contact between terminal and wire

Terminal	ECU	
	A07	Power supply terminal of sensor
	A53	Temperature signal terminal
	A54	Pressure signal terminal
	A28	Ground terminal of sensor

Downloaded from www.Manualslib.com manuals search engine

Fault Tree:

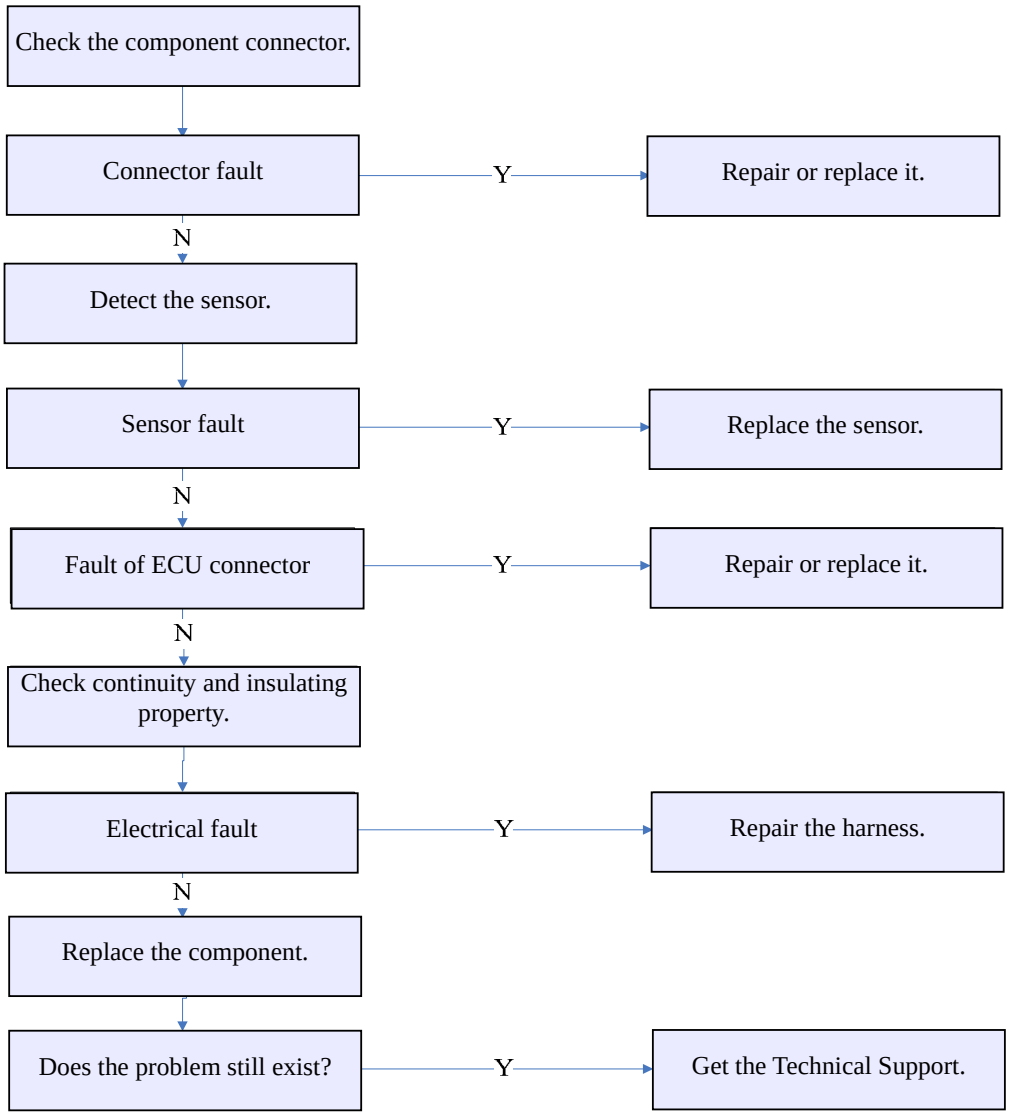

Downloaded from www.Manualslib.com manuals search engine

3.

DTC	**P0087**	**The fuel pressure is below the lower limit.**
	P0088	**The fuel pressure is above the upper limit.**
	P0191	**The forward drift of common rail pressure sensor is too large.**
	P0192	**The common rail pressure sensor output voltage is below the lower limit (the wiring is short to ground).**
	P0193	**The common rail pressure sensor output voltage is above the upper limit (the wiring is open or short to high level).**
	P0194	**The reverse drift of common rail pressure sensor is too large.**
	P1011	**The positive deviation of rail pressure control is above the upper limit.**
	P1012	**The positive deviation of rail pressure control exceeds the upper limit greatly.**
	P1013	**The negative deviation of rail pressure control is below the lower limit.**

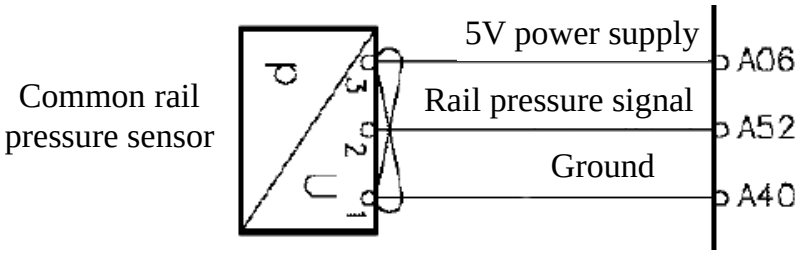

Fault Description: The common rail pressure sensor shall make response to the change of fuel pressure in common rail pipe. The pressure changes with the engine load. The ECU shall supply 5V voltage to the 5V reference voltage circuit of common rail pressure sensor and also supply grounding for the low reference voltage circuit. The common rail pressure sensor shall provide a signal that is related to the change of fuel pressure in common rail pipe to ECU via the common rail pressure sensor signal circuit. When the fuel pressure in common rail pipe is relatively low (for example: during idling period), the low level signal voltage shall be detected by the ECU. When it is relatively high (for example: with the accelerator pedal fully open (WOT)), the high level signal voltage shall be detected. The common rail pressure sensor provides an important parameter for determining engine operation. When its signal is lost, the engine shall stop operation. The common rail pressure sensor includes the following circuits:

- A 5V reference voltage circuit
- A low reference voltage circuit
- A common rail pressure sensor signal circuit

If the common rail pressure sensor signal detected by ECU is beyond the set range, relevant DTC shall be generated.

Diagnosis Hint: When the ignition switch is turned on with engine off, the pressure in common rail pipe is zero and the signal voltage level is low. By comparing the readings with those of the same sensor that is known good, the accuracy of the suspicious sensor can be checked. Their difference should be no more than 0.4V. Perform overall inspection for common rail pressure sensor to see if it is damaged.

During engine starting, any pressure change in the common rail pipe should be detected by the common rail pressure sensor, through which, we can determine if the sensor is stuck at a certain value.

The normal common rail pressure sensor shall make quick response to the change of accelerator pedal position, so its slow action should not appear or it should not act slower than the change of accelerator pedal position.

Downloaded from www.Manualslib.com manuals search engine

Terminal	ECU	
	A06	Power supply terminal of common rail pressure sensor
	A52	Signal terminal of common rail pressure sensor
	A40	Ground terminal of common rail pressure sensor

Downloaded from www.Manualslib.com manuals search engine

Fault Tree:

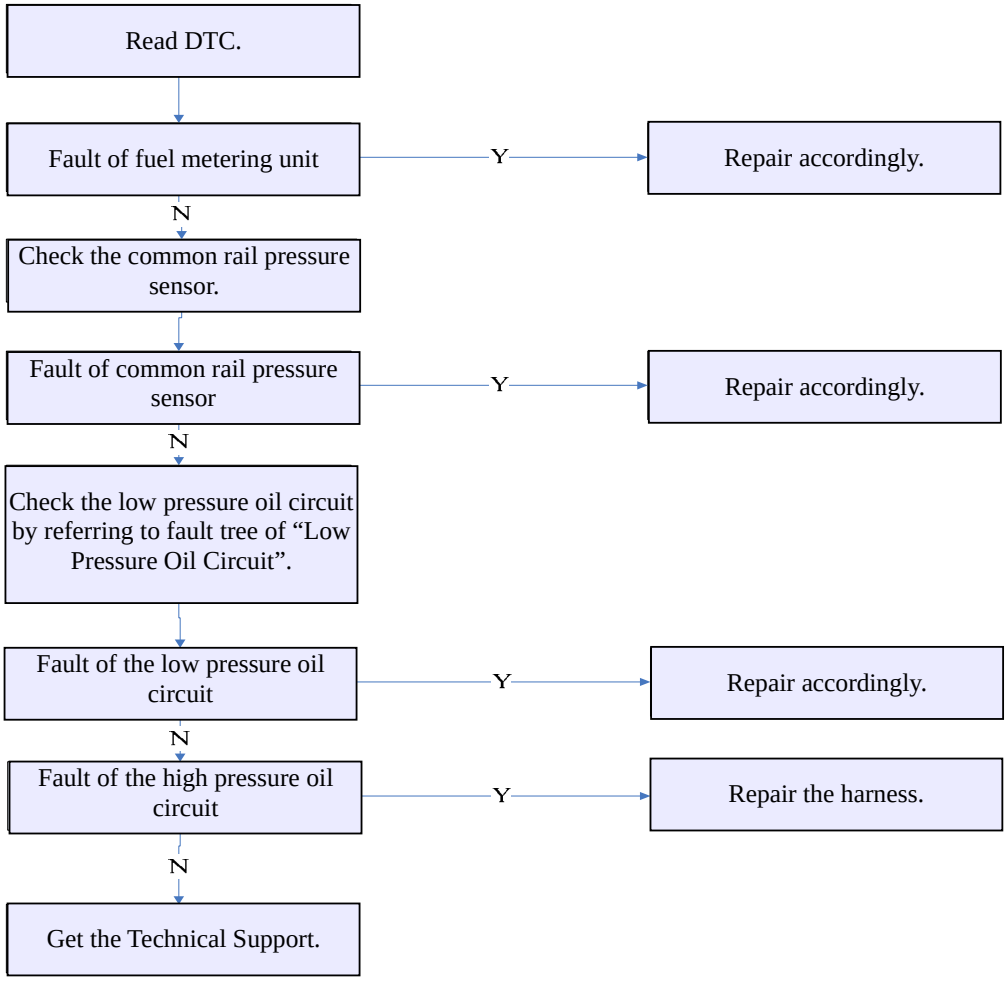

Downloaded from www.Manualslib.com manuals search engine

Inspection for Low Pressure/High Pressure Oil Circuit:

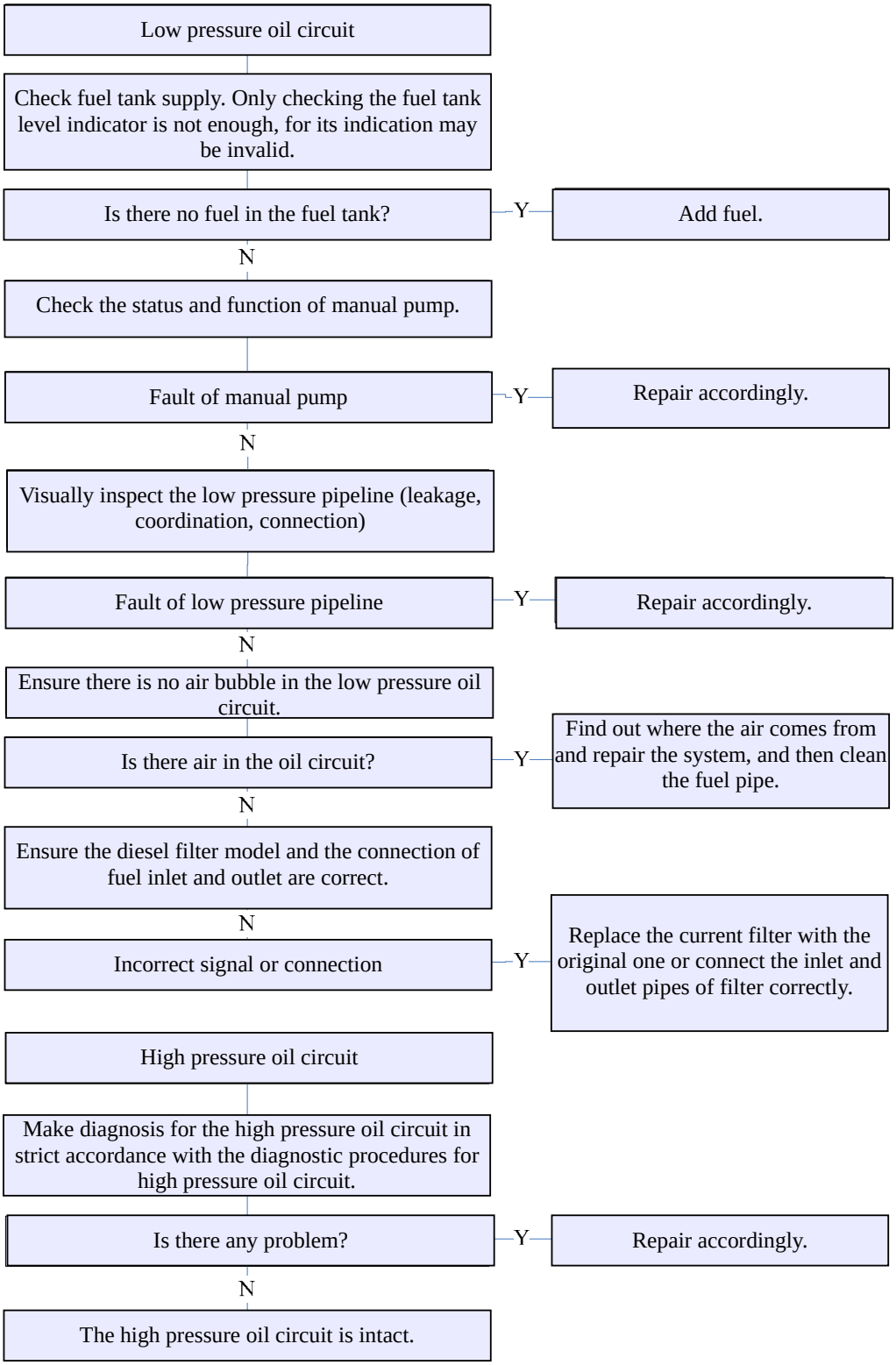

Downloaded from www.Manualslib.com manuals search engine

4.

DTC	**P0116**	**The dynamic characteristics of coolant temperature sensor are unreliable.**
	P0117	**The coolant temperature sensor output voltage is below the lower limit (the wiring is short to ground).**
	P0118	**The coolant temperature sensor output voltage is above the upper limit (the wiring is open or short to high level).**
	P0119	**The static characteristics of coolant temperature sensor are unreliable.**

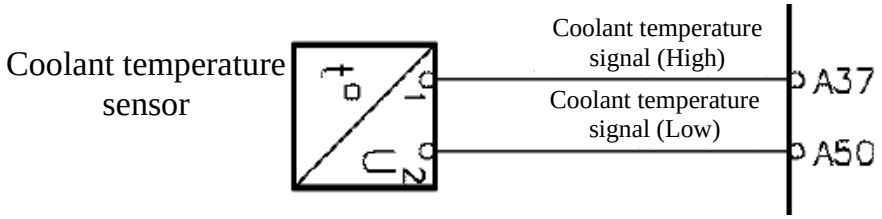

Fault Description: The engine coolant temperature (ECT) sensor is a kind of negative temperature coefficient variable resistor, which can measure the engine coolant temperature. Its resistance shall decrease with the increase of temperature, so the signal value input into ECU in the form of voltage shall decrease accordingly. The voltage signal range is 0-5V. The ECU searches the characteristic curve of the sensor and converts it into engine coolant temperature. The diagnostic module of engine coolant temperature sensor shall make fault judgment based on this temperature value. The ECU shall supply 5V voltage to the signal circuit of engine coolant temperature sensor and also supply grounding for the low reference voltage circuit. If the signal voltage of engine coolant temperature sensor detected by ECU is too low (indicating the temperature is too high), or too high (indicating the temperature is too low), relevant DTC shall be generated.

The following table illustrates the difference among temperature, resistance and voltage.

Engine coolant temperature	Resistance of coolant temperature sensor	Signal voltage of coolant temperature sensor
Low	High	High
High	Low	Low

Diagnosis Hint:

Overheating may result in generation of this DTC. After the engine is started, the temperature of engine coolant temperature sensor should increase steadily and become stable after the thermostat is disconnected. Test the engine coolant temperature sensor under different temperature to check for any error of sensor. If any, the error may result in failure of control performance. After the engine is laid up for a night, the indication difference between IAT sensor and engine coolant temperature sensor should be within 3°C (5°F). Refer to “Temperature and Resistance”.

Check for the following conditions:

Poor contact between ECU and engine coolant temperature sensor – Check the harness connector for:

− Loose terminal

− Poor matching and connection

− Breakage of keeper

− Distortion or damage of terminal

Downloaded from www.Manualslib.com manuals search engine

− Poor contact between terminal and wire

Check the harness for any damage. If the harness appears normal, observe the ECT indication on the diagnostic tool while moving relevant connector and harness of ECT sensor. If the ECT indication changes, there must be failure in that part. If the DTC won't appear again, the fault record data can be used for determining the self-diagnostic code and the running mileage after the previous setting can be used for determining the occurrence frequency of that condition, which can facilitate the troubleshooting for overheating.

After the engine is started, the engine coolant temperature shall increase steadily to about 90°C (194°F) and then become stable after the thermostat is disconnected.

Terminal	ECU	
	A37	Signal terminal of ECT sensor
	A50	Ground terminal of ECT sensor

Downloaded from www.Manualslib.com manuals search engine

Fault Tree:

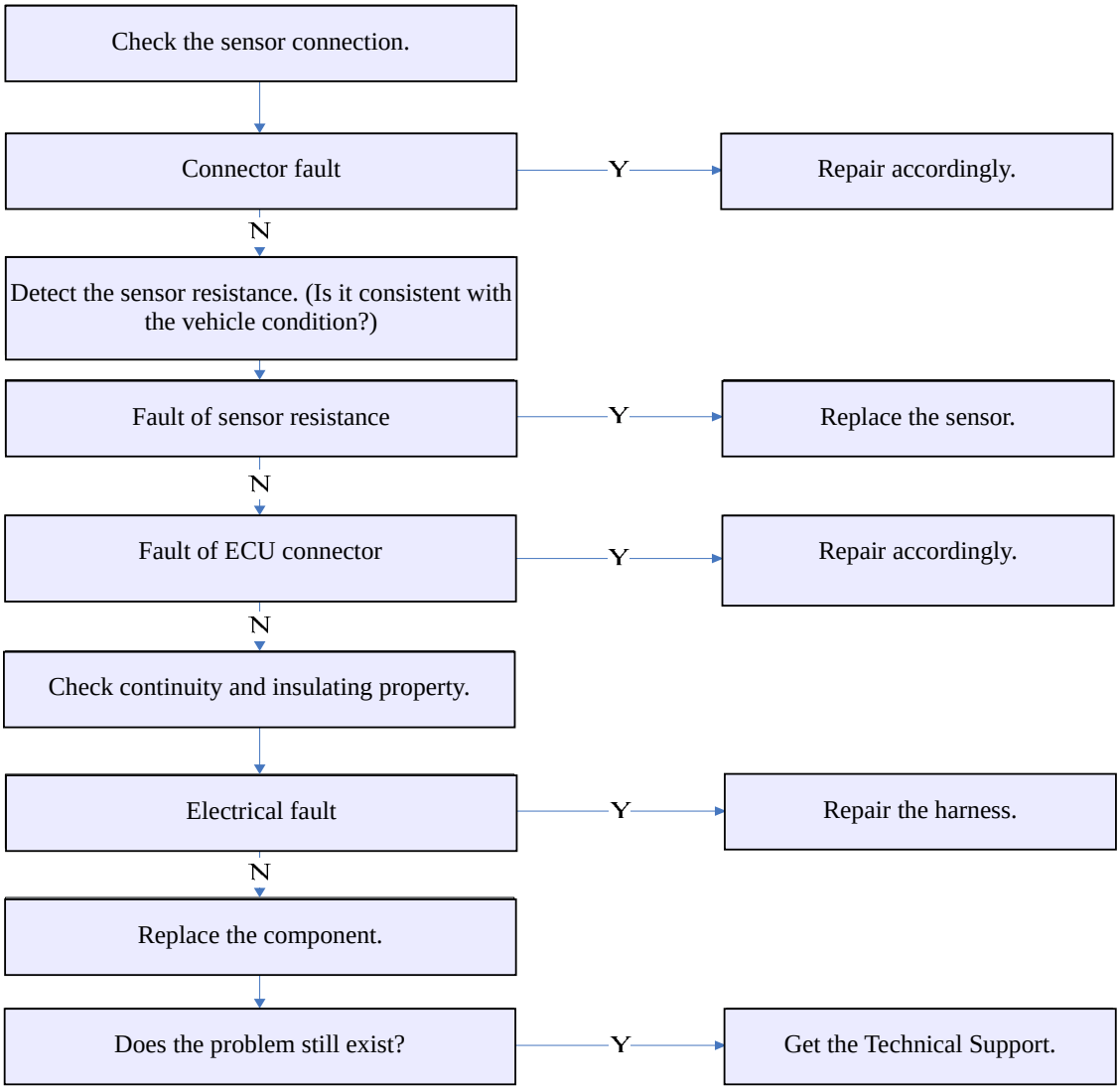

Downloaded from www.Manualslib.com manuals search engine

5.

DTC	**P0122**	**The output voltage of accelerator pedal potentiometer 1 is below the lower limit.**
	P0123	**The output voltage of accelerator pedal potentiometer 1 is above the upper limit.**
	P0222	**The output voltage of accelerator pedal potentiometer 2 is below the lower limit.**
	P0223	**The output voltage of accelerator pedal potentiometer 2 is above the upper limit.**

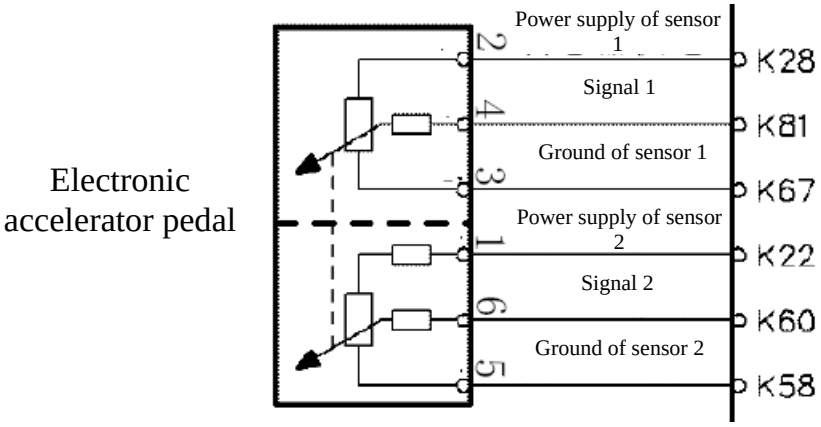

Fault Description: The accelerator pedal assembly consists of two accelerator pedal position (APP) sensor. The APP sensors are installed on the pedal assembly and are not repairable. The APP sensor shall supply a signal voltage that changes with the accelerator pedal position. The ECU shall supply an individual 5V reference voltage circuit and a low level reference voltage circuit to each APP sensor. With the pedal depressed, the signal voltage of APP sensor 1 shall increase, viz. increasing from about 0.7V (at the released position) to above 4V (at the fully depressed position). With the pedal depressed, the signal voltage of APP sensor 2 shall increase, viz. increasing from about 0.3V (at the released position) to above 2V (at the fully depressed position).

APP sensor 1 and 2 are installed in the accelerator pedal assembly. Each one consists of the following circuits:

- A 5V reference voltage circuit
- A low reference voltage circuit
- A signal circuit

With those circuits, the APP sensors can provide the signal voltage that is proportional to the displacement of accelerator pedal to the ECU. Two processors, located in the ECU, are adopted to monitor the data of throttle actuator control system. Each signal circuit shall provide the signal voltage that is proportional to the displacement of accelerator pedal to two processors. Those two processors shall monitor each other to verify whether the indicated value of pedal position is correct or not. The test method of ECU is: making the signal of APP sensor 2 lower instantaneously to see if the signal of APP 1 is also made lower.

Diagnosis Hint: During testing, if it is necessary to detect the ECU harness connector or component harness connector, a diagnostic connector should be adopted to test the adapter component.

If several DTCs appear simultaneously, please check if the signal circuits for APP sensor 1 and 2 are short to each other.

Downloaded from www.Manualslib.com manuals search engine

Terminal	ECU	
	K28	Power supply terminal of APP sensor 1
	K81	Signal terminal of APP sensor 1
	K67	Ground terminal of APP sensor 1
	K22	Power supply terminal of APP sensor 2
	K60	Signal terminal of APP sensor 2
	K58	Ground terminal of APP sensor 2

Downloaded from www.Manualslib.com manuals search engine

Fault Tree:

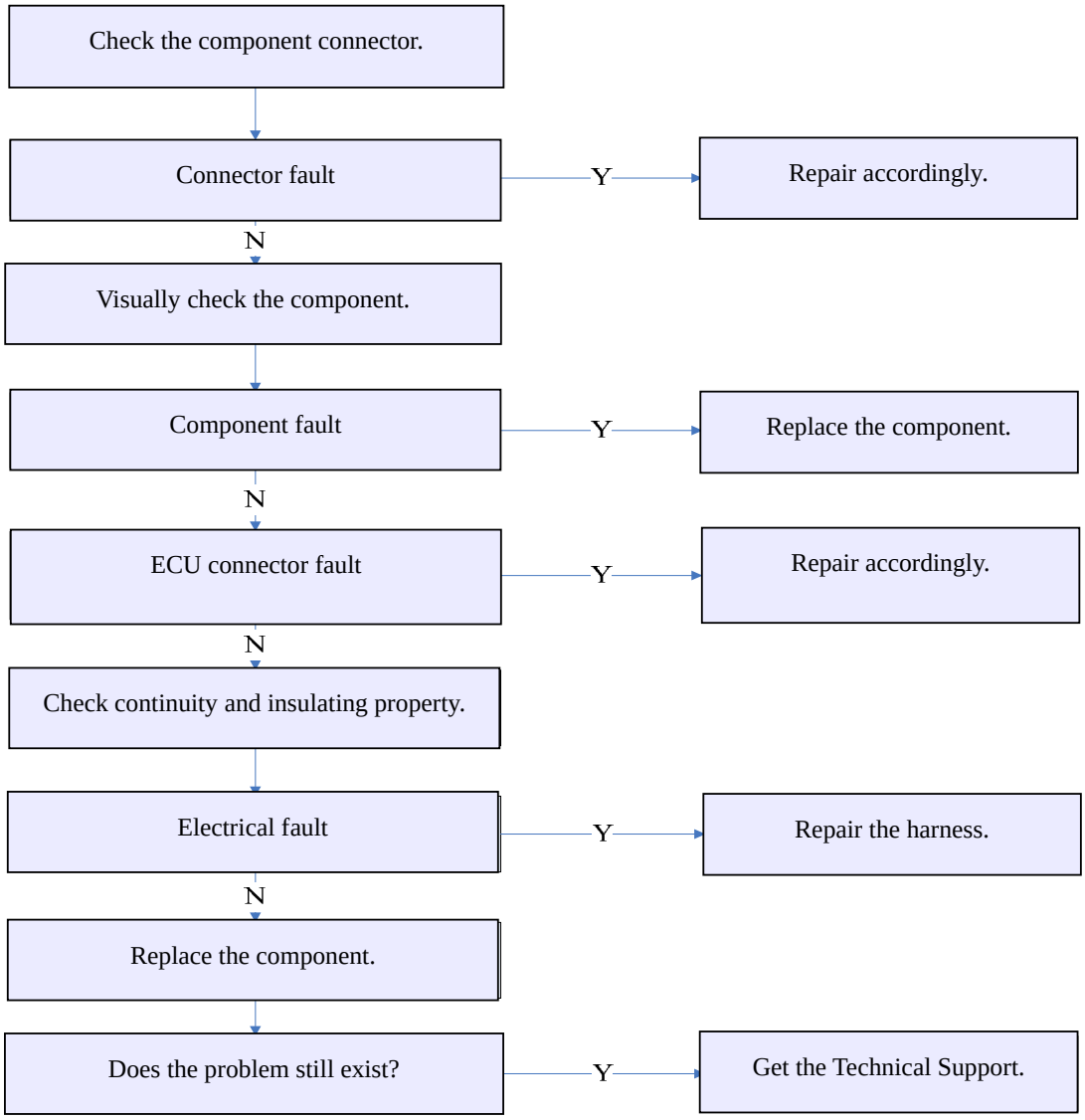

Downloaded from www.Manualslib.com manuals search engine

6.

DTC	**P0201**	**The 1st cylinder fuel injector circuit is open.**
	P0263	**Other errors of the 1st cylinder fuel injector**
	P1200	**The forward error correction of the 1st fuel injector is too large.**
	P1201	**The reverse error correction of the 1st fuel injector is too large.**
	P120C	**The dynamic forward error correction of the 1st fuel injector is too large.**
	P120D	**The dynamic reverse error correction of the 1st fuel injector is too large.**
	P1233	**Other errors of the 1st cylinder fuel injector**
	P1234	**Other errors of the 1st cylinder fuel injector**
	P1235	**Other errors of the 1st cylinder fuel injector**
	P1613	**The electrifying time detected by galloping prevention monitor is too long.**

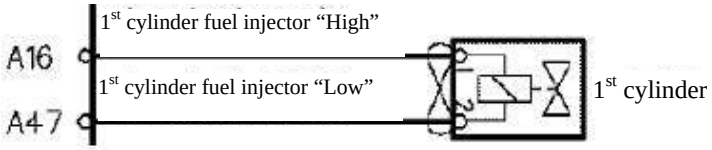

Fault Description: The ECU controls the switching-on circuit of fuel injector directly. The ECU controls the time for switching on each fuel injector via adopting a device named "Driver" to supply PWM current to each fuel injector control circuit. The driver owns a feedback circuit, which is monitored by ECU to verify if the control circuit is open or short. If any failure in the fuel injector control circuit is detected by ECU, the fuel injector control circuit DTC shall be generated.

Diagnosis Hint: For the failure in wire connector shall trigger the setting of DTC, be sure to check the connectors relevant to this diagnostic procedure for short circuit of terminal or poor contact of wire, prior to replacement of any component. Observe the state parameter of relevant fuel injector on the diagnostic tool while shaking the wire and connector relevant to the test. If any intermittent failure is existed in the tested wire or connector, the relevant failure shall be displayed on the diagnostic tool.

Performing compression test is helpful for locating the intermittent failure.

Terminal	ECU	
	A16	1st fuel injector "High"
	A47	1st fuel injector "Low"

Downloaded from www.Manualslib.com manuals search engine

Fault Tree:

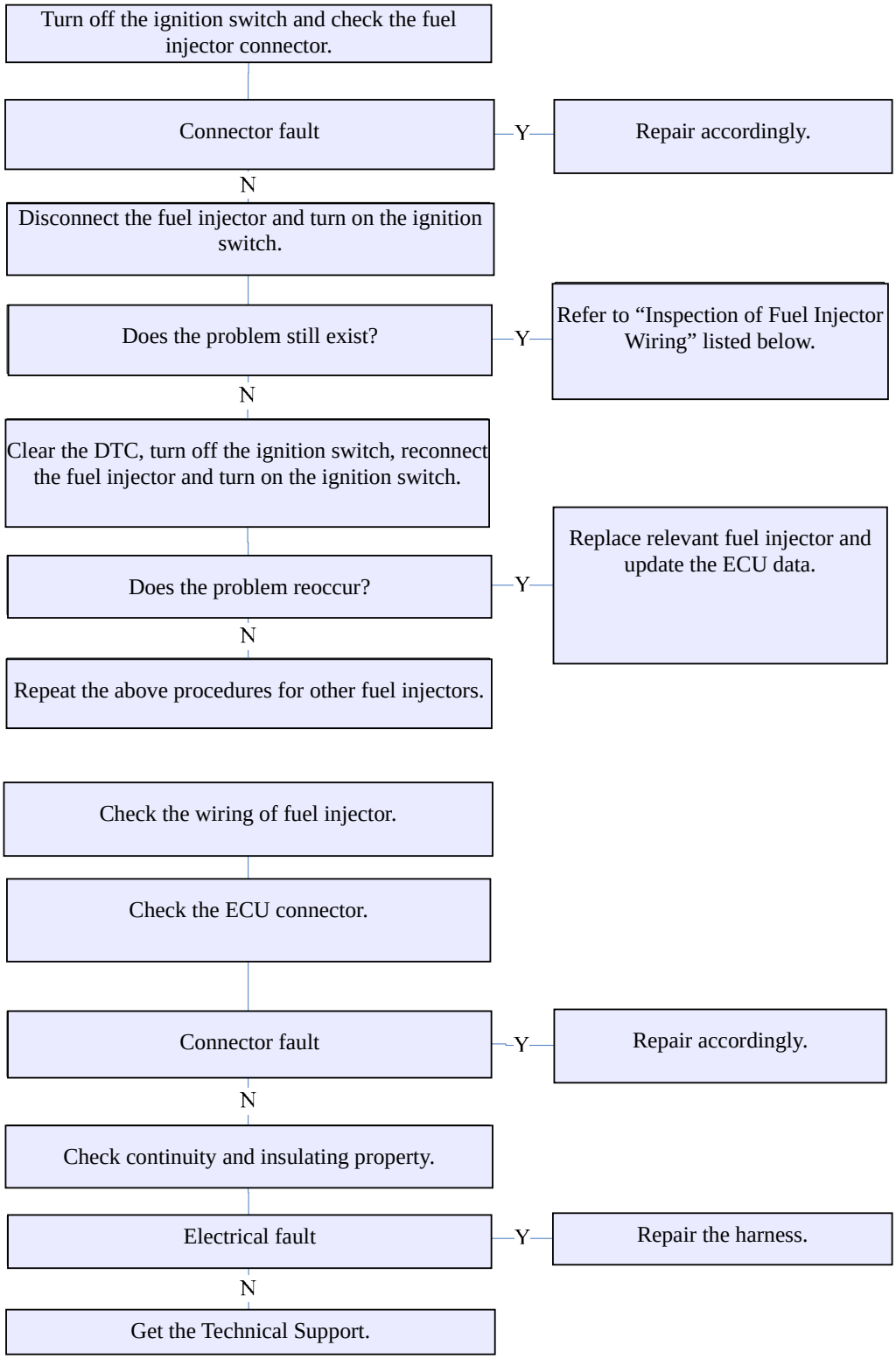

Downloaded from www.Manualslib.com manuals search engine

7.

DTC	**P0202**	**The 2nd cylinder fuel injector circuit is open.**
	P0264	**The low end of the 2nd fuel injector is short to the high end.**
	P0265	**The low end of the 2nd fuel injector is short to the high level.**
	P0266	**Other errors of the 2nd cylinder fuel injector**
	P1202	**The forward error correction of the 2nd fuel injector is too large.**
	P1203	**The reverse error correction of the 2nd fuel injector is too large.**
	P120E	**The dynamic forward error correction of the 2nd fuel injector is too large.**
	P120F	**The dynamic reverse error correction of the 2nd fuel injector is too large.**
	P1236	**Other errors of the 2nd cylinder fuel injector**
	P1237	**Other errors of the 2nd cylinder fuel injector**
	P1238	**Other errors of the 2nd cylinder fuel injector**

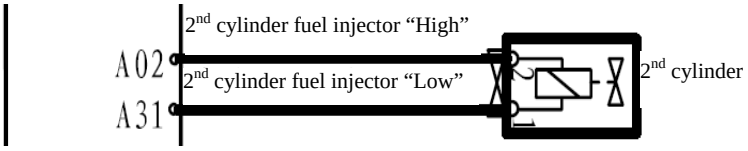

Fault Description: The ECU controls the switching-on circuit of fuel injector directly. The ECU controls the time for switching on each fuel injector via adopting a device named "Driver" to supply PWM current to each fuel injector control circuit. The driver owns a feedback circuit, which is monitored by ECU to verify if the control circuit is open or short. If any failure in the fuel injector control circuit is detected by ECU, the fuel injector control circuit DTC shall be generated.

Diagnosis Hint:

For the failure in wire connector shall trigger the setting of DTC, be sure to check the connectors relevant to this diagnostic procedure for short circuit of terminal or poor contact of wire, prior to replacement of any component. Observe the state parameter of relevant fuel injector on the diagnostic tool while shaking the wire and connector relevant to the test. If any intermittent failure is existed in the tested wire or connector, the relevant failure shall be displayed on the diagnostic tool.

Performing compression test is helpful for locating the intermittent failure.

Terminal	ECU	
	A02	2nd fuel injector "High"
	A31	2nd fuel injector "Low"

Downloaded from www.Manualslib.com manuals search engine

Fault Tree:

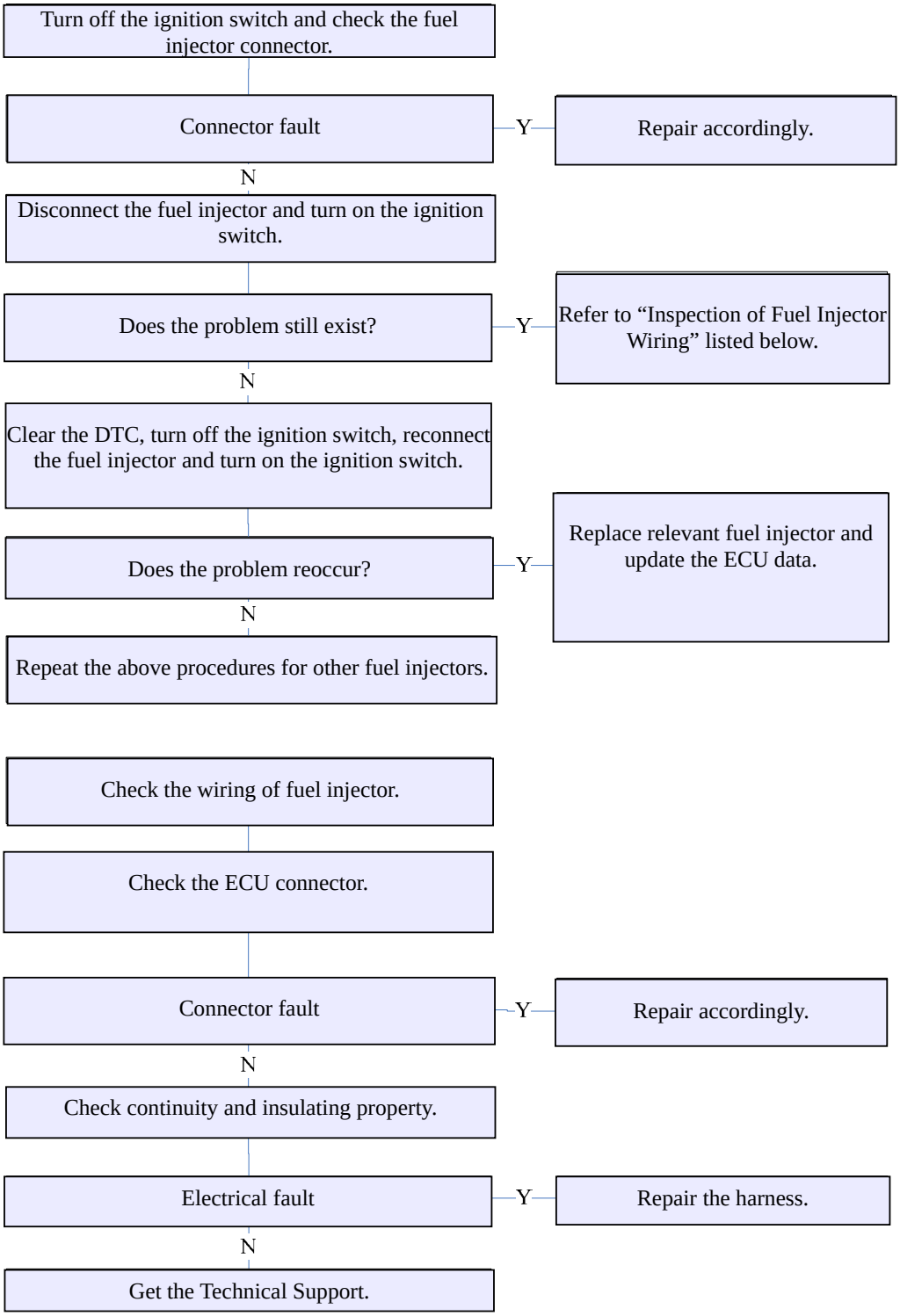

Downloaded from www.Manualslib.com manuals search engine

8.

DTC	**P0203**	**The 3rd cylinder fuel injector circuit is open.**
	P0267	**The low end of the 3rd fuel injector is short to the high end.**
	P0268	**The low end of the 3rd fuel injector is short to the high level.**
	P0269	**Other errors of the 3rd cylinder fuel injector**
	P1204	**The forward error correction of the 3rd fuel injector is too large.**
	P1205	**The reverse error correction of the 3rd fuel injector is too large.**
	P1210	**The dynamic forward error correction of the 3rd fuel injector is too large.**
	P1211	**The dynamic reverse error correction of the 3rd fuel injector is too large.**
	P1239	**Other errors of the 3rd cylinder fuel injector**
	P123A	**Other errors of the 3rd cylinder fuel injector**
	P123B	**Other errors of the 3rd cylinder fuel injector**

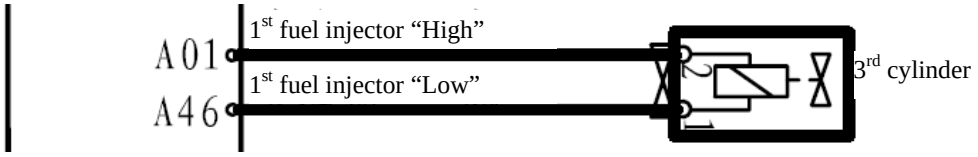

Fault Description: The ECU controls the switching-on circuit of fuel injector directly. The ECU controls the time for switching on each fuel injector via adopting a device named "Driver" to supply PWM current to each fuel injector control circuit. The driver owns a feedback circuit, which is monitored by ECU to verify if the control circuit is open or short. If any failure in the fuel injector control circuit is detected by ECU, the fuel injector control circuit DTC shall be generated.

Diagnosis Hint: For the failure in wire connector shall trigger the setting of DTC, be sure to check the connectors relevant to this diagnostic procedure for short circuit of terminal or poor contact of wire, prior to replacement of any component. Observe the state parameter of relevant fuel injector on the diagnostic tool while shaking the wire and connector relevant to the test. If any intermittent failure is existed in the tested wire or connector, the relevant failure shall be displayed on the diagnostic tool.

Performing compression test is helpful for locating the intermittent failure.

Terminal	ECU	
	A01	1st fuel injector "High"
	A46	1st fuel injector "Low"

Downloaded from www.Manualslib.com manuals search engine

Fault Tree:

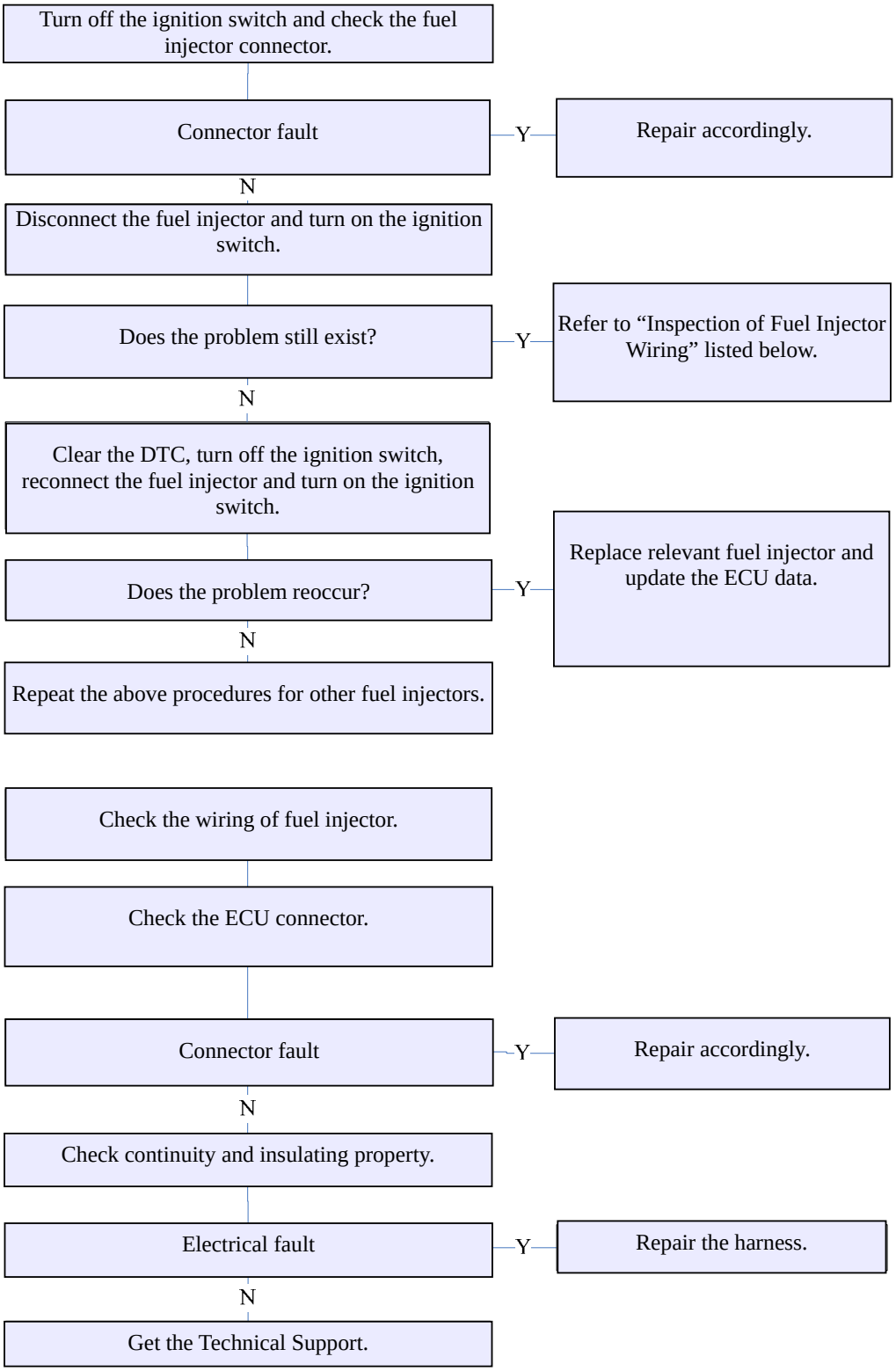

Downloaded from www.Manualslib.com manuals search engine

9.

DTC	**P0204**	**The 4th cylinder fuel injector circuit is open.**
	P0270	**The low end of the 4th fuel injector is short to the high end.**
	P0271	**The low end of the 4th fuel injector is short to the high level.**
	P0272	**Other errors of the 4th cylinder fuel injector**
	P1206	**The forward error correction of the 4th fuel injector is too large.**
	P1207	**The reverse error correction of the 4th fuel injector is too large.**
	P1212	**The dynamic forward error correction of the 4th fuel injector is too large.**
	P1213	**The dynamic reverse error correction of the 4th fuel injector is too large.**
	P123C	**Other errors of the 4th cylinder fuel injector**
	P123D	**Other errors of the 4th cylinder fuel injector**
	P123E	**Other errors of the 4th cylinder fuel injector**

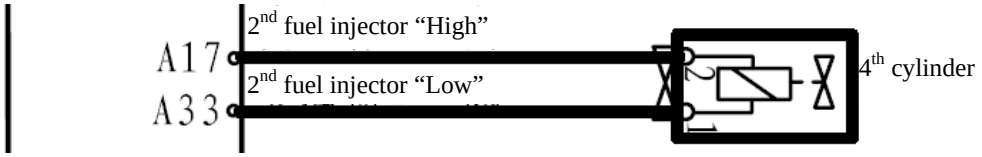

Fault Description: The ECU controls the switching-on circuit of fuel injector directly. The ECU controls the time for switching on each fuel injector via adopting a device named "Driver" to supply PWM current to each fuel injector control circuit. The driver owns a feedback circuit, which is monitored by ECU to verify if the control circuit is open or short. If any failure in the fuel injector control circuit is detected by ECU, the fuel injector control circuit DTC shall be generated.

Diagnosis Hint: For the failure in wire connector shall trigger the setting of DTC, be sure to check the connectors relevant to this diagnostic procedure for short circuit of terminal or poor contact of wire, prior to replacement of any component. Observe the state parameter of relevant fuel injector on the diagnostic tool while shaking the wire and connector relevant to the test. If any intermittent failure is existed in the tested wire or connector, the relevant failure shall be displayed on the diagnostic tool.

Performing compression test is helpful for locating the intermittent failure.

Terminal	ECU	
	A17	2nd fuel injector "High"
	A33	2nd fuel injector "Low"

Downloaded from www.Manualslib.com manuals search engine

Fault Tree:

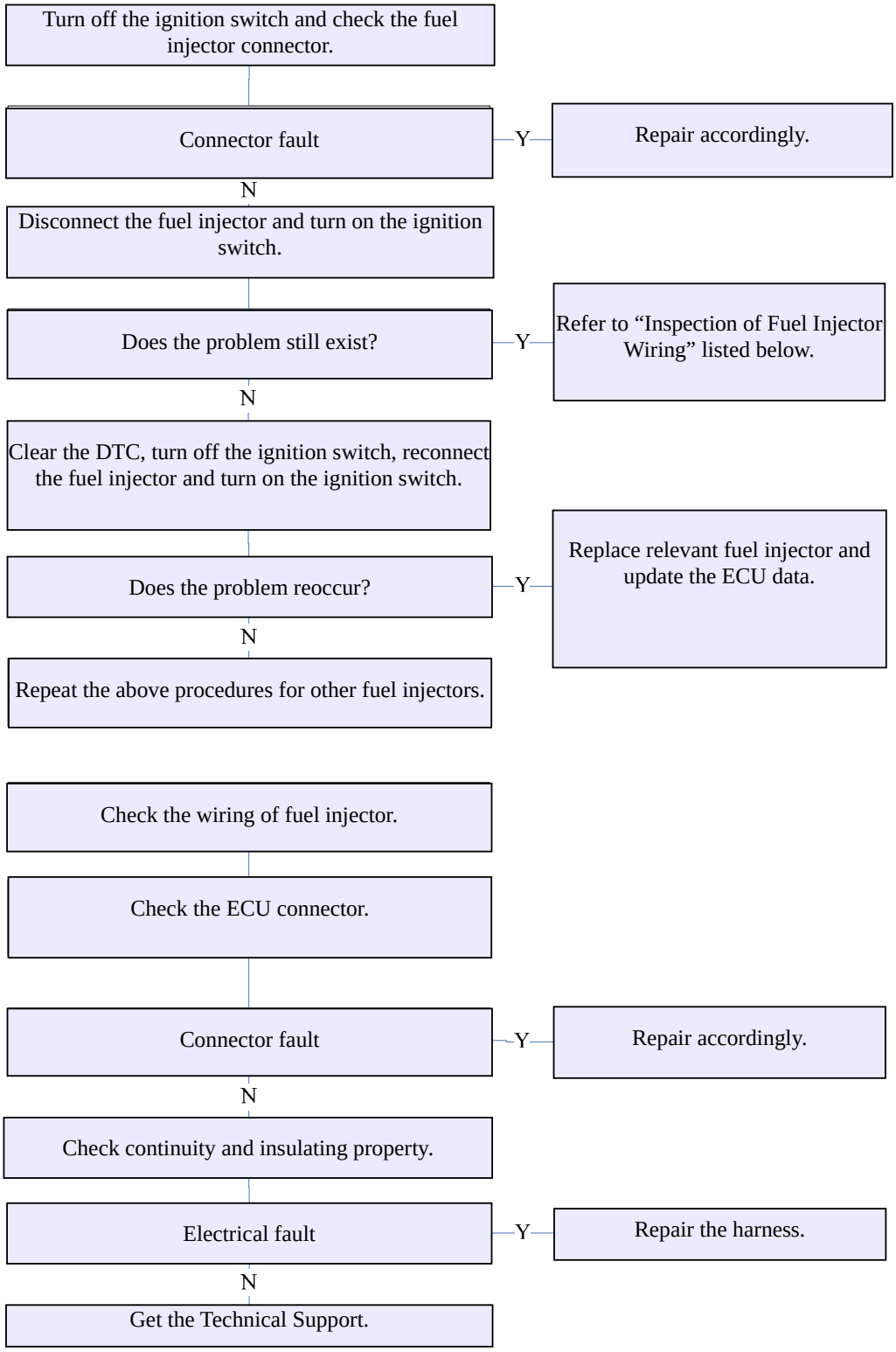

Downloaded from www.Manualslib.com manuals search engine

10.

DTC	**P0251**	**The control line of fuel level control unit is open.**
	P0252	**The ECU internal driver module of fuel level control unit is overheating.**
	P0253	**The control line of fuel level control unit is short to ground.**
	P0254	**The control line of fuel level control unit is short to high level.**

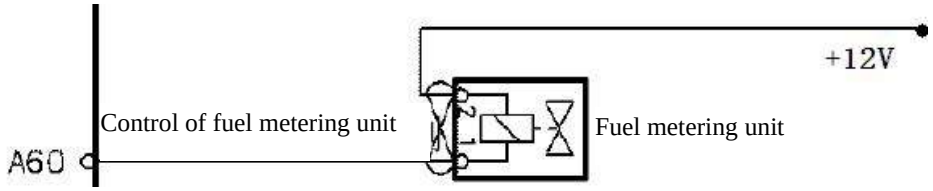

Fault Description: The fuel metering unit is for adjusting the fuel supply and the fuel pressure. When the control coil of metering unit is off, the inlet fuel metering proportional valve of the unit shall be closed, cutting off the fuel supplied to the high pressure fuel pump plunger component. When the control coil of metering unit is electrified, the ECU shall change the fuel inlet sectional area of metering component via pulse signal according to the actual demand, through which, the fuel supplied to the high pressure fuel pump plunger component shall be changed. If the fuel metering control signal voltage detected by ECU is abnormal, the DTC shall be generated.

Diagnosis Hint: The metering component is mounted at the fuel inlet of high pressure pump. The engine's fuel supply shall be affected directly by the opening sectional area of the fuel metering unit control valve. Provided that the fuel metering unit control line is normally connected, monitor the engine fuel supply amount and pressure while moving relevant connector and wire to check if any fault is triggered. If any, the indication of fault diagnostic unit shall change. This is help for locating the intermittent failure.

The intermittent failure may be caused by poor contact of control part. As for poor contact between ECU and fuel metering unit, please check the ECU harness connector for the following conditions:

− Loose terminal

− Poor matching and connection

− Breakage of keeper

− Distortion or damage of terminal

− Poor contact between terminal and wire

Check the harness for any damage. If the harness appears normal, observe the fuel pressure indicated on the diagnostic tool while moving relevant connector and harness of fuel metering unit. If the pressure indication changes, there must be failure in that part.

Terminal	ECU	
	A19	Power supply terminal of fuel metering unit
	A49	Signal terminal of fuel metering unit

Downloaded from www.Manualslib.com manuals search engine

Fault Tree:

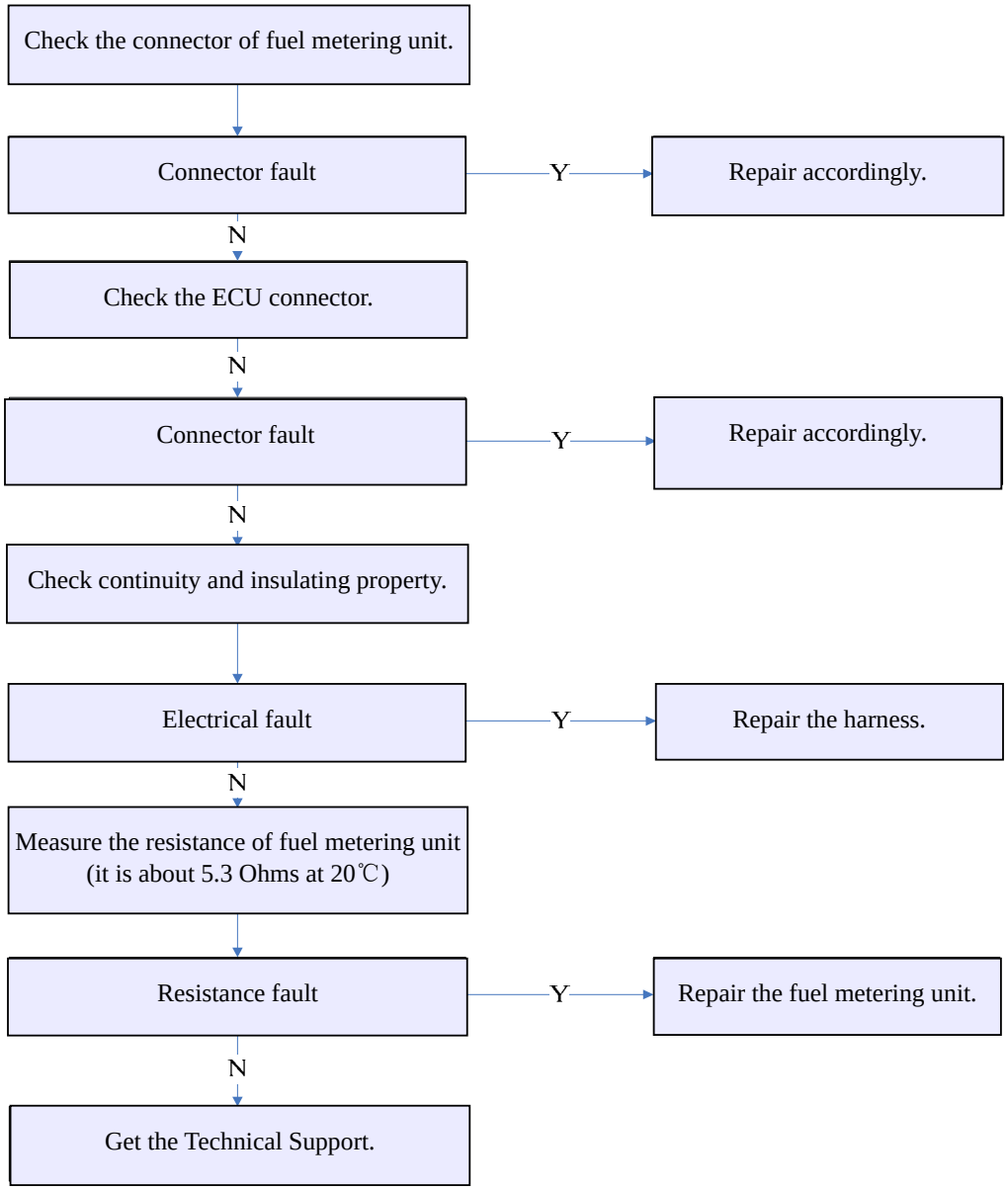

Downloaded from www.Manualslib.com manuals search engine

11.

DTC	**P0335**	**No signal from crankshaft sensor**
	P0336	**False signal from crankshaft sensor**

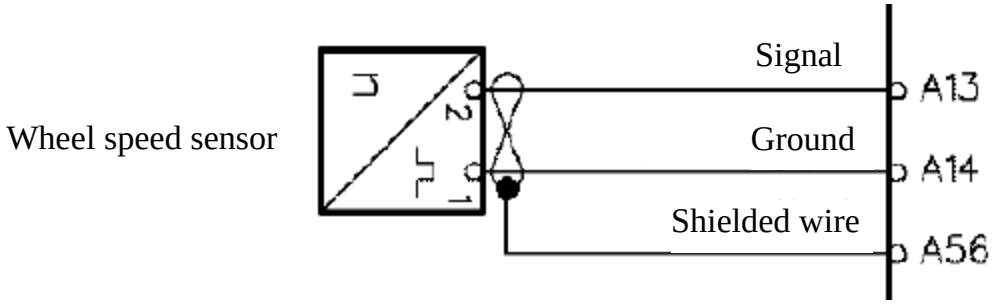

Diagnosis Hint: The signal of crankshaft position (CKP) sensor is used for indicating the rotary speed and position of crankshaft. The CKP sensor shall generate an AC voltage of different amplitude and frequency. The frequency relies on the rotary speed of crankshaft and the output AC voltage relies on the crankshaft position. The CKP sensor shall coordinate with a 58X variable reluctance rotor fixed on the crankshaft. The ECU can synchronize the timing control for fuel injectors according to the input signals of CKP sensor and camshaft position sensor. The CKP sensor can also be applied for testing misfire and tachometer indication. The signal circuit and the low reference voltage circuit of CKP sensor are directly connected to ECU. The shielded and grounded circuit should be grounded. In addition, when the 1st and the 4th cylinders are at TDC, the CKP sensor shall also send a signal to ECU. The ECU shall monitor the signals of CKP sensor and camshaft position sensor to determine whether the 1st cylinder is in compression stroke or not. The circuits between CKP sensor and ECU include:

Signal circuit of CKP sensor

Low reference voltage circuit of CKP sensor

Shielded and grounded circuit

If the number of crankshaft position pulses sent out by the CKP sensor detected by the ECU is incorrect, the DTC shall be generated.

Diagnosis Hint: There is failure in camshaft position sensor circuit.

CKP sensor variable reluctance rotor is dislocated or incorrectly installed.

Large crankshaft end play leads to dislocation of variable reluctance rotor.

There is blockage between CKP sensor and variable reluctance rotor.

Check connectors of CKP sensor and ECU for any corrosion.

Prior to maintenance, all fragments should be removed from the connector surfaces. Prior to diagnosis or replacement, please check the connector gaskets to ensure they are properly installed to avoid ingress of any pollutant.

- Poor terminal connection – Check the harness connector for any loose terminal, mismatching, damaged keeper, improper form or damage, poor contact between terminal and wire. Check if the matched terminal is adopted. Check if the test tension is appropriate.
- Harness damage – Check the harness for any damage. If the harness appears normal, observe the indication on the diagnostic tool while moving relevant connector and harness of the sensor. If the indication changes, there must be failure in that part.

Downloaded from www.Manualslib.com manuals search engine

- Check if the ground and connection of ECU and engine is reliable and clean. If the DTC is determined to be intermittent failure, please refer to the fault records to find out when the previous DTC is set.

Terminal	ECU	
	A13	Signal terminal of CKP sensor
	A14	Negative signal terminal of CKP sensor
	A56	Shielded terminal of CKP sensor

Downloaded from www.Manualslib.com manuals search engine

Fault Tree:

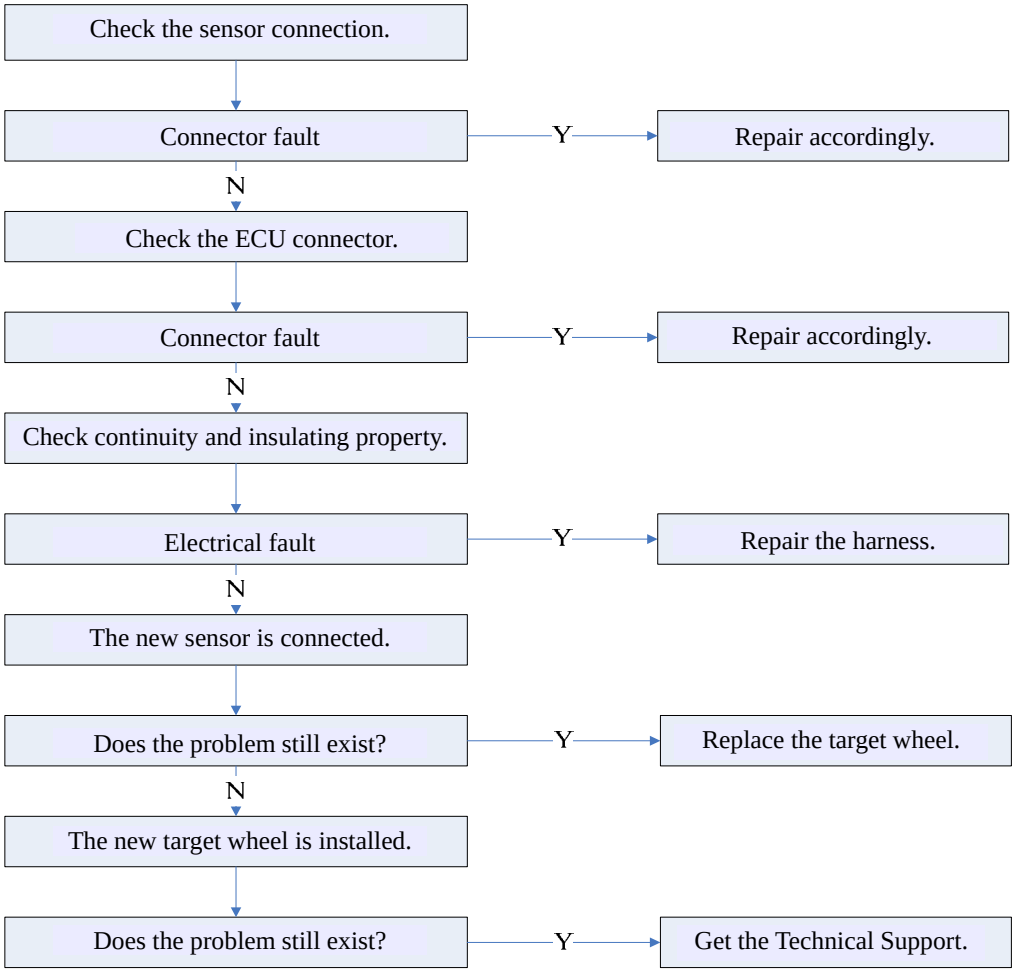

Downloaded from www.Manualslib.com manuals search engine

12.

DTC	**P0340**	**No signal from phase sensor**
	P0341	**False signal from phase sensor**

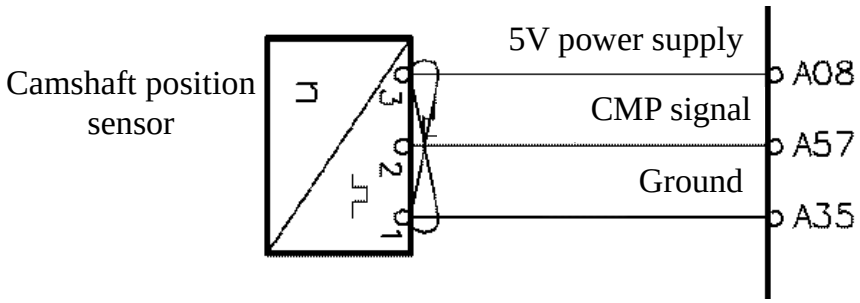

Fault Description: The camshaft position (CMP) sensor is a Hall Effect switch. The ECU shall supply 5V voltage to the 5V reference voltage circuit and also supply grounding for the low reference voltage circuit. The CMP sensor shall provide a signal voltage to ECU by coordinating with 1X variable reluctance rotor. The ECU shall make use of this signal voltage to determine the camshaft position. The CMP sensor links the crankshaft with the camshaft position to facilitate ECU to determine which cylinder the fuel should be injected to. During the rotation of camshaft, the variable reluctance rotor changes the magnetic field generated by the magnet in sensor and send a signal to ECU via the signal circuit. The CMP sensor circuit is directly connected to ECU. The CMP sensor can also be adopted to tell which cylinder has misfire. The circuits between CMP sensor and ECU include:

High reference voltage circuit of CMP sensor

Ground circuit

Camshaft position signal circuit

When no occurrence of minimum camshaft position synchronization is detected by ECU or there is failure in CMP sensor signal circuit, DTCs shall be generated.

Diagnosis Hint: Prior to maintenance, all fragments should be removed from the connector surfaces. Prior to diagnosis or replacement, please check the connector gaskets to ensure they are properly installed to avoid ingress of any pollutant.

Poor terminal connection – Check the harness connector for any loose terminal, mismatching, damaged keeper, improper form or damage, poor contact between terminal and wire. Check if the matched terminal is adopted. Check if the test tension is appropriate.

Harness damage – Check the harness for any damage. If the harness appears normal, observe the indication on the diagnostic tool while moving relevant connector and harness of the sensor. If the indication changes, there must be failure in that part.

Check if the ground and connection of ECU and engine is reliable and clean. If the DTC is determined to be intermittent failure, please refer to the fault records to find out when the previous DTC is set.

Terminal	ECU	
	A08	Signal terminal of phase sensor
	A57	Negative signal terminal of phase sensor
	A35	Shielded terminal of phase sensor

Downloaded from www.Manualslib.com manuals search engine

Fault Tree:

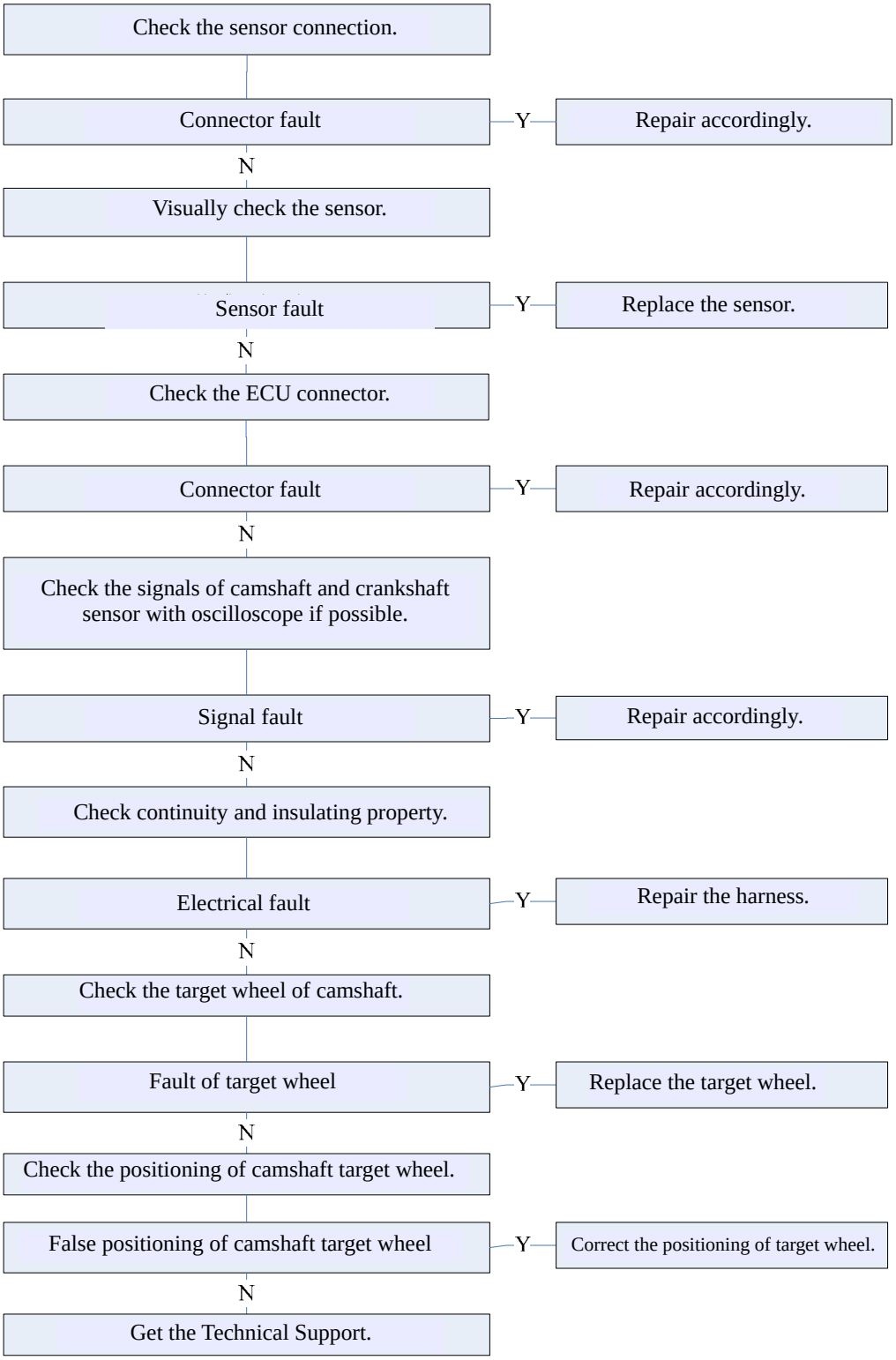

Downloaded from www.Manualslib.com manuals search engine

13.

DTC	**P0380**	**The glow plug works without the command from ECU.**
	P0382	**The glow plug doesn't work with the command from ECU.**
	P0383	**ECU control line for glow plug is short to ground.**
	P0384	**ECU control line for glow plug is short to high level.**
	P0670	**ECU control line for glow plug is open or its driver module is overheating.**

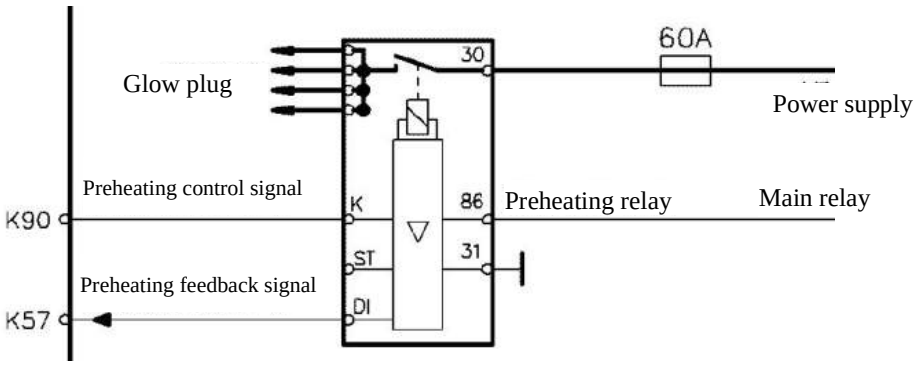

Fault Description: The main part of glow plug is tubular heating element, which is securely and tightly installed inside the glow plug shell, making it resistant to corrosion and thermal shock. The heating element is composed of two resistance elements connected in series; they are installed in the top of heat pipe forming respectively a heating coil and a control coil. The glow plug controller controls over the glow plug via a power relay and electrical switch group. It can control the heating time of glow plug and also serve as a protection and monitoring device. The higher level glow plug controller has diagnosis function, so it can distinguish an individual fault of glow plug and indicate it to the driver. A multilevel socket is equipped on the control input terminal of glow plug controller for connecting with ECU. To avoid voltage drop, screw pins or plugs should be equipped in the series circuit that is connected with the glow plug. The post-heating upon a success start can facilitate the uninterrupted speed increase and idling with little smoke in the process of heating, which can reduce the combustion noise in cold starting. If it fails, the glow plug protection circuit shall open to avoid overdischarging of battery. If no preheating control signal is detected by ECU or the detected control signal is inconsistent with the actual, relevant DTCs shall be generated.

Diagnosis Hint: The failure may be caused by poor contact of wire or loose connector. As for poor contact of ECU or preheating control unit, check the harness connector for the following conditions:

Loose terminal

Poor matching and connection

Distortion or damage of terminal

Poor contact between terminal and wire

Damage of harness – Check the harness for any damage

Terminal	ECU	
	K90	Control signal of preheating relay
	K57	Preheating time feedback signal

Downloaded from www.Manualslib.com manuals search engine

Fault Tree:

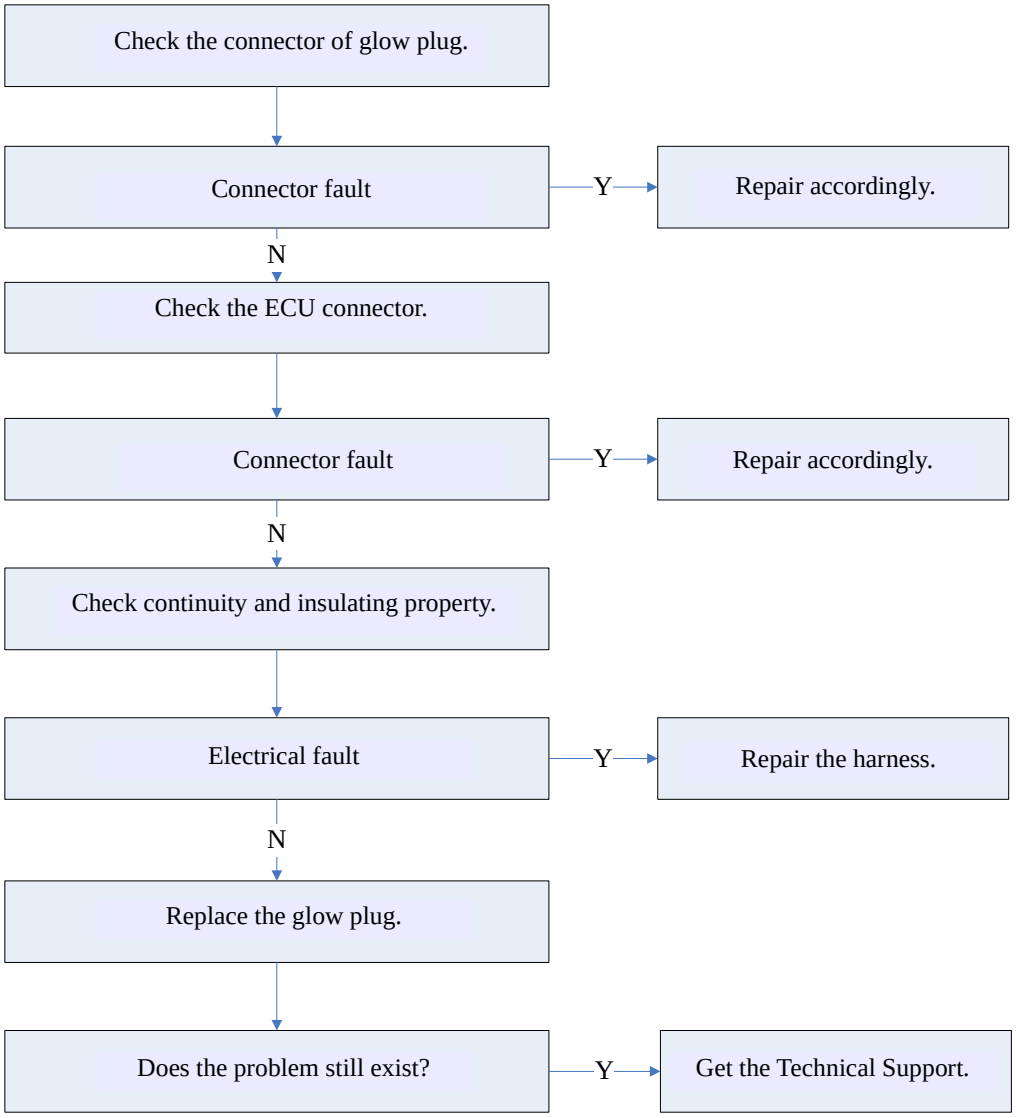

Downloaded from www.Manualslib.com manuals search engine

14.

DTC	**P0500**	**Error of vehicle speed sensor acquisition hardware**
	P0501	**The vehicle speed sensor signal is unreliable.**

Fault Description: Vehicle speed sensor (VSS) provides vehicle speed signals to ECU. It is a kind of Hall Effect sensor. When the rotor gear tooth of transmission output shaft passes through the magnetic field of sensor, the VSS shall generate a signal voltage, whose frequency shall increase with the vehicle speed. The ECU shall convert the signal voltage into vehicle speed and make use of the vehicle speed signal to determine the working status of vehicle. If this signal is lost or abnormal, relevant DTCs shall be generated.

Diagnosis Hint: Check the harness for any damage. If the harness appears normal, observe the indication on the digital multimeter while moving relevant connector and harness of the actuator. If the indication changes in testing, there must be failure in that part. The intermittent failure may be caused by poor contact, abrasion of wire insulation or breakage of the wire inside insulation. Make sure the vehicle speed sensor is correctly fixed onto the transmission housing.

Terminal	ECU	
	K75	VVS input signal

Downloaded from www.Manualslib.com manuals search engine

Fault Tree:

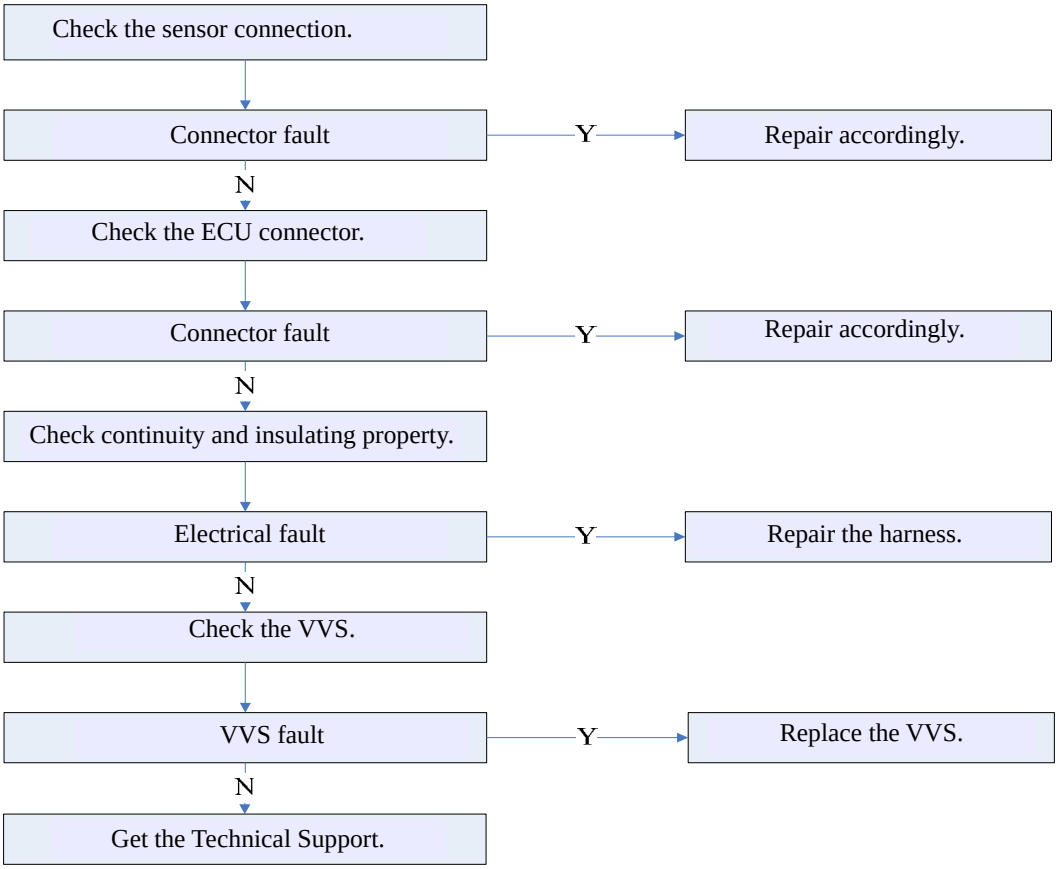

Downloaded from www.Manualslib.com manuals search engine

15.

DTC	**P0504**	**Unreliable comparison between main and auxiliary brake pedal signals**

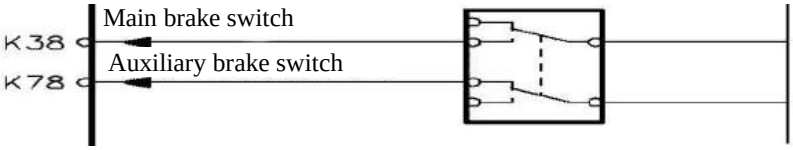

Fault Description: The brake switch detects the brake pedal action and sends the signal to ECU. The brake switch is equipped with two switches, viz. main and auxiliary brake switches. When these two signals are input, these signals are determined by ECU to be normal brake signals. The switch signals are relevant to the accelerator pedal, for controlling the fuel amount during braking. There should be no failure when you operate the accelerator pedal at the point of depressing the brake pedal, but the fuel amount shall be reduced when you operate the accelerator pedal with the brake pedal depressed. If the voltage signal of brake switch is inconsistent with the actual, the DTC shall be generated.

Diagnosis Hint: Check the wiring connector for poor contact, distorted or damaged terminal.

Terminal	ECU	
	K17	Main brake switch signal
	K80	Auxiliary brake switch signal

Downloaded from www.Manualslib.com manuals search engine

Fault Tree:

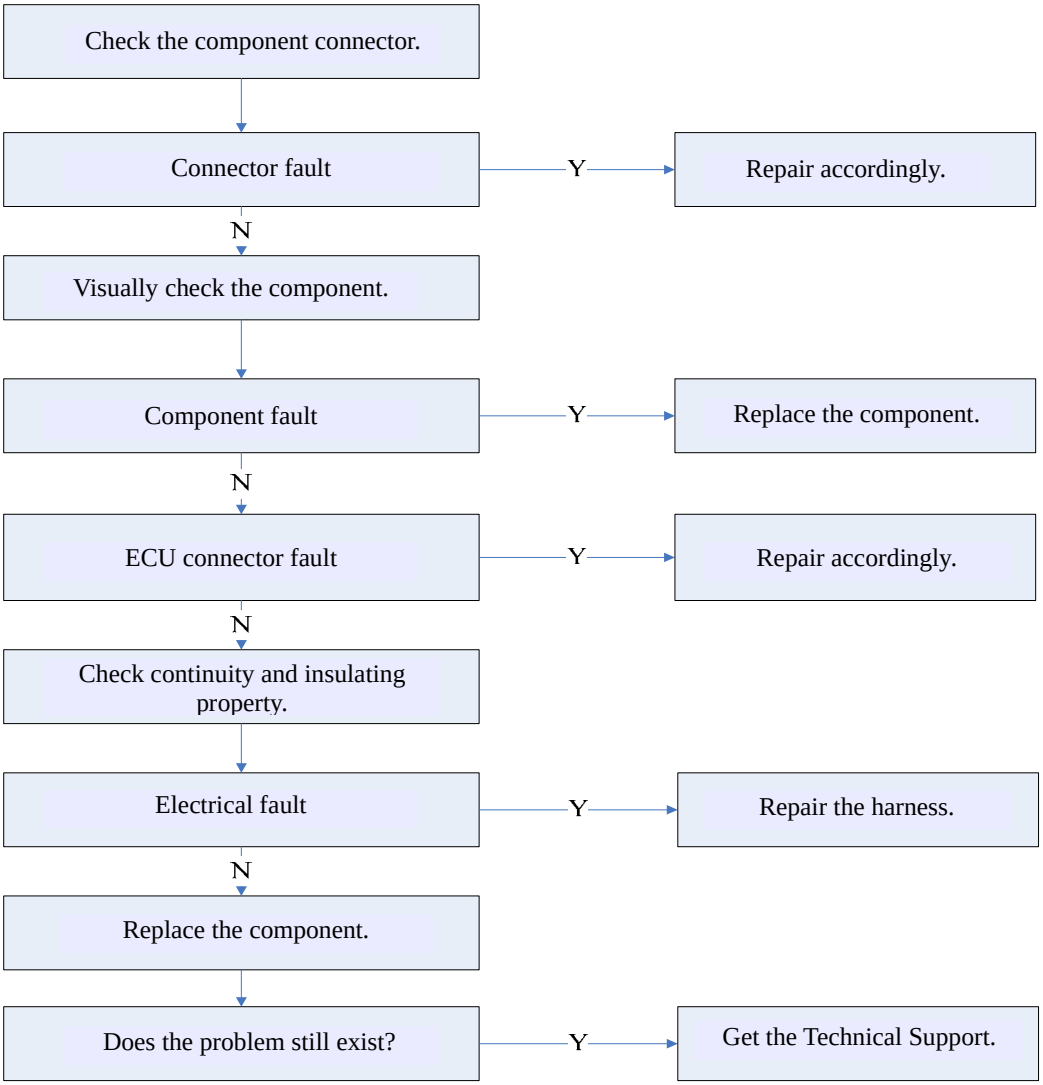

Downloaded from www.Manualslib.com manuals search engine

16.

DTC	**P0562**	**Too low battery voltage**
	P0563	**Too high battery voltage**
	P1617	**The engine cannot be shut down with too high internal supply voltage.**
	P1618	**The engine cannot be shut down with too low internal supply voltage.**
	P1637	**Too high voltage in ECU internal power supply module**
	P1638	**Too low voltage in ECU internal power supply module**

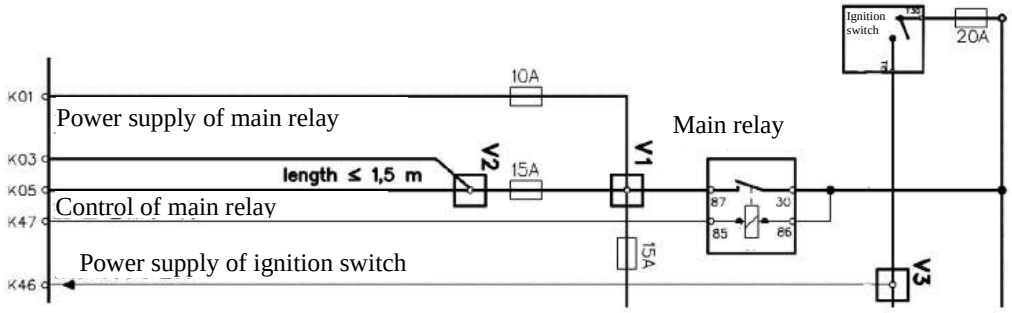

Fault Description: The ECU monitors the system voltage via the ignition voltage circuit. When the voltage exceeds the set range, the parts may be damaged and the input reading may be incorrect. When the system voltage detected by ECU is too low (below 11V) or too high (above 16V), relevant DTCs shall be generated.

Diagnosis Hint: Check if the diagnostic system is normal.

Check if the charging system is normal.

Perform relevant test for intermittent failure or poor contact.

Terminal	ECU	
	K01	Positive battery terminal +Ra
	K03	Positive battery terminal +Rb
	K05	Positive battery terminal +Rc
	K47	Main relay control
	K46	Ignition switch power supply

Downloaded from www.Manualslib.com manuals search engine

Fault Tree:

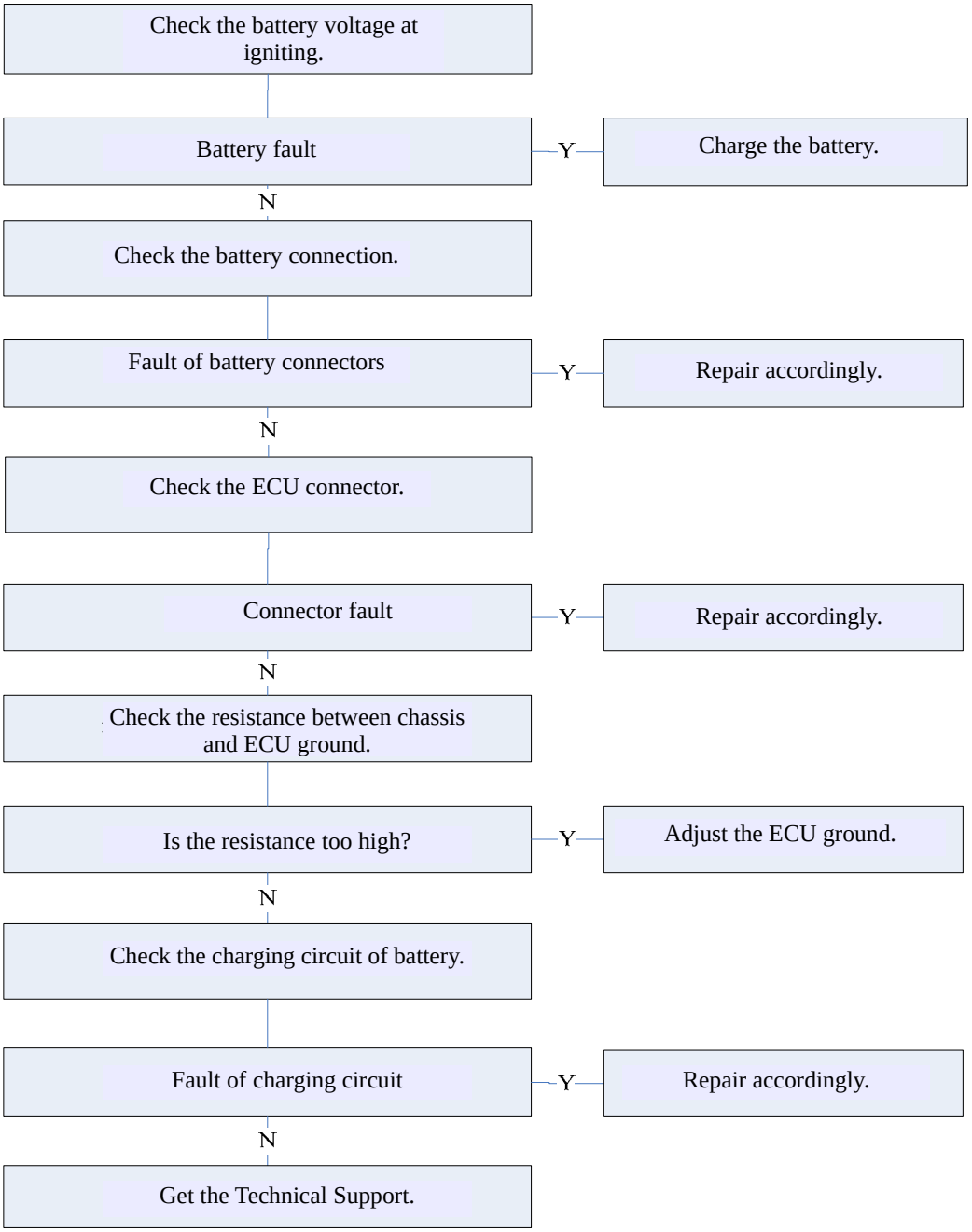

Downloaded from www.Manualslib.com manuals search engine

17.

DTC	**P060A**	**Communication failure of ECU internal chip CJ940**

Fault Description: It is mainly used for monitoring the internal microprocessor integrity failure in ECU to determine whether the ECU program is executed. With engine OFF and ignition switch ON, the ECU shall perform self-diagnosis. If the self-diagnosis process is not finished, the control module shall record the corresponding operating condition and store this information into “Fault Records” to set DTC.

Diagnosis Hint: If the self-diagnosis process is finished smoothly, the current DTC shall be cleared.

If this diagnostic instrument and other diagnosis irrelevant to exhaust pass the test in 40 continuous preheating processes, the history DTC shall be cleared.

Fault Tree:

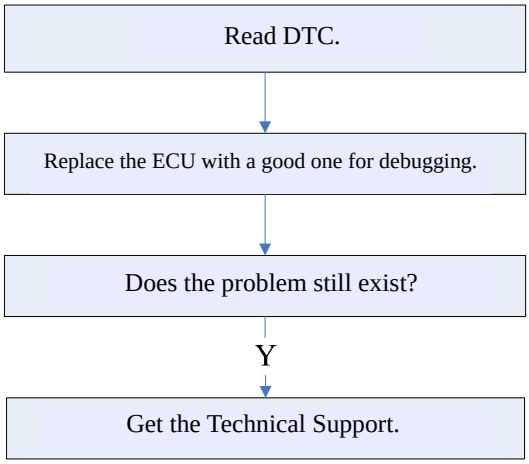

Downloaded from www.Manualslib.com manuals search engine

18.

DTC	P0642	Sensor supply voltage 1 is too low.
	P0643	**Sensor supply voltage 1 is too high.**
	P0652	**Sensor supply voltage 2 is too low.**
	P0653	**Sensor supply voltage 2 is too high.**

Fault Description: Due to the nature of sensor, some sensors require a voltage to finish the required function and operation. The supply voltage of sensor is supplied by ECU. The ECU shall calculate the required voltage of sensor according to its characteristic and supply the voltage to the sensor via control circuit. In the process of voltage signaling, DTCs may occur due to virtual connection or poor connection of control circuit, etc.

Sensor supply voltage 1: The power supply for accelerator pedal 1 and CMP sensor

Sensor supply voltage 2: The power supply for accelerator pedal 2, absolute pressure sensor and common rail pressure sensor.

Diagnosis Hint: Check the ECU power voltage for any fault. The power voltage detected by multimeter should generally be 5V. Check the voltage signal supplied to relevant sensor. The fault may be caused by virtual connection, poor contact of wire, abrasion of insulation or damage of the wire in insulation. Check the circuit for the following conditions:

– Loose terminal

– Poor matching and connection

– Breakage of keeper

– Distortion or damage of terminal

– Poor contact between terminal and wire

– Damage of harness – Check the harness for any damage

Downloaded from www.Manualslib.com manuals search engine

Fault Tree:

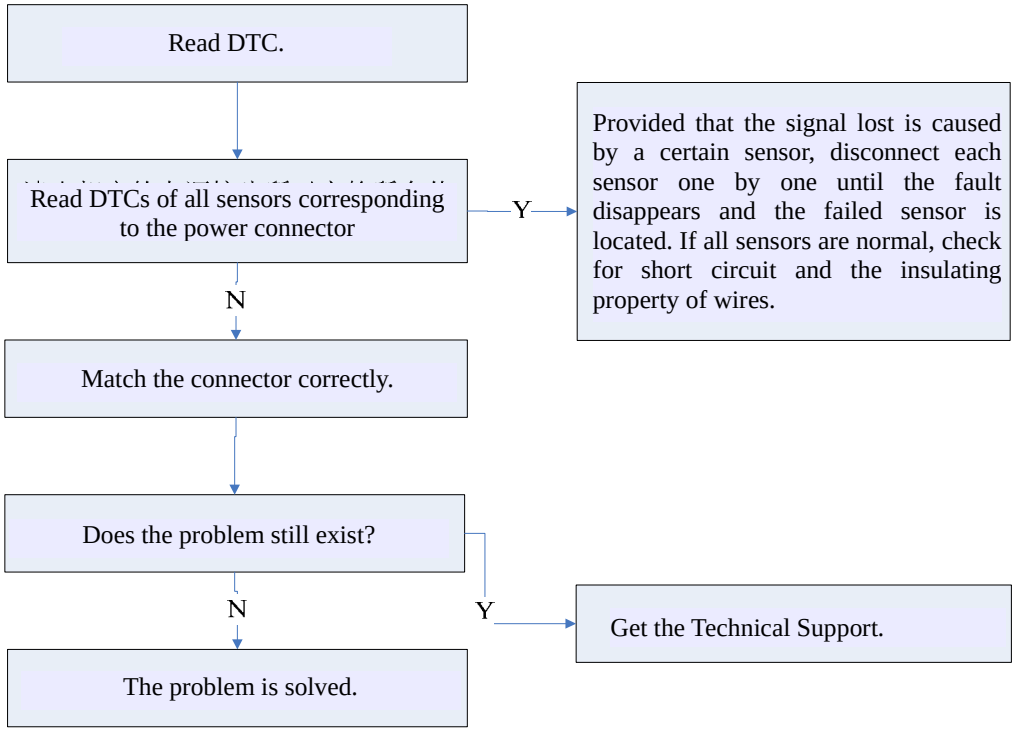

Downloaded from www.Manualslib.com manuals search engine

19.

DTC	**P0686**	**The main relay opens too early.**
	P0687	**The main relay opens too late.**

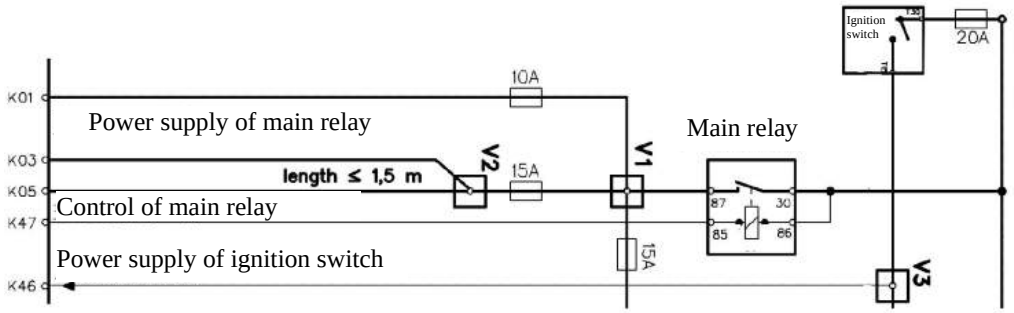

Fault Description: With the ignition switch OFF, the input circuit of main relay through K47 is actuated by V3 and ECU Pin K46 and the electromagnet picks up the contact of output circuit, so the output circuit of main relay is in continuity. Then, the power supply into the internal control module via ECU Pin K01, K03 and K05. If the ECU signal for relay control is distorted, DTC shall be generated.

Diagnosis Hint: The intermittent failure may be caused by poor contact, abrasion of wire insulation or breakage of the wire inside insulation. The ignition 1 relay fault shall lead to the failed starting of engine, for there is no voltage in the ignition coil or fuel injectors in electronic ignition system and they cannot work without being electrified.

Terminal	ECU	
	K47	Main relay control signal

Downloaded from www.Manualslib.com manuals search engine

Fault Tree:

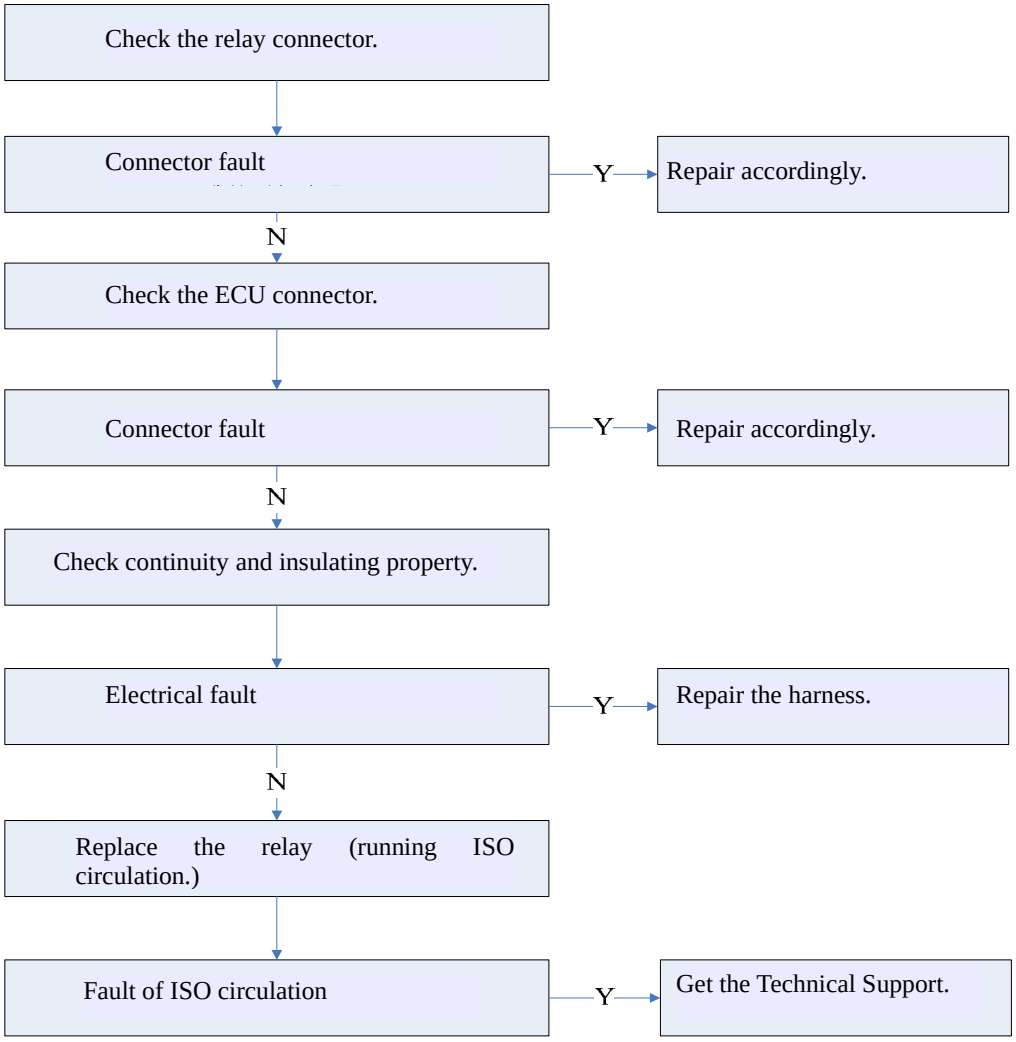

Downloaded from www.Manualslib.com manuals search engine

20.

DTC	**P0704**	**Clutch signals are unreliable.**

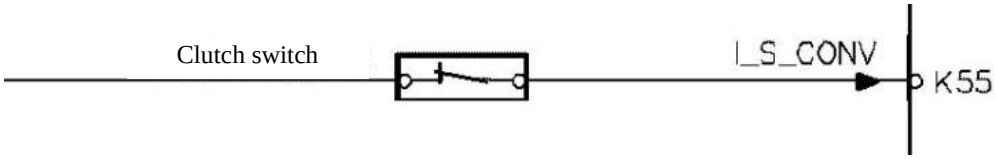

Fault Description: Transmission control unit (TCU) is integrated with engine control unit (ECU) and calculates optimal time and speed for clutch engagement according to feedback information from sensors of accelerator pedal, transmission gear position, transmission input/output shaft speed, engine speed, throttle opening and etc. Automatic transmission (AT) actuating mechanism consists of electric oil pump, solenoid valve and clutch cylinder. When ECU gives command to drive electric oil pump, high-pressure fluid generated in the pump goes through solenoid valve and gets into clutch cylinder. ECU controls magnitude of current of solenoid valve for the control of fluid flow and fluid passage change. Thus piston movement of clutch cylinder is realized in order to complete clutch operation during vehicle starting and shift. In the case of inconformity between clutch signal and actual condition, DTC occurs.

Diagnosis Hint: clutch switch fault

Check switch wire harness (Check Terminal 58 of ECU for open circuit, short circuit and poor contact.)

Check switch power supply voltage and operation condition.

Determine ECU replacement according to actual condition.

Terminals	ECU	
	K55	Clutch switch signal

Downloaded from www.Manualslib.com manuals search engine

Fault Tree:

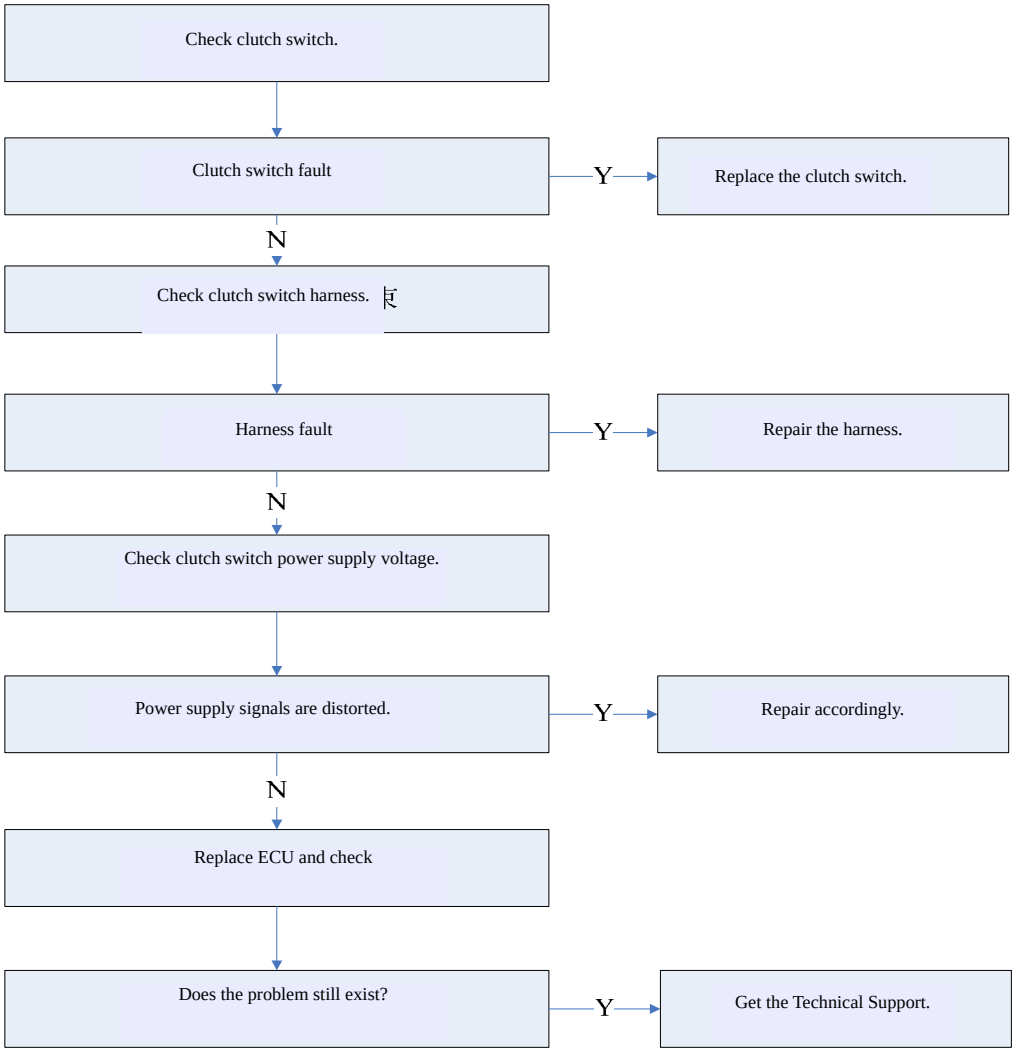

Downloaded from www.Manualslib.com manuals search engine

21.

DTC	**P0650**	**There are faults (short circuit or open circuit) in ECU OBD malfunction indicator lamp (MIL) output connecting wire.**
	P1619	**Connection of ECU system MIL output connecting wire is short to high level.**
	P161A	**Connection of ECU system MIL output connecting wire is short to ground.**
	P161B	**ECU system MIL output connecting wire is open.**
	P161C	**ECU system MIL drive module is overheated.**

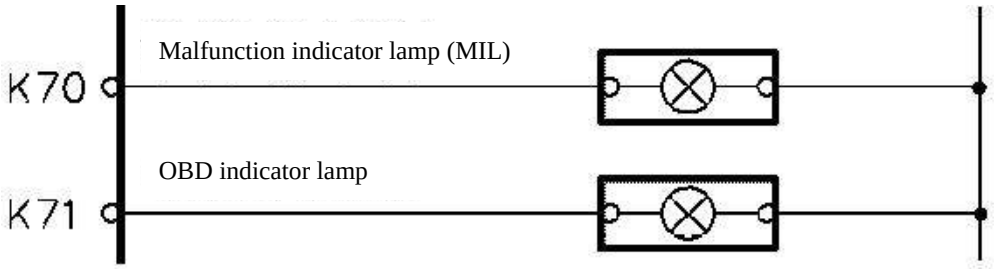

Fault Description: Malfunction indicator lamps (MIL) are located on instrument panel cluster (IPC). MILs inform driver about fault generation and necessary maintenance for engine control system. Control module monitors MIL control circuit for inconformity of commands for MILs. For example, when MIL is disconnected by command, control module monitors low voltage or when MIL is connected by command, control module monitors high voltage. This is indicated that there are faults. When control module discovers incorrect voltage or overhigh temperature of MIL control circuit, DTC occurs. In the case of 20 samplings for output status of MIL drive, open circuit or overhigh temperature faults are detected in 15 samplings at least. There are 100msec for each sampling. ECU detects incorrect output status or overlarge current of MIL drive and such status lasts for more than 2sec; for every 10 samplings of MIL drive output status, there are short circuit faults in 5 samplings at least with time consumption for each sampling process as 12.5msec and ECU detects short circuit for more than 1sec under MIL drive output status. In the case of conditions above, DTCs occur.

Diagnosis Hint: When short circuit fault is detected, control module should stop starting MIL drive within remained travel. Control module records operation condition when diagnosis is failed. For the first diagnosis failure, control module will keep this information in fault record. If diagnosis failure occurs during the second continuous ignition cycle, control module records operation condition under diagnosis failure and writes the operation condition in frozen fault condition and updates fault record.

Terminal	ECU	
	K70	System MIL output signal
	K71	OBD indicator lamp

Downloaded from www.Manualslib.com manuals search engine

Fault Tree:

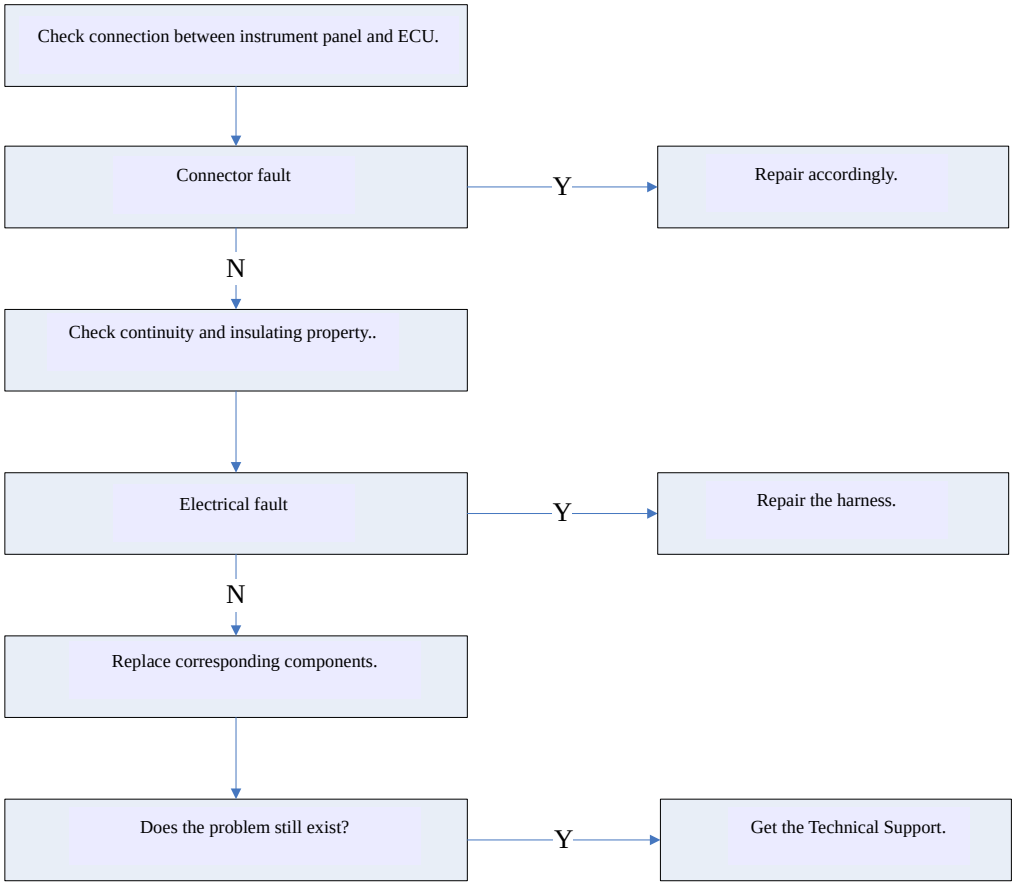

Downloaded from www.Manualslib.com manuals search engine

22.

DTC	**P0100**	**Mass air flow (MAF) signals measured by air flow meter without correction are too strong or too weak (Connection is in open circuit or short circuit).**
	P0101	**Mass air flow (MAF) signals measured by air flow meter with correction are too strong or too weak (Connection is in open circuit or short circuit).**
	P0102	**Mass air flow sensor negative drift**
	P0103	**Mass air flow sensor positive drift**
	P0104	**Mass air flow sensor zero drift**
	P1100	**Air mass flowmeter software correction is excessive.**

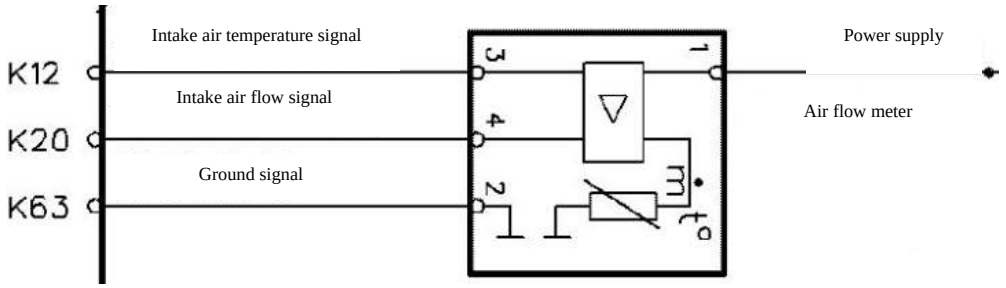

Fault Description: Mass air flow (MAF) sensor is an air flow meter which is used in measurement of air inflow of engine. ECU correctly supplies fuel supply with the use of signals from mass air flow sensor for all engine speeds and loads. In the case of small air inflow of engine, it is indicated there is vehicle deceleration or engine idling. In the case of large air inflow of engine, it is indicated there is vehicle acceleration or high engine load. Mass air flow (MAF) sensor possesses circuits as follows:

One ignition 1 voltage circuit

One ground circuit

One signal circuit

ECU applies a voltage to sensor via signal circuit. The sensor uses the voltage to generate a corresponding frequency for air inflow which gets through the sensor. During idle running, the frequency changes in the range around 2000Hz. ECU calculates predicted air flow value with input signals from sensors as follows:

Atmosphere pressure in the case of ignition key connection

Intake manifold absolute pressure sensor

Intake air temperature sensor

Engine coolant temperature sensor

Engine speed

ECU compares mass air flow sensor frequency signal with predicted air flow valve and verify signal lag (lack of change), too low or too high signal level under given operation condition with the comparison. When D-value between actual mass air flow sensor frequency signal which is detected by ECU and air flow meter calculated value is not in preconcerted range, DTC occurs.

Diagnosis Hint: Check mass air flow sensor harness and verify whether harness arrangement is too close to components as follows:

Downloaded from www.Manualslib.com manuals search engine

— Additional accessories after sale

— Secondary ignition wires or coils

— Solenoid valve

— Relay

— Motor

In the case of idle running or deceleration, air flow goes through sensor may reach its minimum and this may lead to DTC occurrence. Check down stream of mass air flow sensor for vacuum leaks. Check mass air flow sensing elements for affixed dirt or scraps. Check intake system for water penetration. Once there is water in mass air flow sensor, it will lead to sensor deviation and DTC occurrence.

Wide open throttle during vehicle acceleration for starting may lead to rapid parameter increase of mass air flow sensor on fault diagnostic apparatus. In other words, 3-10g/sec during idle running will increase to 150g/sec for shift from the 1st gear to the 2nd. If parameters do not increase, check intake system and exhaust system for clogging.

Check engine coolant temperature sensor for deviation or lag.

In the case of too high resistance in ignition 1 voltage circuit (i.e. equals to or more than 15Ω), DTC occurs.

Terminal	ECU	
	K12	Intake air temperature signal
	K20	Intake air flow signal
	K63	Ground signal

Downloaded from www.Manualslib.com manuals search engine

Fault Tree:

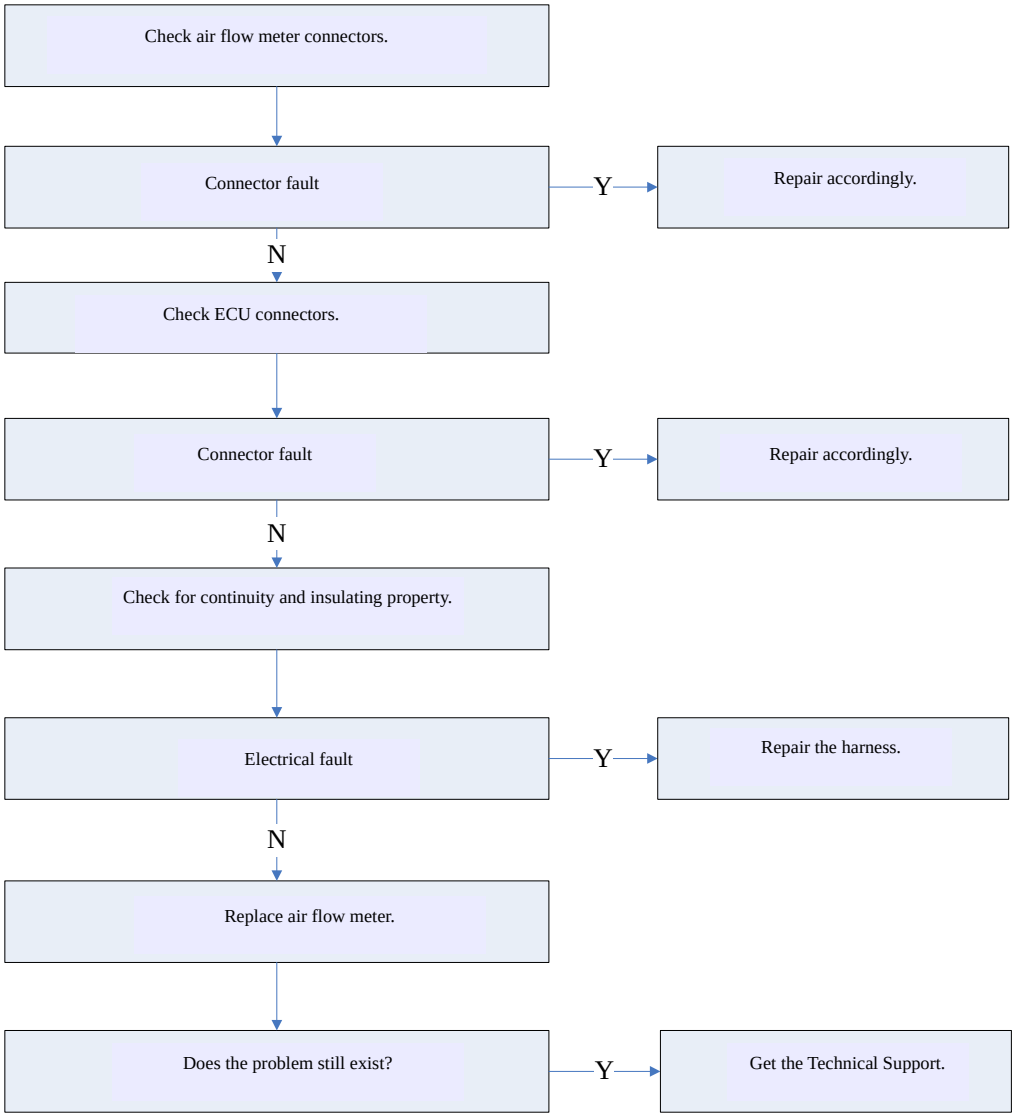

Downloaded from www.Manualslib.com manuals search engine

23.

DTC	**P0110**	**Connection for additional air temperature sensor of air mass flowmeter is short or open.**
	P0112	**Temperature for additional air temperature sensor of air mass flowmeter is too low.**
	P0113	**Temperature for additional air temperature sensor of air mass flowmeter is too high.**
	P1101	**Analog output voltage for additional air temperature sensor of air mass flowmeter is too high or too low.**
	P1102	**Output duty ratio signal level of additional air temperature sensor of air mass flowmeter is too high or too low.**
	P1106	**Output duty ratio signal cycle of additional air temperature sensor of air mass flowmeter is too long.**
	P1107	**Output duty ratio signal cycle of additional air temperature sensor of air mass flowmeter is too short.**

Fault Description: Intake air temperature (IAT) sensor is a variable resistance for measurement of engine intake air temperature. Air temperature sensor possesses a signal circuit and a low reference voltage circuit. ECU provides air temperature sensor signal circuit with 5V voltage and provides air temperature sensor reference voltage circuit with grounding. When air temperature sensor is under cold status, sensor resistance value is high. When air temperature increases, sensor resistance value decreases. In the case of high sensor resistance, voltage of air temperature sensor signal circuit detected by ECU is high. With decrease of sensor resistance, voltage of air temperature sensor signal circuit detected by ECU reduces. In the case of too low detected air temperature signal voltage by ECU (it is indicated that temperature is too high) or too high signal voltage (it is indicated that temperature is too low), DTC for this occurs.

Differences among temperature, resistance and voltage are shown as the table below:

Temperature	Temperature Sensor Resistance	Temperature Sensor Signal Voltage
Low	High	High
High	Low	Low

Diagnosis Hint: Test air temperature sensor under different temperatures for evaluation of sensor errors. In the case of sensor error, there will be control performance fault. Lay the engine up for one night, D-value between air temperature sensor and engine coolant temperature sensor displayed values should be within 3°C (5°F). Please refer to “Temperature and Resistance”. In the case of too high resistance of temperature sensor signal circuit or low reference voltage circuit, DTC may not occur.

Check for the following conditions:

Check ECU harness connector for poor contact between ECU and temperature sensor

− Terminal looseness

− Poor fit of matching parts

− Locking plate fracture

− Terminal deformation or damage

− Poor contact between terminal and wire

Downloaded from www.Manualslib.com manuals search engine

Check harness damage. If the harness seems to be normal, move relevant connector and harness for intake air temperature (IAT) sensor and check display about IAT on diagnostic tool. If display of IAT changes, it is indicated that there is fault in the part.

Fault Tree:

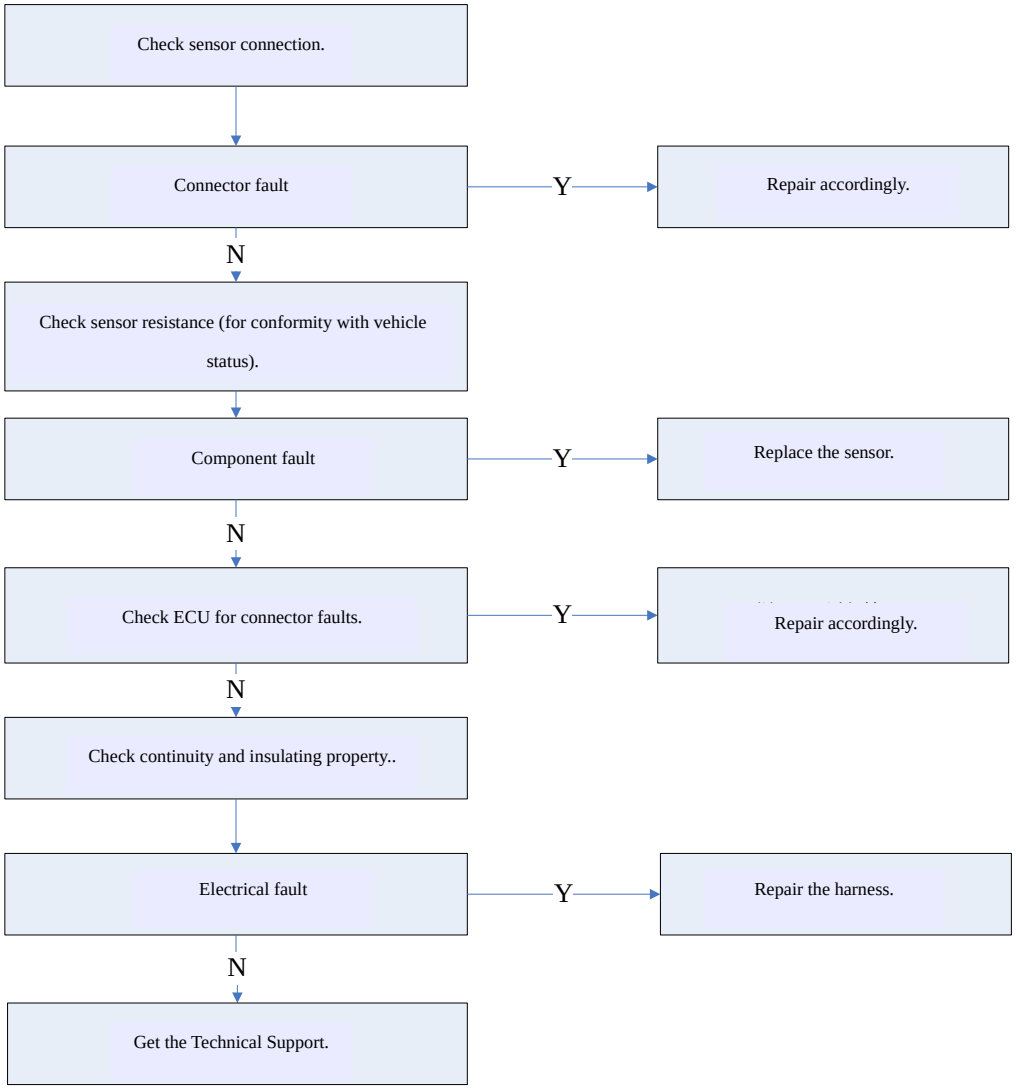

Downloaded from www.Manualslib.com manuals search engine

24.

DTC	**P0300**	**Multi-cylinder misfire**
	P0301	**The 1st cylinder misfire**
	P0302	**The 2nd cylinder misfire**
	P0303	**The 3rd cylinder misfire**
	P0304	**The 4th cylinder misfire**

Fault Description: ECU determines when engine misfire occurs with the help of information from ignition control (IC) module and camshaft position (CMP) sensors. ECU can detect single misfire via crankshaft speed change for each cylinder. In the case of some vehicle running condition, too high misfire rate will lead to three way catalytic converter (TWC) overheating. In the case of three way catalytic converter overheating, MIL will flash. If misfire rate detected by ECU is enough to make emission level to exceed mandatory standard, DTC occurs. If diagnosis operation fails in two continuous ignition cycle, control module lightens MIL. Control module records operation condition when diagnosis is failed. For the first diagnosis failure, control module will keep this information in fault record. If diagnosis failure occurs during the successive ignition cycle, control module records operation condition under diagnosis failure and writes the operation condition in frozen fault condition and updates fault record.

Diagnosis Hint: Influence factors for misfire diagnosis—In the case of misfire diagnosis, it is required that all vehicle parts are under mass production or equivalent. All changes which may influence engine crankshaft speed will interfere with correct diagnosis for misfire.

In the case of faults in components as follows, misfire diagnosis will pause to avoid incorrect diagnostic results—intake pressure/throttle position rationality fault; low voltage or open circuit of intake pressure sensor circuit; high voltage of intake pressure sensor circuit; low voltage or open circuit of coolant temperature sensor circuit; high voltage of coolant temperature sensor circuit; high voltage of throttle position sensor; low voltage of throttle position sensor; signal interference of crankshaft position sensor circuit; no signals in crankshaft position sensor circuit; no signals in camshaft position sensor circuit; camshaft position sensor rationality fault; high voltage or open circuit of intake air temperature sensor circuit; low voltage of intake air temperature sensor circuit; no signals in vehicle speed sensor.

Severe vibration which is not caused by engine may lead to setting fault (vibration source may lead to wears or damages to brake discs with different thicknesses and additional drive belts).

Downloaded from www.Manualslib.com manuals search engine

Fault Tree:

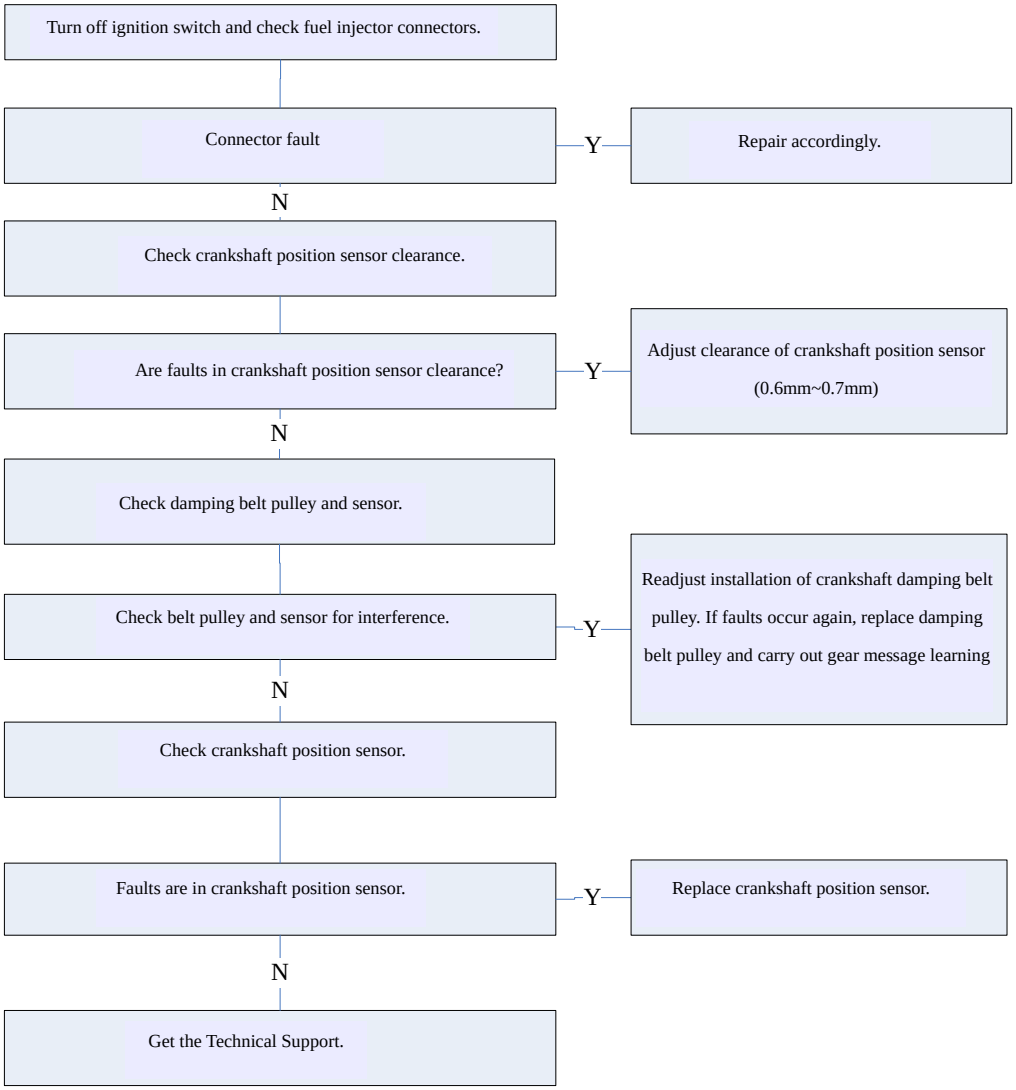

Downloaded from www.Manualslib.com manuals search engine

25.

DTC	**P0401**	**Actual fresh air inflow is larger than target air inflow set by EGR system.**
	P0402	**Actual fresh air inflow is smaller than target air inflow set by EGR system.**
	P0403	**ECU internal drive module of EGR valve actuator control wire is overheated.**
	P0404	**EGR valve actuator control wire is open.**
	P0405	**Voltage of EGR valve position sensor is below the lower limit (Connection is short to ground).**
	P0406	**Voltage of EGR valve position sensor is above the upper limit (Connection is open short to high level).**
	P0489	**EGR valve actuator control wire is open.**
	P0490	**EGR valve actuator control wire is short to high level.**

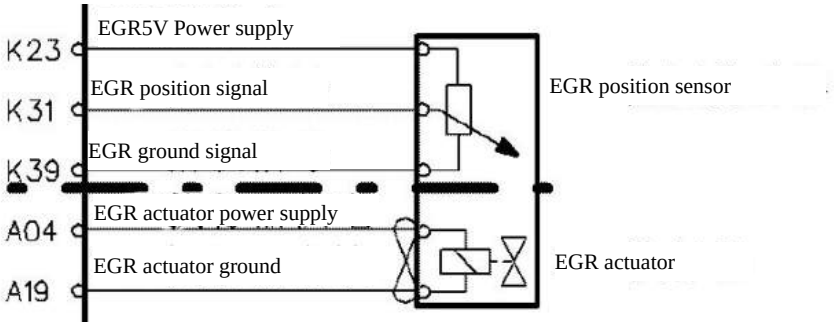

Fault Description: Exhaust gas recirculation system is applied in reduction of Nitrogen oxides emission due to high temperature combustion. Main component of the system is electronic control exhaust gas recirculation valve. Exhaust gas recirculation valve delivers a small amount of exhaust gas into intake manifold to reduce combustion temperature. Recirculation gas flow is controlled by ECU according to changes in engine load. In the case of deceleration, gas flow test for exhaust gas recirculation (EGR) system is carried out by ECU. Therefore, ECU gives a transient command to open exhaust gas recirculation valve and simultaneously monitors signals of intake manifold air pressure (MAP) sensor and exhaust gas recirculation position sensor. In the case of inconformity of intake manifold absolute pressure signals with exhaust gas recirculation valve spool shaft position, ECU records measured D-value of intake manifold absolute pressure and adjust calibrated failure counter to failure technical threshold value. For error quantities of detected exhaust gas recirculation flow are different, required test times for exhaust gas recirculation flow concerned excessive failure technical threshold value of may be different, too. When ECU detects incorrect control signals, DTC occurs.

Diagnosis Hint: Carry out inspection to engine control system; check engine for historical faults; check exhaust gas recirculation system for faults as follows—vacuum leaks between exhaust gas recirculation valve and intake manifold. In the case of carbon deposition or exhaust gas noise around component faying surface, it is indicated there is external leakage. Check passage and exhaust gas recirculation valve for clogging; check exhaust system for relevant faults (such as leakage due to exhaust component damage, clogging due to excessive back pressure and too low engine vacuum and etc.); finally, carry out inspection to mechanical system.

Downloaded from www.Manualslib.com manuals search engine

Terminal	ECU	
	K23	EGR position sensor 5V power supply
	K31	EGR position sensor position signal
	K39	EGR position sensor ground
	A04	EGR actuator power supply
	A19	EGR actuator ground

Downloaded from www.Manualslib.com manuals search engine

Fault Tree:

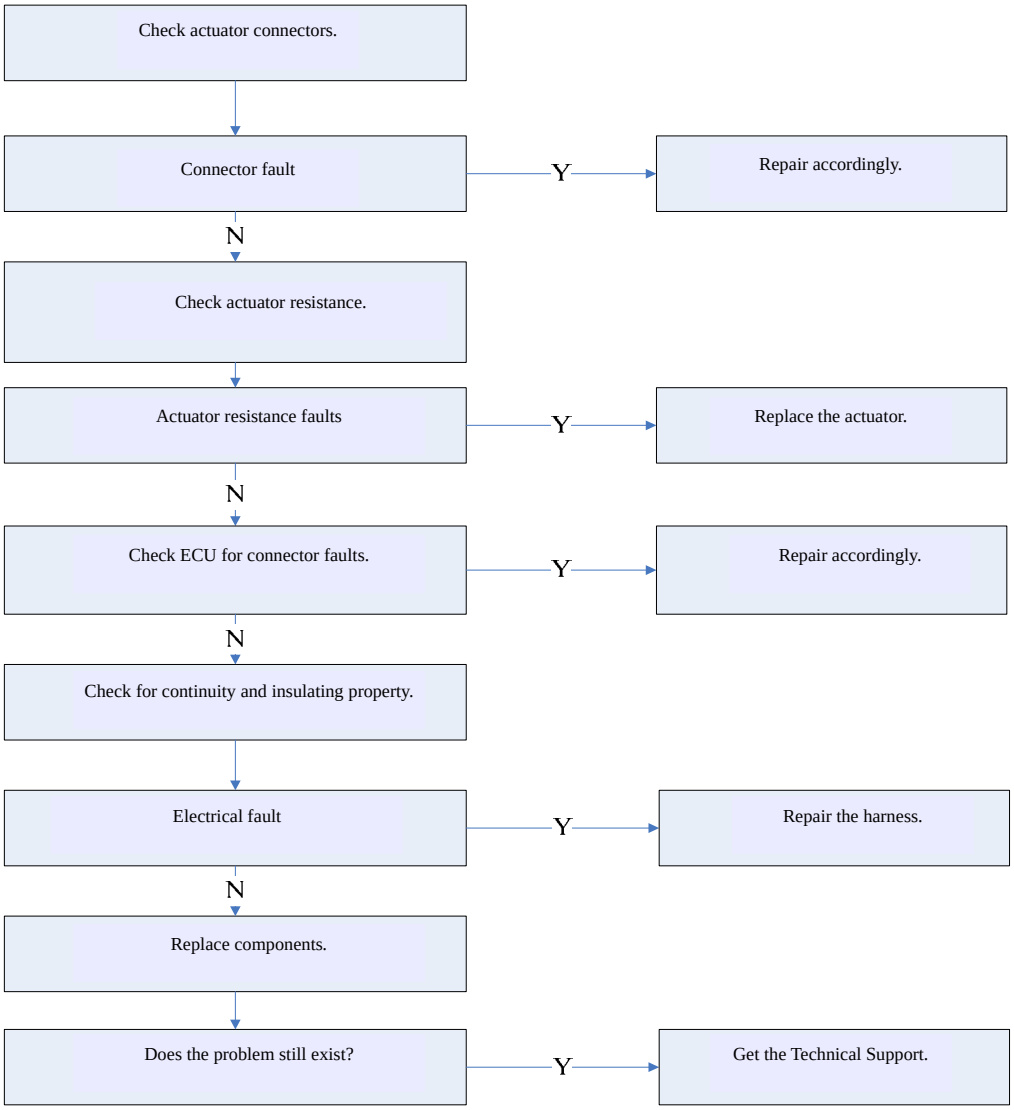

Downloaded from www.Manualslib.com manuals search engine

26.

DTC	**P0480**	**ECU Fan I control wire is open**
	P0481	**ECU Fan II control wire is open.**
	P0483	**ECU Fan I control wire internal drive module is overheated.**
	P0484	**ECU Fan II control wire internal drive module is overheated.**
	P0691	ECU Fan I control wire is short to ground.
	P0692	ECU Fan I control wire is short to high level.
	P0693	**ECU Fan II control wire is short to ground.**
	P0694	**ECU Fan II control wire is short to high level.**

Fault Description: ECU provides low-speed relay with grounding via so-called “drive” internal solid component in order to control cooling fan low speed operation. For cooling fan high speed operation, ECU adopts the method of high speed and S/P replay control circuit grounding with simultaneous low-speed control circuit grounding. Battery positive voltage is provided to low-speed, high-speed and S/P fan relays. When ECU commands fan relay to be connected, control circuit voltage is low level which is close to 0V. When ECU commands fan relay to be disconnected, control circuit voltage should be high level which is close to battery voltage. ECU monitors relay control circuit for conditions as follows:

It is short to ground.

It is short to voltage.

It is open.

When ECU detects incorrect voltage in low-speed or high-speed drive circuit, DTC occurs and corresponding drive will stop operating.

Cooling Fan Relay I control circuit controls low-speed cooling fan relay.

Cooling Fan Relay II control circuit controls high-speed cooling fan relay.

Diagnosis Hint: Check harness for intermittency and good contact.

Prior to maintenance, remove all fragments from connector surface. Check connector pads for correct installation to prevent contamination from entering prior to diagnosis and component replacement.

- Poor terminal connection—Check harness connectors for looseness, mismatching, retainer damage, improper shape or damage and connection failure with wires. Apply corresponding matching terminals for test of proper tension.
- Harness damage—Check wire harness for damage. In the case of no harness faults, move relevant connectors and wire harness and observe display of fault diagnostic apparatus. Fault diagnostic apparatus displays changes to indicate fault positions.
- Check ECU and engine ground connection for reliability and cleanness. If it is determined that DTC is an intermittent fault, please refer to Fault Record to check the time of last DTC occurrence.

Downloaded from www.Manualslib.com manuals search engine

Fault Tree:

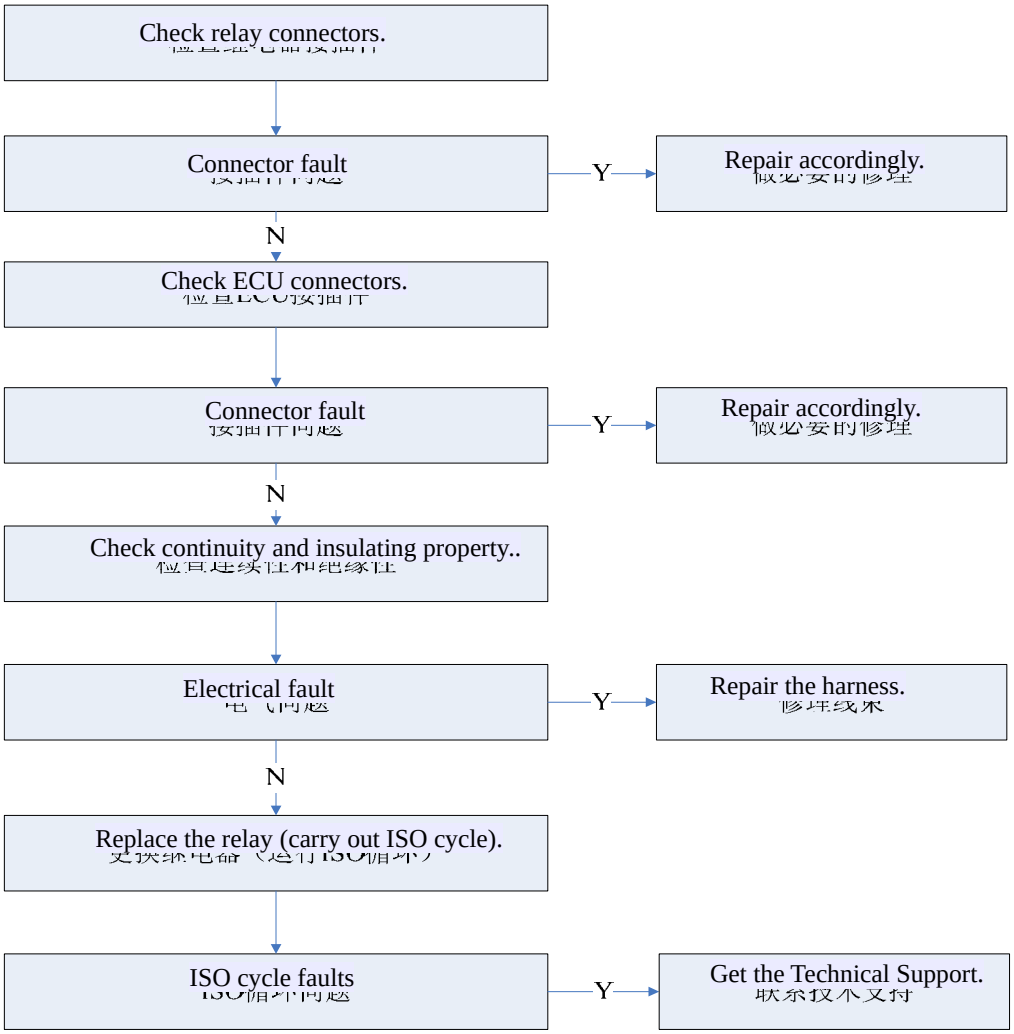

Downloaded from www.Manualslib.com manuals search engine

27.

DTC	**P0487**	**Throttle valve actuator control wire is open.**
	P0488	**ECU internal drive module of throttle valve actuator is overheated.**
	P2141	**Throttle valve actuator control wire is short to ground.**
	P2142	Throttle valve actuator control wire is short to high level.

Fault Description: ECU is the control center for throttle valve actuator control system. ECU can judge driver's intention and then calculate corresponding throttle valve response. ECU realizes throttle valve positioning via providing throttle valve actuator control motor with pulse width modulation (PWM) voltage. Throttle valve actuator control system adopts circuits as follows:

Motor control 1

Motor control 2

Besides, two processors are applied in throttle valve actuator control system data monitoring. These two processors are located in ECU, testing data of each other to prove correctness of throttle valve position.

Diagnosis Hint: Check for connection and disconnection faults or seizures due to temperature. Under extremely hot or cold condition, existed contaminations or freeze may lead to unsmooth component movement.

If it is an intermittent fault, the possible causes may be poor contact, worn wire insulating layer or damaged wire in insulating layer.

Check for the following conditions:

- Poor contact of ECU or exhaust brake valve—Check harness connectors.

– Terminal looseness

– Poor fit of matching parts

–Locking plate fracture

–Terminal deformation or damage

–Poor contact between terminal and wire

- Harness damage—Check harness for damage.

Downloaded from www.Manualslib.com manuals search engine

Fault Tree:

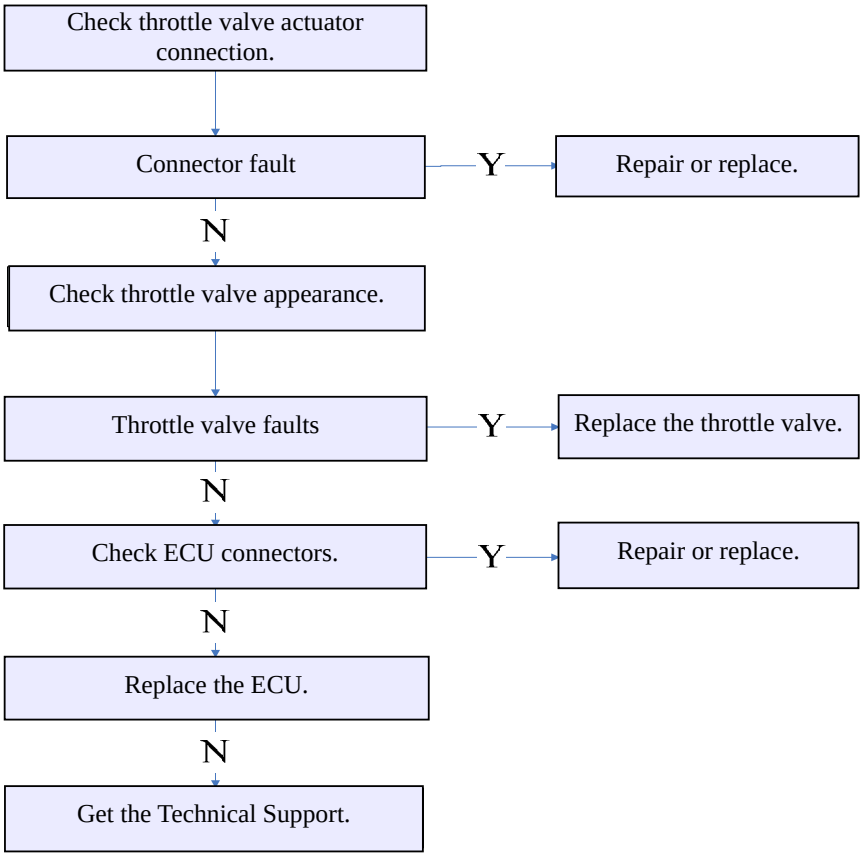

Downloaded from www.Manualslib.com manuals search engine

28.

DTC	**P0615**	**ECU starting motor control wire is open or drive module is overheated.**
	P0616	**ECU starting motor control wire is short to ground.**
	P0617	**ECU starting motor control wire is short to high level.**

Fault Description: ECU provides starting motor with grounding via so-called “drive” internal solid component in order to control starting motor operation. Under starting motor control circuit command, when fault diagnostic apparatus is connected, it is indicated that starting motor circuit is grounded via control module in order to provide starting motor with voltage; when fault diagnostic apparatus is disconnected, it is indicated that starting motor circuit is not connected via control module command currently. ECU monitors starting motor circuit for conditions as follows:

It is short to ground.

It is short to voltage.

It is open.

When ECU detects incorrect voltage signals, DTC occurs and corresponding drive will stop operating.

Diagnosis Hint: Check harness for intermittency and good contact.

Prior to component maintenance, remove all fragments from connector surface. Check connector pads for correct installation to prevent contamination from entering prior to diagnosis and component replacement.

- Poor terminal connection—Check harness connectors for looseness, mismatching, retainer damage, improper shape or damage and connection failure with wires. Apply corresponding matching terminals for test of proper tension.
- Harness damage—Check wire harness for damage. In the case of no harness faults, move relevant connectors and wire harness and observe display of fault diagnostic apparatus. Fault diagnostic apparatus displays changes to indicate fault positions.
- Check ECU and engine ground connection for reliability and cleanness. If it is determined that DTC is an intermittent fault, please refer to Fault Record to check the time of last DTC occurrence.

Downloaded from www.Manualslib.com manuals search engine

Fault Tree:

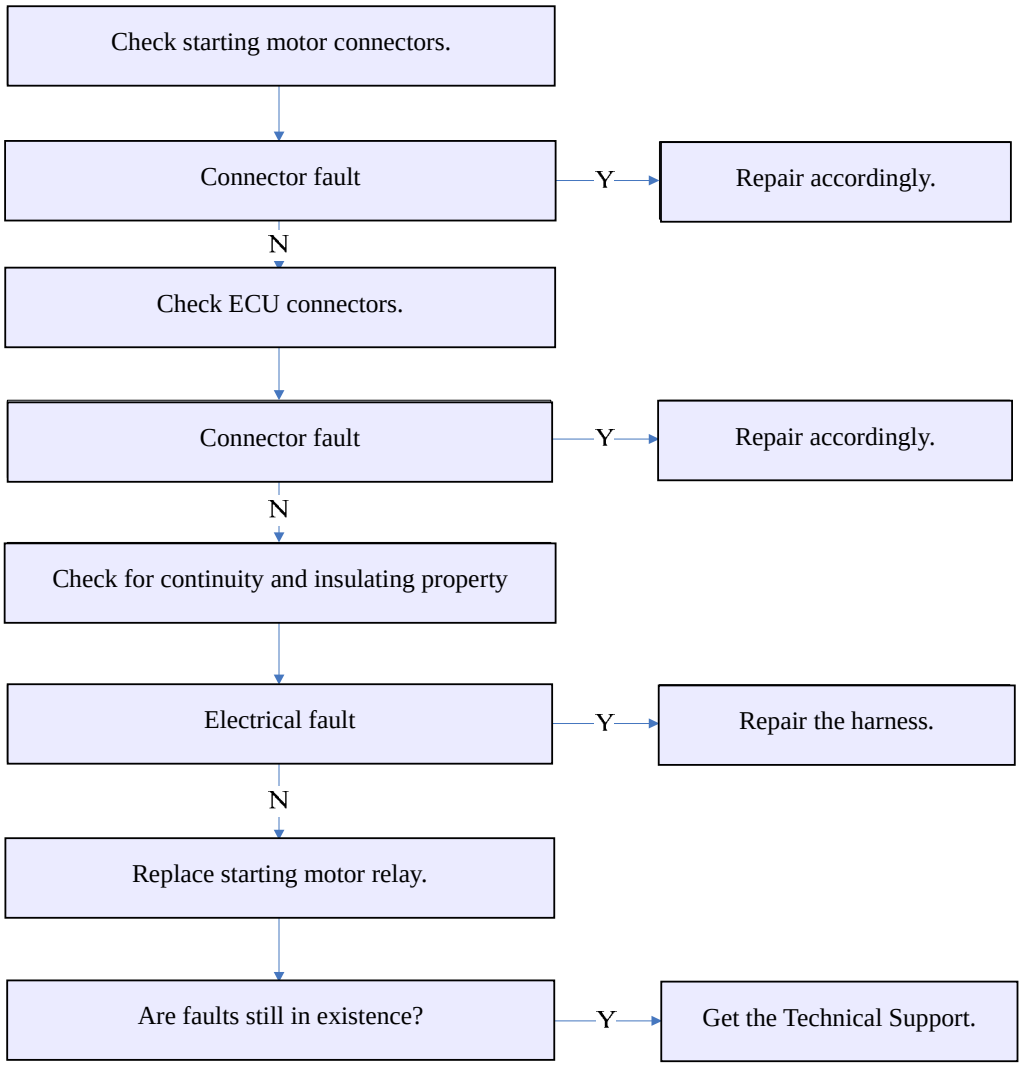

Downloaded from www.Manualslib.com manuals search engine

29.

DTC	**P1605**	**ECU instrument panel engine speed output connecting wire is short to high level.**
	P1606	**ECU instrument panel engine speed output connecting wire is short to ground.**
	P1607	**ECU instrument panel engine speed output connecting wire is open.**

Fault Description: Vehicle speed sensor (VSS) provides ECU with vehicle speed information. When rotor teeth on transmission output shaft go through sensor magnetic field, vehicle speed sensor generates signal voltage. Frequency of this signal voltage increases with vehicle speed increase. ECU transforms the signal voltage into vehicle speed and displays the speed on instrument panel via control circuit. ECU determines vehicle operation condition with vehicle speed signals in order to guide driver operation. ECU monitors the circuit between ECU and instrument panel for conditions as follows:

It is short to ground.

It is short to voltage.

It is open.

When ECU detects incorrect voltage signals, DTC occurs

Diagnosis Hint: Check harness for intermittency and good contact.

Prior to component maintenance, remove all fragments from connector surface. Check connector pads for correct installation to prevent contamination from entering prior to diagnosis and component replacement.

- Poor terminal connection—Check harness connectors for looseness, mismatching, retainer damage, improper shape or damage and connection failure with wires. Apply corresponding matching terminals for test of proper tension.
- Harness damage—Check wire harness for damage. In the case of no harness faults, move relevant connectors and wire harness and observe display of fault diagnostic apparatus. Fault diagnostic apparatus displays changes to indicate fault positions.
- Check ECU and engine ground connection for reliability and cleanness. If it is determined that DTC is an intermittent fault, please refer to Fault Record to check the time of last DTC occurrence.

Downloaded from www.Manualslib.com manuals search engine

Fault Tree:

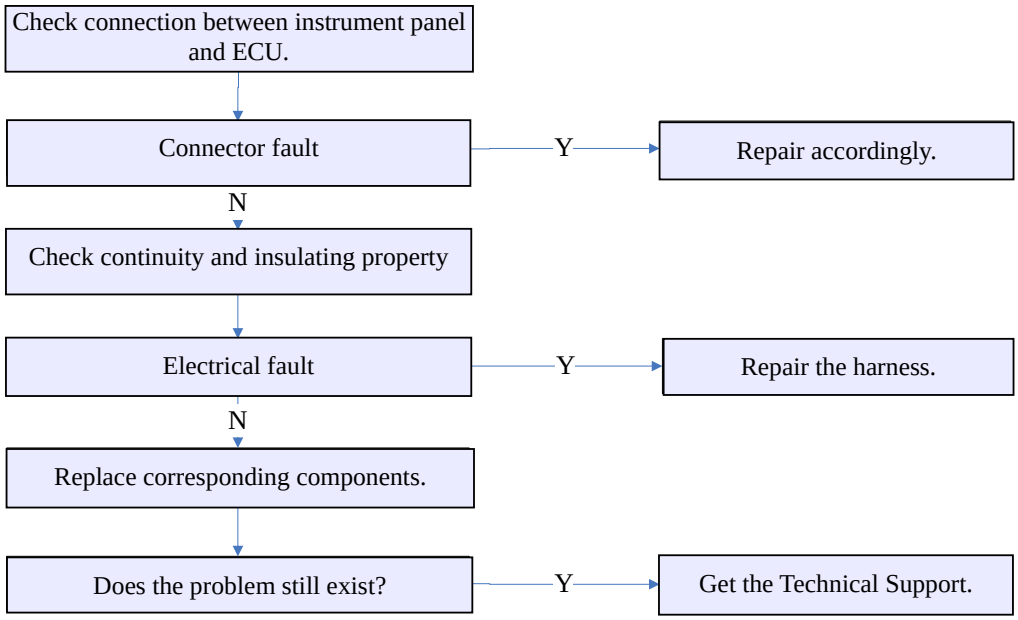

Downloaded from www.Manualslib.com manuals search engine

30.

DTC	**P1608**	**ECU instrument panel preheating indicator lamp output connecting wire is short to high level.**
	P1609	**ECU instrument panel preheating indicator lamp output connecting wire is short to ground.**
	P160A	**ECU instrument panel preheating indicator lamp output connecting wire is open.**
	P160B	**ECU instrument panel preheating indicator lamp output wire drive module is overheated.**

Fault Description: During glow plug operation, preheater relay will send a signal to ECU. Then, ECU sends command to preheating indicator lamp on instrument panel via control circuit. Driver carries out the next operation via observing preheating indicator lamp status. ECU monitors the circuit between ECU and instrument panel for conditions as follows:

It is short to ground.

It is short to voltage.

It is open.

When ECU detects incorrect voltage signals, DTC occurs.

Diagnosis Hint: Check harness for intermittency and good contact.

Prior to component maintenance, remove all fragments from connector surface. Check connector pads for correct installation to prevent contamination from entering prior to diagnosis and component replacement.

- Poor terminal connection—Check harness connectors for looseness, mismatching, retainer damage, improper shape or damage and connection failure with wires. Apply corresponding matching terminals for test of proper tension.
- Harness damage—Check wire harness for damage. In the case of no harness faults, move relevant connectors and wire harness and observe display of fault diagnostic apparatus. Fault diagnostic apparatus displays changes to indicate fault positions.
- Check ECU and engine ground connection for reliability and cleanness. If it is determined that DTC is an intermittent fault, please refer to Fault Record to check the time of last DTC occurrence.

Terminal	ECU	
	K92	Preheating time indicator lamp

Downloaded from www.Manualslib.com manuals search engine

Fault Tree:

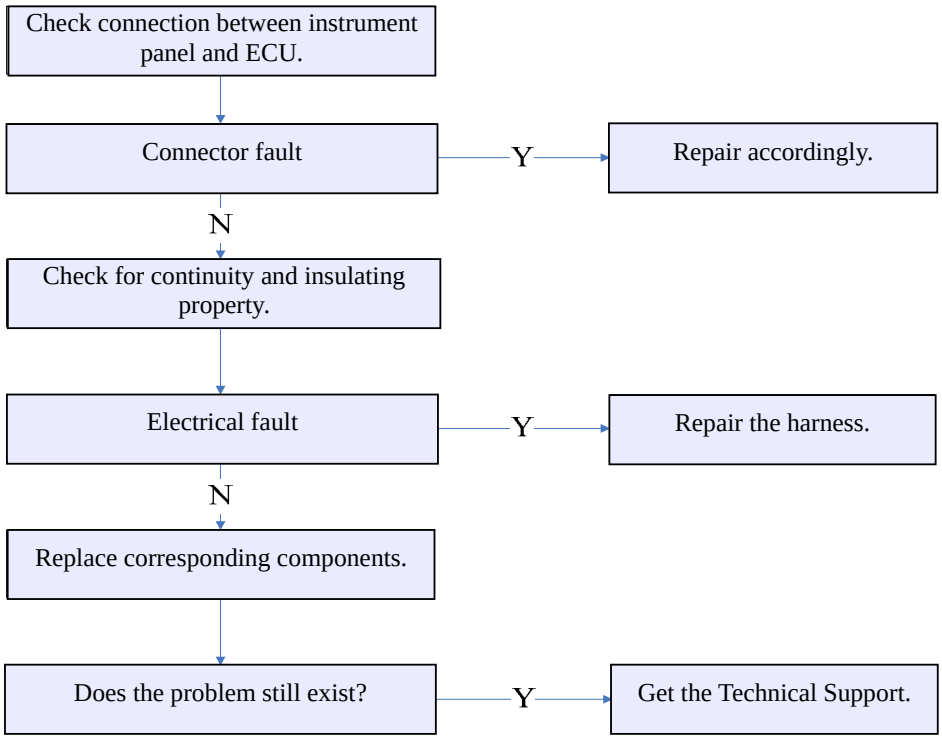

Downloaded from www.Manualslib.com manuals search engine

31.

DTC	P2228	**Atmosphere pressure sensor output voltage is too low.**
	P2229	**Atmosphere pressure sensor output voltage is too high.**

Fault Description: Atmosphere pressure indicates connection of ignition switch. When engine stops operation, control module calculates atmosphere pressure with signals sent by intake manifold absolute pressure sensor. Intake manifold absolute pressure sensor responses to internal pressure changes of intake manifold and the pressure changes according to different engine loads. Intake manifold absolute pressure sensor possesses circuits as follows:

5V reference voltage circuit

Low reference voltage circuit

Intake manifold absolute pressure sensor signal circuit

ECU provides intake manifold absolute pressure sensor with 5V voltage via 5V reference voltage circuit. ECU supplies grounding via low reference voltage circuit and intake manifold absolute pressure sensor provides ECU with a signal via signal circuit. This signal is related to intake manifold internal pressure changes. When ignition switch is connected and engine is shut down, intake manifold absolute pressure sensor displays signals of atmosphere pressure. In the case of engine running with wide open throttle, reading of atmosphere pressure will be renewed. ECU determines whether voltage exceeds normal range via detecting intake manifold absolute pressure sensor signals. When intake manifold absolute pressure sensor displays atmosphere pressure, if sensor signal voltage is not in specified range, DTC occurs.

Diagnosis Hint: When ignition switch is connected and engine is shut down, intake manifold pressure equals to atmosphere pressure and signal voltage is low level. ECU takes this information as vehicle elevation indication. Moreover, to make comparison between this reading with that of an intact vehicle which possesses the same sensor is a good method for sensor accuracy inspection. D-value of two readings should not exceed 0.4V. It is necessary to carry out comprehensive inspection to pressure source of supercharger pressure sensor in order to check intake system for clogging.

In the case of engine start, intake manifold absolute pressure sensor can detect any change of manifold pressure. This test is carried out to determine sensor lag at a certain value.

In the case of normal intake manifold absolute pressure sensor, it will make rapid response to changes of acceleration pedal positions and it should not be “lagged” or slower than changes of acceleration pedal position.

Downloaded from www.Manualslib.com manuals search engine

Fault Tree:

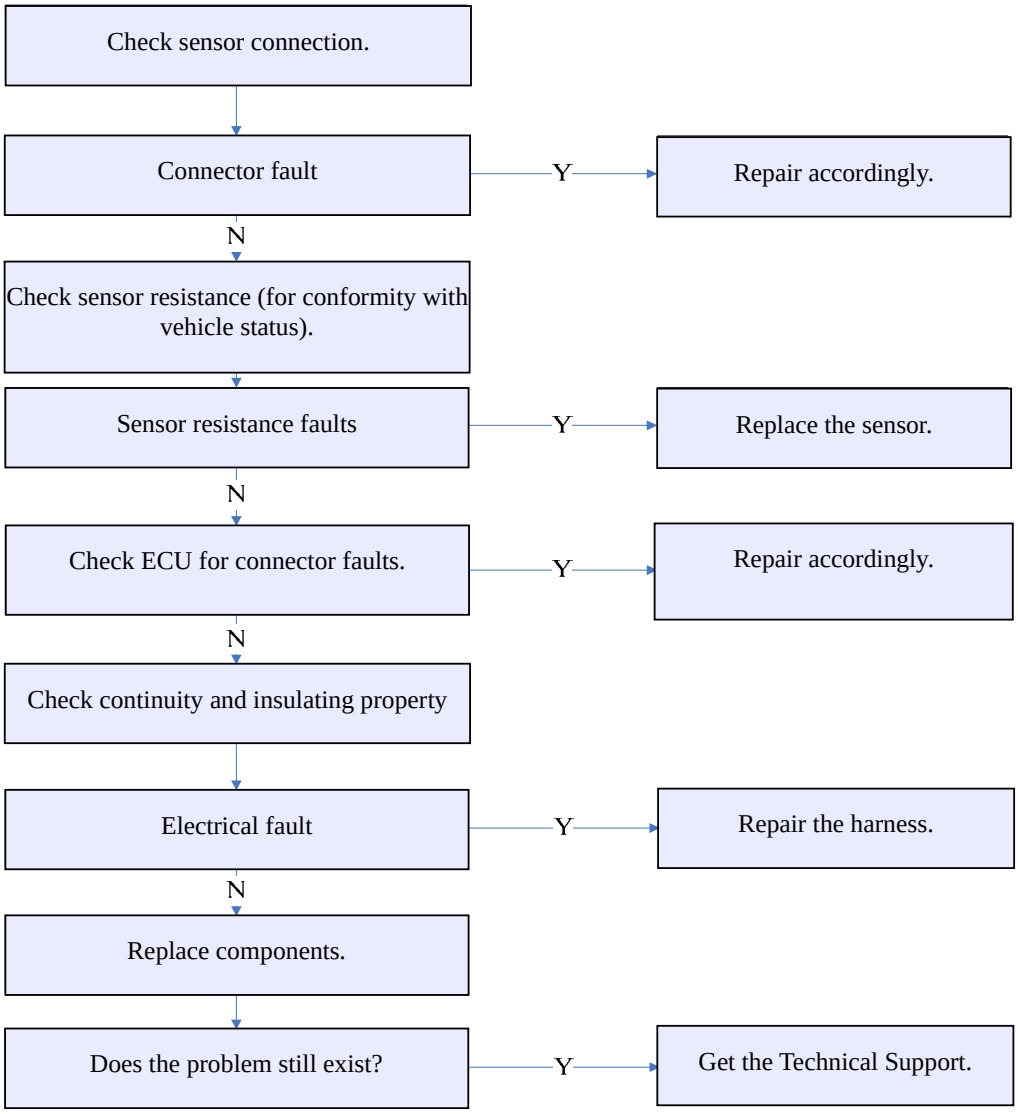

Downloaded from www.Manualslib.com manuals search engine

32.

DTC	**P2264**	**There are faults in water level sensor of diesel filter oil-water separator.**
	P2267	**Water in diesel filter oil-water separator is overflowed.**

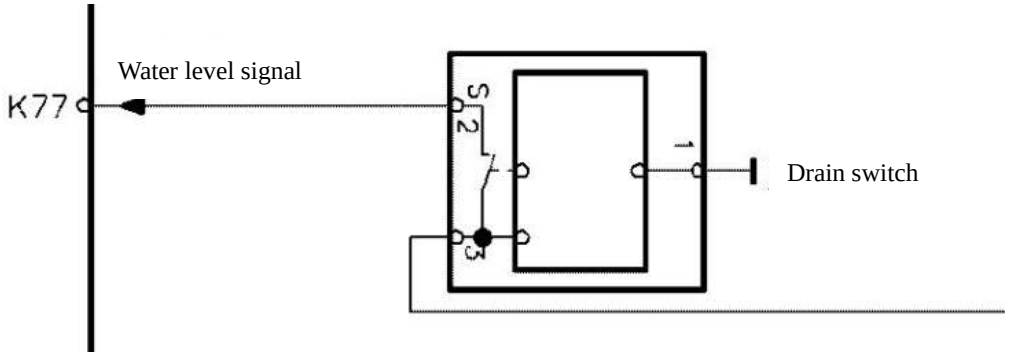

Fault Description: Main function of oil-water separator is to separate moisture from oil in fuel to ensure combustion quality of fuel. When fuel oil goes through oil-water separator, oil content and moisture content in the fuel are separated. For water density is larger than that of oil, separated water is stored in “water tank” under filter element. Fuel filter lower water level sensor is applied in water level detection in “water tank”. When accumulated water reaches certain level, warning lamp on instrument panel will be lightened to remind driver to carry out draining. In the case of delayed water drainage, DTC occurs.

Diagnosis Hint: In the case of DTC existence, it is necessary to check water level first of all. Normally, carry out water drainage for every 8000-10000km engine running. For oil quality problems, water drainage should be carried out ahead of time for fuel which contains much moisture. Besides, test relevant connectors for this diagnostic procedure for short circuit of terminals or poor contact of wire, avoiding water level sensor signal distortions caused by short circuit or poor contact.

Downloaded from www.Manualslib.com manuals search engine

Fault Tree:

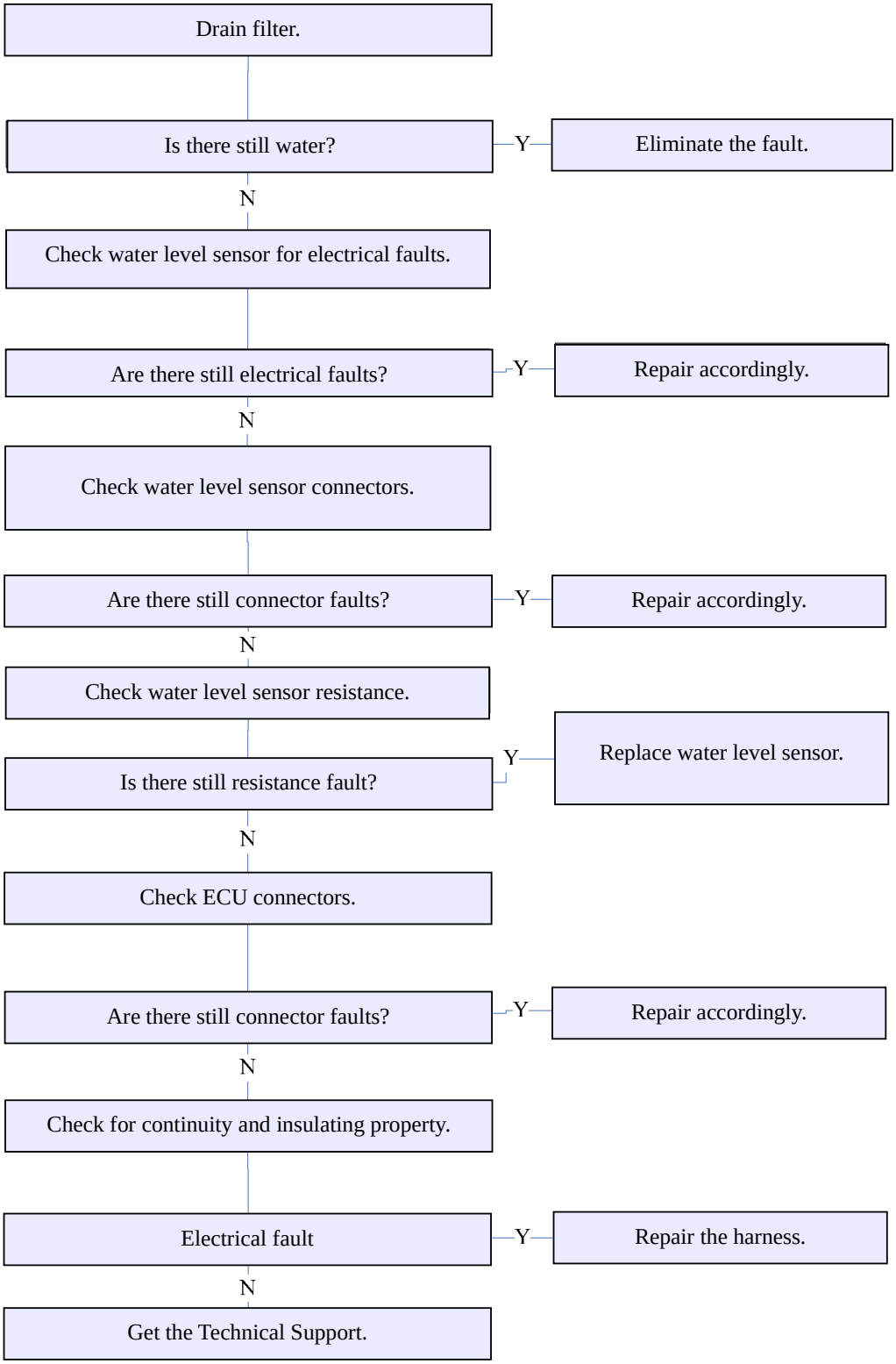

Downloaded from www.Manualslib.com manuals search engine

33.

DTC	**P2299**	**Depress accelerator pedal and brake pedal at the same time.**

Fault Description: Accelerator pedal assembly consists of two accelerator pedal position (APP) sensors. Accelerator pedal position sensors are installed on pedal assembly and they are not maintainable. When driver depresses accelerator pedal, air inflow of cylinder is increased and ECU increases fuel injector pulse width in order to supply additional fuel during acceleration process for engine demand. Brake switch is a normally open one. When brake pedal is depressed, this switch is closed in order to provide TCU with voltage for brake application. In the case of misoperation of driver during driving, brake system will be locked after depressing brake pedal and brake pedal can not return to its original position. Under such condition, depressing accelerator pedal will lead to DTC occurrence due to conflict between acceleration and brake signals in the case of engine braking status. In addition, improper maintenance or ECU control circuit failures will lead to such faults.

Diagnosis Hint: Check brake system and acceleration system for stuck pedal position without pedal returns. Check the circuit between ECU and components for good contact of connection and good harness insulating property. For connection test for ECU and components, diagnostic connectors should be applied.

Downloaded from www.Manualslib.com manuals search engine

Fault Tree:

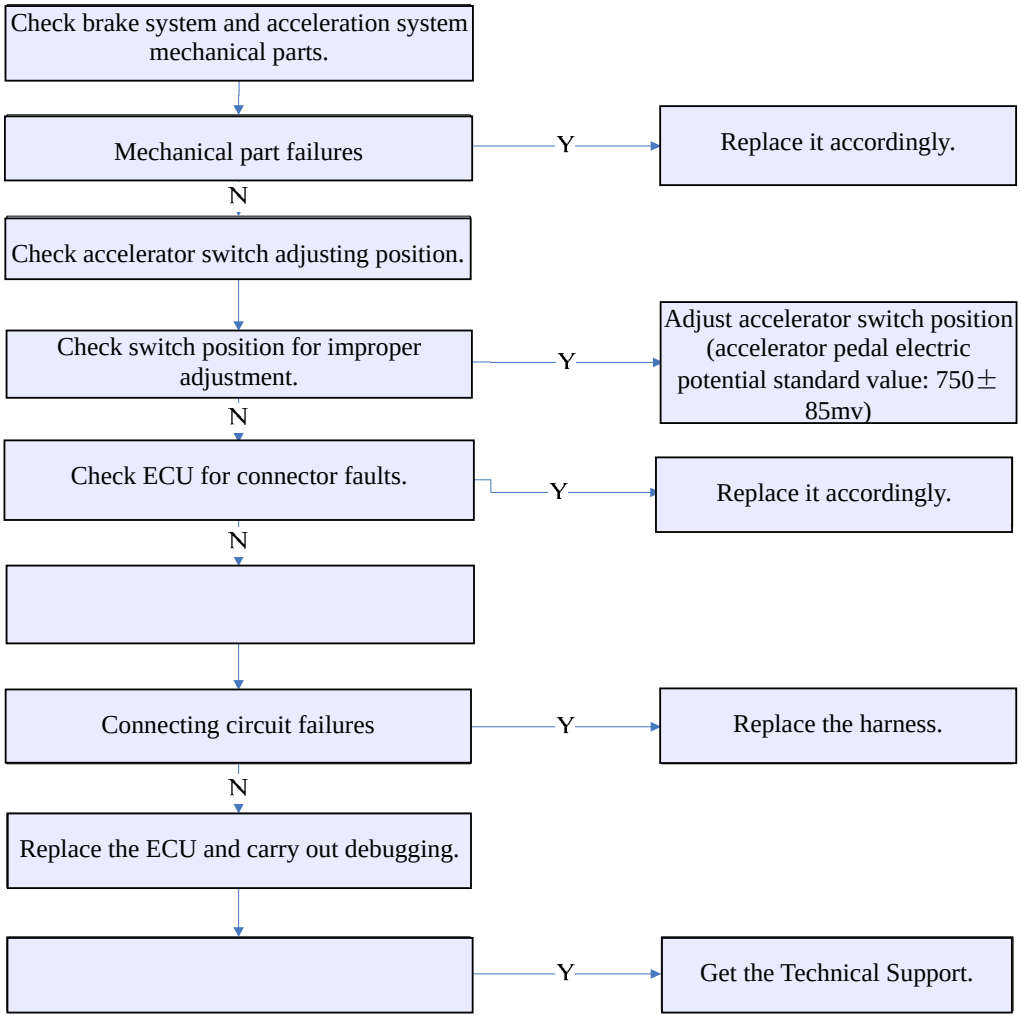

Downloaded from www.Manualslib.com manuals search engine

34.

DTC	**U0167**	**In the case of the maximum fault reading, there are EEPROM errors/ICM time-out communication failures.**

Fault Description: They are mainly taken as integrity failures for ECU internal microprocessor, being applied in determination of ECU programming procedure implementation. In the case of engine shutdown and ignition switch connection, ECU carries out self-diagnosis. In the case of diagnosis failure, control module records operation condition under diagnosis failure and stores this information in “Fault Record”, DTC occurs. During engine operation, when there is deviation between ECU detected signals and standard signals, the fault will be stored and expressed as DTC via internal communication module of ECU. In the case of external signal intrusion, this will lead to system disorder and DTC occurs. When various faults occur at the same time under the same operation condition, there will be multiple DTCs. For there is a process for ECU response to each fault, ECU response time will be longer in the case of multiple simultaneous faults in existence. During response process, DTC may occur due to ECU internal communication errors or hardware faults.

Diagnosis Hint: In the case of fault occurrence, relevant test can be carried out after ECU replacement for possible fault cause may be too long ECU internal response time. Check ECU circuit to verify whether it is circuit failure that leads to fault occurrence.

Downloaded from www.Manualslib.com manuals search engine

Fault Tree:

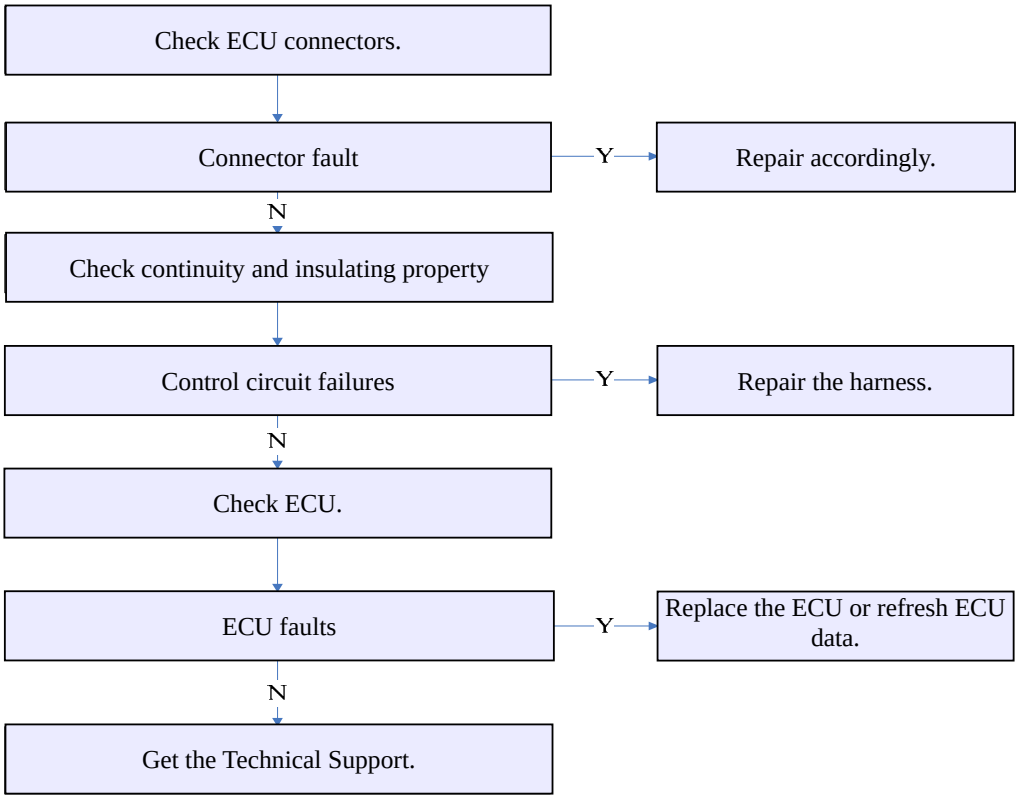

Downloaded from www.Manualslib.com manuals search engine

35.

DTC	**P0045**	**Supercharger actuator control wire is open.**
	P0046	**ECU internal drive module of supercharger actuator control wire is overheated.**
	P0047	**Supercharger actuator control wire is short to ground.**
	P0048	**Supercharger actuator control wire is short to high level.**

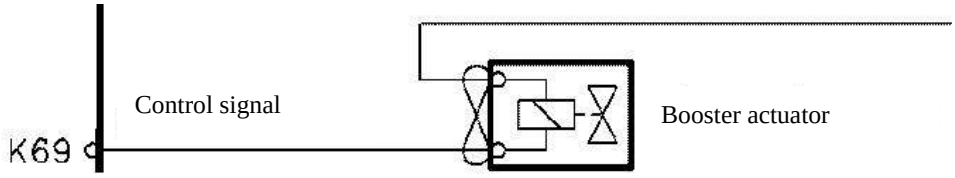

ECU is the control center fro supercharger actuator control system. ECU calculates corresponding supercharger actuator response according to engine operation condition. ECU realizes actuator positioning via providing supercharger actuator control motor with pulse width modulation voltage.

Diagnosis Hint: Check for connection and disconnection faults or seizures due to temperature. Under extremely hot or cold condition, existed contaminations or freeze may lead to unsmooth component movement.

If it is an intermittent fault, the possible causes may be poor contact, worn wire insulating layer or damaged wire in insulating layer.

Check for the following conditions:

- Poor contact of ECU or exhaust brake valve —Check harness connectors.

– Terminal looseness

– Poor fit of matching parts

–Locking plate fracture

–Terminal deformation or damage

–Poor contact between terminal and wire

- Harness damage—Check harness for damage.

Downloaded from www.Manualslib.com manuals search engine

Fault Tree:

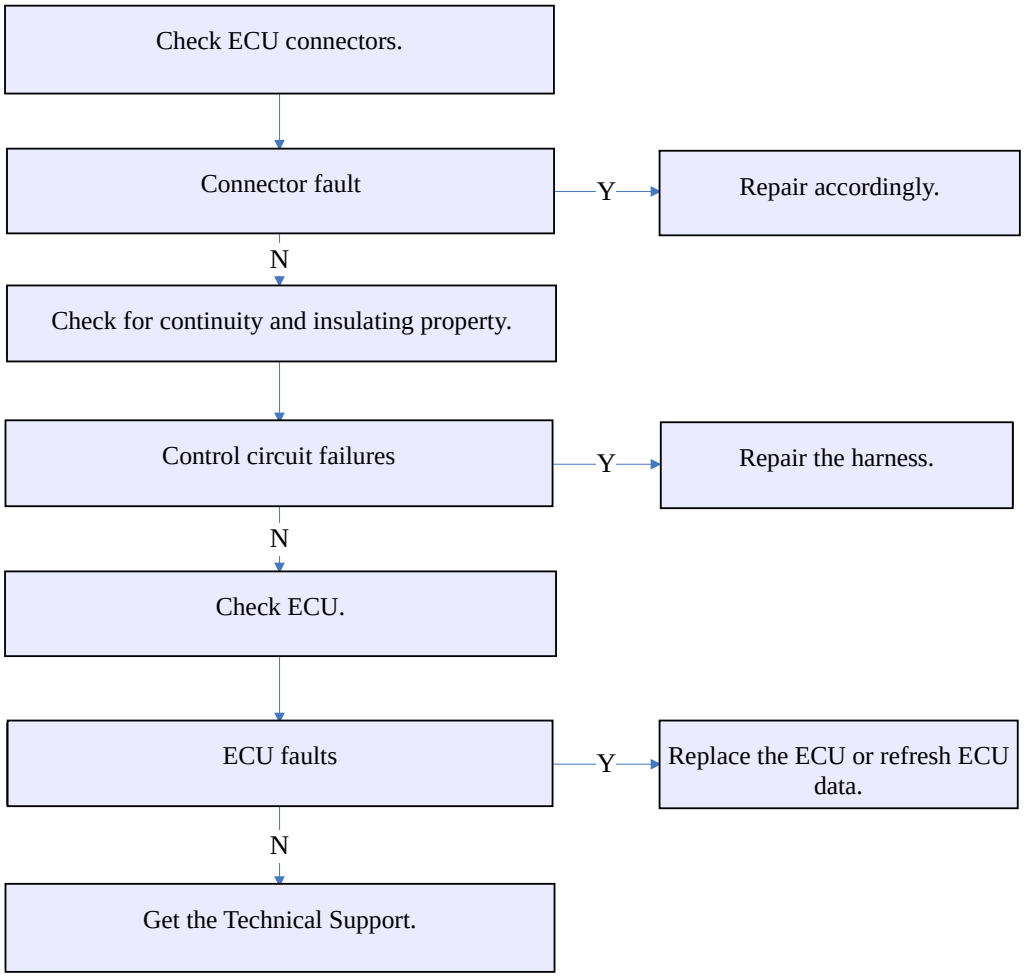

Downloaded from www.Manualslib.com manuals search engine

36.

DTC	**P1070**	**Catalytic converter is clogged.**
	P2002	**Catalytic converter is removed.**
	P2454	**Catalytic converter front and rear differential pressure is too low.**
	P2455	**Catalytic converter front and rear differential pressure is too high.**

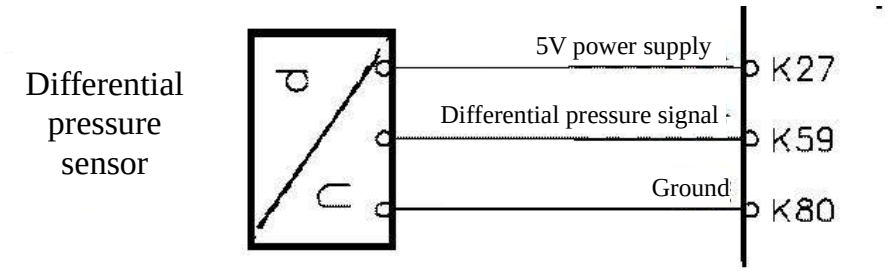

Differential pressure sensor is a Hall Effect switch. ECU provides differential pressure sensor with 5V voltage via 5V reference voltage circuit and provides the sensor with grounding via low reference voltage circuit. Differential pressure sensor provides ECU with signal voltage according to front and rear differential pressure changes of catalytic converter. ECU determines catalytic converter differential pressure with this signal voltage. Differential pressure sensor circuit is connected to ECU directly. Moreover, differential pressure sensor can be applied in determination of catalytic converter damages. Circuits between differential pressure sensor and ECU include the followings:

Differential pressure sensor high reference voltage circuit

Ground circuit

Differential pressure signal circuit

When ECU detects incorrect sensor signals or no signals, DTC occurs.

Diagnosis Hint: Poor terminal connection—Check harness connectors for looseness, mismatching, retainer damage, improper shape or damage and connection failure with wires. Apply corresponding matching terminals for test of proper tension.

Harness damage—Check wire harness for damage. In the case of no harness faults, move relevant connectors and wire harness and observe display of fault diagnostic apparatus. Fault diagnostic apparatus displays changes to indicate fault positions.

Check ECU and engine ground connection for reliability and cleanness. If it is determined that DTC is an intermittent fault, please refer to Fault Record to check the time of last DTC occurrence.

Terminal	ECU	
	K27	Differential pressure sensor power supply
	K59	Differential pressure sensor signal terminal
	K80	Ground

Downloaded from www.Manualslib.com manuals search engine

Fault Tree:

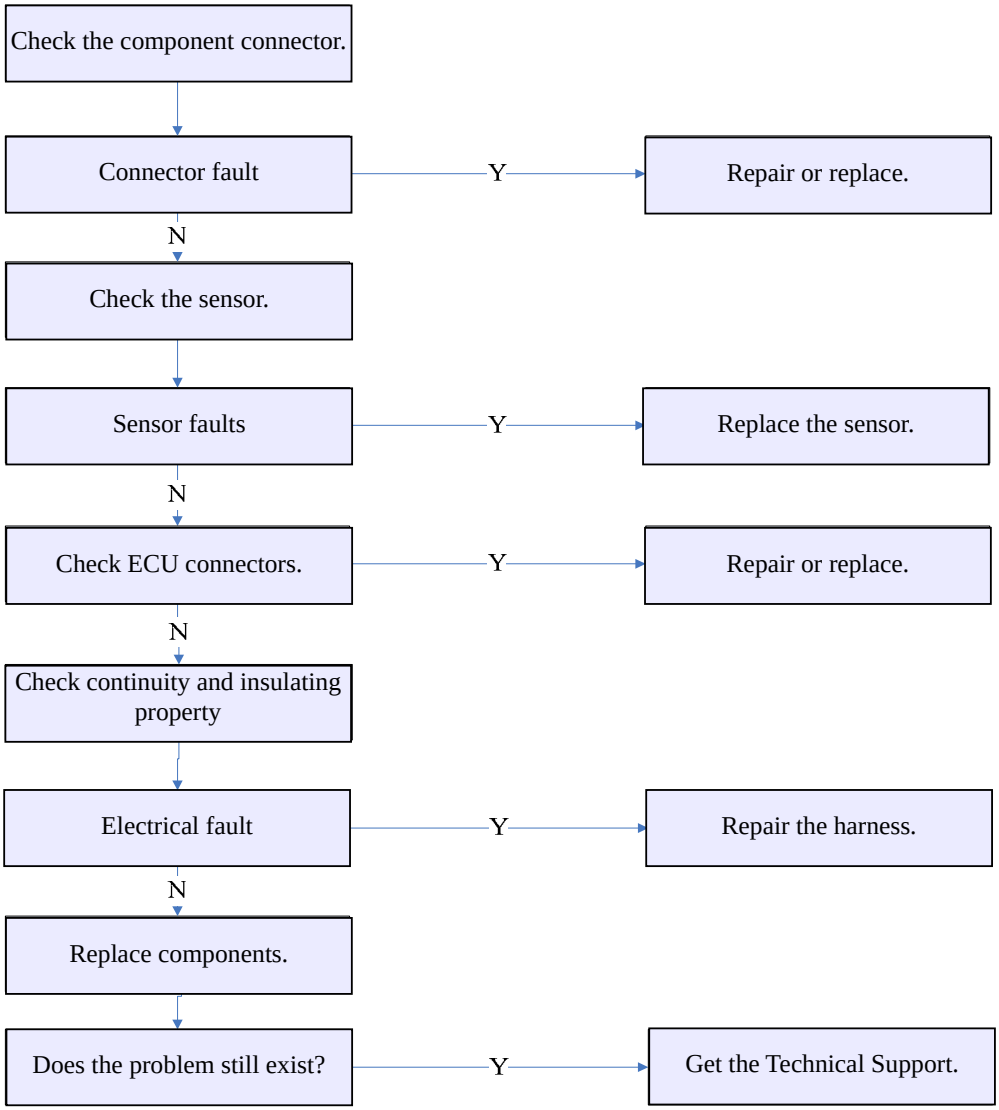

Downloaded from www.Manualslib.com manuals search engine

Preface

This SUNRAY Service Manual is hereby compiled by the Customer Service Department of JAC to help the technical service personnel correctly understand and get familiar with SUNRAY products of JAC INTERNATIONAL better and to provide them with the ability of quick repair and proper maintenance. This manual comprises five volumes: Engine Control, Engine Mechanical, Chassis, Body Electrical, and Body Accessories.

The Body Electrical Volume details the technical standards of electrical component removal/installation, test, debugging and diagnosis for SUNRAY long-wheelbase vehicles, including whole vehicle circuit diagrams, definitions of connectors and locations of ground points for SUNRAY vehicles for quicker service and maintenance of customer.

When replacement is necessary, only genuine spare parts recommended by JAC can be adopted.

No part of this manual can be reproduced or used in any form or by any mean without written permission. All Rights Reserved.

JAC INTERNATIONAL

March 2011

Downloaded from www.Manualslib.com manuals search engine

Body Electrical Volume Contents

Battery and Charging System

Battery....SC 2
Mounting Position....SC 2
Precautions....SC 3
Generator....SC 4
Overview....SC 4
Battery....SC 5
Maintenance....SC 5
Fault diagnosis....SC 7
Generator....SC 11
Fault determination....SC 11
Operating principle....SC 12
Battery....SC 14
Removal of Battery....SC 14
Installation of Battery....SC 16
Generator....SC 18
Removal of Generator....SC 18
Installation of Generator....SC 21

Instrument and Warning System

Instrument....IP 24
Mounting position....IP 24
Performance characteristics....IP 25
Instrument....IP 26
Function description....IP 26
Definitions of pins....IP 32
Instrument....IP 33
Removal of Instrument....IP 33
Instrument....IP 35
Basic parameters....IP 35

ETACS Body Computer

ETACS....ET 38
Mounting position....ET 38
Information functions....ET 39
ETACS....ET 40
System structure....ET 40
Introduction functions....ET 41
Control strategy....ET 47
Diagnosis and Service....ET 49
ETACS Pin Definition....ET 50
ETACS....ET 52
Removal of ETACS....ET 52

Downloaded from www.Manualslib.com manuals search engine

Installation of ETACS....ET 53
ETACS....ET 54
Basic parameters....ET 54

Lighting System

Lighting....LT 56
Overview....LT 56
Lighting configuration table....LT 58
Introduction to functions....LT 59
Fault diagnosis....LT 62
Removal of headlamp....LT 76
Removal of clearance lamps....LT 77
Removal of front fog lamps....LT 78
Removal of ceiling lamps....LT 79
Removal of rear tail lamps....LT 80
Removal of high-mounted brake lamp....LT 81
Removal of rear fog lamp....LT 82
Lighting System....LT 83
Basic parameters....LT 83

Wiper and Washer System

Wiper....WW 86
Mounting position....WW 87
Information functions....WW 89
Wiper....WW 91
Definitions of pins....WW 91
Troubleshooting....WW 92
Wiper....WW 95
Removal of the wiper....WW 95
Removal of the windshield washing fluid reservoir....WW 97
Removal of the Wiper washing nozzle....WW 98
Wiper....WW 99
Basic parameters....WW 99

Reversing Radar

Reversing Radar....PT 102
Mounting position sensor....PT 102
Operating principle....PT 103
Reversing Radar....PT 104
Definitions of reversing radar computer pins....PT 104
Troubleshooting....PT 106
Reversing Radar....PT 108
Removal of the reversing radar computer....PT 108
Removal of the reversing radar sensor....PT 110
Reversing Radar....PT 111
Basic parameters....PT 111

Downloaded from www.Manualslib.com manuals search engine

Audio/Video System

Radio....AV 114
Mounting position....AV 114
Introduction functions....AV 115
Precautions....AV 119
Radio....AV 121
Troubleshooting....AV 121
Radio....AV 124
Removal of Radio....AV 124
Removal of loudspeakers....AV 125
Radio....AV 127
Basic parameters....AV 127

Seat Belt

Seat Belt....SB 130
Overview....SB 130
Seat Belt....SB 131
Troubleshooting....SB 131
Seat Belt....SB 132
Removal of seat belt....SB 132
Removal of seat belt buckle lock....SB 134

Power Window

Power Window....GW 136
Installation position....GW 136
Operation Instructions....GW 137
Power Window....GW 138
Troubleshooting....GW 138
Power Window....GW 142
Removal of window regulator motor....GW 142
Removal of window regulator switch....GW 143

Electric rear-view mirro

Electric rear-view mirro....EM 148
Overview....EM 148
Electric rear-view mirro....EM 149
Removal of rear view mirror....EM 149
Removal of rear view mirror switch....EM 150

Horn

Horn....HO 152
Mounting position....HO 152
Horn....HO 153
Troubleshooting....HO 153
Horn....HO 156
Removal of Horn....HO 156

Downloaded from www.Manualslib.com manuals search engine

Air Conditioner

Air Conditioner..... AT 158
Overview..... AT 158
Precautions..... AT 159
Functional operation..... AT 162
Air Conditioner..... AT 165
Operating principle..... AT 165
Air distribution system introduction..... AT 167
Leak test..... AT 168
A/C system performance testing..... AT 169
Refrigerant recovery ..... AT 172
A/C System Performance Table..... AT 174
System Testing..... AT 176
Air Conditioner..... AT 189
Removal of front A/C..... AT 189
Removal of top evaporator tank..... AT 191
Removal of front condenser..... AT 193
Removal of bottom condenser..... AT 195
Removal of heater water tank..... AT 196
Removal of after motor..... AT 198
Removal of compressor..... AT 202
Installation of compressor assembly..... AT 204
Removal of front A/C panel..... AT 205
Removal of rear A/C panel..... AT 206
Air Conditioner..... AT 207
Basic parameters..... AT 207

Circuit Diagram

Diagram specification..... EC 210
Circuit Diagram..... EC 218
Interior fuse box..... EC 218
Exterior fuse box..... EC 219
Start charging system..... EC 220
Engine ECU electronic control unit..... EC 222
Horn..... EC 217
ABS system..... EC 228
Airbag system..... EC 229
Reversing system..... EC 230
Electric rear view mirror..... EC 231
Audio system..... EC 231
Cigarette lighter and fuel heater..... EC 233
Rear ceiling lamp and front fog lamp..... EC 234
Rear fog lamp..... EC 235
High beam and low beam..... EC 236

Downloaded from www.Manualslib.com manuals search engine

Turn signal lamp and hazard warning lamp....EC 237
Small lamp....EC 238
Central control....EC 239
Wiper and washer....EC 240
Power window....EC 241
Front A/C system....EC 242
Rear A/C system....EC 243
ETACS....EC 244
Instrument....EC 247
Self diagnosis....EC 250
Harness layout....EC 251
Main harness....EC 251
Engine compartment harness....EC 252
Left front door harness....EC 255
Right front door harness....EC 256
Left tail lamp harness....EC 257
Right tail lamp harness....EC 258
Left back door harness....EC 259
Rear loud speaker harness....EC 260
ABS harness....EC 261
Fuel tank harness....EC 262
Reversing radar harness....EC 263

Downloaded from www.Manualslib.com manuals search engine

Battery and Charging System

Applied models: SUNRAY products manufactured by JAC

Subject Page

Instruction and Operation

Battery....2
Mounting Position....2
Precautions....3
Generator....4
Overview....4

Diagnosis and Testing

Battery....5
Maintenance....5
Fault diagnosis....7
Generator....11
Fault determination....11
Operating principle....12

Removal and Installation

Battery....14
Removal of Battery....14
Installation of Battery....16
Generator....18
Removal of Generator....18
Installation of Generator....21

Downloaded from www.Manualslib.com manuals search engine

Instruction and Operation

Battery

Maintenance-free battery is adopted by Sunray series with characteristics in low electrolyte consumption. In the service life of the battery, there is no need to replenish with distilled water. Moreover, other characteristics of the battery are shock resistance, high temperature resistance and low self discharge. Therefore, the service life of this battery is twice as long as that of general batteries.

Mounting Position of Battery

The battery is mounted on the right side of the engine compartment.

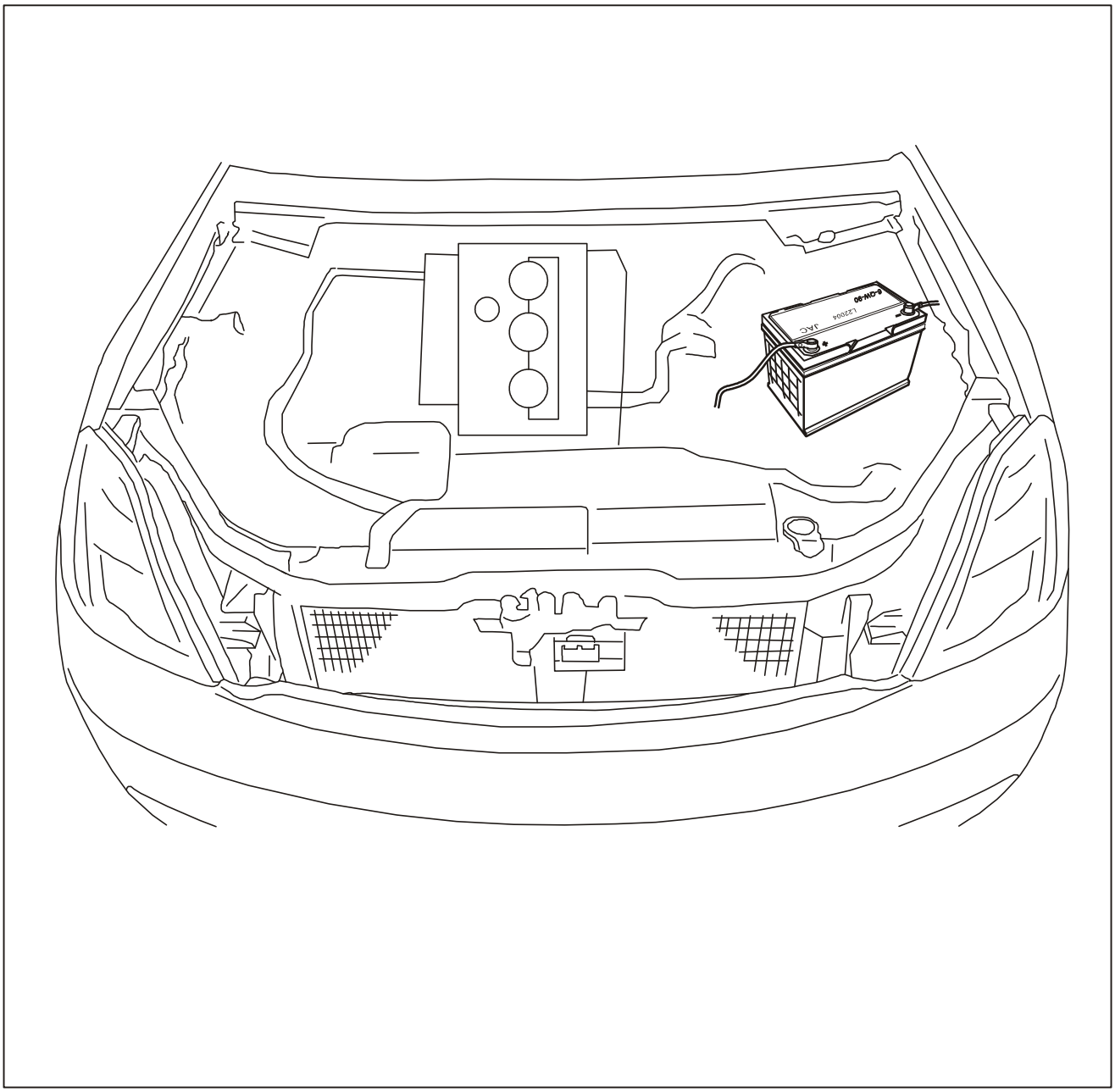

Downloaded from www.Manualslib.com manuals search engine

Instruction and Operation

Precautions of Battery

⚠ **Warning:** Keep the battery out of the reach of children. Since there is sulfuric acid in the battery, the contact of the sulfuric acid with the skin, eyes or clothes should be avoided. In the case of working close to the battery, it is necessary to protect your eyes from being hurt by the spilled out acid solution. Once the acid solution comes into contact with skin or eyes, it is necessary to wash with clean water for 15 minutes at least and go to a doctor immediately. In the case of mistakenly swallow, it is necessary to go to a doctor immediately or it may lead to personal injury.

⚠ **Warning:** In general, explosive gas may be generated by the battery. In the case of misconduct of it, it may lead to personal injury. Therefore, keep the battery out of flames, sparks or burning objects. In the case of battery charging or working close to the battery, it is necessary to protect your face and eyes and maintain good ventilation. Please follow relevant instructions or it may lead to personal injury.

⚠ **Warning:** In the case of mistakenly short circuit between the positive and negative terminal posts with a metal conductor (eg.metal tools, metal wires, metal parts, etc.), in other word, the external short circuit of the battery occurs, the generated electric arc may result in electrode erosion and melted lead alloy splashing even the burning due to the generation of a lot of heat.

⚠ Precautionary measure: Prevent direct short circuit between the positive and negative terminal posts of the battery in battery assembly with metal tools or fault diagnosis with metal wires.

⚠ **Warning:** It is necessary to connect the charger with the battery properly before turning on the charger or it may lead to personal injury.

⚠ **Warning:** It is necessary to turn off the charger before disassembling the battery or it may lead to personal injury.

⚠ **Attention:** It is avoided to carry out battery charging onboard.

⚠ **Attention:** It is not allowed to get close to the battery being charged by the generator. If only generator is applied in battery charging, it is required continuous driving over 8 hours for complete charging without any extra load on the charging system.

⚠ **Warning:** In the process of charging equipment application, it is necessary to follow the instruction of the manufacture or it may lead to personal injury.

⚠ Protection: Please wear safety goggles and gloves.

⚠ Emergency treatment: In the case of battery burning, disconnect the external short-circuited metal wire with the battery, using a monkey spanner or other tools and it is not allowed to contact it with hands. At the same time, put out the fire with extinguisher.

Downloaded from www.Manualslib.com manuals search engine

Instruction and Operation

Generator

Air-cooled generator is adopted by Sunray series vehicle, conducting cooling via the air blowing from the fan behind the pulley into the generator shell. The generator is the main power of the vehicle with the function of power supplying to all electric equipments (except starter) in the normal operation of the starter (above the idle speed) as well as battery charging.

Explosive View of Generator

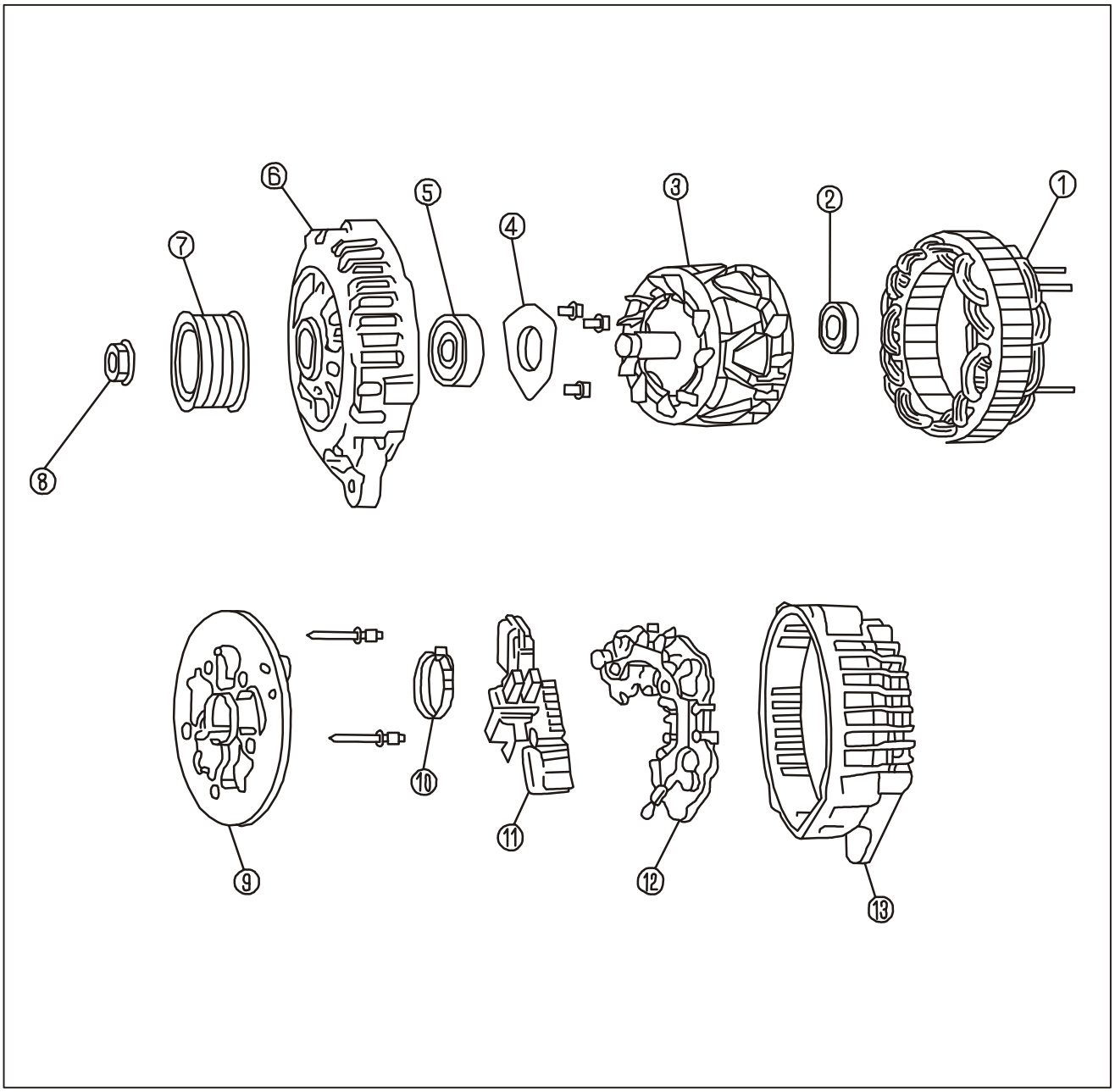

1. Stator	2.Rear bearing	3.Rotor assembly	4.Retainer
5. Front bearing	6.Front cover	7.Pulley	8.Pulley nut
9.Fan guider	10. Double labyrinth seal	11.IC voltage regulator assembly	12.Diode assembly
13. Rear cover			

Downloaded from www.Manualslib.com manuals search engine

Diagnosis and Testing

Maintenance of Battery

1. Battery status indicator (electric eye):
   Green: There is sufficient electric quantity in the battery for starting the vehicle normally.
   Black: There is no sufficient electric quantity in the battery and battery boost charge is needed.
   White: The battery is scrapped and it is necessary to carry out replacement.

2. Boost charge of Battery
   Under the condition of vehicle starting, in the case of abnormal applications like excessively long-term operation of electricals, the electric eye of the battery becomes darkened even the vehicle fails to start because of the power loss of battery due to the lack of normal battery charging caused by long-term parking and vehicle electric leakage or charging fault in vehicle generator. In this case, it is necessary to carry out external charging treatment to the battery.

- Appearance inspection of the battery prior to boost charge:
  It is not allowed to charge the battery with a broken case or acid leakage. Please replace the battery after identifying the cause.
  It is not allowed to carry out boost charge for the battery with a broken terminal post. Please replace the battery after identifying the cause.
  It is not allowed to charge the battery with a white electric eye. Please replace the battery.
  Prior to boost charge, please clean the terminal post, removing the oxide on the surface.

- Precautions in charging:
  Wear safety goggles.
  Maintain ventilation in charging under normal temperature.
  It is not allowed to smoke in charging to prevent the introduction of fire.
  In the wire connection after charging, connect the positive connecting wire firstly; in the wire disconnection before charging, disconnect the negative connecting wire firstly.

- Battery boost charge:
  Confirm that battery terminals are clean and charging circuit is in good connection.
  Connect the positive pole of the charger with that of the battery while the negative pole of the charger with that of the battery. Do not charge the series connected battery (24V).

As dual-purpose charger, one with constant voltage of 16.0V (maximum permitted voltage is equal or under 16.2V or large quantity of water shall be electrolyzed which may lead to liquid level decrease, white electric eye and scrapped battery) and rated current of 25 ampere shall be applied in battery charging until the electric eye becomes green. The green electric eye indicates the battery is charged completely. In the case of no constant voltage charger for battery charging, charge the battery with constant current according to following specifications:

(1) Select the charging current with rated capacity of 1/8 ～ 1/10 ampere for battery charging and at the end of charging, the voltage of battery shall reach 16V without any exceedance (in the case of black electric eye of the battery with voltage under 16V at the end of battery charging, there is no influence to battery application.) When it can not guaranteed the charging voltage limit of the charger is under 16V, it is necessary to monitor the end voltage of battery to be charged, or there shall be battery water loss due to overvoltage charging even battery failure.
(2) After charging completion, verify the color of battery electric eye. In the case of green electric eye, it indicated that the battery is charged completely. In the case of black electric eye, verify whether charging connecting wires are connected firmly, connection points are clean and charging voltage is 16V. Leave the battery as it is for 24 hours, measure its voltage and carry out boost charge according to charging interest.
(3) In the case of white electric eye, it indicates that there are bubbles in the electric eye and shake the battery slightly to remove these bubbles. If the electric eye is still white after battery shaking (indicating electrolyte loss), replace the battery.

For battery with voltage lower than 11V, there may be incapable charging phenomenon at the beginning of battery charging. The proportion of sulfuric acid in the battery is close to pure water and battery internal resistance becomes very large due to serious battery power loss. In this case, reduce the charging current or use a charger with a higher power instead, with the battery charging goes on, the proportion of sulfuric acid in the battery increases and the

Downloaded from www.Manualslib.com manuals search engine

charging current for battery can return to normal gradually.

In the process of charging, if there is a large quantity of acid spraying out from battery vent, stop charging and identify the cause.

In the process of charging, when the battery temperature exceeds 45 ℃, stop charging. When the battery is cooled down to room temperature, go on to charge it with half charging current.

In the process of battery boost charge, check the status of electric eye once an hour. In the case of green electric eye, it indicates that the battery is charged completely and stop charging.

After charging completion and relevant test, it is recommended to apply grease on battery terminals to avoid electrolytic corrosion.

3. Correct Application of Battery

- The discharging time of battery in large current should not be too long or pole plate shall be deformed due to overheating that may lead to short circuit or battery capacity reduction caused by active material shedding. In the case of vehicle start, each start time should not exceed 5 seconds and the interval between continuous starts should not less than 10~15 seconds;
- In capacity inspection with high rate discharging gauge (discharging meter), the discharging time should not exceed 5 seconds;
- In normal vehicle running, battery is in charging state generally; In the case of low power supply capacity of generator due to improper regulation of regulator, excessive battery power consumption due to frequent vehicle start or serious battery power loss due to short circuit in electric appliance, it is necessary to carry out battery boost charge.
- After 3 months of battery service time, when the battery capacity is lower than 50% or phenomenons like underpowered vehicle starting, dim lighting, abnormal honk etc., off-board boost charge for battery shall be carried out as well as normal maintenance. At the same time, pay attention to batteries in the process of charging for batteries with the same capacity and different voltages shall not be charged together. It is not allowed the mixed use of new and old batteries.
- The output voltage of vehicle voltage regulator shall be measured after battery loading and shall be regulated in the range of 13.8~14.8 V according to vehicle service condition. The recommended voltage is 14.4V. In the case of frequent vehicle application, it is easy to cause battery overcharge and the voltage should be regulated to a lower one. On the contrary, in the case of infrequent vehicle application or frequent vehicle start, the voltage should be regulated to a higher one. To avoid overcharge, the voltage should be heightened while in summer it should be lowered.
- In the case of long-term parking, the negative terminal should be disconnected with vehicle to avoid excessive self discharge and serious sulfating. Under the condition of no battery power loss, recharge the maintenance-free battery once every 3 months. In the case of instant power loss at the beginning of parking, it is necessary to recharge the battery timely according to the voltage. In general, when battery voltage is under 12.6V, it is necessary to recharge the battery.

It is not allowed for the battery discharging current to exceed that of the maximum battery of the manufacturer. In general, the discharging current is 4~5 times as large as that of 4～5C20 battery capacity. It is not allows to test battery electrification with short-circuit method.

Downloaded from www.Manualslib.com manuals search engine

Diagnosis and Test

1. Fault diagnosis of Battery

Fault	Fault symptoms	Cause analysis	Troubleshooting
Insufficient battery power	① Voltage is approximately 12V ② Density is under 1.220dt ③ Underpowered vehicle starting, dim lighting, low honk ④ The capacity test is in the yellow area.	① Too low set value of vehicle regulator ② Power consumption is larger than that of charging. ③ High start frequency and short driving distance ④ Insufficient power generation or circuit fault ⑤ Terminal corrosion or unfirm connection	① Replace the regulator ② Carry out the off-board charging ③ Eliminate generator or circuit faults ④ Clean corrosions on terminals.
Overcharge	① Perpetual reddish yellow of battery case inner wall (operating bolt) ② Separator carbonization or softening ③ Red brown and thick electrolyte ④ Pulpy shedding of positive active material	① Too high set valve of vehicle regulator ② Too large current in charging and too long charging time ③ Closed operating bolt in charging	① Regulate or replace the regulator ② Charge according to relevant regulations ③ For mild overcharge, clean it with water and recharge it for application.
Overdischarge	① Voltage is under 10V ② Density (proportion) is 1.100g/cm^3 ③ Tattletale gray and thick electrolyte	① Apply the undercharged battery ② V ehicle undercharge and too long service time of battery ③ Short circuit in vehicle circuit ④ Forget to turn off electric switch ⑤ Impure electrolyte or serious self discharge	① Replace the circuit regulator ② Guarantee the quality and quantity of off-board charging ③ Eliminate circuit faults ④ Keep a clear head in parking (to turn off the switch) ⑤ Replace with a new battery
Short circuit	① Voltage is under 10V ② No voltage in faulted cell ③ No proportion in faulted cell ④ Smoking and bubbling in discharging ⑤ No response from the faulted cell in charging	① Lead leakage or foreign matter dropping in battery assembly ② Pole plate bending in battery assembly ③ Burrs of cluster plate pins ④ Holes or cracks in separators. ⑤ Artificial damage	① Disassemble and analyze it ② Replace with a new battery
Open circuit	① Unusually instability of voltage ② Lead leakage and cavities at the place 5mm upper than the terminal top ③ Measure voltage is under 10V and discharging returns zero ④ Unable current input in charging or there is abnormal noise	① Poor welding of terminal posts ② Broken busbar ③ Open welding of wall weld ④ Broken intermediate terminal post	① Repair ② Replace with a new battery

Downloaded from www.Manualslib.com manuals search engine

Diagnosis and Test

1. Fault diagnosis of Battery

Fault	Fault symptoms	Cause analysis	Troubleshooting
Improper electrolyte filling	① Peculiar smell of electrolyte ② Density (proportion) is above 1.300dt ③ Density is about 1.100dt after filling. ④ Liquid color is light and whitish.	① Impure electrolyte ② Too high ratio of electrolyte ③ Insufficient density ④ Do not fill pure water	① Replace with a new battery ② Adjust the density and carry out boost charge ③ After changing the electrolyte, adjust charging with acid of 1.400dt
Sulphating of pole plate	① Excessively low battery capacity in discharging ② Too fast voltage descent speed in discharging ③ Early bubble generation in charging ④ Too fast and high voltage rise in charging ⑤ There are white granules and spots on pole plate surface.	① Insufficient charging time and too long service time ② Too long storage of battery with electrolyte and no timely boost charge ③ Battery is in the status of liquid loss and the exposure time of terminal cluster is too long. ④ Too high electrolyte density ⑤ Too high electrolyte temperature ⑥ Impure electrolyte	① Overcharge method ② Repetitive charging method ③ Washing treatment ④ Replace with a new battery
Battery cell electrolyte leakage	① Low voltage ② When connecting battery cells are tilted, electrolyte flows. ③ There is boiling in discharging.	① Electrolyte flows among battery cells and cracks on battery case ② There is vibration in transportation. ③ There is vibration in vehicle running. ④ There are sparking and implosion. ⑤ The heat seal is not firm.	① Repair or replace the case ② Replace with a new battery
Excessive shedding of active material	① Excessive sediments at the battery bottom ② Excessive low battery capacity ③ Perpetual red brown of cell wall and operating bolt ④ Red brown electrolyte ⑤ The electrolyte is reddish and there is pulpy shedding of pole plate active materials, separators are in softening state and negative pole plate active materials are softening expansion. ⑥ Massive shedding	① Too high set valve of vehicle circuit regulator ② Too large current in charging and too long charging time ③ Too large discharge capacity and too long discharge time ④ High temperature and long service time due to long-term vehicle running ⑤ Unqualified pole plate manufacture	① Clean the sediments with washing method and charge it for reuse ② Replace with a new battery

Downloaded from www.Manualslib.com manuals search engine

Diagnosis and Test

1. Fault diagnosis of Battery

Fault	Fault symptoms	Cause analysis	Troubleshooting
Excessive shedding of active material	① Excessive sediments at the battery bottom ② Excessive low battery capacity ③ Perpetual red brown of cell wall and operating bolt ④ Red brown electrolyte ⑤ The electrolyte is reddish and there is pulpy shedding of pole plate active materials, separators are in softening state and negative pole plate active materials are softening expansion. ⑥ Massive shedding	① Too high set valve of vehicle circuit regulator ② Too large current in charging and too long charging time ③ Too large discharge capacity and too long discharge time ④ High temperature and long service time due to long-term vehicle running ⑤ Unqualified pole plate manufacture	① Clean the sediments with washing method and charge it for reuse ② Replace with a new battery
Reverse installation of polarities	① For one reversed cell, 8V ② For two reversed cells, 4V ③ For the whole reversed cells-12V	Manufacturing quality	① Replace with a new battery ② Disassemble and reinstall
Reverse charging of polarities	① The voltage is negative ② The colors of positive and negative terminal posts are reversed. ③ The colors of pole plates are reversed.	① Misconnection of positive and negative polarities in charging	① Discharge the capacity of battery after its reverse charging of polarities completely ② Charge the battery with small current and then with normal current in the case of response of every cell ③ For serious cases, replace with a new battery
Battery explosion	① Terminal post sparking ② Broken positive circuit ③ Holes and cracks in battery case and cover	① Incorrect installation ② Aged and thin circuit ③ Faulted operation of generator ④ Interference of external sparks ⑤ Insufficient solder for terminal post ⑥ Broken busbar ⑦ Dropped plate ⑧ Broken intermediate terminal post ⑨ Broken pole plate	① Firmly install ② Replace the circuit ③ Eliminate generator fault ④ Keep the battery away from heat source ⑤ Always keep vent unblocked. ⑥ Replace with a new battery
Low capacity in early stage	① Underpowered start ② Low voltage value ③ Slow response	① Unfirm connection or circuit fault ② It exceeds the storage period. ③ Positive pole plate passivation ④ Negative pole plate oxidation ⑤ Slightly leaky separator	① Inspect the circuit carefully ② Carry out boost charge

Downloaded from www.Manualslib.com manuals search engine

Diagnosis and Test

Fault determination of battery

2. Appearance inspection

Items of Inspection		Cause	Troubleshooting
Case	Damage	① Battery case crash ② Incorrect installation	Replace with a new one
	Burn	① Loose connection or poor contact of terminal post ② External short circuit	Replace with a new one
	Explosion	① Internal short circuit ② In the case of low electrolyte level, there will be internal spark. ③ Blocked vent	Replace with a new one
	Deformation	① Overcharge ② Overcurrent charging ③ Blocked vent	Replace with a new one
Battery acid leakage		① Damaged plastic case due to external impact ② Inversion or too large tilt angle of battery ③ Unfirm heat seal	Replace with a new one
Terminal post melting loss		① External short circuit ② Poor contact ③ Poor welding	Replace with a new one

3. Voltage inspection

Voltage	When it is above 12.5V,the electric eye is green	Normal	Load test
	When it is between 12.4～11V, the electric eye is black	Undercharge	Boost charge
	When it is equal to or under 10.5V	① Overdischarge (Black electric) ② Short circuit (in general, green electric eye) ③ Open circuit	Replace with a new one
Load test	Green area	Normal	—
	Yellow area	Undercharge	Boost charge
	Red area	① Undercharge ② Short circuit or open circuit	Replace with a new one

Downloaded from www.Manualslib.com manuals search engine

Diagnosis and Test

Fault determination of Generator

Fault diagnosis of charging system

Fault symptoms	Fault diagnosis	Troubleshooting
No lightened charging indicator lamp when the ignition switch is at the 2nd gear	① Bulb fault ② Looseness or oxidation of generator connectors or battery terminals, poor connection of ground wire ③ Faults in voltage regulator, rotor or brush circuit ④ Ignition switch fault	① Install a new bulb. ② Clean and tighten cables of battery or generator and apply acid proof grease. Inspect ground wire connectors, clean and tighten if necessary. ③ Eliminate the open circuit fault ④ Install a new ignition switch
Incorrect go-out of charging indicator lamp when the engine is in operation	① Loose drive belt ② Loose or oxidized generator connector, poor connection of ground wire ③ Unable contact of brush with rotor ring, stuck brush in conduction direction, wear and oil stains of brush. Wear of bearing and slip ring, faults in voltage regulator or rectifier assembly	① Tension drive belt again ② Clean and tighten connectors ③ Inspect brush connector, clean/loosen brush if necessary, install a new voltage regulator or replace the faulted generator
Undercharge	① Loose drive belt ② Fault in welding points of generator connector ③ Poor connection of ground wire between voltage regulator and generator housing	① Tension drive belt again ② Install a new voltage regulator or replace the faulted generator if necessary ③ Clean and tighten connectors
Overcharge	① Voltage regulator fault	① Install a new voltage regulator or replace the faulted generator if necessary
Noise in operation	① Bearing wear ② Loose pulley ③ Belt wear	① Install a new generator ② Tension the pulley according to specified torque. In the case of broken shaft, replace the generator ③ Install a new belt

Downloaded from www.Manualslib.com manuals search engine

Diagnosis and Test

Operating principle of generator

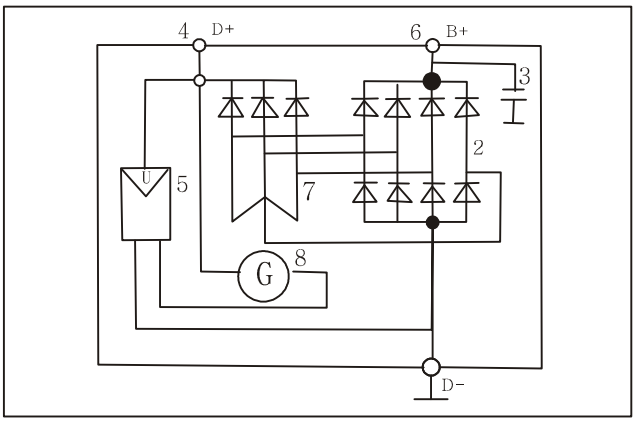

The operating principle of generator: divide three-phase alternating currents (AC) generated by the three-phase windings into two paths: take one as field current to go through 3 excitation diodes 1 to D+ end and voltage regulator 5, then go through moving contacts and slip rings to field winding, finally, return to the voltage regulator through slip rings and sliding contacts; The other one goes through positive rectifier diode of three-phase full-wave velocity converter bridge to electric appliances in the vehicle and then returns through negative power diodes.

Terminal B+ is an output one and Terminal D+ is connected to charging indicator lamp and ignition switch in the external circuit and then is connected to battery positive pole. When starting the engine, contact points of the ignition switch are closed and form initial field current in field winding with the charging indicator lamps lightening simultaneously (lighting inspection). In the case of engine in idling operation condition, the indicator lamp goes out. During vehicle running, if the charging indicator lamp is lightened, it indicates faults in generator system.

The hybrid germanium transistor voltage regulator is adopted in this generator, consisting of a ceramic wafer with protective resistance and an integrated circuit enclosed in seal housing. It plays a role in: keeping a constant output current of AC generator in the case of wide engine speed range and large output current change.

Downloaded from www.Manualslib.com manuals search engine

Diagnosis and Test

Precautions of generator maintenance

For the output current of generator is generated by stators and rectified by rectifier diodes, please pay attention to following aspects in generator inspection and regulation:

1. Pay attention to generator ground polarities and it is not allowed to connect reversely. In the case of reverse connection of generator and battery polarities, it leads to positive conduction of power diode and the diode is burnt by the large current goes through it. Therefore, correct polarities are necessary in battery replacement.

2. It is not allowed to use screw drivers or wires to ground output terminal and housing of generator for live wire test. For instant large current or high voltage electromotive force generated by induction may puncture or burn down the power diode.

3. It is not allowed to connect two terminal posts for test with screw drivers or wires or there shall be fast rise of generator voltage which may lead to voltage regulator damage.

4. In the case of fast charging with large current from AC generator to battery, when the charging current is discovered getting smaller or ever being close to 0, please verify for the existence of faults in charging part. In the case of voltage regulator fault or excessively high voltage regulation, please carry out maintenance as soon as possible to avoid early damage in battery and electric appliance of generator field winding.

5. In the joint operation of generator and voltage regulator, the output voltage is very stable. However, in the case of their inspections and applications, they should be connected to on-board battery in parallel for application. When the generator is outputting a large current, sudden disconnection with battery may generate an excessively high peak voltage. In this case, even there is only a short-time existence of the peak voltage, it may lead to damage of other electronic parts. Therefore, pay attention to relevant inspection and application, do not disconnect the connection of generator in operation with battery at any case.

6. It is necessary to guarantee the reliable connection of the connecting ground wire between the generator and chassis.

7. It is not allowed to ground the power supply lead in the operation of generator or it may lead to harness burn.

8. In generator inspection, it is necessary to fill the generator sealed bearing with sufficient No.2 lithium base grease before the next maintenance.

9. It is not necessary to maintain the voltage regulator, In the case of its damage, replace the voltage regulator assembly.

Downloaded from www.Manualslib.com manuals search engine

Removal and Installation

Removal of Battery

⚠ **Warning:** In general, explosive gas may be generated by the battery. In the case of misconduct of it, it may lead to personal injury. Therefore, keep the battery out of flames, sparks or burning objects. In the case of battery charging or working close to the battery, it is necessary to protect your face and eyes and maintain good ventilation. Please follow relevant instructions or it may lead to personal injury.

⚠ **Warning:** Since there is sulfuric acid in the battery, the contact of the sulfuric acid with the skin, eyes or clothes should be avoided. In the case of working close to the battery, it is necessary to protect your eyes from being hurt by the spilled out acid solution. Once the acid solution comes into contact with skin or eyes, it is necessary to wash with clean water for 15 minutes at least and go to a doctor immediately. In the case of mistakenly swallow, it is necessary to go to a doctor immediately or it may lead to personal injury.

⚠ The sequence of battery disconnection: disconnect the negative connecting wire of the battery and then the positive one.

⚠ **Warning:** In the maintenance of auxiliary restraint system or fuel system, do not apply the audio hosting or the storage device of key password. For the applications of these devices at this moment, there is still a low current in vehicle electric system. Please follow relevant instructions or it may lead to personal injury.

⚠ **Notice:** Prior to battery ground wire removal, it is necessary to confirm that the engine is stopped in order to avoid vehicle electric system damage.

⚠ **Notice:** In the case of battery removal mentioned in maintenance manual, please follow the procedure for the removal.

Downloaded from www.Manualslib.com manuals search engine

Removal and Installation

Removal of Battery

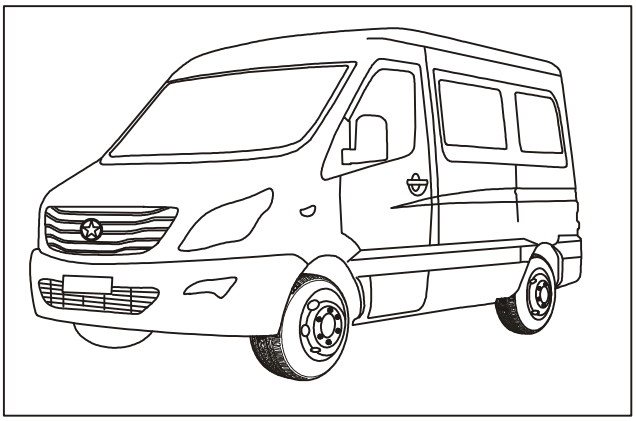

1. Open the engine hood.

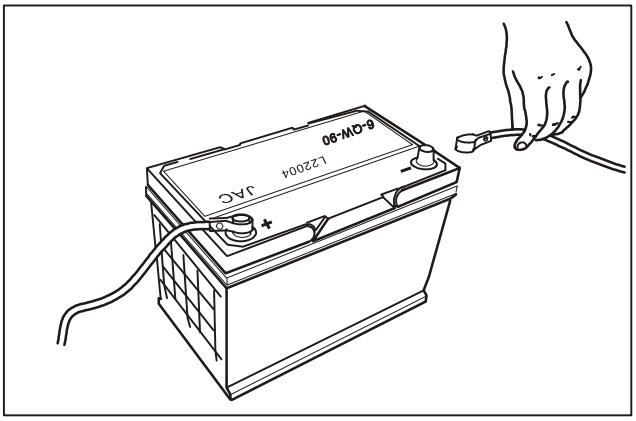

2. Unscrew mounting bolts of battery negative pole.
   Remove the negative connecting wire of battery.

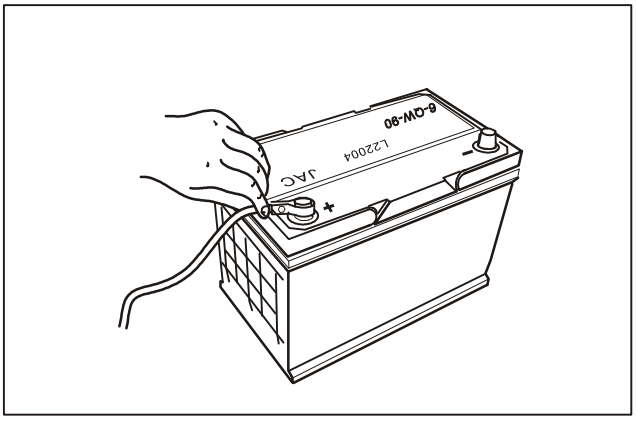

3. Unscrew mounting bolts of battery positive pole.
   Remove the positive connecting wire of battery.

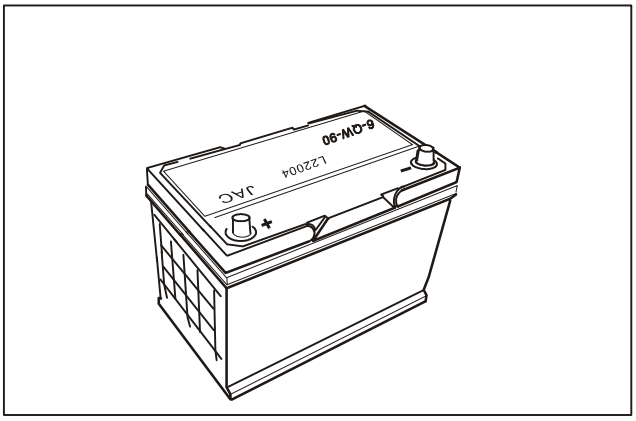

4. Take down the battery from vehicle.

Downloaded from www.Manualslib.com manuals search engine

Removal and Installation

Installation of Battery

⚠ **Warning:** In general, explosive gas may be generated by the battery. In the case of misconduct of it, it may lead to personal injury. Therefore, keep the battery out of flames, sparks or burning objects. In the case of battery charging or working close to the battery, it is necessary to protect your face and eyes and maintain good ventilation. Please follow relevant instructions or it may lead to personal injury.

⚠ Caution: Prior to connection of battery ground wire, it is necessary to confirm that all electric systems are turned off in order to avoid vehicle electric system damage.

⚠ Do not tilt the battery with an angle over 40°

⚠ It is not allowed to place the battery up side down or place it laterally.

⚠ It is not allowed to install the battery with electric leakage onto the vehicle.

⚠ Inspect the transportation tray for battery for the existence of screws and nuts and remove them in order to avoid secondary damage of the battery.

⚠ The sequence of battery connection: connect the positive connecting wire of the battery and then the negative one.

⚠ **Warning:** Since there is sulfuric acid in the battery, the contact of the sulfuric acid with the skin, eyes or clothes should be avoided. In the case of working close to the battery, it is necessary to protect your eyes from being hurt by the spilled out acid solution. Once the acid solution comes into contact with skin or eyes, it is necessary to wash with clean water for 15 minutes at least and go to a doctor immediately. In the case of mistakenly swallow, it is necessary to go to a doctor immediately or it may lead to personal injury.

⚠ Notice: In the case of battery removal mentioned in maintenance manual, please follow the procedure for the removal.

⚠ Prior to battery installation, it is necessary to confirm that the electric eye is green.

⚠ It is not allowed to install the battery with a black electric eye onto the vehicle.

⚠ It is not allowed to knock or twist terminal posts in battery installation.

⚠ In battery installation, make sure that all electric appliances are “OFF”.

Downloaded from www.Manualslib.com manuals search engine

Removal and Installation

Installation of Battery

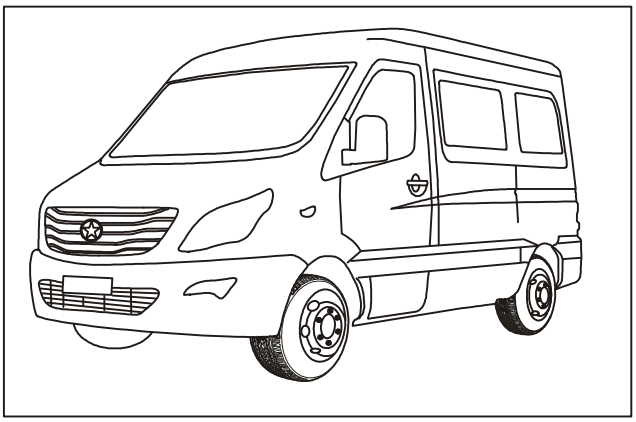

1. Open the engine hood.

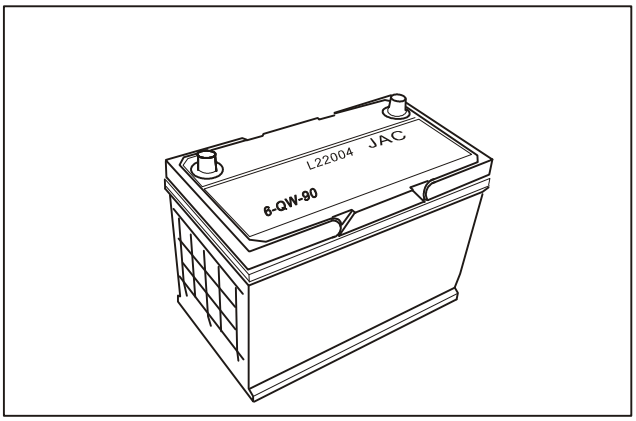

2. Place the battery on its support plate steady.

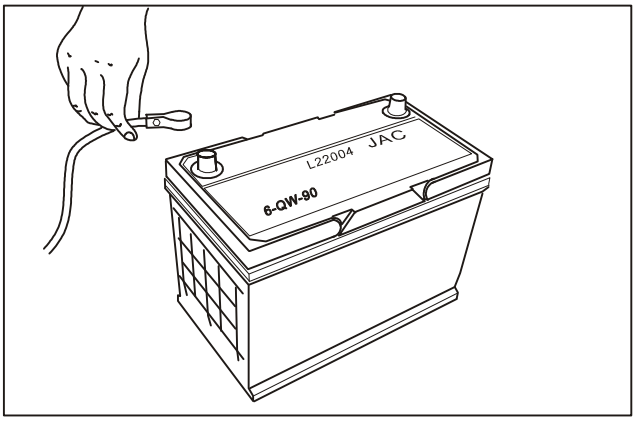

3. Install the positive connecting wire of battery.
   Tighten mounting bolts of battery positive pole.

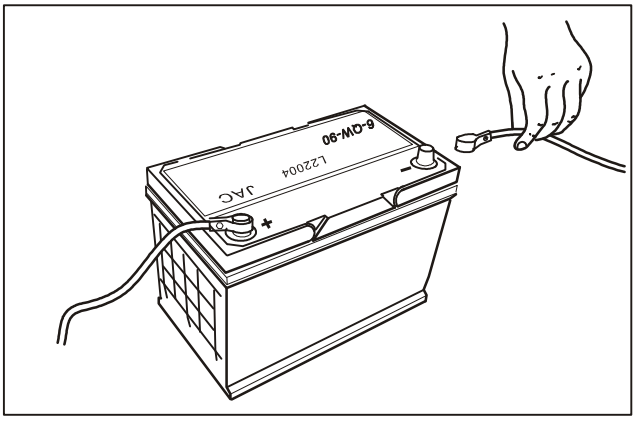

4. Install the negative connecting wire of battery.
   Tighten mounting bolts of battery negative pole.

Downloaded from www.Manualslib.com manuals search engine

Removal and Installation

Removal of Generator

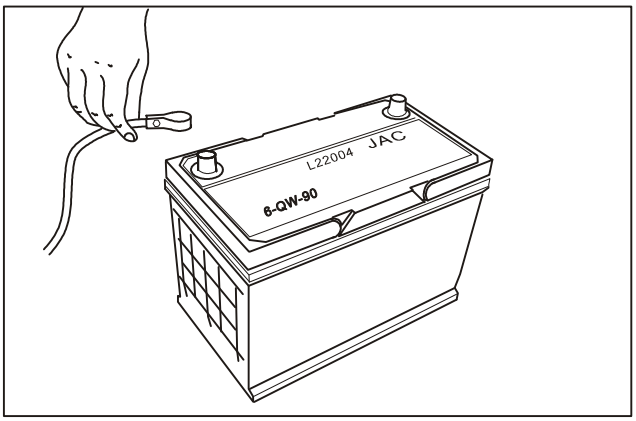

1. Disconnect the battery connection.

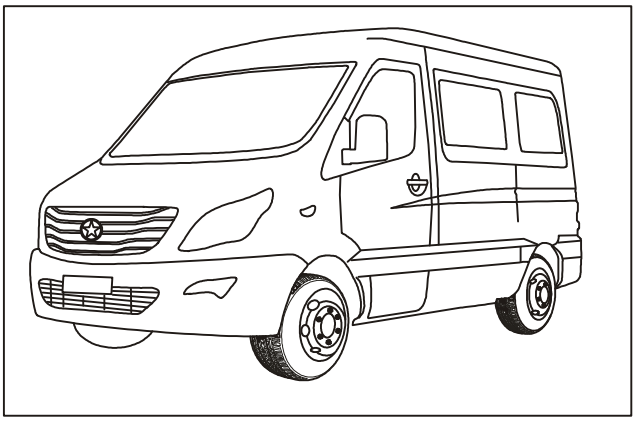

2. Remove the front bumper.

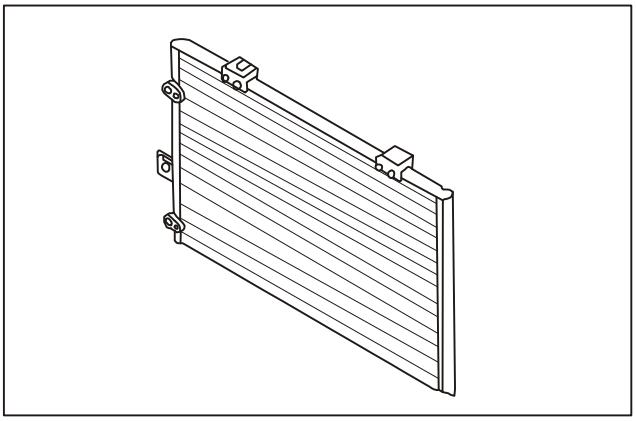

3. Remove the condenser, intercooler and water tank.

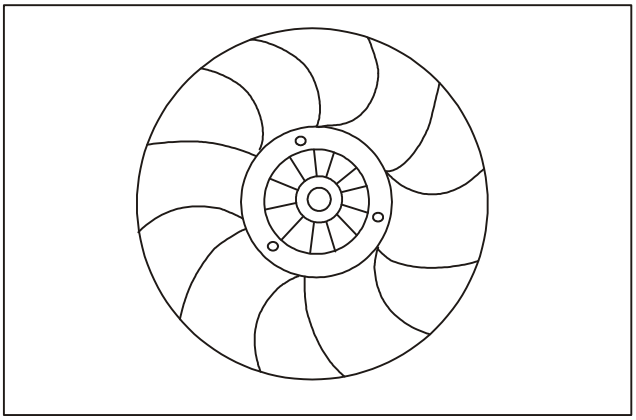

4. Remove the cooling fan.

Downloaded from www.Manualslib.com manuals search engine

Removal and Installation

Removal of Generator

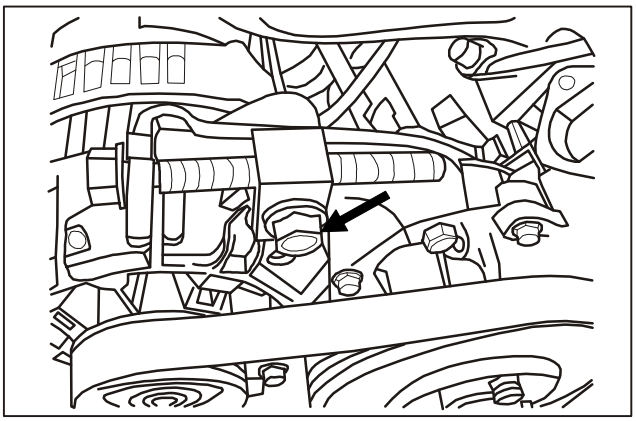

5. Unscrew tension bolts of generator.

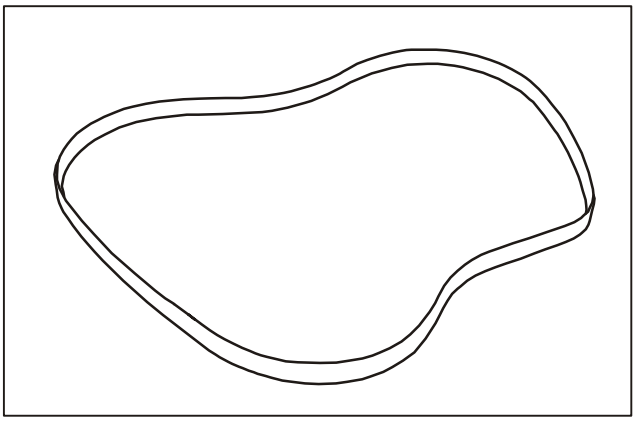

6. Remove the generator belt.

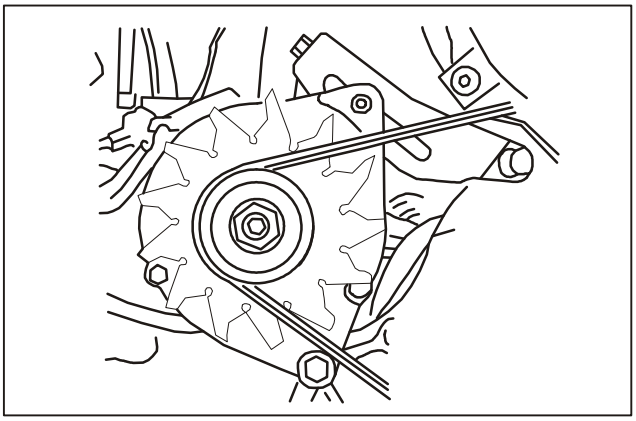

7. Remove the mounting bolts of generator.

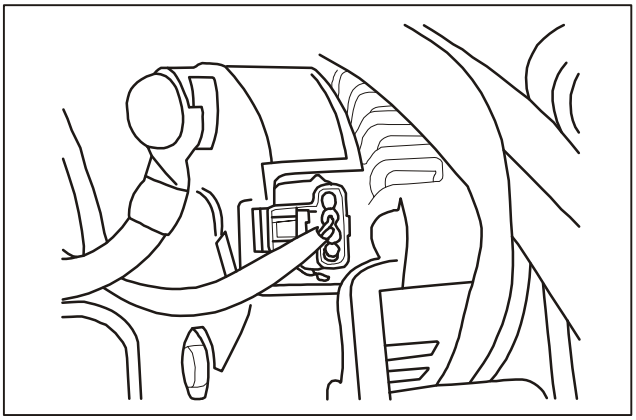

8. Disconnect the generator harness connectors.

Downloaded from www.Manualslib.com manuals search engine

Removal and Installation

Removal of Generator

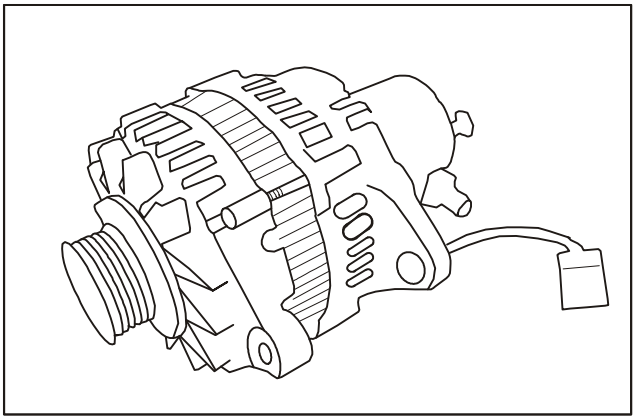

9. Remove the generator.

Downloaded from www.Manualslib.com manuals search engine

Removal and Installation

Installation of Generator

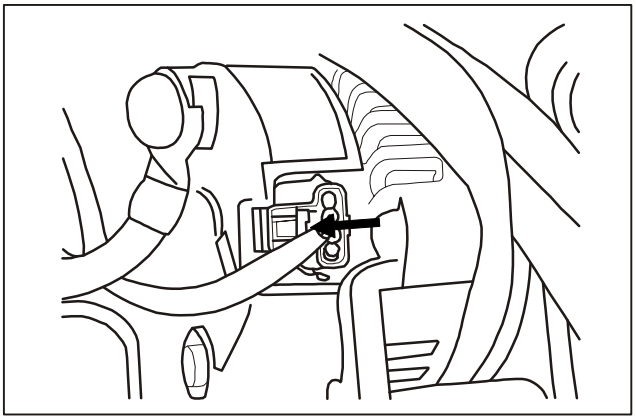

1. Connect the generator harness connectors.

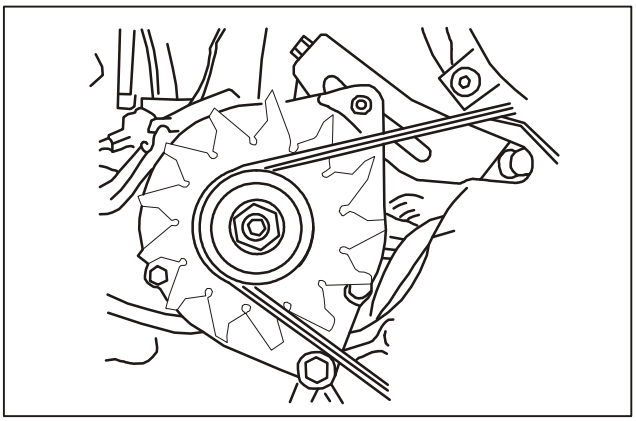

2. Install mounting bolts of generator.

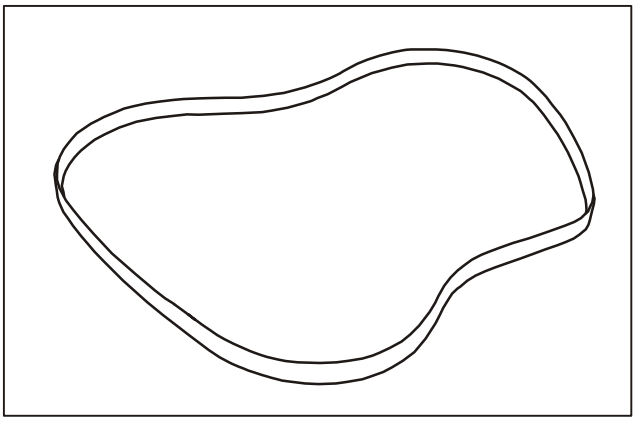

3. Install the generator belt.

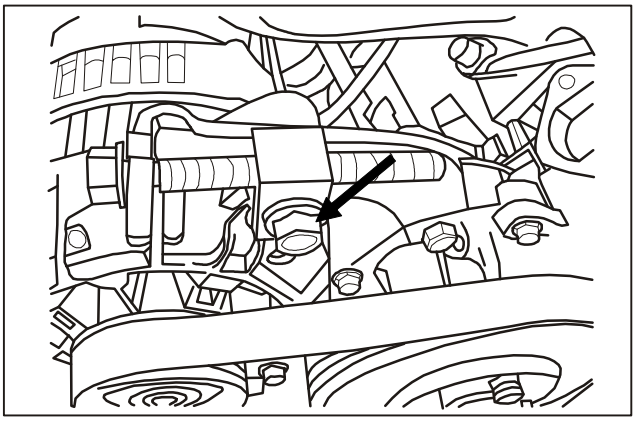

4. Tighten tension bolts of generator.

Downloaded from www.Manualslib.com manuals search engine

Downloaded from www.Manualslib.com manuals search engine

Instrument and Warning System

Applied models: SUNRAY products manufactured by JAC

Subject Page

Instruction and Operation

Instrument..... 24

Mounting position.....24

Performance characteristics..... 25

Diagnosis and Testing

Instrument..... 26

Function description..... 26

Definitions of pins..... 32

Removal/Installation

Instrument..... 33

Removal of Instrument..... 33

Specification

Instrument..... 35

Basic parameters.....35

Downloaded from www.Manualslib.com manuals search engine

Instruction and Operation

Combination instrument

Sunray instruments are all-digital instruments which take stepping motors as the structural forms. Analog or digital signals of all sensors are converted into digital signals via processing of central processing units (CPU) to drive the stepping motors. After the processing, the drive signals are sent to respective indicating instruments of stepping motors and actuate their operations.

Locations of combination instruments:

Sunray combination instrument is in front of the driver.

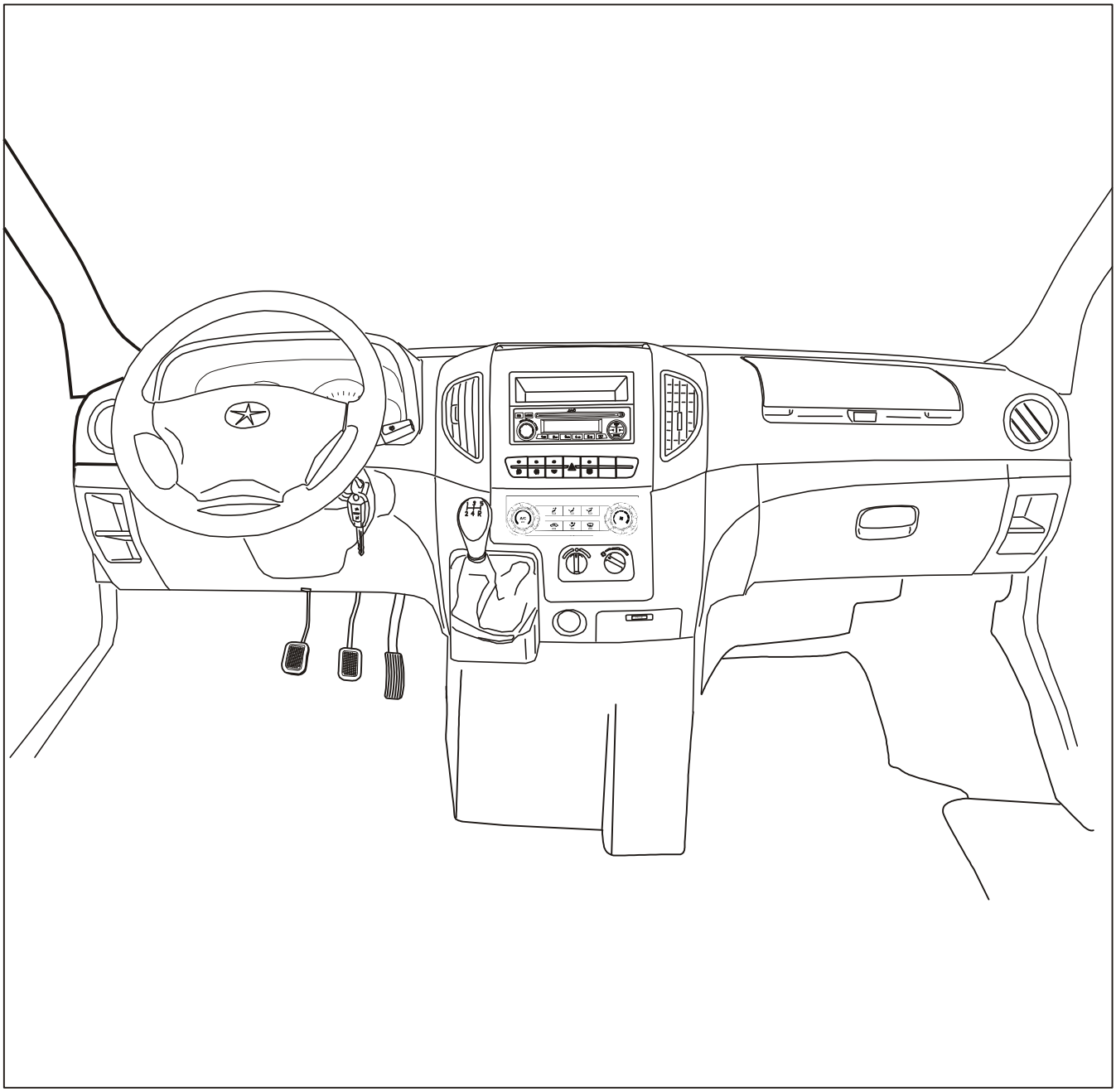

Downloaded from www.Manualslib.com manuals search engine

Instruction and Operation

Performance characteristics of the combination instrument:

All-digital instruments are adopted in Sunray series, which do not only eliminate disadvantages of conventional analog display instruments, but also possess following advantages:

1. The indication accuracy may reach 1/12°as the highest.
2. It enables the stable indication without the application of damping oil and pointer balancer.
3. It enables easy installation and debugging without any hysteresis errors that the instrument possesses good reliability, good consistency and strong vibration resistance.
4. It enables long service life and wide operating range of -40°~+85°.
5. It enables low voltage (5V) and low current drive, all-digital control and low consumption.
6. It enables strong anti-interference.
7. It enables smaller thickness and weight of the instrument.
8. LED is applied as indicator lamps and backlights which enables lower power consumption, longer service life and lower heat. And LED backlight technology is adopted for homogeneous and soft lighting.
9. LCD is applied for mileage display and mileage subtotal to avoid stuck phenomenon with the application of gear display and it is easily installed and debugged.
10. SMD parts and reflow soldering technology may prevent the instrument from faults caused by insufficient solder and void and enable lower weight of the instrument.
11. Software warning is adopted in fuel warning and the fuel warning switch in the sensor can be revocatory.
12. With proper modifications of instrument software parameters, the instrument can be applicable to vehicles with different gear ratios, speeds, fuels and temperature sensors and the applicable range is very wide.

Downloaded from www.Manualslib.com manuals search engine

Diagnosis and Test

Function description of the combination instrument

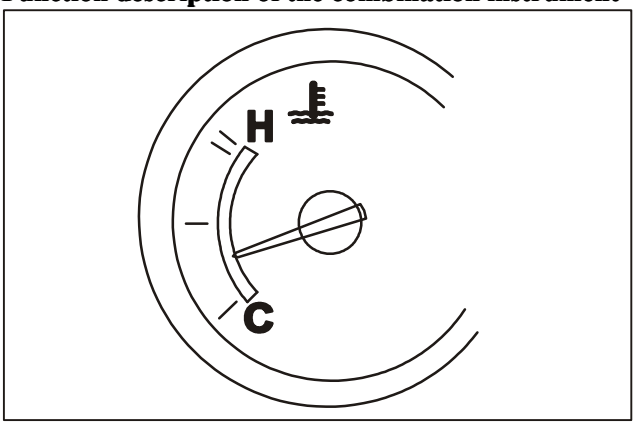

1. Water temperature gauge

   It processes water temperature signals received by the instrument, converts these signals to voltage signals firstly then to digital signals via AD and controls the water temperature stepping motor for the indication of corresponding values.

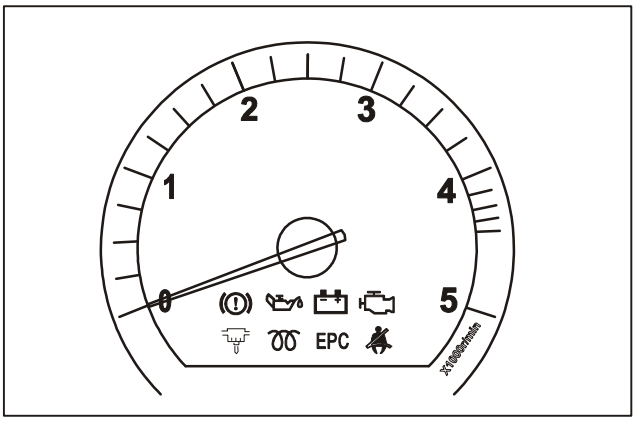

2. Tachometer

   It carries out the algorithmic-processing for signals sent by the generator, controls the speed stepping motor for the indication of corresponding values. Corresponding speed signal frequency for every 1000R/MIN is 260HZ.

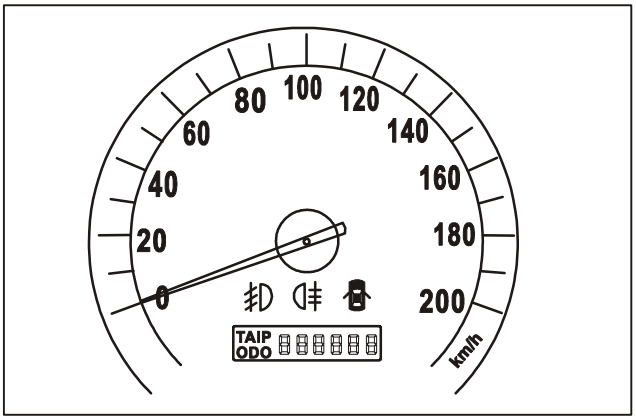

3. Speedometer

   It carries out the algorithmic-processing for signals sent by the vehicle speed sensor and controls the vehicle speed stepping motor for the indication of corresponding values.

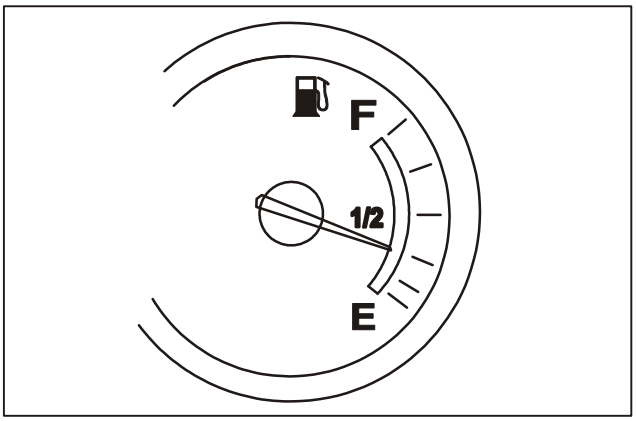

4. Fuel gauge

   It processes resistance signals sent by the fuel sensor, converts these signals to voltage signals firstly then to digital signals via AD and controls the fuel stepping motor for the indication of corresponding values.

Downloaded from www.Manualslib.com manuals search engine

Diagnosis and Test

Function description of the combination instrument

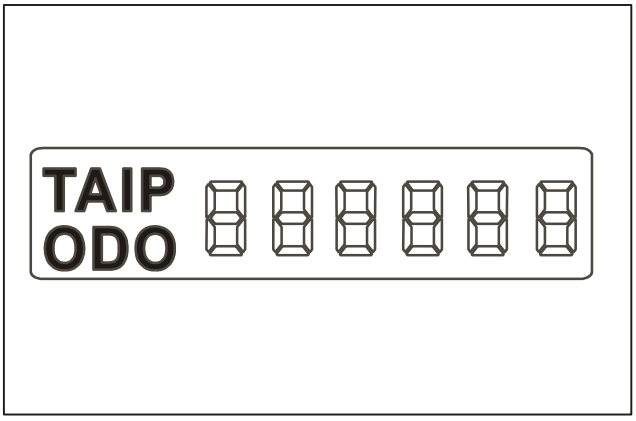

5. Accumulative total and subtotal odometer
   The LCD is applied for the indication of total mileage and subtotal mileage. The display interface can be switched via the application of the adjusting lever at the right side. The subtotal odometer can be reset via pressing the adjusting lever for 2S.

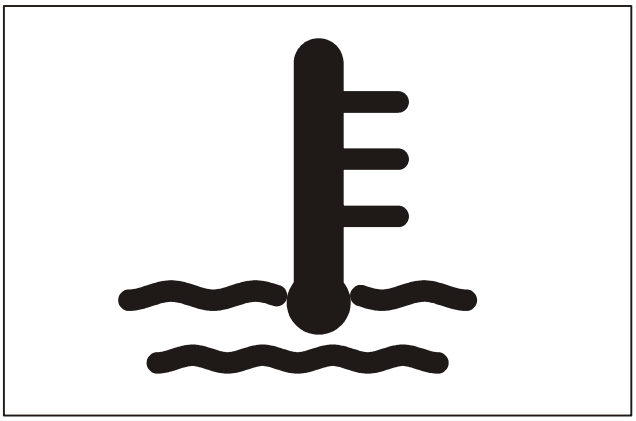

6. Water temperature warning lamp
   In the case of overhigh engine antifreeze temperature, the warning lamp lightens.

7. Brake shoe wear indicator lamp
   In the case of friction lining wear with a certain extent, the brake shoe wear indicator lamp will be lit to remind you of brake lining replacement.

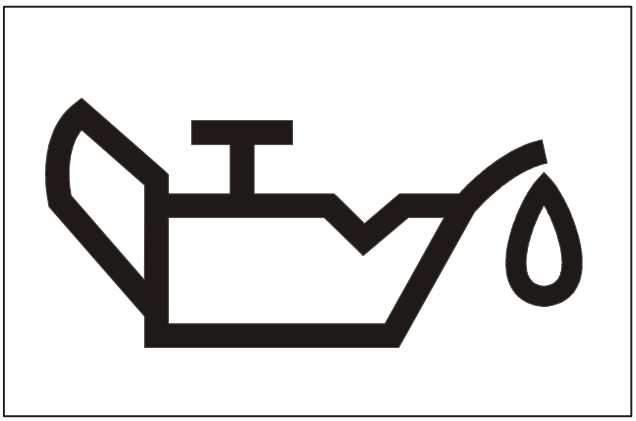

8. Engine oil pressure warning lamp
   In the case of excessively low engine oil pressure, the warning lamp will keep lit after engine start or it will be lit during vehicle running, indicating insufficient engine oil pressure.

Downloaded from www.Manualslib.com manuals search engine

Diagnosis and Test

Function description of the combination instrument

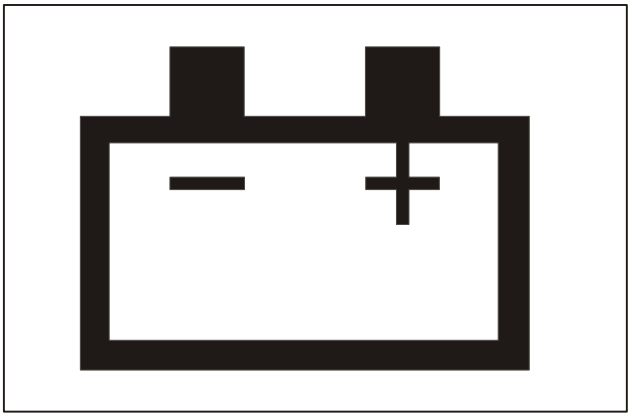

9. Charging warning lamp
   If the indicator lamp keeps lit or it will be lit during vehicle running, it indicates that there may be electrical faults in the charging system.

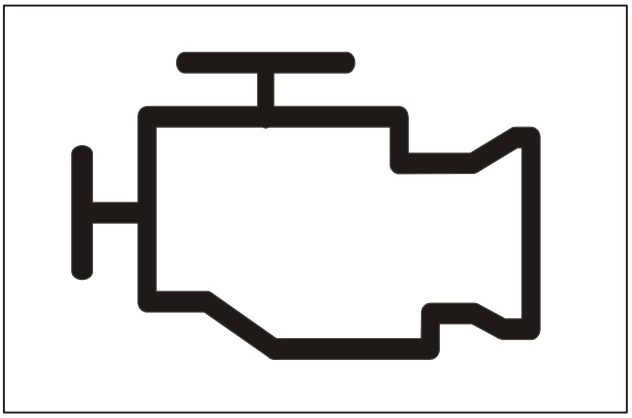

10. Exhaust fault indicator lamp
    In the case of exhaust emission exceeding the standard value, this lamp will be lit.

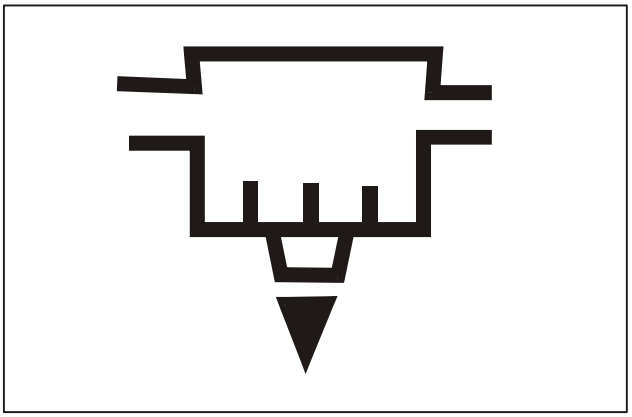

11. Fuel filter warning lamp
    In the case of water level of oil-water separator reaching danger level, the oil-water separator water volume indicator lamp lightens.

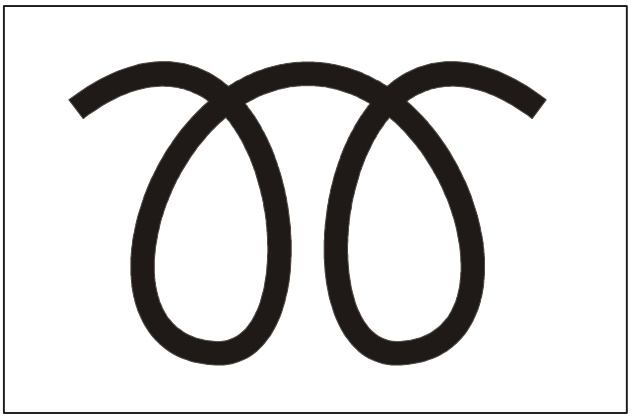

12. Diesel oil preheating indicator lamp
    The preheating indicator lamp may keep lit for a while or go out immediately. The lit time varies according to the engine and coolant temperatures.

Downloaded from www.Manualslib.com manuals search engine

Diagnosis and Test

Function description of the combination instrument

13. EPC indicator lamp
    If the indicator lamp is in the state of normally on, it indicates that there are electronic faults.

14. Seat belt warning lamp
    It will keep lit until the driver's seat belt has been fastened.

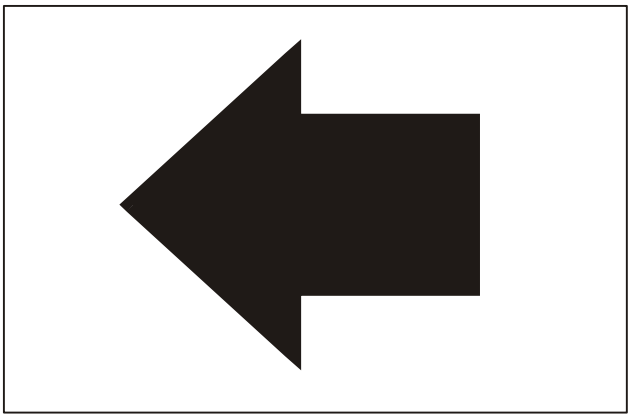

15. Left turn signal indicator lamp
    When the left turn signal lamp is lit, this indicator lamp will be lit together with a turn indicator lamp in the corresponding direction. When the turn signal lamp is turned off, this indicator lamp will go out automatically.

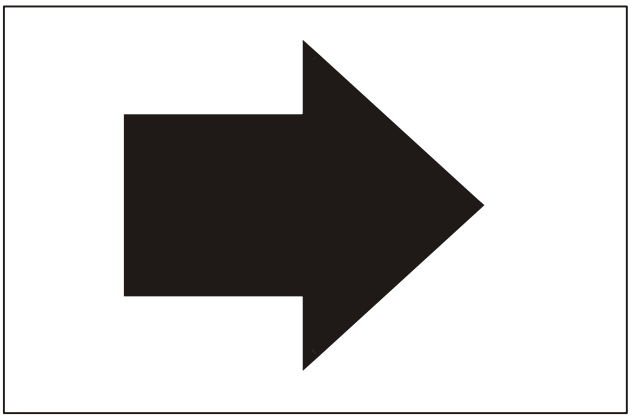

16. Right turn signal indicator lamp

    When the right turn signal lamp is lit, this indicator lamp will be lit together with a turn indicator lamp. When the turn signal lamp is turned off, this indicator lamp will go out automatically.

Downloaded from www.Manualslib.com manuals search engine

Diagnosis and Test

Function description of the combination instrument

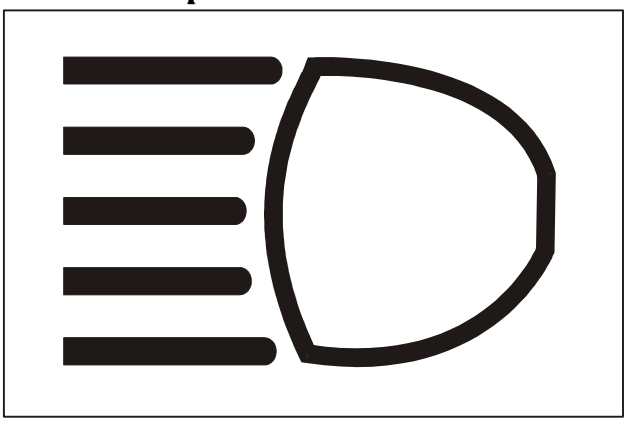

17. Upper beam indicator lamp
    When the upper beam headlamp is connected, this indicator lamp will be lit.

18. Airbag indicator lamp
    If the airbag indicator lamp keeps lit or is lit during vehicle running, it indicates that there are abnormalities in airbag system.

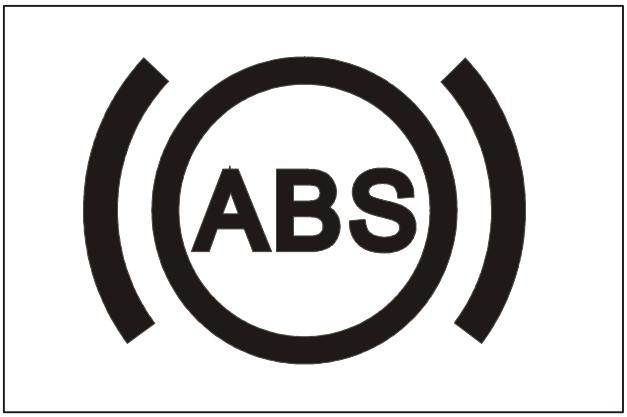

19. ABS signal lamp
    In the case of opening door with key or vehicle self-inspection, the ABS lamp may keep lit for a few seconds then go out. If the lamp does not lighten or keep lit, it indicated that there are faults in ABS.

20. Parking brake indicator lamp
    When the hand brake is pulled up, the indicator lamp lightens automatically and the lamp will go out with the hand brake down.

Downloaded from www.Manualslib.com manuals search engine

Diagnosis and Test

Function description of the combination instrument

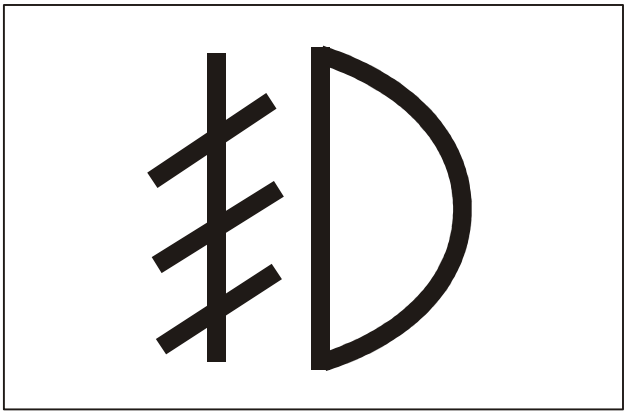

21. Front fog lamp indicator lamp
    When the front fog lamp is lit, corresponding mark of the indicator lamp will be lit. When the fog lamp is turned off, corresponding indicator lamp goes out.

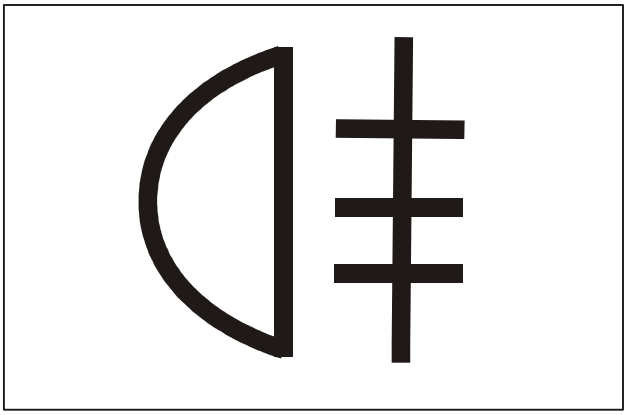

22. Rear fog lamp indicator lamp
    When the rear lamp is lit, corresponding mark of the indicator lamp will be lit. When the fog lamp is turned off, corresponding indicator lamp goes out.

23. Door open warning lamp
    When doors are not closed, the indicator lamp keeps lit until all doors are closed and locked completely.

24. Fuel warning lamp
    When the remaining fuel in the fuel tank is lower than the warning level, the fuel warning lamp lightens to remain the driver of fuel filling.

Downloaded from www.Manualslib.com manuals search engine

Diagnosis and Test

Definitions of instrument pins

Terminal NO.	Terminal name	Terminal NO.	Terminal name
A1	Back lighting(-)	B1	Right turn(+)
A2	Back lighting (+)	B2	Upper beam(+)
A3	Frequency division output	B3	NC
A4	Main relay	B4	Instrument LIN communication
A5	Oil-water separator(+)	B5	NC
A6	NC	B6	NC
A7	NC	B7	NC
A8	NC	B8	NC
A9	NC	B9	NC
A10	Engine fault(-)	B10	NC
A11	Charging indicator lamp(-)	B11	NC
A12	Engine oil pressure(-)	B12	NC
A13	Brake fault(-)	B13	NC
A14	Engine inspection(EPC)(-)	B14	NC
A15	NC	B15	NC
A16	Engine fault(-)	B16	NC
A17	NC	B17	Parking brake(-)
A18	Water temperature signal	B18	Preheating(-)
A19	Fuel signal	B19	Seat belt(-)
A20	Vehicle speed signal	B20	Door open indicator lamp(-)
A21	Speed signal	B21	NC
A22	Constant power supply	B22	Rear fog lamp(+)
A23	GROUND	B23	Front fog lamp(+)
A24	Ignition	B24	NC
A25	GROUND	B25	NC
A26	NC	B26	NC
A27	ABS	B27	NC
A28	NC	B28	NC
A29	GROUND	B29	NC
A30	NC	B30	NC
A31	NC	B31	NC
A32	Left turn(+)	B32	NC

Downloaded from www.Manualslib.com manuals search engine

Removal and Installation

Removal of the instrument

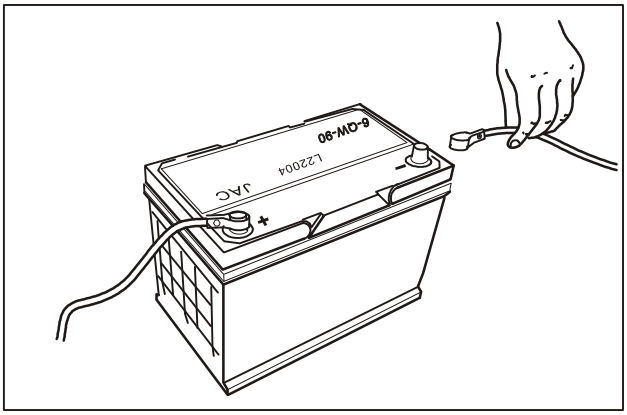

1. Disconnect the connecting wire of battery.

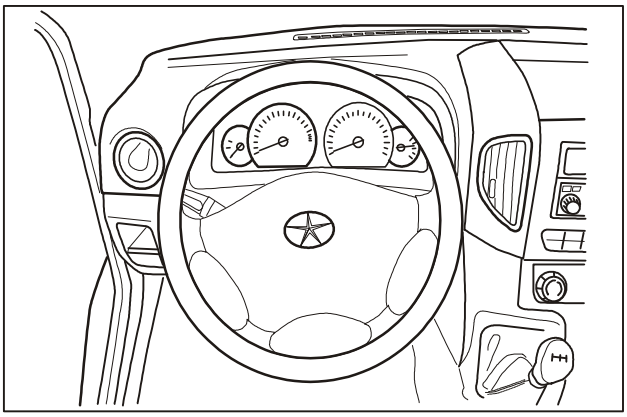

2. Remove the steering wheel.

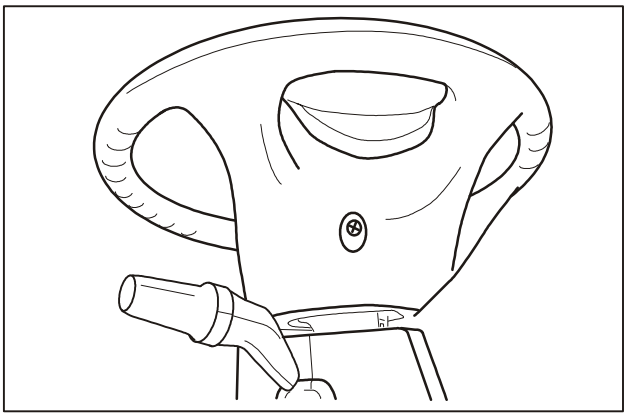

3. Remove the protecting cover of the steering wheel.

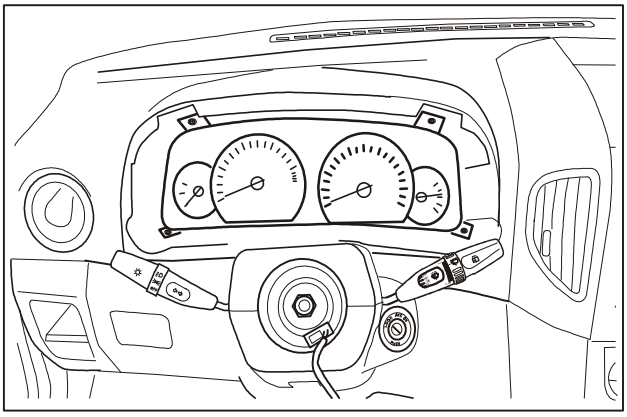

4. Remove mounting bolts of the instrument.

Downloaded from www.Manualslib.com manuals search engine

Removal and Installation

Removal of the instrument

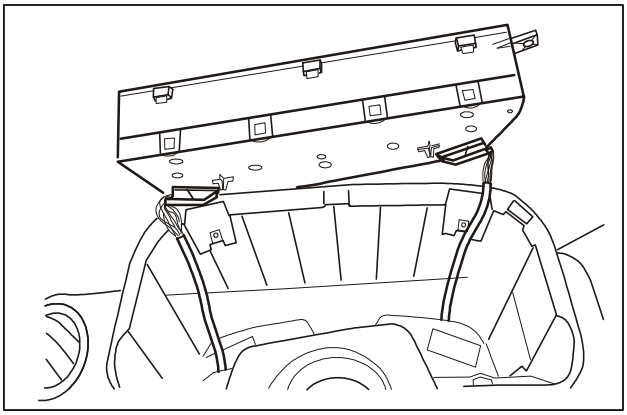

5. Disconnect the connector plug of the instrument.

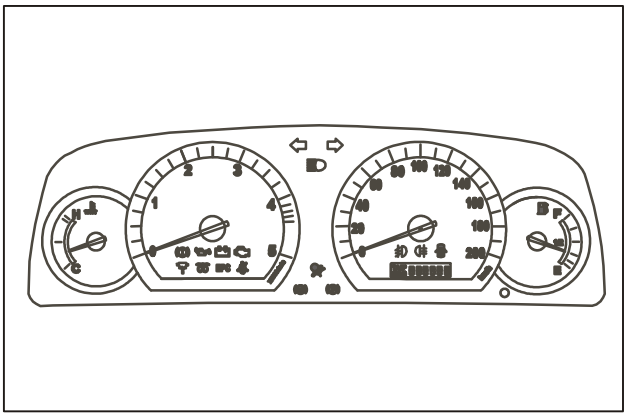

6. Take out the instrument.

Downloaded from www.Manualslib.com manuals search engine

Specification

Technical parameter of the instrument

Item	Technical parameter	Remark
Operating temperature range of the instrument	-30℃～65℃	
Storage temperature range of the instrument	-40℃～75℃	
Operating voltage range of the instrument	10.8V～16V	
Static operating current of the instrument	〈3mA	

Item	Technical parameter	Remark
Speedometer	The tolerance of speedometer indication errors should be equal to or under ±2%.	①Elementary errors of speedometer under higher speed shall be according to the agreement of the customer and manufacture. ②The error for upper limit shall not be reviewed. ③ In the case of special requirements of customers, the elementary errors shall be reviewed according to enterprise standard approved via specified procedures or customers' requirements.
Tachometer	The elementary errors of the tachometer should be equal to or under ±10% under low speed and ±10% under medium and high speed.	①Under low speed, the error shall be equal to or smaller than 30% of scale upper limit. ②Under medium and high speed, the error shall be larger than 30% of scale upper limit. ③In the case of special requirements of customers, the elementary errors shall be reviewed according to enterprise standard approved via specified procedures or customers' requirements.
Fuel gauge	The elementary errors of the fuel gauge should not exceed ±8% of scale full arc length.	In the case of special requirements of customers,the elementary errors shall be reviewed according to enterprise standard approved via specified procedures or customers' requirements.
Water temperature gauge	The elementary errors of the water temperature gauge should not exceed ±6% of scale full arc length.	In the case of special requirements of customers,the elementary errors shall be reviewed according to enterprise standard approved via specified procedures or customers'requirements.

Downloaded from www.Manualslib.com manuals search engine

Downloaded from www.Manualslib.com manuals search engine

ETACS Body Computer

Applied models: SUNRAY products manufactured by JAC

Subject Page

Instruction and Operation

ETACS..... 38
Mounting position..... 38
Information functions..... 39

Diagnosis and Testing

ETACS..... 40
System structure..... 40
Introduction functions..... 41
Control strategy..... 47
Diagnosis and Service..... 49
ETACS Pin Definition..... 50

Removal/Installation

ETACS..... 52
Removal of ETACS..... 52
Installation of ETACS..... 53

Specification

ETACS..... 54
Basic parameters..... 54

Downloaded from www.Manualslib.com manuals search engine

Instruction and Operation

ETACS body computer

SUNRAY ETACS is for controlling a majority of electrical systems and equipments on vehicle, such as front water sprayer, front wiper, key hole lamp, interior ceiling lamp, anti-theft alarm bell, seat belt alarm, power window, rear fog lamp, rear defroster, front fog lamp, step lamp, small lamp, headlamp, hazard warning lamp, and locking device.
ETACS control is achieved based on status of various equipments, including signals from driver side door and its locking device, front passenger door and its locking device, vehicle speed signal, rear fog lamp switch, front fog lamp switch, small lamp switch, headlamp switch, front water sprayer switch, front wiper switch, hand brake switch, rear defroster switch, key insertion, ignition switch, seat belt and so on.

Mounting position of ETACS

ETACS is installed below the glove box of instrument panel.

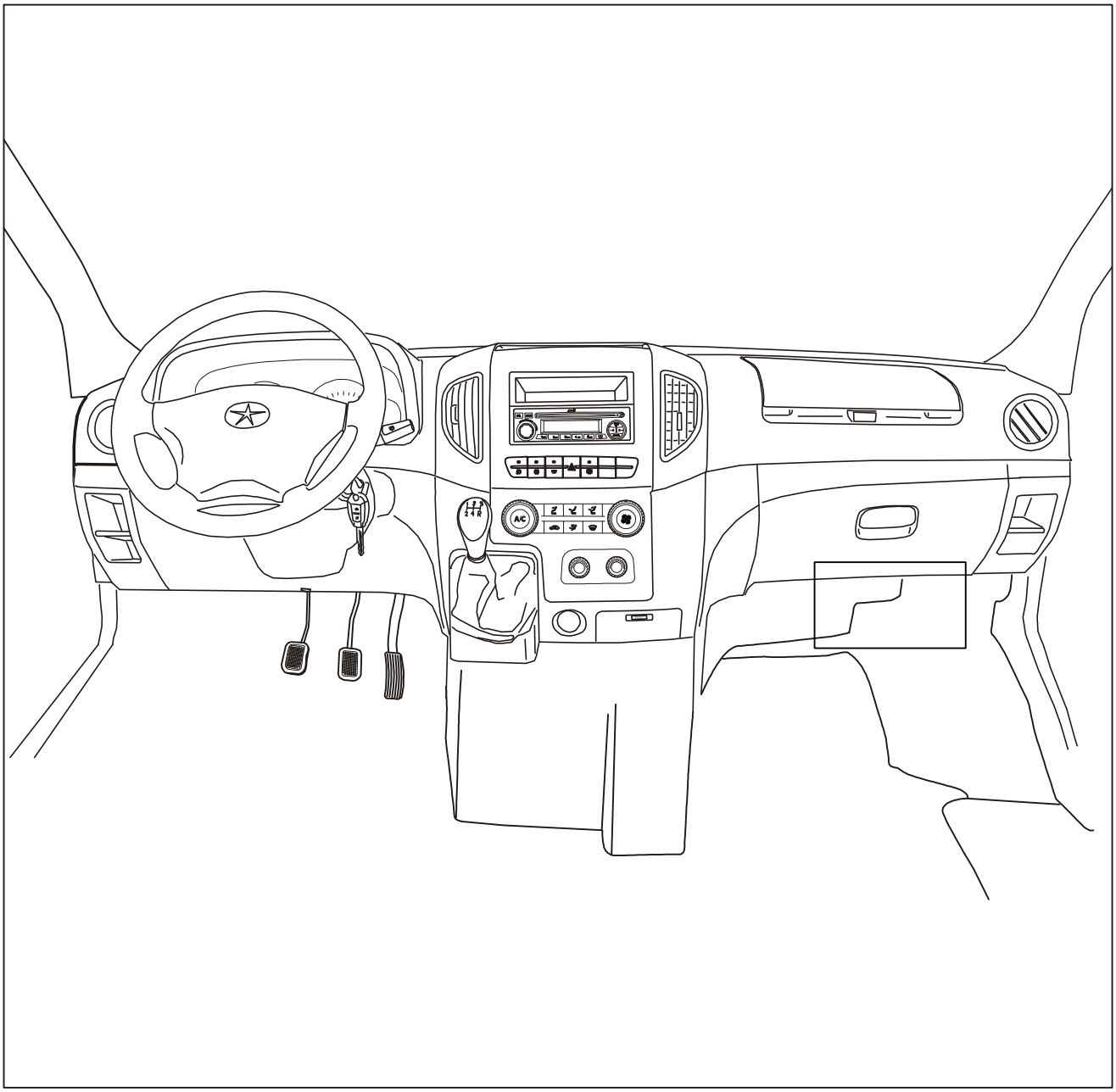

Downloaded from www.Manualslib.com manuals search engine

Instruction and Operation

Introduction to ETACS functions

SUNRAY ETACS defines 17 kinds of function listed below:

A. Washer & Wiper Control
B. Variable Intermittent Wiper Control
C. Ignition Key Hole Illumination Control
D. Front Ceiling Lamp Illumination Control
E. Parking Start Warning
F. Seat Belt Warning Timer
G. Power Window Timer
H. Tail Lamp Auto Cut
I. Rear Fog Lamp Control
J. Power Door Latch Control
K. Key Management Control
L. Induction Conflict Control
M. Auto Locking
N. Key-Out Auto Door Unlock
O. Step Lamp Control
P. Middle Door Control
Q. Password Input

Downloaded from www.Manualslib.com manuals search engine

Diagnosis and Testing

System structure

System structure chart:

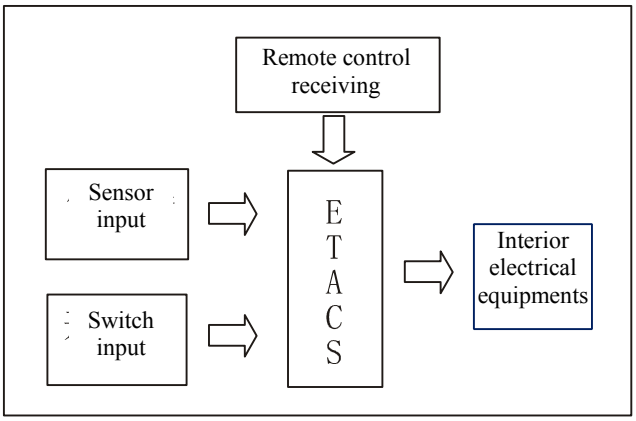

1. SUNRAY ETACS is a centralized control module for body electrical equipments.
2. Body electrical control system mainly consists of ETACS, sensor input, switch input, remote control receiving input and interior electrical equipments.
3. Every parts of body electrical control system are connected through interior harnesses.
4. ETACS shall make the interior electrical equipments actuate after judgment based on various input quantities.

Downloaded from www.Manualslib.com manuals search engine

Diagnosis and Testing

Introduction to ETACS functions

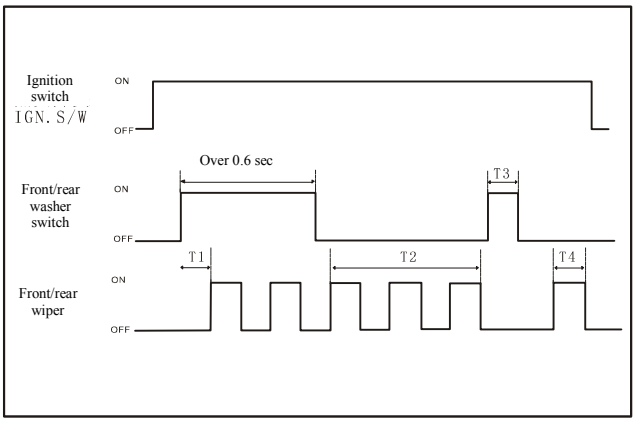

1. Washer & Wiper Control
   Turn the ignition switch to "ON" position.
   - If the washer is switched on over 0.6 sec, the wiper shall operate in T1 (0.6±0.1s) after the start of washer switch and it shall perform 3 T4 cycles (viz. 3 times) of wiping after the switch is off.
   - If the washer is switched on within 0.2-0.6 sec (T3), the wiper shall perform one time of wiping.

   T1: 0.6±0.1 sec
   T2: 2.5—3.8 sec
   T3: 0.2—0.6 sec (MAX)
   T4: One cycle of wiping

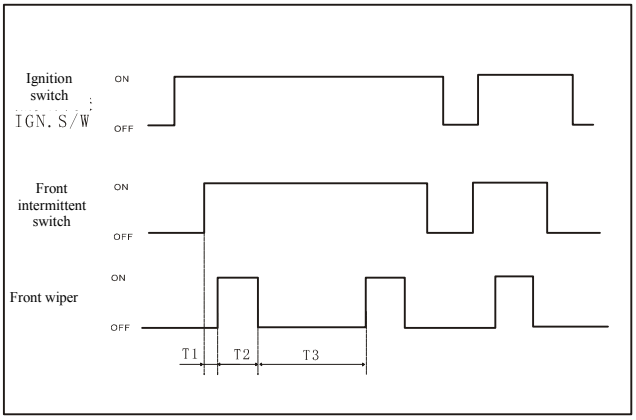

2. Variable intermittent wiper
   Turn the ignition switch to "ON" position. The wiper shall operate after the intermittent switch is turned on in T1 (0.3S), each time of wiping for T2 (0.7±0.1S) with interval adjustable within 2.6±0.7S(VR=0KΩ)~18.0±1S(VR=50KΩ) when the vehicle speed is 0Km/h.
   When the vehicle speed is over 100Km/h, the wiping interval is adjustable within 1.0±0.2S(VR=0KΩ)~10.0±1S(VR=50KΩ).

   T1: 0.3 sec
   T2: 0.7±0.1 sec
   T3: When the vehicle speed is 0Km/h, the interval is adjustable within:
   - 2.6±0.7S～8.0±1S(VR=50KΩ)
     When the vehicle speed is 100Km/h, the interval is adjustable within:
   - 1.0±0.2S～10.0±1S(VR=50KΩ)

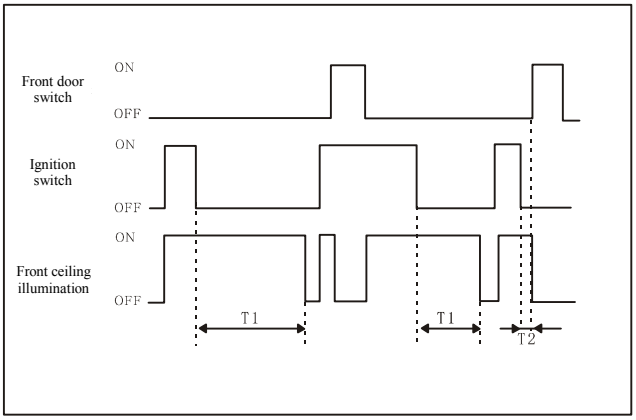

3. Ignition Key Hole Illumination Control
   Turn the ignition switch to "OFF" position. The ignition key hole lamp shall lighten when any of front doors open and shall go out in T1 (10±1S) after the front door is closed. With the front doors open, if your turn the ignition switch to "ON" position, the lamp shall go out.

   T1: 10±1sec
   T2: 0～10sec

Downloaded from www.Manualslib.com manuals search engine

Diagnosis and Testing

Introduction to ETACS functions

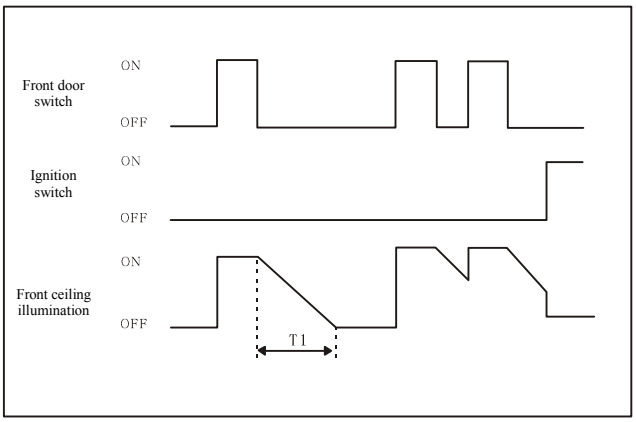

4. Front Ceiling Lamp Illumination Control (Decayed Room Lamp)
   With the front ceiling lamp set to "DOOR" position, the front ceiling lamp shall lighten when the front door is open. When the front door is closed, the lamp shall go out gradually in T1(5.5±0.5S) with the ignition switch turned to "ACC" position or shall go out directly with the ignition switch turned to "ON" position.

   T1: 5.5±0.5 sec

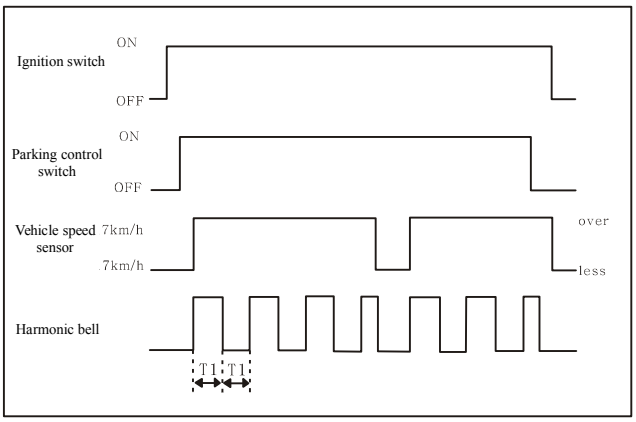

5. Parking Start Warning
   Turn the ignition switch to "ON" position. With the parking brake handle unreleased, when the vehicle speed is over 17Km/h, the door bell shall ring intermittently with interval of T1(0.3±0.1S) and it shall stop ringing with the handle released. If the vehicle speed is lower than 17Km/h, there is no alarm.

   TI: 0.3±0.1 sec

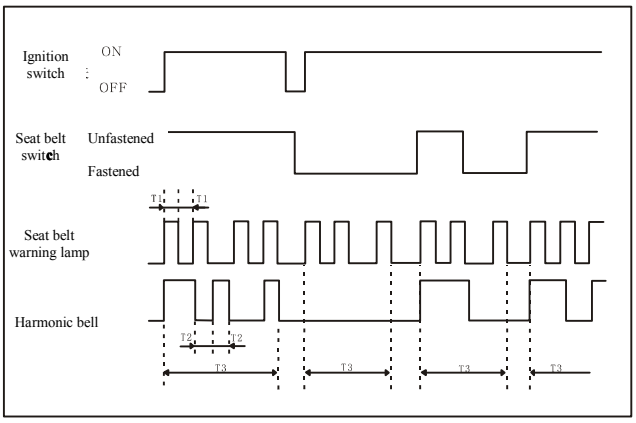

6. Seat Belt Warning Timer
   Turn the ignition switch to "ON" position. If the driver's seat belt is unfastened, the seat belt warning lamp shall flicker with 50% duty cycle and time of T1(0.3±0.1sec), and the door bell shall ring for T3 (6±1sec) with an interval of T2(0.45±0.1sec). If the seat belt is fastened, the warning lamp shall flicker once without any alarm. If the seat belt is released, the warning lamp shall flicker with alarm and if the seat belt is fastened again, the alarm shall stop. Unfastening seat belt indicator shall be normally on after one cycle of flickering, but the the seat belt indicator shall go out after one cycle of flickering.
   T1: 0.3±0.1 sec
   T2: 0.45±0.1 sec
   T3: 6±1 sec

7. Power Window Auto Rising
   Auto window rising shall be achieved after the vehicle is locked properly by remote control. Windows at both driver and front passenger sides shall rise simultaneously and the maximum rise time is 4.5 sec.

Downloaded from www.Manualslib.com manuals search engine

Diagnosis and Testing

Introduction to ETACS functions

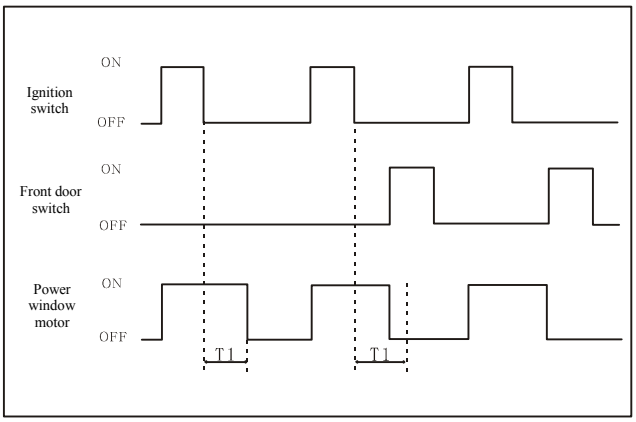

8. Power Window Timer
When the ignition switch is turned to "ON" position, the power windows are operable with front doors closed. When the ignition switch is turned to "LOCK" or "ACC" position, the power windows are operable within T1 (30±3sec); however, if any of front doors opens within this period, the power windows are inoperable.
T1: 30±3 sec

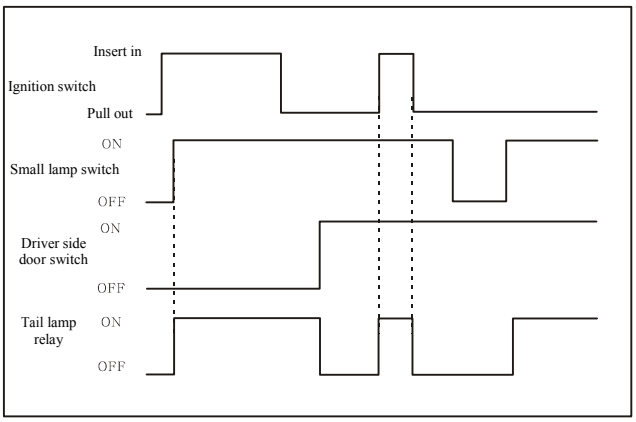

9. Tail Lamp Auto Cut
Tail lamps shall lighten in any case once the lighting switch (on the left of combination switch) is turned from OFF to ON.
Tail lamp auto cut is controlled by the procedures below:
- Lighting switch (on the left of combination switch) is turned from ON to OFF.
- With the key pulled out, when the driver side door opens, the tail lamp shall go out.
- If you insert the key again, the tail lamp shall lighten.

Note: Tail lamps mentioned here refer to small lamps.

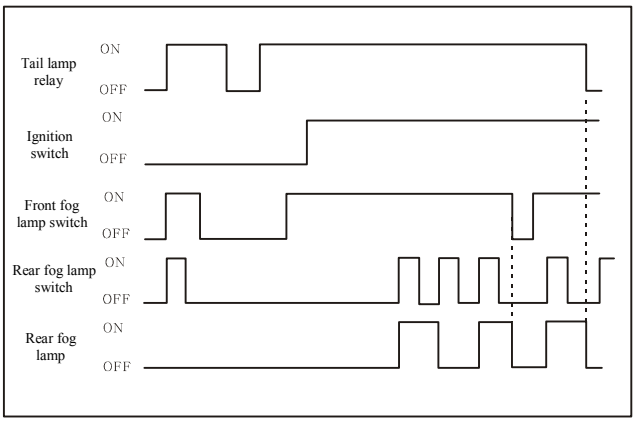

10. Rear Fog Lamp Control
With the ignition switch turned to "OFF" position, the lighting switch (on the left of combination switch) and front fog lamp switch turned on, if you turn on the rear fog lamp switch, the rear fog lamps won't lighten. With the ignition switch turned to "ON" position, the lighting switch (on the left of combination switch) turned to small lamp position, and front fog lamp switch turned on, if you turn on the rear fog lamp switch, the rear fog lamps shall lighten and at this time if you turn off the front fog lamps, the rear fog lamps shall be turned off simultaneously. When the lighting switch is turned to lighting position, the operation of rear fog lamps won't be affected by the front fog lamps, viz. with front fog lamp switch off, the rear fog lamps can be separately controlled by the rear fog lamp switch.

Downloaded from www.Manualslib.com manuals search engine

Diagnosis and Testing

Introduction to ETACS functions

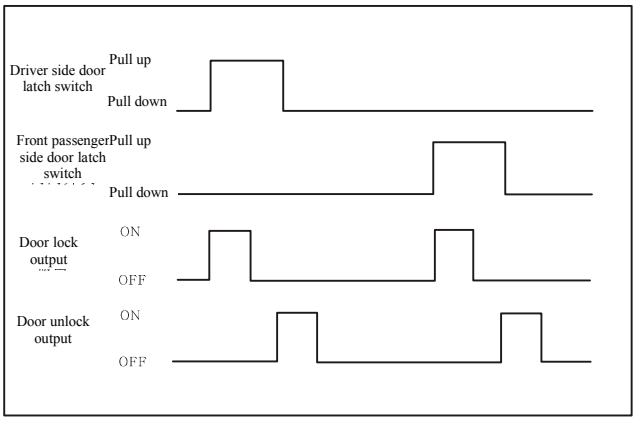

11. Power Door Latch Control
Four door locks can be controlled through doors at driver side and front passenger side. If you push down the driver side door latch, doors shall be locked with the door lock signal output by locking device; if you pull up the driver side door latch, doors shall be unlocked with the door unlock signal output by locking device. It is the same for the front passenger side door.

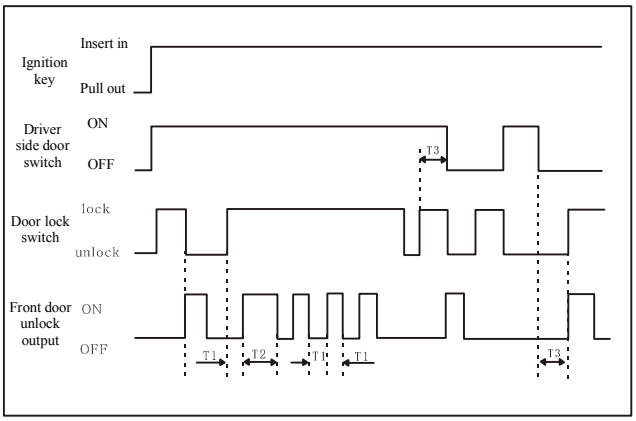

12. Key Management Control
With the key in and driver side door open, if you push down the latch switch, doors cannot be locked after a door lock signal output by locking device. If you hold the latch switch, a door unlock signal is output by locking device and then 3 unlock signals are output. The driver side door is closed within T3 (0sec.<T3<0.5sec.) after the latch switch is pressed; at the same time, if latch switch is pulled up, doors won't be locked with an unlock signal output.

T1: 0.5±0.1 sec
T2: 1±0.1 sec
T3: 0SEC.<T3<0.5 sec

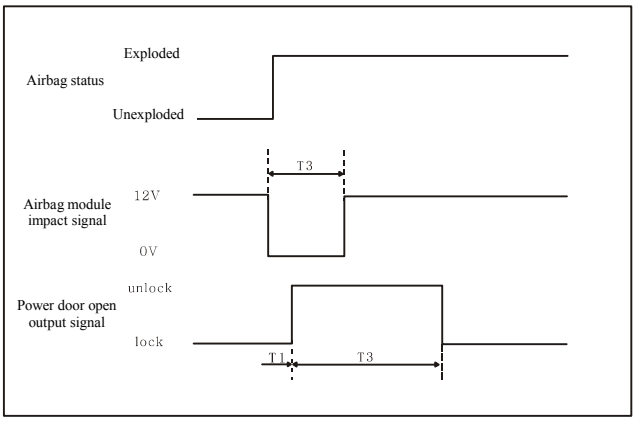

13. Induction Conflict Control
In case of collision, the airbag expands and the airbag controller outputs a 0V signal to ETACS, and then ETACS output an unlock signal to the locking device, which output an unlock action lasting for T3 (5sec) in T2 (40msec), so the doors are under unlocked status.

T1: 200 msec
T2: 40 msec
T3: 5 sec

Downloaded from www.Manualslib.com manuals search engine

Diagnosis and Testing

Introduction to ETACS functions

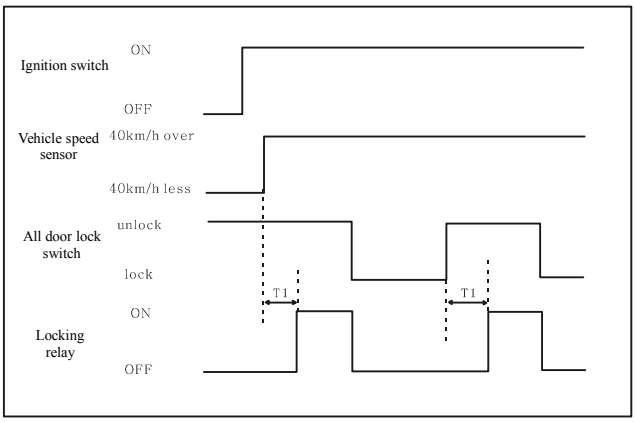

14. Auto Locking.
With the ignition switch turned to "ON" position and the doors unlocked, the doors shall be locked automatically in T1 (1±0.3sec) after the vehicle speed exceeds 40Km/h. If the doors are unlocked by locking device during travelling, they shall be locked automatically again in T1 (1±0.3sec).

T1: 1±0.3 sec

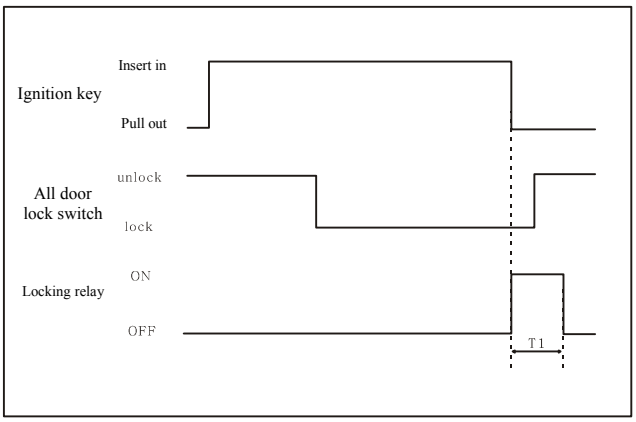

15. Key-Out Auto Door Unlock
With the door locked, if the ignition key is pulled out, the doors shall be unlocked after an unlock signal of T1 (0.5±0.1 sec) is output by the locking relay.

T1: 0.5±0.1 sec

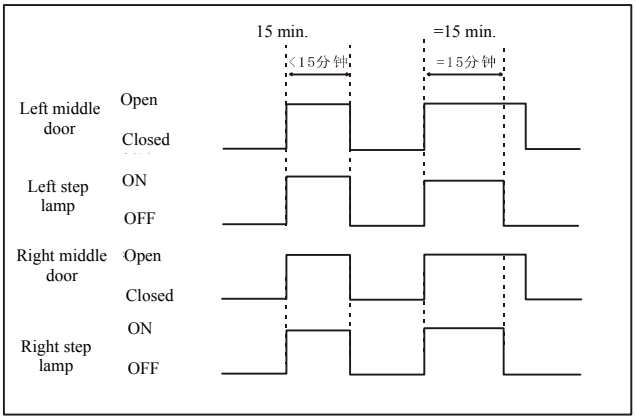

16. Step Lamp Control
The left step lamp shall lighten with the left middle door open and go out with the door closed. The right step lamp shall lighten with the right middle door open and go out with the door closed. The step lamps shall go out automatically if the middle door open time exceeds 15 minutes.

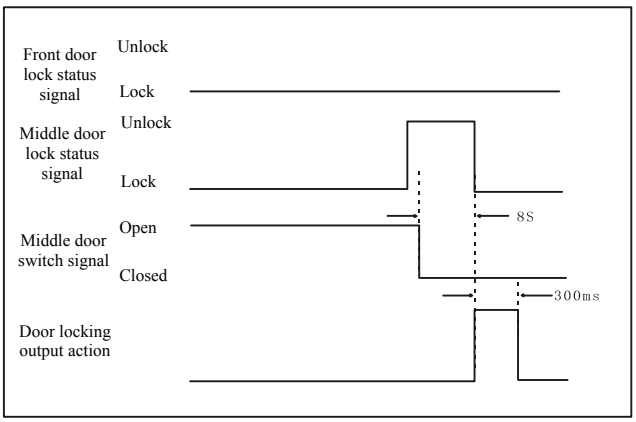

17. Middle Door Control
Middle door auto locking
- With the left and right front doors locked, if you open and then close the middle door, the middle door shall be locked automatically in 8 sec. (Please refer to the left figure.)

Downloaded from www.Manualslib.com manuals search engine

Diagnosis and Testing

Introduction to ETACS functions

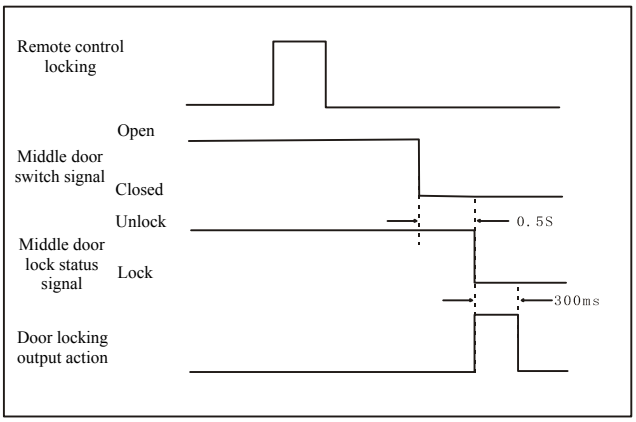

- With the middle door open, if you press "Unlock" key on the remote control, the middle door shall be locked in 0.5 sec after the door is closed. (Please refer to the left figure.)

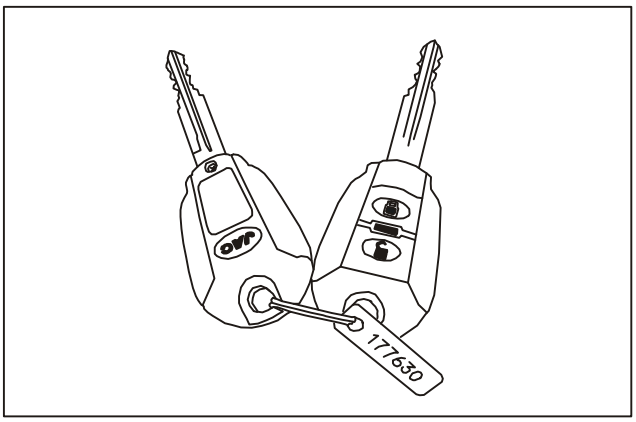

18. Password Learning Input
    - If you press the password learning switch, the fault lamp shall lighten entering into password learning mode. The learning time is 10 sec in total.
    - Press every key of the remote controller once. The fault lamp shall go out after the first key is pressed. Four keys in total can be learned within 10 sec after starting the password learning key.
    - Conduct detection for remote control password learning.
    - Enter into password learning mode with the previous memory deleted automatically.

Downloaded from www.Manualslib.com manuals search engine

Diagnosis and Testing

Control strategy

S/N	Item	Function
1	Washer & Wiper Control	Turn the ignition switch to "ON" position. 1. If the washer is switched on over 0.6 sec, the wiper shall operate in T1 (0.6±0.1s) after the start of washer switch and it shall perform 3 T4 cycles (viz. 3 times) of wiping after the switch is off; 2. If the washer is switched on within 0.2-0.6 sec (T3), the wiper shall perform one time of wiping.
2	Variable intermittent wiper	Turn the ignition switch to "ON" position. The wiper shall operate after the intermittent switch is turned on in T1 (0.3S), each time of wiping for T2 (0.7±0.1S) with interval adjustable within (1±0.5S~11±1S). When the vehicle speed is over 40Km/h, the interval T3 shall shorten by 4 sec.
3	Back window defroster timer	With the generator being charged, if you turn on the defroster switch, the defroster relay shall operate for T1 (20±2min). If the interval of pressing defroster switch is less than T1, the defrosting function is cancelled after the second time of pressing switch.
4	Ignition Key Hole Illumination Control	Turn the ignition switch to "OFF" position. The ignition key hole lamp shall lighten when any of front doors open and shall go out in T1 (10±1S) after the front door is closed. With the front doors open, if your insert the key in, the lamp shall go out. If the key is pulled out with the front door open, the lamp shall lighten and shall go out in T1 (10±1S) after the front door is closed. With the key not inserted, if you open the front door, the lamp shall lighten. The lamp shall go out immediately if the key is inserted within T2 (0-10S) after the front door is closed and it shall go out in T1 (10±1S) after the front door is closed if the key is not inserted within T2 (0-10S).
5	Front Ceiling Lamp Illumination Control	With the front ceiling lamp set to "DOOR" position, the front ceiling lamp shall lighten when the front door is open. When the front door is closed, the lamp shall go out gradually in T1 (5.5±0.5S) with the ignition switch turned to "ACC" position or shall go out directly with the ignition switch turned to "ON" position.
6	Parking Start Warning	Turn the ignition switch to "ON" position. With the parking brake handle unreleased, when the vehicle speed is over 3 Km/h, the door bell shall ring intermittently with interval of T1 (0.3±0.1S) and it shall stop ringing with the handle released. If the vehicle speed is lower than 3 Km/h, there is no alarm.
7	Seat Belt Warning Timer	Turn the ignition switch to "ON" position. If the driver's seat belt is unfastened, the seat belt warning lamp shall flicker with 50% duty cycle and time of T1(0.3±0.1 sec), and the door bell shall ring for T3 (6±1 sec) with an interval of T2(0.45±0.1 sec). If the seat belt is fastened, the warning lamp shall flicker once without any alarm. If the seat belt is released, the warning lamp shall flicker with alarm and if the seat belt is fastened again, the alarm shall stop.
8	Power Window Timer	When the ignition switch is turned to "ON" position, the power windows are operable with front doors closed. When the ignition switch is turned to "LOCK" or "ACC" position, the power windows are operable within T1 (30±3 sec); however, if any of front doors opens within this period, the power windows are inoperable.
9	Tail Lamp Auto Cut	With the key inserted, the lighting switch (on the combination switch) turned on and the driver side door closed, the tail lamp shall lighten; with the key pulled out and the tail lamp switch still on, the tail lamp shall lighten but it shall go out if the driver side door opens; when the key is inserted again, the tail lamp shall lighten until the key is pulled out. Under normal condition, with the tail lamp switch on, the tail lamps shall lighten regardless of key insertion or not or the door status. (Tail lamps mentioned here refer to small lamps.)
10	Rear Fog Lamp Control	With the ignition switch turned to "OFF" position, the lighting switch (on the left of combination switch) and front fog lamp switch turned on, if you turn on the rear fog lamp switch, the rear fog lamps won't lighten. With the ignition switch turned to "ON" position, the lighting switch (on the left of combination switch) turned to small lamp position, and front fog lamp switch turned on, if you turn on the rear fog lamp switch, the rear fog lamps shall lighten and at this time if you turn off the front fog lamps, the rear fog lamps shall be turned off simultaneously. If the lighting switch is turned off at this time, the rear fog lamps shall go out.
11	Power Door Latch Control	Four door locks can be controlled through doors at driver side and front passenger side. If you push down the driver side door latch, doors shall be locked with the door lock signal output by locking device; if you pull up the driver side door latch, doors shall be unlocked with the door unlock signal output by locking device. It is the same for the front passenger side door.

Downloaded from www.Manualslib.com manuals search engine

Diagnosis and Testing

Control strategy

S/N	Item	Function
12	Key Management Control	With the key in and driver side door open, if you push down the latch switch, doors cannot be locked after a door lock signal output by locking device. If you hold the latch switch, a door unlock signal is output by locking device and then 3 unlock signals are output. The driver side door is closed within T3 (0 sec.<T3<0.5 sec.) after the latch switch is pressed; at the same time, if latch switch is pulled up, doors won't be locked with an unlock signal output.
13	Induction Conflict Control	In case of collision, the airbag expands and the airbag controller outputs a 0V signal to ETACS, and then ETACS output an unlock signal to the locking device, which output an unlock action lasting for T3 (5 sec) in T2 (40 msec), so the doors are under unlocked status.
14	Auto Locking	With the ignition switch turned to "ON" position and the doors unlocked, the doors shall be locked automatically in T1 (1±0.3 sec) after the vehicle speed exceeds 40Km/h. If the doors are unlocked by locking device during travelling, they shall be locked automatically again in T1 (1±0.3 sec).
15	Key-Out Auto Door Unlock	With the door locked, if the ignition key is pulled out, the doors shall be unlocked after an unlock signal of T1(0.5±0.1 sec) is output by the locking relay.
16	Warning Function	With all doors and engine hood closed, if you use remote controller for locking, the vehicle shall be under warning status after the hazard warning lamp flickers T2 (1.0±0.2 sec); if you use remote controller for locking under all doors are not closed, the doors shall be locked but the vehicle is not under warning status and it shall be under warning status if all doors are closed.
17	Warning Off	If you use the remote controller to release warning status, the doors shall be unlocked, the hazard warning lamp shall flicker T1 (0.5±0.1 sec) and flicker another T1 sec in T2 (0.5±0.1 sec).
18	Step Lamp Control	The step lamp shall lighten with the middle door open and go out with the door closed. The step lamp shall go out automatically if the middle door open time exceeds 15 minutes. (Please refer to figure below.)
19	Middle Door Control	a. With the left and right front doors locked, if you open and then close the middle door, the middle door shall be locked automatically in 8 sec. b. With the middle door open, if you press "Unlock" key on the remote control, the middle door shall be locked in 0.5 sec after the door is closed.
20	Remote Control Window Rising	When using remote controller to set warning and perform locking, ETACS shall output left/right front window rising signal.
21	Password Input	a. Start the decoder switch; b. Press any one of keys on the remote controller and press again after 3 sec of pause; c. Perform remote control detection; d. If more than one remote controller is in need of learning, please repeat steps a, b and c. One key can be learned each time. Two keys can be learned in total.

Downloaded from www.Manualslib.com manuals search engine

Diagnosis and Testing

Diagnosis and Service

S/N	Function	Service Methods and Phenomena
1	Warning-off	a. Press "Learning" key on decoder and the fault lamp lightens. b. If you press the "Warning-off" switch on the remote control, the fault lamp shall go out; if you press "Unlock" switch in 8 sec, the fault lamp shall flicker twice and then go out with the door latch unlocked; if you press the "Lock" switch on the remote control, the fault lamp shall lighten and then go out with door latch locked and power window auto rising. c. At this time, if you open the left door, the front ceiling lamp, ignition key hole lamp and anti-theft relay shall operate with intermittent flickering of fault lamp and alarm sound; if you close the left door and press the "Lock" key on the remote control, the interior lamp and ignition key hole lamp shall go out and the anti-theft relay shall stop operating, with fault lamp and alarm off, power window auto rising on, door latch locked.
2	Detection of ignition switch and power window	With the ignition switch turned to "ON" position, the power windows are operable and the seat belt indicator flickers.
3	Back window defogging detection	With the generator turned on, the rear defogging device shall operate once the switch is pressed and shall stop operation once it is pressed again. With the generator turned off, the rear defogging shall stop.
4	Front washer detection	Press the front washer switch for 1 sec and release it. Check if the wiper stops after operating for 2 sec.
5	Front wiper delay detection	With the ignition key in and front wiper intermittent switch pressed, check the operating cycle of front wiper. If you press the front wiper regulating switch, the front wiper operating cycle shall be lengthened. Release the wiper intermittent switch and wiper regulating switch, and then turn off the ignition switch.
6	Driver side door (left door) detection	If you open the driver side door, the front ceiling lamp and ignition key hole lamp shall lighten; if you close the door, the front ceiling lamp shall go out gradually and the ignition key hole lamp shall go out in 6 sec.
7	Front passenger side door (right door) detection	Same as the driver side door detection.
8	Middle door detection	If you open the middle door, the front ceiling lamp and step lamp shall lighten; if you close the door, the step lamp shall go out and the front ceiling lamp shall go out gradually.
9	Seat belt detection	With the ignition switch turned to "ON" position, if the seat belt is unfastened, the seat belt indicator shall flicker 10 times with buzzer ringing 10 times.
10	Detection of lamps	With the driver side door open, small lamp switch on and key inserted, the small lamps and front ceiling lamp lighten; with key pulled out, the small lamps go out. With ignition switch turned to "ON" position, small lamp switch and front fog lamp switch on, rear fog lamps lighten once the switch is pressed and they go out once the switch is pressed again. With rear fog lamps on, they go out once the front fog lamp switch is turned off. Then if the small lamp switch is turned off and headlamp switch is turned on, rear fog lamps are operable separately without the front fog lamp switch on. With lighting lamp reset, front fog lamps, rear fog lamps and small lamps go out.
11	Door latch detection	If the left front door latch is locked, all door latches inside shall be locked; if the left front door latch is unlocked, all door latches inside shall be unlocked. It is the same for the right front door latch.
12	Auto unlocking	With door latch locked and ignition key pulled out, the door latch shall be unlocked.
13	40Km auto locking	With the ignition switch turned to "ON" position, if the vehicle speed exceeds 40Km/h, the door latch shall be locked automatically.
14	Warning detection	a. With ignition switch turned off and ignition key pulled out, if you open the middle door, the front ceiling lamp and step lamps shall lighten; if you press "Lock" key, the locking lamp shall lighten and then go out, with power window auto rising. If you close the middle door, the front ceiling lamp and step lamps shall go out and the fault lamp shall lighten and then go out. b. If you open and then close the left door, the front ceiling lamp and ignition key hole lamp shall lighten and the anti-theft relay shall operate with intermittent flickering of fault lamp and alarm sound; if you press "Lock" key, door latch shall be locked, fault lamp shall lighten and then go out, and power window shall rise automatically. c. It is the same for right door. d. If you open the middle door, the front ceiling lamp and step lamps shall lighten and the anti-theft relay shall operate with intermittent flickering of fault lamp and alarm sound; if you close the middle door, the step lamps shall go out; if you press "Lock" key, door latch shall be locked, fault lamp shall lighten and then go out, and power window shall rise automatically.

Downloaded from www.Manualslib.com manuals search engine

Diagnosis and Testing

ETACS Pin Definition

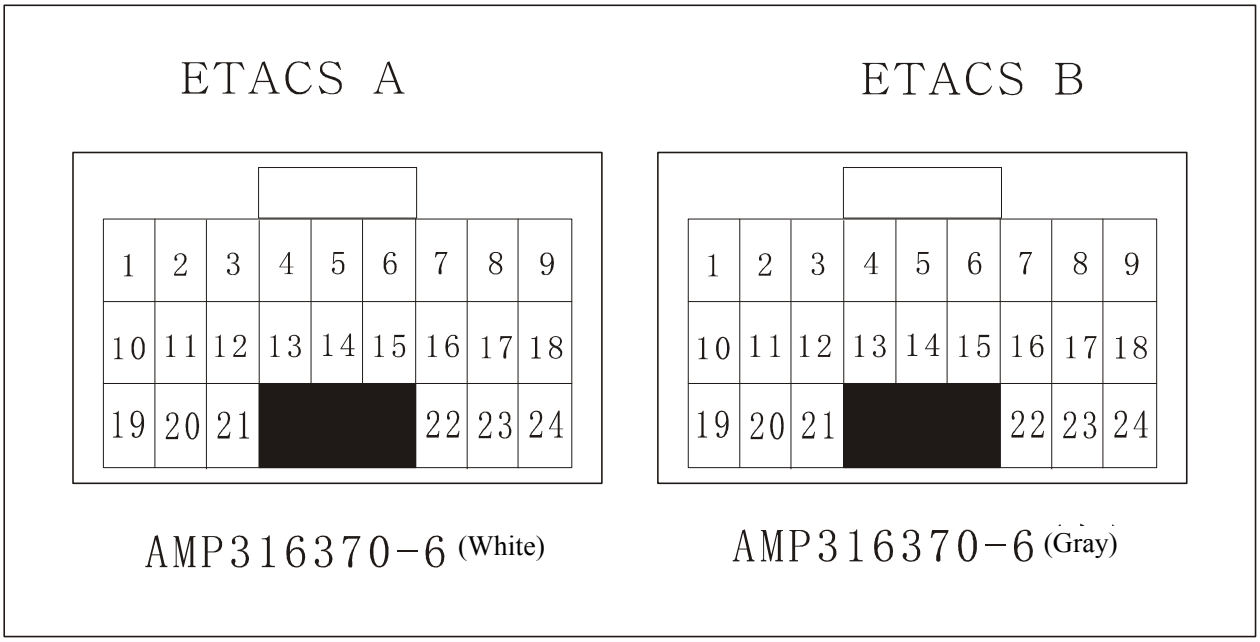

Port No.	Port Name	Input/Output	Initial Status	Operating Status	Remark
A1	Interior lamp	Output	High level	Low level	
A2	Anti-theft relay	Output	High level (NC)	Low level	Reserved
A3	Front wiper relay	Output	High level	Low level	
A4	Rear defroster relay	Output	High level	Low level	
A5	Seat belt warning lamp	Output	High level	Low level	
A6	Rear fog lamp relay	Output	High level	Low level	
A7	Step lamps	Output	NC	Low level	
A8	Door locking relay	Output	High level	Low level	
A9					
A10	B+				
A11	Door unlocking relay	Output	High level	Low level	
A12	Middle door switch	Input	NC (door closed)	Low level (door open)	
A13	Small lamp relay	Output	High level	Low level	
A14	Anti-theft alarm bell	Output	High level	Low level	Reserved
A15	Power window relay	Output	High level	Low level	
A16					
A17	Front passenger side door switch	Input	NC	Low level	
A18	Hazard warning lamp relay	Output	High level	Low level	
A19	Ground				
A20	Key hole lamp	Output	High level	Low level	
A21					
A22					
A23					

Downloaded from www.Manualslib.com manuals search engine

Diagnosis and Testing

ETACS Pin Definition (Continued)

Port No.	Port Name	Input/Output	Initial Status	Operating Status	Remark
A24	Vehicle speed signal	Input	NC	Pulse	
B1	Driver side door switch	Input	NC	Low level	
B2	Rear fog lamp switch	Input	NC	Low level	
B3	Left/right front window relay	Output	NC	Low level	
B4	Front water sprayer switch	Input	NC	Low level	
B5	Front passenger side door lock switch	Input	NC	Low level	
B6	Hand brake switch	Input	NC	Low level	
B7	Rear defroster switch	Input	NC	Low level	
B8	Front fog lamp switch	Input	NC	Low level	
B9	IG2	Input	NC	High level	
B10	Door switch	Input	NC	Low level	
B11	Key insertion switch	Input	NC	High level	
B12	Headlamp switch	Input	NC	Low level	
B13	Small lamp switch	Input	NC	Low level	
B14	Driver side door lock switch	Input	NC	Low level	
B15	Middle door locking device	Input	NC (locked)	Low level (unlocked)	
B16	Seat belt switch	Input	NC	Low level	
B17	Storage code	Input	NC	Pulse	
B18	IG1	Input	NC	High level	
B19	Front wiper intermittent switch	Input	NC	Low level	
B20					
B21	Airbag signal	Input	NC	Low level	
B22	Front wiper interval adjustment	Input			
B23	Generator L	Input	NC	High level	
B24	External antenna				

Downloaded from www.Manualslib.com manuals search engine

Removal/Installation

Removal of ETACS

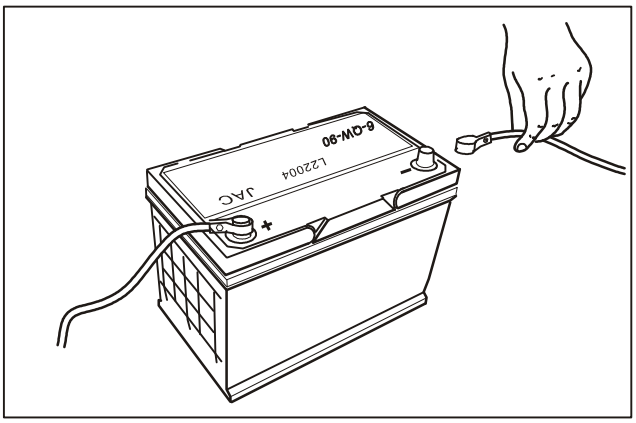

1. Disconnect the negative cable of battery.

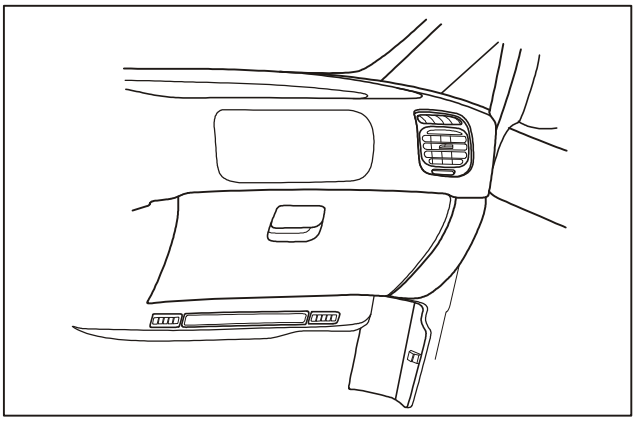

2. Remove the glove box.

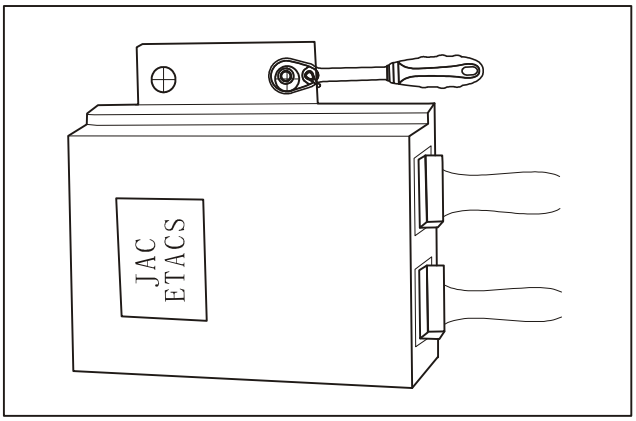

3. Remove the mounting bolts from body computer.

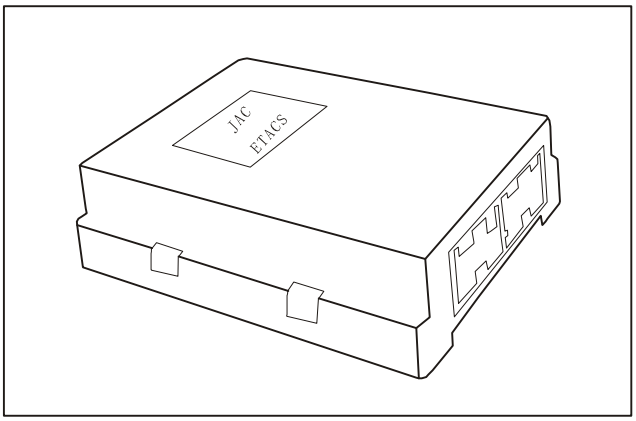

4. Disconnect the harness connector of controller and remove the body computer.

Downloaded from www.Manualslib.com manuals search engine

Removal/Installation

Installation of ETACS

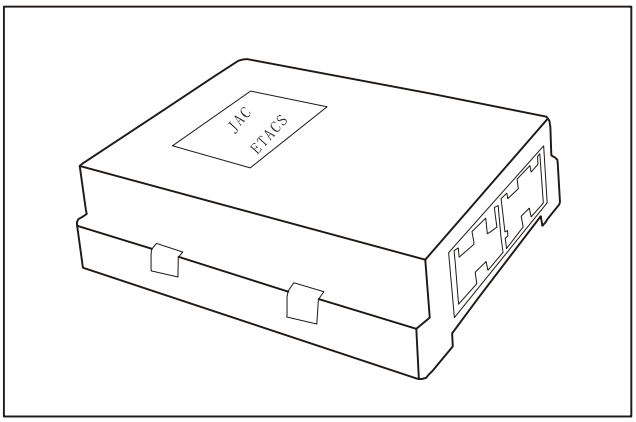

1. Connect the harness connector of controller.

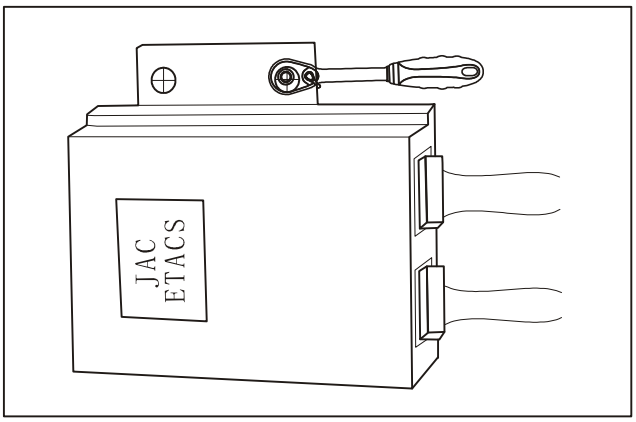

2. Tighten the mounting bolts of body computer.

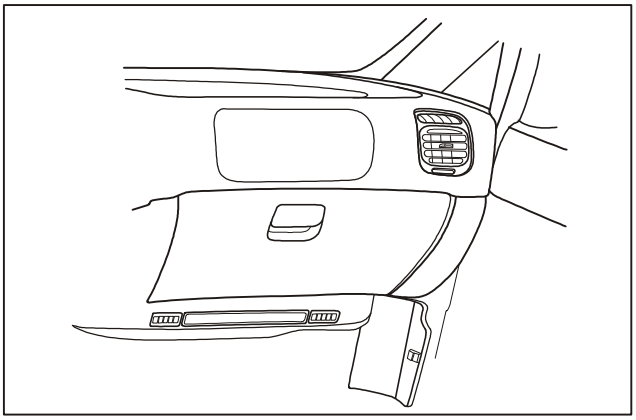

3. Install the glove box.

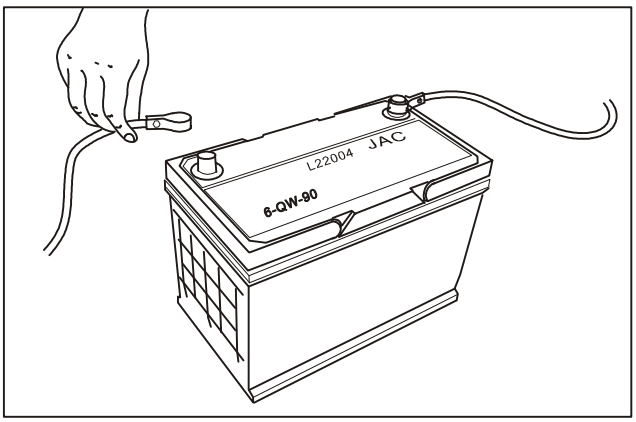

4. Connect the battery cable.

Downloaded from www.Manualslib.com manuals search engine

Specification

Parameters

Electrical Parameter	Requirement
Operating voltage	DC12V
Operating voltage range	DC9V～DC16V
Quiescent current	＜10mA
Insulating resistance	100MΩ (DC500V megger)
Remote control transmitting frequency	315MHz±0.075MHz
Receiving frequency of body controller	315MHz±100KHz
Remote control distance	20M dead zone free
Operating temperature	at -30ºC～+85ºC
Storage temperature	at -40ºC～+90ºC
Relative humidity	≤95%

Downloaded from www.Manualslib.com manuals search engine

Lighting System

Applied models: SUNRAY products manufactured by JAC

Subject Page

Instruction and Operation

Overview..... 56
Lighting configuration table..... 58
Introduction to functions.....59

Diagnosis and Testing

Fault diagnosis.....62

Removal/Installation

Removal of headlamp.....76
Removal of clearance lamps.....77
Removal of front fog lamps.....78
Removal of ceiling lamps..... 79
Removal of rear tail lamps.....80
Removal of high-mounted brake lamp..... 81
Removal of rear fog lamp.....82

Specification

Lighting System.....83
Basic parameters.....83

Downloaded from www.Manualslib.com manuals search engine

Instruction and Operation

Lighting system

SUNRAY front lamps (headlamps) are installed on both sides of vehicle head, for lighting when driving at night. Fog lamps are installed on head positions lower than headlamps, for roadway lighting when driving in rainy or foggy days. Light color of fog lamp is required to be yellow or orange, for yellow is of longer optical wave and excellent fog penetrating capability.

Headlamps

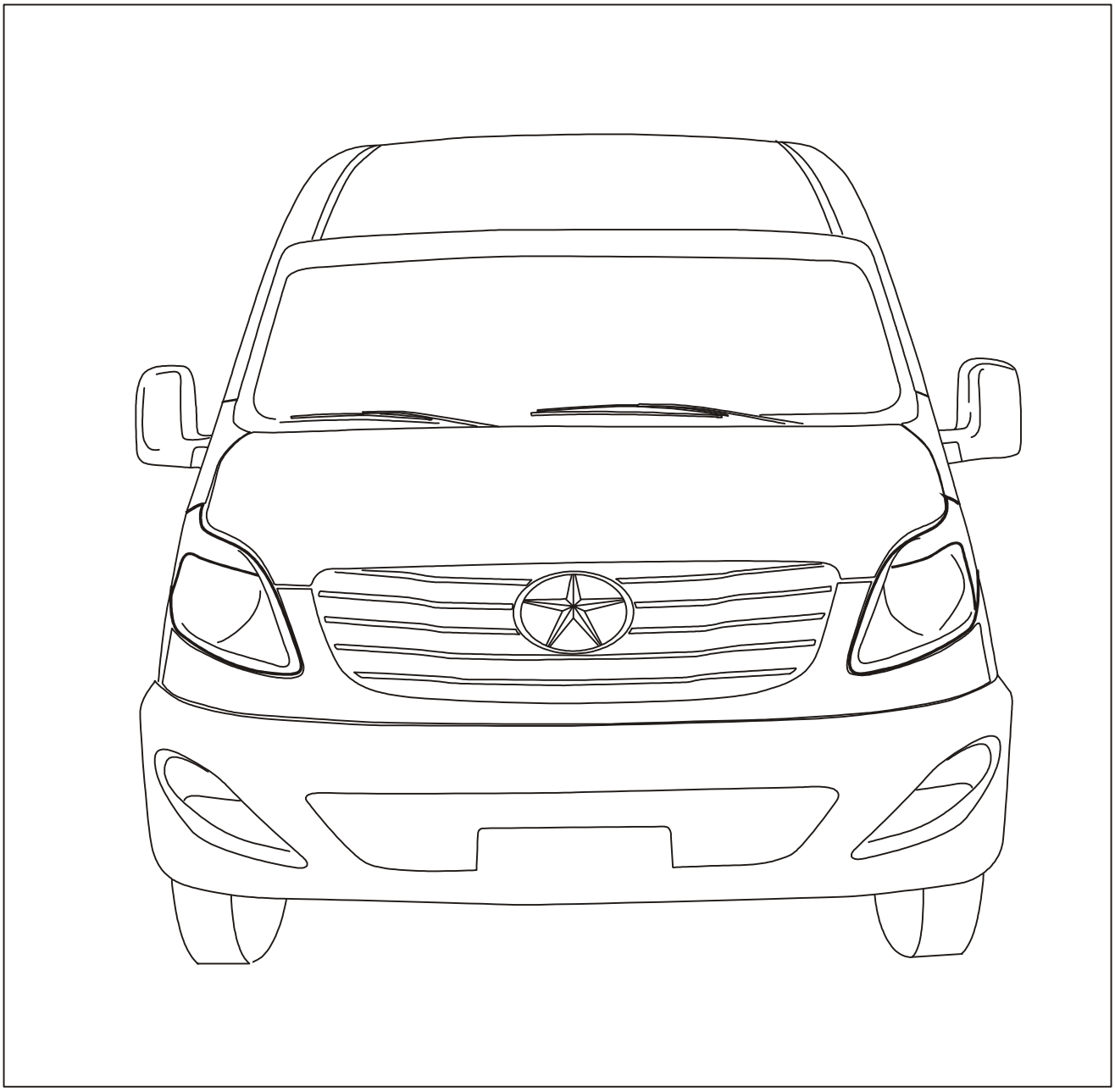

Downloaded from www.Manualslib.com manuals search engine

Instruction and Operation

Tail lamps

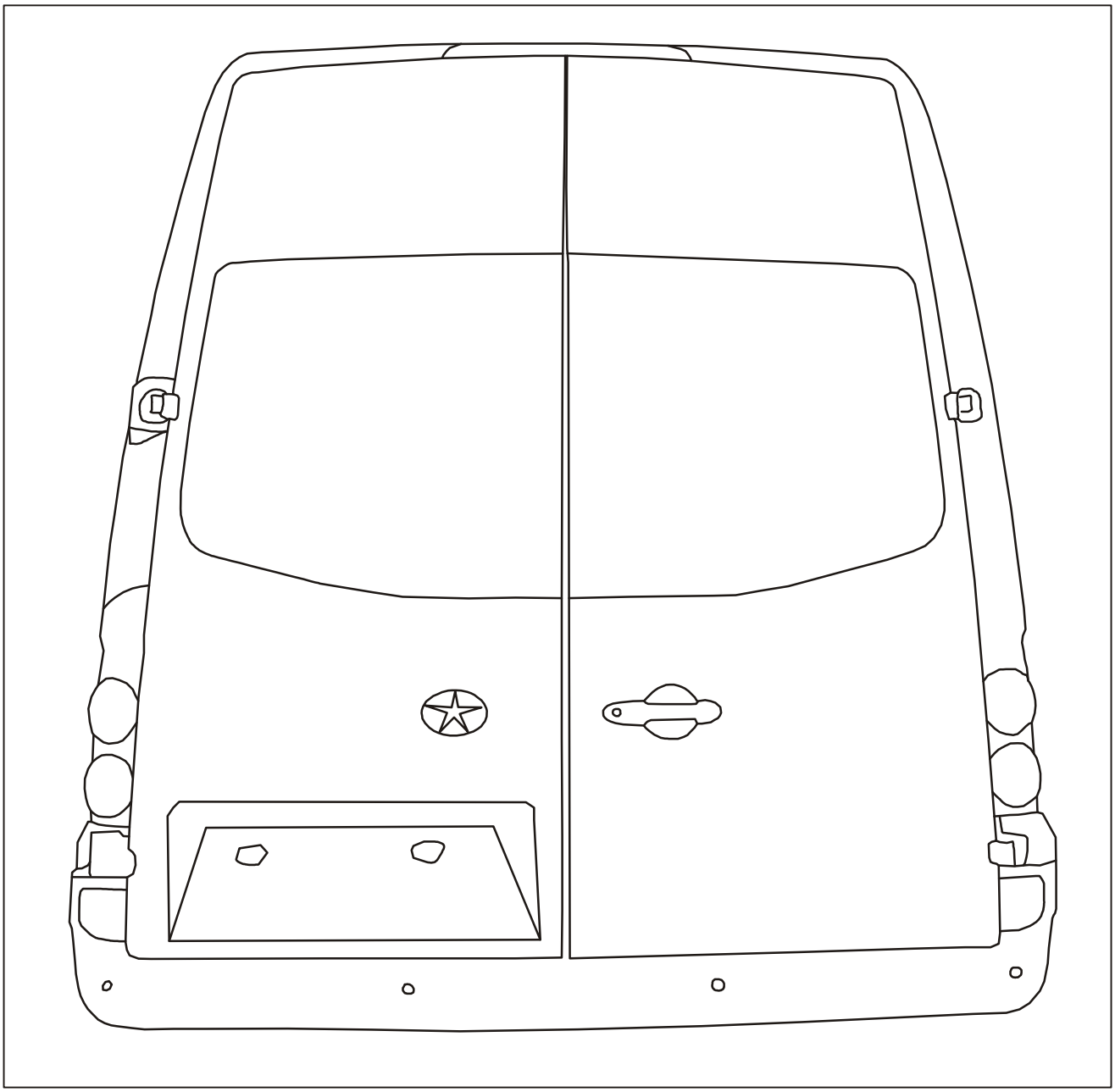

Downloaded from www.Manualslib.com manuals search engine

Instruction and Operation

Lighting configuration table

S/N	Name	Qty. (For single vehicle)
1	Rear ceiling lamp assembly	2
2	Front ceiling lamp assembly	1
3	Left front courtesy lamp	1
4	Right front courtesy lamp	1
5	License plate lamp assembly	2
6	Left side turn signal lamp	1
7	Right side turn signal lamp	1
8	Left front fog lamp assembly	1
9	Right front fog lamp assembly	1
10	Left rear fog lamp assembly	1
11	Right rear fog lamp assembly	1
12	Left front combination lamp assembly	1
13	Right front combination lamp assembly	1
14	Left rear combination lamp assembly	1
15	Right rear combination lamp assembly	1
16	High-mounted brake lamp assembly	1

Downloaded from www.Manualslib.com manuals search engine

Instruction and Operation

Introduction to functions

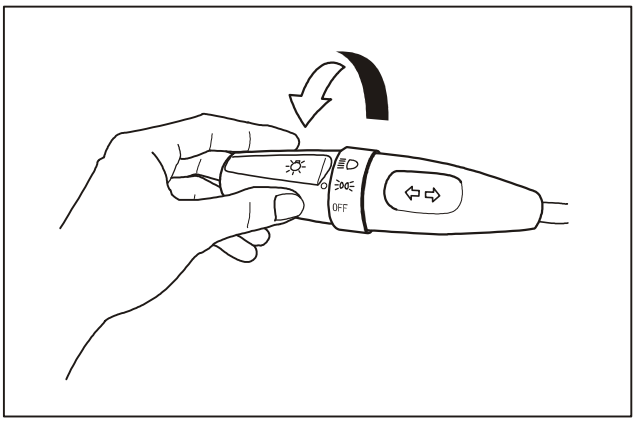

1. Position switch.
   Rotate the cylinder at the end of multifunctional switch lever to the first position to turn on small lamps, tail lamps, license plate lamps and instrument panel lamp.

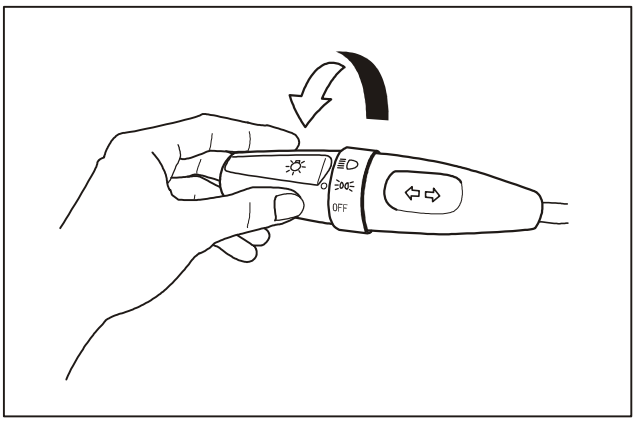

2. Headlamp switch.
   Rotate the cylinder at the end of multifunctional switch lever to the first position to turn on small lamps, tail lamps, license plate lamps and instrument panel lamp.
   Rotate it to the second position to turn on headlamps.

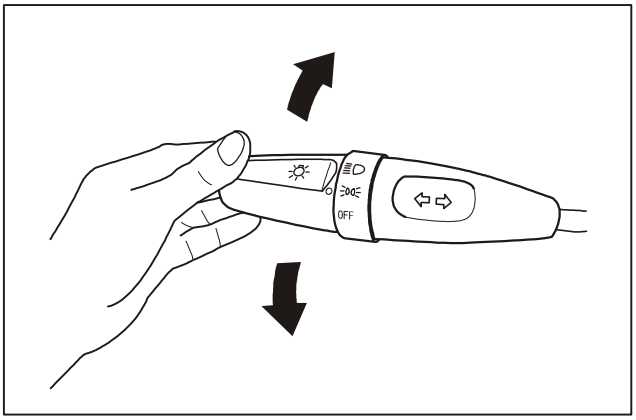

3. Turn signal lamp switch.
   Turn signal lamps only operate when the ignition switch is turned on.
   To turn right, pull up the turn signal lamp switch lever.
   To turn left, push down the turn signal lamp switch lever.

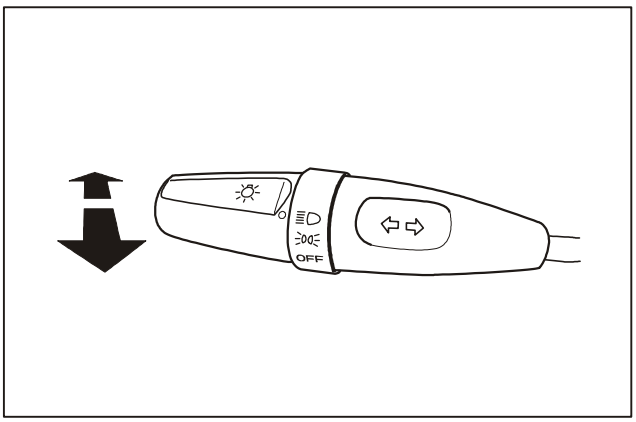

4. High beam switch.
   To turn on high beam of headlamp, push the control lever forward (direction away from yourself) with headlamp on, the high beam lightens with high beam indicator on the instrument on. To switch to low beam, pull the control lever backward.

Downloaded from www.Manualslib.com manuals search engine

Instruction and Operation

Introduction to functions

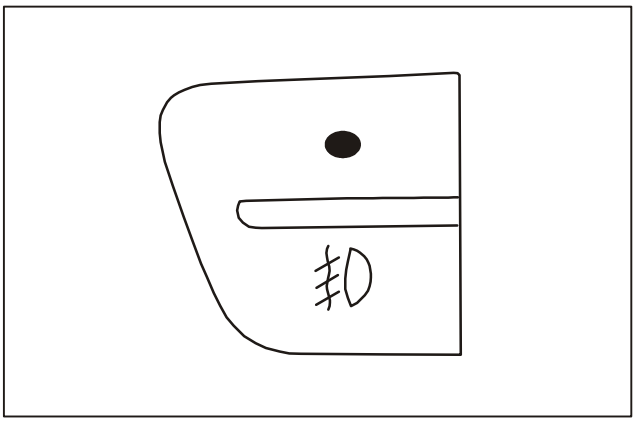

5. Front fog lamp switch.
   Turn the headlamp switch knob to position lamp, press the front fog lamp switch knob, and the front fog lamp lightens.

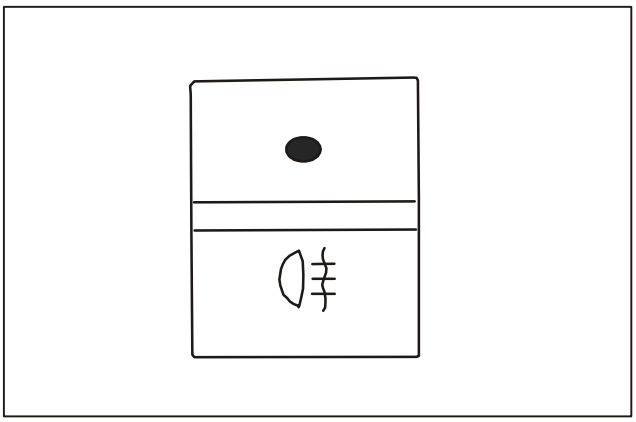

6. Rear fog lamp switch.
   Turn the headlamp switch knob to position lamp, press the front fog lamp switch knob and then the rear fog lamp switch knob, and the rear fog lamp lightens.

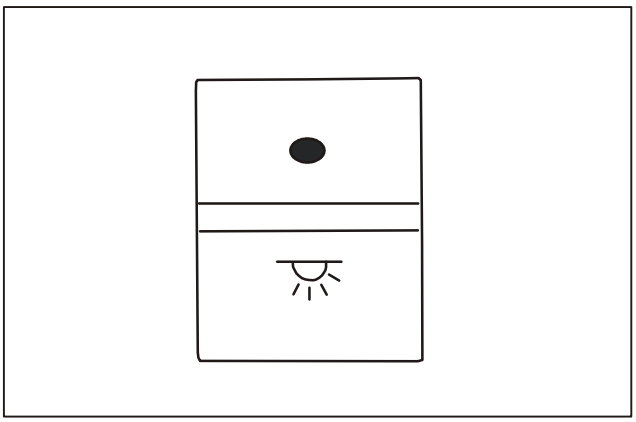

7. Rear ceiling lamp switch.
   Press the rear ceiling lamp switch and the rear ceiling lamp lightens.

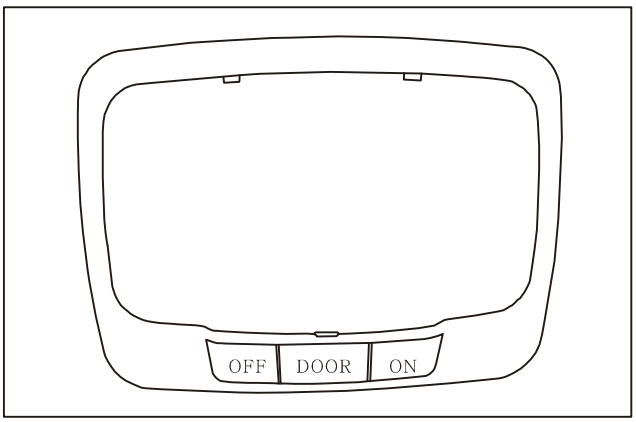

8. Front ceiling lamp switch.
   OFF: Ceiling lamp off.
   DOOR: Ceiling lamp on with door open.
   ON: Ceiling lamp normally on.

Downloaded from www.Manualslib.com manuals search engine

Instruction and Operation

Introduction to functions

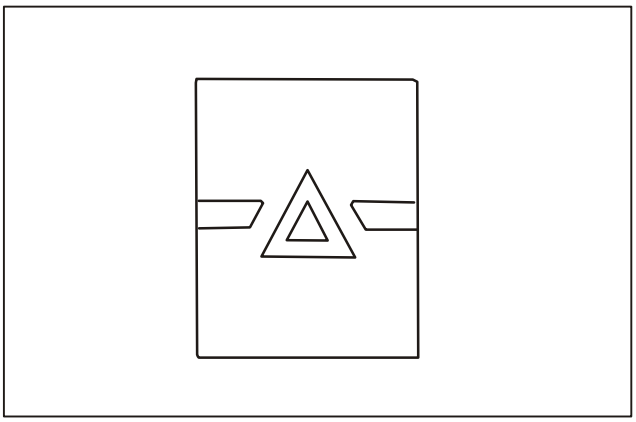

9. Hazard warning lamp switch.
   If you press the hazard warning lamp switch, turn signal lamps on both sides and instrument indicator shall lighten.

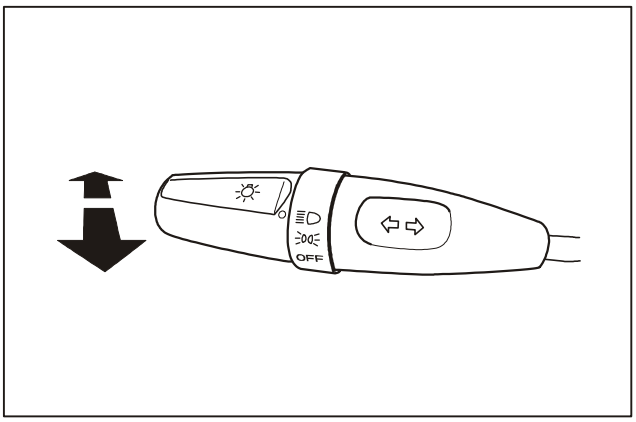

10. Headlamp flickering.
    To make the headlamp flicker, pull the switch towards yourself and release it.
    Even though the headlamp switch is located at “OFF” position, the headlamp flickering can still be achieved.

Downloaded from www.Manualslib.com manuals search engine

Diagnosis and Testing

Fault diagnosis

1. Front fog lamp diagnosis

Step	Operation	Yes	No
1	①Turn on the ignition switch and set the headlamp to “position lamp” position. ②Does the front fog lamp lighten when it is turned on?	Go to Step 2.	Check circuit.
2	Does the front fog lamp indicator in combination instrument lighten?	System is normal.	Go to Step 3.
3	①Turn off the fog lamps. ②Turn off the ignition switch. ③Remove the combination instrument. ④Using the multimeter as a ohmmeter, measure the circuit resistance. Is the reading below 1 Ohm?	Replace combination instrument.	Repair fault circuit.
4	①Check if the system operates normally. ②Does the system operate normally?	System is normal.	Go to Step 1.

Downloaded from www.Manualslib.com manuals search engine

Diagnosis and Testing

Fault diagnosis

2. Turn signal indicator diagnosis

Step	Operation	Yes	No
1	Turn on the ignition switch and press the hazard warning lamp switch. Are front/rear left/right turn signal lamps flickering continuously?	Go to Step 2.	Go to Step 5.
2	Are left/right turn signal indicators flickering continuously?	Go to Step 3.	Check circuit.
3	Turn on the ignition switch and set the turn signal lamp switch to left/right turning position. Does left/right turn signal indicator flicker as expected?	Go to Step 4.	Go to Step 6.
4	Turn on the ignition switch and set the turn signal lamp switch to left/right turning position. Does left/right turn signal indicator in combination instrument flicker as expected?	System is normal.	Go to Step 8.
5	Connect the temporary vehicle ground to body control module terminal. Does the hazard warning lamp flicker as expected?	Hazard warning lamp operates normally.	Check body computer.
6	Use multimeter to measure the voltage of flasher relay. Does the multimeter indicate the battery voltage?	Replace flasher relay.	Check circuit.
7	Use multimeter to measure the circuit voltage of turn signal lamp. Does the multimeter indicate the battery voltage?	Check circuit.	Check circuit.
8	①Turn off the hazard warning lamp. ②Turn off the ignition switch. ③Remove the combination instrument. ④Use the multimeter to measure the circuit resistance. Is the reading below 1 Ohm?	Replace combination instrument.	Repair circuit.
9	①Check if the system operates normally. ②Does the system operate normally?	System is normal.	Go to Step 1.

Downloaded from www.Manualslib.com manuals search engine

Diagnosis and Testing

Fault diagnosis

3. High-mounted brake lamp failed

Step	Operation	Yes	No
1	Is the fuse blown out?	Go to Step 4.	Go to Step 2.
2	Connect the test lamp with two terminals of brake signal lamp switch. Does the test lamp lighten?	Go to Step 5.	Go to Step 3.
3	①Connect the test lamp with two terminals of high-mounted brake signal lamp. ②Depress the brake pedal to check if the test lamp lightens?	Go to Step 6.	Go to Step 7.
4	Replace fuse.		
5	Replace brake signal lamp switch.		
6	Replace high-mounted brake signal lamp.		
7	Repair the circuit of poor contact.		

Downloaded from www.Manualslib.com manuals search engine

Diagnosis and Testing

Fault diagnosis

4. Ceiling lamp failed

Step	Operation	Yes	No
1	Check if the bulb filament of ceiling lamp is burnt out. Is the filament burnt out?	Go to Step 4.	Go to Step 2.
2	Is the fuse blown out?	Go to Step 5.	Go to Step 3.
3	Connect the test lamp respectively with two terminals of contact switch (left front, right front, left rear, right rear) and terminals of lighting switch. Does the test lamp lighten?	Go to Step 6.	Go to Step 7.
4	Replace bulb.		
5	Replace fuse.		
6	Replace contact switch or lighting switch.		
7	Repair the circuit of poor contact.		

Downloaded from www.Manualslib.com manuals search engine

Diagnosis and Testing

Fault diagnosis

5. Glove box lamp failed

Step	Operation	Yes	No
1	Is the fuse blown out?	Go to Step 3.	Go to Step 2.
2	Check if the bulb filament of glove box is burnt out. Is the filament burnt out?	Go to Step 4.	Go to Step 5.
3	Replace fuse.		
4	Replace bulb.		
5	Repair the circuit of poor contact.		

Downloaded from www.Manualslib.com manuals search engine

Diagnosis and Testing

Fault diagnosis

6. Both high and low beams failed

Step	Operation	Yes	No
1	Set the switch to position and the high/low beam switch to high beam position. Is the fuse intact?	Go to Step 2.	Go to Step 3.
2	Measure the fuse voltage. Is the voltage normal?	Go to Step 7.	Go to Step 4.
3	Please replace the damaged fuse. Does it still fail after replacement?	Go to Step 7.	Go to Step 2.
4	Check the high/low beam switch. Is it normal?	Go to Step 5.	
5	Check switches. Are they normal?	Go to Step 6.	
6	Check wiring harness of instrument panel as per circuit diagram.	Go to Step 8.	
7	Check the high beam signaling device. Does it operate normally?	Go to Step 9.	
8	Check high/low beam and wiring harness connector. Are there intact?	Go to Step 9.	-
9	Check lamp connector pin. Is wire well-grounded?	Go to Step 10.	
10	Disconnect the connector between high/low beam and front body harness. Is the pin voltage normal?	Go to Step 11.	Go to Step 12.
11	Check connector for good contact and check the front body harness from connector to lamp as per circuit diagram.		
12	Check connector for good contact and check the instrument panel harness from fuse to connector as per circuit diagram.		

Downloaded from www.Manualslib.com manuals search engine

Diagnosis and Testing

Fault diagnosis

7. Only high beam failed

Step	Operation	Yes	No
1	Check if the high beam signaling device operates normally (only for high beam)?	Go to Step 2.	Go to Step 3.
2	Check lamps and harness connectors and ensure they are normal when the high beam position is selected.	Go to Step 3.	
3	Disconnect the connector between instrument panel and front body harness. Is the voltage normal?	Go to Step 4.	Go to Step 5.
4	Check the front body harness from connector to high beam as per circuit diagram. Is it intact?	Go to Step 5.	
5	Check the instrument panel harness from fuse to connector as per circuit diagram.		
6	Is the fuse intact?	Go to Step 7.	Go to Step 9.
7	Measure the fuse voltage. Is it normal?	Go to Step 8.	Go to Step 11.
8	Check the instrument panel harness from fuse to connector.	Go to Step 10.	
9	Replace the fuse. Does it still fail after replacement?	Go to Step 8.	Go to Step 7.
10	Check connector and front body harness.	Go to Step 2.	
11	Check high/low beam switch and the instrument panel harness from switch to fuse.		

Downloaded from www.Manualslib.com manuals search engine

Diagnosis and Testing

Fault diagnosis

8. Low beam failed

Step	Operation	Yes	No
1	Check lamps and wiring harness connectors. Are they intact?	Go to Step 2.	
2	Is the fuse intact?	Go to Step 3.	Go to Step 8.
3	Measure the fuse voltage. Is it normal?	Go to Step 4.	Go to Step 7.
4	Check connector between instrument panel and front body harness. Is the measured voltage normal?	Go to Step 5.	
5	Check front body electric harness.		
6	Check instrument panel harness.		
7	Check high/low beam switch and the instrument panel harness from switch to fuse.		
8	Replace the fuse. Does it still fail after replacement?	Go to Step 4.	Go to Step 3.

Downloaded from www.Manualslib.com manuals search engine

Diagnosis and Testing

Fault diagnosis

9. Diagnostic program for front rear fog lamp

Step	Operation	Yes	No
1	Set the lamp switch to " 雾灯 " position, turn on the front fog lamp switch and check whether the switch indicator is intact.	Go to Step 7.	Go to Step 2.
2	Is the Fuse 9 intact?	Go to Step 4.	Go to Step 3.
3	Replace the damaged fuse.	Go to Step 4.	
4	Remove the front fog lamp relay and measure the relay voltage. Is the voltage normal?	Go to Step 6.	Go to Step 5.
5	Check whether the instrument panel harness and the front fog lamp switch circuit is normal as per circuit diagram. Replace when necessary.		
6	Replace relay. Are fog lamps normal?		Go to Step 7.
7	Check fog lamp connector. Are voltage and grounding normal?	Go to Step 8.	
8	Check instrument panel harness from relay to fog lamp as per circuit diagram.		

Downloaded from www.Manualslib.com manuals search engine

Diagnosis and Testing

Fault diagnosis

10. Rear fog lamp failed with front fog lamp and rear fog lamp turned on simultaneously

Step	Operation	Yes	No
1	Turn on low beam and front fog lamp and then turn on rear fog lamp switch. Does the switch indicator operate normally?	Go to Step 2.	Go to Step 6.
2	Check rear fog lamp and wiring harness connector. Ensure voltage and grounding is normal.	Go to Step 3.	Go to Step 11.
3	Check connector between instrument panel and rear body harness. Is the measured voltage normal?	Go to Step 4.	Go to Step 5.
4	Check rear body harness from connector and rear fog lamp. Repair when necessary.		
5	Check instrument panel harness from rear fog lamp switch to connector. Repair when necessary.		
6	Remove the rear fog lamp switch. Measure the voltage of wiring harness. Is the voltage normal?	Go to Step 7.	Go to Step 8.
7	Replace the rear fog lamp switch. Is the rear fog lamp normal?		Go to Step 3.
8	Replace the relay. Is the rear fog lamp normal?		Go to Step 9.
9	Check the instrument panel harness from relay to switch. Is it normal??	Go to Step 10.	
10	Check the instrument panel harness connected to rear fog lamp relay. Repair when necessary.		
11	Replace rear fog lamp.		

Downloaded from www.Manualslib.com manuals search engine

Diagnosis and Testing

Fault diagnosis

11. Diagnostic program for reversing lamps

Step	Operation	Yes	No
1	Is the fuse intact?	Go to Step 3.	Go to Step 2.
2	Replace the damaged fuse. Are the reversing lamps intact?		Go to Step 3.
3	Check connector between instrument panel and rear body harness. Is the measured voltage normal?	Go to Step 4.	Go to Step 6.
4	Check connector between reversing lamp and wiring harness. Is it normal??	Go to Step 5.	Go to Step 10.
5	Check rear body harness from connector to reversing lamp.		
6	Disconnect the connector of reversing lamp switch. Is the measured voltage normal?	Go to Step 8.	Go to Step 7.
7	Check the instrument panel harness from fuse to reversing lamp switch.		
8	Check the instrument panel harness from connector of reversing lamp switch to joint. Is it normal??	Go to Step 9.	
9	Check connector between brake lamps and wiring harness.	Go to Step 10.	
10	Check the ground point of rear body harness. Is it well grounded?		

Downloaded from www.Manualslib.com manuals search engine

Diagnosis and Testing

Fault diagnosis

12. Diagnostic program for brake lamps

Step	Operation	Yes	No
1	Turn on the ignition switch to check fuse. Is the fuse intact?	Go to Step 3.	Go to Step 2.
2	Please replace the damaged fuse. Does it still fail after replacement?	Go to Step 5.	Go to Step 3.
3	Measure the fuse voltage. Is it normal?	Go to Step 5.	Go to Step 4.
4	Check the instrument panel harness.		
5	Disconnect the brake switch connector and check the brake switch. Ensure the brake switch is normal. Is the measured voltage normal?	Go to Step 7.	Go to Step 6.
6	Check the instrument panel harness from brake switch to fuse.		
7	Check connector between instrument panel and rear body harness. Is it normal??	Go to Step 8.	
8	Check the rear body harness from connector to brake lamp.	Go to Step 9.	
9	Check the connector between brake lamp and wiring harness.	Go to Step 10.	
10	Check the ground point of rear body harness. Is it well grounded?		

Downloaded from www.Manualslib.com manuals search engine

Diagnosis and Testing

Fault diagnosis

13. Hazard warning lamp failed but with normal operation of turn signal lamps

Step	Operation	Yes	No
1	Is the fuse intact?	Go to Step 3.	Go to Step 2.
2	Replace the damaged fuse. Is the hazard warning lamp normal?		Go to Step 3.
3	Remove the hazard warning switch and check if it is normal.	Go to Step 4.	
4	Check if the voltage of hazard warning lamp switch is normal?	Go to Step 6.	Go to Step 5.
5	Check the instrument panel harness from fuse to hazard warning lamp switch.		
6	Check the ground wire of hazard warning lamp switch. Is it normal?	Go to Step 8.	Go to Step 7.
7	Check the ground wire of instrument panel harness.		
8	Check the lead from instrument panel harness to hazard warning lamp switch.		

Downloaded from www.Manualslib.com manuals search engine

Diagnosis and Testing

Fault diagnosis

14. Turn signal lamp failed but with normal operation of hazard warning lamp

Step	Operation	Yes	No
1	Is the fuse intact?	Go to Step 3.	Go to Step 2.
2	Replace the damaged fuse. Is the turn signal lamp normal?		Go to Step 3.
3	Remove the hazard warning lamp switch and measure the switch voltage. Is the voltage normal?	Go to Step 5.	
4	Check the instrument panel harness from fuse to hazard warning lamp switch.		
5	Check if the hazard warning lamp switch is normal.		

Downloaded from www.Manualslib.com manuals search engine

Removal/Installation

Removal of headlamp

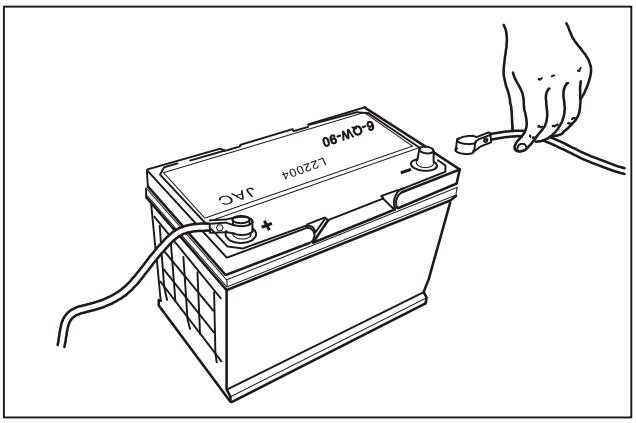

1. Disconnect the negative cable of battery.

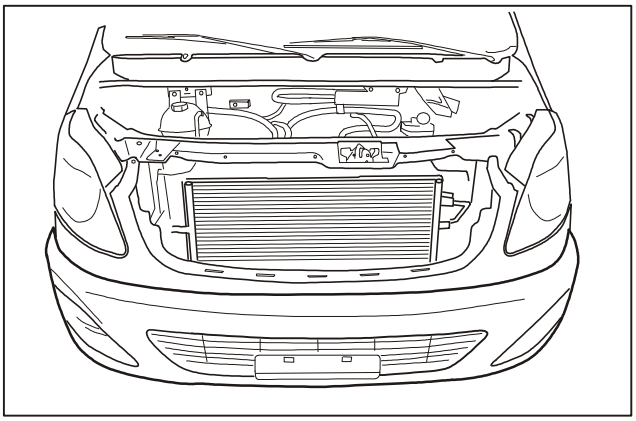

2. Remove the front grille, front compartment panel, and front bumper.

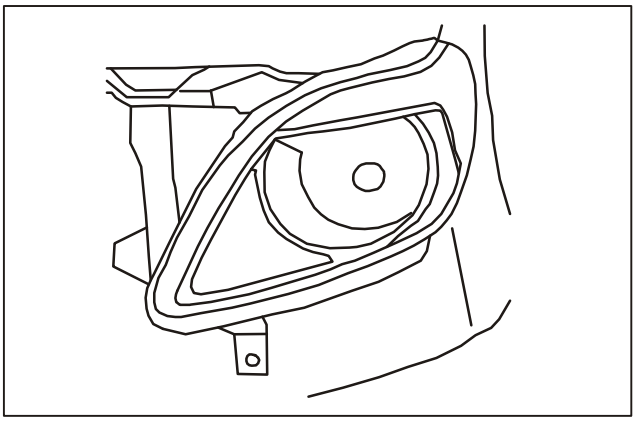

3. Remove mounting bolts from headlamps.

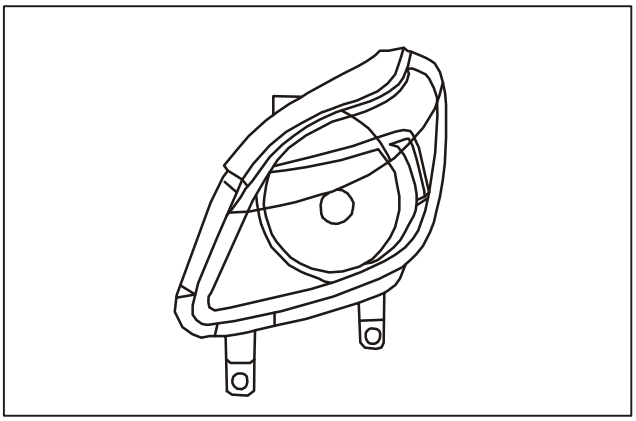

4. Disconnect the connecting wire to remove headlamps.

Downloaded from www.Manualslib.com manuals search engine

Removal/Installation

Removal of clearance lamps

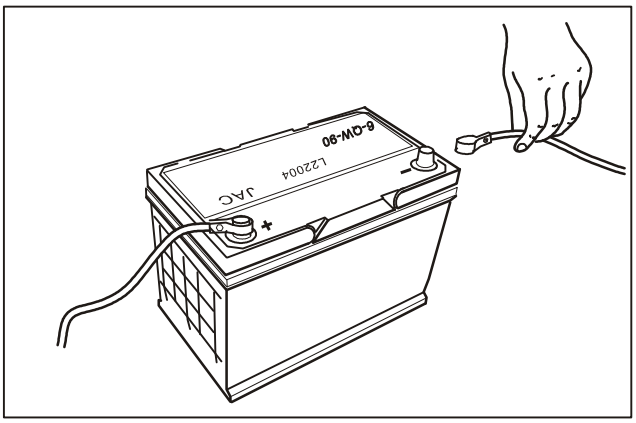

1. Disconnect the negative cable of battery.

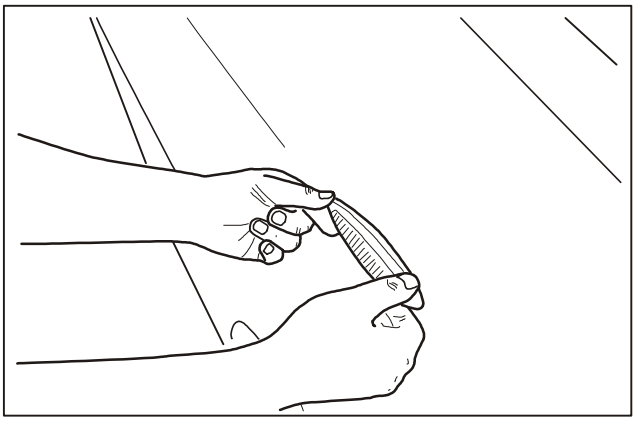

2. Hold the side turn signal lamp with hands and push it forwards, and then pull the lamp outwards with force.

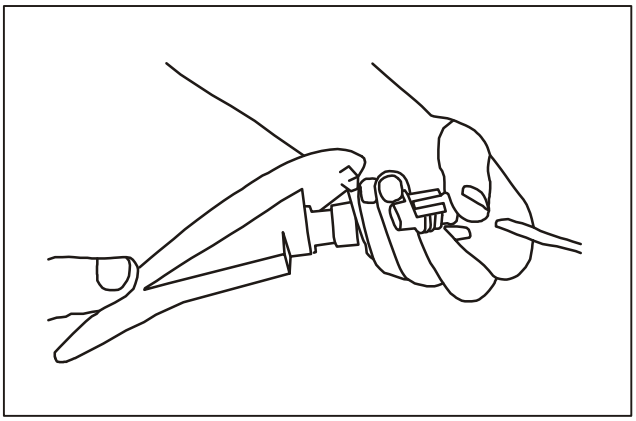

3. Disconnect the connecting wire of clearance lamp.

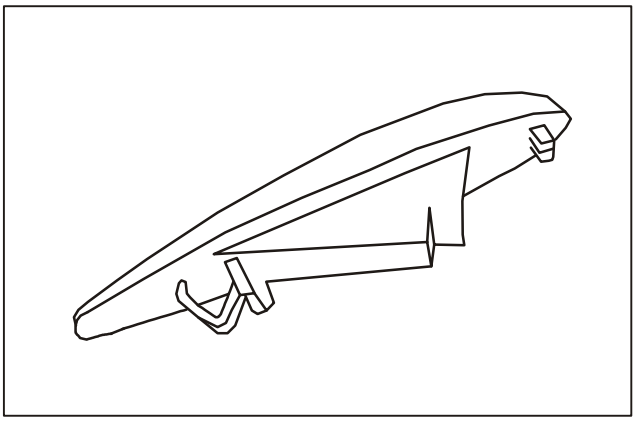

4. Remove the clearance lamp.

Downloaded from www.Manualslib.com manuals search engine

Removal/Installation

Removal of front fog lamps

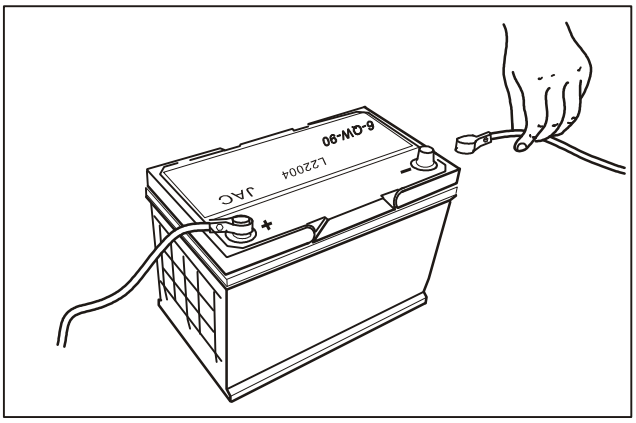

1. Disconnect the negative cable of battery.

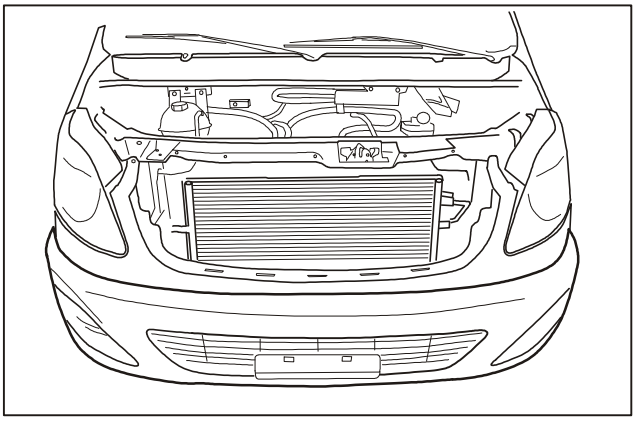

2. Remove the front bumper.

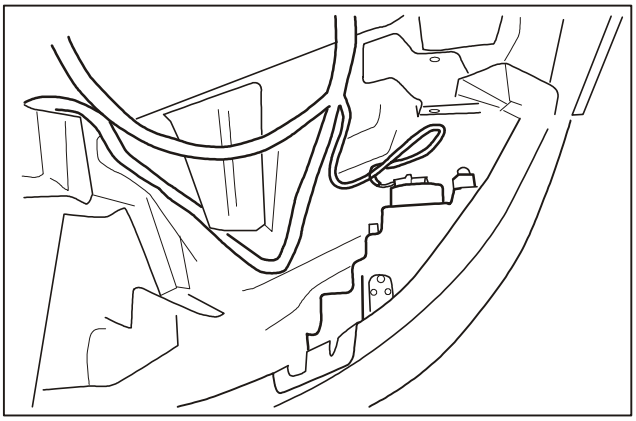

3. Disconnect the connecting wire of fog lamp.

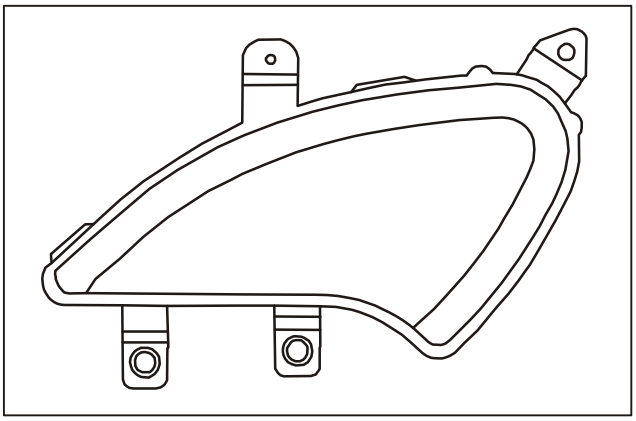

4. Remove the front fog lamp.

Downloaded from www.Manualslib.com manuals search engine

Removal/Installation

Removal of ceiling lamps

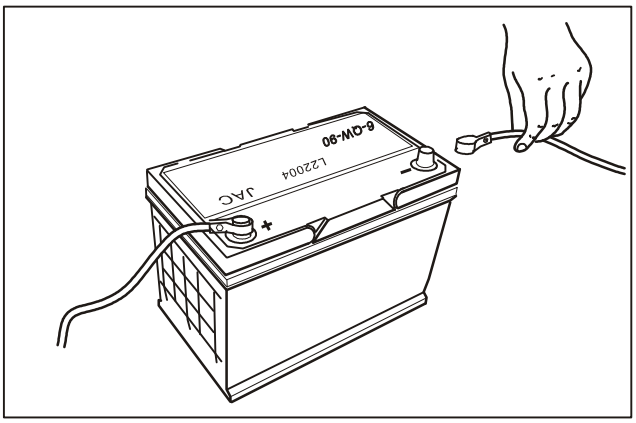

1. Disconnect the negative cable of battery.

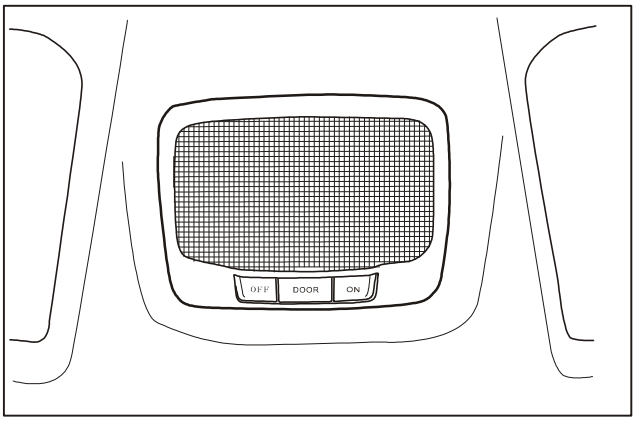

2. Remove the casing of ceiling lamp.

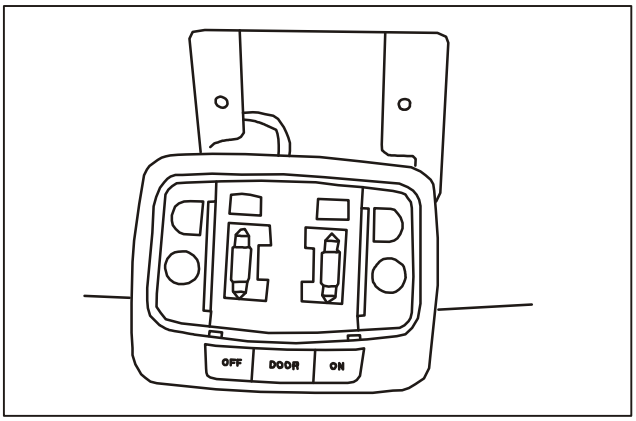

3. Remove the mounting bolts from ceiling lamp.

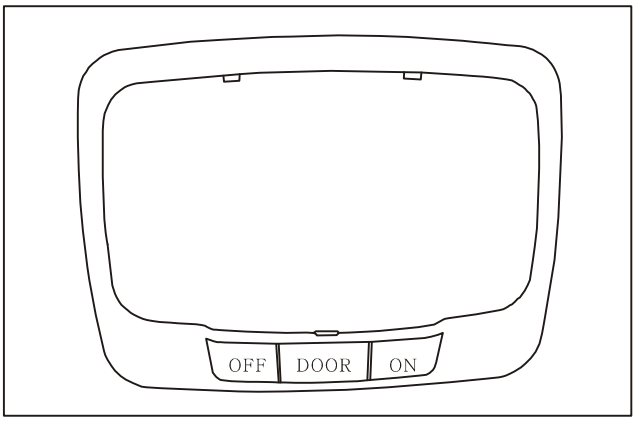

4. Remove the ceiling lamp.

Downloaded from www.Manualslib.com manuals search engine

Removal/Installation

Removal of rear tail lamps

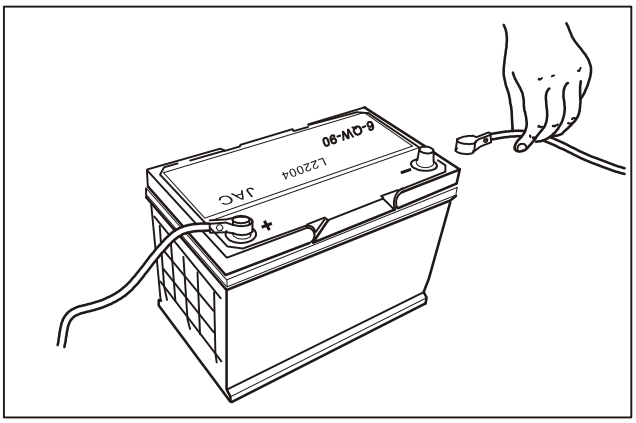

1. Disconnect the negative cable of battery.

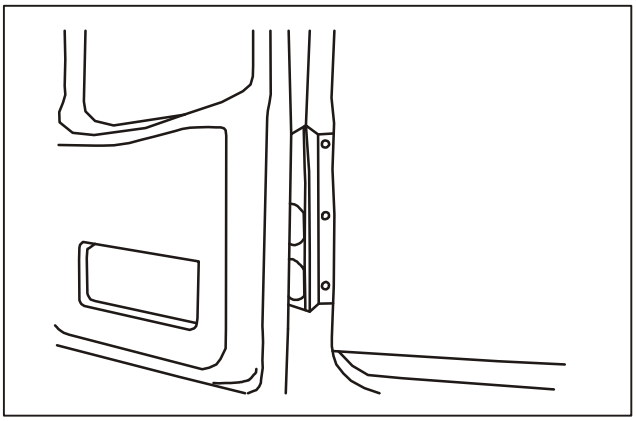

2. Remove the mounting bolts from tail lamp.

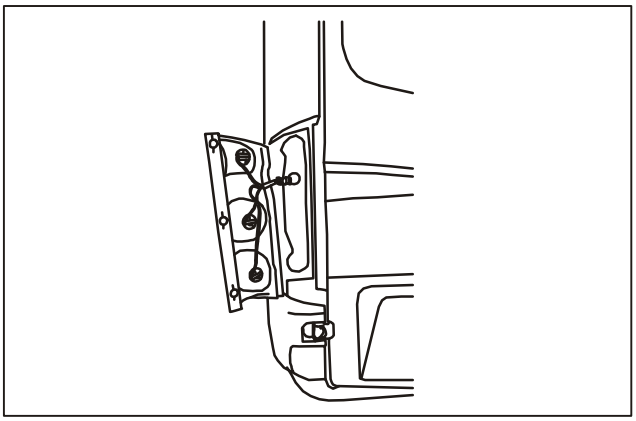

3. Disconnect the connecting wire of tail lamp.

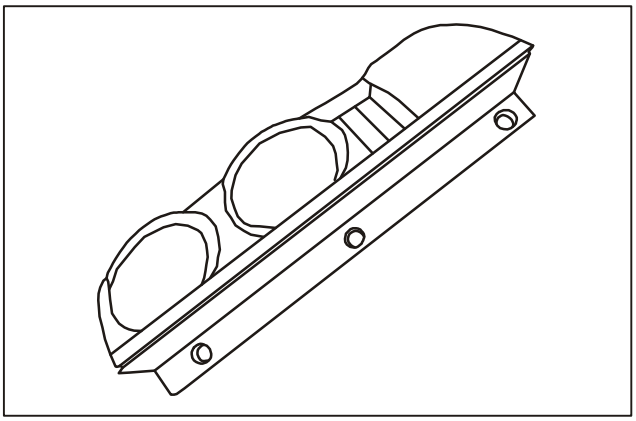

4. Remove the tail lamp.

Downloaded from www.Manualslib.com manuals search engine

Removal/Installation

Removal of high-mounted brake lamp

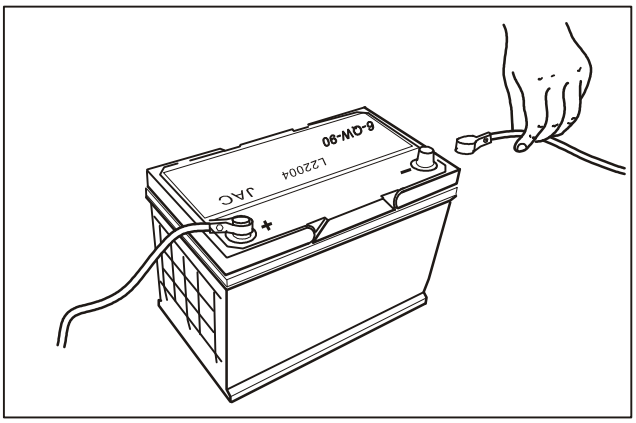

1. Disconnect the negative cable of battery.

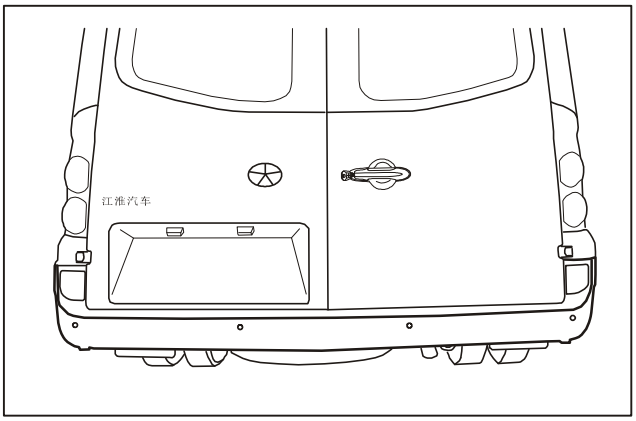

2. Open the back door.

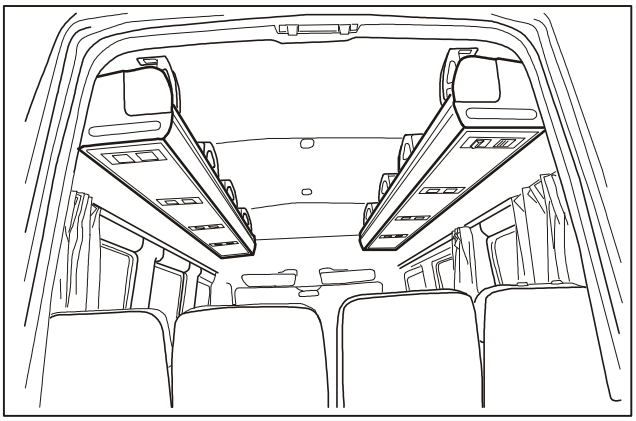

3. Remove the mounting bolts and disconnect the connecting wire of high-mounted brake lamp.

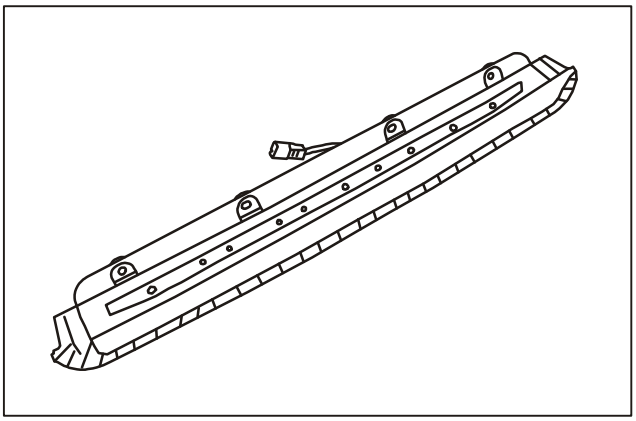

4. Remove the high-mounted brake lamp.

Downloaded from www.Manualslib.com manuals search engine

Removal/Installation

Removal of rear fog lamp

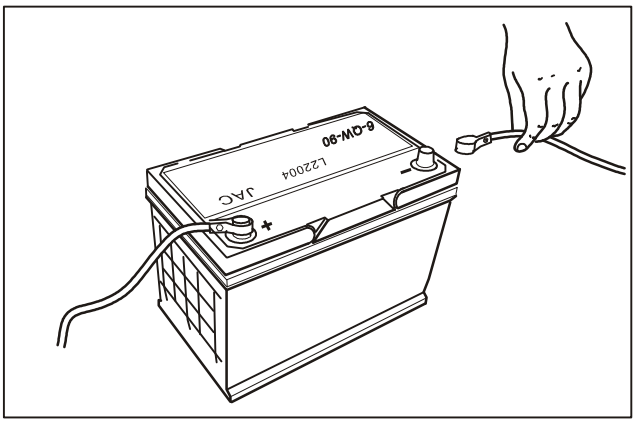

1. Disconnect the negative cable of battery.

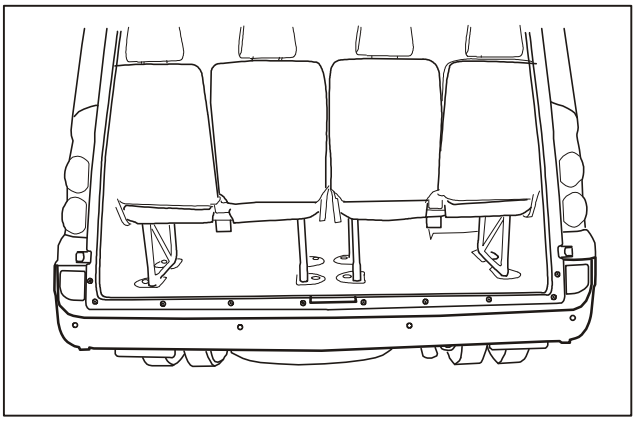

2. Remove the rear bumper.

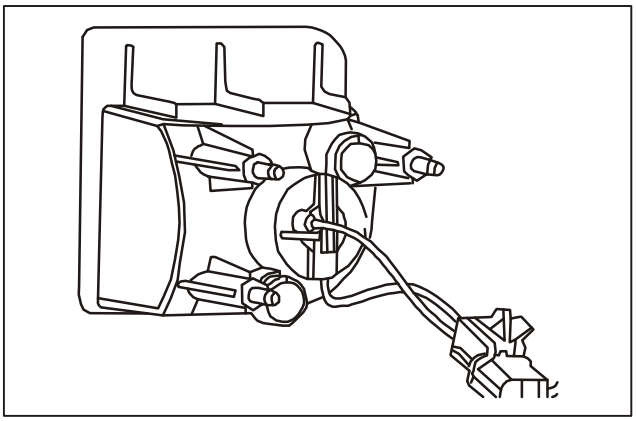

3. Disconnect the connecting wire of rear fog lamp.

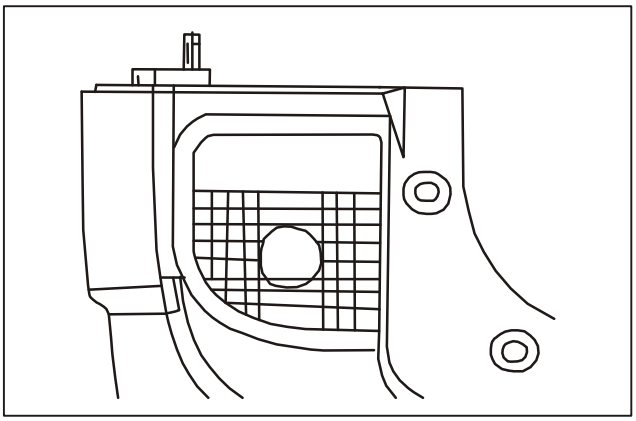

4. Remove the rear fog lamp.

Downloaded from www.Manualslib.com manuals search engine

Specification

Basic parameters

S/N	Name		Bulb Type	Power
1	Front combination lamp	High/low beam	H4 12V 60/55W	60/55W
			H4 12V 60/55W	60/55W
		Position lamp	12V 16W	16W
		Turn signal lamp	12V 21W	21W
2	Rear combination lamp	Turn signal lamp	12V 21W	21W
		Brake lamp	12V 21W	21W
		Reversing lamp	12V 21W	21W
		Rear fog lamp	12V 21W	21W
		Position lamp	12V 5W	5W
3	Front fog lamp		12V 55W	55W
4	Side turn signal lamp		12V 5W	5W
5	High-mounted brake lamp		LED module	1.5W
6	License plate lamp		12V 10W	10W
7	Front ceiling lamp assembly		12V 10W	10W
8	Rear ceiling lamp assembly		12V 10W	10W

Downloaded from www.Manualslib.com manuals search engine

Downloaded from www.Manualslib.com manuals search engine

Wiper and Washer System

Applied models: SUNRAY products manufactured by JAC

Subject Page

Instruction and Operation

Wiper....86
Mounting position....87
Information functions....89

Diagnosis and Testing

Wiper....91
Definitions of pins....91
Troubleshooting....92

Removal/Installation

Wiper....95
Removal of the wiper....95
Removal of the windshield washing fluid reservoir....97
Removal of the Wiper washing nozzle....98

Specification

Wiper....99
Basic parameters....99

Downloaded from www.Manualslib.com manuals search engine

Instruction and Operation

Wiper system

Wiper system is the system used for cleaning raindrops on windshield and rear window in order to maintain clear vision. The application of spray washer in the system is for dirt removal on the windshield. Therefore, it is a necessary system for driving safety.

Component drawing of wiper system:

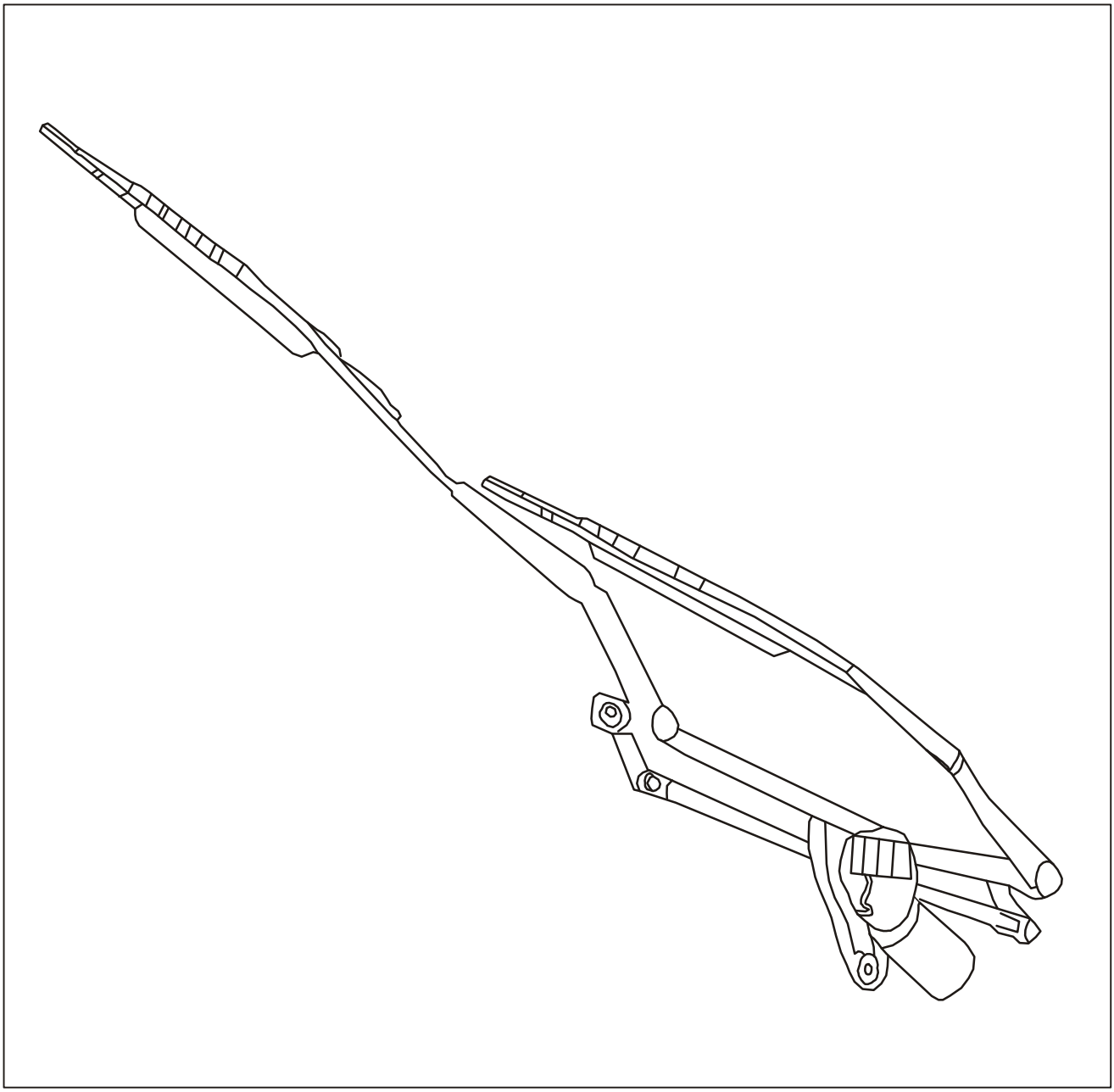

Downloaded from www.Manualslib.com manuals search engine

Instruction and Operation

Mounting position of wiper system components

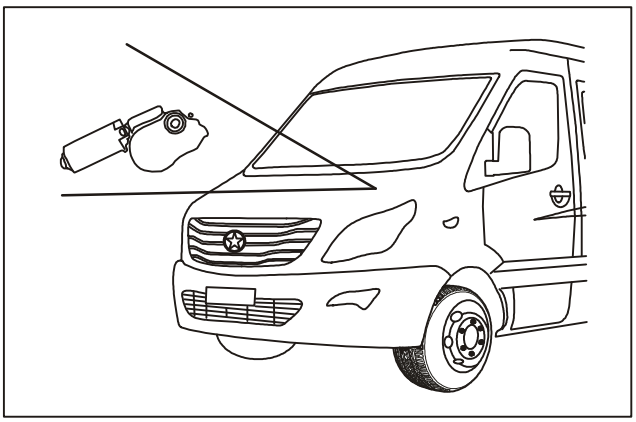

1. Wiper motor
   Mounting position: in the engine compartment

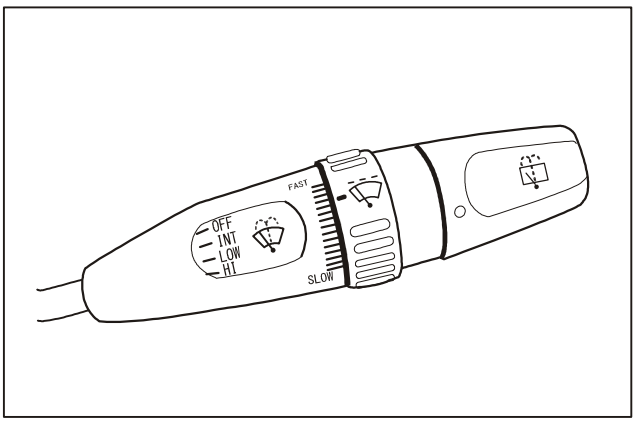

2. Wiper switch
   Mounting position: on the combination switch under the steering wheel

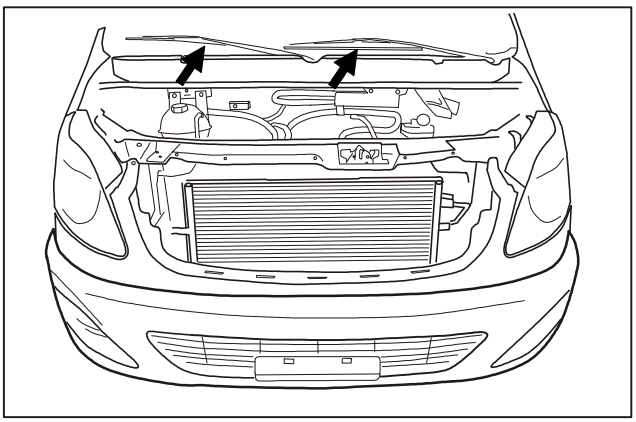

3. Wiper blade
   Mounting position: on the front windshield

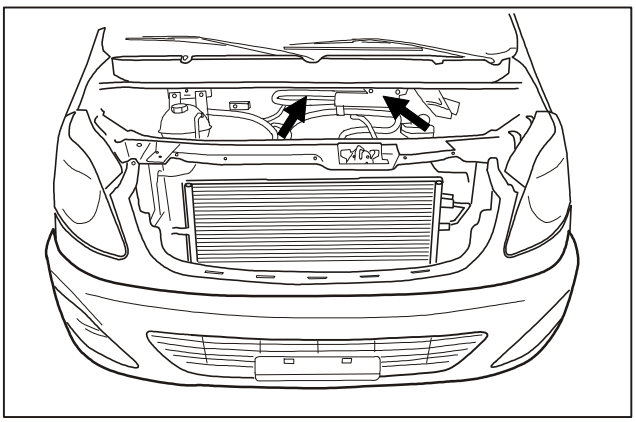

4. Wiper linkage
   Mounting position: connecting with wiper blade at the front windshield

Downloaded from www.Manualslib.com manuals search engine

Instruction and Operation

Mounting position of wiper system components

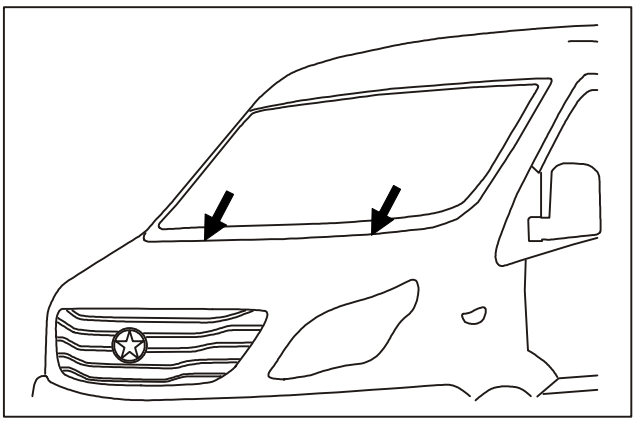

5. Washer nozzle
   Mounting position: on the wiper decorative panel

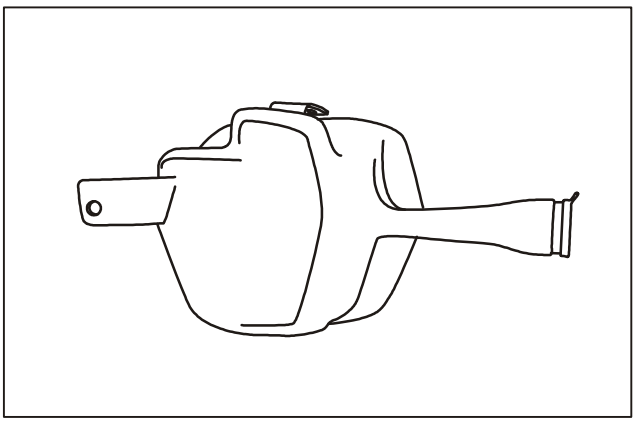

6. Washer motor and washing liquid reservoir
   Mounting position: at the right front lower part of engine compartment

Downloaded from www.Manualslib.com manuals search engine

Instruction and Operation

Operation of wiper system function

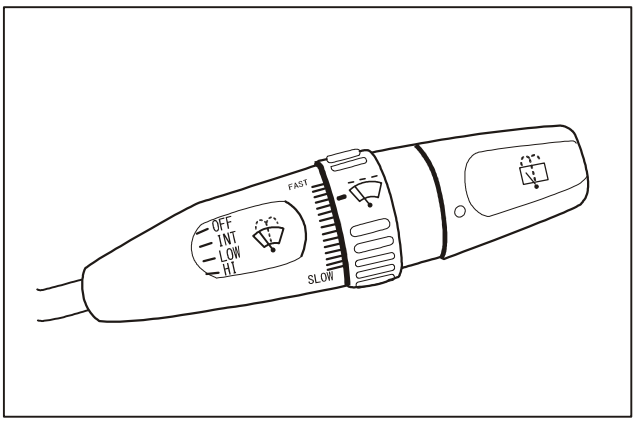

1. OFF gear
   When it is at this gear, the wiper is in off state and does not operate.

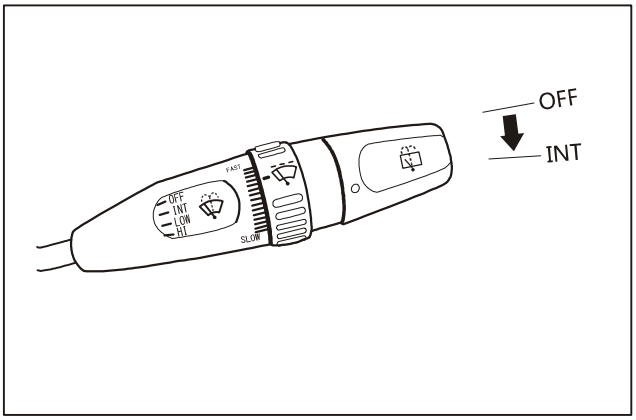

2. INT gear
   When it is at this gear, the wiper operates intermittently.

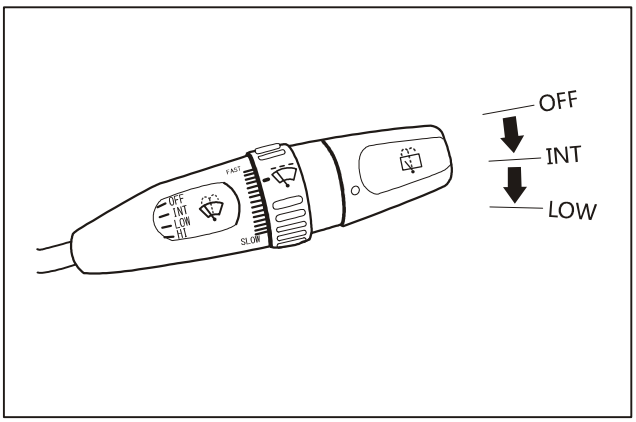

3. LOW gear
   When it is at this gear, the wiper operates with a low speed.

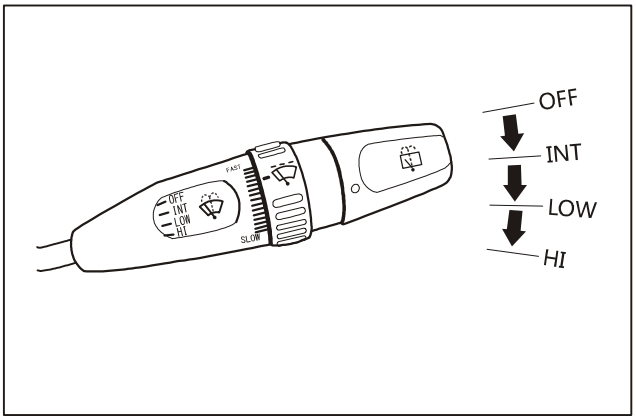

4. HI gear
   When it is at this gear, the wiper operates with a high speed.

Downloaded from www.Manualslib.com manuals search engine

Instruction and Operation

Operation of wiper system function

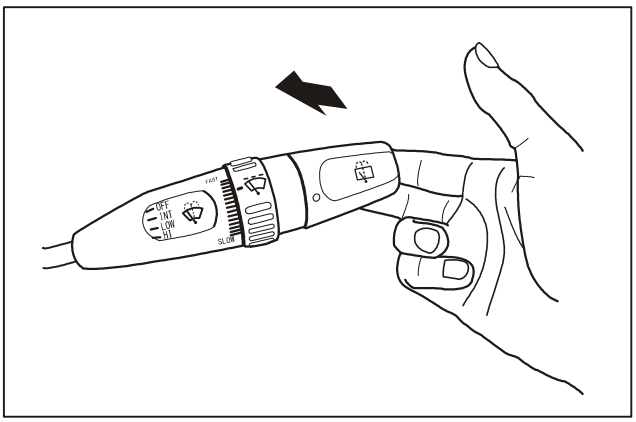

5. Operation of windshield cleaning
   In the case of windshield cleaning, pull up the wiper/washer lever. When the washer is turned on, water which is sprayed from the water sprayer cleans the windshield automatically and the wiper shall operate simultaneously. Loosen the lever and cleaning operation is stopped.

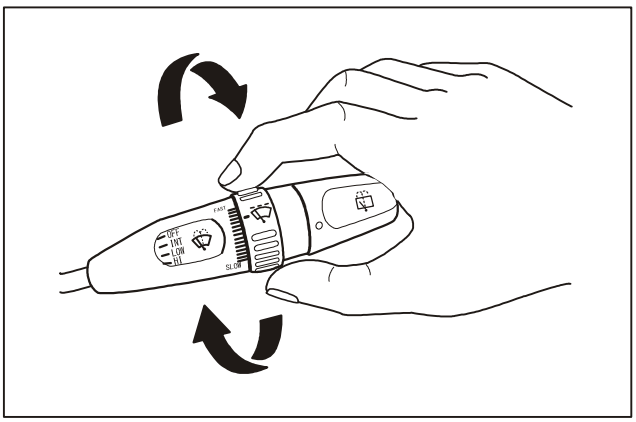

6. Wiper intermittent operation
   Shift the wiper switch to “INT” and the wiper shall operate intermittently. Turn the adjustment knob of intermittence when the wiper switch is at “INT”, there shall be corresponding intermittence change.
   The swing interval of wiper controlled by the adjustable switch is in the range of 1~18 seconds.

Downloaded from www.Manualslib.com manuals search engine

Diagnostic Test

Definitions of pins

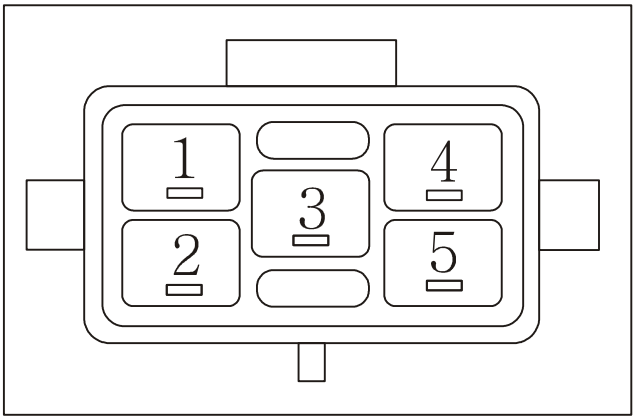

No.	1	2	3	4	5
Color	Red	Green	Blue	Yellow	Black
Function	Positive pole	Low speed	High speed	Return	Negative pole

Downloaded from www.Manualslib.com manuals search engine

Diagnostic Test

Troubleshooting

1. Fault mode: No matter what gear is the wiper switch at, there are no operations of the wiper and washer.

Step	Operation	Yes	No
1	Inspect the wiper fuse for the existence of damage.	Go to Step 3	Step 2
2	Remove the wiper switch, inspect it and confirm that there are no faults in it. Then measure the wire harness with a digital multimeter. Inspect the voltages from the connector to the wiper switch and verify whether they are normal.	Go to Step 5	Go to Step 4
3	Replace the damaged fuse.	Go to Step 2	
4	Inspect the instrument panel wire harness between the fuse and the wiper switch and repair if necessary.	Go to Step 5	
5	Verify the existence of good contact between the wiper switch and wire harness connector. Disconnect the wire harness and wiper motor, inspect the instrument panel wire harness among the wiper switch, the fuse and the wiper motor according to relevant circuit diagrams. Repair the harness if necessary.	Go to Step 6	
6	Inspect the wiper motor and repair if necessary. Confirm that there are no faults in the wiper motor and verify the existence of good contact of the wiper motor connector.	Go to Step 7	—
7	Inspect the ground wire of the wiper motor in the instrument panel wire harness and repair if necessary.	Go to Step 8	
8	Verify whether the system is intact.		

2. Fault mode: No operation at HI gear

Step	Operation	Yes	No
1	Disconnect the wire harness from the wiper motor. Measure the voltage at wire harness side with a digital multimeter and verify whether the voltage is normal.	Go to Step 2	Go to Step 3
2	Inspect the internal structure of the wiper motor, replace or repair if necessary.		
3	Remove the wiper switch and inspect it to confirm that there are no faults in it. Inspect the instrument panel wire harness between the wiper switch and the wiper motor. Repair the instrument panel wire harness if necessary.		

3. Fault mode: No operation at LOW gear

Step	Operation	Yes	No
1	Disconnect the wire harness connector from the wiper motor. Measure the voltage at wire harness side with a digital multimeter and verify whether the voltage is normal.	Go to Step 2	Go to Step 3
2	Inspect the internal structure of the wiper motor, replace or repair if necessary.		
3	Remove the wiper switch and inspect it to confirm that there are no faults in it. Replace or repair it if necessary.	Go to Step 4	
4	Inspect the instrument panel wire harness between the wiper switch and the wiper motor. Repair the instrument panel wire harness if necessary.		

Downloaded from www.Manualslib.com manuals search engine

Diagnostic Test

Troubleshooting

4. Fault mode: No operation at INT gear only

Step	Operation	Yes	No
1	Remove the wiper relay and shift the ignition switch to ON and shift the wiper switch to internal gear. Measure the voltage of relay pin with a digital multimeter and verify whether the voltage is normal.	Go to Step 4	Go to Step 2
2	Remove the wiper switch and inspect it to confirm that there are no faults in it. Replace or repair it if necessary.	Go to Step 3	
3	Inspect the instrument panel wire harness between the wiper switch and the wiper relay, repair the harness if necessary.		Go to Step 7
4	Inspect the ground wire at the relay for its good grounding.	Go to Step 6	Go to Step 5
5	Repair the ground wire and confirm whether it is in good grounding.		
6	Replace the wire relay and confirm whether the system is intact.		
7	Inspect the instrument panel wire harness between the wiper switch and the relay and confirm that there are no faults in it.	Go to Step 8	Go to Step 10
8	Remove the new wiper relay and measure the voltage of the relay with a digital multimeter to verify whether the voltage is normal.	Go to Step 10	
9	Inspect the instrument panel wire harness and repair it if necessary. Confirm that there are no faults in it.	Go to Step 10	
10	Inspect the instrument panel wire harness between the relay and the wiper motor and repair the instrument panel if necessary. Confirm that there are no faults in it and verify whether the system is intact.		

5. Fault mode: No operation of the washer

Step	Operation	Yes	No
1	Remove the wiper/washer switch and shift the ignition switch to ON. Measure the pin voltage of the switch at its original position with a digital multimeter to verify whether the voltage is normal.	Go to Step 3	Go to Step 2
2	Inspect the instrument panel wire harness between the fuse and the wiper/washer switch. Repair the instrument panel if necessary and confirm that there are no faults in it	Go to Step 3	
3	Inspect the internal structure of the wiper switch, replace or repair if necessary. Confirm that there are no faults in the switch and verify whether the system is intact.		Go to Step 4
4	Install the wiper/washer switch. Disconnect the washer motor connector and shift the wiper/washer switch to WASHING. Measure the pin voltage of the washer motor at its connector (the side of wire harness) with a digital multimeter to verify whether the voltage is normal.	Go to Step 6	Go to Step 5
5	Inspect and repair the wire harness between the wiper/washer and the washer motor according to relevant circuit diagrams.	Go to Step 6	
6	Inspect the instrument panel wire harness between the wiper motor and the wiper/washer switch according to relevant circuit diagrams and verify whether it is intact.	Go to Step 7	
7	Replace the washer motor and verify whether the system is intact.		

Downloaded from www.Manualslib.com manuals search engine

Diagnostic Test

Troubleshooting

6. Fault mode: Deviation of the wiper blade form its original position

Step	Operation	Yes	No
1	Remove the wiper switch and inspect the internal structure of it. Repair or replace it if necessary and confirm that there are no faults in it.	Go to Step 2	
2	Disconnect the wiper motor connector. Measure the pin voltage at the wire harness side with a digital multimeter to verify whether the voltage is normal.	Go to Step 4	Go to Step 3
3	Inspect the instrument panel wire harness between the fuse and the wiper motor according to relevant circuit diagrams and confirm that there are no faults in it.	Go to Step 4	
4	Remove the wiper motor and inspect its structure. Repair or replace it if necessary and verify whether the system is intact.		

7. Fault mode: Nonstop operation of the wiper

Step	Operation	Yes	No
1	Inspect the fuse and verify whether it is intact.	Go to Step 2	Go to Step 3
2	Replace the damaged fuse.	Go to Step 3	
3	Remove the wiper switch and measure the voltage of the switch with a digital multimeter to verify whether the voltage is normal.	Go to Step 5	Go to Step 4
4	Inspect the instrument panel wire harness between the fuse and the wiper switch and repair it if necessary.	Go to Step 5	Go to Step 6
5	Inspect the internal structure of the wiper switch and replace or repair it if necessary. Confirm that there are no faults in it and verify whether the system is intact.		Go to Step 10
6	Disconnect the connector from the wiper motor, shift the ignition switch to ON and shift the wiper switch to HI gear. Measure the pin voltage at the connector (wire harness side) with a digital multimeter to verify whether the voltage is normal.	Go to Step 7	Go to Step 10
7	Inspect the instrument panel wire harness between the wiper switch and the relay. Confirm that there are no faults in it.	Go to Step 8	Go to Step 9
8	Verify the existence of good grounding of the ground wire with a digital multimeter.		
9	Remove the wiper motor and replace or repair it if necessary. Verify whether the system is intact.		Go to Step 10
10	Inspect the instrument panel wire harness between the wiper switch and the wiper motor according to relevant circuit diagrams. Repair it if necessary. Confirm that there are no faults in it and verify whether the system is intact.		

Downloaded from www.Manualslib.com manuals search engine

Removal and Installation

Removal of the wiper

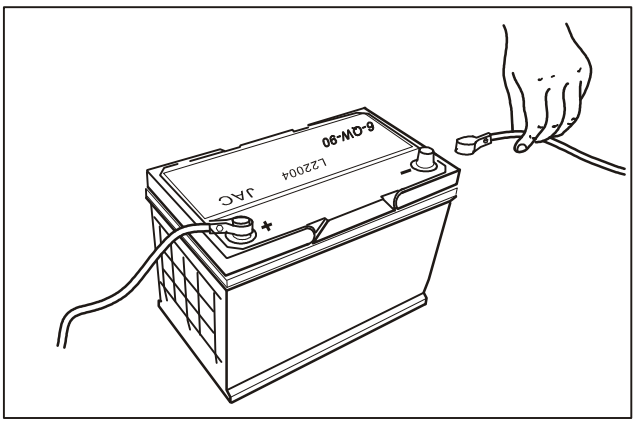

1. Disconnect the connecting wire of battery.

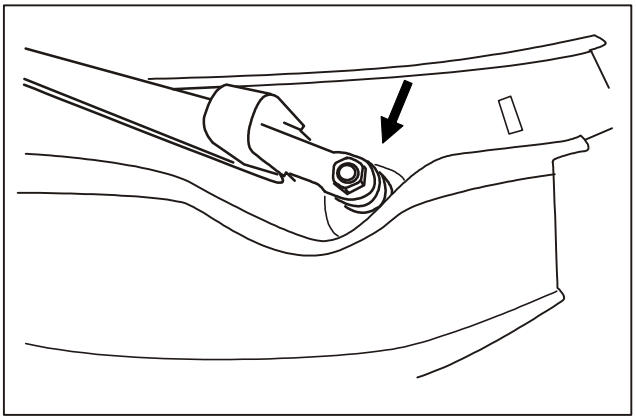

2. Remove mounting bolts of the wiper.

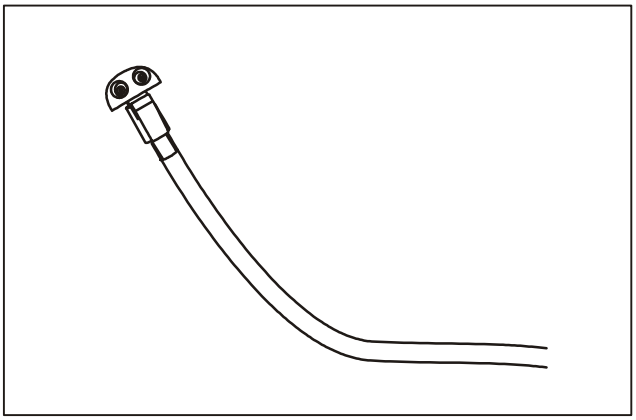

3. Disconnect the connecting pipe of the windshield washing fluid nozzle.

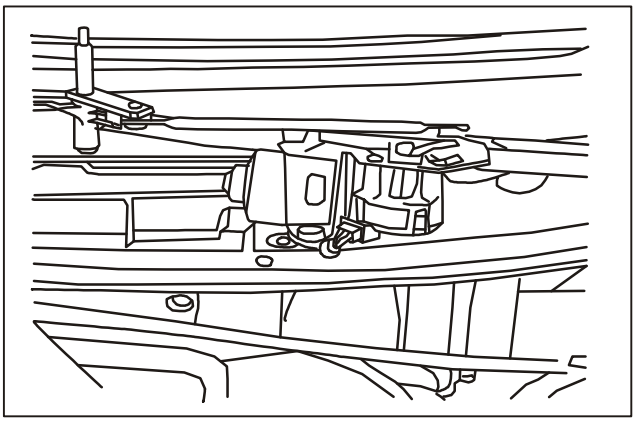

4. Remove sealing rubber strips and fixing clamps of the wiper decorative panel.

Downloaded from www.Manualslib.com manuals search engine

Removal and Installation

Removal of the wiper

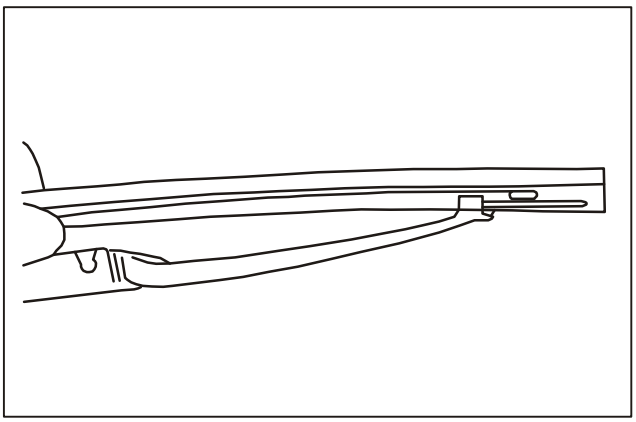

5. Take down the wiper blade and wiper decorative panel.

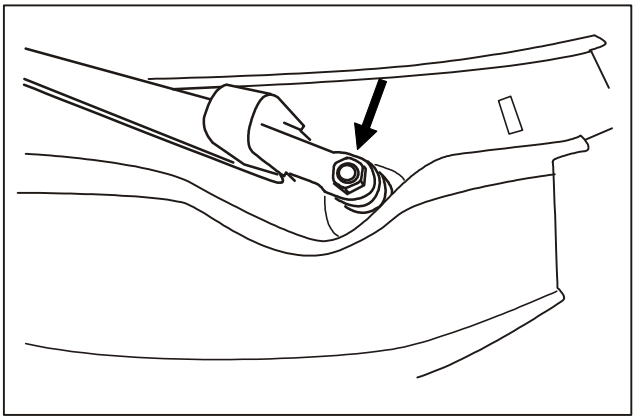

6. Remove connecting bolts of the wiper linkage.

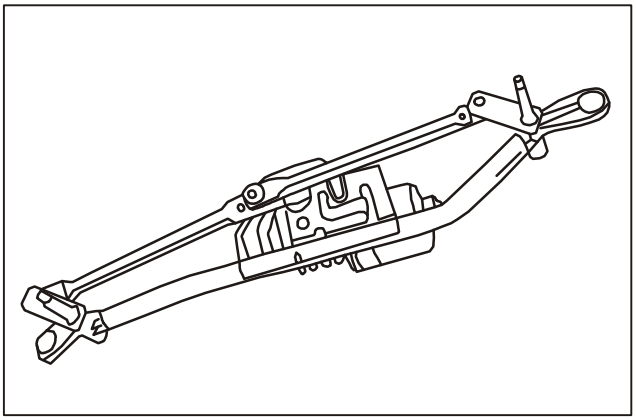

7. Take down the wiper linkage and wiper motor.

Downloaded from www.Manualslib.com manuals search engine

Removal and Installation

Removal of the windshield washing fluid reservoir

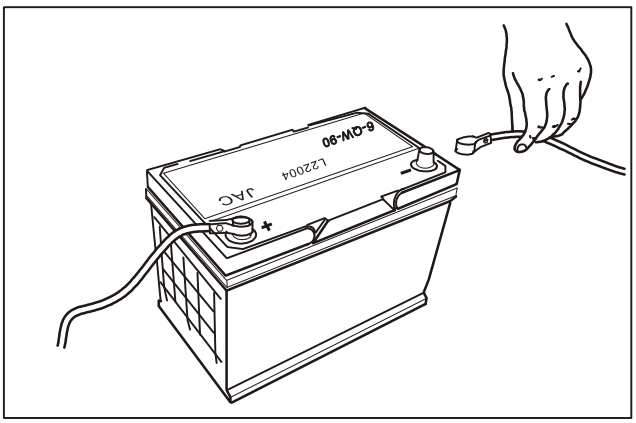

1. Disconnect the connecting wire of battery.

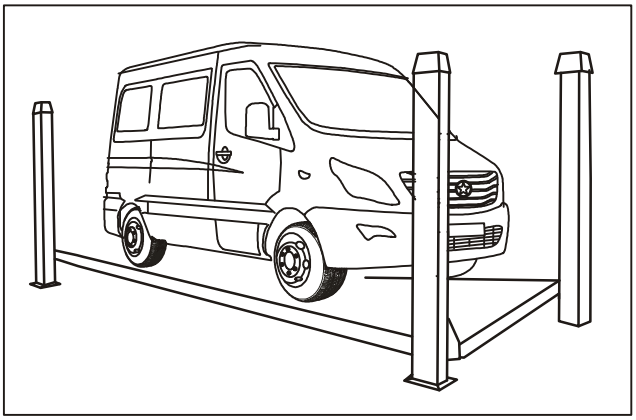

2. Lift the vehicle.

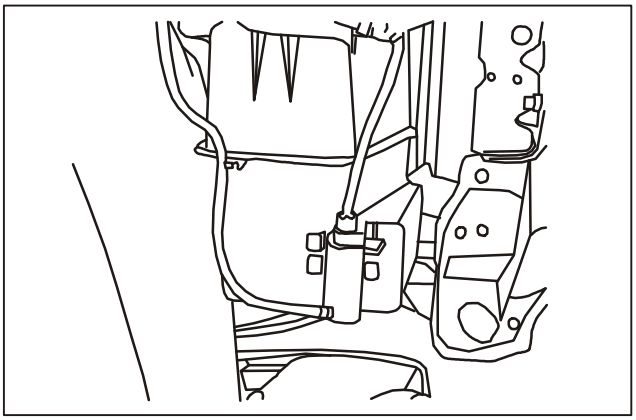

3. Remove mounting bolts of the windshield washing fluid reservoir.

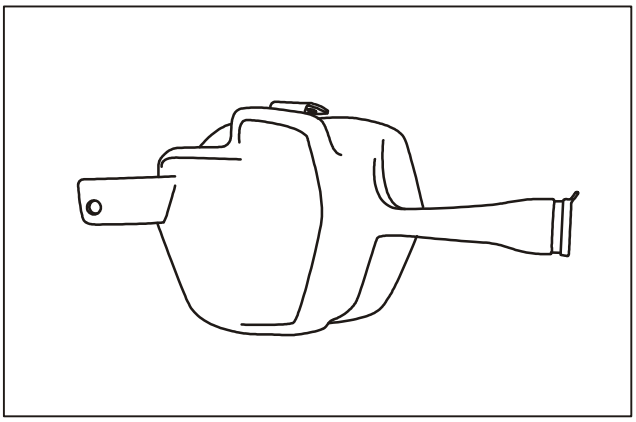

4. Take out the windshield washing fluid reservoir.

Downloaded from www.Manualslib.com manuals search engine

Removal and Installation

Removal of the Wiper washing nozzle

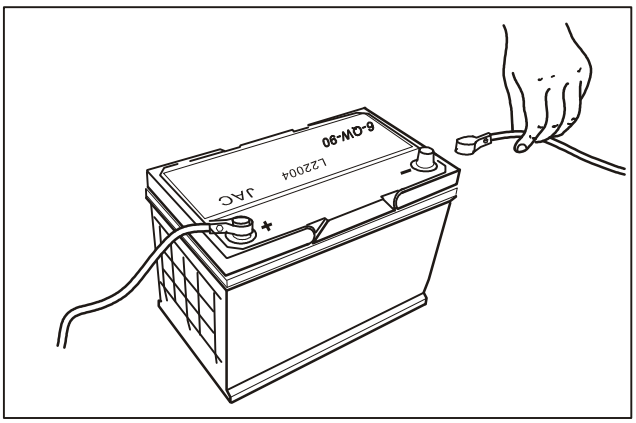

1. Disconnect the connecting wire of battery.

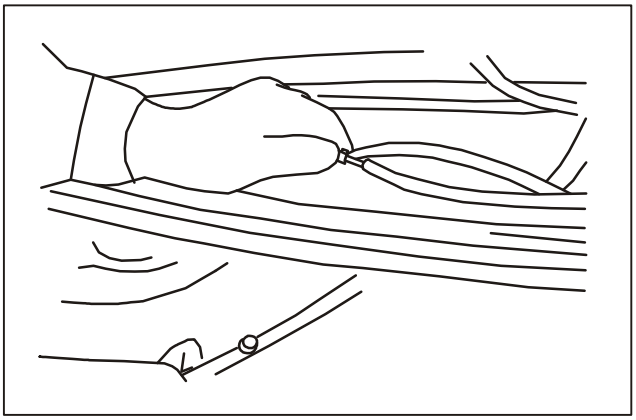

2. Pull up the washing nozzle with hand.

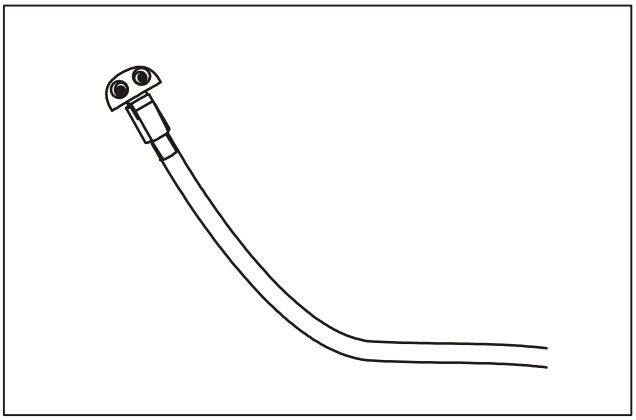

3. Disconnect the water pipe of nozzle.

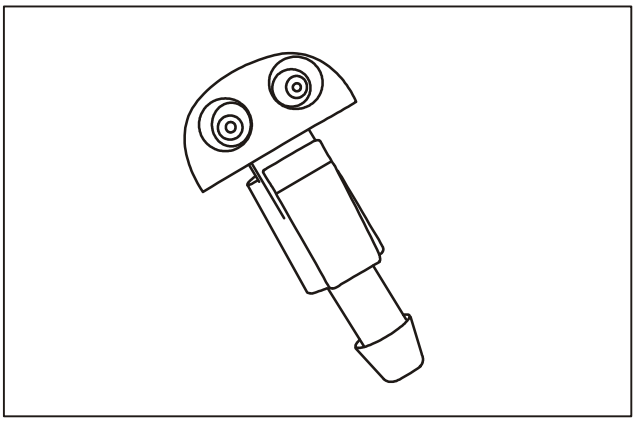

4. Take down the washing nozzle.

Downloaded from www.Manualslib.com manuals search engine

Specification

Technical parameter

No load				Loaded 4.4N.m			
Low speed		High speed		Low speed		High speed	
Speed r/min	Current A	Speed r/min	Current A	Speed r/min	Current A	Speed r/min	Current A
45±5	≤2	65±8	≤3.5	≥20	≤5.5	≥45	≤6.8

High speed braking		Low speed braking	
Torque N.m	Current A	Torque N.m	Current A
19.6	≤32	27	≤26

Noise	High speed≤60dB(A)	Low speed≤50dB(A)

Downloaded from www.Manualslib.com manuals search engine

Downloaded from www.Manualslib.com manuals search engine

Reversing Radar

Applied models: SUNRAY products manufactured by JAC

Subject Page

Instruction and Operation

Reversing Radar....102
Mounting position sensor....102
Operating principle....103

Diagnosis and Testing

Reversing Radar....104
Definitions of reversing radar computer pins....104
Troubleshooting....106

Removal/Installation

Reversing Radar....108
Removal of the reversing radar computer....108
Removal of the reversing radar sensor....110

Specification

Reversing Radar....111
Basic parameters....111

Downloaded from www.Manualslib.com manuals search engine

Instruction and Operation

Reversing radar sensor

There are 4 sensor probes for Sunray reversing radar. With the application of ultrasonic sensor, the distance measurement of the obstacle and the vehicle can be carried out. In the process of reversing, the buzzer plays a role in supporting reminding for the driver via beeps with different frequencies.

Mounting position of the reversing radar sensor:

The reversing radar computer is mounted on the rear bumper.

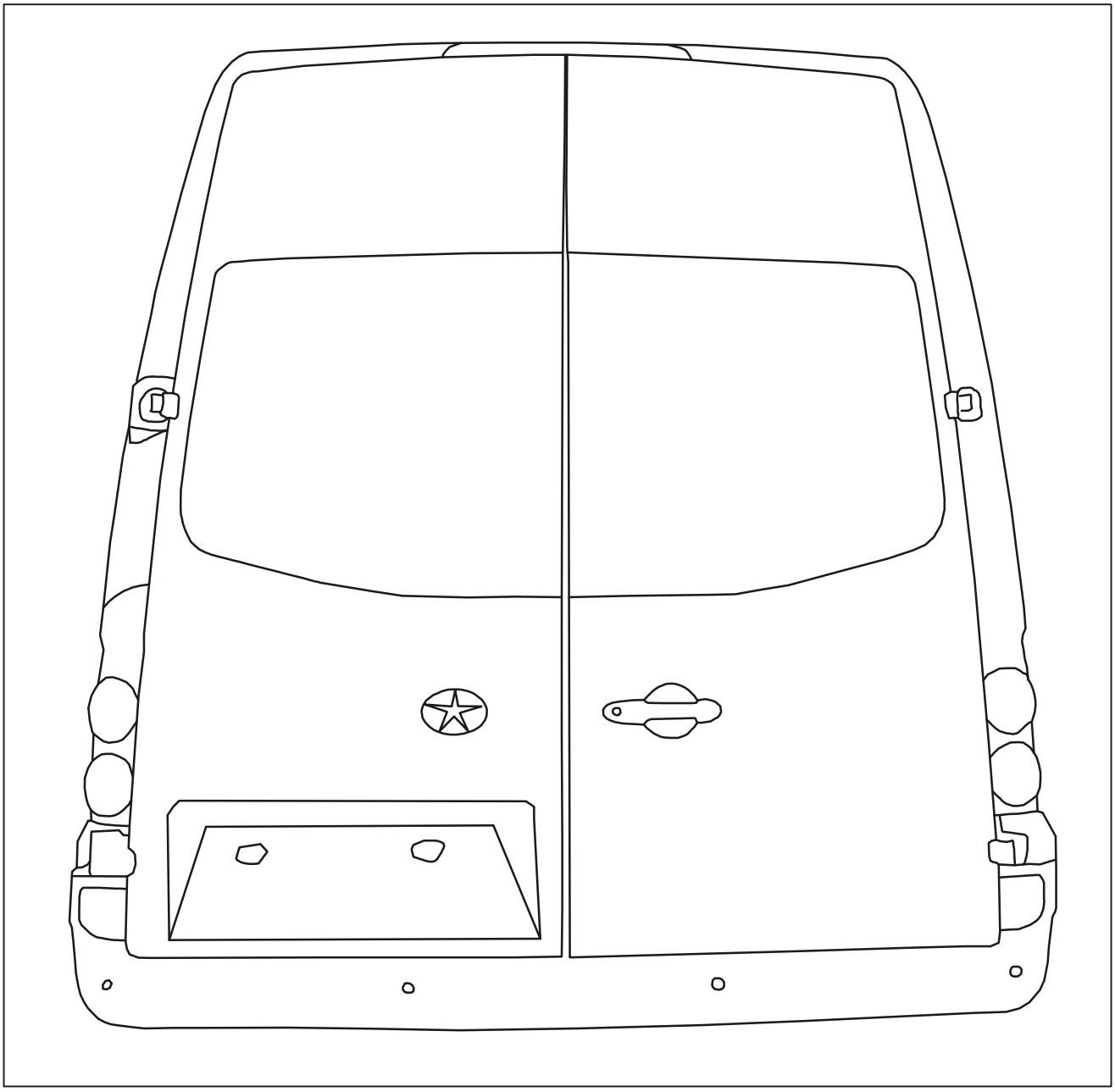

Downloaded from www.Manualslib.com manuals search engine

Instruction and Operation

Operating principle of the reversing radar

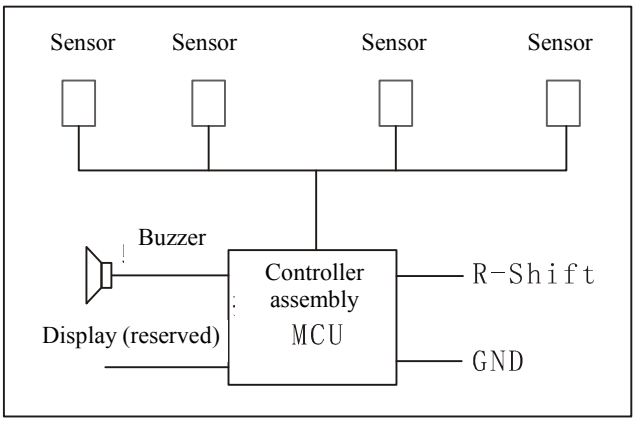

1. Schematic diagram of reversing radar system

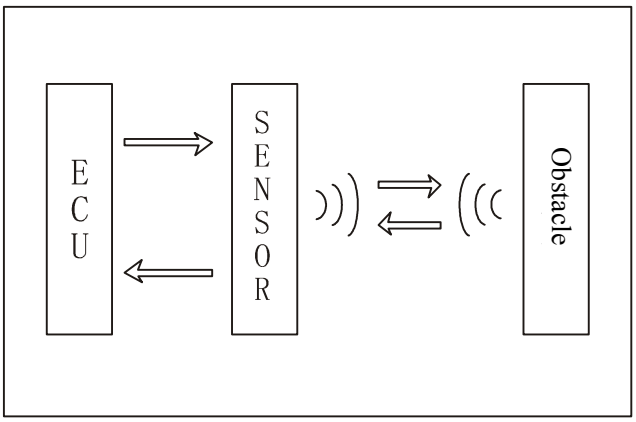

2. Schematic diagram of ultrasonic distance measurement

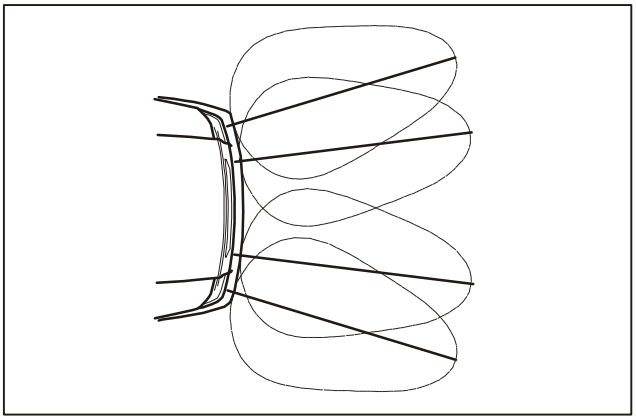

3. The reversing radar controller sends ultrasonic signals to the sensor in order to drive the sensor for ultrasonic wave generation; Ultrasonic signals are received by the sensor via obstacle reflection and the internal circuit of the sensor amplifies the reflected signals and sends them to the controller. After analysis and calculation of the controller, the distance information of obstacle is processed by the controller and the buzzer is driven to beep. For obstacles at different distances from the vehicle, the buzzer is controlled by the controller to beep in different frequencies thus to remind the driver of obstacles.

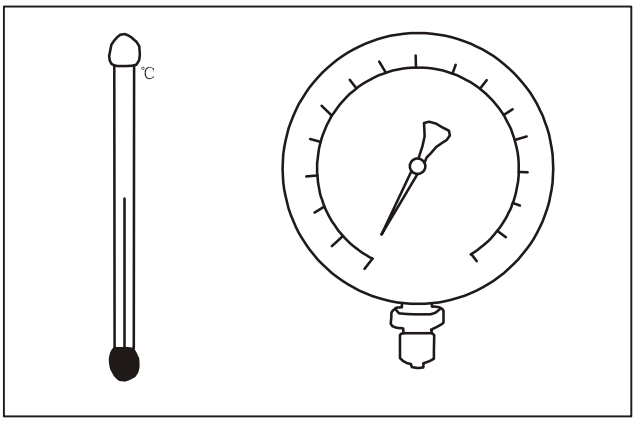

4. Factors which may affect the operation of reversing radar:
   - Temperature
   - Air pressure
   - Humidity

Downloaded from www.Manualslib.com manuals search engine

Diagnosis and Test

Definitions of reversing radar computer pins

1. Control logic

In the case of no fault in sensor, the buzzer 2HZ beeps once; in the case of one or more faulted sensors, the buzzer 2HZ beeps twice and then turns into normal distance measurement.					
Distance	0-30	> 30-60	> 60-90	> 90-180	> 180
Beeping frequency of the buzzer	ON	8HZ	4 HZ	2 HZ	OFF

2. Definitions of control module interfaces

Connector figure	Pin	Signal name	Function
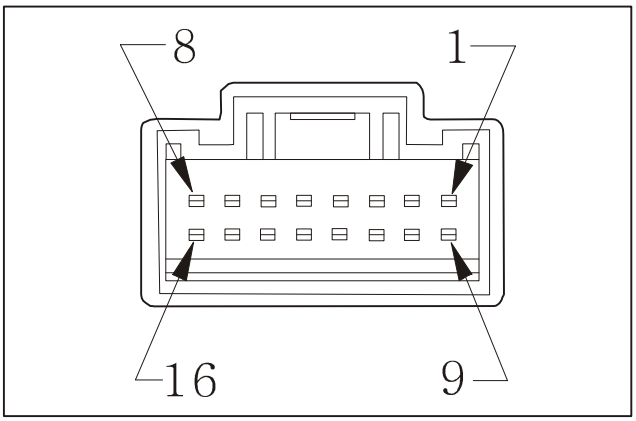	1	R-SHIFT	Reversing signal
	2	NC	
	3	NC	
	4	S-CR	Right intermediate probe
	5	NC	
	6	NC	
	7	S-L	Left probe
	8	S-CL	Left intermediate probe
	9	NC	
	10	NC	
	11	NC	
	12	NC	
	13	DATA	Data display
	14	Buzzer	Control signal of buzzer
	15	S-R	Right probe
	16	GND	Ground

3. Probe interfaces

Connector figure	Pin	Current	Function
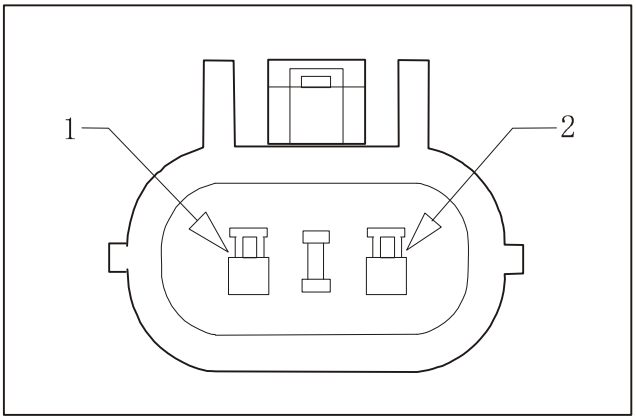	1	0.1	Power supply
	2	0.1	Ground

Downloaded from www.Manualslib.com manuals search engine

Diagnosis and Test

Definitions of reversing radar computer pins（continued）

4. Buzzer connectors

Connector figure	Pin	Current	Function
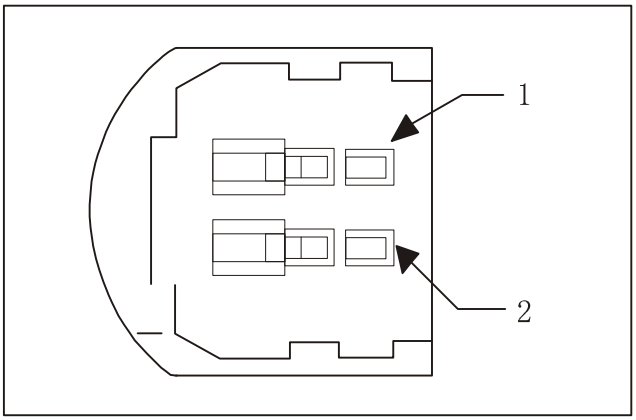	1	0.1	Ground
	2	0.1	Power supply

Downloaded from www.Manualslib.com manuals search engine

Diagnosis and Test

Possible conditions for the out of operation reversing radar

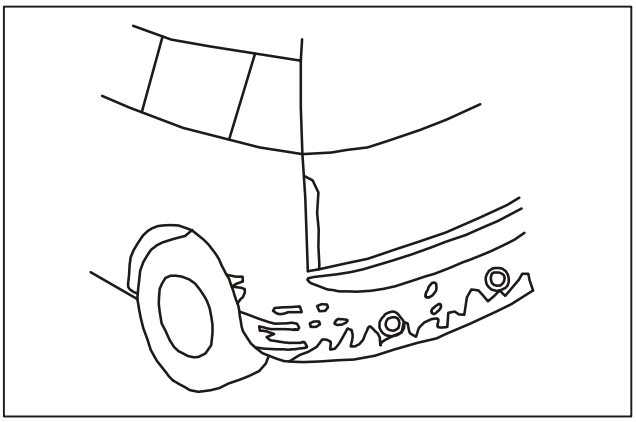

1. Verify whether there is snow or mud on radar probes.

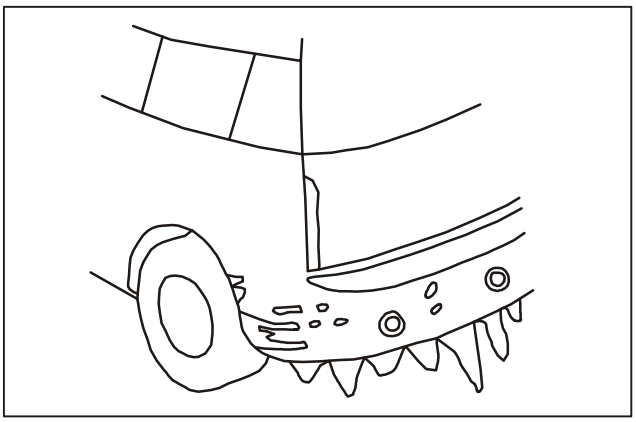

2. Verify whether the surface of the radar probe is frozen.

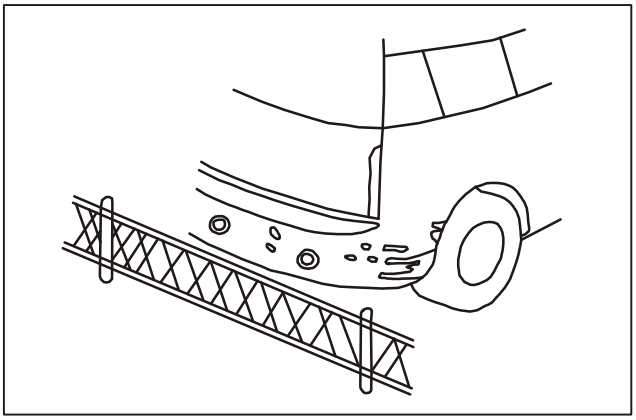

3. Verify whether the obstacles approaching are thin objects like iron wires, ropes and mesh walls.

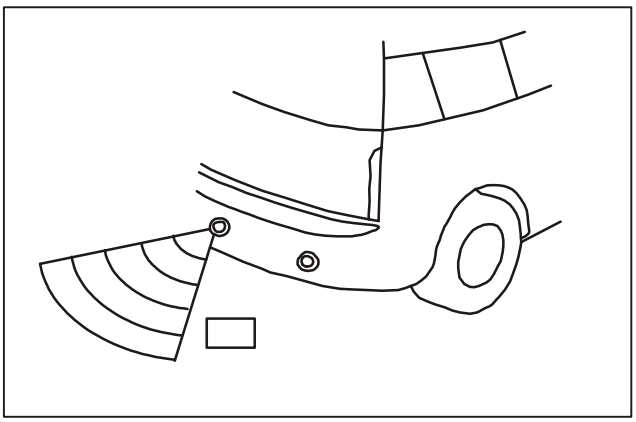

4. Verify whether the obstacles approaching are too low.

Downloaded from www.Manualslib.com manuals search engine

Diagnosis and Test

Possible conditions for the reversing radar false alarms

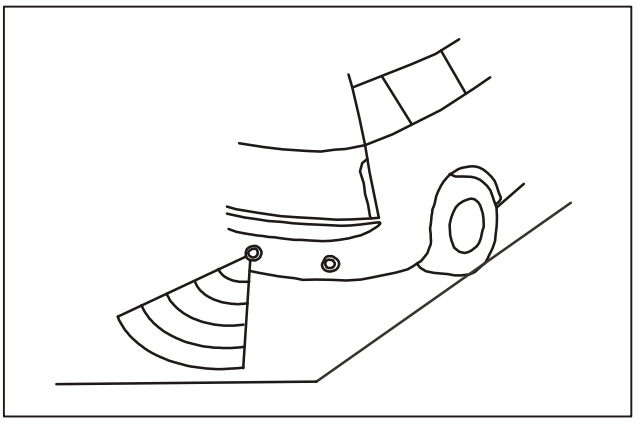

1. The vehicle is running downward from steep hills.

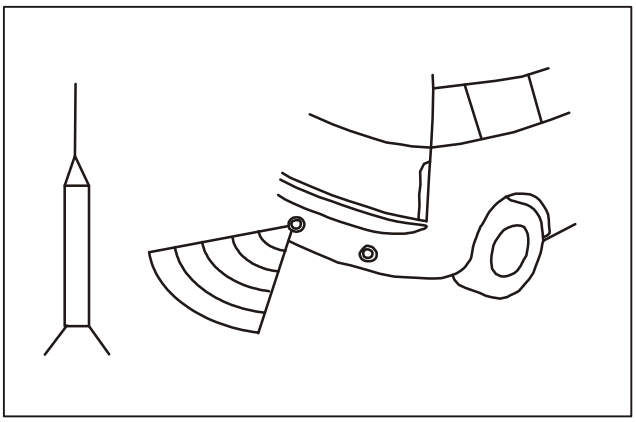

2. The vehicle is equipped with the radio or antenna with high output and these equipments are in operation.

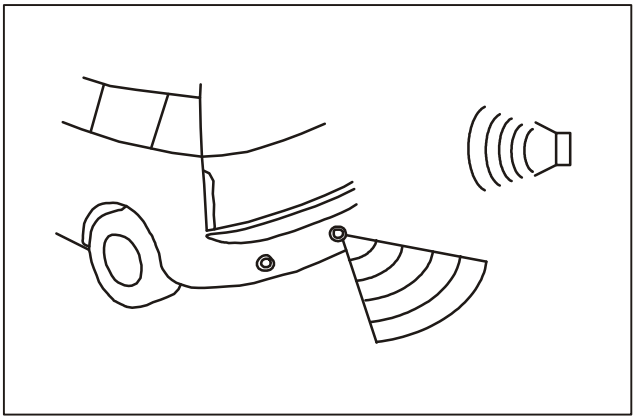

3. Other vehicles with honk, motorcycles with engine noise and objects with noise of exhaust brake are approaching the vehicle.

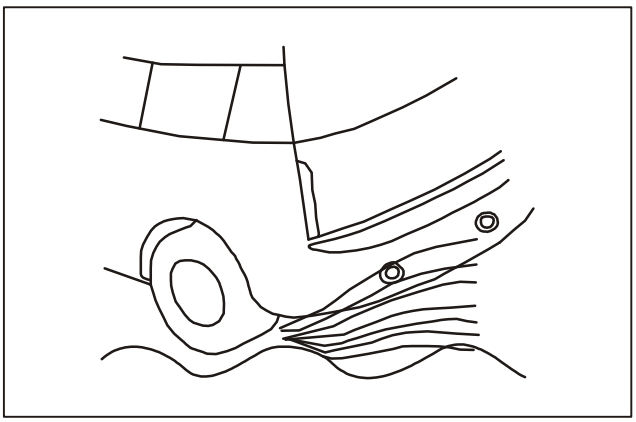

4. The vehicle is running in jelly snow or rain.

Downloaded from www.Manualslib.com manuals search engine

Removal and Installation

Removal of the reversing radar computer

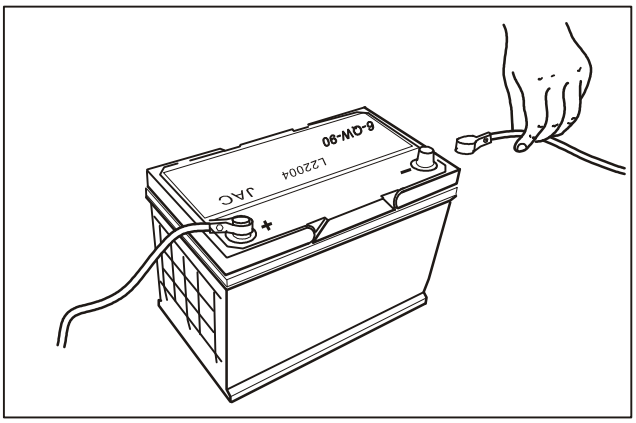

1. Disconnect the negative cable of battery.

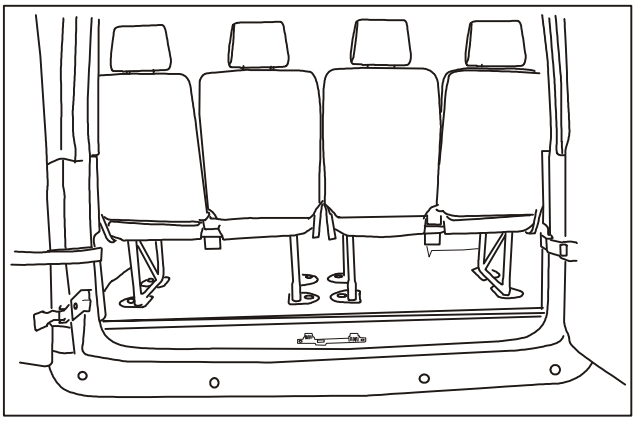

2. Remove the rear seat.

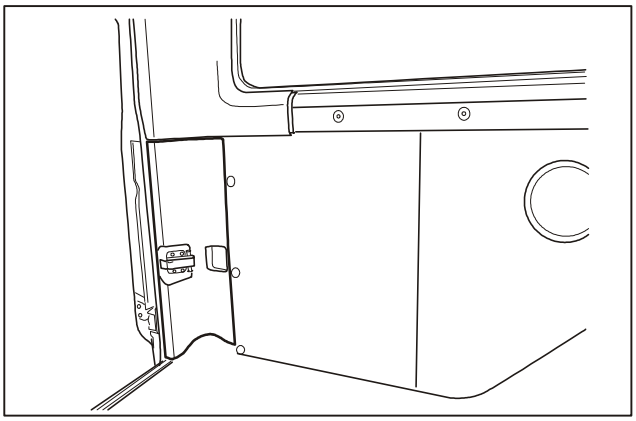

3. Remove the trim panel at the left rear side of the vehicle.

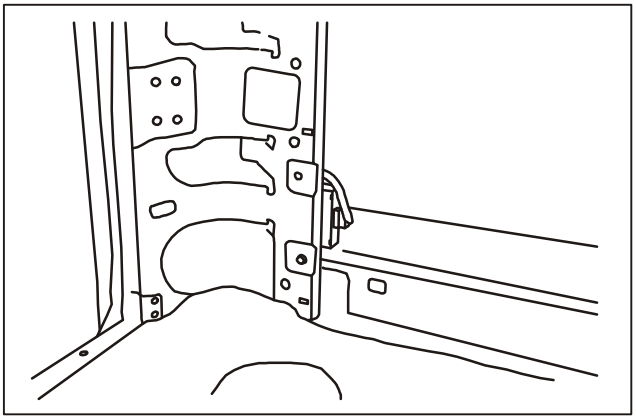

4. Remove mounting bolts of the reversing radar.

Downloaded from www.Manualslib.com manuals search engine

Removal and Installation (continued)

Removal of the reversing radar

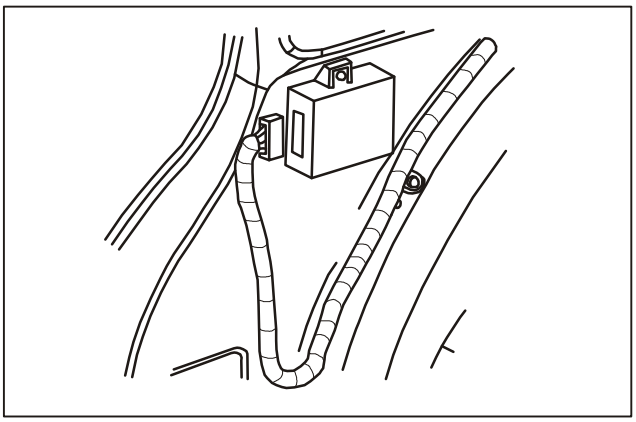

5. Disconnect the connecting wire of the reversing radar computer.

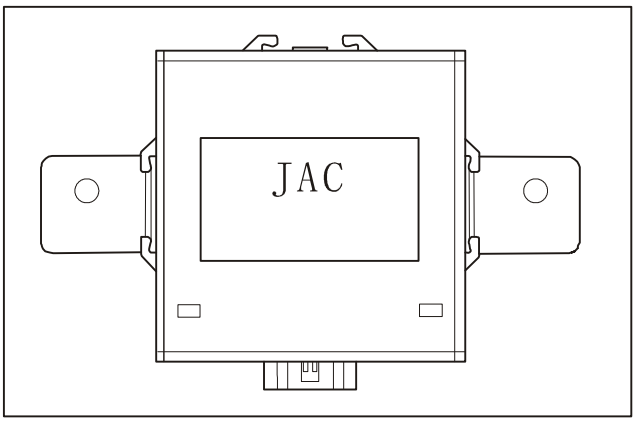

6. Take out the reversing radar.

Downloaded from www.Manualslib.com manuals search engine

Removal and Installation

Removal of the reversing radar sensor

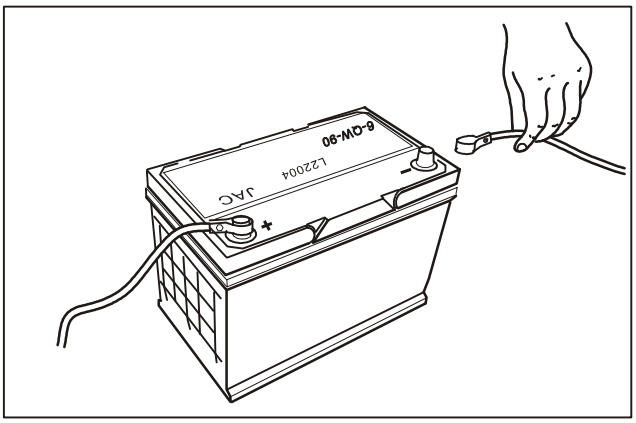

1. Disconnect the connecting wire of battery.

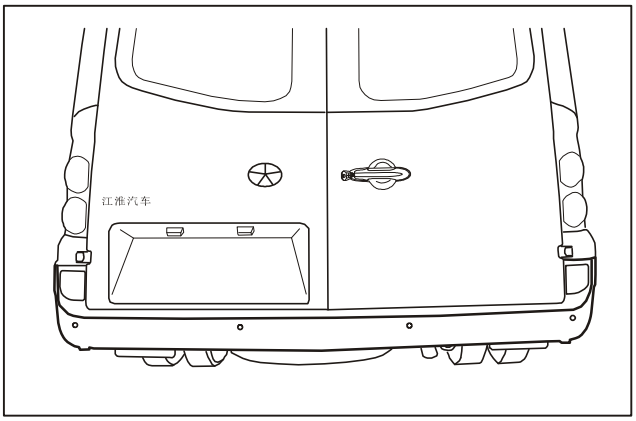

2. Remove the rear bumper.

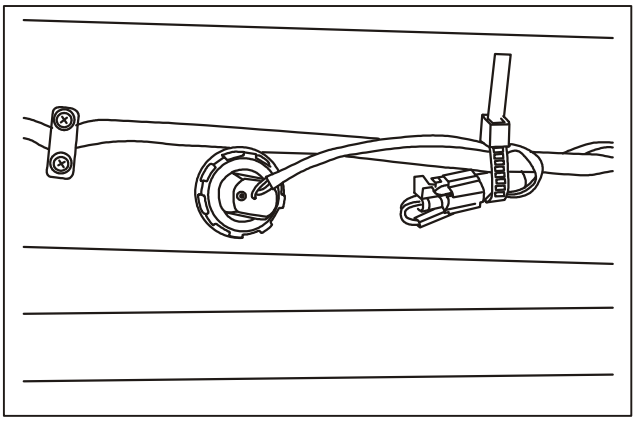

3. Disconnect the connecting wire of probe.

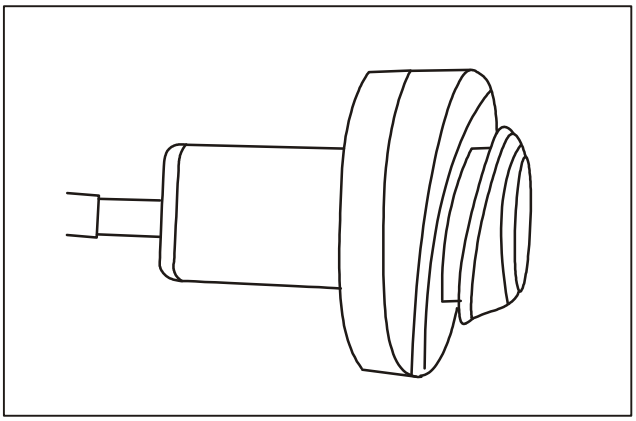

4. Screw out the probe.

Downloaded from www.Manualslib.com manuals search engine

Specification

Basic parameter of the reversing radar:

Technical parameter of the control module:

Rated operating voltage	DC12V
Range of operating voltage	DC9V～16V
Operating temperature	-30～+80℃
Storage temperature	-40～+85℃
Operating frequency	58KHz
Max.detection distance	For intermediate probe180cm；For left/right probe 60cm

Technical parameter of the probe:

Rated operating voltage	DC12V
Range of operating voltage	DC9V～16V
Operating temperature	-30～+80℃
Storage temperature	-40～+85℃
Operating frequency	58KHz
Detection angle	Horzontal 80°,vertical 34°

Technical parameter of the buzzer:

Rated voltage	DC12V
Operating voltage	DC9V～16V
Operating temperature	-30℃～+80℃
Storage temperature	-40℃～+85℃
Sound level of the buzzer	≥90dB～105dB/10cm/12V(min)
Frequency of the buzzer	2.9±0.3kHz

Downloaded from www.Manualslib.com manuals search engine

Downloaded from www.Manualslib.com manuals search engine

Audio/Video System

Applied models: SUNRAY products manufactured by JAC

Subject Page

Instruction and Operation

Radio..... 114
Mounting position..... 114
Introduction functions..... 115
Precautions..... 119

Diagnosis and Testing

Radio..... 121
Troubleshooting..... 121

Removal/Installation

Radio..... 124
Removal of Radio..... 124
Removal of loudspeakers..... 125

Specification

Radio..... 127
Basic parameters..... 127

Downloaded from www.Manualslib.com manuals search engine

Instruction and Operation

Audio system

SUNRAY audio control system, powered by 12V DC power supply, is composed of CD module, radio module and MP3 module, which features with 10 seconds electronic anti-vibration reliability, USB data reading function and FM/AM radio, and can supports play formats of CD, MP3 and WMA.

The host, featuring with four-way audio output function, can be connected with four-way loudspeaker; therefore, vehicle occupants can adjust proper voice and select play format freely based on actual road condition, as well as adjust various output volume by audio balance setting.

Mounting position of audio host:

In the middle of center console of instrument panel.

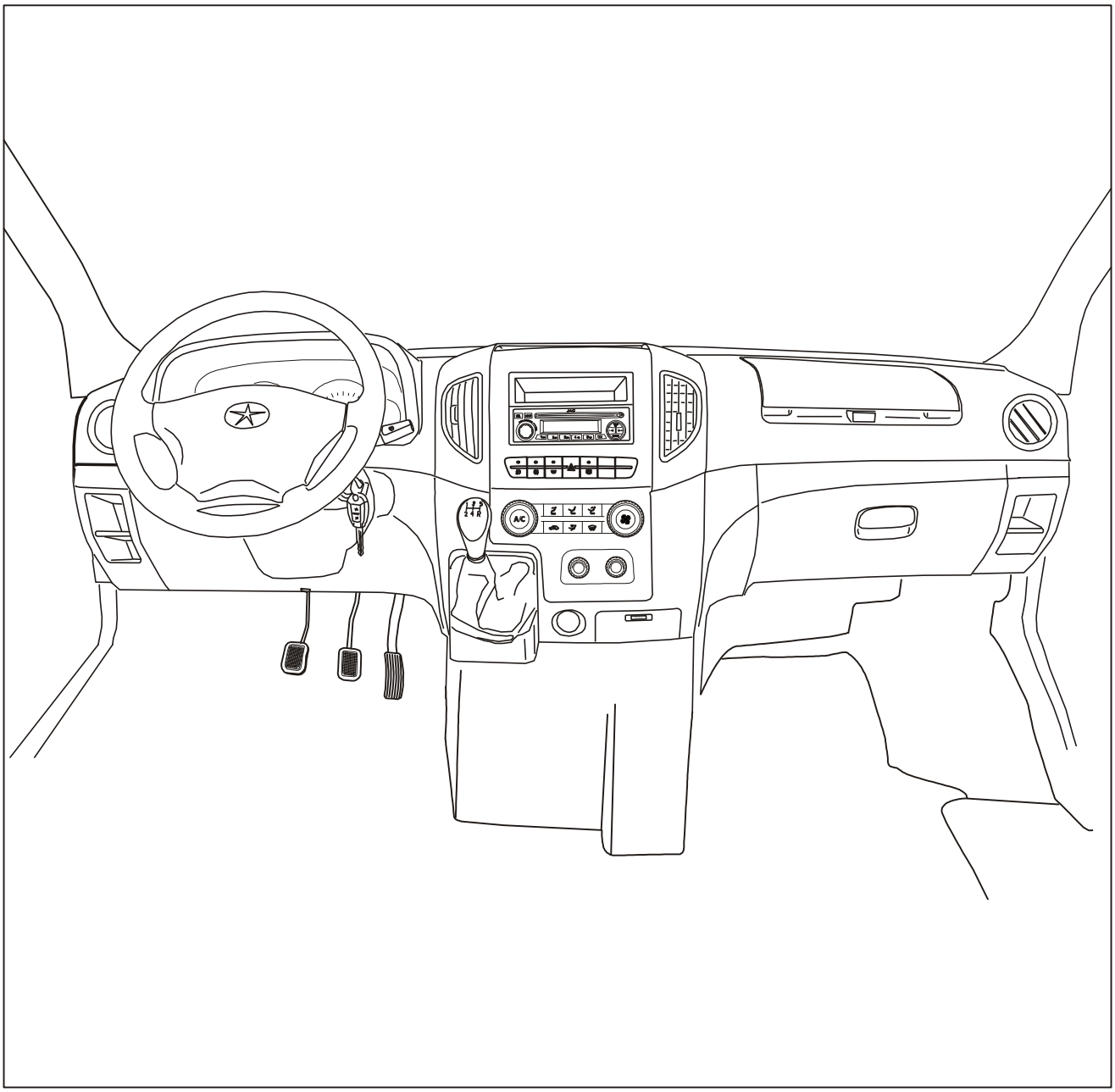

Downloaded from www.Manualslib.com manuals search engine

Instruction and Operation

Introduction to CD player function

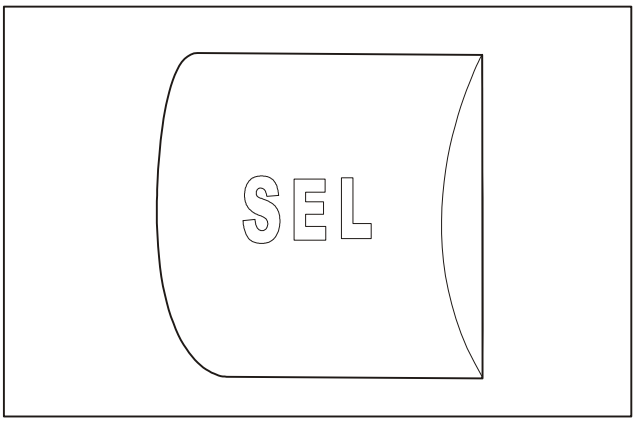

1. Press it shortly.
   BASS: Low pitch
   TREBLE: High pitch
   BAL: Left/right balance
   FADER: Front/rear balance
   CUSTOM: Set by customer

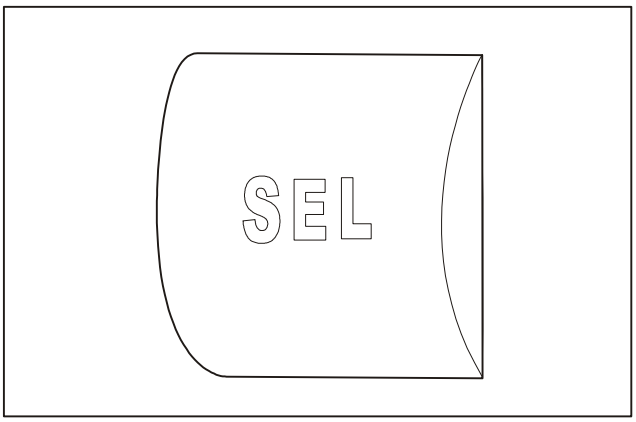

2. Press it shortly.
   Under "CUSTOM" mode, sound effect can be achieved by adjusting volume up or down.
   JAZZ: Jazz music
   VOCAL: Vocal
   POP : Popular music
   ROCK: Rock and roll
   CLASSIC: Classic music
   FLAT: Flat voice

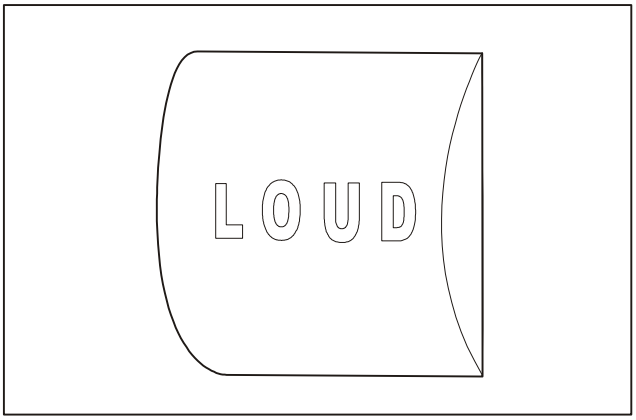

3. Press it shortly.
   Loudness enhancement ON;

   Press and hold it.
   Loudness enhancement OFF.

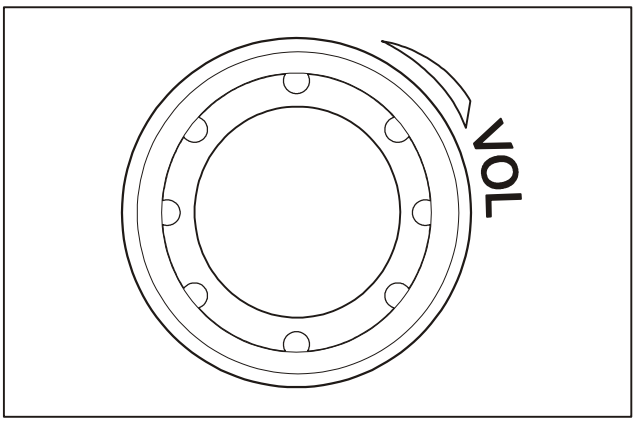

4. Press it shortly.
   The machine is turned on if it is under OFF status.

   Press and hold it.
   Mute mode is turned on if it is under ON status.

   Turn counterclockwise.
   To decrease volume.

   Turn clockwise.
   To increase volume.

Downloaded from www.Manualslib.com manuals search engine

Instruction and Operation

Introduction to CD player function

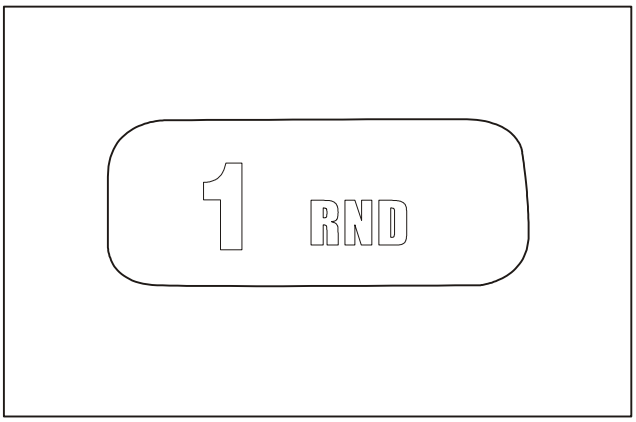

5. Press it shortly.
   Under radio mode, the first radio station is selected; under playback mode, random play starts.

   Press and hold it.
   The current radio station is stored onto No.1 position.

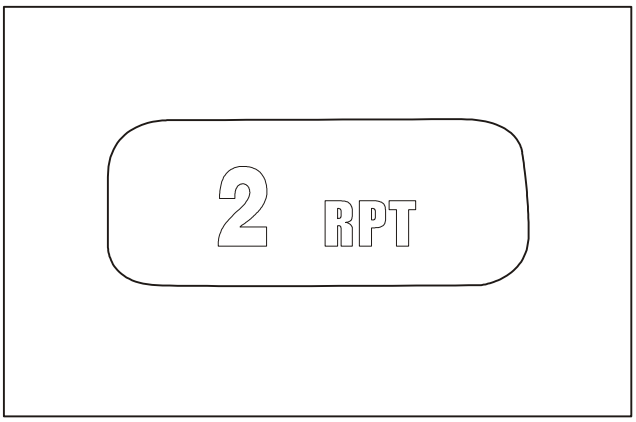

6. Press it shortly.
   Under radio mode, the second radio station is selected; under playback mode, repeat play starts.

   Press and hold it.
   The current radio station is stored onto No.2 position.

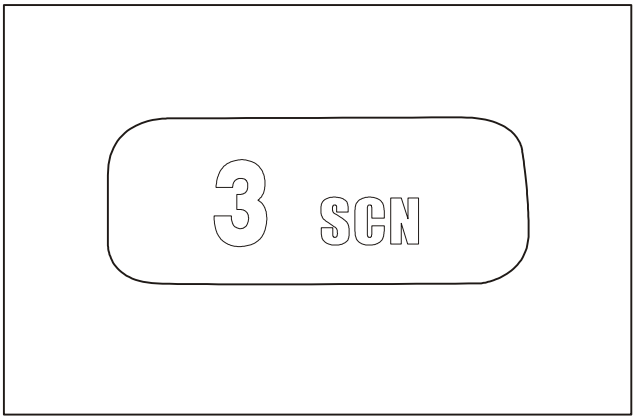

7. Press it shortly.
   Under radio mode, the third radio station is selected; under playback mode, scan play starts.

   Press and hold it.
   The current radio station is stored onto No.3 position.

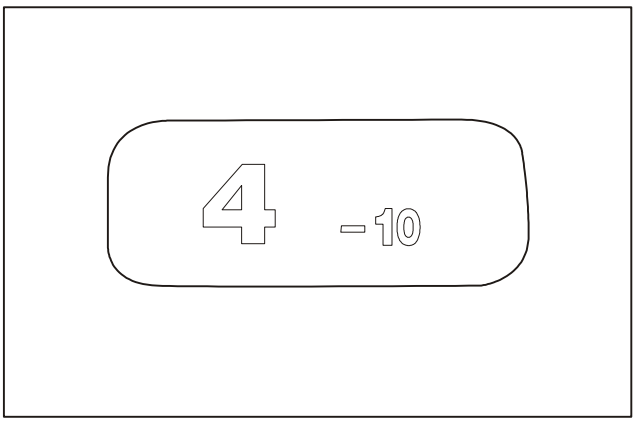

8. Press it shortly.
   Under radio mode, the fourth radio station is selected; under playback mode, it starts to play from the last 10th songs.

   Press and hold it.
   The current radio station is stored onto No.4 position.

Downloaded from www.Manualslib.com manuals search engine

Instruction and Operation

Introduction to CD player function

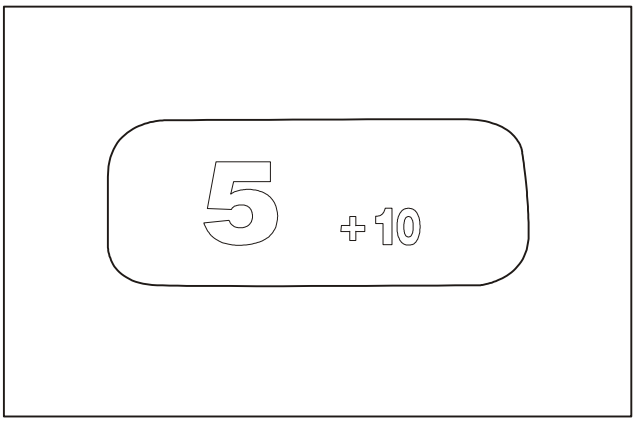

9. Press it shortly.
   Under radio mode, the fifth radio station is selected; under playback mode, it skips the first 10 songs to play.

   Press and hold it.
   The current radio station is stored onto No.5 position.

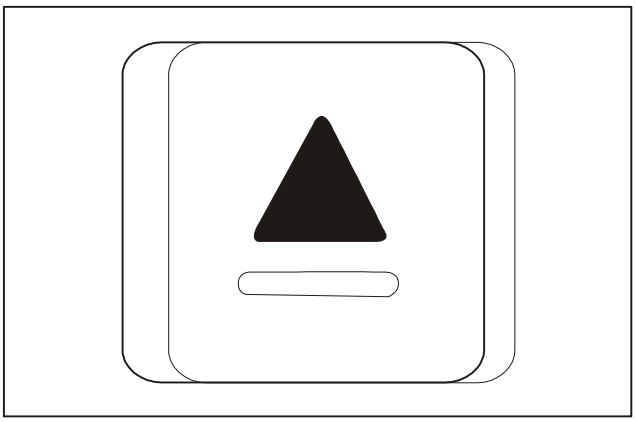

10. Press it shortly.
    CD quit if it is inside.

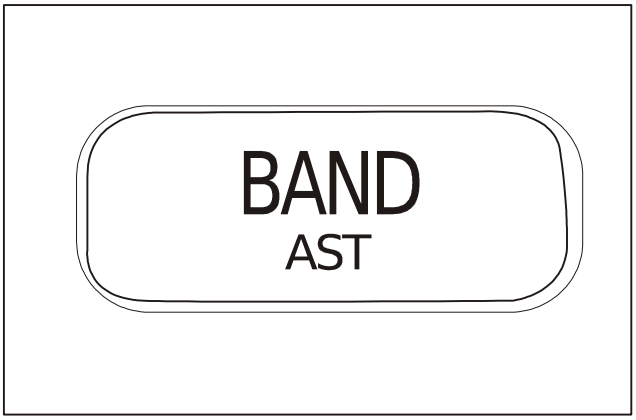

11. Press it shortly.
    Cycle selection of band from FM1, FM2, FM3, AM and AM2.

    Press and hold it.
    Under FM mode, maximum 15 radio stations can be searched automatically and stored onto FM1, FM2 and FM3; under AM mode, maximum 10 radio stations can be searched automatically and stored onto AM1 and AM2.

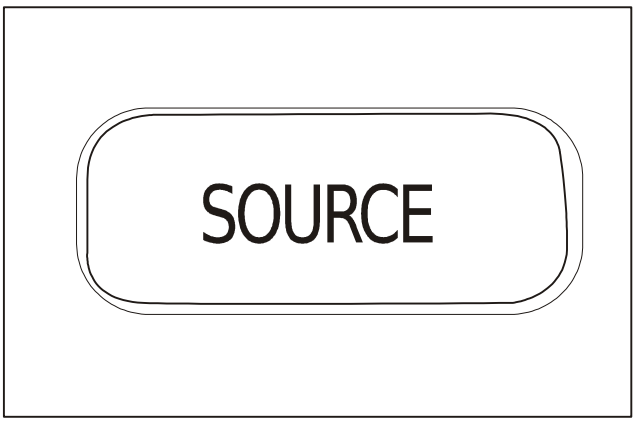

12. Press it shortly.
    Cycle selection of radio/playback sound source.

Downloaded from www.Manualslib.com manuals search engine

Instruction and Operation

Introduction to CD player function

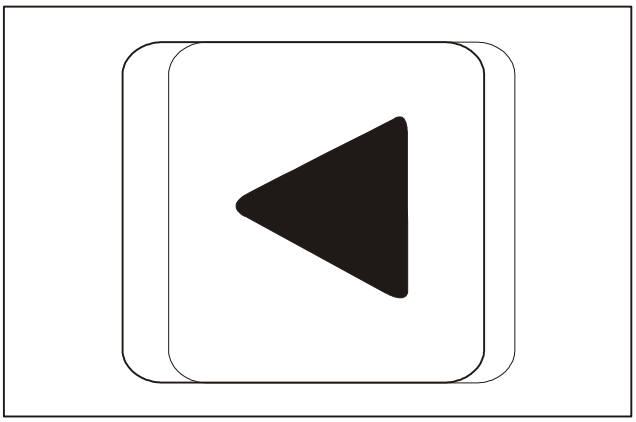

13. Press it shortly.
    Auto searching to low end.

    Press and hold it.
    Manual searching to low end.

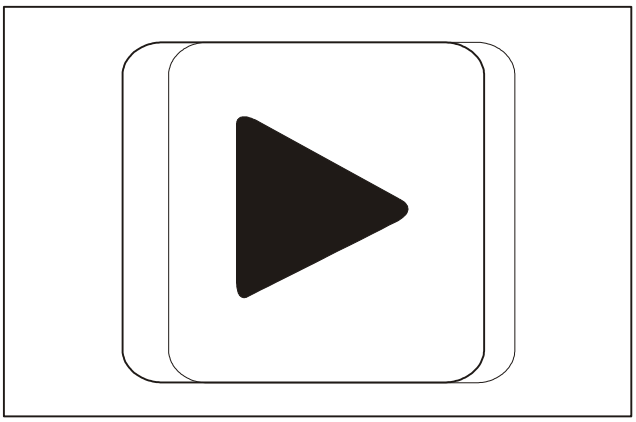

14. Press it shortly.
    Auto searching to high end.

    Press and hold it.
    Manual searching to high end.

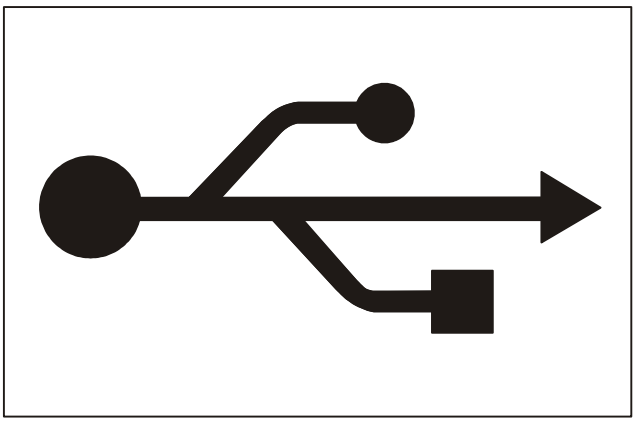

15. With U disk inserted, MP3/WMA format play can be achieved.

Downloaded from www.Manualslib.com manuals search engine

Instruction and Operation

Precautions

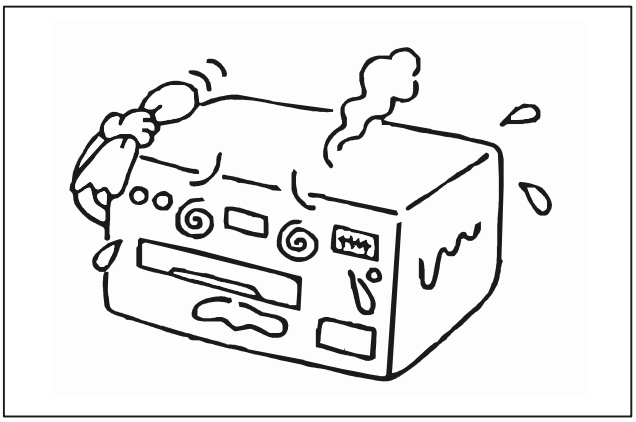

1. Don’t place CD player under hot environment.

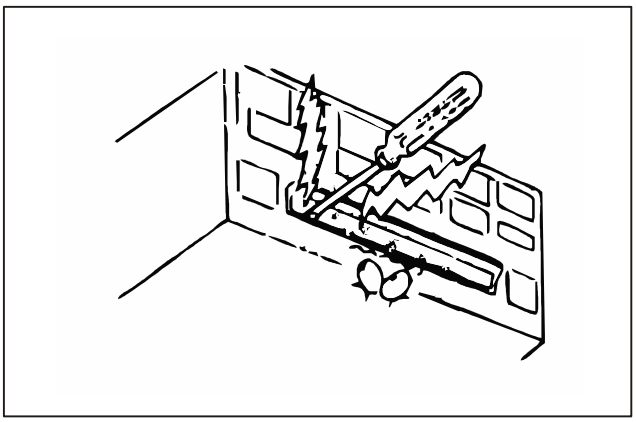

2. Don’t remove the CD player violently.

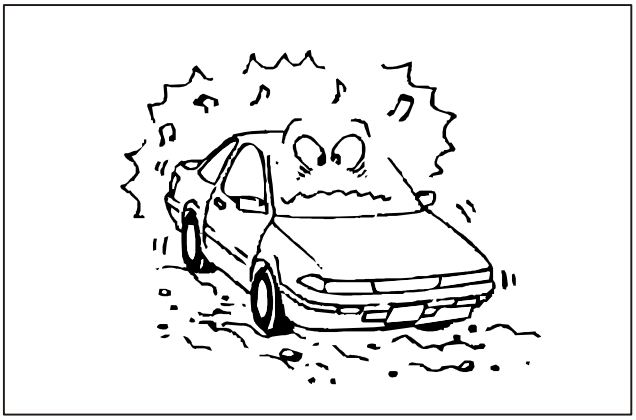

3. Don’t use the CD player when driving on bumpy road surface.

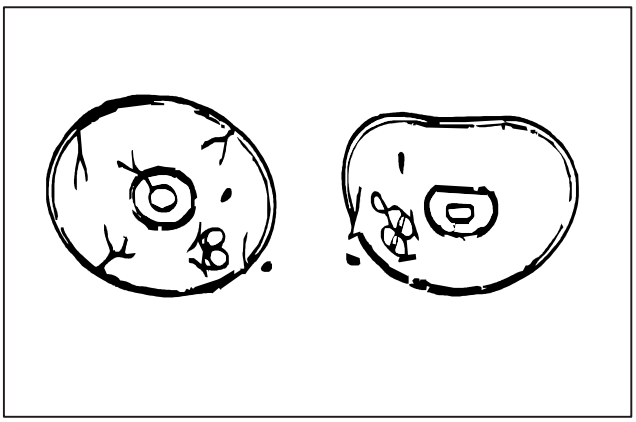

4. The deformed CD cannot be applied.

Downloaded from www.Manualslib.com manuals search engine

Instruction and Operation

Precautions

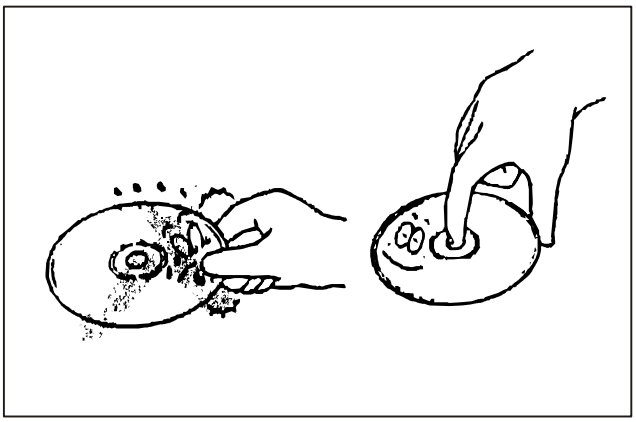

5. Handle the CD properly.

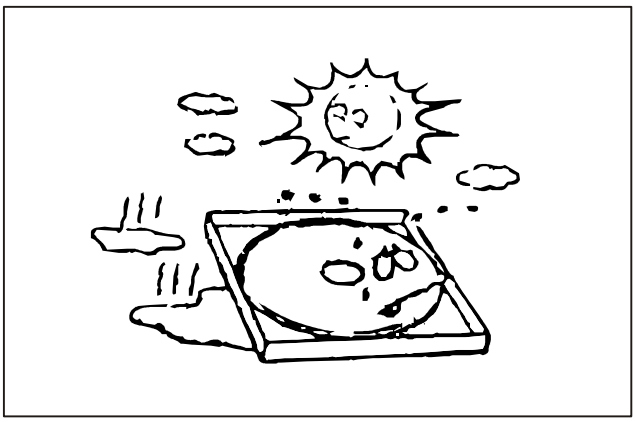

6. The CD is not allowed to be exposed under strong sunlight.

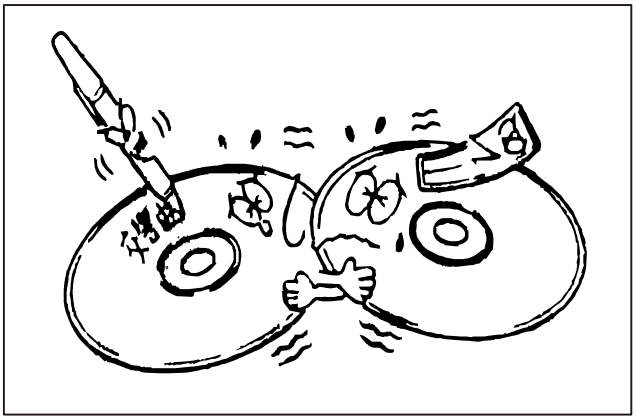

7. Don’t write or stick label on the CD.

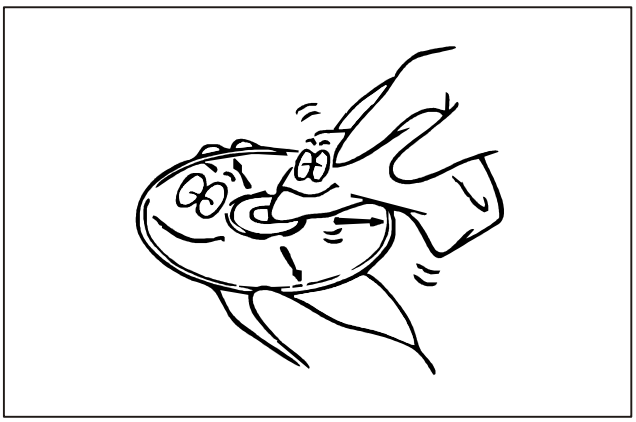

8. Keep the CD clean.

Downloaded from www.Manualslib.com manuals search engine

Diagnosis and Testing

Troubleshooting

1. Poor reception of antenna.

Step	Operation	Yes	No
1	Does the reception effect decrease or are there more than one radio stations cannot be received?	Go to Step 3.	Go to Step 2.
2	Check if there are specific frequencies interfered by the electrical system of vehicle as per procedures below: ①Turn the ignition switch to ON position. ②Select the influenced radio station. ③Remove one fuse each time until the failed one is found out. ④Perform necessary maintenance for the failed circuit. Is the maintenance finished?	Check radio system.	—
3	①Disconnect the negative cable of battery. ②Disconnect the antenna lead connector from the radio receiver. ③Measure the resistance between antenna lead connector and battery ground cable. Is the resistance higher than the specified?	Go to Step 4.	Go to Step 5.
4	①Disconnect the radio antenna lead connector from the windshield. ②Measure the resistance between co-axial cable shielded ground and radio connector shielded circuit. Is the resistance higher than the specified?	Go to Step 8.	Go to Step 10.
5	Measure the resistance of center conductor (signal input) between the antenna connector and the radio connector. Is the resistance higher than the specified?	Go to Step 7.	Go to Step 6.
6	Measure the resistance between center conductor (signal input) and coaxial cable shielded ground. Is the resistance lower than the specified?	Go to Step 9.	Go to Step 1.1
7	①Check coaxial cable and interconnection for failed connection or corrosion. ②Repair cable and interconnection when necessary. ③If the cable and interconnection are normal, please replace the coaxial cable of antenna. Is the maintenance finished?	Check radio system.	—
8	①Check coaxial cable ground for failed connection or corrosion. ②Repair the ground when necessary. ③Replace the coaxial cable if the ground is normal. Is the maintenance finished?	Check radio system.	—
9	Replace the affected section of coaxial cable. If the maintenance finished?	Check radio system.	—
10	Perform maintenance for the failed connection or corrosion at the coaxial ground cable. Is the maintenance finished?	Check radio system.	—
11	①Check coaxial cable connector on the windshield for failed connection or corrosion. ②Replace the good radio already known. ③Replace the windshield if the reception is not improved. Is the maintenance finished?	Check radio system.	—

Downloaded from www.Manualslib.com manuals search engine

Diagnosis and Testing

Troubleshooting

2. No radio display with the parking lamp on.

Step	Operation	Yes	No
1	①Turn the ignition key to ACC position. ②Turn on the radio. ③Turn the parking lamp. ④Adjust the instrument panel lamp dimmer switch. Does the fluorescent shield display of radio operate normally?	Check harness.	Go to Step 2.
2	Test the DC dimmer signal circuit for: Open circuit High resistance Short circuit to ground Poor contact Is the fault detected and eliminated?	Go to Step 6.	Go to Step 3.
3	In the DC dimmer signal circuit, test the output DC voltage of the headlamp and instrument panel lamp dimmer switch. Does the voltage change with the rotation of instrument panel lamp dimmer switch?	Go to Step 4.	Go to Step 5.
4	Replace the radio. Is the maintenance finished?	Go to Step 6.	—
5	Replace headlamp and instrument panel lamp dimmer switch. Is the maintenance finished?	Go to Step 6.	—
6	Operate the system to check the maintenance result. Is the fault eliminated?	System is intact.	Go to Step 1.

Downloaded from www.Manualslib.com manuals search engine

Diagnosis and Testing

Troubleshooting

3. Loudspeaker failed to operate.

Step	Operation	Yes	No
1	Does every loudspeaker fail to operate?	Go to Step 6.	Go to Step 2.
2	Regulate the radio balance and find out the suspected loudspeaker. Does this loudspeaker operate normally?	Go to Step 3.	Go to Step 3.
3	①Remove the radio. ②Use an appropriate jumper to make instantaneous contact with the 1.5V battery in relevant loudspeaker circuit. Is there any bang of loudspeaker?	Go to Step 7.	Go to Step 4.
4	Test relevant loudspeaker circuit for open circuit or too high voltage. Is the fault detected and eliminated?	Go to Step 10.	Go to Step 5.
5	Check loudspeaker for poor contact. Is the fault detected and eliminated?	Go to Step 10.	Go to Step 8.
6	Test every loudspeaker circuit for short circuit to positive battery voltage or ground. Is the fault detected and eliminated?	Go to Step 10.	Go to Step 7.
7	Check radio harness connector for poor contact. Is the fault detected and eliminated?	Go to Step 10.	Go to Step 9.
8	Replace relevant loudspeaker. If the replacement finished?	Go to Step 10.	—
9	Replace the radio. Is the maintenance finished?	Go to Step 10.	—
10	Replace the failed system. Does the system return to normal?	Go to Step 1.	System is intact.

Downloaded from www.Manualslib.com manuals search engine

Removal/Installation

Removal of CD player

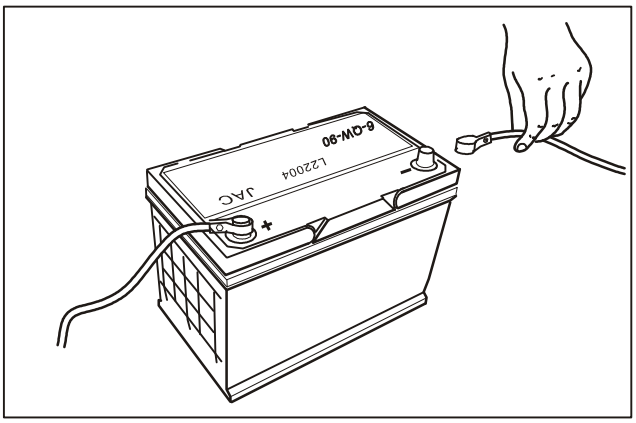

1. Disconnect the negative cable of battery.

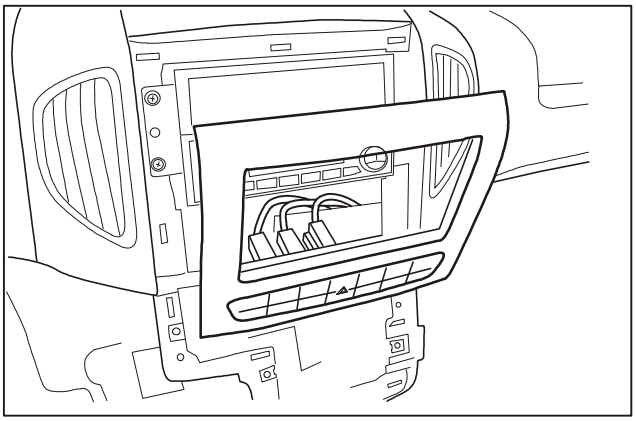

2. Remove the outer cover plate of CD player.

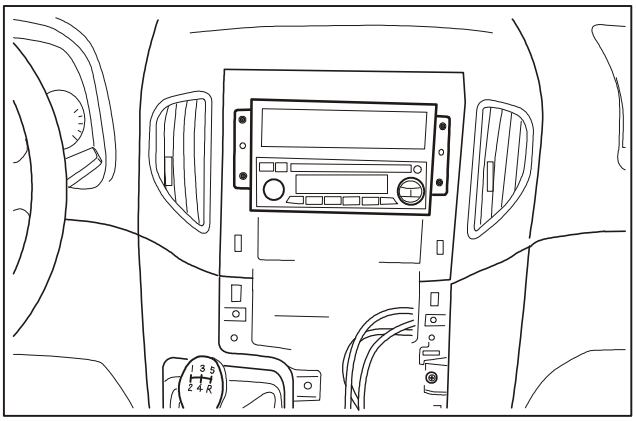

3. Unscrew the mounting bolts from CD player.

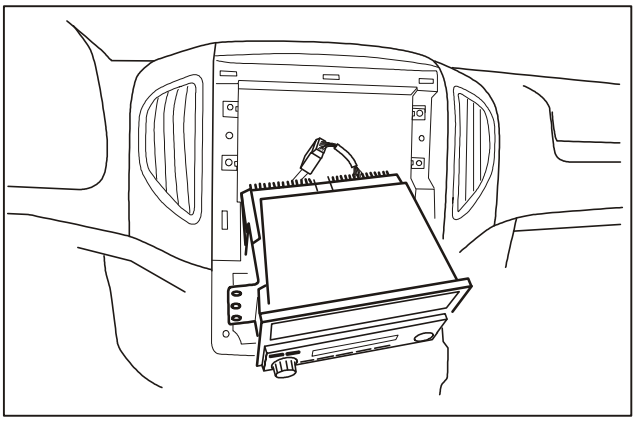

4. Disconnect the connecting wire of radio and remove the CD player.

Downloaded from www.Manualslib.com manuals search engine

Removal/Installation

Removal of loudspeakers

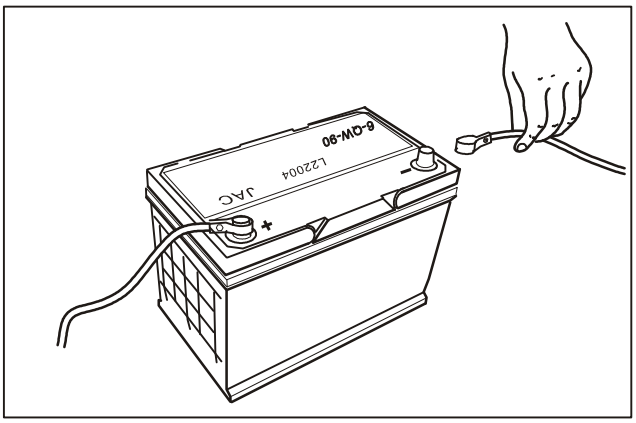

1. Disconnect the negative cable of battery.

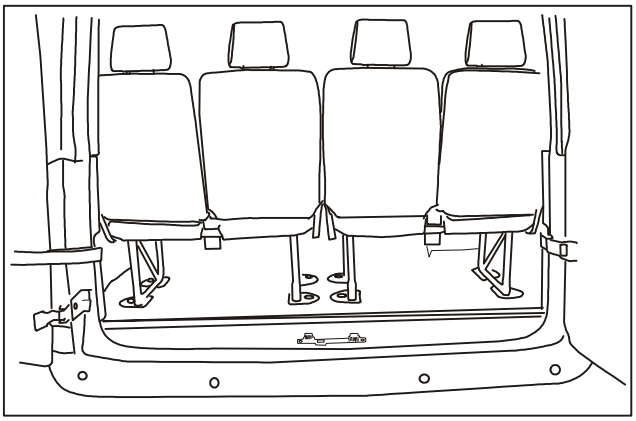

2. Remove the third and fourth rows of seat.

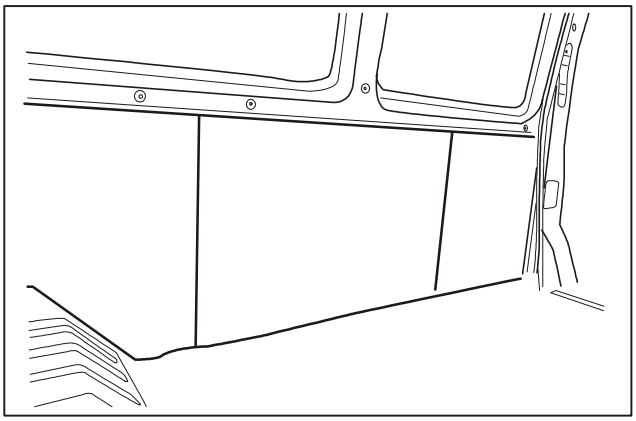

3. Remove the inner trims.

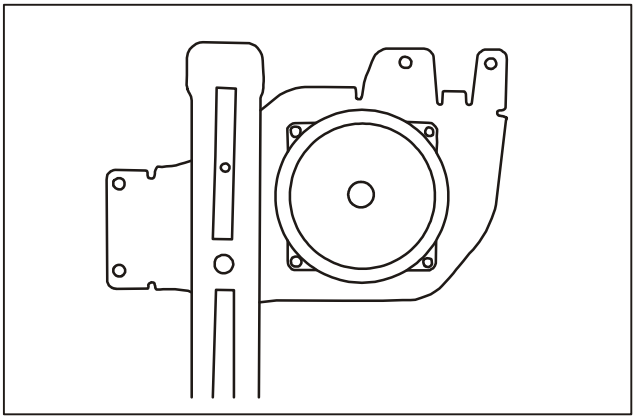

4. Remove the mounting bolts.

Downloaded from www.Manualslib.com manuals search engine

Removal/Installation

Removal of loudspeakers

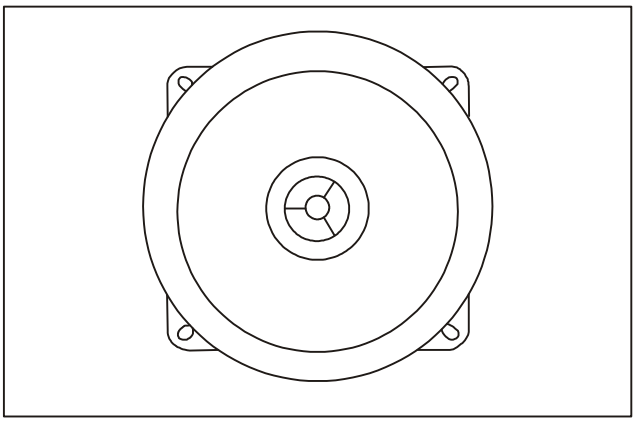

5. Disconnect the connecting harness and remove the loudspeaker.

Downloaded from www.Manualslib.com manuals search engine

Specification

Basic parameters of audio system

1. Operating condition and performance parameter:

Item	Range	Typical Value
Operating voltage	DC 10.8V ～ 16V	12V
Operating temperature	-20℃ ～ 70℃	/
Storage temperature	-40℃ ～ 80℃	/
Relative humidity	40% ～ 93%	/
Atmospheric pressure	86KPa ～ 106KPa	/

2. AM technical data:

Item	Unit	Performance Parameter
Frequency range	KHz	531 ～ 1629
Intermediate frequency	KHz	455±5
S/N sensitivity	dBuV	≤40
S/N ratio	dB	≥40
Selectivity	dBuV	≥40
Intermediate frequency rejection ratio	dBuV	≥50
Image rejection ratio	dBuV	≥60
Automatic gain control	dBuV	≥40
Maximum output power	W	≥10
Distortion	%	≤3

3. FM technical data:

Item	Unit	Performance Parameter
Frequency range	MHz	87.5 ～ 108
Intermediate frequency	MHz	10.7 ± 0.3
S/N sensitivity	dBuV	≤12
-3dB amplitude limiting	dBuV	≤10
S/N ratio	dBuV	≥50
Intermediate frequency rejection ratio	dBuV	≥65
Image rejection ratio	dBuV	≥50
AM rejection ratio	dBuV	≥35
Selectivity	dB	≥20
Search sensitivity	dBuV	14 ～ 24
Channel separation L/R	dB	≥25
Distortion	%	≤2
Overload distortion	%	≤5
Maximum output power	W	≥15W
Stereo S/N ratio	dB	≥46

Downloaded from www.Manualslib.com manuals search engine

4. Technical data for USB-MP3 play:

Item	Unit	Performance Parameter
Frequency response	dB	100Hz/100KHz ±3dB
Standard distortion	/	≤3%
S/N ratio	dB	≥50
Channel separation	dB	≥45
Maximum output power	W	≥10

5. Technical data for CD play:

Item	Unit	Test Condition	Performance Parameter
S/N ratio	dB	0dB Track	≥60
Channel separation	dB	20Hz	≥45
	dB	1KHz	≥50
	dB	10KHz	≥45
Distortion	%	1KHz	≤0.35
	%	10KHz	≤0.5
Frequency response	dB	20Hz	0± 3
	dB	20KHz	0± 3
Maximum output power	W	1KHz	≥15
CD read time	S	TCD-784	≤10
CD quit time	S	TCD-784	≤8
Time to next track	S	TCD-784	≤3
Time between first and last track	S	TCD-784	≤5
Pause and play time	S	TCD-784	≤6
Error correction during reading core shift CD	um	TCD-712R	≥140
Error correction during reading plane polarized CD	mm	TCD-731RA	≥0.6
Breakpoint/macula during reading error correction CD	mm	TCD-725B	≥0.7 / ≥0.6
Fingerprint during reading error correction CD	um	TCD-725B	≥65

6. Technical data for loudspeakers:

Item	Unit	Performance Parameter
Rated impedance	Ω	4Ω± 0.6
Rated power	W	20W
Maximum rated power	W	30W
Rated resonance frequency	HZ	80HZ±20
Rated frequency range	HZ	f0-8KHZ
Rated characteristic sensitivity	dB	87±3
Low temperature resistance	℃	-40℃
High temperature resistance	℃	85℃

Downloaded from www.Manualslib.com manuals search engine

Seat Belt

Applied models: SUNRAY products manufactured by JAC

Subject Page

Instruction and Operation

Seat Belt..... 130
Overview..... 130

Diagnosis and Testing

Seat Belt..... 131
Troubleshooting..... 131

Removal/Installation

Seat Belt..... 132
Removal of seat belt..... 132
Removal of seat belt buckle lock..... 134

Downloaded from www.Manualslib.com manuals search engine

Instruction and Operation

Seat Belt

The seat belts are assembled on each seats for Sunray. The seat belt is designed to limit the movement of passengers and protect the passengers when a collision occurs to the vehicle.

Seat Belt

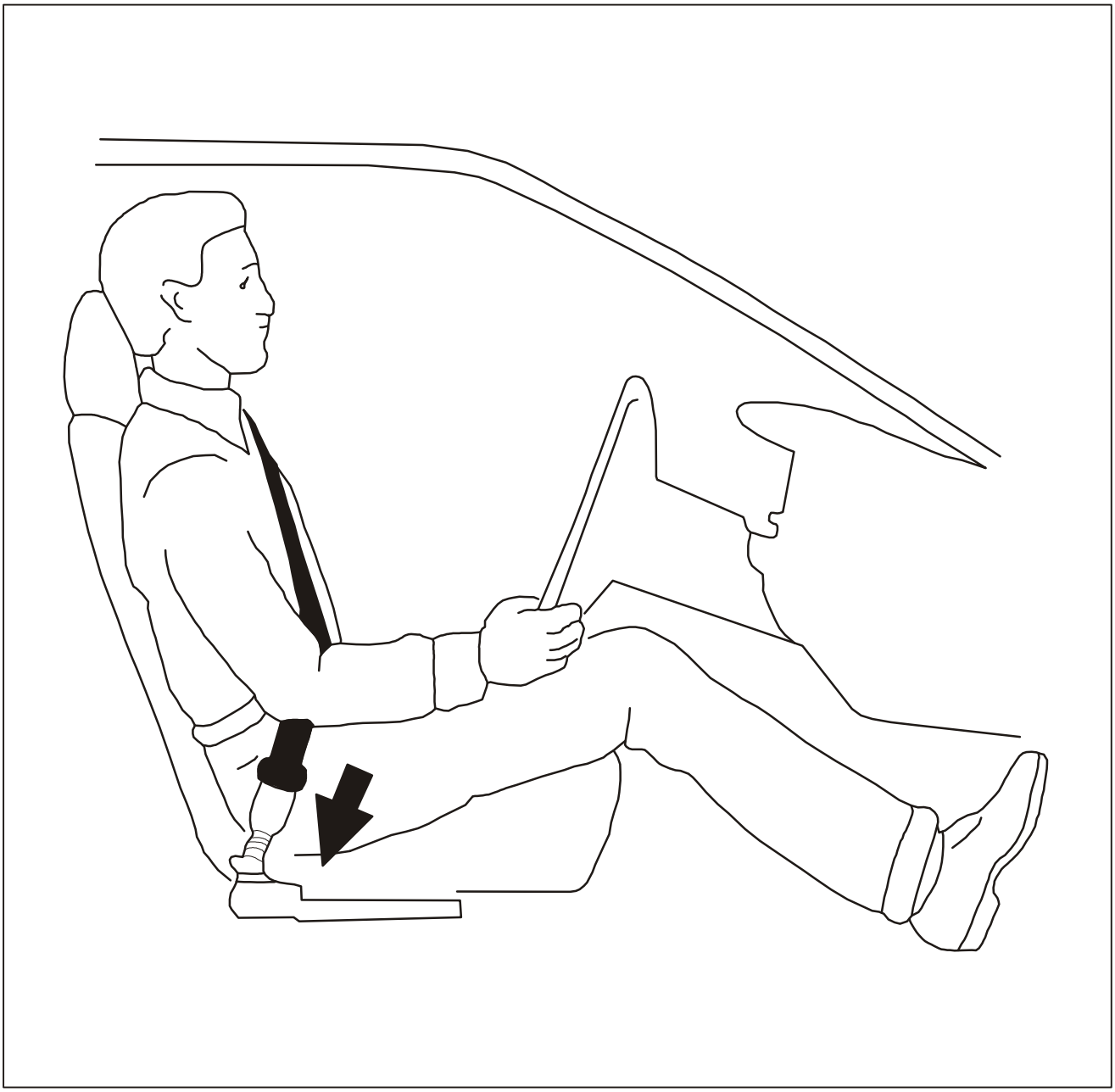

Downloaded from www.Manualslib.com manuals search engine

Diagnosis and Testing

Troubleshooting

Fault of driver's seat belt indicator lamp circuit

Step	Operation	Yes	No
1	①Turn the ignition switch on and the engine switch is off. Important precautions: When the driver's seat belt is not fastened, the seat belt indicator lamp should illuminate. ②Fasten, unfasten the driver's seat belt and check the seat belt indicator lamp in instrument panel combination instrument. When unfasten and fasten the driver's seat belt, do the corresponding seat belt indicator lamps illuminate and extinguish?	—	Go to Step 2
3	Replace the instrument panel combination instrument. Has the replacement operation been completed?	Go to Step 6	—
3	①Turn the ignition switch off. ②Disconnect the connector of left seat belt switch. ③Test if the signal circuit of left seat belt switch is open or high-impedance. Has the condition been found and corrected?	Go to Step 6	Go to Step 4
4	Test if ground circuit of left seat belt switch is open or high-impedance. Has the problem been found and resolved?	Go to Step 6	Go to Step 5
5	Replace the left seat belt switch. Has the replacement operation been completed?	Go to Step 6	—
6	Operate the system to check the maintenance effect. Has the problem been found and resolved?	The system is normal	Go to Step 2

Downloaded from www.Manualslib.com manuals search engine

Removal/Installation

Removal of seat belt

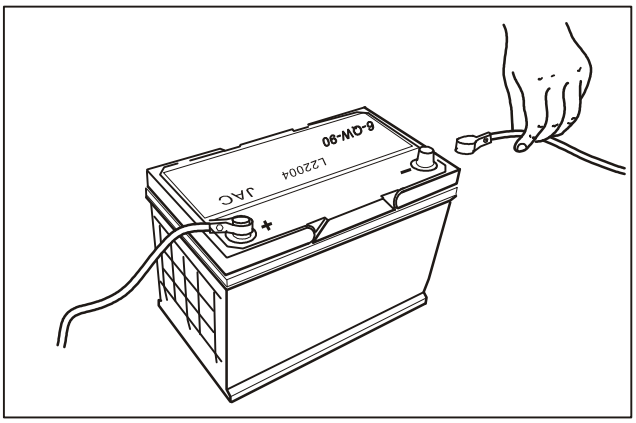

1. Disconnect the connecting wire of battery.

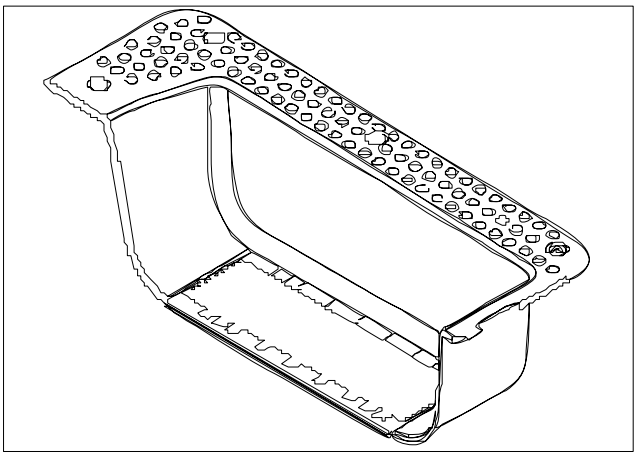

2. Remove the left front door stepping shield.

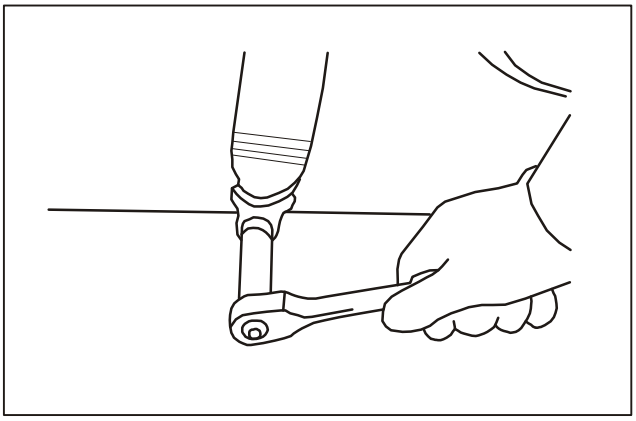

3. Remove the bottom mounting bolts of seat belts.

Downloaded from www.Manualslib.com manuals search engine

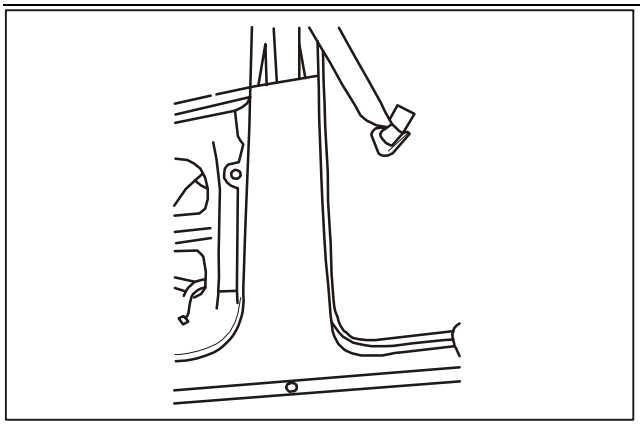

4. Remove the B pillar inner trim panel.

Downloaded from www.Manualslib.com manuals search engine

Removal/Installation

Removal of seat belt

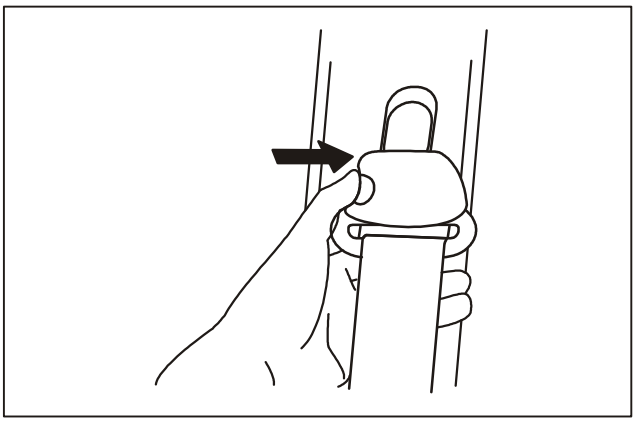

5. Remove the covers of top mounting bolts.

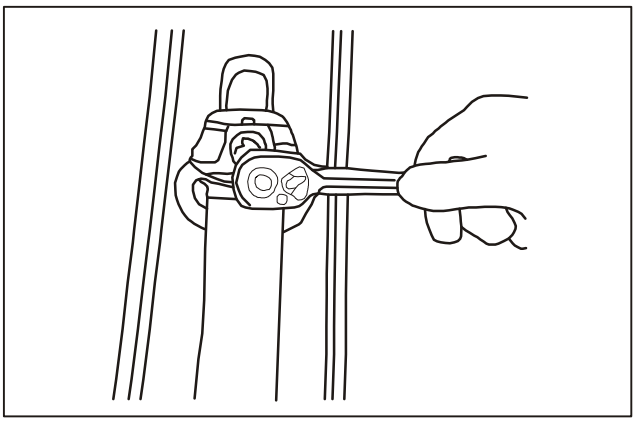

6. Remove the top mounting bolts.

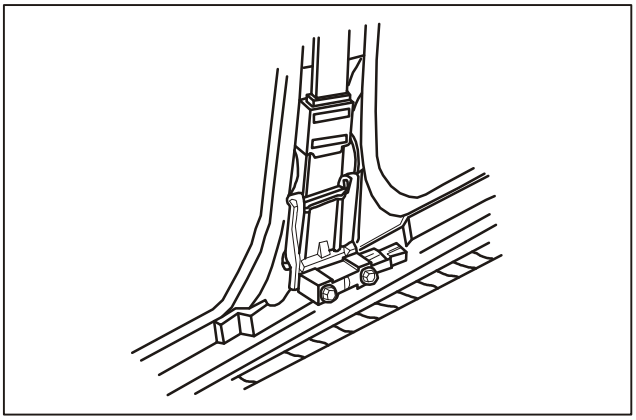

7. Remove the bottom mounting bolts.

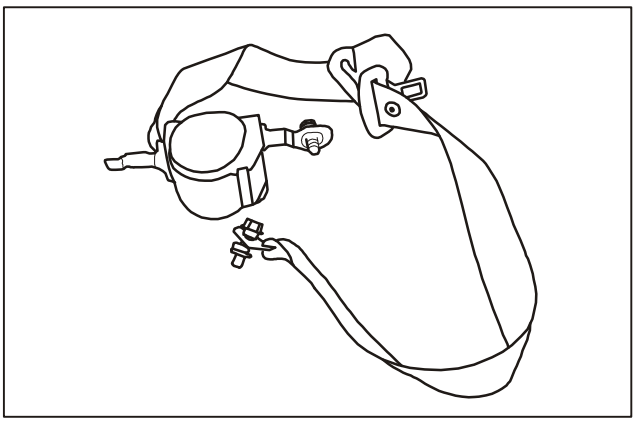

8. Remove the seat belt.

Downloaded from www.Manualslib.com manuals search engine

Removal/Installation

Removal of seat belt buckle lock

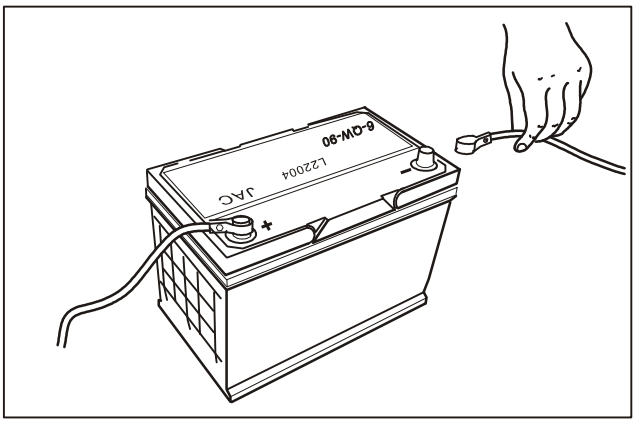

1. Disconnect the connecting wire of battery.

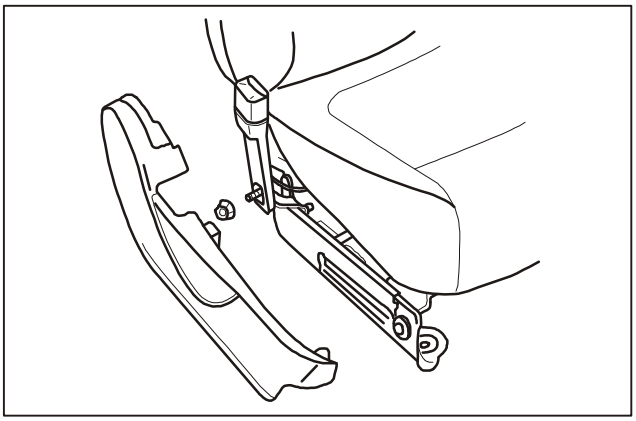

2. Remove the front seat inner lateral panel assembly.

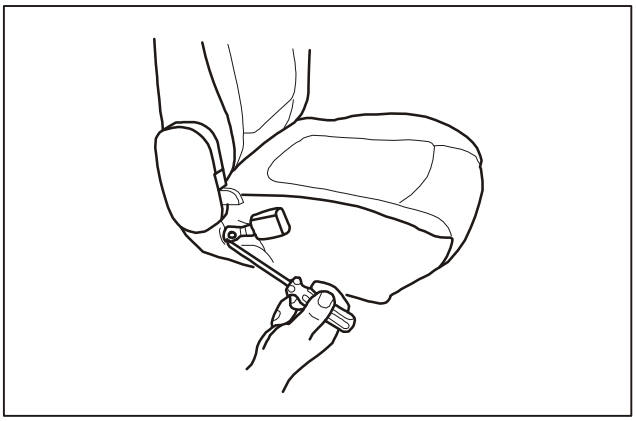

3. Remove the nuts of lower fastening buckle lock from cushion frame.

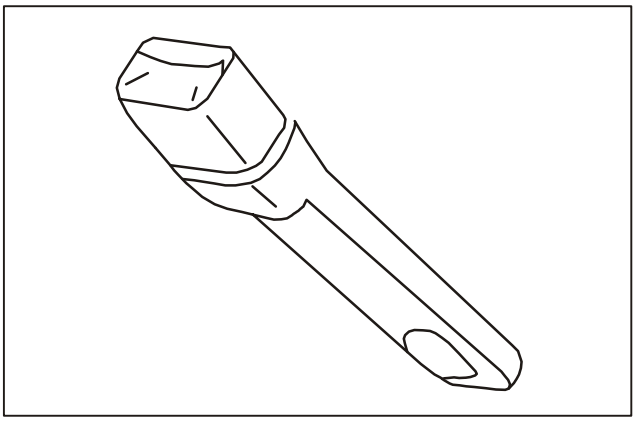

4. Remove the seat belt buckle locks from seats.

Downloaded from www.Manualslib.com manuals search engine

Power Window

Applied models: SUNRAY products manufactured by JAC

Subject Page

Instruction and Operation

Power Window....136
Installation position....136
Operation Instructions....137

Diagnosis and Testing

Power Window....138
Troubleshooting....138

Removal and Installation

Power Window....142
Removal of window regulator motor....142
Removal of window regulator switch....143

Downloaded from www.Manualslib.com manuals search engine

Instruction and Operation

Power Window

Both front door windows for Sunray adopt electric up/down operation. Power window system can lift or lower windows electrically by turning on the switches on each door trims. The main switch on front door trim at the driver's side enables the driver to lift or lower windows at the passenger's side. Power window system includes power window switches on each door trims, body control module and power window motors inside each doors. Window glass regulator assembly is used instead of window motor. If the window motor is required to be replaced, the window glass regulator must be replaced.

Installation position of power window:

Inside the left/right front doors.

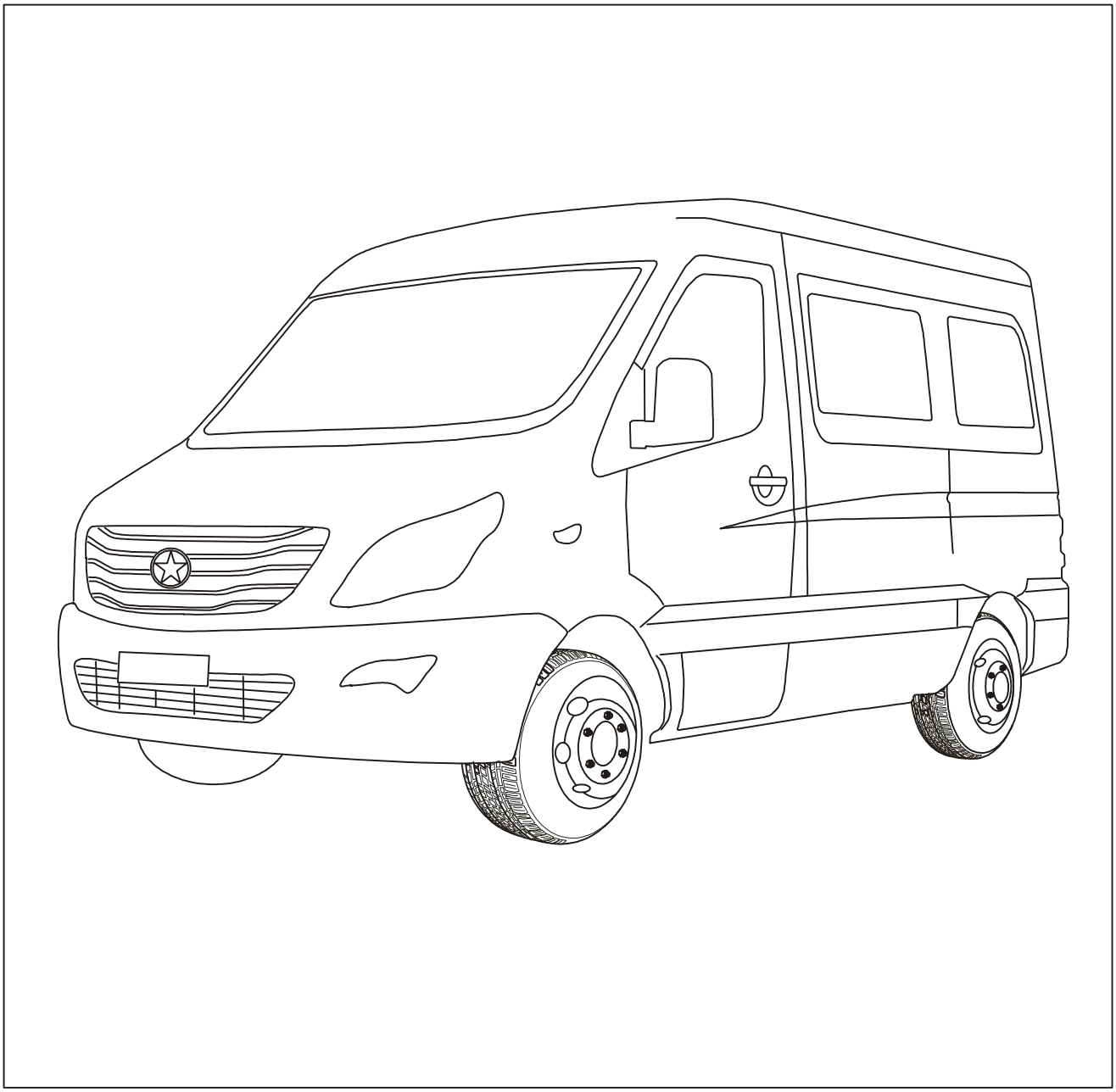

Downloaded from www.Manualslib.com manuals search engine

Instruction and operation

Instructions for power window function

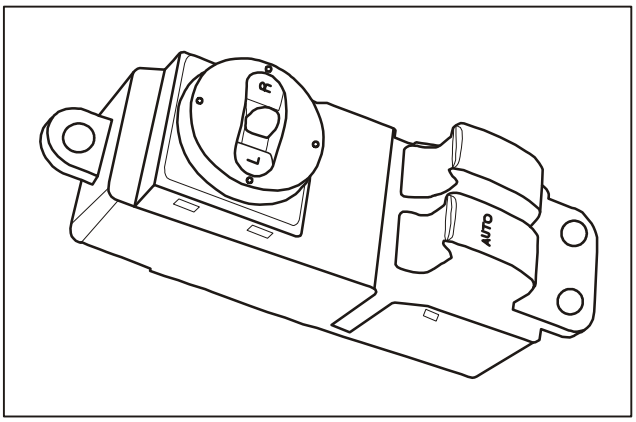

1. Power window switch.
   Power window is controlled by 2 window switches on front door trims. The window switch at the driver's side enables the driver to control windows at the passenger's side.

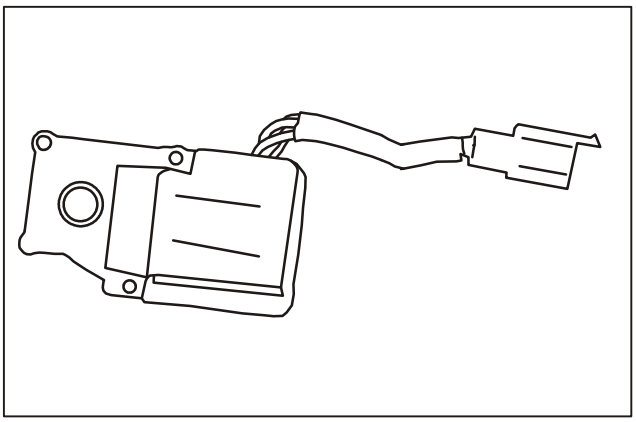

2. Power window motor.
   Permanent-magnetic reversible motor enables window regulator upper window bracket to move by the rope wheel mechanism. Connect the battery positive and negative to both terminals of motor and enable the motor to rotate towards one direction. The reverse current flowing to the 2 same connections enables the motor to rotate in reverse.

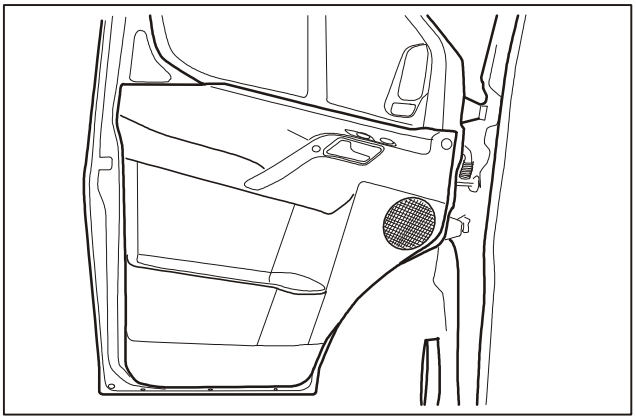

3. Operation mode.
   Operation mode of power window includes：
   Manual up;
   Manual down;
   Auto down (only driver side door)

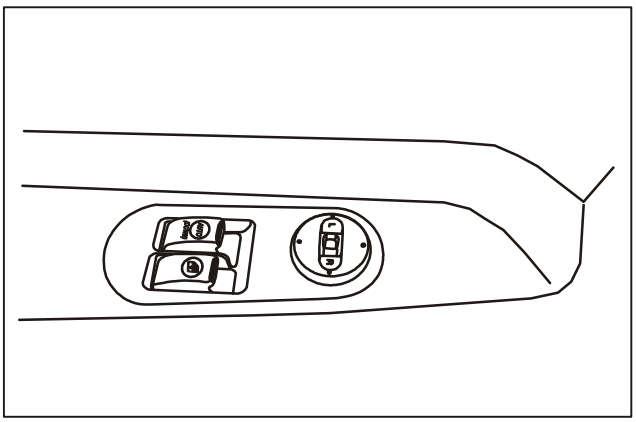

4. After the ignition switch off, the power window can still be operated, and cannot be operated when the following situation occurs:
   - Time for ignition switch off is more than 30 seconds.
   - Any door is opened.
   - Lock the doors from outside.

Downloaded from www.Manualslib.com manuals search engine

Diagnosis and Testing

Troubleshooting

1. All the door power windows cannot operate.

Step	Operation Method	Yes	No
1	Check if F31 50A fuse of engine compartment fuse block, F29 15A fuse, F7 10A fuse, F12 10A fuse of meter fuse block are disconnected.	Go to Step 8	Go to Step 2
2	Check if the power supply for ETACS is normal ①Turn the ignition switch off and the voltage between Terminal 10 of ETACS connector M36 and ground is the battery voltage. ②Turn the ignition switch on and the voltage between Terminal 18, Terminal 9 of ETACS connector M37 and ground is the battery voltage.	Go to Step 3	Go to Step 9
3	Check if the ground for ETACS is normal Turn the ignition switch off and disconnect the ETACS connector. Terminal 19 of connector M36 and ground are conductive.	Go to Step 4	Go to Step 10
4	Check if the operation of power window relay is normal. ①Terminal 2 and 4 of relay are constant power supply. ②After the ignition switch is turned on, the voltage for Terminal 1 of relay is the battery voltage.	Go to Step 7	Go to Step 5
5	Turn the ignition switch on and check if Terminal 3 of power window relay grounds.	Go to Step 11	Go to Step 6
6	Check if the harnesses of ETACS and power window relay are conductive. Terminal 15 of ETACS connector M36 should be conductive with Terminal 3 of relay.	Go to Step 13	Go to Step 14
7	Check if the power supply and ground wire for left front door power window switch are normal ①Turn the ignition switch on and the battery voltage exists between Terminal 11 of left front door power window switch connector D04 and ground. ②Terminal 10 of left front door power window switch connector D04 and ground are conductive.	Go to Step 12	Go to Step 15
8	After servicing the fault due to circuit, replace the fuse. Is the fault eliminated?		Go to Step 2
9	Repair the open or short power supply circuit for ETACS. Is the fault eliminated?		Go to Step 3
10	Check if the ground circuit for ETACS is open.		Go to Step 4
11	Repair the circuit fault and replace the power window relay. Is the fault eliminated?		Go to Step 7
12	Replace the left front door power window switch.		
13	Replace the ETACS.		Go to Step 7
14	Repair the connecting circuit between ETACS and power window. Is the fault eliminated?		Go to Step 13
15	Repair the harnesses of left front door power window switch. Is the fault eliminated?		Go to Step 12

Downloaded from www.Manualslib.com manuals search engine

Diagnosis and Testing

Troubleshooting

2. The left front door power window cannot operate.

Step	Operation Method	Yes	No
1	Check if the output signal from power window main switch is normal Disconnect the left front door power window motor connector and turn the ignition switch on. When the power window main switch goes up, the voltage between Terminal 2 of left front door power window motor connector D08 and ground is the battery voltage, the voltage between Terminal 1 and ground is 0 V, and it is reverse when going down.	Go to Step 2	Go to Step 3
2	Replace the left front door power window motor.		
3	Check if the harness connection between left front door power window switch and motor is normal.	Go to Step 2	Go to Step 4
4	Repair the harness connector between left front door power window switch and motor. Is the fault eliminated?		Go to Step 2

Downloaded from www.Manualslib.com manuals search engine

Diagnosis and Testing

Troubleshooting

3. The right front door power window cannot operate.

Step	Operation Method	Yes	No
1	Check if the output signal from power window main switch is normal Disconnect the right front door power window motor connector and turn the ignition switch on. When the right front door power window main switch goes up, the voltage between Terminal 1 of right front door power window motor connector D15 and ground is the battery voltage, the voltage of Terminal 2 is 0 V, and it is reverse when going down.	Go to Step 2	Go to Step 3
2	Replace the right front door power window motor.		
3	Check if the conductivity of right front door power window switch is normal Disconnect the right front door power window switch connector D12 and check the conductivity between Terminal 4, 6, 8 and Terminal 1, 3. Terminal 1 and 6, Terminal 2 and 8 are conductive when going up. Terminal 3 and 6, Terminal 1 and 4 are conductive when going down. Terminal 3 and 8, Terminal 1 and 4 are conductive when no operation.	Go to Step 5	Go to Step 4
4	Replace the right front door power window switch.		
5	Check if the harnesses of right front door power window switch and right front door power window motor are conductive. Terminal 3 and 1 of right front door power window switch connector D12 are respectively conductive with Terminal 2 and 1 of right front door power window motor connector D15.	Go to Step 7	Go to Step 6
6	Repair or replace the harnesses of right front door power window switch and right front door power window motor. Is the fault eliminated?		Go to Step 7
7	Check if the power supply for replacing right front door power window switch is normal Turn the ignition switch on and the voltage between Terminal 6 of right front door power window switch connector D12 and ground is the battery voltage.	Go to Step 4	Go to Step 8
8	Check if Terminal 1 of the left front door power window switch connector D04 and Terminal 6 of right front door power window connector D12 are conductive.	Go to Step 10	Go to Step 9
9	Repair or replace the connecting wire of left front door power window switch connector and right front door power window switch connector. Is the fault eliminated?		Go to Step 10
10	Replace the left front door power window switch.		

Downloaded from www.Manualslib.com manuals search engine

Diagnosis and Testing

Troubleshooting

4. The auto down function for left front door power window fails.

Step	Operation Method	Yes	No
1	The normal replacement and check operation for left front door power window switch. Does the auto down function operate?	Go to Step 2	
2	Replace the left front door power window switch.		

Downloaded from www.Manualslib.com manuals search engine

Removal/Installation

Removal of window regulator motor

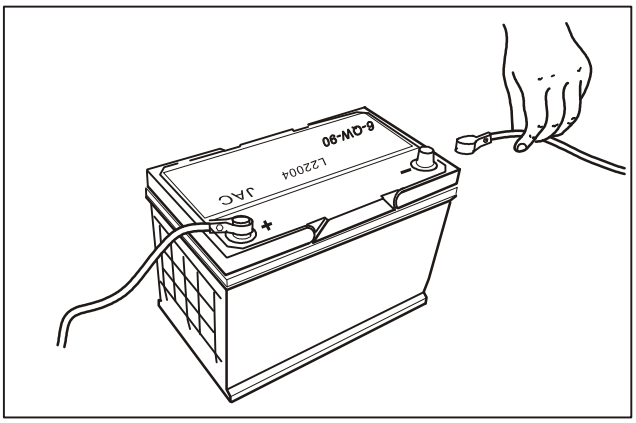

1. Disconnect the connecting wire of battery.

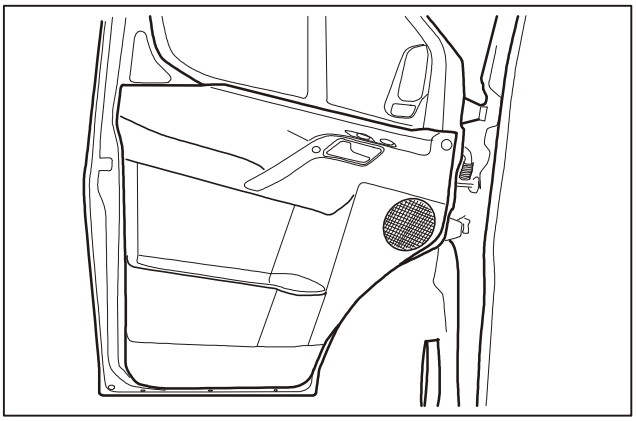

2. Remove the left front door inner trim.

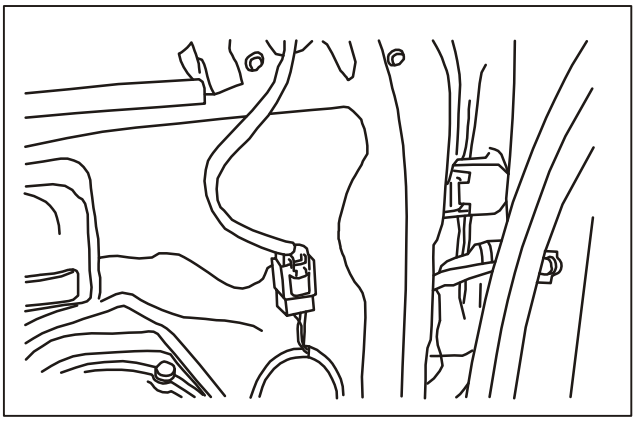

3. Disconnect the harness connection and remove the mounting bolts of motor.

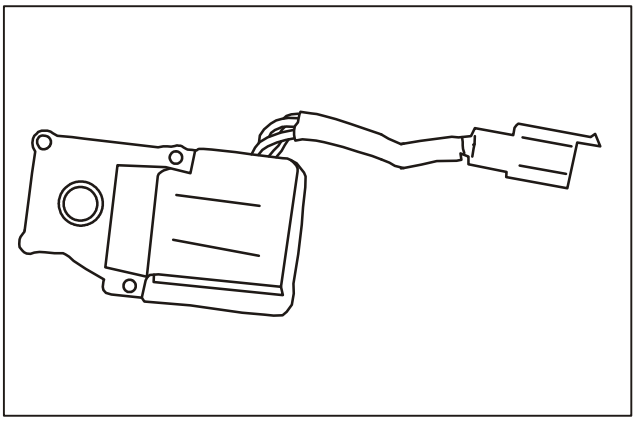

4. Remove the motor.

Downloaded from www.Manualslib.com manuals search engine

Removal/Installation

Removal of window regulator switch

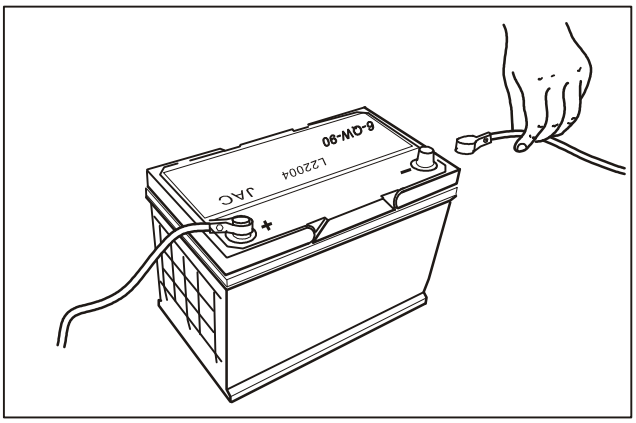

1. Disconnect the connecting wire of battery.

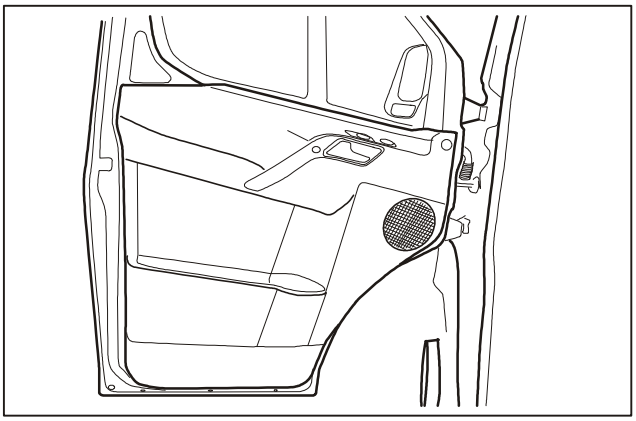

2. Remove the left front door inner trim.

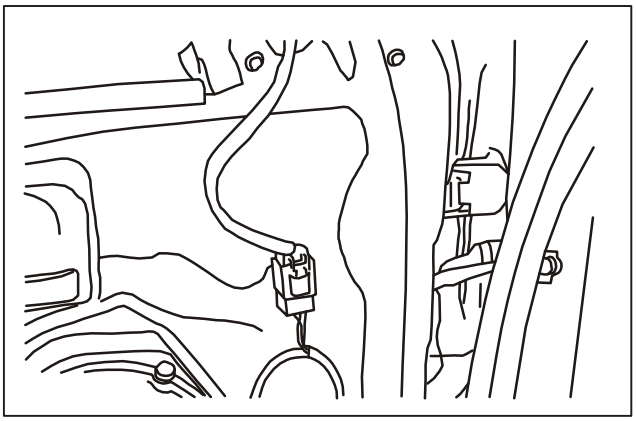

3. Disconnect the connecting wire and remove the mounting bolts of switch.

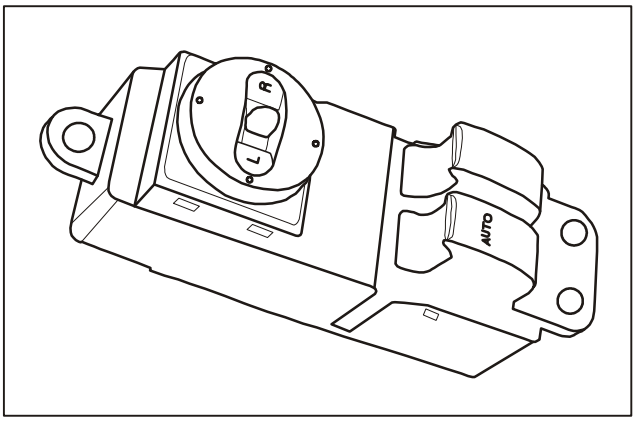

4. Remove the window switch.

Downloaded from www.Manualslib.com manuals search engine

Removal/Installation

Installation of window regulator motor

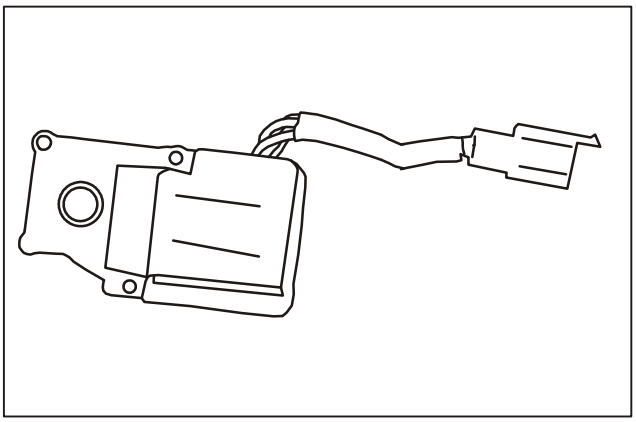

1. Install the motor.

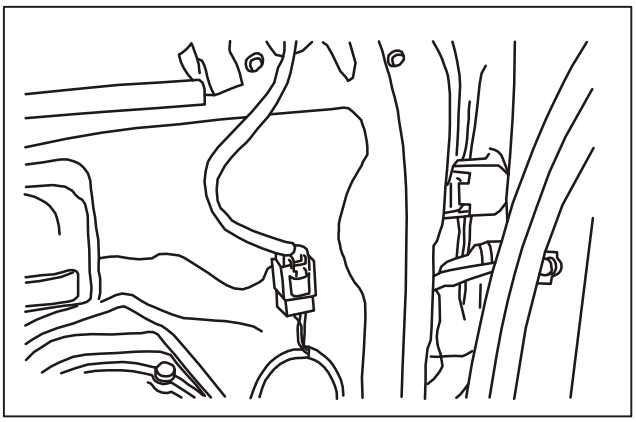

2. Connect the harness and install the mounting bolts of motor.

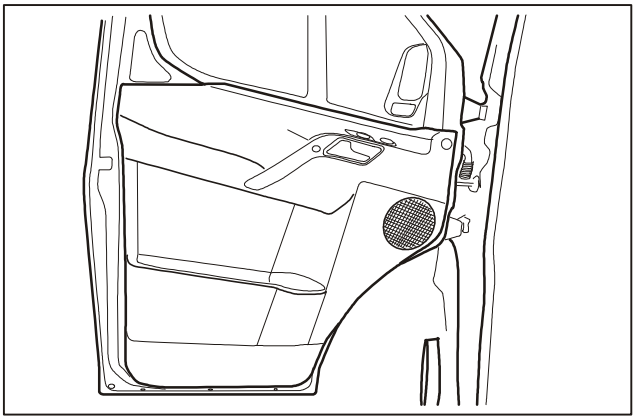

3. Install the left front door inner trim.

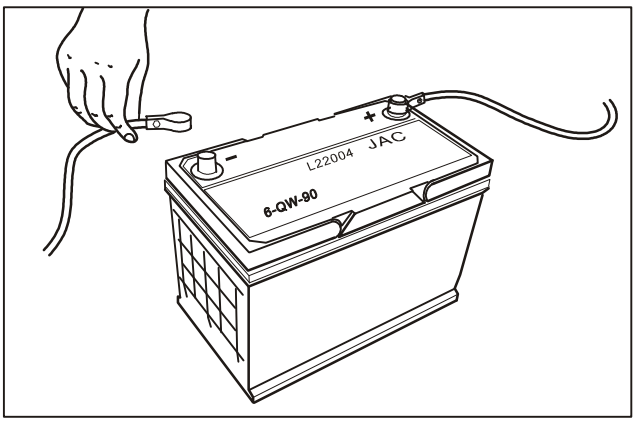

4. Install the connecting wire of battery.

Downloaded from www.Manualslib.com manuals search engine

Removal/Installation

Installation of window regulator switch

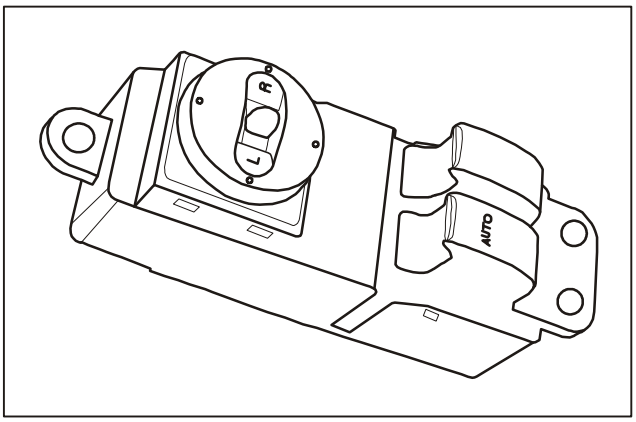

1. Install the window switch.

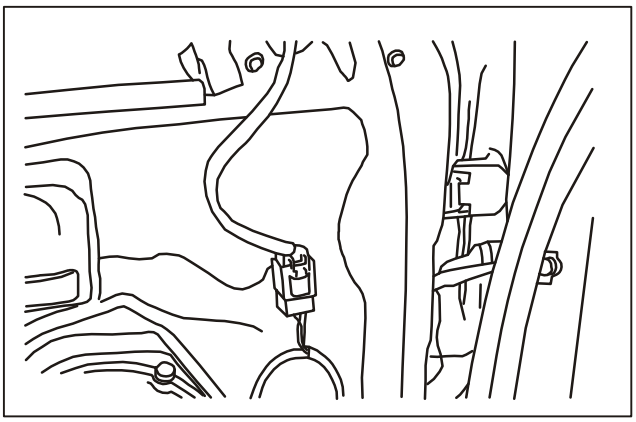

2. Connect the harness and install the mounting bolts of switch.

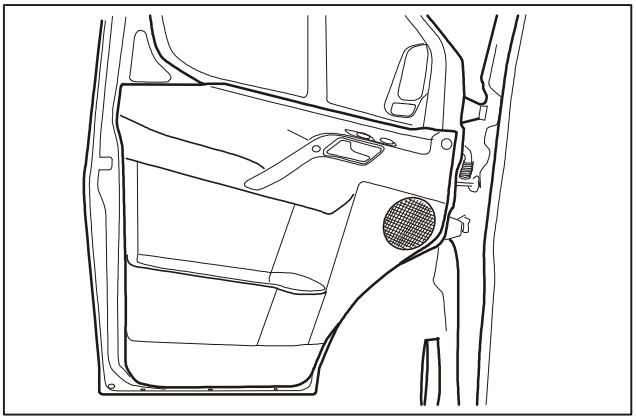

3. Install the left front door inner trim.

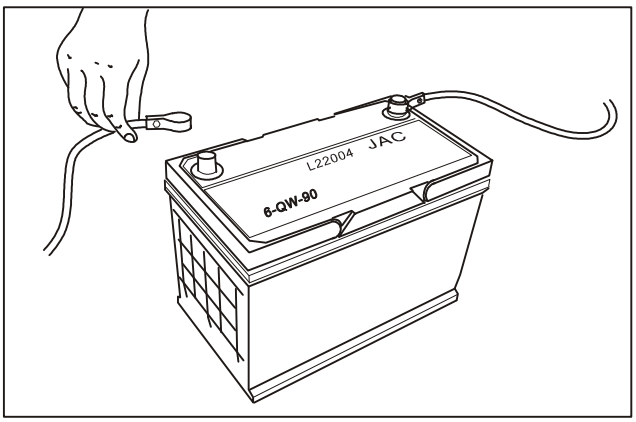

4. Install the connecting wire of battery.

Downloaded from www.Manualslib.com manuals search engine

Downloaded from www.Manualslib.com manuals search engine

Electric rear-view mirro

Applied models: SUNRAY products manufactured by JAC

Subject Page

Instruction and Operation

Electric rear-view mirro..... 148
Overview..... 148

Removal and Installation

Electric rear-view mirro..... 149
Removal of rear view mirror..... 149
Removal of rear view mirror switch..... 150

Downloaded from www.Manualslib.com manuals search engine

Instruction and Operation

Rear view mirror

Sunray rear view mirrors is devided into interior rear view mirror and exterior interior rear view mirror. The exterior rear view mirrors are fixed on the top of front windshield and at left and right outboard sides of vehicle body for observation of conditions inside and behind the vehicle.

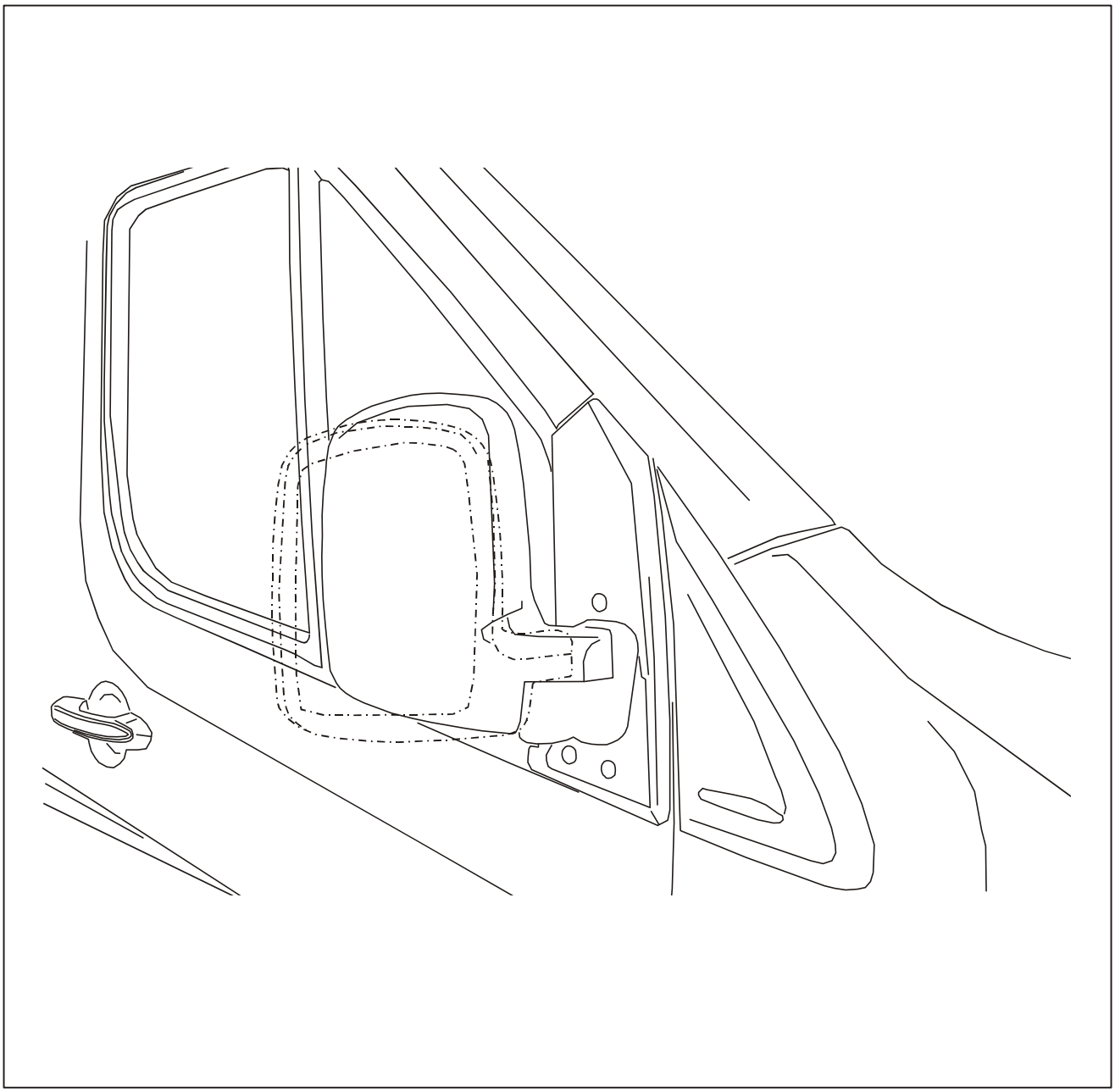

Downloaded from www.Manualslib.com manuals search engine

Removal and Installation

Removal of rear view mirror

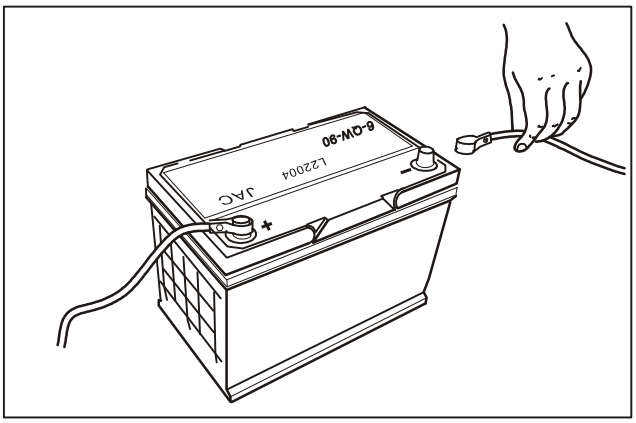

1. Disconnect the connecting wire of battery.

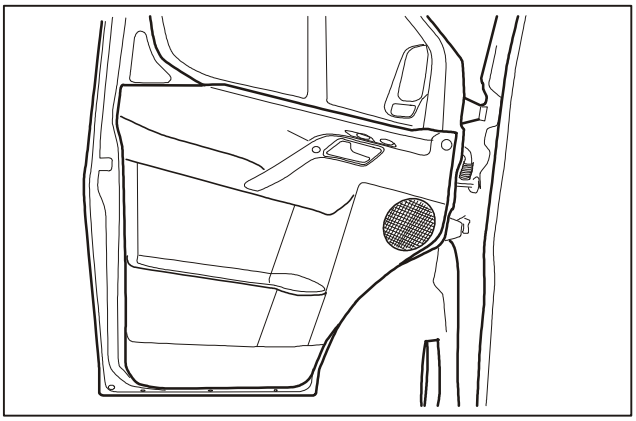

2. Remove the interior trim panel of the left front door.

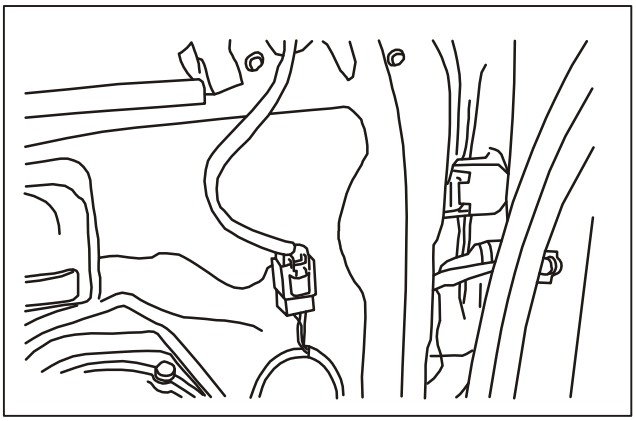

3. Disconnect the connector plug of the rear view mirror.

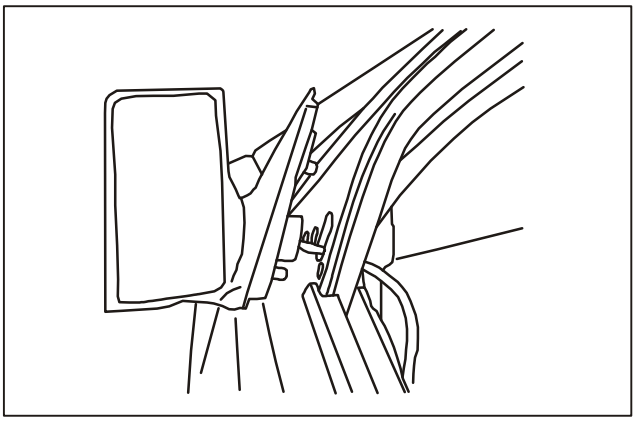

4. Remove mounting bolts of the rear view mirror and take down the rear view mirror.

Downloaded from www.Manualslib.com manuals search engine

Removal and Installation

Removal of rear view mirror switch

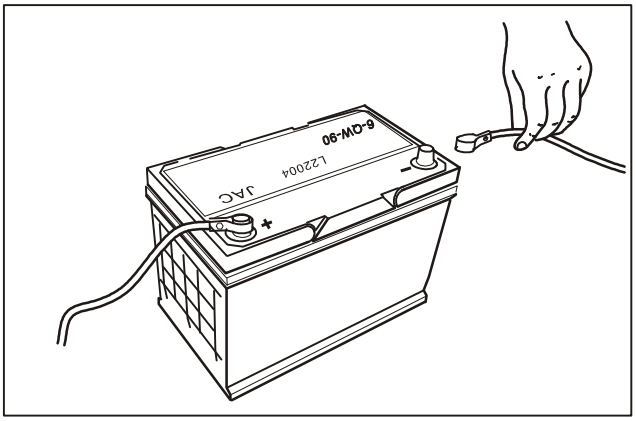

1. Disconnect the connecting wire of battery.

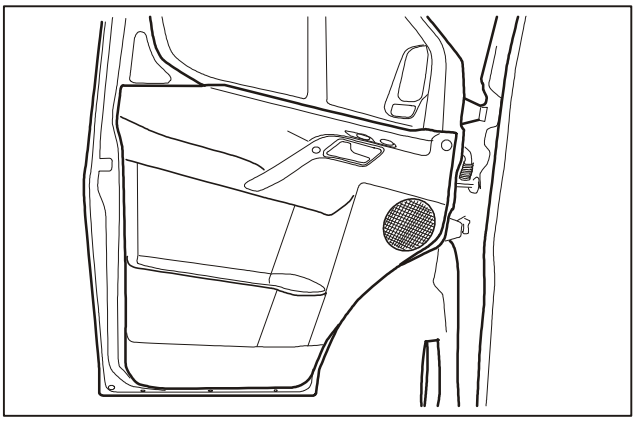

2. Remove the interior trim panel of the left front door.

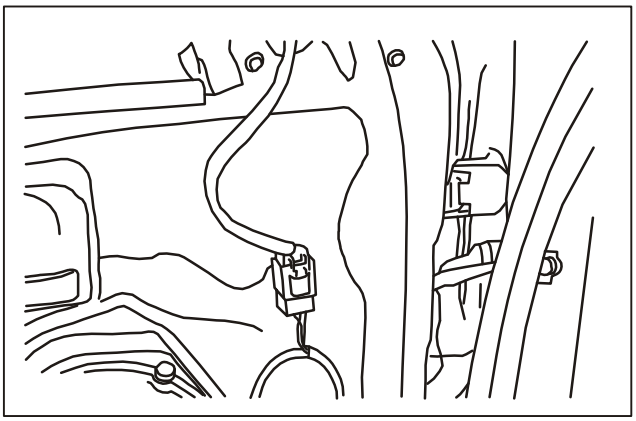

3. Disconnect the connector plug of the switch.

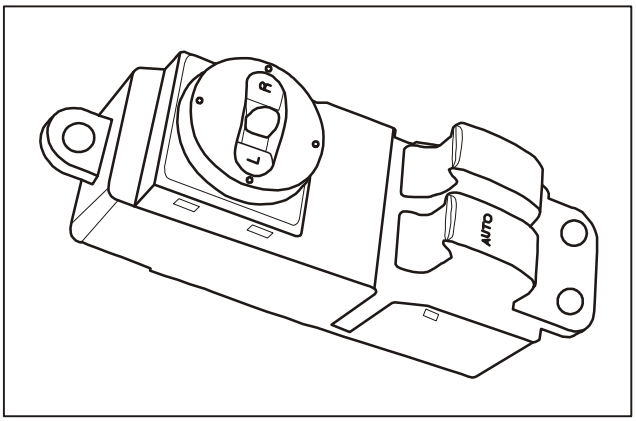

4. Remove mounting bolts and take down the switch.

Downloaded from www.Manualslib.com manuals search engine

Horn

Applied models: SUNRAY products manufactured by JAC

Subject Page

Instruction and Operation

Horn..... 152
Mounting position.....152

Diagnosis and Testing

Horn..... 153
Troubleshooting.....153

Removal/Installation

Horn..... 156
Removal of Horn..... 156

Downloaded from www.Manualslib.com manuals search engine

Instruction and Operation

Mounting position of horn

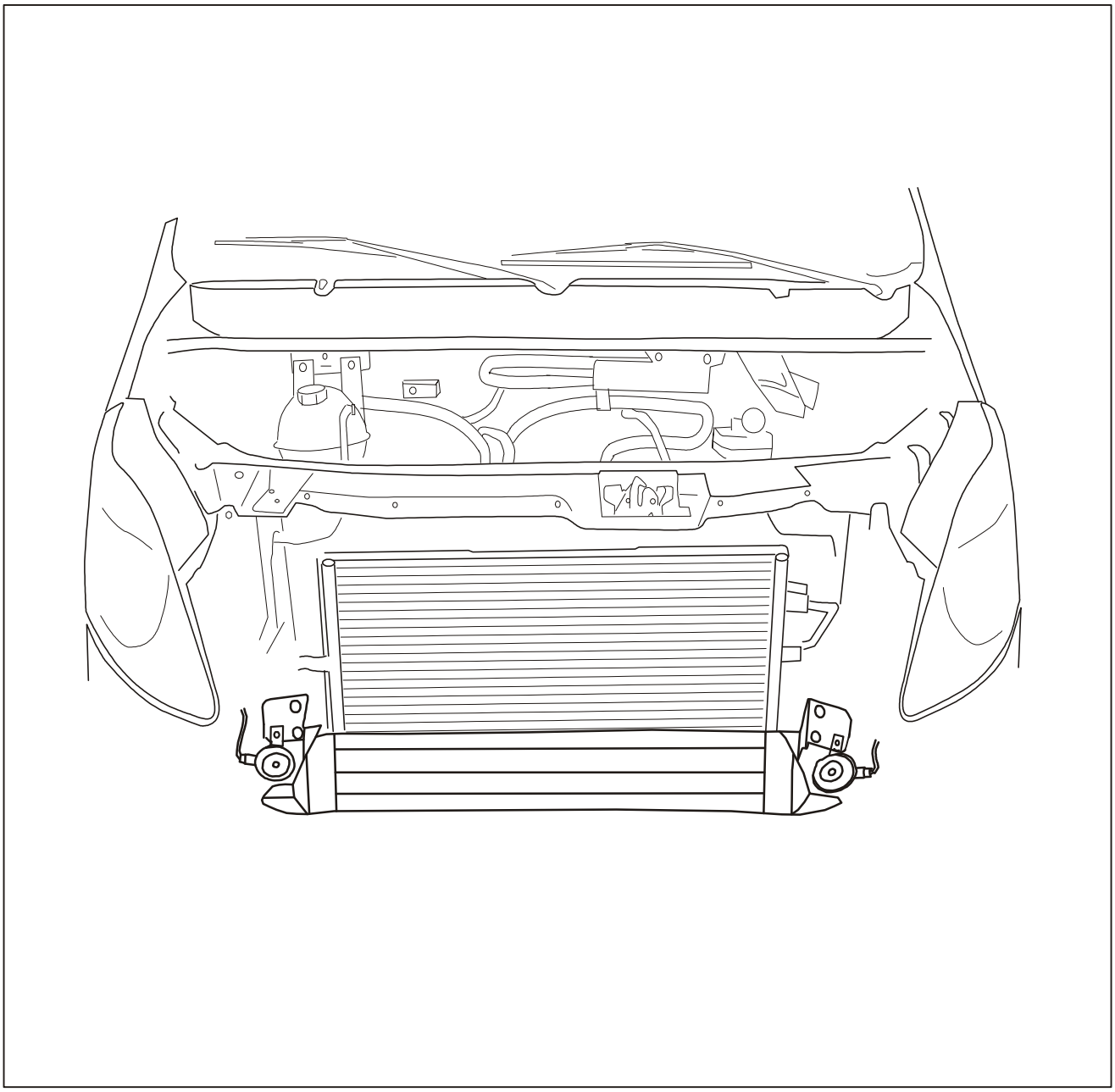

Downloaded from www.Manualslib.com manuals search engine

Diagnosis and Testing

Troubleshooting

1. Horn always on.

Step	Operation	Yes	No
1	Is the vehicle equipped with any anti-theft system?	Go to Step 2.	Go to Step 3.
2	Is the vehicle diagnostic system check performed?	Go to Step 4.	Check vehicle diagnostic system.
3	Is horn operation and other necessary inspection performed?	Go to Step 4.	Check horn harness.
4	Press and then release the horn botton. Is the horn always on?	Go to Step 5.	Check horn harness.
5	Is the vehicle equipped with any anti-theft system?	Go to Step 6.	Go to Step 7.
6	Disconnect the body control module. Is the horn always on?	Go to Step 7.	Go to Step 11.
7	Disconnect the horn relay. Is the horn always on?	Go to Step 10.	Go to Step 9.
8	Check horn relay for poor contact. Is any fault detected and elimilated?	Go to Step 15.	Go to Step 14.
9	Repair the horn relay control circuit that is shorted to ground. Is the maintenance finished?	Go to Step 15.	—
10	Check harness connector of body control module for poor contact. Is any fault detected and elimilated?	Go to Step 15.	Go to Step 13.
12	Repair the shorted horn control circuit. Is the maintenance finished?	Go to Step 15.	—
13	Replace the body control module. Is the replacement finished?	Go to Step 15.	—
14	Replace the horn relay. Is the replacement finished?	Go to Step 15.	—
15	Is the horn able to operate normally?	System is normal.	Go to Step 1.

Downloaded from www.Manualslib.com manuals search engine

Diagnosis and Testing

Troubleshooting

2. Horn failed to work.

Step	Operation	Yes	No
1	Is the vehicle equipped with any anti-theft system?	Go to Step 2.	Go to Step 3.
2	Is the vehicle diagnostic system check performed?	Go to Step 4.	Check vehicle diagnostic system.
3	Is horn operation and other necessary inspection performed?	Go to Step 4.	Check horn harness.
4	Press and then release the horn botton. Is the horn always on?	Check horn harness.	Go to Step 5.
5	1. Disconnect the horn relay. 2. Connect a test lamp between the positive battery voltage circuit of horn relay coil and a sound ground. Is the test lamp lit?	Go to Step 6.	Go to Step 13.
6	1. Connect a test lamp between the positive battery voltage circuit of horn relay coil and the horn relay control circuit. 2. Press the horn button and hold it. Is the test lamp lit?	Go to Step 7.	Go to Step 14.
7	Connect a test lamp between the positive battery voltage circuit of horn relay button and a sound ground. Is the test lamp lit?	Go to Step 8.	Go to Step 15.
8	Connect a jumper with a 15A fuse between the positive battery voltage circuit of horn relay button and the horn control circuit. Does the horn ring?	Go to Step 11.	Go to Step 9.
9	1. Reconnect the horn relay. 2. Disconnect the horn connector. 3. Connect a test lamp between the horn control circuit and a sound ground. 4. Press the horn button and hold it. Is the test lamp lit?	Go to Step 10.	Go to Step 16.
10	1. Connect a test lamp between the horn control circuit and the horn ground circuit. 2. Press the horn button and hold it. Is the test lamp lit?	Go to Step 12.	Go to Step 17.
12	Perform troubleshooting for the high impedence in the horn control circuit or horn ground circuit. Is the maintenance finished?	Go to Step 19.	—
13	Perform troubleshooting for the open circuit or high impedence in the positive battery voltage circuit of horn relay coil. Is the maintenance finished?	Go to Step 19.	—
14	Perform troubleshooting for the open circuit in horn relay control circuit or shorted positive battery circuit. Horn relay control circuit is composed of horn slip ring and horn button. Is the maintenance finished?	Go to Step 19.	—
15	Perform troubleshooting for the open circuit or high impedence in the positive battery voltage circuit of horn relay button. Is the maintenance finished?	Go to Step 19.	—
16	Perform troubleshooting for the open circuit or high impedence in the horn control circuit. Is the maintenance finished?	Go to Step 19.	—
17	Perform troubleshooting for the open circuit or high impedence in the horn ground circuit. Is the maintenance finished?	Go to Step 19.	—
18	Replace the horn relay. Is the replacement finished?	Go to Step 19.	—
19	Operate the horn. Is the horn able to operate normally?	System is normal.	Go to Step 1

Downloaded from www.Manualslib.com manuals search engine

Diagnosis and Testing

Troubleshooting

3. Inferior tone quality of horn.

Step	Operation	Yes	No
1	Is the vehicle equipped with any anti-theft system?	Go to Step 2.	Go to Step 3.
2	Is the vehicle diagnostic system check performed?	Go to Step 4.	Check vehicle diagnostic system.
3	Is horn operation and other necessary inspection performed?	Go to Step 2.	Check horn harness.
4	Press the horn button. Is there any screak or buzz?	Go to Step 5.	Check horn harness.
5	1. Check the horn for proper mounting torque. 2. Check if there is any fragment at the connecting part between horn and vehicle. Is any fault detected and elimilated?	Go to Step 9.	Go to Step 6.
6	Perform procedures below for each horn: 1. Disconnect the horn connector. 2. Connect a jumper with a 15A fuse between the positive battery terminal of horn and the control circuit of horn. 3. Connect aother jumper between the negative battery terminal of horn and the grounding terminal of horn. Is there any screak or buzz?	Go to Step 8.	Go to Step 7.
7	Perform troubleshooting for the high impedence in the horn control circuit or the horn ground circuit. Is the maintenance finished?	Go to Step 9.	—
8	Replace the horn. Is the replacement finished?	Go to Step 9.	—
9	Operate the horn. Is the horn able to operate normally?	System is normal.	Go to Step 1

Downloaded from www.Manualslib.com manuals search engine

Removal/Installation

Removal of horn

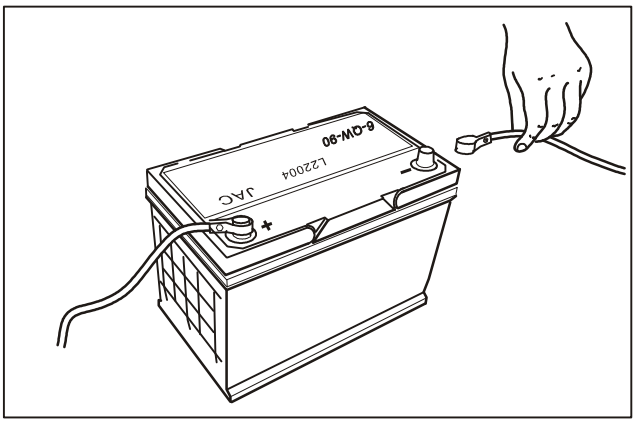

1. Disconnect the negative cable of battery.

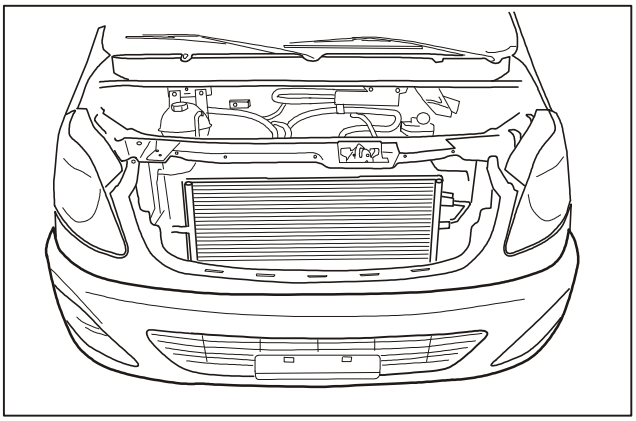

2. Remove the front bumper.

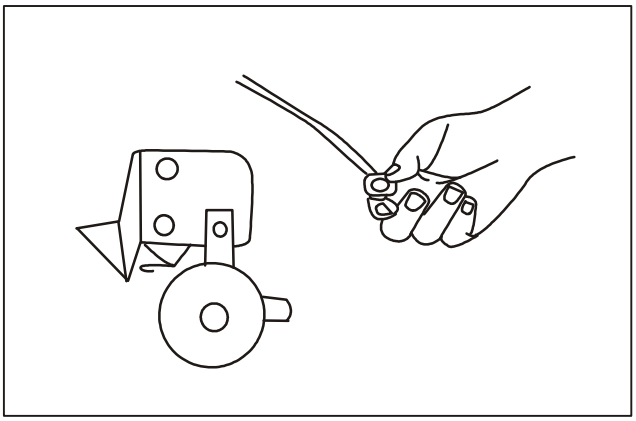

3. Remove the mounting bolt of horn and disconnect the horn plug.

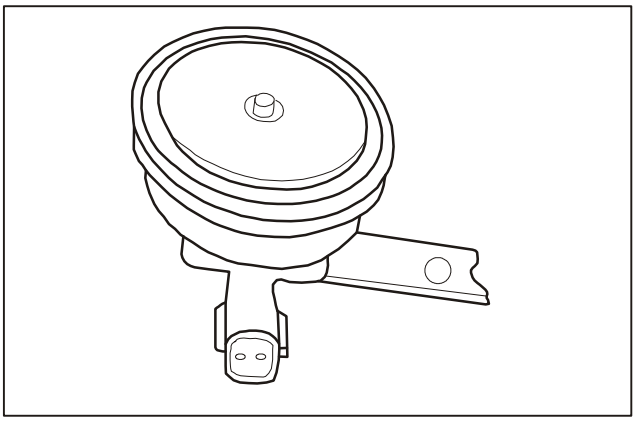

4. Remove the horn.

Downloaded from www.Manualslib.com manuals search engine

Air Conditioner (A/C)

Applied models: SUNRAY products manufactured by JAC

Subject Page

Instruction and Operation

Air Conditioner..... 158
Overview..... 158
Precautions.....159
Functional operation..... 162

Diagnosis and Testing

Air Conditioner..... 165
Operating principle..... 165
Air distribution system introduction..... 167
Leak test.....168
A/C system performance testing.....169
Refrigerant recovery 172
A/C System Performance Table.....174
System Testing.....176

Removal/Installation

Air Conditioner..... 189
Removal of front A/C..... 189
Removal of top evaporator tank.....191
Removal of front condenser.....193
Removal of bottom condenser..... 195
Removal of heater water tank..... 196
Removal of after motor.....198
Removal of compressor..... 202
Installation of compressor assembly.....204
Removal of front A/C panel.....205
Removal of rear A/C panel..... 206

Specification

Air Conditioner..... 207
Basic parameters.....207

Downloaded from www.Manualslib.com manuals search engine

Instruction and Operation

A/C system

SUNRAY adopts dual A/C system, with the front and rear A/C controlled independently. In this system, the front and rear A/C use independent condenser and evaporator but share the same compressor.

A/C system schematic diagram:

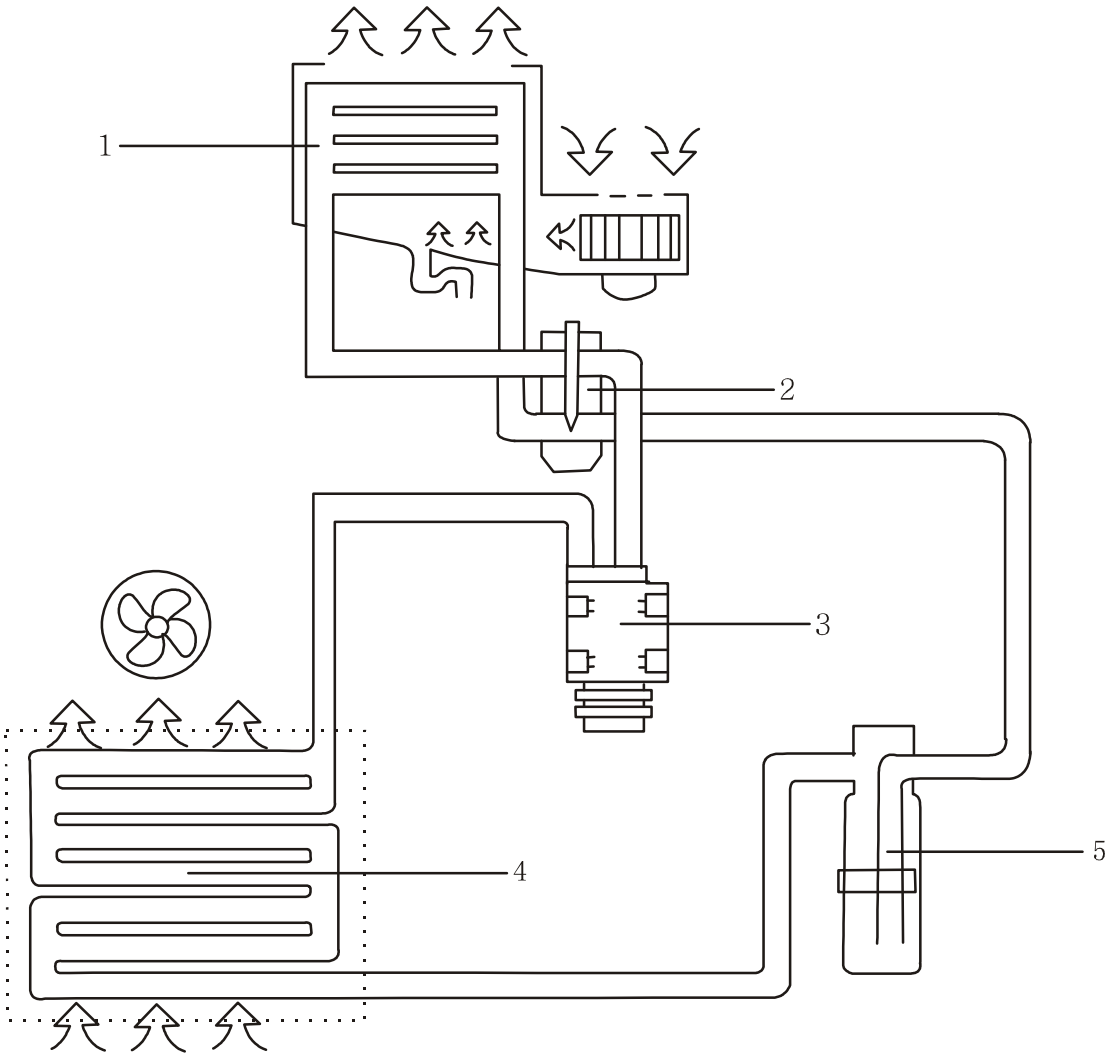

1. Evaporator 2. Expansion valve 3. Compressor
4. Condenser 5. Fluid reservoir

Downloaded from www.Manualslib.com manuals search engine

Instruction and Operation

Precautions

1. Refrigerant is of low freezing point and strong volatility, so please wear gloves and goggles in order to avoid frostbite, blindness and other phenomena caused by its contact with skin.

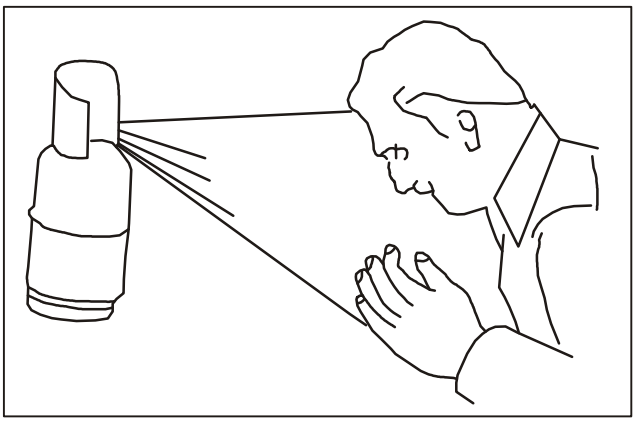

2. In case of the refrigerant gets into your eyes or having contact with skin, please flush the affected areas with fresh water and go to the doctor for help. Please don't rub your eyes with hand or handkerchief.

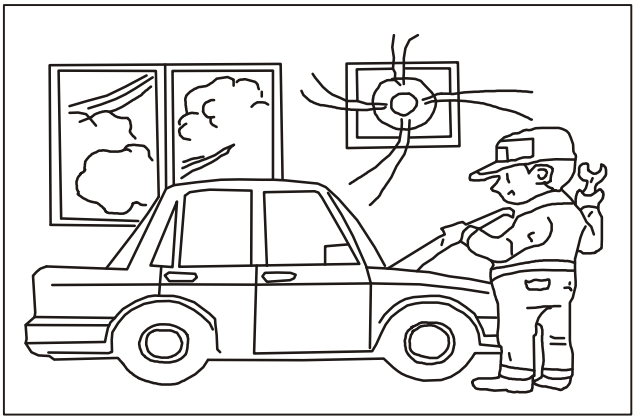

3. The handling of refrigerant shall be performed in well-ventilated areas.
   Although refrigerant is innoxious, abundant exhaust of refrigerant into enclosed space may lead to hypoxia.

4. During the handling of refrigerant, the ambient environment shall be free from water and foreign matters such as dust, for which may cause damage to A/C system when flowing into. Therefore, special attention must be paid.

Downloaded from www.Manualslib.com manuals search engine

Precautions

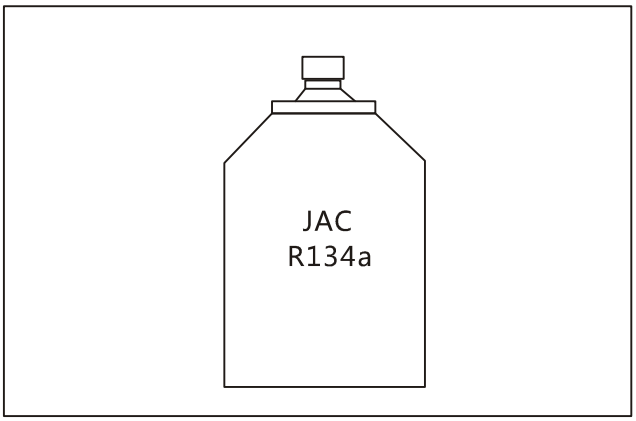

5. R-134a shall be adopted as refrigerant.
   Use of other kinds of refrigerant may bring negative effect to system components.

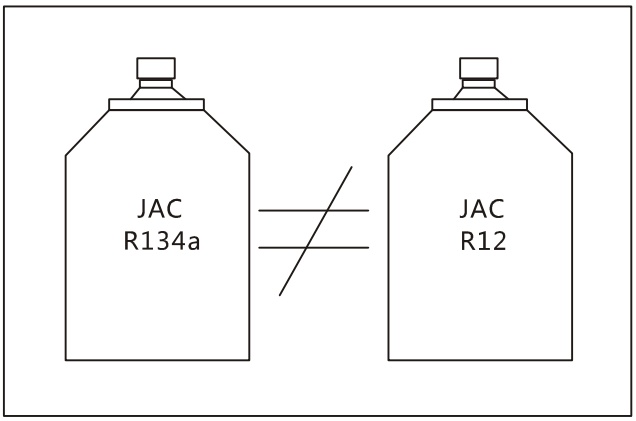

6. R-134a refrigerant and R-12 refrigerant are incompatible, so even little amount of R-12 refrigerant is not allowed to be mixed into R-134a refrigerant.

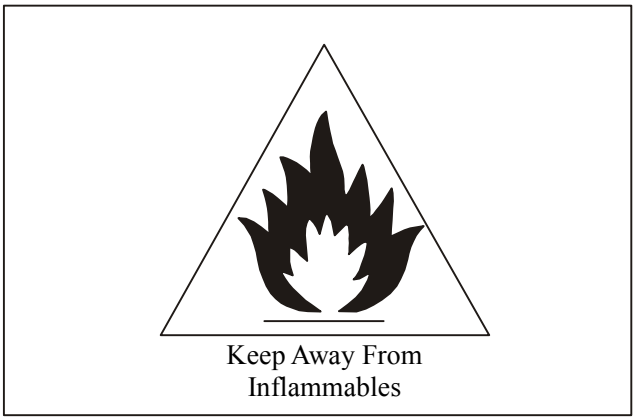

7. When handling refrigerant, please note that the surroundings must be free from any tinder or inflammable, for the exposure of refrigerant reservoir to heat source shall lead to explosion.

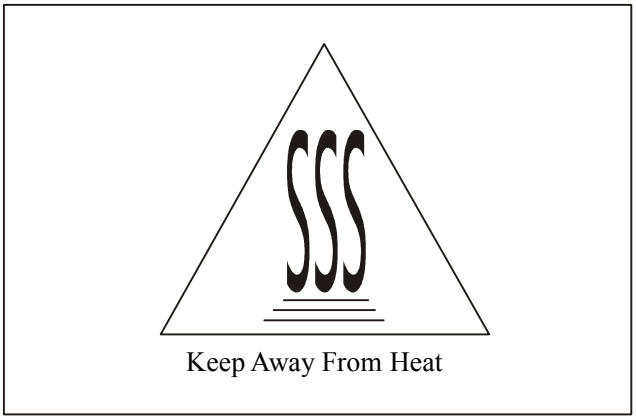

8. R134a refrigerant container is under high pressure status, so please don't place it under high temperature condition and the ambient temperature for storage should be below 52℃.

Downloaded from www.Manualslib.com manuals search engine

Instruction and Operation

Precautions

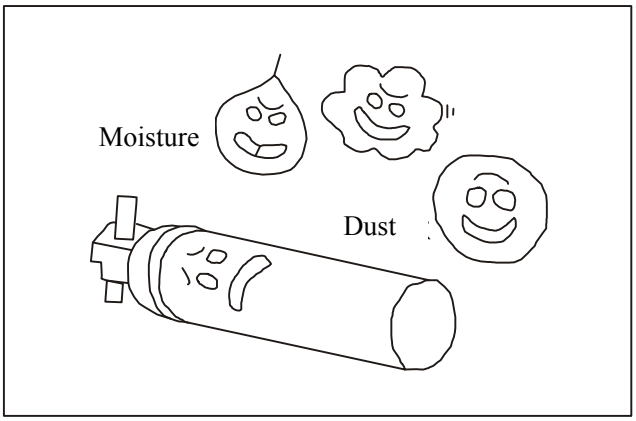

9. Generally, dust covers are adopted for A/C components, in order to avoid access of sewage, dust and moisture. Dust covers should be removed before operation and sealed after operation.

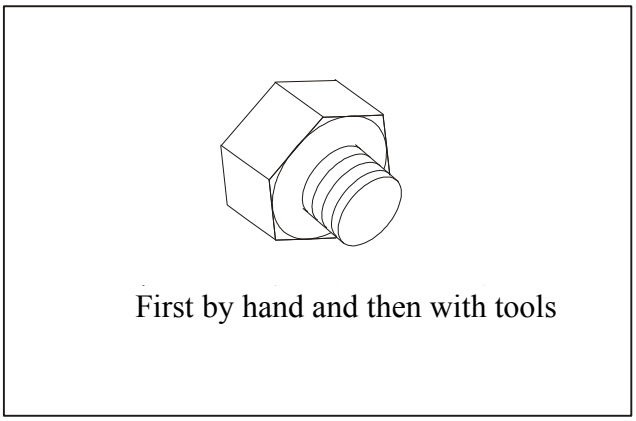

10. During the reinstallation of A/C system after removal, please apply refrigerant oil onto the O-ring. As for screwed joints, install them by hand and then use two wrenches for tightening. As for the flanged joints, install nuts and bolts when pushing the pipeline gently.

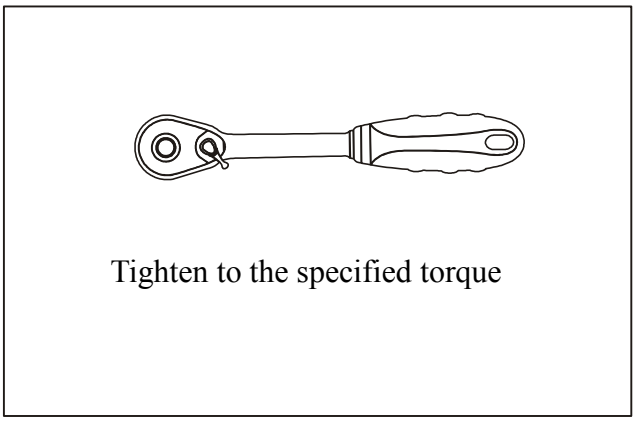

11. During A/C installation, over tightening or clamping of O-ring may cause refrigerant leakage, so please operate as per specified torque.

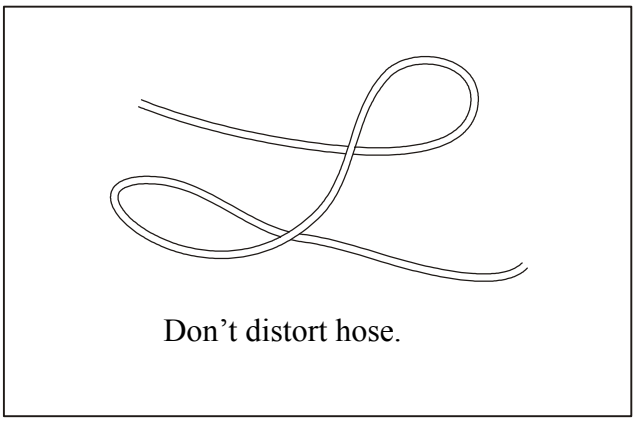

12. Hoses shall be free from distortion.

Downloaded from www.Manualslib.com manuals search engine

Instruction and Operation

Functional operation

1. "TO-FACE" mode
   Air is adjusted when passing through system and vented out through upper air vent. This mode is applied to most of places using A/C.

2. "TO-FACE/FEET" mode
   Air is adjusted and vented out through upper air vent and floor air vent. The air from floor air vent is hotter than that from upper air vent. However, when the temperature knob is rotated counterclockwise to the end (hottest) or clockwise to the end (coldest), air temperature from two different positions are the same.

3. "TO-FEET" mode
   Air is vented out through the bottom air vent.

4. "TO-FEET" plus "DEFROST" mode
   Air is vented out through the bottom air vent and a little air is vented out through defroster air vent and air vent of side window defroster.

Downloaded from www.Manualslib.com manuals search engine

Instruction and Operation

Functional operation

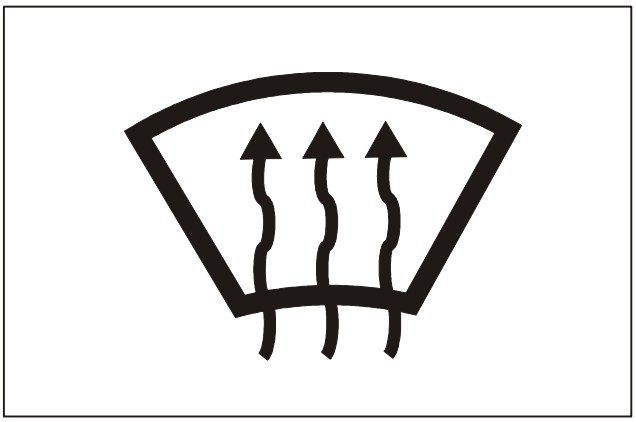

5. Defroster
   Air is adjusted and vented out through defroster air vent and a little air is vented out through side window defroster. It is recommended to use this mode only in foggy or icy weather.

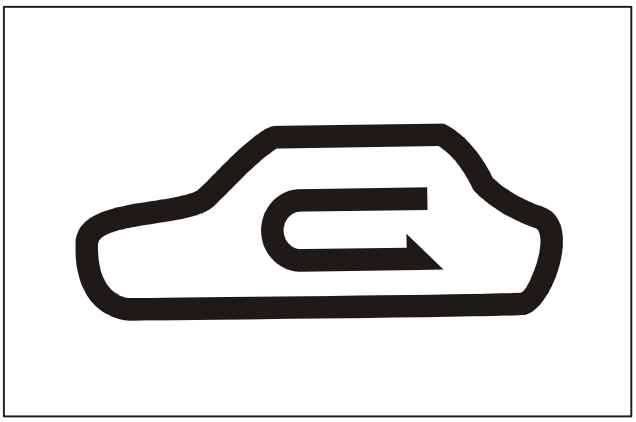

6. Internal/external circulation select button
   Press this button and the indicator shall lighten, indicating the internal circulation mode is applied; press this button again and the external circulation mode is selected.

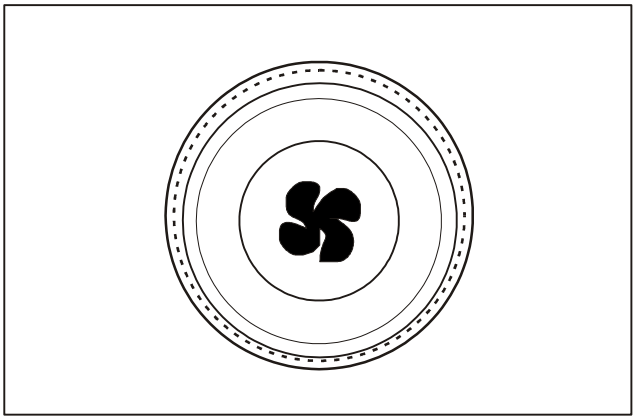

7. Front control panel air volume knob
   Rotate the air volume knob shown in the right figure to achieve perfect control of the air volume of blower. Rotate leftwards, the air volume shall decrease, and rightwards, the air volume shall increase.

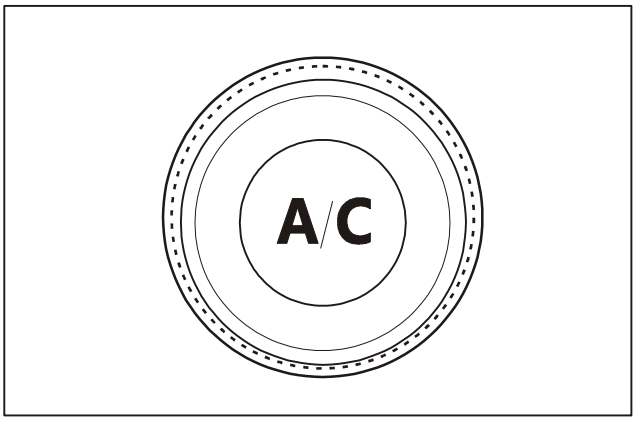

8. A/C switch
   Press this switch with the indicator on, indicating the A/C system is in operation. Press this switch again, and the A/C system is turned off.
   If the fan knob is located at off position instead of at certain position within speed setting range, the A/C system cannot operate.

Downloaded from www.Manualslib.com manuals search engine

Instruction and Operation

Functional operation

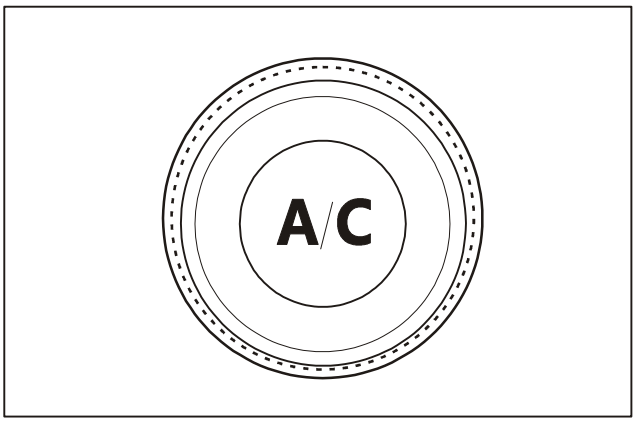

9. Front control panel temperature control knob
   Rotate the knob within the range shown in the right figure, and the interior temperature can be controlled within the indicated range.

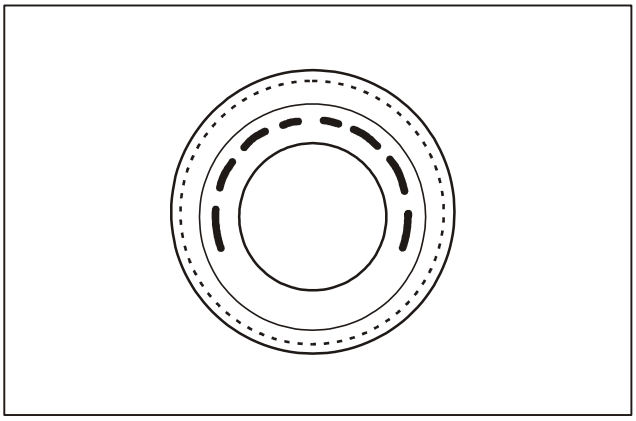

10. Rear control panel cold/warm select knob
    Rotate the knob within the red zone, the vented air is warm air; rotate the knob within the blue zone, the vented air is cold air.

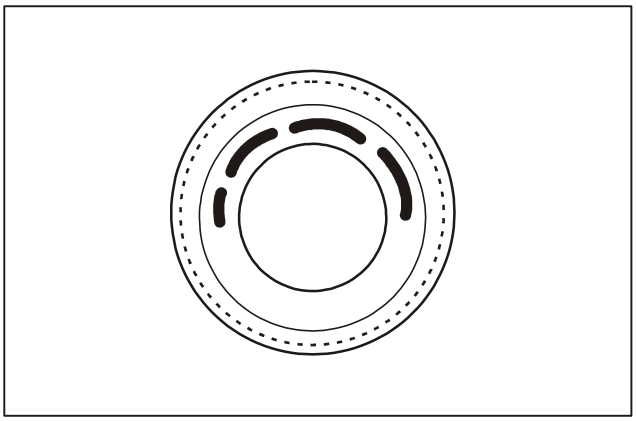

11. Rear control panel air volume knob
    Rotate the air volume knob shown in the right figure to achieve perfect control of the air volume of blower. Rotate leftwards, the air volume shall decrease, and rightwards, the air volume shall increase.

Downloaded from www.Manualslib.com manuals search engine

Diagnosis and Testing

Operating principle

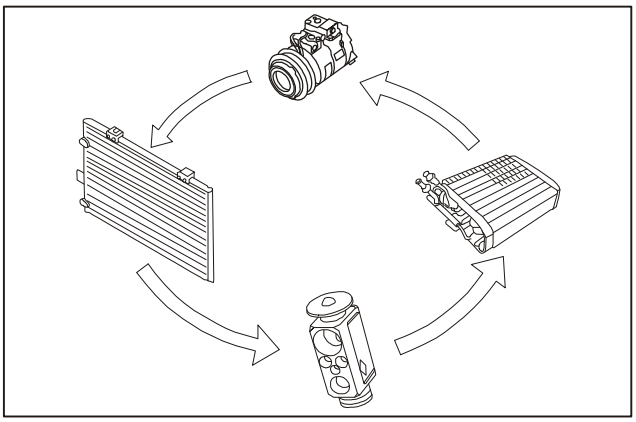

1. During operation, low pressure gaseous refrigerant from evaporator transforms into high pressure and high temperature gas after passing through compressor, which transforms into high pressure and low temperature liquid after being cooled by condenser radiating pipe; the liquid, after being dehumidified and buffered by receiver drier, flows into expansion valve at stable pressure and flow rate, and finally flows into evaporator through throttling and depressurization; the refrigerant evaporates and absorbs abundant heat once encountering low pressure condition.

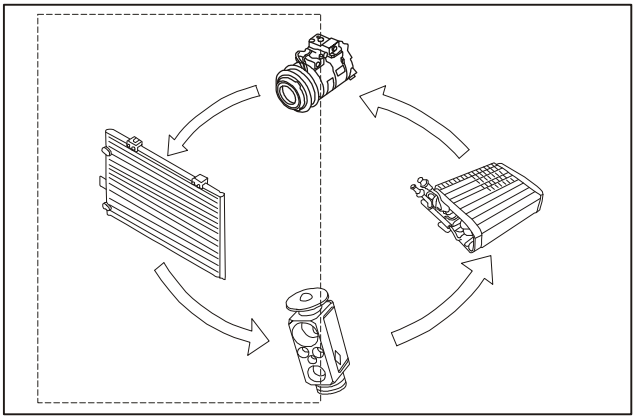

2. High-pressure side of refrigerating system.

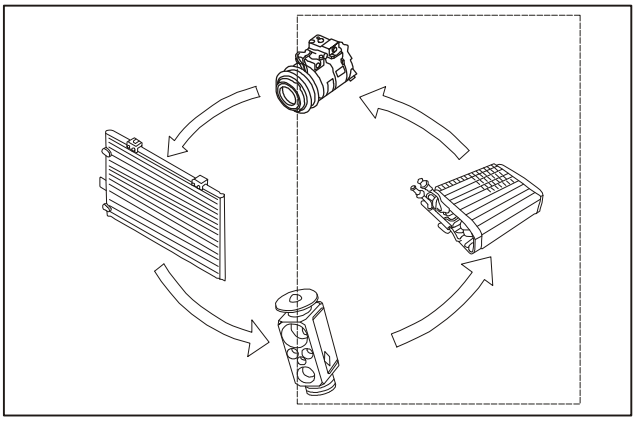

3. Low-pressure side of refrigerating system.

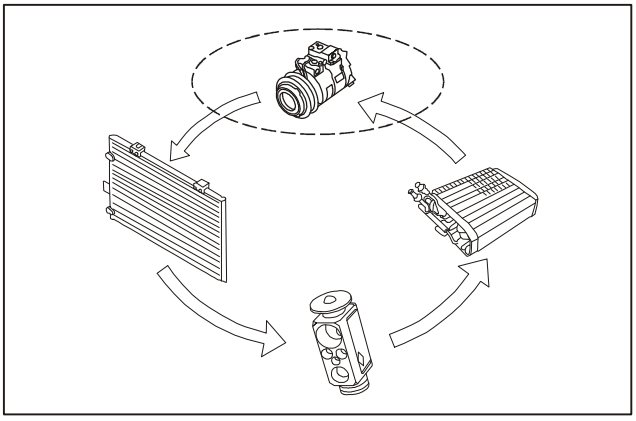

4. Compression process.

Downloaded from www.Manualslib.com manuals search engine

Diagnosis and Testing

Operating principle

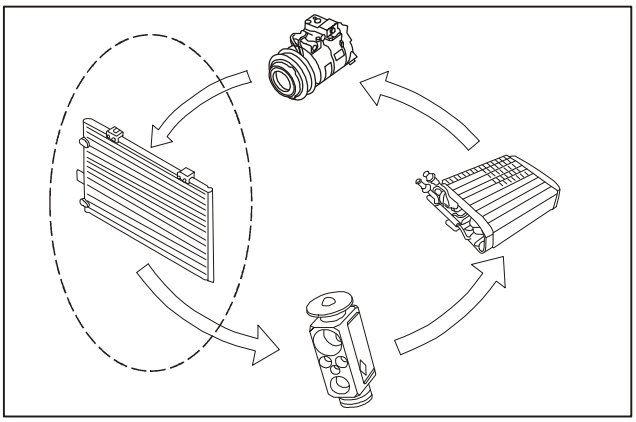

5. Condensation process.

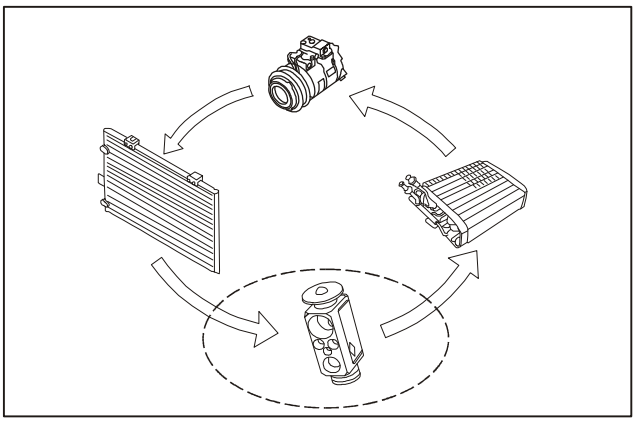

6. Throttling and expansion process.

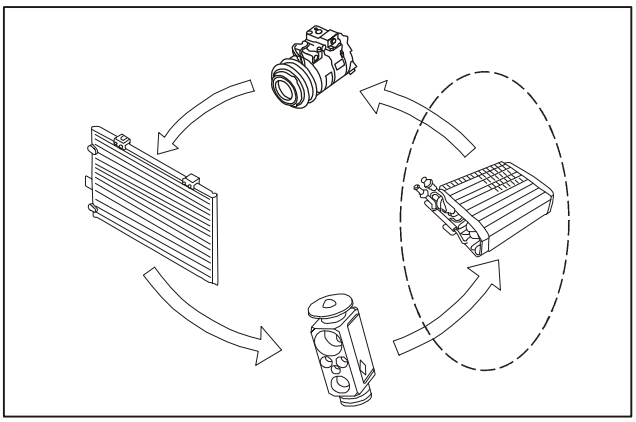

7. Evaporation process.

Downloaded from www.Manualslib.com manuals search engine

Diagnosis and Testing

Air distribution system introduction

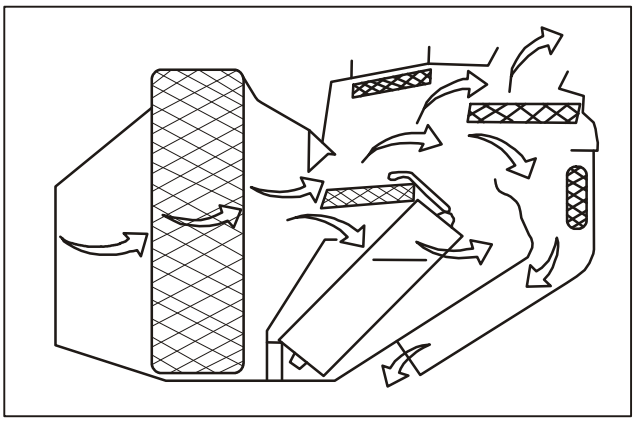

1. Mixing flow.
   The outside air is mixed through:
   - Instrument panel air vent
   - Floor air vent

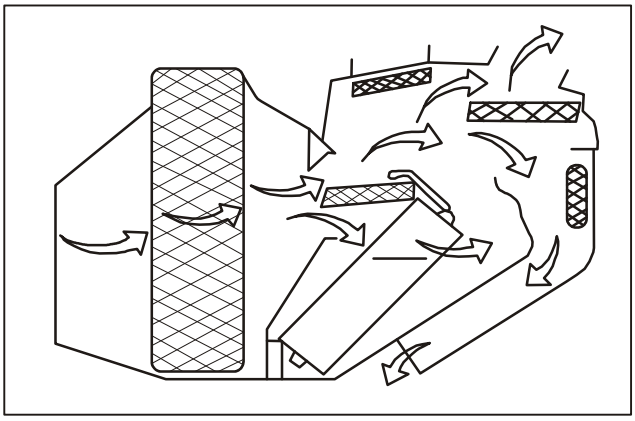

2. Ventilation.
   The outside air comes in through the instrument panel air vent.
   No operation of compressor during ventilation.

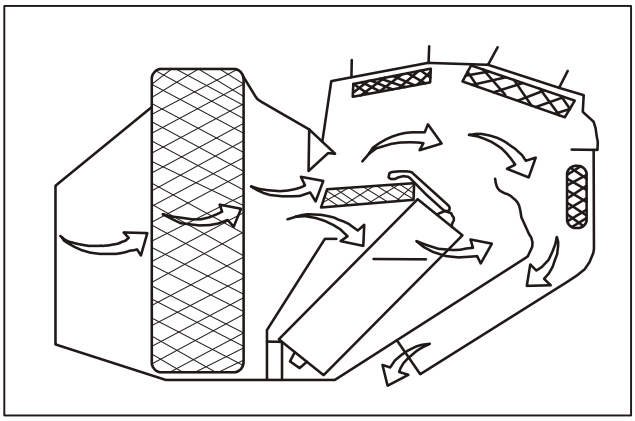

3. Heater.
   Air is mostly from floor air vent and a little air is from defrosting air duct.

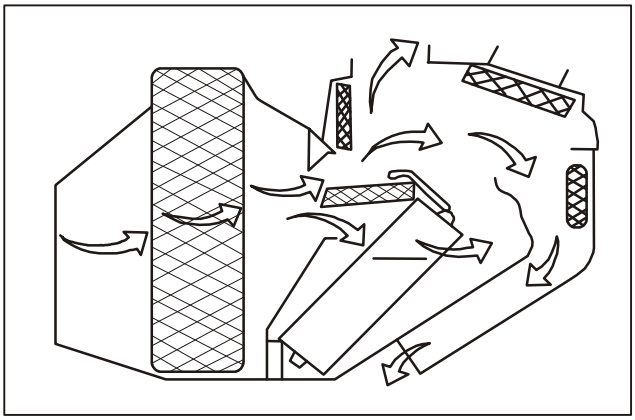

4. Defogging.
   Equivalent air from floor air vent and defrosting air vent.

Downloaded from www.Manualslib.com manuals search engine

Diagnosis and Testing

Leak test

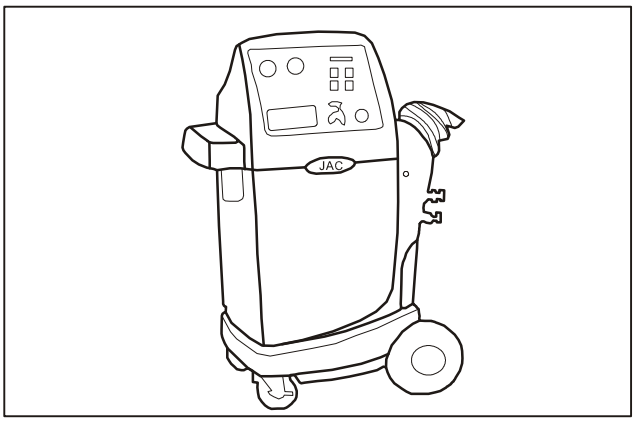

1. Required tools.
   R-134a A/C system dye tracer (24 pcs.).
   General purpose 12V leak detector lamp.
   Fluorescent dye scavenger.
   A/C dye injection tool kit.
   Dye cell for replacement.
   Electronic leak detector.
   Spray bottle with soap water.

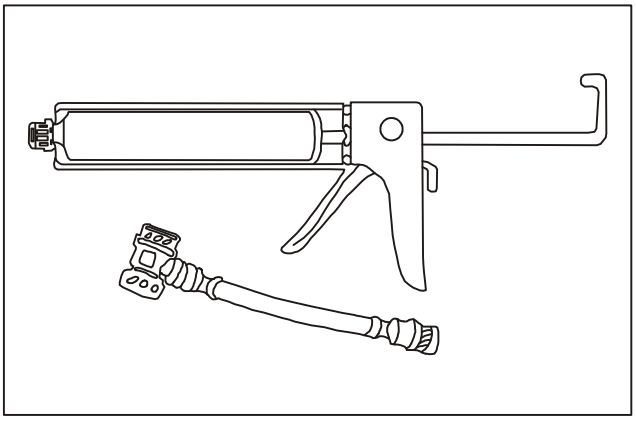

2. Fluorescence leak detector.
   IMPORTANT: Be sure to wear dark color goggles with UV lamp, so the color of dye can be deepened.
   The application of fluorescent dye can facilitate the detection of leak position in A/C system.

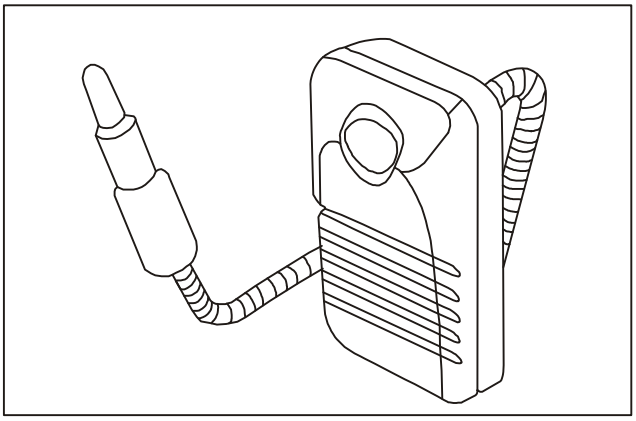

3. Electronic leak detector.
   IMPORTANT: Perform testing in continuous path to ensure detection of any possible leak. Check every position of system for leak.

4. Soap water.
   Fill a bottle with solution consisting of 50% water and 50% detergent.
   Run A/C system and spray the soap water onto connectors and components.
   In case of any obvious leak, bubbles shall appear.
   This is an ideal method for detecting leak of hoses and connectors.

Downloaded from www.Manualslib.com manuals search engine

Diagnosis and Testing

A/C system performance testing

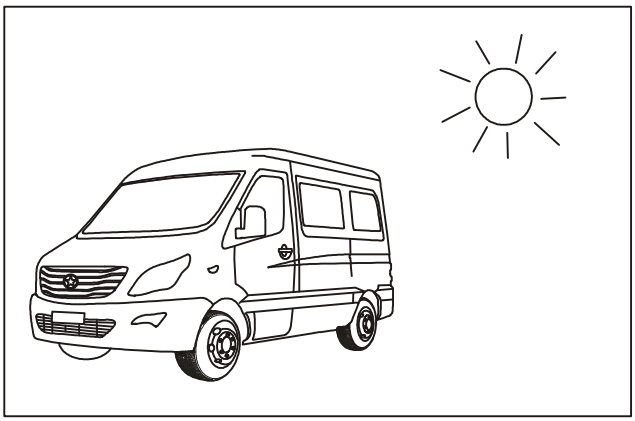

1. Test the vehicle under direct sunlight.

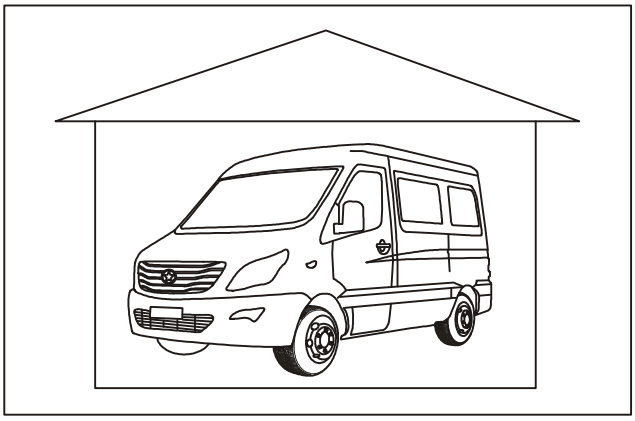

2. Don’t test the vehicle under airflow obstruction of condenser, such as the vehicle is parked closely against wall.

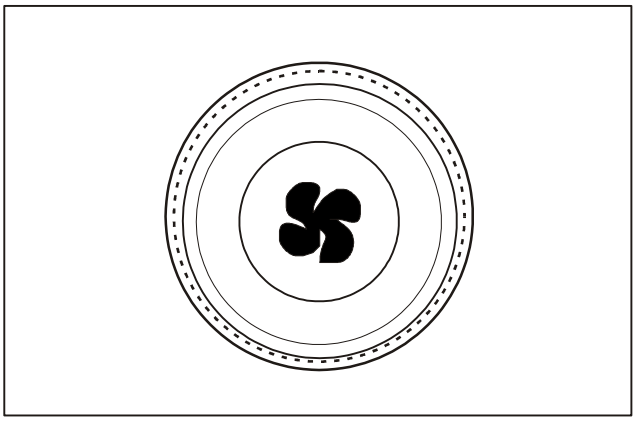

3. Set the blower motor to the highest speed mode.

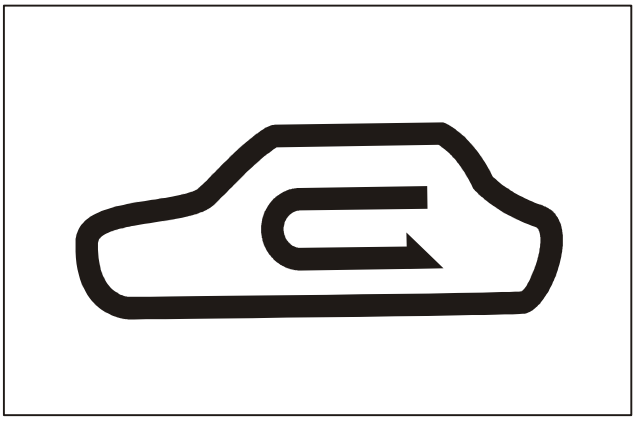

4. External air circulation mode.

Downloaded from www.Manualslib.com manuals search engine

Diagnosis and Testing

A/C system performance testing

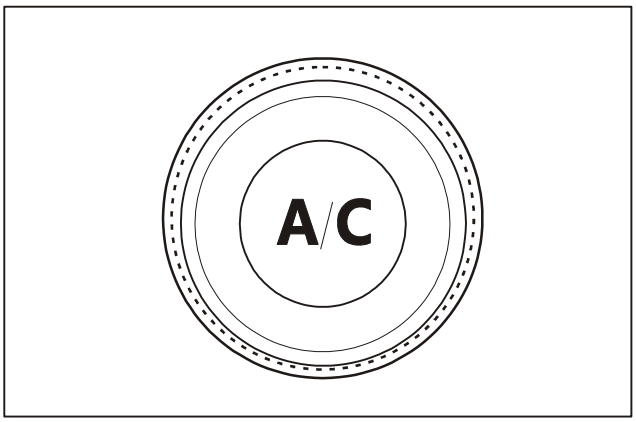

5. Set the cooling temperature to the coldest status.

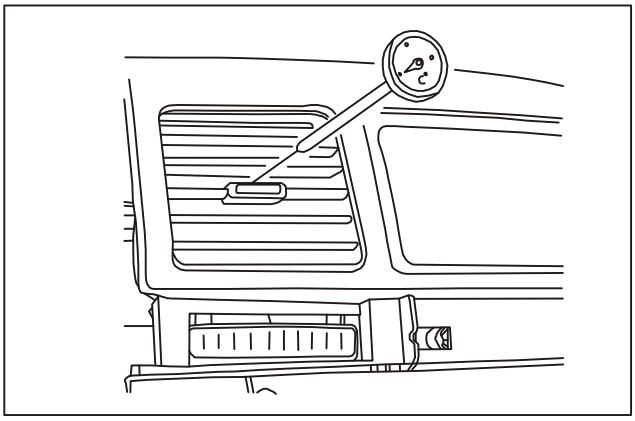

6. Open the instrument panel air vent facing right ahead. Insert the temperature gauge into the panel air vent center in thickness of 50mm.

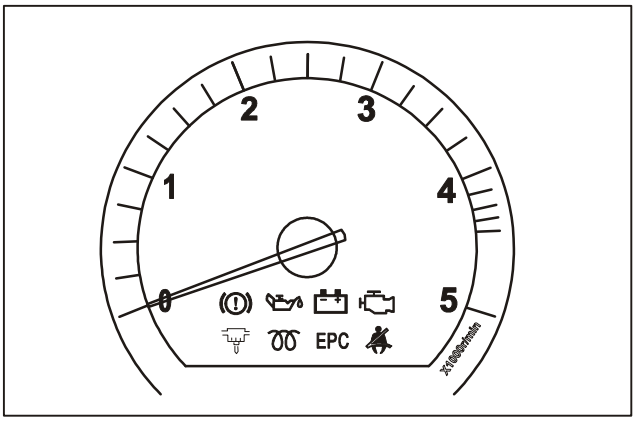

7. Test under idling status.

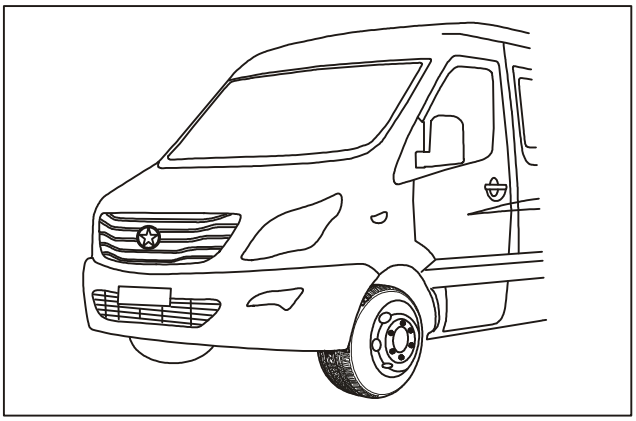

8. Both front windows are closed.

Downloaded from www.Manualslib.com manuals search engine

Diagnosis and Testing

A/C system performance testing

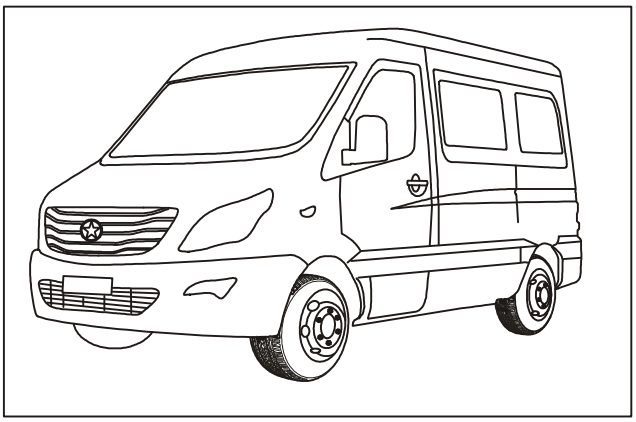

9. The engine hood is closed.

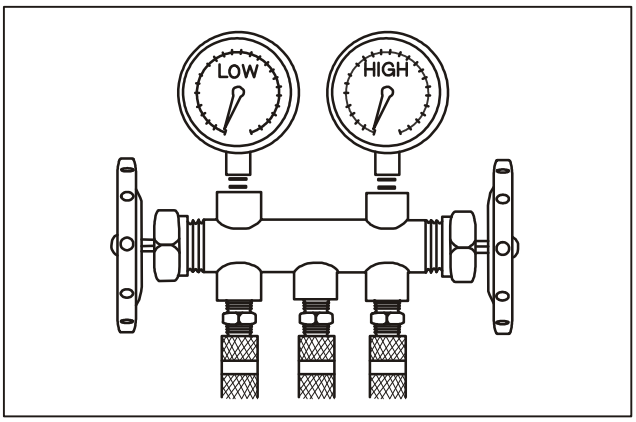

10. Connect the precision pressure gauge to A/C system.

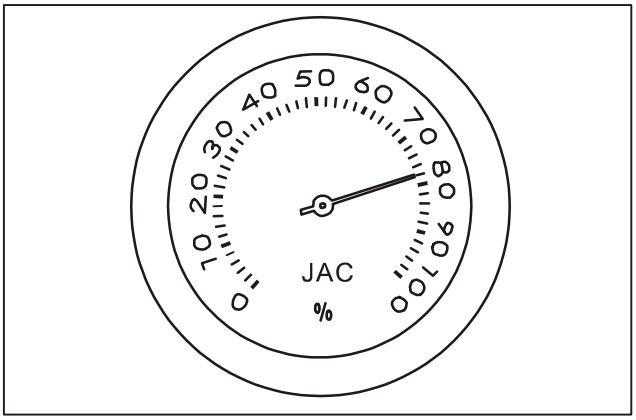

11. As for the precise testing of humidity (relative humidity %), the pressure and temperature of air supply outlet shall vary with humidity (relative humidity %). Please refer to "A/C System Performance Table" in this section for details.

3—4℃	The best status
5—8℃	Normal
>10℃	In need of maintenance

12. Shut down the engine. Compare the readings with data listed in "A/C System Performance Table" and no big difference can be found under normal operation of A/C system.

Downloaded from www.Manualslib.com manuals search engine

Diagnosis and Testing

Refrigerant recovery

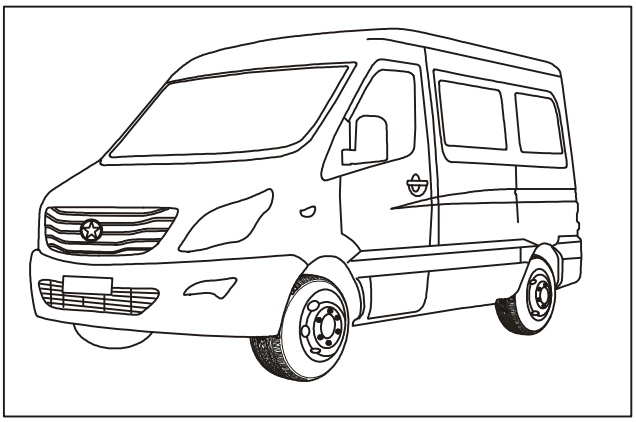

1. Park the vehicle in well-ventilated areas.

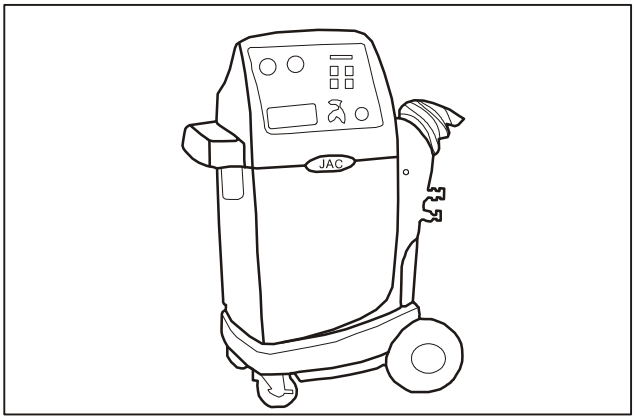

2. Connect to the refrigerant recovery machine.

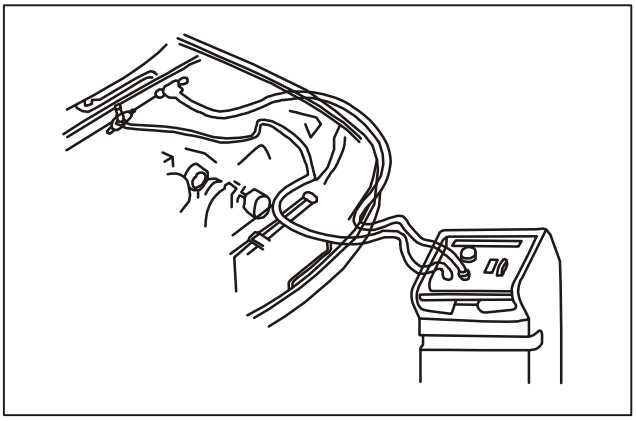

3. Turn on the refrigerant recovery machine and select the refrigerant reclaimer on the control panel.

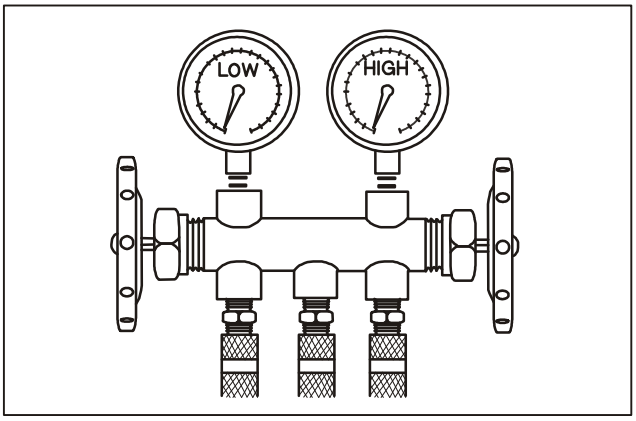

4. Open the manual valves at both high-pressure and low-pressure sides.

Downloaded from www.Manualslib.com manuals search engine

Diagnosis and Testing

Refrigerant recovery

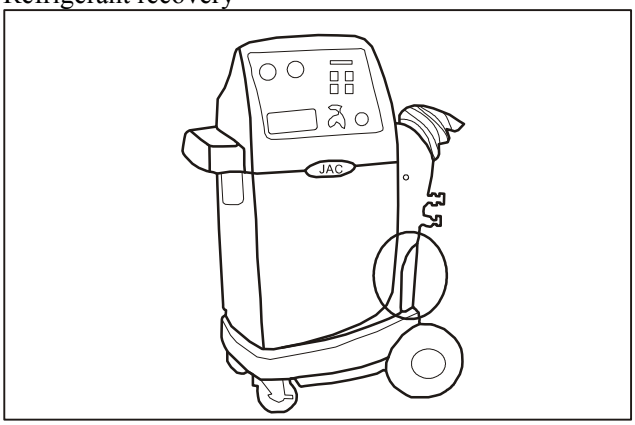

5. The refrigerant recovery machine shall start to recover refrigerant and lubricating oil from A/C system, which respectively flows into a fluid reservoir and a removable oil reservoir.

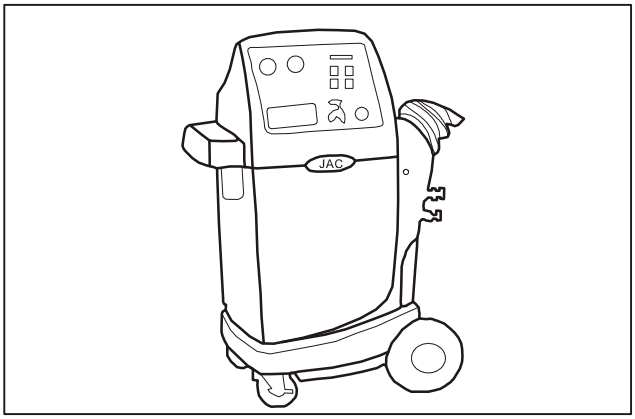

6. Refrigerant recovery machine shall drain all refrigerant out of A/C system, achieving partial vacuum of A/C system with pressure at about 34 kPa (10 Hg).

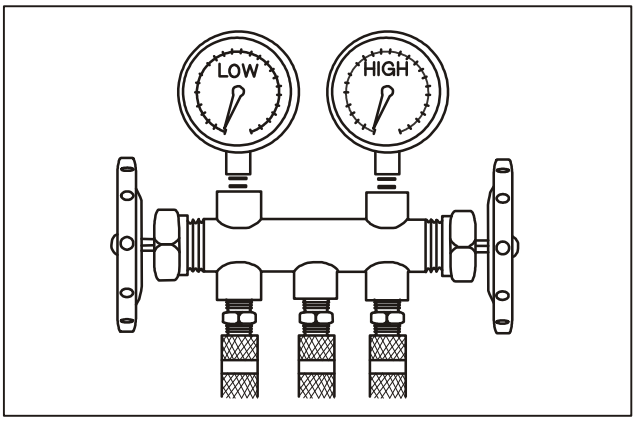

7. Once partial vacuum is realized, it is recommended to turn off the refrigerant recovery machine and two manual valves and record the pressure readings. If the vacuum reading rises up to positive pressure in 2 min, there is still surplus refrigerant (after boiling) in the receiver drier; therefore, you should continue to execute the reclaimer until no obvious positive pressure rise occurs.

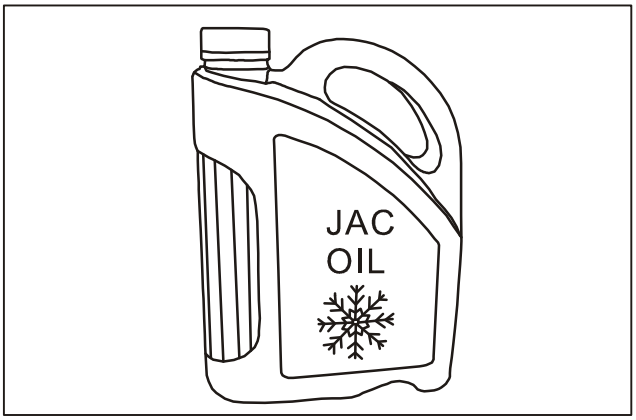

8. Check the oil reservoir for oil recovery and record the recovered volume, for the same volume of oil shall be added into A/C system later.

Downloaded from www.Manualslib.com manuals search engine

Diagnosis and Testing

A/C System Performance Table

Engine speed (r/min)	Relative humidity (%)	Ambient air temperature		Temperature of central air vent		Pressure at low-pressure side of pressure gauge		Pressure at high-pressure side of pressure gauge	
		°F	℃	°F	℃	psi	kPa	psi	kPa
Idling speed	20	59	15	37	3.00	27	162	142	943
		68	20	37	3.00	31	185	168	1106
		77	25	40	4.64	36	209	191	1296
		86	30	47	8.60	42	236	225	1494
		95	35	54	12.49	50	265	266	1653
		104	40	62	16.45	58	300	304	1864
		113	45	69	20.47	63	334	323	2155
	40	59	15	37	3.00	25	171	139	956
		68	20	38	3.50	28	197	164	1129
		77	25	44	6.79	32	222	192	1323
		86	30	52	11.27	36	252	209	1445
		95	35	61	15.94	42	288	248	1709
		104	40	69	20.76	48	329	279	1925
		113	45	77	25.18	54	375	306	2110
	60	59	15	37	3.00	26	177	140	966
		68	20	40	4.47	30	205	166	1146
		77	25	48	8.92	34	233	192	1326
		86	30	57	13.93	39	269	215	1480
		95	35	66	19.11	45	310	249	1718
		104	40	76	24.59	52	358	300	2072
		113	45	86	29.82	59	406	318	2196
	80	59	15	37	3.00	27	186	142	976
		68	20	43	6.11	31	214	168	1160
		77	25	52	11.15	36	250	191	1320
		86	30	62	16.95	42	289	225	1551
		95	35	74	23.23	50	342	266	1833
		104	40	85	29.27	58	398	304	2096
		113	45	96	35.65	63	436	323	2226

Downloaded from www.Manualslib.com manuals search engine

Diagnosis and Testing

A/C System Performance Table

℃	℉	kPa	psi	℃	℉	kPa	psi
Definition: This table lists the pressure of refrigerant 134a under different temperature. For example, under room temperature of 26.6 ℃ (80°F), the pressure of refrigerant reservoir reaches 595.6 kPa (86.4 psi). If the refrigerant is heated up to 51.6℃ (125°F), the pressure shall rise up to 1278.8 kPa (185.5 psi). You can also determine the boiling point of refrigerant 134a based on different pressure. For example, under the pressure of 188.2 kPa (27.3 psi), the boiling point of refrigerant R134a is 0℃ (32°F).							
				15.5	60	392.3	56.9
-23.3	-10	12.4	1.8	18.3	65	438.2	63.6
-20.5	-5	27.0	3.9	21.1	70	487.3	70.7
-17.7	0	43.2	6.3	23.8	75	539.7	78.3
15.0	5	60.8	8.8	26.6	80	595.6	86.4
-12.2	10	80.1	11.6	29.4	85	655.1	95.0
9.4	15	101.3	14.7	32.2	90	718.5	104.2
-6.6	20	124.3	18.0	35.0	95	785.6	113.9
-3.8	25	149.4	21.7	37.7	100	856.9	124.3
-1.1	30	176.6	25.6	40.5	105	932.3	135.2
0.0	32	188.2	27.3	43.3	110	1012.1	146.8
1.6	35	206.2	29.9	46.1	115	1096.4	159.0
4.4	40	238.0	34.5	48.8	120	1185.2	171.9
7.2	45	272.5	39.5	51.6	125	1278.8	185.5
10.0	50	309.5	44.9	54.4	130	1377.3	199.8
12.7	55	349.4	50.7	60.0	140	1589.6	230.5

Downloaded from www.Manualslib.com manuals search engine

Diagnosis and Testing

A/C system performance diagnosis

1. Air heater performance diagnosis.

Step	Operation	Yes	No
1	Whether or not to conduct this diagnosis based on “symptoms” or instruction of other diagnosis tables?	Go to Step 2.	—
2	①Start the engine. ②Let the engine idling. Does the engine temperature reach normal operating temperature?	Go to Step 3.	Go to Step 9.
3	①Let the engine idling. ②Select “FLOOR” mode. ③Set the minimum speed of blower. ④Set the warmest temperature. ⑤Sense the temperature of inlet and outlet hoses at the heater core. Is the inlet hose of heater warmer than the outlet hose?	Go to Step 7.	Go to Step 4.
4	①Place the temperature gauge at the central air vent. ②Fix the temperature gauge onto the outlet hose at the heater core. ③Set the maximum speed of blower. ④Set the warmest temperature. ⑤Record temperature at the position listed below: Central air vent on instrument panel. Outlet hose at the heater core. ⑥Compare the recorded temperatures. Are these two temperatures nearly the same?	Go to Step 5.	Go to Step 6.
5	①Check the following parts of vehicle for cold air leak and conduct relevant maintenance: Front shield plate. Internal circulation damper. Air heater, ventilation and A/C system module housing. ②Conduct necessary maintenance. Is the maintenance finished?	Go to Step 10.	—
6	①Check the operation of temperature damper. ②Conduct necessary maintenance. Is the maintenance finished?	Go to Step 10.	—
7	①Shut down the engine. ②Backflush the heater core. ③Start the engine. ④Select “FLOOR” mode. ⑤Set the minimum speed of blower. ⑥Set the warmest temperature. ⑦Sense the temperature of inlet and outlet hoses at the heater core. Is the inlet hose of heater warmer than the outlet hose?	Go to Step 8.	Go to Step 10.
8	Replace the heater core. Is the maintenance finished?	Go to Step 10.	—
9	Troubleshoot too low engine temperature. Is the maintenance finished?	Go to Step 10.	—

Downloaded from www.Manualslib.com manuals search engine

10	Run the system to check the maintenance result. Is the fault detected and eliminated?	System is normal.	Go to Step 2.

Downloaded from www.Manualslib.com manuals search engine

Diagnosis and Testing

A/C system performance diagnosis

2. Insufficient defrosting.

Step	Operation	Yes	No
1	Whether or not to conduct this diagnosis based on “symptoms” or instruction of other diagnosis tables?	Go to Step 2.	—
2	①Start the engine. ②Select “DEFROST” mode. ③Set the maximum speed of blower. Is there sufficient airflow from defroster outlet?	Go to Step 3.	Go to Step 10.
3	Measure the operating temperature of engine. Does the engine temperature reach normal operating temperature?	Go to Step 4.	Go to Step 8.
4	①Set the minimum speed of blower. ②Set the warmest temperature. ③Sense the temperature of inlet and outlet hoses at the heater core. Is the inlet hose of heater warmer than the outlet hose?	Go to Step 11.	Go to Step 5.
5	Test the operation of A/C compressor. Does the A/C compressor run?	Go to Step 7.	Go to Step 6.
6	Replace the A/C compressor. Is the maintenance finished?	Go to Step 14.	—
7	Conduct A/C system performance test. Does the operation of A/C system meet the requirements?	Go to Step 9.	Go to Step 12.
8	Troubeshoot too low engine temperature. Is the maintenance finished?	Go to Step 14.	—
9	Check whether the internal circulation damper operates normally. Does the internal circulation damper operate normally?	Go to Step 14.	Go to Step 13.
10	Conduct troubleshooting for air outlet. Is the maintenance finished?	Go to Step 14.	—
11	Conduct troubleshooting for air heater. Is the maintenance finished?	Go to Step 14.	—
12	Conduct troubleshooting on A/C performance. Is the maintenance finished?	Go to Step 14.	—
13	Conduct troubleshooting for internal circulation damper. Is the maintenance finished?	Go to Step 14.	—
14	Run the system to check the maintenance result. Is the fault detected and eliminated?	System is normal.	Go to Step 2.

Downloaded from www.Manualslib.com manuals search engine

Diagnosis and Testing

A/C system performance diagnosis

3. Blower motor noise diagnosis.

Step	Operation	Yes	No
1	Whether or not to conduct this diagnosis based on "symptoms" or instruction of other diagnosis tables?	Go to Step 2.	—
2	Check if there is any chip at air inlet grille. Is there any chip?	Go to Step 8.	Go to Step 3.
3	1.Sit in the vehicle. 2.Close doors and windows. 3.Turn the ignition switch to ON position with the engine off. 4.Run the blower motor at every speed and mode to determine the time and place of noise generating. Is the noise under operation of blower is obvious?	Go to Step 4.	Go to Step 11.
4	Touch the blower casing to check for vibration when the blower motor operating at different speed. Is there any overvibration?	Go to Step 6.	Go to Step 5.
5	Listen to the sound of blower motor at different speed. Is there any abnormal noise such as squeak or chirp?	Go to Step 9.	Go to Step 11.
6	1. Remove the blower motor. 2. Check the blower motor impeller for any abnormal deposition. 3. Check the blower motor for any abnormal deposition. Do you find any foreign matter on blower motor or blower motor impeller?	Go to Step 8.	Go to Step 7.
7	Check blower motor for: Vane crack. Looseness of impeller fasteners. Improper positioning of impeller. Do you find any abnormality mentioned above?	Go to Step 9.	Go to Step 10.
8	Clear foreign matter. Is the operation finished?	Go to Step 10.	—
9	Replace blower motor. Is the maintenance finished?	Go to Step 11.	—
10	Install blower motor. Is the operation finished?	Go to Step 11.	—
11	Run the system to check the maintenance result. Is the fault detected and eliminated?	System is normal.	Go to Step 2.

Downloaded from www.Manualslib.com manuals search engine

Diagnosis and Testing

A/C system performance diagnosis

4. Refrigerating system noise diagnosis.

Step	Operation	Yes	No
1	Whether or not to conduct this diagnosis based on "A/C system symptoms" or instruction of other diagnosis tables?	Go to Step 2.	—
2	Check accessory drive belt and drive belt tensioner for failure and conduct troubleshooting when necessary.	Go to Step 3.	—
3	Run the engine to check compressor for any abnormal noise: Does the noise last for over 30 seconds?	Go to Step 5.	Go to Step 4.
4	Let the engine run for several minutes. Stop the engine for 1 minute. Restart the engine. Is any noise detected by using this procedure?	Go to Step 6.	Generation of liquid slugging noise is a common phenomenon, which shall occur when the system experience a long time of shutdown under high temperature and the ambient temperature lowers after a whole night.
5	Check if the refrigerant level in system is too low. Is the system refrigerant sufficient?	Go to Step 7.	Go to Step 8.
6	Check if the heat expansion valve is stuck at closed or open position. Is the heat expansion valve is stuck at open position?	Replace expansion valve.	Go to Step 7.
7	Check if the compressor bolt and/or A/C pipeline scratches body parts. Is the mounting bolt loosened?	Tighten bolt and/or rearrange pipeline.	Go to Step 8.
8	①Recover refrigerant and replace compressor. ②Refill the system. Is the gas pressure within the specified range?	The system inspection is finished.	Go to Step 1

Downloaded from www.Manualslib.com manuals search engine

Diagnosis and Testing

A/C system performance diagnosis

5. A/C system actuator noise diagnosis.

Step	Operation	Yes	No
1	Whether or not to conduct this diagnosis based on “symptoms” or instruction of other diagnosis tables?	Go to Step 2.	—
2	①Start the engine. ②Finish the settings below: Blower motor speed Air heater, ventilation and A/C system modes Temperature control setting ③Define the noise types: Scraping, bang Tick/click, chirp or creak Whish/howling Is the scraping or bang obvious during mode selection or temperature setting?	Go to Step 6.	Go to Step 3.
3	When the blower motor speed reduces, is there still tick/click、 chirp, squeak or scraping but with lower sound?	Go to Step 6.	Go to Step 4.
4	Is whish/howling obvious under every mode but not so under every temperature setting?	Go to Step 6.	Go to Step 5.
5	Is there obvious whish/howling only under “DEFROST” or “FLOOR” mode?	Go to Step 6.	Go to Step 6.
6	Remove the instrument panel bracket. ①Check damper for normal operation. ②Check air duct for blockage or foreign matter. Does any of the above condition occur?	Go to Step 9.	Go to Step 7.
7	Check modes, temperature dampers and seals for warpage or crack. Is the damper under normal status?	Go to Step 10.	Go to Step 8.
8	Replace relevant dampers and/or seals. Is the maintenance finished?	Go to Step 10.	—
9	Remove obstruction or foreign matter. Is the operation finished?	Go to Step 10.	—
10	Install the instrument panel bracket. Is the operation finished?	Go to Step 11.	—
11	Run the system to check the maintenance result. Is the fault detected and eliminated?	System is normal.	Go to Step 2.

Downloaded from www.Manualslib.com manuals search engine

Diagnosis and Testing

A/C system performance diagnosis

6. Odour diagnosis.

Step	Operation	Yes	No
1	Whether or not to conduct this diagnosis based on "symptoms" or instruction of other diagnosis tables?	Go to Step 2.	—
2	①Sit in the vehicle. ②Close all doors and windows. ③Start the engine. ④Let the engine idling under normal operating temperature. ⑤Set the maximum speed of blower. ⑥Set the coldest temperature. ⑦Run the A/C under every blower speed, mode and temperature to determine what kind of odour (musty taste, smell of coolant or oil) occurs.	Go to Step 3.	Go to Step 8.
3	Check air heater, ventilation and A/C system module assembly filter and air inlet grille for any chip? Is there any chip?	Go to Step 4.	Go to Step 5.
4	Clear all chip. Is the operation finished?	Go to Step 15.	—
5	Check if the carpet is moist. Is the carpet moist?	Go to Step 6.	Go to Step 14.
6	Check the existence of the conditons below: Leak at front windshield periphery Drain pipe blockage of air heater, ventilation and A/C system module Leak at door seal Is there any leak?	Go to Step 7.	Go to Step 14.
7	Repair leak when necessary. Is the maintenance finished?	Go to Step 15.	—
8	Does the odour smell like coolant?	Go to Step 9.	Go to Step 12.
9	Check cooling system for any leak. Is there any leak?	Go to Step 10.	Go to Step 12.
10	Check vehicle inside for coolant leak or check the front windshield for a layer of film. Is there any fault?	Go to Step 11.	Go to Step 15.
11	Replace the heater core. Is the maintenance finished?	Go to Step 15.	—
12	Does the odour smell like engine oil?	Go to Step 13.	Go to Step 15.
13	①Check engine compartment for any leak. ②Repair leak. Is the maintenance finished?	Go to Step 15.	—
14	Musty taste is probably caused by molds on evaporator and heater core or inside air heater, ventilation and A/C system module assembly. Is the operation finished?	Go to Step 15.	—
15	Run the system to check the maintenance result.	System is normal.	Go to Step 2.

Downloaded from www.Manualslib.com manuals search engine

	Is the fault detected and eliminated?		

Diagnosis and Testing

A/C system performance diagnosis

7. Diagnosis of failed blower motor operation.

Step	Operation	Yes	No
1	①Turn the ignition switch to ON position with the engine off. ②Turn the blower motor switch to each speed position. Is the blower motor able to operate at each speed position?	Go to “Fault 8”.	Go to Step 2.
2	①Turn the ignition switch to OFF position. ②Disconnect the blower motor. ③Set a test lamp between blower motor power voltage circuit and control circuit. ④Turn the ignition switch to ON position with the engine off. ⑤Turn the blower motor switch to each speed position. Is the test lamp on under every speed.	Go to Step 9.	Go to Step 3.
3	Test blower motor power voltage circuit for open circuit or excessive resistance. Is the fault detected and eliminated?	Go to Step 15.	Go to Step 4.
4	Test blower motor circuit for open circuit or excessive resistance. Is the fault detected and eliminated?	Go to Step 15.	Go to Step 5.
5	①Turn the ignition switch to OFF position. ②Connect the blower motor. ③Air heater, ventilation and A/C system control module. ④Turn the ignition switch to ON position with the engine off. ⑤Turn the blower motor switch to each speed position. Is the blower motor able to operate at each speed position?	Go to Step 10.	Go to Step 6.
6	Check serial data code or check for any fault. Is there any fault?	Go to Step 7.	Go to Step 8.
7	Test circuit. Is the fault detected and eliminated?	Go to Step 15.	Go to Step 8.
8	Test blower motor switch control circuit for open circuit or excessive resistance. Is the fault detected and eliminated?	Go to Step 15.	Go to Step 11.
9	Check blower motor for poor contact. Is the fault detected and eliminated?	Go to Step 15.	Go to Step 12.
10	Check air heater, ventilation and A/C system control module for poor contact. Is the fault detected and eliminated?	Go to Step 15.	Go to Step 13.
11	Check audio system for poor contact. Is the fault detected and eliminated?	Go to Step 15.	Go to Step 14.
12	Replace blower motor. Is the replacement finished?	Go to Step 15.	
13	Replace air heater, ventilation and A/C system control module. Is the replacement finished?	Go to Step 15.	
14	Replace blower switch. Is the replacement finished?	Go to Step 15.	
15	Run the system to check the maintenance result.	System is normal.	Go to Step 1.

Downloaded from www.Manualslib.com manuals search engine

	Is the fault eliminated?		

Downloaded from www.Manualslib.com manuals search engine

Diagnosis and Testing

A/C system performance diagnosis

8. Fault diagnosis of blower motor.

Step	Operation	Yes	No
1	①Turn the ignition switch to ON position with the engine off. ②Turn the blower motor switch to each speed position. If there any speed position failed?	Go to Step 3.	Go to Step 2.
2	Check blower motor fuse for blowout. Is the fuse blown out?	Replace the fuse with a new one of the same rating.	Go to Step 3.
3	Check the power supply of blower motor. The blower motor won't run even though there is voltage.		
4	①Run the blower under every speed and run once at the integrated radio control position of blower. ②20 blower speeds should be effective. Is every blower speed effective?	Go to Step 8.	Go to Step 5.
5	①Plug a 2-pin connector into the back of blower motor. ②Use integrated radio to control blower and run the blower once at each one of 20 blower speeds. ③Compare the voltage with the illustrated voltage. Please refer to "1.2.1.2 Sensor Resistance Table" in "Automatic Air Heater, Ventilation and A/C System" for details. Does the voltage approach to the illustrated voltage?	Go to Step 8.	Go to Step 6.
6	Connect the fault diagnosis instrument. Conduct combined testing for switch data. Use fault diagnosis instrument to increase/decrease the soft key to select from 20 different blower speeds. Is every speed effective	Conduct integrated radio control testing for blower switch function.	Go to Step 7.
7	Replace air heater, ventilation and A/C system control module. Is the fault detected and eliminated?	Go to Step 8.	
8	Run the system to check the maintenance result. Is the fault eliminated?	System is normal.	Go to Step 1

Downloaded from www.Manualslib.com manuals search engine

Diagnosis and Testing

A/C system performance diagnosis

9. Diagnosis of poor A/C system refrigeration.

Step	Operation	Yes	No
1	Check the operation of air mixing damper to confirm no blockage or rupture. Is air mixing damper blocked or ruptured?	Replace actuator.	Go to Step 2.
2	①Turn the ignition switch to ON position with the engine off. ②Turn the blower motor switch to each speed position. Is the blower motor able to operate at each speed position?	Go to Step 3.	Go to “Fault 7”.
3	Does blower motor run at corresponding speed?	Go to Step 4.	Go to “Fault 8”.
4	①Start the engine. ②Set the mode switch to “TO-Face” mode. ③Set the internal circulation switch to “ON” position. ④Observe the internal circulation damper. ⑤Set the internal circulation switch to “OFF” position. Does the internal circulation damper transfer from internal circulation to ventilation?	Go to Step 5.	Go to “Internal Air Circulation Fault Diagnosis Help” in “Automatic Air Heater, Ventilation and A/C System”.
5	①Start the engine. ②Use the fault diagnosis instrument to clear all fault codes stored in air heater, ventilation and A/C system control module. ③Set the left side air temperature switch to coldest position. ④Set the mode switch to “TO-FACE/FEET” position. ⑤Set the blower motor switch to high speed position. Does the A/C compressor run?	Go to Step 6.	Replace compressor.
6	Conduct A/C system performance test. Is the fault detected and eliminated?	Go to Step 9.	Go to Step 7.
7	Install a temperature gauge near the interior air temperature sensor. Is the indicated temperature below 3℃(5°F)?	Go to Step 9.	Go to Step 8.
8	Check air suction pipe for leak or blockage. Is the fault detected and eliminated?	Go to Step 9.	—
9	Run the system to check the maintenance result. Is the fault eliminated?	System is normal.	Go to Step 1

Downloaded from www.Manualslib.com manuals search engine

Diagnosis and Testing

A/C system performance diagnosis

10. Diagnosis for insufficient warm air.

Step	Operation	Yes	No
1	Check the operation of air mixing damper to confirm no blockage or rupture. Is air mixing damper blocked or ruptured?	Replace actuator.	Go to Step 2.
2	Turn the blower motor switch to each speed position. Is the blower motor able to operate at each speed position?	Go to Step 3.	Go to “Fault 7”
3	Does blower motor run at corresponding speed?	Go to Step 4.	Go to “Fault 8”
4	①Start the engine. ②Set the mode switch to “TO-Face” mode. ③Set the internal circulation switch to “ON” position. ④Observe the internal circulation damper. ⑤Set the internal circulation switch to “OFF” position. Does the internal circulation damper transfer from internal circulation to ventilation?	Go to Step 5.	Go to “Internal Air Circulation Fault Diagnosis Help” in “Automatic Air Heater, Ventilation and A/C System”.
5	Set the temperature switch to “OFF” position. When heating or defrosting is applied, is it still cold?	Go to Step 6.	Go to Step 9.
6	①Start the engine. ②Shut down the air heater, ventilation and A/C control system. Does the A/C compressor run?	Replace compressor.	Go to Step 8.
7	Check cooling system for: Too low coolant level. Looseness or wear of accessory drive belt. Leak of radiator hose or heater hose. Distortion of radiator hose or heater hose. Lack of radiator cap pressure seal. Leak of radiator cap. Is the fault detected and eliminated?	Go to Step 10.	Go to Step 8.
8	①Set the mode switch to “TO-FACE” mode. ②Turn the ignition switch to ON position with the engine off. ③Set the blower motor switch to maximum speed position. ④Cover the sensor air inlet with a piece of paper of 5mm^2 (2 square inch) to check whether there is any airflow through the interior air temperature sensor. Is the paper still at the original position?	Go to Step 10.	Go to Step 9.
9	Check aspirator pipeline for leak or blockage. Is the fault detected and eliminated?	Go to Step 10.	—
10	Run the system to check the maintenance result. Is the fault eliminated?	System is normal.	Go to Step 2.

Downloaded from www.Manualslib.com manuals search engine

Diagnosis and Testing

A/C system performance diagnosis

11. Inadequate air out.

Step	Operation	Yes	No
1	①Start the engine. ②Set the mode switch to “OFF” position. Does the blower stop operation?	Go to Step 2.	Go to Step2
2	①Set the mode switch to “VENT” position. ②Turn the blower motor switch to each speed position. Is the blower motor able to operate at each speed position?	Go to Step 4.	Go to “Fault 7”
3	Does blower motor run at corresponding speed?	Go to Step 4.	Go to “Fault 8”
4	Check mode damper for any damage or blockage. Is the mode damper damaged or blocked?	Replace mode damper.	Go to Step 5.
5	Run the system to check the maintenance result. Is the fault eliminated?	System is normal.	Go to Step 1

Downloaded from www.Manualslib.com manuals search engine

Diagnosis and Testing

A/C system performance diagnosis

12. Fault diagnosis of internal/external circulation.

Step	Operation	Yes	No
1	①Turn the ignition switch to ON position with the engine off. ②Set the blower motor switch to maximum speed position. ③Set the mode switch to “TO-FACE/FEET” position. ④Set the internal circulation switch to “VENTILATION” position. ⑤Set the internal circulation switch to “INTERNAL CIRCULATION” position. Do you hear any change in air flow sound when setting the internal circulation switch to “INTERNAL CIRCULATION” position?	Go to Step 2.	Go to Step 2.
2	①Set the internal circulation switch to “VENTILATION” position. ②Observe the drive shaft of internal circulation actuator. ③Set the internal circulation switch to “INTERNAL CIRCULATION” position. Does the drive shaft of internal circulation actuator rotate?	Go to Step 3.	Go to Step 3.
3	①Observe the drive shaft of internal circulation actuator. ②Use the fault diagnosis instrument and command the internal circulation actuator transfer to “INTERNAL CIRCULATION” and “VENTILATION” positions. Does the drive shaft of internal circulation actuator rotate?	Go to Step 11.	Go to Step 4.
4	①Turn the ignition switch to OFF position. ②Disconnect the internal circulation actuator. ③Turn the ignition switch to ON position with the engine off. ④Use a test lamp connected to sound ground to detect the ignition voltage circuit 3 of internal circulation actuator. Is the test lamp on?	Go to Step 5.	Go to Step 12.
5	①Set a test lamp between damper control Circuit A and ignition voltage circuit 3 of internal circulation actuator. ②Use the fault diagnosis instrument and command the internal circulation actuator transfer to “INTERNAL CIRCULATION” and “VENTILATION” positions. Is the test lamp on when this command is executed?	Go to Step 6.	Go to Step 7.
6	①Set a test lamp between damper control circuit B and ignition voltage circuit 3 of internal circulation actuator. ②Use the fault diagnosis instrument and command the internal circulation actuator transfer to “INTERNAL CIRCULATION” and “VENTILATION” positions. Is the test lamp on when this command is executed?	Go to Step 9.	Go to Step 8.
7	Check the internal circulation actuator control Circuit A for open circuit, excessive resistance, short circuit to ground or voltage. Is the fault detected and eliminated?	Go to Step 15.	Go to Step 11.
8	Check the internal circulation actuator control Circuit B for open circuit, excessive resistance, and short circuit to ground or voltage. Is the fault detected and eliminated?	Go to Step 15.	Go to Step 11.

Downloaded from www.Manualslib.com manuals search engine

Diagnosis and Testing

A/C system performance diagnosis

13. Fault diagnosis of internal/external circulation.

Step	Operation	Yes	No
9	Check internal circulation damper and internal circulation actuator for: Dislocation of circulation actuator. Linkage fractured or stuck. Internal circulation damper fractured or stuck. Obstacle blocking the internal circulation damper moving within the whole range. Lack of internal circulation damper seals. Dislocation of internal circulation damper seals. Is the fault detected and eliminated?	Go to Step 15.	Go to Step 10.
10	Check the harness connector of internal circulation actuator for poor contact. Is the fault detected and eliminated?	Go to Step 15.	Go to Step 13.
11	Check the harness connector of air heater, ventilation and A/C system control module for poor contact. Is the fault detected and eliminated?	Go to Step 15.	Go to Step 14.
12	Repair the ignition voltage circuit of internal circulation actuator. Is the repair finished?	Go to Step 15.	—
13	Replace the internal circulation actuator. Is the replacement finished?	Go to Step 15.	—
14	Replace air heater, ventilation and A/C system control module. Is the replacement finished?	Go to Step 15.	—
15	Run the system to check the maintenance result. Is the fault eliminated?	System is normal.	Go to Step 2.

Downloaded from www.Manualslib.com manuals search engine

Removal/Installation

Removal of front A/C assembly

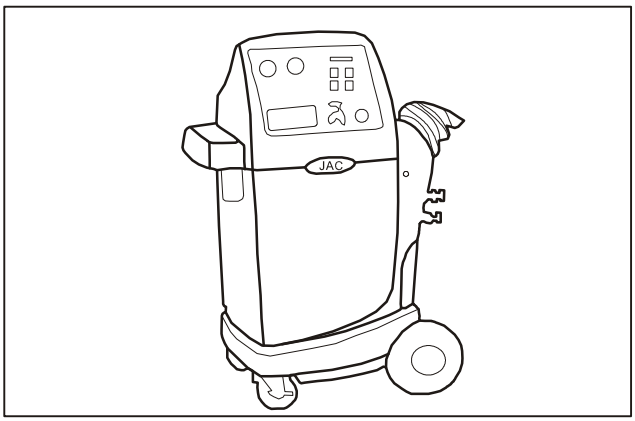

1. Recover refrigerant.

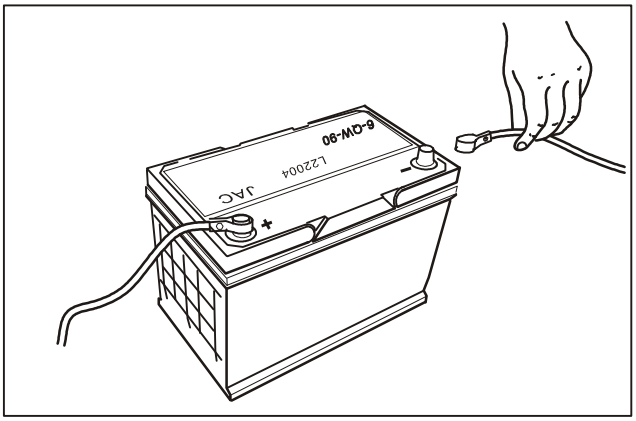

2. Disconnect negative cable of battery.

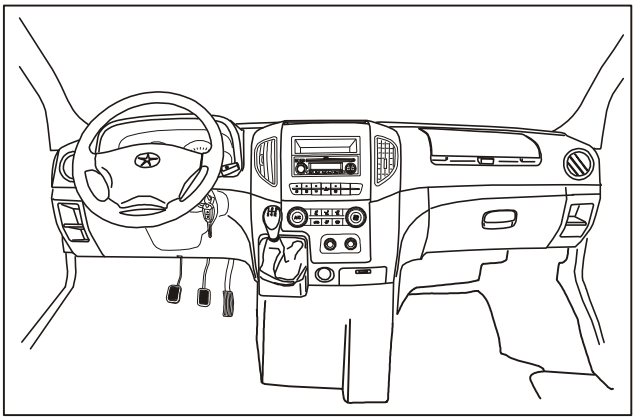

3. Remove instrument panel.

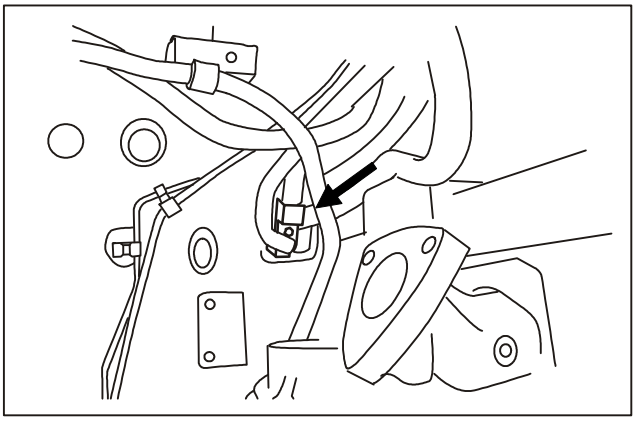

4. Remove mounting bolts from expansion valve.

Downloaded from www.Manualslib.com manuals search engine

Removal/Installation

Removal of front A/C assembly

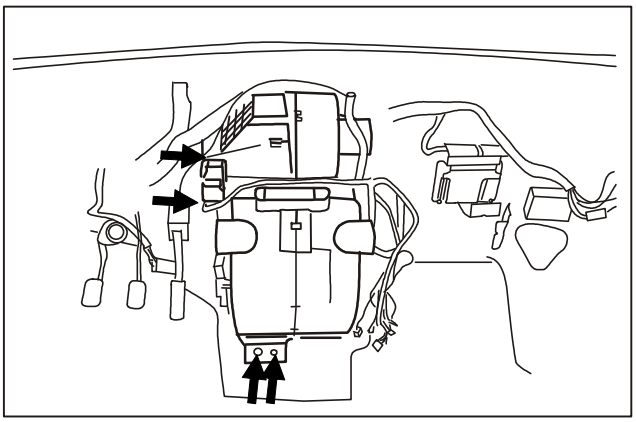

5. Remove mounting bolts from front A/C.

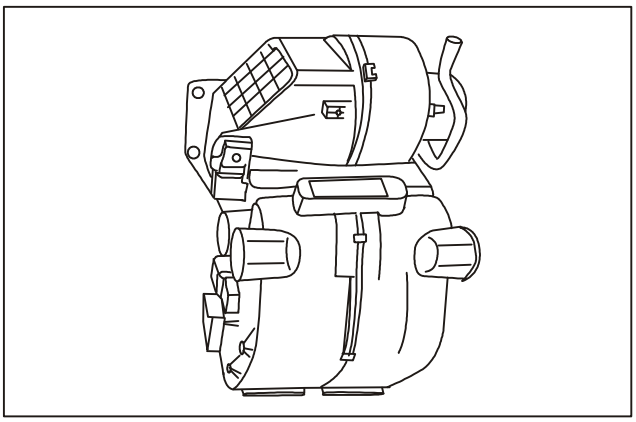

6. Disconnect the connector and remove the front A/C assembly.

Downloaded from www.Manualslib.com manuals search engine

Removal/Installation

Removal of top evaporator tank

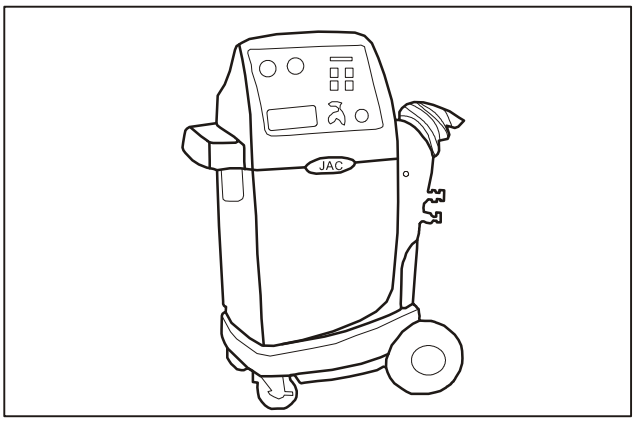

1. Recover refrigerant.

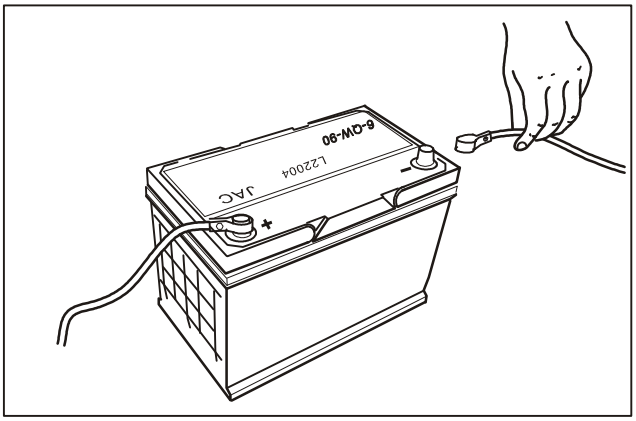

2. Disconnect negative cable of battery.

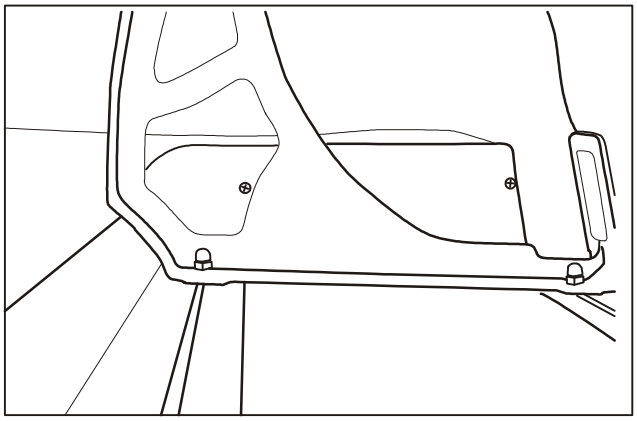

3. Remove luggage rack.

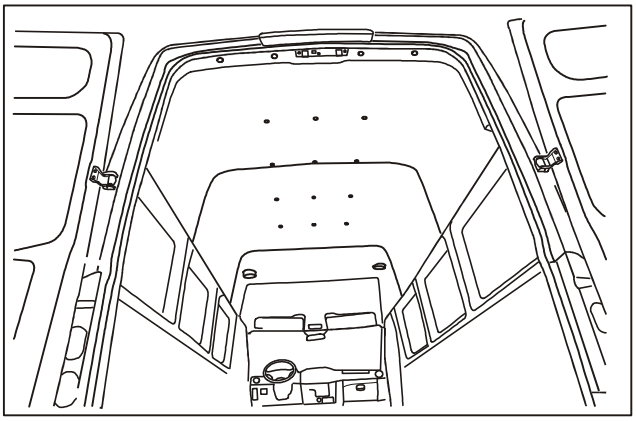

4. Remove ceiling and interior trim.

Downloaded from www.Manualslib.com manuals search engine

Removal/Installation

Removal of top evaporator tank

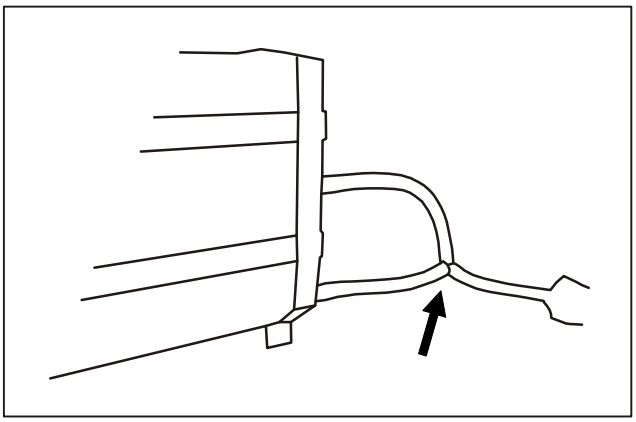

5. Disconnect the A/C drain pipe.

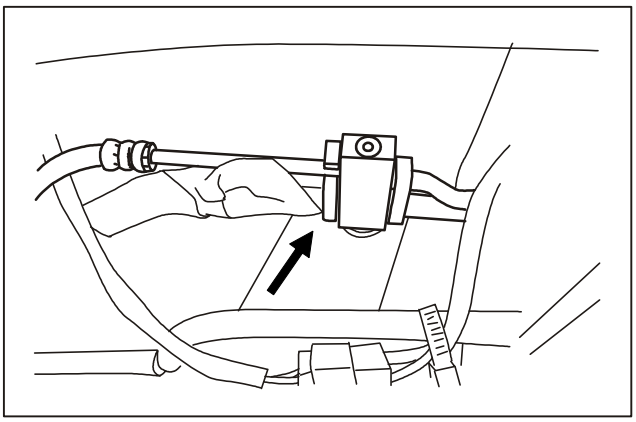

6. Remove mounting bolts from expansion valve.

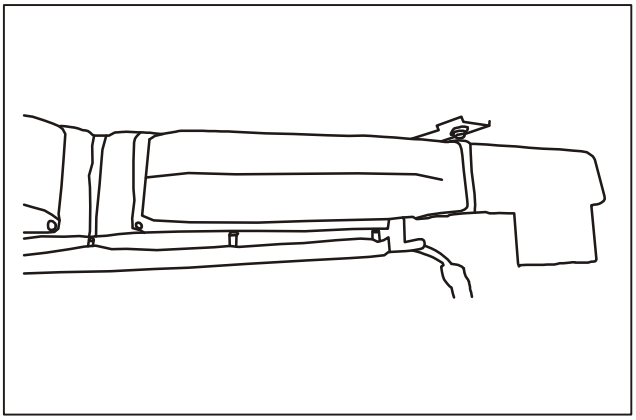

7. Remove mounting bolts.

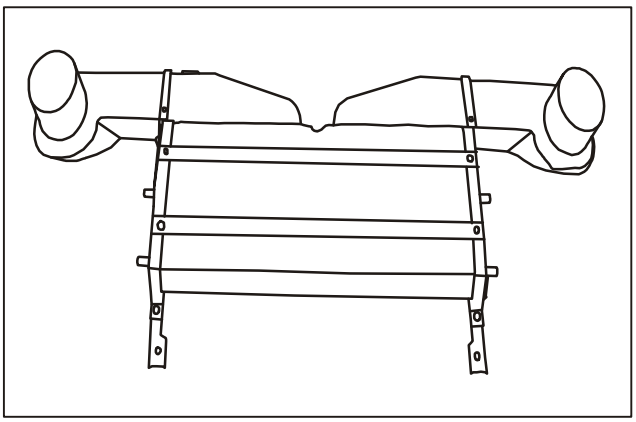

8. Remove the top evaporator tank assembly.

Downloaded from www.Manualslib.com manuals search engine

Removal/Installation

Removal of front condenser

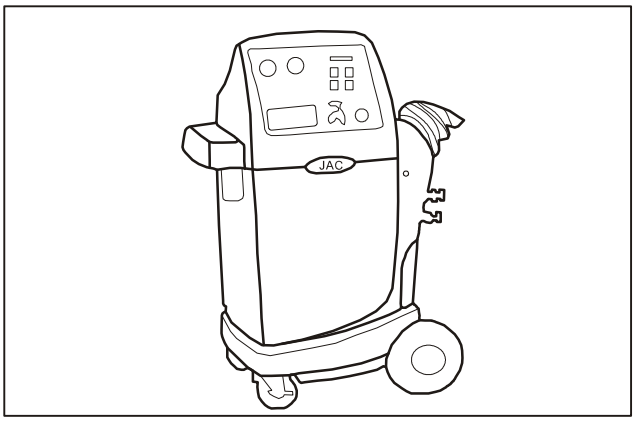

1. Recover refrigerant.

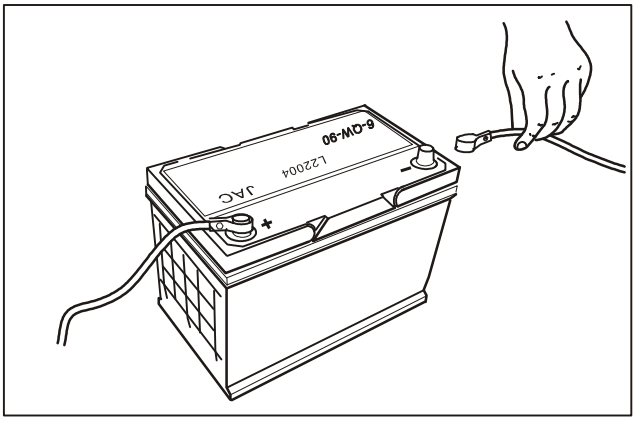

2. Disconnect negative cable of battery.

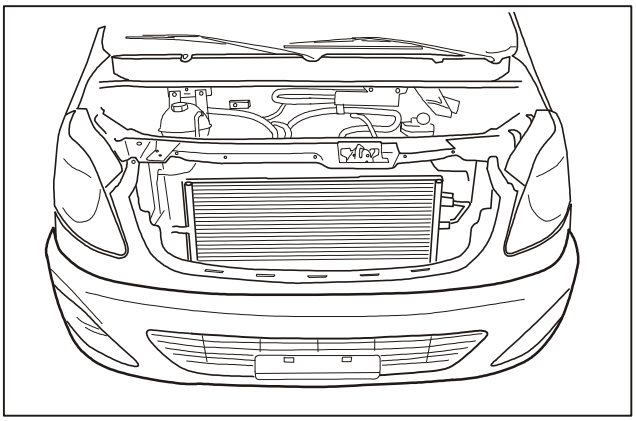

3. Remove front bumper.

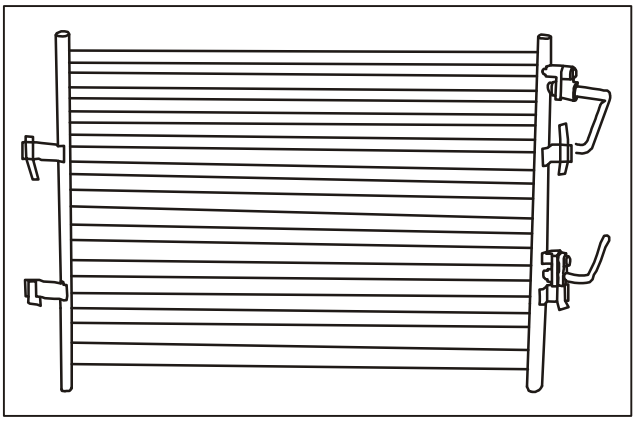

4. Remove mounting bolts.

Downloaded from www.Manualslib.com manuals search engine

Removal/Installation

Removal of front condenser

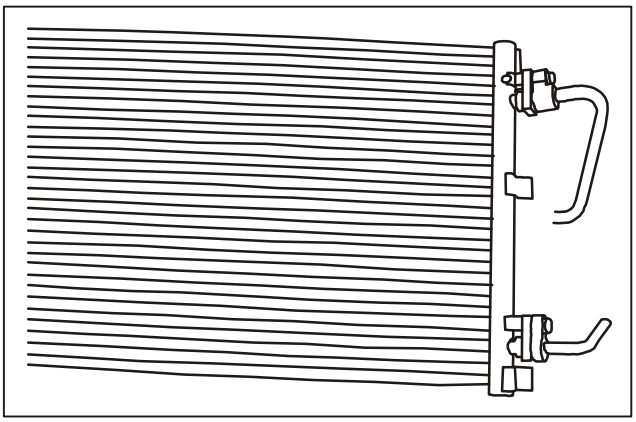

5. Disconnect pipeline.

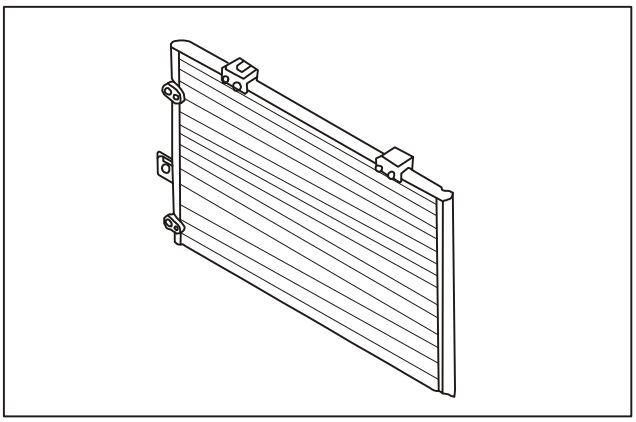

6. Remove condenser.

Downloaded from www.Manualslib.com manuals search engine

Removal/Installation

Removal of bottom condenser

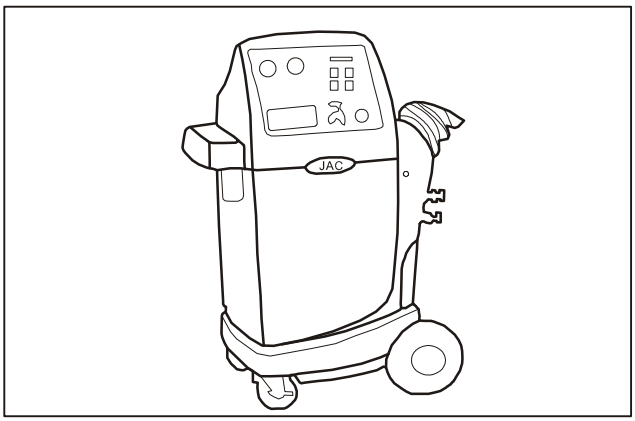

1. Recover refrigerant.

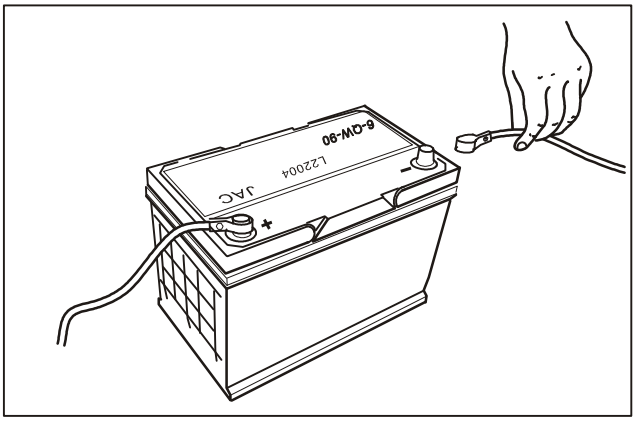

2. Disconnect negative cable of battery.

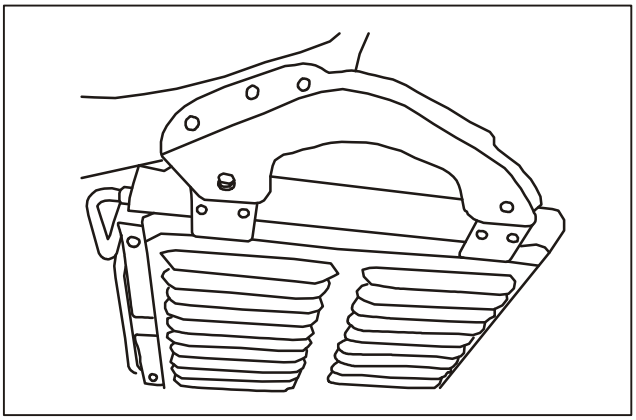

3. Remove mounting bolts and disconnect pipeline.

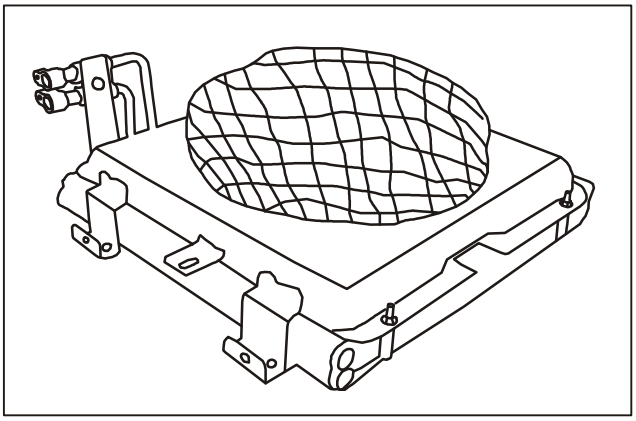

4. Remove bottom condenser assembly.

Downloaded from www.Manualslib.com manuals search engine

Removal/Installation

Removal of heater water tank

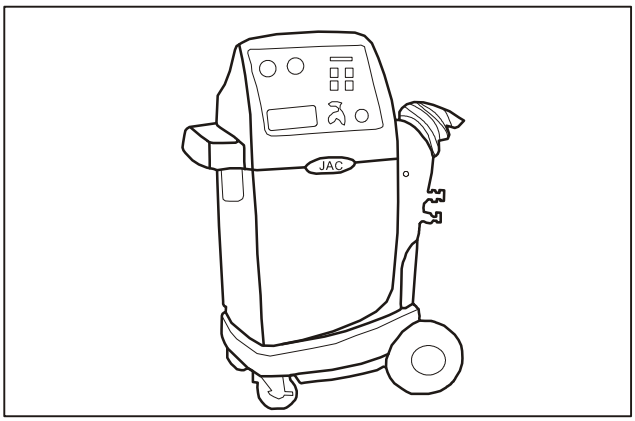

1. Recover refrigerant.

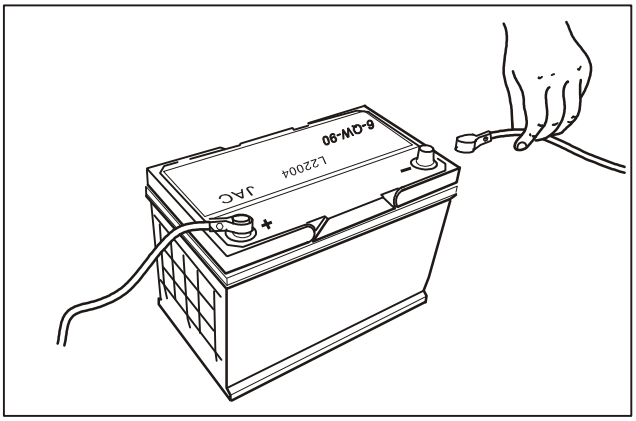

2. Disconnect negative cable of battery.

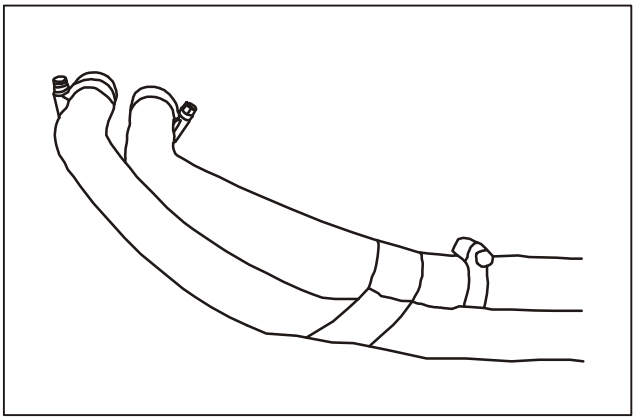

3. Remove connecting pipe of heater water tank.

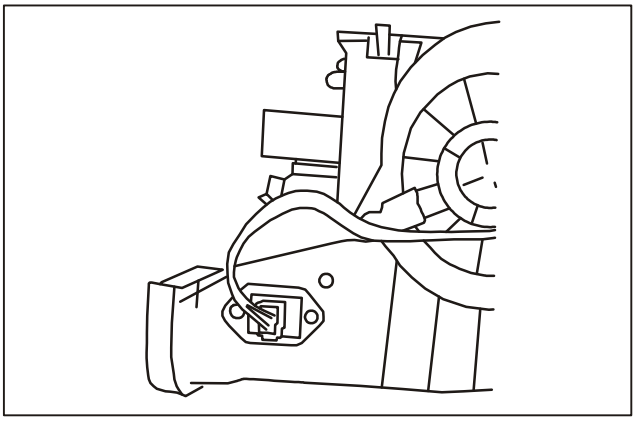

4. Disconnect the plug.

Downloaded from www.Manualslib.com manuals search engine

Removal/Installation

Removal of heater water tank

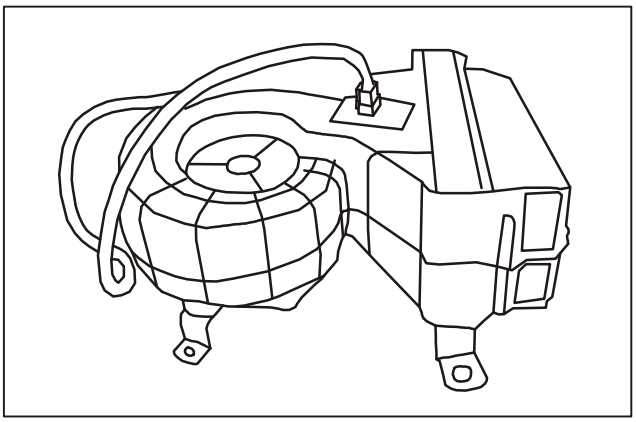

5. Remove mounting bolts from heater water tank.

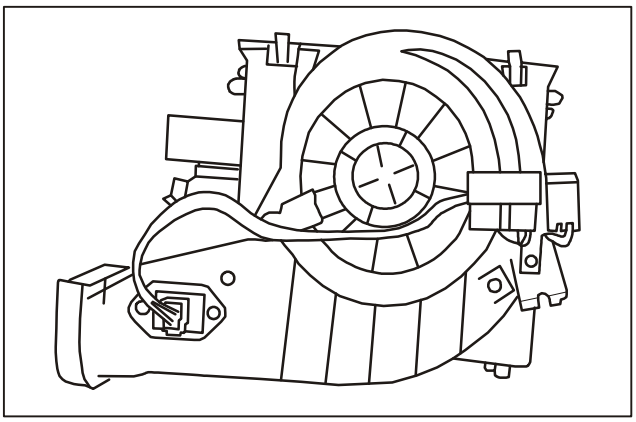

6. Remove heater water tank assembly.

Downloaded from www.Manualslib.com manuals search engine

Removal/Installation

Removal/installation of temperature control motor

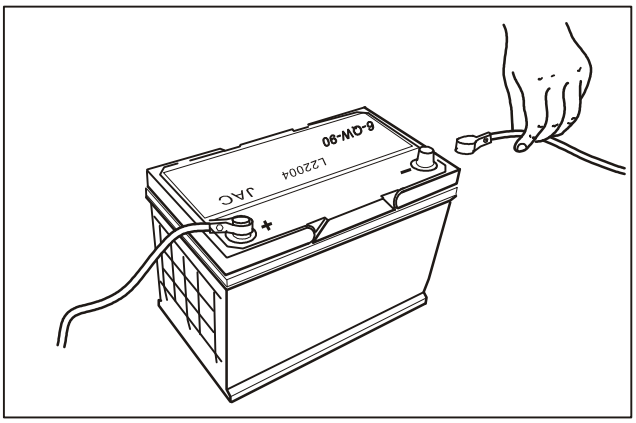

1. Disconnect negative cable of battery.

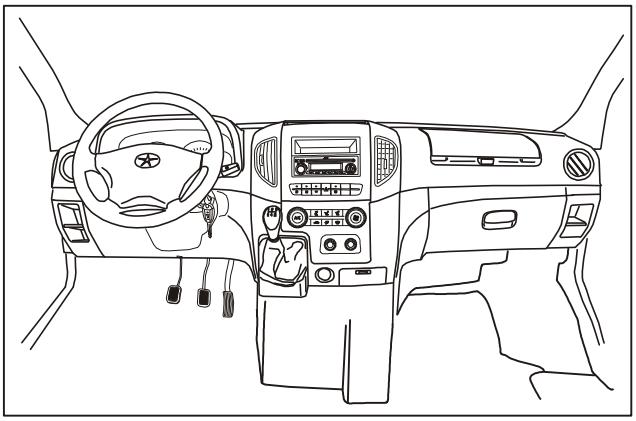

2. Remove instrument panel.

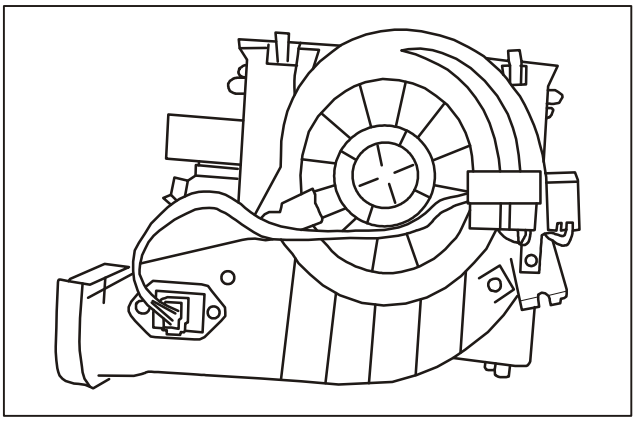

3. Disconnect harness connector and remove mounting screws from temperature control motor.

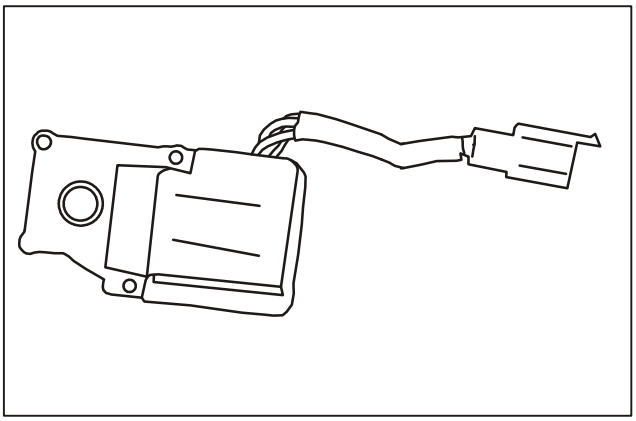

4. Take down the temperature control motor.

Downloaded from www.Manualslib.com manuals search engine

Removal/Installation

Removal/installation of mode damper motor

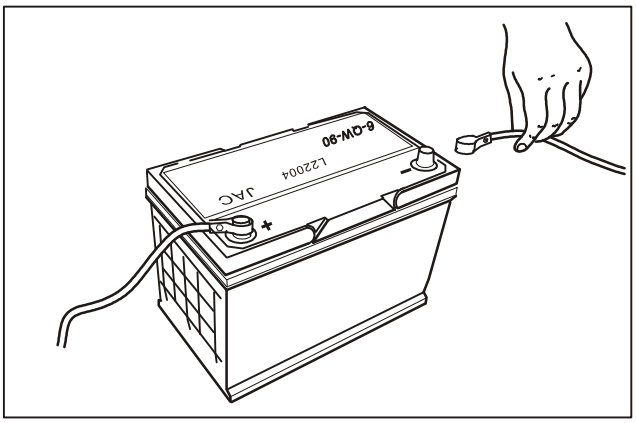

1. Disconnect negative cable of battery.

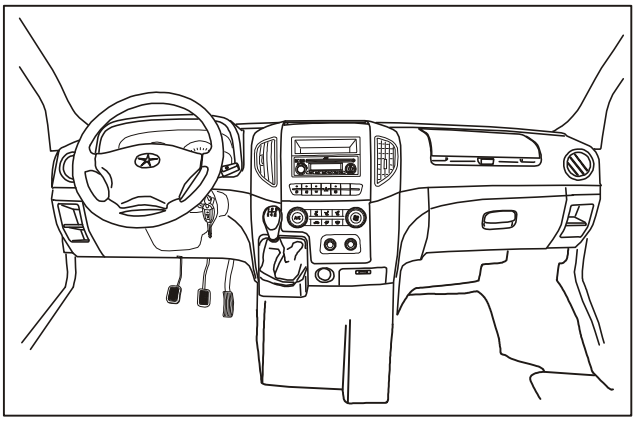

2. Remove instrument panel.

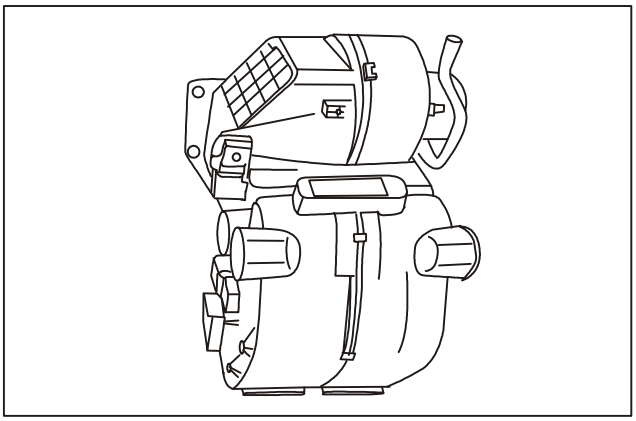

3. Disconnect harness connector and connections and remove mounting screws from mode damper motor.

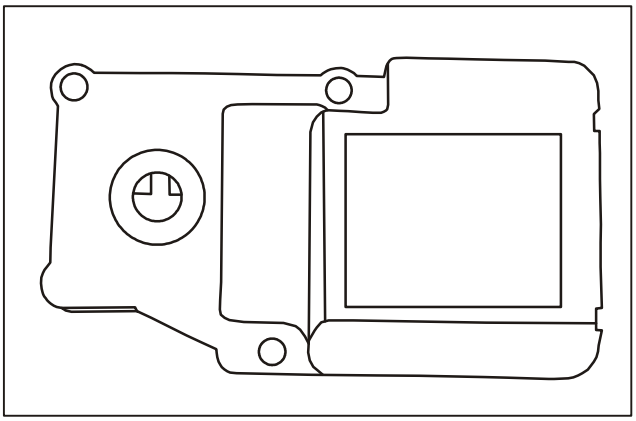

4. Remove the mode damper motor.

Downloaded from www.Manualslib.com manuals search engine

Removal/Installation

Removal/installation of speed governing module

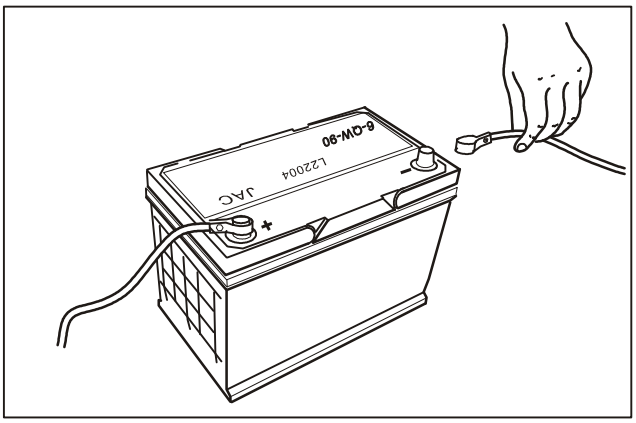

1. Disconnect negative cable of battery.

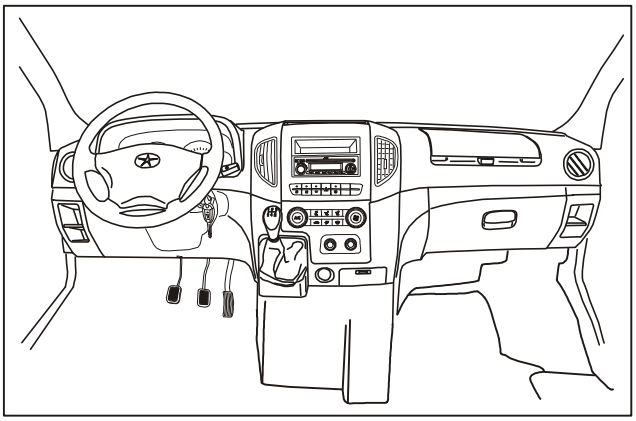

2. Remove instrument panel.

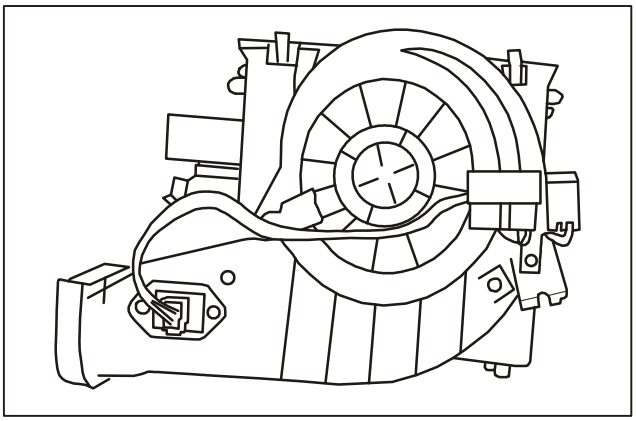

3. Disconnect the harness connector of speed governing module and remove mounting screws.

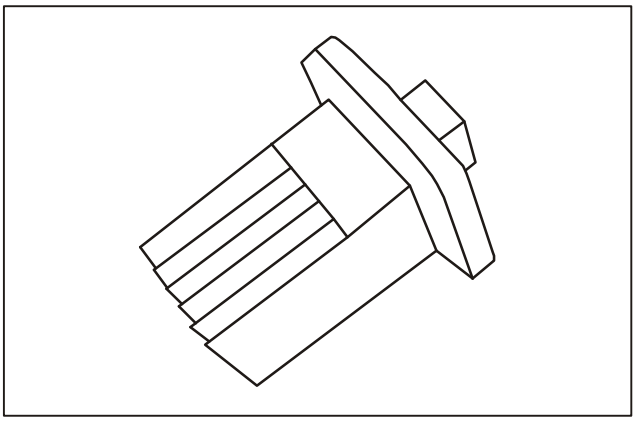

4. Remove the speed governing module.

Downloaded from www.Manualslib.com manuals search engine

Removal/Installation

Removal/installation of internal/external air damper motor

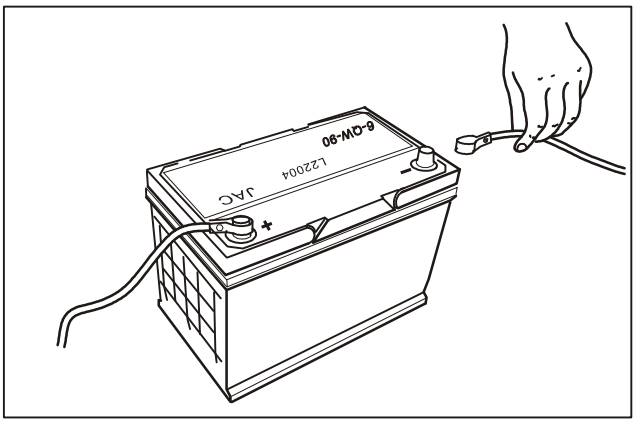

1. Disconnect negative cable of battery.

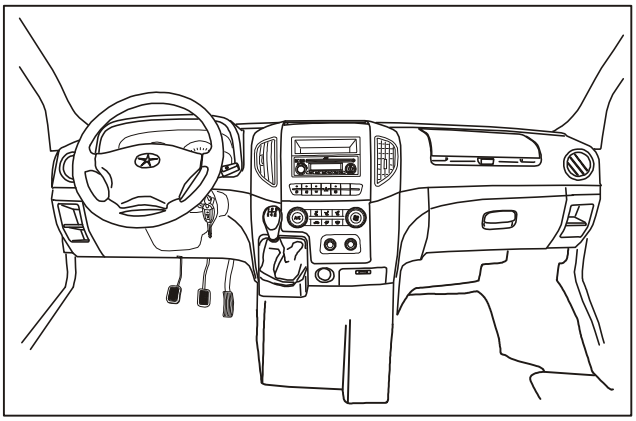

2. Remove instrument panel.

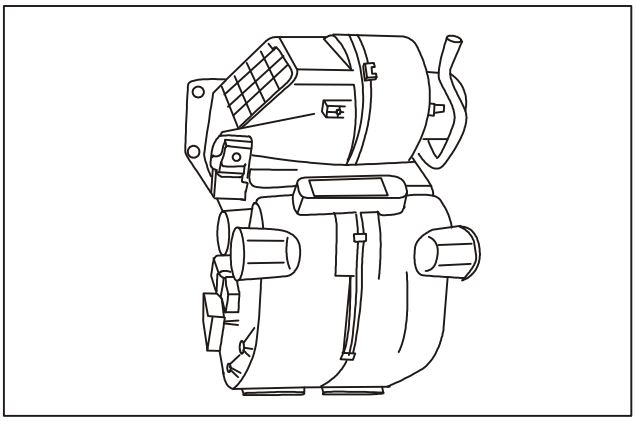

3. Disconnect harness connector and remove mounting screws from internal/external air damper motor.

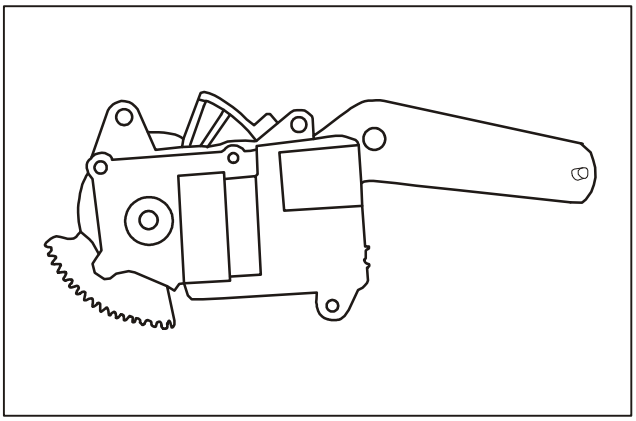

4. Take down the internal/external air damper motor.

Downloaded from www.Manualslib.com manuals search engine

Removal/Installation

Removal/installation of compressor assembly

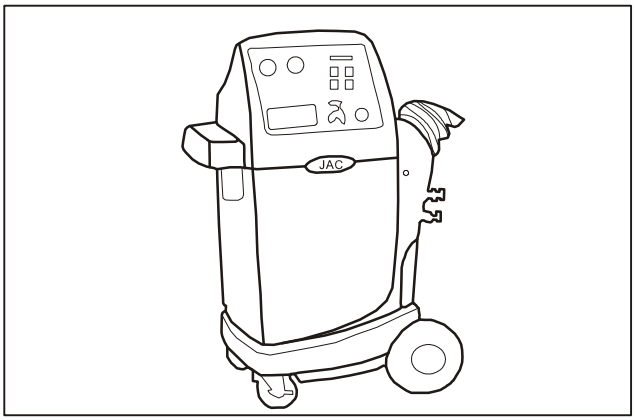

1. Recover refrigerant.

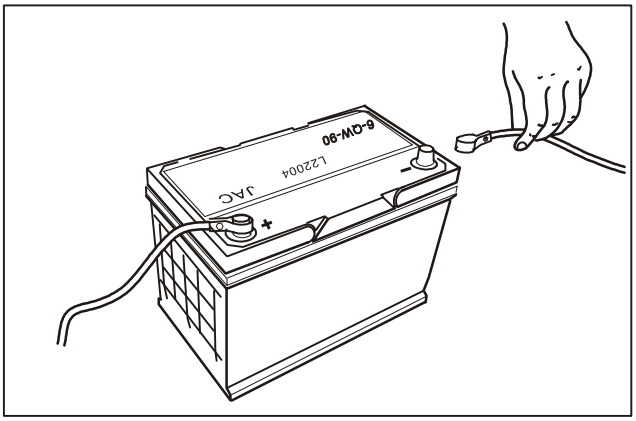

2. Disconnect negative cable of battery.

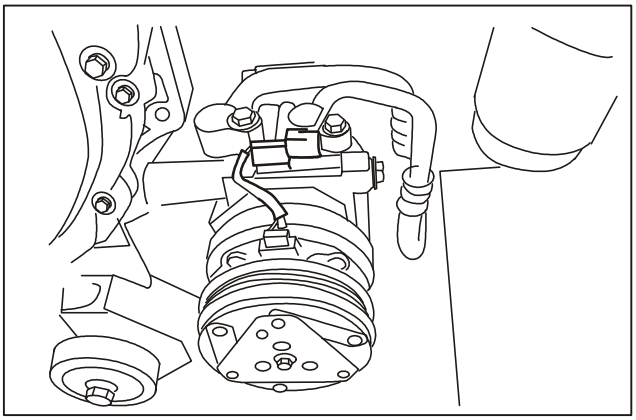

3. Disconnect A/C clutch switch harness.

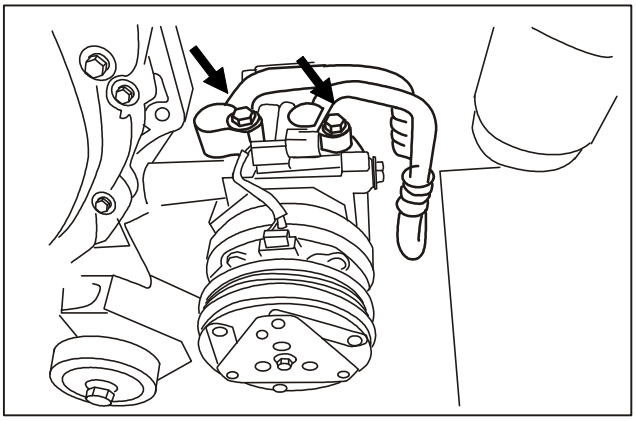

4. Unscrew mounting bolts from pipeline and make high and low pressure pipes separated.

Downloaded from www.Manualslib.com manuals search engine

Removal/Installation

Removal/installation of compressor assembly

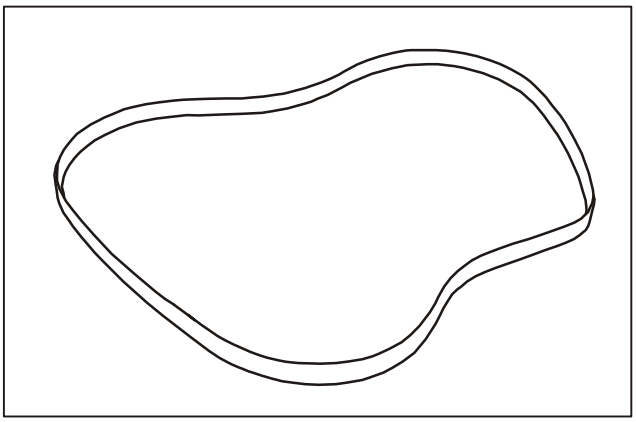

5. Loosen mounting nuts from tension pulley, unscrew adjusting bolt for tension pulley and remove the compressor drive belt.

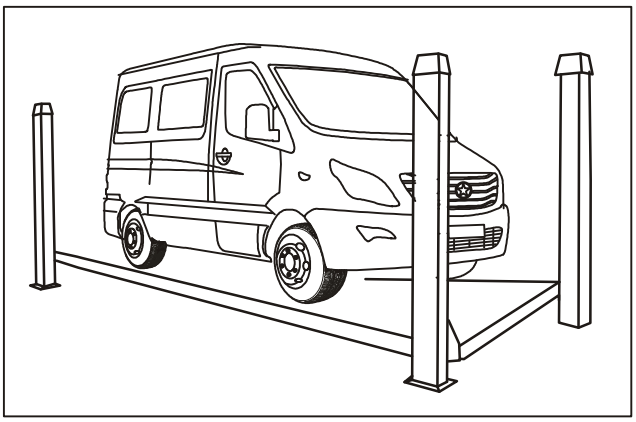

6. Lift the vehicle.

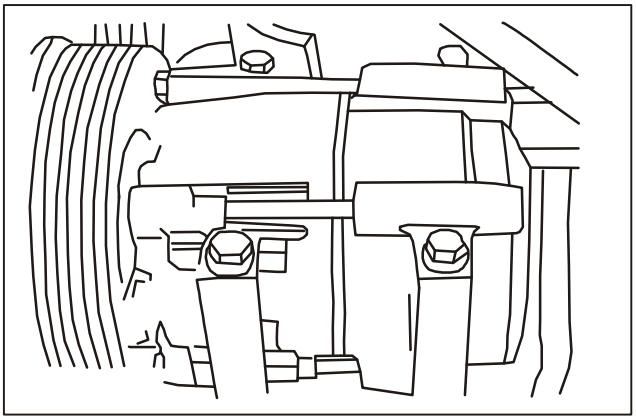

7. Remove mounting bolts from compressor.

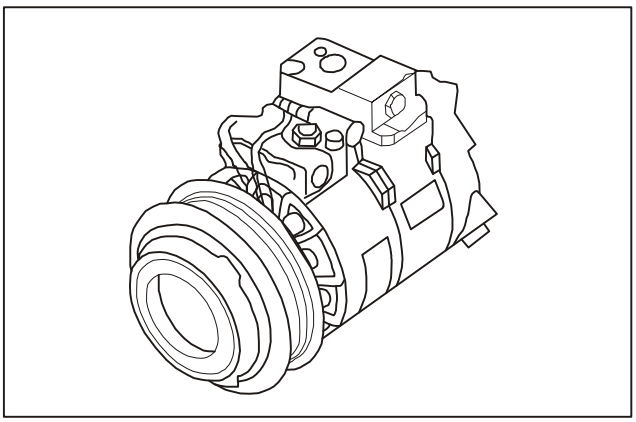

8. Remove the compressor from vehicle bottom.

Downloaded from www.Manualslib.com manuals search engine

Removal/Installation

Installation of compressor assembly

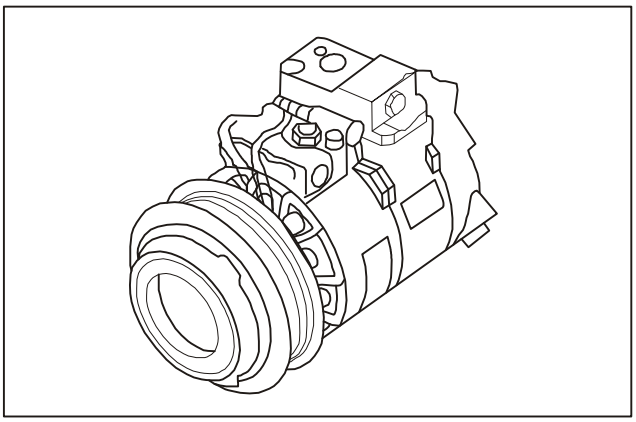

1. Refill compressor with compressor oil and tighten the oil filler bolt.

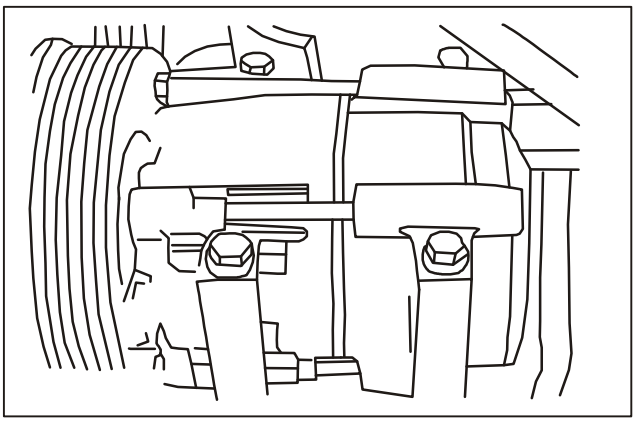

2. Install the compressor onto vehicle in reverse order of removal.

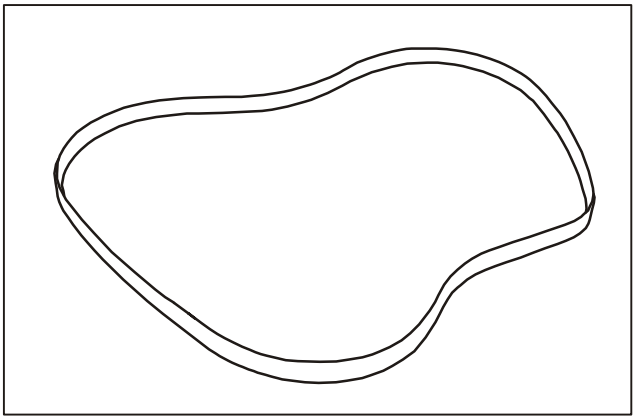

3. Adjust belt tension after installation.

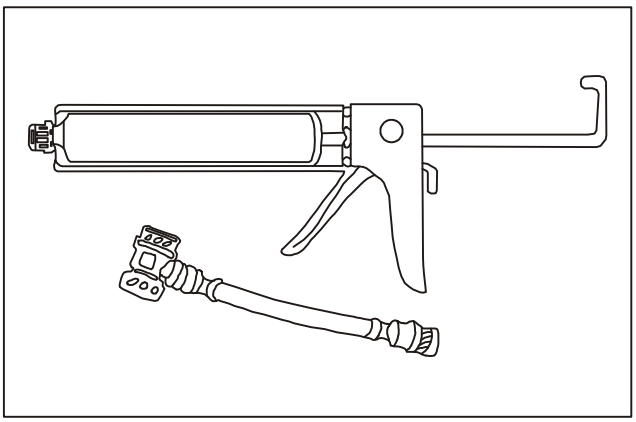

4. Check pipeline for leak after replenishment of refrigerant.

Downloaded from www.Manualslib.com manuals search engine

Removal/Installation

Removal of front A/C control panel

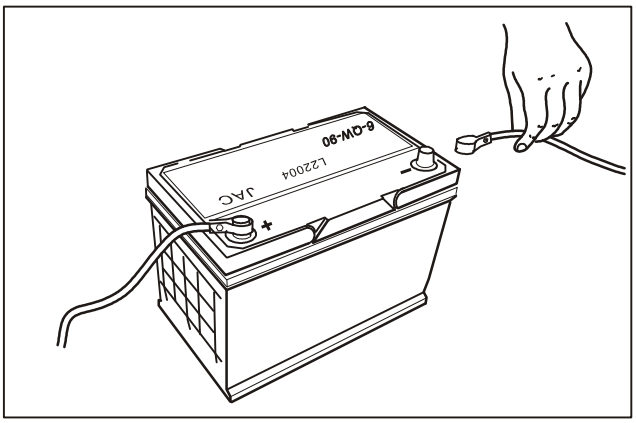

1. Disconnect negative cable of battery.

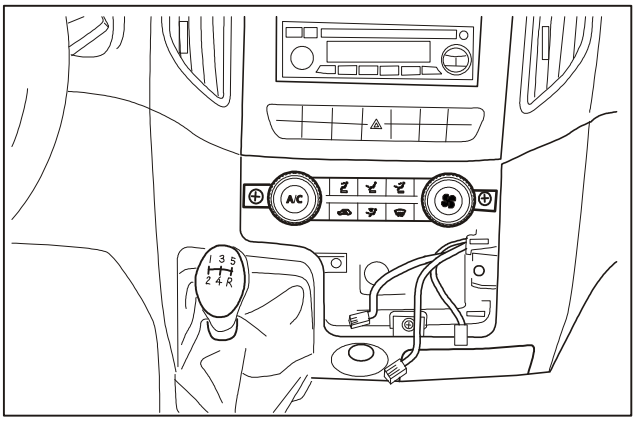

2. Remove outer cover plate of A/C control panel.

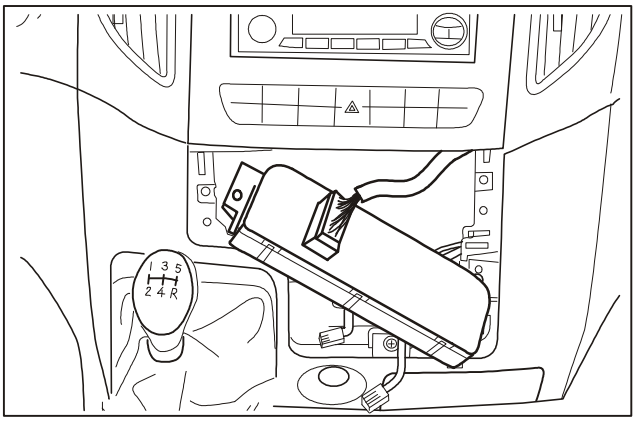

3. Remove mounting bolts from A/C control panel and disconnect harness.

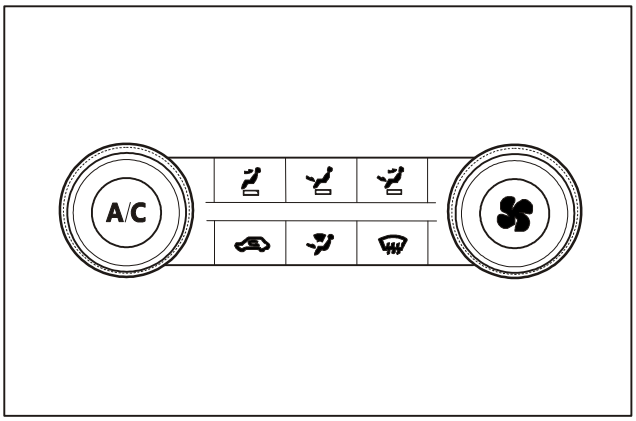

4. Remove the A/C control panel.

Downloaded from www.Manualslib.com manuals search engine

Removal/Installation

Removal of front A/C control panel

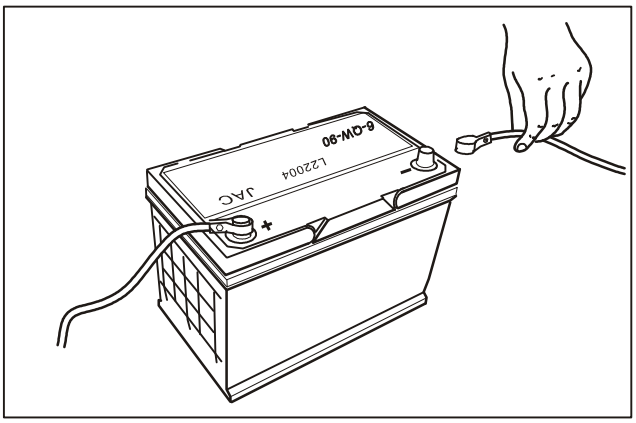

1. Disconnect negative cable of battery.

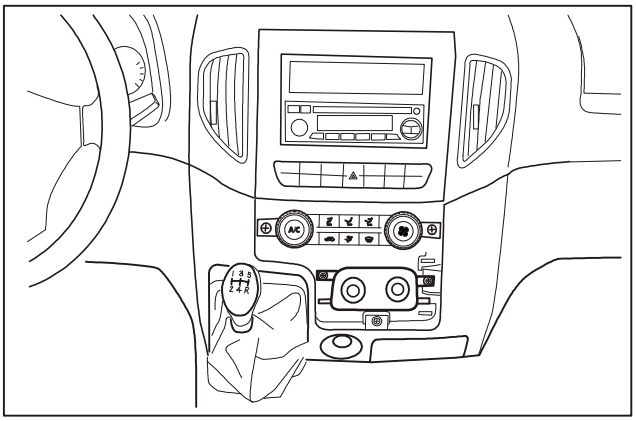

2. Remove outer cover plate of A/C control panel.

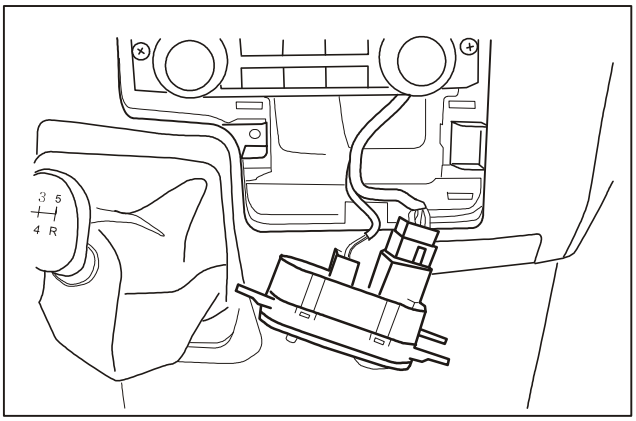

3. Remove mounting bolts from A/C control panel and disconnect harness.

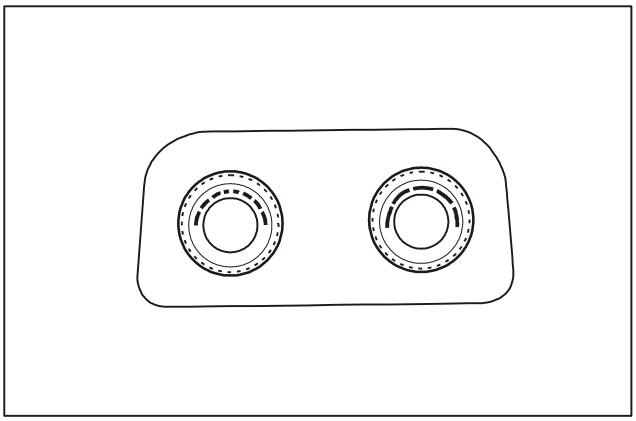

4. Remove the A/C control panel.

Downloaded from www.Manualslib.com manuals search engine

Specification

Basic parameters

Name	Item	Parameter	
A/C compressor	Type:	10-cyliner swash-plate compressor	
	Air displacement: ml/r	210ml/r	
	Lubricating oil grade:	PAG	
	Lubricating oil volume: g	400±15g	
	Electromagnetic clutch:	Four-groove disc clutch of 110mm diameter.	
Air heater:		Front heater assembly	Rear heater assembly
	Type:	All-aluminum welding heater	
	Power:	4000W	4500W
Blower:		Front A/C blower	Rear A/C blower (2)
	Operating voltage:	DC 12 V	DC 12 V
	Operating current:	18.3 A	12 A
Refrigerating device:		Front A/C	Rear A/C
	Type:	Laminated evaporator	Dual parallel flow-type evaporator
	Evaporator power:	＞4500 W	＞5000W
Condenser		Front condenser assembly	Rear condenser assembly
	Type:	Aluminum parallel flow type	Aluminum parallel flow type
	Power:	12000 W	12000 W
Fluid reservoir	Model and capacity	400 ml R134a	
Refrigerant:	Model and filling amount	R134a, 1550 g	

Downloaded from www.Manualslib.com manuals search engine

Downloaded from www.Manualslib.com manuals search engine

Circuit Diagram

Applied models: SUNRAY products manufactured by JAC

Subject Page

Diagram specification..... 210

Circuit Diagram..... 218
Interior fuse box..... 218
Exterior fuse box..... 219
Start charging system..... 220
Engine ECU electronic control unit..... 222
Horn..... 217
ABS system..... 228
Airbag system..... 229
Reversing system..... 230
Electric rear view mirror..... 231
Audio system..... 231
Cigarette lighter and fuel heater..... 233
Rear ceiling lamp and front fog lamp..... 234
Rear fog lamp..... 235
High beam and low beam..... 236
Turn signal lamp and hazard warning lamp..... 237
Small lamp..... 238
Central control..... 239
Wiper and washer..... 240
Power window..... 241
Front A/C system..... 242
Rear A/C system..... 243
ETACS..... 244
Instrument..... 247
Self diagnosis..... 250

Harness layout..... 251
Main harness..... 251
Engine compartment harness..... 252
Left front door harness..... 255
Right front door harness..... 256
Left tail lamp harness..... 257
Right tail lamp harness..... 258
Left back door harness..... 259
Rear loud speaker harness..... 260
ABS harness..... 261
Fuel tank harness..... 262
Reversing radar harness..... 263

Downloaded from www.Manualslib.com manuals search engine

EC Circuit Diagram

Instruction

This chapter consists of two parts as circuit diagram and harness layout drawing.

Circuit Diagram

Start to understand every system form understanding its circuit diagram for circuit diagram indicates all operating paths of every component. For example, it indicates power supply and negative ground of electric load, position of wire connector and relative fuse, switch, etc. consist of circuit. For trouble diagnosis and troubleshooting, the full understanding of circuit diagram is necessary.

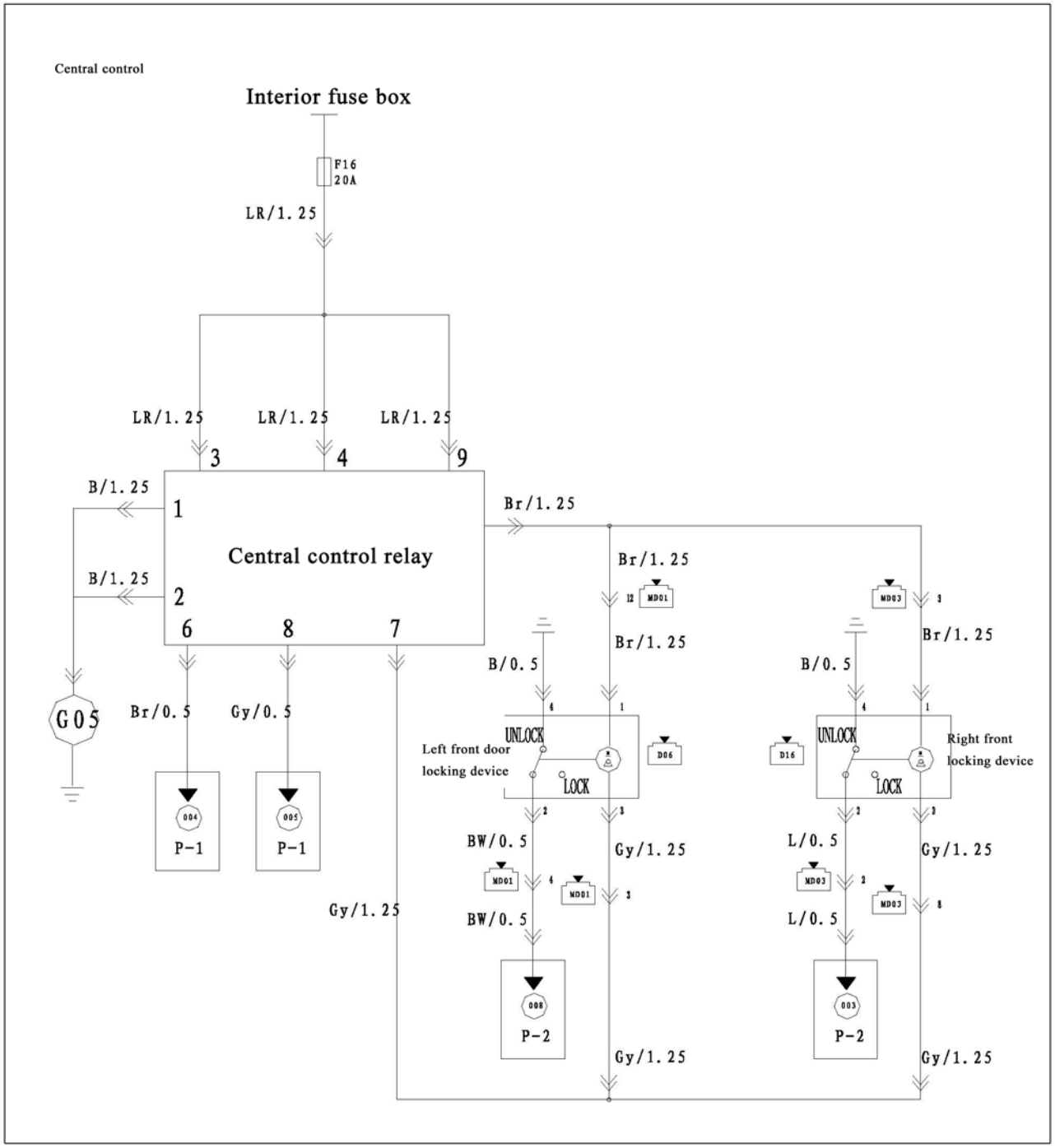

Downloaded from www.Manualslib.com manuals search engine

Harness layout drawing

Mounting and fixed position of main harness and wire connector and route of main harness are indicated in this part. With the help of these harness layout drawings, circuit repair would become easier.

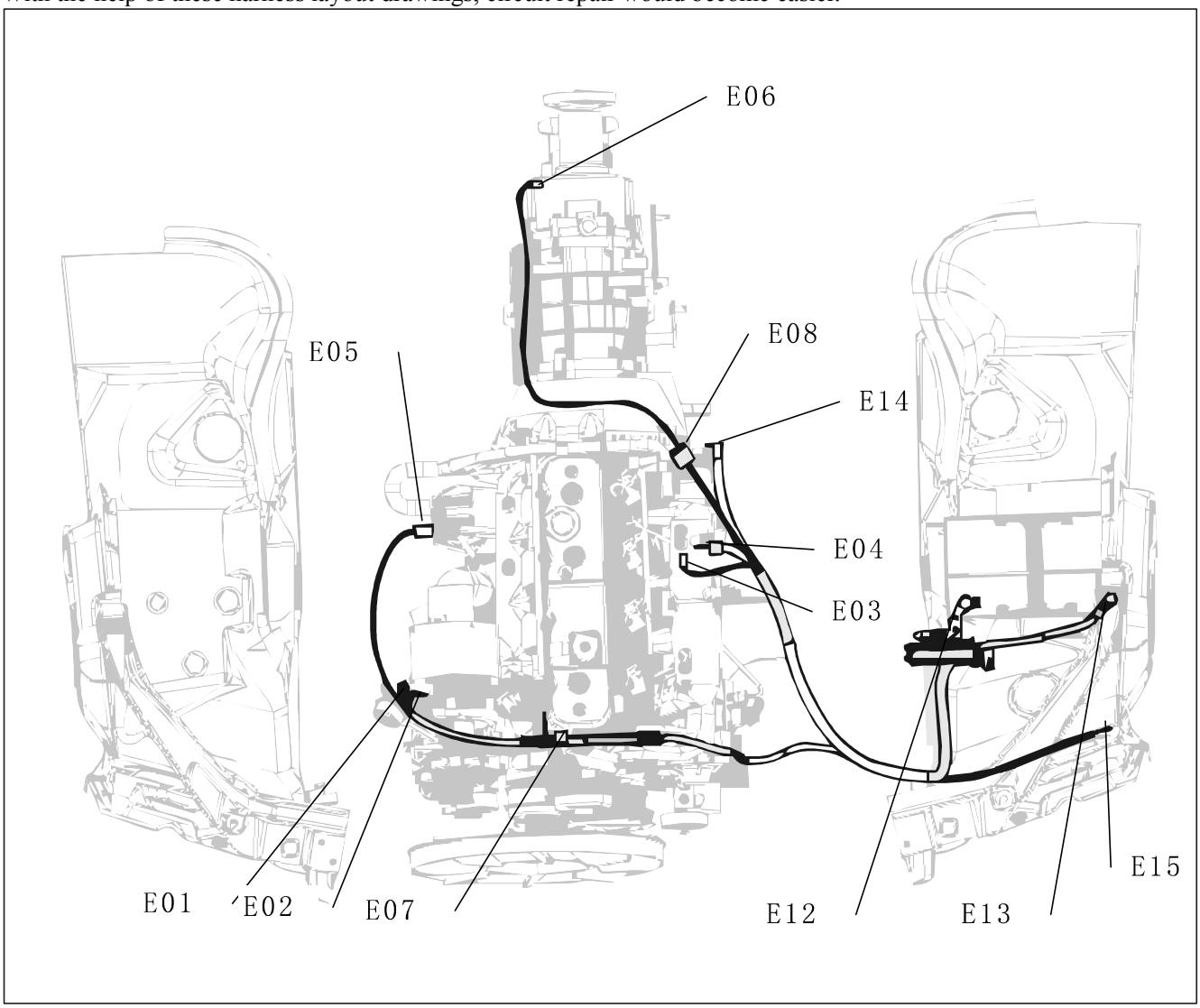

Downloaded from www.Manualslib.com manuals search engine

Notation

The following electrical notations, electrical symbols and abbreviations are adopted in this manual.

Notation of circuit diagram

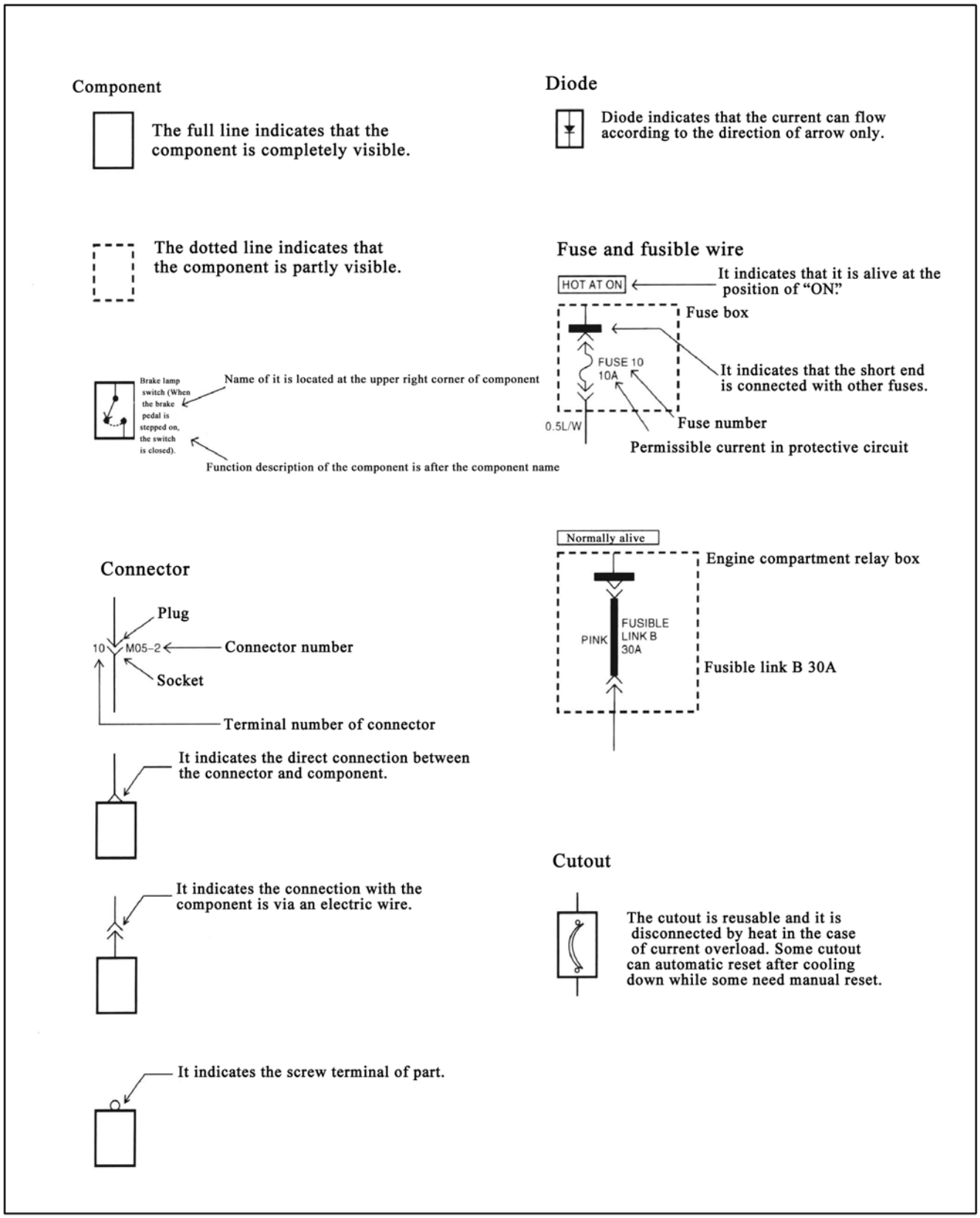

Downloaded from www.Manualslib.com manuals search engine

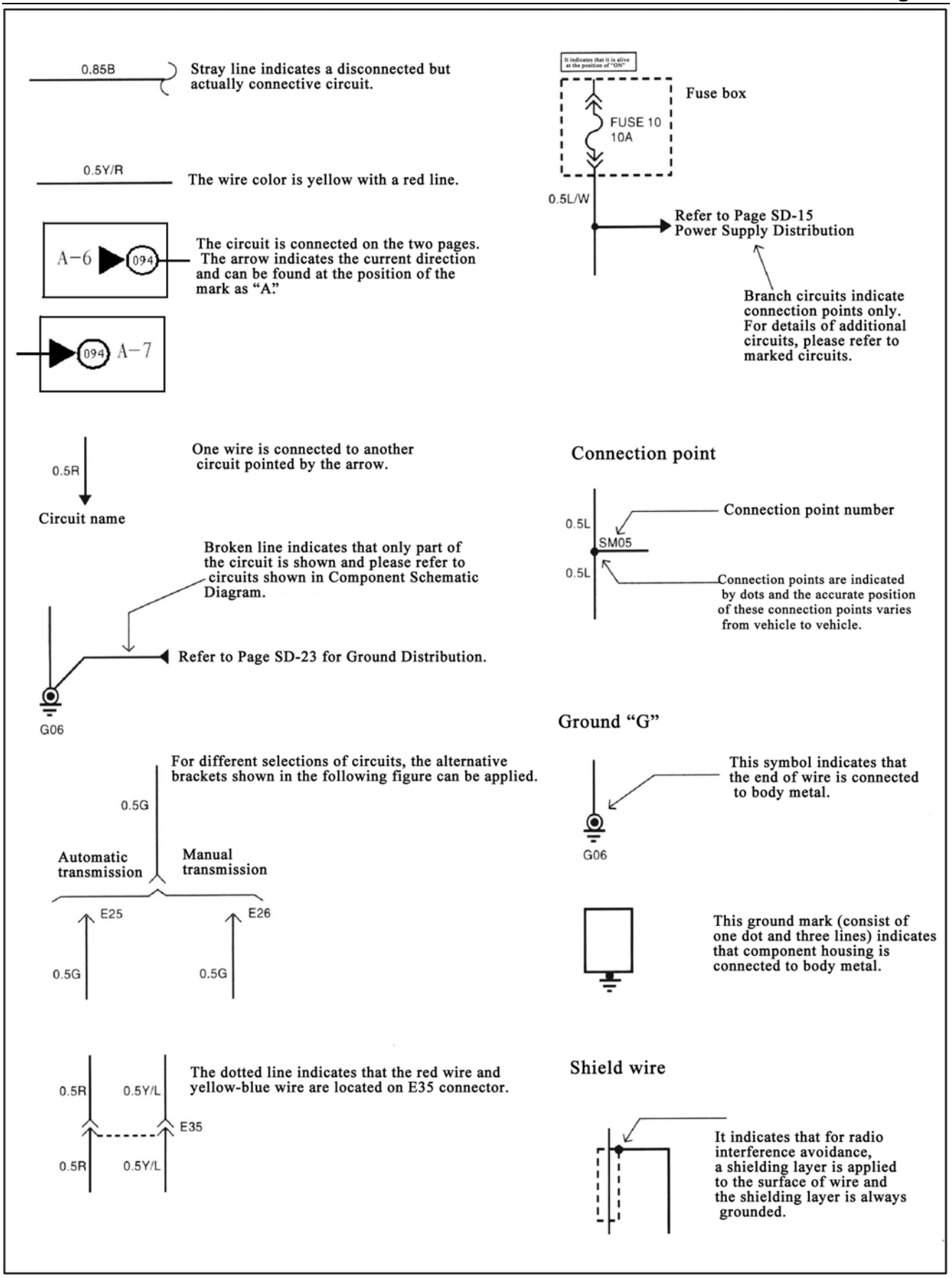

Downloaded from www.Manualslib.com manuals search engine

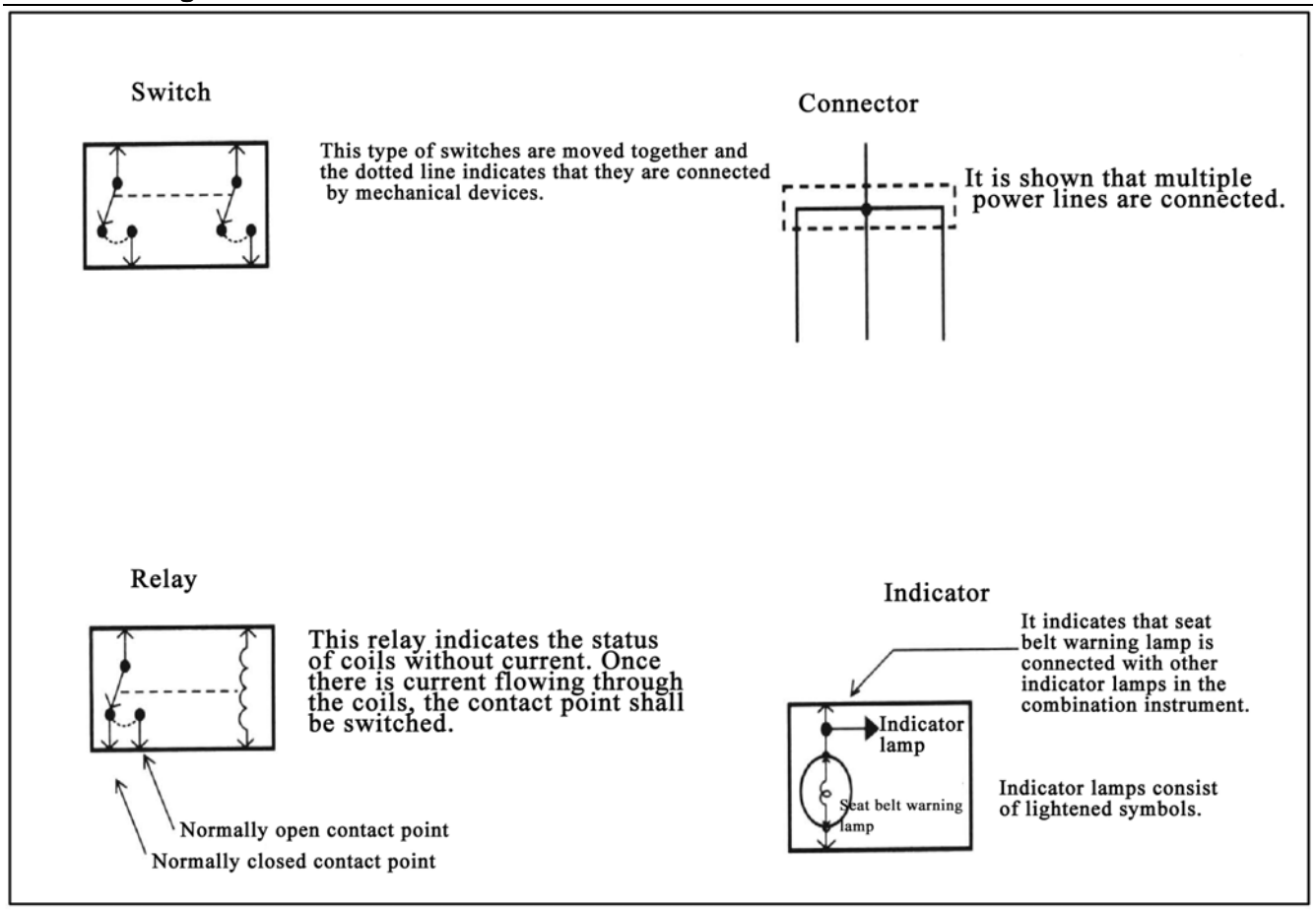

Downloaded from www.Manualslib.com manuals search engine

Wire color description

Wire color	Code	Wire color	Code
Black	B	Orange	O
Blue	L	Pink	P
Brown	Br	Red	R
Green	G	Violet	V
Gray	Gr	Yellow	Y
Light green	Lg	White	W

Identification of wire connector codes

Wire connector identification code consists of harness position identification code and wire connector identification code. For example:

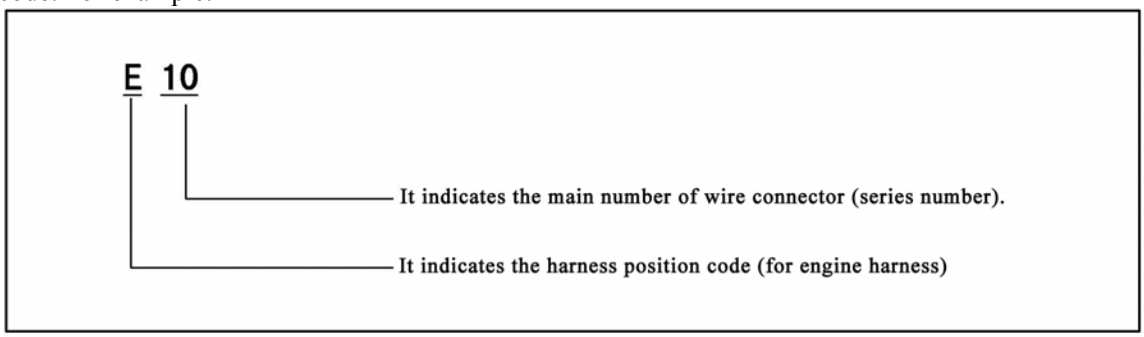

Notice:

Wire connectors between harnesses are expressed by following codes. For example:

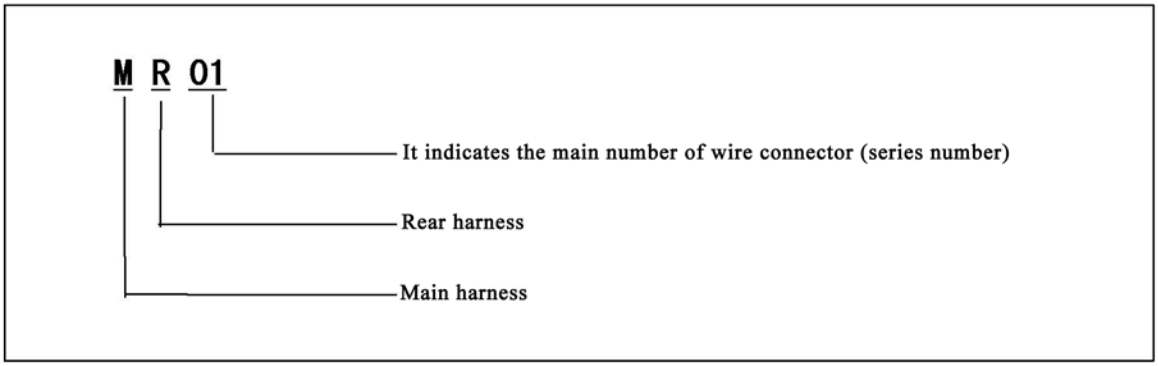

Identification of relays

Relay identification code consists of relay abbreviation and its main number (series number). For example:

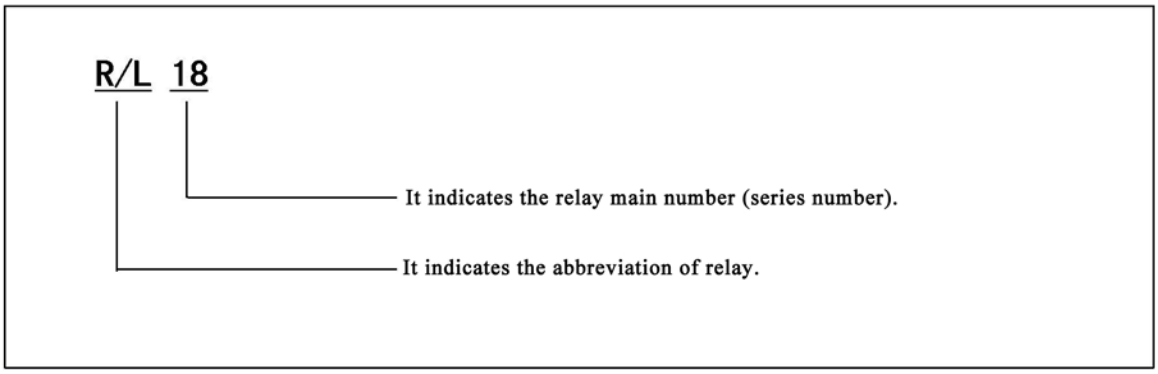

Downloaded from www.Manualslib.com manuals search engine

EC Circuit Diagram

Electrical symbols of circuit diagram

Electrical symbol	Symbol description
Battery	• It generates current via chemical action • It supplies current to circuits directly
Harness ground point	• It is connected to body ground point via harness to connect current with battery negative terminal and from a circuit
Slow blow fuse	• When the current exceeds the rated one, fusible wire is blown and the current is cut off. • Warning: In fuse replacement, the current of fuse should not exceed rated current Slow blow fuse Plate fuse
Plate fuse	
Lighting	• When the current is flowing through filament, light and heat is generated
Resistance	• It is mainly used in series circuit to protect electrical appliance with rated voltage
Motor	• It converts electric energy to mechanical energy
Pump	• It sucks or discharges gas or liquid via the work of motor.

	Symbol description
Electrical heating	• It generates heat via current
Cigarette lighter	• It generates heat via current and can be used as vehicle power supply
Vehicle power supply	• It distributes power for off-board electrical appliances which are in accordance with rated voltages
Horn	• It makes a sound via current
Loud speaker	
Switch	• It allows or stops the existing current by opening or closing circuit
Diode	• Diode, allows current to flow in only one direction
Light-emitting diode (LED)	• When current flows through it, it is lightened • Different from general bulbs, when LED is lighten, there is no heat generation

Downloaded from www.Manualslib.com manuals search engine

Electrical symbol	Symbol description	Electrical symbol	Symbol description
Sensor (Thermistor type)	❍ Resistance value varies according to temperature changes.	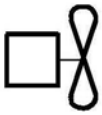 Fan	❍ It is used for engine heat dissipation.
Sensor (Sliding resistance type)	❍ Resistance value varies according to component positions.	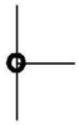 Circuit intraconnection	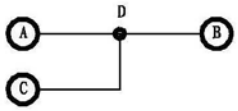 ❍ The above diagram indicates Circuit C-D is intraconnected to Circuit A-B.
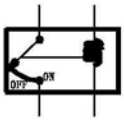 Normally open relay	❍ It generates magnetic force via coils, picks up electrical appliance contact points and let the current flowing through. There is no current flowing through the coils No current 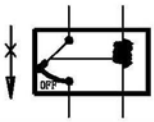 There is current flowing through the coils There is current 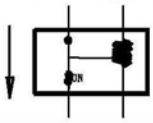		
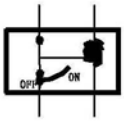 Normally closed relay	❍ It generates magnetic force via coils, picks up electrical appliance contact points and let the current flowing through. There is no current flowing through the coils There is current 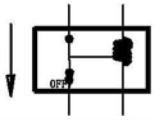 There is current flowing through the coils No current 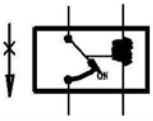		

Downloaded from www.Manualslib.com manuals search engine

Circuit Diagram-Power distribution system

Power distribution system-1 Interior fuse box M01

Interior fuse box

F19 10A	F20 10A	F21 40A	F22 10A	F23 15A	F24 15A	F25 10A	F26 25A	F27 10A	F28 10A	F29 10A	F30 10A	F31 10A	F32 10A	F33 15A	F34 10A	F35 10A	F36 15A
FDS					C	XII			XIII			XIV			D		E
VI			VII			VIII			IX			X			XI		
I			II			III			IV			V			A		B
F1 30A	F2 30A	F3	F4 30A	F5 20A	F6 10A	F7 15A	F8 10A	F9 10A	F10 30A	F11	F12 15A	F13 25A	F14 10A	F15 40A	F16 20A	F17 15A	F18 15A

FDS	Self diagnosis	F5	Radio CD-player	F28	Reversing lamp
C	Small lamp relay	F6	ETACS	F29	Instrument
XII	Starter relay	F7	Front fog lamp	F30	Airbag
XIII	Front A/C relay	F8	Turn signal lamp	F31	ABS
XIV	Rear A/C relay	F9	Instrument	F32	Vehicle speed sensor
D	Horn relay	F10	ECU	F33	Wiper and washer
E	Rear fog lamp relay	F11	Vacancy	F34	Rear fog lamp
VI	Front fog lamp relay	F12	Horn	F35	High and low beam coil end
VII	Central control lock relay	F13	ABS	F36	Cigarette lighter
VIII	Wiper intermittent relay	F14	Ceiling lamp		
IX	Compressor relay	F15	Front A/C		
X	ECU relay	F16	Door lock and small lamp		
XI	Condenser fan relay	F17	High beam		
II	Power window relay	F18	Low beam		
III	Heater relay	F19	Small lamp		
IV	Flasher relay	F20	Small lamp		
V	Warning lamp relay	F21	Rear A/C		
A	Low beam relay	F22	Compressor		
B	High beam relay	F23	ECU		
F1	Starter	F24	ECU		
F2	Condenser fan	F25	ECU		
F3	Vacancy	F26	Heater		
F4	Power window	F27	ACC		

Downloaded from www.Manualslib.com manuals search engine

Circuit Diagram-Power distribution system

Power distribution system-2 Exterior fuse box E12

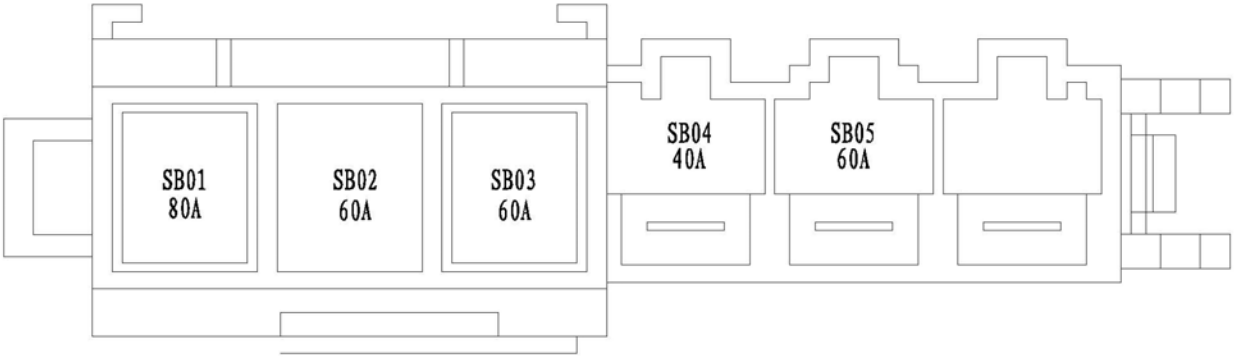

SB01	Constant power supply I
SB02	Constant power supply II
SB03	Constant power supply III
SB04	ABS power supply
SB05	Preheating module power supply

Downloaded from www.Manualslib.com manuals search engine

Circuit Diagram-Power distribution system

Start charging system

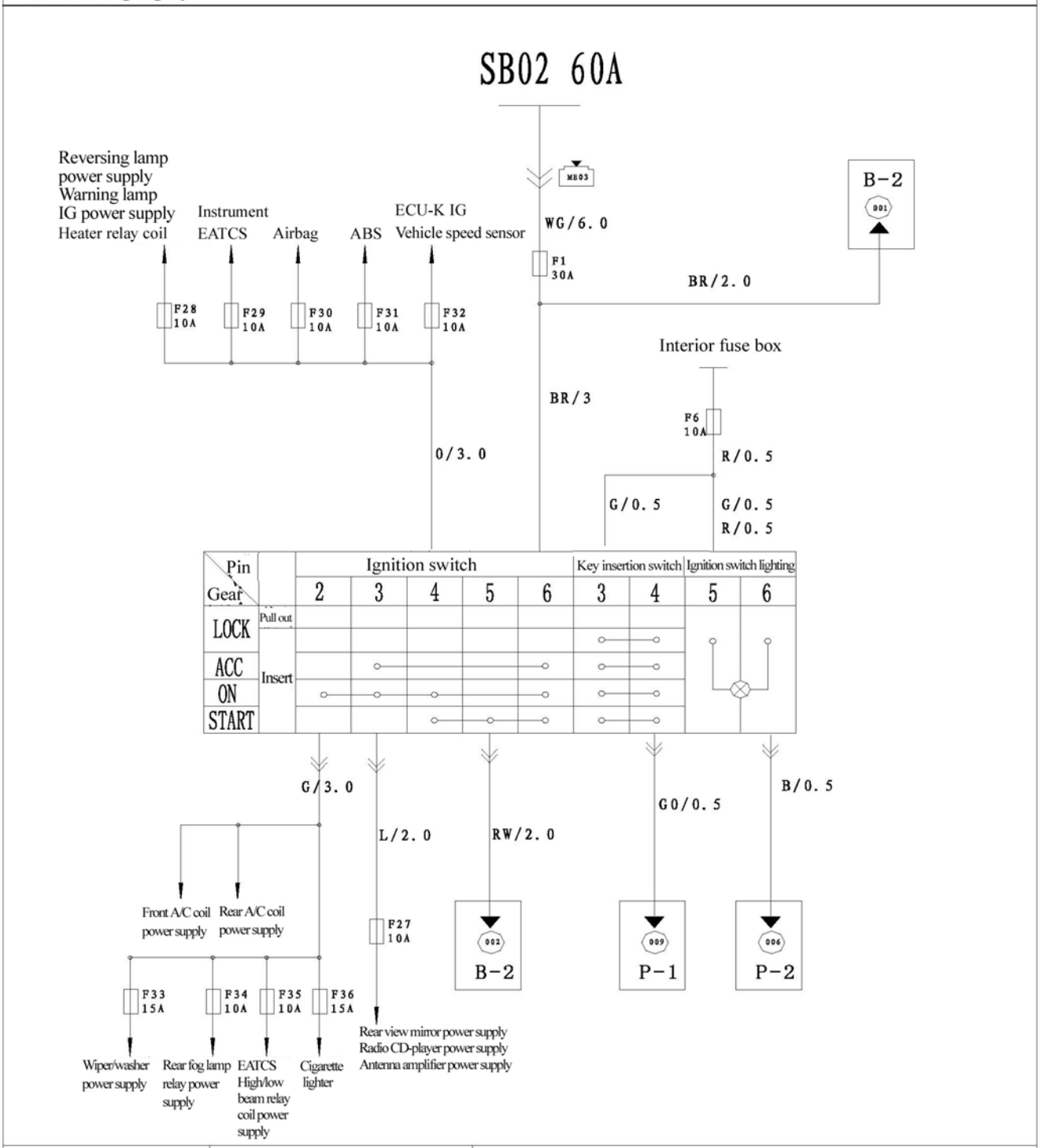

M18 ignition switch

3	2	1
6	5	4

M42 Key insertion lighting

2			1
6	5	4	3

Downloaded from www.Manualslib.com manuals search engine

Circuit Diagram-Power distribution system

Start charging system

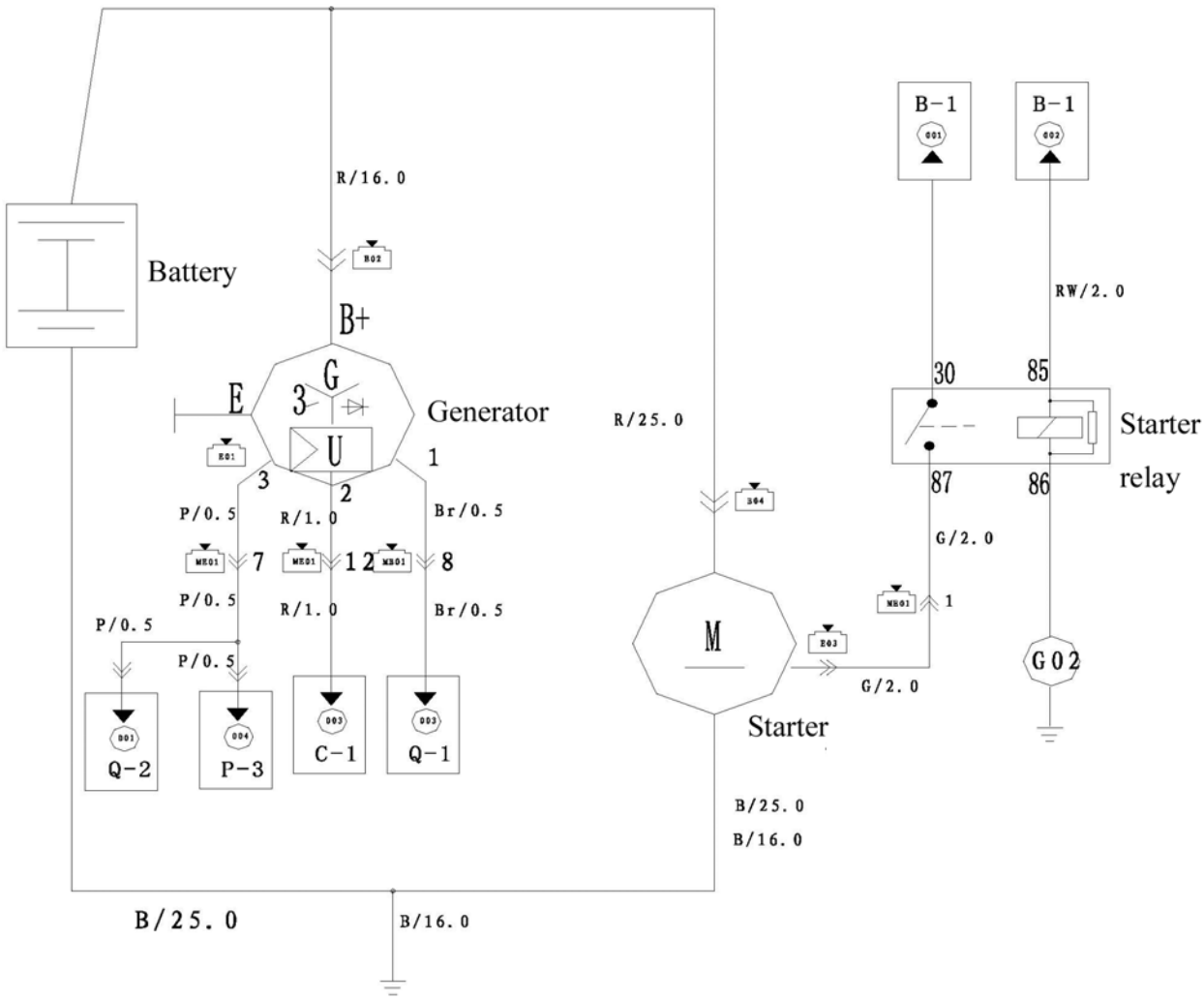

E01 Generator control

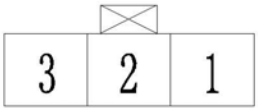

ME01 Engine harness is butt jointed with main harness

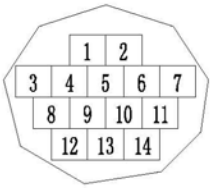

Downloaded from www.Manualslib.com manuals search engine

Circuit Diagram-Power distribution system

Engine ECU Electronic Control Unit

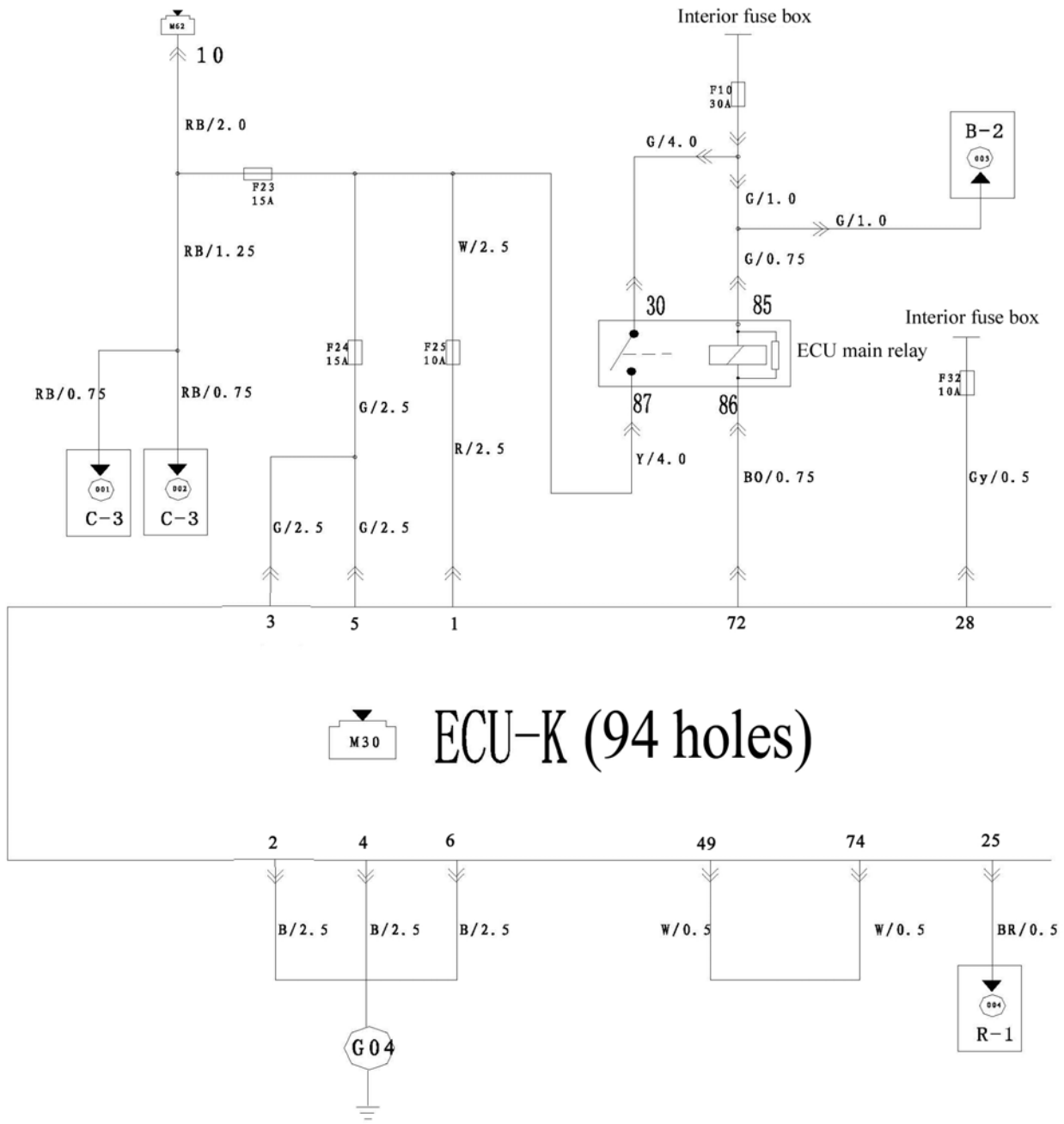

M62 Connected to short-circuit device 2

10	9	8	7	6	5	4	3	2	1
20	19	18	17	16	15	14	13	12	11

M30 ECU-K (94 holes)

1	2
3	4
5	6

7	8	9	10	11	12	13	14	15	16	17	18	19	20	21	22	23	24	25	26	27	28
29	30	31	32	33	34	35	36	37	38	39	40	41	42	43	44	45	46	47	48	49	50

51	52	53	54	55	56	57	58	59	60	61	62	63	64	65	66	67	68	69	70	71	72
73	74	75	76	77	78	79	80	81	82	83	84	85	86	87	88	89	90	91	92	93	94

Downloaded from www.Manualslib.com manuals search engine

Circuit Diagram-Power distribution system

Engine ECU Electronic Control Unit

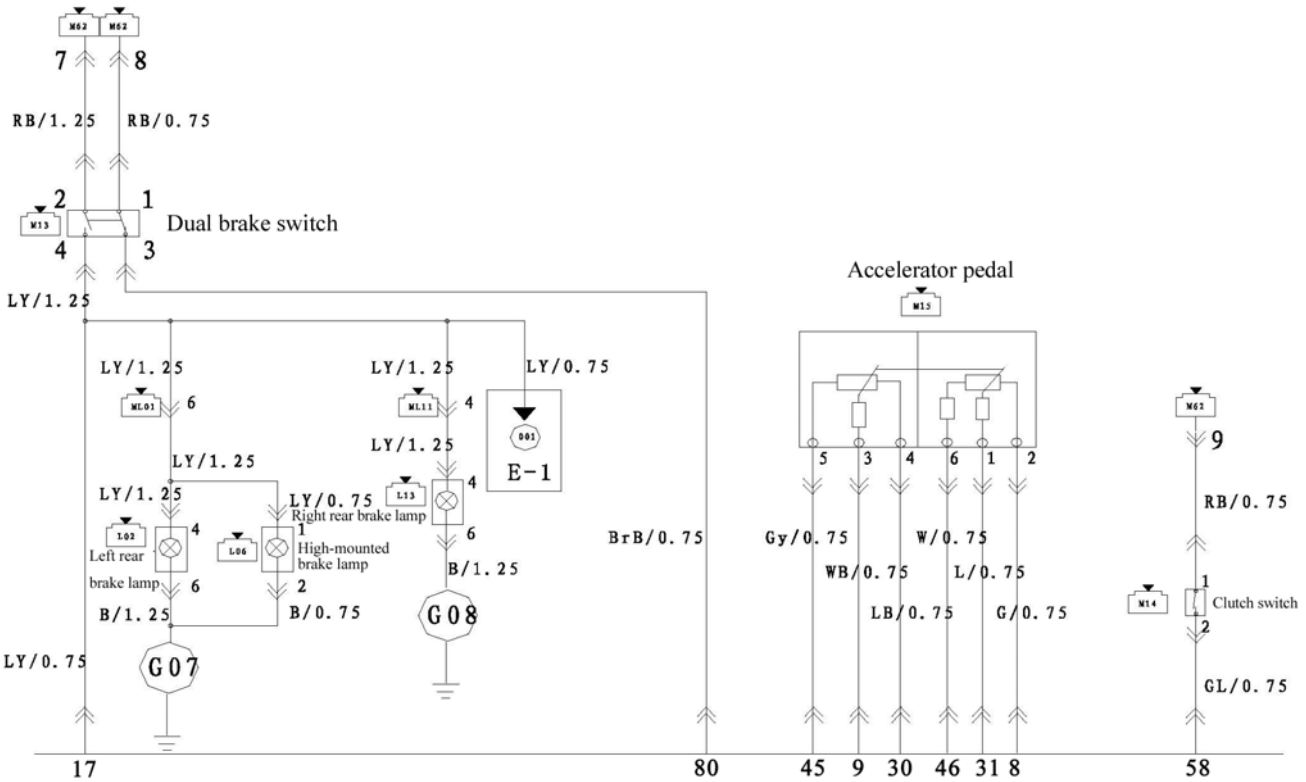

ECU-K (94 holes)

M15 Accelerator pedal	L02/L13 Left/right rear combination lamp	L06 High-mounted brake lamp	
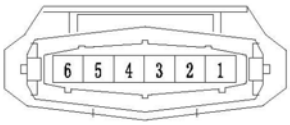	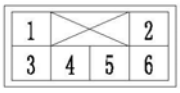	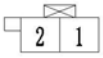	

M13 Dual brake switch	M14 Clutch switch	ML01 The main harness is butt jointed with harness of left tail lamp	ML11 The main harness is butt jointed with harness of right tail lamp
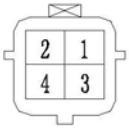			

Downloaded from www.Manualslib.com manuals search engine

Circuit Diagram-Power distribution system

Engine ECU Electronic Control Unit

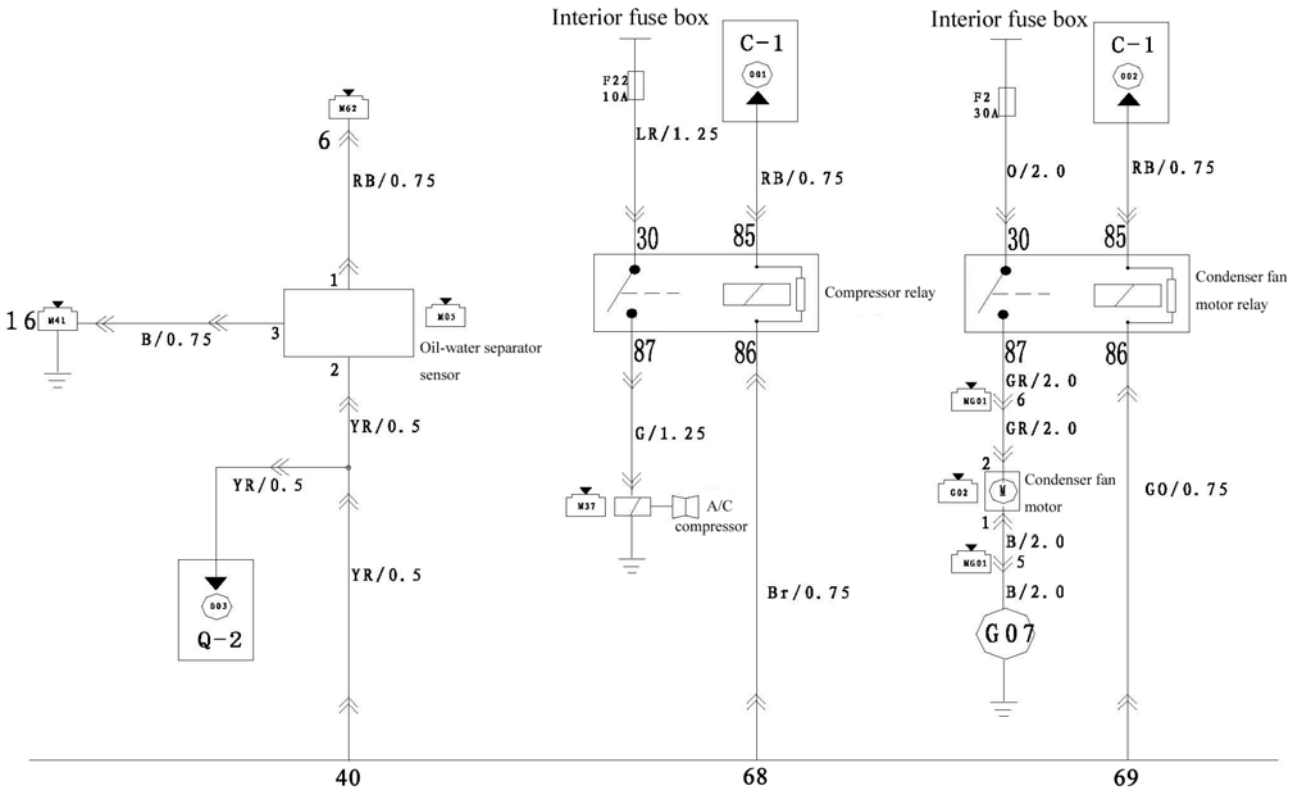

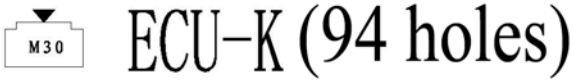

M41 Connected to short-circuit device 1 (ground wire)	M37 Compressor	MG01 Main harness is butt jointed with fuel tank harness	G02 Condenser fan motor
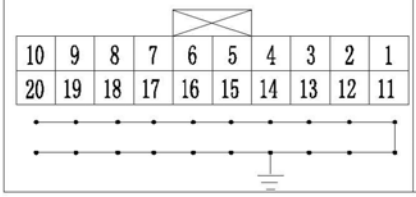		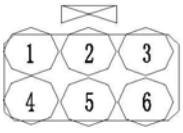	

Downloaded from www.Manualslib.com manuals search engine

Circuit Diagram-Power distribution system

Engine ECU Electronic Control Unit

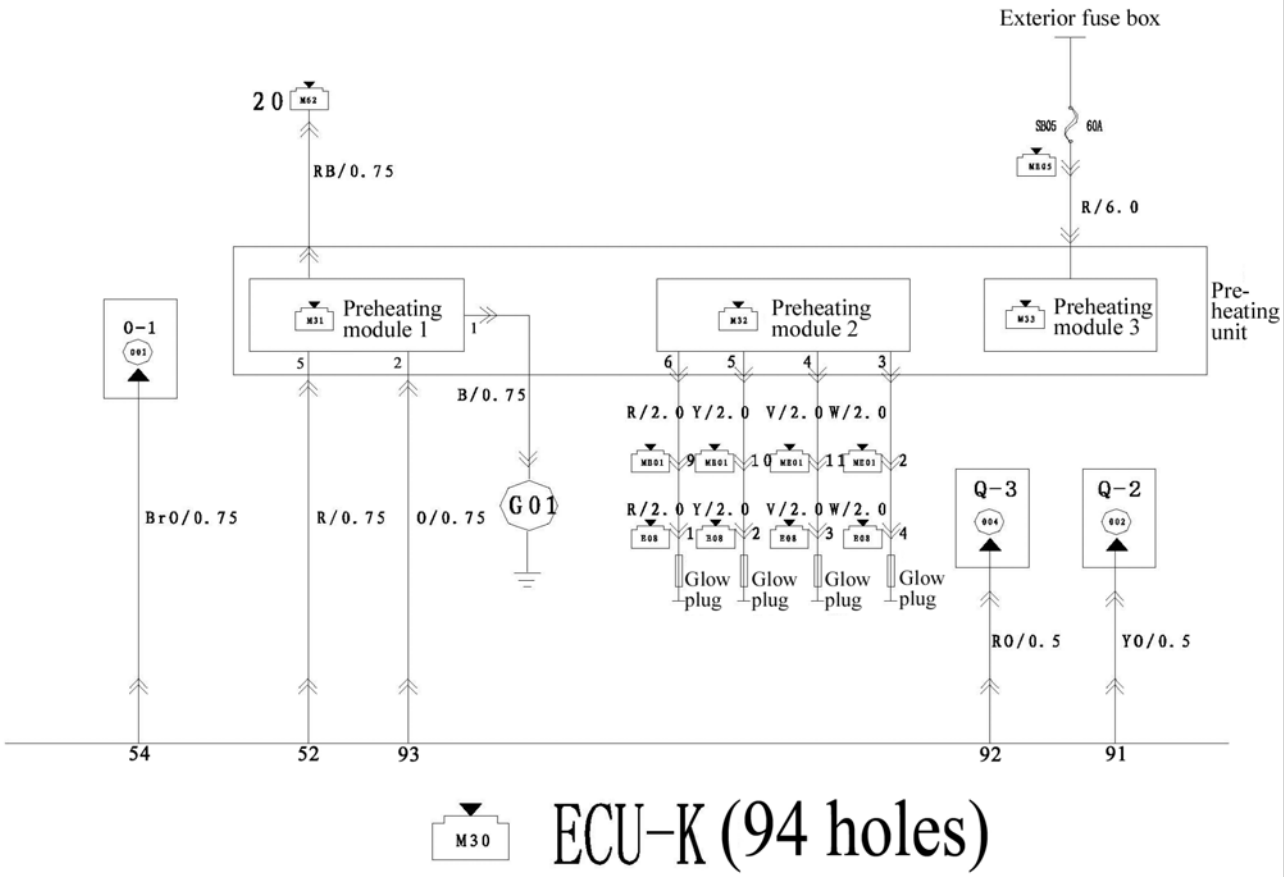

ME05 Fuse box in engine compartment is butt jointed with main harness (yellow) 	E08 Engine compartment harness is butt jointed with glow plug harness 		
ME01 Engine harness is butt jointed with main harness 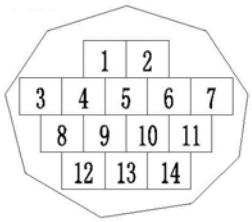 	M31 Preheating module 1 	M32 Preheating module 2 	M33 Preheating module 3 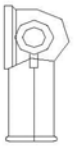

Downloaded from www.Manualslib.com manuals search engine

Circuit Diagram-Power distribution system

Engine ECU Electronic Control Unit

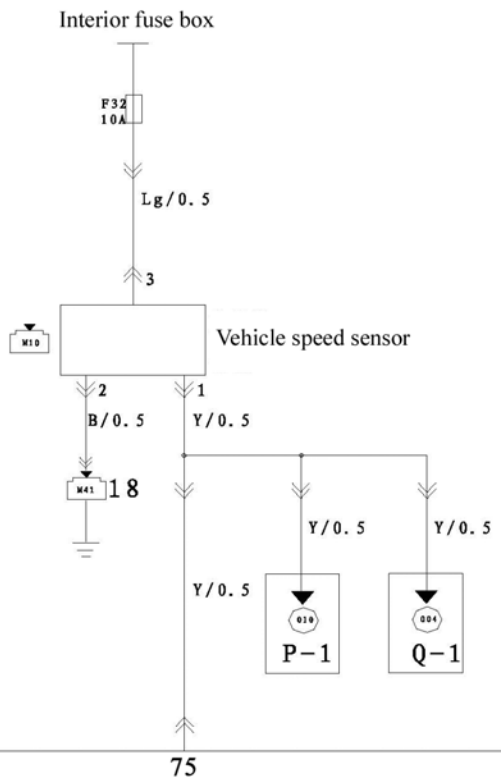

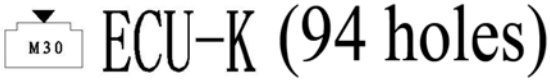

M10 Vehicle speed sensor

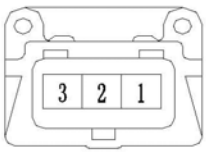

Downloaded from www.Manualslib.com manuals search engine

Circuit Diagram-Power distribution system

Horn

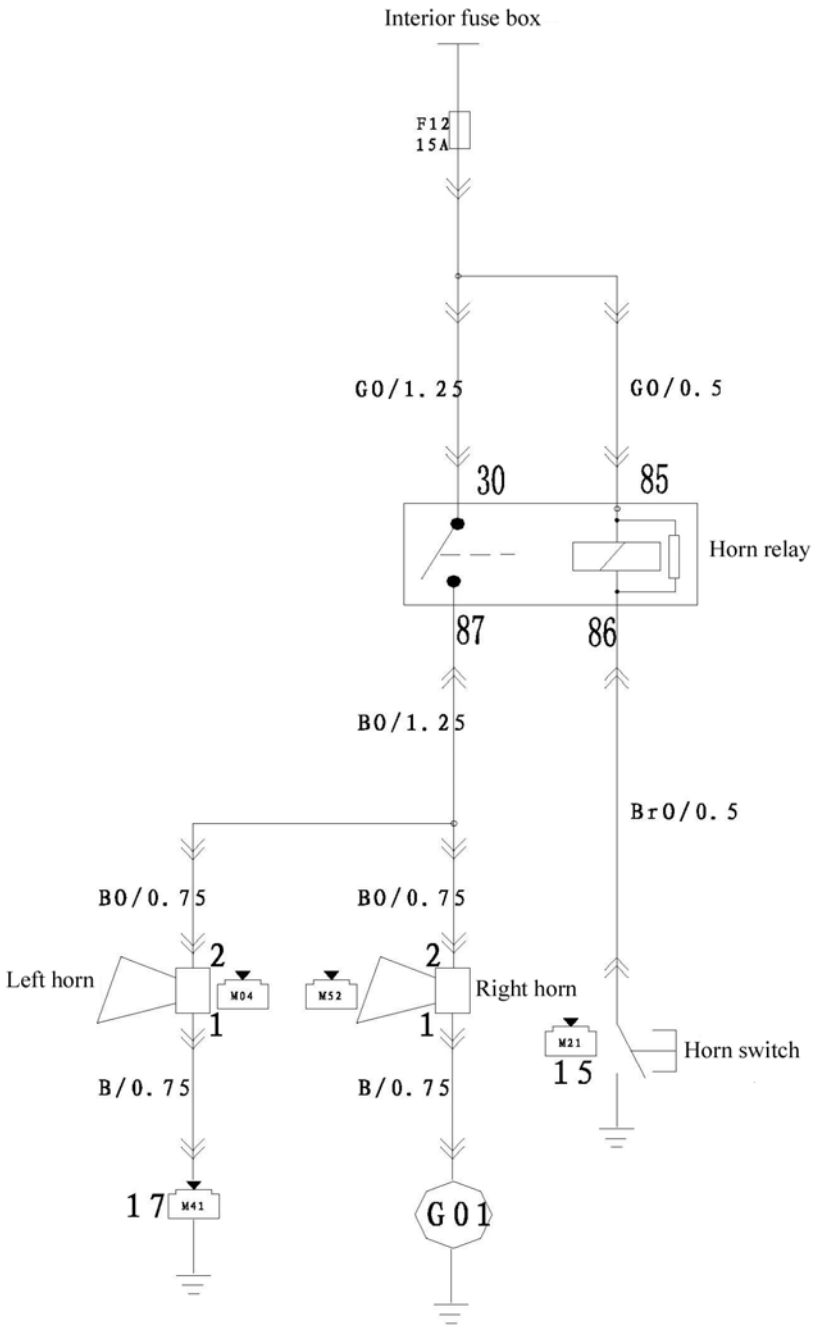

M21 Connected to combination switch 2

8	7	6	5			4	3	2	1
18	17	16	15	14	13	12	11	10	9

M04/M52 Left/right electric horn

2	1

Downloaded from www.Manualslib.com manuals search engine

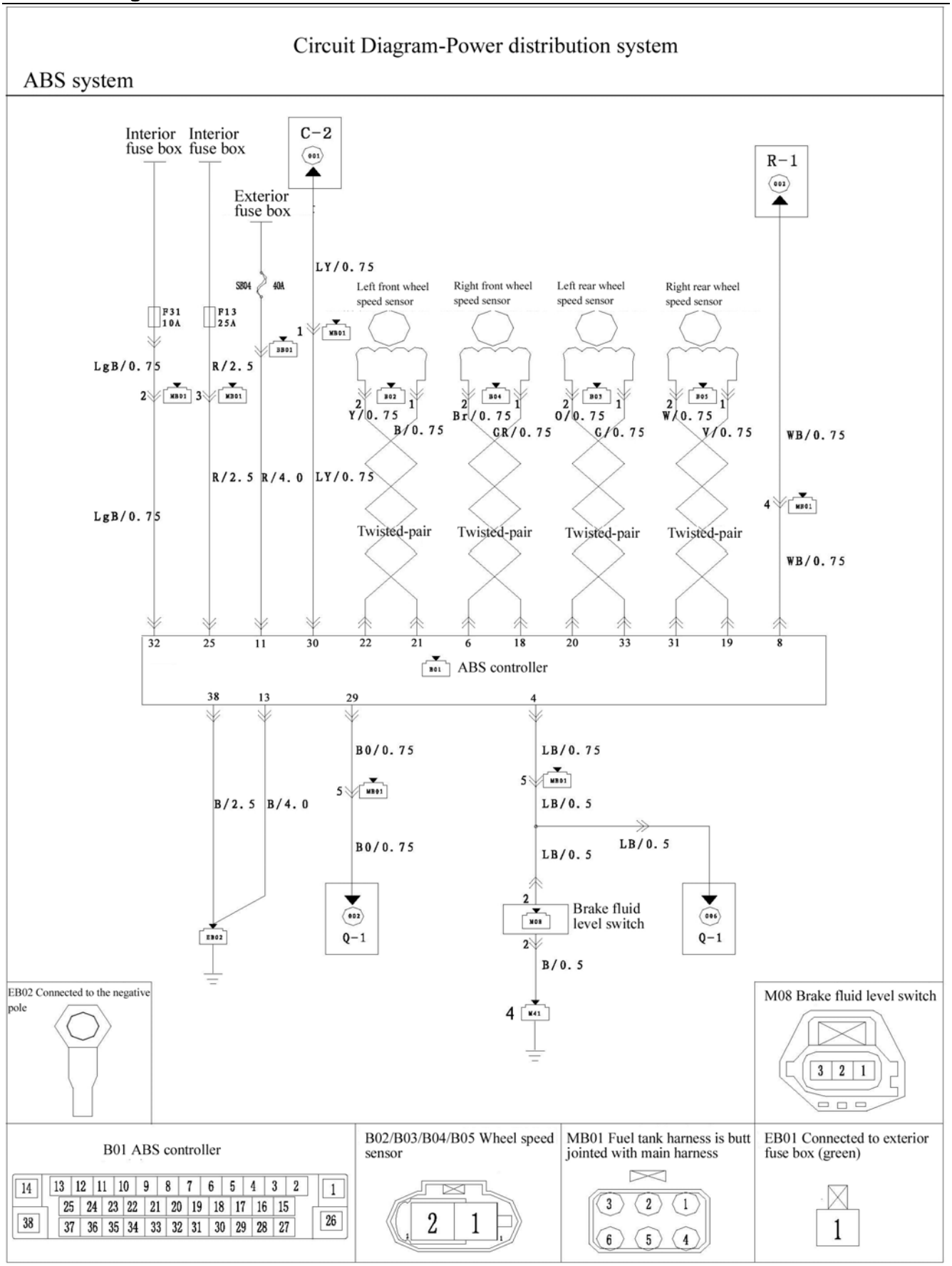

Downloaded from www.Manualslib.com manuals search engine

Circuit Diagram-Power distribution system

Airbag system

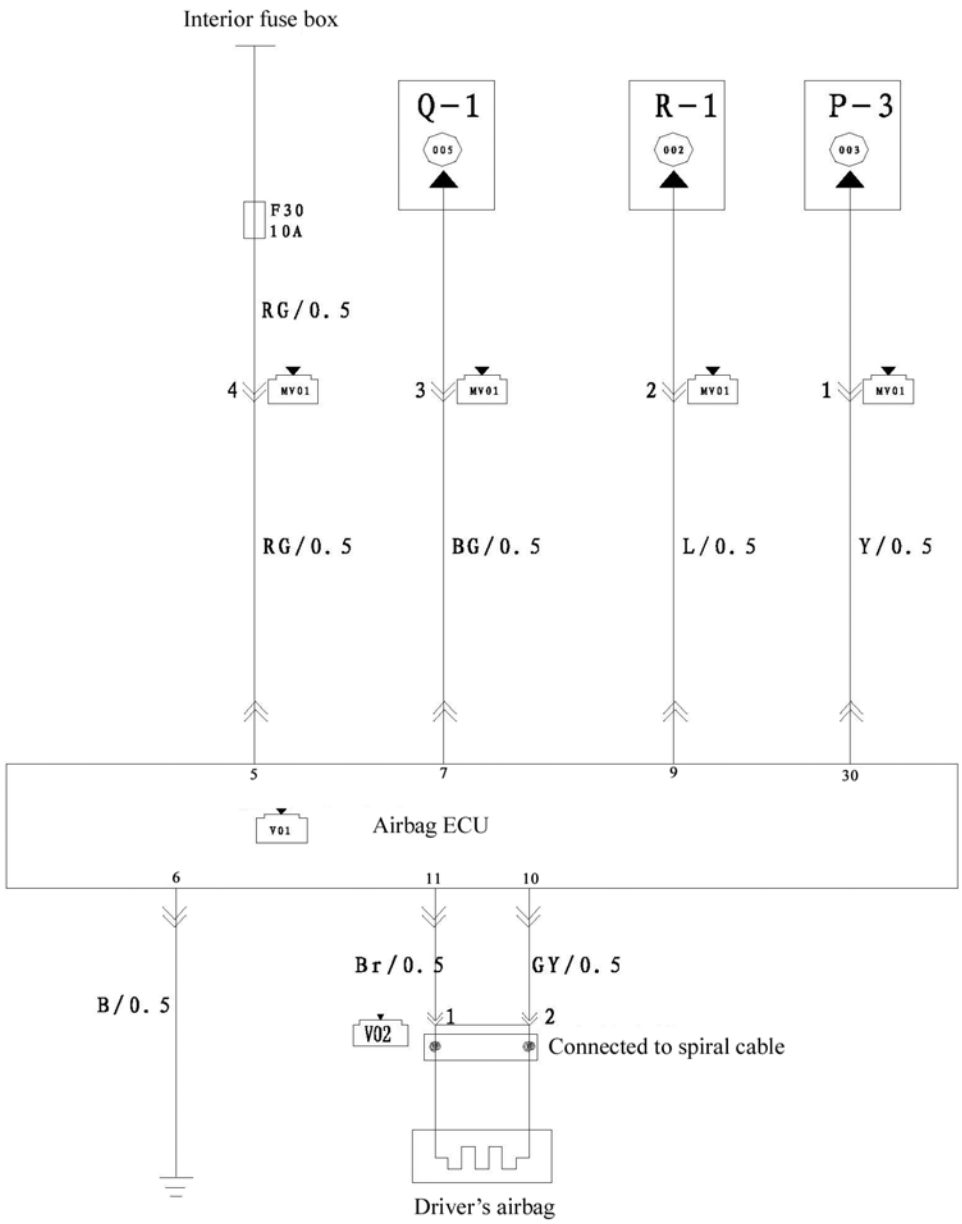

V01 Airbag ECU

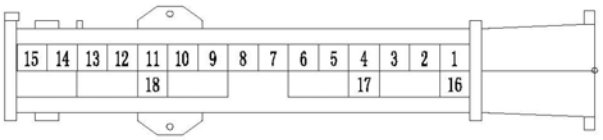

V02 Connected to spiral cable (yellow)

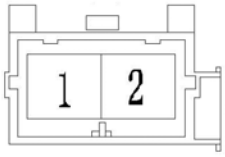

MV01 Airbag harness is butt jointed with main harness

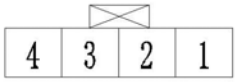

Downloaded from www.Manualslib.com manuals search engine

Circuit Diagram-Power distribution system

Reversing system

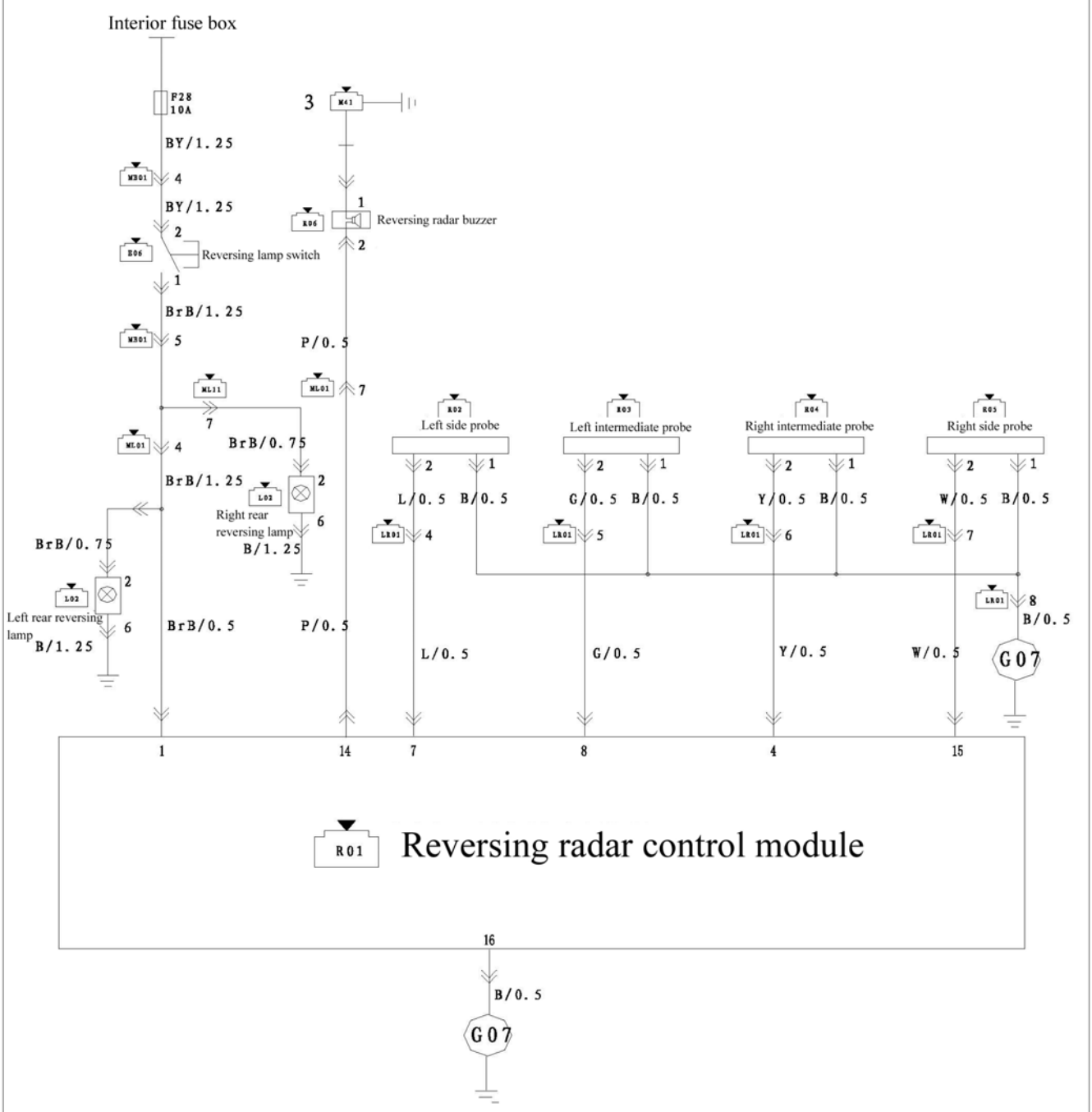

R01 Revering radar control module	Lr 01 Left tail lamp harness is butt jointed with reversing radar harness	R02/R02/R03/R04 Probe	R06 Reversing radar buzzer
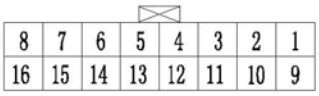	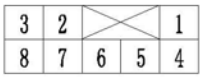		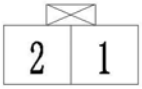

Downloaded from www.Manualslib.com manuals search engine

Circuit Diagram-Power distribution system

Electric rear view mirror

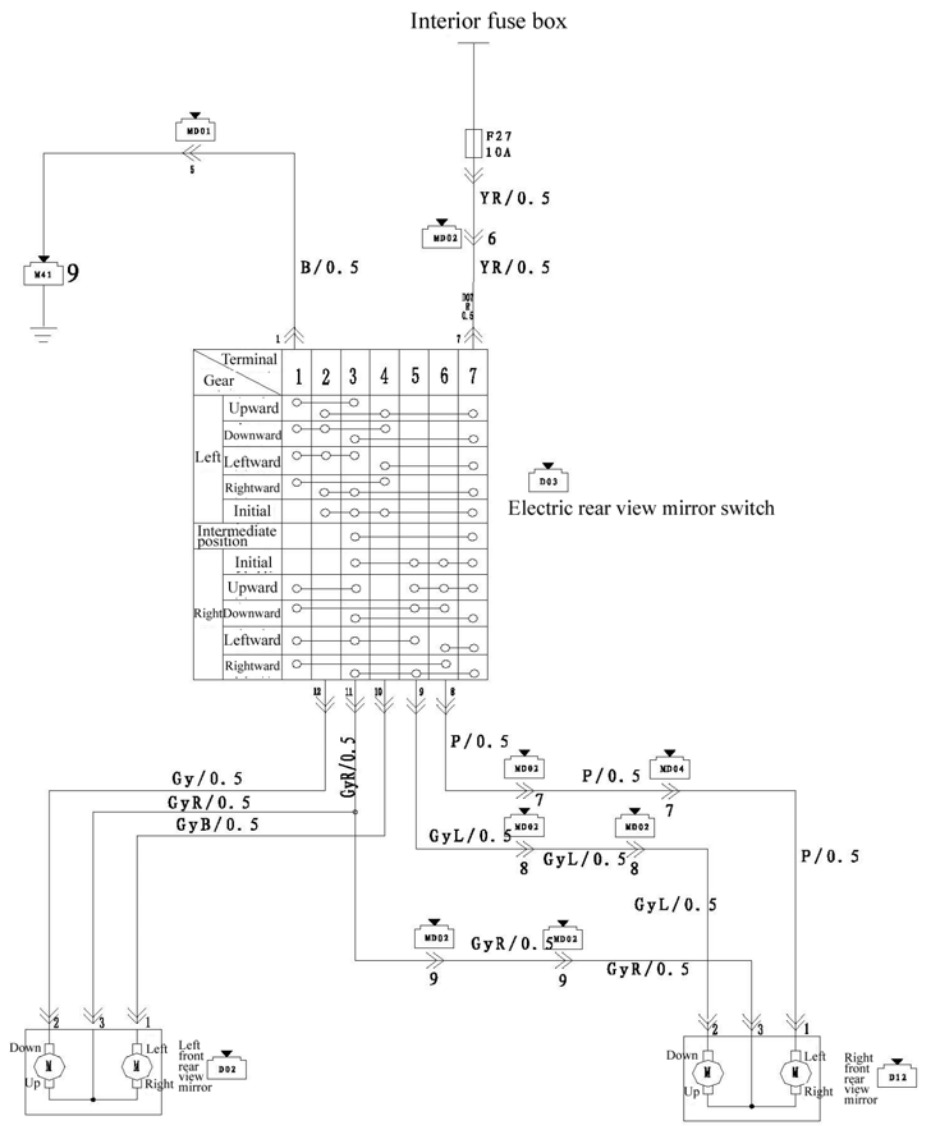

MD04 Right front door harness is butt jointed with main harness 2	MD03 Right front door harness is butt jointed with main harness 1		
4 3 2 1 10 9 8 7 6 5	3 2 1 8 7 6 5 4		
D03 Electric rear view mirror switch	MD02 Left front harness is butt jointed with main harness 2	MD01 Left front harness is butt jointed with main harness 1	D02/D12 Left/Right Front/Rear rear view mirror
6 5 4 3 2 1 12 11 10 9 8 7	4 3 2 1 10 9 8 7 6 5	6 5 4 3 2 1 14 13 12 11 10 9 8 7	3 2 1 6 5 4

Downloaded from www.Manualslib.com manuals search engine

Circuit Diagram-Power distribution system

Audio system

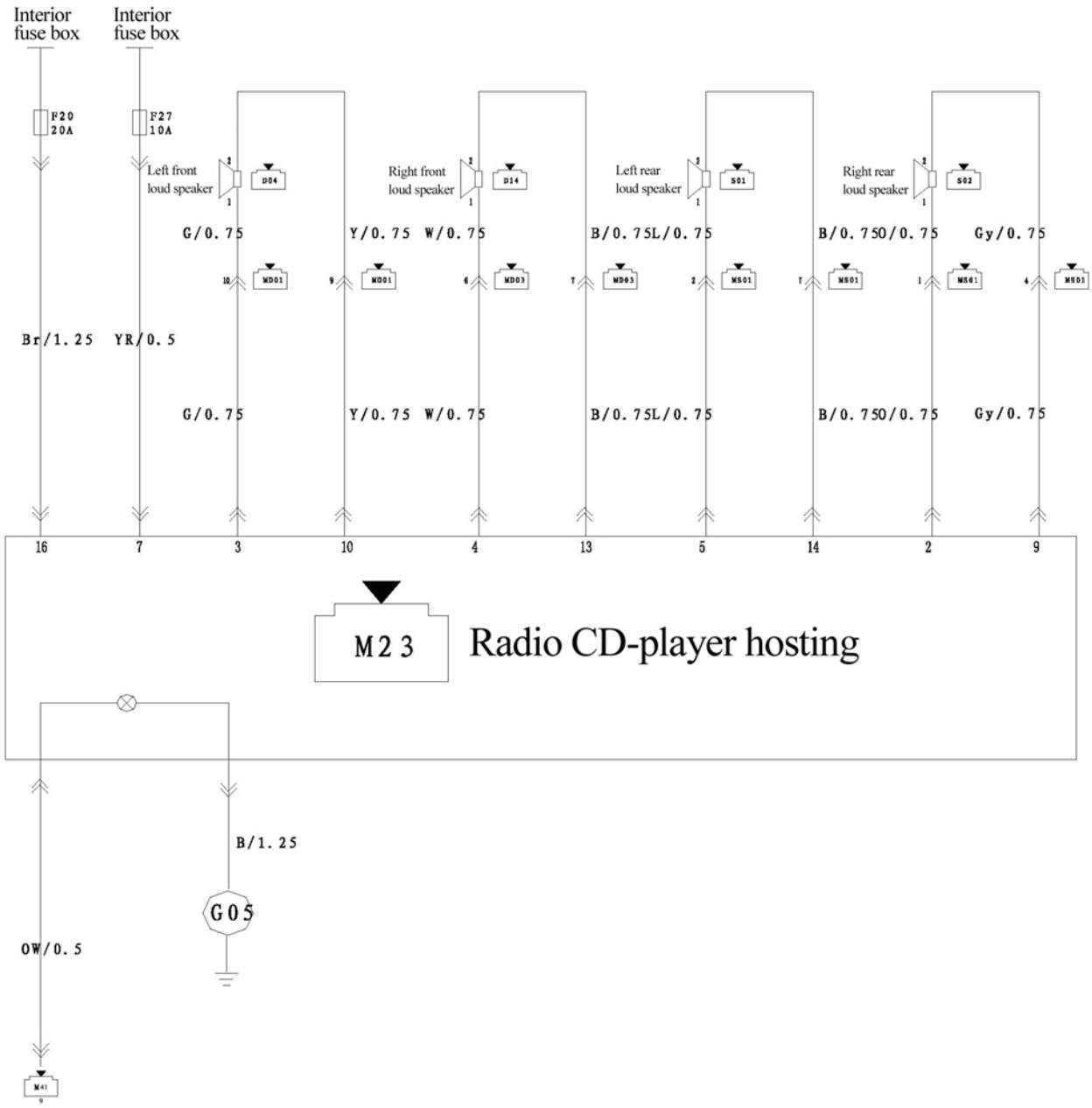

M23 Radio CD-player hosting	D04/D14/S01/S02 Loud speaker	MS01 Main harness is butt jointed with loud speaker harness	M63 Connected to short-circuit device 3 (small lamp power supply)
7 6 5 4 3 2 1 16 15 14 13 12 11 10 9 8	2 1	3 2 1 8 7 6 5 4	10 9 8 7 6 5 4 3 2 1 20 19 18 17 16 15 14 13 12 11

Downloaded from www.Manualslib.com manuals search engine

Circuit Diagram-Power distribution system

Cigarette lighter and fuel heater

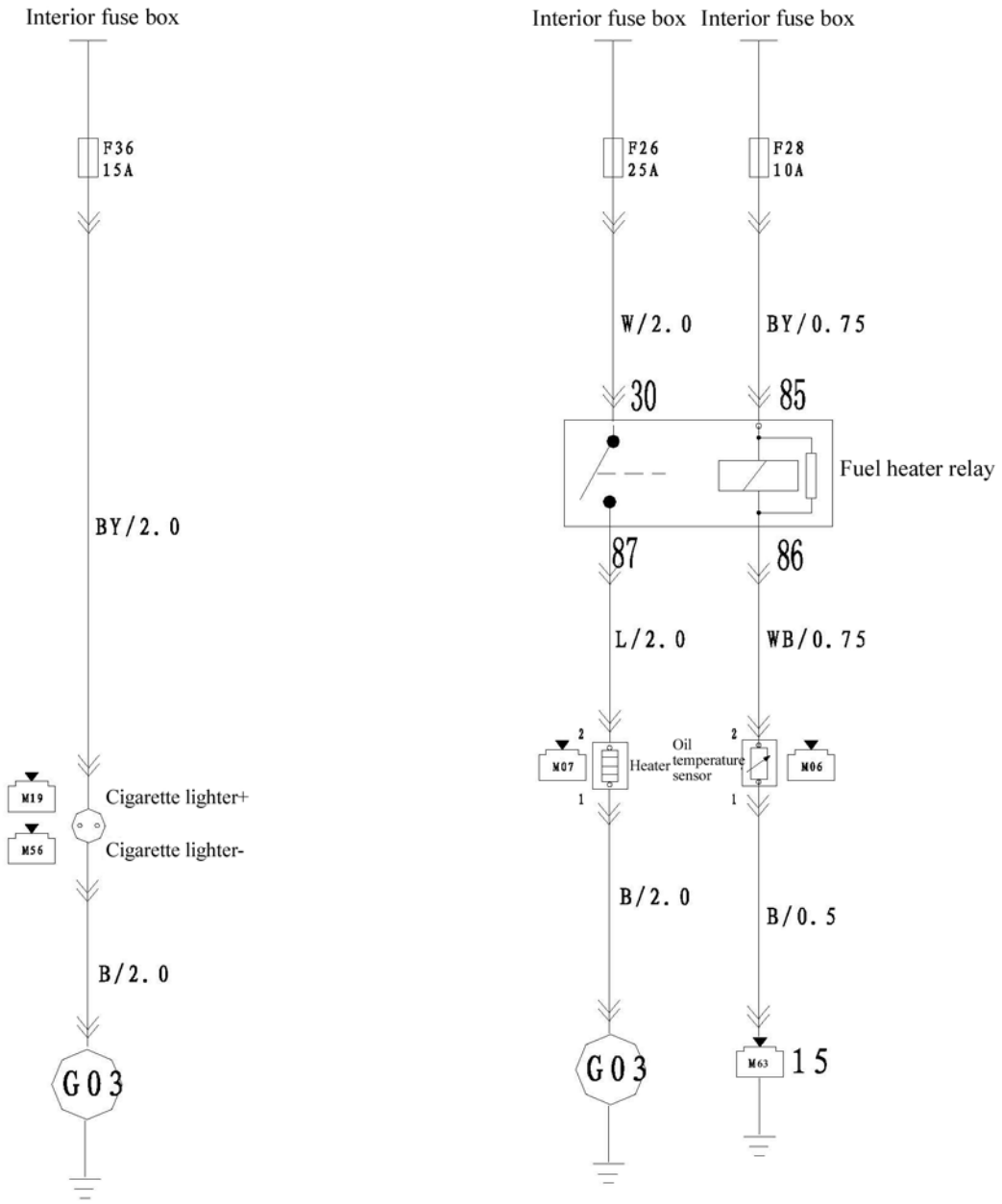

M19/M56 Cigarette lighter +/-	M07 Heater	M06 Oil temperature sensor
	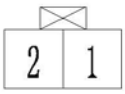	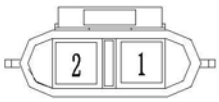

Downloaded from www.Manualslib.com manuals search engine

Circuit Diagram-Power distribution system

Rear ceiling lamp and front fog lamp

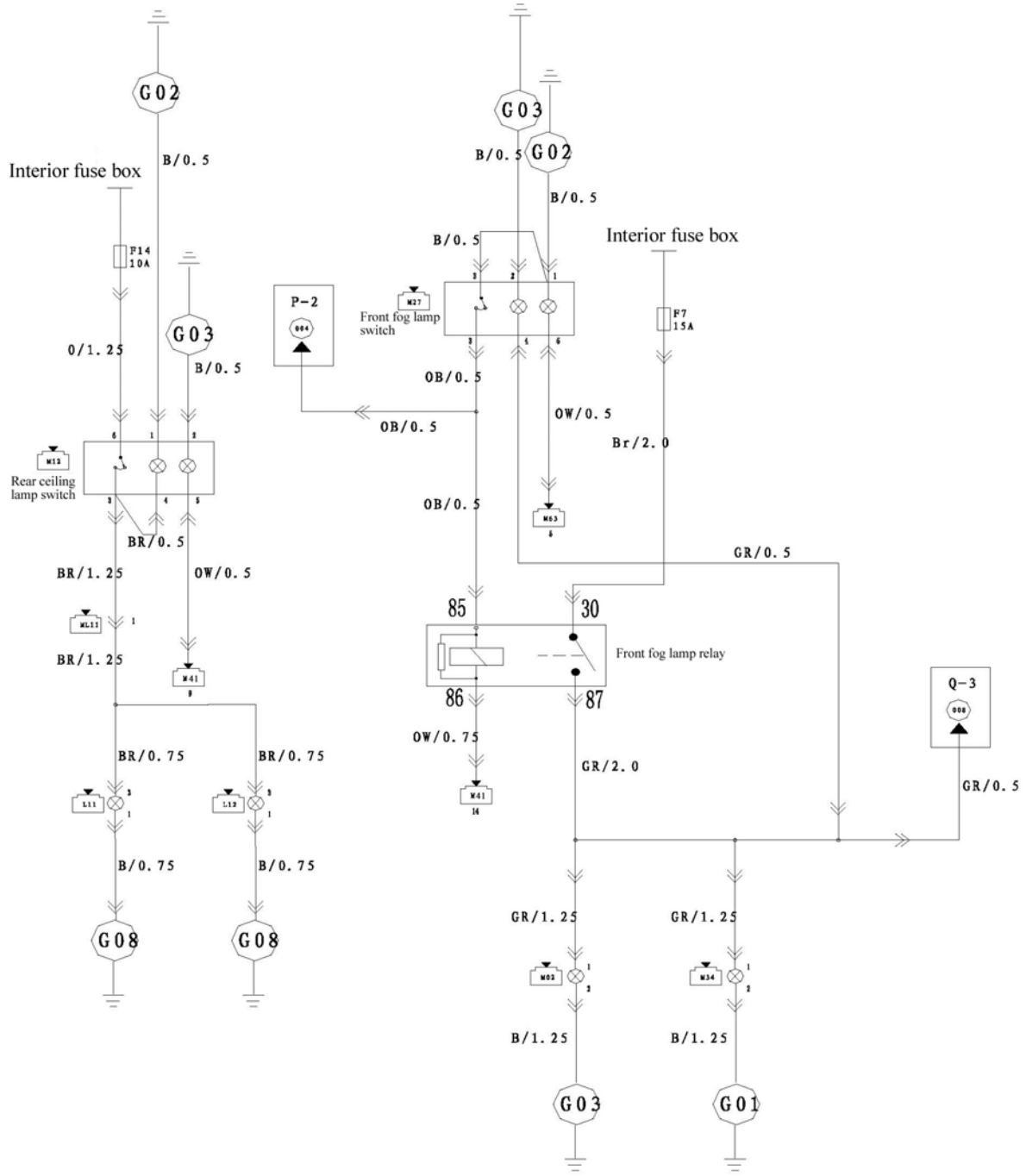

M12 Rear ceiling lamp switch (red) M27 Front fog lamp switch (white)	ML11 Main harness is butt jointed with right tail lamp harness	L11 Intermediate ceiling lamp L12 Rear ceiling lamp	M02 Left front fog lamp M34 Right front fog lamp
2 1 6 5 4 3	4 3 2 1 10 9 8 7 6 5	3 2 1	2 1

Downloaded from www.Manualslib.com manuals search engine

Circuit Diagram-Power distribution system

Rear fog lamp

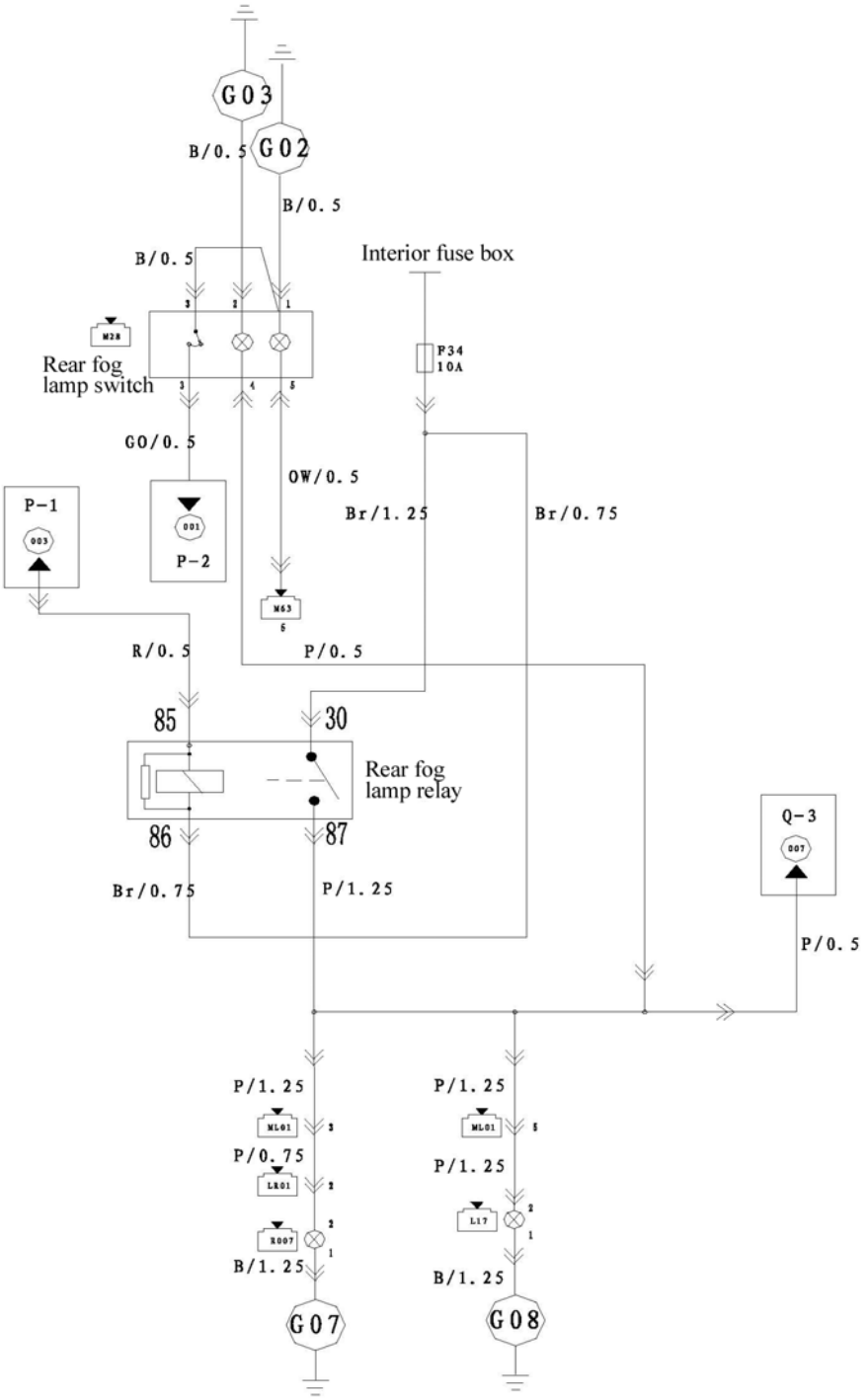

M28 Rear fog lamp switch (black)	M50 ETACS (white)	M51 ETACS (gray)	R07 Left rear fog lamp L17 Right rear fog lamp
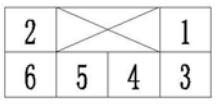	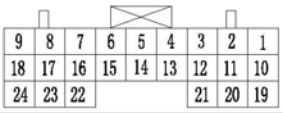	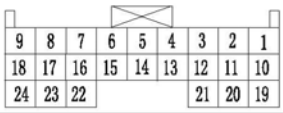	

Downloaded from www.Manualslib.com manuals search engine

Circuit Diagram-Power distribution system

High beam and low beam

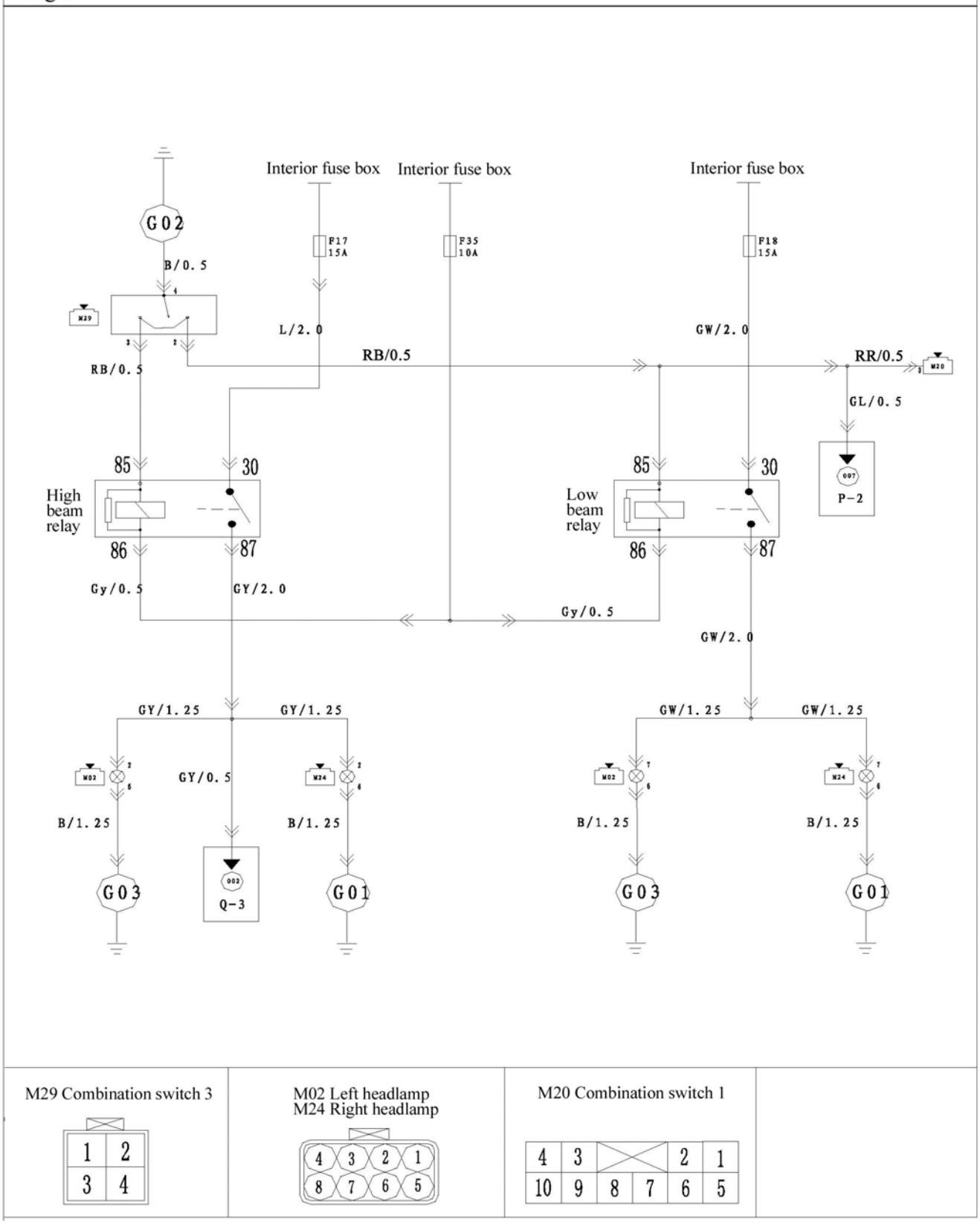

Downloaded from www.Manualslib.com manuals search engine

Circuit Diagram-Power distribution system

Turn signal lamp and hazard warning lamp

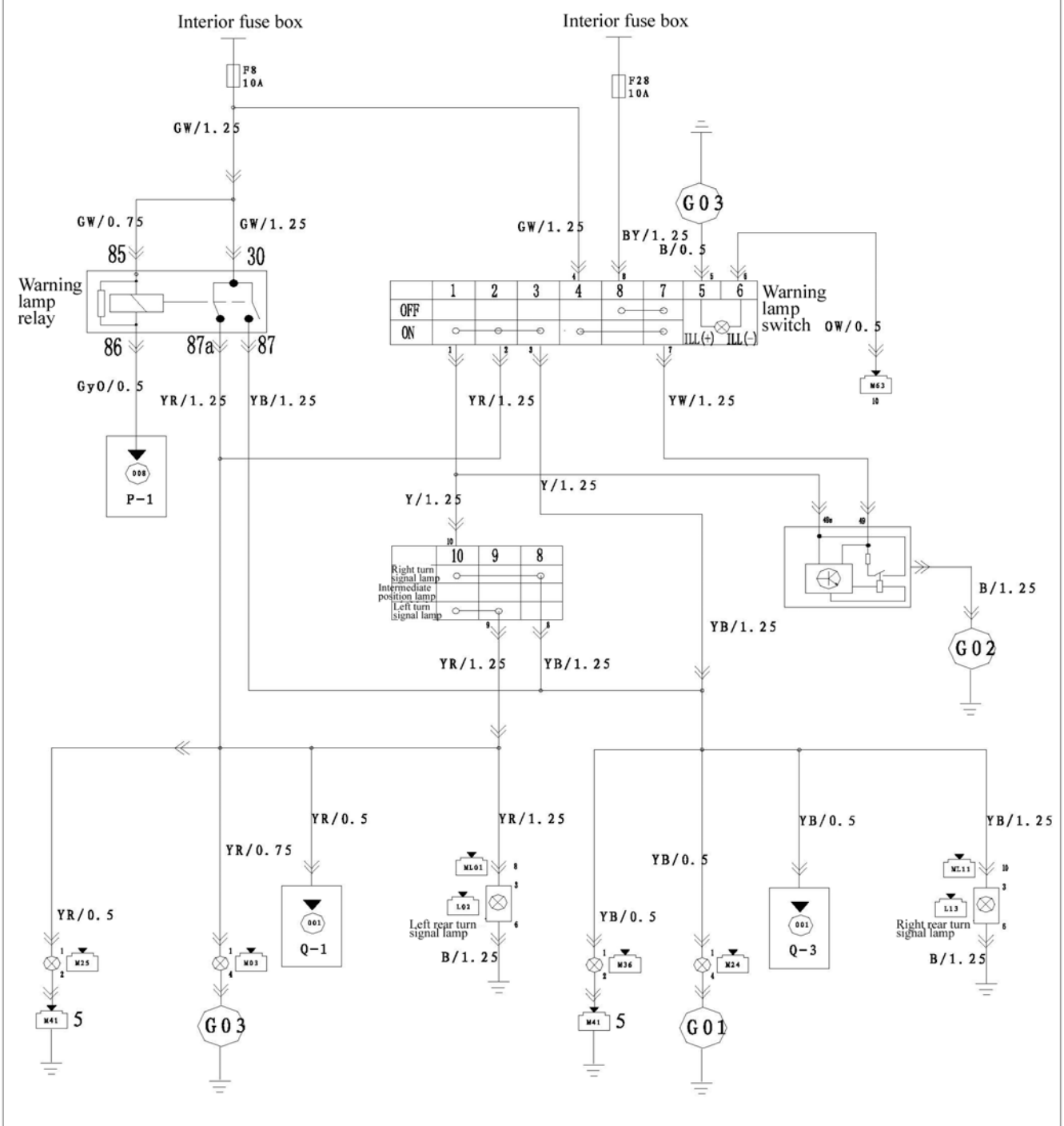

M35 Warning lamp switch	M02 Left headlamp M24 Right headlamp	M20 Combination switch 1	M25 Left side turn signal lamp M36 Right side turn signal lamp
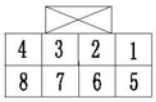	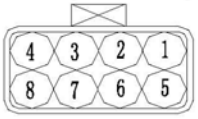	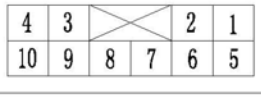	

Downloaded from www.Manualslib.com manuals search engine

Circuit Diagram-Power distribution system

Small lamp

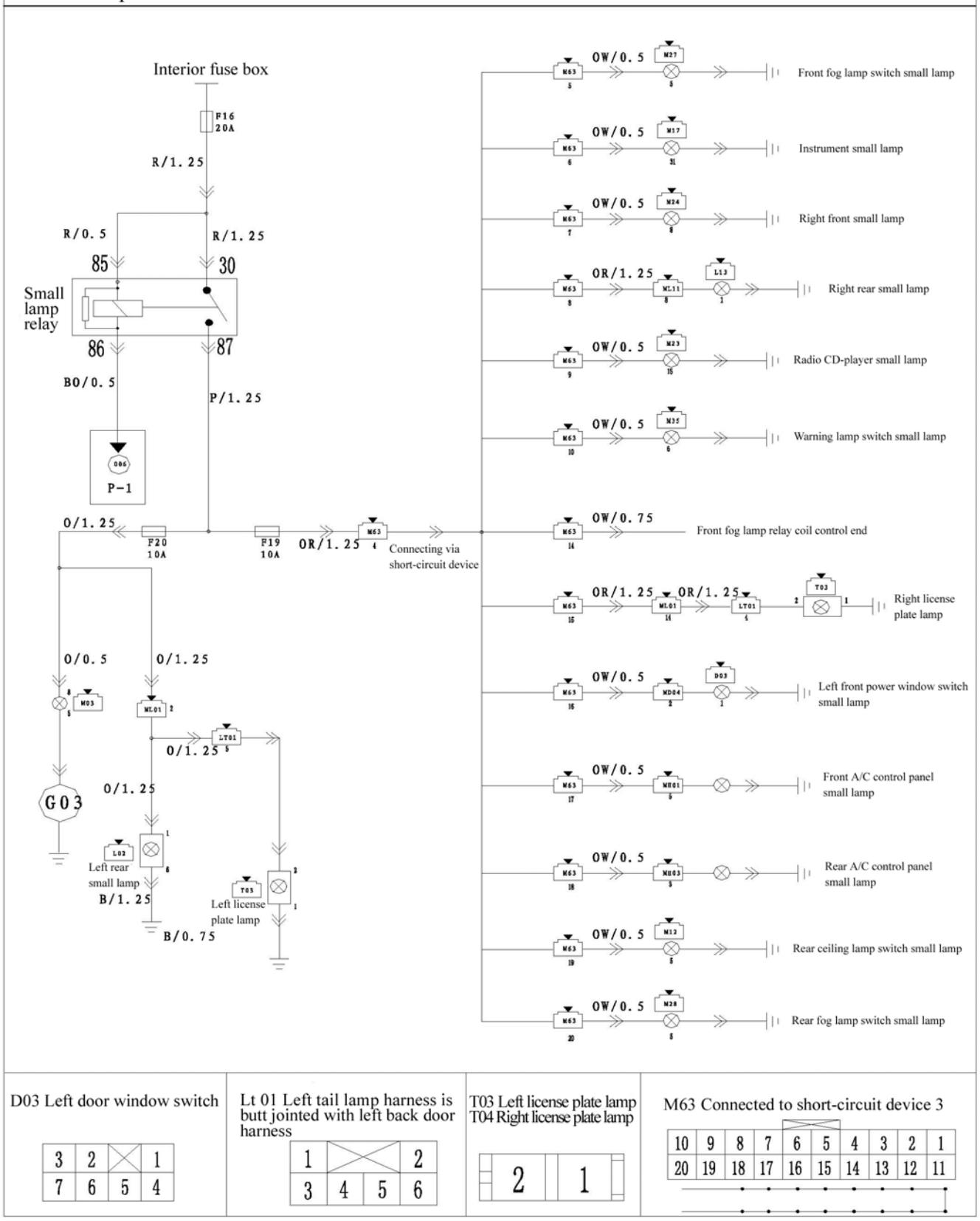

D03 Left door window switch

3	2		1
7	6	5	4

Lt 01 Left tail lamp harness is butt jointed with left back door harness

1			2
3	4	5	6

T03 Left license plate lamp
T04 Right license plate lamp

2	1

M63 Connected to short-circuit device 3

10	9	8	7	6	5	4	3	2	1
20	19	18	17	16	15	14	13	12	11

Downloaded from www.Manualslib.com manuals search engine

Circuit Diagram-Power distribution system

Central control

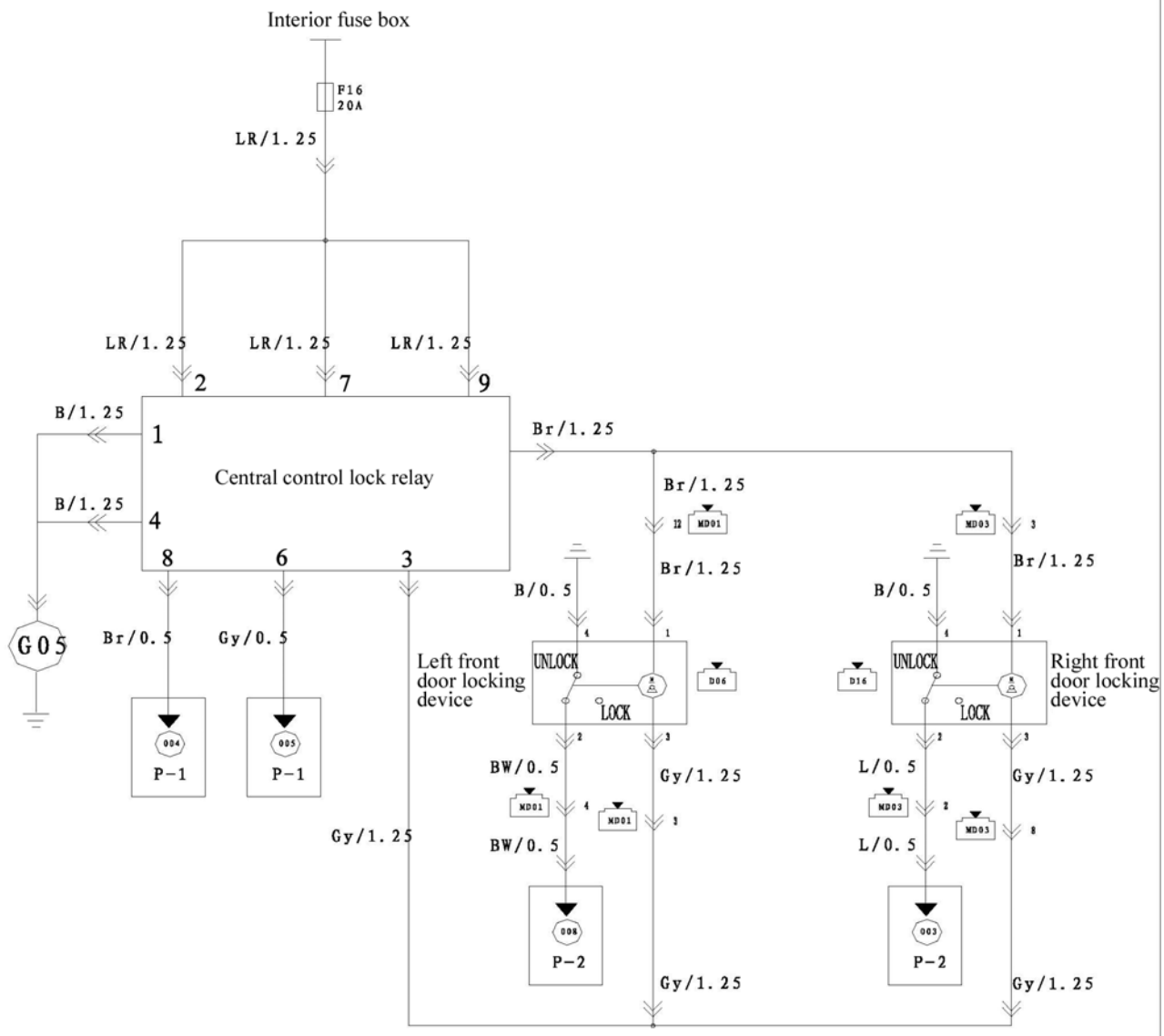

Central control relay

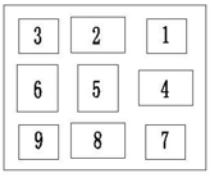

D06 Left front locking device
D16 Right front locking device

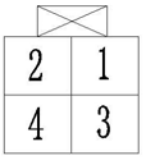

Downloaded from www.Manualslib.com manuals search engine

Circuit Diagram-Power distribution system

Wiper and washer

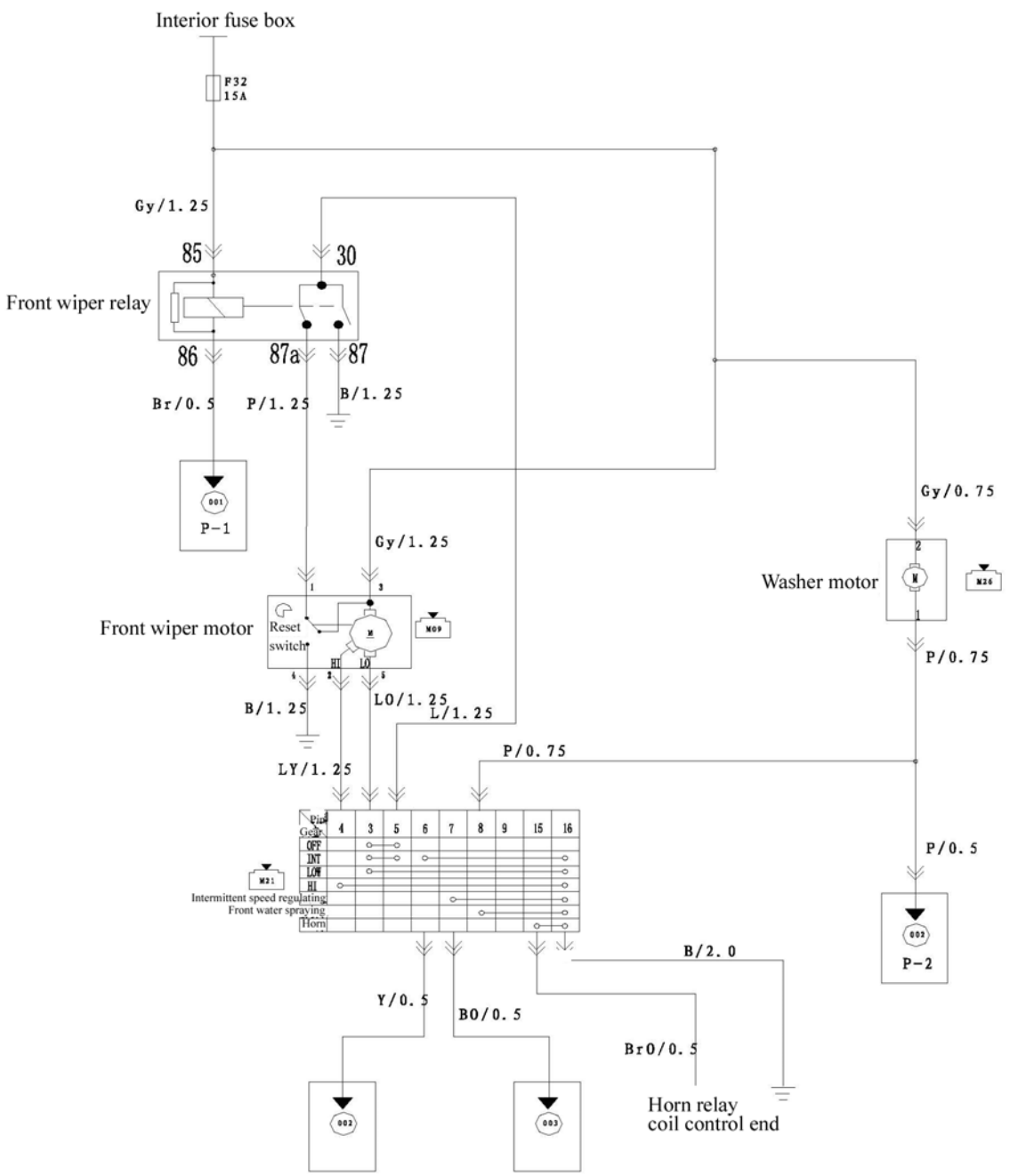

M29 Washer motor

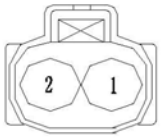

M09 Front wiper motor

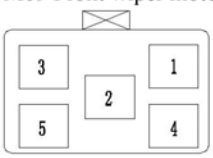

M21 Combination switch 2

8	7	6	5			4	3	2	1
18	17	16	15	14	13	12	11	10	9

Downloaded from www.Manualslib.com manuals search engine

Circuit Diagram-Power distribution system

Power window

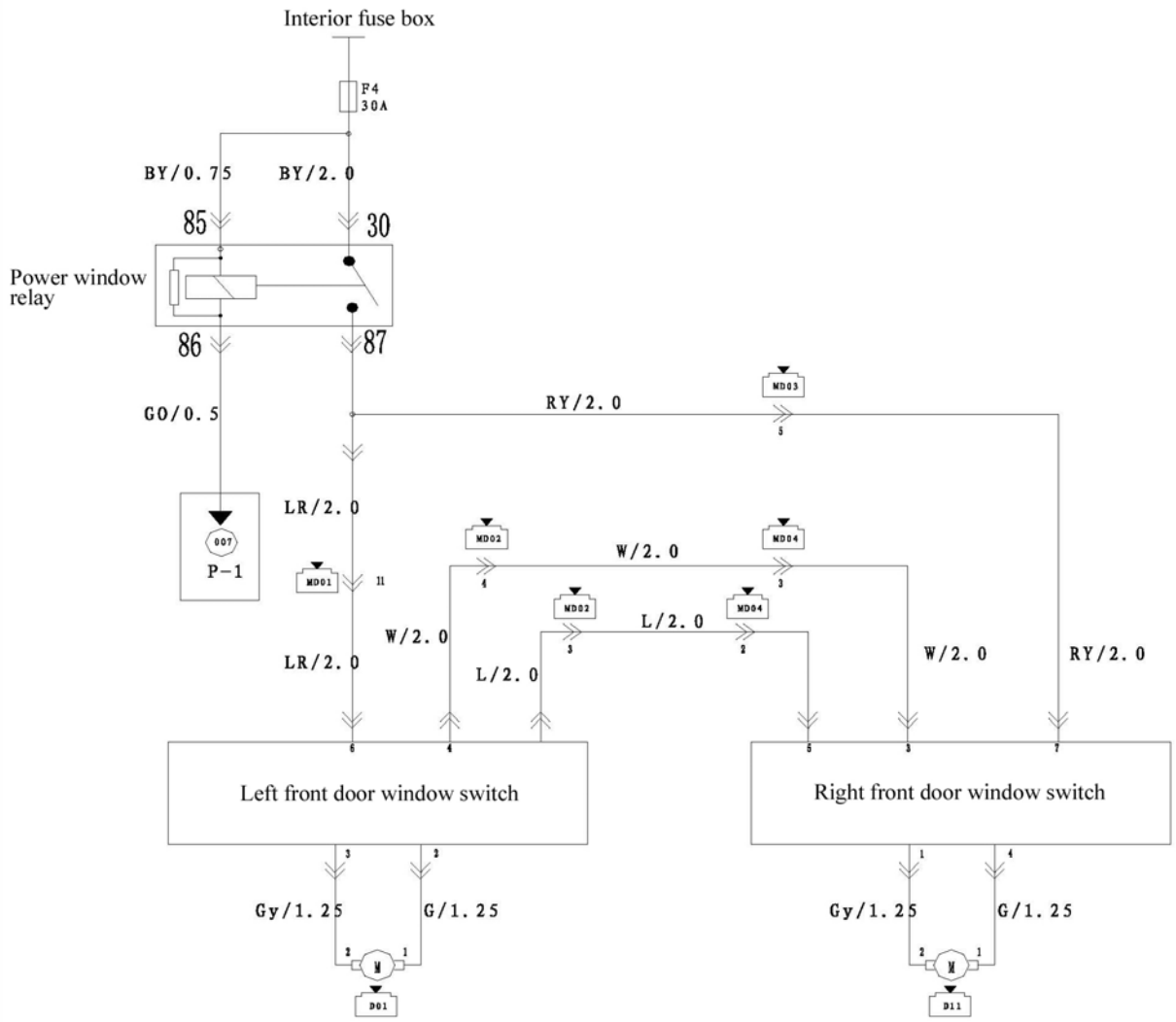

Md01 Main harness is butt jointed with right front door 1

1			2	3
4	5	6	7	8

Md01 Main harness is butt jointed with left front door 1

1	2	3		4	5	6	
7	8	9	10	11	12	13	14

Md 02 Main harness is butt jointed with left front door 2
Md04 Main harness is butt jointed with right front door 2

1	2			3	4
5	6	7	8	9	10

D03 Left front door window switch
D13 Right front door window switch

3	2		1
7	6	5	4

D01 Left front door window motor
D11 Right front door window motor

Downloaded from www.Manualslib.com manuals search engine

Circuit Diagram-Power distribution system

Front A/C system

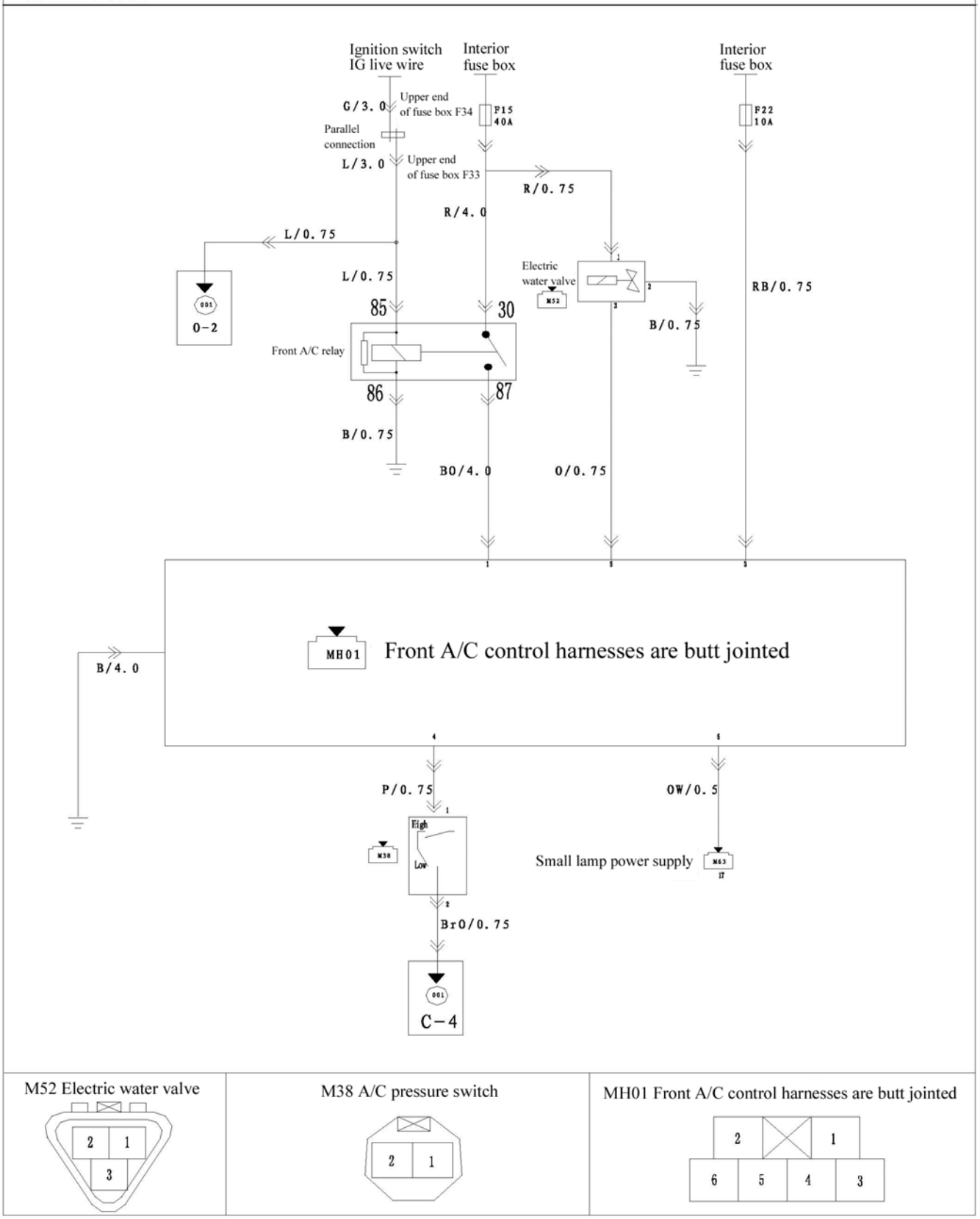

M52 Electric water valve	M38 A/C pressure switch	MH01 Front A/C control harnesses are butt jointed

Downloaded from www.Manualslib.com manuals search engine

Circuit Diagram-Power distribution system

Rear A/C system

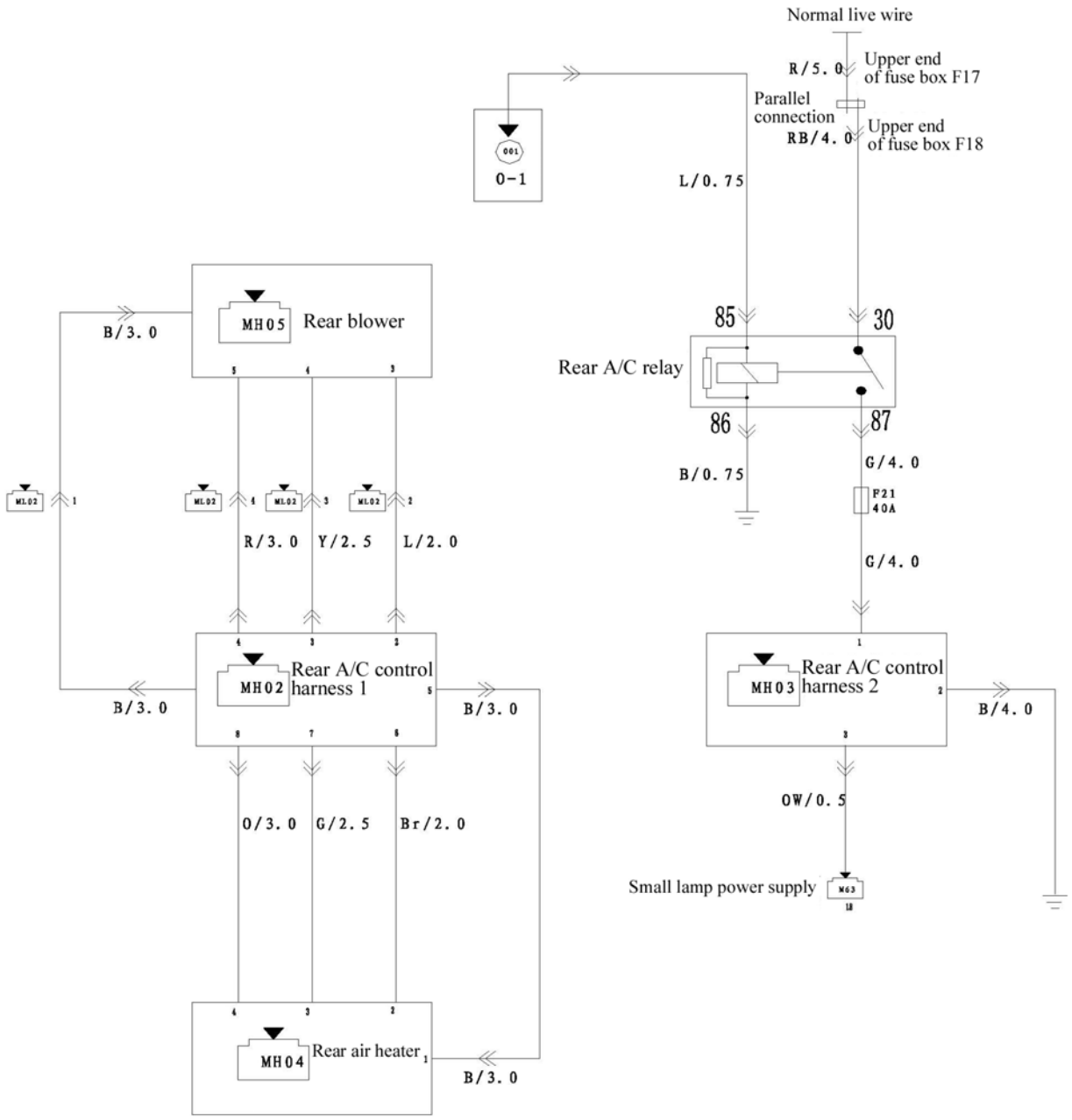

MH02 Rear A/C control harness 1	MH03 Rear A/C control harness 2	MH04 Rear air heater	ML02 Main harness is butt jointed with left tail lamp harness 2	MH04 Rear blower
4 3 2 1 8 7 6 5	2 1 4 3	2 1 4 3	2 1 4 3	2 1 5 4 3

Downloaded from www.Manualslib.com manuals search engine

Circuit Diagram-Power distribution system

ETACS

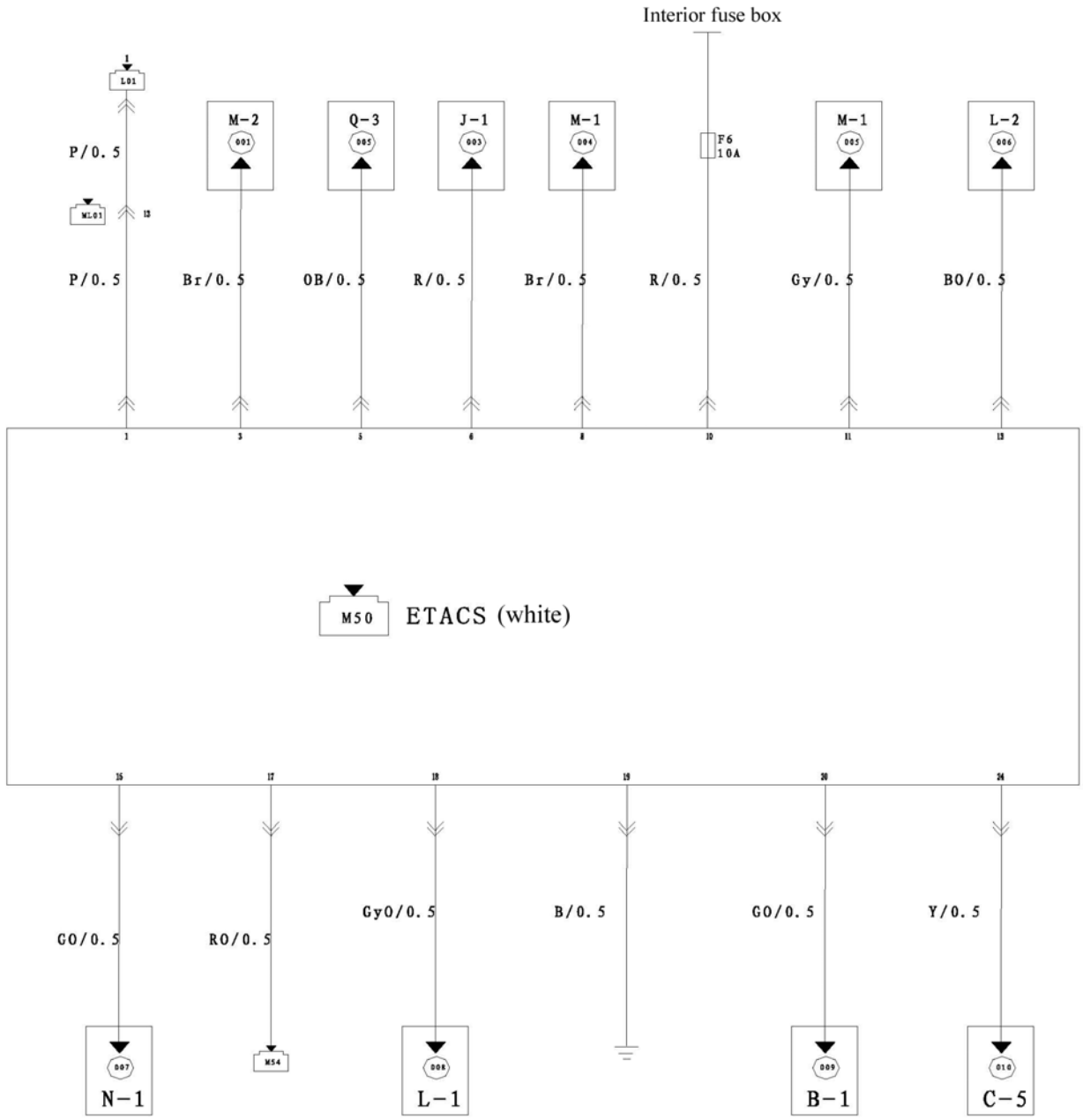

M50 ETACS (white)

9	8	7	6	5	4	3	2	1
18	17	16	15	14	13	12	11	10
24	23	22				21	20	19

M54 Right door control switch

Downloaded from www.Manualslib.com manuals search engine

Circuit Diagram-Power distribution system

ETACS

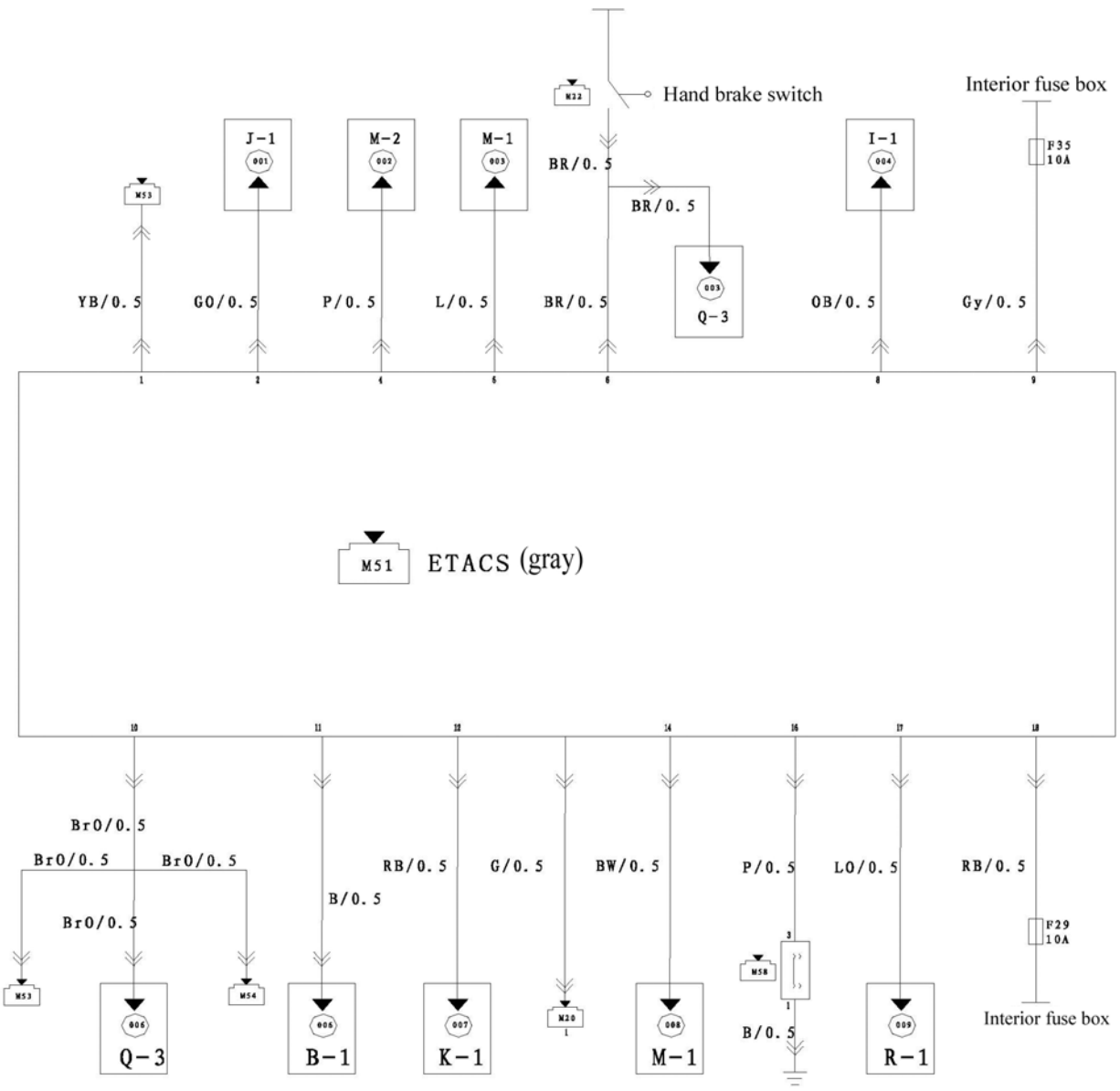

M51 ETACS (gray)	M53 Left door control switch	M22 Hand brake switch	M54 Right door control switch	M58 Driver's seat belt
9 8 7 6 5 4 3 2 1 18 17 16 15 14 13 12 11 10 24 23 22 21 20 19	1	1	1	3 2 1

Downloaded from www.Manualslib.com manuals search engine

Circuit Diagram-Power distribution system

ETACS

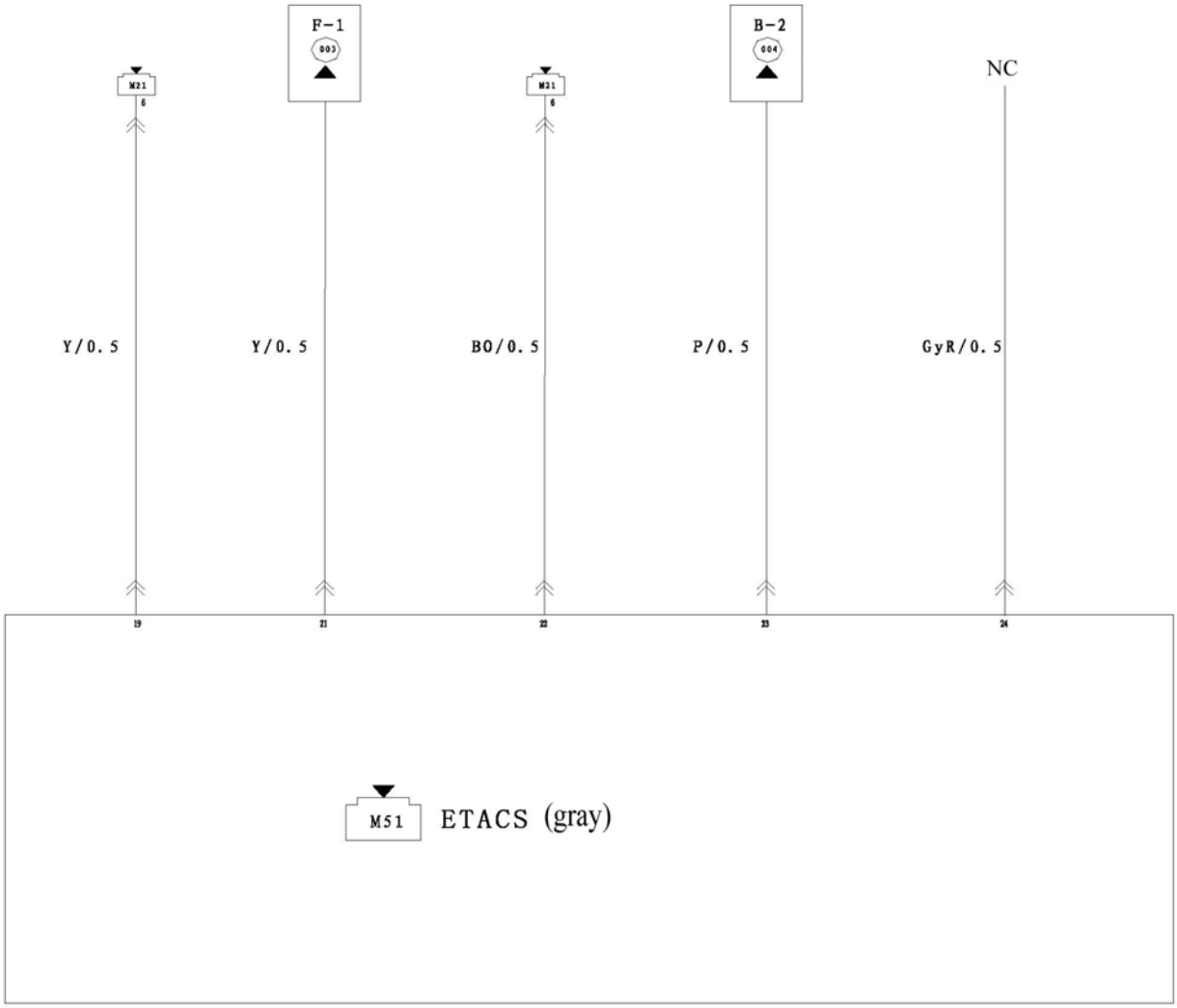

M51 ETACS (gray)

9	8	7	6	5	4	3	2	1
18	17	16	15	14	13	12	11	10
24	23	22				21	20	19

M21 Connected to combination switch 2

8	7	6	5			4	3	2	1
18	17	16	15	14	13	12	11	10	9

Downloaded from www.Manualslib.com manuals search engine

Circuit Diagram-Power distribution system

Instrument

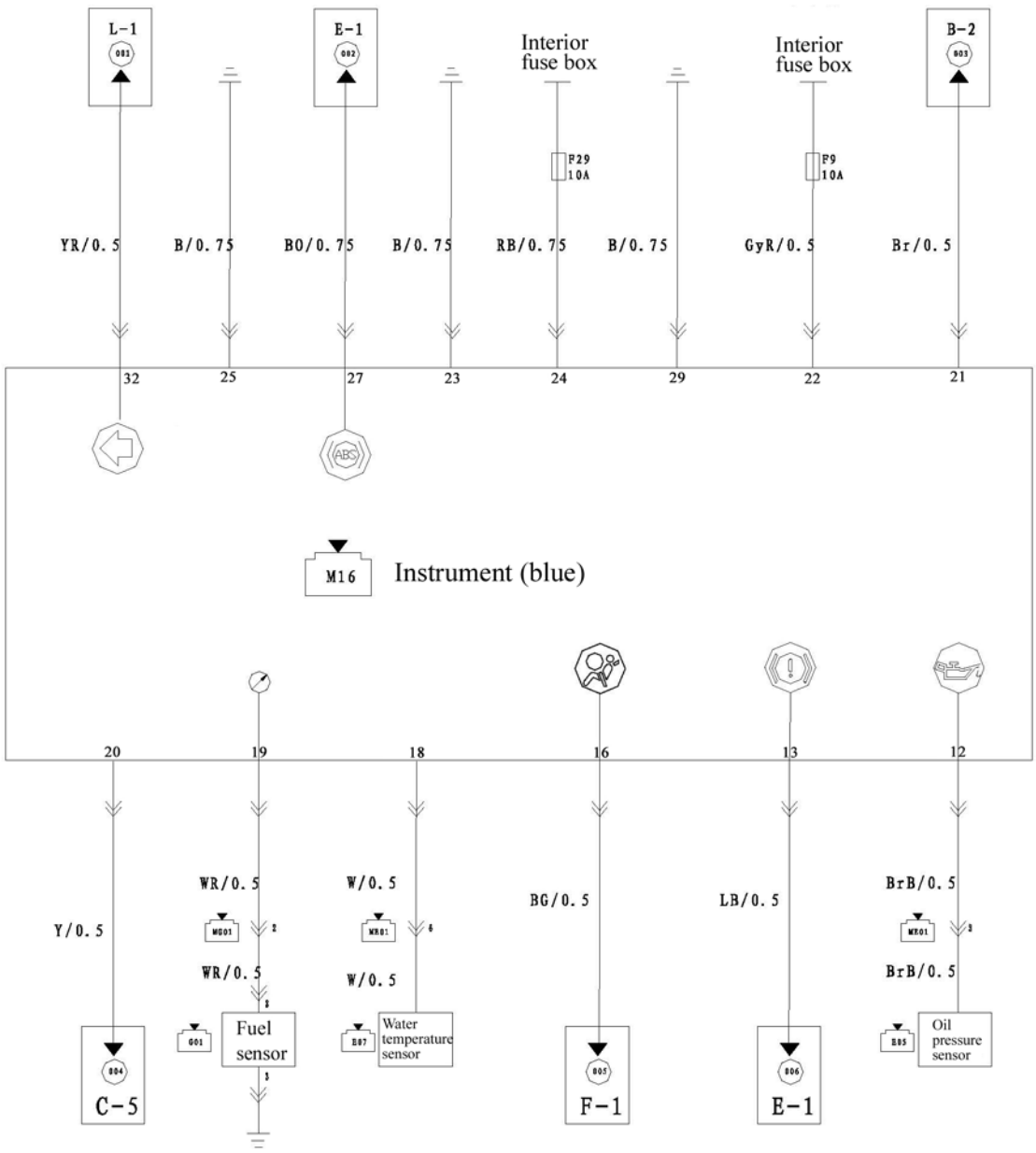

M16 Instrument (blue)

16	15	14	13	12	11	10	9	8	7	6	5	4	3	2	1
32	31	30	29	28	27	26	25	24	23	22	21	20	19	18	17

E07 Water temperature sensor
E05 Oil pressure sensor

G01 Fuel sensor

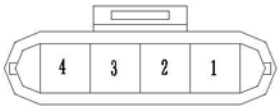

Downloaded from www.Manualslib.com manuals search engine

Circuit Diagram-Power distribution system

Instrument

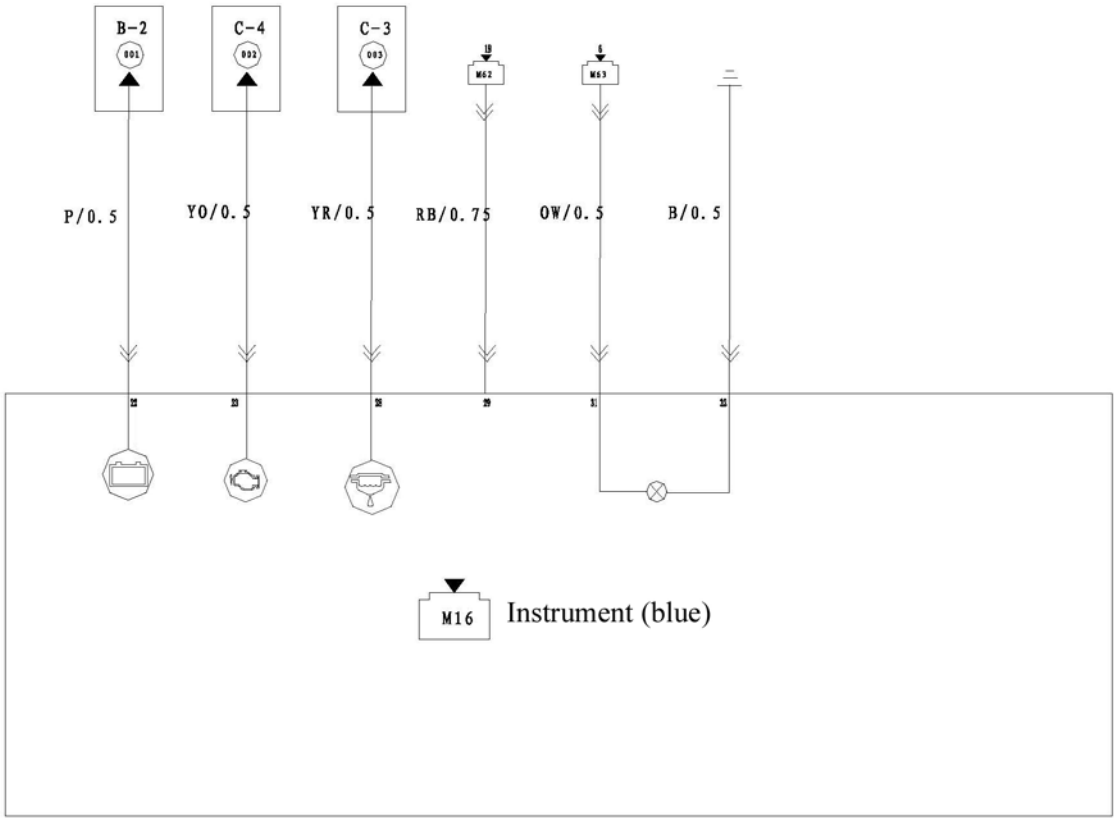

M16 Instrument (blue)

16	15	14	13	12	11	10	9	8	7	6	5	4	3	2	1
32	31	30	29	28	27	26	25	24	23	22	21	20	19	18	17

Downloaded from www.Manualslib.com manuals search engine

Circuit Diagram-Power distribution system

Instrument

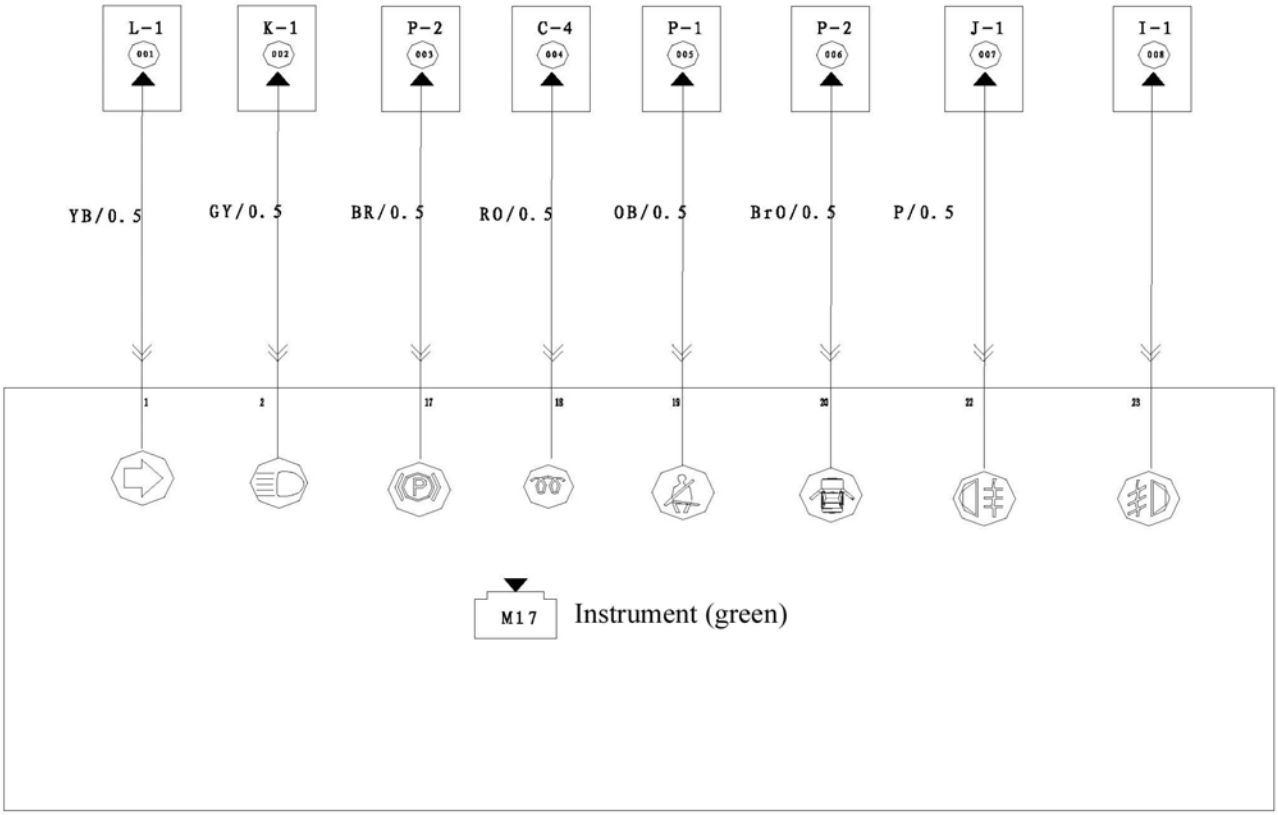

M16 Instrument (blue)

16	15	14	13	12	11	10	9	8	7	6	5	4	3	2	1
32	31	30	29	28	27	26	25	24	23	22	21	20	19	18	17

Downloaded from www.Manualslib.com manuals search engine

Circuit Diagram-Power distribution system

Self diagnosis

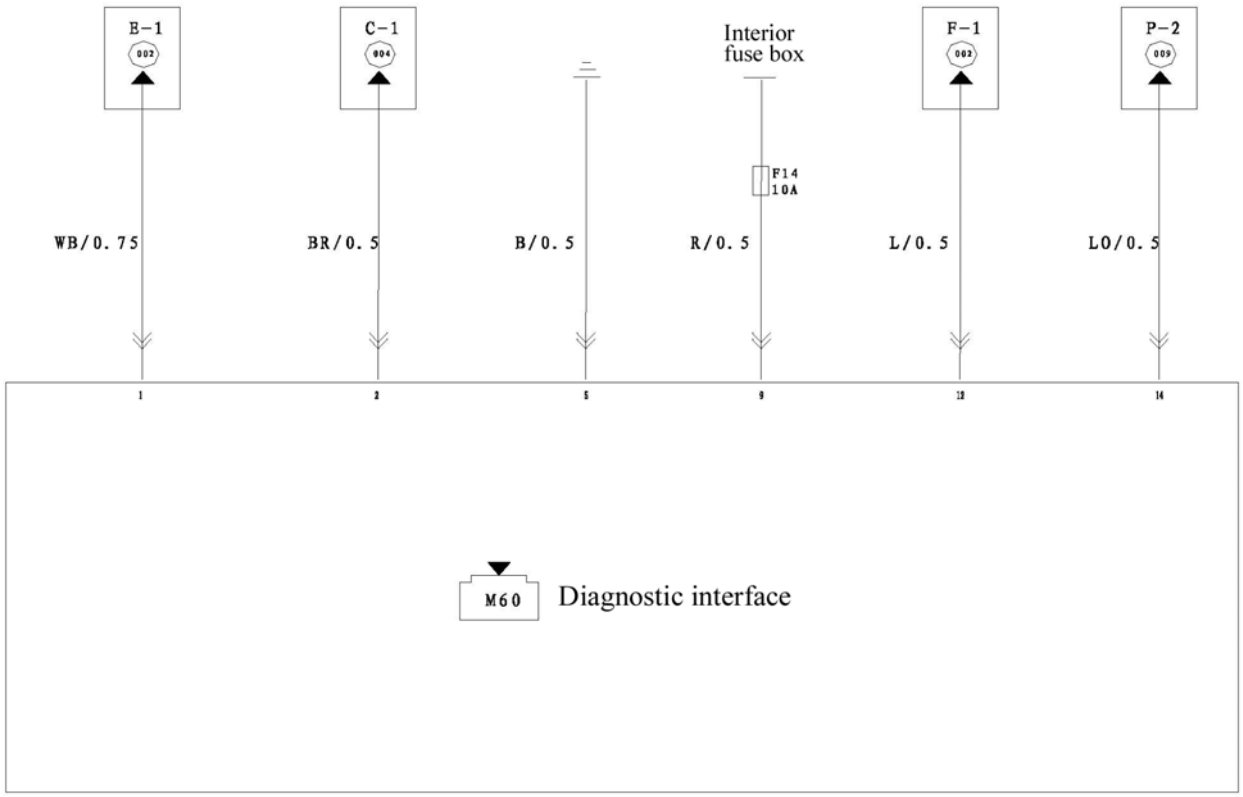

M60 Diagnostic interface

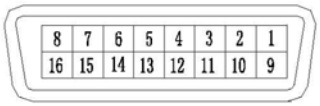

Downloaded from www.Manualslib.com manuals search engine

Main harness specification

Identification code	Name	Identification code	Name
M01	Relay box	M42	Key and faulted door switch
M02	Left front fog lamp	M43	Buzzer
M03	Left headlamp	M45	Rear air heater
M04	Left electric horn	M50	BCM controller interface 1
M05	Oil-water separator sensor	M51	BCM controller interface 2
M06	Oil temperature sensor	M52	Right electric horn
M07	Heater	M53	Left door switch
M08	Brake fluid level switch	M54	Right door switch
M09	Front wiper motor	M58	Driver's seat belt switch
M10	Odometer sensor	MH01	Connected to front A/C harness
M12	Rear ceiling lamp switch	MH02	Connected to rear A/C harness
M13	Dual brake switch	MD01	Connected to left door harness 1
M14	Clutch switch	MD02	Connected to left door harness 2
M15	Electronic accelerator pedal	MD03	Connected to right door harness 1
M16	Instrument 1	MD04	Connected to right door harness 2
M17	Instrument 2	MV01	Connected to airbag harness
M18	Ignition switch	MB01	Connected to ABS harness
M19	Cigarette lighter	ML01	Connected to left tail lamp harness 1
M20	Combination switch 1	ML02	Connected to left tail lamp harness 2
M21	Combination switch 2	ML11	Connected to right tail lamp harness
M22	Hand brake switch	MG01	Connected to fuel tank harness
M23	Radio CD-player	MS01	Connected to loud speaker harness
M24	Right headlamp	ME01	Connected to engine harness
M25	Left side turn signal lamp	ME02	Connected to engine harness
M26	Front washer motor	ME03	Connected to engine harness
M27	Front fog lamp switch	ME04	Connected to engine harness
M28	Rear fog lamp switch	ME05	Connected to engine harness
M29	Combination switch 3		
M30	Engine ECU		
M31	GCU-1		
M32	GCU-2		
M33	GCU-3		
M34	Right front fog lamp		
M35	Warning lamp switch		
M36	Right side turn signal lamp		
M37	A/C compressor		
M38	High/low pressure switch		

Downloaded from www.Manualslib.com manuals search engine

Main harness 1

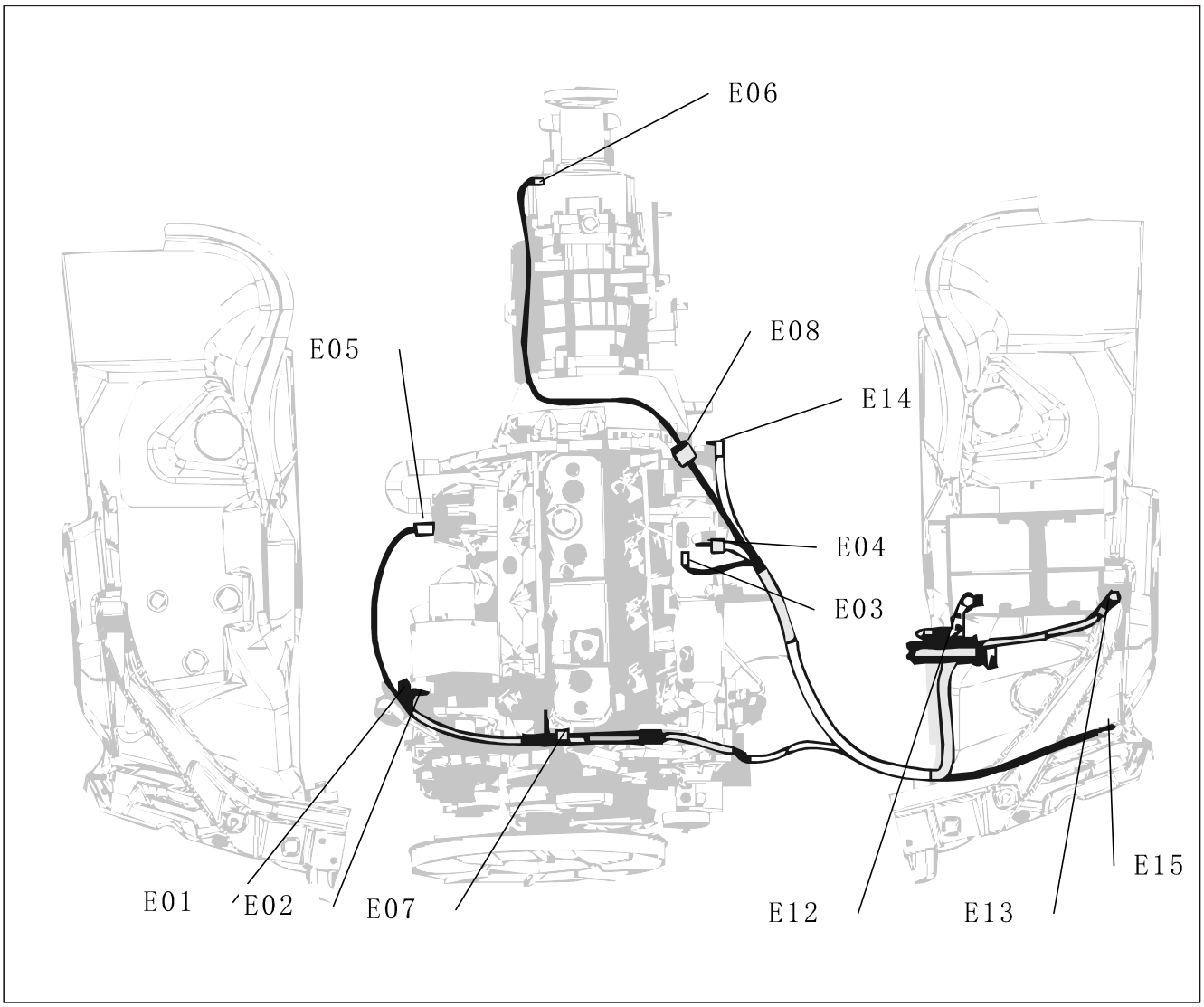

Downloaded from www.Manualslib.com manuals search engine

Main harness 2

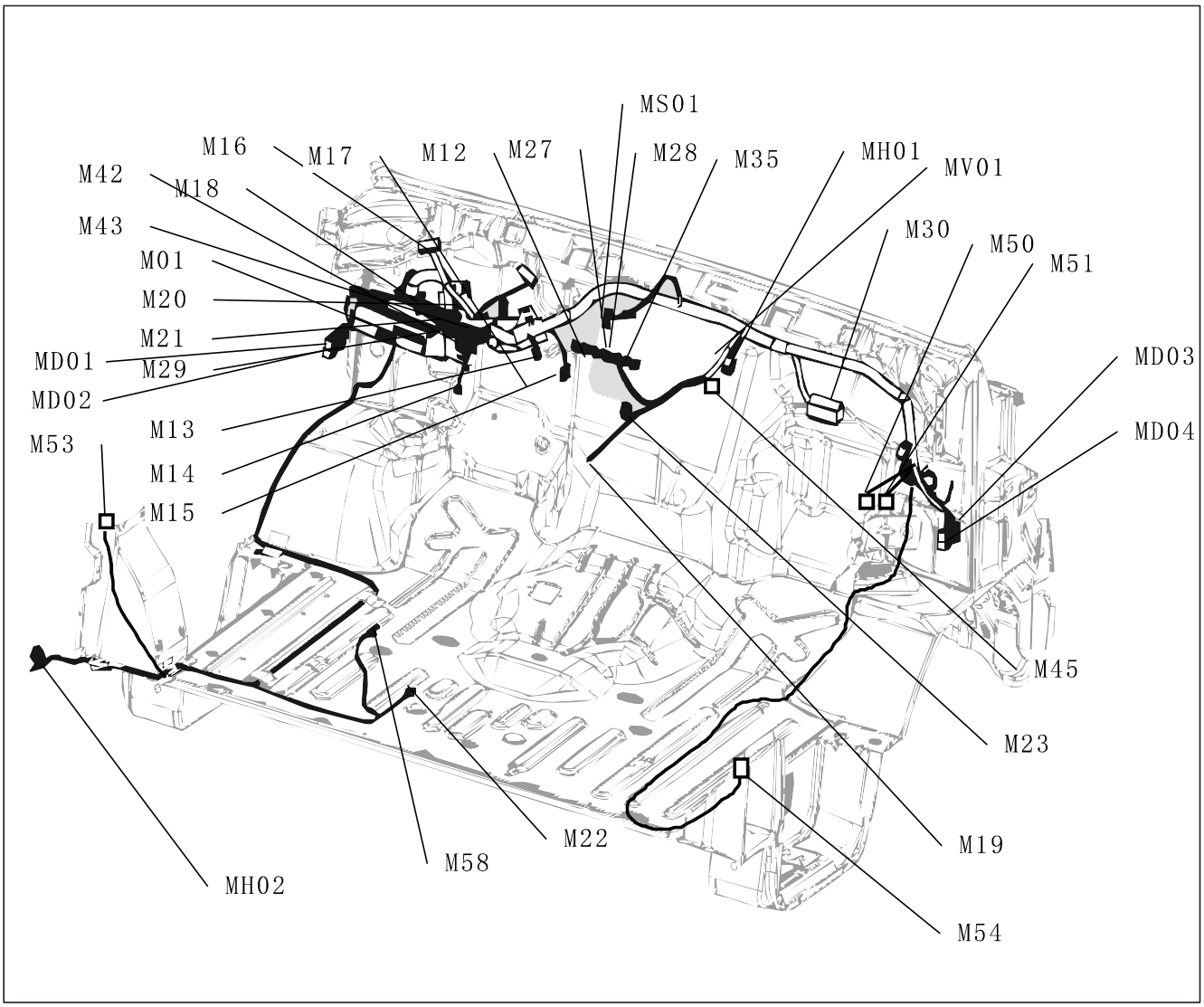

Downloaded from www.Manualslib.com manuals search engine

Engine compartment harness specification

Identification code	Name
E01	Connected to generator control
E02	Connected to generator positive pole
E03	Connected to starter control
E04	Connected to starter positive pole
E05	Connected to oil pressure switch
E06	Connected to reversing lamp switch
E07	Connected to water temperature sensor
E08	Connected to preheating harness
E12	Connected to battery positive pole
E13	Connected to battery negative pole
E14	Engine ground
E15	Vehicle body ground
EM01	Connected domain harness

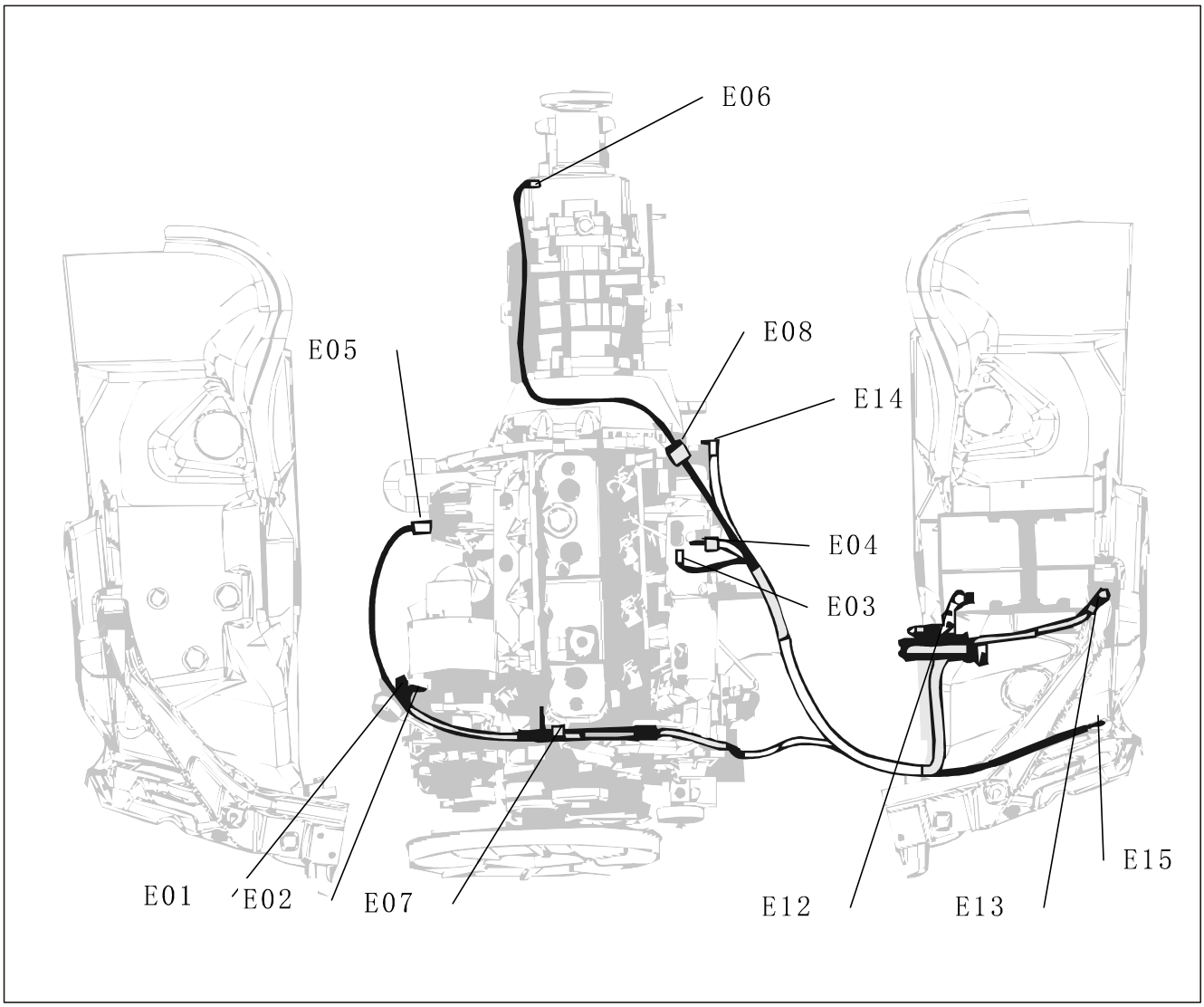

Downloaded from www.Manualslib.com manuals search engine

Left front door harness specification

Identification code	Name
D01	Left window regulator motor
D02	Left electric rear view mirror
D03	Window regulator main switch
D04	Left door loud speaker
D06	Left door lock actuator
D08	Electric rear view mirror switch
MD01	Connected to left main harness
MD02	Connected to left main harness

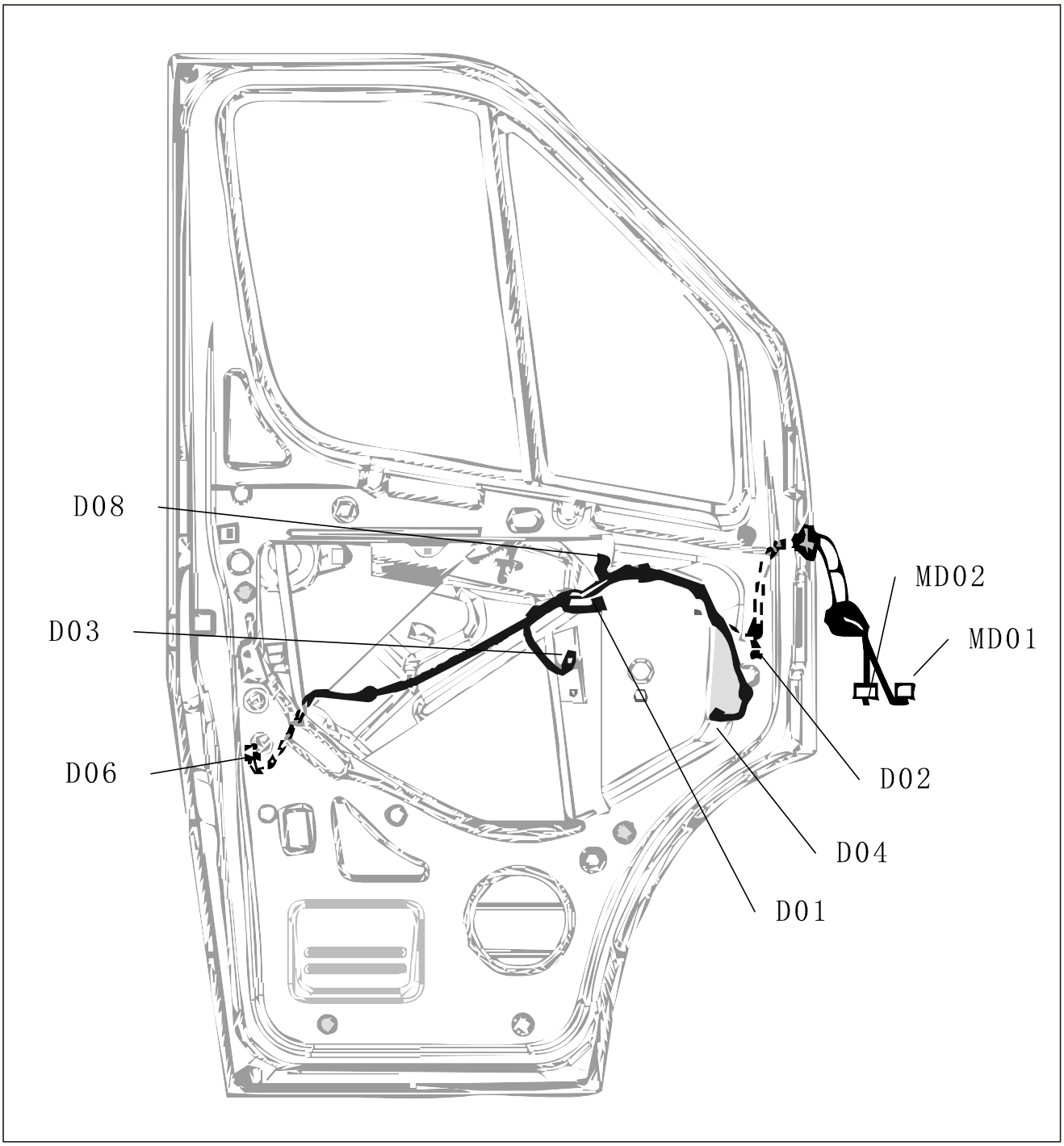

Downloaded from www.Manualslib.com manuals search engine

Right front door harness specification

Identification code	Name
D11	Right power window motor
D12	Right electric rear view mirror
D13	Power window auxiliary switch
D14	Right door loud speaker
D16	Right door lock actuator
MD03	Connected to right main harness
MD04	Connected to right main harness

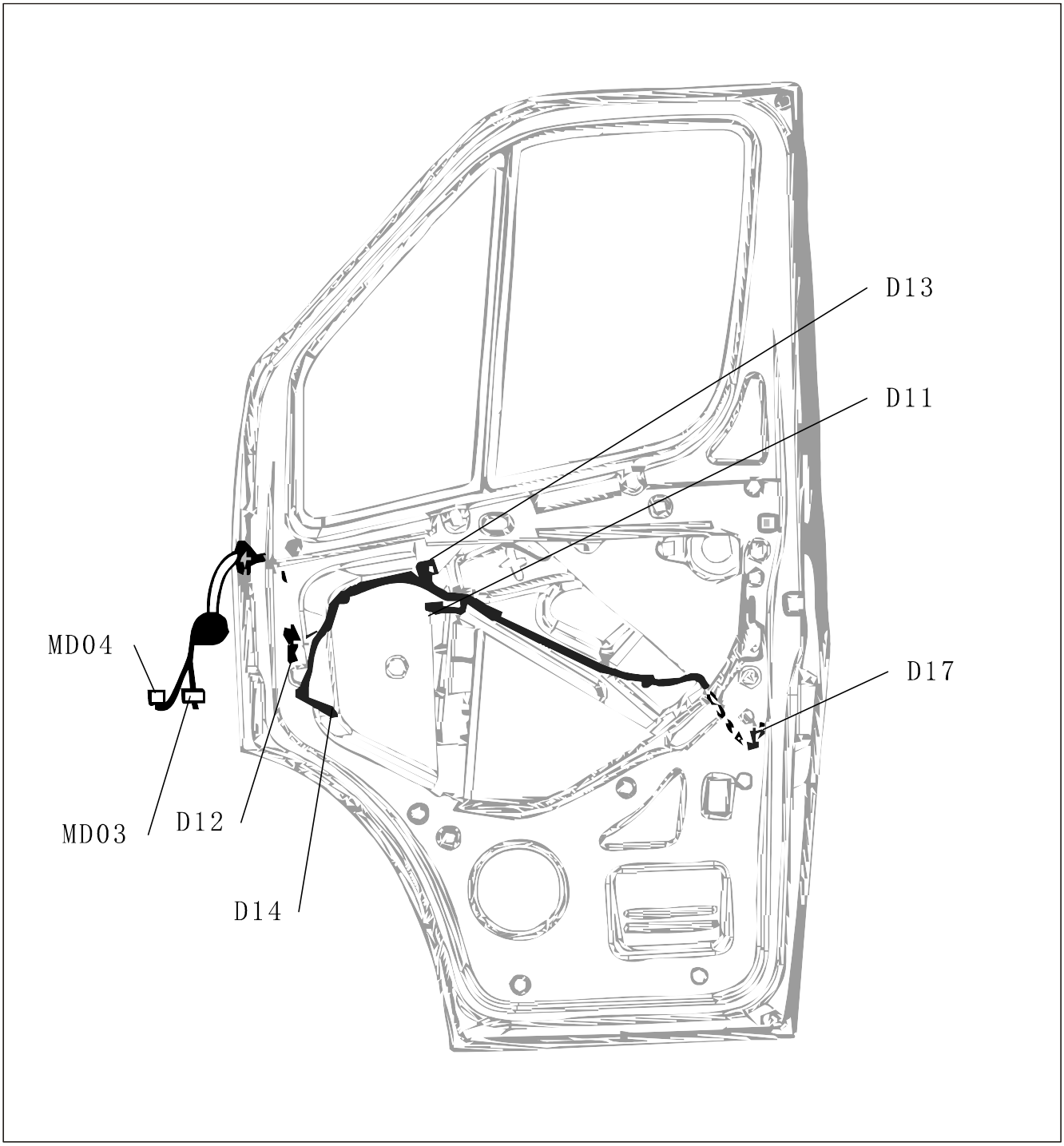

Downloaded from www.Manualslib.com manuals search engine

Left tail lamp harness specification

Identification code	Name
L01	Front ceiling lamp
L02	Left rear combination lamp
L03	High-mounted brake lamp
L04	Reversing radar ECU
L05	Antenna amplifier
L06	Rear blower
LR01	Connected to reversing radar harness
LT01	Connected to left back door harness
LM01	Connected to main harness 1
LM02	Connected to main harness 2
Ground	G

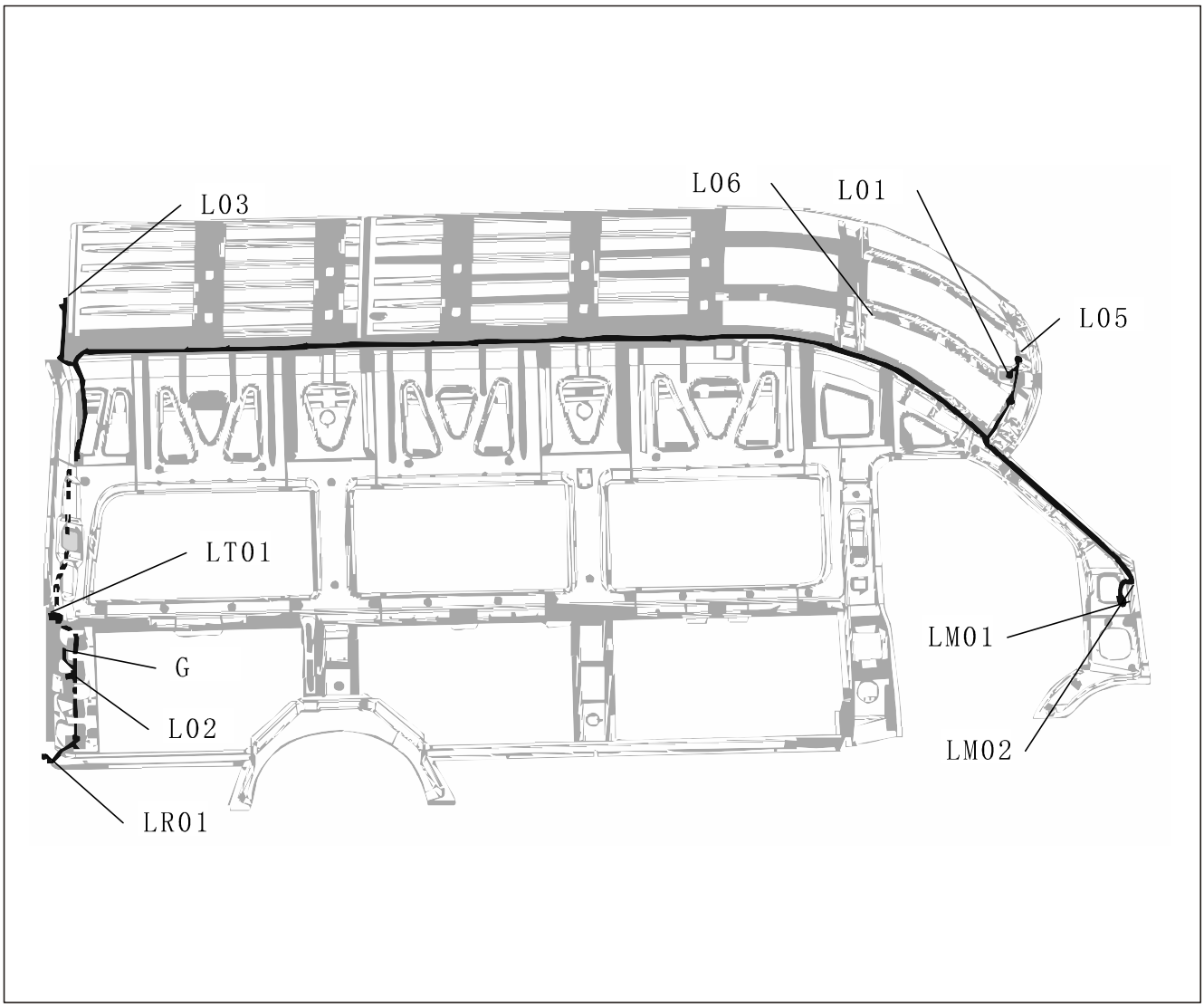

Downloaded from www.Manualslib.com manuals search engine

Right tail lamp harness specification

Identification code	Name
N01	Intermediate ceiling lamp
N02	Rear ceiling lamp
N03	Right rear combination lamp
N04	Right rear fog lamp
NM01	Connected to right main harness
Ground	G

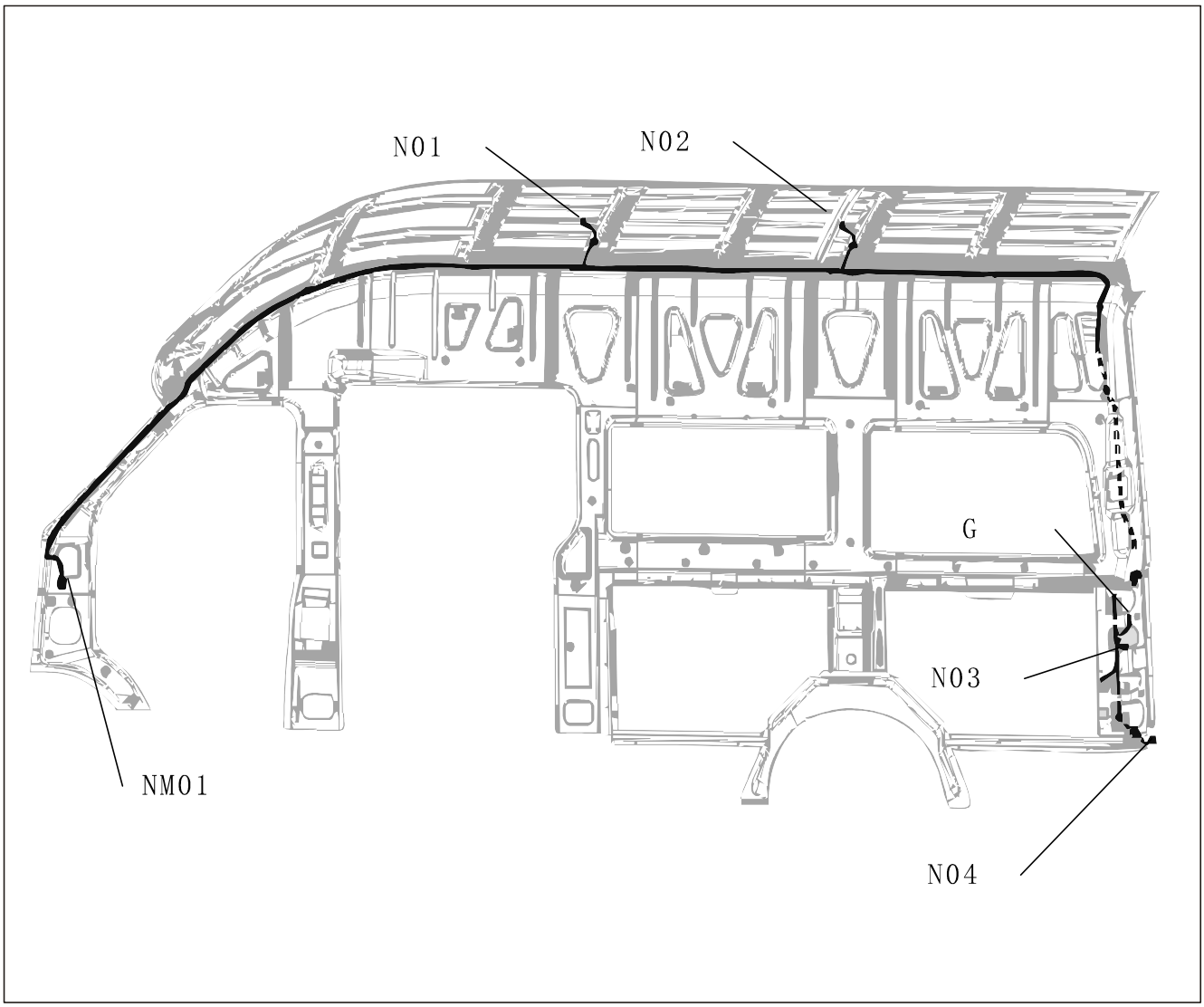

Downloaded from www.Manualslib.com manuals search engine

Left back door harness specification

Identification code	Name
T03	Left license plate lamp
T04	Right license plate lamp
LT01	Connected to left roof harness
Ground	G

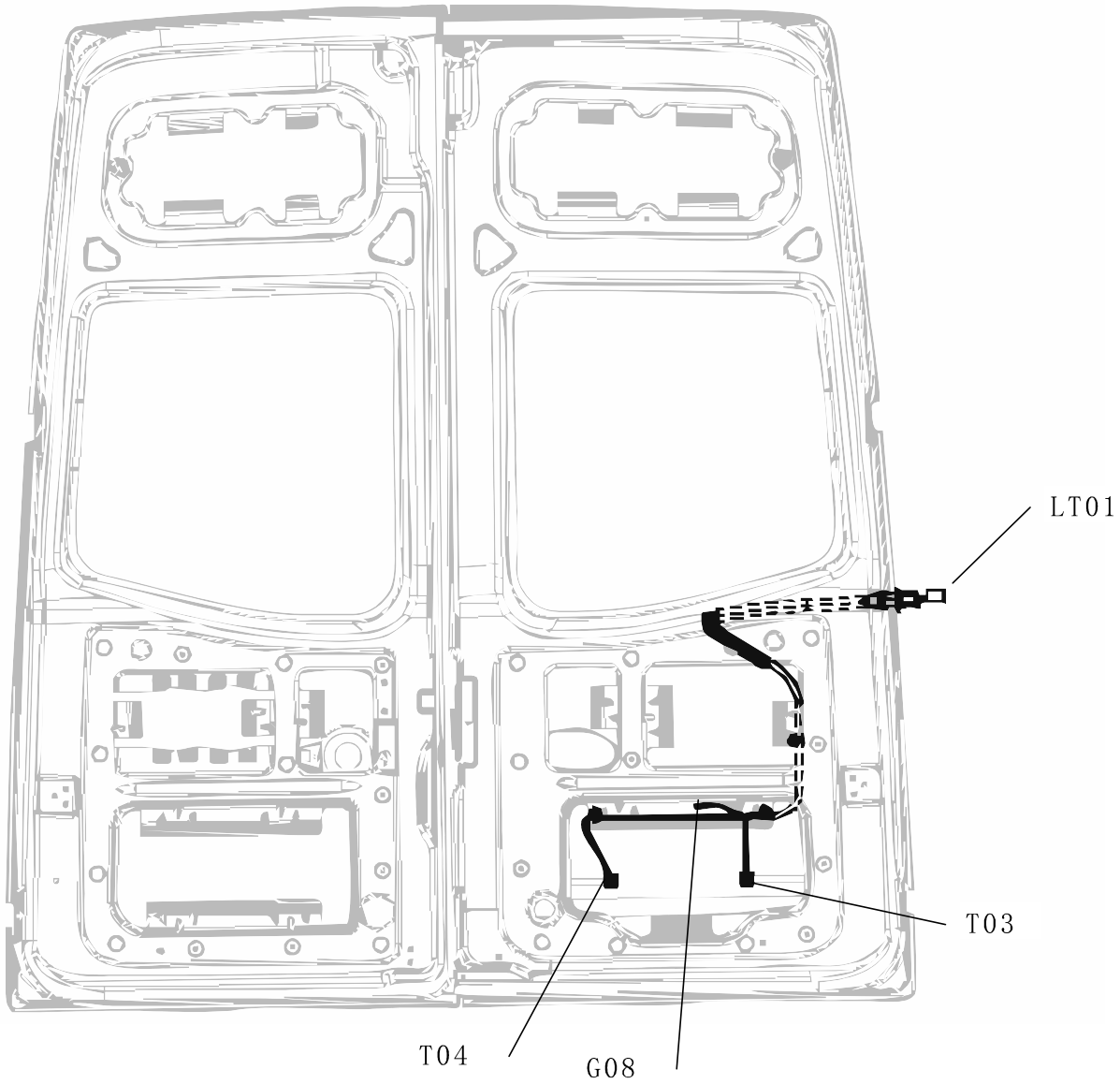

Downloaded from www.Manualslib.com manuals search engine

Rear loud speaker harness specification

Identification code	Name
S01	Left rear loud speaker
S02	Right rear loud speaker
SM01	Connected to main harness

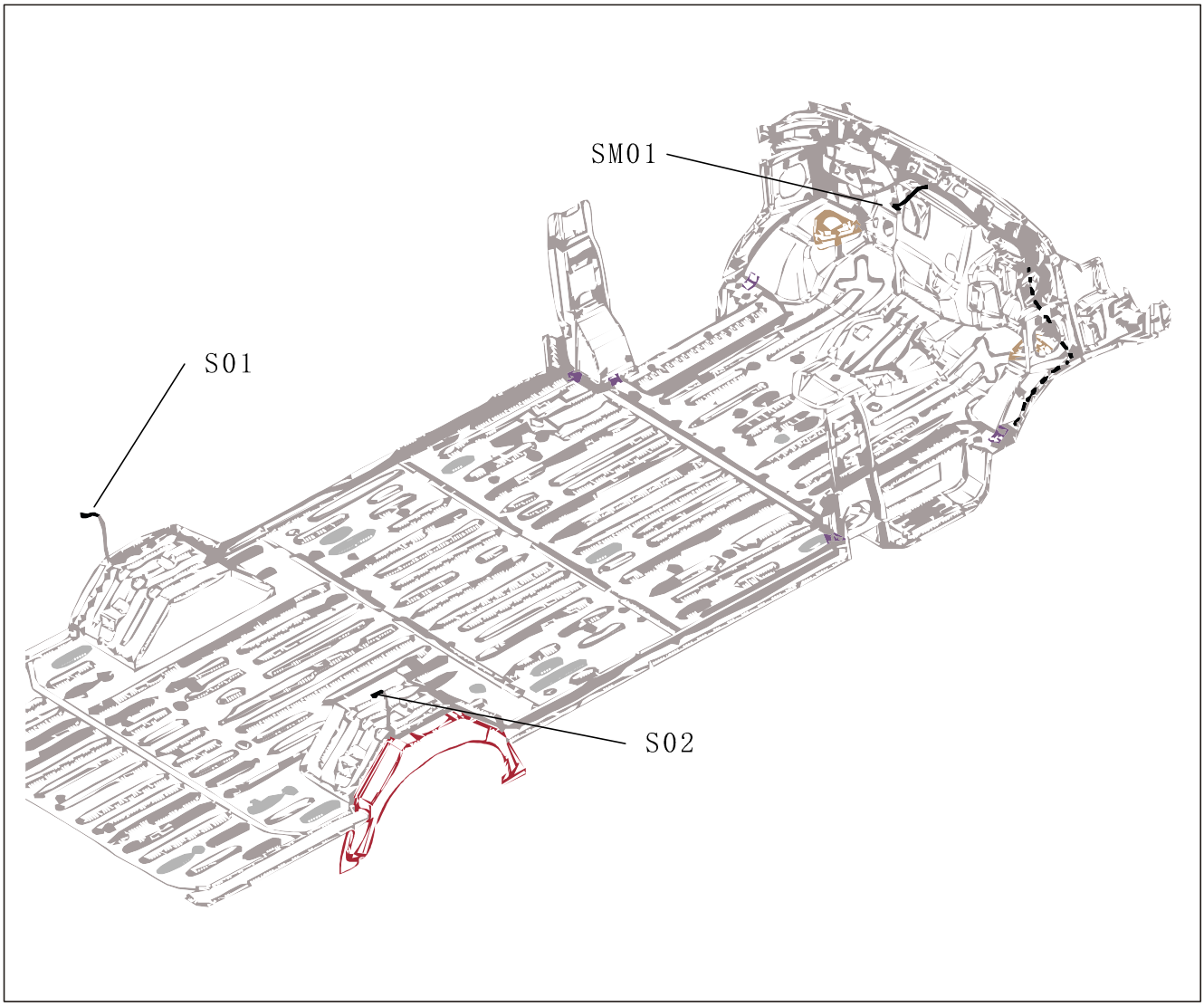

Downloaded from www.Manualslib.com manuals search engine

ABS harness specification

Identification code	Name
B01	ABS system control module
B02	Left front wheel speed sensor
B03	Right front wheel speed sensor
B04	Right front wheel speed sensor
B05	Right rear wheel speed sensor
BM01	Connected to fuse box
BM02	Connected to main harness 1
Ground	G01

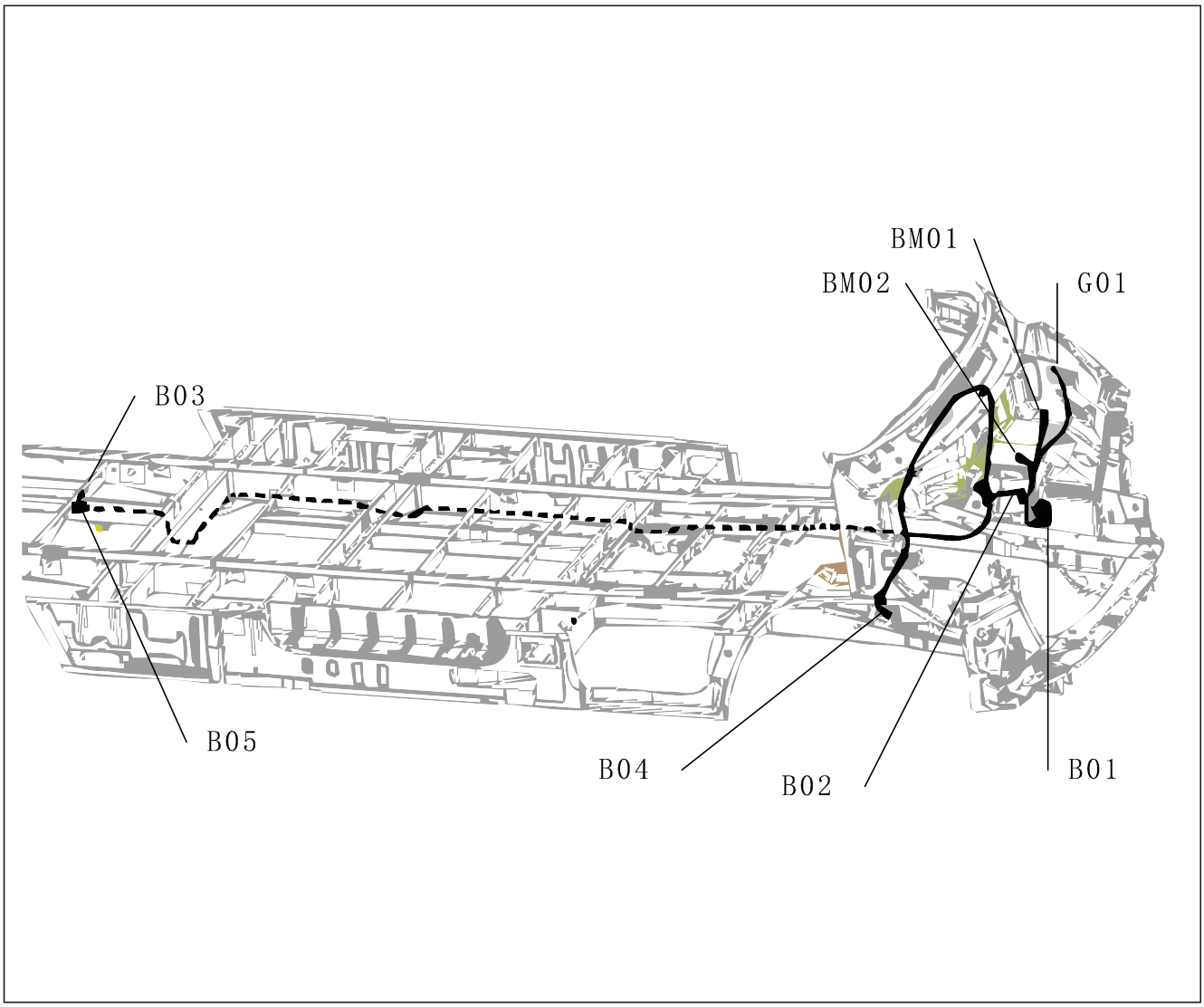

Downloaded from www.Manualslib.com manuals search engine

Fuel tank harness specification

Identification code	Name
G01	Fuel sensor
G02	Condenser fan motor
GM01	Connected to main harness 1

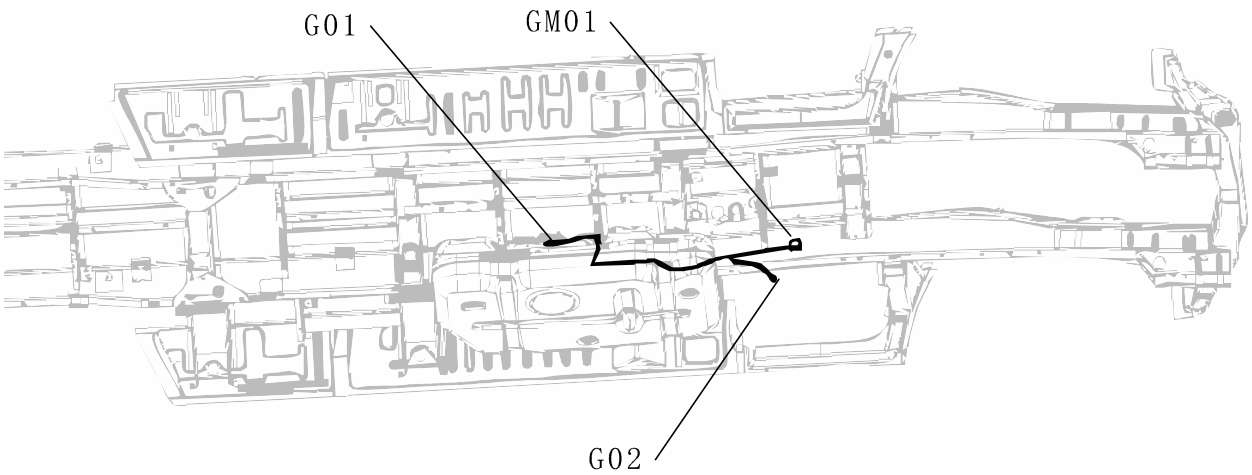

Downloaded from www.Manualslib.com manuals search engine

Reversing radar harness specification

Identification code	Name
R01	Left rear fog lamp
R02	Left external probe
R03	Left intermediate probe
R04	Right intermediate probe
R05	Right external probe
RL01	Connected to left tail lamp harness

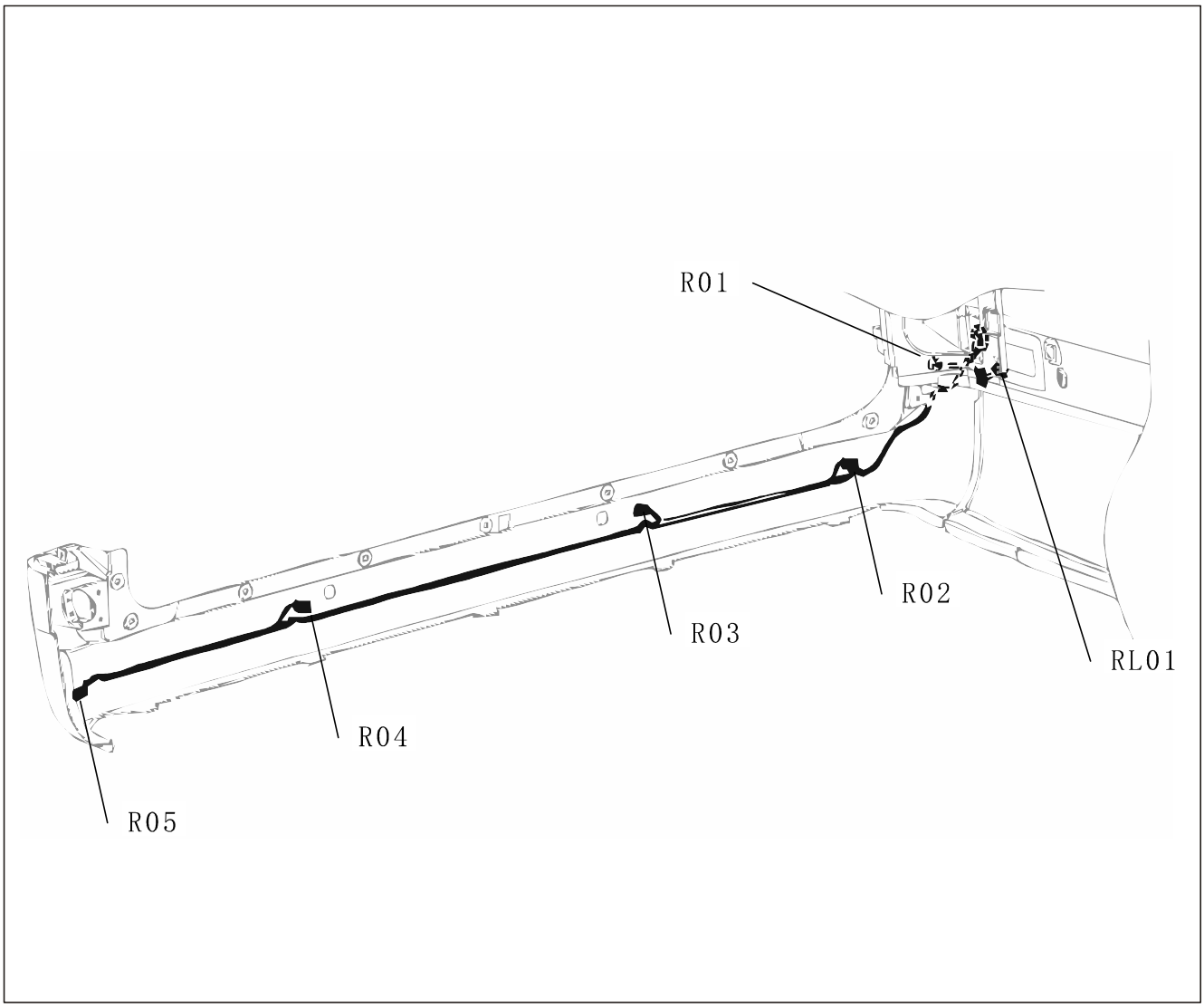

Downloaded from www.Manualslib.com manuals search engine

Preface

This SUNRAY Service Manual is hereby compiled by the Customer Service Department of JAC to help the technical service personnel correctly understand and get familiar with SUNRAY products of JAC INTERNATIONAL better and to provide them with the ability of quick repair and proper maintenance. This manual comprises five volumes: Engine Control, Engine Mechanical, Chassis, Body Electrical, and Body Accessories.

The Chassis Volume details the technical standards on removal/installation, testing, debugging and diagnosis for systems and components of SUNRAY long-wheelbase vehicle chassis.

When replacement is necessary, only genuine spare parts recommended by JAC can be adopted. During maintenance, please conduct tightening in strict accordance with tightening torque specified in the Manual. If locking device is damaged during removal, please replace it with new one.

No part of this manual can be reproduced or used in any form or by any mean without written permission. All Rights Reserved.

JAC INTERNATIONAL

March 2011

Downloaded from www.Manualslib.com manuals search engine

Chassis Volume Contents

Clutch

Clutch....1
Explosive View of Clutch....1
Introduction of Clutch....1
Clutch....2
Operating Principle....2
Inspection and Maintenance....3
Fault Symptom Table....4
Removal and Installation
Clutch....7
Specification
Specification....14
Tightening Torque....14

Manual Transmission

Manual Transmission....16
Explosive View of Manual Transmission....16
Introduction of Manual Transmission....16
Manual transmission....17
Inspection and confirmation....17
Fault Symptom Table....18
Removal/Installation
Manual Transmission....19
Specifications....43
Tightening Torque....43
Care and Maintenance....44

Brake System

Brake System....46
Explosive View....46
Introduction of Brake....47
Diagnosis and Testing
Brake System....49
Inspection and confirmation....52
Fault Symptom Table....53
Removal/Installation
Removal/installation of brake disc....50
Removal/installation of brake caliper assembly....54
Removal/installation of rear wheel brake shoe....56
Parking brake adjustment....59
Removal/installation of parking brake lever....60
Removal/installation of parking brake cable....61
Replacement of parking brake cable....62
Removal/installation of brake pedal....63
Removal/installation of brake master cylinder....65
Removal/installation of vacuum pump....66
Removal/installation of vacuum booster....68
Air bleeding for hydraulic pressure brake system....71

Downloaded from www.Manualslib.com manuals search engine

Anti-lock Brake System (ABS)

ABS system....74
Diagnosis and Testing
ABS system....79
Operating principle....79
Inspection and confirmation....81
Fault Symptom Table....85
Removal/Installation
ABS system....101
Wheel speed sensor....103

Transmission Shaft

Transmission Shaft....106
Explosive View of Transmission Shaft....106
Introduction of Transmission Shaft....106
Diagnosis and Testing
Transmission Shaft....107
Inspection and Confirmation....107
Fault Symptom Table....108
Removal/Installation
Removal of Transmission shaft....109
Installation of Transmission shaft....110

Front Suspension

Front Suspension....112
Front Suspension....112
Diagnosis and Testing
Front Suspension....114
Inspection and Confirmation....114
Fault symptom Table....115
Removal and Installation
Removal and Installation of Subframe....116
Specification....131
Tightening Torques....131

Rear Axle

Rear axle....134
Explosive View of Rear Axle....134
Introduction of Rear Axle....135
Diagnosis and Testing
Rear axle....136
Operating principle....136
Inspection and Confirmation....137
Fault symptom Table....140
Removal/Installation
Rear axle....141
Differential....141
Specification
Specification....148
Tightening torque....148

Downloaded from www.Manualslib.com manuals search engine

Steering System

Steering System....152
Explosive View of Steering System....152
Introduction of Steering System....153
Diagnosis and Testing
Steering System....154
Operating Principle....155
Inspection and confirmation....156
Fault Symptom Table....159
Removal and Installation
Removal and Installation of Steering System....164
Removal and Installation of steering wheel....167

Wheels and Tires

Wheels and Tires....174
Explosive View of Wheels and Tires....175
Precaution for Tire Usage....175
Diagnosis and Testing
Removal/Installation Instruction of Tire Assembly....176
Fault Symptom Table....177
Removal/installation
Removal/installation of wheel and Tires....178

Four-Wheel Alignment

Four-Wheel Alignment....184
Preparation before four-wheel alignment....184
Diagnosis and Testing
Four-Wheel Alignment....185
Function of each angle....185
Common fault symptom....186
Adjustment
Four/wheel alignment....187

Attached List—SUNRAY Special Service Tools

Downloaded from www.Manualslib.com manuals search engine

Clutch

Applied models: SUNRAY products manufactured by JAC

Subject Page

Instruction and Operation

Clutch....1
Explosive View of Clutch....1
Introduction of Clutch....1

Diagnosis and Testing

Clutch....2
Operating Principle....2
Inspection and Maintenance....3
Fault Symptom Table....4

Removal and Installation

Clutch....7

Specification

Specification....14
Tightening Torque....14

Downloaded from www.Manualslib.com manuals search engine

Instruction and Operation

Clutch

System diagram:

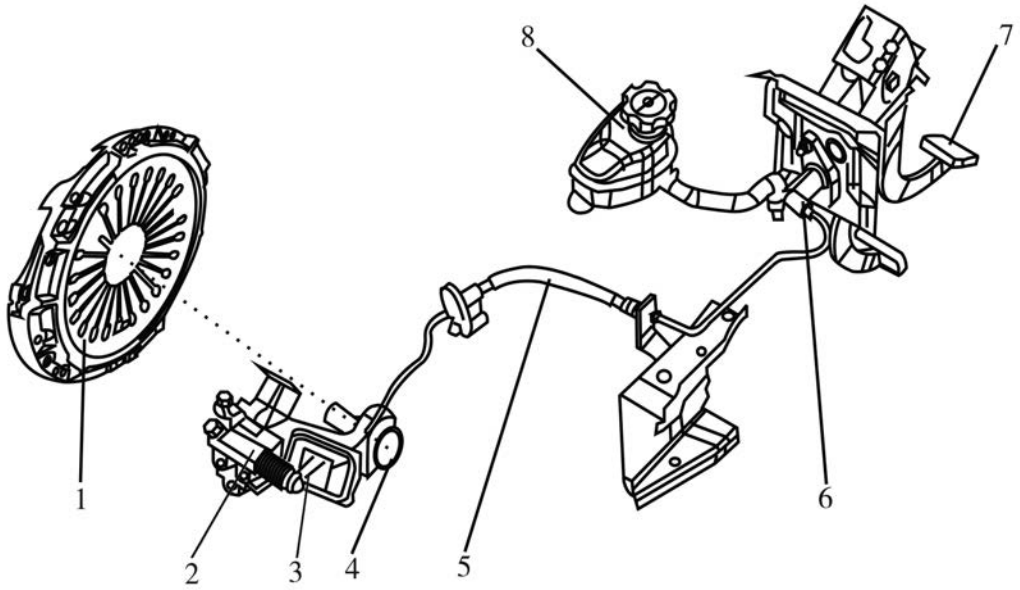

Diagram of Clutch Control System
1.Clutch 2.Clutch release cylinder 3.Release fork 4.Release bearing 5.Clutch line
6.Clutch master cylinder 7.Clutch pedal 8.Fluid reservoir

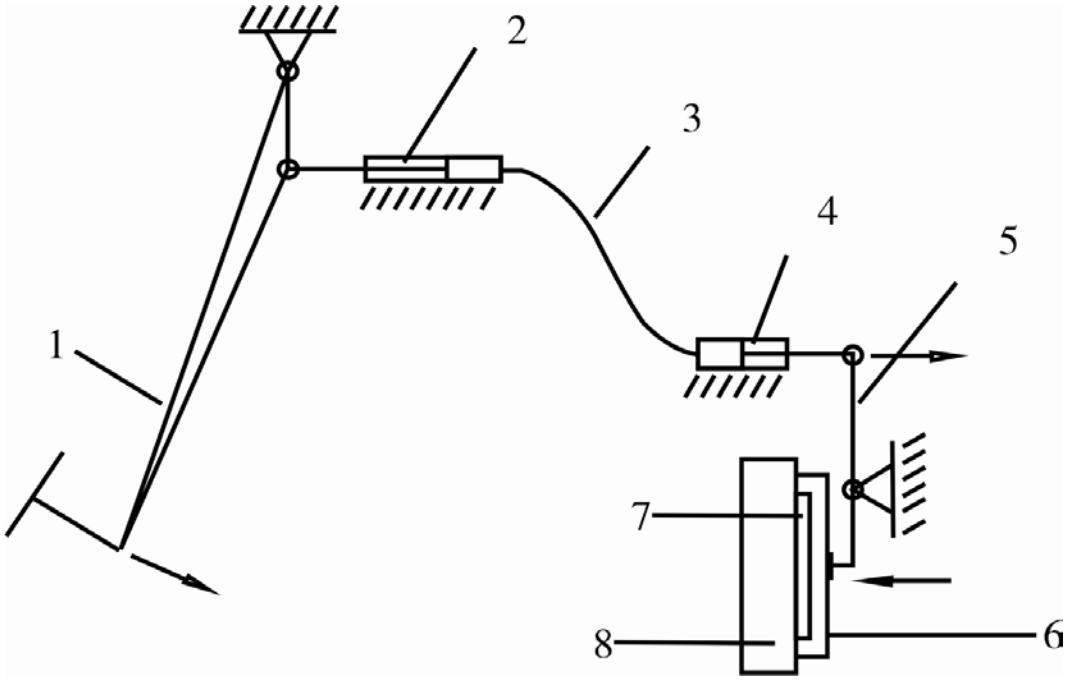

Schematic Diagram of Clutch Control Principle
1.Clutch pedal 2.Clutch master cylinder 3.Clutch hydraulic line 4.Clutch release cylinder 5.Release fork
6.Pressure plate 7.Driven disc 8.Flywheel

Downloaded from www.Manualslib.com manuals search engine

Instruction and Operation

Operating Principle

The clutch control is realized via remote hydraulic control of clutch engagement and release for the power transmission and cutting-off. Specific implementations are as follows:

In clutch release: The driver steps on the clutch pedal 1 and push the special clutch hydraulic fluid stored in the master cylinder via the push rod connecting the pedal and the clutch master cylinder 2 to flow through the line 3 consisting of pipes and hoses and enter the release cylinder 4. The release fork 5 pushes the release bearing shaft forward and then pushes the diaphragm spring of clutch pressure plates 6 separated. Then, the chamber clearance between the driven disc 7 and flywheel 8 becomes larger. Because of the decreased friction force, the driven disc 7 can not transmit power to the input shaft of the transmission, the power is cut off.

In clutch engagement: The driver releases the clutch pedal slowly, the pressure applied on the diaphragm spring separated finger of clutch pressure plates 6 decreases and the spring returns gradually. With relevant level effect, the fluid chamber of the slave cylinder becomes smaller while the fluid chamber of the master cylinder becomes larger and the clutch pedal is lifted slowly; At the same time, the distance between the pressure plate 6 and flywheel becomes smaller that the chamber clearance among the driven disc 7, flywheel 8 and pressure plate 6 becomes smaller. Because of the increased friction force, the driven disc 7 starts power transmission to the input shaft of the transmission, the power is engaged.

Inspection and Maintenance

Clutch：

1. Clutch pressure plate

① Inspect the end of the diaphragm spring for wears and altitude difference. In the case of obvious wears and altitude difference out of the limit value, replace the clutch pressure plate.
Limit value：0.5mm

② Inspect the surface of the pressure plate for wears, cracks and discoloration.

③ Inspect rivets of the pressure plate for looseness. In the case of loose rivets, replace the clutch pressure plate.

2. Clutch driven disc

Attention:

It is not allowed to clean the clutch driven disc with petrol!

① Inspect its surface for loose rivets, signal side contact, degradation due to burns and adherent grease. In the case of such problems, replace the clutch driven disc.

② Measure the rivet settlement. In the case of settlement out of the limit value, replace the clutch driven disc.

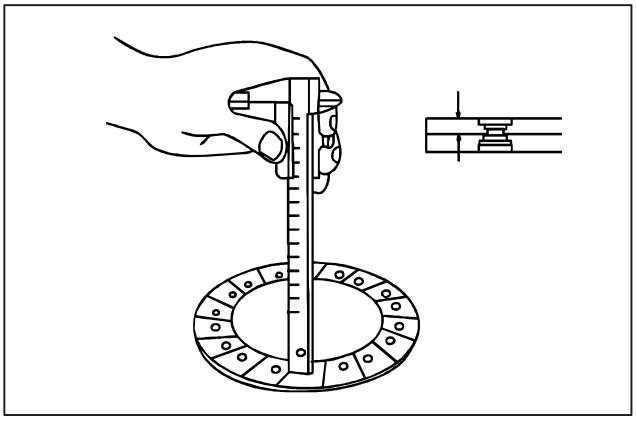

Limit value: 0.3mm

③ Inspect the torsion spring for looseness, breakage. In the case of such problems, replace the clutch driven disc.

④ Install the clutch driven disc onto the input shaft, inspect it for its sliding condition and rotation direction for looseness. In the case of poor sliding, clean and reinspect it after installation. In the case of obvious looseness, replace the clutch driven disc or input shaft or replace both simultaneously.

3. Clutch release bearing

Attention:

Inspect the bearing for burns, damages, abnormal noise, and unsmooth rotation.

Inspect the release bearing and diaphragm spring or inspect the contact surface of the release fork for abnormal wears. In case of such problems, carry out replacement.

4. Release fork

In the case of abnormal wears between the release fork and the contact surface with the bearing, carry out replacement.

Clutch release cylinder：

Release cylinder：

1. Inspect the inner surface of the release cylinder for rusting and damages.

2. Measure the inner diameter of the release cylinder with a cylinder gauge at three places (bottom, intermediate part and upper part). In the case of the clearance with the piston outer circumference out of the limit value, replace the release cylinder assembly.

Limit value: 0.15mm

Clutch hydraulic fluid

Attention:

Do not carry out operations to this system with a vacuum pump or any other evacuation power devices.

Inspect the fluid level of the clutch hydraulic fluid, please ensure the normal fluid level.

Air bleeding of the line:

Attention:

After the removal of clutch line, clutch master cylinder,

Downloaded from www.Manualslib.com manuals search engine

clutch slave cylinder and hydraulic release bearing or in the case of spongy clutch pedal, carry out air bleeding for the system.

1. Loosen bleed bolts of the clutch release cylinder.
2. Step on the clutch pedal slowly until complete air bleeding has been done.
3. Step on the pedal completely, maintain the status and tighten the bleed bolts.
4. Refill with hydraulic fluid for the clutch hydraulic system.

   Attention:

   Keep the fluid level in the fluid reservoir between MIN and MAX marks all the time.
5. Repeat the abovementioned steps until there is clear clutch hydraulic fluid draining out without any bubbles.
6. Confirm normal operation of the clutch.

① Start the engine, step on the clutch pedal and shift into the reverse gear after 2 seconds. In the case of large noise during gear selection, step the clutch pedal to the floor for 5 times in order to carry out system air bleeding.

② Wait for 30 seconds and reinspect the clutch operation. In the case of remained large noise, repeat air bleeding.

Fault diagnosis

Performance diagnosis for the clutch assembly and clutch control system should be carried out by experienced vehicle maintenance technicians.

After proper diagnosis, carry out adjustment or part replacement according to corresponding troubleshooting and proper steps of specific procedures in the service manual. For all parts to be replaced, only authorized parts of JAC shall be applied. For damaged clutch pressure plates or driven discs, they are not repairable and it is necessary to replace corresponding assemblies.

Numbers in the diagnosis table have no relations with the inspection sequence. There is no precedence relationship for various possible causes.

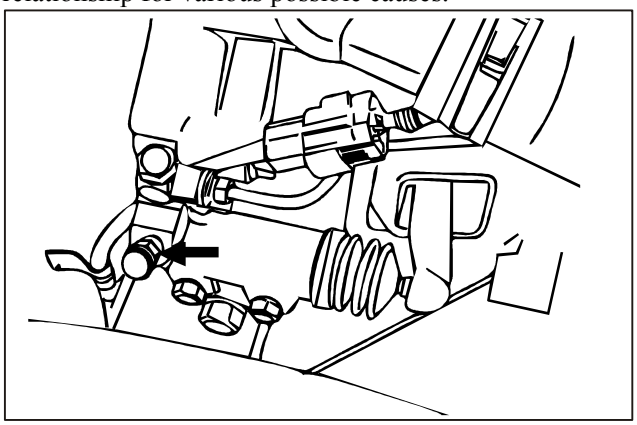

Downloaded from www.Manualslib.com manuals search engine

Common fault diagnosis table

Fault Symptom	Possible Cause of Fault	Troubleshooting
Incapable release	Incapable release of the clutch means unable functioning of the clutch and the power transmitted from the engine can not be cut off. Inspect for following conditions: 1. Deformation in clutch release lever 2. Deformation in diaphragm spring 3. Punsture in diaphragm spring support ring 4. Improper adjustment of clutch pedal control system 5. Seizure of clutch friction lining with flywheel or clutch pressure plate	Replace deformed, worn and fractured parts. Adjust clutch pedal control system.
Incomplete release	Incomplete clutch release may lead to incapable cutting-off of power transmitted from the engine and the shift lever will be hard to operate due to continuous rotation of clutch friction linings and transmission input shaft. Inspect for following conditions: 1. Deformation in clutch friction lining. In the rotation of the lining, there will be swing. 2. Damage in clutch friction lining 3. Mismatching of clutch friction lining spline and transmission input shaft or damage in spline tooth surface 4. Seizure of clutch friction lining with flywheel or clutch pressure plate 5. Thickness of flywheel/clutch pressure plate/ clutch friction lining out of specified dimension 6. Mechanical failure or improper adjustment in clutch pedal control system	Replace deformed, worn and fractured parts or parts out of specified dimension. In the case of poor matching of clutch friction lining with the operation of transmission input shaft spline, replace the clutch friction lining and if necessary, replace transmission input shaft. In the case of damaged clutch friction lining or clutch friction lining out of specified dimension, replace it. Replace inapplicable clutch thrust bearing. Adjust clutch system, remove unnecessary clearances and eliminate mechanical failures. Reinstall improperly-assembled parts.
Incomplete engagement	Incomplete clutch engagement may lead to incapable power transmission of the engine to the transmission input shaft and clutch friction linings will slip. Inspect for following conditions: 1. Smudginess in clutch friction lining due to engine oil or grease 2. Damage in clutch friction lining 3. No free travel for clutch pedal 4. Deformation or damage in diaphragm spring / clutch pressure plate / clutch release lever / clutch friction lining spline 5. Mechanical failure or improper adjustment in clutch pedal control system	Replace deformed, worn and fractured parts. Replace clutch friction linings or faulted clutch assembly. Carry out proper adjustment of clutch pedal free travel. Adjust clutch system, remove unnecessary clearances and eliminate mechanical failures. Reinstall improperly-assembled parts.
Slipping	Clutch friction lining slipping may lead to incapable normal power transmission of the engine. Inspect for following conditions: 1. Wear in clutch friction lining. 2. Smudginess in clutch friction lining due to engine oil or grease 3. Incomplete clutch engagement 4. Thickness of flywheel/clutch pressure plate/ clutch friction lining out of specified dimension, friction surface out of specified specification 5. Overhigh temperature of clutch housing due to improper driving 6. Installation of improper clutch	Replace deformed, worn and fractured parts or parts out of specified dimension and specification. Carry out the same troubleshooting with “Incomplete release” and “Incomplete engagement” Turn off the engine, cool the clutch housing（in the case of overhigh temperature in the housing）and carry out further diagnosis. Carry out correct installation for specified clutch. Adjust clutch system, remove unnecessary clearances and eliminate mechanical failures. Reinstall improperly-assembled parts. It is not allowed for the driver to step on the clutch pedal all the time.

Downloaded from www.Manualslib.com manuals search engine

CL Clutch

Fault Symptom	Possible Cause of Fault	Troubleshooting
Noise	Inspect for following conditions: 1. Improper clutch friction lining. 2. Poor balance 3. Fault in clutch thrust bearing 4. Damage in torsion damping spring of clutch friction lining	Replace deformed, worn and fractured parts. Install specified clutch friction lining. In the case of poor balance in some parts, replace clutch assembly. Adjust clutch pedal control system. Reinstall improperly-assembled parts.
Shudder	There may be clutch shudder in the case of incapable smooth engagement of the clutch friction lining with the flywheel. Inspect for following conditions: 1. Clutch friction lining damping spring out of specified specification 2. Clutch friction lining out of specified specification 3. Smudginess in clutch friction lining due to engine oil or grease	Replace clutch assembly.

Downloaded from www.Manualslib.com manuals search engine

Removal and Installation

Clutch

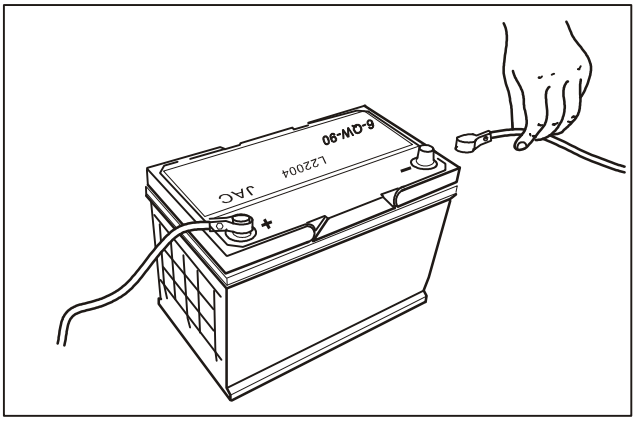

1. Disconnect the negative cable of battery.

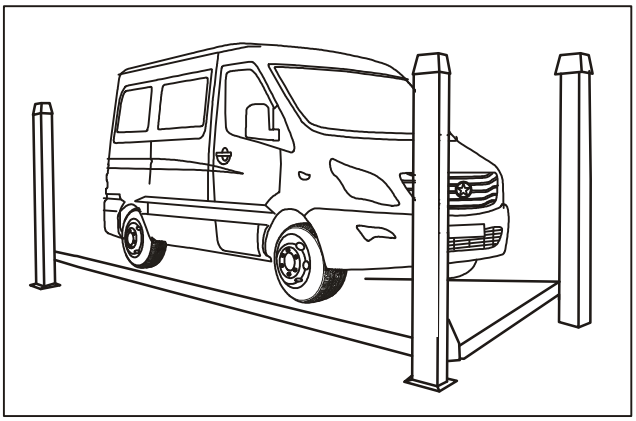

2. Lift the vehicle.

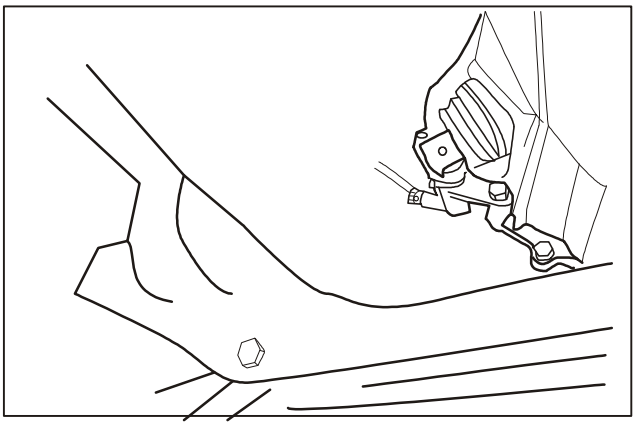

3. Remove the clutch slave cylinder.
   - Remove bleed bolts of clutch slave cylinder and drain system brake fluid completely.
   - Remove the clutch slave cylinder

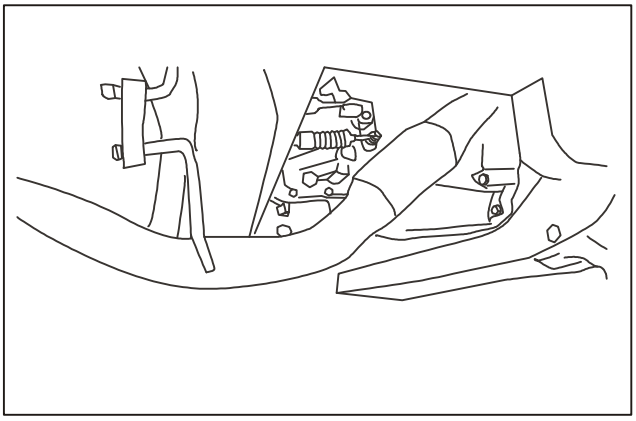

4. Remove the shift cable assembly.

Attention:

Remove the shift cable and fixit on one side.

Downloaded from www.Manualslib.com manuals search engine

Removal and Installation (continued)

Clutch

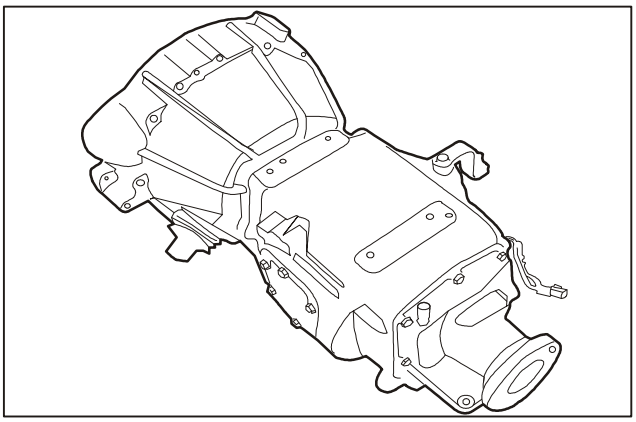

5. Remove the rear support pad of the transmission. Jack up the transmission with a jack.
6. Remove bolts at the side of connection between the transmission rear flange plate and the propeller shaft.
7. Remove the starter and the bolts at the side of connection between the transmission and generator. Move the removed transmission backward.

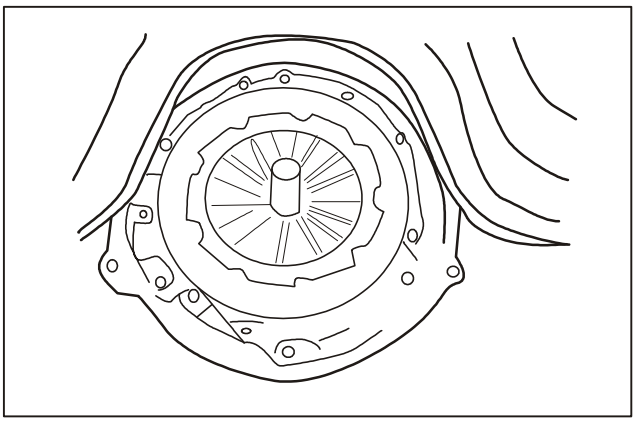

8. Insert special tools in the center of pressure plate.
   - Remove mounting bolts of the pressure plate assembly and pay attention to the installation position.

Attention:

In the processing of removal, there should be one holding up the pressure plate assembly to avoid pricks to people.

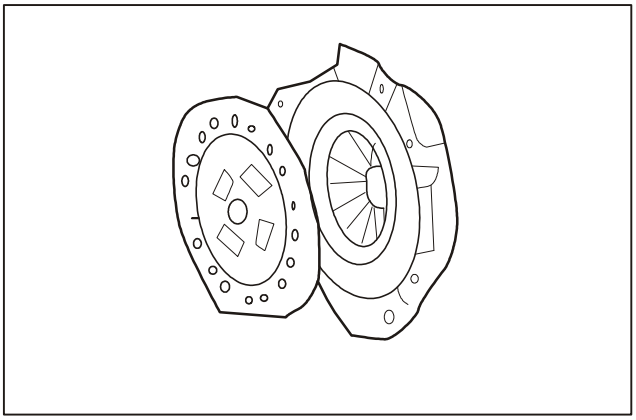

9. Remove pressure plates and friction linings and place them horizontally on the ground. Do not smudge them and it is not allowed to wipe the pressure plates and friction linings with oily cloth.

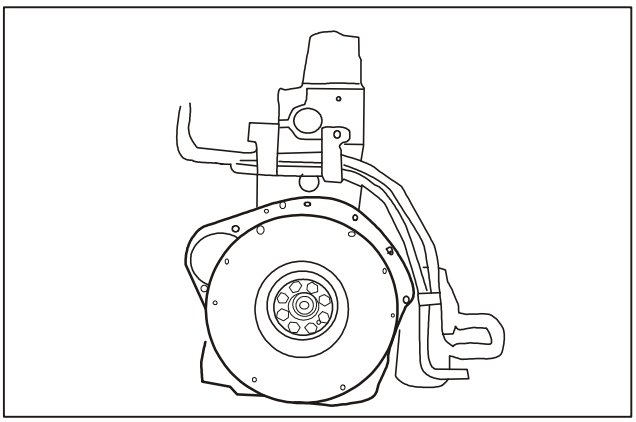

10. Remove mounting bolts of the flywheel. Pay attention to the removal process of the flywheel and it is not allowed to fix the gear ring or crankshaft position sensor target wheel with a screwdriver.

Downloaded from www.Manualslib.com manuals search engine

Removal and Installation (continued)

Clutch

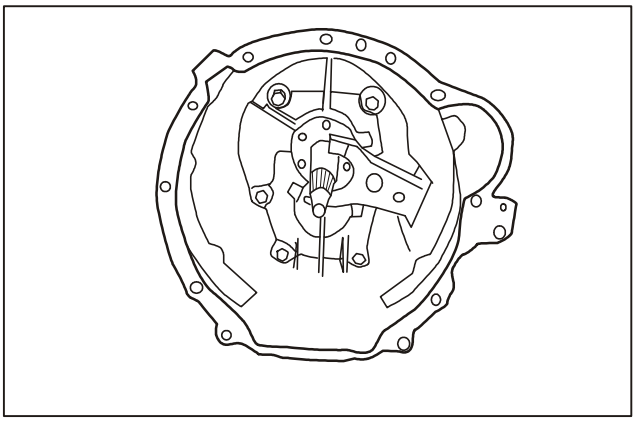

11. Remove the release bearing. Attention: Do not make the lubricating grease to contact with the clutch assembly.

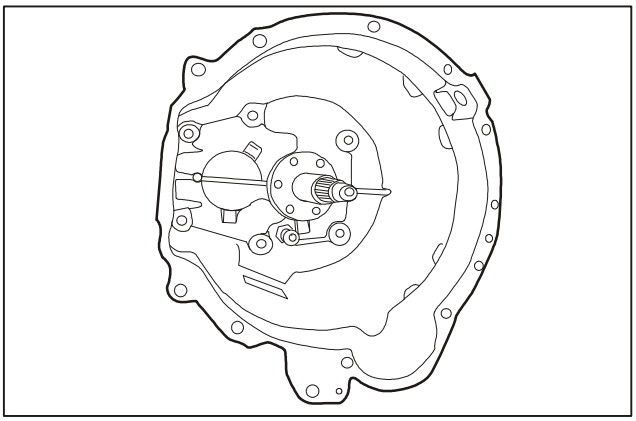

12. Remove the release fork.
    - Remove the dust boot at the outside of the release fork.
    - Snap the release fork. Attention: the release fork is clipped on the support pin and pay attention to the spring force to avoid injury in hands.

Downloaded from www.Manualslib.com manuals search engine

Removal and Installation (continued)

Installation of Clutch

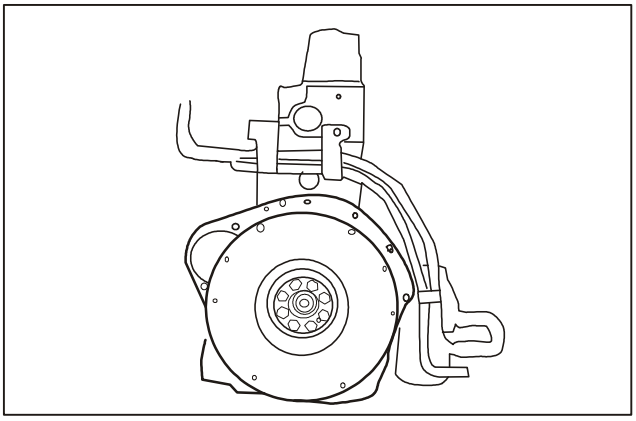

Installation:

1. Install the flywheel onto the crankshaft and pay attention to the fixed pin there.

Attention:
There should be another man for cooperation in the installation and pay attention to safety.

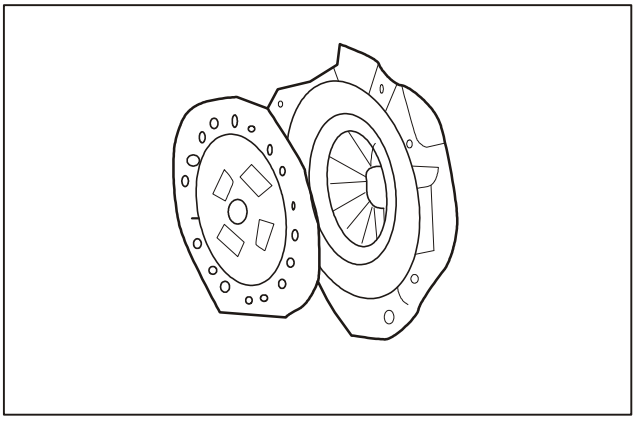

2. Insert the special tool into the saddle bore of guide bearing at the rear end of crankshaft. Set the new friction lining and pressure plate into the special tool. Install the pressure plate assembly in place. In the process of bolt tightening, pay attention to tighten the bolts one by one diagonally. Pull out the special tool at last.

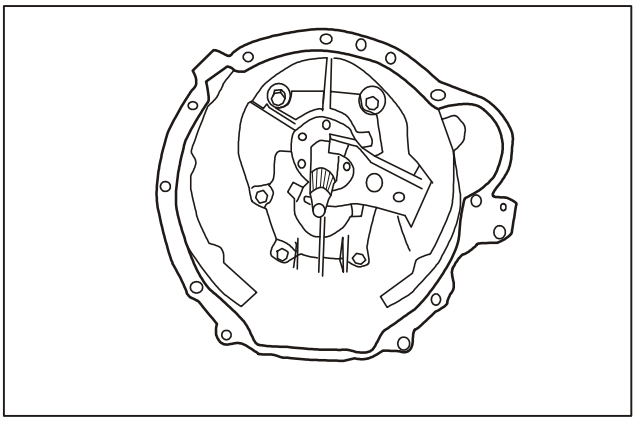

3. Install the release lever into the clutch housing and clamp the release lever. Finally, install a dust boot in the rear of the installed release lever.
4. Apply a layer of lubricating grease on the inner side of the release bearing and install the release bearing into the transmission input shaft.

Downloaded from www.Manualslib.com manuals search engine

Removal and Installation (continued)

Installation of Clutch

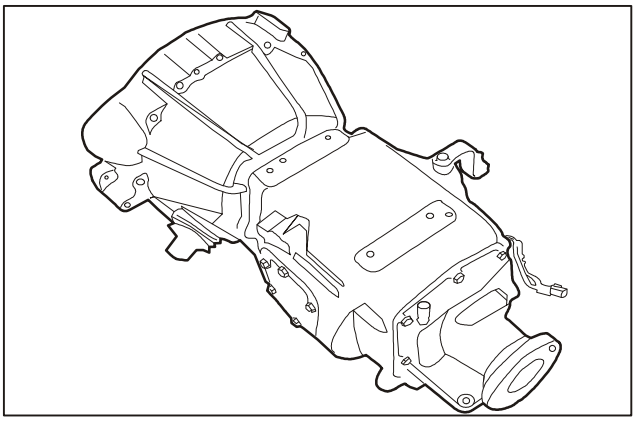

5. Install the transmission in the clamping jaw to corresponding position and install a bolt there without tightening.
6. Turn the transmission and install the transmission input shaft into the center of the installed clutch assembly.
7. Shake the transmission to inspect whether the transmission input shaft is installed in place. Install and tighten connecting bolts between the transmission and engine with attention to the tightening torque. Install the starter into the transmission assembly.
8. Install the mount pad in the rear of transmission and tighten it. Install the propeller shaft to the flange plate of the transmission output shaft with attention to the installation position.

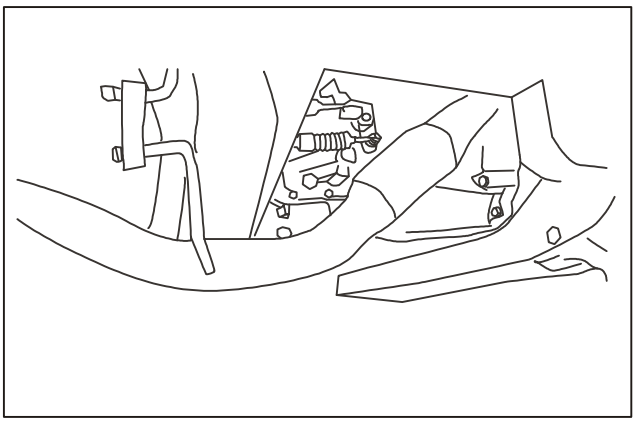

9. Install the transmission gear shift mechanism cable in place. Pay attention to the cotter pin involved in the installation process and replace the used cotter pin with a new one.

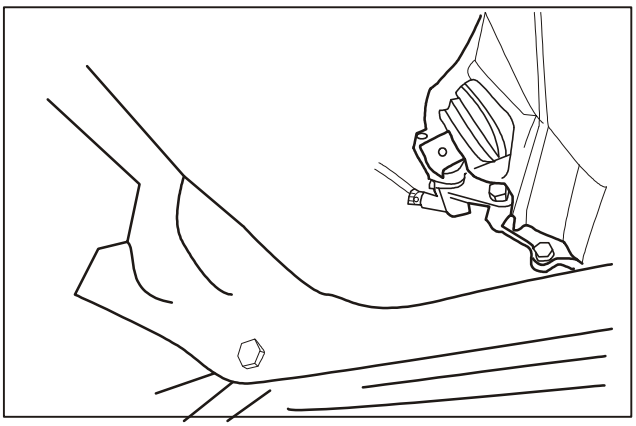

10. Clamp the moving side of the removed clutch slave cylinder into the release lever and fix the slave cylinder with bolts.
11. After installation of the slave cylinder, lower the vehicle and carry out air bleeding for the clutch hydraulic system.
12. Connect the negative cable of battery.

Downloaded from www.Manualslib.com manuals search engine

Removal and Installation (continued)

Clutch master cylinder

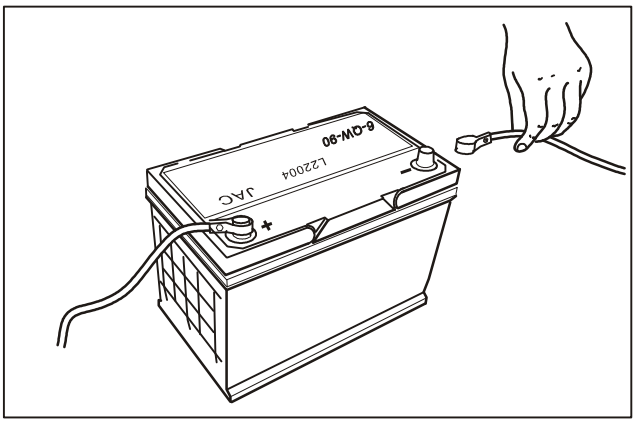

1. Disconnect the negative cable of battery.

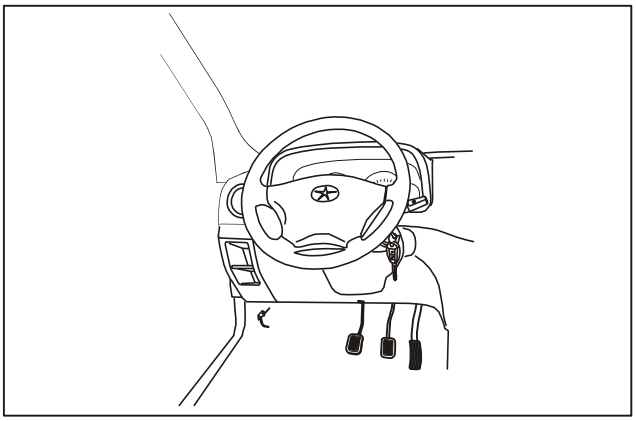

2. Remove the lower protective plate of driver's instrument panel.
   Attention:
   Pay attention not to damage the instrument clip during its removal.

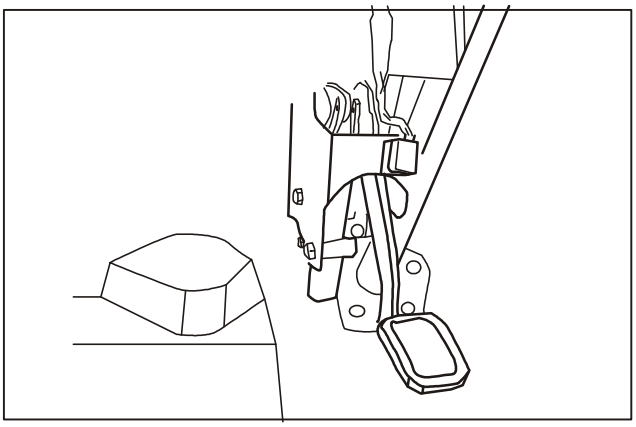

3. Drain brake fluid in the brake fluid reservoir.
4. Remove three mounting bolts of the clutch master cylinder and do not take down the cylinder after bolt removal.
5. Remove output and input oil pipes of the clutch master cylinder.
6. Remove the cotter pin of the clutch master cylinder and pull out the cotter pin.

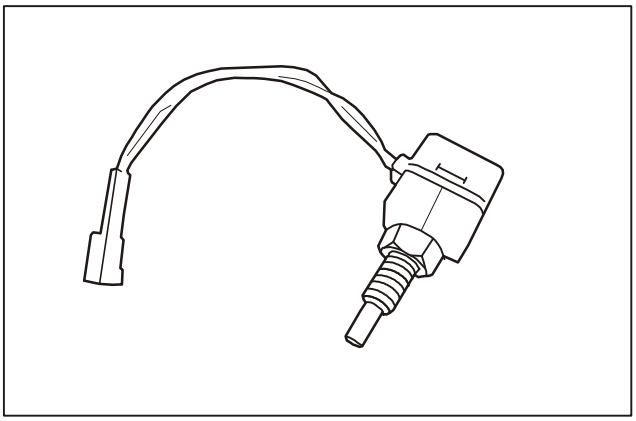

7. Disconnect the clutch switch plug.
8. Remove the clutch switch with an open end wrench with attention of installation position.

Downloaded from www.Manualslib.com manuals search engine

Removal and Installation (continued)

Clutch master cylinder

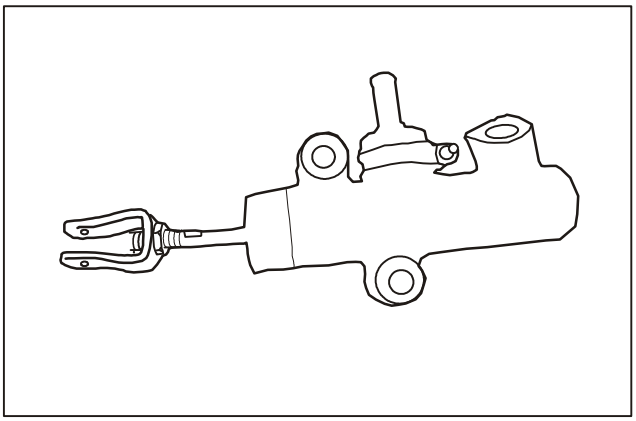

Installation

1. Clean the clutch master cylinder completely.
2. In the installation of output and input hoses of the master cylinder, confirm that they are well tightened.
3. Inspect the master cylinder oil pipe for deformation or crush.

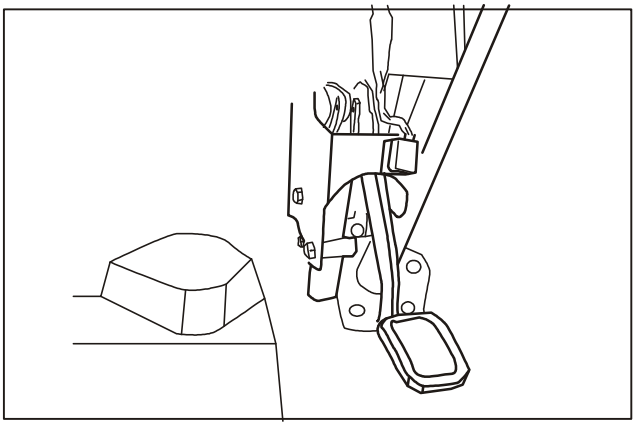

4. Align the master cylinder to screw holes and carry out tightening according to standard torque.
5. Insert the fixed pin of the master cylinder and fix it with a new cotter pin.

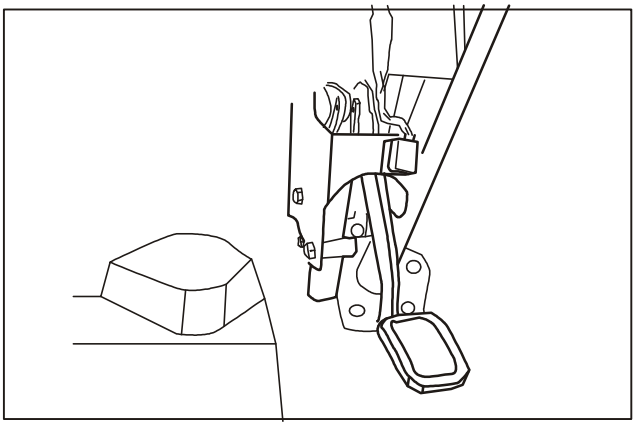

6. Screw the clutch switch into pedal position and inspect for its proper installation position with a multimeter.

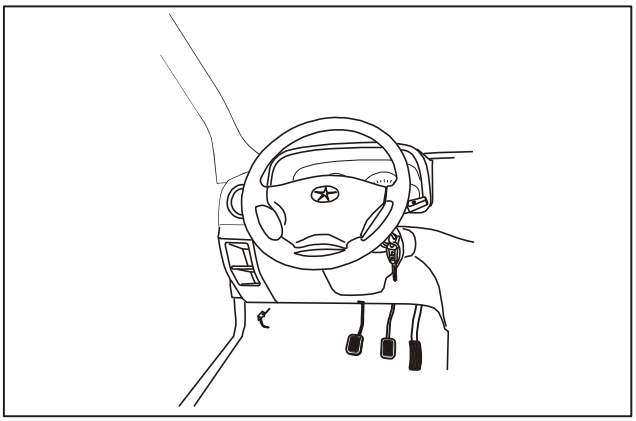

7. Install the lower protective plate on the driver's instrument panel.
8. Connect the negative cable of battery.

Downloaded from www.Manualslib.com manuals search engine

Specification

Tightening Torque

Part name	Tightening torque Nm	Quantity
Clutch master cylinder bolt and nut cap	23～29	3
Nut for installing the master cylinder to the vehicle body	23～29	4
Clutch slave cylinder bolt	120～140	3
Clutch hose support bolt	23～29	1
Clutch air bleeder pipe bolt	23～29	1
Clutch hose punching bolt	45～50	1
Air bleeder outlet oil pipe joint	23～29	1
Pressure plate mounting bolt	45～50	6

Downloaded from www.Manualslib.com manuals search engine

Manual Transmission

Applied models: SUNRAY products manufactured by JAC

Subject Page

Instruction and Operation

Manual Transmission..... 16
Explosive View of Manual Transmission..... 16
Introduction of Manual Transmission..... 16

Diagnosis and Testing

Manual transmission..... 17
Inspection and confirmation..... 17
Fault Symptom Table..... 18

Removal/Installation

Manual Transmission..... 19

Specifications

Specifications..... 43
Tightening Torque..... 43
Care and Maintenance..... 44

Downloaded from www.Manualslib.com manuals search engine

Instruction and Operation

SUNRAY vehicles adopt synchronizer manual-shift mechanical transmissions of good shifting flexibility, good hand feel, low noise, compact structure, large carrying capacity as well as good sealing performance, which consist of five forward gears and one reverse gear. All gears are of helical teeth. Except for the reverse gear that adopts direct transmission through sleeve, the other gears adopt three-cone (single cone, three-cone only for 1st/2nd gear) synchronizer. Shifting mechanism is of cable-type remote control.

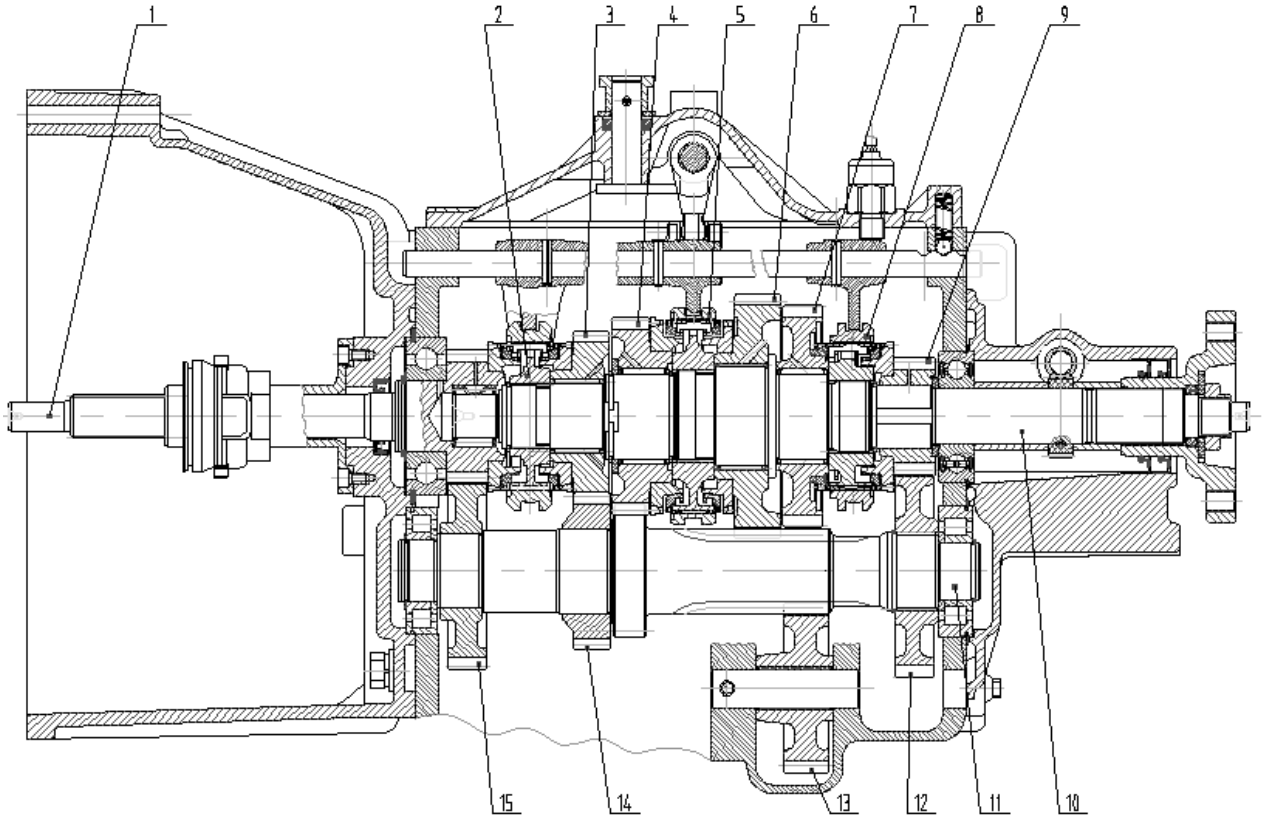

Principles of motion:

1st gear

Engine→Clutch→Input shaft 1→Main gear of countershaft 15→Countershaft 11→1st driving gear 6→1st/2nd gear synchronizer 5→Output shaft 10

2nd gear

Engine→Clutch→Input shaft 1→Main gear of countershaft 15→Countershaft 11→2nd driving gear 4→1st/2nd gear synchronizer 5→Output shaft 10

3rd gear

Engine→Clutch→Input shaft 1→Main gear of countershaft 15→Countershaft 11→3rd gear of countershaft 14→3rd driving gear 3→3rd/4th gear synchronizer2→Output shaft 10

4th gear

Engine→Clutch→Input shaft 1→3rd/4th gear synchronizer 2→Output shaft 10

5th gear

Engine→Clutch→Input shaft 1→Main gear of countershaft 15→Countershaft 11→5th gear of countershaft 12→5th driving gear 9→5th/reverse gear synchronizer 8→Output shaft 10

Reverse gear

Engine→Clutch→Input shaft 1→Main gear of countershaft 15→Countershaft 11→Reverse gear 13→Reverse driving gear 7→5th/reverse gear synchronizer 8→Output shaft 10

Downloaded from www.Manualslib.com manuals search engine

Instruction and Operation

Control

Gear selector lever and gear shift lever can be controlled through controlling the control handle inside cab to realize gear shifting. Different directions shown on the control handle grip corresponds to different gear select and shift positions. The control handle shall return to neutral position automatically after each time of gear removal. Gear selection can only be performed after the control handle is returned to the neutral position.

1. In order to shift gear, depress the clutch pedal fully to make the transmission out of engine torque and then control the gear shift lever quickly to shift gear. Please adopt low speed gear when starting.
2. Please adopt low speed gear during vehicle climbing, running downhill or turning. Don't let the vehicle idling with clutch released.
3. In case it is difficult to control the control handle, please stop and inspect. Don't apply it violently.

Kilometers applicable to each forward gear of transmission:

Gear Position	1st gear	2nd gear	3rd gear	4th gear	5th gear
Kilometers	0～15	20～30	35～45	50～60	65～75

Attention:

1. **Gear shifting of transmission should be performed within relevant kilometer range.**
2. **The applicable kilometers may vary when the transmission is equipped to different vehicles.**

Principle of gear shifting

Under the forward running status, the requirements of gear shifting is as follows: gear shifting from 1st gear to 5th gear step by step for speeding up, gear shifting from 5th gear to 1st gear step by step for speeding down; reverse gear can be shifted to in 3 seconds of pause after the clutch pedal is depressed under motionless state of vehicle; don't apply reverse gear under running state and don't apply forward gears under reversing state. Don't use the control handle of transmission as an armrest, in order to avoid early wear of shift fork.

Attention: In case of any emergency occurs during running state, you may perform gear shifting without following this principle.

Meaning of transmission name:

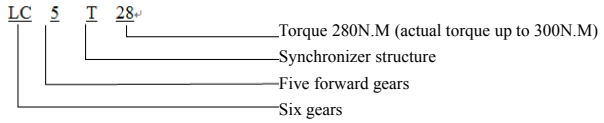

Inspection and Confirmation

1. Check input shaft assembly

1) Check input shaft for gear teeth fracture, pitting, severe wear or scuffing of tooth surface. If any, please replace the input shaft.
2) Check input shaft spline for any severe wear or damage. If any, please replace the input shaft.
3) Rotate bearing by hand to check for non-flexible rotation or sticking. If any, please replace the bearing.

Note:

Please check the stop ring on bearing during replacement of bearing. If it is deformed, please replace it.

2. Check output shaft assembly

Check input shaft for gear teeth fracture, pitting, severe wear or scuffing of tooth surface. If any, please replace the output shaft.

Note:

Rotate bearing by hand to check for non-flexible rotation or sticking. If any, please replace the bearing.

3. Check synchronizer ring

1) Check tooth surface of synchronizer ring for any damage.
2) Check conical surface for any damage or wear; check if the screw is crushed.

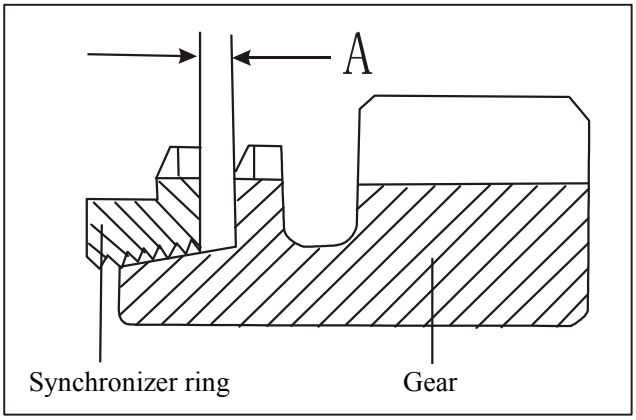

3) When the synchronizer ring is pressed close to gear, check clearance "A". If "A" is below the limit, please replace the ring.

Limit value: 0.5mm

4. Check synchronizer gear sleeve and gear hub

1) Assemble the synchronizer gear sleeve and gear hub together and check for smooth sliding but no sticking.
2) Check front and read end of inner surface of gear sleeve for any damage.

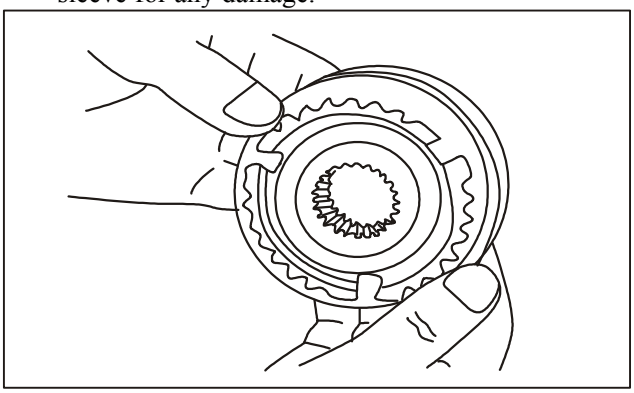

Attention: In case the synchronizer gear sleeve or gear hub is in need of replacement, they should be replaced as a whole.

Downloaded from www.Manualslib.com manuals search engine

Instruction and Operation

Fault diagnosis

Common fault diagnosis table

Fault Symptom	Possible Cause	Solution
Jumping back to neutral position under running state	Excessive wear of shift fork shaft arc, elastic deformation of lock ball spring	Check if the operating system has pushed the gear shift rocker arm of transmission into place; or with the transmission removed, push the shift fork into gear by hand to check gear meshing status.
	Excessive wear of shift fork working face	In case of incomplete meshing, please check shift fork for deformation or working face excessive wear.
	Excessive wear of joint surface of shift fork gear ring or gear sleeve	In case of complete meshing, please check wear condition of inverted cone of gear sleeve and engaged gear.
	Axial looseness of gear	If excessive clearance is felt, please check fork shaft groove and guide spring for any wear or failure.
Difficulty in gear shifting, loud impact sound in gear shifting, or difficulty in shifting to certain gear with normal operation of clutch	Severe wear of synchronizer ring	Replace synchronizer ring.
Noise generated in transmission 1. Regular impact sound 2. Uniform noise	Caused by breakage of individual gear tooth	Check relevant part and remove it.
	Backlash increase or gear damage	Remove, check and clean or replace damaged gear.
	Bearing wear	Remove, check and clean or replace damaged bearing.
	Insufficient lube oil	Change oil or add new oil.
Oil leak	Adding too much oil, too high oil level	Remove oil filler plug to check oil level.
	Excessive wear or damage of oil seal	Replace oil seal.
	Uneven application of sealant or damage of sealing paper pad	Remove parts relevant to each joint surface and apply sealant evenly, or replace paper pad.
	Failure of vent plug	Replace vent plug.
	Joint surface bump not shaved in time	Remove parts relevant to each joint surface to have the bump point shaved.
Abnormal spoilage of bearing	Too dirty lube oil	Change oil.
	Inadequate lubrication or nonconforming or inferior lube oil	Check oil level, add or change oil.
	Unqualified bearing adopted	Replace bearing.

Downloaded from www.Manualslib.com manuals search engine

Removal/Installation

Manual transmission

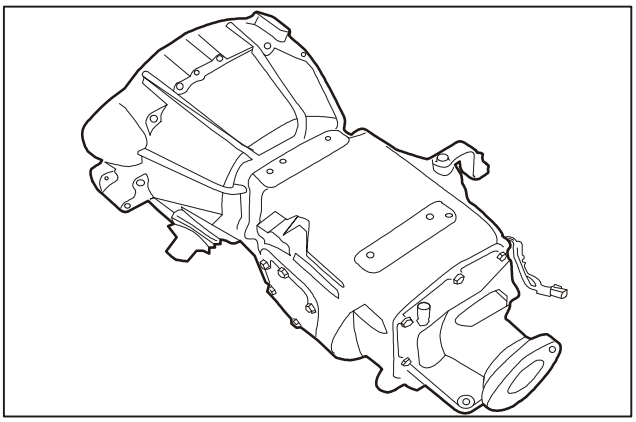

1. Remove manual transmission.
- Oil drainage

  Attention: Remove oil drain plug with wrench and drain oil through this plug instead of other parts.

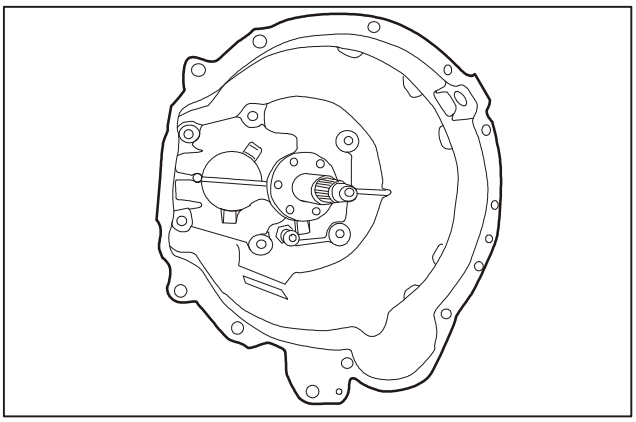

2. Remove release bearing from input shaft front cap.

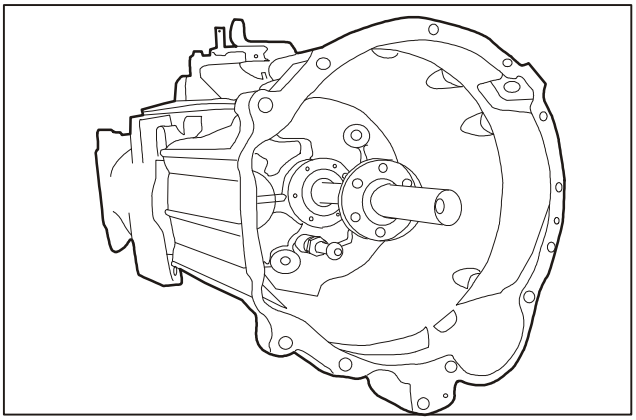

3. Remove input shaft front cap from transmission.

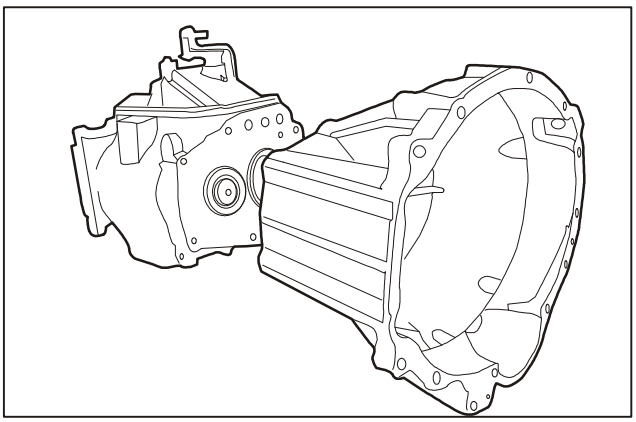

4. Remove clutch housing.
   Attention: If the transmission housing is assembled tightly with clutch housing, a rubber hammer or copper rod can be applied to knock on the housing edge to make them become loose.

Downloaded from www.Manualslib.com manuals search engine

Removal/Installation (Continued)

Manual transmission

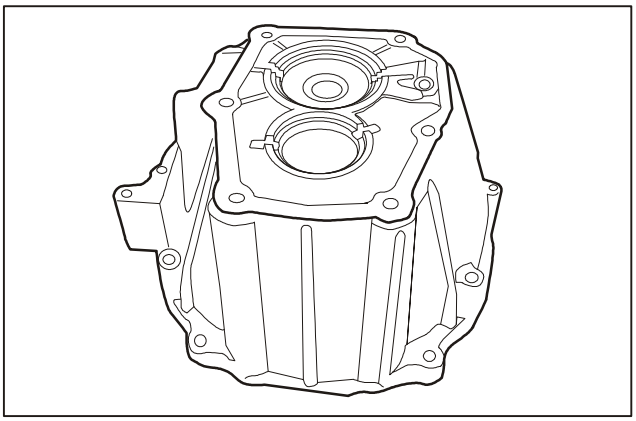

5. Remove clutch housing.
   - Place it upside down on cardboard horizontally.

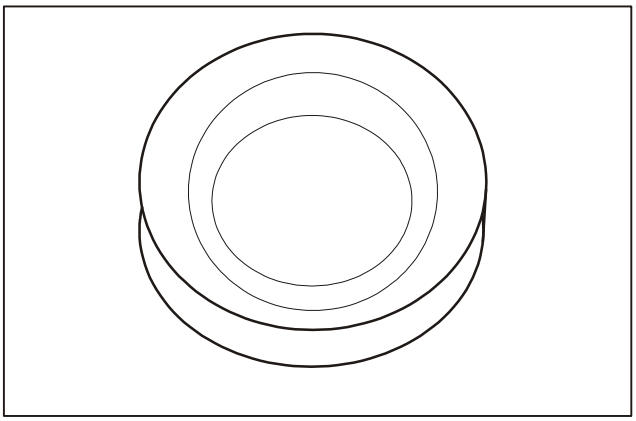

6. Remove input shaft oil seal from transmission.

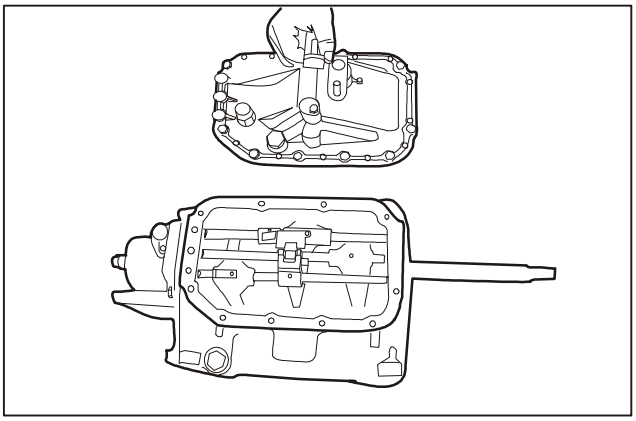

7. Remove top cover from transmission.
   Attention: If the transmission housing is assembled tightly with clutch housing, a rubber hammer or copper rod can be applied to knock on the housing edge to make them become loose.

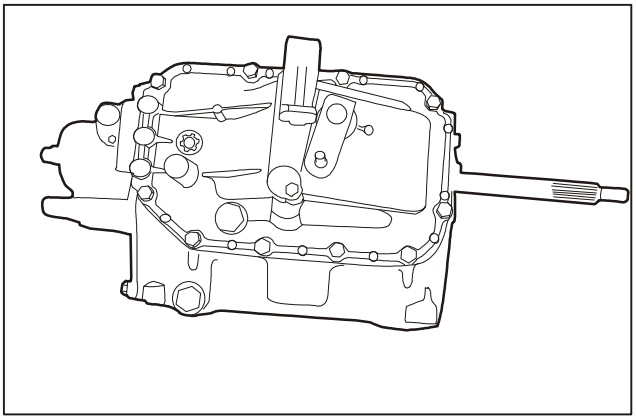

8. Remove gear shift rocker arm assembly from transmission.

Downloaded from www.Manualslib.com manuals search engine

Removal/Installation (Continued)

Manual transmission

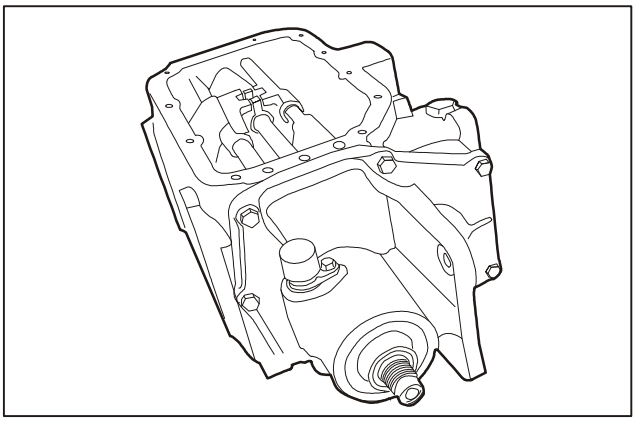

9. Use pneumatic gun or wrench to remove output shaft bolt of transmission and knock out flange nut.

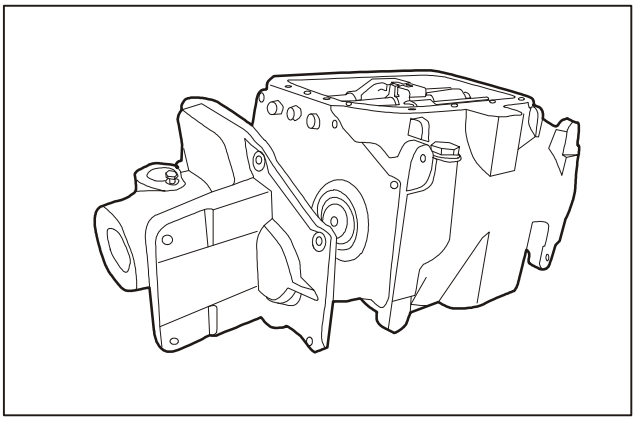

10. Remove rear cover of transmission.
    Attention: If the transmission housing is assembled tightly with clutch housing, a rubber hammer or copper rod can be applied to knock on the housing edge to make them become loose.

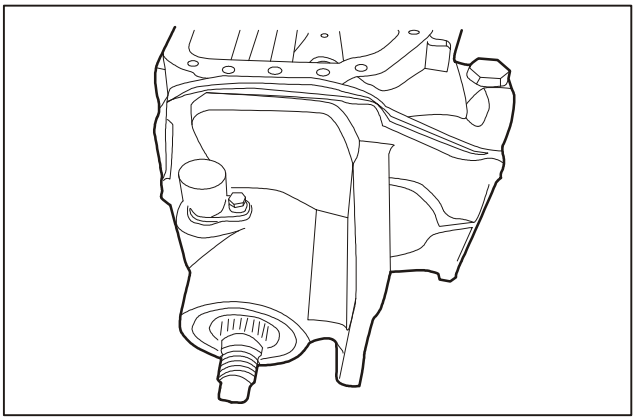

11. Remove vehicle speed sensor.

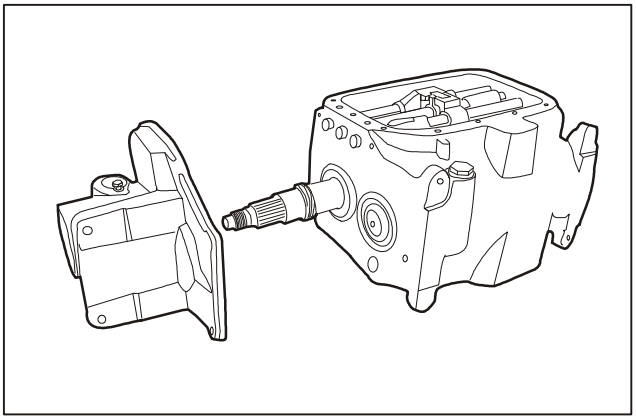

12. Remove vehicle speed sensor gear and bushing.

Downloaded from www.Manualslib.com manuals search engine

Removal/Installation (Continued)

Manual transmission

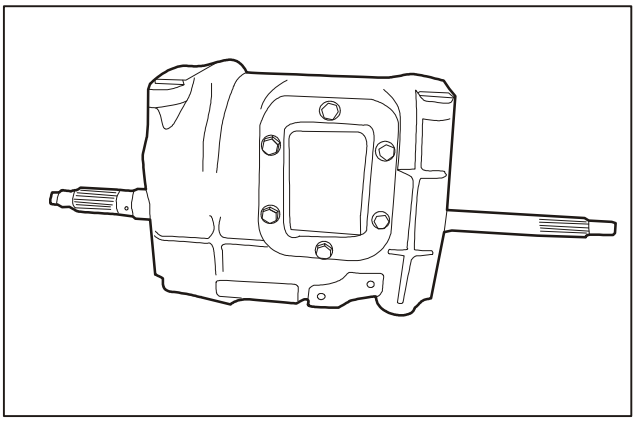

13. Remove side cover from transmission.
    - Turn over the transmission.
    - Remove bolts from side cover.

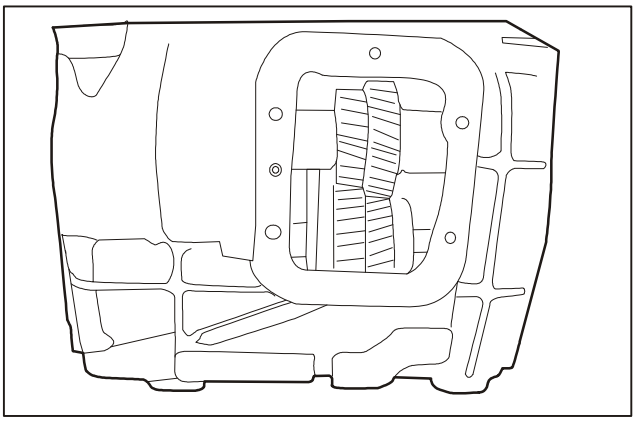

14. Remove side cover from transmission.

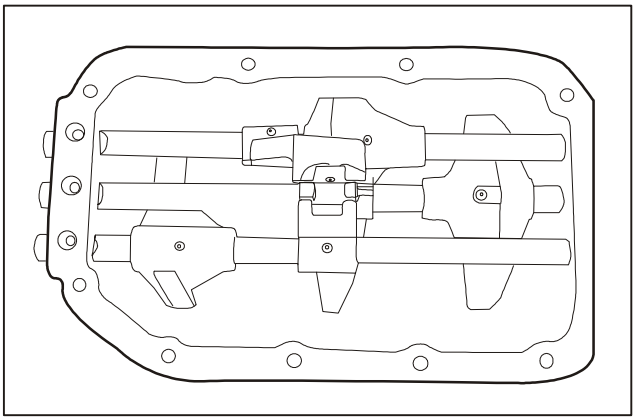

15. Remove gear shift fork from transmission.

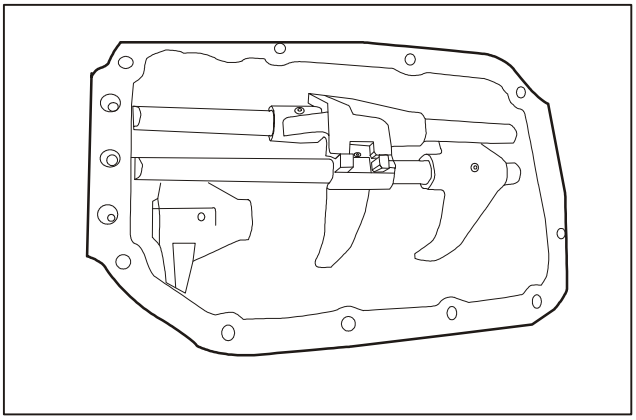

16. Remove gear shift block from transmission.
    - Punch out the spring pin by using punch and remove each shift fork, shift block and shift fork shaft.

Downloaded from www.Manualslib.com manuals search engine

Removal/Installation (Continued)

Manual transmission

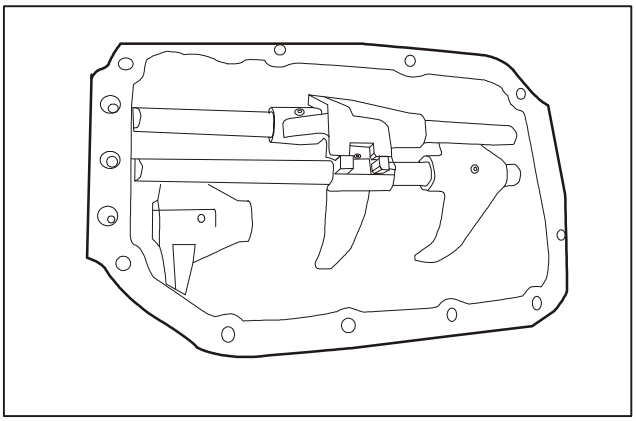

17. Remove gear selector fork from transmission.

Attention:

Please notice the position of steel balls. This transmission has 7 steel balls and 1 steel locking piece, among which, 3 steel balls are self-locking devices and the others are interlocking devices.

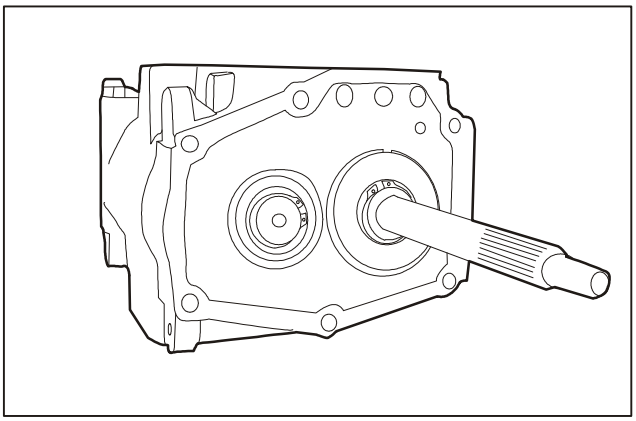

18. Remove all bearing circlips by using circlip pliers.

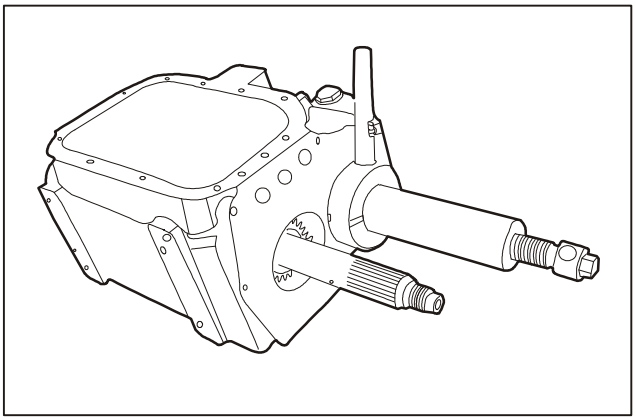

19. Pull out bearings except for input shaft bearing cap with SST.

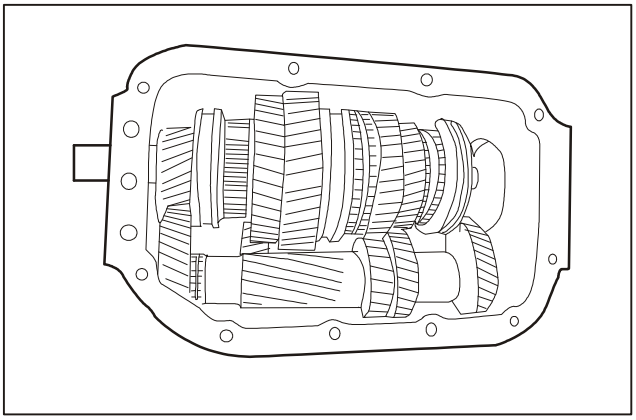

20. Remove input shaft of transmission.

Downloaded from www.Manualslib.com manuals search engine

Removal/Installation (Continued)

Manual transmission

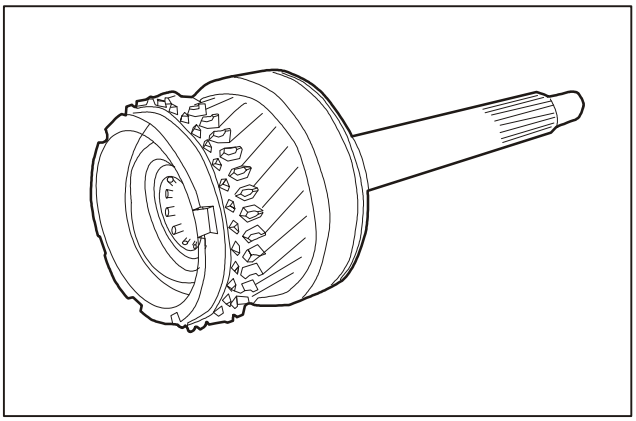

21. Remove output (input) shaft of transmission and place it on cardboard horizontally.

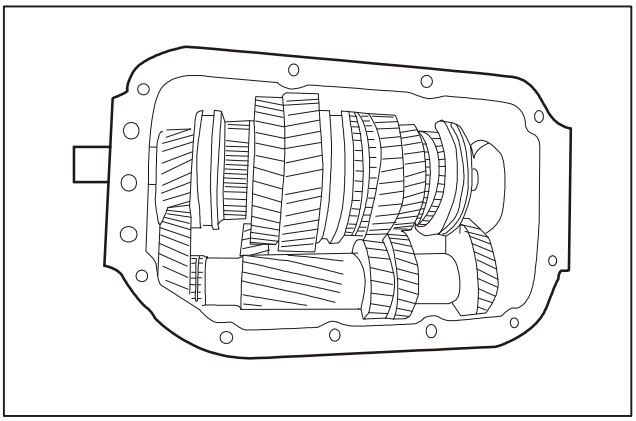

22. Remove output shaft of transmission.

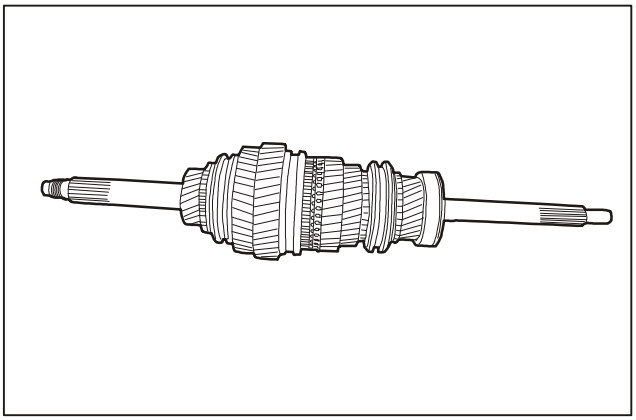

23. Remove output shaft of transmission.

Assemble the output shaft and input shaft of transmission together and place them on clean cardboard horizontally.

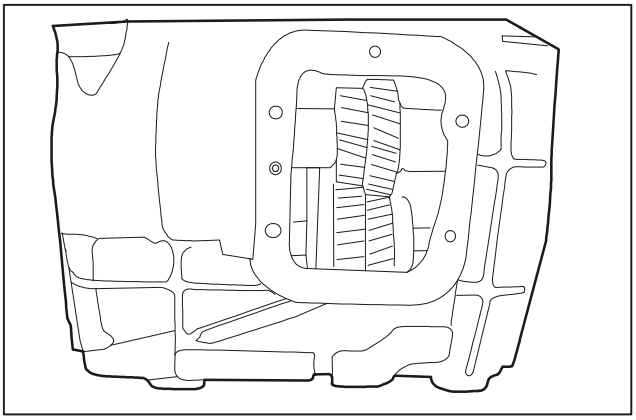

24. Remove reverse gear shaft pin of transmission.

Downloaded from www.Manualslib.com manuals search engine

Removal/Installation (Continued)

Manual transmission

25. Use a rubber hammer or copper rod to knock on the reverse gear shaft gently.

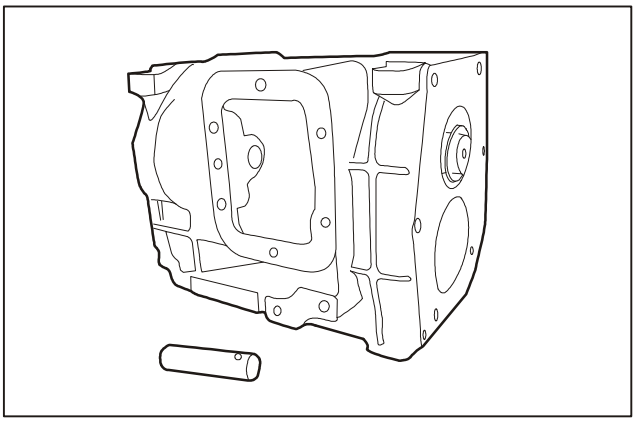

26. Pull out the reverse gear shaft pin and punch out the reverse gear shaft.

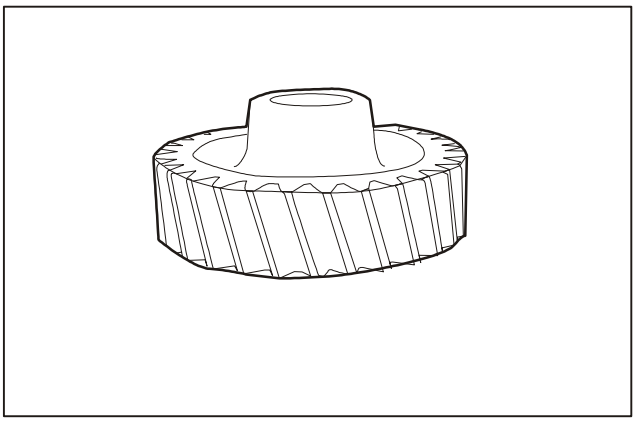

27. Remove reverse gear of transmission.
    Place it on clean cardboard horizontally.

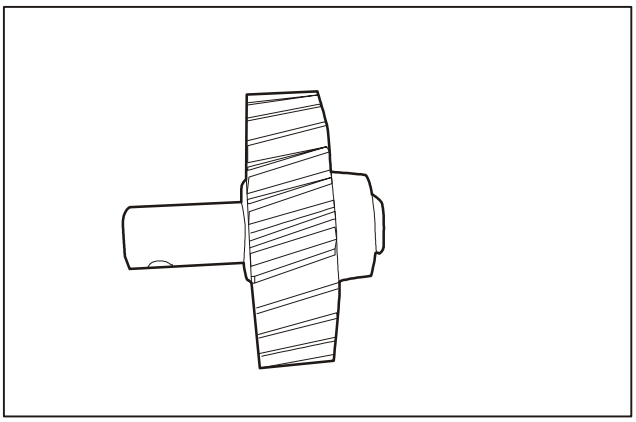

28. Assemble the reverse gear and reverse gear shaft as a whole.

Downloaded from www.Manualslib.com manuals search engine

Removal/Installation (Continued)

Manual transmission

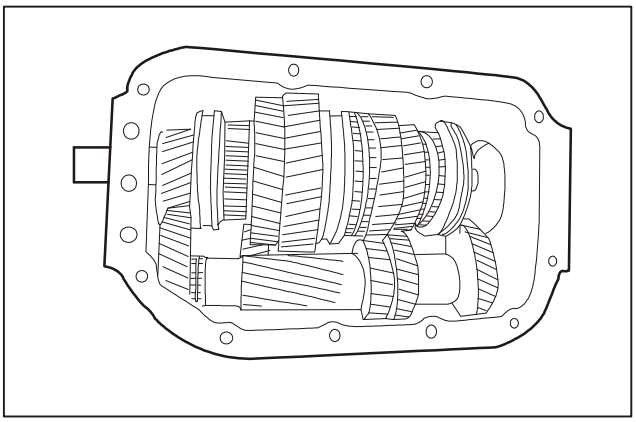

29. Loosen the 5th gear circlip with circlip pliers and remove the fixed circlip from the 5th driving gear.

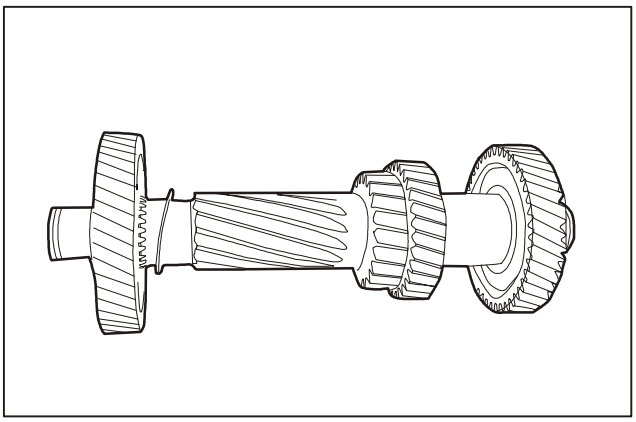

30. Adjust the position of 5th gear of countershaft and remove countershaft of transmission.

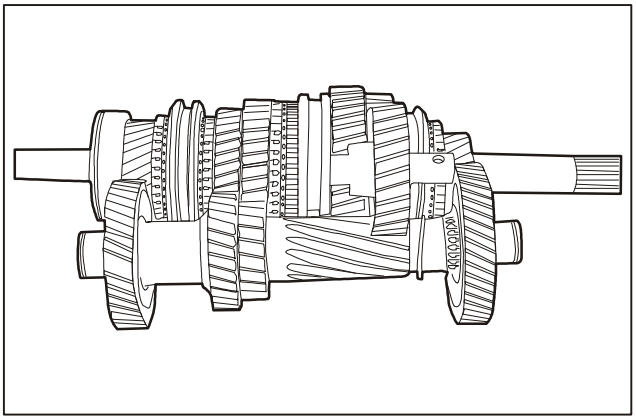

31. Transmission gearing diagram

Downloaded from www.Manualslib.com manuals search engine

Instruction and Operation

Exploded View of Reverse Gear Shaft

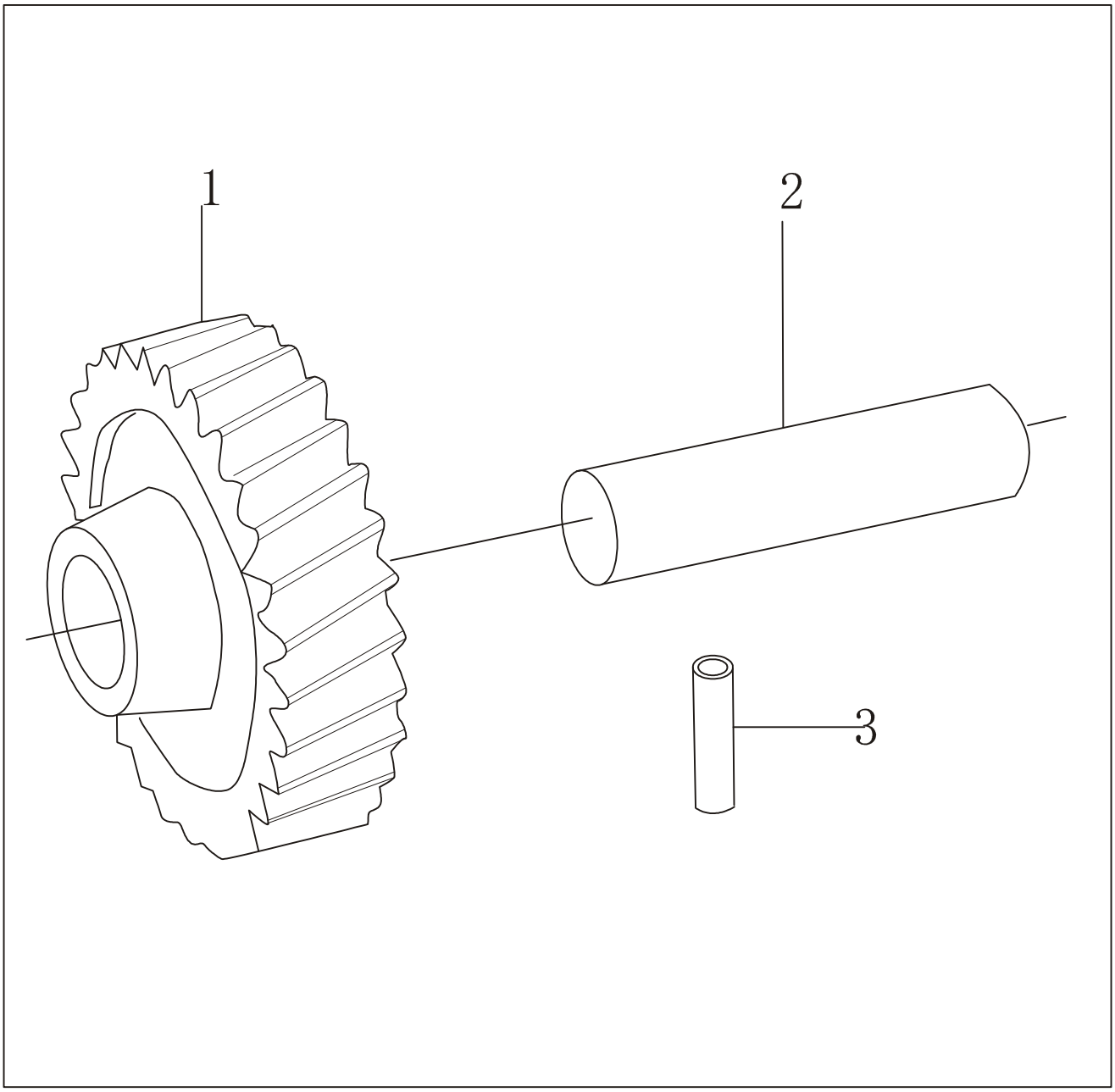

Reverse Gear Shaft Parts List

S/N	Name	Qty.
1	Reverse gear assembly	1
2	Reverse gear shaft	1
3	Reverse gear shaft pin	1

Downloaded from www.Manualslib.com manuals search engine

Instruction and Operation

Exploded View of Output Shaft Assembly

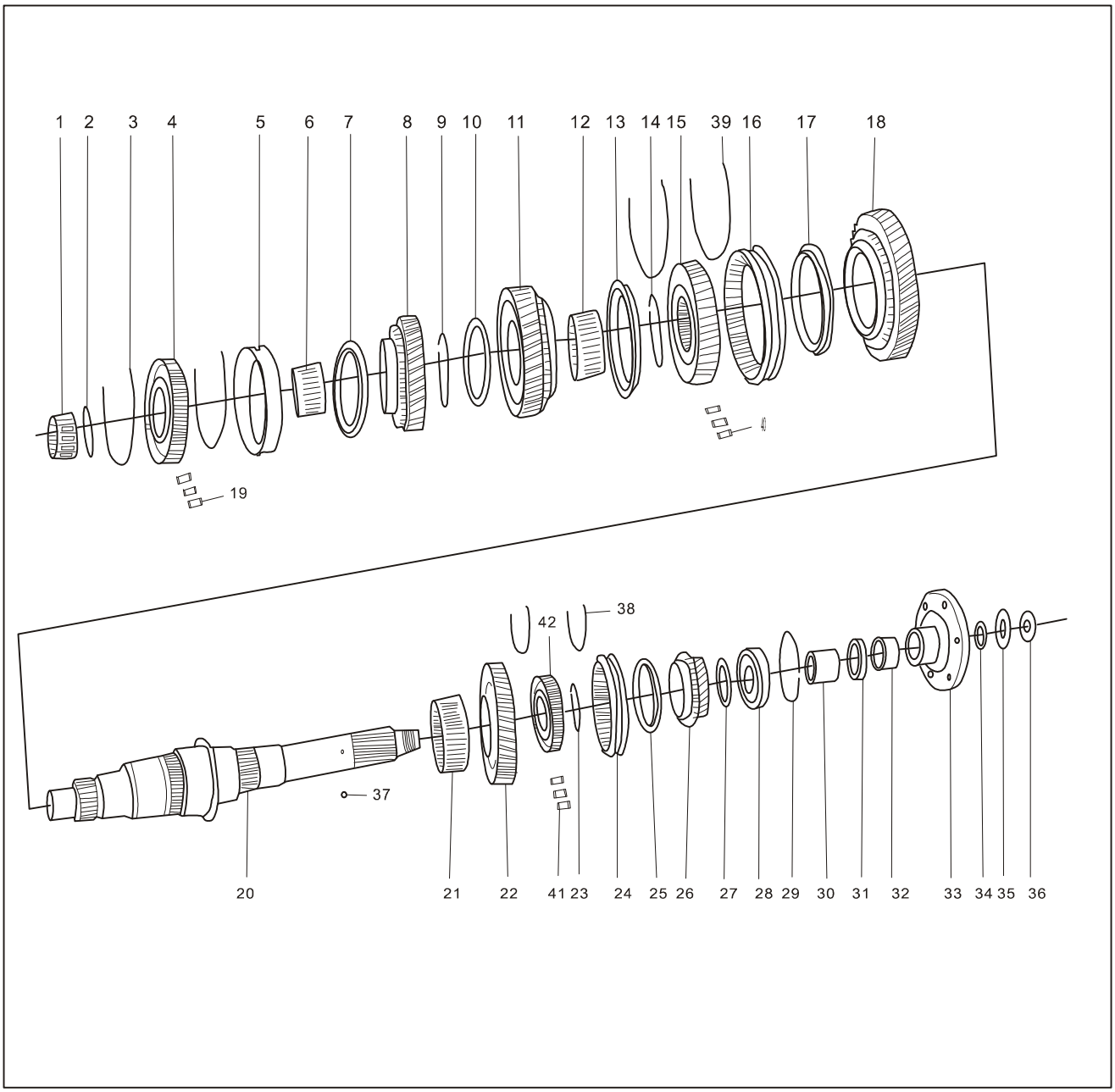

Downloaded from www.Manualslib.com manuals search engine

Output Shaft Parts List

S/N	Name	Qty.	S/N	Name	Qty.
1	Output shaft head needle roller bearing	1	27	Thrust washer of 5th gear	1
2	Circlip	1	28	Ball bearing	1
3	3rd/4th gear synchronizer spring	2	29	Stop ring	1
4	3rd/4th gear synchronizer gear hub	1	30	Front spacer bush of odometer driving gear	1
5	3rd/4th gear synchronizer gear sleeve	1	31	Odometer driving gear	1
6	needle roller bearing	1	32	Rear spacer bush of odometer driving gear	1
7	3rd/4th gear synchronizer ring	1	33	Flange	1
8	3rd gear assembly of output shaft	1	34	O-ring	1
9	Circlip	1	35	Conical spring washer	1
10	Thrust washer of 2nd gear	1	36	Output shaft nut	1
11	2nd gear assembly of output shaft	1	37	Steel ball	1
12	Needle roller bearing	2	38	3rd/4th gear synchronizer spring	2
13	1st/2nd gear synchronizer ring	1	39	1st/2nd gear synchronizer spring	2
14	Circlip	1	40	3rd/4th gear synchronizer slider	3
15	1st/2nd gear hub	1	41	Reverse/5th gear synchronizer slider	3
16	1st/2nd gear sleeve	1	42	Reverse/5th gear synchronizer gear hub	1
17	1st/2nd gear synchronizer ring	1	43		
18	1st gear assembly of output shaft	1	44		
19	3rd/4th gear synchronizer slider	3	45		
20	Output shaft	1	46		
21	Needle roller bearing	1	47		
22	Reverse gear assembly of output shaft	1	48		
23	Circlip	1	49		
24	Reverse/5th gear synchronizer gear sleeve	1			
25	3rd/4th gear synchronizer ring	1			
26	5th gear assembly of output shaft	1			

Downloaded from www.Manualslib.com manuals search engine

Instruction and Operation

Exploded View of Top Cover Assembly

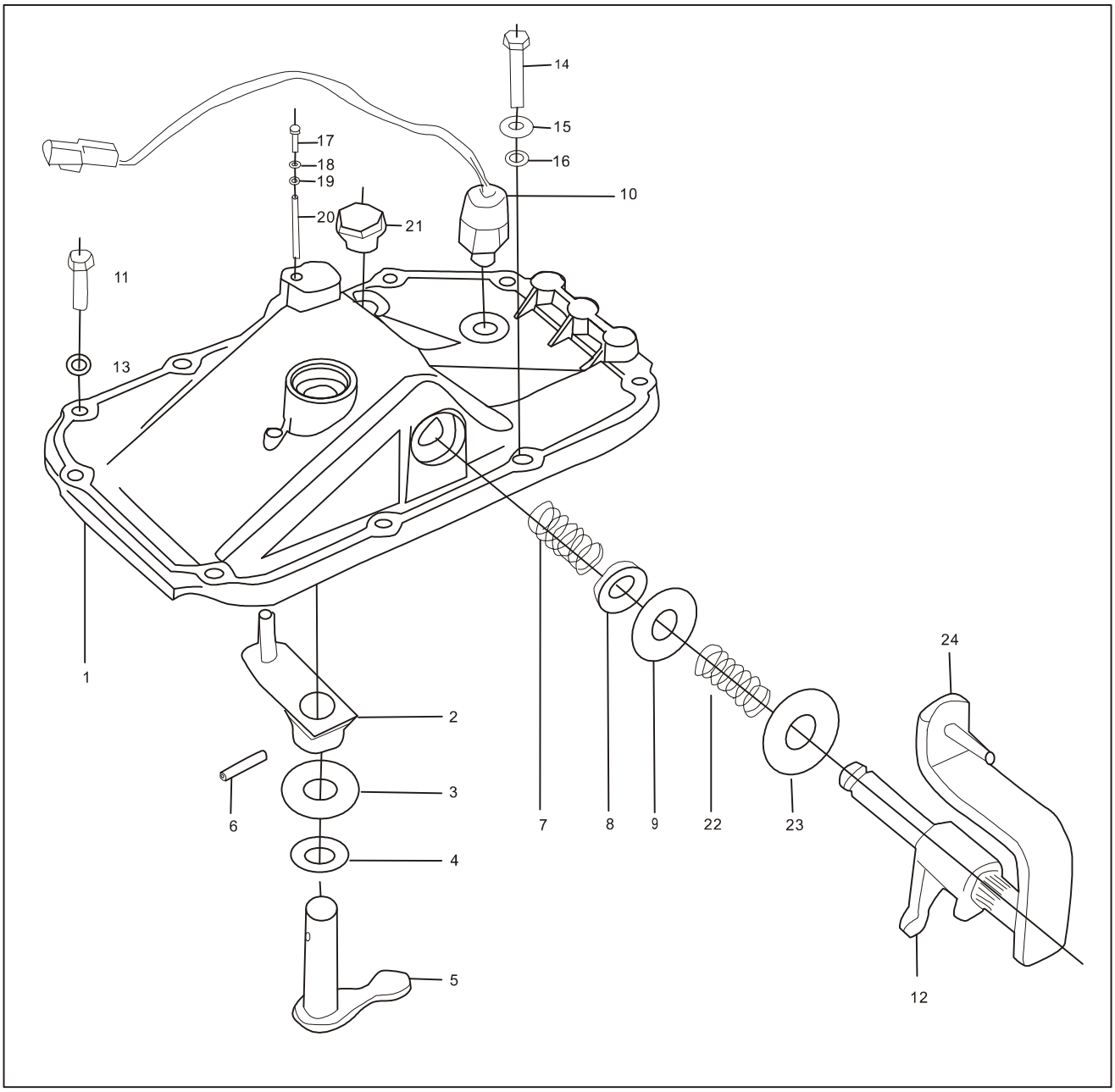

Downloaded from www.Manualslib.com manuals search engine

Top Cover Assembly Parts List

S/N	Name	Qty.	S/N	Name	Qty.
1	Transmission cover	1	14	Hexagon bolt	2
2	Outer gear selector rocker arm assembly	1	15	Large washer	2
3	Flat washer	1	16	Spring washer	8
4	Oil seal	1	17	Hexagon bolt	1
5	Inner gear selector rocker arm	1	18	Flat washer	
6	Spring pin	1	19	Washer	1
7	Reverse/5th gear damping spring	1	20	Knurled pin	1
8	Oil seal	1	21	Oil filler plug assembly	1
9	Flat washer	1	22	1st/2nd gear damping spring	1
10	Reversing lamp switch	1	23	Flat washer	1
11	Hexagon bolt	8	24	Outer gear shift rocker arm assembly	1
12	Inner gear shift rocker arm	1			
13	Spring washer	8			

Downloaded from www.Manualslib.com manuals search engine

Instruction and Operation

Exploded View of Input Shaft Assembly

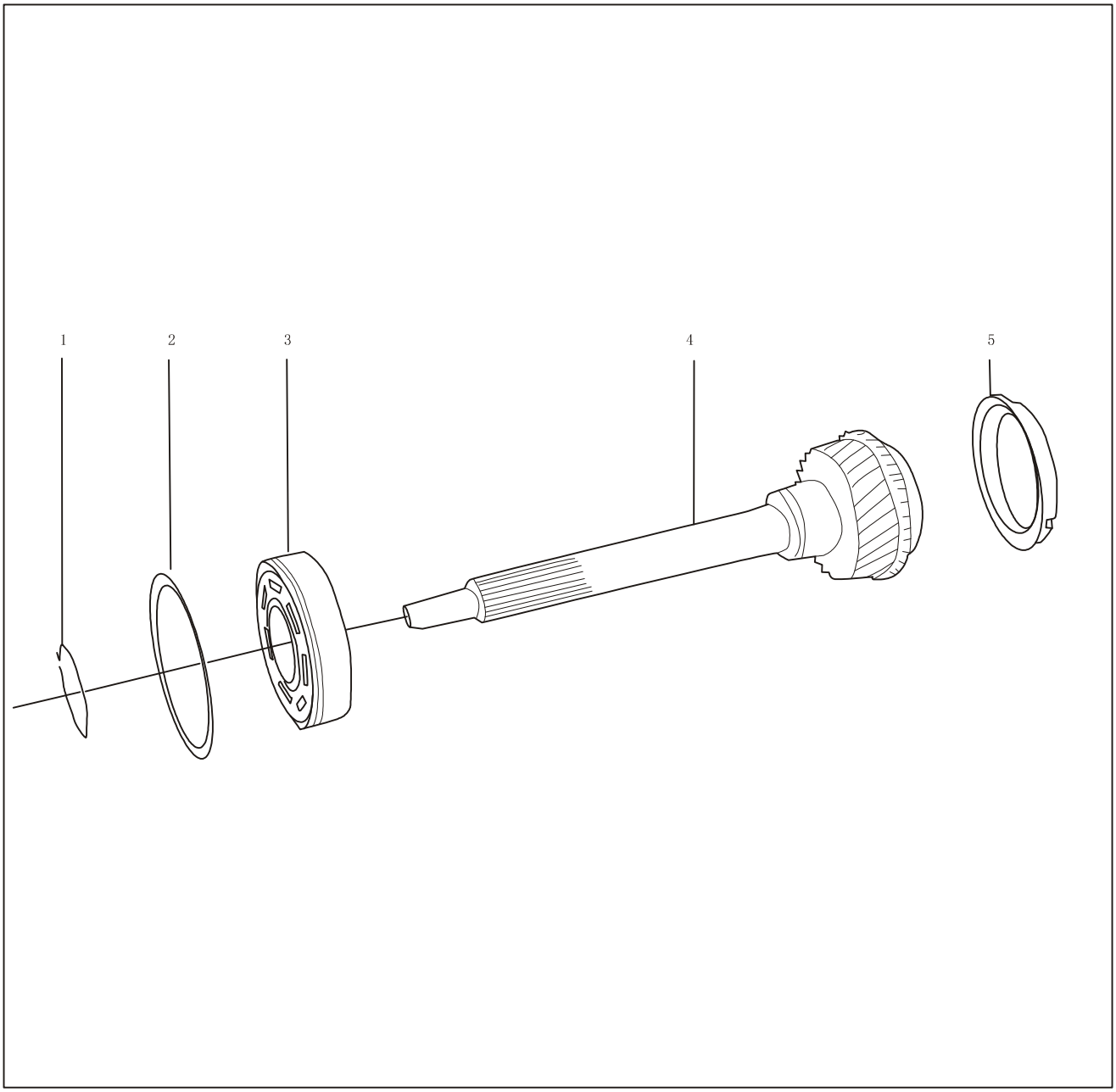

S/N	Name	Qty.	S/N	Name
1	Circlip	1	5	3rd/4th gear synchronizer ring
2	Stop ring	1		
3	Ball bearing (input shaft)	1		
4	Input shaft assembly	1		

Downloaded from www.Manualslib.com manuals search engine

Instruction and Operation

Exploded View of Transmission Rear Cover

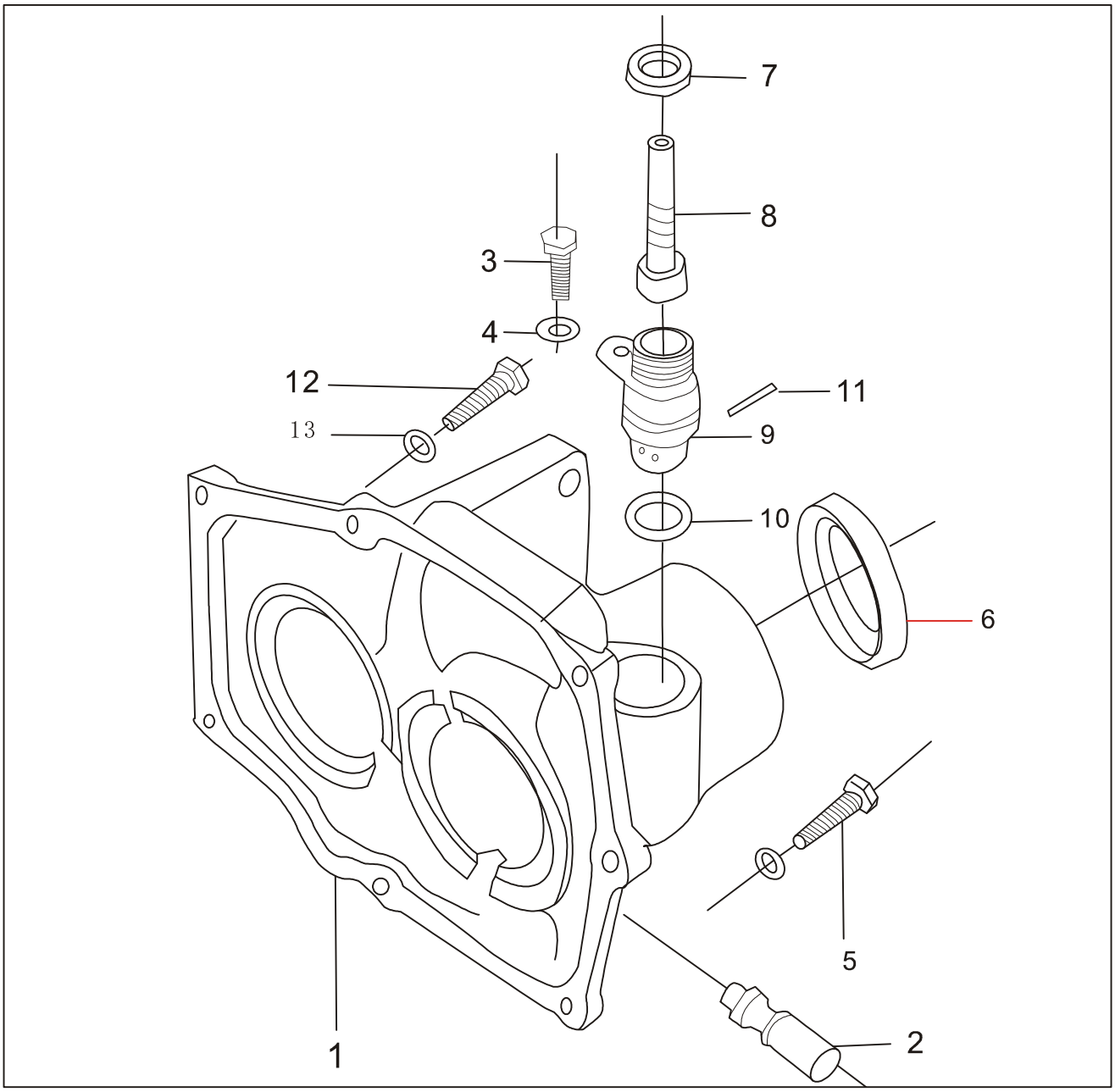

S/N	Name	Qty.	S/N	Name	Qty.
1	Rear cover	1	9	Odometer guide sleeve	1
2	Vent plug	1	10	O-ring	1
3	Hexagon bolt	1	11	Spring pin	1
4	Spring washer	1	12	Hexagon bolt	5
5	Hexagon bolt	2	13	Spring washer	7
6	Oil seal	1			
7	Oil seal	1			
8	Odometer gear	1			

Downloaded from www.Manualslib.com manuals search engine

Exploded View of Countershaft Assembly

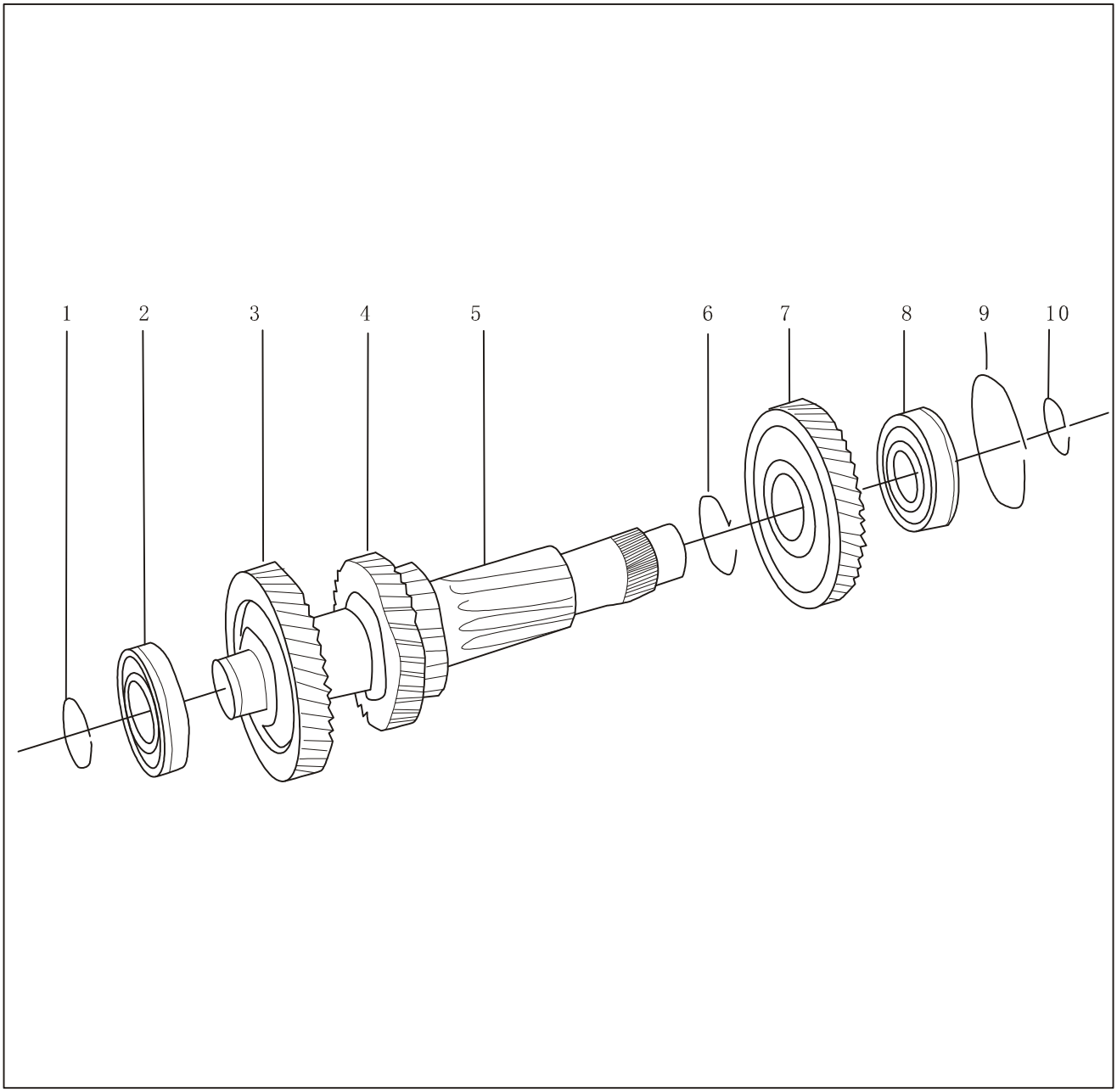

S/N	Name	Qty.	S/N	Name	Qty.
1	Circlip	1	6	Circlip	1
2	Cylinder roller bearing	1	7	5th gear of countershaft	1
3	Main gear of countershaft	1	8	Cylinder roller bearing	1
4	3rd gear of countershaft	1	9	Stop ring	1
5	Countershaft	1	10	Circlip	1

Downloaded from www.Manualslib.com manuals search engine

Instruction and Operation

Exploded View of Housing Assembly

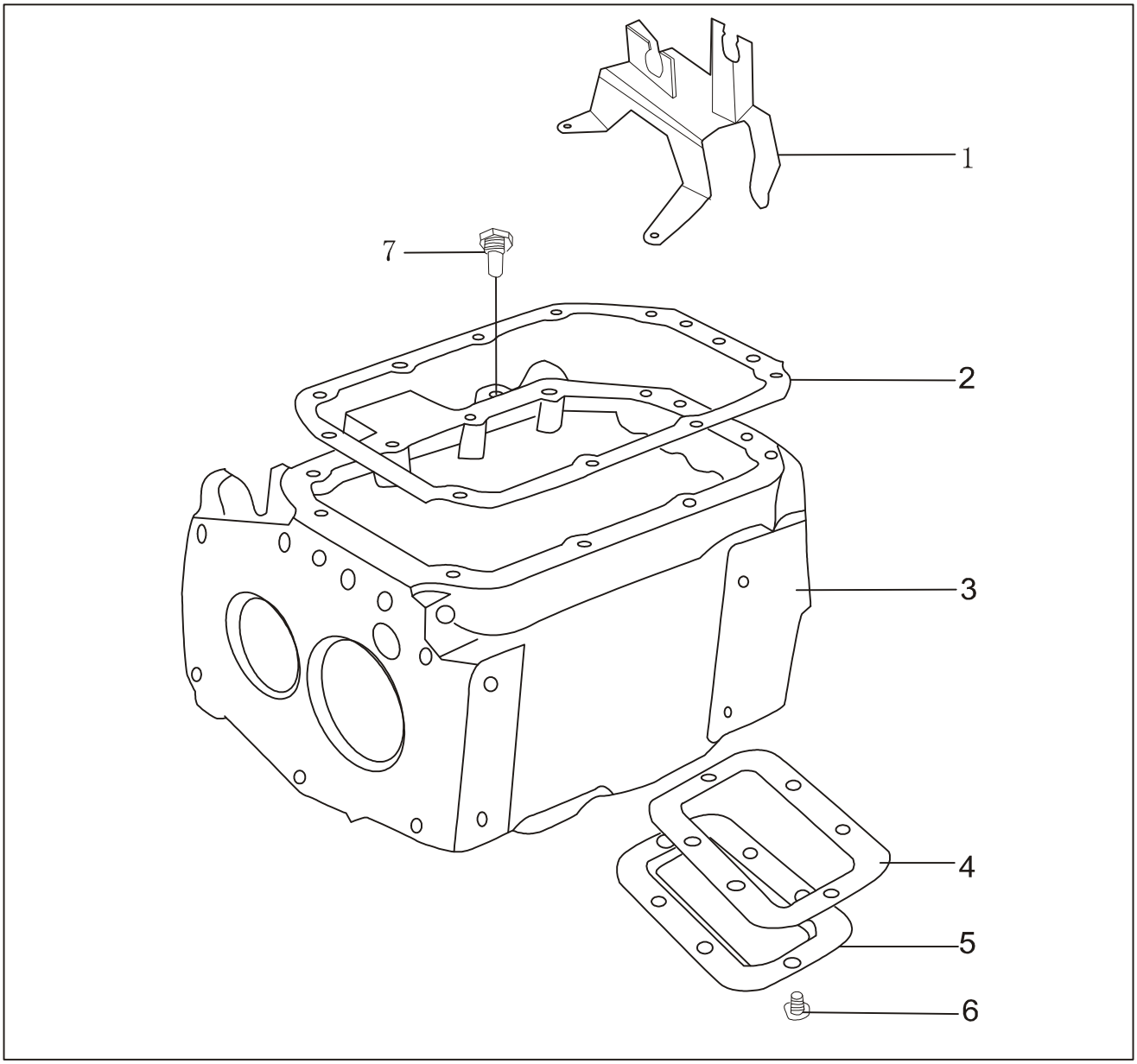

S/N	Name	Qty.
1	Flexible shaft bracket assembly	1
2	Liner	1
3	Housing	1
4	Side cover liner	1
5	Side cover of transmission	1
6	Side cover bolt	6
7	Oil drain plug assembly	1

Downloaded from www.Manualslib.com manuals search engine

Instruction and Operation

Exploded View of Shift Fork Assembly

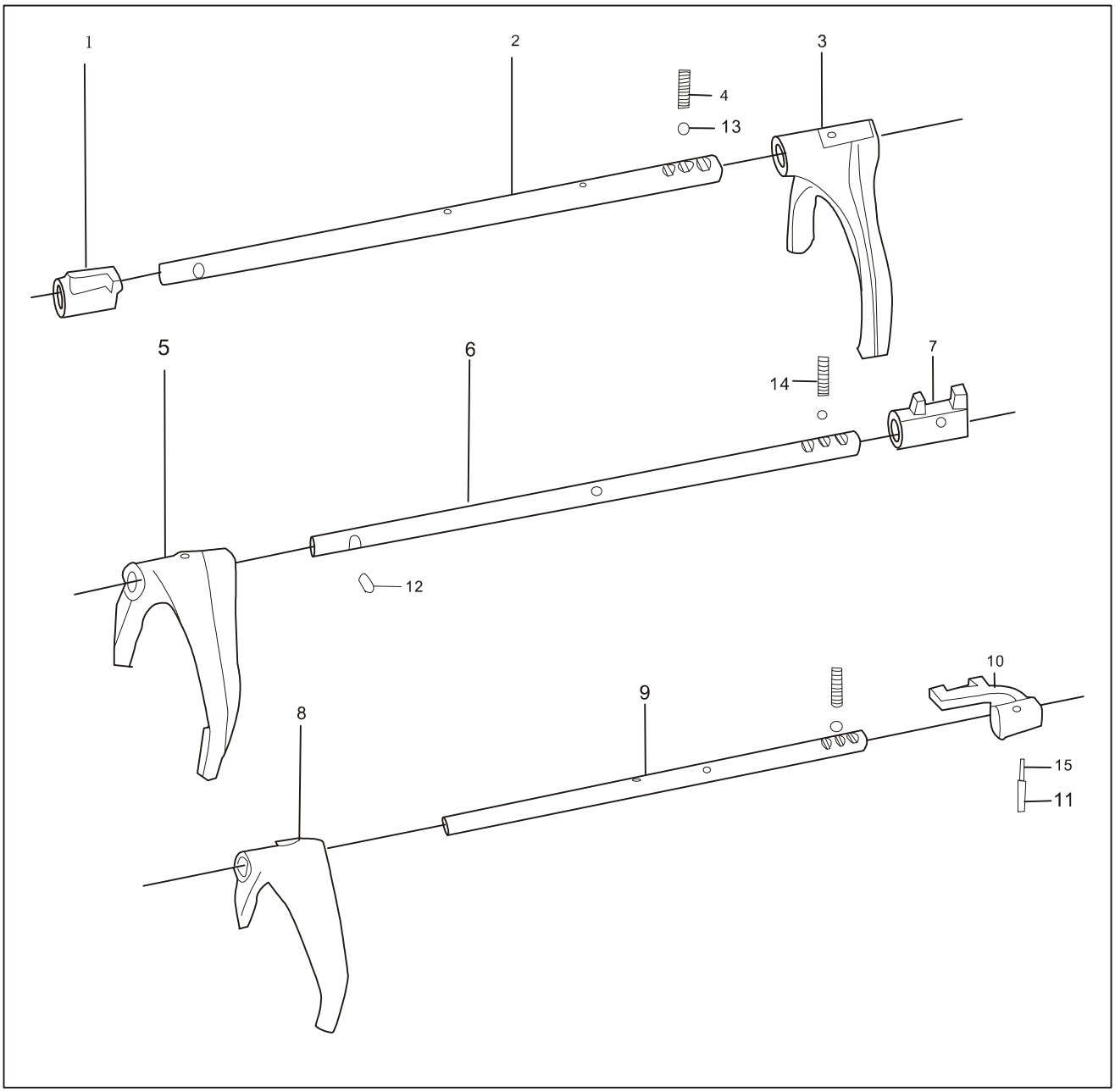

S/N	Name	Qty.	S/N	Name	Qty.
1	5th/reverse gear shift block	1	9	1st/2nd gear shift fork shaft	1
2	5th/reverse gear shift fork shaft	1	10	1st/2nd gear shift block	1
3	5th/reverse gear shift fork	1	11	Spring pin	6
4	Lock ball spring	2	12	Interlocking lifting pin	1
5	3rd/4th gear shift fork	1	13	Steel ball	7
6	3rd/4th gear shift fork shaft	1	14	Lock ball spring	1
7	3rd/4th gear shift block	1	15	Spring pin	5
8	1st/2nd gear shift fork	1			

Downloaded from www.Manualslib.com manuals search engine

Instruction and Operation

Exploded View of Transmission Front Cover Assembly

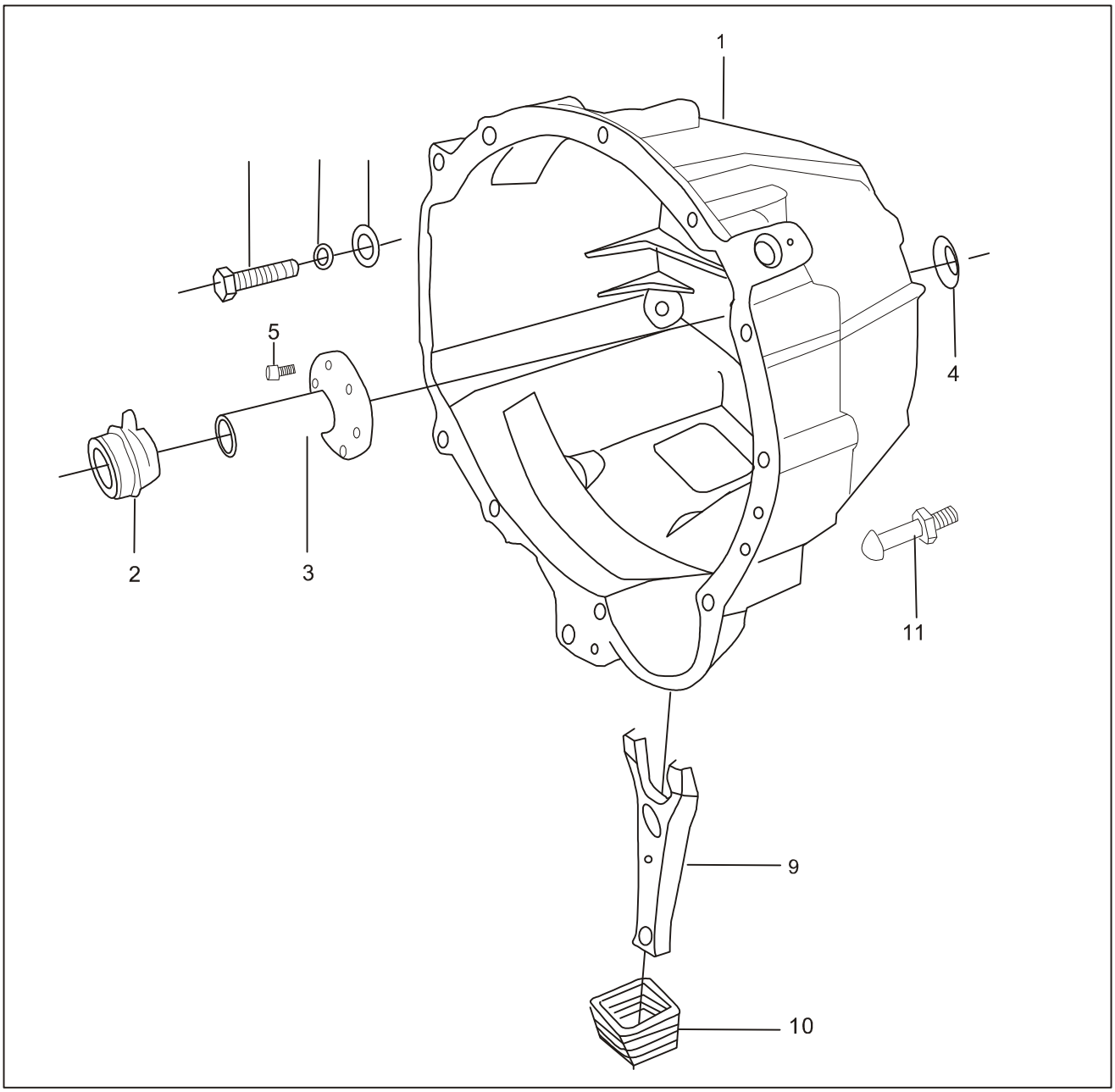

S/N	Name	S/N	Name	Qty.
1	Clutch housing	7	Spring washer	
2	Release bearing	8	Flat washer	1
3	Input shaft front cap	9	Release fork assembly	1
4	Oil seal	10	Release fork shield	1
5	Hexagonal socket head cap screw	11	Ball joint bracket	1
6	Bolt (Clutch housing)			

Downloaded from www.Manualslib.com manuals search engine

Instruction and Operation

Transmission Assembly Diagram

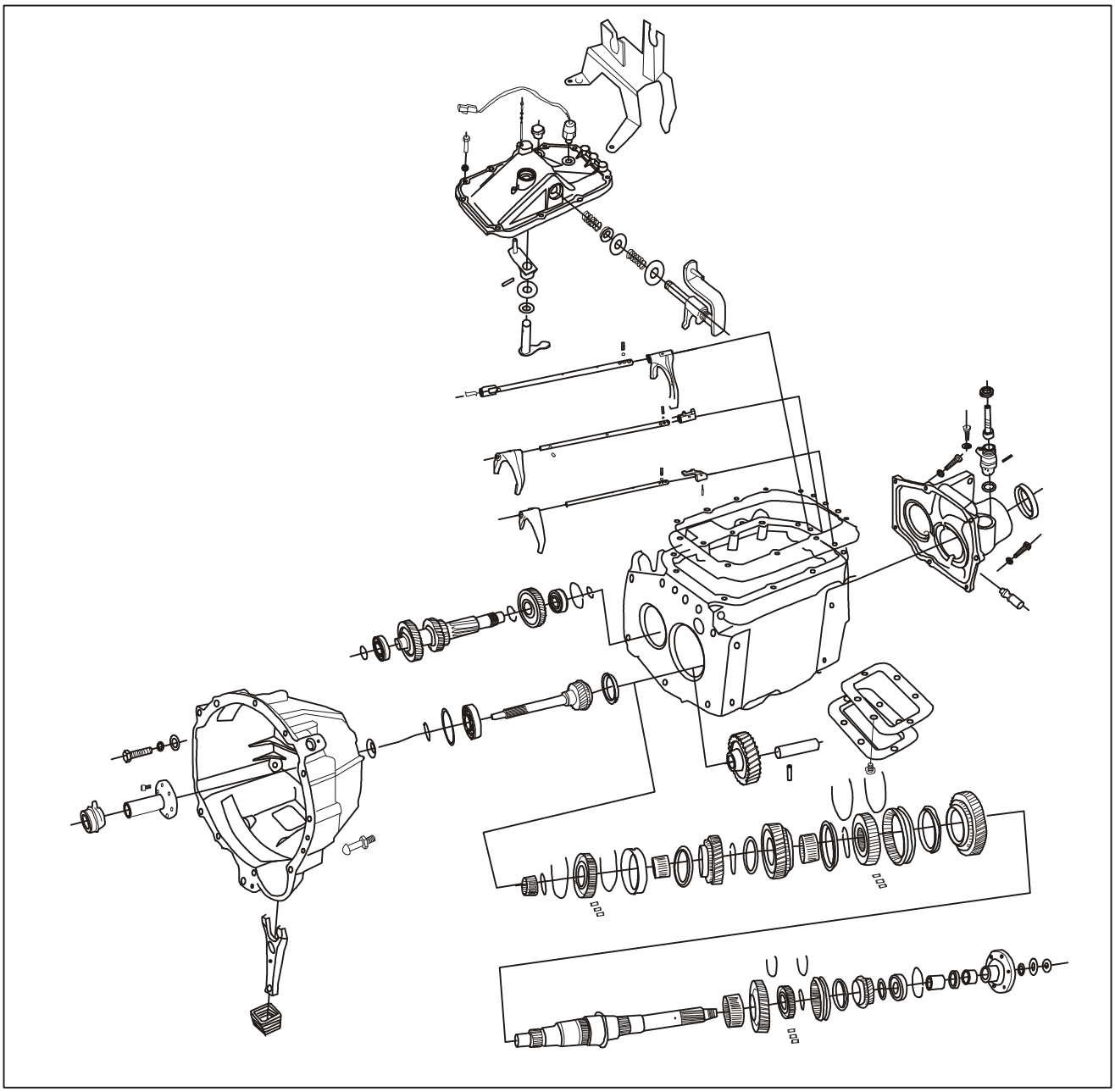

Downloaded from www.Manualslib.com manuals search engine

Removal/Installation (Continued)

Transmission

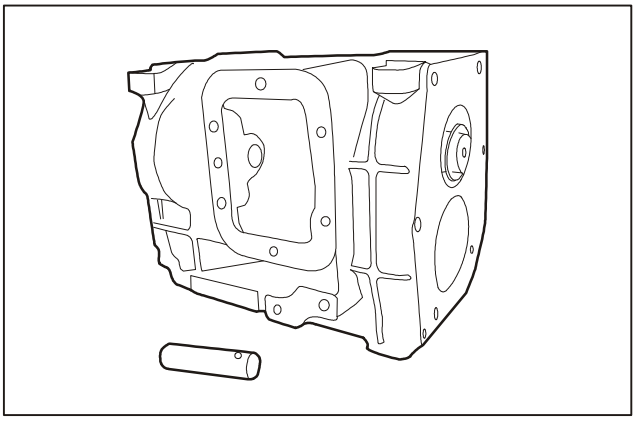

Installation

1. Place transmission housing onto a clean cardboard.
2. Install reverse gear and reverse gear shaft onto transmission housing.

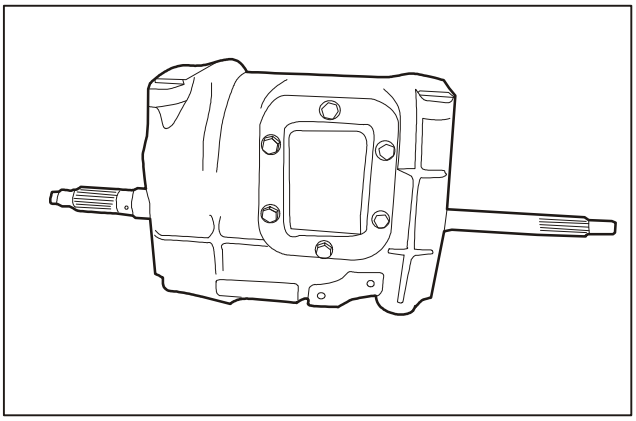

3. Install side cover and reverse gear shaft pin of transmission in place and tighten to the specified torque.

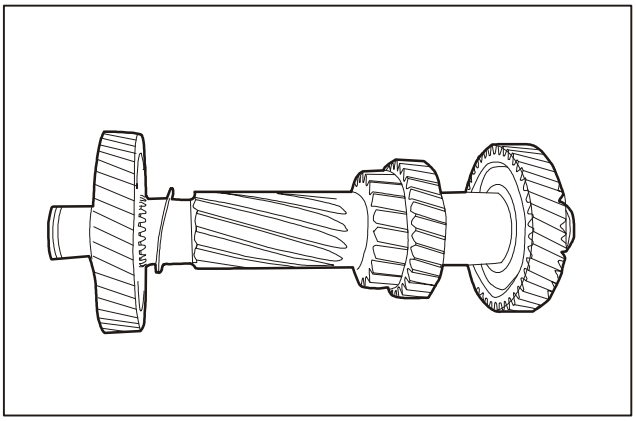

4. Install transmission countershaft into the transmission housing.

Downloaded from www.Manualslib.com manuals search engine

Removal/Installation (Continued)

Transmission

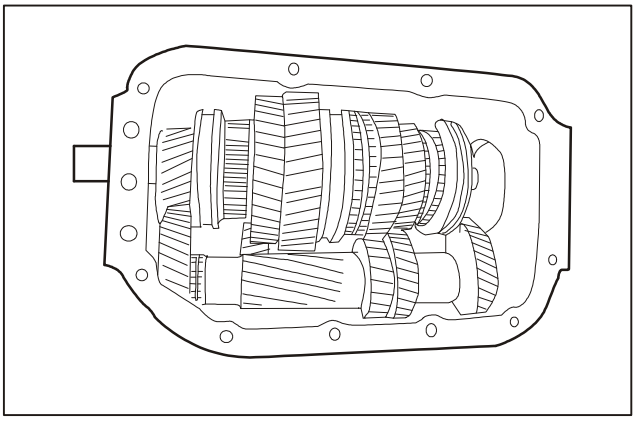

5. Install the fixed circlip of 5th driving gear of transmission countershaft in place.

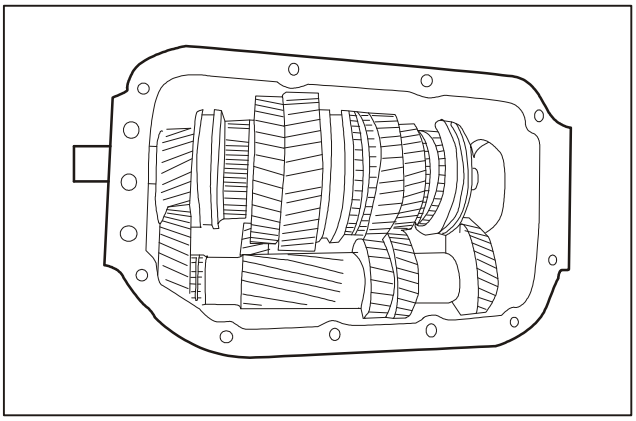

6. Install output shaft of transmission into transmission housing.

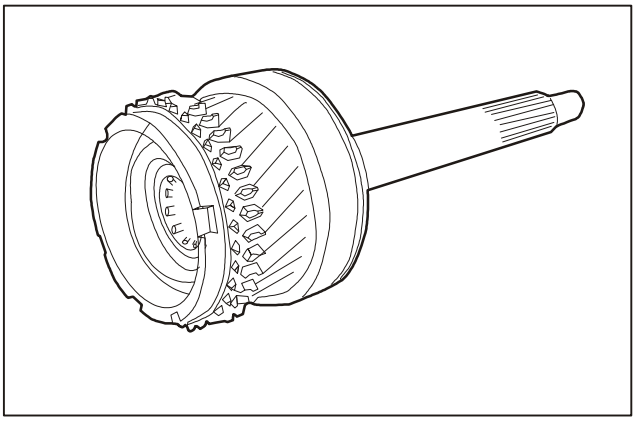

7. Install guide bearing of input shaft of transmission in place.

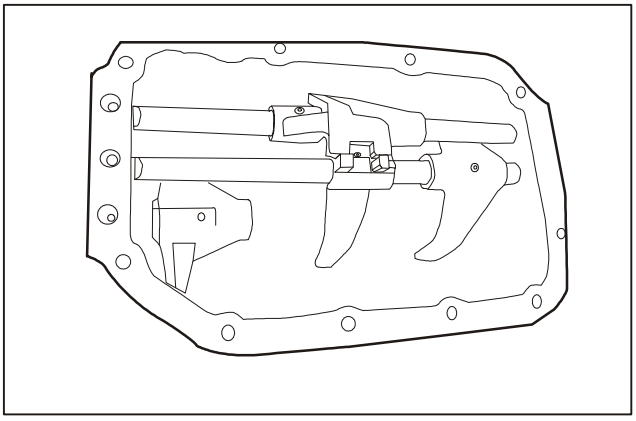

8. Install shifting mechanism assembly.
   - Maintain each gear and synchronizer at neutral position.
   - Install interlocking steel ball into transmission housing.
   - Install gear shift shaft into transmission housing gently.

Downloaded from www.Manualslib.com manuals search engine

Removal/Installation (Continued)

Transmission

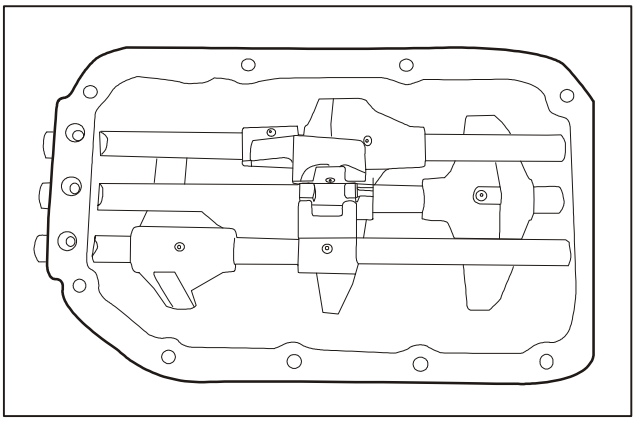

9. Install gear shift control mechanism assembly.
   - Install the self-locking device of gear shift control mechanism in place.

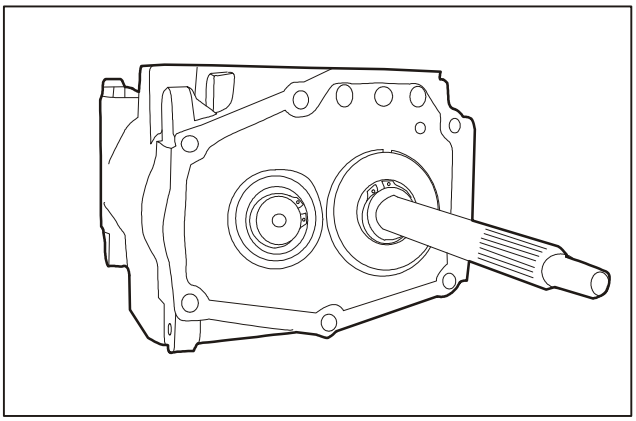

10. Knock the input shaft gently into transmission.
    Attention:
    During the installation of input shaft, use rubber hammer to knock gently on symmetric position on input shaft support bearing.
    - Install inside and outside circlips into input shaft of transmission.
    - Install the countershaft bearing into transmission. Please notice the mounting direction of both side bearing inner rings, with the one without ledge facing inward of transmission. During installation, use hammer to knock on transmission bearing gently and evenly into transmission housing.

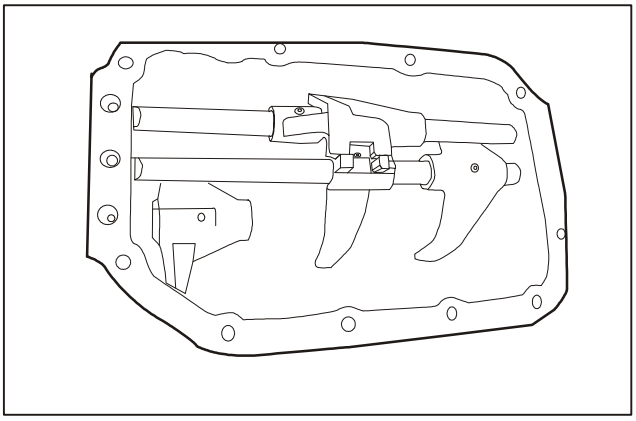

11. Install shifting mechanism assembly.
    - Maintain each gear and synchronizer at neutral position.
    - Install interlocking steel ball into transmission housing.
    - Install gear shift shaft into transmission housing gently.

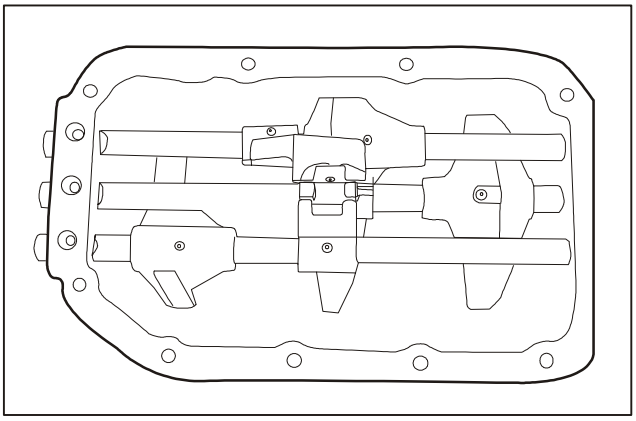

12. Install gear shift control mechanism assembly.
    Install the self-locking device of gear shift control mechanism in place.

Downloaded from www.Manualslib.com manuals search engine

Removal/Installation (Continued)

Transmission

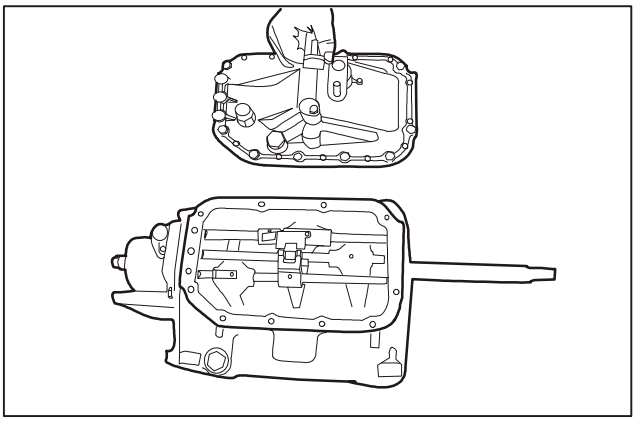

13. Install top cover of transmission.
    Maintain gear shift control mechanism and gear shift shaft at reverse gear position.

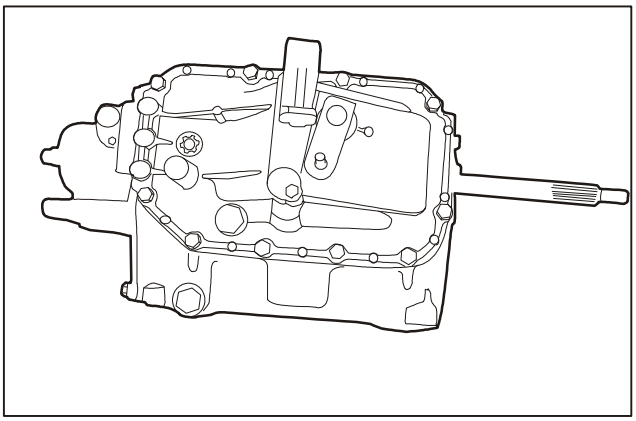

14. Install gear shift control mechanism onto the top cover of transmission.

Attention:

In order to avoid deformation during installation of transmission cover, please tighten bolts on middle part first and then bolts on both sides in symmetry. (Check for normal gear shifting after installation)

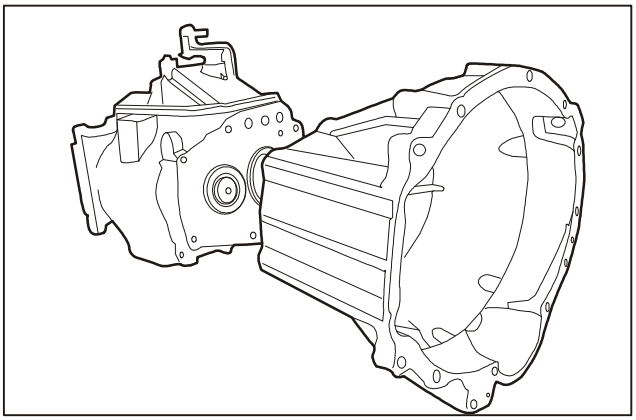

15. Assemble clutch housing onto transmission housing.

Tighten outer bolts and front cover mounting bolts of input shaft. Please tighten bolts on middle part first and then bolts on both sides or tighten diagonally.

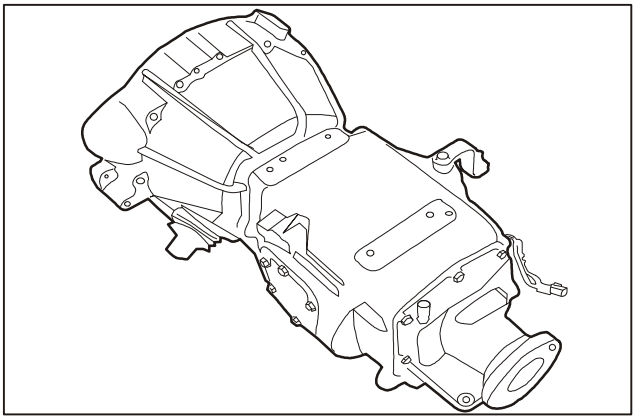

16. Tighten output shaft flange of transmission to the specified torque.

Downloaded from www.Manualslib.com manuals search engine

Maintenance Parameters

Tightening torque

Position	Technical Requirement (N.m)
Connection between clutch housing and transmission housing	68.6～93.2
Reversing lamp switch	29.4～39.2
Rear cover, transmission cover bolts	25～35
Bracket bolt	25～35
Side cover bolt	14～24.5
Vent plug	10.8～18.6
Oil filler plug and oil drain plug	39.2～58.8
Output shaft nut	160～210
Gear shift shaft dowel hole bolt	9.8～14.7
Odometer shaft sleeve	9.8～14.7
Release fork ball joint support	30～42
Input shaft front cap	9.8～14.7

Main technical parameters

Type		Five forward gears and one reverse gear
Control type		Remote control
Rated input torque		300N.m
Assembly mass		About 78Kg
Speed ratio	Gear position	Speed ratio
	1st gear	4.717
	2nd gear	2.513
	3rd gear	1.679
	4th gear	1.00
	5th gear	0.784
	Reverse gear	4.497

Downloaded from www.Manualslib.com manuals search engine

Care and maintenance

Transmission maintenance

1. Transmission operation and maintenance should be conducted in accordance with application and maintenance requirements for commercial vehicles, which are generally divided into three technical maintenance stages.
2. Check, change (or add) transmission oil regularly.

Regular Inspection and Maintenance Schedule for Transmission
Mileage and time (by the month) are both indicated for each item, whichever occurs first.
○ Check point, tighten or adjust; ★ Change lube oil

Item		Service interval (based on odometer reading or number of months, which occurs first)										
	Number of months	—	3	6	12	18	24	30	36	42	48	54
	Odometer reading×1000km	1	5	10	20	30	40	50	60	70	80	90
Transmission inside inspection												
Check gear oil level inside transmission				○		○		○		○		○
Change gear oil inside transmission	Normal service condition		★		★		★		★		★	
	Severe service condition		★		★	★	★	★	★	★	★	
Other inspections												

Note: “Severe service condition” includes items listed below:
1. Running in dusty areas or frequently exposed in salty atmosphere or saline water.
2. Running on bumpy, water-logging roads or on mountain road.
3. Running in cold areas.
4. Engine idling for a long time or frequent short distance running in cold seasons.
5. Frequent application of brakes and emergency brake.
6. Towing vehicle.
7. Under high temperature over 32℃, the time of vehicle running slowly in congested urban areas exceeding 50% of total running time.
8. Under high temperature over 30℃, the time of vehicle running at high speed over 120km/h exceeding 50% of total running time.
9. Overloading.

Lubrication and seal

Item	Lube Oil/Sealant	Qty.
Transmission gear oil	Gear oil In summer 80W/90 GL-4 In winter 75W/90 GL-4	2.7L
Release bearing bore of transmission	Grease	Adequate
Transmission oil seal	Grease	Adequate
Mating face between transmission housing and clutch housing	TONSAN®1596F	Adequate
Mating face between transmission housing and rear cover	TONSAN®1596F	Adequate

Downloaded from www.Manualslib.com manuals search engine

Brake System

Applied models: SUNRAY products manufactured by JAC

Subject Page

Instruction and Operation

Brake System..... 46
Explosive View..... 46
Introduction of Brake..... 47

Diagnosis and Testing

Brake System..... 49
Inspection and confirmation..... 52
Fault Symptom Table..... 53

Removal/Installation

Removal/installation of brake disc..... 50
Removal/installation of brake caliper assembly..... 54
Removal/installation of rear wheel brake shoe..... 56
Parking brake adjustment..... 59
Removal/installation of parking brake lever..... 60
Removal/installation of parking brake cable..... 61
Replacement of parking brake cable..... 62
Removal/installation of brake pedal..... 63
Removal/installation of brake master cylinder..... 65
Removal/installation of vacuum pump..... 66
Removal/installation of vacuum booster..... 68
Air bleeding for hydraulic pressure brake system..... 71

Downloaded from www.Manualslib.com manuals search engine

Instruction and Operation

SUNRAY vehicles' brake system adopts cross type brake line and the front disc/rear drum brake type.

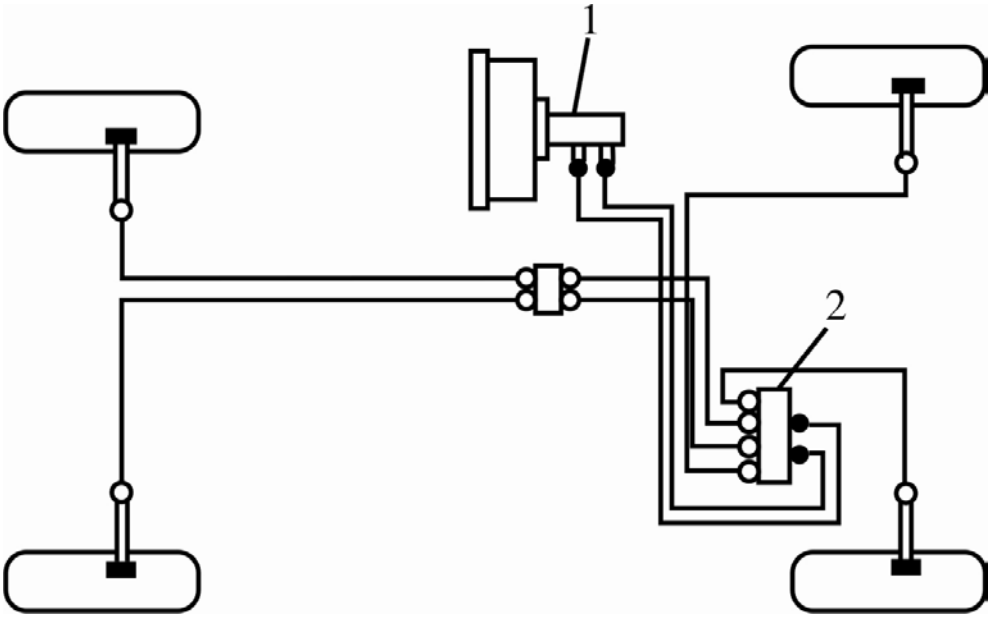

1. Brake master cylinder
2. Hydraulic distribution valve

Downloaded from www.Manualslib.com manuals search engine

Instruction and Operation

Operating principle

Brake fluid

Inspection of brake fluid level:

1. Check if the brake fluid level in oil reservoir is within the specified range (between MAX and MIN signs). In case of too low fluid level, please check oil reservoir periphery and brake system for any leak.
2. Start the vehicle with parking brake lever released to observe whether the brake warning lamp goes out. If not, please check the parking brake switch and brake fluid level switch for any fault.

Brake master cylinder

On-vehicle inspection:

Check mounting surfaces of master cylinder and oil reservoir, as well as brake pipe connectors for any leak.

Instruction and Operation

Inspection of vacuum booster

1. Operation inspection

   Shut down the engine and repeatedly depress the brake pedal for several times to make the vacuum inside the vacuum booster equivalent to atmospheric pressure. With the brake pedal depressed to the end and engine started, check if the clearance between brake pedal and floor decreases once the vacuum up to the standard degree.

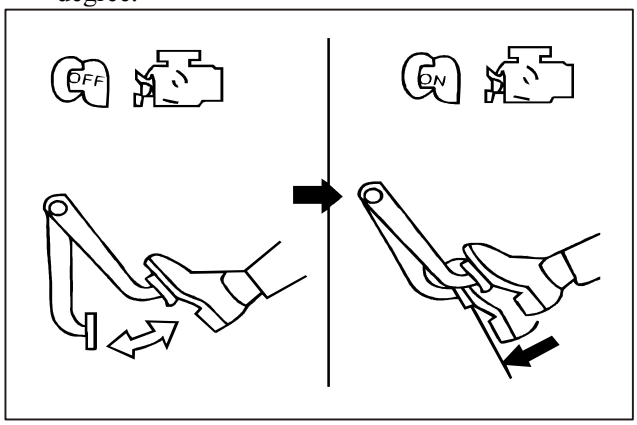

   Attention:

   Please depress the brake pedal with an interval of 5 seconds.

2. Air tightness inspection

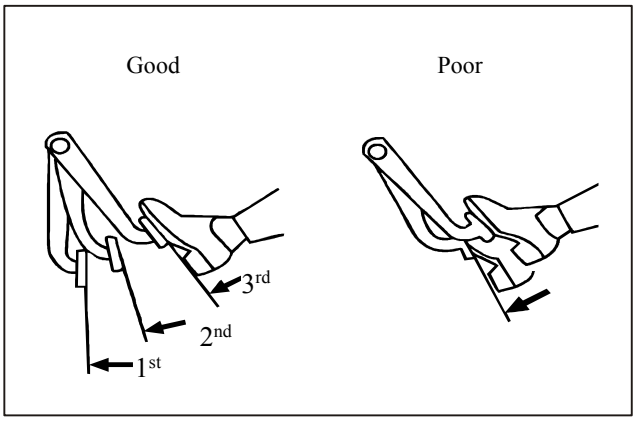

   Start the engine and let it idling for 1 minute, and shut down the engine once the vacuum established in the vacuum booster. Depress the brake pedal normally to remove the vacuum.

   Please check if the clearance between brake pedal and floor increases gradually.

   Depress the brake pedal with engine running and then hold the brake pedal depressed to realize flameout. Please check if there is any change in pedal travel after holding it for 30 seconds.

Front disc brake caliper

On-vehicle inspection:

1. Check brake shoes for any wear.

   Attention:

   Standard thickness: 12mm

   Wear limit thickness: 2mm

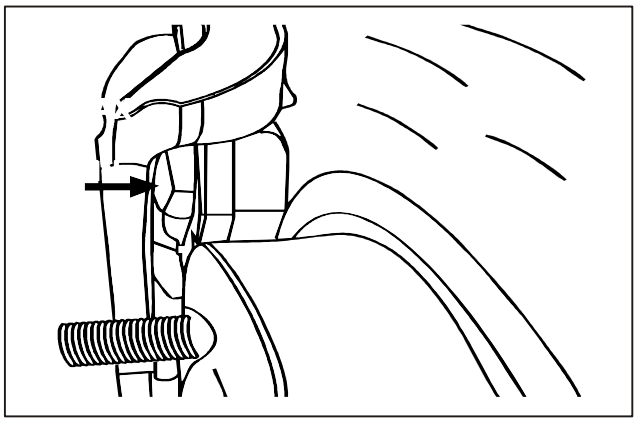

Inspection of brake disc:

1. Visual inspection

   Check brake disc surface for uneven abrasion, crack or sever damage. If any, please replace the brake disc.

2. Inspection of runout

   ① Fix the brake disc onto the wheel hub.

   Attention:

   Before measurement, please ensure proper axial clearance of wheel bearing.

Downloaded from www.Manualslib.com manuals search engine

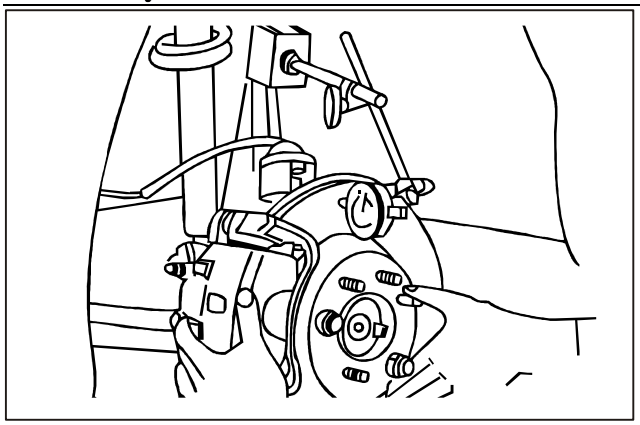

② Check the runout with dial indicator. (It is preferable to conduct measurement at points 10mm distant from the disc edge)
Runout limit: 0.05mm

③ If the disc runout exceeds the specified value, please replace or reprocess it accordingly.

3. Thickness inspection
Check the thickness of brake disc with a micrometer.
If the thickness is less than the wear limit, please replace the brake disc.

Standard thickness: 24.3mm
Wear limit: 22.3mm

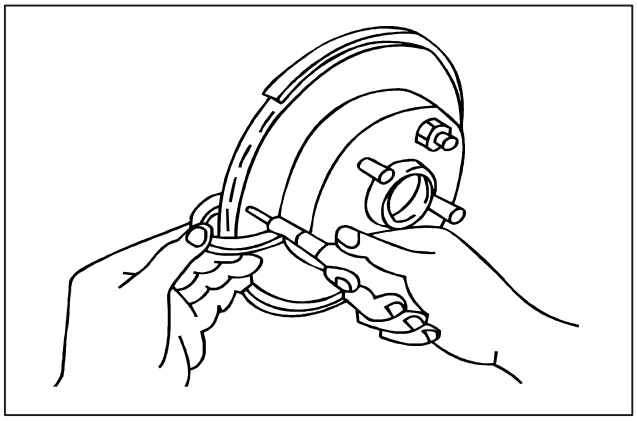

Downloaded from www.Manualslib.com manuals search engine

Fault Diagnosis

Common fault diagnosis table

Fault Symptom	Possible Cause	Solution
Vehicle pulled to one side when braking	Insufficient left/right tire pressure	Adjust
	Improper front wheel alignment	Adjust
	Poor contact of brake shoe	Adjust
	Grease or oil existed on brake shoe surface	Replace
	Improper installation of brake wheel cylinder	Adjust
	Failure of auto-regulating mechanism	Adjust
Insufficient brake force	Low level or contamination of brake fluid	Replenish or change
	Air existed in brake system	Bleed air out of system
	Failure of vacuum booster	Adjust
	Poor contact of brake shoe	Adjust
	Grease or oil existed on brake shoe surface	Replace
	Failure of auto-regulating mechanism	Adjust
	Overheating of brake rotary parts due to sluggish of brake shoe	Adjust
	Restriction of brake line	Adjust
Pedal travel increase (decrease of clearance between pedal and floor)	Air existed in brake system	Bleed air out of system
	Leak of brake fluid	Adjust
	Failure of auto-regulating mechanism	Adjust
	Excessive clearance between pushrod and brake master cylinder	Adjust
Brake hysteresis	Parking brake not fully released	Release
	Improper adjustment of parking brake	Adjust
	Wear of brake pedal return spring	Replace
	Restriction of return opening of brake master cylinder	Adjust
	Insufficient lubrication of sliding parts	Lubricate
	Defective check valve or piston return spring of brake master cylinder	Replace
	Insufficient clearance between pushrod and brake master cylinder	Adjust
Insufficient parking braking	Damage of rear brake shoe	Replace
	Grease or oil existed on rear brake shoe surface	Replace
	Parking brake cable stuck	Adjust
	Failure of auto-regulating mechanism	Adjust
	Excessive travel of parking brake handle	Adjust

Downloaded from www.Manualslib.com manuals search engine

Removal/Installation

Front brake disc

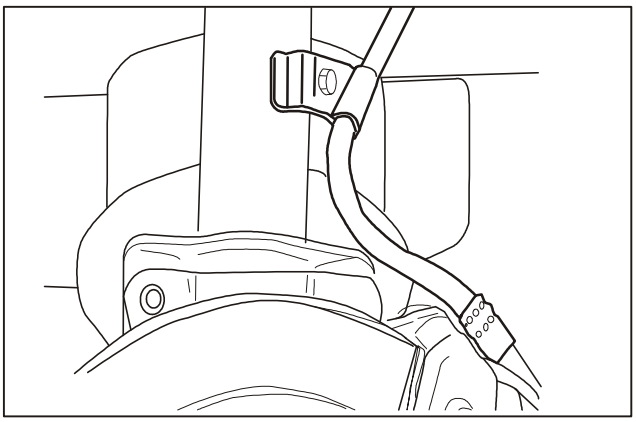

Removal

1. Have the vehicle lifted and remove the front wheel.
2. Remove the brake hose from the shock absorber.

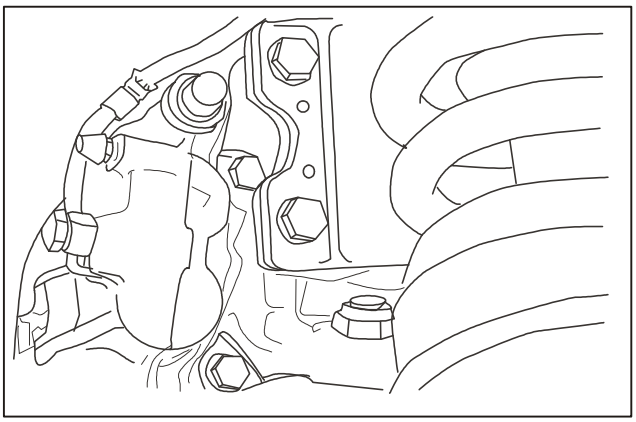

Note:

Loosen the brake caliper to certain degree ready for removal instead of removing it completely.

3. Remove the brake caliper.

   Hang up the brake caliper properly in order to avoid damage of brake hose.

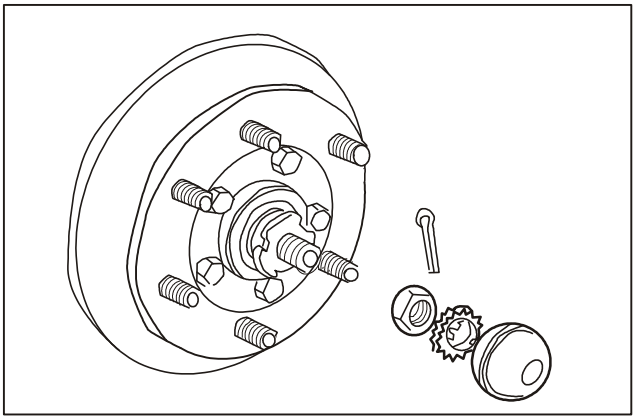

Caution:

Bearing preload adjusting nut is of right hand thread.

4. Remove the brake disc assembly:
   - Remove the dust cover.
   - Remove the split pin and nut retainer.
   - Loosen the adjusting nut of wheel bearing.
   - Remover the brake disc assembly.

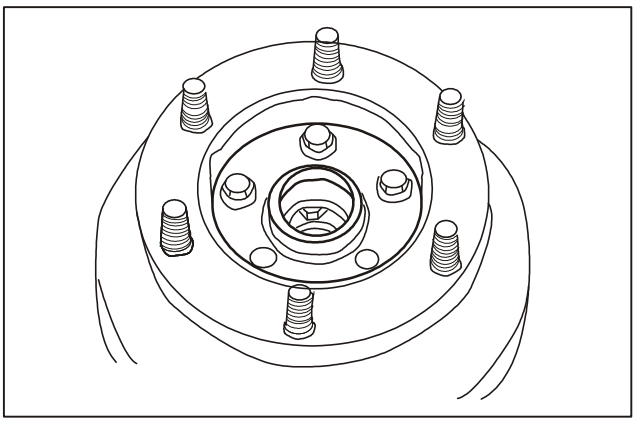

5. Remove the wheel hub from the wheel disc.

   Bend the lock lug on the set bolt down.
6. Clean the contact surface between wheel hub and disc.

Downloaded from www.Manualslib.com manuals search engine

Removal/Installation

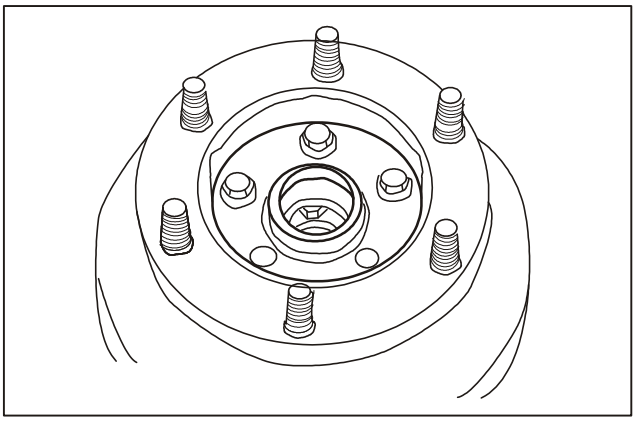

Installation

1. Install the wheel hub onto the brake disc.
   Bend the lock lug on the set bolt up.

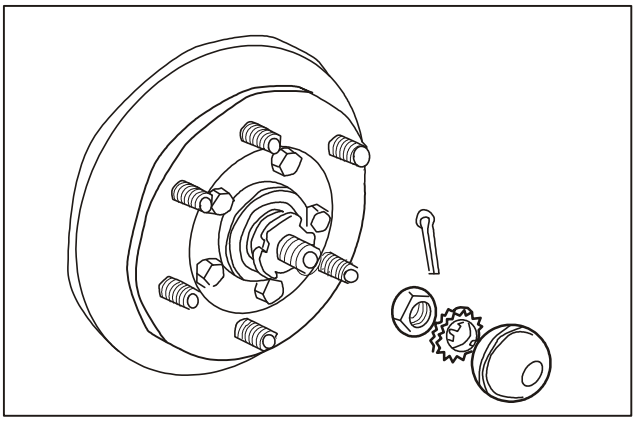

Caution:

The left hand side bearing adjusting nut is of left hand thread.

2. Reinstall the hub bearing:
   - Reinstall the washer and brake disc assembly, as well as the outer bearing.
   - Reinstall the wheel bearing adjusting nut.

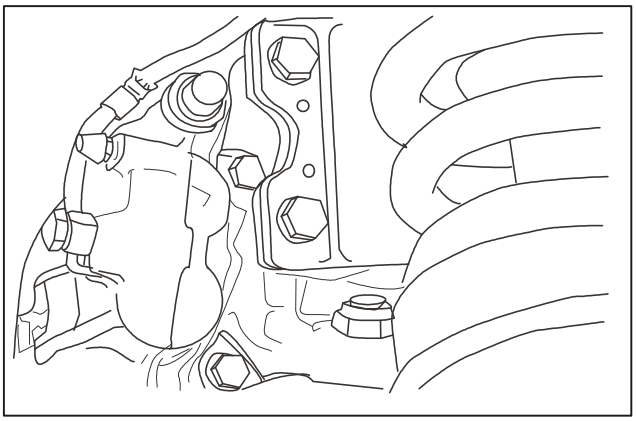

3. Reinstall the brake caliper.
4. Install the brake hose onto the shock absorber.
5. Check the front disc runout as required.

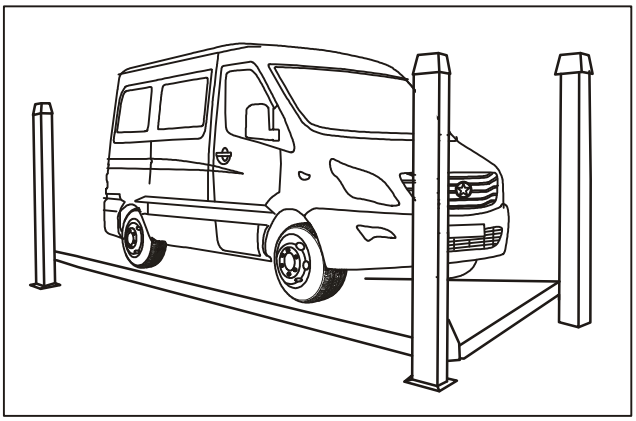

6. Set the axial clearance of wheel bearing:
   - Tighten the adjusting nut of wheel bearing and rotate the wheel at the same time to make it closely fitted against the bearing.
   - Rotate the adjusting nut by 180 degree and shake the wheel to make the hang properly fitted.
   - Push and pull the wheel horizontally to check the bearing axial clearance. If no clearance can be felt, adjust the adjusting nut to make the axial clearance within 0.002~0.05mm.
7. Use new split pin to reinstall the nut lock piece and the dust cover.
8. Reinstall the wheel.
9. Lower the vehicle.

Downloaded from www.Manualslib.com manuals search engine

Replacement of front brake disc

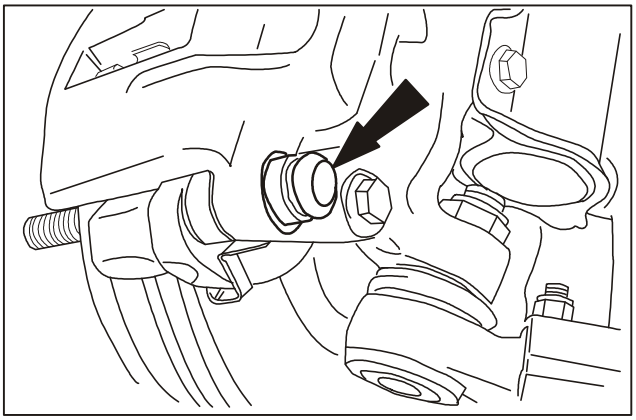

Removal

1. Have the vehicle lifted to remove the front wheel.
2. Remove the plastic cap of brake caliper sliding pin.

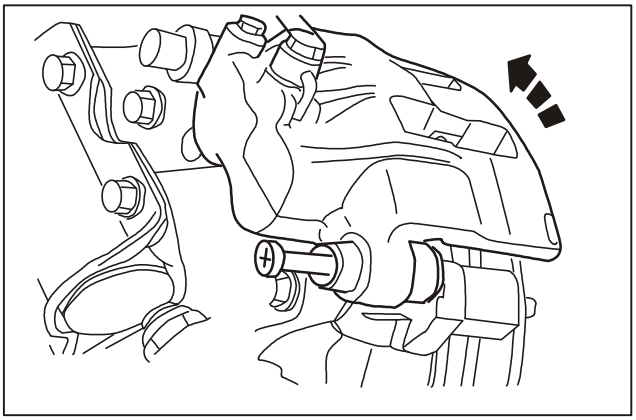

3. Make the brake disc exposed:
   - Remove the guide pin bolt of brake caliper.
   - Upturn the brake caliper.

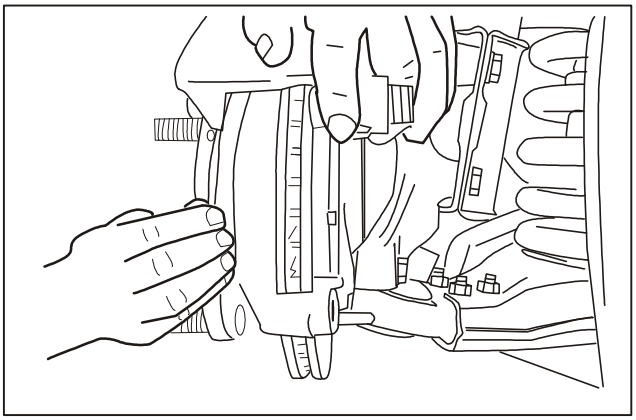

Note:

The ablated or damaged piston bush should be replaced.

4. Remove the inner/outer brake pad.

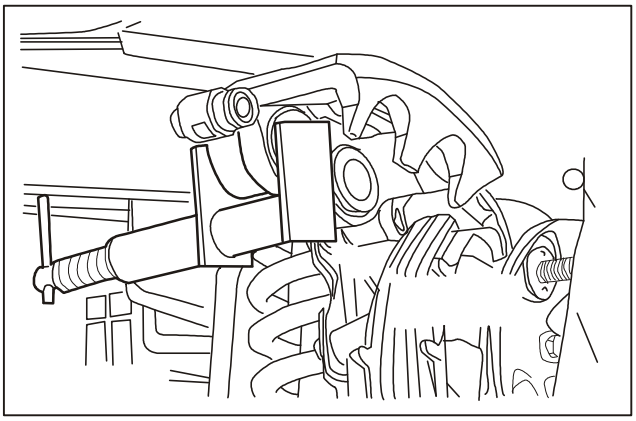

Note:

Resetting of wheel cylinder piston shall make the brake fluid returned to the fluid reservoir of master cylinder.

5. Push the wheel cylinder piston carefully to the original position.

Downloaded from www.Manualslib.com manuals search engine

Removal/Installation

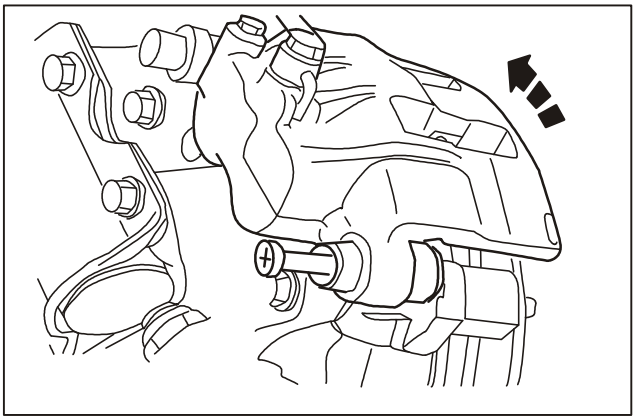

6. During the installation of new brake lining, please remove the snap ring of brake lining from the brake caliper.
7. Clear any dirt within the mounting areas.

Installation

1. Install new snap ring onto new brake lining.
2. Check if two brake linings are of the same type.
3. During the installation of new brake lining, please remove the interleaving paper from the acoustic lining.

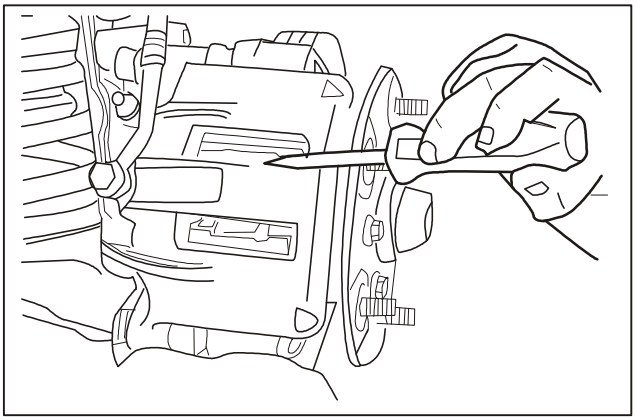

4. Reinstall inner/outer brake lining.
5. Reinstall the brake caliper assembly:
   - Install the brake caliper assembly.
   - Install the guide pin bolt of brake caliper.
   - Install the plastic cap of brake caliper guide pin.
6. Adjust the slider of brake plate.

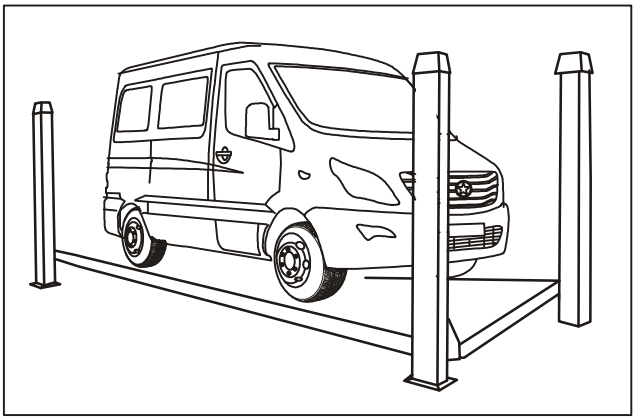

7. Reinstall the wheel and lower the vehicle.

8. Check the brake fluid level of master cylinder. If insufficient, please add brake fluid to the standard position.

Downloaded from www.Manualslib.com manuals search engine

Removal/Installation

Brake caliper assembly

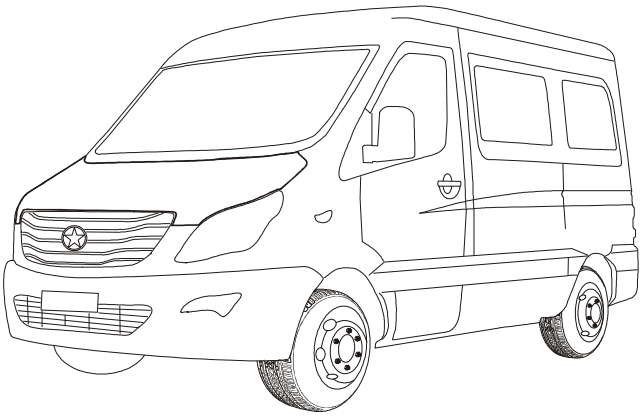

Removal

1. Have the vehicle lifted and remove the front wheel.

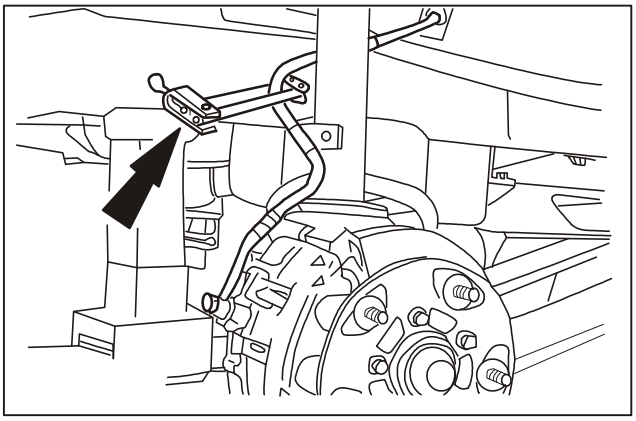

Note:

Clamp the brake hose with SST in order to avoid damage of brake hose.

2. Clamp the brake hose.

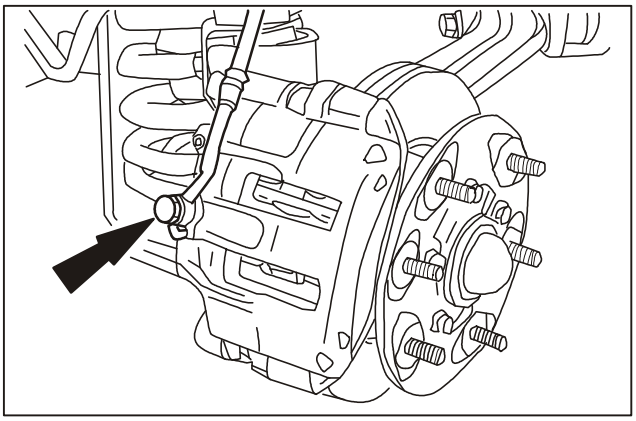

3. Remove the brake hose from the caliper.
   Put on the seal plug to avoid excessive leak of brake fluid or contamination of dust.

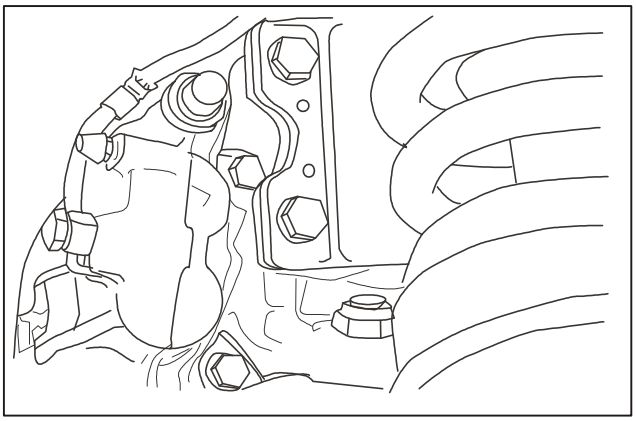

Note:

Loosen the upper mounting bolt of caliper until the brake caliper can be removed.

4. Remove the brake caliper assembly.

Downloaded from www.Manualslib.com manuals search engine

Removal/Installation

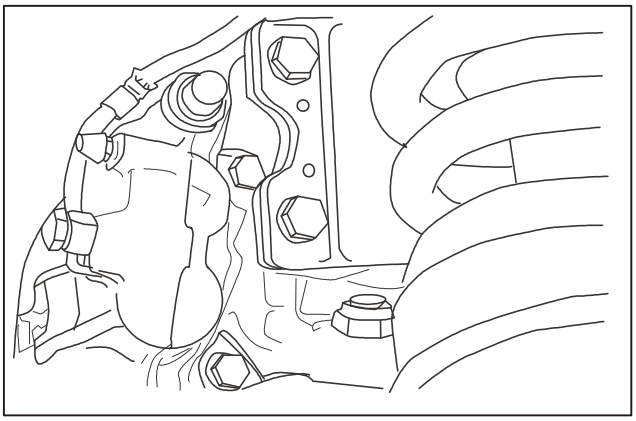

Installation

1. Reinstall the brake caliper.

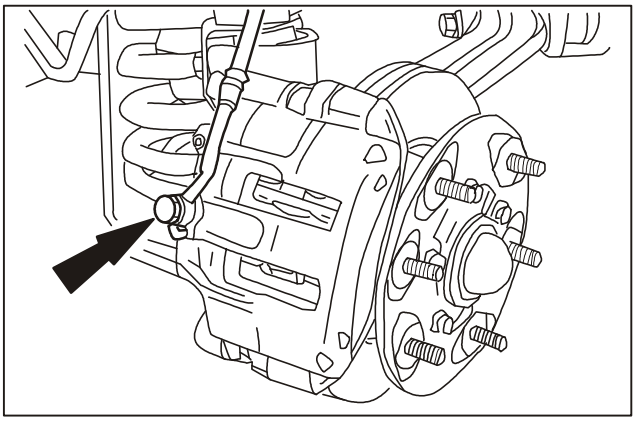

2. Connect the brake hose to the brake caliper.
3. Fix the brake hose onto the shock absorber.
4. Bleed air out of brake line in accordance with specification.

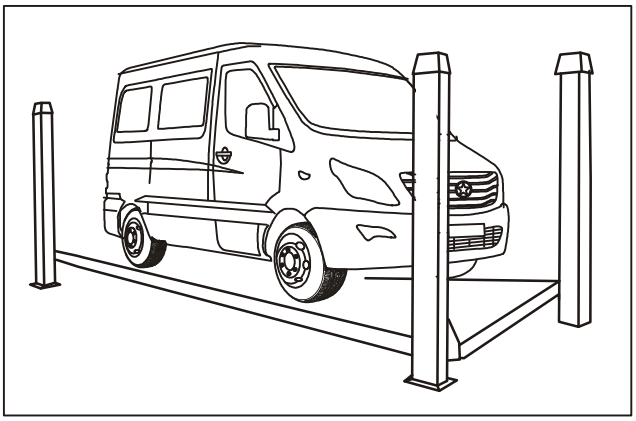

5. Install the wheel and lower the vehicle. Depress the brake pedal to adjust brake clearance.

Downloaded from www.Manualslib.com manuals search engine

Removal/installation of rear wheel brake shoe

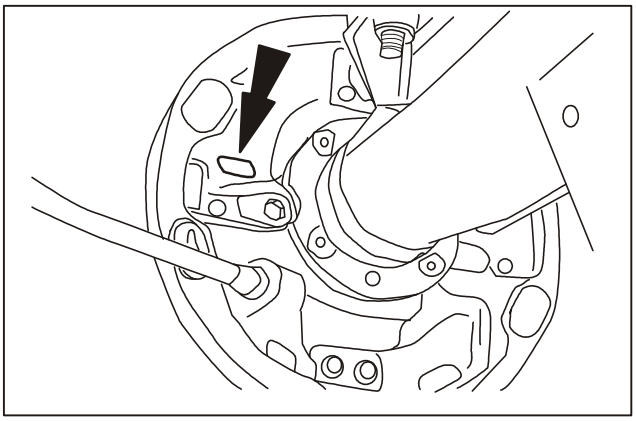

Removal

1. Release the parking brake lever, have the vehicle lifted and remove the rear wheel.
2. Remove the automatic regulator.
3. Mark properly on the wheel hub and rim for removal of hub.

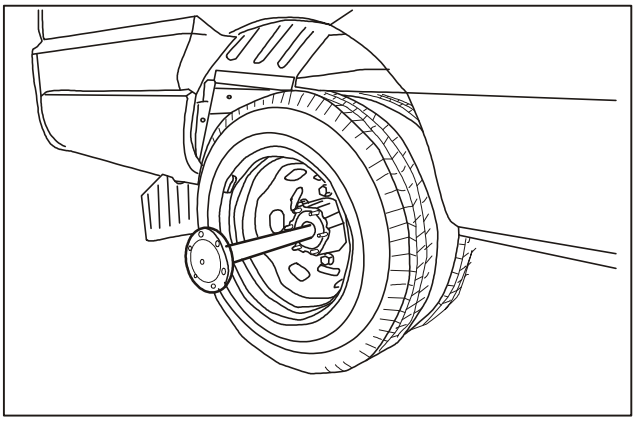

Caution:

Don't make the axle casing oil seal damaged.

4. Remove the axle shaft.

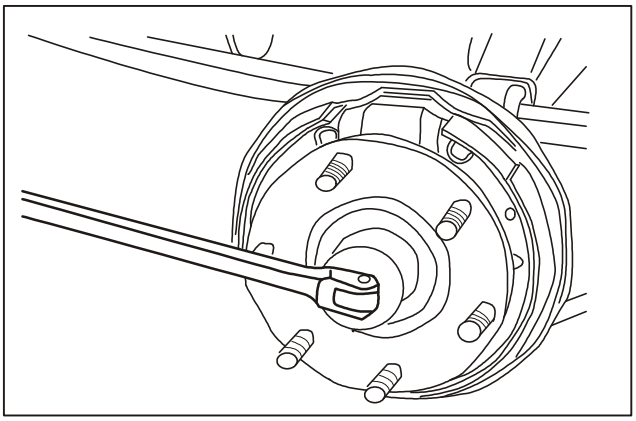

5. Remove flange nuts.

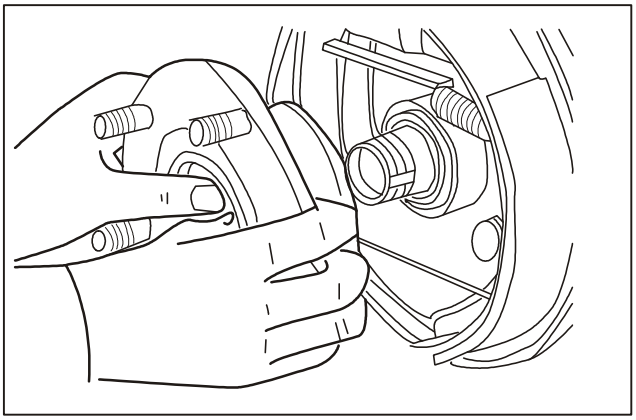

6. Remove the flange.

Downloaded from www.Manualslib.com manuals search engine

Removal/Installation

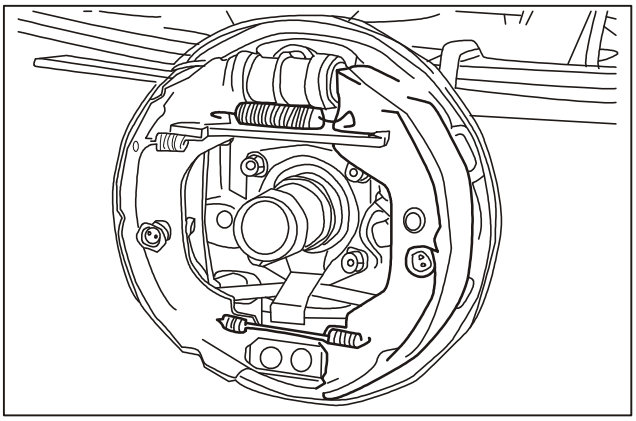

7. Remove the leading shoe:
   - Remove the lock pin and its spring cap.
   - Remove the brake shoe lower end from the support.
   - Loosen the lower return spring.
   - Remove the brake shoe upper end from the wheel cylinder.
   - Loosen the upper return spring.

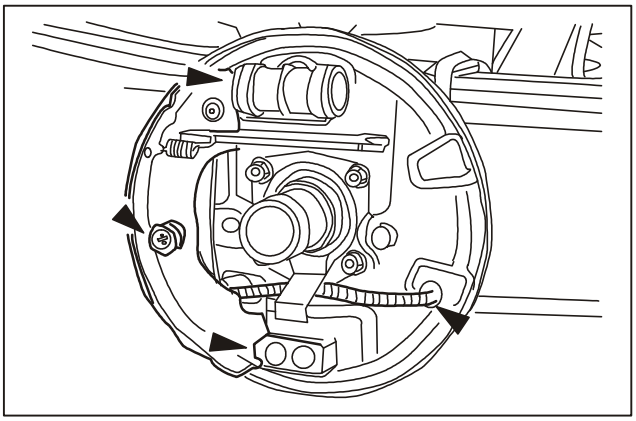

8. Remove the trailing shoe:
   - Remove the lock pin and its spring cap.
   - Remove the trailing shoe from the wheel cylinder and support.
   - Disconnect the parking brake cable.

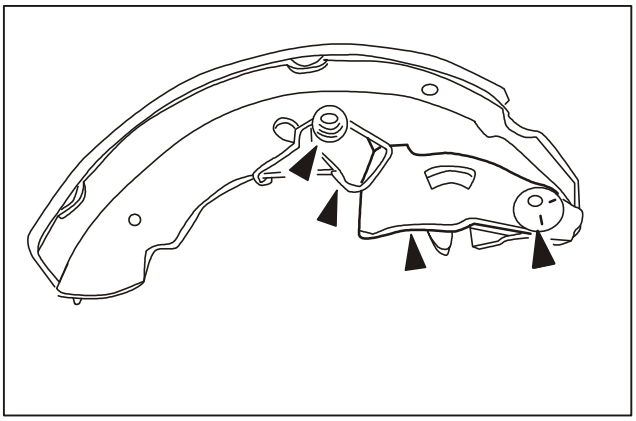

9. Disassemble the leading shoe:
   - Remove retainer ring from the inside of brake shoe.
   - Remove washer and spring from the fulcrum pin.
   - Remove spring and retainer ring from the ratchet.
   - Remove ratchet and washer from brake shoe.

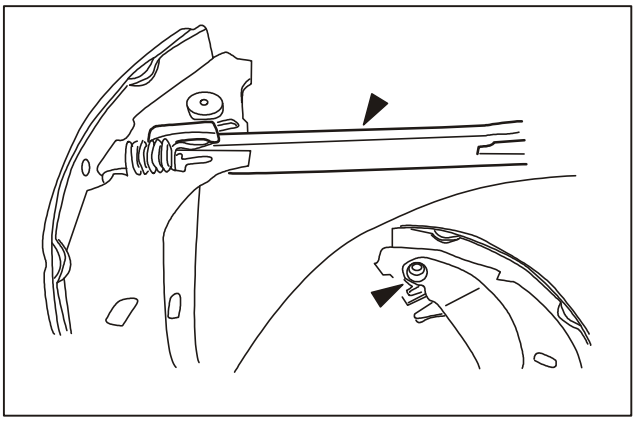

10. Disassemble the trailing shoe:
    - Remove return spring and strut from parking brake lever and brake shoe.
    - Remove retainer ring, fulcrum pin, washer and tie rod from brake shoe.

Downloaded from www.Manualslib.com manuals search engine

Removal/Installation

Installation

1. Clean the support plate and apply ABS fluid onto the bonding point between brake bottom plate and brake shoe.
2. Assemble the trailing shoe.
   Apply grease onto parking brake lever and brake shoe.
3. Reconnect the parking brake cable to the lever.
4. Reinstall the trailing shoe.
5. Assemble the leading shoe.
   Apply grease between the adjusting ratchet and the fulcrum pin.
6. Reinstall the leading shoe.
7. Install the upper/lower return spring of brake shoe.
8. Install the brake shoe lock pin, and the fixed pin and clip of spring.

Note:

Please don't make the brake lining contaminated by any oil or grease. If any, please wipe it clean with sand paper.

9. Reinstall the flange.

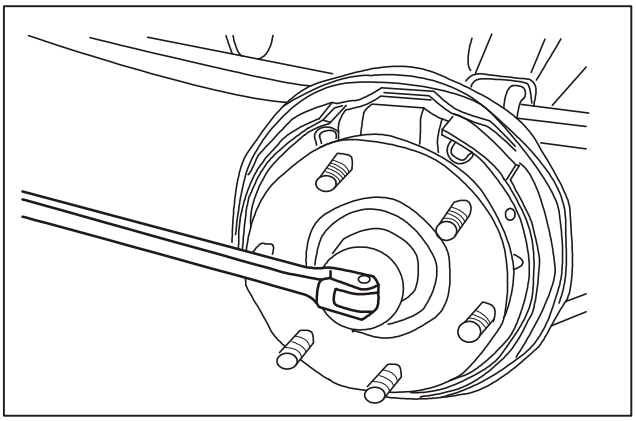

Note:

The annular mark on the left side flange nut of vehicle indicates the nut is of left hand thread.

10. Retighten the flange nut.

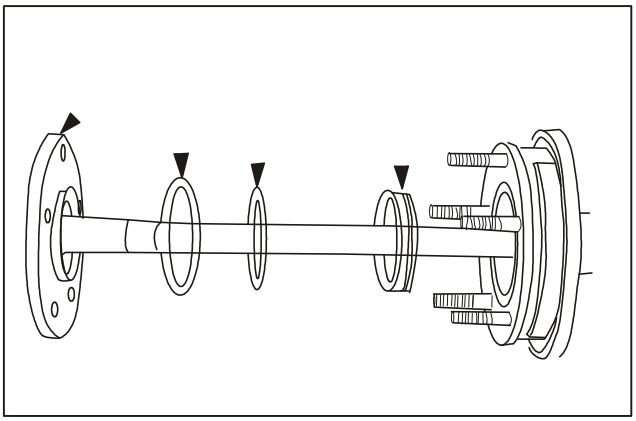

Caution:

Don't make the half axle oil seal damaged.

11. Reinstall the half axle:
    - Install the spacer.
    - Install a new O-ring.
    - Install a new oil seal.
    - Install the half axle.
12. Reinstall the brake drum.
13. Reinstall the tire and lower the vehicle.

Downloaded from www.Manualslib.com manuals search engine

Parking brake adjustment

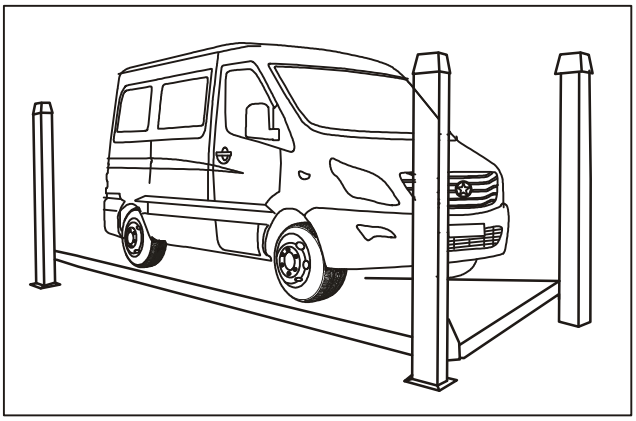

1. Release the parking brake and have the vehicle lifted.

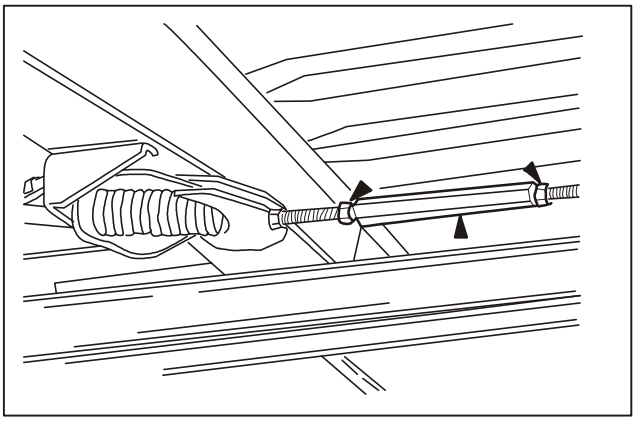

2. Release the parking brake regulator.
   - Loosen the lock nut.
   - Rotate the regulator.
3. Depress the brake pedal to ensure proper automatic regulation.
4. Pull up the parking brake lever until it gets stuck at the 3rd tooth.

Note:

Ensure thread length on both sides are the same and the thread can be observed through the hole of regulator.

Note:

The parking brake lever can be pulled up by four to six teeth after the last regulation is finished.

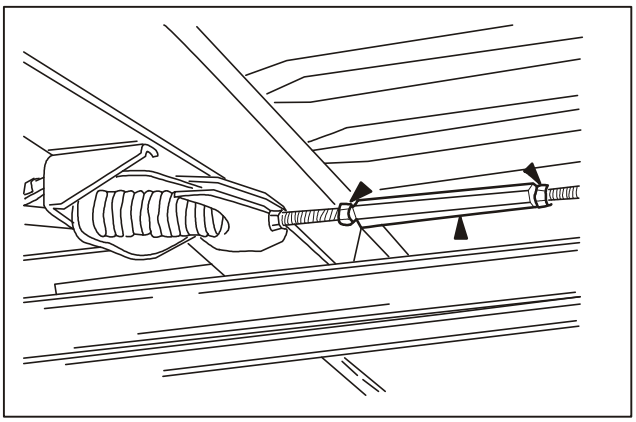

5. Tighten the parking brake adjusting nut:
   - Tighten the adjusting nut by hand.
   - Tighten the adjusting nut.

Downloaded from www.Manualslib.com manuals search engine

Removal/installation of parking brake lever

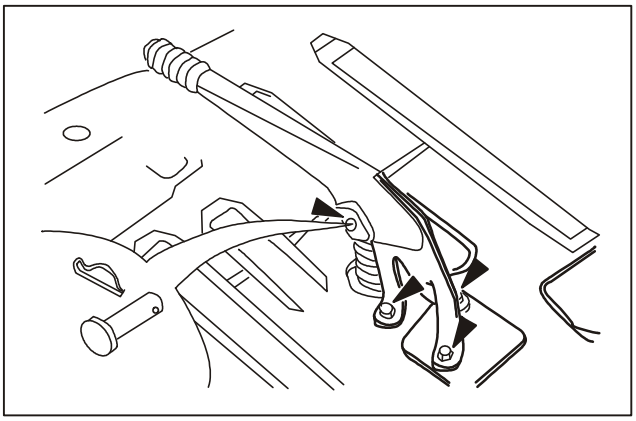

Removal

1. Loosen the parking brake lever.
2. Remove the wavy dust shield of parking brake.
3. Remove the parking brake lever assembly:
   - Remove the spring clip and the clevis pin for fixing cable.
   - Remove the mounting bolts from parking brake lever.

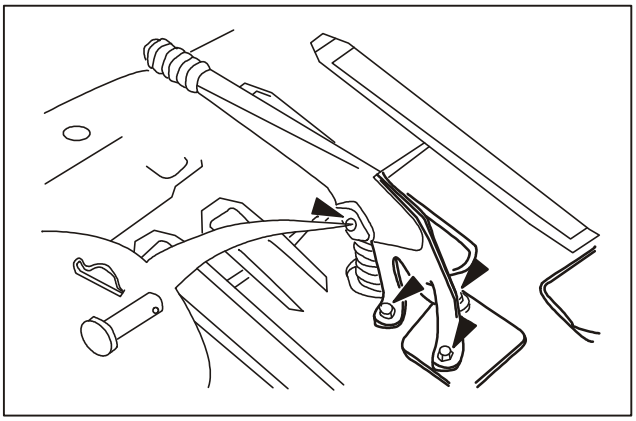

Installation

4. Reinstall the parking brake assembly:
   - Tighten the mounting bolts of parking brake lever.
   - Install the spring clip and the clevis pin for fixing the main cable.
   - Install the wavy dust shield of parking brake.

Downloaded from www.Manualslib.com manuals search engine

Removal/installation of parking brake cable

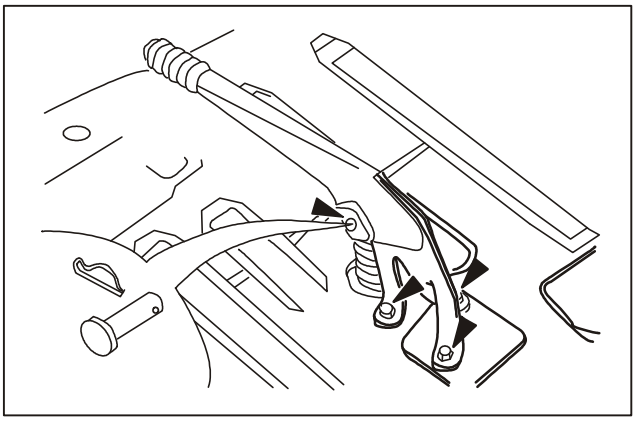

Removal

1. Loosen the parking brake lever.
2. Remove the spring clip and the clevis pin from the main cable and remove the cable from the parking brake lever.

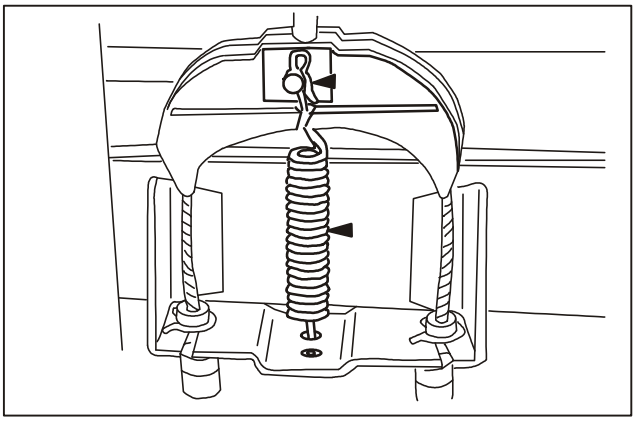

3. Separate the main cable from the equalizer:
   - Remove the spring clip and the clevis pin.
   - Remove the return spring from the equalizer.
4. Remove the main cable.

Installation

1. Reinstall all parts in the reverse order of removal.
2. Regulate the parking brake in accordance with specification when necessary.

Downloaded from www.Manualslib.com manuals search engine

Replacement of parking brake cable

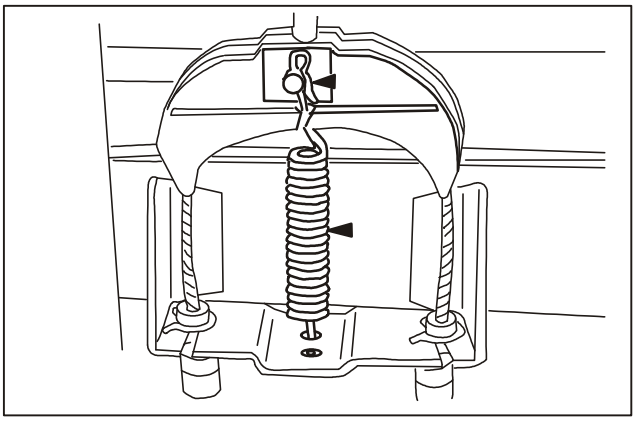

Removal:

1. Loosen the parking brake lever.
2. Remove the main cable from the equalizer:
   - Remove the spring clip and the clevis pin.
   - Remove the return spring from the equalizer.

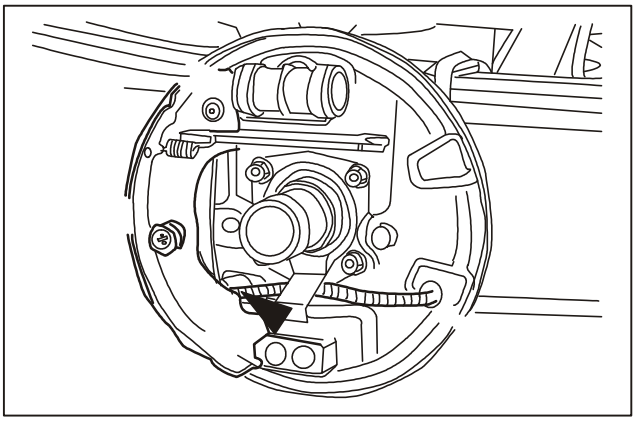

3. Remove the rear brake drum.
4. Remove the rear cable from the brake shoe control lever.

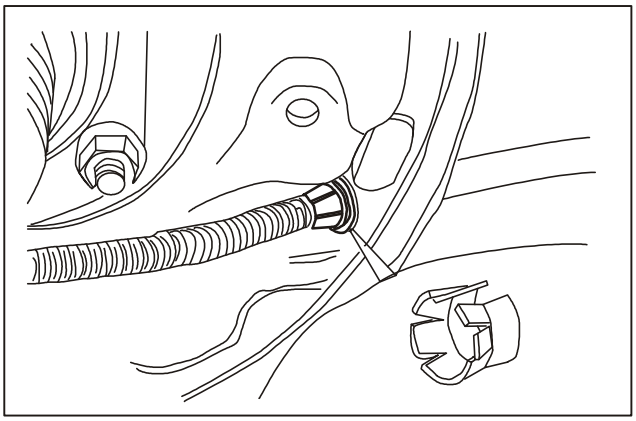

5. Remove the rear cable from the brake bottom plate.

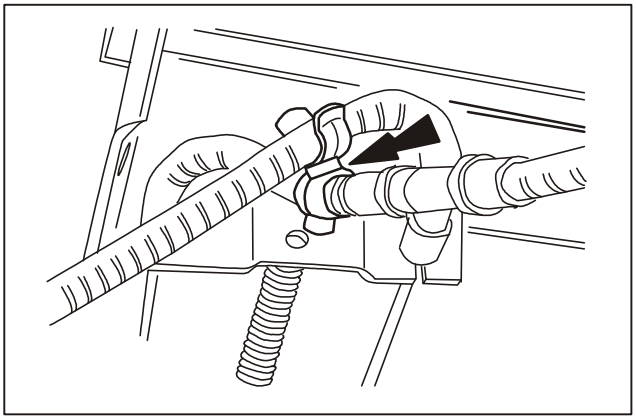

6. Remove the cable from the bracket hook.

Installation

1. Reinstall all parts in the reverse order of removal.
2. Regulate the parking brake in accordance with specification when necessary.

Downloaded from www.Manualslib.com manuals search engine

Removal/installation of brake pedal

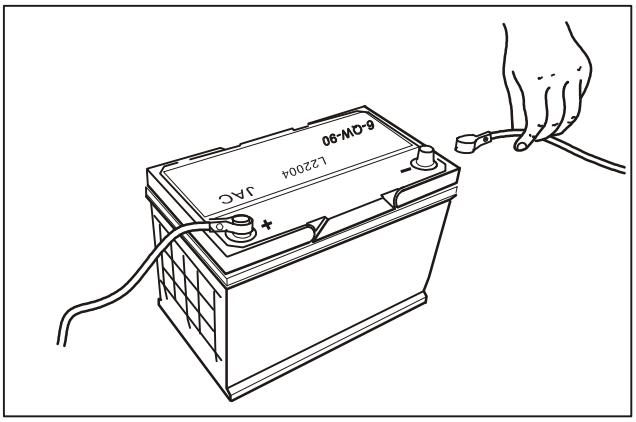

Removal

1. Disconnect the negative cable of battery.

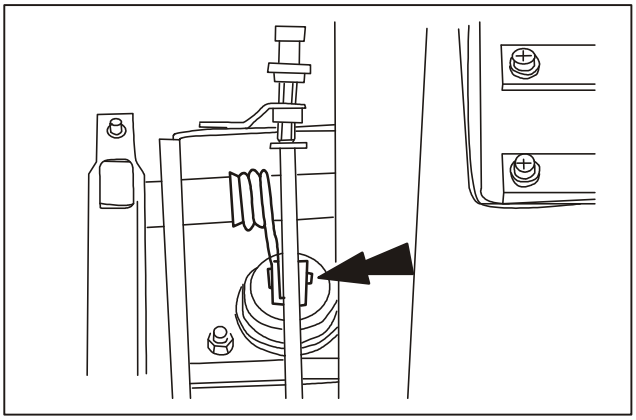

2. Remove the clevis pin and spring clip from the vacuum booster control rod of brake pedal.

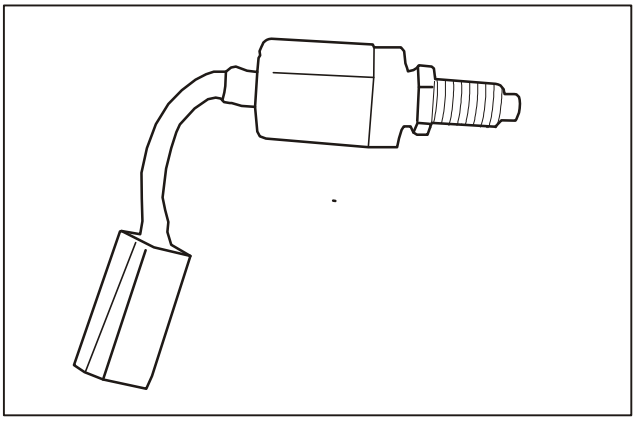

3. Remove the brake switch:
   - Disconnect the harness connector.
   - Remove the brake switch.

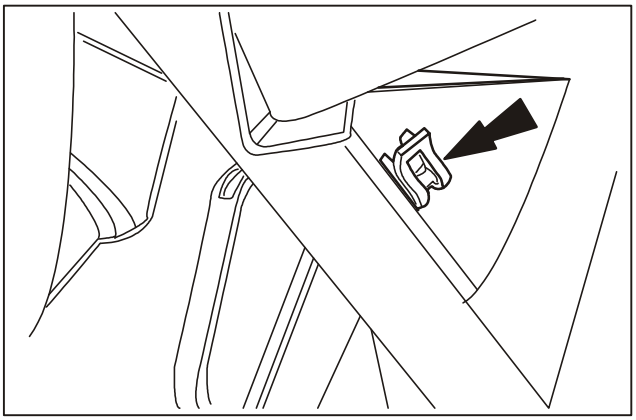

4. Remove the brake and clutch pedal spider clip from the pedal bracket.

Downloaded from www.Manualslib.com manuals search engine

Removal/Installation

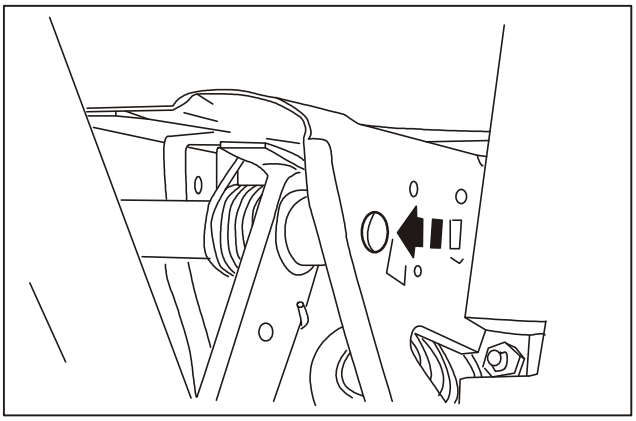

5. Remove the brake pedal:
   - Push the spider to the direction of clutch pedal.
   - Remove the brake pedal.

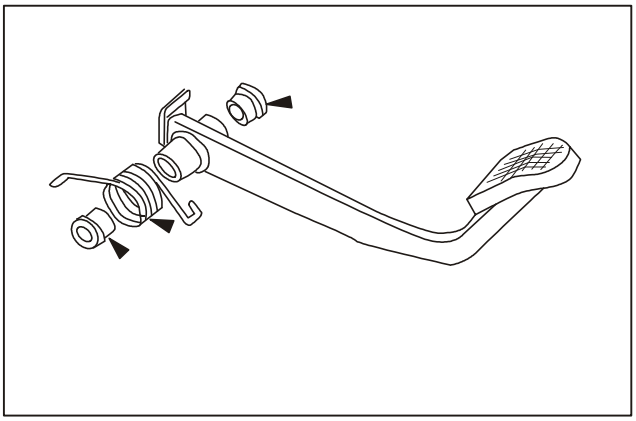

6. Remove the pedal bushing and spring:
   - Remove the pedal bushing.
   - Remove the spring.

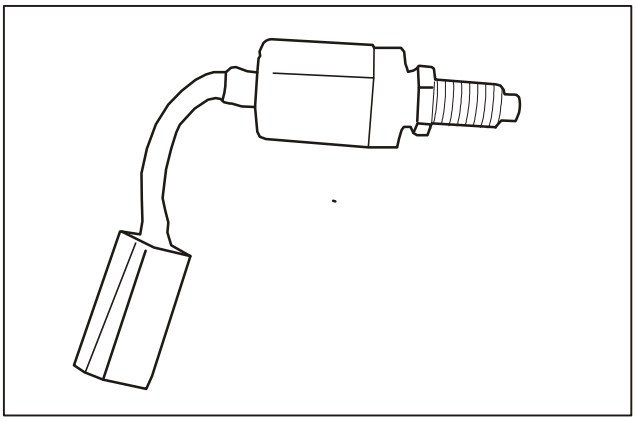

Installation

1. Reinstall all parts in the reverse order of removal.
2. Reinstall and regulate the brake switch:
   - Screw in the switch.
   - Reconnect the harness connector.

Downloaded from www.Manualslib.com manuals search engine

Removal/installation of brake master cylinder

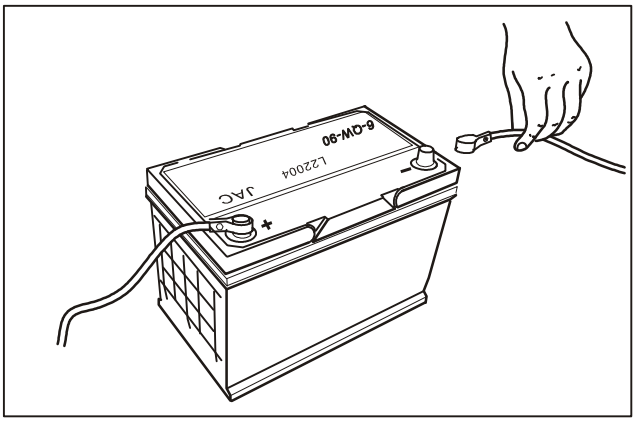

Caution:

Don't the make the brake fluid splashing onto the paint surface. In case of any, please wash the surface with clean water immediately.

Removal

1. Disconnect the negative cable of battery.

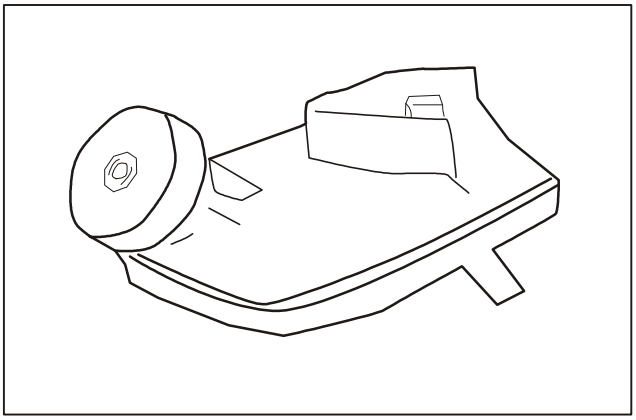

2. Remove the brake fluid reservoir cap:
   - Disconnect the fluid level alarm harness connector.
   - Remove the fluid reservoir cap.
3. Remove the clutch master cylinder pipe and drain the brake fluid out of the master cylinder fluid reservoir.
4. Remove the brake line from brake master cylinder and block the pipe with plug to avoid contamination by dirt.

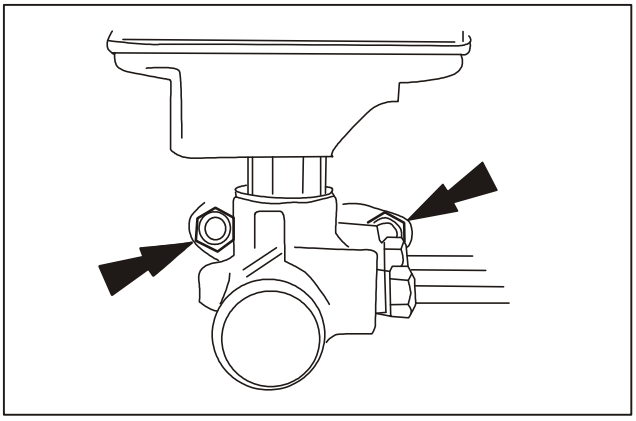

Caution:

Please ensure the air in vacuum booster is fully bled before the removal of brake master cylinder. Remove the vacuum pipe from the booster for air bleeding.

5. Remove the master cylinder.
6. Install it in the reverse order of removal. Remember to perform air bleeding after installation. Please bleed air out from system in accordance with specification.

Downloaded from www.Manualslib.com manuals search engine

Removal/installation of vacuum pump

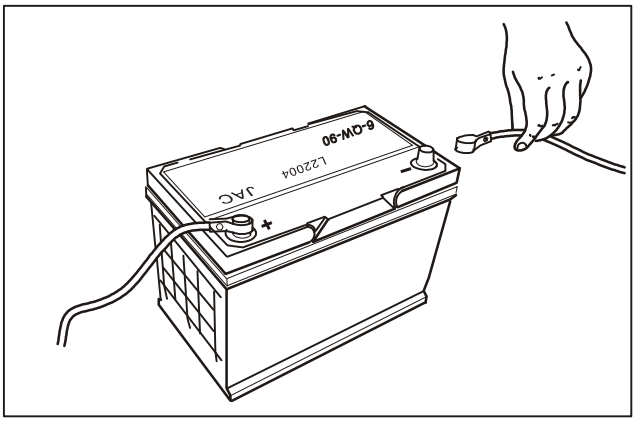

Caution:

Don't the make the brake fluid splashing onto the paint surface. In case of any, please wash the surface with clean water immediately.

Removal

1. Disconnect the negative cable of battery.

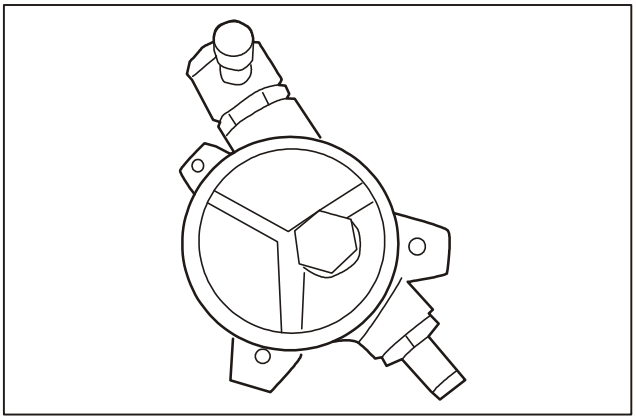

2. Remove the vacuum pipe from the pump.

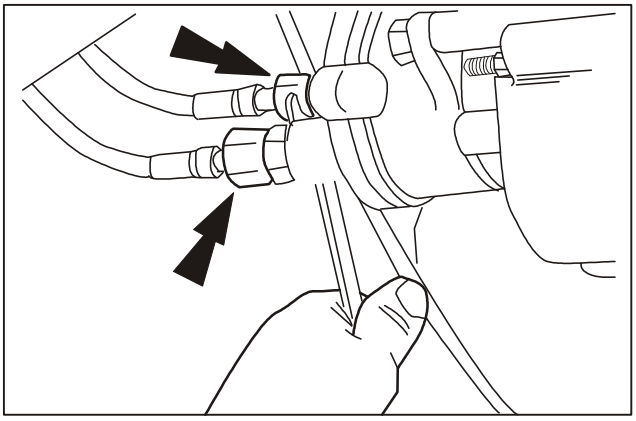

Note:

Plug the pipe orifice to avoid contamination by dirt.

3. Remove the oil inlet pipe and the oil return pipe from the pump.

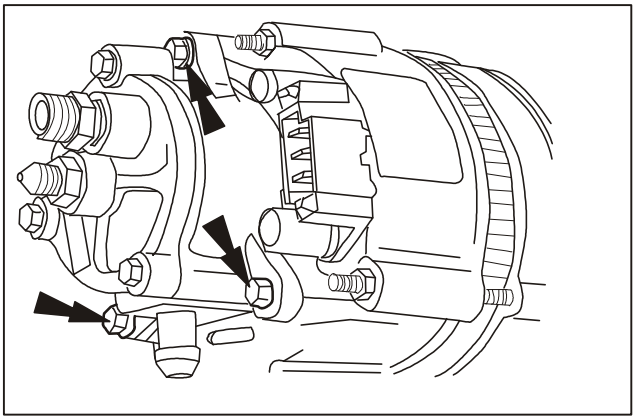

4. Remove the vacuum pump.

Downloaded from www.Manualslib.com manuals search engine

Removal/Installation

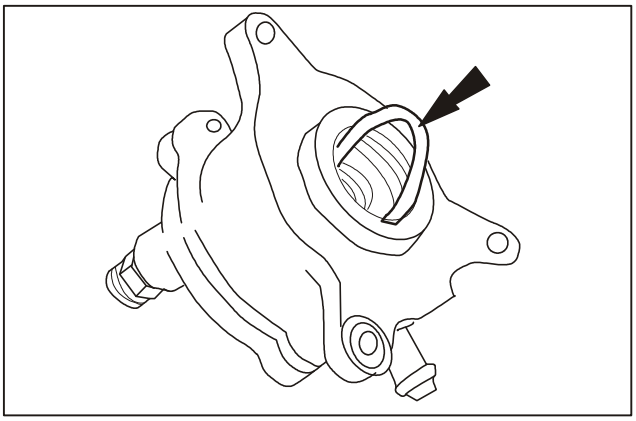

5. Remove the seal ring between generator and vacuum pump.

Installation

1. Reinstall the seal ring between generator and vacuum pump.

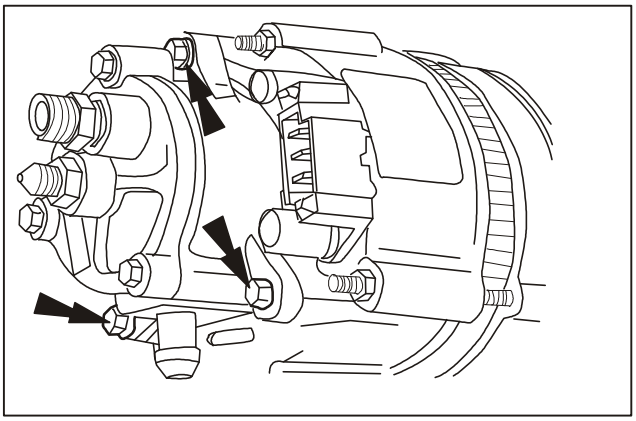

2. Reinstall the vacuum booster.
3. Reinstall the oil inlet pipe and the oil return pipe onto the pump.
4. Connect the vacuum pipe onto the pump.
5. Connect the negative cable of battery.

Downloaded from www.Manualslib.com manuals search engine

Removal/installation of vacuum booster

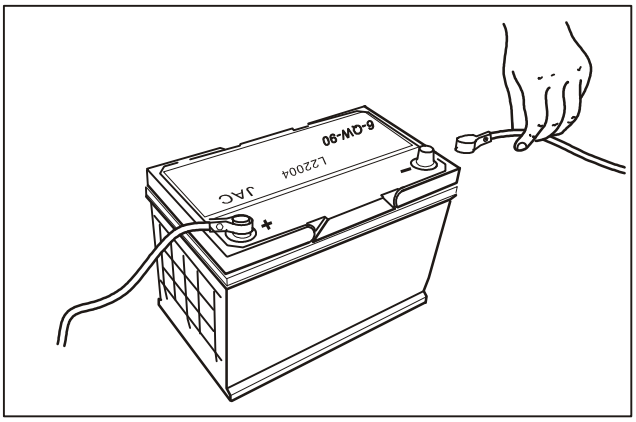

Caution:

Don't the make the brake fluid splashing onto the paint surface. In case of any, please wash the surface with clean water immediately.

Removal

1. Disconnect the negative cable of battery.

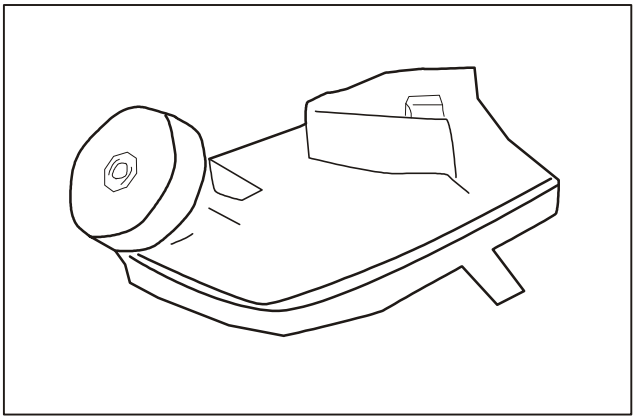

2. Disconnect the harness connector of the brake fluid level warning switch.
3. Disconnect the brake fluid circuit.

Note:

Plug the pipe orifice to avoid contamination by dirt.

4. Remove the brake line from the master cylinder.

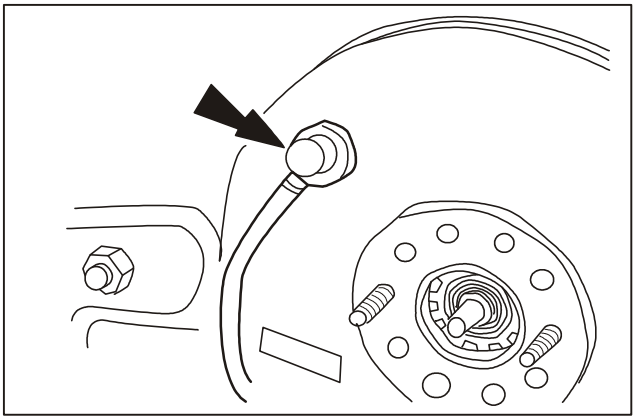

5. Remove the vacuum booster hose connector carefully.

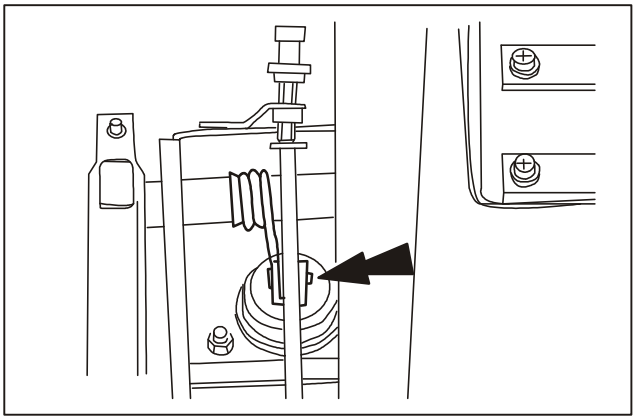

6. Remove the clevis pin and spring clip from the vacuum booster control rod of brake pedal.

Downloaded from www.Manualslib.com manuals search engine

Removal/Installation

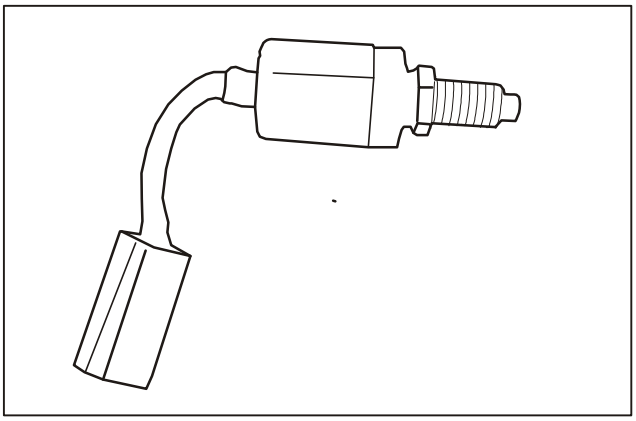

7. Remove the brake switch.
   - Remove the harness connector.

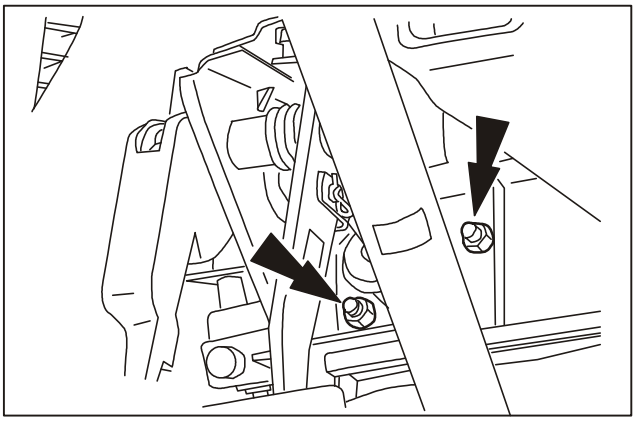

8. Remove the booster and master cylinder assembly.

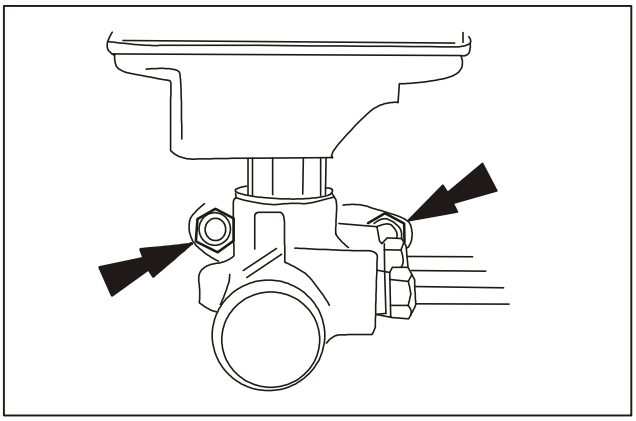

9. Separate the booster from the master cylinder.

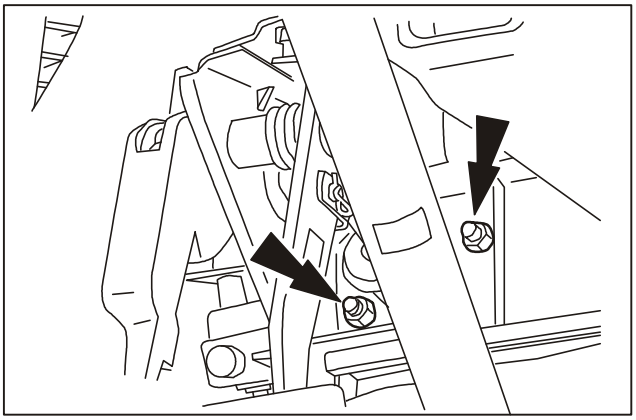

Installation

1. Install the vacuum booster.
2. Install the booster control rod onto the brake pedal.

Downloaded from www.Manualslib.com manuals search engine

Removal/Installation

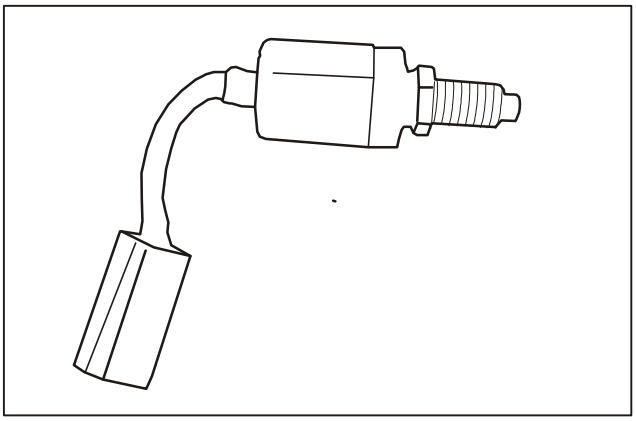

3. Reinstall and debug the brake switch.

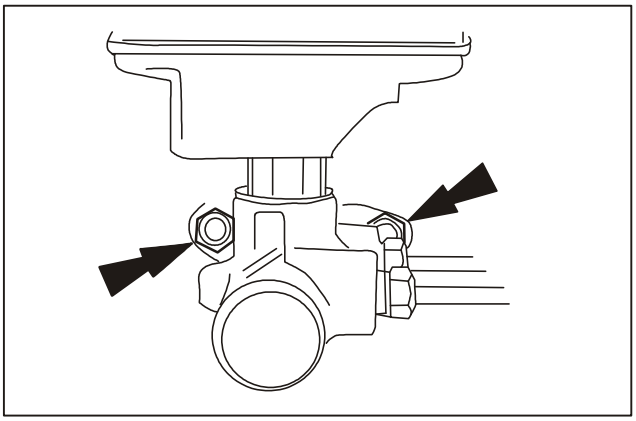

4. Reinstall the master cylinder onto the booster. Ensure proper position and clean joint surface for sealing washer of vacuum pump.
5. Reconnect the brake line.
6. Reconnect the brake line with the master cylinder.
7. Install the vacuum booster pipe connector.
8. Connect the brake fluid level warning sensor connector.
9. Connect the negative cable of battery.
10. Bleed air out of brake system in accordance with specification.

Downloaded from www.Manualslib.com manuals search engine

Air bleeding for brake system

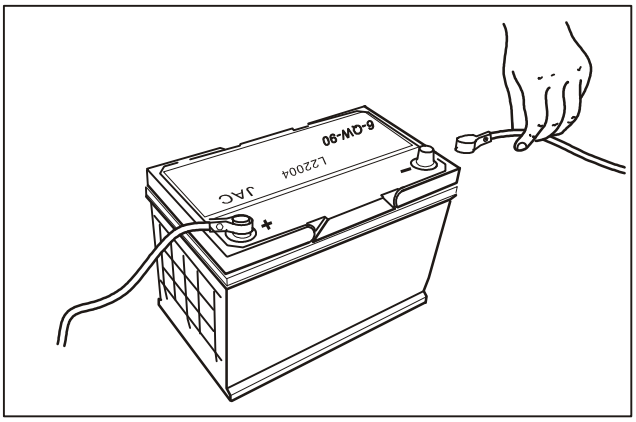

Caution:

Don't the make the brake fluid splashing onto the paint surface. In case of any, please wash the surface with clean water immediately.

1. Disconnect the ground wire of battery.

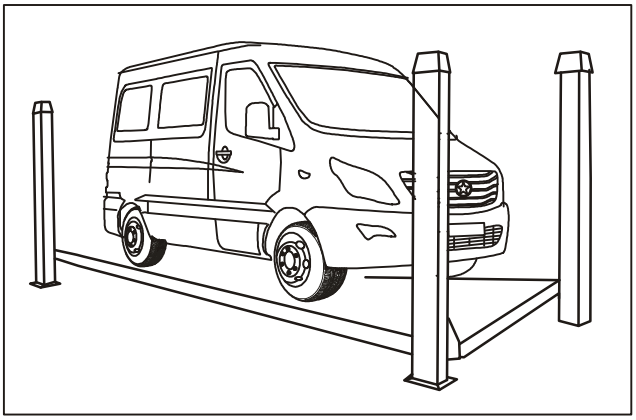

2. Have the vehicle lifted.

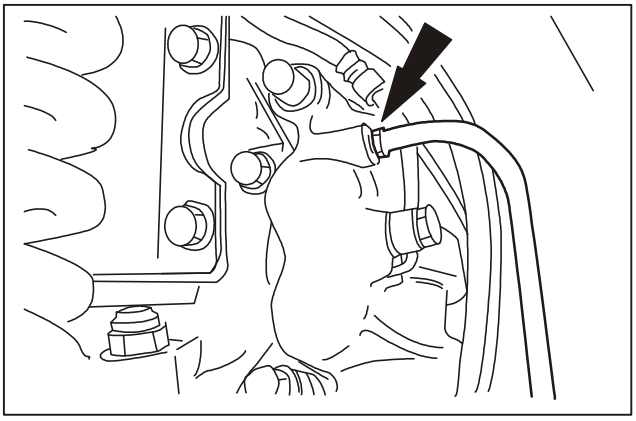

3. Connect the oil drain pipe to the air vent of four wheels.
4. Loosen the bleeder screw.

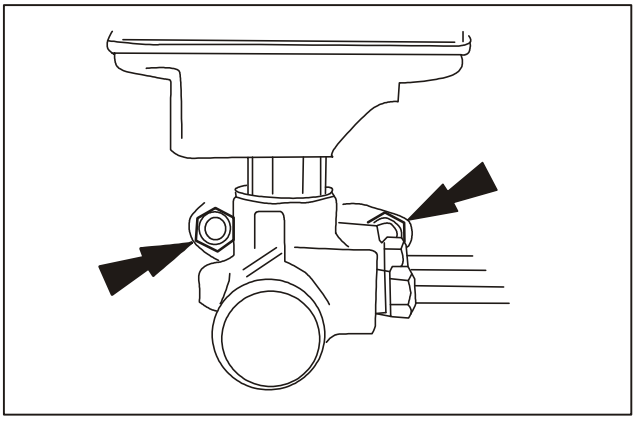

Note:

Keep the brake fluid reservoir cap clean.

5. Open the brake fluid reservoir cap.
6. Bleed air out of the front circuit.

   Fill the fluid reservoir with brake fluid with the brake pedal fully depressed, release the brake pedal immediately and then hold the brake pedal depressed. Loosen the bleeder screw of wheel cylinder to bleed air out of system. Perform air bleeding for wheels in the order of left rear, right front, right rear and left front. Tighten the bleeder screw once no air bubble is observed.

Downloaded from www.Manualslib.com manuals search engine

Anti-lock Brake System (ABS)

Applied models: SUNRAY products manufactured by JAC

Subject Page

Instruction and Operation

ABS system....74

Diagnosis and Testing

ABS system....79
Operating principle.... 79
Inspection and confirmation....81
Fault Symptom Table.... 85

Removal/Installation

ABS system....101
Wheel speed sensor.... 103

Downloaded from www.Manualslib.com manuals search engine

Instruction and Operation

Anti-lock brake system (ABS)

BOCSH 8 ABS is adopted for JAC multifunctional commercial vehicles.

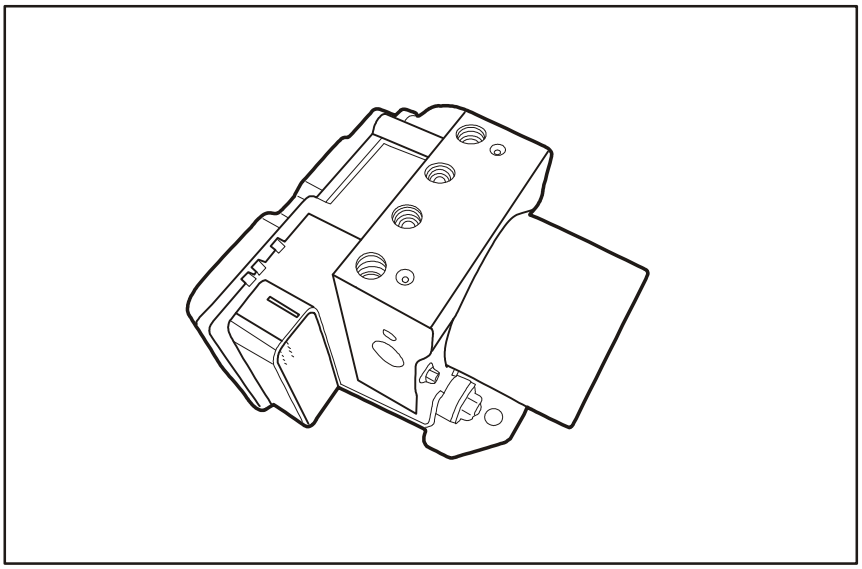

ABS Hydraulic Assembly

Downloaded from www.Manualslib.com manuals search engine

Instruction and Operation

Operating principle

Connection Diagram of ABS Brake Line (Diagonal Layout)

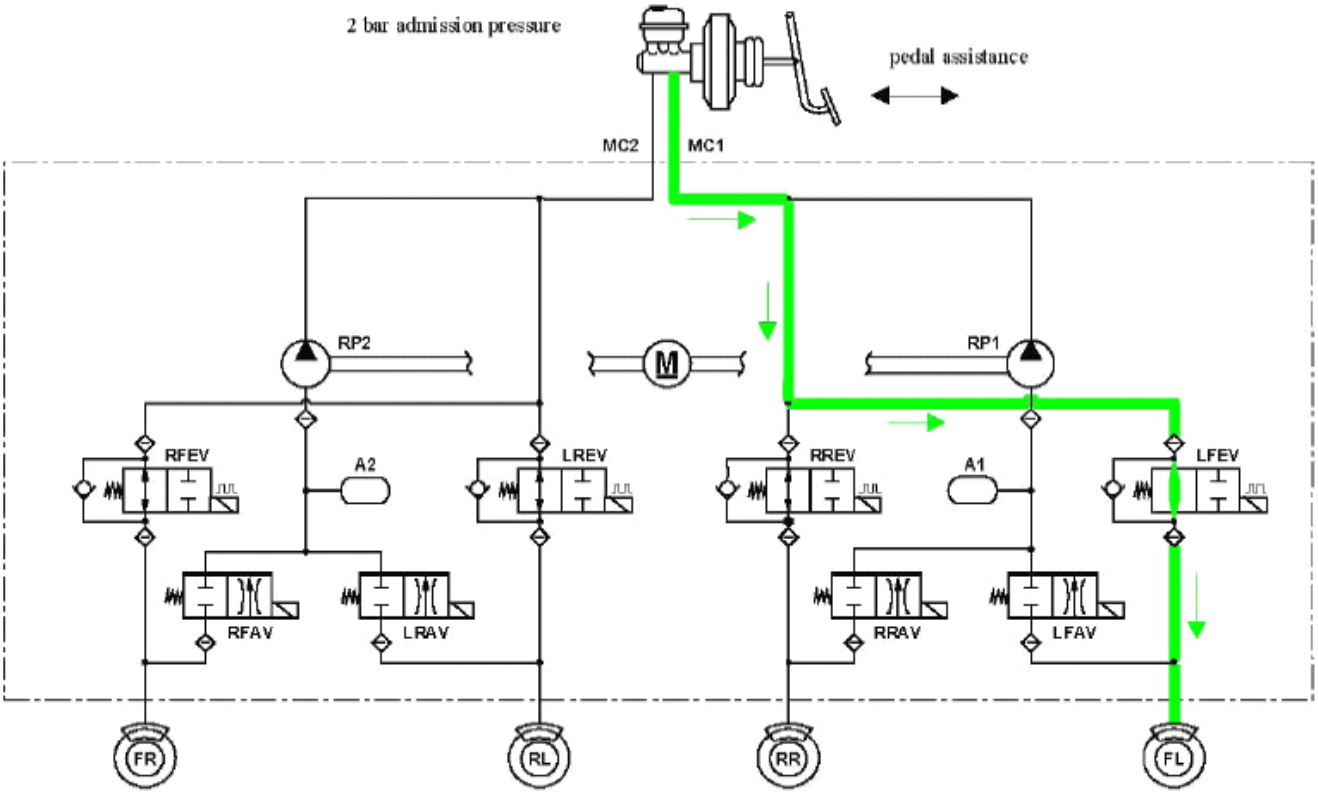

Downloaded from www.Manualslib.com manuals search engine

Instruction and Operation

Precautions for ABS system diagnosis

As ABS is a safety related component, the following precautions should be observed in addition to general safety and preventive measures that should be taken in the course of maintenance and diagnosis.

1. Maintenance for ABS system should be conducted by specially trained technicians that mastering the maintenance skills and only genuine parts manufactured by the original manufacturers should be applied for replacement.
2. Before conducting diagnosis over ABS system, the conventional brake system should operate normally.
3. Before and during travelling, ABS ECU shall perform continuously monitoring over ABS related electrical components to see if they can operate normally.
4. ABS and EBD lamps shall be lit when the ignition switch is turned on and go out in several seconds based on no fault existed in system.
5. The following two conditions indicate that there is fault detected in the system:
   ① The warning lamp keeps on after the ignition switch is turned on;
   ② The warning lamp doesn't go out after it is turned on during travelling.

   Under those conditions, the driver can still apply conventional brake but should minimize the applied braking force to avoid wheel locking. Therefore, please be attentive to drive carefully after the warning lamp is lit. Please go to the service shop for maintenance of ABS system as soon as possible in order to avoid occurrence of more faults and traffic accidents.
6. ABS hydraulic governor with ECU consists of the following parts:
   ① ABS ECU: Including reflux pump motor relay and solenoid valve relay;
   ② Solenoid valves (8): Including 4 oil inlet valves and 4 oil outlet valves;
   ③ Reflux pump and pressure accumulator;
   ④ Others: Motor, bolts and so on. They can only be replaced as a whole instead of being removed for overhaul or partly/separately replaced. BOSCH Company won't provide separate spare parts, won't provide maintenance warranty for the disassembled ABS with hydraulic controller, as well as won't bear any responsibility for consequences caused by removal overhaul or part/separate replacement.
7. Connectors for ABS ECU:
   ① The ignition switch must be turned off before the removal of connectors for ABS ECU;
   ② Keep the connectors for ABS ECU dry and clean without any foreign matter;
   ③ The connectors for ABS ECU must be installed in position with bottom parallel to the base;
   ④ The connectors for ABS ECU must be installed in position with lateral part vertical to the base.
8. ABS hydraulic governor with ECU should be grounded properly. If not, water and moisture shall permeate into connectors of ABS ECU via pore path of harness under the capillary (syphon) effect, leading to failure.
9. Please ensure ABS brake line properly connected, because ABS ECU is unable to diagnose whether the brake line is properly connected or not and to realize failure protection. Wrong connection may possibly lead to severe accidents.
   - MC1: Connected with brake line 1 of brake master cylinder;
   - MC2: Connected with brake line 2 of brake master cylinder
   - FL: Connected with brake line of left front brake wheel cylinder;
   - FR: Connected with brake line of right front brake wheel cylinder;
   - RL: Connected with brake line of left rear brake wheel cylinder;
   - RR: Connected with brake line of right rear brake wheel cylinder.
10. Ensure each wheel speed sensor wiring properly connected.

Downloaded from www.Manualslib.com manuals search engine

Instruction and Operation

Fault diagnosis procedures for ABS with EBD

S/N	Operation		
1	Drive the vehicle into repair shop.	Go to the next step.	
2	Customer problem analysis	Go to the next step.	
3	Read diagnostic trouble code (DTC).	With DTC	Go to Step 4
		No DTC	Go to Step 9
4	Record DTC and clear fault memory.	Go to the next step.	
5	Verify and reproduce fault: Simulation of fault occurrence status. Read DTC again.	With DTC	Current DTC. Go to Step 8
		No DTC	History DTC. Go to Step 6
6	Is it relevant to fault symptom?	Yes	Intermittent fault. Go to Step 7
		No	Eliminated fault. Go to Step 9
7	Perform fault simulation again.	Go to the next step.	
8	Perform troubleshooting based on DTC list. Go to Step 10.	Go to the next step.	
9	Perform troubleshooting based on fault symptom list.	Go to the next step.	
10	Ensure the fault is eliminated.	Go to the next step.	
11	Prevention of recurrence.	Go to the next step.	
12	End		

Downloaded from www.Manualslib.com manuals search engine

Diagnosis and Testing

Diagnosis

1. Preliminary inspection

Inspect those easily accessible components that may lead to ABS system fault. Faults can be determined quickly through visual and appearance inspection, in no need of further diagnosis.

(a) Ensure the vehicle is equipped with wheels and tires of recommended size. Coaxial tires should be of the same pattern and tread depth.

(b) Check the hydraulic governor, brake line and connector for leak.

(c) Check ABS fuses - 10A, 25A and 40A. Only the fuses of correct rating should be applied.

(d) Ensure the battery is fully charged.

(e) Check battery connection for corrosion or terminal looseness.

(f) Perform visual and appearance inspection for electrical components listed below:

① Check ABS component harnesses and pins for wrong connection, damage due to clamping or cutting.

② Check whether the harnesses are arranged close to high voltage or heavy current devices, such as:

- High voltage ignition component;
- Motor and generator;
- Stereo amplifier optional equipped.

IMPORTANT: High voltage or heavy current devices are likely to make induced noise generated in circuit interfering normal operation of circuit.

③ Check connectors of ABS system relevant components for poor connection or check pins for incomplete insertion into connector shells.

④ ABS components are sensitive to electromagnetic interference (EMI). If any intermittent fault is suspicious, please check whether the optional equipped anti-theft devices, lamps or mobile phones are properly installed.

(g) ABS is a kind of active safety system, which mainly functions to maintain vehicle's steerability and driving stability in the course of braking and to minimize the braking distance through obtaining the maximum deceleration. With the adoption of ABS for braking, there is little but uniform tire wear, for adhesion applied between tire and road surface is realized based on adhesion coefficient limit. However, ABS is unable to avoid skidding of vehicle completely if the vehicle speed at turning exceeds the limit or the vehicle is running at high speed on slippery road.

(h) ABS sound

When the vehicle is running for about 15Km/h after the start of engine, there is a short buzz generated in the engine compartment, which is the sound of ABS self-checking but not abnormal noise. Kinds of sound in the course of ABS functioning include:

- Operation sound of motor, solenoid valve and reflux pump inside ABS hydraulic unit;
- Sound generated from vibration of brake pedal;
- Suspension knock sound arisen by braking during ABS operation.
- Excessive noise during system self-checking or ABS functioning may be caused by:
- Looseness of ABS fixation;
- Looseness of ABS bracket;
- Damage or missing of plastic washers on ABS bracket;
- Looseness of brake relevant connection or fixation;
- Brake line connection direction nonconforming to delivery status;
- Air bubbles in brake line.
-

Downloaded from www.Manualslib.com manuals search engine

ABS Operating principle:

ABS shall enter antilock brake mode once wheel skidding is detected during braking. In the course of antilock braking, the hydraulic circuit pressure of each wheel is under control to avoid wheel skidding. Each wheel is equipped with individual hydraulic line and valve. ABS is able to reduce, maintain or increase the hydraulic pressure of each wheel braking. However, it is unable to increase the hydraulic pressure to a certain level that exceeds the pressure delivered by the master cylinder during braking. In the course of antilock braking, a series of quick vibration of brake pedal can be felt. The pedal vibration shall appear during antilock braking and disappear during conventional braking or after complete stop of vehicle. Operation noise can be heard due to quick cycle use of solenoid valve. When antilock braking is applied on dry road, intermittent sharp noise shall generate right before wheel skidding. Those noises and pedal vibration under antilock braking are normal symptoms. Operation of brake pedal during conventional braking should be the same as that of vehicle without ABS system. Maintain balance pedal force can both ensure the vehicle stability and the shortest stopping distance.

1. Pressure maintenance

Once wheel skidding is detected, ABS control module shall close the oil inlet valve and then make the oil outlet valve in the hydraulic assembly closed to isolate the system, which can keep the brake pressure stable and avoid boosting or reducing of hydraulic pressure.

2. Pressure reducing

Under the pressure maintenance mode, wheel skidding can still be detected by ABS control module to reduce the affected wheel pressure. Keep the oil inlet valve closed and oil outlet valve open. The redundant fluid/pressure shall be temporarily stored into the accumulator in hydraulic assembly until the pump motor is able to return the brake fluid into oil reservoir of master cylinder.

3. Pressure boosting

If decrease of wheel skidding is detected by ABS control module under pressure maintenance or pressure reducing mode, the ABS control module shall boost the affected wheel pressure through applying the pressure of master cylinder. Keep the oil inlet valve open and oil outlet valve closed. Pressure from master cylinder shall be partly or fully applied onto wheels.

4. Operating procedures of ABS

During vehicle running, each wheel speed sensor shall produce a voltage signal in proportion to wheel speed. ABS control module shall make judgment based on the received wheel speed data; if more than one wheels decelerate rapidly (compared with reference vehicle speed), it is determined as skidding. ABS control module shall activate the module as required to control over the brake pressure of each wheel to achieve optimization.

Schematic Diagram of ABS Hydraulic System:

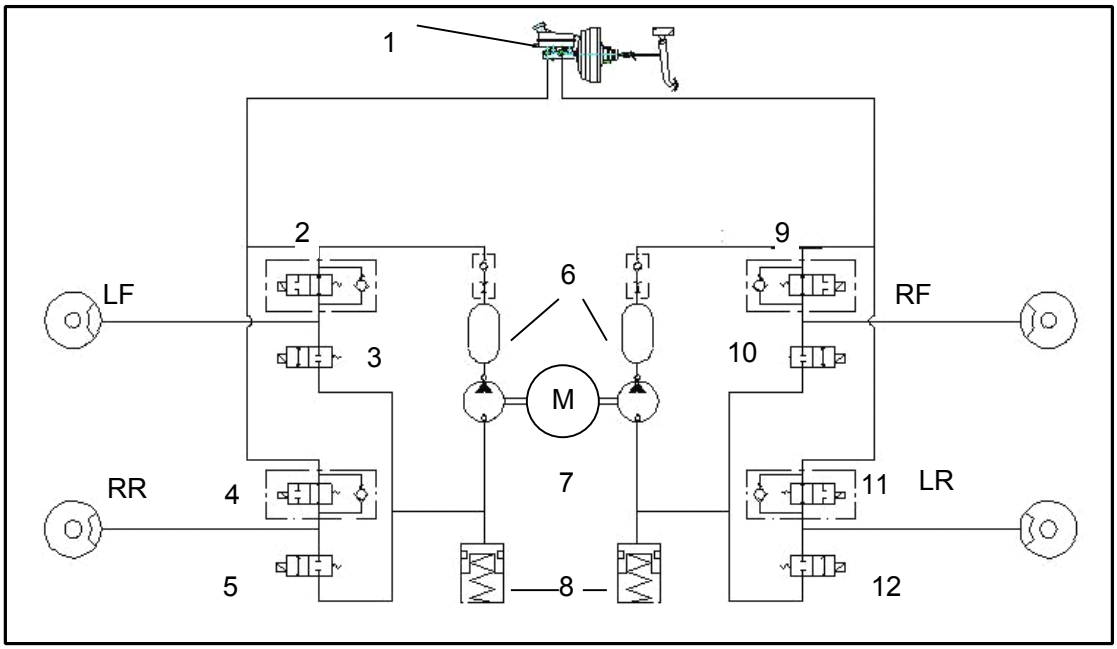

Schematic Diagram of ABS Hydraulic System

1. Master cylinder 2. Oil inlet valve (LF) 3. Oil outlet valve (LF) 4. Oil inlet valve (RR) 5. Oil outlet valve (RR) 6. Damper 7. Oil return pump 8. Accumulator 9. Oil inlet valve (RF) 10. Oil outlet valve (RF) 11. Oil inlet valve (LR) 12. Oil outlet valve (LR)

Downloaded from www.Manualslib.com manuals search engine

Diagnosis and Testing

Diagnosis

Checking instrument warning lamp

(a) Release the parking brake lever.

(b) Check the warning lamp.

With the ignition switch turned on, check if ABS and EBD warning lamps is lit and then go out in a few seconds.

Remarks:

- With the parking brake applied, the EBD warning lamp shall be lit (details based on actual conditions).
- As for some vehicle models, EBD warning lamp shall be lit if brake fluid level is too low (details based on actual conditions).
- In case of abnormal operation of warning lamps, please perform troubleshooting for ABS or EBD warning lamp circuit.

S/N	Operation Sequence	EBD Warning Lamp	ABS Warning Lamp
1	With the ignition switch turned on, ABS and EBD warning lamps should be lit. If the system is normal, the warning lamps shall go out in about 3 seconds.	ON	ON
2	The system is normal after self-checking.	OFF	OFF
3	① There is current DTC not removed in ABS. ABS stops operation but EBD is still operating. For example: Only one wheel speed sensor failed. ② There are current DTCs of wheel speed sensor and reflux pump in ABS. With the vehicle speed below 12Km/h, ABS warning lamp is lit but ABS stops operation. With the vehicle speed no below 12Km/h, ABS warning lamp goes out after no fault is detected and the current DTC becomes the history DTC.	ON	OFF
4	① Diagnosis on ABS by diagnostic instrument. With the vehicle speed below 10Km/h, all diagnoses of ABS function normally. With the vehicle speed over 10Km/h, two lamps go out once the system is detected to be normal and diagnosis is cut off automatically if the ABS controls normally. ②EBD failure. Both ABS and EBD stop operation. For example: Over three wheel speed sensors failed.	ON	ON
5	Too low brake fluid level or unreleased parking brake lever (details based on actual conditions). Both ABS and EBD electrical components operate normally.	OFF	ON

Downloaded from www.Manualslib.com manuals search engine

Diagnosis and Testing

Detection by diagnostic instrument

Remarks:

Data of switches, sensors, actuators and so on can be read through data stream of diagnostic instrument without removal/installation of any element.

Therefore, the reading of data stream before troubleshooting is one of the methods for shortening maintenance time.

Functions of diagnostic instrument shall be determined based on actual development of customer's instrument. Please refer to corresponding instruction manual of diagnostic instrument for certain vehicle for details.

The diagnostic contents (BOSCH diagnostic instrument) listed below is only for reference.

(a) Connect the diagnostic instrument to data link connector (DLC).

(b) Turn on the ignition switch.

(c) Read data stream based on display of diagnostic instrument.

Remarks: Apply the diagnostic instrument to test ABS, which should be performed in road test. DTC can be cleared when necessary to ensure normal operation of ABS and conventional brake system.

Please finish the following procedures before the replacement of ABS:

1. Dynamic self-checking: ABS lamp won't go out when the ignition switch is turned on again after some faults (such as wheel speed sensor signal reliability failure or motor failure) are eliminated and the lamp shall go out after ABS dynamic self-checking is qualified with the vehicle speed no less than 15Km/h.
2. Cross validation: Install the removed ABS onto a normal vehicle equipped with the same ABS model, with ABS harness connectors connected but no oil pipe in need of connection, and ensure ABS connectors and wheel speed sensors are firmly and reliably connected. Start the vehicle to run for a few circles to enable ABS dynamic self-checking.
   - If the ABS lamp goes out, there is no failure in ABS.
   - If the lamp keeps on, there is failure in ABS. The ABS may be replaced.

Item	Display Valve/Range	Normal State	Remarks
Left front wheel speed	1.75Km/h～350Km/h	Actual wheel speed	
Right front wheel speed	1.75Km/h～350Km/h	Actual wheel speed	
Left rear wheel speed	1.75Km/h～350Km/h	Actual wheel speed	
Right rear wheel speed	1.75Km/h～350Km/h	Actual wheel speed	
Battery voltage	0～+20.40V	9.3～16.9V	
Left front oil inlet valve	ON/OFF	With ignition switch turned on: Power failure Other conditions: Based on control	Relevant to ABS conditions: Pressure boosting: Oil inlet valve - power failure Oil outlet valve - power failure Pressure maintenance: Oil inlet valve - continuity Oil outlet valve - power failure Pressure reducing: Oil inlet valve - continuity Oil outlet valve - continuity
Left front oil outlet valve	ON/OFF		
Right front oil inlet valve	ON/OFF		
Right front oil outlet valve	ON/OFF		
Left rear oil inlet valve	ON/OFF		
Left rear oil outlet valve	ON/OFF		
Right rear oil inlet valve	ON/OFF		
Right rear oil outlet valve	ON/OFF		
Brake lamp switch	ON/OFF	ON: With brake pedal depressed OFF: With brake pedal released	
Reflux pump motor	ON/OFF		
Solenoid valve relay	ON/OFF	With ignition switch turned on: Continuity	
Occupied state of hydraulic governor	Already occupied and normal or BOSCH supply status	Already occupied and normal	

Downloaded from www.Manualslib.com manuals search engine

Diagnosis and Testing

Brake bleeding

Note:

Brake bleeding can be performed in the first and second circuits.

Brake bleeding should be performed after the replacement of brake system components (such as change of brake fluid, replacement of brake system components and hydraulic unit) or when the brake pedal is soft.

The hydraulic unit for replacement must be wet-type ABS hydraulic governor with ECU.

During exhaust, please ensure the brake system is of complete structure and all hydraulic units are properly connected.

Before brake bleeding, shift to P gear (for AMT) or N gear (for MT) and apply the parking brake lever.

Brake fluid is toxic, so please clean your skin if any fluid touches your skin.

1. Manual brake bleeding procedures

Step	Operation
1	Fill the brake fluid reservoir.
2	Repeat the procedures below for bleeding of each wheel cylinder in order of left rear, left front, right front and right rear.
3	Open the bleed screw.
4	Depress and release brake pedal repeatedly.
5	Close the bleed screw.
6	Release the brake pedal.
7	Check the pedal travel.
8	If failed, repeat bleeding.
9	Check if brake fluid level is within upper and lower limit marks.

Remarks: Brake fluid level in reservoir shall be over the lower limit mark during the whole bleeding process.

2. Manual brake bleeding schematic diagram

Manual brake bleeding schematic diagram for 4-channel ABS X-type circuit: Left front wheel

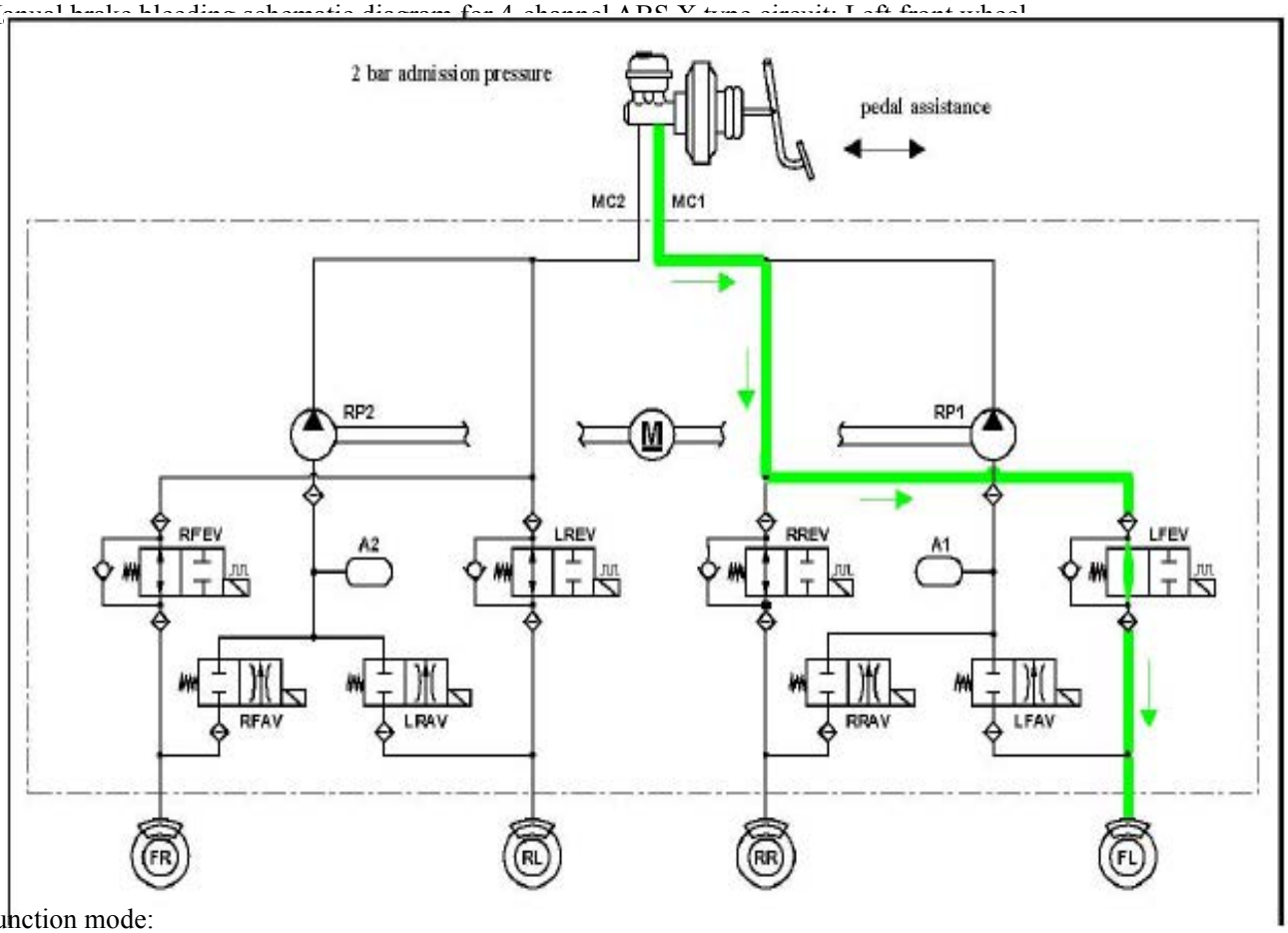

Function mode:

The brake fluid flows into wheel cylinder through master cylinder and hydraulic unit. Open the bleed screw on the left front wheel with the screws on other wheels closed. Depress and release brake pedal until air bubbles and impurities are fully drained and the brake fluid is pure. Perform the same process on the other three wheels.

Downloaded from www.Manualslib.com manuals search engine

Diagnosis and Testing

Component activation test

1. Component activation test for reflux pump:
   (1) Turn off the ignition switch.
   (2) Connect the diagnostic instrument to DLC.
   (3) Turn on the ignition switch with engine off.
   (4) Apply the "Component Test" function of diagnostic instrument to activate the reflux pump.

   Normal state: Operation sound of reflux pump can be heard.
2. Component activation test for solenoid valve:

   Remarks:
   - Before testing solenoid valve, please test he reflux pump to see if it operates normally.
   - Two repair men are required to finish this test.

   (1) Turn off the ignition switch.
   (2) Connect the diagnostic instrument to DLC.
   (3) One repair man should sit in the vehicle and the vehicle should be lifted by lifter with wheels suspended.
   (4) Turn on the ignition switch with engine off.
   (5) Apply the "Component Test" function of diagnostic instrument to activate the solenoid valve as per prompt of diagnostic instrument.
   (6) Firstly, test the oil inlet valve and oil outlet valve of left front wheel, during which, the repair man in the vehicle should depress the brake pedal with force and hold it.
      - Conventional braking phase:

        Normal state: The repair man outside cannot rotate the left front wheel by hand.
      - Boosting phase: Use diagnostic instrument to access the "boosting phase".

        Normal state: The repair man outside cannot rotate the left front wheel by hand.
      - Pressure maintenance phase: Use diagnostic instrument to access the "pressure maintenance phase".

        Normal state: The repair man outside cannot rotate the left front wheel by hand.
      - Pressure reducing phase: Use diagnostic instrument to access the "pressure reducing phase".

        Normal state: The repair man outside can rotate the left front wheel by hand.

   (7) Perform testing for right front, left rear and right rear wheels in sequence. The test results should be the same as those of left front wheel.
3. Component activation test for ABS and EBD warning lamps
   (1) Turn off the ignition switch.
   (2) Connect the diagnostic instrument to DLC.
   (3) When performing the component activation test for ABS and EBD warning lamps, they should lighten or go out corresponding to the control of diagnostic instrument.

Downloaded from www.Manualslib.com manuals search engine

DTC List

Attention:

Please turn off the ignition switch before removal of parts.

Note:

Please use the diagnostic instrument to read DTC.

If no fault is detected during the detection of components, ABS hydraulic governor with ECU and its ground point/power line should be inspected.

When more than two DTC is in memory, the fault relevant DTC and circuits should be inspected at first.

DTC list

DTC	Detection Item	Possible Failure Areas
C0035	Left front wheel speed sensor circuit fault	Left front wheel speed sensor circuit, gear ring or sensor itself
C0040	Right front wheel speed sensor circuit fault	Right front wheel speed sensor circuit, gear ring or sensor itself
C0045	Left rear wheel speed sensor circuit fault	Left rear wheel speed sensor circuit, gear ring or sensor itself
C0050	Right rear wheel speed sensor circuit fault	Right rear wheel speed sensor circuit, gear ring or sensor itself
C0060	Left front oil outlet valve circuit fault of hydraulic governor	ABS hydraulic governor with ECU
C0065	Left front oil inlet valve circuit fault of hydraulic governor	ABS hydraulic governor with ECU
C0070	Right front oil outlet valve circuit fault of hydraulic governor	ABS hydraulic governor with ECU
C0075	Right front oil inlet valve circuit fault of hydraulic governor	ABS hydraulic governor with ECU
C0080	Left rear oil outlet valve circuit fault of hydraulic governor	ABS hydraulic governor with ECU
C0085	Left rear oil inlet valve circuit fault of hydraulic governor	ABS hydraulic governor with ECU
C0090	Right rear oil outlet valve circuit fault of hydraulic governor	ABS hydraulic governor with ECU
C0095	Right rear oil inlet valve circuit fault of hydraulic governor	ABS hydraulic governor with ECU
C0110	Reflux pump motor fault: Operation or stopping failed	ABS hydraulic governor with ECU Ground/power supply for ABS hydraulic governor with ECU
C0121	Solenoid valve relay circuit fault	ABS hydraulic governor with ECU Ground/power supply for ABS hydraulic governor with ECU
C0161	ABS brake lamp switch circuit fault	Brake lamp switch and its circuit ABS hydraulic governor with ECU and its circuit
C0245	General fault of wheel speed sensor	Wheel speed sensor circuit, gear ring or sensor itself
C0550	ABS ECU fault	Battery Ground/power supply for ABS hydraulic governor with ECU ABS hydraulic governor with ECU
C0800	Voltage out of range	Battery Charging system Power/ground circuit

Downloaded from www.Manualslib.com manuals search engine

Diagnosis and Testing

Fault symptom table

If fault occurs without fault memory during DTC reading, please check relevant circuits of each fault symptom in order listed below and by referring to relevant fault diagnosis content.

Attention:

Before maintenance of ABS, please ensure the conventional brake system operates normally.

When the replacement of ABS hydraulic governor with ECU, sensors or other components is necessary, please turn off the ignition switch firstly.

Fault Symptom	Check Areas
ABS failed to operate	1. Check if ABS and EBD warning lamps are lit; 2. Read DTC and check for any fault; 3. Check power UZ circuit of ignition switch; 4. Check brake line for any leak.
ABS poor effect	1. Read DTC and check for any fault; 2. Check brake line for any leak; 3. Apply diagnostic instrument to read “occupied state of hydraulic governor”; 4. Check the power supply state of battery; 5. Ensure the mounting bracket is fixed at normal state (at this time the driving comfort may decrease).
Abnormal ABS and EBD warning lamps	1. Read DTC and check for any fault; 2. Check the circuits of ABS and EBD warning lamps; 3. Check power UZ circuit of ignition switch; 4. Check the power supply state of battery;
Diagnostic instrument failed to read DTC	1. Check if ABS and EBD warning lamps are lit; 2. Check the power line and ground cable of ABS hydraulic governor with ECU; 3. Check power UZ circuit of ignition switch; 4. Check the power supply state of battery; 5. Check the DIAGK cable of ABS hydraulic governor with ECU; 6. Check the diagnostic instrument for reliable connection.

Downloaded from www.Manualslib.com manuals search engine

Diagnosis and Testing

Intermittent fault diagnosis table

Note: In case one of the following conditions occurs, there is intermittent fault.

Fault does not always occur;

It may probably occur again;

There is history DTC but no current DTC.

Inspection	Operation
Preliminary inspection	1. Perform “preliminary inspection” at first; 2. Collect information relevant to the arising of intermittent fault from the customer, such as: 1) Driving conditions (vehicle speed, brake, warning lamps and road condition) when the fault occurs. 2) Does the fault occur during the application of electrical equipments added by service shop? 3) Has the battery status been checked? 4) Have the wheel speed sensor harnesses and gear rings been checked?
Detection by diagnostic instrument	Detection procedures: 1. Operate the suspicious ABS component harnesses and connectors and observe the data stream of measured circuit on the diagnostic instrument. If the reading of diagnostic instrument fluctuates during this operation, please check circuits for loose connection. 2. Perform vehicle road test under occurrence of intermittent fault and ask an assistant to observe the suspicious operating parameters on the diagnostic instrument. 3. Capture and store data by snapshot once fault occurs. The stored data can be displayed at lower speed to facilitate diagnosis. Oscilloscope can also be applied for signal detection. 4. Apply the “Component Test” function of diagnostic instrument to control the suspicious ABS components to test their operation.
Warning lamps	The following conditions may lead to intermittent illumination of warning lamps without DTC set. 1. Warning indicator circuit is shorted to ground intermittently. 2. Ground points of ABS hydraulic governor with ECU or instruments become loose. 3. Battery voltage is a little lower or unstable under stationary state of vehicle.
Wheel speed sensor	1. Visually inspect wheel speed sensors and gear rings for looseness, damage, foreign matters or improper installation. Please replace any damaged component, remove any foreign matter or fix any loosened component accordingly. 2. Check the wheel speed sensor for proper wiring and ensure the harnesses of wheel speed sensor are not interfered by mechanical components. 3. Monitor the data display of wheel speed sensor on diagnostic instrument with assistance and at the same time perform road test to check if any wheel speed sensor in abnormal speed range is displayed.
Additional testing	1. Check electrical equipments added by service shop such as mobile phones, anti-theft warning devices, lamps, radio equipments, stereo amplifiers and so on for correct installation. 2. Check if any electromagnetic interference (EMI) is caused by failed components (such as relays or solenoid valves) with power on. 3. Power-on test for motors and solenoid valves.

Downloaded from www.Manualslib.com manuals search engine

Diagnosis and Testing

1. Wheel speed sensor fault (C0035, C0040, C0045, C0050, and C0245): Wheel speed sensors are applied to detect the wheel speed and transmit relevant signals to ABS ECU. These signals are used for controlling ABS operation. Each wheel is equipped with a sensor and with a 48-tooth gear ring mounted on its axle shaft. This vehicle model mainly adopts the active wheel speed sensors that are activated by 12V DC power voltage supplied by ABS ECU. Wheel speed sensor adopts Hall Effect with nearly constant output amplitude and square wave of 50% duty cycle, with low voltage of 0.5V and high voltage of 1V; its frequency increases with the increase of vehicle speed. ABS ECU shall calculate the wheel speed based on this frequency.

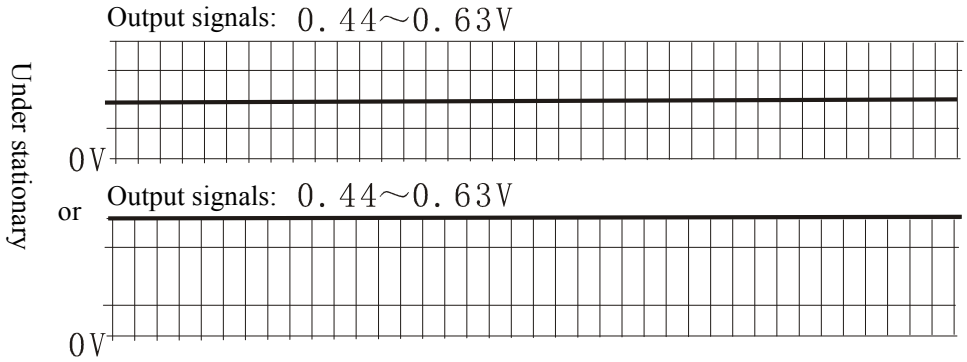

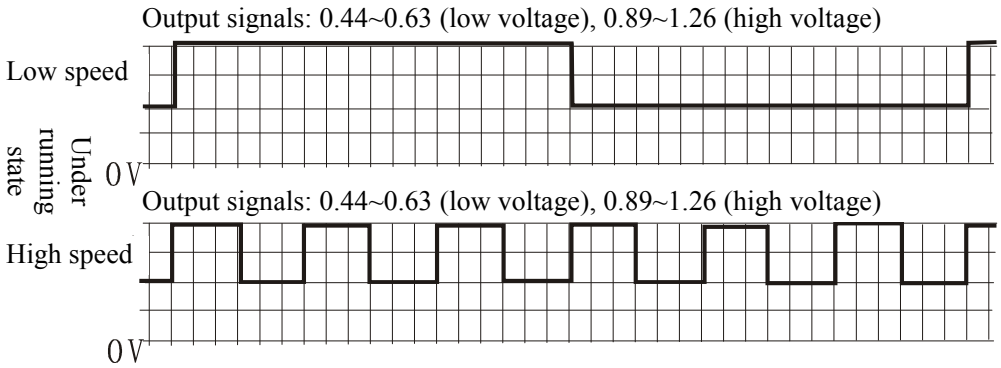

Downloaded from www.Manualslib.com manuals search engine

DTC	Detection Condition	Set Condition	Possible Faulty Areas
C0035 C0040 C0045 C0050	With the ignition switch turned on All conditions	1) Monitor if the power voltage of sensor is too low; 2) Monitor if the power wire and signal wire of sensor is normal.	1. Wheel speed sensor bodies 2. Wrong connection of wheel speed sensors 3. Wheel speed sensor signals being interfered 4. Too large clearance between wheel speed sensor and gear ring (displacement caused by vibration) 5. Corrosion of wheel speed sensors and supports 6. Gear ring fault (dirty, tooth damage) 7. Tires: size, pressure, pattern and tread depth 8. Connectors flawed, contaminated or affected with damp 9. Loosened or fractured wheel speed sensors/connecting wires/connectors 10. Sensor circuit shorted to ground 11. Damaged insulation of sensor cables
	Wheel speed monitoring a. Reference vehicle speed within 0～100Km/h	1) At least one wheel speed above the reference vehicle speed of 12km/h over 8s (72s is required in case of wheel skidding; 2) Speed difference between wheels on the same side (such as left front and left rear wheels) over 6Km/h, or speed difference between wheels on the same axle (such as left front and right front wheels) when turning over 10Km/h, or speed difference between diagonal wheels (such as left front and right rear wheels) when turning over 14Km/h.	
	Wheel speed monitoring b. Reference vehicle speed ＞100Km/h	Speed difference between wheels on the same side over 6% of the reference speed, or speed difference between wheels on the same axle when turning over 6%+4Km/h of the reference speed, or speed difference between diagonal wheels when turning over 6%+8Km/h of the reference speed.	
	Long time monitoring of signal interference	1) In case signals of one or two wheel speed sensors fail, fault shall be detected in 20s (with brake pedal depressed) or 5s (without brake pedal depressed). 2) In case signals of three or four wheel speed sensors fail, fault shall be detected in 1s.	
	Monitoring of wheel speed difference	Perform monitoring when vehicle speed over 20Km/h and 20s (or 80s in case of wheel skidding) is needed for fault confirmation: 1) If the vehicle speed is within 20Km/h～100Km/h, the speed difference between the fastest and slowest wheels shall exceed 6%; 2) If the vehicle speed is over 100Km/h, the speed difference between the fastest and slowest wheels shall exceed 6Km/h; 3) During vehicle turning, vehicle speed difference range shall increase by 4Km/h.	
	Gear ring monitoring For example: Missing teeth	With vehicle speed of 10～60Km/h and no operation of ABS, missing pulse number per rotation of wheel is displayed for over 10 times.	
	Dynamic monitoring	If the vehicle speed is over 43Km/h, no wheel speed signal is received within 10～20ms in interval of 60ms.	
	Monitoring of fast starting speed (only for wheel speed sensors of driving wheels)	1) With vehicle speed over 12Km/h, the speed of one or two wheels is below 2.75Km/h; 2) If the speed of one wheel decreases below 2.75Km/h with running speed of v1 (over 12Km/h), the fault can be detected when the vehicle speed increases by 18Km/h, viz. speed increase up to v1+18.	
	Monitoring of slow starting speed	If the speed of two wheels is over 12Km/h and the speed of the other one or two wheels is below 5Km/h, 20s is needed for fault confirmation.	
	With the ignition switch turned on All conditions	If one of the following faults appears for over 200ms: 1. Sensor wiring circuit open, open to ground or power supply 2. Loosened sensor connectors The current of wheel speed sensor is out of range: Current ＜1.1mA or ＞39mA	

Downloaded from www.Manualslib.com manuals search engine

Occurrence of fault shall give rise to the following operation:

Braking Strategy	Failure Protection
Relevant wheels cannot be controlled any more because correct wheel speed sensor signals cannot be obtained. When fault occurs, ABS shall make the pressure of front wheels increase and that of rear wheels decrease until the ignition switch is turned off.	· The system shall be converted to EBD emergency control mode. · ABS warning lamp shall be lit.
If failure of one or two wheel speed sensors is detected in ABS control process, the system shall be converted to EBD emergency control mode until this control process is finished.	· The system shall be converted to EBD emergency control mode.
If failure of three or four wheel speed sensors is detected,	· Brake system shall enter the conventional braking mode. · ABS and EBD warning lamps shall be lit.

Remarks: If the ignition switch is turned on after fault removal, the warning lamp shall go out only when the vehicle speed exceeds 12Km/h.

Troubleshooting procedures

S/N	Operating Step	Operation	Detection Result	Next Step
1	Fault confirmation	(a) Connect the diagnostic instrument, read and record DTC. (b) Clear of DTC: Apply diagnostic instrument to clear DTC as per prompt of the instrument. Remarks: DTC cannot be cleared if the battery is removed. Please ensure normal voltage of battery before removing fault. (c) Conduct fault simulation to see if the fault reoccurs.	Yes	If it is current fault, please go to Step 3
			No	If it is history fault, please go to the next step.
2	Intermittent fault diagnosis	(a) Check wiring between ABS hydraulic governor with ECU and wheel speed sensors and relevant connectors. Please refer to "04-Inspection before diagnosis" for inspection methods and procedures. (b) Check the free travel of hub bearing. Normal value of free travel of hub bearing: 0mm Is the problem solved?	Yes	Go to Step 11
			No	Go to Step 4
3	Appearance inspection	(a) Check wiring between ABS hydraulic governor with ECU and wheel speed sensors and relevant connectors. Please replace it when necessary. (b) Check tires: 1. Check every tire size and perform replacement when necessary. 2. Check tires and wheel hubs for any damage; perform repair or replacement when necessary. 3. Check tire pressure and make adjustment when necessary. 4. Check tire pattern for any abnormal wear (eccentric wear, excess wear, uneven wear and depth); perform replacement or make tire balance, four-wheel alignment and girder correction when necessary. Is the problem solved?	Yes	Go to Step 12
			No	Go to the next step.

Downloaded from www.Manualslib.com manuals search engine

S/N	Operating Step	Operation	Detection Result	Next Step
4	Using diagnostic instrument to read wheel speed data stream	(a) Connect the diagnostic instrument to read data stream. (b) One repair main conduct test run uniformly in a straight line on good road surface and the other one observe the data stream. Normal state: The displayed speed of each wheel is basically the same. Tip: Allowable error for speedometer is ±10%.	Normal	Go to Step 8
			Abnormal	Check wheel speed sensors.
5	Checking wheel speed sensors	(a) Remove the connector of wheel speed sensor to measure the internal resistance of wheel speed sensor. Normal value: 3MΩ～5MΩ (b) Measure the wheel speed sensor's resistance to ground. Normal value: ∞	Normal	Go to the next step.
			Abnormal	Replace relevant wheel speed sensor.
6	Ensuring the wheel speed sensor correctly connected	Use multimeter to measure the cable resistance. Normal value: 0Ω	Normal	Go to the next step.
			Abnormal	Repair or replace it.
7	Using oscilloscope to check wheel speed sensor and its waveform	(a) Remove the connector from wheel speed sensor. (b) One terminal of sensor is connected with 12V battery and the other terminal connected with red pen of oscilloscope. Attention: Ground cable of oscilloscope must be connected with ground cable of battery. Please drive carefully and ensure connecting wire not interfered with motion parts of vehicle.	Normal	Repair or replace the ABS assembly.
			Abnormal	Go to the next step.
8	Checking wheel speed sensor harness	Wheel speed sensor adopts twisted pair to provide effective shield so as to protect sensitive electronic elements from being affected by electrical interference. To avoid performance degradation due to electrical interference, the following requirements should be satisfied during maintaining the twisted pair: (a) Wind the wire by 9 loops every 310mm along the length direction of the wire. (b) The external diameter of twisted pair shall be no more than 6.0mm.	Normal	Go to the next step.
			Abnormal	Repair
9	Checking the installation of wheel speed sensor		Normal	Go to the next step.
			Abnormal	Repair
10	Checking wheel speed sensor probe		Normal	Go to the next step.
			Abnormal	Clean or replace it.
11	Checking wheel speed sensor rotor		Normal	Check or replace the ABS assembly.
			Abnormal	Clean or replace the gear ring.
12	Conduct final inspection to confirm the fault is removed. Clear DTC.			

Downloaded from www.Manualslib.com manuals search engine

Diagnosis and Testing

2. Hydraulic governor solenoid valve fault: C0060, C0065, C0070, C0075, C0080, C0085, C0090, C0095

Circuit description:

With the ignition switch turned on and ABS solenoid valve relay powered on, battery voltage can be provided to one terminal of solenoid valve of hydraulic governor.

With ignition switch turned off or ABS system disabled, the solenoid valve relay should be kept power-on.

Function:

ABS ECU is applied to control the operation of solenoid valves through controlling their grounding so as to regulate brake pressure of each brake circuit.

Inlet valves: PWM type.

Outlet valves: Switch type.

DTC	Detection Condition	Set Condition	Possible Faulty Areas
C0060 C0065 C0070 C0075 C0080 C0085 C0090 C0095	To be conducted at the same time of ABS ECU initialization and self-checking: Vehicle under stationary state or speed ≥15Km/h	1. With the ignition switch turned on, ABS ECU detects relevant solenoid valve circuit short to power or ground permanently or intermittently. 2. Activate relevant solenoid valve but without feedback. 3. Coil or connector fault of solenoid valve is detected during travelling: – Without brake pedal depressed: Vehicle under stationary state – With brake pedal depressed: Vehicle speed ≈15Km/h 4. Under all conditions, fault occurs in oil circuit of ABS hydraulic governor with ECU.	1. Fault of solenoid valve inside ABS hydraulic governor with ECU: brake oil circuit fault, electrical fault. 2. Hydraulic/mechanical fault.

Occurrence of fault shall give rise to the following operation:

Braking Strategy	Failure Protection
Solenoid valve failed to operate or operating wrongly	Brake system shall enter the conventional braking mode.
If the solenoid valve failed to operate, relevant wheel may be locked. If it operates wrongly, no oil pressure shall be established for relevant wheel.	ABS and EBD warning lamps shall be lit.

Downloaded from www.Manualslib.com manuals search engine

Troubleshooting procedures

S/N	Operating Step	Operation	Detection Result	Next Step
1	Checking ABS hydraulic governor with ECU under stationary state of vehicle	(a) Turn off the ignition switch; (b) Turn on the ignition switch without brake pedal depressed; (c) Check if ABS and EBD warning lamps are lit and when necessary use diagnostic instrument to read DTC. If it is normal, ABS/EBD warning lamp shall go out without current DTC.	Normal	Go to the next step.
			Abnormal	Go to Step 3
2	Using diagnostic instrument to perform component testing for solenoid valve of ABS hydraulic governor with ECU	Remarks: ① Before testing solenoid valve, please test he reflux pump to see if it operates normally. ② Two repair men are required to finish this test. (a) Turn off the ignition switch; (b) Connect the diagnostic instrument to DLC; (c) One repair man should sit in the vehicle and the vehicle should be lifted by lifter with wheels suspended; (d) Turn on the ignition switch with engine off; (e) Apply the "Component Test" function of diagnostic instrument to activate the solenoid valve as per prompt of diagnostic instrument; (f) Firstly, test the oil inlet valve and oil outlet valve of left front wheel, during which, the repair man in the vehicle should depress the brake pedal with force and hold it. ① Conventional braking phase Normal state: The repair man outside cannot rotate the left front wheel by hand. ② Boosting phase: Use diagnostic instrument to access the "boosting phase". Normal state: The repair man outside cannot rotate the left front wheel by hand. ③ Pressure maintenance phase: Use diagnostic instrument to access the "pressure maintenance phase". Normal state: The repair man outside cannot rotate the left front wheel by hand. ④ Pressure reducing phase: Use diagnostic instrument to access the "pressure reducing phase". Normal state: The repair man outside can rotate the left front wheel by hand. (g) Perform testing for right front, left rear and right rear wheels in sequence. The test results should be the same as those of left front wheel.	Normal	Go to the next step.
			Abnormal	Replace ABS control unit assembly.
3	Checking pin voltage of ABS hydraulic governor with ECU	(a) Turn off the ignition switch; (b) Remove connectors from ABS hydraulic governor with ECU; (c) Use multimeter to measure the voltage at the power terminal and grounding terminal of solenoid valve. Remarks: If no jumper box is applied, the normal detection cannot be ensured. Normal value: U = 9.3 ～ 16.9V	Normal	Replace ABS control unit assembly.
			Abnormal	Go to the next step.
4	Checking connecting wires, connectors and 40A fuse	(a) Check if 25A fuse is normal; (b) Check the charging system, such as generator/battery and its connecting wire; (c) Ensure the grounding terminal is well grounded.	Normal	Go to the next step.
			Abnormal	Replace or repair connecting wire/connector or fuse.
5	Final inspection	(a) Clear DTC; (b) ABS and EBD warning lamps shall go out shortly after the ignition switch is turned on; (c) With the ignition switch turned on, C0060, C0065, C0070, C0075, C0080, C0085, C0090 or C0095 DTC shall not appear any more after self-checking is finished by system.		

Downloaded from www.Manualslib.com manuals search engine

Diagnosis and Testing

3. Reflux pump motor fault: C0110

Circuit description:

ABS hydraulic unit with ECU integrates reflux pump with motor. Reflux pump relay shall stop operation and the reflux pump shall be under stationary state if no regulation is performed by ABS. When decompression is regulated by ABS, ABS ECU shall control the operation of reflux pump motor through controlling the grounding of reflux pump relay.

Function:

- ABS Pressure reducing phase: Reflux pump shall operate to pump the brake fluid in the wheel cylinder of locked wheel back into the master cylinder line so as to reduce the pressure of wheel cylinder.
- EBD Pressure reducing phase: Pressure accumulator shall store the brake fluid flowed back from rear wheels.

DTC	Detection Condition	Set Condition	Possible Faulty Areas
C0110	To be conducted at the same time of ABS ECU initialization and self-checking: Vehicle under stationary state or speed ≥15Km/h	1. After the reflux pump motor relay operates for 60ms, still no voltage signal can be detected by reflux pump monitoring. 2. Under no operation of reflux pump motor relay, voltage detected by reflux pump monitoring exceeds 2.5s. 3. If the reflux pump motor relay stop operation, no voltage drop is detected by reflux pump monitoring.	1. "Reflux pump motor circuit" inside ABS. 2. Open circuit of reflux pump motor relay. 3. Fault of reflux pump motor relay. 4. Fault of reflux pump motor wiring. 5. Imperfect ground. 6. Inadequate power supply. 7. Fault of reflux pump motor.

Occurrence of fault shall give rise to the following operation:

Braking Strategy

- Fault of reflux pump relay: Reflux pump failed to operate
- Wheel brake force control is disabled due to no back-flow pressure can be generated. System shall perform conventional braking.

Failure Protection

- Brake system shall enter the conventional braking mode.
- ABS and EBD warning lamps shall be lit.

Remarks:

If the ignition switch is turned on after fault removal, the ABS and EBD warning lamps shall go out automatically when the vehicle speed exceeds 12Km/h.

Troubleshooting procedures

S/N	Operating Step	Operation	Detection Result	Next Step
1	Parking the vehicle to check ABS hydraulic governor with ECU	(a) Turn off the ignition switch; (b) Is any noise heard from ABS hydraulic governor? Normal state: ABS reflux pump shall stop operation.	Normal	Go to the next step.
			Abnormal	Go to Step 4
2	Inspection of self-checking initializer of ABS hydraulic governor with ECU	(a) Start the engine; (b) Run at speed of 10～15Km/h without brake pedal depressed; (c) Check if ABS warning lamp is lit and when necessary use diagnostic instrument to read DTC. Normal state: ABS warning lamp shall go out without DTC memory in ABS ECU.	Normal	Go to the next step.
			Abnormal	Repair based on DTC.

Downloaded from www.Manualslib.com manuals search engine

S/N	Operating Step	Operation	Detection Result	Next Step
3	Using diagnostic instrument to perform component testing for ABS hydraulic governor with ECU	(a) Turn off the ignition switch; (b) Connect the diagnostic instrument to OBD port; (c) Turn on the ignition switch with engine off; (d) Apply the "Component Test" function of diagnostic instrument to activate the reflux pump. Normal state: Operation sound of reflux pump can be heard.	Normal	Go to the next step.
			Abnormal	Replace ABS control unit assembly.
4	Checking pin voltage of ABS hydraulic governor with ECU	When using multimeter: (a) Turn off the ignition switch; (b) Remove connectors from ABS hydraulic governor with ECU; (c) Use multimeter to measure the voltage at the power terminal and grounding terminal of reflux pump. Remarks: If no jumper box is applied, the normal detection cannot be ensured. Normal value: U=9.3～16.9V	Normal	Replace ABS control unit assembly.
			Abnormal	Go to the next step.
5	Checking connecting wires, connectors and 40A fuse	(a) Check if 40A fuse is normal; (b) Check the charging system, such as generator/battery and its connecting wire; (c) Ensure the grounding terminal is well grounded.	Normal	Go to the next step.
			Abnormal	Replace or repair connecting wire/connector or fuse.
6	Final inspection.	(a) Clear DTC; (b) ABS and EBD warning lamps shall go out shortly after the ignition switch is turned on; (c) C0110 DTC shall no longer appear with the ignition switch turned on; (d) When travelling at speed of 10～15Km/h, C0110 DTC shall no longer appear without brake pedal depressed.		

Downloaded from www.Manualslib.com manuals search engine

Diagnosis and Testing

4. Solenoid valve relay circuit fault: C0121

Circuit description:

With the ignition switch turned on and ABS solenoid valve relay powered on, battery voltage can be provided to one terminal of solenoid valve of hydraulic governor.

With ignition switch turned off or ABS system disabled, the solenoid valve relay should be kept power-on.

Function:

ABS ECU is applied to control the operation of solenoid valves through controlling their grounding so as to regulate brake pressure of each brake circuit.

DTC	Detection Condition	Set Condition	Possible Faulty Areas
C0121	1. With the ignition switch turned on and in the course of fault testing 2. In the course of ABS operation	Short circuit of solenoid valve, or voltage circuit short to Uz or ground, or fuse blowout is detected. The time of voltage supplied for solenoid valve detected to be ＜0.8*Uz (≈8.0V) exceeds 0.8s.	1. "Solenoid valve relay circuit" inside ABS. 2. Inadequate power supply. 3. Short circuit. 4. Open circuit.

Occurrence of fault shall give rise to the following operation:

Braking Strategy	Failure Protection
· Fault of solenoid valve relay: Solenoid valve failed to operate	· Brake system shall enter the conventional braking mode. · ABS and EBD warning lamps shall be lit.
· If the solenoid valve relay stop operation due to fault of audion in ECU,	· The system shall be converted to EBD emergency control mode. · ABS warning lamp shall be lit.

Troubleshooting procedures:

S/N	Operating Step	Operation	Detection Result	Next Step
1	Checking ABS hydraulic governor with ECU under stationary state of vehicle	(a) Turn off the ignition switch; (b) Turn on the ignition switch without brake pedal depressed; (c) Check if ABS and EBD warning lamps are lit and when necessary use diagnostic instrument to read DTC. Normal state: ABS/EBD warning lamp shall go out without current DTC.	Normal	Go to the next step.
			Abnormal	Go to Step 3

Downloaded from www.Manualslib.com manuals search engine

S/N	Operating Step	Operation	Detection Result	Next Step
2	Using diagnostic instrument to perform component testing for solenoid valve of ABS hydraulic governor with ECU	Remarks: ① Before testing solenoid valve, please test he reflux pump to see if it operates normally. ② Two repair men are required to finish this test. (a) Turn off the ignition switch; (b) Connect the diagnostic instrument to DLC. (c) One repair man should sit in the vehicle and the vehicle should be lifted by lifter with wheels suspended. (d) Turn on the ignition switch with engine off. (e) Apply the "Component Test" function of diagnostic instrument to activate the solenoid valve as per prompt of diagnostic instrument. (f) Firstly, test the oil inlet valve and oil outlet valve of left front wheel, during which, the repair man in the vehicle should depress the brake pedal with force and hold it. ① Conventional braking phase: Normal state: The repair man outside cannot rotate the left front wheel by hand. ② Boosting phase: Use diagnostic instrument to access the "boosting phase". Normal state: The repair man outside cannot rotate the left front wheel by hand. ③ Pressure maintenance phase: Use diagnostic instrument to access the "pressure maintenance phase". Normal state: The repair man outside cannot rotate the left front wheel by hand. ④ Pressure reducing phase: Use diagnostic instrument to access the "pressure reducing phase". Normal state: The repair man outside can rotate the left front wheel by hand. (g) Perform testing for right front, left rear and right rear wheels in sequence. The test results should be the same as those of left front wheel.	Normal	Go to the next step.
			Abnormal	Replace ABS control unit assembly.
3	Checking pin voltage of ABS hydraulic governor with ECU	When using multimeter: (a) Turn off the ignition switch (b) Remove connectors from ABS hydraulic governor with ECU. (c) Use multimeter to measure the voltage at the power terminal and grounding terminal of solenoid valve. Remarks: If no jumper box is applied, the normal detection cannot be ensured. Normal value: U=9.3～16.9V	Normal	Replace ABS hydraulic governor with ECU.
			Abnormal	Go to the next step.
4	Checking connecting wires, connectors and 40A fuse	(a) Check if 25A fuse is normal. (b) Check the charging system, such as generator/battery and its connecting wire. (c) Ensure the grounding terminal is well grounded.	Normal	Go to the next step.
			Abnormal	Replace or repair connecting wire/connector or fuse.
5	Final inspection.	(a) Clear DTC. (b) ABS and EBD warning lamps shall go out shortly after the ignition switch is turned on (c) With the ignition switch turned on, C0121 DTC shall no longer appear after self-checking is finished by system. (d) Perform Step 2 in this procedure and the testing result is normal.		

Downloaded from www.Manualslib.com manuals search engine

Diagnosis and Testing

5. ABS brake lamp switch circuit fault: C0161

Circuit description:

Brake lamp switch is a kind of normally open switch.

This switch shall be on with the brake pedal depressed, providing +12V signal voltage to brake lamp signal circuit (+BLS).

ABS ECU shall monitor the brake lamp switch signal voltage to facilitate the determination of brake engagement time and the detection of brake lamp switch circuit.

DTC	Detection Condition	Set Condition	Possible Faulty Areas
C0161	1. With ignition switch turned on 2. Battery voltage＞8V 3. Vehicle speed＞16Km/h	1. The brake pedal is detected to be depressed under the conditions below: Vehicle speed＞40Km/h Acceleration＞8Km/h2 2. The brake pedal is detected to be released under the conditions below: Vehicle speed＞24Km/h Acceleration＞11.5Km/h2	1. Brake lamp switch 2. Brake lamp switch circuit 3. Brake lamp switch connector 4. ABS ground 5. ABS hydraulic governor with ECU

Troubleshooting procedures:

S/N	Operating Step	Operation	Detection Result	Next Step
1	Checking brake lamp switch block	(a) Depress and release brake pedal to check brake lamp. With brake pedal depressed: Brake lamp shall be lit. With brake pedal released: Brake lamp shall go out. Remarks: Please ensure the brake lamp and its circuit is normal when using this method to diagnose the brake lamp switch. (b) Check brake lamp switch based on data stream of diagnostic instrument. With brake pedal depressed: “Engagement” shall be displayed on diagnostic instrument. With brake pedal released: “Disengagement” shall be displayed on diagnostic instrument.	Normal	Go to the next step.
			Abnormal	Go to Step 4
2	Checking pin voltage of ABS hydraulic governor with ECU (Voltage of Pin 30 corresponding to Pin 38)	(a) Turn off the ignition switch. (b) Remove connector from ABS hydraulic governor. (c) Turn on the ignition switch. (d) Use multimeter to measure the voltage between brake lamp switch terminal and grounding terminal. With brake pedal depressed: Voltage＜2V→Brake lamp shall be lit. With brake pedal released: Voltage ＞ 4.5V→Brake lamp shall go out.	Normal	Go to the next step.
			Abnormal	Replace ABS with hydraulic governor.
3	Checking connecting wire and connector (between brake lamp switch and ABS hydraulic governor with ECU)	Checking connecting wire and connector between brake lamp switch and ABS hydraulic governor for short circuit or open circuit.		
4	Checking connecting wire and connector (brake lamp switch circuit)	Check the brake lamp switch circuit for short circuit or open circuit.		
5	Final inspection.	Confirm that the fault shall no longer appear.		

Downloaded from www.Manualslib.com manuals search engine

Diagnosis and Testing

6. ABS ECU fault: C0550

Circuit description:

ABS ECU, installed in ABS hydraulic governor with ECU, is the control center of ABS system. Programmable and calibration data required by ABS operation are stored in ROM of ABS ECU. ABS ECU shall perform self-checking continuously to monitor any fault in ABS system.

DTC	Detection Condition	Set Condition	Possible Faulty Areas
C0550	With ignition switch turned on	Fault is detected immediately.	1. ABS hydraulic governor with ECU. 2. Circuit.
	With engine running and under all conditions	Fault is detected immediately.	
	Under all conditions	It is detected that wheel speed sensor power circuit is short to Uz.	

Occurrence of fault shall give rise to the following operation:

Braking Strategy	Failure Protection
Stop operation	· Brake system shall enter the conventional braking mode. · ABS and EBD warning lamps shall be lit.

Troubleshooting procedures:

S/N	Operating Step	Operation	Detection Result	Next Step
1	ABS hydraulic governor with ECU under stationary state of vehicle	(a) Turn off the ignition switch; (b) Turn on the ignition switch without brake pedal depressed; (c) Check if ABS and EBD warning lamps are lit and when necessary use diagnostic instrument to read DTC. Normal state: ABS/EBD warning lamp shall go out without current DTC.	Normal	Check based on other DTC.
			Abnormal	Go to the next step.
2	Detection of system circuit	(a) Check all ground circuit of ABS hydraulic governor with ECU for excessive resistance or open circuit. (b) Check ABS fuse and when necessary replace it. (c) Check ABS battery power supply voltage circuit for excessive resistance, open circuit or short to ground. (d) Check if the wheel speed sensor power line is short to main power line. (e) Check for any electromagnetic interference. Is the fault eliminated?	Yes	Go to Step 4
			No	Go to the next step.
3	Replacement of ABS hydraulic governor with ECU.	Replace the ABS hydraulic governor with ECU as a whole.		
4	Conduct final inspection to confirm the fault is removed.	(a) Clear DTC. (b) With ignition switch turned on, ABS has no DTC memory.		

Downloaded from www.Manualslib.com manuals search engine

Diagnosis and Testing

7. Voltage out of range: C0800

Circuit description:

ABS ECU monitors the battery power supply voltage supplied to ABS ECU through Uz. If the voltage is out of the specified range, the following faults shall occur:

Too low voltage supplied to ABS ECU may lead to abnormal operation of ABS system.

Too high voltage supplied to ABS ECU may lead to damage of ABS components.

Normal operating voltage of system: 9.3V～16.9V under operation of reflux pump motor

DTC	Detection Condition	Set Condition	Possible Faulty Areas
C0800	With ignition switch turned on	1. If the voltage is below 9.6V with no operation of ABS, or below 9.3V with operation of ABS, this DTC shall be recorded and ABS shall be turned off by software. 2. If voltage below 7.6V or above 16.9V is continuously monitored, this DTC shall be recorded and ABS and EBD shall be turned off by hardware.	1. Overdischarge or damage of battery. 2. Fault of voltage regulator (charging system). 3. Fault of fuse or connector, imperfect body grounding, or contact resistance.

Occurrence of fault shall give rise to the following operation:

Braking Strategy	Failure Protection
Normal operation of reflux pump motor and solenoid valve cannot be ensured.	Brake system shall enter the conventional braking mode. ABS and EBD warning lamps shall be lit.
If the voltage is far below 9.6V	The system shall be converted to EBD emergency control mode. ABS warning lamp shall be lit.
If the voltage is far above 7.6V	Brake system shall enter the conventional braking mode. ABS and EBD warning lamps shall be lit.
Voltage Uz is above 9.8V after a period of too low voltage.	System shall retreat from the EBD emergency operation mode. Normal operation of ABS shall recover.

Downloaded from www.Manualslib.com manuals search engine

Troubleshooting procedures

S/N	Operating Step	Operation	Detection Result	Next Step
1	Checking fuse	(a) Check if the 10A, 25A and 40A fuses for power supply ECU of ABS operate normally. Normal: Continuity	Yes	Go to the next step.
			No	Check fuse circuit.
2	Using multimeter to check battery voltage	(a) Check battery voltage under various conditions. ① Idling: with headlamp turned on, A/C turned to the coldest mode/blower turned to the maximum speed mode ② Parking: With all electrical equipments turned off, rotation speed increased to 3500rpm and hold on for 30s ③ During application of service brake Normal value: 10～16.9V	Yes	Go to the next step.
			No	Check charging system.
3	Using diagnostic instrument to read battery voltage	(a) Connect the diagnostic instrument to read battery voltage under various conditions. ① Idling: with headlamp turned on, A/C turned to the coldest mode/blower turned to the maximum speed mode ② Parking: With all electrical equipments turned off, rotation speed increased to 3500rpm and hold on for 30s ③ During application of service brake Normal value: 10～16.9V	Yes	Intermittent fault, go to Step 5
			No	Go to the next step.
4	Checking voltage of ABS power line and ground cable	(a) Turn off the ignition switch. (b) Remove connectors from ABS hydraulic governor with ECU. (c) With ignition switch turned on, use multimeter to measure if driving voltage of each solenoid valve, motor or ECU is between 9.3V～16.9V.	Normal	Go to the next step.
			Abnormal	Check and repair circuit.
5	Fault reconfirmation	(a) Simulate fault for reconfirmation. (b) Read DTC. Normal state: No DTC memory	Normal	Go to the next step.
			Abnormal	Replace the ABS hydraulic governor with ECU.
6	Intermittent fault	(a) If it is intermittent fault, please return the vehicle to customer, for the fault cannot be located at that moment. (b) Ask the customer to record relevant data once the same fault occurs: · Vehicle speed · With/without brake pedal depressed · Weather · Road condition and etc.		
7	Conduct final inspection to confirm the fault is removed.	(a) Clear DTC (b) With ignition switch turned on, ABS has no DTC memory.		

Downloaded from www.Manualslib.com manuals search engine

Removal/Installation

ABS system

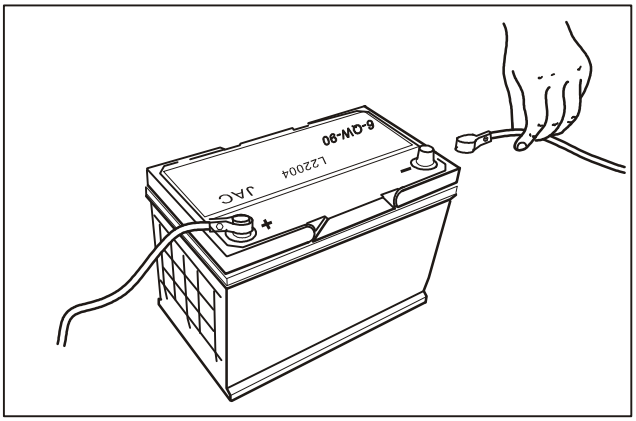

1. Remove the negative cable of battery.

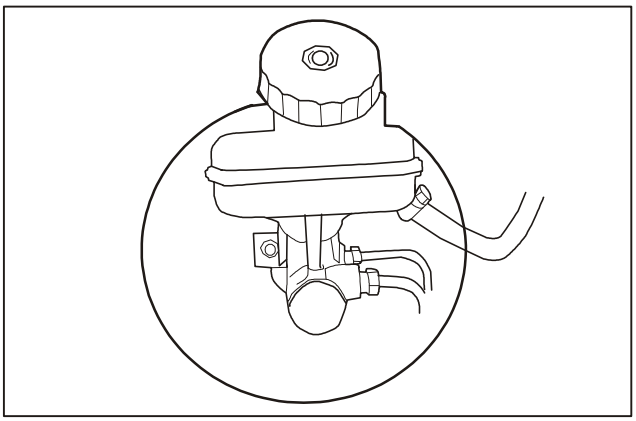

2. Drain the brake fluid in the hydraulic brake system completely.
3. Loosen the oil pipe of brake master cylinder.

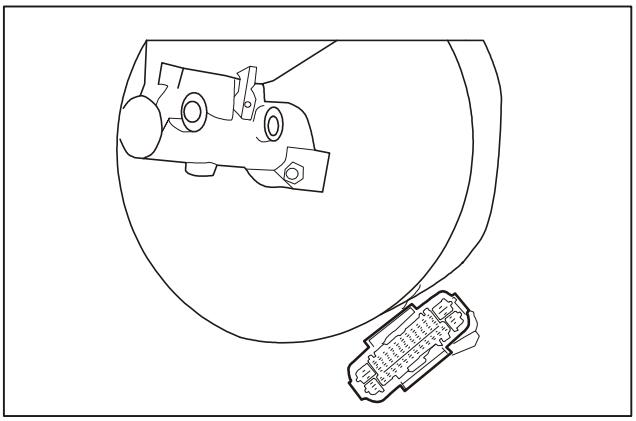

4. Remove the ABS connector.

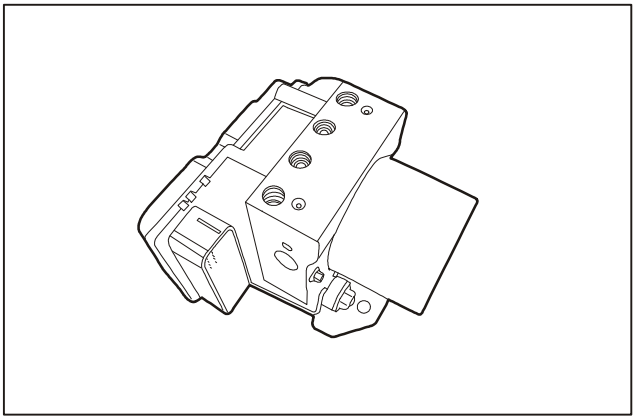

5. Remove the brake fluid pipe from ABS hydraulic assembly. Wrap the pipe with plastic bag to avoid dirt. Use clean water to wash the surface that having brake fluid on it.
6. Remove the mounting bolts from ABS hydraulic assembly and then remove the assembly.

Downloaded from www.Manualslib.com manuals search engine

Removal/Installation (Continued)

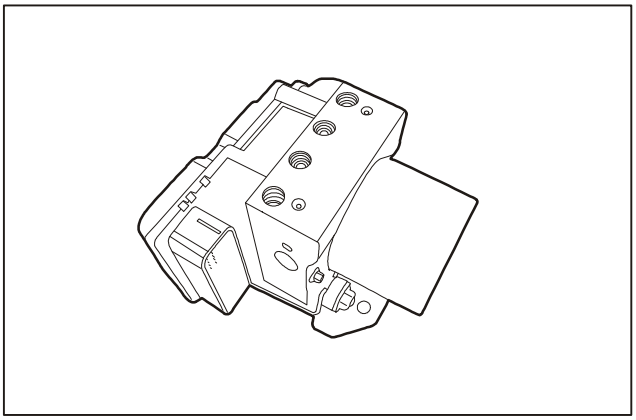

Installation

1. Clean the surface of ABS hydraulic assembly and fix the assembly onto bracket with bolts.
2. Install the brake pipe onto the ABS hydraulic assembly.

Attention:

As for the installation of aluminum alloy parts, the brake pipe should be fit in place smoothly by correct alignment; otherwise, the original part bodies may be damaged easily.

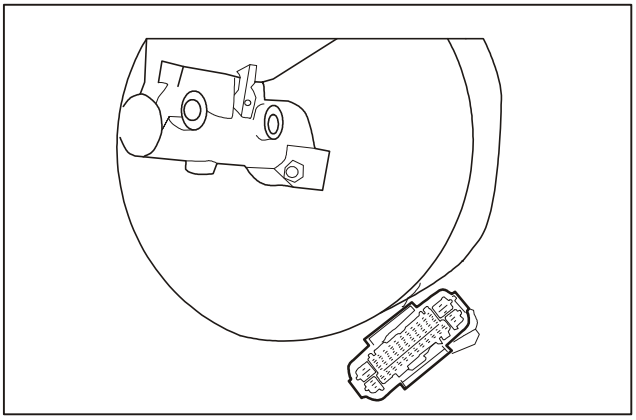

3. Insert the ABS plug into relevant socket.

Attention:

The ABS plug should be installed in carefully and smoothly instead of violently.

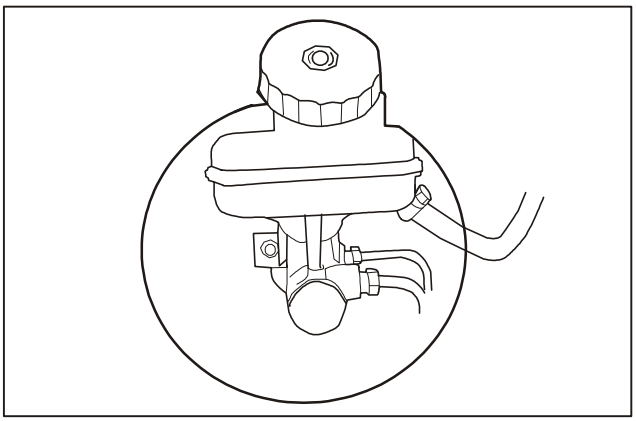

4. Install and fasten the oil pipe of brake master cylinder.
5. Fill the reservoir of master cylinder with brake fluid.
6. Two persons shall work together to bleed the air in brake line until pure brake fluid is drained out. Air bleeding order: left rear, right front, right rear and left front wheels.
7. Connect the negative cable of battery.

Downloaded from www.Manualslib.com manuals search engine

Removal/Installation (Continued)

Wheel speed sensor

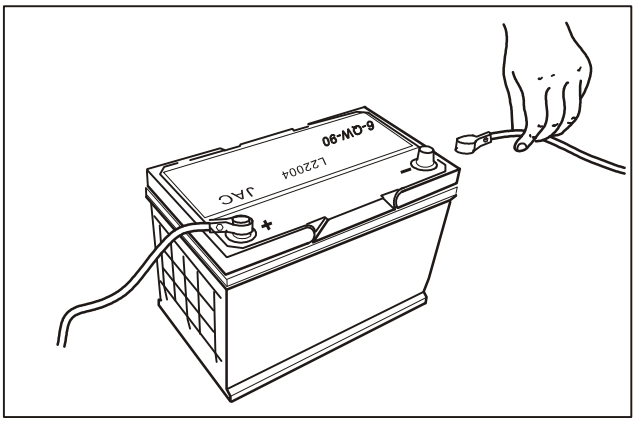

1. Disconnect the negative cable of battery.

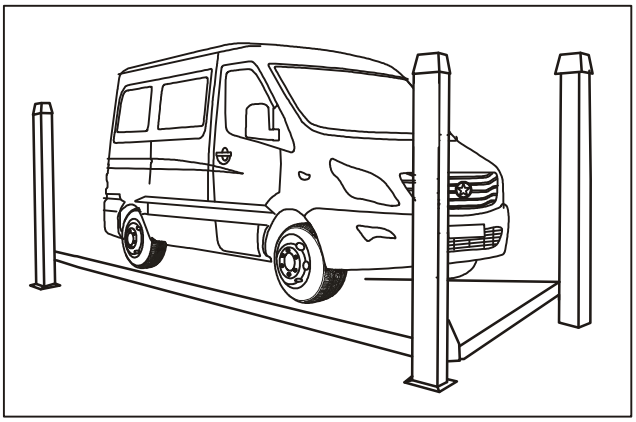

2. Lift the vehicle.

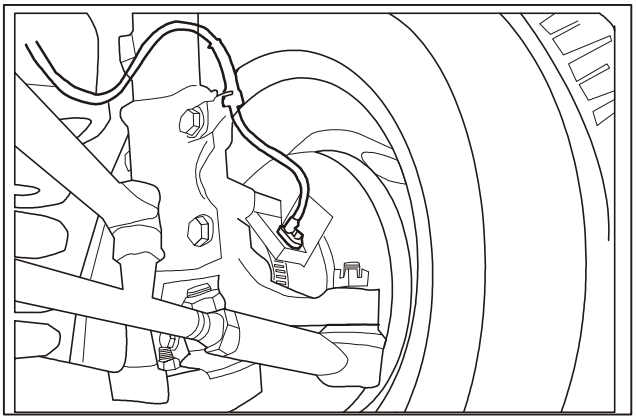

3. Disconnect the plug of wheel speed sensor and remove the harness fixture of sensor.
4. Remove the mounting bolts from wheel speed sensor and then remove the sensor.

Installation

1. Insert the sensor into relevant hole and fix it with bolt.
2. Fix the sensor harness and install the harness onto the plug.
3. Lower the vehicle.
4. Connect the negative cable of battery.

Downloaded from www.Manualslib.com manuals search engine

Transmission Shaft

Applied models: SUNRAY products manufactured by JAC

Subject Page

Instruction and Operation

Transmission Shaft..... 106
Explosive View of Transmission Shaft..... 106
Introduction of Transmission Shaft..... 106

Diagnosis and Testing

Transmission Shaft..... 107
Inspection and Confirmation..... 107
Fault Symptom Table..... 108

Removal/Installation

Removal of Transmission shaft..... 109
Installation of Transmission shaft..... 110

Downloaded from www.Manualslib.com manuals search engine

Introduction

Transmission shaft is a kind of device that is applied to joint transmission and rear axle together and to transmit power from transmission to rear axle. Transmission shaft, made of hollow steel tube, is equipped with intermediate support to reduce resonance during power transmission. Transmission shaft adopts constant velocity universal joints that are maintainable. Balance weights are equipped for transmission shaft in order to ensure stable power transmission.

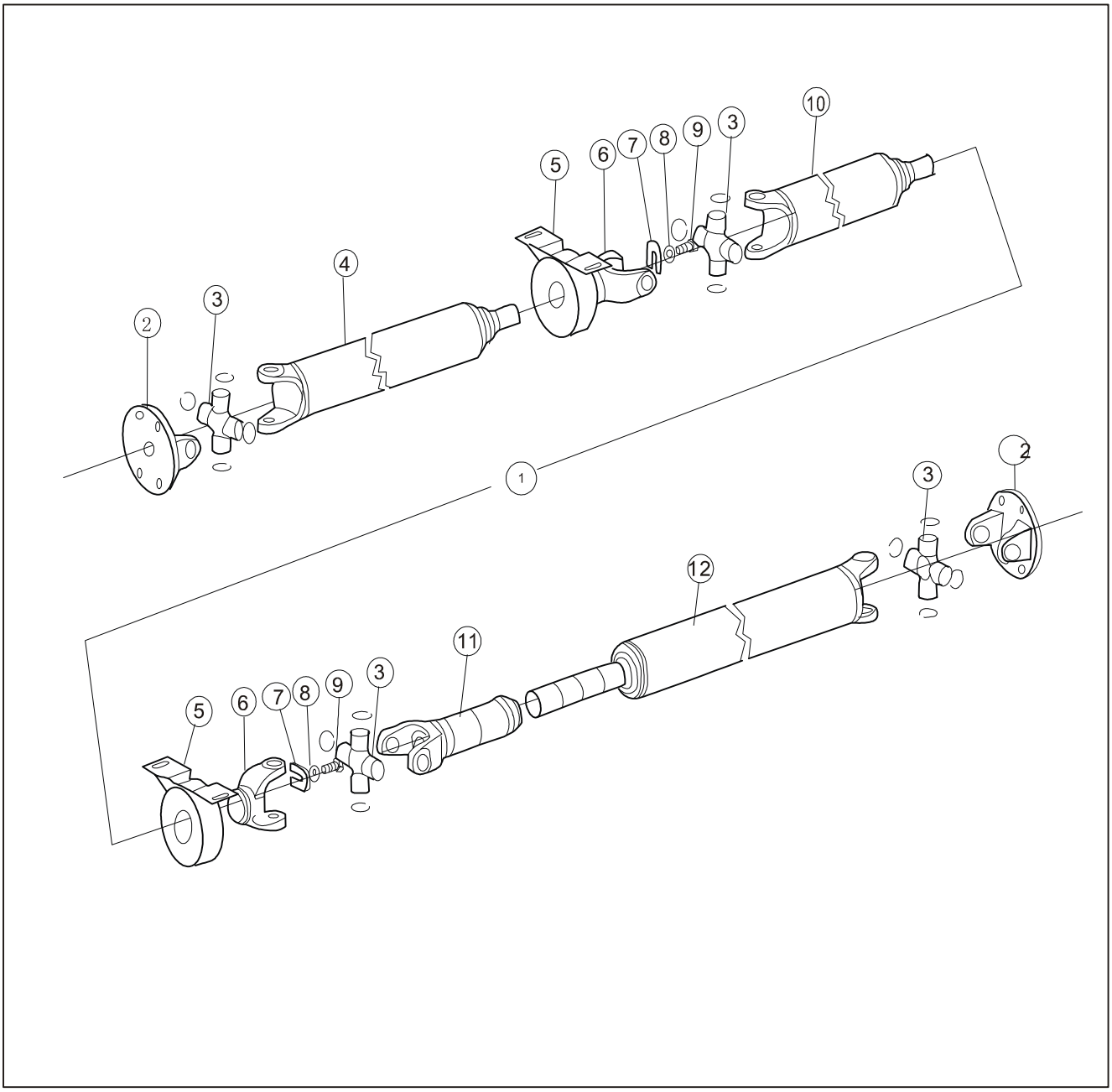

Downloaded from www.Manualslib.com manuals search engine

Inspection and Confirmation:

1. Inspection of flange
   Check flange between transmission and transmission shaft. Check flange screw hole for any deformation or crack. Check flange internal spline for tooth looseness, missing or damage. If there are more than two teeth is damaged, please replace the flange assembly.
2. Maintenance and repair of universal joint
   Maintenance of universal joint: Use grease nipple that is aligned to the oil filler of universal joint to add grease until clean grease is extruded out.
   Repair of universal joint: Remove universal joint and rotate it to check for any sticking, obvious clearance, deformation or fracture. Replace the universal joint accordingly.
3. Inspection of intermediate support
   Inspection of intermediate support: Use crow bar to pry up the rubber part of intermediate support and check rubber part for any wear, deformation or crack. Hold and shake the transmission shaft by hand to check for excessive clearance of intermediate support. If any, please replace the support.

Downloaded from www.Manualslib.com manuals search engine

Fault Diagnosis Procedures for Transmission Shaft

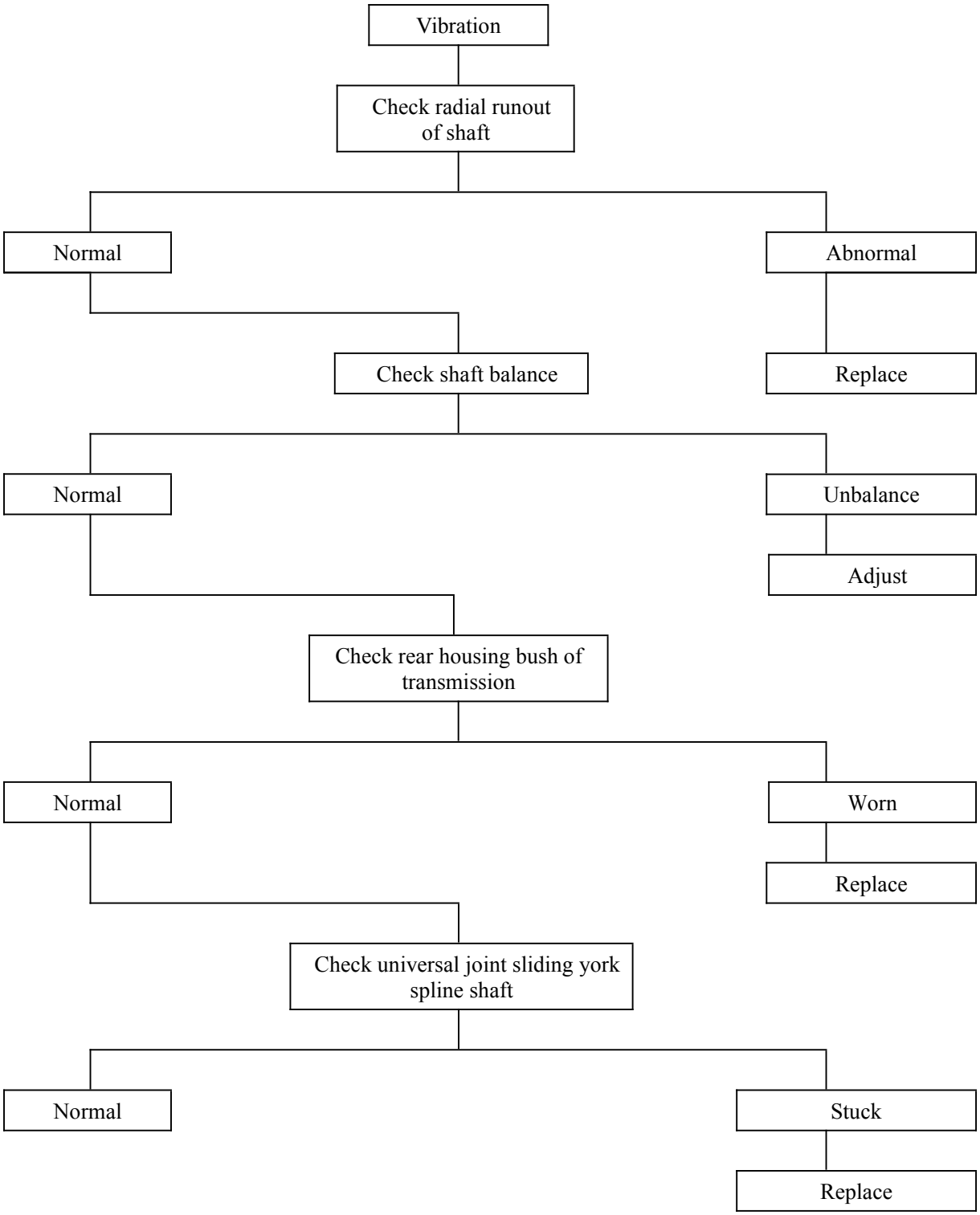

Downloaded from www.Manualslib.com manuals search engine

Removal/Installation

Transmission shaft

1. Lift the vehicle.

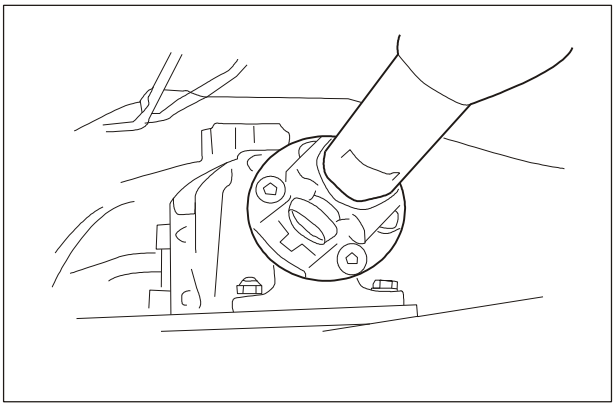

Note:

Mark properly in pair on transmission shaft front flange and transmission flange.

2. Remove transmission shaft front flange from transmission flange.

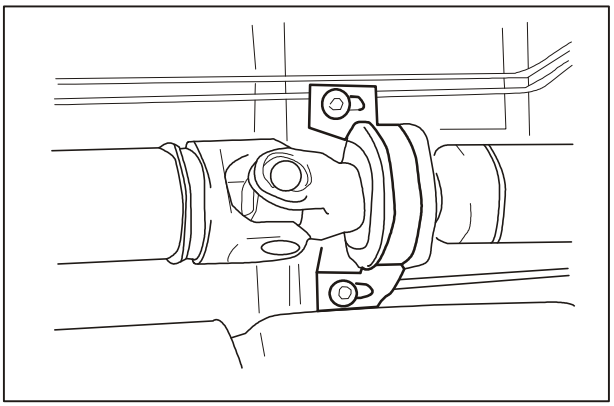

3. Loosen transmission shaft intermediate bearing.

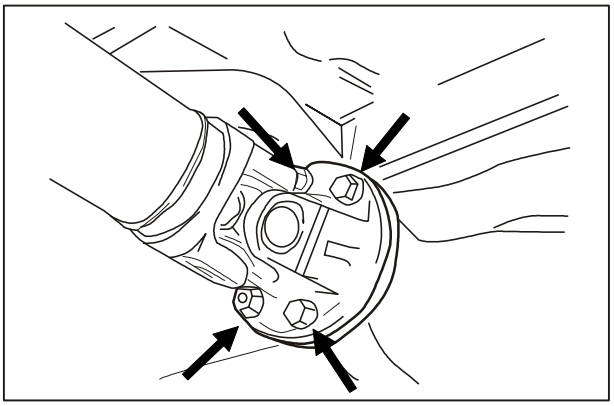

4. Remove transmission shaft rear flange from rear axle flange.
   - Mark properly in pair on transmission shaft rear flange and rear axle flange.
   - Remove four mounting bolts from transmission shaft.

Downloaded from www.Manualslib.com manuals search engine

Removal/Installation

Transmission shaft

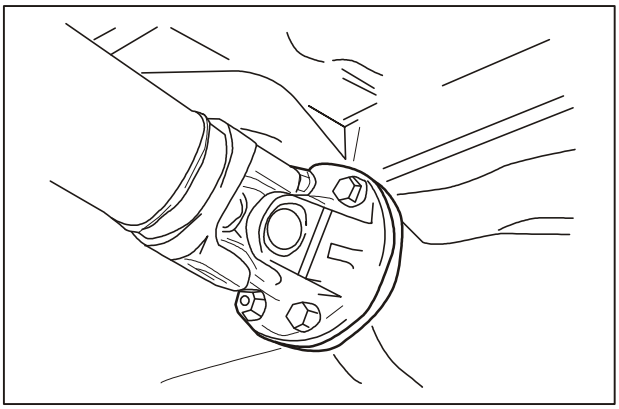

Installation

Note:

Have marks properly aligned.

1. Install the transmission shaft front flange onto transmission.

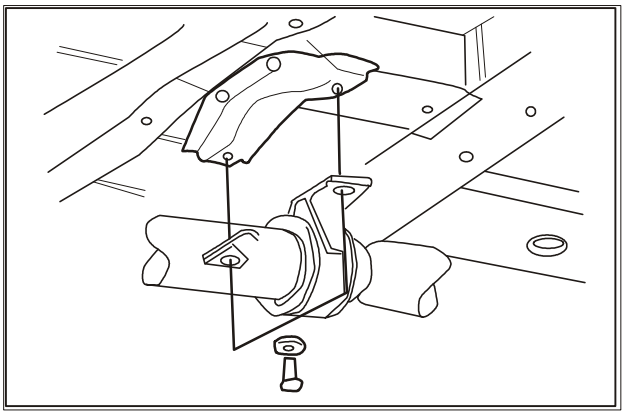

2. Install transmission shaft intermediate support onto the intermediate support seat located on body bottom plate.

Note:

Don't tighten bolt for the moment to facilitate adjustment.

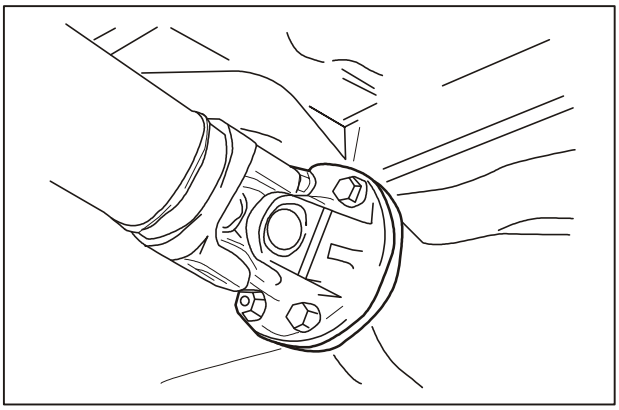

3. Install transmission shaft rear flange with rear axle flange.
   - Have two marks on flanges properly aligned.
   - Use new mounting bolts for transmission shaft.

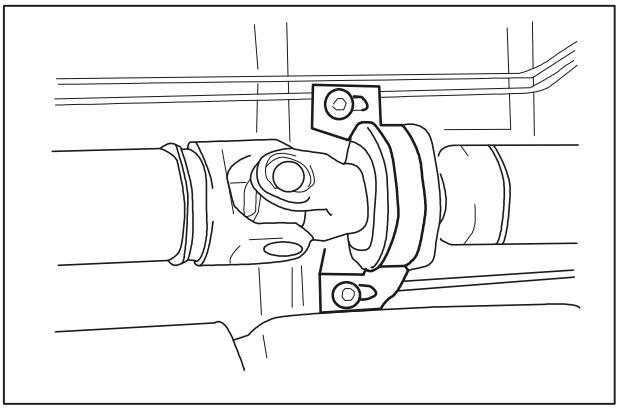

4. Tighten mounting bolts for transmission shaft intermediate bearing after alignment of transmission shaft.

Downloaded from www.Manualslib.com manuals search engine

Front Suspension

Applied models: SUNRAY products manufactured by JAC

Subject Page

Instruction and Operation

Front Suspension....112
Front Suspension....112

Diagnosis and Testing

Front Suspension....114
Inspection and Confirmation....114
Fault symptom Table....115

Removal and Installation

Removal and Installation of Subframe....116

Specification

Specification....131
Tightening Torques....131

Downloaded from www.Manualslib.com manuals search engine

Instruction and Operation

Front Suspension

This front axle is a steering axle at front of the vehicle, mainly consisting of the front overhang subframe assembly, lower swing arm assembly, front anti-roll bar link assembly, steering knuckle with brake assembly, helical spring assembly and mounting cushion for helical spring, etc., realizing vehicle steering via vehicle steering gear by pushing steering knuckle that may make wheels to deflect with certain angle.

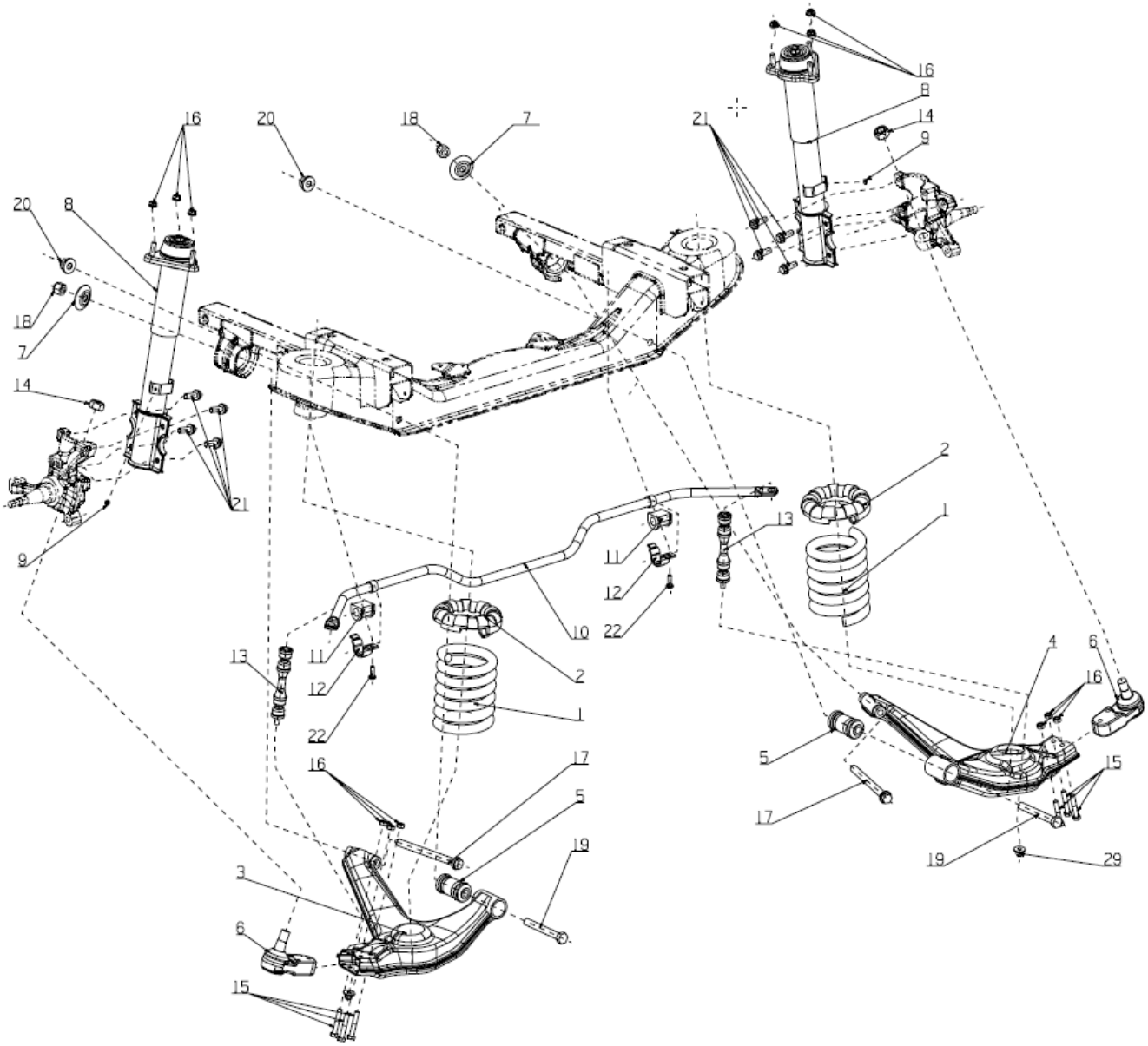

Downloaded from www.Manualslib.com manuals search engine

SN	Name	Quantity	Remarks
1	Front helical spring assembly	2	
2	Mounting cushion for front helical spring	2	
3	Left lower swing arm weld assembly	1	
4	Right lower swing arm weld assembly	1	
5	Lower swing arm bushing assembly	2	
6	Lower swing arm ball pin assembly	2	
7	Taper washer(16X61X3)	2	
8	Front shock absorber assembly	2	
9	Brake hose mounting flat spring nut	2	
10	Front anti-roll bar assembly	1	
11	Front anti-roll bar mounting bushing	2	
12	Front anti-roll bar mounting bracket	2	
13	Front anti-roll bar link assembly	2	
14	Type 1 all-metal hexagon lock nut (thickness 15.5)	2	
15	Hexagon headed bolt	6	
16	All-metal hexagon flange face lock nut	12	
17	Hexagon flange face lock nut (length of screw thread is 57)	2	
18	Type 1 all-metal hexagon lock nut	2	
19	Hexagon headed bolt (length of screw thread is 78)	2	Grade 10.9
20	All-metal hexagon flange face lock nut	2	
21	Hexagon headed bolt and flat washer assembly	8	
22	Hexagon lobular socket pan head screw	2	

Downloaded from www.Manualslib.com manuals search engine

Use and Maintenance

1. Inspect the wear condition of brake pad. After the first 40000km or 24-month driving of the vehicle, inspect the wear condition of friction linings and measure the thickness of the most worn part of brake caliper friction linings with the standard value of 18mm and limit value of 17mm.When the thickness of brake lining is lower than the limit value, the brake lining should be replaced.
2. In Level III maintenance, the front suspension may be removed for cleaning of interiors of the steering knuckle with bushing and wheel hub as well as bearings. Please tighten bolts and nuts of each component with specified torques.
3. Precautions:

The vehicle loading should not exceed the max. loading weight.

Diagnosis and Testing

Inspection and Maintenance of Front Suspension

1. Special measuring apparatuses and tools should be applied in part inspection. For damaged parts, carry out maintenance or replacement according to relevant requirements. In the case of one of the matching parts is worn and its clearance exceeds the specified one, please replace this worn part together with its matching part according to relevant requirements. Measure the starting torque of the front wheel hub at wheel bolts, it should be 17～25N.m.
2. From the point of view of preventive maintenance, some parts which are still in maintenance or within wear limit should be replaced before exceeding the limit.
3. Carry out appearance inspections of all parts with specified visual method or red pigment penetration method. In the case of following abnormalities in part outside surfaces, carry out maintenance or replacement for relevant parts according to corresponding requirements:

   Abnormalities
   - Failure or fatigue (in helical spring)
   - Bending deformation (generally in steering knuckle)
   - Abnormal noise（for bearings）
   - Looseness （in bolts of anti-roll bar and lower swing arm）
   - Discoloration or seizure（for steering knuckle ball joint etc.）
   - Rusting
   - Deterioration（for brake lining）
4. For all rubber parts like oil seals, gaskets, bushings,etc., they should be replaced with new ones after removal. For standard parts like pre-riveted nuts and bolts with rubber, they are not reusable.
5. Abnormal sound is a kind of noise, mainly appearing as abnormal sounds like clash or harsh screaming,etc. under different service conditions (like vehicle speed or road conditions). Some of these sounds may fade out with running-in while some may increase gradually due to improper adjustment in assembling. On condition that the part is qualified, adjustment of part assembly clearance may be taken as solution.

Downloaded from www.Manualslib.com manuals search engine

Fault Diagnosis

Common Fault Diagnosis Table

Fault Symptom	Possible Cause of fault	Troubleshooting
Arduous steering	No power steering	Repair or replace
	Improper front wheel alignment	Adjust
	Excessively low tire pressure	Carry out tire inflation
	Steering exceeding the lower swing arm ball joint	Replace
Poor return	Improper front wheel alignment	Adjust
	Fault in the shock absorber	Repair or replace
	Wear or damage in the front anti-roll bar	Replace
	Wear or damage in the helical spring	Replace
	Wear in the lower swing arm bushing	Replace
Abnormal tire wear	Improper front wheel alignment	Adjust
	Excessively low or high tire pressure	Adjust the tire pressure
	Fault in the shock absorber	Repair or replace
Vehicle deviation	Improper front wheel alignment	Adjust
	Insufficient steering resistance of the lower swing arm ball joint connection	Replace
	Looseness or wear in the lower swing arm bushing	Replace
Unilateral vehicle deviation	Improper front wheel alignment	Adjust
	Insufficient steering resistance of the lower swing arm ball joint connection	Replace
	Bending of the lower swing arm	Replace
	Wear or damage in the helical spring	Replace
Steering wheel fight	Fault in the shock absorber	Repair or replace
	Insufficient steering resistance of the lower swing arm ball joint connection	Replace
	Looseness or wear in the lower swing arm bushing	Replace
	Wear or damage in the helical spring	Replace
	Wear or damage in the front anti-roll bar	Replace
	Looseness in mounting screws of the steering gear	Repair
	Improper front wheel alignment	Adjust
Vehicle sinkage	Vehicle body welding failure	Repair
	Wear or damage in the helical spring	Replace
	Fault in the shock absorber	Repair or replace

Downloaded from www.Manualslib.com manuals search engine

Removal and Installation of Subframe

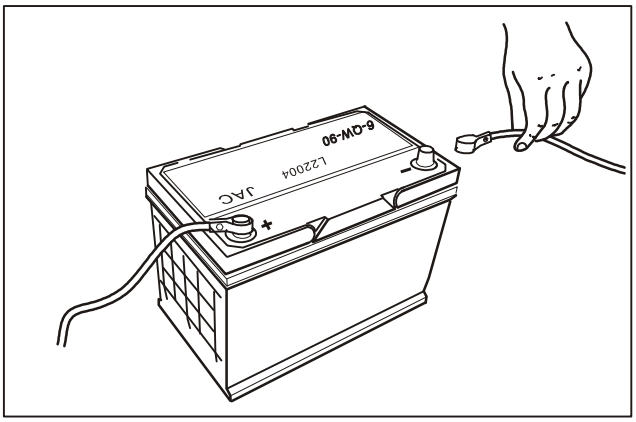

Removal

1. Disconnect the negative cable of battery.

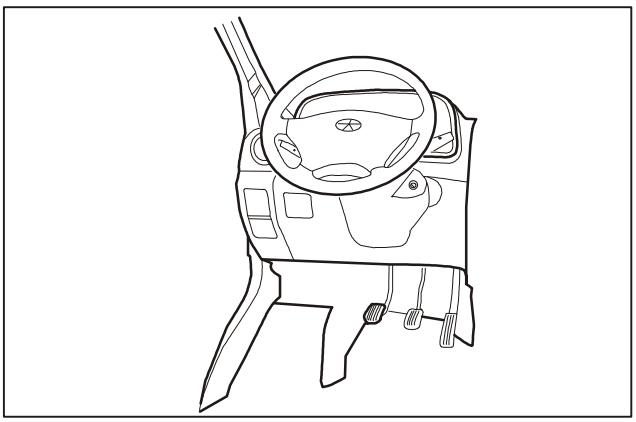

2. Place the steering wheel in the center and lock it up in the position of straight-ahead.

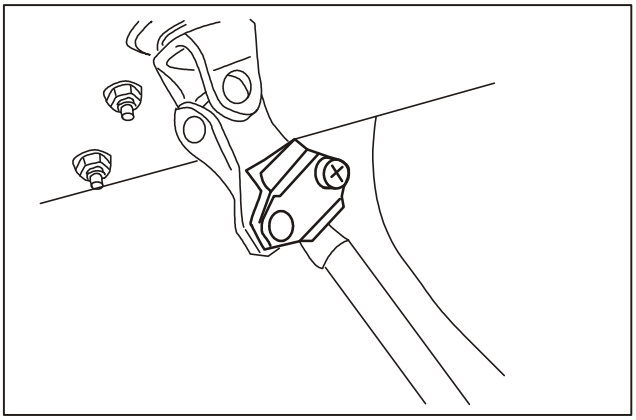

3. Remove track bolts for fixing the steering column onto the cross shaft. Rotate clamped plates to make them separated.
4. Loosen front wheel nuts and lift the vehicle.
5. Remove the front wheel.

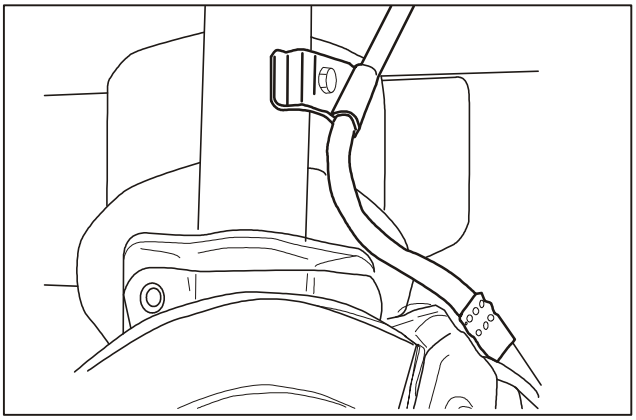

6. Remove the brake hose from the shock absorber.

Downloaded from www.Manualslib.com manuals search engine

Removal and Installation of Subframe (Continued)

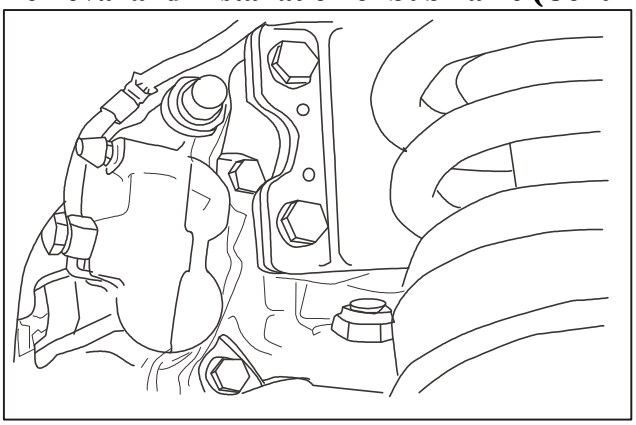

Note:

Mounting bolts on the top of the brake caliper can not be loosened completely until the complete removal of the brake caliper has been done.

7. Remove the brake caliper.
   Hang the brake caliper up to avoid brake hose damage.

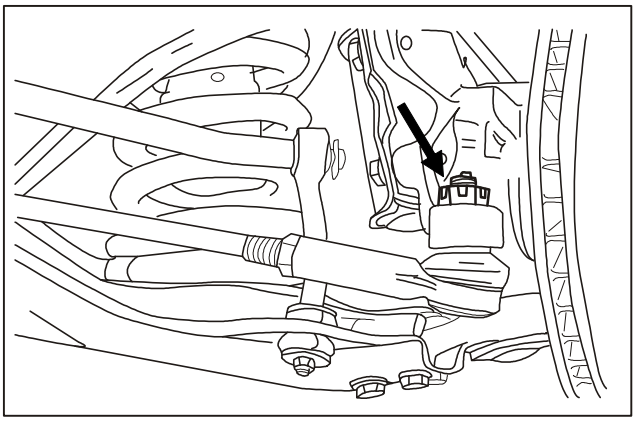

8. Remove cotter pin and castle nuts for fixing the steering tie rod onto the steering knuckle. (Discard the removed cotter pin)

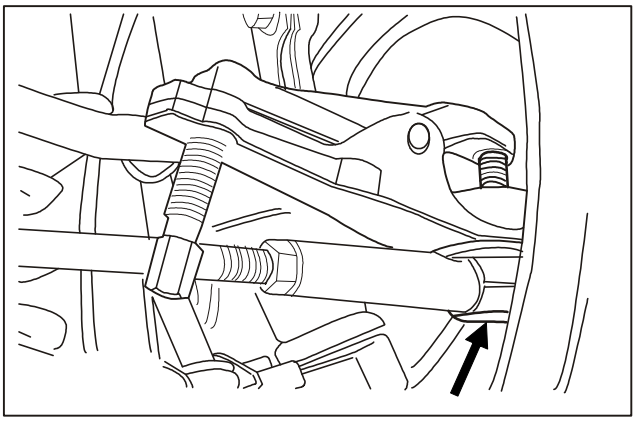

Note:

In the separation of the steering tie rod end from the steering knuckle, sealing protection should be carried out for the ball joint at any time.

9. Remove the ball joint of the steering tie rod from the steering knuckle.

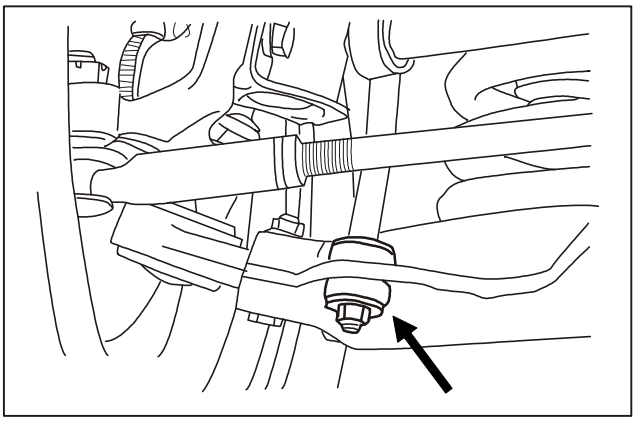

10. Remove the front anti-roll bar link from the lower swing arm.
11. Support the lower swing arm assembly.

Downloaded from www.Manualslib.com manuals search engine

Removal and Installation of Subframe (Continued)

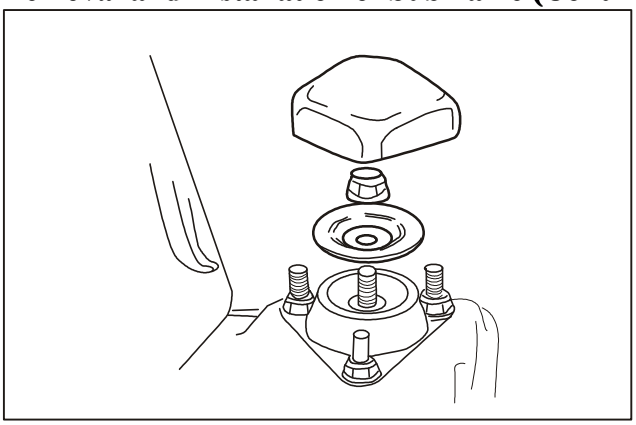

12. Remove mounting nuts of the shock absorber from the cab.
    - Remove the plastic cap.
    - Remove nuts and washers for fixing the piston rod with an L-shaped wrench.
    - Remove the disc washer.

Caution:

Pay attention not to damage the lower swing arm ball joint for connecting the shock absorber and the front suspension.

13. Lay down the lower swing arm assembly and remove the helical spring.
14. Support the cross rail.

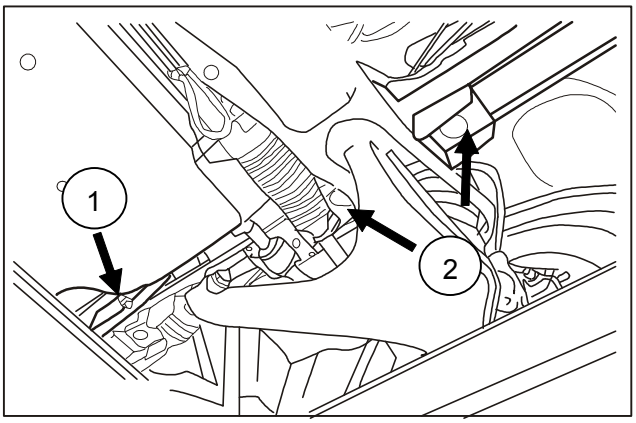

15. Remove the cross rail assembly.
    - ① Remove the two bracket nuts and bolts from the front suspension.
    - ② Remove the four cross rail bolts.

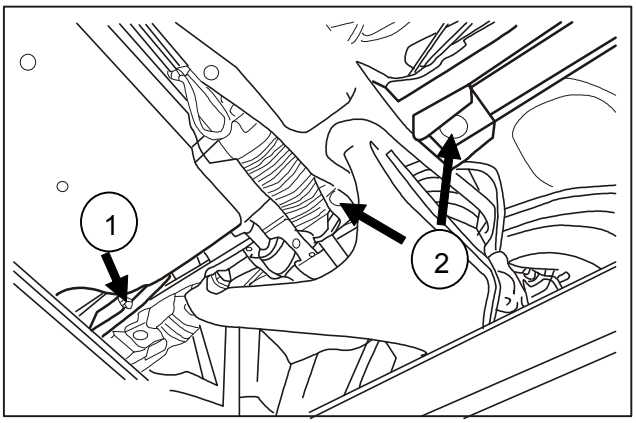

Installation

1. Reinstall the cross rail assembly.
    - Lift the cross rail, install the two bracket nuts and bolts of the subframe relaxedly.
    - Reinstall the four cross rail bolts.
    - Tighten bracket nuts and bolts of the front suspension.

Downloaded from www.Manualslib.com manuals search engine

Removal and Installation of Subframe (Continued)

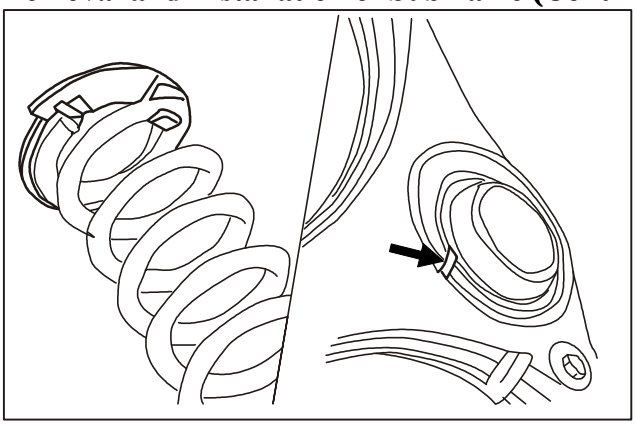

2. Reinstall the helical spring.
   Ensure following operations:
   - Correctly prevent the shock insulator from opening.
   - Correctly combine the shock insulator connector.
   - Place the lower end of the helical spring into the deepest place of the lower swing arm groove.
3. Remove the shock absorber.
4. Lift the lower swing arm assembly and install the shock absorber.

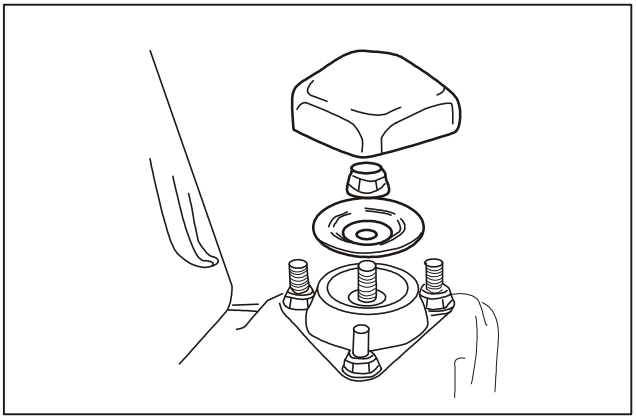

5. Fix the shock absorber from the cab.
   - Reinstall the disc washer.
   - Support nuts and washers of the piston rod with the L-shaped wrench.
   - Install nut caps.

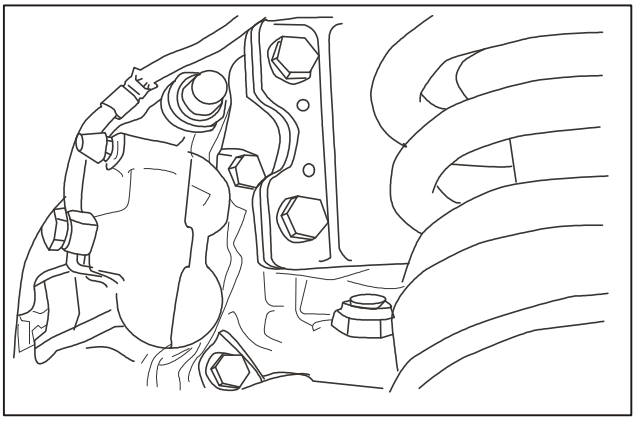

6. Reinstall the wheel hub assembly.
7. Reconnect the brake hose onto the shock absorber.
8. Install each end of the steering tie rod onto the steering knuckle.
   Fix castle nuts with a new cotter pin.

Caution:

The convex side of the washer at the joint of the front anti-roll bar should face the rubber shaft sleeve.

9. At the mounting position of the front anti-roll bar link, connect it with the lower swing arm.

Caution:

Make sure that the steering wheel is in straight-ahead position.

10. Then install tires and lower the vehicle.
11. Align clamped plates of the cross shaft with the steering column and fix them with a new bolt.
12. Reconnect the negative cable of battery.

Downloaded from www.Manualslib.com manuals search engine

Disassembly and Assembly of Subframe

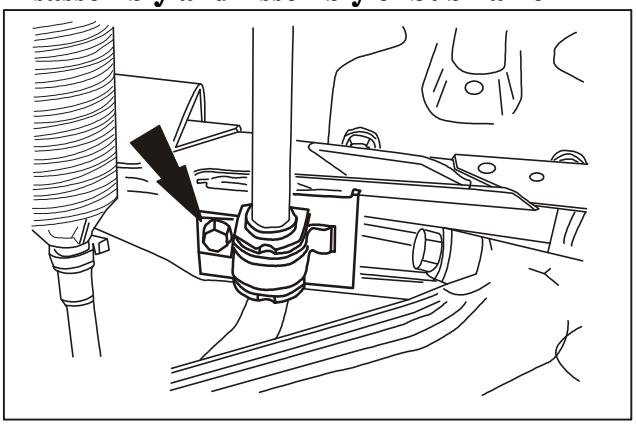

Disassembly

1. Remove the two mounting bolts at the mounting position of the front anti-roll bar.

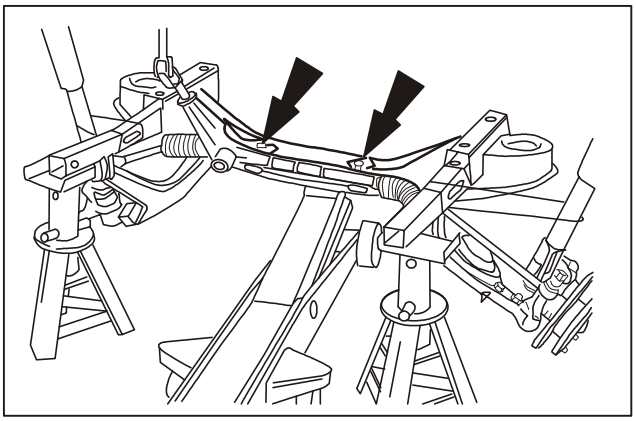

2. Remove the steering gear box.

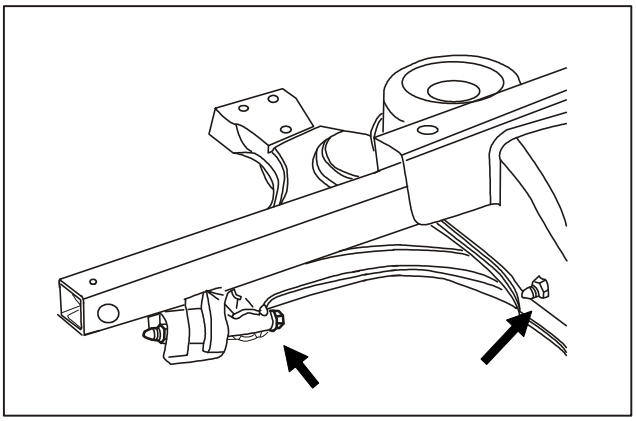

3. Remove the lower swing arm assembly.
   - Remove connecting bolts between the lower swing arm and the subframe.
   - Remove feedthrough bolts and nuts between the lower swing arm and the subframe.

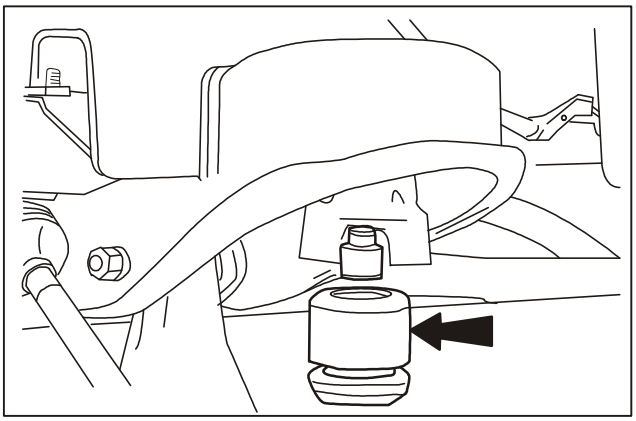

4. Remove the compression travel stop block.

Downloaded from www.Manualslib.com manuals search engine

Removal and Installation of Subframe (Continued)

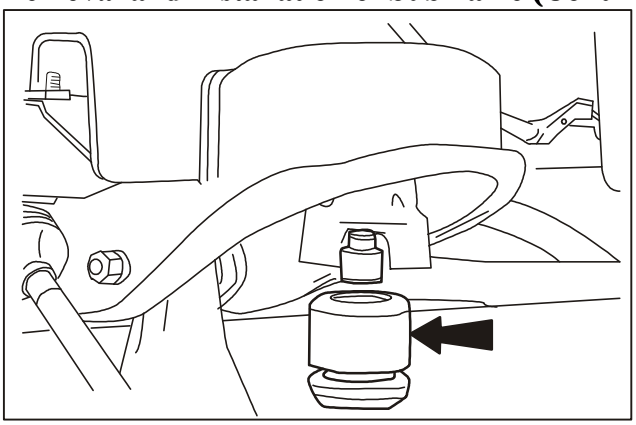

Assembly

1. Install the compression travel stop block.

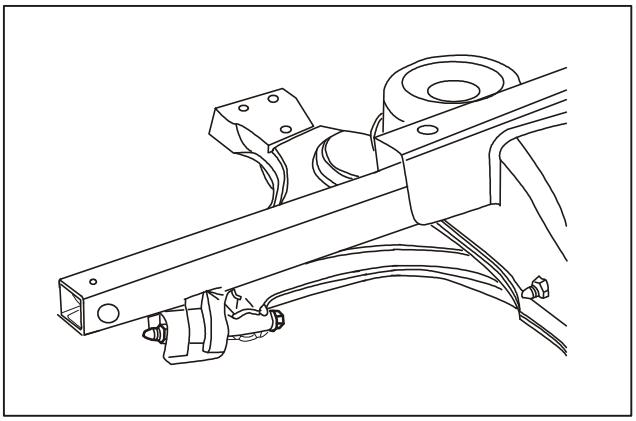

2. Reinstall the lower swing arm assembly.
   Install feedthrough bolts and nuts between the lower swing arm and the cross rail from the rear side.

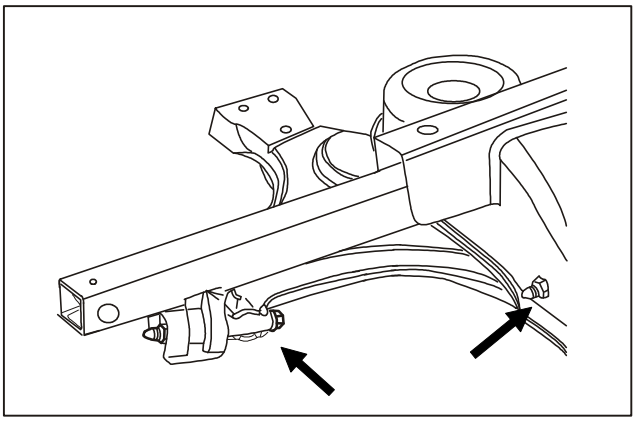

3. Align and reinstall the lower swing arm assembly.
   - Tighten bolts between the front suspension and the subframe.
   - Insert feedthrough bolts into the cross rail, install and then tighten them.

Downloaded from www.Manualslib.com manuals search engine

Removal and Installation (Continued)

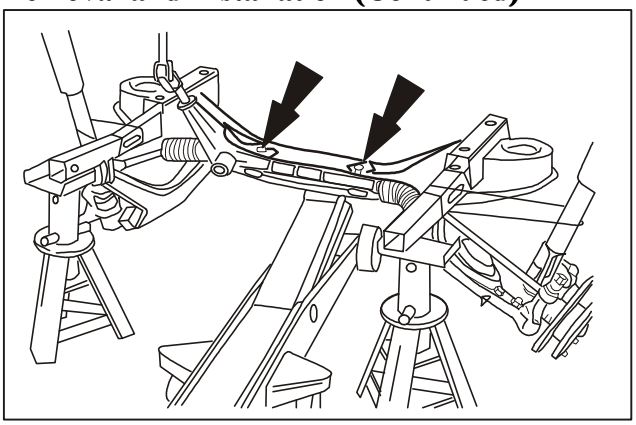

4. Reinstall the steering gear box.
   Make sure to install mounting bolts in the direction of underside of the cross rail.

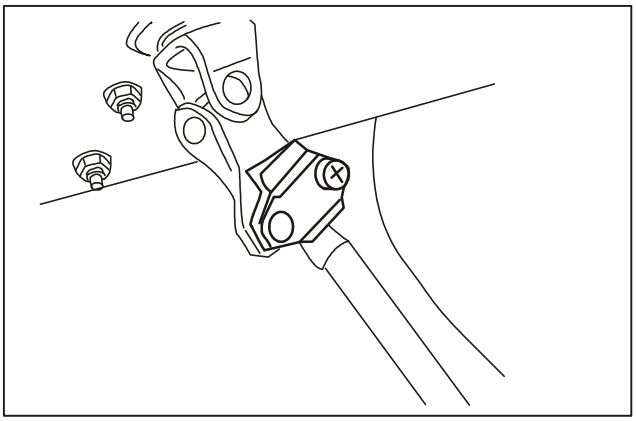

Caution:

Make sure that the positioning shaft sleeves of the front anti-roll bar are in the inner side of the rubber space ring, with their opening marks backward.

5. Install the two mounting bolts of the front anti-roll bar.

Downloaded from www.Manualslib.com manuals search engine

Removal and Installation of Lower Swing Arm

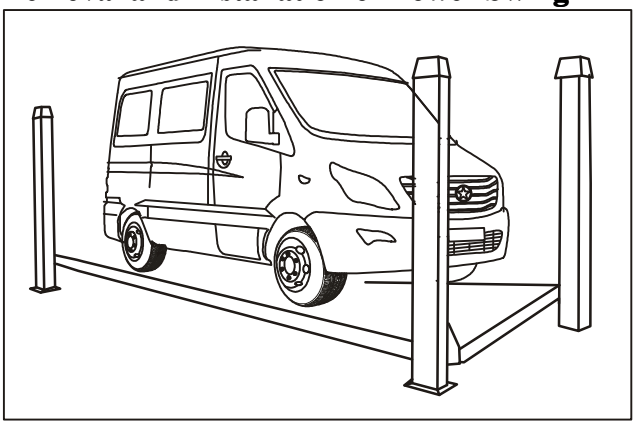

Removal

1. Loosen wheel nuts, lift the vehicle and remove wheels.

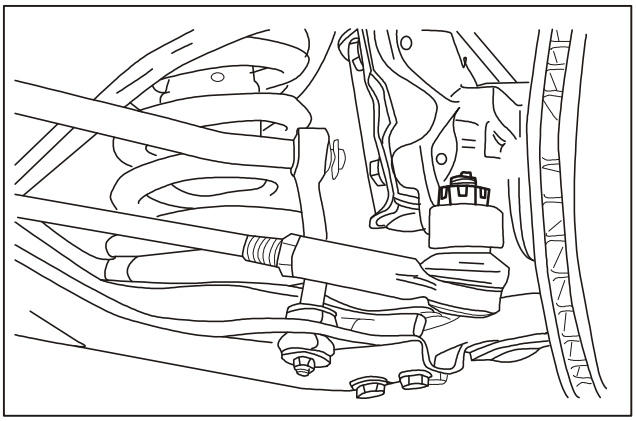

2. Loosen mounting nuts of the front lower swing arm.

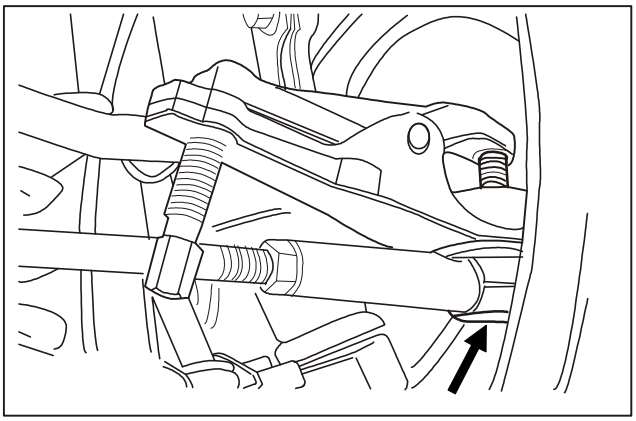

Note:

In the process of steering tie rod removal from the steering knuckle, wrap up ball seals with cloth as protection for them.

3. Remove the steering tie rod end ball joint from the steering knuckle.
4. Support the lower swing arm.

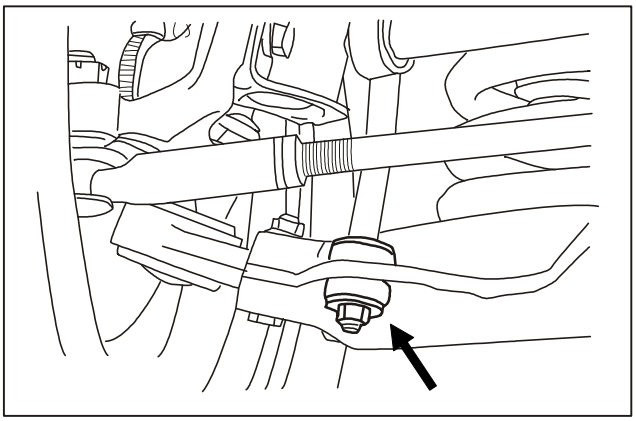

5. At the mounting position, disconnect the front anti-roll bar link from the lower swing arm.

Downloaded from www.Manualslib.com manuals search engine

Removal and Installation of Lower Swing Arm (Continued)

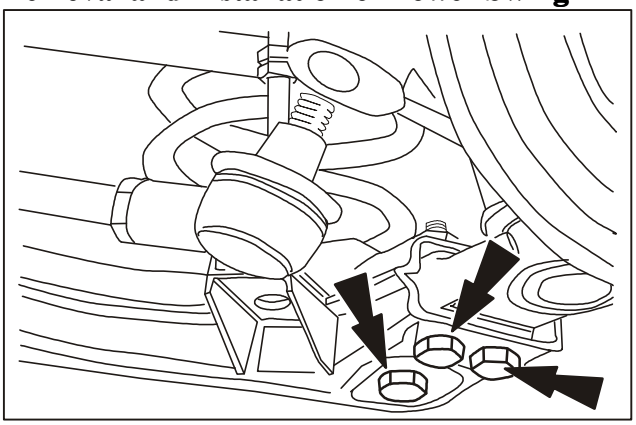

6. Remove the ball joint from the lower swing arm.
7. Lower the lower swing arm and remove the helical spring.

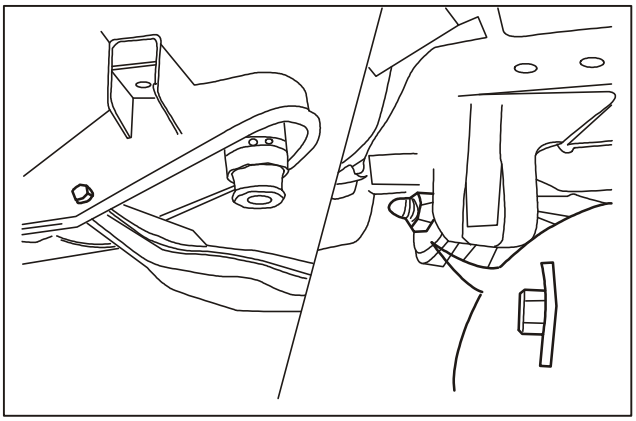

8. Remove the lower swing arm.
   - Remove nuts and bolts between the lower swing arm and the cross rail.
   - Remove nuts and bolts between the lower swing arm and the front suspension.
   - Remove the disc washer.

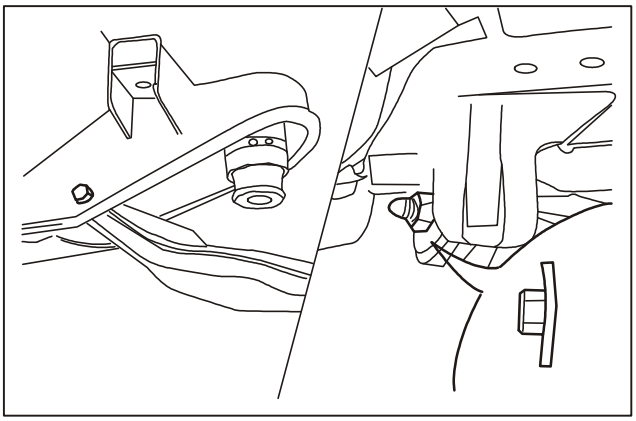

Installation

1. Reinstall the lower swing arm.
   - Install the disc washer.
   - Install nuts and bolts between the lower swing arm and the front suspension.
   - Install nuts and bolts between the lower swing arm and the cross rail.

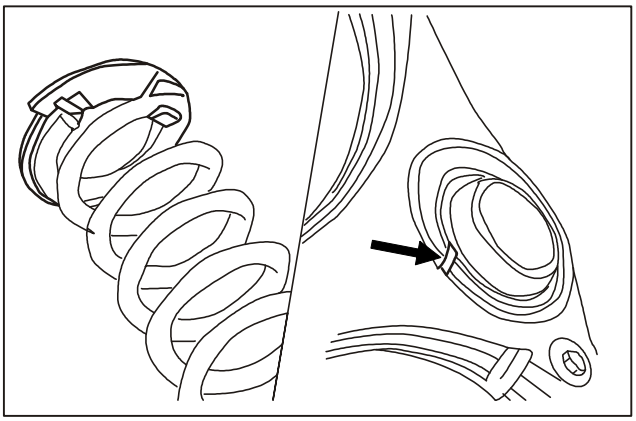

2. Reinstall the helical spring.
   Ensure following operations:
   - Correctly place the positioning opening of the gasket.
   - Correctly combine the gasket positioning lug.
   - The lower end of the spring is located at the groove of the lower swing arm
3. Lift the lower swing arm.

Downloaded from www.Manualslib.com manuals search engine

Removal and Installation of Lower Swing Arm (Continued)

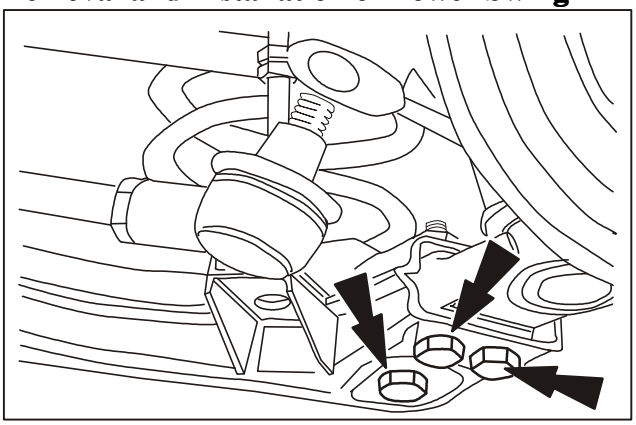

Caution:

When install the ball joint into the lower swing arm, the mounting of the front axle is not allowed to exceed the specified value to avoid damage of the lower swing arm ball joint dust cover.

4. Reinstall the ball joint into the lower swing arm.

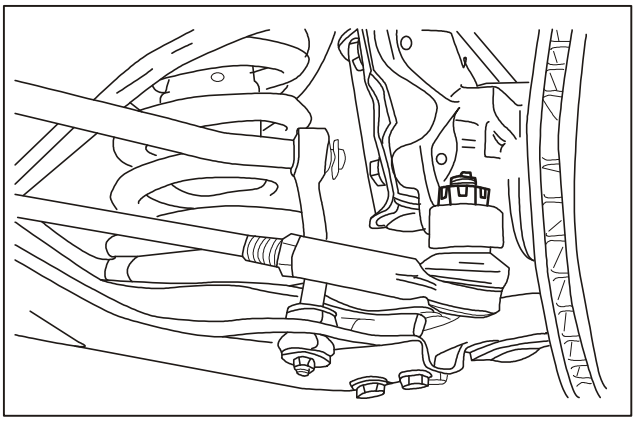

5. Reinstall the steering tie rod end onto the steering knuckle.

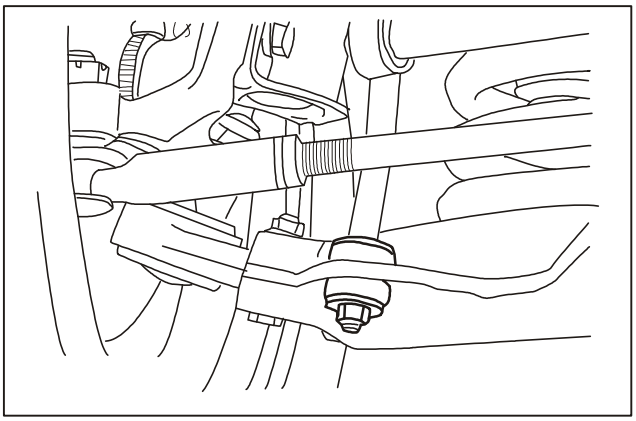

6. Reconnect the front anti-roll bar link with the lower swing arm.

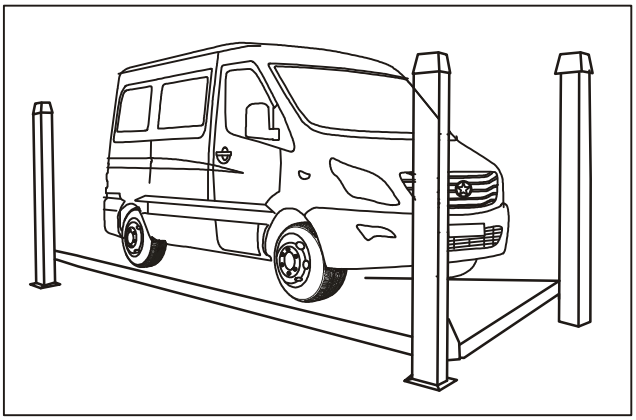

7. Install wheels and lower the vehicle.
8. Tighten mounting nuts of the lower swing arm.
   - Tighten nuts and bolts between the lower swing arm and the cross rail.
   - Tighten nuts and bolts between the lower swing arm and the front suspension

Downloaded from www.Manualslib.com manuals search engine

Removal and Installation of Helical Spring

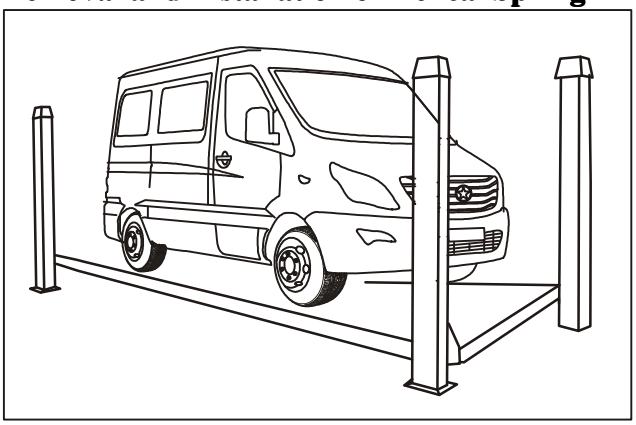

Removal

1. Loosen wheel nuts, lift the vehicle and remove wheels.

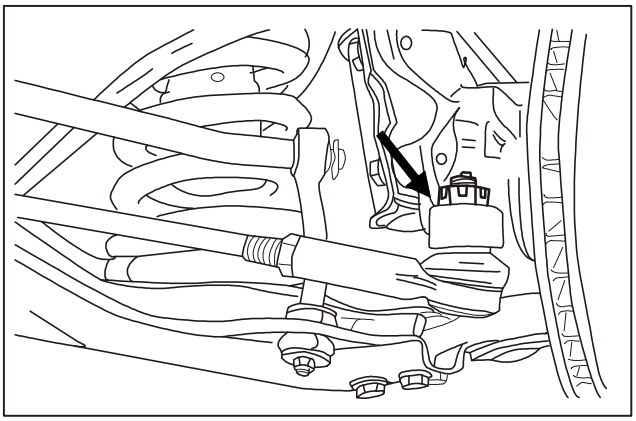

2. Remove the fixed cotter pin and castle nuts between the steering tie rod end and the steering knuckle.

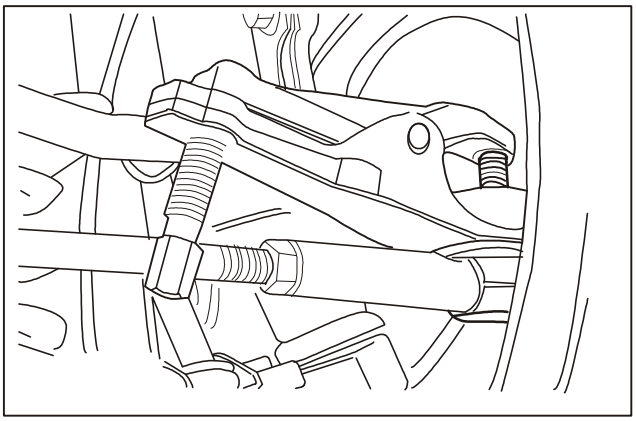

Note:

In the process of steering tie rod removal from the steering knuckle, wrap up ball seals with cloth as protection for them.

3. Remove the steering tie rod ball joint from the steering knuckle.

4. Support the lower swing arm.

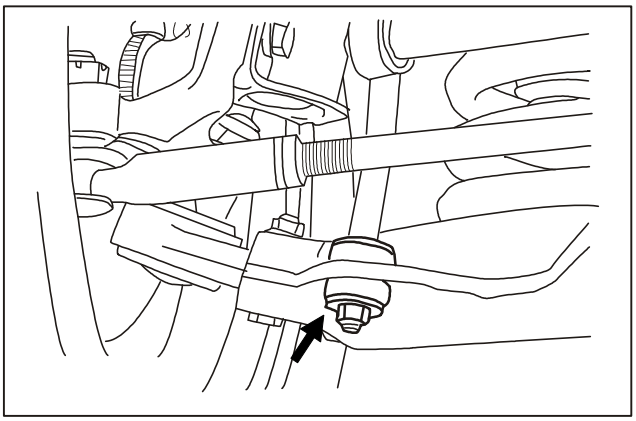

5. At the mounting position, remove the front anti-roll bar link from the lower swing arm.

Downloaded from www.Manualslib.com manuals search engine

Removal and Installation of Helical Spring

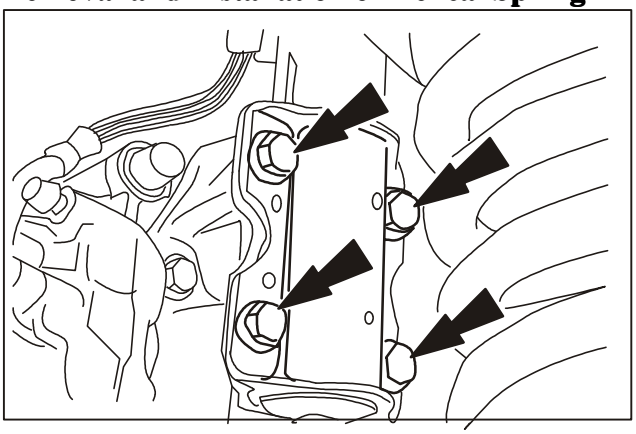

Caution:

To avoid lower swing arm ball joint damage, tie the top of the lower swing arm together with the cross swing arm.

6. Remove the shock absorber form the steering knuckle.
7. Lower the lower swing arm assembly and remove the helical spring
8. Remove the gasket from the top of the spring.

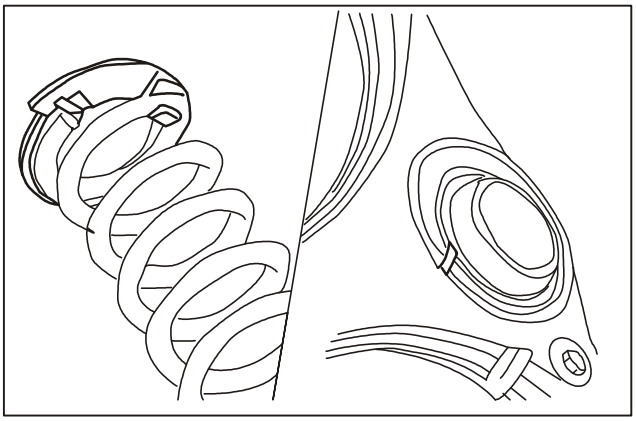

Installation

1. Reinstall the helical spring.
   Ensure flowing operations:
   - Correctly place the positioning opening of the gasket.
   - Correctly combine the gasket positioning lug.
   - The lower end of the spring is located at the groove of the lower swing arm.

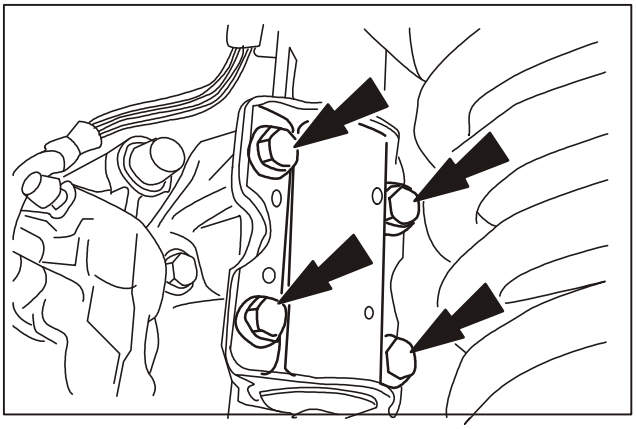

2. Reinstall the shock absorber onto the steering knuckle.
   Loosen the steering knuckle, lift the lower swing arm and align it with the shock absorber.

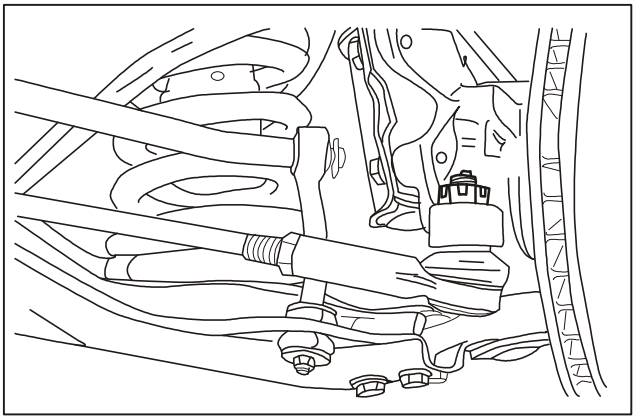

3. Retighten the steering tie rod with the steering knuckle.
   Fix castle nuts with new cotter pins.

Downloaded from www.Manualslib.com manuals search engine

Removal and Installation of Helical Spring

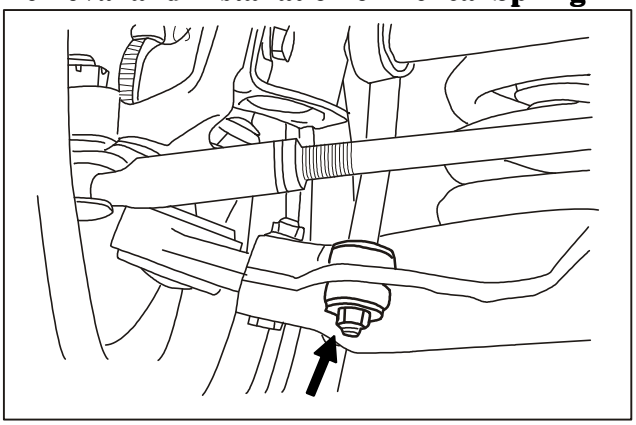

4. Connect the steering tie rod link with the lower swing arm.

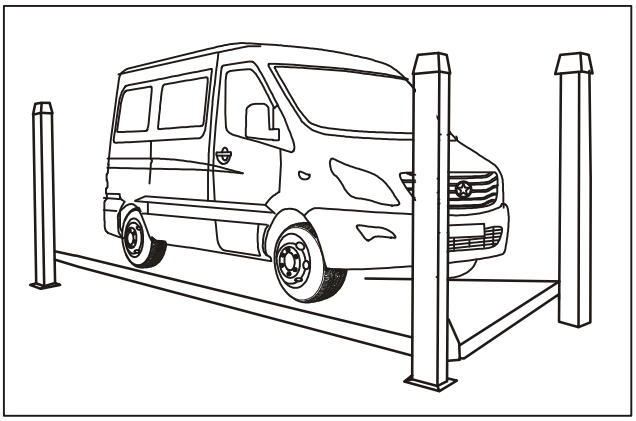

5. Install wheels and lower the vehicle.

Downloaded from www.Manualslib.com manuals search engine

Removal and Installation of Front Shock Absorber

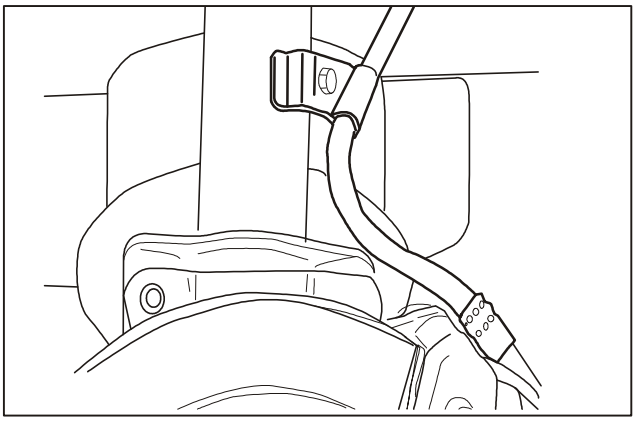

Removal

1. Loosen wheel nuts, lift the vehicle and remove wheels.
2. Remove the brake hose from the shock absorber.
3. Support the lower swing arm.
4. Support the wheel hub assembly.

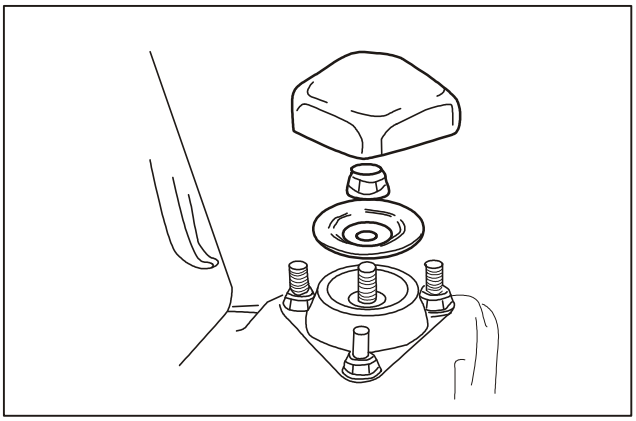

5. Remove the shock absorber from the cab.
   - Remove the cap.
   - Remove nuts and washers for fastening the central shaft with an L-shaped allen wrench.
   - Remove the disc washer.

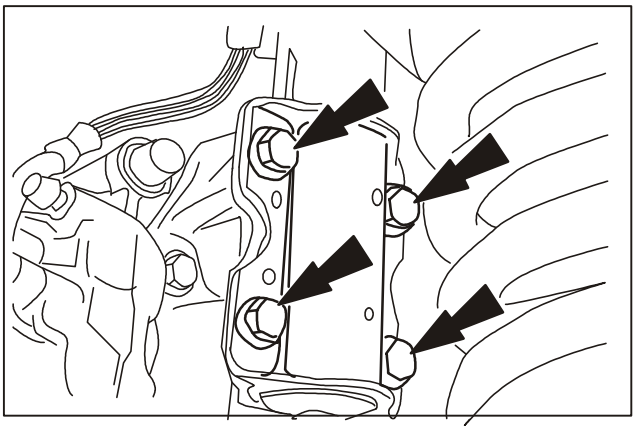

6. Remove the shock absorber form the steering knuckle.

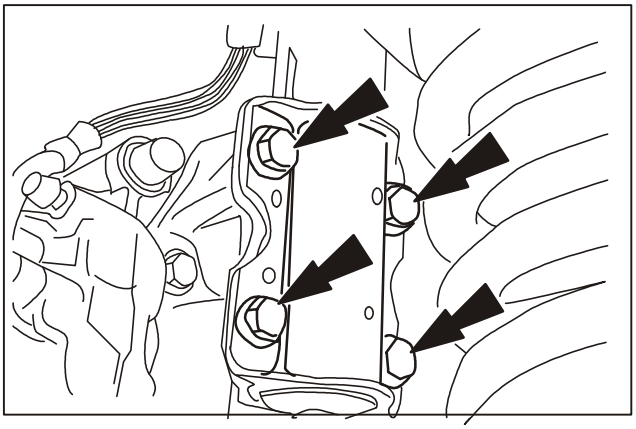

Installation

7. Install the shock absorber onto the steering knuckle.
8. Apply some soap solution onto the inner side of the shock insulator and top of the shock absorber.
9. Install the shock absorber in place.

Downloaded from www.Manualslib.com manuals search engine

Removal and Installation of Front Shock Absorber

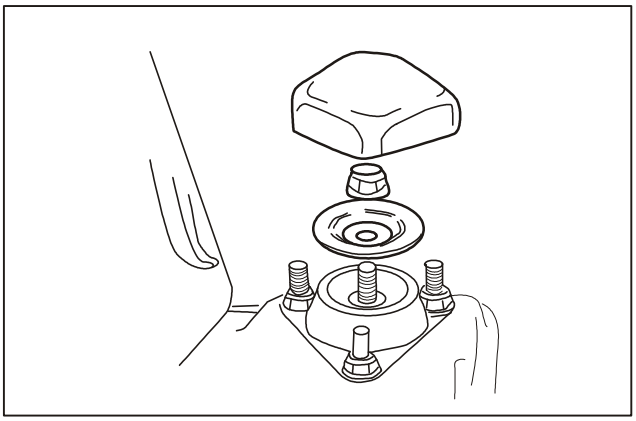

10. Fix the shock absorber firmly from the cab.
    - Reinstall the disc washer.
    - Install nuts and washers for fastening the central shaft with an L-shaped allen wrench.
    - Install the cap.
11. Reinstall the brake hose onto the shock absorber.

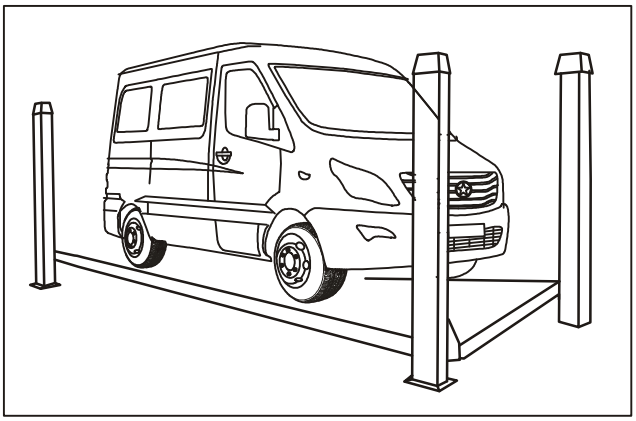

12. Install wheels and lower the vehicle.

Downloaded from www.Manualslib.com manuals search engine

Specification

1. List of Main Tightening Torques

Name of Bolt（Nut）	Tightening Torque (N.m)
Tightening torque for ball pin nut	220～250
Connecting rod nut	20～30
Ball pin mounting bolt	35～75
Front anti-roll bar clamping bolt	16～26
Front nut of the lower swing arm	180～245
Rear nut of the lower swing arm	180～245

2. List of Front Suspension Wearing Parts

Name	Quantity
Lower swing arm bushing assembly	2
Front cross rail bushing assembly	2
Front wheel hub inner and outer bearings	2 sets for each
Left and right friction linings	2 pieces for each

3. Maintenance Parameter Table of Front Suspension

Item	Major Parameter	Remarks
Axle load	1.54t	
Wheel base	1760mm	
Center distance of helical spring	1170mm	
Brake type	Disc brake	
Brake specification	R135mm,cylinder boreΦ45	
Camber angle of front wheel	0.75±1°	Max.tolerance between the left and right 1.25°
Caster angle of kingpin	1.5±1.5°	Max.tolerance between the left and right 1°
Inclination angle of kingpin	12.75°±1°	Max.tolerance between the left and right 1.25°
Toe-in	2～4mm	
Wheel bolt	6-M16X1.5	
Standard pitch diameter of hub and wheel bolt	Φ180mm	

Downloaded from www.Manualslib.com manuals search engine

Rear Axle

Applied models: SUNRAY products manufactured by JAC

Subject Page

Instruction and Operation

Rear axle..... 134
Explosive View of Rear Axle.....134
Introduction of Rear Axle..... 135

Diagnosis and Testing

Rear axle..... 136
Operating principle..... 136
Inspection and Confirmation..... 137
Fault symptom Table..... 140

Removal/Installation

Rear axle..... 141
Differential.....141

Specification

Specification.....148
Tightening torque.....148

Downloaded from www.Manualslib.com manuals search engine

Instruction and Operation

Rear axle

Rear axles for two-wheel drive vehicles with dependant rear suspensions are adopted, mainly composed of final drive, differential and axle housing, which are the final stage transmission mechanism in vehicle power train. The final drive, consisting of driving gear and driven gear, functions for changing driving direction, reducing speed and increasing torque. Driving gear is connected with universal joint assembly of propeller shaft through driving gear flange at one end of spline, with its middle part supported by two conical bearings installed reversely for bearing axial force and tangential force and the small end face journal of driving gear installed on cylinder roller bearing for bearing radial force only. The driven gear is fixed on the differential left housing by using a set of bolts.

Differential, for realizing different rotation speed of left and right wheels, is mainly composed of left and right housings of differential, spider, four planetary gears and two differential gears.

One end of rear axle shaft is connected with differential gear with spline and the flange at the other end is connected with wheel hub assembly with brake drum by using bolt.

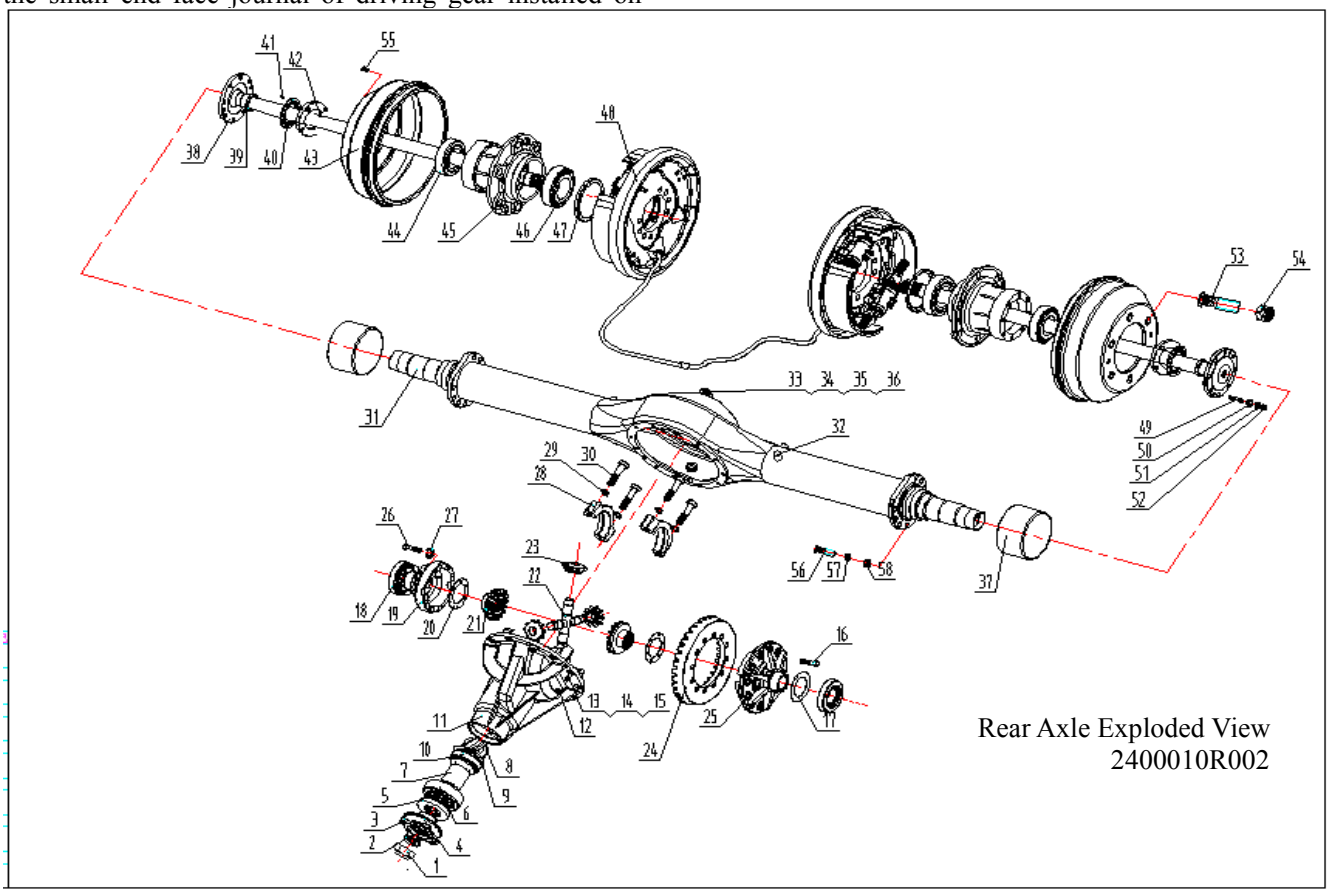

Rear Axle Exploded View
2400010R002

Downloaded from www.Manualslib.com manuals search engine

1.	Driving gear flange nut	2.	Driving gear flange flat gasket	3.	Driving gear flange	4	Flange dust cover
5	Driving gear oil seal	6	Tapered roller bearing	7	Resilient spacer	8	Driving gear
9	Driving gear adjusting washer	10	Tapered roller bearing	11	Final drive housing	12	I-type hexagon nut
13	Spring washer	14	Final drive housing bolt (Single end)	15	Final drive housing bolt (Stud)	16	Driven gear bolt
17	Differential bearing adjusting washer	18	Differential bearing	19	Differential housing (Right)	20	Differential gear thrust washer
21	Differential gear	22	Planetary gear shaft	23	Planetary gear	24	Driven gear
25	Differential housing (Left)	26	Differential housing bolt	27	Heavy spring washer	28	Bearing cap
29	Heavy spring washer	30	Bearing cap bolt	31	Rear axle housing assembly	32	Normally-closed vent plug
33	Oil filler plug	34	Oil filler plug sealing washer	35	Hexagon plug with magnetic core	36	Drain plug sealing washer
37	Oil catcher	38	Axle shaft	39	Axle shaft oil seal	40	Lock washer
41	Nut and bolt components	42	Bearing lock nut	43	Rear brake drum	44	Rear hub outer bearing
45	Rear hub	46	Rear hub inner bearing	47	Rear hub inner oil seal	48	Brake assembly (Left/Right)
49	Axle shaft bolt	50	Tapered sleeve	51	Spring washer	52	I-type hexagon nut with fine thread
53	Tire bolt (Left/Right)	54	Outer bolt of tire (Left/Right)	55	Cross recessed countersunk head screw	56	Brake bottom plate bolt
57	Spring washer	58	I-type hexagon nut with fine thread				

Downloaded from www.Manualslib.com manuals search engine

Instruction and Operation

Application and maintenance

1. Hyperbolic gear is of strict lubrication requirement and only the specified hyperbolic gear oil can be added instead of using ordinary gear oil or being mixed with ordinary gear oil; otherwise, early wear of tooth surface shall be caused, resulting in excessive wear of gear.
2. As for bevel gear of rear axle final drive that is selected and adjusted before delivery, removal and adjustment are unnecessary under ordinary condition but are necessary in case of gear wear, backlash over the specified data or excessive end play of bearing, or parts damaged in need of replacement.
3. Clear earth and dust on the rear axle housing vent plug frequently. Remove and clean it during Stage-I maintenance in order to ensure air passage unobstructed, because the air passage obstruction shall lead to pressure increase inside the rear axle housing, giving rise to oil leak at driving gear oil seal and joint position. Please check the lube oil level inside housing also.

- Please change lube oil during the first Stage-II maintenance of new vehicle. Change the lube oil for rear axle housing after running for 40000Km or 24 months. Drain the gear oil out of rear axle housing, add kerosene for cleaning, add new lube oil of Grade (GL-5) 85W/90 after the kerosene is drained completely. No ordinary gear oil can be adopted. Change lube oil after running for 80000Km or 48 months and since then change oil every 50000Km of running. Check oil quality every four times of Stage-II maintenance; in case of any color change, lean, or other kinds of deterioration, please change with new oil.
- Check the wear condition of brake lining and brake drum. After new vehicle running for 40000Km or using 24 months, check the wear condition of brake lining and brake drum, measure the thickness of brake lining worn badly (standard value: 4.6mm, limit value: 1.0mm) . When the thickness of brake lining is below the limit value, please replace the brake lining.

4. During Stage-III maintenance, you should remove rear axle, clean internal cavity and final drive assembly, and tighten every bolt and nut to the specified torque.

Precautions:

- Weight loaded on vehicle should be no more than the maximum allowable load.
- During running, please don’t release the clutch abruptly to improve barrier overtaking ability of vehicle; otherwise, the gears may be damaged due to impact.

Downloaded from www.Manualslib.com manuals search engine

Diagnosis and Testing

Inspection and maintenance

Inspection and maintenance for rear axle

1. Check parts by using special measuring apparatus or tools.
   Determine if the part can be used or not on the basis of maintenance standard. Repair or replace damaged parts as required. If one part damaged in a pair of parts makes the clearance over the specified limit, please replace this part or replace it together with its matched part accordingly.
2. In order to prevent failure, please replace those parts still within but nearly approaching to the repair or wear limit before the limit is exceeded.
3. Check carefully the appearance of each part by visual inspection or red pigment osmosis method. In case of any abnormality listed below existed on the outer surface, please repair or replace relevant parts accordingly.
   - Uneven wear
   - Eccentric wear
   - Scratch
   - Crack
   - Malformation
   - Failure or weakening (of spring)
   - Bending deformation
   - Abnormal noise (of bearing)
   - Looseness
   - Color change or sticking
   - Deterioration (of brake lining)
4. All rubber parts, such as O-rings, oil seals, washers and etc. should be discarded after removal instead of being applied again.
5. In case of abnormal noise or vibration in drive system, please measure the total clearance of rear axle and then determine whether to remove final drive assembly or not.

Park the vehicle on flat ground with transmission and transfer case placed at neutral position; have the vehicle jacked up after the parking brake lever is applied. Turn the flange clockwise to the end and mark in pair properly on the flange dust cover and final drive housing; turn the flange counterclockwise to the end to measure the distance between two marks (limit clearance: 6mm) ; if the clearance is beyond limit, it is indicated excessive gear clearance of rear axle, so please make proper adjustment after removal.

Abnormal noise is a kind of noise, mainly referring to impact sound or shrieking occurs under different conditions (such as speed, road condition), some of which shall disappear gradually after running-in while some shall increase constantly. The latter situation is mainly caused by improper assembly or adjustment. If the parts are normal, the abnormal noise can generally be eliminated by adjusting the assembly clearance of parts.

6. Brake failed to return means the brake is locked and cannot be applied again after braking, which can be solved by adjusting the brake assembly adjusting clearance.

Installation and adjustment of rear axle assembly

1. Install the wheel hub assembly with brake drum in the reverse order of removal, during which the adjustment listed below should be performed:
   Adjustment of rear hub bearing clearance:
   Tighten the bearing nut until the brake drum cannot or hardly move, loosen the bearing nut a little by 1/6 ～ 1/8 circle and rotate the brake drum; the tangential force measured at tire bolt without contact between brake lining and brake drum should be 2.98～4.97 N.m or the brake drum can be rotated by hand freely.
2. Adjustment of rear brake clearance:
   This brake is servo brake whose brake clearance is adjusted automatically instead of manually.

Please observe the above mentioned procedures and requirements to perform actual maintenance.

Downloaded from www.Manualslib.com manuals search engine

Diagnosis and Testing

Installation and adjustment of rear axle assembly

Please make adjustment based on the flowing requirements after the final drive assembly is installed:

1. Preloading of driving gear inner/outer bearing:
   - During the assembly of final drive, the tapered roller bearing should be of certain preload, which means to eliminate the bearing clearance and also apply certain preload, aiming to reduce the axial displacement caused by axial force generated in the course of bevel gearing and improve the bearing rigidity of axle and thus to ensure normal meshing of bevel gear pair. However, please avoid excessive preloading, for it shall result in low drive efficiency and acceleration of bearing wear.
   - Adjustment of driving gear bearing preload: Install the driving gear oil seal with the tightening torque of driving gear flange nut and ensure proper driving gear bearing preload when the driving gear is not meshed with driven gear. Add or reduce adjusting washers of driving gear bearing between inner and outer bearings of driving gear to realize the preload adjustment. The preloading torque shall increase with the reduction of adjusting washers but decease with the adding of adjusting washers. .
2. Adjustment of differential bearing preload:
   - Adjustment of differential bearing: Adjust the differential bearing to gain proper preload, with 0.05～0.08mm interference on both sides. Without the meshing between driving and driven gears, apply gear oil onto rotary part of bearing. The friction torque at starting should be 1.764 ～ 2.058N.m. No axial runout of driven gear occurs after the adjustment.
   - Adjustment of differential gear clearance: Measure the differential gear backlash at the planetary gear with dial indicator.
     Attention: Measure at more than three points.
     Standard value: 0 ～ 0.15mm; limit value: 0.3mm.
3. Adjustment of driving/driven gear backlash and meshing trail
   - Adjustment of driving/driven gear backlash: Please refer to table for normal meshing clearance and backlash of driving and driven gears. During the adjustment of backlash, perform measurement at four positions evenly distributed along the periphery of driven gear. The measuring head of dial indicator should be vertical to the surface of measured points.
   - Adjustment of driving/driven gear meshing trail:
     Apply red lead powder onto the driving gear teeth and then rotate the driving and driven gears repeatedly, so there is red trail on both working surfaces of driven gear. If the trail on positive/reverse rotation working surface is located at the medium tooth height nearer to the small end as shown in the table below, the meshing trail position should be adjusted through adjustment of driving gear adjusting washer and differential bearing adjusting washer.

.

Downloaded from www.Manualslib.com manuals search engine

Adjustment of meshing marks:

Contact status of driven gear working flank	Causes	Adjusting method A-Tooth surface contact area adjustment B-Backlash adjustment	
Deflected to addendum	High driving gear, driven gear too far	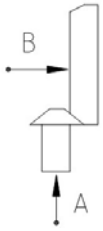	1. Driven gear away from driving gear 2. Driving gear close to driven gear to obtain correct backlash (adding washers)
Deflected to dedendum	High driving gear, driven gear too close	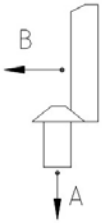	1. Driven gear close to driving gear 2. Driving gear away from driven gear to obtain correct backlash (reducing washers)
Deflected to small end	High driven gear, driving gear too close	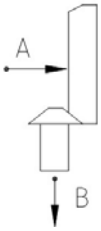	1. Driven gear away from driving gear 2. Driving gear away from driven gear to obtain correct backlash (reducing washers)
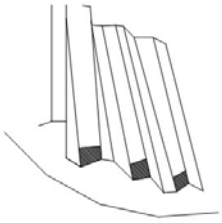 Deflected to big end	High driven gear, driving gear too far	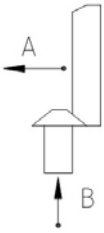	1. Driven gear close to driving gear 2. Driving gear close to driven gear to obtain correct backlash (adding washers)

Downloaded from www.Manualslib.com manuals search engine

Diagnosis and Testing

Troubleshooting

Fault	Causes	Solutions/Preventive Measures
Hub bearing sluggish	Excessive preload for hub bearing	Adjust the preload.
	Bearing lack of lubricant or adoption of improper grease	Add or change grease.
	Bearing contaminated by dust	Clean and add grease.
Hub bearing sluggish	Poor camshaft lubrication or adjusting arm failed to return	Add grease or correct faulty parts.
Wheel sticking	Return spring fracture or fatigue for brake shoe or air chamber	Replace faulty parts.
Abnormal driving sound	Improper differential gear clearance	Replace washer or gear.
	Excessive clearance between driving and driven gears	Replace washer or gear.
	Too small driving gear bearing preload	Adjust preload.
	Abrasion or damage of differential gear, planetary gear, spider thrust washers and etc.	Correct or replace faulty parts.
	Too low oil level	Add lube oil.
Lube oil leak	Wear, looseness or damage of oil seal	Replace oil seal.
	Looseness of final drive fastening bolt or damage of sealant	Tighten bolt or reapply sealant.
	Looseness of bearing support fastening bolt	Tighten bolt to the specified torque.
	Looseness of drain plug or damage of lining	Tighten plug or replace lining.
	Axle housing deformation due to overloading	Correct or replace axle housing.
	Vent plug blockage or damage	Clean or replace vent plug.
Insufficient brake force	Overheating or deterioration of brake lining	Replace brake lining.
	Improper fitting of friction lining	Correct the fitting position of brake lining.
	Brake drum flooded by water	Depress the pedal slightly during running to drain water.
	Grease on contact surface between brake lining or brake drum	Clear grease or replace brake lining.
Abnormal braking noise	Rivet extruded due to wear of brake lining	Replace brake lining.
	Hardening or deterioration of brake lining surface	Replace brake lining.
	Uneven wear or insecure installation of brake drum	Correct brake drum or tighten bolt.
	Untight contact between brake shoe and brake lining	Replace rivet.
	Looseness of brake shoe fixed pin	Tighten the lock screw of fixed pin.
	Hub bearing wear	Replace hub bearing.
	Deformation of brake drum	Replace brake drum.
	Improper installation of brake shoe or damage of return spring	Tighten fixed pin lock screw or replace return spring.
	Greasy or deteriorated brake lining	Clean or replace brake lining.
	Damage of brake bottom plate	Replace brake bottom plate.

Downloaded from www.Manualslib.com manuals search engine

Removal/Installation

Rear axle

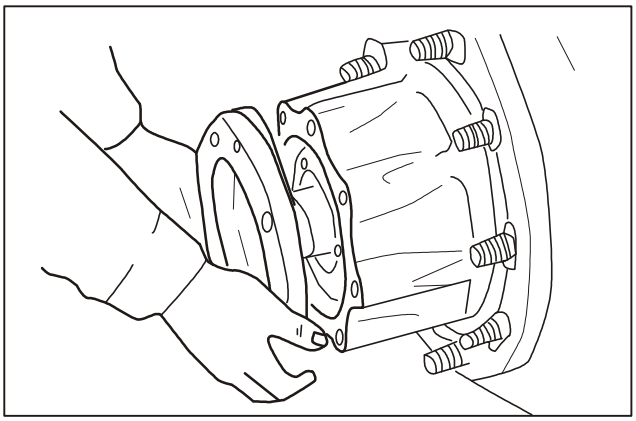

Removal of rear axle
1. Block the wheel front and back with anchor blocks.
2. Loosen outside wheel nut.
3. Jack up the rear axle.

Removal of axle shaft
1. Loosen axle shaft nut.
2. Remove axle shaft. If it is difficult to remove, please use copper hammer to knock on the axle shaft flange gently until it becomes loose.

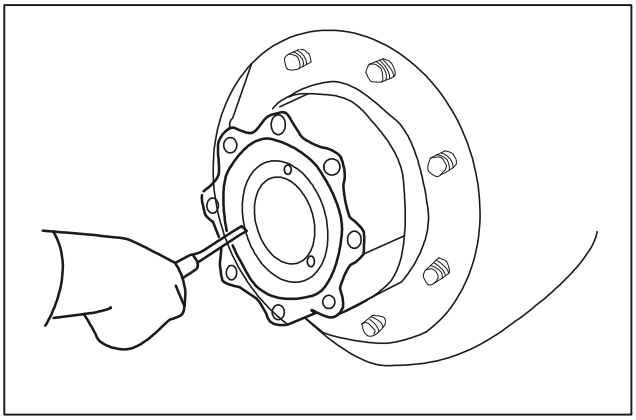

Disassembly of wheel hub
1. Remove lock washer.

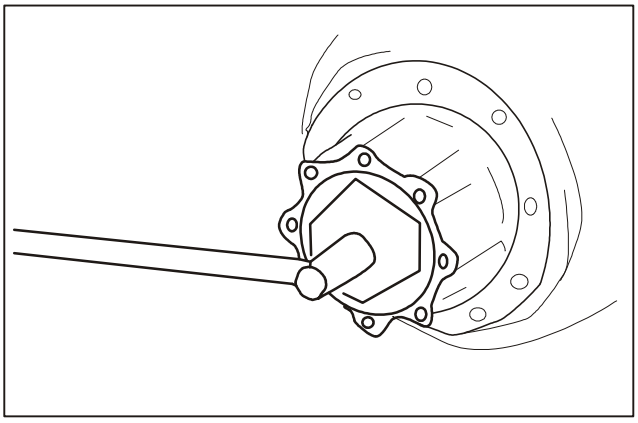

2. Remove hub bearing lock nut.

Attention:

Remove adjusting nut by using 7757 adjusting nut wrench for hub bearing.

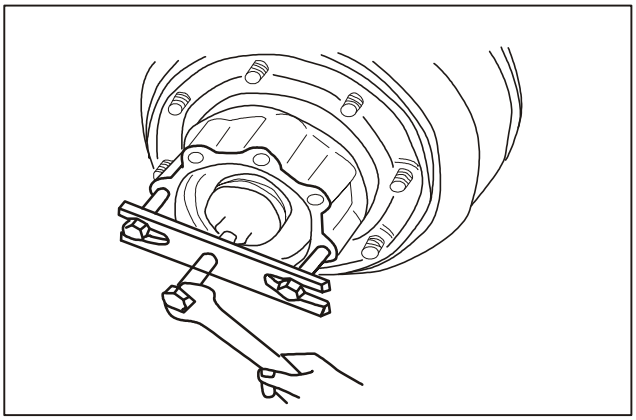

3. Remove hub assembly.

Attention:

Please apply the rear hub puller.

Downloaded from www.Manualslib.com manuals search engine

Removal/Installation (Continued)

Rear axle

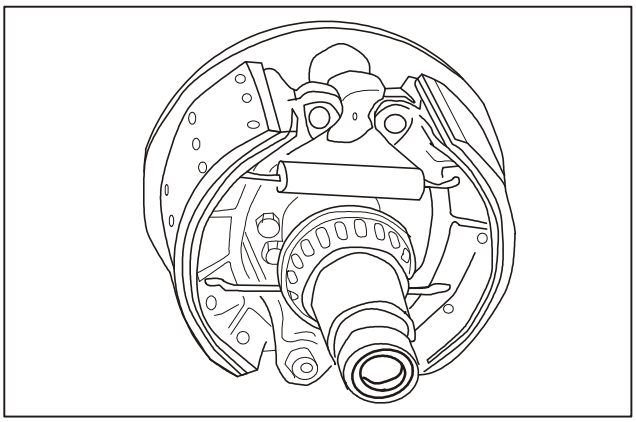

4. Remove axle shaft oil seal from the end of axle shaft sleeve.

Note:

During assembly, apply lithium base grease onto the outer ring of axle shaft oil seal and then press it into rear hub.

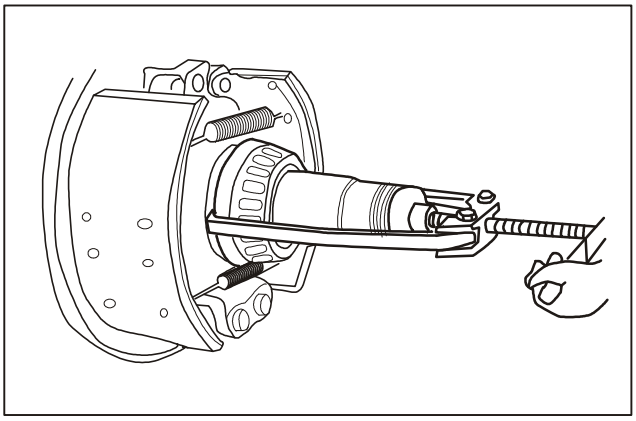

5. Disassemble together with the inner ring of inner bearing.

Note:

During assembly, oil seal bushing shall be pressed into axle shaft sleeve by using special pressing die after being heated.

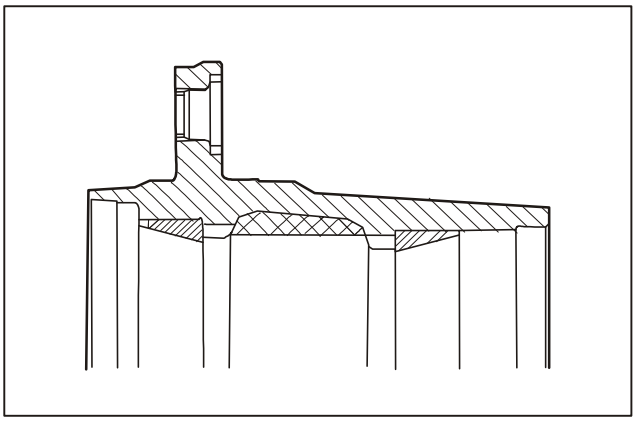

6. Remove oil seal from hub assembly.
7. Remove outer ring of inner/outer bearing.

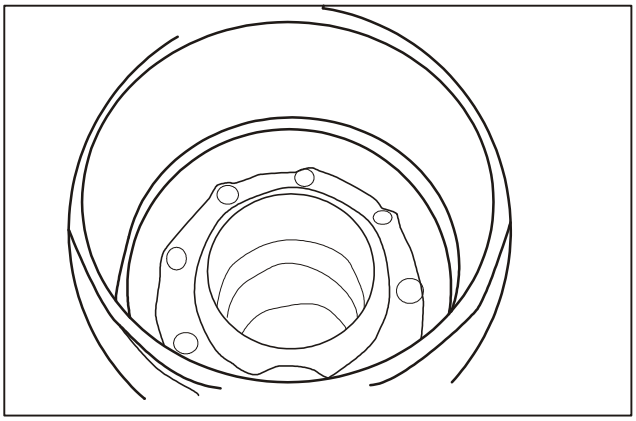

8. Remove brake drum.

Downloaded from www.Manualslib.com manuals search engine

Removal/Installation (Continued)

Rear axle

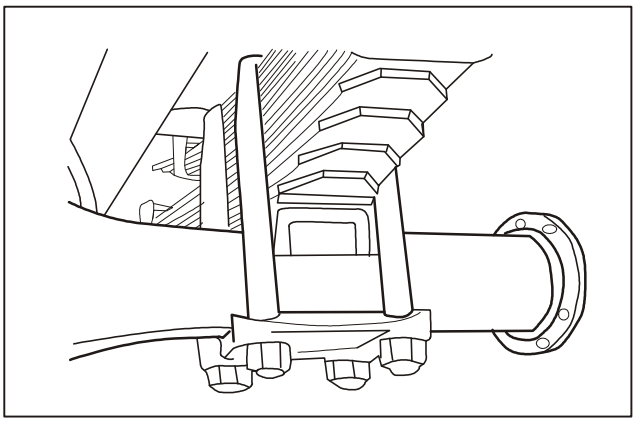

Disassembly of axle housing and final drive

1) Drain gear oil from final drive.
2) Disconnect the connection between propeller shaft and final drive.
3) Remove final drive assembly by using jack.
4) Remove hose, steel tube and electric wiring harness.
5) Remove brake assembly.
6) Remove rear axle.

- Jack up the axle housing.
- Remove U-bolt and upper/lower back plates, lower the jack and pull out the axle housing.

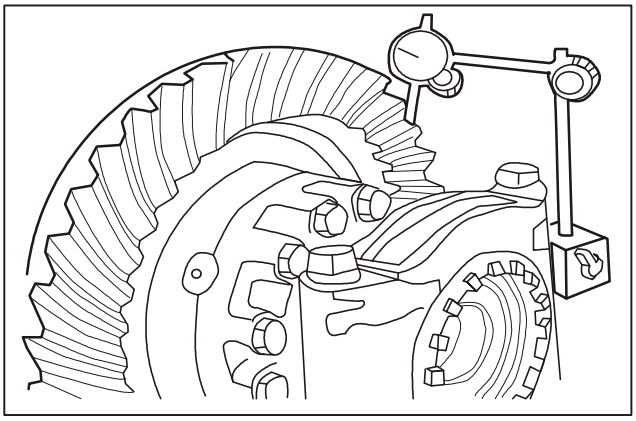

Disassembly of final drive assembly

1. Before assembly, measure and record backlash of driving/driven gear.

Attention:

After adjustment, check gear meshing status.

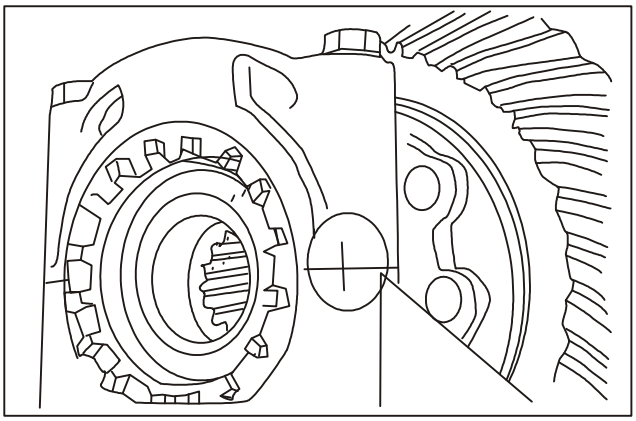

2. Make assembly marks on bearing cap and housing. The removed bearing cap and final drive housing should be placed separately at left and right side in pair, in order to avoid confusion.

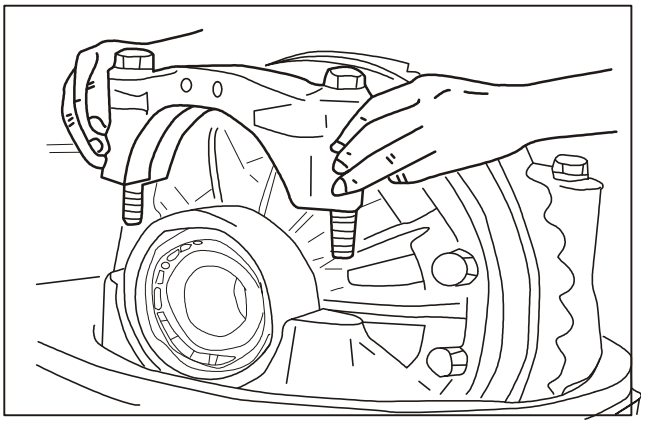

3. Remove bearing cap and bolt.

Downloaded from www.Manualslib.com manuals search engine

Removal/Installation (Continued)

Rear axle

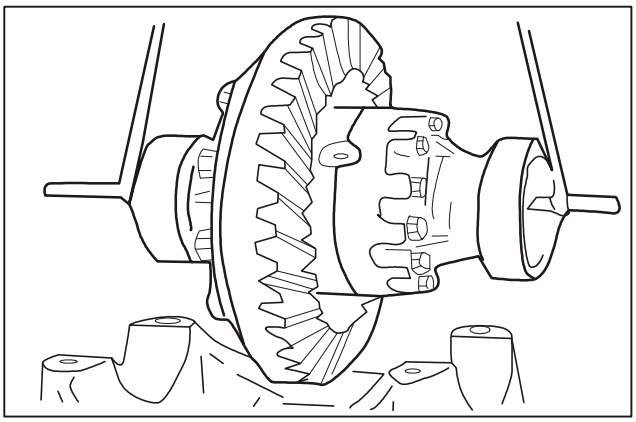

4. Remove differential assembly.

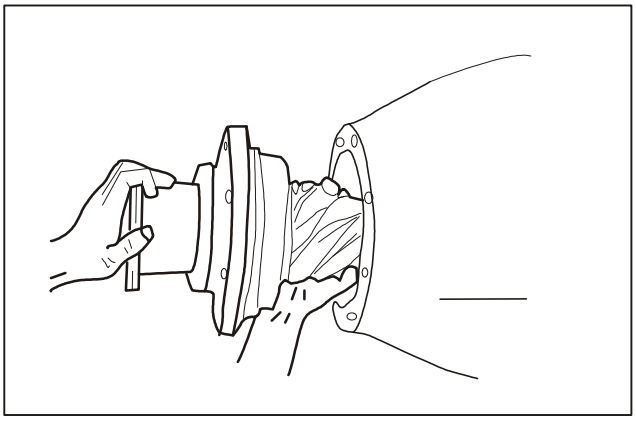

5. Remove driving gear assembly by using puller and remove adjusting washer at the same time.

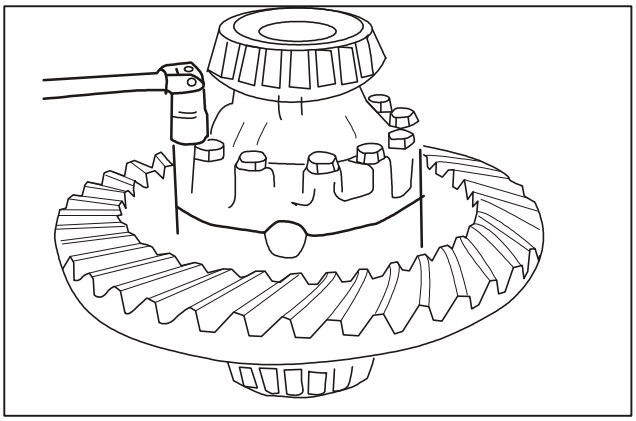

Disassembly of differential assembly

1. Remove differential right housing.

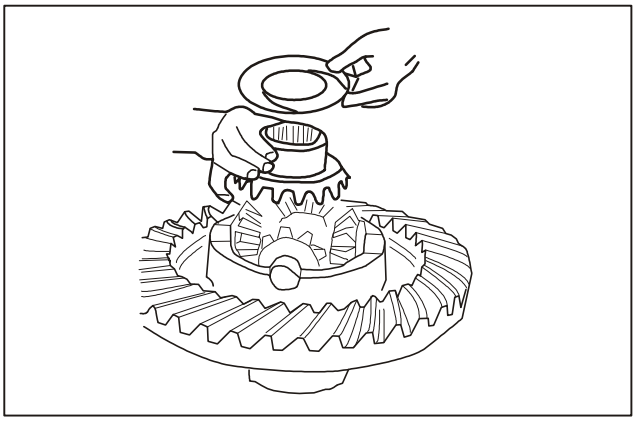

2. Remove differential gear and bearing washer.

Downloaded from www.Manualslib.com manuals search engine

Removal/Installation (Continued)

Rear axle

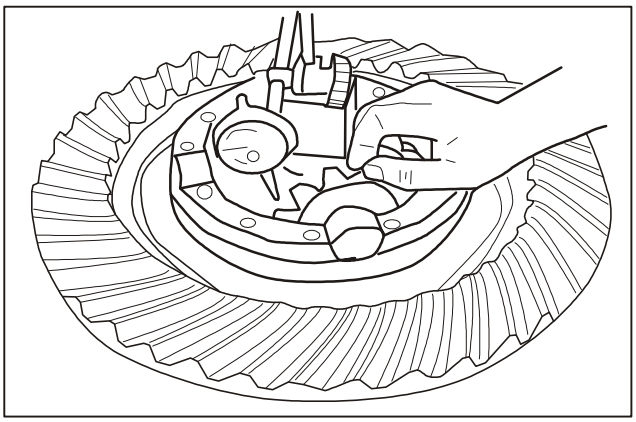

3. Measure and record planetary gear backlash.

Attention:

Please hold the planetary gear spider during backlash measurement.

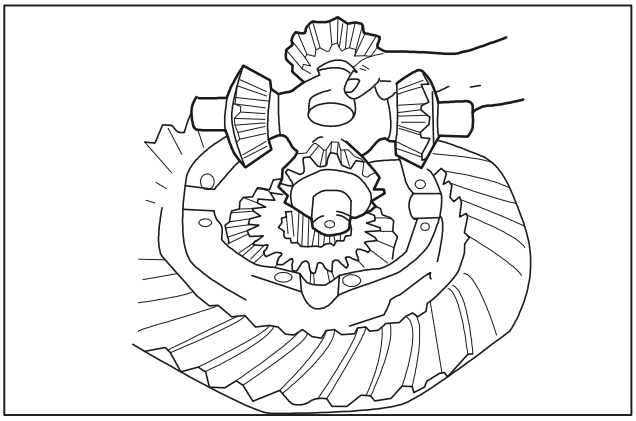

4. Remove planetary gear spider assembly and remove planetary gear and bearing washer from spider.

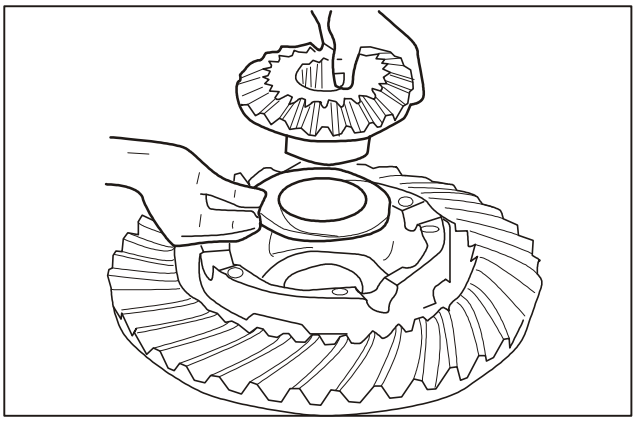

5. Take out the differential gear and its thrust washer.
6. Remove driven gear

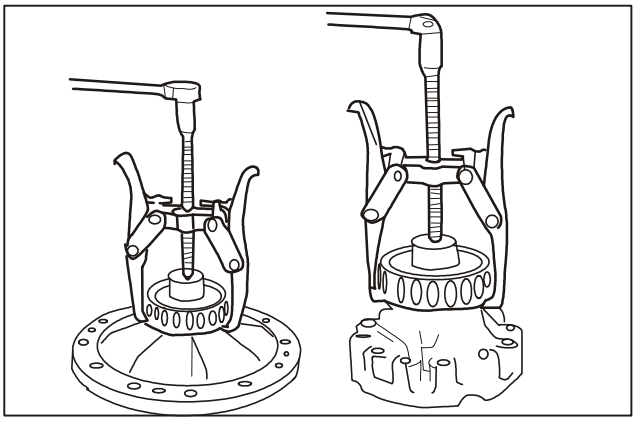

7. Remove differential bearing from differential housing.

Downloaded from www.Manualslib.com manuals search engine

Removal/Installation (Continued)

Rear axle

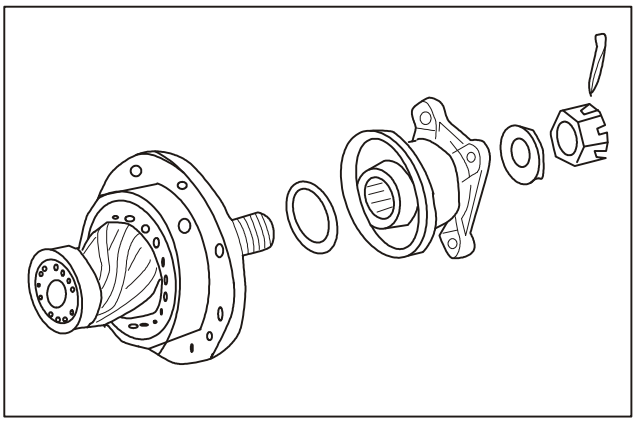

Removal of driving gear

1. Remove driving gear flange nut.

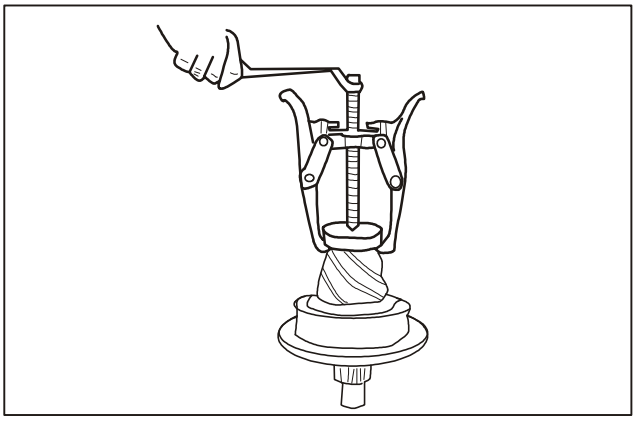

2. Remove retaining ring for shaft and remove driving gear guide bearing.

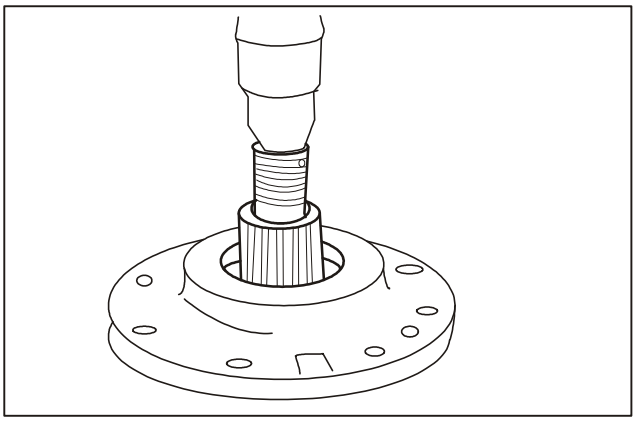

3. Extrude the driving gear out of bearing support.

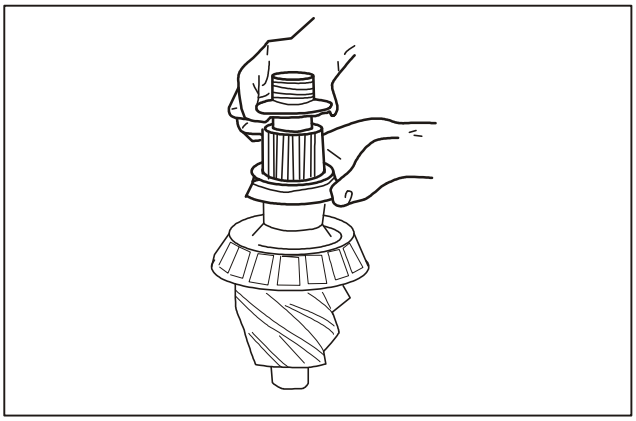

4. Remove adjusting washer and bearing spacer.

Downloaded from www.Manualslib.com manuals search engine

Removal/Installation (Continued)

Rear axle

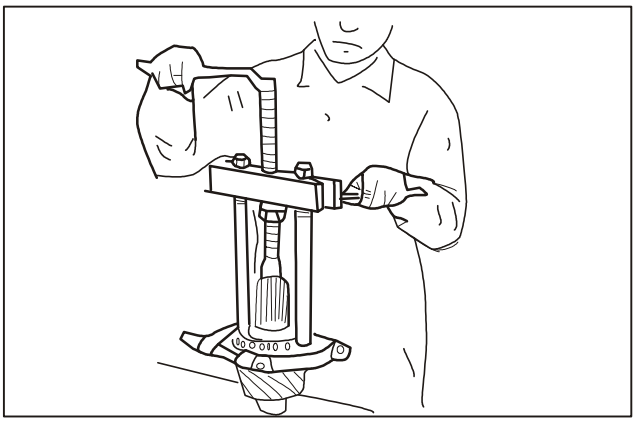

5. Remove bearing from driving gear.

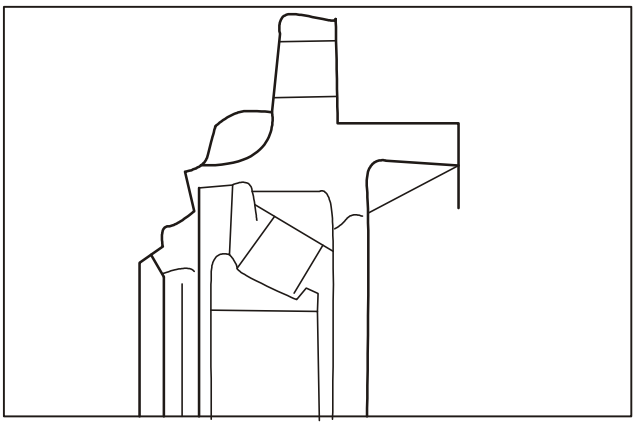

6. Remove oil seal from bearing support.
7. Remove inner and outer rings of bearing.

Inspection during removal

- Check driving gear flange for wear or damage.
- Check bearing for wear or color change.
- Check gear for crack.
- Check driving and driven gears for wear or crack.
- Check differential gear, planetary gear and planetary gear shaft for wear or crack.
- Check differential gear spline for wear or damage.

Downloaded from www.Manualslib.com manuals search engine

Specification

1. Structure type of rear axle

Item	Specification
Axle housing type	Integral press-welding axle housing
Axle shaft support type	Full-floating type
Reduction gear type	Single-stage hyperboloid spiral bevel gear
Planetary gear type	2/4 planetary gear

2. Sealant and adhesive for rear axle

Item	Specified Sealant and Adhesive
Fitting surface between rear axle housing assembly and final drive assembly	1587 Silicon rubber
Driven gear bolt	GY-340 Anaerobic adhesive
Differential housing bolt	GY-340 Anaerobic adhesive
Final drive housing bolt	Machinery sealant 605
Internal cavity of hub	Multi-purpose lithium base grease
Parts installation of final drive assembly	10# Engine oil

3. Rear axle wear parts list

Name	Qty.
Driving gear oil seal	1
Rear hub inner oil seal	2
Rear hub inner bearing	2
Rear hub outer bearing	2
Driving gear inner bearing	1
Driving gear outer bearing	1
Axle shaft oil seal	2
Driving gear nut	1
Differential bearing	2
Left/right friction	Respectively 2 pieces for left and right

4. Rear axle maintenance parameter list

Item	Value
Clearance between driving and driven gears	0.15～0.20
Clearance between planetary gear and differential gear	0～0.15 mm
Rotating torque of driving gear	Without oil seal; apply gear oil 18～21Kgf.cm
Rear axle gear oil	Hyperbolic gear oil: (GL-5) 85W/90; capacity: 2.5L
Oil applied onto outer lips and lips of axle shaft oil seal and driving gear oil seal	ZL-2 GB5671-85, multi-purpose lithium base grease
Clearance between brake lining and brake drum	0.4～0.7 mm

5. Main tightening torque list

Bolt (nut) name	R101(N.m)
Driving gear nut	245～294
Bolt - driven gear	114.6～140.1
Differential housing bolt	68.6～88.2
Final drive housing bolt	65～93
Bearing cap bolt	132.3～171.5
Rear brake bottom plate nut	50～60
Axle shaft bolt	46-80
Small hexagon bolt for lock washer	6～12
Oil filler plug	44.1～53.9
Drain plug	44.1～53.9

Downloaded from www.Manualslib.com manuals search engine

Specification

Item	Wear limit
Wear of rear axle leaf spring retainer location hole	1mm
Outer bearing journal radial runout of left/right axle shaft sleeve	0.1mm
Middle unprocessed surface of axle shaft	Radial runout 1.5mm
End face runout of joint surface between hub and axle shaft flange	0.15mm

Downloaded from www.Manualslib.com manuals search engine

Steering System

Applied models: SUNRAY products manufactured by JAC

Subject Page

Instruction and Operation

Steering System....152
Explosive View of Steering System....152
Introduction of Steering System....153

Diagnosis and Testing

Steering System....154
Operating Principle....155
Inspection and confirmation....156
Fault Symptom Table....159

Removal and Installation

Removal and Installation of Steering System....164
Removal and Installation of steering wheel....167

Downloaded from www.Manualslib.com manuals search engine

Instruction and Operation

Steering System

Summary of Power Steering System

With the purpose of reducing the working intensity of drivers, the power steering system is firstly installed on heavy-duty vehicles. However, with the increase of high speed demand and load on the steering wheel, the power steering has become necessary and its application range has been widened. The advantages of the power steering system are as follows:

It reduces the steering force applied on the steering wheel, especially in the case of static steering and low-speed steering with large steering angle, the assistance is obvious.

It enhances the steering sensitivity.

It reduces the impact on the steering wheel in the case of ground kick back.

In the case of certain tire burst, it may prevent the wheel from swerve thus it improves driving safety.

It enables the steering wheels to bear larger loads and increase the freedom of general arrangement.

The power steering system consists of:

Vehicle power steering system consists of the power steering gear, power steering pump, power steering oil reservoir and hydraulic line. The power steering gear is the actuator of the steering system hydraulic booster; the steering oil pump associates with the engine, playing a role in hydraulic power supply for the system; the steering oil reservoir possesses the function of storing, cooling and filtering of steering oil.

The structure of the power steering system is shown as follows:

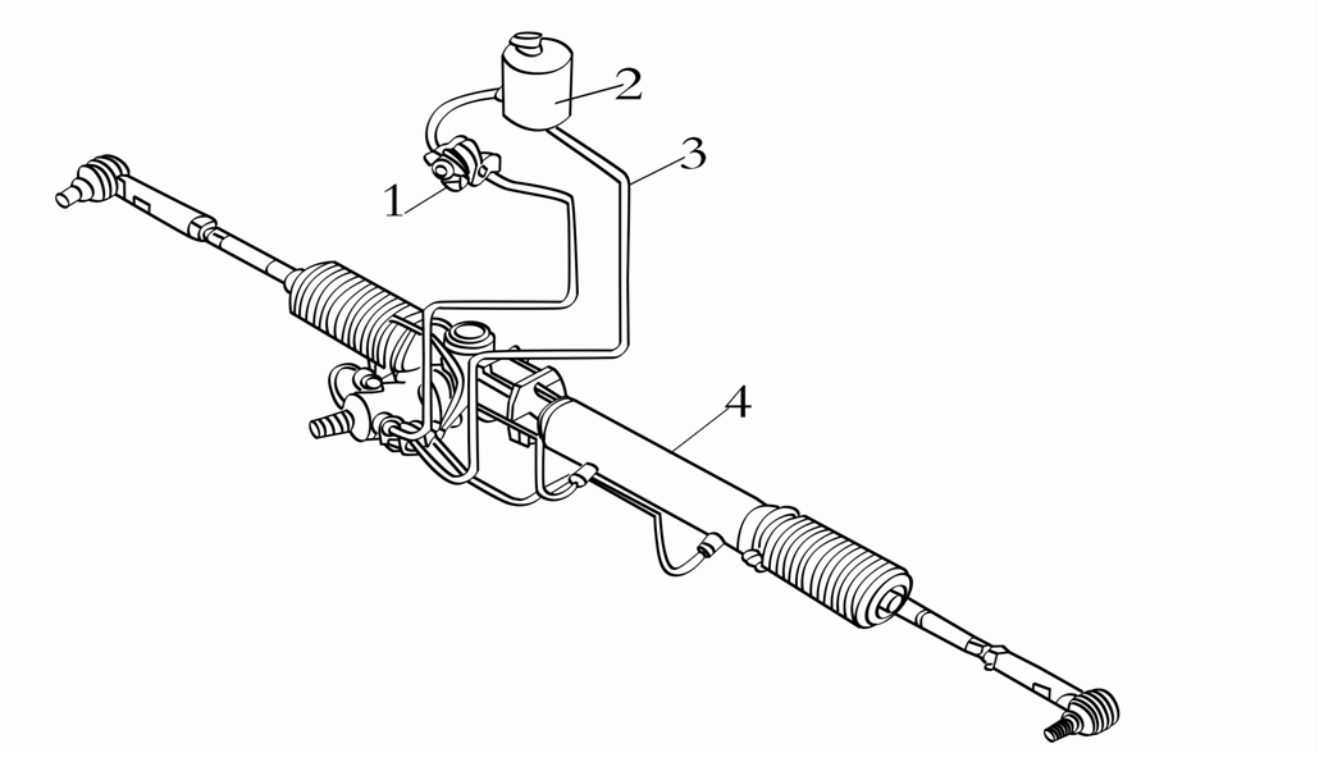

Structural Drawing of Power Steering System

Downloaded from www.Manualslib.com manuals search engine

Instruction and Operation

Structural Brief Introduction of Rack-and-pinion Power Steering Gear:

The rack-and-pinion power steering gear consists of the control valve, mechanical steering gear and power steering pump. The control valve is a structurally advanced and high sensitivity rotary valve and the mechanical steering gear is a rack-and-pinion one.

Control Valve:

As is shown in the under figure: As a normally open rotary valve, the control valve consists of 1 torsion bar, 2 input shaft, 3 valve pocket and other parts and inputs the hydraulic oil into two oil chambers on the left and right through the pre-open clearance between abovementioned 2 input shaft and 3 valve pocket.

Structural Drawing of Control Valve

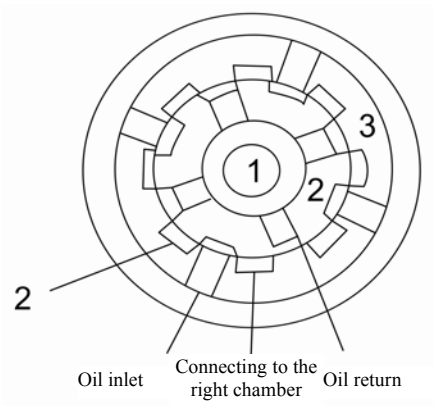

1. Torsion bar 2.Input shaft 3.Valve pocket

Mechanical Steering Part:

The mechanical steering part is a rack-and-pinion one, consisting of three parts as the gear shaft, rack piston assembly and steering link.

Power Steering Pump:

The power steering pump has a metal casing and the internal rack piston of the pump divides it into two oil chambers on the left and right which are connected to two oil ports of the control valve.

Operating Principle

Intermediate Position:

In the case of vehicle straight running (without any movement of the steering wheel), the hydraulic oil supplied by the oil pump goes into the oil inlet and then goes through the pre-open clearance of the rotary valve. At this moment, because there is no movement of the rotary valve, the hydraulic oil returns to the oil reservoir and the oil pressures in the two working chambers of the steering gear are the same that no assistance is generated.

In the Process of Steering:

In the case of steering wheel turning, there will be changes of the valve slot clearance between the valve pocket and the input shaft and there will be oil pressure differential formed by the hydraulic oil flowing into these two working chambers. The oil pressure differential acts on the piston, pushes it to overcome the steering resistance and generate displacement in order to drive the steering link assembly to move and realize the power-assisted steering.

In the Process of Return:

After the completion of steering, the force on the steering wheel disappears. With the elastic force effect of the torsion bar, the input shaft returns to a relatively equilibrium position with the valve pocket and the oil pressure differential between the two working chambers of the steering gear disappears correspondingly. Then, with the self-aligning torque effect of the front wheel, the vehicle will return to the position of straight running until the position has been reached.

Road Feel Effect:

The road feel effect is the ability to produce the steering feel. When there is a force applied on the steering wheel by the driver, the force acts on the torsion bar of the steering gear simultaneously to make the torsion bar twisted and deformed. However, the deformation depends on the steering resistance of wheels. With the increase of the steering resistance, the deformation increases. Therefore, the driver may determine the changes of the steering resistance according to the force he applies on the steering wheel in order to realize the “road feel “effect.

Downloaded from www.Manualslib.com manuals search engine

Power Steering Oil

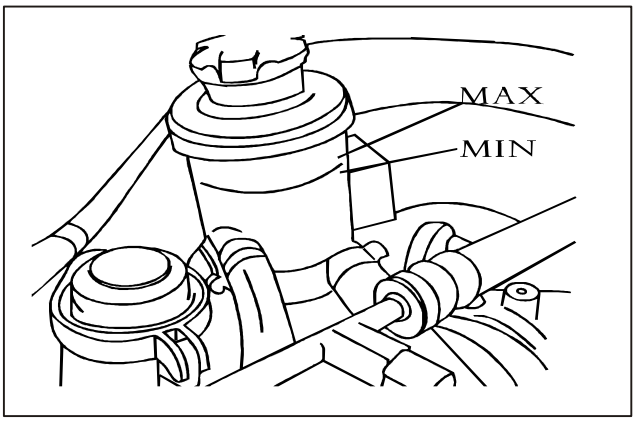

Inspection of Fluid Level:

1. The fluid level inspection should be carried out in the case of engine flameout.
2. Confirm that the fluid level is between MIN and MAX.

Notice:

The fluid level should not exceed the maximum value (MAX mark) to avoid power steering oil leakage.

Recommended Oil: ATF-III

3. Do not reuse the drained power steering oil.

Inspection for Steering Oil Leakage

Inspect the hydraulic joint for the existence of oil leakage, cracks, damages, looseness and wears.

① Start the engine and make the oil temperature in the power steering oil reservoir to reach 50 ～ 80℃（122～176°F）with the engine idling.

② Make full lock turns of the steering wheel to the left and right for several times.

③ Hold the steering wheel in the locking point position for 5 seconds and inspect carefully for the oil leakage at the same time.

④ In the case of oil leakage at the joint, loosen oil pipe nuts and retighten them with the specified torque.

Tightening Torque: 57～63N.m

Notice:

Do not excessively tighten the joint nuts to avoid O-ring, gasket and joint damages.

⑤ In the case of oil leakage from the power steering pump, please inspect the power steering pump.

⑥ Inspect the steering gear dust boot for oil agglutination.

Air Bleeding of Hydraulic System

In the case of incomplete air bleeding, there may be the following symptoms:

- Bubbles in the power steering oil reservoir
- Abnormal noise in the power steering pump

Notice:

In the operation of power steering pump, there may be liquid noise which does not affect system performance or durability.

1. Turn off the engine and make full lock turns of the steering wheel to the left and right for several times.

Notice:

Fill the power steering oil reservoir with oil and turn the steering wheel to make the fluid level to or above the MIN mark.

2. Start the engine, hold the steering wheel in the locking point position for 3 seconds with the engine idling and inspect for oil leakage.
3. Repeat Step 2) for several times with an interval of 3 seconds.

Notice:

When the steering wheel is in the locking point position, do not hold it for more than 10 seconds to avoid power steering pump damage.

4. Inspect the oil for bubbles and white foreign matters.
5. In the case of incomplete bubble or white foreign matter elimination, please turn off the engine and repeat Step 2) ~3) after complete elimination.
6. Turn off the engine and inspect the fluid level.

Notice:

Inspect whether the fluid level of the power steering oil reservoir changes in the range of 5mm in the cases of engine operation and engine flameout.

If the fluid level is not in the abovementioned range, repeat air bleeding for the system.

Change of Power Steering Oil:

1. Lift front wheels of the vehicle.

Notice:

The front wheels should be fixed with a rigid support.

2. Remove the oil return pipe from the power steering oil reservoir and block the oil return port of the oil reservoir.

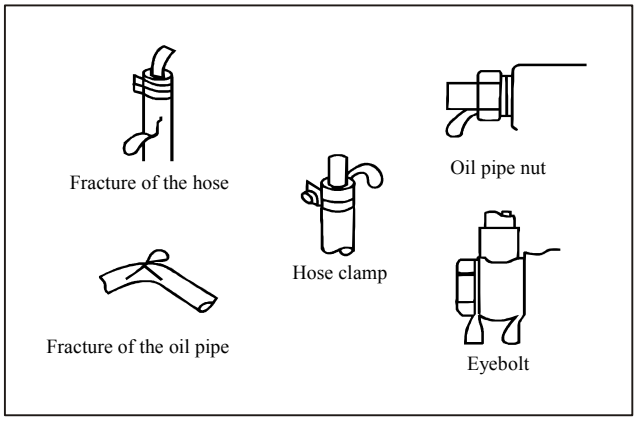

3. Connect the oil return pipe with a general oil pipe and drain the power steering oil to a vessel.
4. Start the engine, turn the steering wheel to the left and right and drain the power steering oil.

Notice:

It is necessary to refill the power steering oil and

Downloaded from www.Manualslib.com manuals search engine

keep the fluid level between MIN and MAX to avoid dry friction of the power steering pump.
Excessively lone engine operation is not appropriate. In the case of decreasing fluid level of the steering oil to MIN, it is necessary to turn off the engine.

5. Connect the oil return pipe and refill with new power steering oil to the standard fluid level.
6. In the case of unsatisfactory power steering oil quality, repeat Step 2) ~5).

Notice:
After oil change, carry out system air bleeding.
Inspect Pulley Tension of the Power Steering Pump:
Apply a force of 100N in the upward center of the V-belt between the power steering pump and the engine crankshaft, the deflection of the belt shall in the range of 11.7 ～ 15.3mm.In the case of out-of-range deflection, loosen adjusting bolts of the tension pulley and adjust the belt tension to make it qualified.

Steering Wheel

On-car Inspection:

1. Inspection of Installation

① Inspect the installation of the steering gear assembly, front suspension, axle and steering column.
② Inspect the steering wheel for its movement clearance in the cases of steering wheel upward and downward, leftward and right ward and axial movements.
③ Inspect mounting nuts and bolts of the steering gear assembly for their looseness.

2. Inspection of Steering Wheel Free Play

① Turn the steering wheel to make the front wheels in the straight-ahead position, start the engine and then turn the steering wheel slightly to the left or right until front wheel movement. At this moment, measure the displacement of the steering wheel on its outside edge.
Free Play of the Steering Wheel: 30mm
② When the measured value exceeds the standard value, inspect the installation of every steering column connector and the steering mechanism. Carry out correction or part replacement according to actual situations.
③ If the free play exceeds 30mm, turn off the engine, keep front wheels in straight running and apply a force of 5N on the steering wheel circle for the inspection of the free play. The free play should not exceed 10mm.If the free play exceeds 10mm, inspect whether the steering gear is qualified.
④ If the free play is still a limit value, make the steering wheel to the intermediate position, apply a force of 4±0.6N on the steering wheel circle and then inspect the free play.
Standard Value: <15mm
⑤ If the free play exceeds the standard value, remove the steering gear and inspect the total torque of the pinion.

3. Inspection of Intermediate Position

① Confirm the proper installation of the steering gear assembly, steering column and steering wheel.
② After wheel alignment, carry out intermediate position inspection. Please refer to “Inspection of Front Wheel Alignment”.
③ Park the vehicle straight-ahead and confirm that the steering wheel is in the intermediate position.
④ Loosen lock nuts of the tie rod and carry out fine tuning of the adjusting lever by turning it to the left and right to confirm whether the steering wheel is in the intermediate position.

4. Inspection of Steering Wheel Static Steering Force

① Park the vehicle on a horizontal and dry ground and pull up the parking brake lever.
② Start the engine.

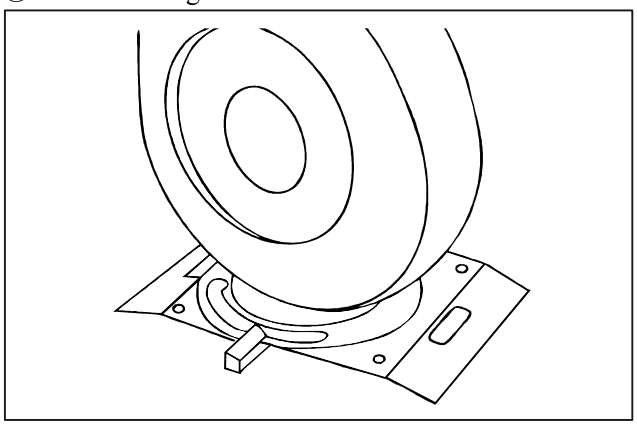

③ Keep the engine operating and rise the temperature of the power steering oil to its working temperature.

Notice:
The tire pressure should in the range of its standard value.

④ Turn the steering wheel for 360° from its intermediate position, inspect the steering force of the steering wheel for its obvious fluctuation.
Steering Force of the Steering Wheel: < 34N
Permitted Fluctuation: < 5.9N
⑤ If the steering force of the steering wheel exceeds the specified value, please inspect or adjust the following items:
   a. Damages of lower swing arm and ball joint of the steering tie rod
   b. Gear preload of the steering gear and angular moment of the steering tie rod ball joint.
   c. Torque of the lower swing arm ball joint

5. Inspection of Steering Wheel Self-return

Notice:
In the case of slow or quick turn, confirm whether there are differences of the acting force and

Downloaded from www.Manualslib.com manuals search engine

returnability between the left and right side.

It is necessary to carry out this step on safe ground and under safe traffic condition and pay attention to your safety.

① Turn the steering wheel for 90°, drive with the speed of 35Km/h, maintain the state for several seconds and then release the steering wheel, the returnability should be 70% at least.

Notice:

In the case of rapid turning of the steering wheel, there may be a transient feel of "arduous"due to insufficient oil supply during idling and it is not a fault.

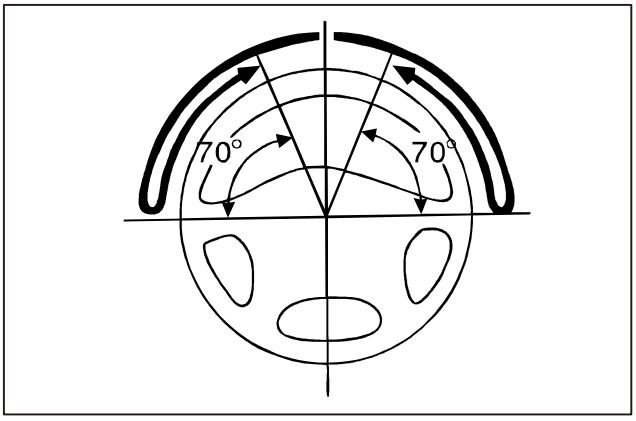

6. Inspection of Front Wheel Steering Angle

① After the inspection of front wheel toe-in, inspect the steering angle of the front wheel. Place the front wheel on the steering angle measuring device (front wheel alignment steering wheel) and inspect the maximum steering angles of inner and outer wheels on the left and right.

Inner Wheel:

Outer Wheel:

② In the case of engine idling, make full lock turns of the steering wheel to the left and right to measure the steering angle.

If the measured value is not in the standard range, adjust the tie rod.

The adjustment of the steering angle is as follows:

When the steering angle exceeds the standard value, loosen lock nuts of the left and right steering tie rods, rotate the left and right steering tie rods respectively with a wrench to adjust the steering angles to the standard values and then tighten the lock nuts with a tightening torque of 45～55N.m.

In the length adjustments of the left and right steering tie rods (length shown in the following figure), pay attention to adjust them to the same value for the left and right steering tie rods （208.7mm,in reversed directions）

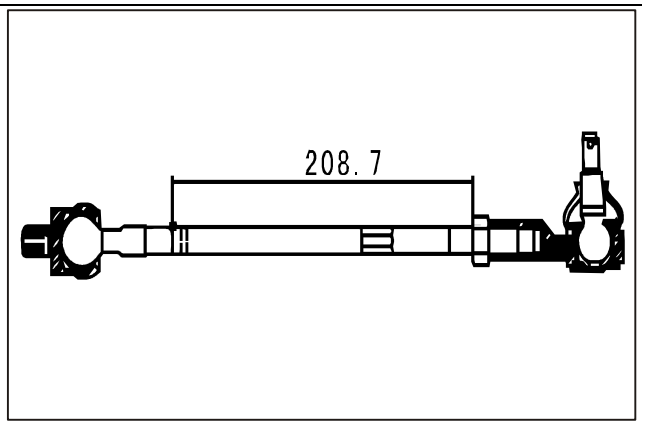

Notice:

When the steering angle of the inner wheel exceeds the standard value, adjust the tie rod at this side to rotate outward and the steering angle of the inner wheel will increase; When the steering angle of the outer wheel exceeds the standard value, adjust the tie rod at this side to rotate outward and the steering angle of the outer wheel will decrease.

Notice:

The adjustment of the toe-in is interrelated with those of the wheel alignment parameters and the steering angle.

7. Inspection of Ball Joint Dust Boot

① Press the dust boot with hand to inspect it for crack or damage.

② In the case of cracked or damaged dust boot, it is necessary to replace the tie rod ball joint.

Notice:

In the case of cracked or damaged dust boot, the ball joint may be damaged jointly.

8. Inspection for Angular Moment of Steering Tie Rod Ball Joint

① Swing the tie rod rapidly for 10 times.

② Measure the swing resistance of the tie rod with a spring scale.

Standard value: 2～5 N.m

If the measured value is not in the range of standard value, please replace it.

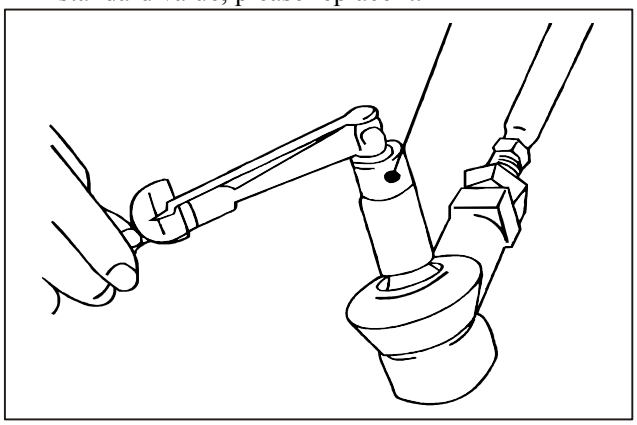

Downloaded from www.Manualslib.com manuals search engine

Inspection and Replacement of Steering Mechanism Parts:

Inspection of Rack Piston Assembly:

Inspect the straightness accuracy for the intermediate rack of the rack piston assembly and the maximum deviation is 0.15mm. Inspect the tooth face for exfoliation and impression, verify whether there are cracks or damages on the operating surface of the tooth and inspect the back of the tooth for wear and damage. If necessary, replace the rack piston assembly. Inspect the piston ring and o-ring in the piston for damages. In the case of defects in them, it is necessary to carry out replacement. In the replacement, remove the piston ring and o-ring with a flat-blade screwdriver.

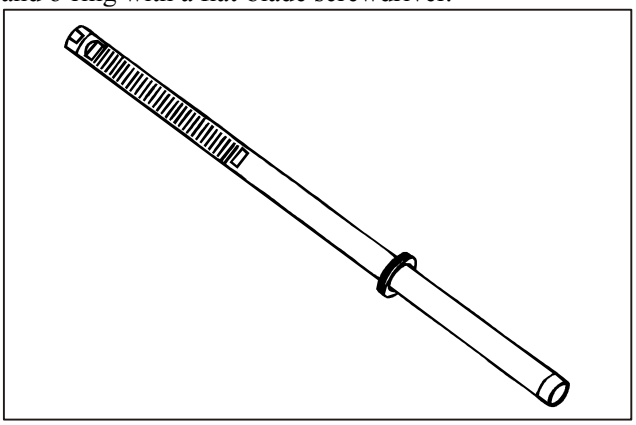

Notice:

Pay attention not to damage the rack. Apply some power steering hydraulic oil on the new o-ring and install the o-ring.

Notice:

Pay attention not to expand the piston ring excessively. Install the new piston ring onto the piston of the rack piston assembly, apply some power steering hydraulic oil on the new piston ring and press it out downward with fingers.

Inspection of Valve Assembly

Inspect the gear shaft tooth surface of the spool assembly for cracks, damages, exfoliations or deformations. Inspect it for its flexible rotation, in the case of any defects, replace the spool assembly.

Steering Column

Figure for Steering Column Assembly:

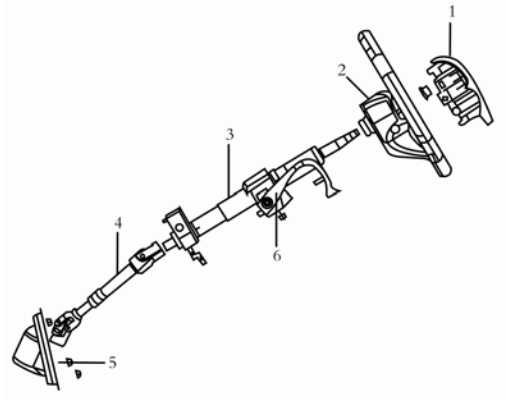

Schematic Diagram of Steering Column Assembly

1. Horn hood with airbag
2. Steering wheel
3. Steering column assembly
4. Connecting shaft with universal joint
5. Protective cover
6. Free upward and downward adjustment and locking device of the steering wheel

Inspection of Steering Column:

① Inspect the steering column for cracks, deformations or other damages, in the case of such defects, carry out relevant replacement.

② Inspect the spline of steering column shaft for wear or broken tooth, in the case of such defects, carry out relevant replacement.

Original Figure of Power-assisted Steering Gear Box

Notice:

In the case of separation of the steering column and steering gear assembly, rotation of steering wheel may lead to clock spring damage. Therefore, it is necessary to fix the steering wheel to prevent it from rotation.

① Power-assisted Steering Gear Box

Inspect the oil pipe joint for looseness and damages.

Inspect the fixed bush of the power steering gear for wears or other damages.

Inspect the rack and pinion for their smooth operations and wears.

Inspect the gear preload.

a. Rotate the gear with the speed of 4~6 seconds per turn and measure the gear preload in the whole travel range of the rack.
   Standard value: 0.6～1.3N.m
b. If the measured value exceeds the specified value, adjust the plug firstly and then reinspect the gear preload.
c. If the specified gear preload can not achieved after plug adjustment, inspect or replace the plug assembly.

② Steering Tie Rod

Inspect the angular moment of steering tie rod.

a. Swing the tie rod rapidly for 10 times.
b. Measure the swing resistance of the tie rod with a spring scale.
   Standard value: 2～5 N.m
   If the measured value is not in the range of standard value, please replace it.
   Notice:
   In the case of no excessive clearance of the tie rod under the slow swing condition, even though the measured value is lower than the standard value, the tie rod can be applicable. If the measured value is lower than 4.3N.m, it

Downloaded from www.Manualslib.com manuals search engine

is necessary to replace the tie rod.

③ Tie Rod Dust Boot

Inspect the dust boot for damage, in the case of such defect, please carry out replacement.

Inspect the dust boot for its correct mounting position.

Post-installation Inspection

Make full lock turns of the steering wheel to the left and right for several times to verify its flexible operation.

Inspection and Replacement of Steering Mechanism Parts:

Inspection of Rack Piston Assembly:

Inspect the straightness accuracy for the intermediate rack of the rack piston assembly and the maximum deviation is 0.15mm. Inspect the tooth face for exfoliation and impression, verify whether there are cracks or damages on the operating surface of the tooth and inspect the back of the tooth for wear and damage. If necessary, replace the rack piston assembly. Inspect the piston ring and o-ring in the piston for damages. In the case of defects in them, it is necessary to carry out replacement. In the replacement, remove the piston ring and o-ring with a flat-blade screwdriver.

Notice:

Pay attention not to damage the rack. Apply some power steering hydraulic oil on the new o-ring and install the o-ring.

Notice:

Pay attention not to expand the piston ring excessively. Install the new piston ring onto the piston of the rack piston assembly, apply some power steering hydraulic oil on the new piston ring and press it out downward with fingers.

Inspection of Valve Assembly

Inspect the gear shaft tooth surface of the spool assembly for cracks, damages, exfoliations or deformations. Inspect it for its flexible rotation, in the case of any defects, replace the spool assembly.

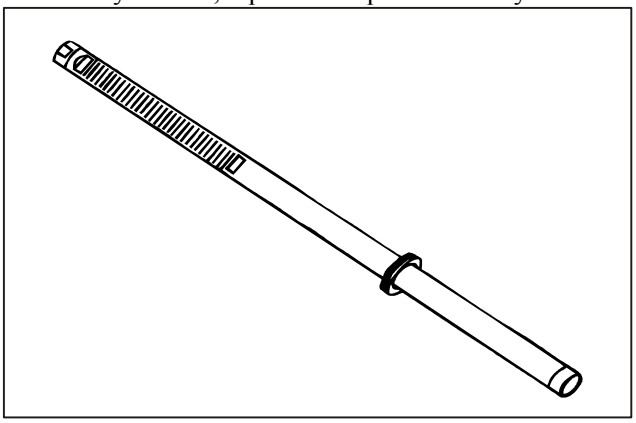

On-car Inspection of Power-assisted Steering Pump:

Inspection of Release Oil Pressure

Notice:

Prior to implementation, please confirm the belt tension.

① Remove the oil pipe from the power steering pump and connect the pump with a pressure gauge.

② Open the valve and carry out air bleeding for the hydraulic line.

③ Start the engine and turn the steering wheel for several times to raise the oil temperature to about 50℃.

Notice:

In engine start, it is necessary to keep belts and hoses for other parts clean.

④ In engine idling, close the pressure gauge completely to measure the release oil pressure.

Notice:

The time for closed valve should not exceed 10 seconds.

⑤ After the measurement, open the valve slowly. If the release oil pressure is not in the range of standard value, please replace the power steering pump.

⑥ After the inspection, disconnect the pressure gauge from the hydraulic line and refill with new oil and carry out air bleeding for the line.

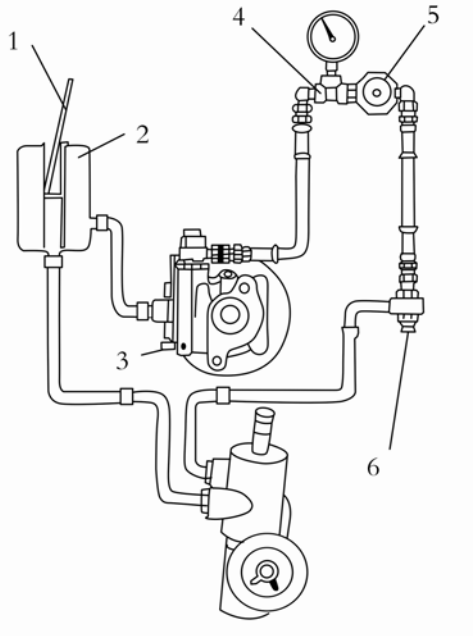

Figure for Power Steering Pump Assembly

1. Temperature gauge
2. Power steering oil reservoir
3. Power steering pump
4. Pressure gauge
5. Stop valve
6. Joint

Downloaded from www.Manualslib.com manuals search engine

Common Fault Diagnosis Table

Fault	Fault Symptom	Fault Cause	Troubleshooting
Oil leakage	Oil leakage from the power steering pump	Damage in oil seal of the power steering pump	Replace the power steering pump oil seal
	Oil leakage from the oil pipe and oil reservoir	High-temperature aging and poor connection etc. of the oil pipe	Replace the oil reservoir and oil pipe
Damage	Damage in the power steering pump	Damage in oil seal of the power steering pump	Replace the power steering pump oil seal
		Damage in power steering pump casing	Replace the power steering pump
Seizure	Low system pressure	Blockage in slide valve	Remove the slide valve, grind and clean it in order to make it slide smoothly
	Insufficient power steering pump flow	Blockage in slide valve and spring failure	
Internal pressure relief	No pressure in steering system	Seizure in slide valve assembly of the steering pump, serious wear in parts	Inspect the safety valve/relief valve, change the oil and replace the steering pump
	power steering gear	Internal pressure relief in the power steering gear	Inspect the safety valve/relief valve, change the oil and replace power steering gear
		Oil seal failure in the power steering gear	Replace the oil seal or power steering gear
		Excessive early activation of the steering limiter	Adjust the limiter
Noise	Abnormal noise in the power steering pump	Air entrainment	Carry out air bleeding for the steering system
		Damage in drive components of the power steering pump	Replace the power steering pump
	Noise in the oil pipe/power steering oil reservoir	The oil pipe amplifies the noise in the steering pump and the flow noise of liquid which is flowing in the oil pipe is not absorbed and superimposed so that there is excessive large noise in the system.	It can be solved by optimizing the matching of the steering system only and part replacement alone can not solve it at all. And a resonance tube can be installed in the oil pipe.

Downloaded from www.Manualslib.com manuals search engine

Fault	Fault Symptom	Fault Cause	Troubleshooting
Arduous steering wheel operation	Arduous turns to the left and right of the steering wheel	Too low oil level in the power steering oil reservoir	Refill with oil
		Air entrainment	Carry out air bleeding
		Seize in the steering column or steering link	Adjust the link.
		Filter element blockage in the power steering oil reservoir	Clean and replace the power steering oil reservoir and change the steering oil
		Damage in the power steering pump	Inspect the output operating pressure of the hydraulic pump with a pressure gauge and inspect the pump for damages; in the case of insufficient pressure or flow in the power steering pump, further inspect the hydraulic oil filter and pipeline for blockage.
		Poor performance of the power steering gear	Inspect the power steering gear for damage
		Inspect the v-belt for slipping and looseness; in the case of gear drive, inspect the engagement of the drive gear pair	Inspect and adjust each part
		Air in the system	Inspect for leakage/carry out air bleeding
	Arduous quick turn of the steering wheel during idling	Low internal pressure in the power-assisted system, such as insufficient oil supply of the power steering pump; slipping and looseness of the drive belt. Improper adjustment of the relief valve; Deformation of the high pressure oil pipe due to high pressure oil, which may lead to pressure hysteresis and air entrainment in the hydraulic system.	Inspect and adjust the whole steering system
		Internal wear in the power steering pump	Replace the power steering pump and clean the whole steering system

Downloaded from www.Manualslib.com manuals search engine

Troubleshooting for Common Faults:

Oil leakage:

1. Verify whether there is oil leakage in oil pipe of the steering system, joints of the power steering oil reservoir, power steering gear and power steering pump.
2. At the oil inlet of the power steering pump, in the case of oil pipe looseness, there will be oil leakage here. Therefore, it is not allowed to impact the oil inlet of the power steering pump (for the oil pipe is interference fitted into the pump body, please handle with care)
3. In the case of oil leakage in the joint between the oil pipe and the high pressure oil outlet of the power steering pump, replace the o-ring and tighten the mounting bolts on the oil pipe. The oil leakage fault is not related with the pump quality and there is no need to replace the oil pump.
4. In the case of oil leakage in the power steering oil reservoir, if there is excessive oil filling in the oil reservoir or poor seal of the oil reservoir joint, when excessive engine bucking occurs, there will be oil leakage in the power steering oil reservoir cap under the condition of driving on rough road. Such oil leakage occurs constantly and it should be not considered as oil leakage in the power steering pump or power steering oil reservoir. In this case, clean the power steering pump and power steering oil reservoir carry out reinstallation for them and observe carefully and confirm the oil leakage in order to confirm the proper oil filling and require customers for regular maintenance and daily cleaning.

Troubleshooting for oil leakage:

1. Verify and inspect the oil leaky parts carefully, replace oil seals and oil pipes and tighten joint bolts. The tightening torque for the large nuts of the power steering pump high pressure oil outlet is 55 ～65N.m and it is not recommended to carry out installation of the high pressure oil pipe and the nuts with a torque larger than 60 N.m or the screw thread in the power steering pump aluminum casing may be damaged.
2. In the case of low oil level, carry out timely refilling of the power-assisted steering oil to the specified value. And in oil refilling, the oil level is not allowed to exceed the mark on the power steering oil reservoir.
3. Clean the leaky oil on the power steering pump, power steering oil reservoir, oil pipe and relevant joints for accurate distinguishing of oil leakage or excessive oil filling.

Abnormal noise:

1. Low oil level in the power steering oil reservoir, oil leakage or air entrainment in the system, blocked filter element in the power steering oil reservoir may lead to insufficient oil suction of the power steering pump.
2. Dirty interior of the steering system may lead to excessive wears in the stator, rotor, oil distributor, end cover and input shaft.
3. Design and installation of the oil pipe, blockage, and bucking, excessive deformation of the oil pipe in its installation and poor matching of the system may lead to resonance and unsmooth system oil inlet and outlet,etc.
4. Overload operation of the steering system may lead to excessive wear in the stator, rotor in the power steering pump and further lead to irregular movement of the oil in the pump which may generate abnormal noise (In the case of noise existence “shorter than 6 seconds”, turn the steering wheel to its limiting position, the generated“tehee”sound is normal).
5. In the case of frequent and excessive long-term limit steering of the power steering pump, there should be lots of bubbles in the steering system. The noise in the system decreases after oil change and abnormal noise and lots of bubbles occur after road test. In this case, such fault is not relative with the performance and function of the power steering pump and power steering gear. It is recommended to change the steering oil reservoir and oil in it and it is preferable to use an oil reservoir with internal steps or curved tracks.
6. Noise in other rotating parts of the engine, such as: bearings in the water pump, air conditioner compressor, tensioner, pulley, etc. eg. In the case of loose belt, there may be “squeaks”coming from the front end bearing of the power steering pump. eg. After a certain time of vehicle running, when the steering wheel is turned to left or right limit position, abnormal noise may occur in some vehicles. In this case, inspect the belt for there may be changes in the required torques for the steering system in limiting positions. And belt looseness and slipping may generate noise on the pulley of the power steering pump.
7. Low mounting position of the power steering pump, driving on extreme rough road etc. may lead to lots of silts and oil stains on the oil pump casing which may cause damage in the input shaft housing of the power steering pump by foreign matters and then corrosions by water, acid and alkali. In the case of irregular maintenance of the whole steering system, the ball bearing of the power steering pump may easily burnt or seizured and abnormal noise and arduous steering wheel operation may occur under this condition at the same time.
8. Looseness in the mounting brackets of the power steering gear and power steering pump, internal wear in the power steering gear and improper adjustment of the pinion and rack.

Downloaded from www.Manualslib.com manuals search engine

9. Improper matching of system components before leaving factory may lead to unable vibration absorbing of pipeline as well as faults like abnormal noise, failure of the system. Eg. In the case of no noise reduction device or corresponding vibration damper in the pipeline, there will be noise and failure in the whole system. In this case, oil pipe with different noise reduction effect may be applicable instead. However, in such replacement, there is a high demand of technical requirements and it should be carried out by professional staff from the manufacture for better troubleshooting.

Troubleshooting for abnormal noise:

1. Clean the whole steering system and carry out air bleeding for the system. Adjust belt tension or replace the belt. Inspect and repair oil pipes, power steering oil reservoir, power steering pump and power steering gear, change with new power steering oil and replace the power steering oil reservoir.
2. Replace the steering high pressure oil pipe and a new one with vibration damping effect or possessing good matching to the system may be applied.
3. Inspect other rotating parts, tension the pulley, and clean the power steering pump and power steering gear. In special cases, it is necessary to replace the power steering pump or power steering gear assembly.

Arduous steering wheel operation:

1. Dirty interior of the power steering oil reservoir, blockage in the filter screen or low oil level in the power steering oil reservoir.
2. A great quantity of air in the power steering system
3. Foreign matters in the steering system may lead to seizure in the flow control valve of the steering pump, serious wear of parts in the power steering pump and internal leakage of the pump.
4. Excessive wear in the piston cylinder of the power steering gear, poor sealing performance of the oil seal, bonding or damage in the control valve.
5. Insufficient tire pressure, interference in the power steering pump steering column , loose connection, looseness or slipping of power steering pump belt or loose mounting position of the pump
6. Loose bolts in joints of oil pipes which may lead to steering oil leakage and insufficient flow in the system.

Troubleshooting for arduous steering wheel operation:

1. Inspect the power steering gear, control valve of the power steering pump, oil reservoir filter screen and steering oil, clean the whole power steering system (it is preferable to clean with kerosene and it is not allowed to disassemble the pump body. Instead, remove bolts on the control valve chamber of the pump and take out the pump body for simple cleaning)
2. In the case of dirty power steering pump, it is necessary to clean the interior and exterior of the power steering pump and oil pipes (it is not allowed to clean with cotton gauze or other multi-fiber cloth but carry out cleaning with clean brush). Pay attention to system cleanness and there should not be any visible impurities entering the pump and system.
3. Refill the oil reservoir to the specified oil level, inspect or replace the oil reservoir.
4. Adjust the belt tension according to specifications and tighten coupling bolts for every component.
5. Inspect joints of oil pipes and tighten connecting nuts here.
6. Replace oil pipes, the power steering pump or the power steering gear.

Emulsible foam in the steering power oil:

Fault cause:

1. There is air in the steering system.
2. There is liquid leakage in the steering system.

Troubleshooting for the fault:

1. Carry out air bleeding, inspect for oil leakage and solve such problem.
2. Inspect the power steering oil reservoir and refill the oil reservoir with oil.

Vehicle deviation (Carry out test runs in two directions on the flat ground):

Fault cause:

1. Looseness of the steering wheel ball joint or improper front wheel alignment.
2. Twisted deformation or excessive wear in the steering rod.
3. Maladjustment of preload of racks in the power steering gear
4. Poor returnability of the steering wheel and steering wheel tremble.

Troubleshooting for the fault:

1. Adjust the front wheel alignment and steering wheel ball joint.
2. Refill with steering oil and carry out air bleeding.
3. Adjust the preload of racks or repair racks in the power steering gear.
4. Inspect and adjust every joints in the system according to specifications.

Downloaded from www.Manualslib.com manuals search engine

Removal and Installation

Power-assisted Steering System

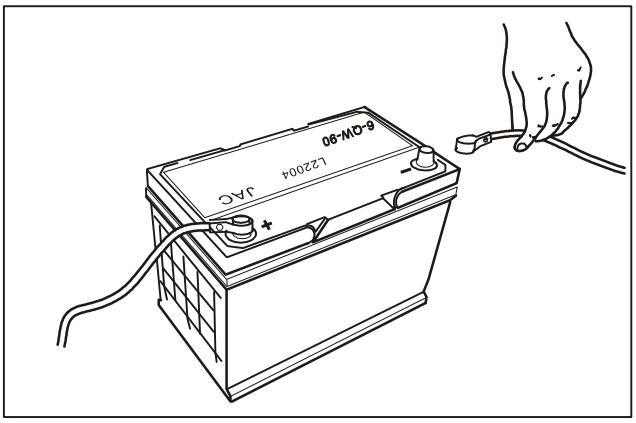

1. Disconnect the negative cable of the battery.

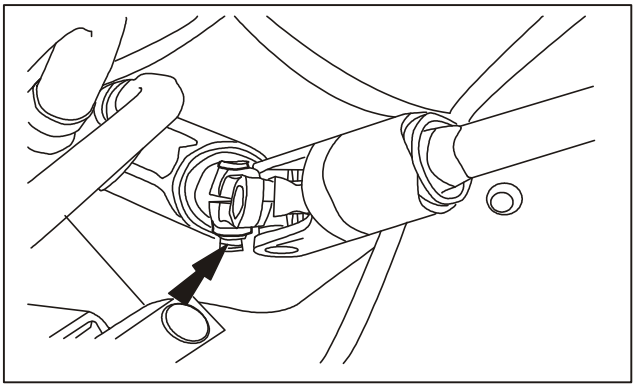

2. Remove the cardan universal joint on the steering gear box.

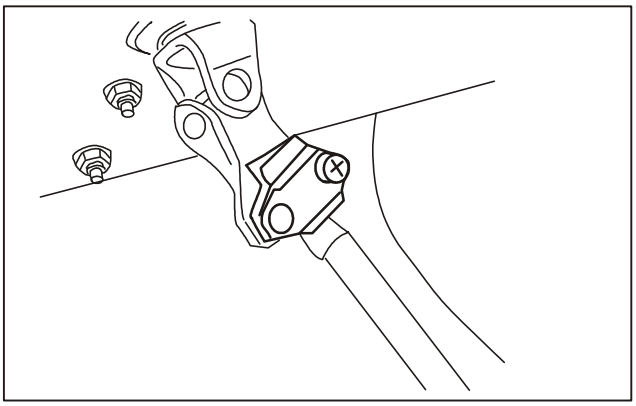

3. Remove track bolts for fixing the steering column to the cross coupling.
4. Remove the cross shaft coupling.
5. Lift the vehicle.

Downloaded from www.Manualslib.com manuals search engine

Removal and Installation (Continued)

Power-assisted Steering System

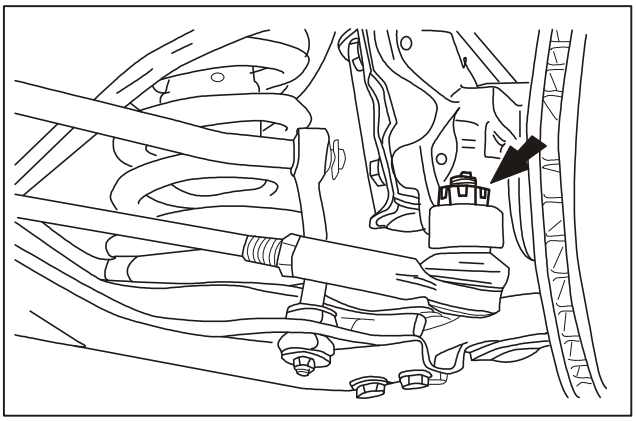

6. Take down the cotter pin and remove castle nuts on the joint of the tie rod ball joint and steering knuckle.
   - Do not reuse the cotter pin.

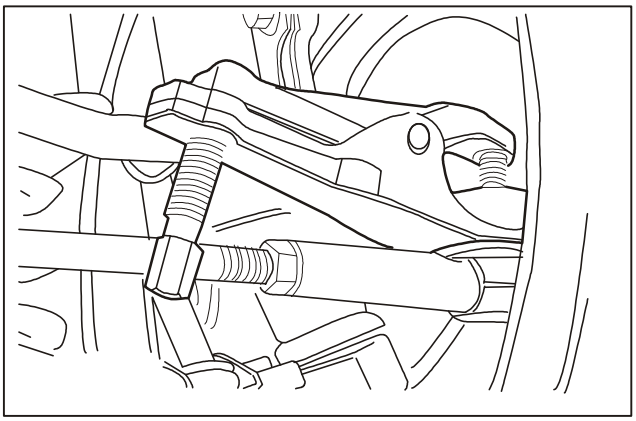

7. Remove the tie rod ball joint from the steering knuckle.

Note:

After the separation of the steering tie rod and steering knuckle, wrap the ball joint with cloth to protect the ball joint seal.

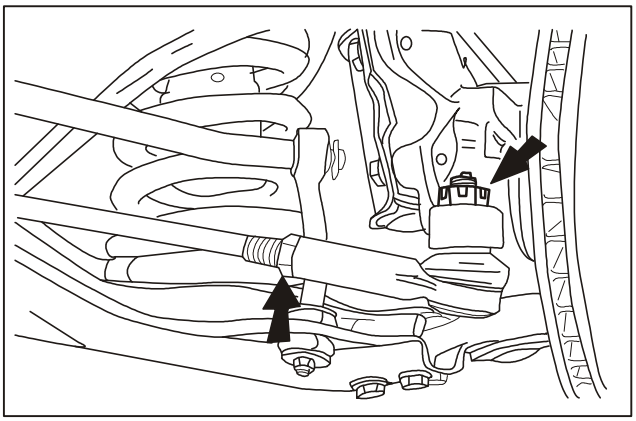

8. Remove the tie rod ball joint.
   - Loosen lock nuts of the tie rod ball joint.
   - Remove the tie rod ball joint.

Note:

Remember the number of turns in ball joint removal.

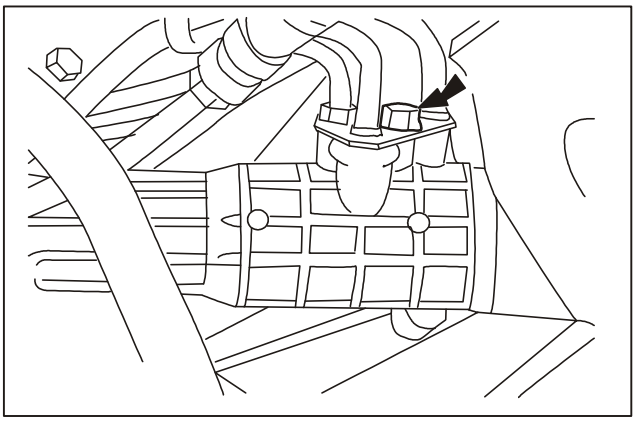

8. Remove the fixed plate of the steering gear box oil pipe and remove the oil pipe.

   Note:

   In the steering gear box oil pipe removal, block the joint with a plug to avoid dirt entering.

Downloaded from www.Manualslib.com manuals search engine

Removal and Installation (Continued)

Power-assisted Steering System

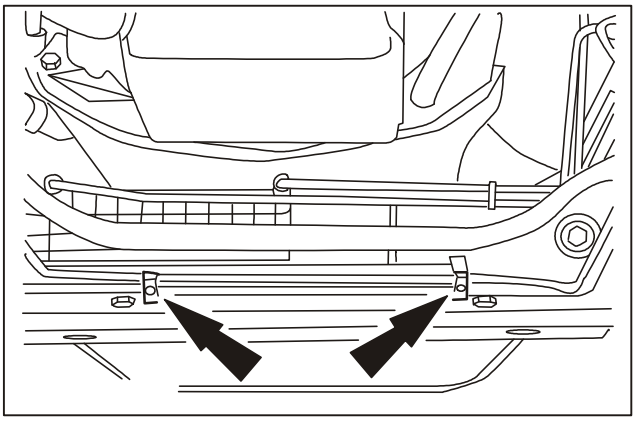

9. Disconnect the booster oil pipe from the steering gear box.

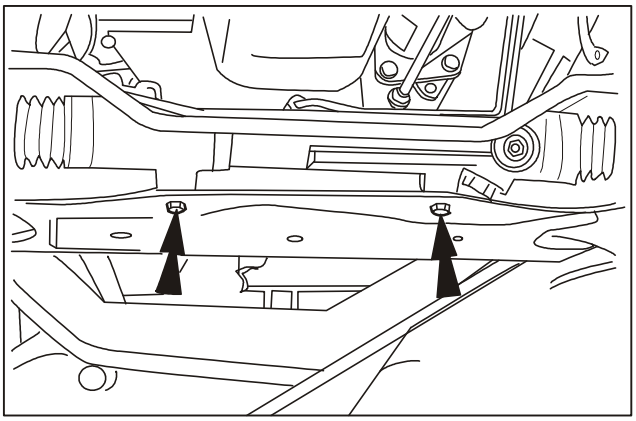

10. Remove the steering gear box.

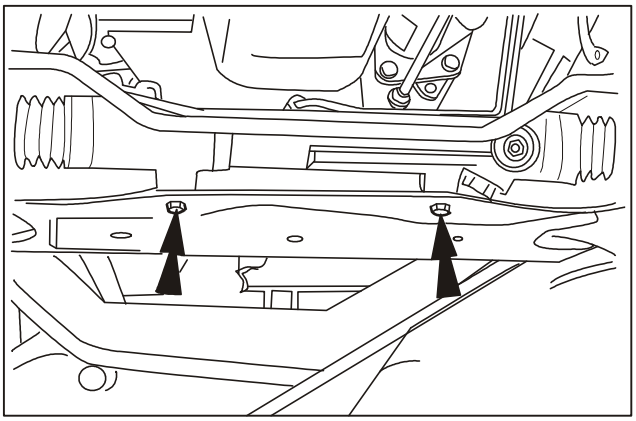

Installation

1. Reinstall the steering gear box.
2. Install the booster pump oil pipe to the steering gear box.

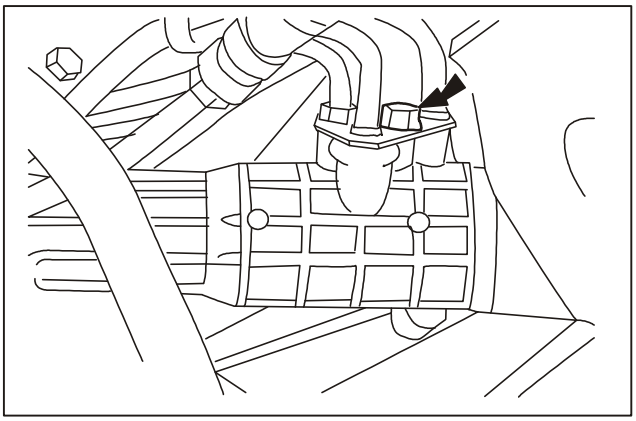

3. Install the booster pump oil pipe to the inverter valve and tighten the fixed plate.

Downloaded from www.Manualslib.com manuals search engine

Removal and Installation (Continued)

Power-assisted Steering System

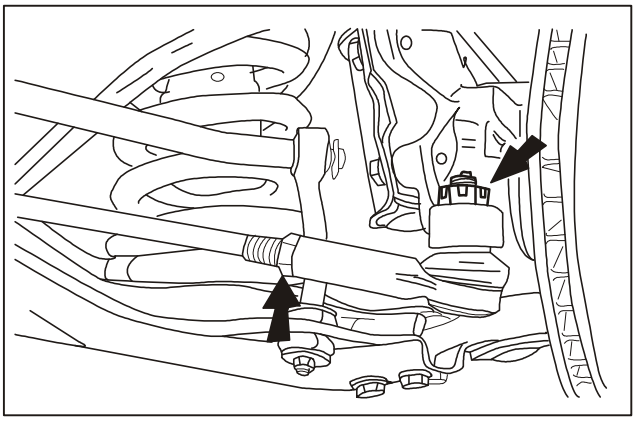

Note:

In the ball joint installation, make sure that the number of turns of the installation is the same with that of the removal.

4. Reinstall the tie rod ball joint in place.
   - Install the ball joint in place.
   - Tighten lock nuts of the ball joint.

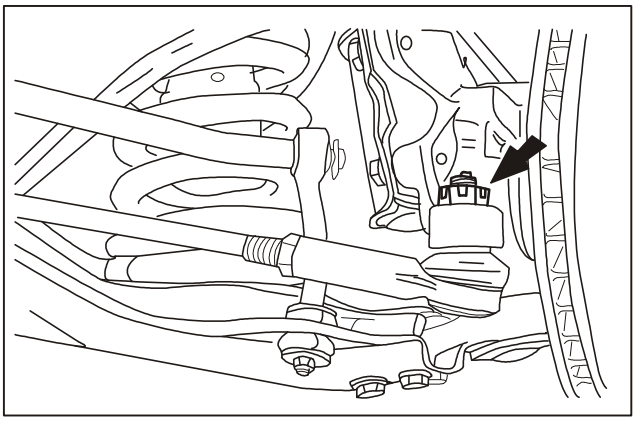

Caution:

Keep the steering wheel in the straight-ahead position throughout.

5. Install ball studs on the steering knuckle and lock castle nuts with new cotter pins.
6. Lower the vehicle from the lifter.

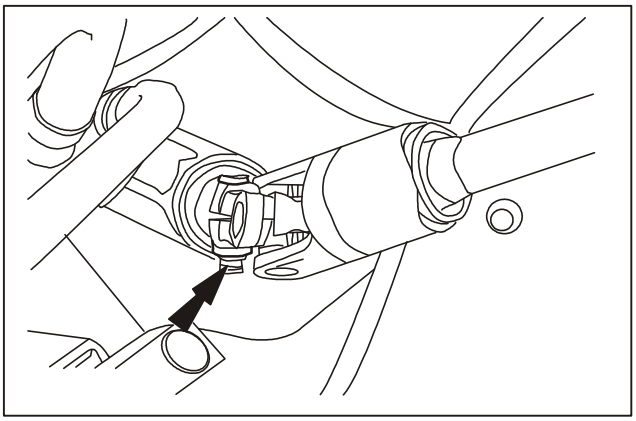

7. Install the ball head shaft on the pinion shaft, confirm the positional accuracy of the positioning keyway and confirm that fastening bolts are in the pinion slot.

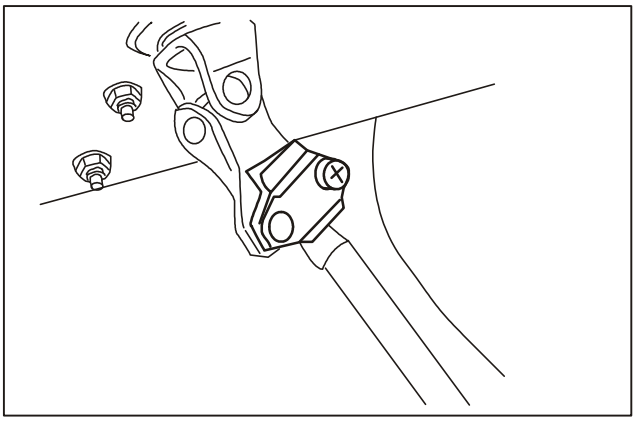

8. Align the clamped plated of the universal joint to the steering column and carry out installation.
9. Reconnect the negative cable of the battery.
10. Carry out air bleeding for the system according to the specification.
11. Inspect for the front wheel alignment.

Downloaded from www.Manualslib.com manuals search engine

Removal and Installation of Steering Wheel

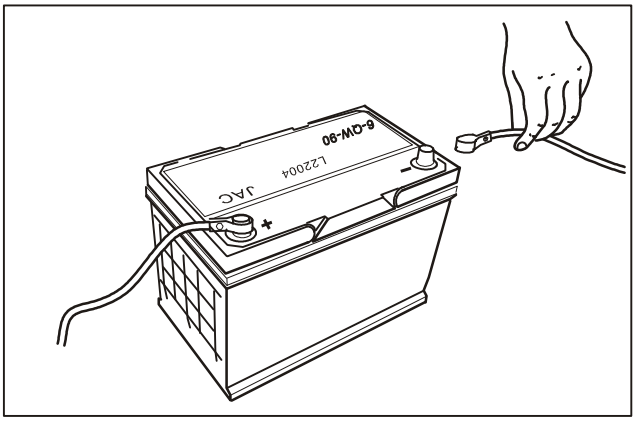

Removal:

1. Remove the negative cable of the battery.

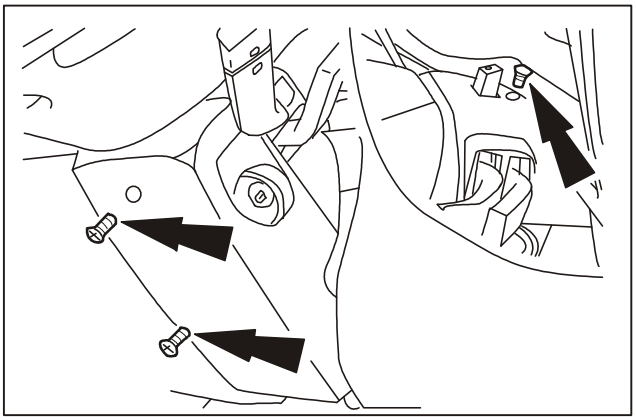

2. Remove the upper and lower protective plates of the steering column.

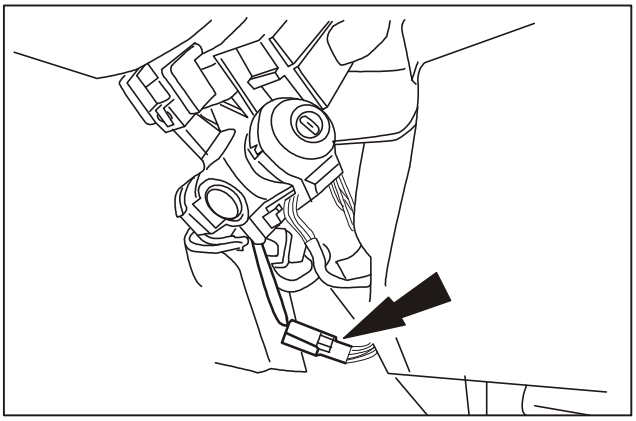

3. Disconnect the plug of the ignition switch harness.

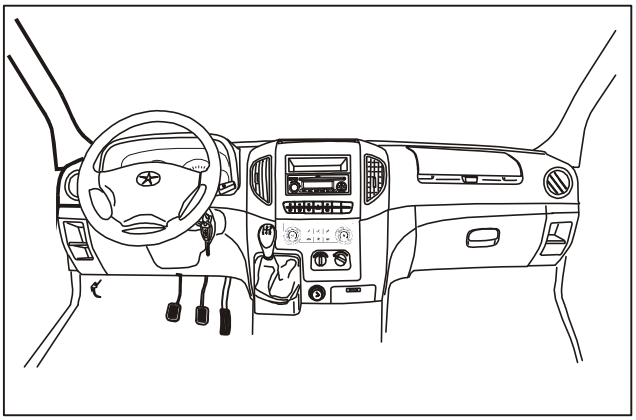

4. Carry out steering wheel centering and lock it up.
5. Remove the steering wheel central covering plate.

Downloaded from www.Manualslib.com manuals search engine

Removal and Installation of Steering Wheel (Continued)

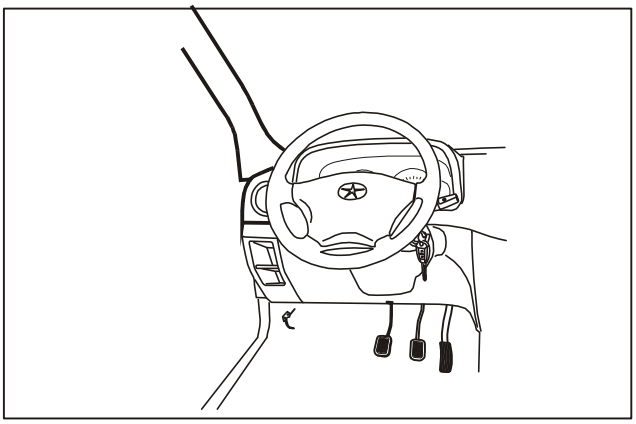

6. Remove mounting nuts of the steering wheel and remove the steering wheel.

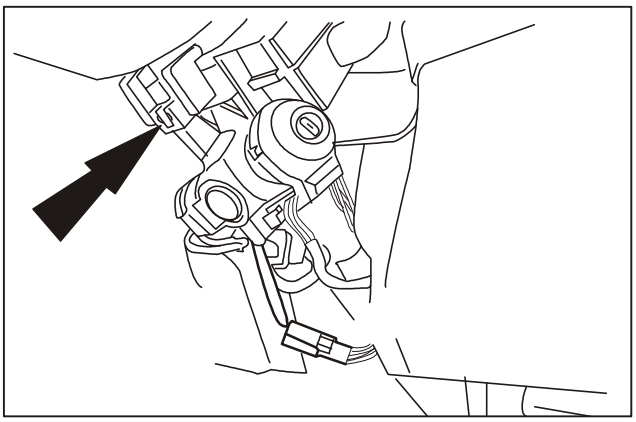

Installation

Warning:

Prior to the steering wheel installation, Keep the ignition switch upright all the time.

1. Return the steering wheel to ensure the ignition switch set in place.

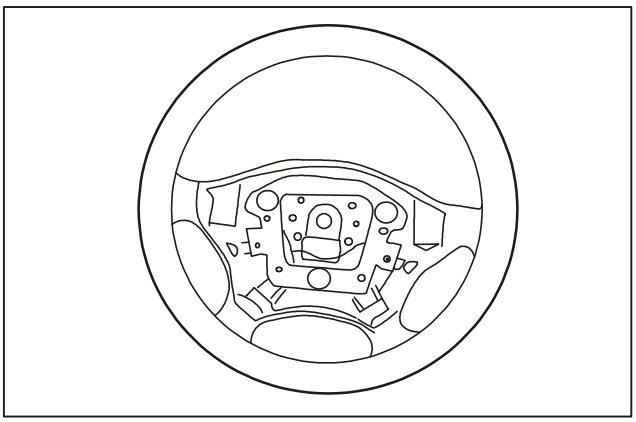

2. Reinstall all parts in the reverse order of removal.

Downloaded from www.Manualslib.com manuals search engine

Removal and Installation of Steering Column

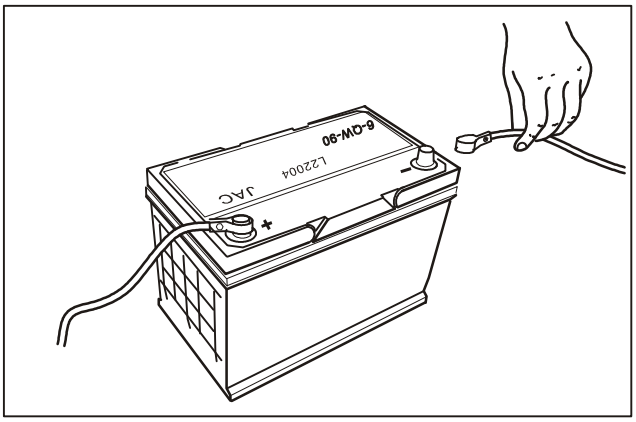

Removal

1. Disconnect the negative cable of the battery

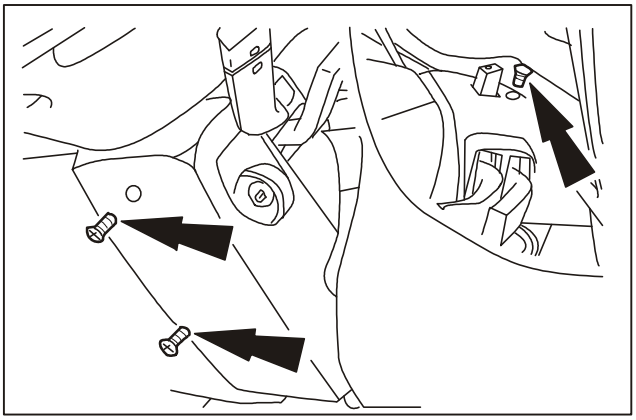

2. Remove the upper and lower protective plates of the steering column.
3. Remove the multi-functional combination switch.

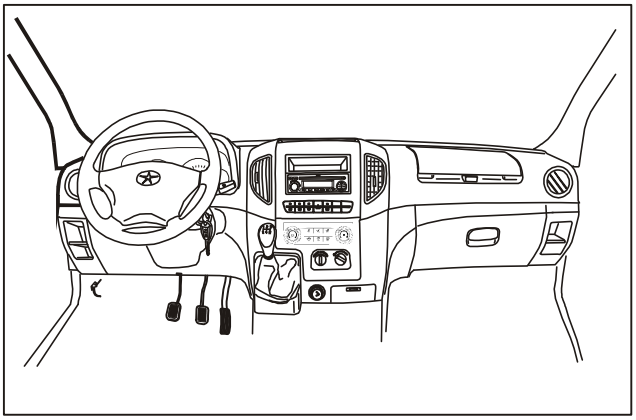

4. Return the steering wheel to the intermediate position and lock it up.

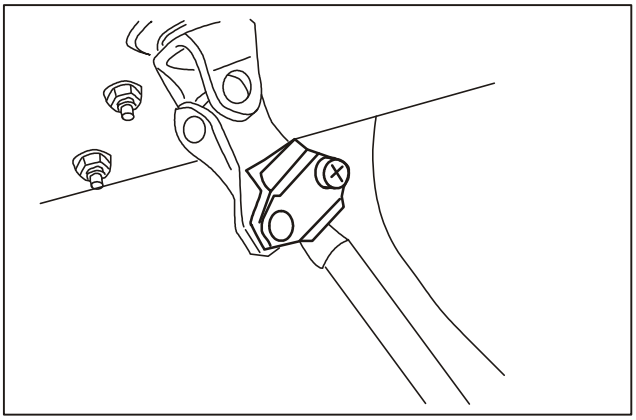

5. Remove track bolts on the joint of the steering column and steering knuckle.
   Turn clamped plates and take them down.

Downloaded from www.Manualslib.com manuals search engine

Removal and Installation of Steering Column (Continued)

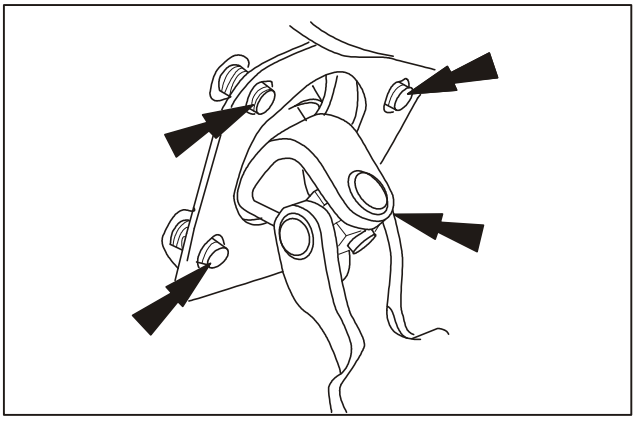

6. Remove four mounting nuts for fixing the lower part of the steering column onto the partition panel.

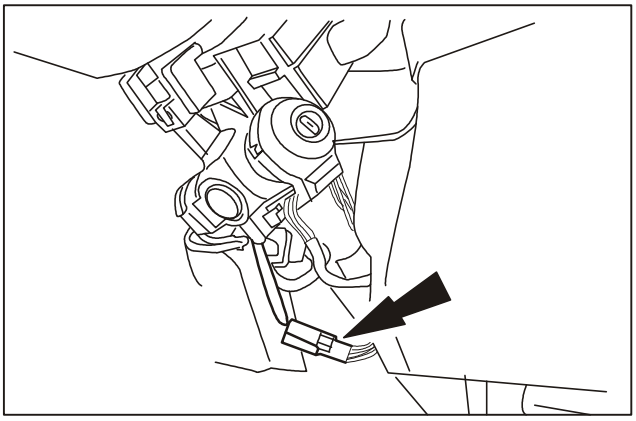

7. Disconnect the ignition switch plug.

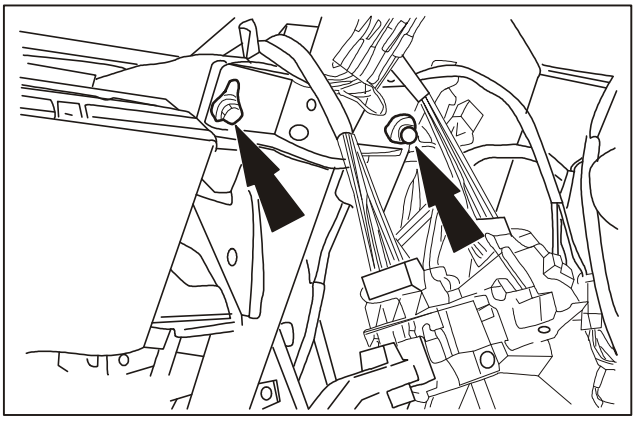

8. Remove the steering column.

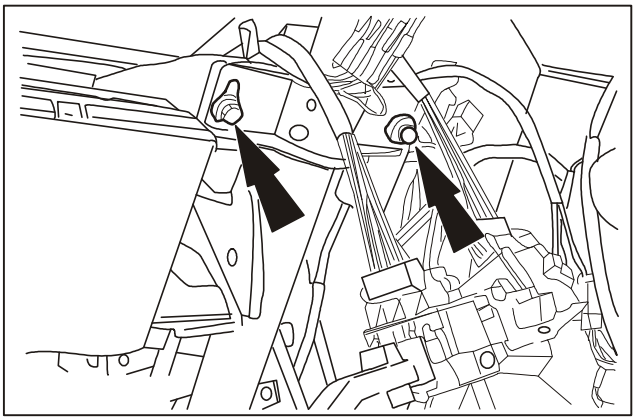

Installation

9. Install the steering column in place and ensure the correct positioning of bolts on the lower part of the steering column.

Downloaded from www.Manualslib.com manuals search engine

Removal and Installation of Steering Column (Continued)

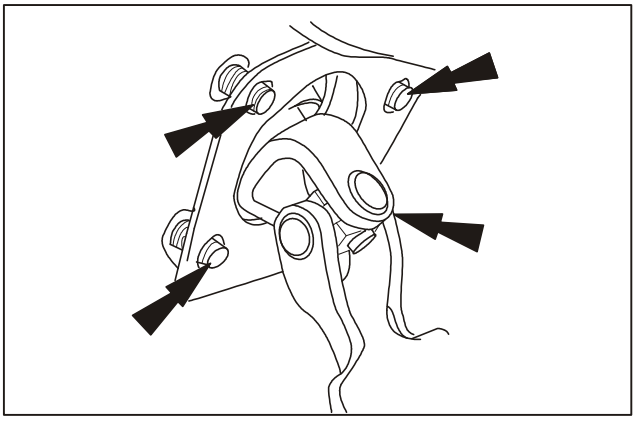

10. Fix the lower part of the steering column onto the partition panel.
11. Reconnect the harness plug of the ignition switch.
12. Reinstall the combination switch.
13. Fix the wire with cable ties.

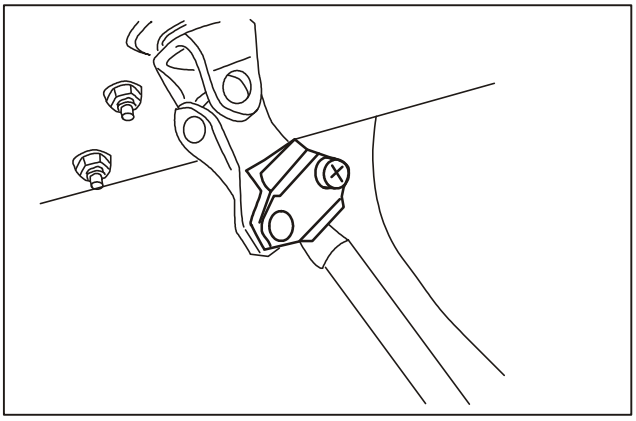

Caution:

Ensure that the steering wheel is in the intermediate position.

14. Align the clamped plates of the cardan universal joint to the shaft and install the clamped plates.
15. Install the upper and lower protective plates of the steering column in place.
16. Connect the negative cable of the battery.

Downloaded from www.Manualslib.com manuals search engine

Wheels and Tires

Applied models: SUNRAY products manufactured by JAC

Subject Page

Instruction and Operation

Wheels and Tires....174
Explosive View of Wheels and Tires....175
Precaution for Tire Usage....175

Diagnosis and Testing

Removal/Installation Instruction of Tire Assembly....176
Fault Symptom Table....177

Removal/installation

Removal/installation of wheel and Tires....178

Downloaded from www.Manualslib.com manuals search engine

Instruction and Operation

SUNRAY vehicles adopts tire models of GITI 195/70R15LT and 185R15LT.

Tires of different sizes are applied for bearing the vehicle weight, supplying driving force and brake force, buffering the impact from road surface as well as changing the running direction of vehicle..

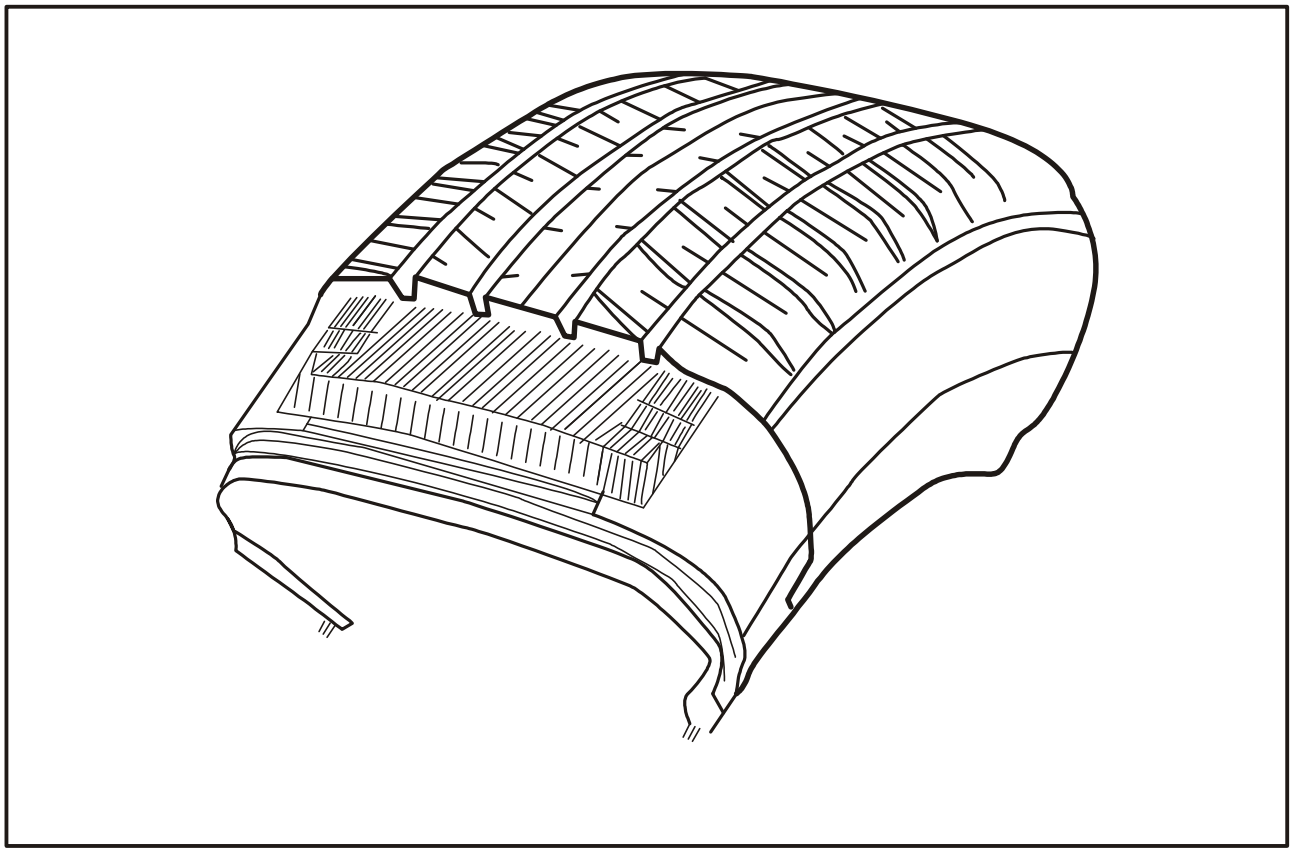

Downloaded from www.Manualslib.com manuals search engine

Notice for tire usage

Please use the genuine tires manufactured by the original manufacturer.

During running-in period of new tires, please avoid fast starting, sharp turning and emergent braking, and don't use tires under severe working conditions, in order to protect the new tires from premature damage.

Wheel balance should be conducted before the application of new tires.

Tires

Inspection:

1. Inspection of tire pressure
   - Check the inflation pressure of tire. Make adjustment if the pressure is not within the standard range.

   Standard value: 450±10KPa

Attention:

Check the tire pressure by using tire pressure gauge of good performance. Check tires for wear, improper inflation, crack or other damage.

Please check the tire pressure if the ambient temperature experiences violent change.

- Improper tire pressure shall lead to the results below:

a. Under-pressure shall lead to quick wear of tire shoulder, as well as increase of tire deflection and rolling resistance.

b. Over-pressure shall lead to quick wear of the middle part of tire crown and decrease of buffer capacity.

2. Inspection of improper alignment

   Too large/small front/rear wheel toe-in shall lead to feathered wear of tire.

3. Inspection of tire tread
   - Check the tread depth of tire.

   Note: Tire size: 185R15LT

   When the tread depth reaches to the limit value or smaller, wear mark shall be shown on the tread; at this time, please replace the tire.
   - Check tire tread for any foreign matter. If any, please clear it.

4. Check wheel for crack or other damages. If there is deformation, please check the wheel runout.
   - Remove the tire from wheel and install it onto the wheel balancer.
   - Set the dial indicator as shown in figure.

   Please refer to "Maintenance Data and Specification" for wheel runout. If it exceeds the limit, please replace it.

   Tire rotation**:**

   Perform tire rotation after the vehicle running for 8000Km. tire rotation shall also be conducted when changing with a new tire.

Replacement:

① Please replace tire after normal running for 50000Km.

② Replace tire in case one of the following conditions occurs:
- At least 3 wear marks exposed on tire tread.
- Tire cord fabric or tire cord exposed on the rubber.
- Cracking of tire tread or shoulder with cord fabric exposed.
- Tire bulge, upheaval or layering.
- Tire being punctured or scratched or other damages that is hardly to recover.

Wheel & tire assembly

Removal/installation:

1. Removal
   - Remove wheel nut.

     Tightening torque: 220～280N.m
   - Remove wheel & tire assembly.
2. Installation

   Install wheel & tire assembly and tire nut.

   Attention:

   As for manual installation, tighten it according to the diagonal order after nuts are pre-tightened in sequence.

   As for auto tightening, adjust the tightening torque and tighten it at one time.

   Please tighten all wheel nuts in the order indicated in the figure.

Wheel balance:

1. Removal
   - Remove the wheel and tire in need of adjustment.
   - Remove the used balance weight on both sides of wheel and clear any foreign matter on the tire tread.

Attention:

Don't make the tire scratched during removal. In case of new tire, rubber belt on tire should be removed.

2. Wheel balance adjustment
   - Install the wheel onto the balancer by centering the center hole and start the wheel balancer.
   - When both inner and outer balance values are displayed on the balancer, the actual balance weight can be obtained by multiplying the outer balance value by 5/3. Choose the outer balance weight approaching to the calculated value and install it onto the specified position outside or diagonal position.

Attention:

Install the inner balance weight after the installation of outer balance weight. Before installation, please make the mating surface clean.

a. Install the balance weight to the position as

Downloaded from www.Manualslib.com manuals search engine

shown in the figure.

b. When installing balance weight onto wheel, the balance weight shall be placed onto inner wall with grooves as shown in the right figure, with the center of balance weight aligned with the position (or angle) indicated by the wheel balancer.

c. If the calculated balance weight exceeds by 50g, please install two balance weights in the same straight line.

Attention:

- For balance weight cannot be reused, please apply new one every time.
- No more than two pieces of balance weight can be installed.
- Please always use genuine balance weight.
- Please don't place one balance weight onto another one.

③ Restart the wheel balancer.

④ Knock in the balance weight from the inside of wheel as per position (or angle) indicated by wheel balancer.

⑤ Start the balancer to verify if the residual inside/outside unbalance value is below 10g. If the residual unbalance value of any side is over 10g, dynamic balance test should be conducted.

Downloaded from www.Manualslib.com manuals search engine

Fault Diagnosis

Common fault diagnosis table

Fault Symptom	Possible Cause	Solution
Steering wheel circular vibration	Excessive deflection of wheel and rim	Replace
	Looseness of wheel nut	Tighten
	Wheel unbalance	Adjust
	Uneven wear of tire	Adjust or replace
	Under-pressure of tire	Adjust
	Damage or wear of front wheel bearing	Adjust or replace
	Steering system fault	Adjust or replace
	Suspension system fault	Adjust or replace
Premature wear of tire	Improper tire pressure	Adjust
Tire noise	Improper tire pressure	Adjust
	Tire deterioration	Replace
Road noise or body vibration	Under-pressure of tire	Adjust
	Wheel unbalance	Adjust
	Deformation of rim and tire	Repair or replace
	Uneven wear of tire	Adjust or replace
Up and down vibration of steering wheel	Excessive deflection of wheel and rim	Replace
	Looseness of wheel nut	Tighten
	Wheel unbalance	Adjust
	Fracture or wear of engine mounting rubber	Replace
	Fracture or wear of transmission mounting rubber	Replace
Steering wheel drifted to one side	Improper tire pressure	Adjust
	Excessive or uneven wear of tire	Adjust or replace
	Steering system fault	Adjust or replace
	Brake system fault	Adjust or replace
	Suspension system fault	Adjust or replace
Wobbling	Both side tire pressure unbalance	Adjust
	Deformation of rim and tire	Repair or replace
	Looseness of wheel nut	Tighten
	Steering system fault	Adjust or replace
	Suspension system fault	Adjust or replace
Brake pulled to one side	Both side tire pressure unbalance	Adjust
	Brake system fault	Adjust or replace
Heavy steering wheel felt	Under-pressure of tire	Adjust
	Steering system fault	Adjust or replace
	Suspension system fault	Adjust or replace
Poor steering wheel return	Under-pressure of tire	Adjust
	Steering system fault	Adjust or replace
	Suspension system fault	Adjust or replace

Downloaded from www.Manualslib.com manuals search engine

Removal/installation of front wheel assembly

Removal/installation

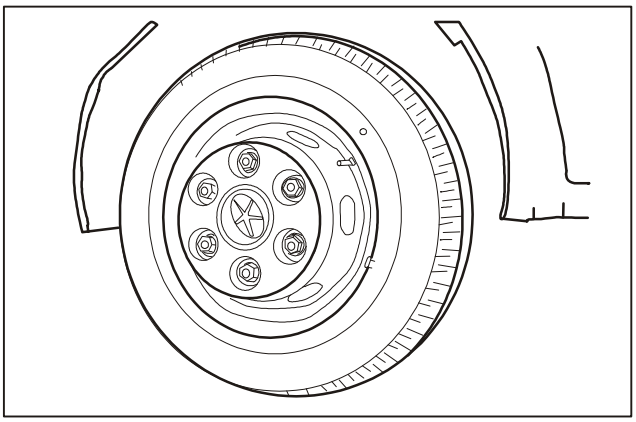

Removal

1. Loosen tire nut, and have the vehicle jacked to remove the tire.

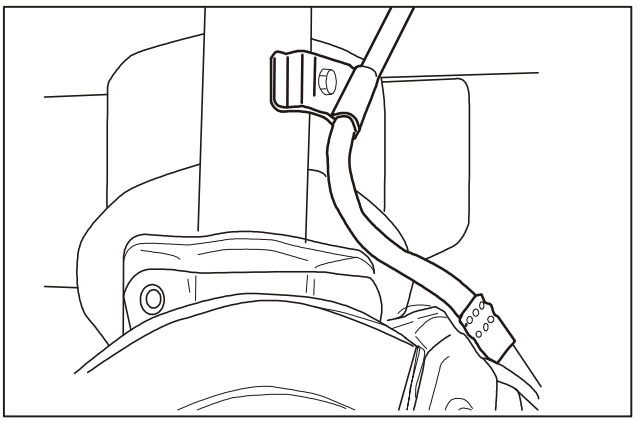

2. Remove brake hose from shock absorber.

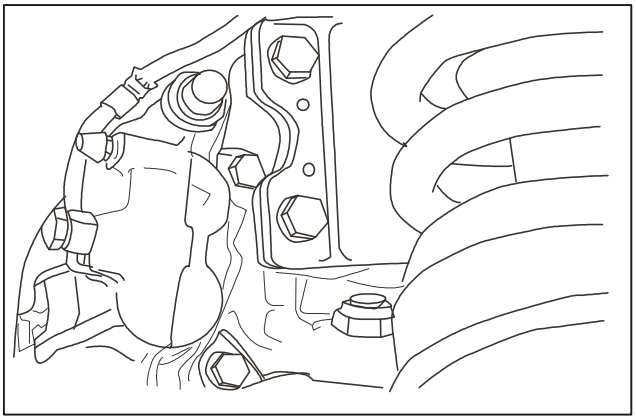

Note:

Loosen the brake caliper top bolt properly for removal of brake caliper.

3. Remove the brake caliper.
   - Hang the brake caliper beside the shock absorber in order to avoid damage of brake hose.

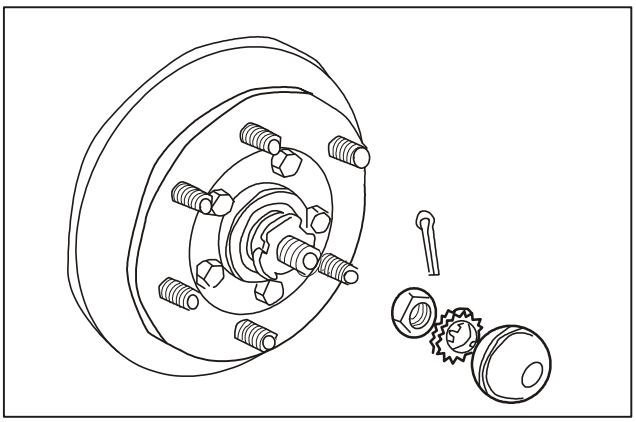

Caution:

The left hand side bearing adjusting nut is of left hand thread.

4. Remove flange assembly.
   - Remove dust cover.
   - Remove split pin and nut lock piece.
   - Remove wheel bearing adjusting nut.
   - Remove washer and flange assembly together.

Downloaded from www.Manualslib.com manuals search engine

Removal/installation

Installation

Caution:

The left hand side bearing adjusting nut is of left hand thread.

1. Install flange assembly.
   - Install washer and hub assembly together with outer bearing.

   Install wheel bearing adjusting nut.

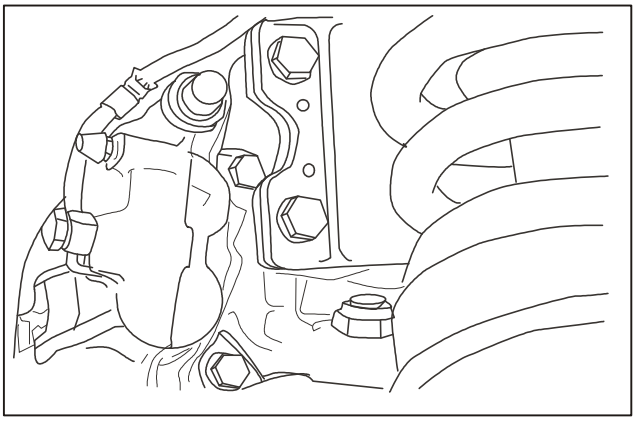

2. Install brake caliper.
3. Install brake hose onto shock absorber.
4. Install wheel plane bearing.
5. Determine wheel bearing end play.
   - Tighten wheel bearing adjusting nut and rotate the wheel at the same time to make bearing installed in place.
   - Unscrew nut by 180° and shake wheel mount.
   - Push and pull wheel until bearing end play can be felt.

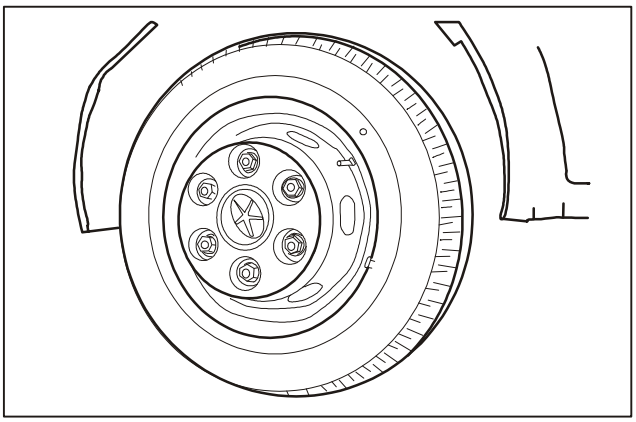

   - If necessary, loosen the adjusting nut again by 90° until clearance can be felt.
   - Measure end play (required to be 0.002～0.05mm）.
   - If necessary, rotate the adjusting nut clockwise or counterclockwise to obtain required end play.
6. Use new split pin and dust cover and reinstall the nut lock piece.
7. Lower the vehicle.

Downloaded from www.Manualslib.com manuals search engine

Replacement of front flange assembly (with flange assembly already removed)

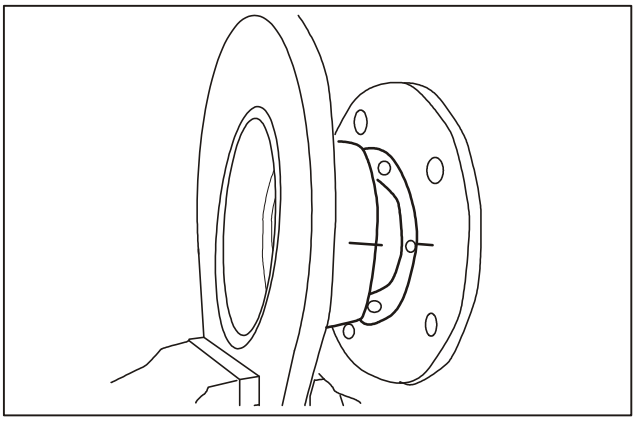

Removal

1. Mark properly on flange and brake disc to facilitate positioning during reinstallation.

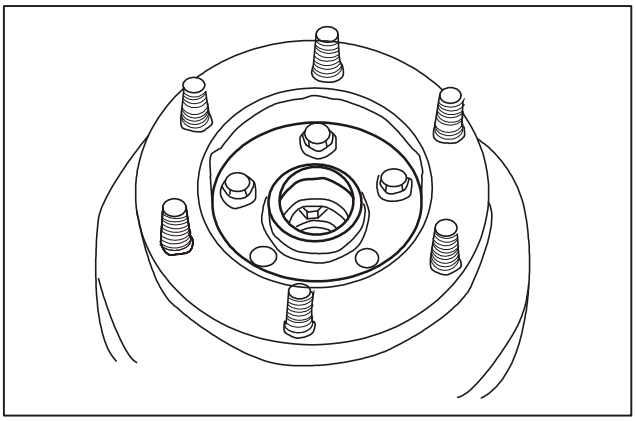

2. Remove flange from brake disc.

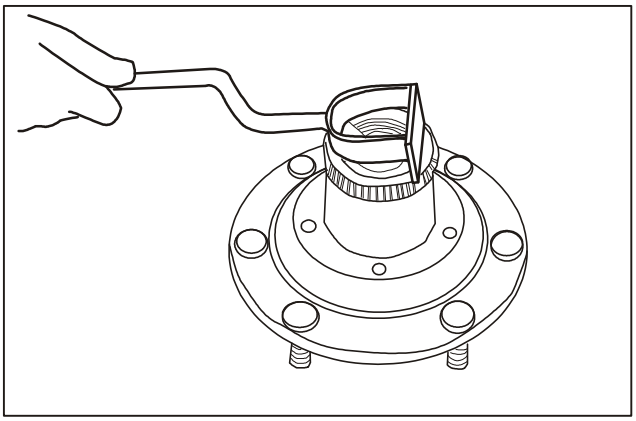

3. Remove oil seal.
4. Remove inner and outer races of conical bearing.

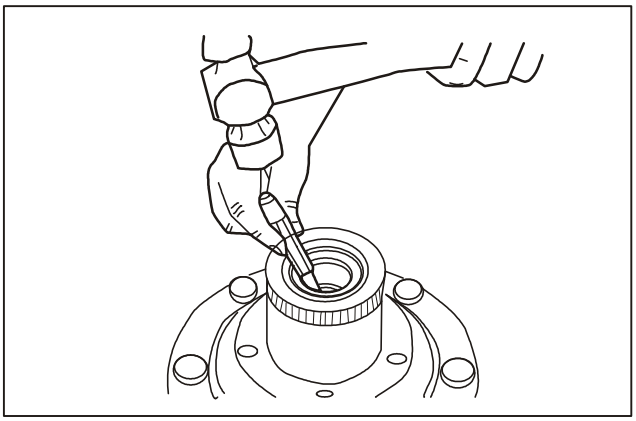

Caution:

Don't make burr on flange to ensure bearing race can be fitted in place.

Note:

Tap the bearing race alternately and diagonally and don't make the sleeve tilted.

5. Remove inner and outer races of bearing.
6. Clean mating face between wheel hub and brake disc.

Downloaded from www.Manualslib.com manuals search engine

Removal/installation

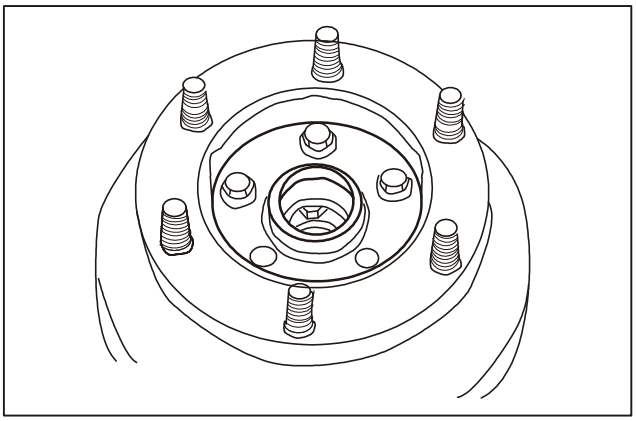

Installation

1. Install the flange onto the brake disc.

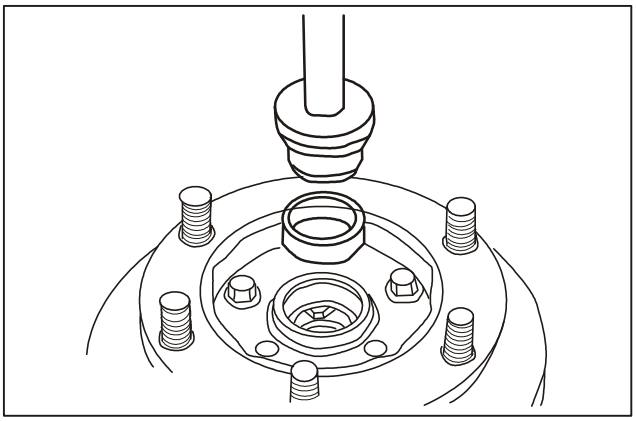

Caution:

The adopted bearing races and rollers should be from the same manufacturer.

2. Reinstall the inner and outer races of bearing.

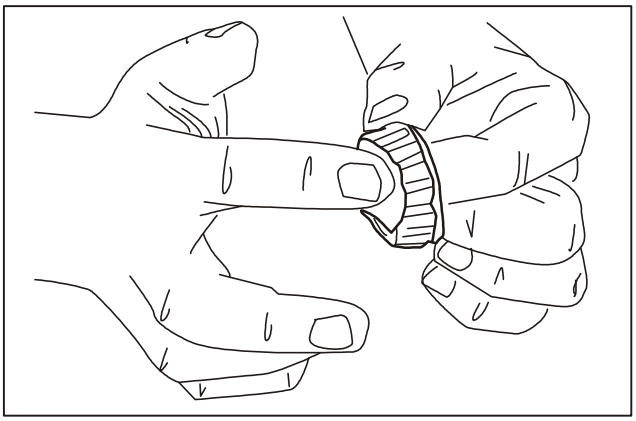

3. Apply grease onto race and roller bearing.
4. Reinstall it onto the bearing race.
5. Clean the periphery of oil seal seat and apply sealant onto it.

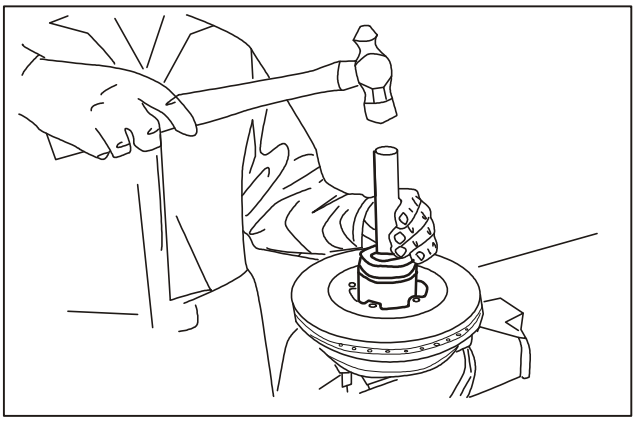

6. Install oil seal and remove redundant sealant.
7. Fill sealing shaft with grease and apply grease onto lip surface.

Downloaded from www.Manualslib.com manuals search engine

Four-Wheel Alignment

Applied models: SUNRAY products manufactured by JAC

Subject Page

Instruction and Operation

Four-Wheel Alignment....184
Preparation before four-wheel alignment.... 184

Diagnosis and Testing

Four-Wheel Alignment....185
Function of each angle....185
Common fault symptom.... 186

Adjustment

Four/wheel alignment.... 187

Downloaded from www.Manualslib.com manuals search engine

Instruction and Operation

Objectives for four-wheel alignment:

- Elimination of deflection
- Decrease of chassis wear
- Straightness of linear steering wheel
- Decrease of tire wear
- Straightness of steering wheel after turning
- Decrease of tire wear
- Straightness of linear steering wheel
- Recovery of new car driving feeling

Principle and five factors of four-wheel alignment

Principle:

Rear wheels aligned first and then front wheels

Five factors:

1. Camber
2. Inclination angle
3. Caster
4. Toe-in
5. Adjustment of thrust axis and angle

Function of four-wheel alignment

Four-wheel alignment functions for measurement of alignment angle of chassis. In case of a little change in chassis parameters, it is only needed to adjust the alignment angle; in case of large difference, the deformed or damaged parts should be detected for complete removal of fault.

Note: It is a must to check the chassis condition before conducting four-wheel alignment.

Preparation before four-wheel alignment

1. Check tire pressure and adjust it as required.
2. Check body height.
   - Front part measurement
   - Rear part measurement
3. Check wheel bearing clearance and replace front wheel bearing when necessary.
4. Check rim and tire condition.
5. Check steering linkage and ball joint for looseness.
6. Park the vehicle on flat ground with no luggage or person inside.
7. Check wheels; check front suspension for looseness.
8. Check shock absorber for normal operation.

Note:

Make sure half level in oil tank, as well as the required level of cooling water in water tank and proper engine oil. The tire jack and accessories should be placed at the specified position.

Downloaded from www.Manualslib.com manuals search engine

Instruction and Operation

Four-wheel alignment parameters

Front wheel camber	0.75±1°	1.25°
Kingpin caster	1.5±1.5°	1°
Kingpin inclination angle	12.75°±1°	1.25°
Toe-in	0～2mm	

This vehicle is light-duty bus, with integral rear axle. Rear wheel parameters cannot be adjusted during four-wheel alignment.

1. Front wheel camber：

   Camber refers to the angle included between geometry centerline and plumb line of tire viewed from the front of vehicle. Tire upper edge deviates to the inside (approaching to engine) or outside (deviated from engine):

   - Zero camber refers to the state that the tire centerline is coincided with the plumb line.
   - Positive camber refers to the state that the tire centerline is located outside of plumb line.
   - Negative camber refers to the state that the tire centerline is located inside of plumb line.

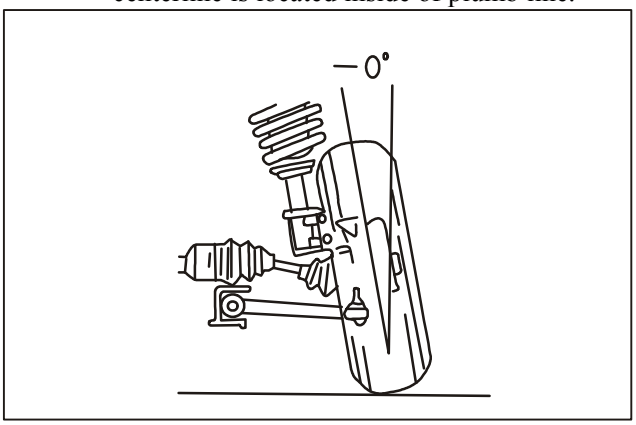

   - Excessive camber may lead to outside wear of tire and too small camber may lead to inside wear of tire. In case of inconsistency between two wheel cambers, the vehicle shall be pulled to one side of the larger camber.

Toe-in definition

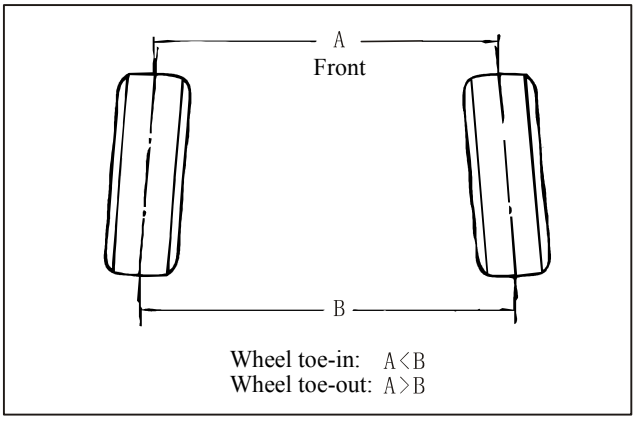

Front wheel toe-in is observed from the front of vehicle and measured when two wheel axles are of the same height. Front and rear end distance difference between left and right tire centerline is known as the total toe-in, as shown in the figure:

Zero toe-in: Left and right tire centerline distance at front and rear end is equal: A=B.

Positive toe-in: Left and right tire centerline distance at front end is less than that at rear end: A<B.

Negative toe-in: Left and right tire centerline distance at front end is larger than that at rear end: A>B.

2. Toe-in function

   It is used for elimination of tire skidding caused by camber. The effect of wheel camber shall make the wheel top face tilted outwards and the wheel shall roll outwards during running, thus skidding is formed, which shall lead to tire wear. The toe-in functions to eliminate tire skidding due to camber, as shown in the figure:

Downloaded from www.Manualslib.com manuals search engine

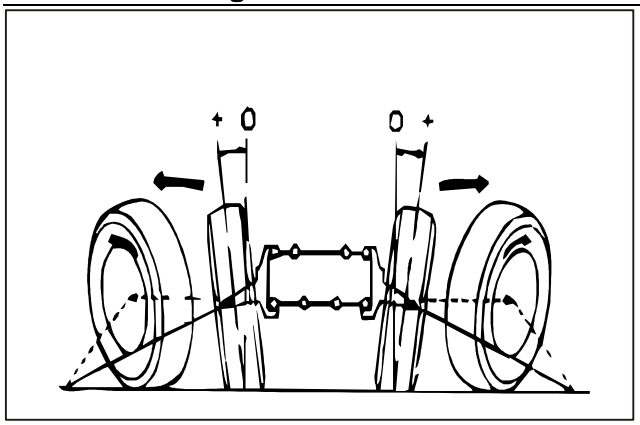

3. Toe-in effect
   - Effect of positive toe-in: Tire outside wear due to excessive positive camber takes the form of feature. Touch it from the inside to outside and sharp needle like feeling can be felt on the tread outer edge.
   - Effect of negative toe-in: Tire inside wear due to excessive negative camber takes the form of feature. Touch it from the outside to inside and sharp needle like feeling can be felt on the tread outer edge.
4. In case of inconsistency between two wheel toe-in, the vehicle shall be pulled to one side of the smaller toe-in.

Kingpin caster

Kingpin caster definition

It refers to the angle included between the steering axis and the line vertical to ground, which indicates the forward and backward inclination of the line between the upper ball joint or strut top and the lower ball joint viewed from the side of vehicle (called the imaginary steering axis). There are three kinds of caster, viz. positive caster, negative caster and zero caster.

Caster adjustment (generally nonadjustable)

As for the adjustment of caster, make analysis and judgment as per different vehicle models at first and then make adjustment through adjusting washer, eccentric camshaft, eccentric ball joint, girder slot, or balance bar.

Inclination angle definition

Definition of inclination angle: The angle included between the steering axis and the plumb line viewed from the front of vehicle.

Kingpin inclination angle mainly functions for the realization of auto return after steering and the increase of adhesion force of vehicle. Kingpin inclination angle is unadjustable and its standard value can be achieved by the replacement of defect parts.

As for four-wheel alignment of SUNRAY vehicles, only the data adjustment for front wheels can be realized but not for rear wheels. Among various parameters of front wheels, the camber and toe-in are adjustable. Determine the camber at first and then adjust the toe-in in order to ensure the stability of vehicle straight running.

Common faults:

1. Abnormal wear of tire: Middle part wear, tire shoulder wear, eccentric wear, feature-like wear, serrated wear, wavy wear and spotty wear.
   Middle part wear: Too high tire pressure.
   Tire shoulder wear: Too low tire pressure and overloading.
   Eccentric wear: Improper camber.
   Feature-like wear: Improper toe-in.
   Serrated wear: Frequent brake application under overloading condition for a long time and tire rotation not conducted at regular intervals.
   Wavy wear: Dynamic unbalance of tire, large circular runout of wheel end face, looseness of hub bearing and steering knuckle, too big thrust angle of rear wheels and etc.
   Spotty wear: Shimmy under high speed rotation of wheel, excessive clearance of bearing, ball joint and steering rod, dynamic unbalance of tire.
2. Running deviation: Probably caused by inconsistent kingpin inclination angle, camber, caster, toe-in, tire pattern, shock absorber vibration reduction effect or wheel base between left and right wheels.
3. Memory deviation: Probably caused by interference of upper strut support motion, wear of shock absorber steady bearing, over sticking of ball joint or unbalance power steering.
4. Torque deviation: Probably caused by stuck or loose ball joint, unequal axle angle under acceleration, nonconforming inclination angle and included angle, or improper alignment of power train.

Downloaded from www.Manualslib.com manuals search engine

Data adjustment of four-wheel alignment

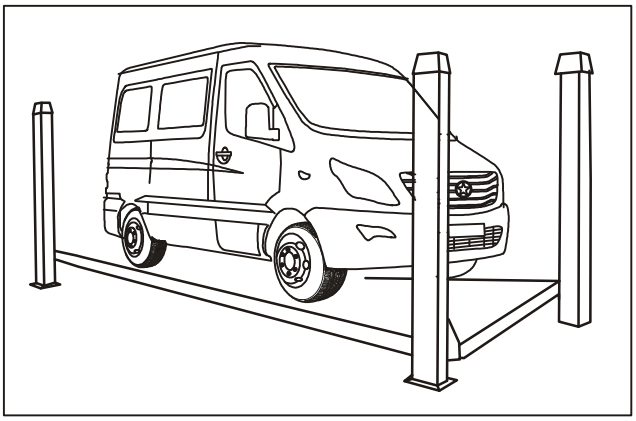

1. Check basic data of vehicle such as tire pressure, fuel level, vibration reduction effect, tire wear degree, accessories and tools. Recover it to the delivery status.
2. Drive the vehicle onto the lifter, with front wheels held at the center of front turntable of the four-column lifter.
3. Maintain vehicle and tire horizontal and press the nose by hand.
4. Install the sensor and claw onto the tire properly and maintain the sensor balanced.

5. Turn on the four-wheel aligner and select the current vehicle position.
6. Operate on the basis of the computer reminder to measure the actual four-wheel alignment parameters.
7. Compare the parameters provided by four-wheel aligner with the standard data and calculate the actual data for adjustment.

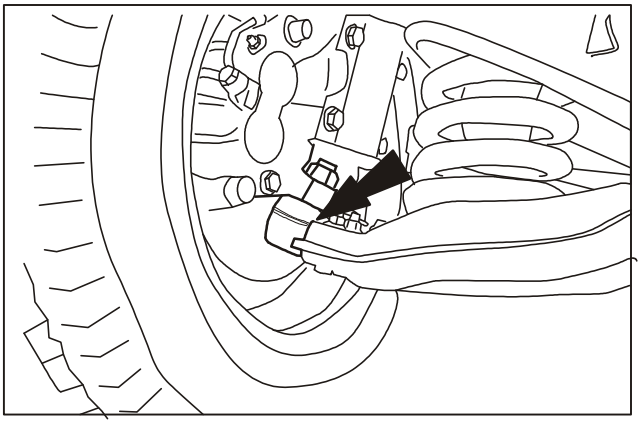

8. Lift the vehicle. As the rear wheels are of nonadjustable rear axle, only front wheel camber and toe-in are adjustable.
9. Adjustment of front wheel camber: Loosen the mounting nut of shock absorber lower support, knock down the lower swing arm with SST or crow bar and record the number of washers, make calculation and find out what kinds of washer should be adopted on the basis of four-wheel alignment data and actual vehicle parameters, install the washer onto the lower swing arm and then tighten the nut to the standard torque.
   Tire camber: 0.3°. Check if it is within the normal data range of vehicle through computer.

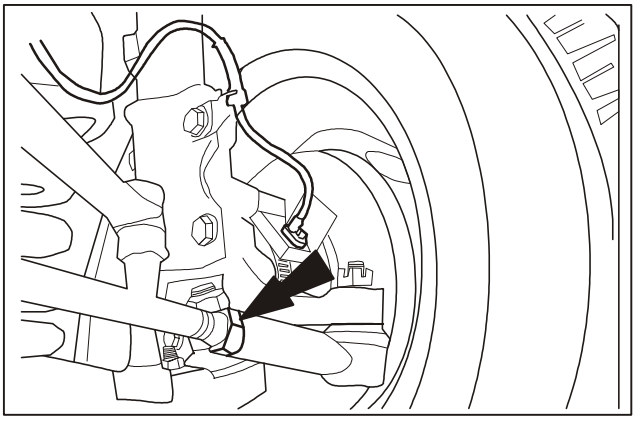

10. Adjustment of toe-in: Loosen the mounting nut of tie rod, calculate the required data on the basis of the actual toe-in and standard data, and observe if the toe-in is within the standard range through computer when making adjustment.
    Attention: The adjusting amount should be controlled within half circle in order to avoid inaccuracy.
    Standard toe-in: 0~2mm.

Downloaded from www.Manualslib.com manuals search engine

Attached List-Special Tools for Sunray

Applicable model: SUNRAY products manufactured by JAC (4DA1 Series)

Tool number	Tool name	Outline drawing	Purpose/application
JAC-T8F001	Piston pin remover and installer		Removing and installing piston pins (engine)
JAC-T8F002	Handle		Supporting use of related installer in bearing installation (transmission)
JAC-T8F003	Flywheel stopper		Fixing flywheel for easy removal (engine)
JAC-T8F004	Cooling system tester		Checking cooling system for leakage (engine)
JAC-T8F005	Oil filter wrench		Removing and installing oil filter (engine)
JAC-T8F006	Valve oil seal installer		Installing valve oil seals (engine)
JAC-T8F007	Fuel pressure gauge		Measuring fuel pressure (engine)
JAC-T8F008	Compression gauge		Measuring cylinder pressure (engine)
JAC-T8F009	Pressure gauge connector		Playing the role of an adapter during cylinder pressure measurement (engine)
JAC-T8F010	Valve spring compressor		Compressing valve springs and removing valves and related parts (engine)
JAC-T8F011	Camshaft gear puller		Removing camshaft gear (engine)
JAC-T8F012	Cylinder liner installer (including jack)		Installing cylinder liners (engine)

Downloaded from www.Manualslib.com manuals search engine

Special Tools for Sunray

Tool number	Tool name	Outline drawing	Purpose/application
JAC-T8F013	Cylinder liner puller	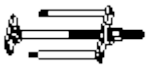	Removing cylinder liners (engine)
JAC-T8F014	Piston installer		Installing pistons (engine)
JAC-T8F015	Crankshaft front oil seal installer		Installing crankshaft front oil seal (engine)
JAC-T8F016	Camshaft bushing remover/installer		Removing and installing camshaft bushing (engine)
JAC-T8F017	V-block for camshaft measurement		Measuring camshaft damage (engine)
JAC-T8F018	Hose clamp pliers		Removing a clamp from a hose
JAC-T8F019	Piston ring extractor		Removing and installing piston circlips (engine)
JAC-T8F020	Valve oil seal extractor		Removing valve oil seals (engine)
JAC-T8F021	End fork clip		Securing flywheel (engine)
JAC-T8F022	Crankshaft back bearing remover		Removing crankshaft back bearing
JAC-T8F023	Crankshaft back bearing installer		Installing crankshaft back bearing
JAC-T8F024	Diesel common rail tool kit		The diesel common rail tester can accurately and effectively diagnose a diesel engine with a diesel common rail system and test its fuel injection.
JAC-T8B001	Shift fork lock pin remover		Removing shift fork spring pin (transmission)
JAC-T8B002	Oil seal puller		Removing oil seals (transmission)

Downloaded from www.Manualslib.com manuals search engine

Tool number	Tool name	Outline drawing	Purpose/application
JAC-T8B003	Clutch guide		Centering clutch discs (transmission)
JAC-T8B004	Input shaft bearing installer		Installing input shaft bearings (transmission)
JAC-T8B005	Output shaft bearing installer		Installing output shaft bearings (transmission)
JAC-T8B006	Countershaft front bearing installer		Installing countershaft front bearing (transmission)
JAC-T8B007	Input shaft protective sleeve		Protecting front gear of input shaft (transmission)
JAC-T8B008	Output shaft protective sleeve		Protecting front gear of output shaft (transmission)
JAC-T8B009	Transmission bearing remover kit		Removing bearings on transmission (transmission)
JAC-T8B010	Input shaft oil seal installer		Installing input shaft oil seals (transmission)
JAC-T8B011	Transmission rear end cover oil seal remover		Removing rear end cover oil seal (transmission)
JAC-T8B012	Rear end cover oil seal installer		Installing rear end cover oil seal (transmission)
JAC-T8D001	Steering linkage drawing die		Disconnecting front end control arm ball joint of wheel from steering knuckle (chassis)
JAC-T8D002	Interior trim crow plates		Prying door trims

Downloaded from www.Manualslib.com manuals search engine

Preface

This SUNRAY Service Manual is hereby compiled by the Customer Service Department of JAC to help the technical service personnel correctly understand and get familiar with SUNRAY products of JAC INTERNATIONAL better and to provide them with the ability of quick repair and proper maintenance. This manual comprises five volumes: Engine Control, Engine Mechanical, Chassis, Body Electrical, and Body Accessories.

The Body Accessories Volume details the removal methods of body accessories including interior and exterior trims and glasses of SUNRAY long-wheelbase vehicles as well as repair parameters of metal plates.

When replacement is necessary, only genuine spare parts recommended by JAC can be adopted.

No part of this manual can be reproduced or used in any form or by any mean without written permission. All Rights Reserved.

JAC INTERNATIONAL

March 2011

Downloaded from www.Manualslib.com manuals search engine

Body Accessories Volume Contents

Body Glass

SST for Glass....BG 2
Front windshield....BG 3
Windshield....BG 4
Front triangle glass....BG 7
Front door glass....BG 9
Front door glass seal....BG 11
Front door glass regulator....BG 12
Left side wall glass....BG 14
Right side wall glass....BG 17
Double-open back door glass....BG 21

Front/Rear Doors and Front Compartment Cover

Front compartment cover....BD 24
Front compartment cover....BD 25
Radiator core bracket....BD 28
Compartment cover release cable....BD 29
Right front door....BD 31
Left front door....BD 34
Door outer handle....BD 37
Door lock cylinder....BD 39
Left front door lock body....BD 41
Right front door lock body....BD 44
Door seal....BD 46
Double-open back door....BD 47
Double-open back door outer handle....BD 50
Double-open back door latch....BD 52
Double-open back door lock and drive rod....BD 53
Double-open back door lock....BD 55
Double-open back door seal....BD 57

Removal/Installation

Instrument panel....BP 60
Instrument panel....BP 61
Roof lining....BP 69
Trim panel of A-pillar....BP 74
Trim panel of B-pillar....BP 75
Trim panel of C-pillar....BP 78
Side wall window trim panel....BP 80
Trim panel of D-pillar....BP 84
Interior trim panel....BP 86
Front door trim panel....BP 88
Double-open back door trim panel....BP 89

Downloaded from www.Manualslib.com manuals search engine

Interior rear-view mirror....BP 91
Sun visor....BP 92
Curtains....BP 93
Luggage rack....BP 94
Step plate assembly....BP 96
Front bumper....BP 97
Rear bumper....BP 99
Front grille....BP 101
Fender....BP 102
Front door skirt trim panel....BP 106
Front side wall skirt trim panel....BP 107
Middle side wall skirt trim panel....BP 108
Rear wheel skirt trim panel....BP 109
Rear tire mud guard....BP 110

Seats

Driver's seat....SE 112
Front row twin bench-type seat....SE 114
Front row individual seat....SE 115
Driver's seat....SE 116
Front row twin bench-type seat....SE 119
Front row individual seat....SE 120
back row seats....SE 121

Sealing Elements

Inner acoustic baffle of front wall....SP 124
Outer heat shield of front wall....SP 125
Front door seal....SP 125
Rear door seal....SP 126
Fender seal....SP 126
Front compartment seal....SP 127
Waterproof membrane....SP 127

Body Repair Parameters

Engine Compartment Repair Parameters....XE 130
Windshield Repair Parameters....XE 131
Front Door Repair Parameters....XE 132
Rear Double-Door Repair Parameters....XE 133
Girder Repair Parameters....XE 134

Attached List—SUNRAY Special Service Tools

Downloaded from www.Manualslib.com manuals search engine

Body Glass

Applied models: SUNRAY products manufactured by JAC

Subject Page

Instruction and Operation

SST for Glass..... 2
Front windshield..... 3

Removal/Installation

Windshield..... 4
Front triangle glass.....7
Front door glass.....9
Front door glass seal.....11
Front door glass regulator..... 12
Left side wall glass.....14
Right side wall glass..... 17
Double-open back door glass.....21

Downloaded from www.Manualslib.com manuals search engine

Instruction and Operation

SST for Glass

Tool	Illustration	Function
Door hinge adjusting wrench	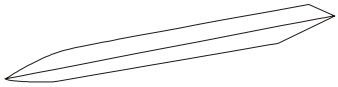	For adjustment, removal or installation of door hinge
Ceiling remover	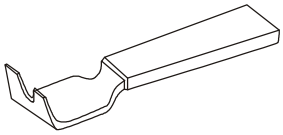	For removal of ceiling
Sealant remover	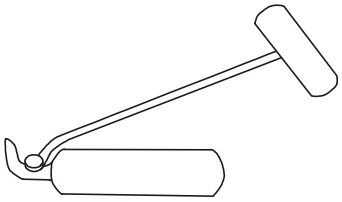	For cutting door window seal (used together with the next tool)
Seal cutting blade	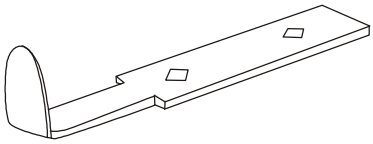	For removing windshield sealant (used together with the previous tool)
Sealant gun	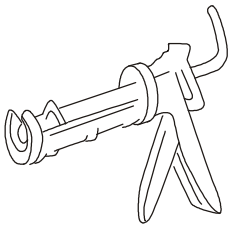	For applying sealant onto windshield
Glass suction cup	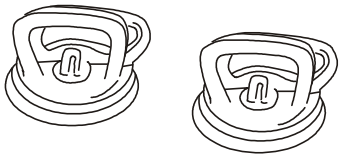	For removal/installation of windshield
Windshield remover	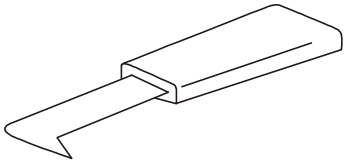	For removal of windshield molding

Downloaded from www.Manualslib.com manuals search engine

Instruction and Operation

Front windshield

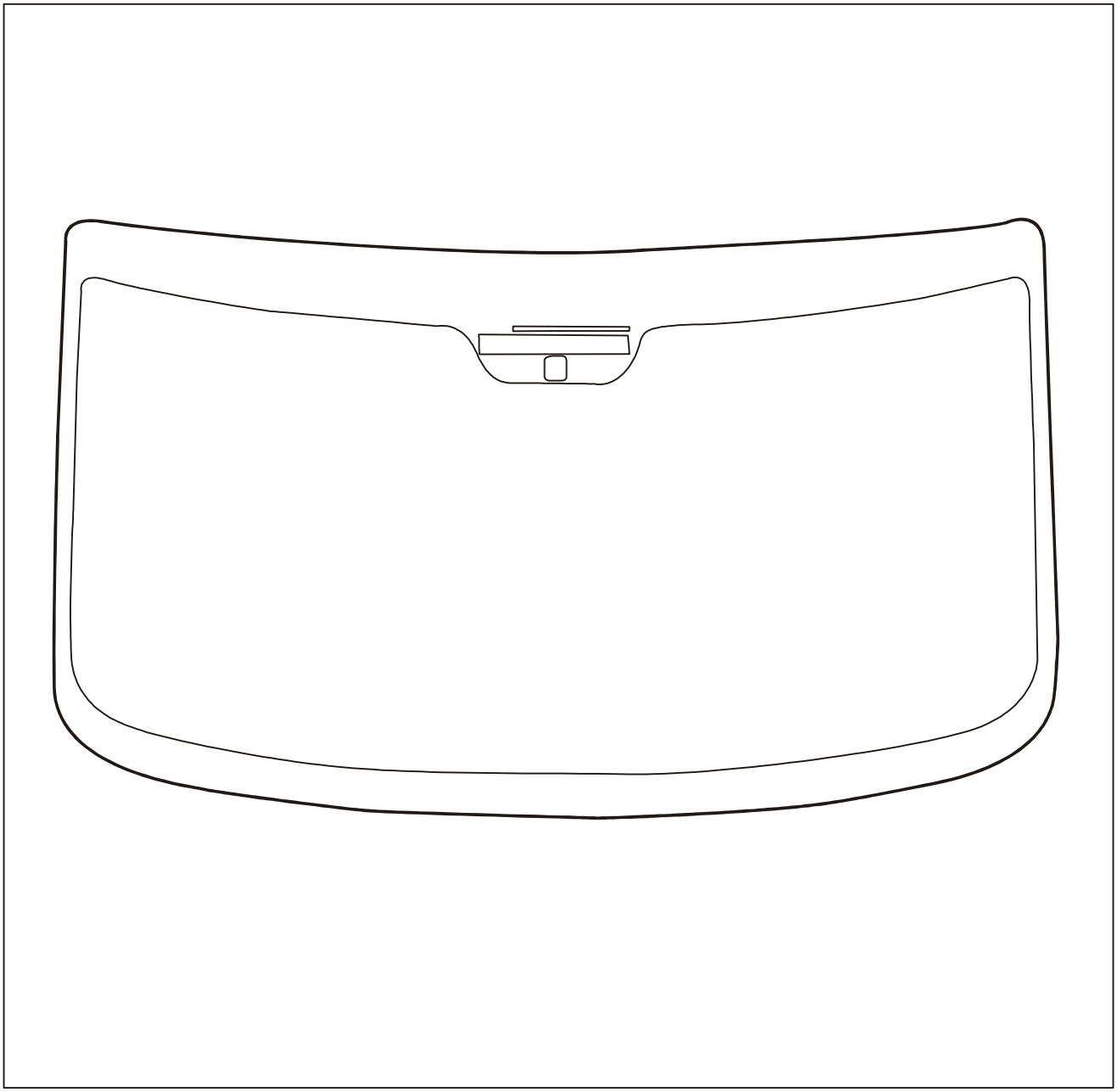

Front windshield is mainly composed of laminated glass and relevant accessories (interior rear-view mirror base, antenna and antenna terminal, pad), functioning for blocking wind and rain and providing safe and comfortable environment for driver and passengers.

Downloaded from www.Manualslib.com manuals search engine

Removal/Installation

Front windshield

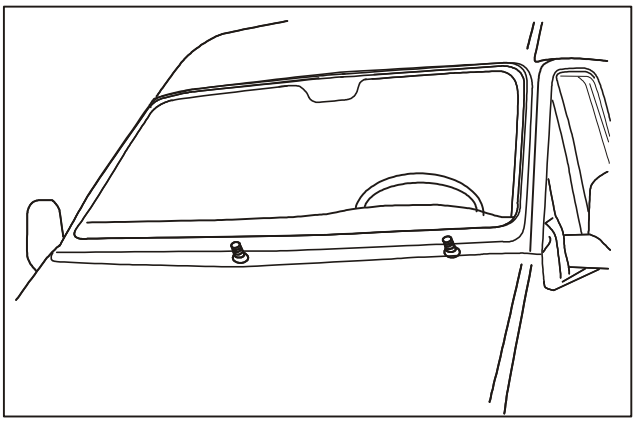

Removal

1. Remove glass molding
   Prepare repair kit, with the following articles included:

Sealant (carbamic acid ethyl ester adhesive)	Cleaner
Primer	Cloth
Wool brush	Felt
Mat	Nozzle

Note:
An additional tube of sealant may be applied.

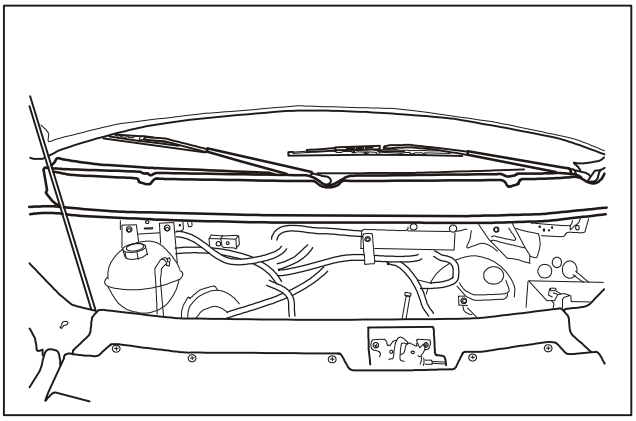

2. Remove grille and wiper from vehicle neck. .

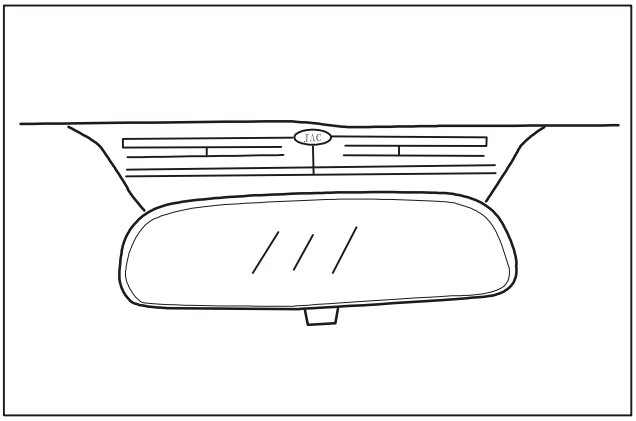

3. Remove interior rear-view mirror.

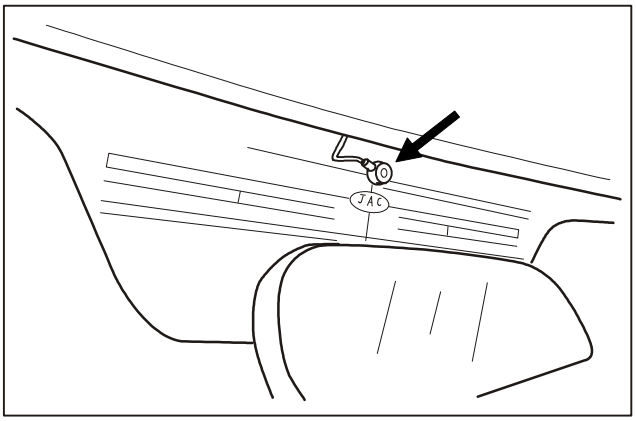

4. Disconnect antenna connector.

Downloaded from www.Manualslib.com manuals search engine

Removal/Installation (Continued)

Front windshield

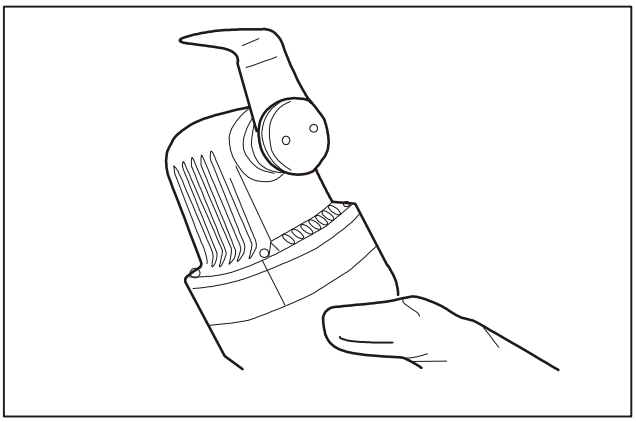

5. Install the precise cutting blade (24mm hook type blade) onto the cutter.

Warning:
When using tools for cutting glasses, please wear gloves and goggles to avoid possible injury caused by glass fragments generated during cutting.

Attention:
In case of the windshield to be reused, it is prohibited to use cutter or electric cutting tools.

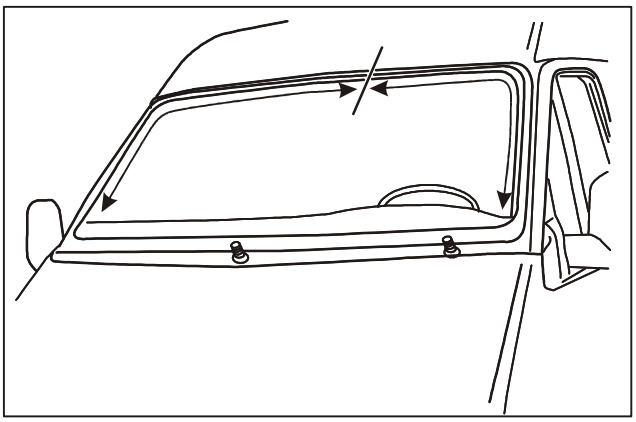

6. Cut one side and top side of glass sealant.
   Cut the polyurethane sealant on the outside of windshield from the left lower corner to the left upper part and then from the upper part to the right lower corner.

Note:
The windshield is positioned by two height adjustable pieces installed on the bottom, which should be leveled before cutting.

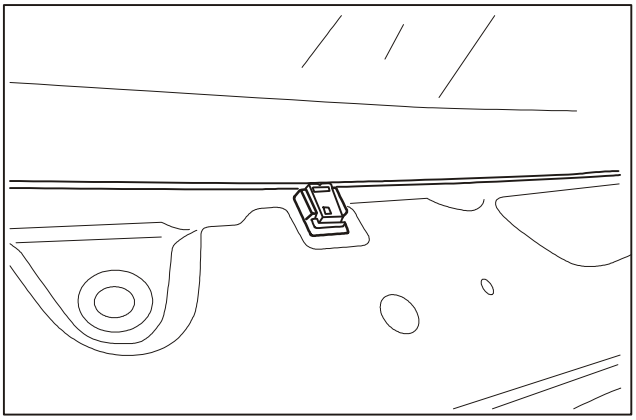

7. Cut the glass sealant at the bottom part.

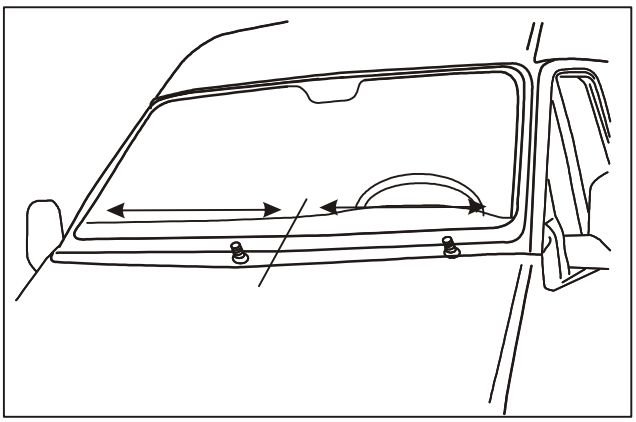

8. Cut the glass sealant at the bottom part (continued).
   Cut the sealant from the outside midpoint to both sides.
9. Take the windshield down carefully.

Downloaded from www.Manualslib.com manuals search engine

Removal/Installation (Continued)

Front windshield

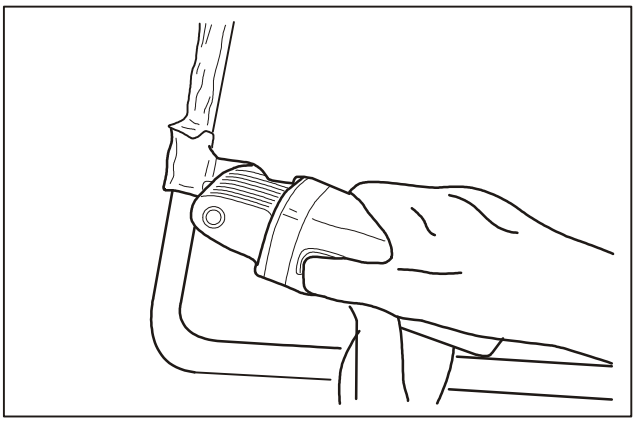

Installation

Note:

Don't contact the already trimmed surface, otherwise, bonding effect of new sealant may be influenced.

1. Trim the side grooves.
   - Install the precise cutting blade.
   - Trim the polyurethane sealant remained on grooves carefully, with polyurethane sealant in thickness of 1mm left on the body for side trimming.

2. Wipe the glass clean.
   Trim the polyurethane sealant remained on window carefully, with polyurethane sealant in thickness of 1mm left on the glass for side trimming.

Caution:

Glass primer contains solvent that can make the primer hardened after volatilization but also can soften the surface coat of synthetic paint, therefore, "ZK" polypropylene surface paint mixed with hardener should be applied around the window.

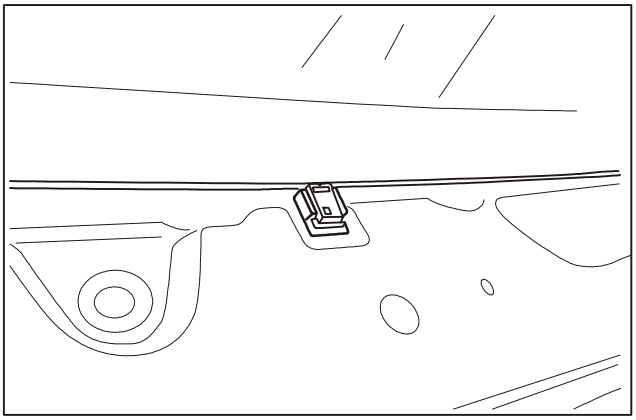

3. Install the new height adjusting brackets onto the bottom part of windshield.
   - Clamp the mark position of windshield center groove.
   - Rotate two adjusting screws to lift the glass to the uppermost.
   - Place the glass into window groove and check if the clearance between glass top and window groove is 2~4mm. Adjust when necessary.

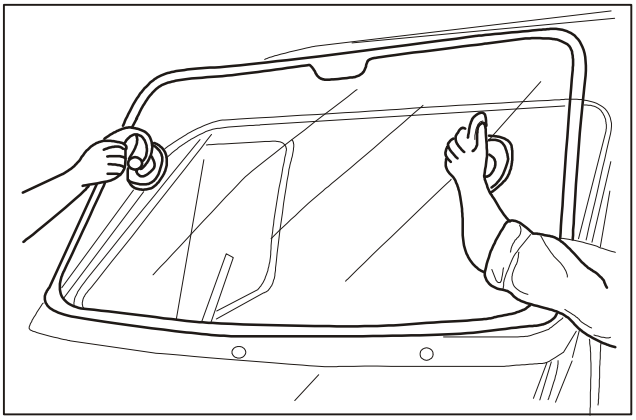

4. Install the glass.
   - Mount the glass in place with center aligned.
   - Adjust glass based on window groove height to ensure proper alignment. Adjust when necessary.
   - Press the glass tightly into the sealant from center part gradually to both sides.

Note:

Park the vehicle in the place with ambient temperature of zero degree and don't drive it 24h before complete curing of carbamic acid ethyl ester adhesive. The curing time is determined by temperature and humidity, which shall be prolonged in case of low temperature and humidity.

5. Install remaining parts in reverse order of removal.

Downloaded from www.Manualslib.com manuals search engine

Removal/Installation

Front triangle glass

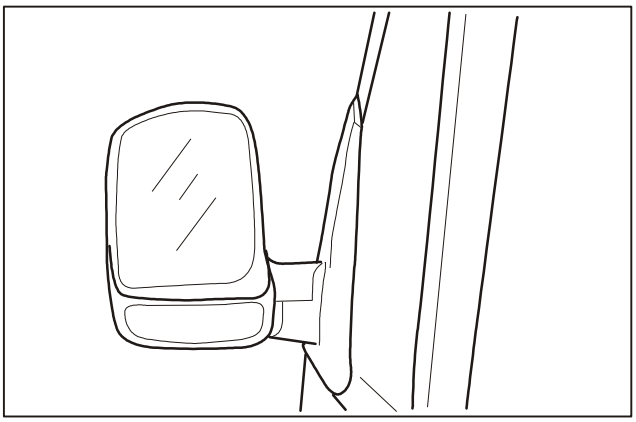

Removal

1. Remove the rear-view mirror from the window.

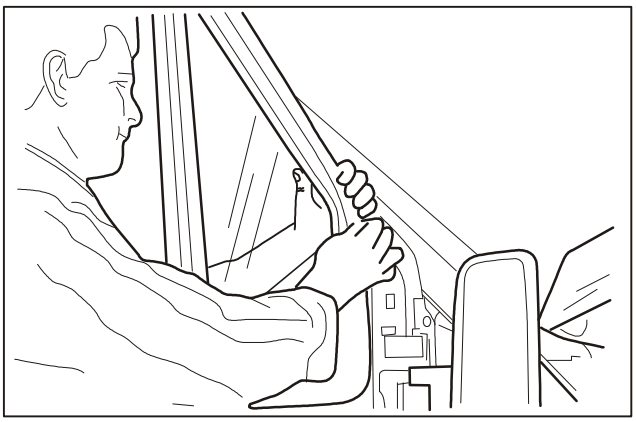

2. Remove the glass.
   Compress the glass continuously and forcibly from the inside upper corner.

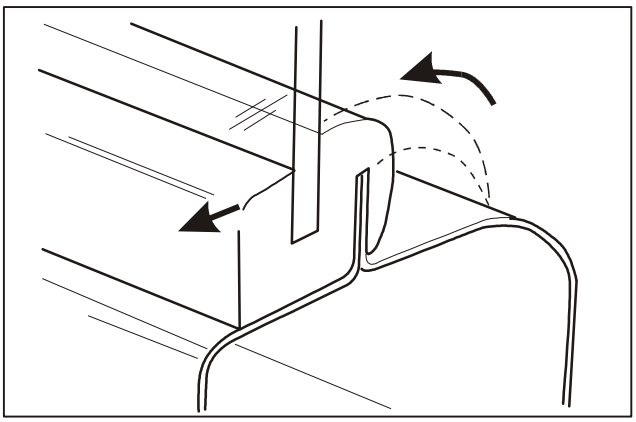

3. Peel off the seal.

Installation

1. Insert a high strength cable into seal and window groove to determine the end position of cable and make it lapped at the corner part.

Downloaded from www.Manualslib.com manuals search engine

Removal/Installation (Continued)

Front triangle glass

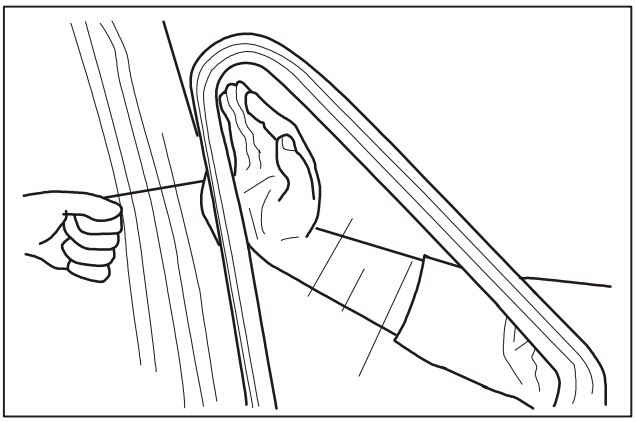

2. Reinstall the window.
   - Pass the cable through the window groove and stick the lower edge of seal along the edge of window groove.
   - Compress the outside of glass continuously and forcibly and meanwhile draw one end of the cable to press the seal onto the window groove.
   - Repeat those action until the window is properly installed and then check if the seal is sealed properly.

Downloaded from www.Manualslib.com manuals search engine

Removal/Installation

Front door glass

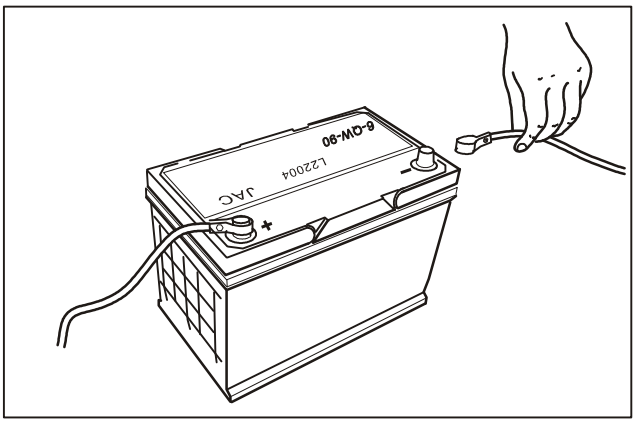

1. Disconnect the negative cable of battery.

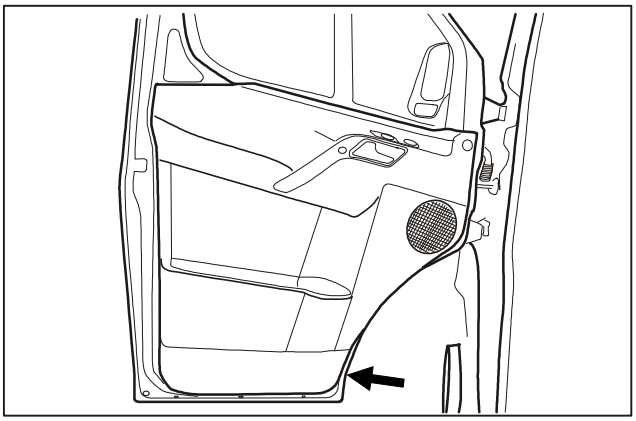

2. Remove the interior trim panel of door.

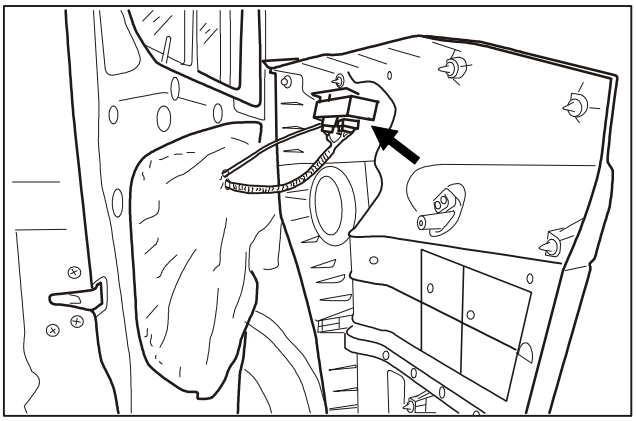

3. Disconnect the harness connector of interior trim panel of door.

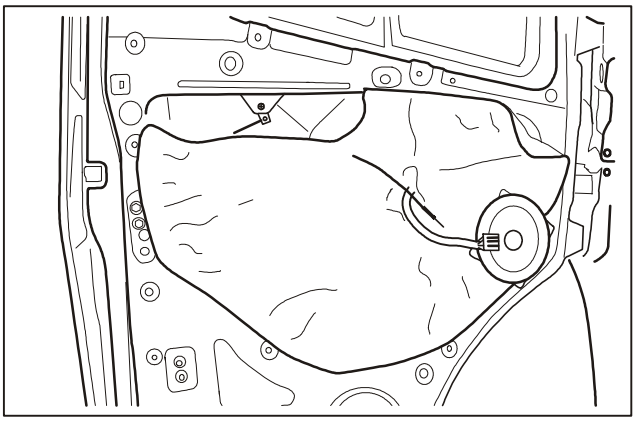

4. Peel off the waterproof membrane.

Downloaded from www.Manualslib.com manuals search engine

Removal/Installation (Continued)

Front door window

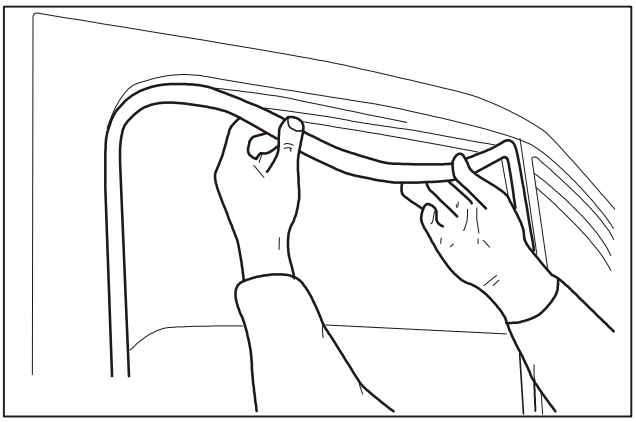

5. Pull out the glass seal from top to bottom.

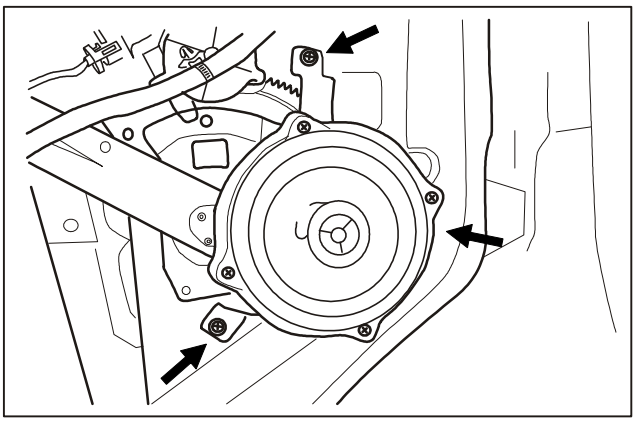

6. Remove the loudspeaker.

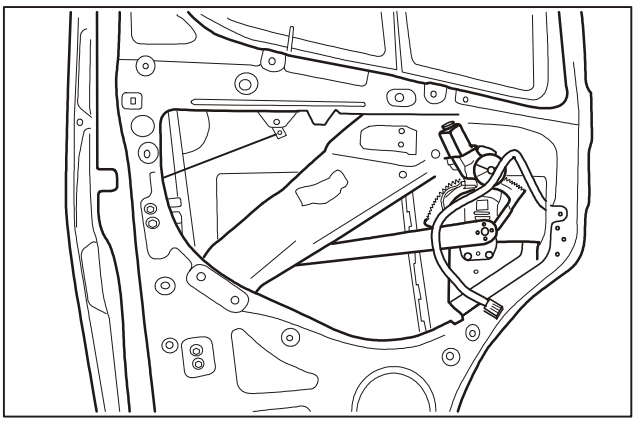

7. Remove the glass regulator motor.

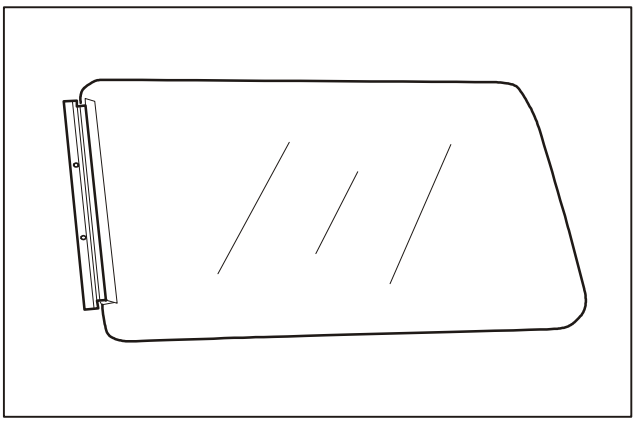

8. Take down the glass from the window carefully.

Downloaded from www.Manualslib.com manuals search engine

Removal/Installation

Front door glass seal

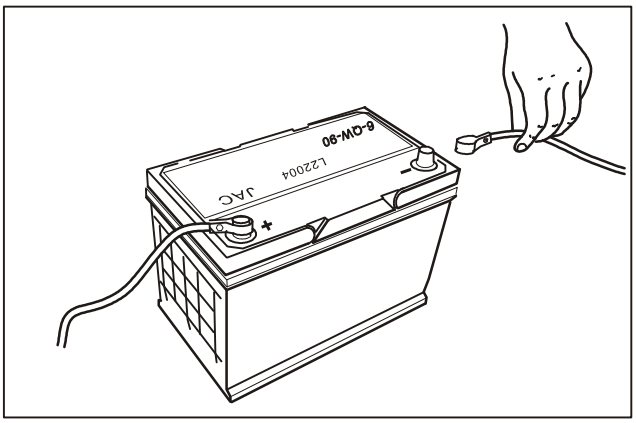

Removal

1. Disconnect the negative cable of battery.

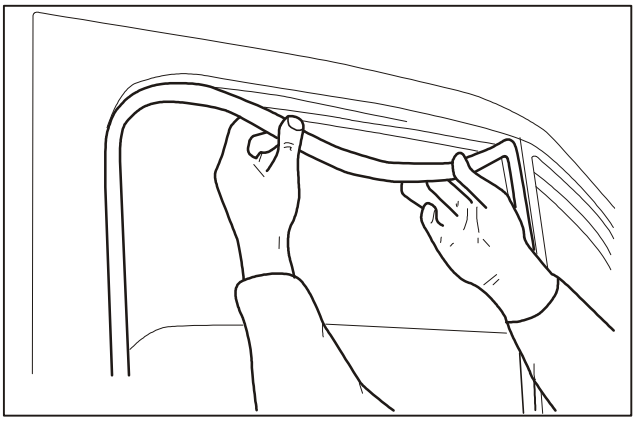

2. Peel off the window glass seal.

Note:
Peel off the window glass seal completely from top to bottom as shown in the figure.

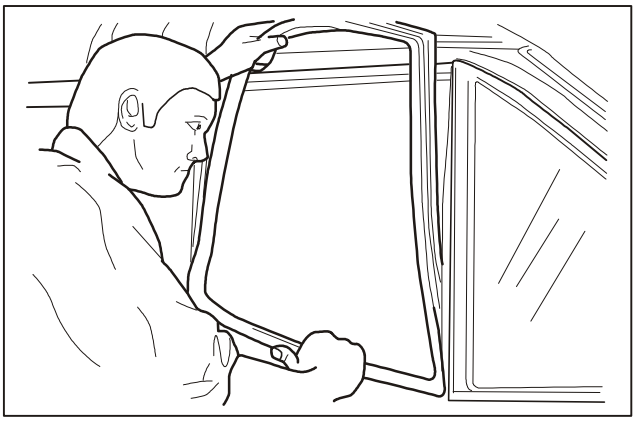

Installation

1. Install the seal into door panel from the front bottom corner.

Downloaded from www.Manualslib.com manuals search engine

Removal/Installation

Front door glass regulator

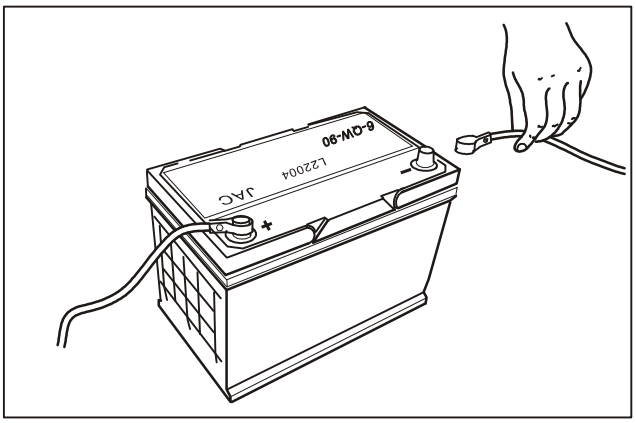

Removal

1. Disconnect the negative cable of battery.

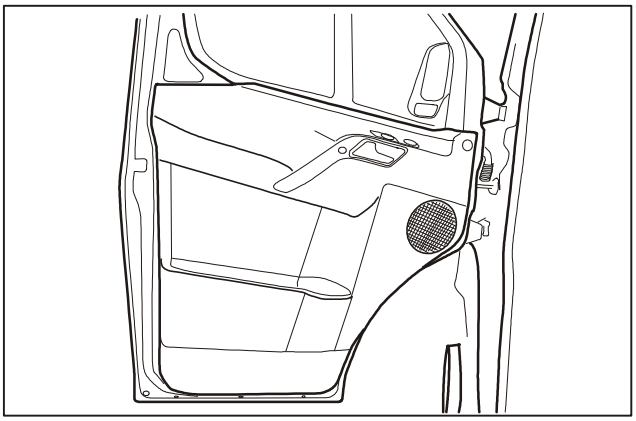

2. Peel off the window glass seal.

Note:
Peel off the window glass seal completely from top to bottom as shown in the figure.

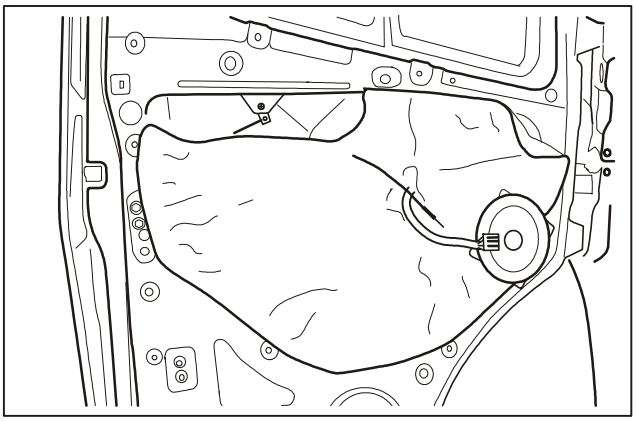

3. Remove the waterproof membrane.

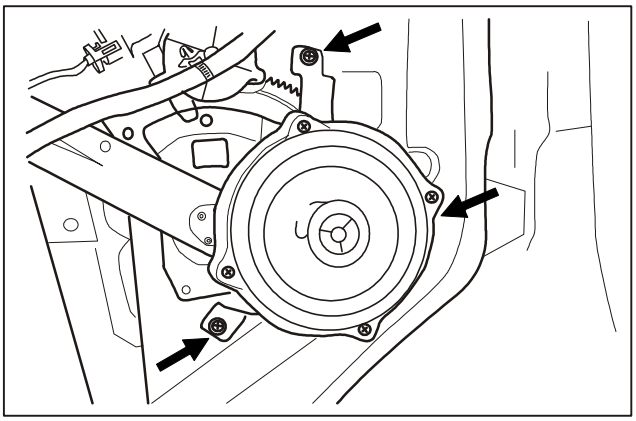

4. Remove the loudspeaker.

Downloaded from www.Manualslib.com manuals search engine

Removal/Installation (Continued)

Front door glass regulator

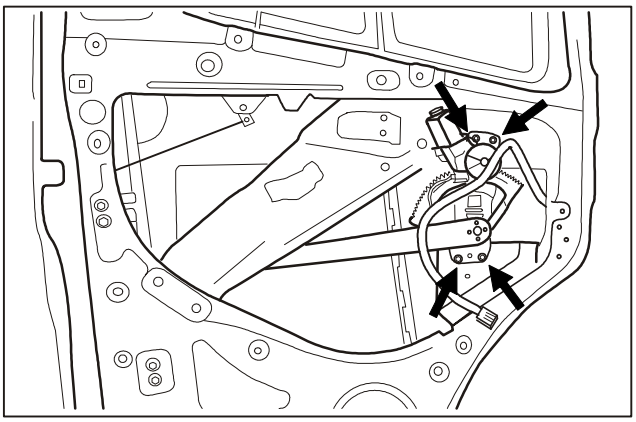

5. Remove the mounting screws for regulator motor.

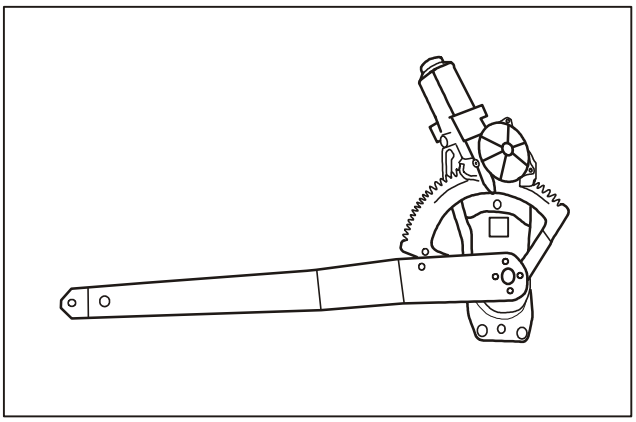

6. Take down the regulator motor.

Installation

Install it in reverse order of removal.

Downloaded from www.Manualslib.com manuals search engine

Removal/Installation

Left side wall glass

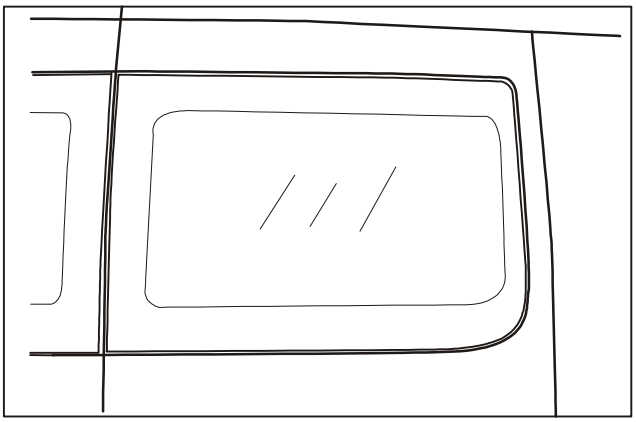

Removal

1. Prepare necessary tools.

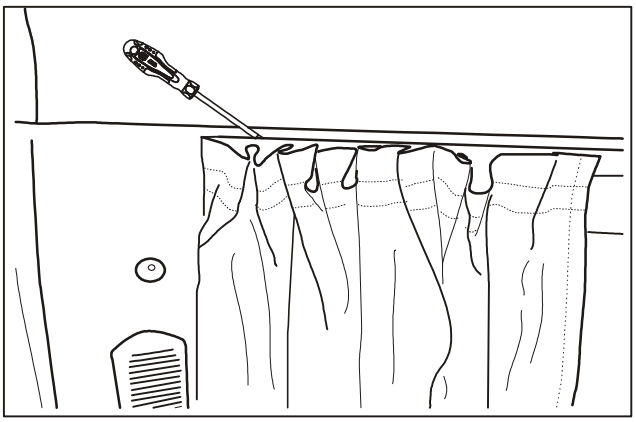

2. Peel off the window glass seal.

Note:
Peel off the window glass seal completely from top to bottom as shown in the figure.

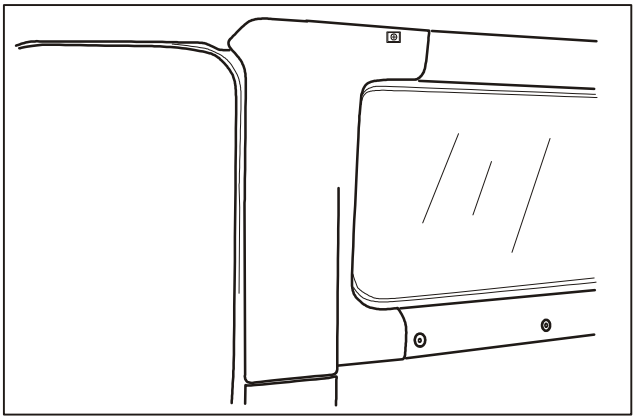

3. Remove upper and lower guard plates of B-pillar.

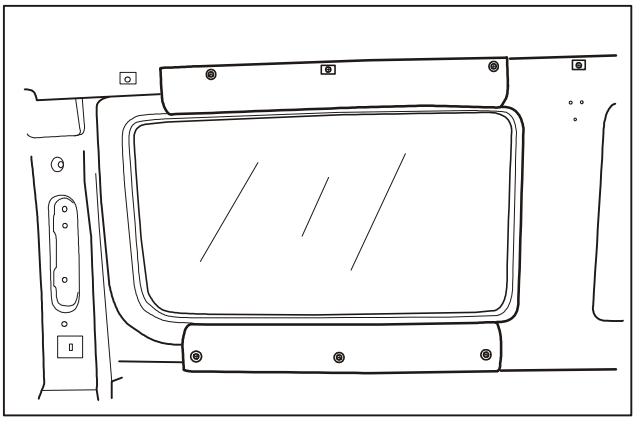

4. Remove upper and lower guard plates of B-pillar.

Downloaded from www.Manualslib.com manuals search engine

Removal/Installation (Continued)

Left side wall glass

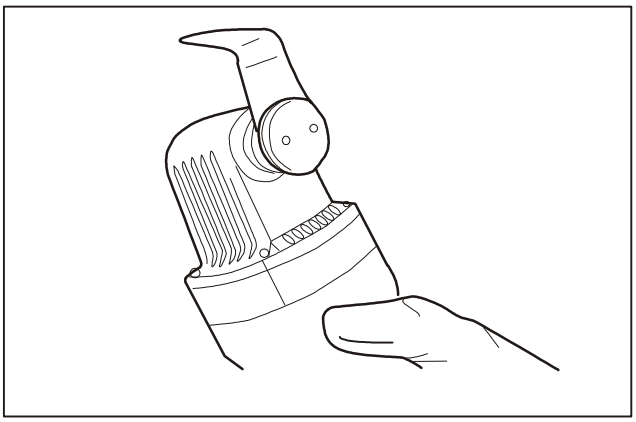

5. Install the precise cutting blade (24mm hook type blade) onto the cutter.

Warning:
When using tools for cutting glasses, please wear gloves and goggles to avoid possible injury caused by glass fragments generated during cutting.

Attention:
In case of the windshield to be reused, it is prohibited to use cutter or electric cutting tools.

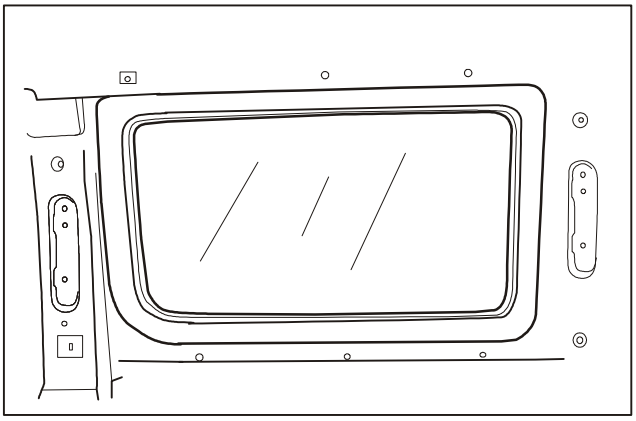

6. Remove the front door window seal.

Note:
Peel off the window glass seal completely from top to bottom as shown in the figure.

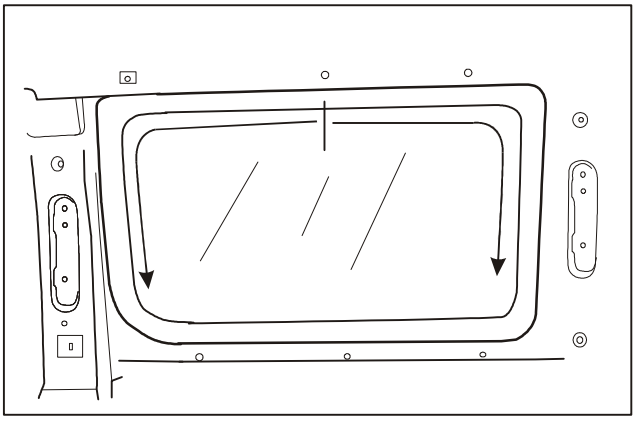

7. Cut the glass sealant, as shown in the figure.
Note:
Two persons are necessary for removal of glass and one should stand outside to hold the glass by using suction cup.

Downloaded from www.Manualslib.com manuals search engine

Removal/Installation

Left side wall glass

Installation

1. Prepare repair kit, with the following articles included:

Sealant (carbamic acid ethyl ester adhesive)	Cleaner
Primer	Cloth
Wool brush	Felt
Mat	Nozzle

Note: An additional tube of sealant may be applied.

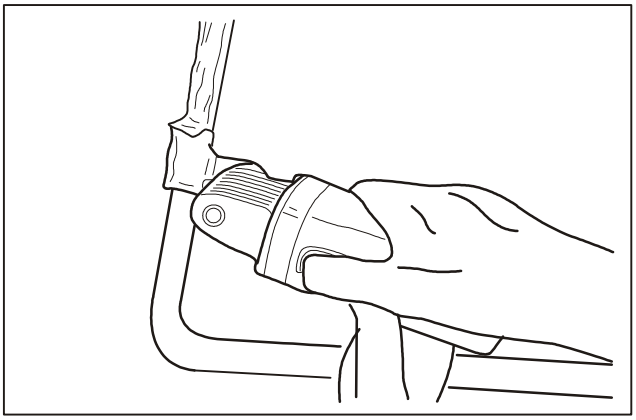

Note:

Peel off the window glass seal completely from top to bottom as shown in the figure.

Note:

Don't contact the already trimmed surface, otherwise, bonding effect of new sealant may be influenced.

2. Trim the side grooves.

- Install the precise cutting blade.

Trim the polyurethane sealant remained on grooves carefully, with polyurethane sealant in thickness of 1mm left on the body for side trimming.

3. Wipe the glass clean.

Trim the polyurethane sealant remained on window carefully, with polyurethane sealant in thickness of 1mm left on the glass for side trimming.

Caution:

Glass primer contains solvent that can make the primer hardened after volatilization but also can soften the surface coat of synthetic paint; therefore, "ZK" polypropylene surface paint mixed with hardener should be applied around the window.

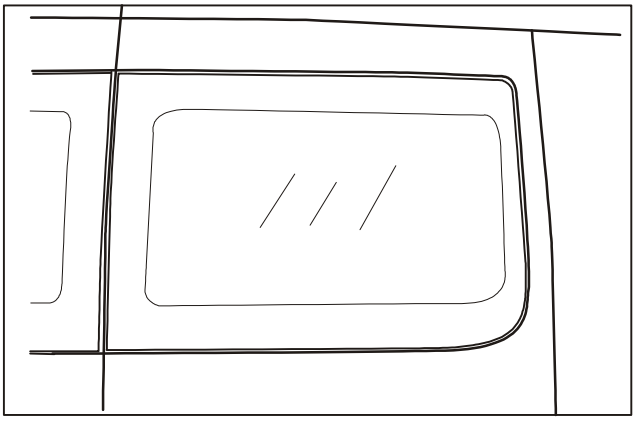

4. Install the glass.

- Mount the glass in place with center aligned.
- Adjust glass based on window groove height to ensure proper alignment. Adjust when necessary.
- Press the glass tightly into the sealant from center part gradually to both sides.

Note:

Park the vehicle in the place with ambient temperature of zero degree and don't drive it 24h before complete curing of carbamic acid ethyl ester adhesive. The curing time is determined by temperature and humidity, which shall be prolonged in case of low temperature and humidity.

5. Install remaining parts in reverse order of removal.

Downloaded from www.Manualslib.com manuals search engine

Removal/Installation

Right side wall glass

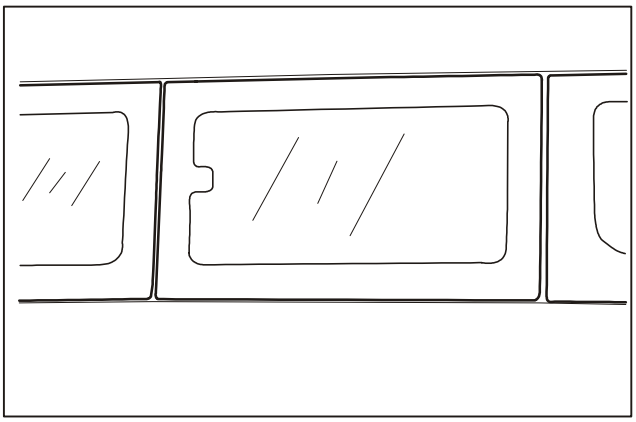

Removal

1. Side wall glass.

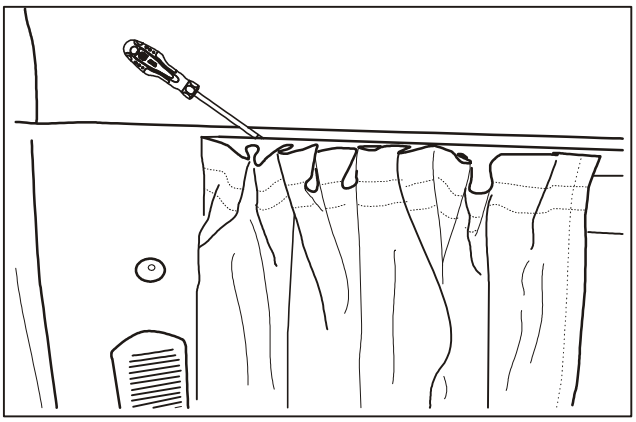

2. Remove the curtain.

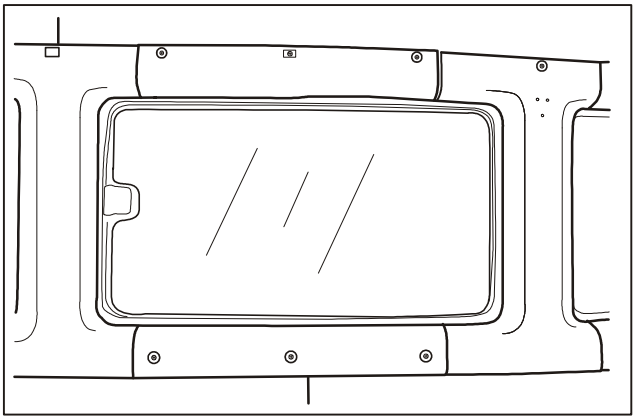

3. Remove the side pillar trim panel.

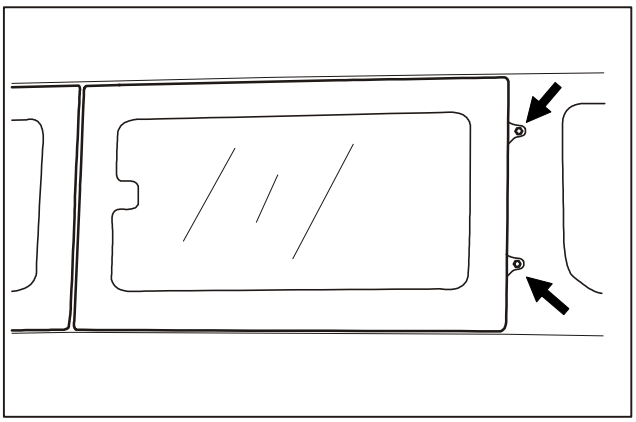

4. Remove two mounting bolts for glass.

Attention:

Two service persons are necessary for the removal.

Downloaded from www.Manualslib.com manuals search engine

Removal/Installation (Continued)

Right side wall glass

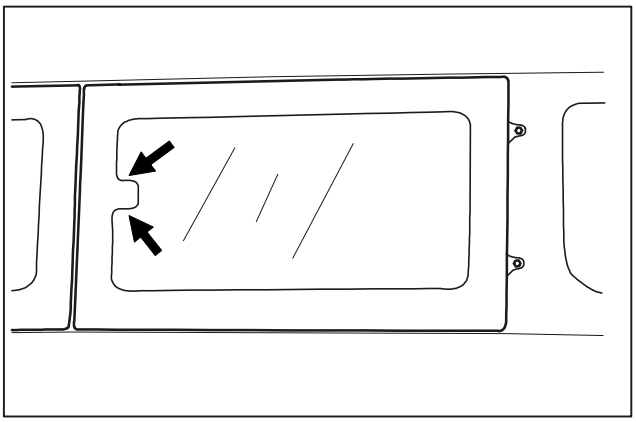

5. Remove the mounting bolts for glass and take the glass down.

Installation

Install it in reverse order of removal.

Downloaded from www.Manualslib.com manuals search engine

Removal/Installation

Rear side wall glass

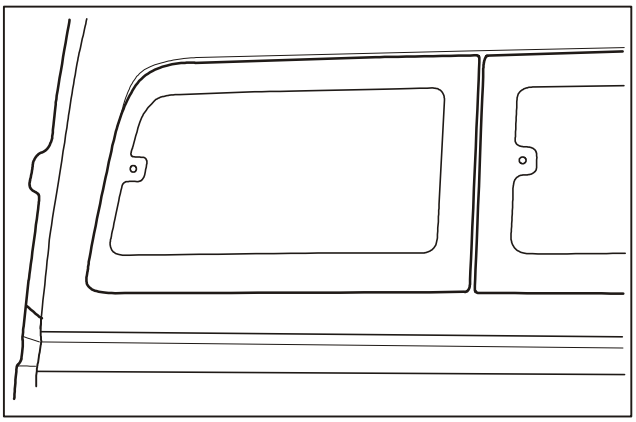

Removal

1. Rear side wall glass.

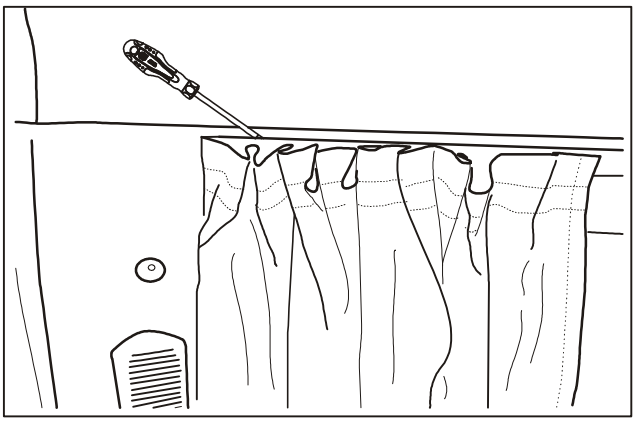

2. Remove the curtain.

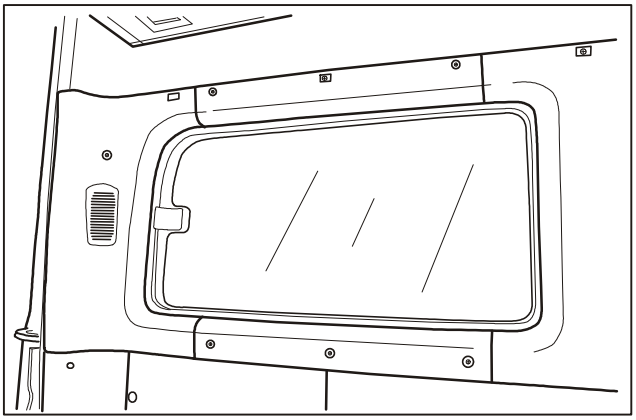

3. Remove upper and lower trim panels and guard plates of pillar-D.

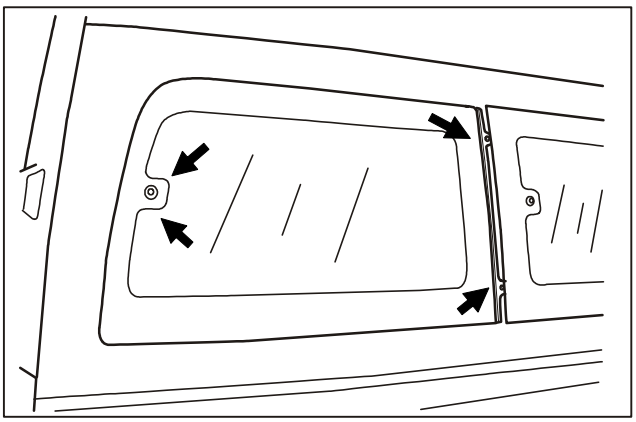

4. Remove the mounting bolts for glass and take the glass down carefully.

Downloaded from www.Manualslib.com manuals search engine

Removal/Installation

Rear side wall glass

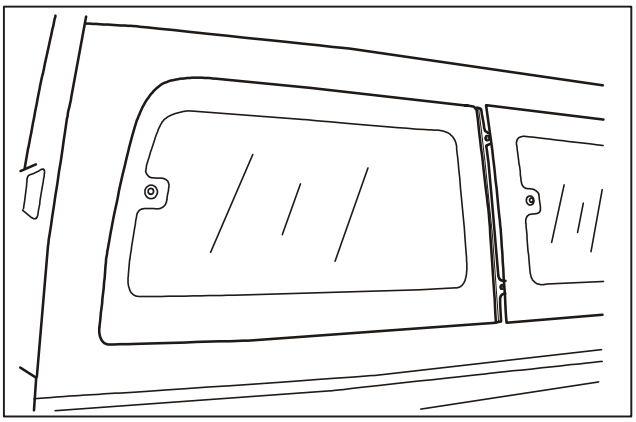

5. Remove the mounting bolts for glass and take the glass down carefully.

Installation
Install it in reverse order of removal.

Downloaded from www.Manualslib.com manuals search engine

Removal/Installation

Double-open back door glass

1. Prepare repair kit, with the following articles included:

Sealant (carbamic acid ethyl ester adhesive)	Cleaner
Primer	Cloth
Wool brush	Felt
Mat	Nozzle

Note: An additional tube of sealant may be applied.

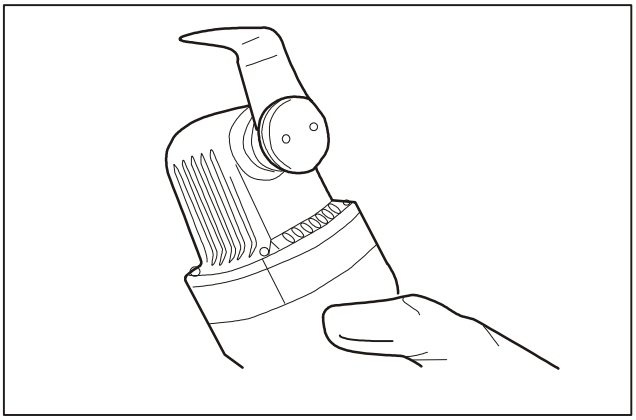

2. Install the precise cutting blade (24mm hook type blade) onto the cutter.

Warning:
When using tools for cutting glasses, please wear gloves and goggles to avoid being injured by glass fragments generated during cutting.

Attention:
In case of the windshield to be reused, it is prohibited to use cutter or electric cutting tools.

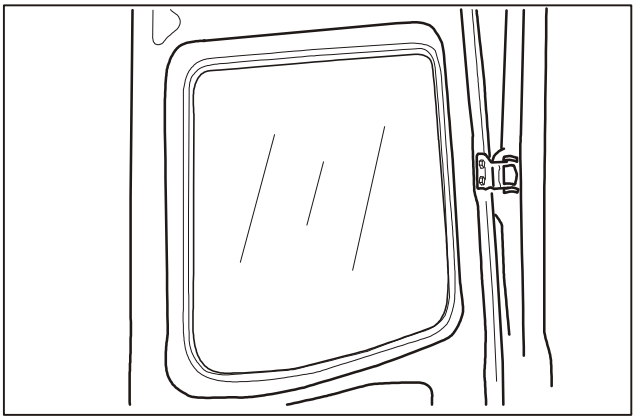

3. Remove the double-open back door glass seal.

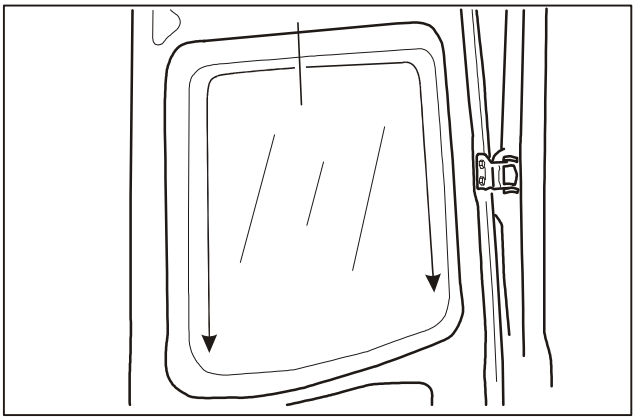

4. Cut the glass sealant in the direction shown in figure.

Downloaded from www.Manualslib.com manuals search engine

Removal/Installation

Double-open back door glass

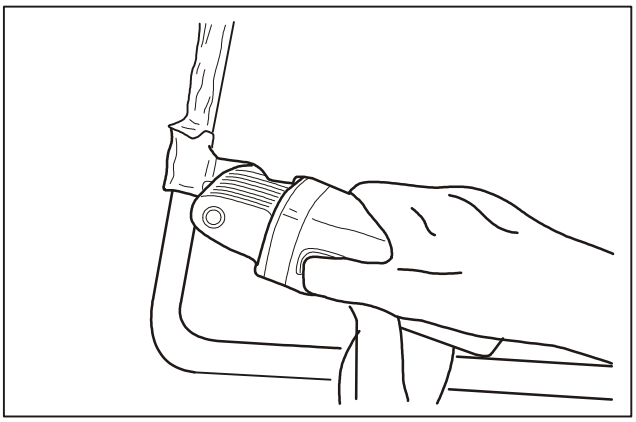

Note:

Don't contact the already trimmed surface; otherwise, bonding effect of new sealant may be influenced.

1. Trim the side grooves.

- Install the precise cutting blade.
  Trim the polyurethane sealant remained on grooves carefully, with polyurethane sealant in thickness of 1mm left on the body for side trimming.

2. Wipe the glass clean.

Trim the polyurethane sealant remained on window carefully, with polyurethane sealant in thickness of 1mm left on the glass for side trimming.

Caution:

Glass primer contains solvent that can make the primer hardened after volatilization but also can soften the surface coat of synthetic paint; therefore, "ZK" polypropylene surface paint mixed with hardener should be applied around the window.

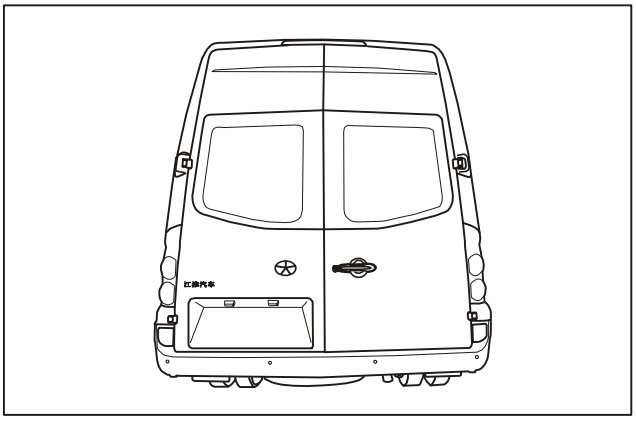

3. Install the glass.

- Mount the glass in place with center aligned.
- Adjust glass based on window groove height to ensure proper alignment. Adjust when necessary.
- Press the glass tightly into the sealant from center part gradually to both sides.

Note:

Park the vehicle in the place with ambient temperature of zero degree and don't drive it 24h before complete curing of carbamic acid ethyl ester adhesive. The curing time is determined by temperature and humidity, which is prolonged in case of low temperature and humidity.

4. Install remaining parts in reverse order of removal.

Downloaded from www.Manualslib.com manuals search engine

Front/Rear Doors and Front Compartment Cover

Applied models: SUNRAY products manufactured by JAC

Subject Page

Instruction and Operation

Front compartment cover....24

Removal/Installation

Front compartment cover....25
Radiator core bracket....28
Compartment cover release cable....29
Right front door....31
Left front door....34
Door outer handle....37
Door lock cylinder....39
Left front door lock body....41
Right front door lock body....44
Door seal....46
Double-open back door....47
Double-open back door outer handle....50
Double-open back door latch....52
Double-open back door lock and drive rod....53
Double-open back door lock....55
Double-open back door seal....57

Downloaded from www.Manualslib.com manuals search engine

Instruction and Operation

Front compartment cover

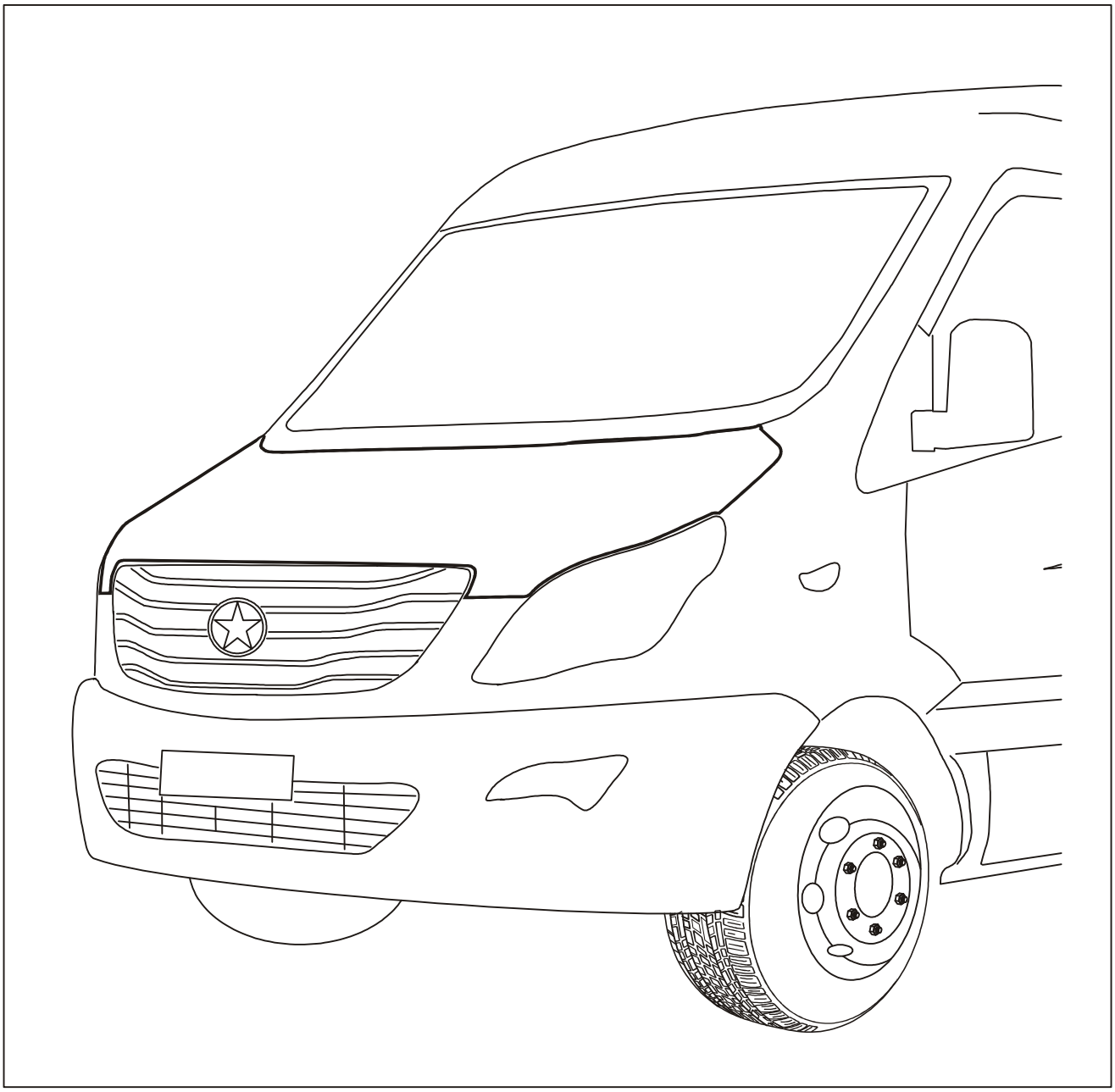

Downloaded from www.Manualslib.com manuals search engine

Removal/Installation

Front compartment cover

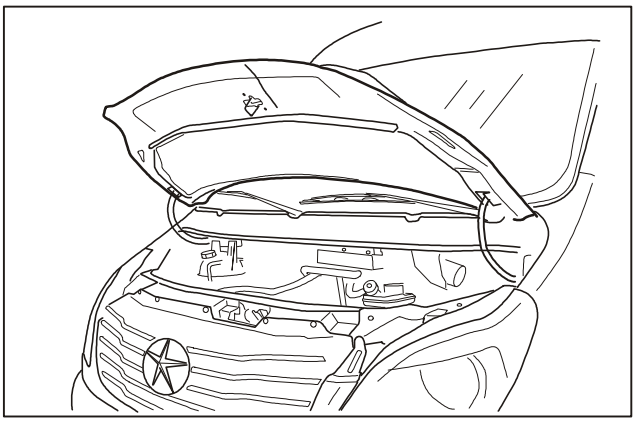

1. Open the front compartment cover.

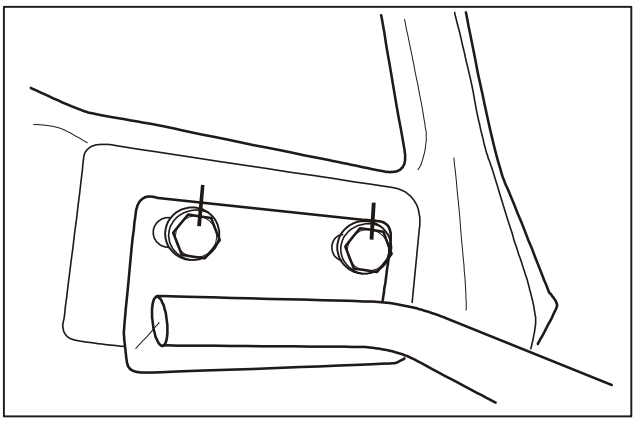

2. Mark below the mounting bolts of front fender.

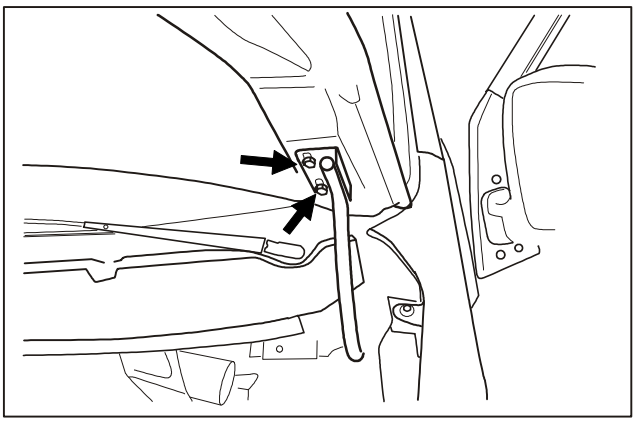

3. Remove four mounting bolts on both left and right sides.

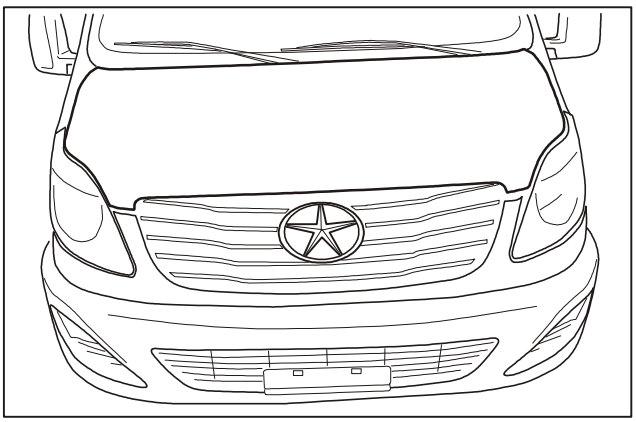

4. Two persons work together to lift the front compartment cover down.

Downloaded from www.Manualslib.com manuals search engine

Removal/Installation (Continued)

Front compartment cover

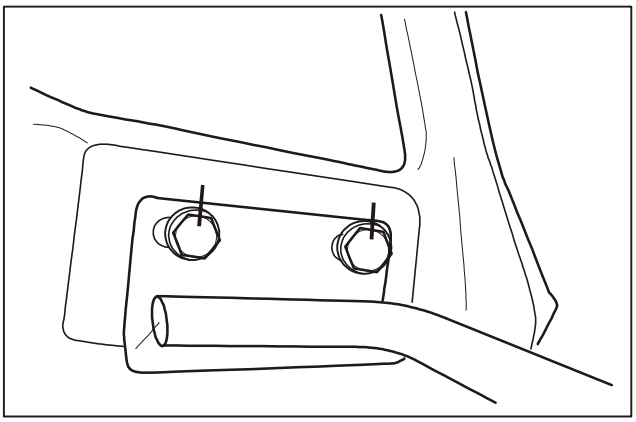

1. Install the cover with mounting marks properly aligned.

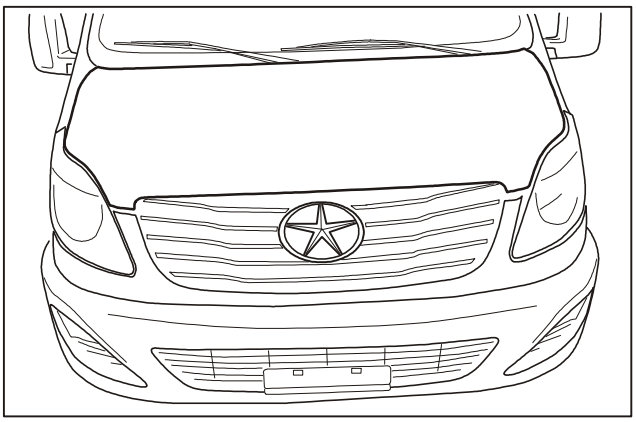

2. Two persons work together to install the front compartment cover.

Downloaded from www.Manualslib.com manuals search engine

Inspection/Adjustment

Front compartment cover

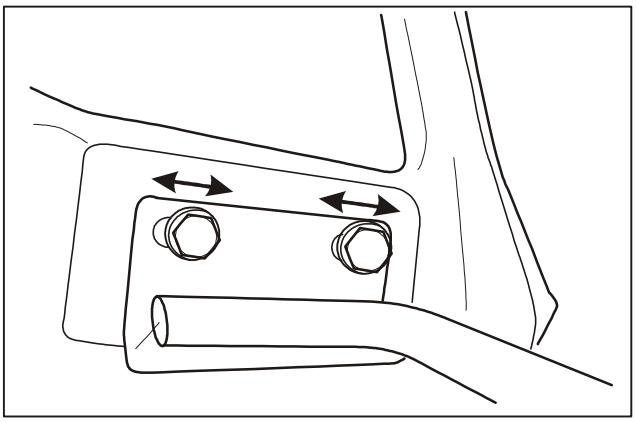

1. The adjustment direction of front compartment cover is shown in the figure.

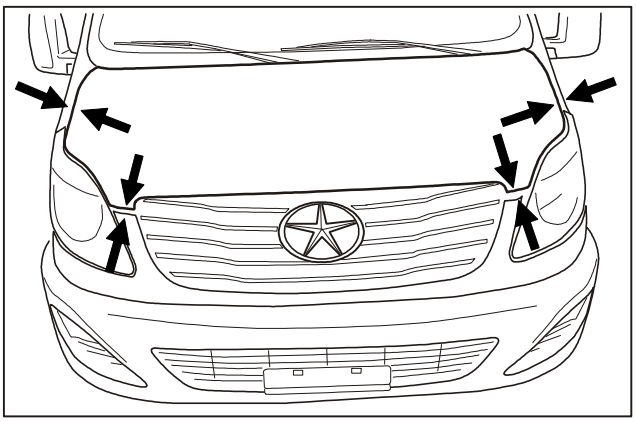

2. As shown in the figure, clearance between left/right side of the cover and fender shall meet the requirements.

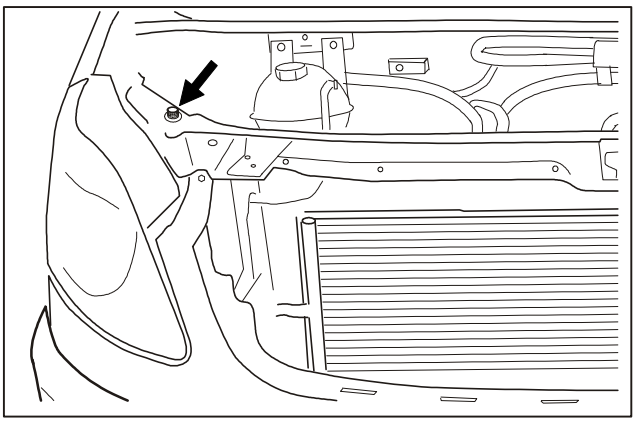

3. Adjust the height of pad and ensure the height of both fender and cover meet the requirements after the closing of front compartment cover.

Downloaded from www.Manualslib.com manuals search engine

Removal/Installation

Radiator core bracket

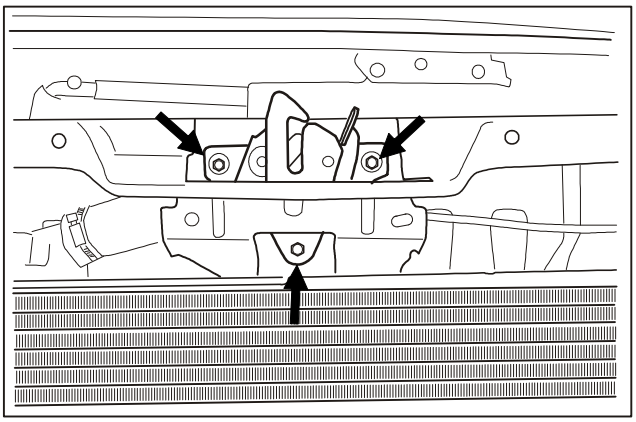

1. Remove the lock body of front compartment cover.

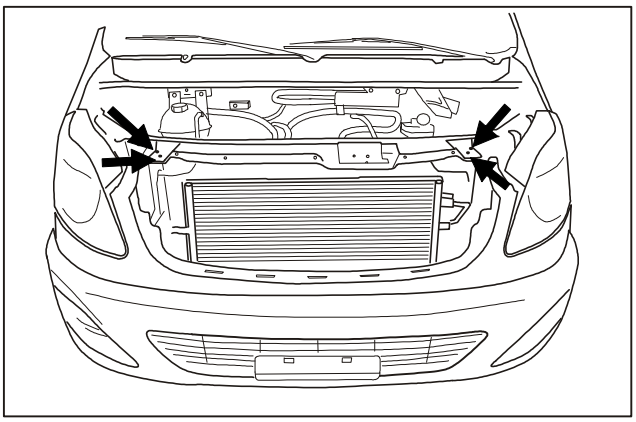

2. Remove mounting bolts for radiator core bracket.

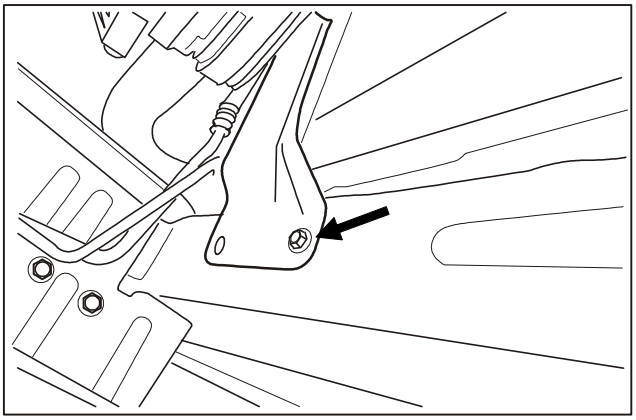

3. Remove mounting bolts for radiator core bracket.

Installation
Install it in reverse order of removal.

Downloaded from www.Manualslib.com manuals search engine

Removal/Installation

Compartment cover release cable

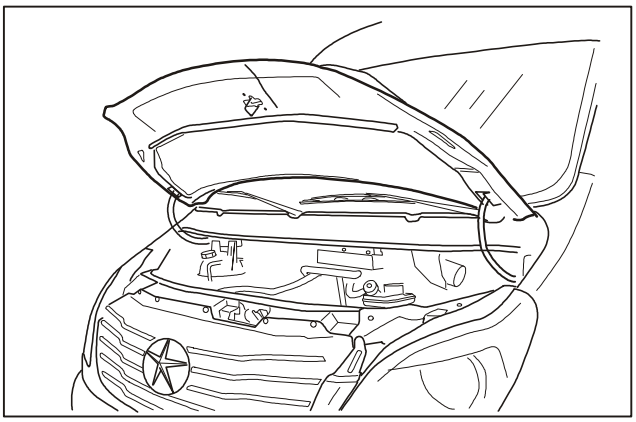

1. Open the front compartment cover.

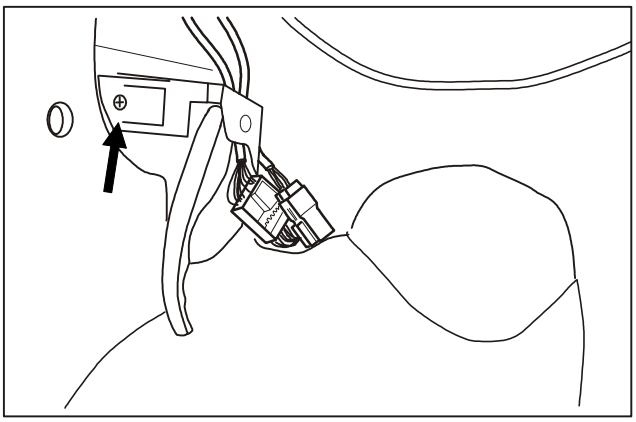

2. Remove the cable handle of front compartment cover and disconnect the cable.

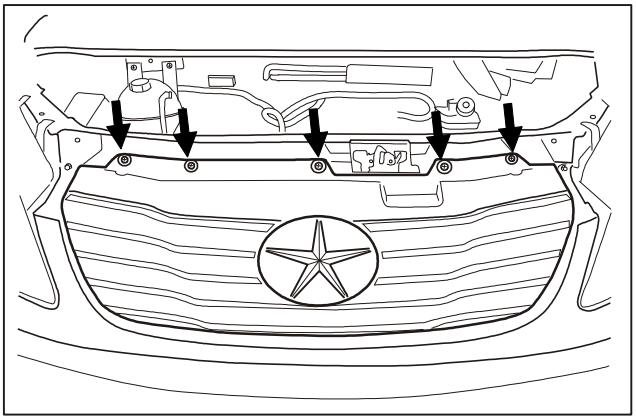

3. Remove the front grille.

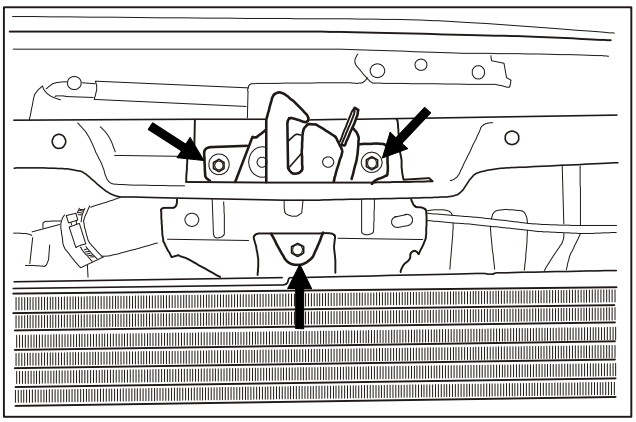

4. Remove mounting bolts for lock body.

Downloaded from www.Manualslib.com manuals search engine

Removal/Installation (Continued)

Compartment cover release cable

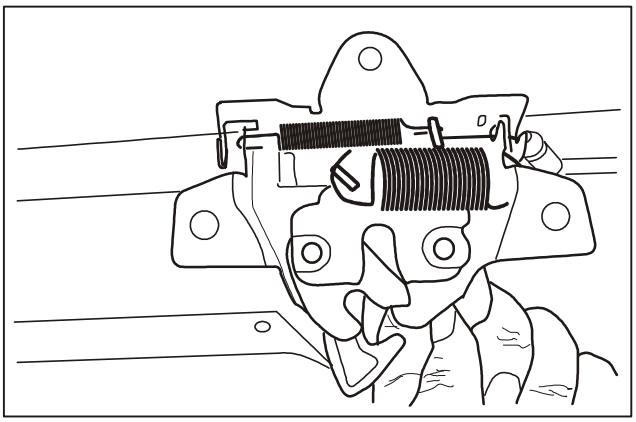

5. Disconnect the cable.

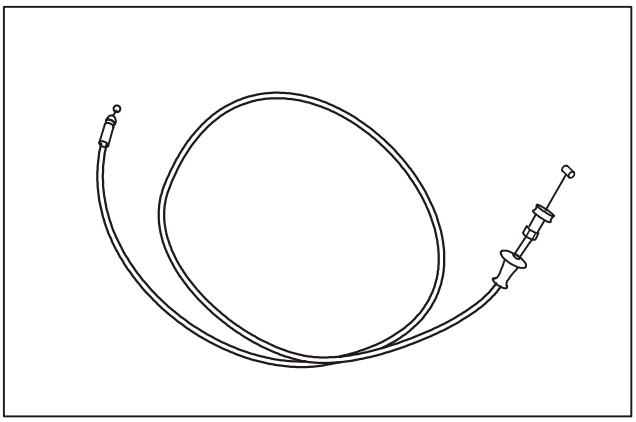

6. Remove the cable.

Installation
Install it in reverse order of removal.

Downloaded from www.Manualslib.com manuals search engine

Removal/Installation

Right front door

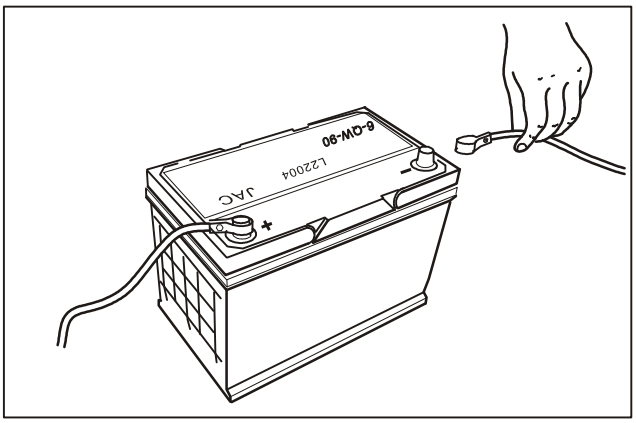

1. Disconnect the negative cable of battery.

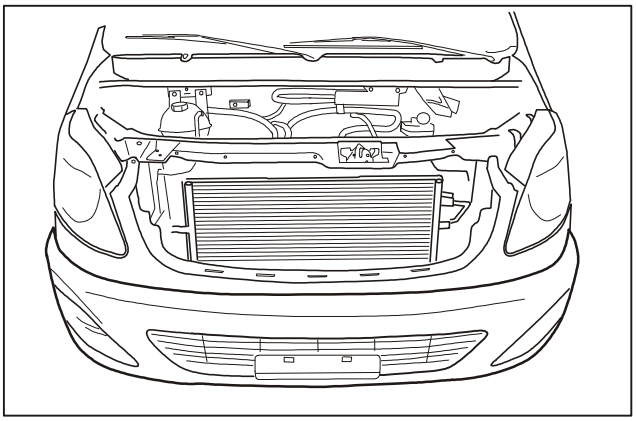

2. Remove the front bumper.
   (Refer to Removal of Front Bumper, Exterior Trim.)

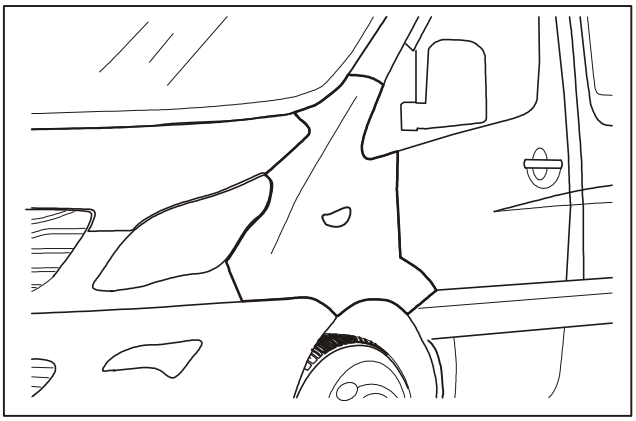

3. Remove the fender.
   (Refer to Removal of Fender, Exterior Trim.)

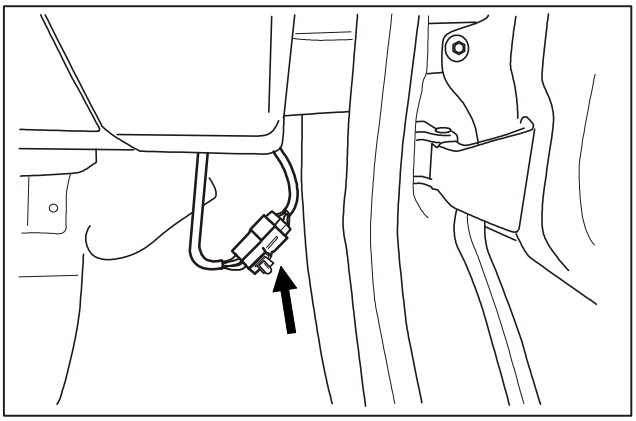

4. Disconnect the right door harness connector.

Downloaded from www.Manualslib.com manuals search engine

Removal/Installation (Continued)

Right front door

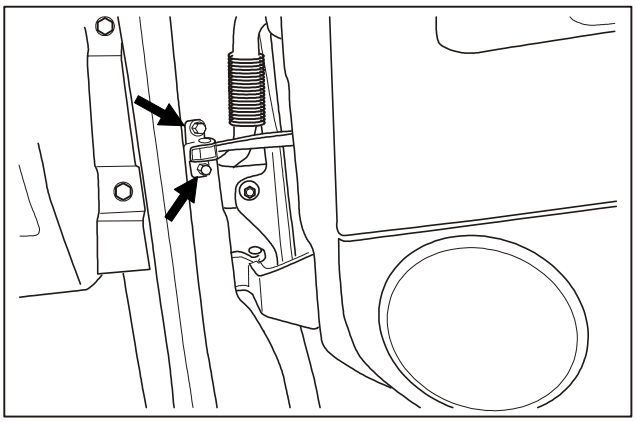

5. Remove mounting screws for right front door check.

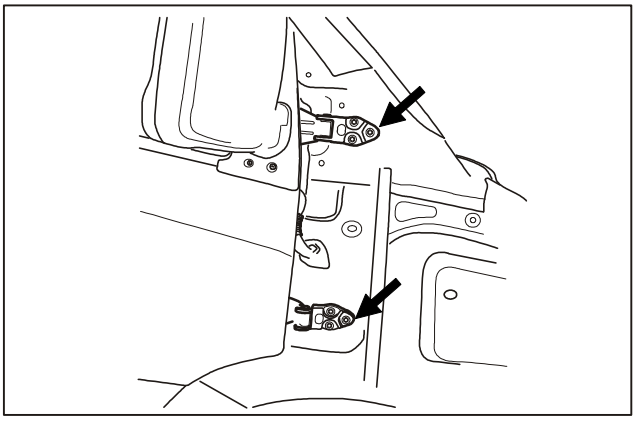

6. Remove mounting screws for hinges. Two persons shall work together to remove the door.

Downloaded from www.Manualslib.com manuals search engine

Inspection/Adjustment

Right front door

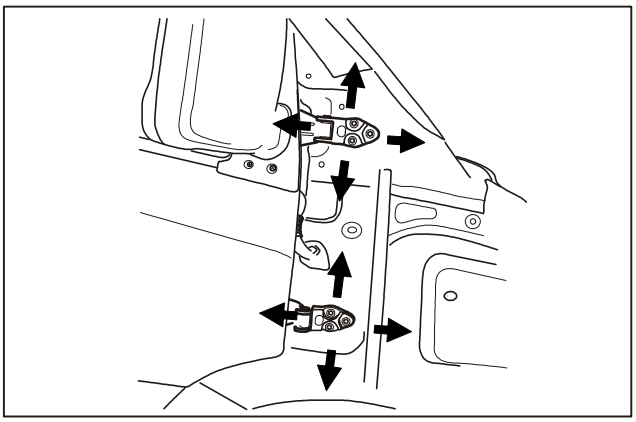

1. Adjust door hinges.

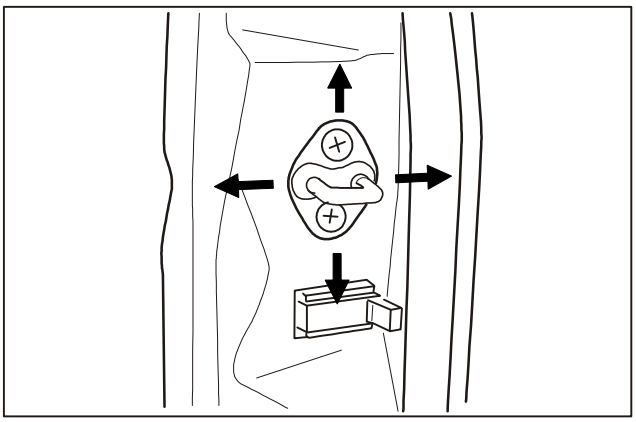

2. Adjust door latches in four directions shown in the figure.

Downloaded from www.Manualslib.com manuals search engine

Removal/Installation

Left front door

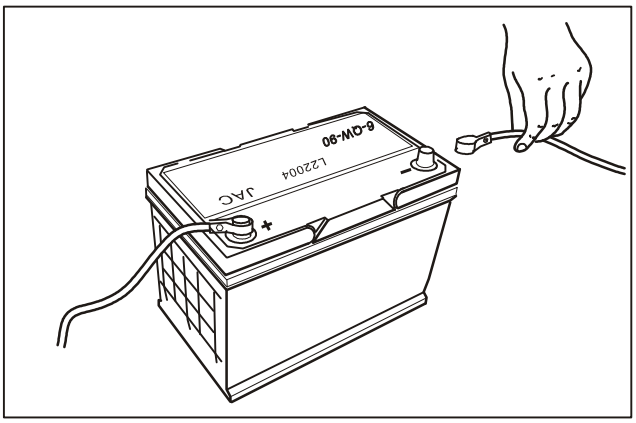

1. Disconnect the negative cable of battery.

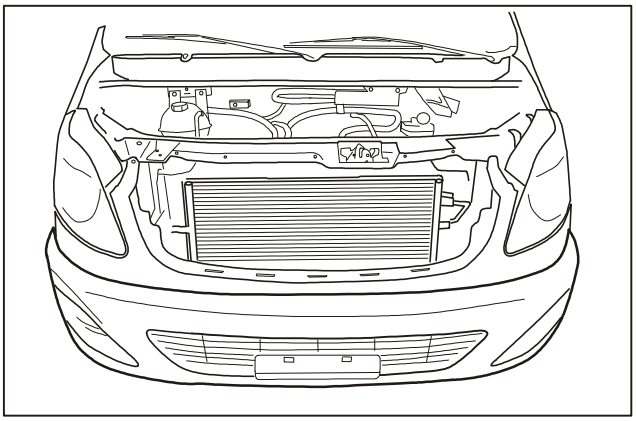

2. Remove the front bumper.
   (Refer to Removal of Front Bumper, Exterior Trim.)

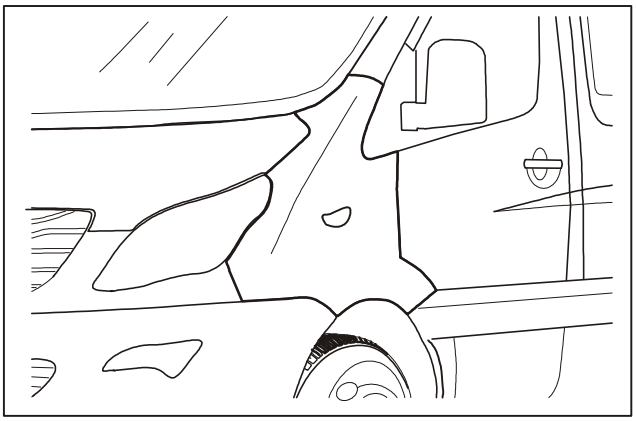

3. Remove the front fender.
   (Refer to Removal of Fender, Exterior Trim.)

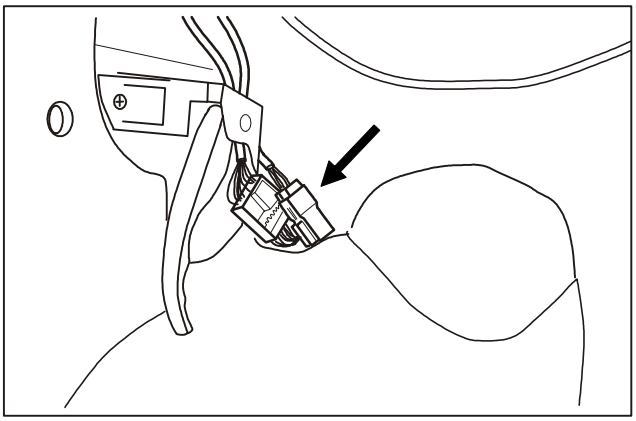

4. Disconnect the door harness connector.

Downloaded from www.Manualslib.com manuals search engine

Removal/Installation

Left front door

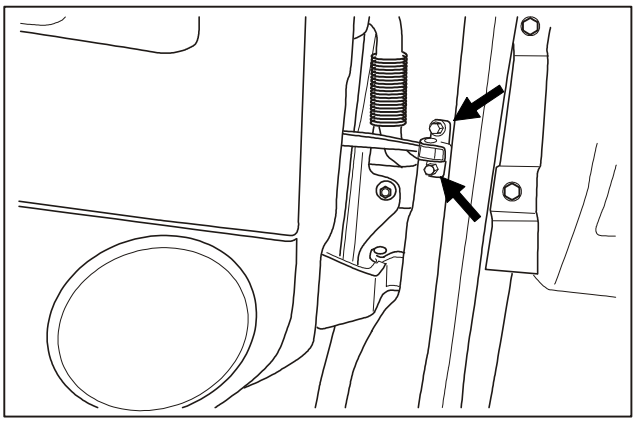

5. Remove mounting screws for left front door check.

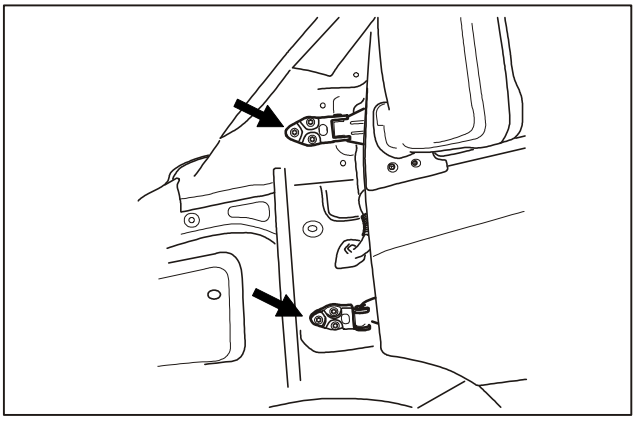

6. Remove mounting screws for hinges. Because the door is heavy, so two service persons are necessary for the removal of door.

Downloaded from www.Manualslib.com manuals search engine

Inspection/Adjustment

Left front door

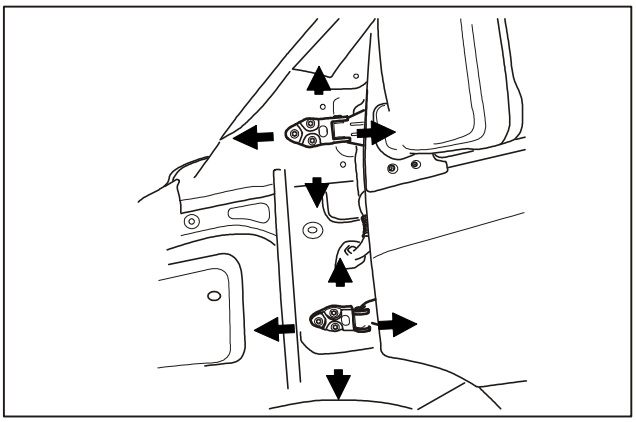

1. Adjust door hinges in four directions shown in the figure.

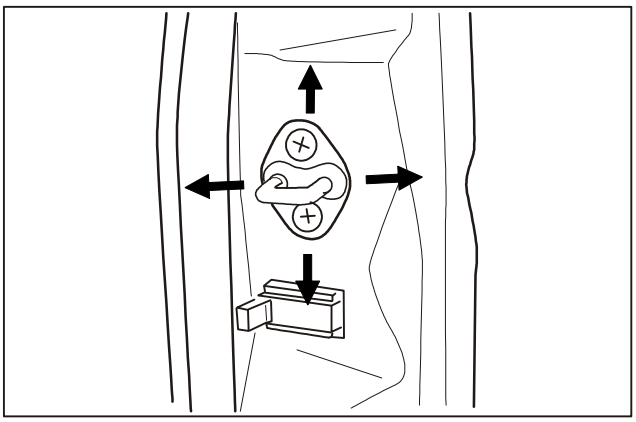

2. Adjust door latches in four directions shown in the figure.

Downloaded from www.Manualslib.com manuals search engine

Removal/Installation

Left front door outer handle

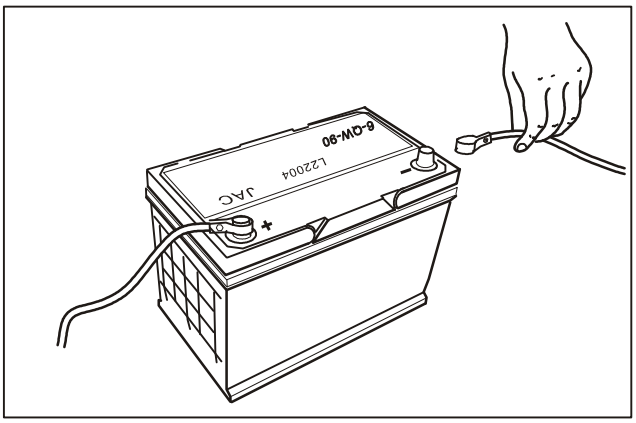

1. Disconnect the negative cable of battery.

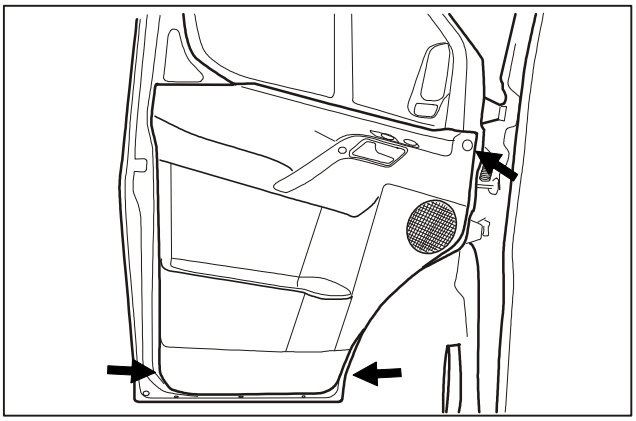

2. Remove door trim panel.

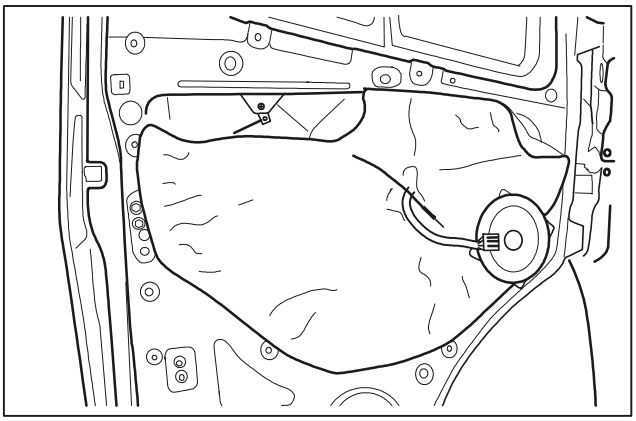

3. Remove door waterproof membrane.

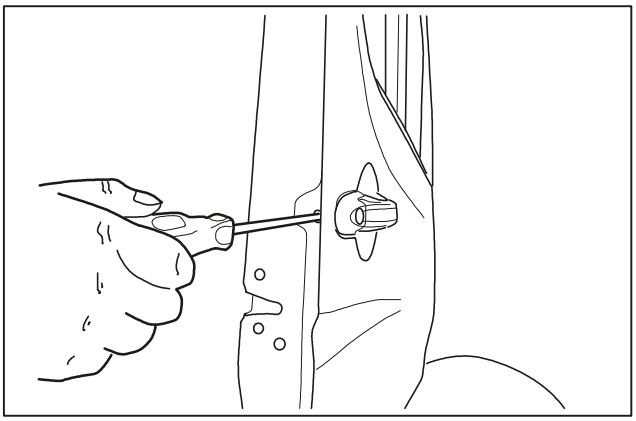

4. Unscrew mounting screws for door handle.

Downloaded from www.Manualslib.com manuals search engine

Removal/Installation (Continued)

Left front door outer handle

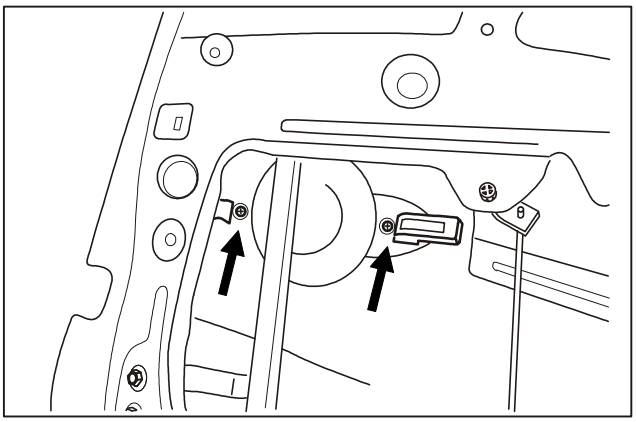

5. Disconnect the door handle linkage and remove mounting screws for door handle.

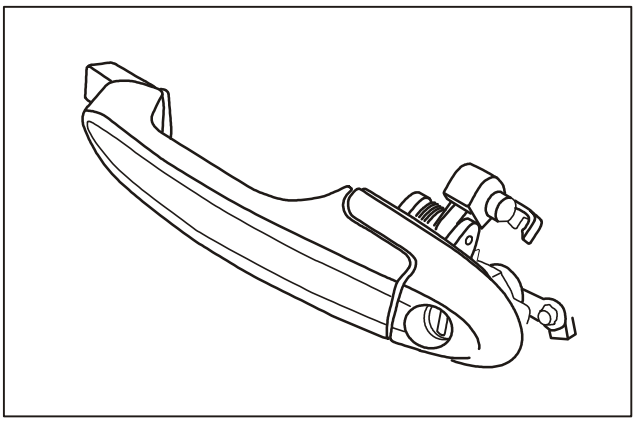

6. Take down the door handle.

Downloaded from www.Manualslib.com manuals search engine

Removal/Installation

Left front door lock cylinder

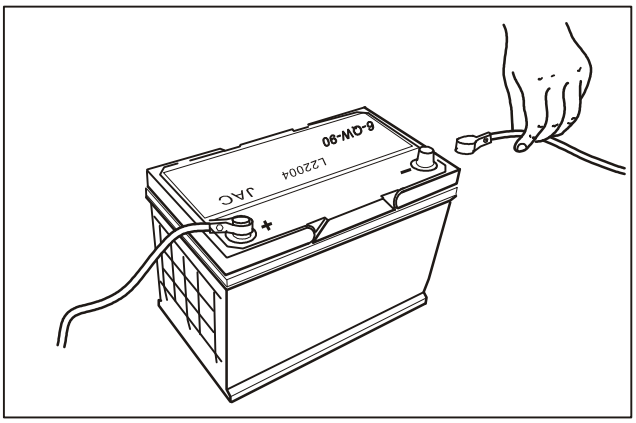

1. Disconnect the negative cable of battery.

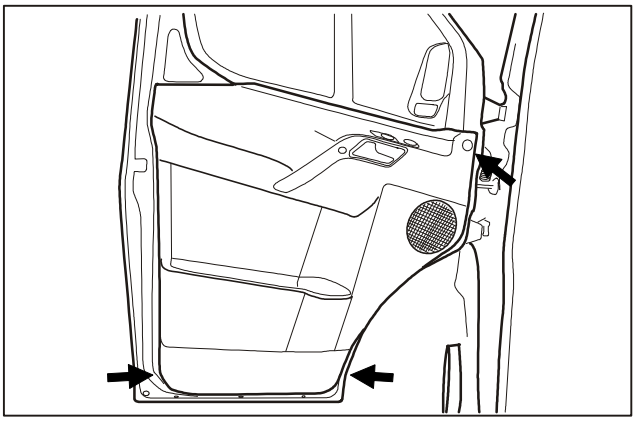

2. Remove the interior trim panel of door.

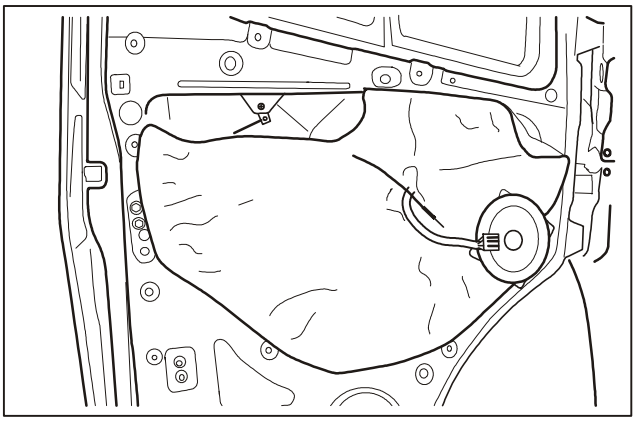

3. Remove waterproof membrane.

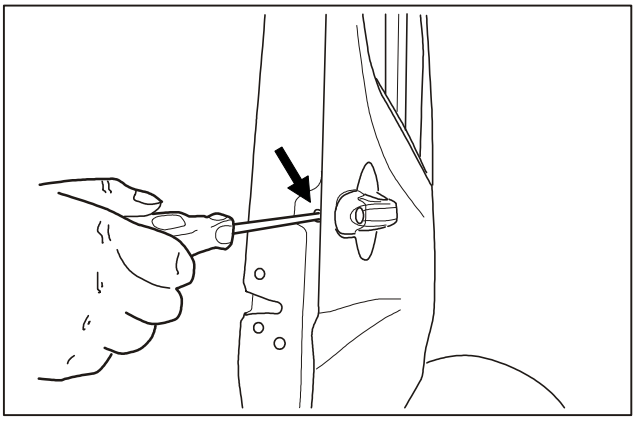

4. Remove mounting screws for door handle.

Downloaded from www.Manualslib.com manuals search engine

Removal/Installation (Continued)

Left front door lock cylinder

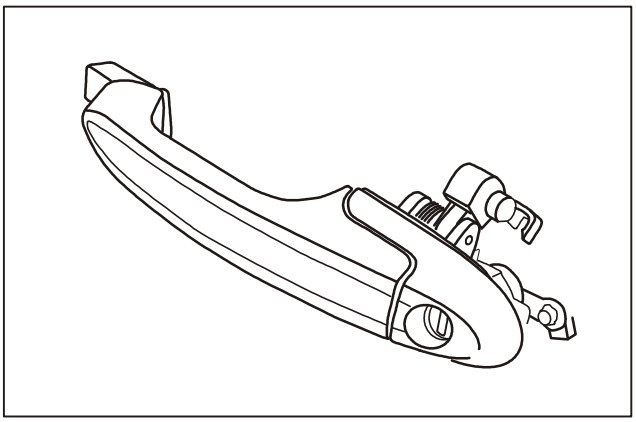

5. Remove door handle.

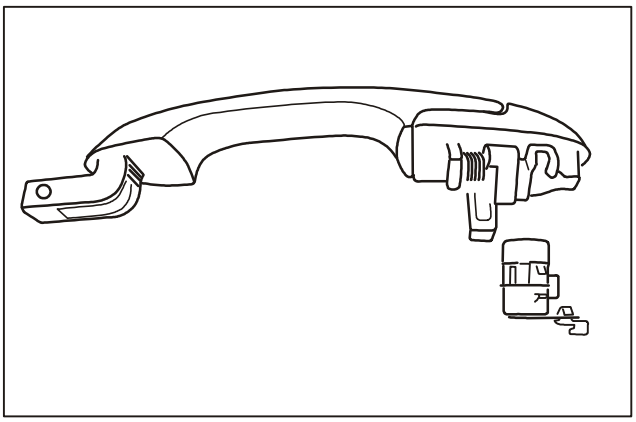

6. Remove door lock cylinder.

Downloaded from www.Manualslib.com manuals search engine

Removal/Installation

Left front door lock body

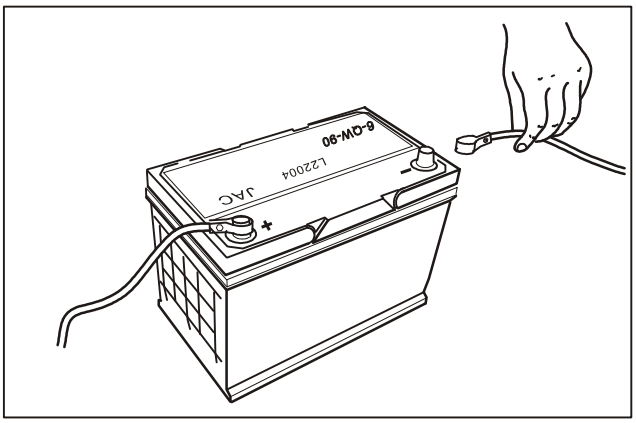

Removal

1. Disconnect the negative cable of battery.

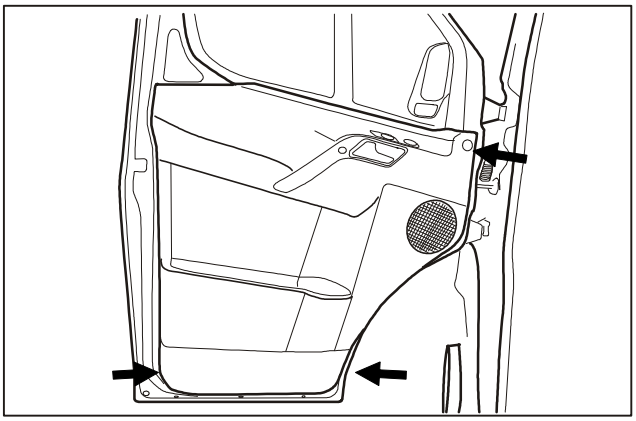

2. Remove the door trim panel.

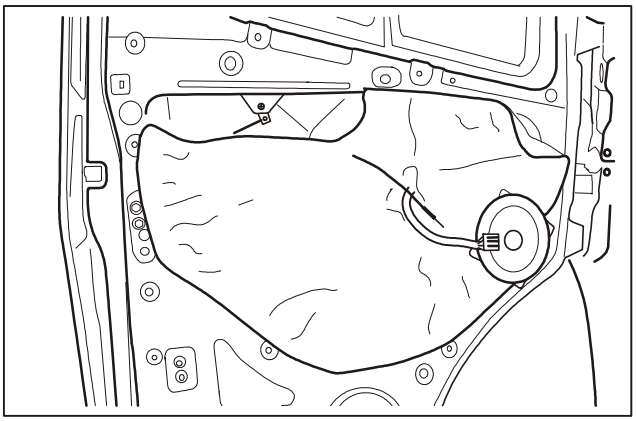

3. Peel off the waterproof membrane.

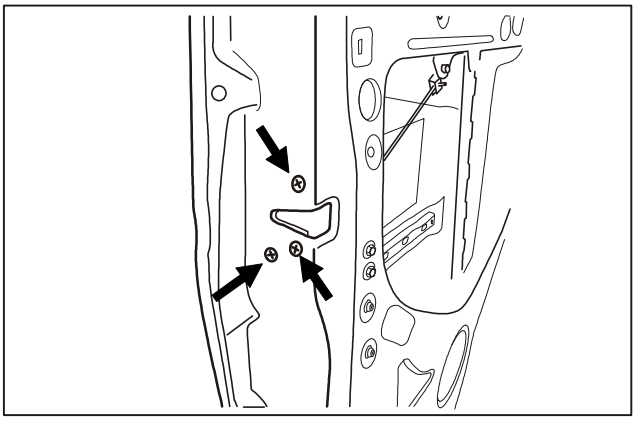

4. Remove three mounting screws for lock body.

Downloaded from www.Manualslib.com manuals search engine

Removal/Installation (Continued)

Left front door lock body

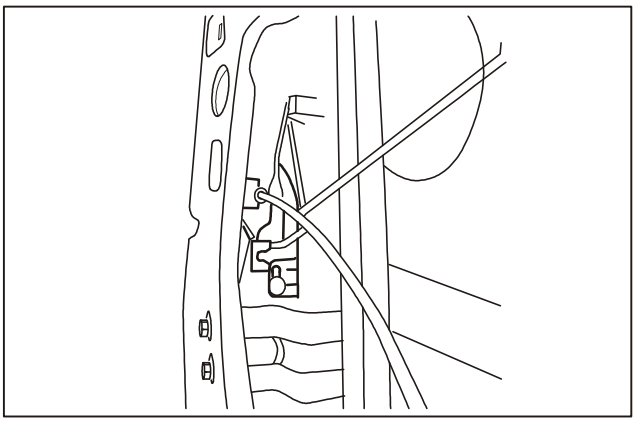

5. Remove the linkage of lock body.

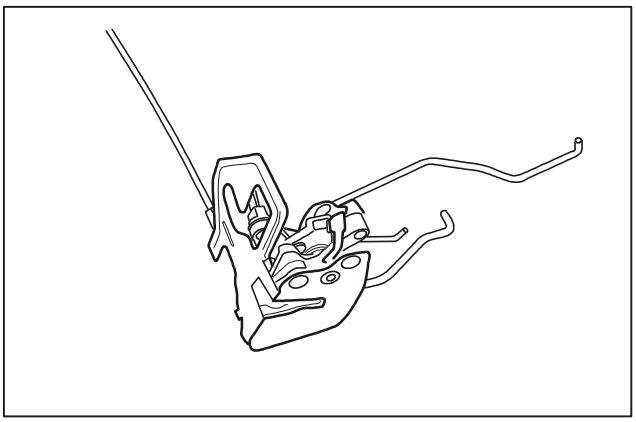

6. Take out the whole lock body.

Downloaded from www.Manualslib.com manuals search engine

Removal/Installation (Continued)

Left front door lock body

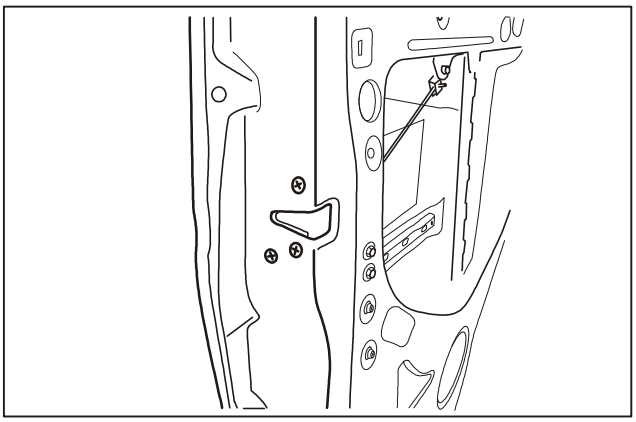

Installation

1. Install the lock body into door.

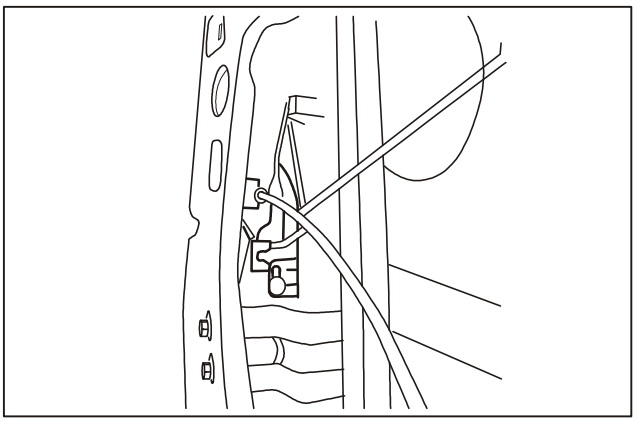

2. Connect each linkage properly. As for other parts, please install them in reverse order of removal.

Downloaded from www.Manualslib.com manuals search engine

Removal/Installation

Right front door lock body

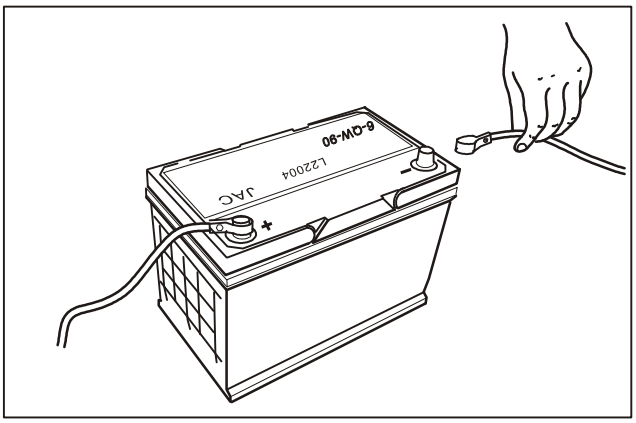

Removal

1. Disconnect the negative cable of battery.

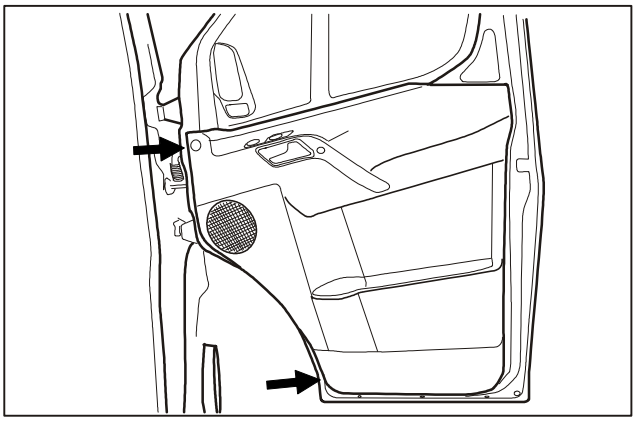

2. Remove mounting screws for door.

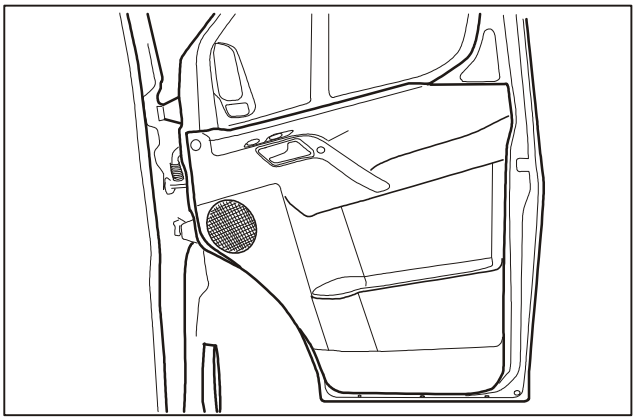

3. Remove door trim panel.

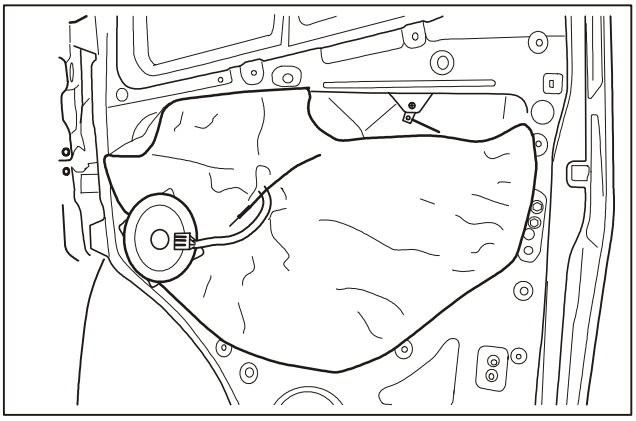

4. Peel off the waterproof membrane.

Downloaded from www.Manualslib.com manuals search engine

Removal/Installation (Continued)

Right front door lock body

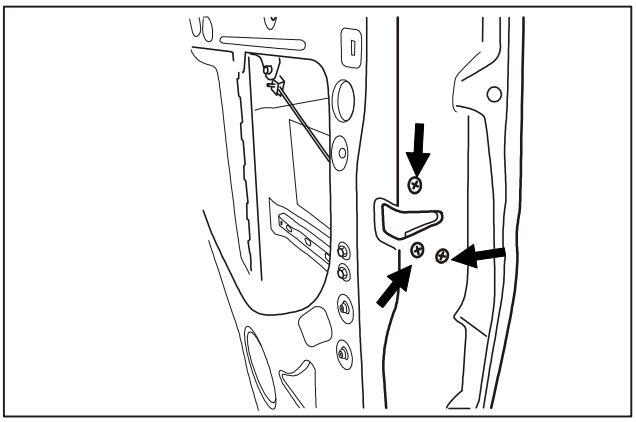

5. Remove three mounting bolts for door lock.

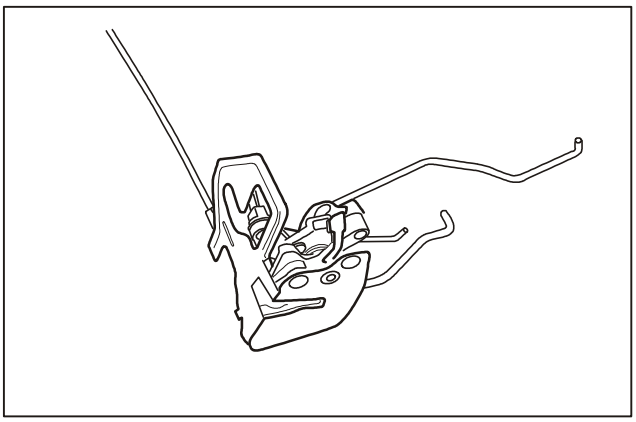

6. Disconnect the door linkage and then remove the lock assembly.

Installation
Install it in reverse order of removal.

Downloaded from www.Manualslib.com manuals search engine

Removal/Installation

Door seal

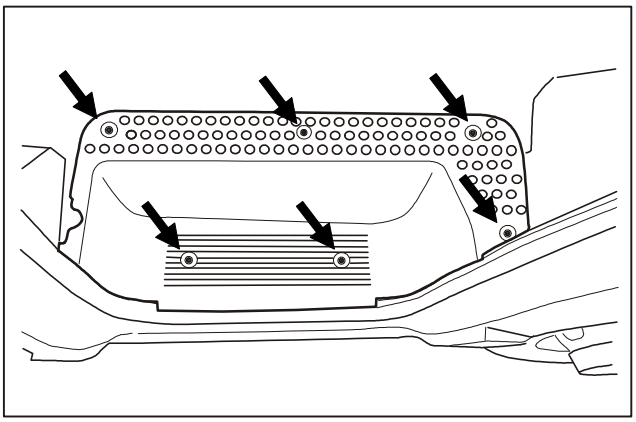

1. Remove the step plate.

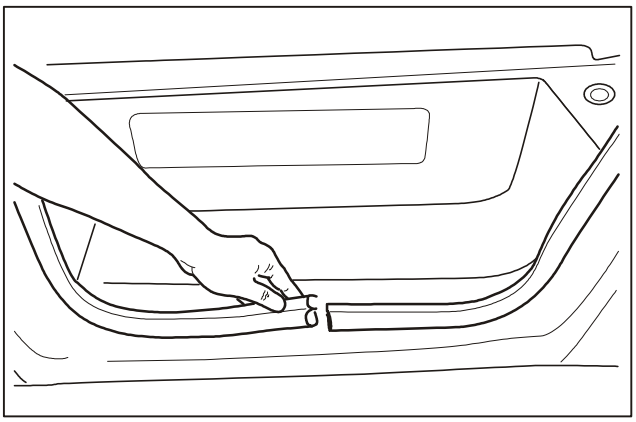

2. Peel off door seal from top to bottom.

Attention:
After removal of door seal, please don't tension the seal forcibly.

Installation
Install it in reverse order of removal.

Downloaded from www.Manualslib.com manuals search engine

Removal/Installation

Double-open back door

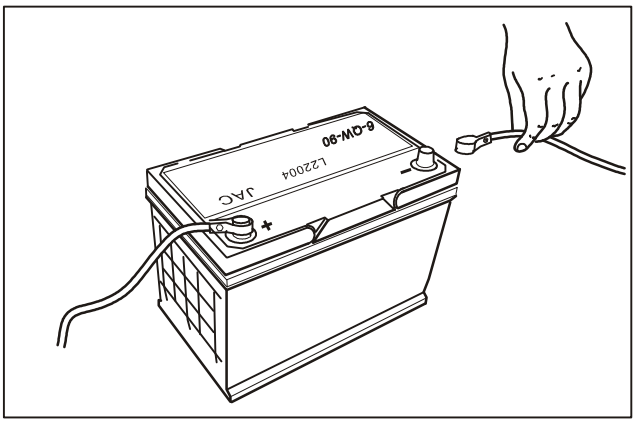

Removal

1. Disconnect the negative cable of battery.

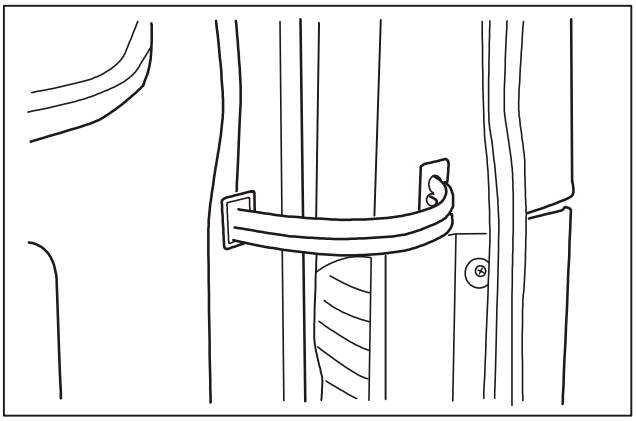

2. Disconnect the harness of left door.

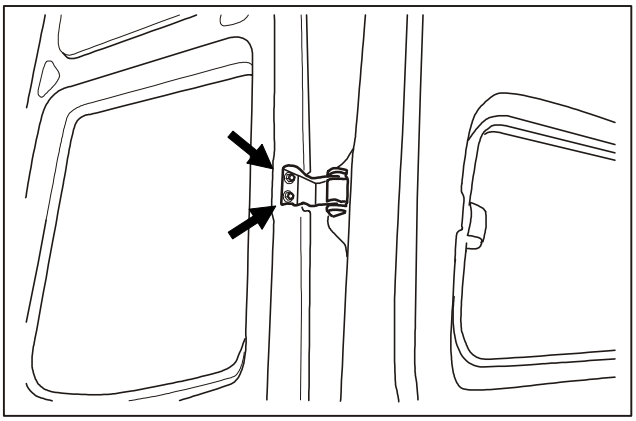

3. Remove bolts for door hinge.

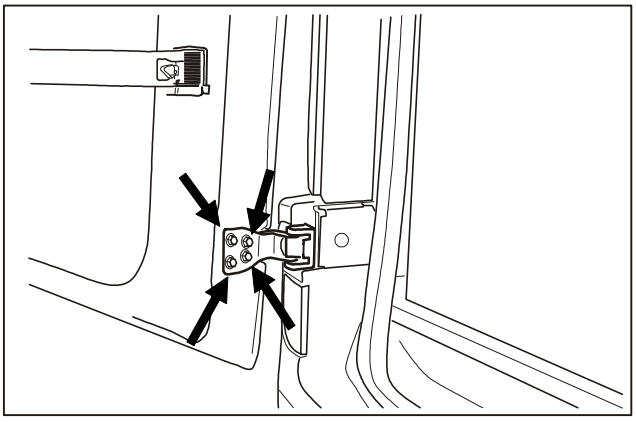

4. Remove bolts for door hinge.

Attention:

Because the double-open back door is heavy, so jack may be applied when necessary to hold the door, during which, use some cloth wrapping the jacked part to avoid damage to paint surface.

Downloaded from www.Manualslib.com manuals search engine

Removal/Installation (Continued)

Double-open back door

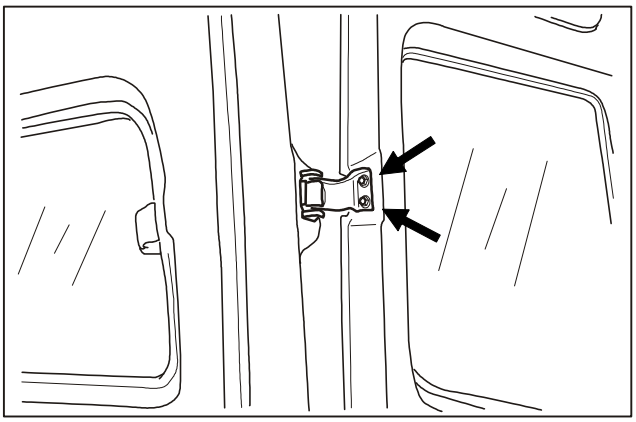

5. Remove bolts for right door hinge.

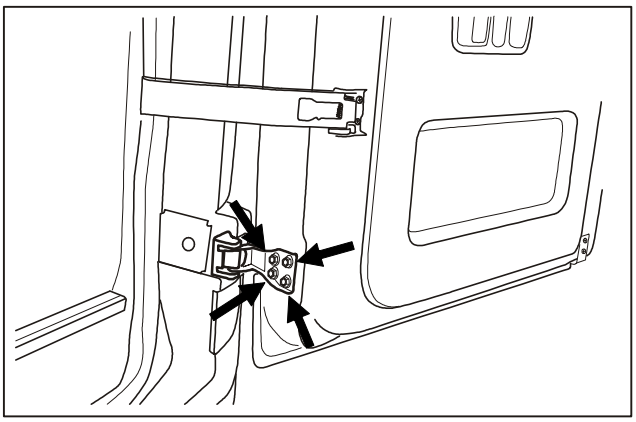

6. Remove bolts for right door hinge.

Attention:

Because the double-open back door is heavy, so jack may be applied when necessary to hold the door, during which, use some cloth wrapping the jacked part to avoid damage to paint surface.

Downloaded from www.Manualslib.com manuals search engine

Removal/Installation

Double-open back door

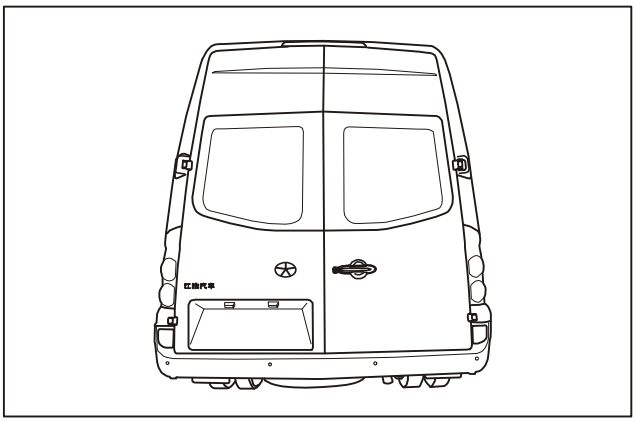

Installation

1. After the installation of back door, lower/upper clearance should be adjusted properly.

Downloaded from www.Manualslib.com manuals search engine

Removal/Installation

Back door outer handle

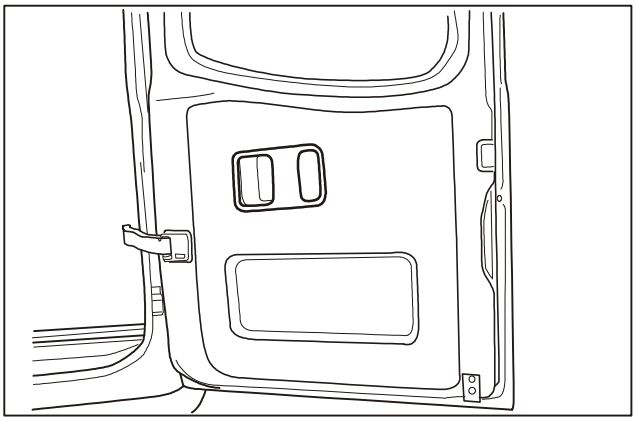

Removal

1. Remove inner handle shield of back door.

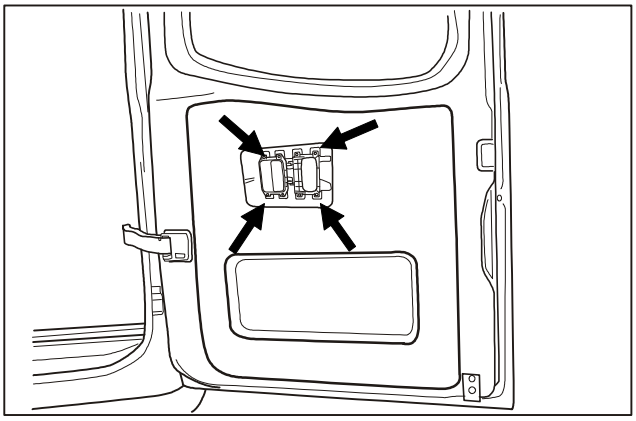

2. Remove mounting screws for back door inner handle assembly.

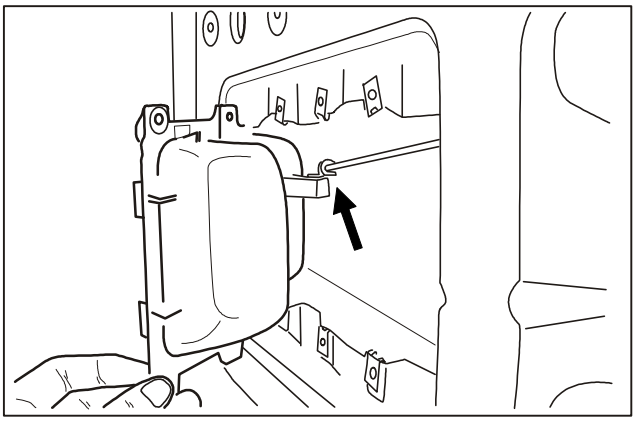

3. Disconnect the linkage.

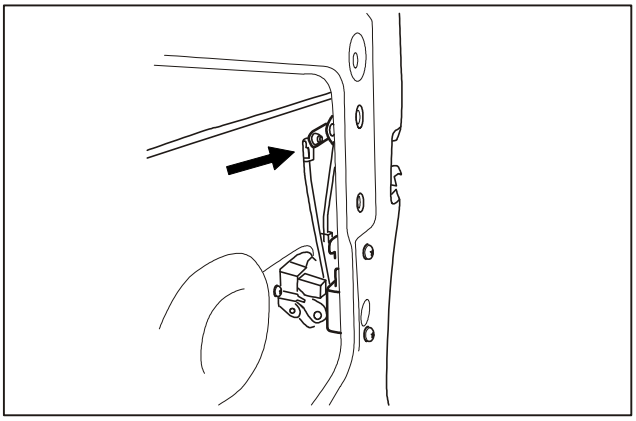

4. Disconnect the linkage with outer handle.

Downloaded from www.Manualslib.com manuals search engine

Removal/Installation (Continued)

Back door outer handle

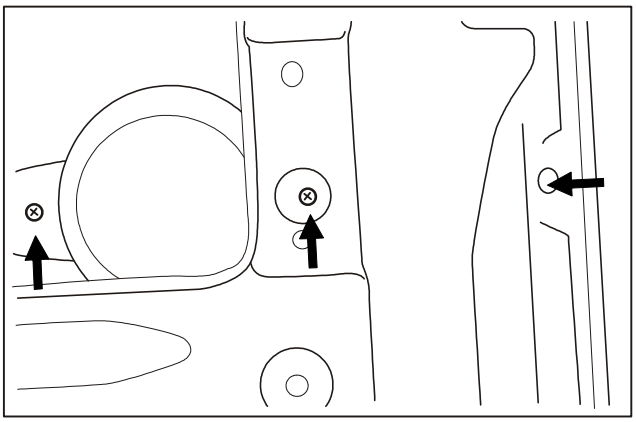

5. Remove mounting screws for outer handle.

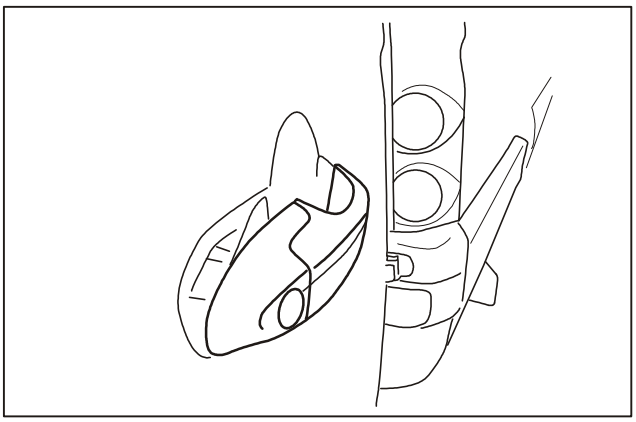

6. Remove outer handle.

Installation
Install it in reverse order of removal.

Downloaded from www.Manualslib.com manuals search engine

Removal/Installation

Back door latch

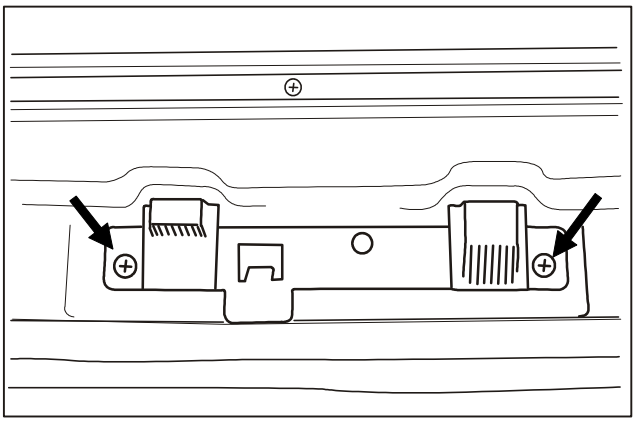

1. Remove mounting screws for back door latch.

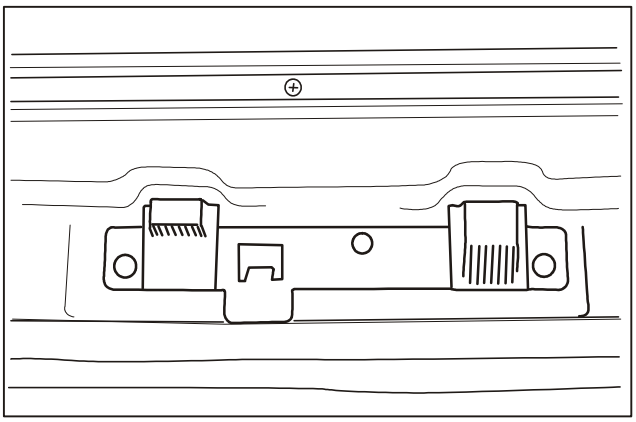

2. Remove the back door latch.

Installation

Install it in reverse order of removal.

Downloaded from www.Manualslib.com manuals search engine

Removal/Installation

Outer lock of back door

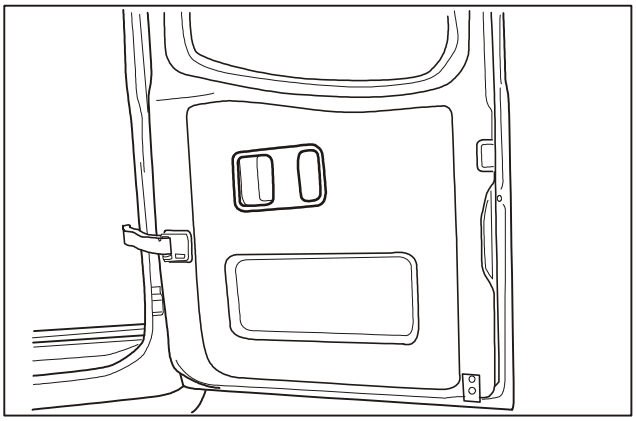

Removal

1. Remove inner handle shield.

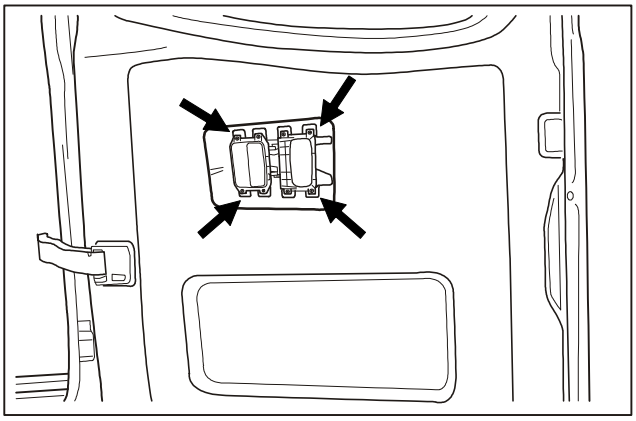

2. Remove mounting screws for inner handle.

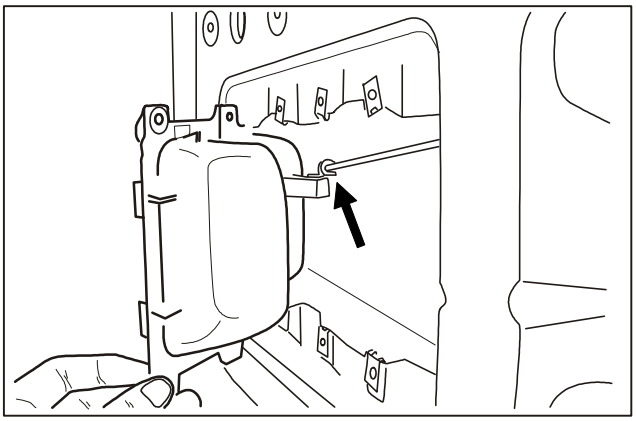

3. Disconnect the linkage of inner handle.

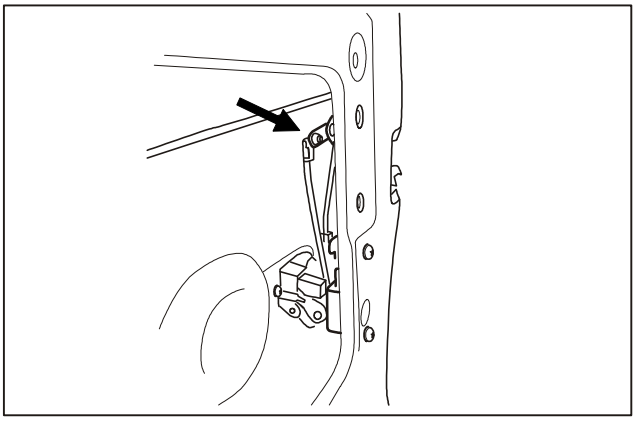

4. Disconnect the linkage with door lock.

Downloaded from www.Manualslib.com manuals search engine

Removal/Installation (Continued)

Outer lock of back door

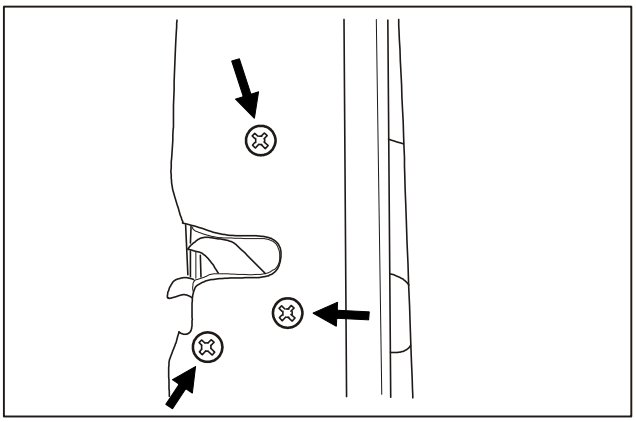

5. Remove three mounting bolts for door lock.

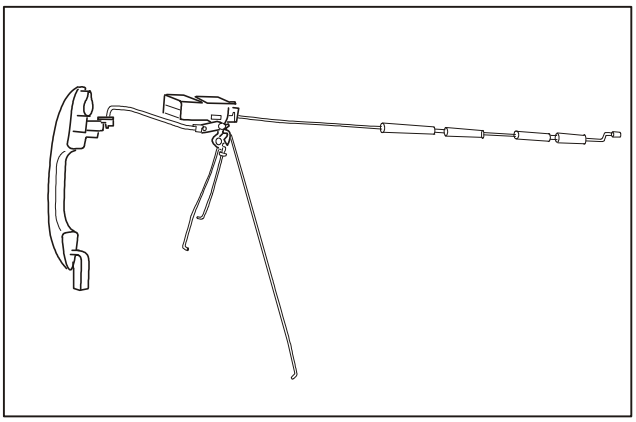

6. Remove the linkage assembly.

Installation
Install it in reverse order of removal.

Downloaded from www.Manualslib.com manuals search engine

Removal/Installation

Inner lock of back door

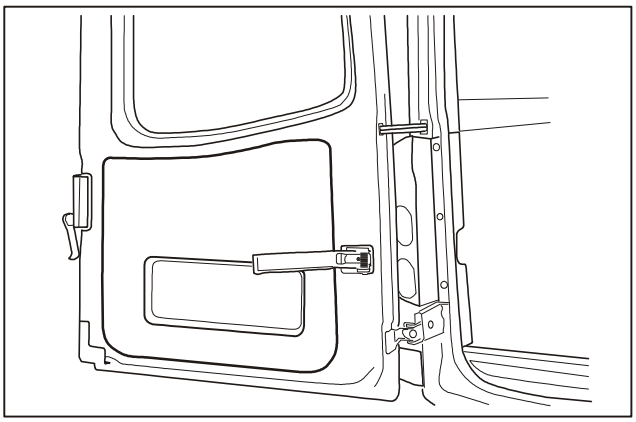

Removal

1. Remove interior trim panel of back door.

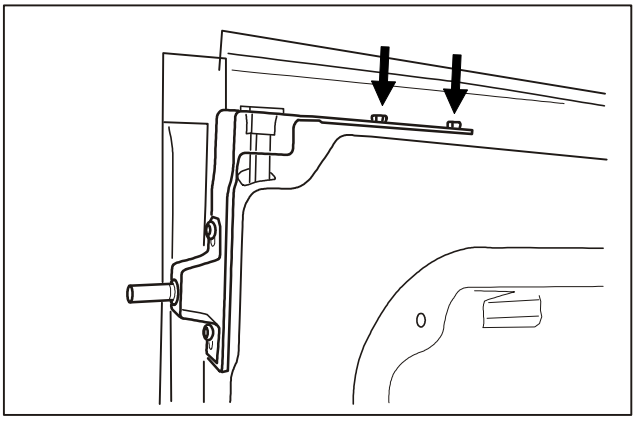

2. Remove the upper mounting bracket of door lock.

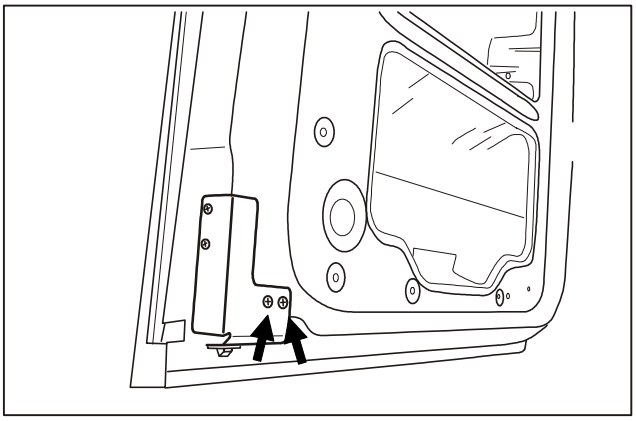

3. Remove the lower mounting bracket of door lock.

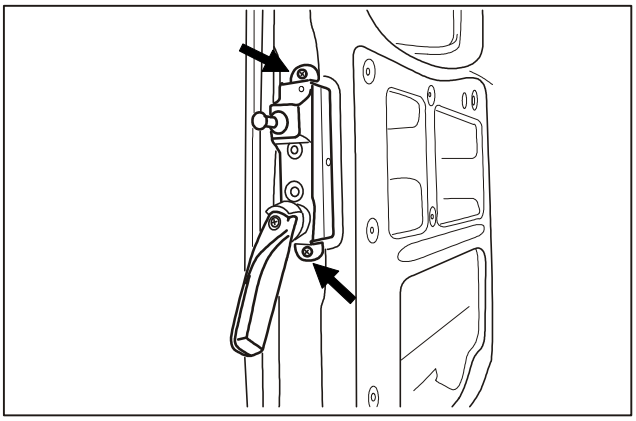

4. Remove mounting screws for door latch.

Downloaded from www.Manualslib.com manuals search engine

Removal/Installation (Continued)

Inner lock of back door

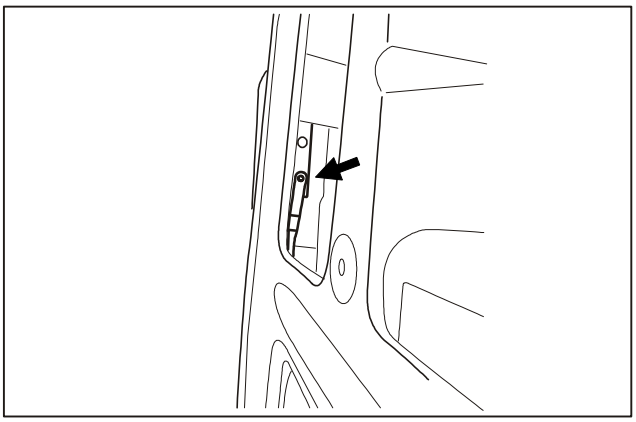

5. Disconnect circlip between door latch and linkage.

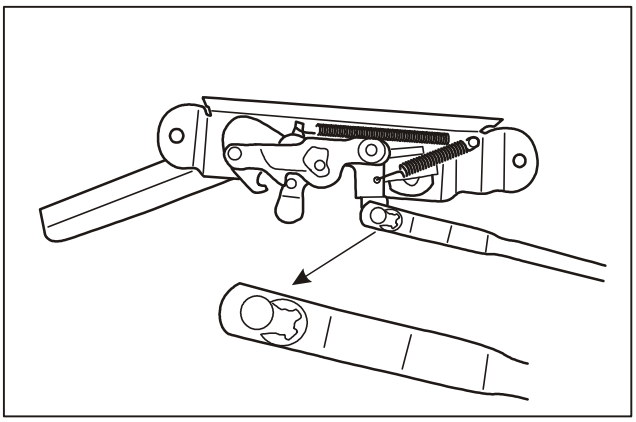

6. The circlip is shown in the figure. Remove the lock linkage assembly.

Installation
Install it in reverse order of removal.

Downloaded from www.Manualslib.com manuals search engine

Removal/Installation

Back door seal

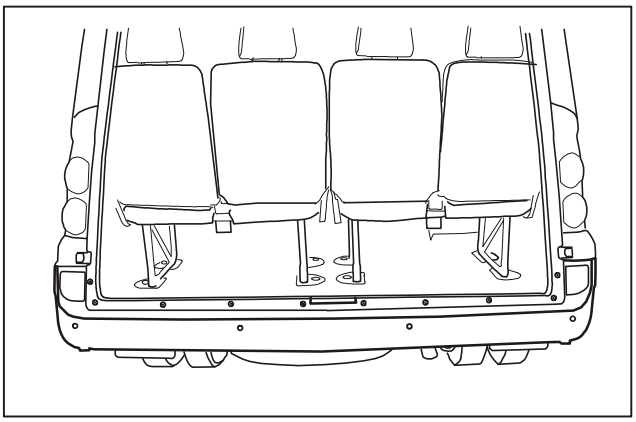

Removal

1. Peel off the seal forcibly from top to bottom.

Installation

Install it in reverse order of removal.

Downloaded from www.Manualslib.com manuals search engine

Downloaded from www.Manualslib.com manuals search engine

Interior/Exterior Trims

Applied models: SUNRAY products manufactured by JAC

Subject Page

Instruction and Operation

Instrument panel....60

Removal/Installation

Instrument panel....61
Roof lining....69
Trim panel of A-pillar....74
Trim panel of B-pillar....75
Trim panel of C-pillar....78
Side wall window trim panel....80
Trim panel of D-pillar....84
Interior trim panel....86
Front door trim panel....88
Double-open back door trim panel....89
Interior rear-view mirror....91
Sun visor....92
Curtains....93
Luggage rack....94
Step plate assembly....96
Front bumper....97
Rear bumper....99
Front grille....101
Fender....102
Front door skirt trim panel....106
Front side wall skirt trim panel....107
Middle side wall skirt trim panel....108
Rear wheel skirt trim panel....109
Rear tire mud guard....110

Downloaded from www.Manualslib.com manuals search engine

Instruction and Operation

Instrument panel

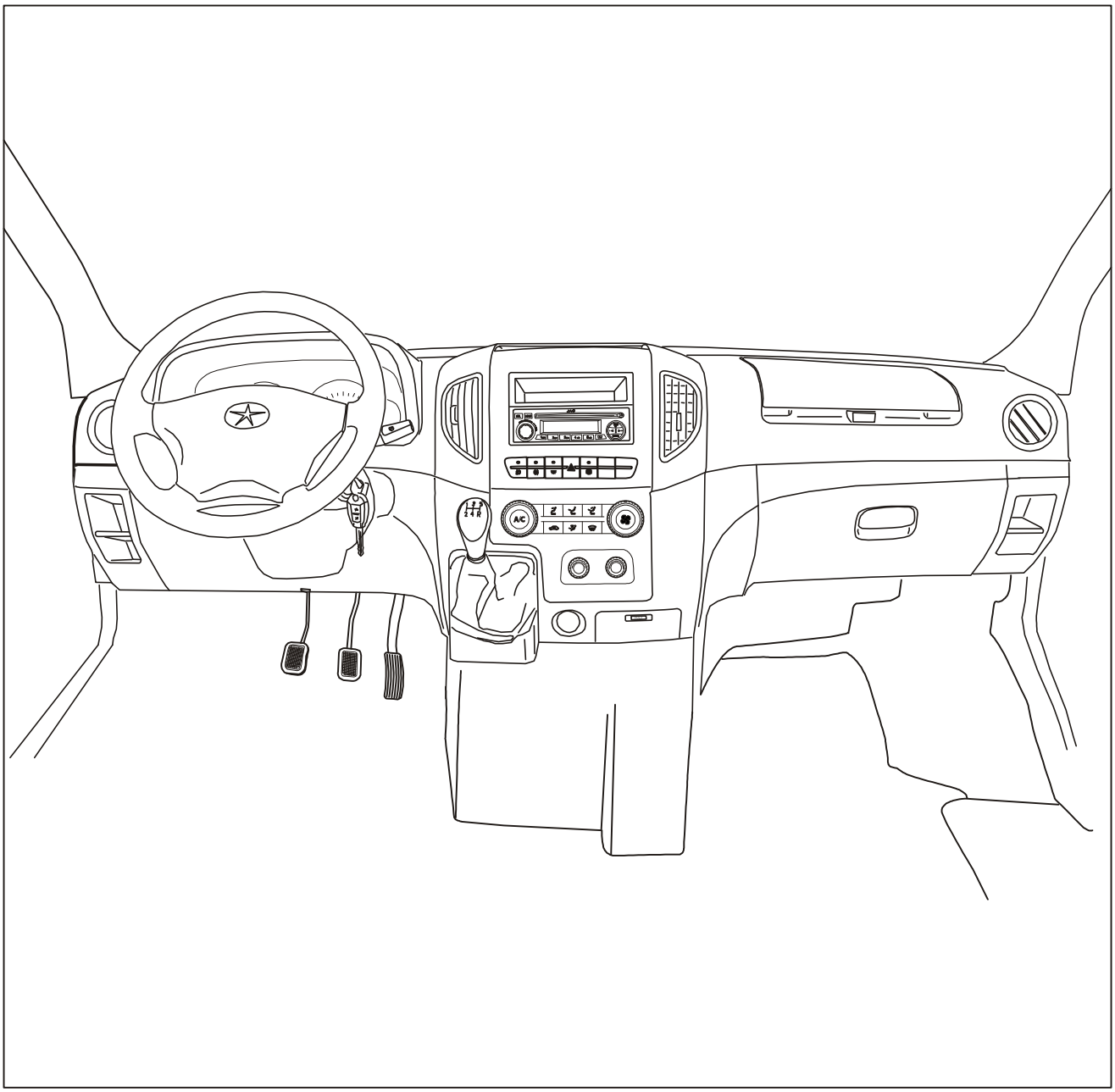

Downloaded from www.Manualslib.com manuals search engine

Removal/Installation

Instrument panel

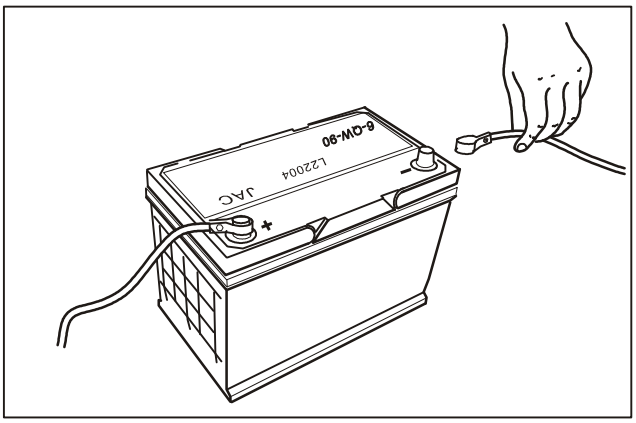

1. Remove the negative cable of battery.

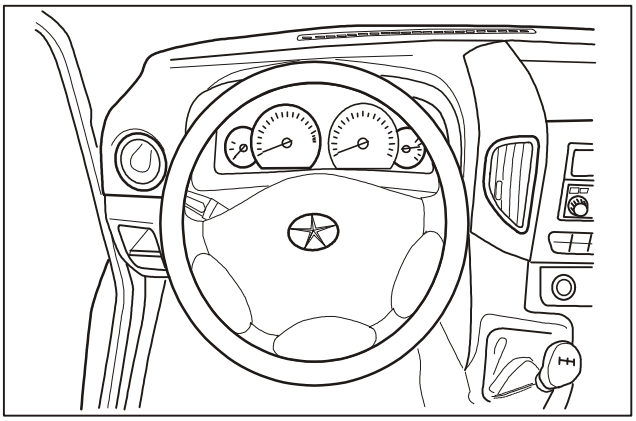

2. Remove the upper cover of steering wheel.

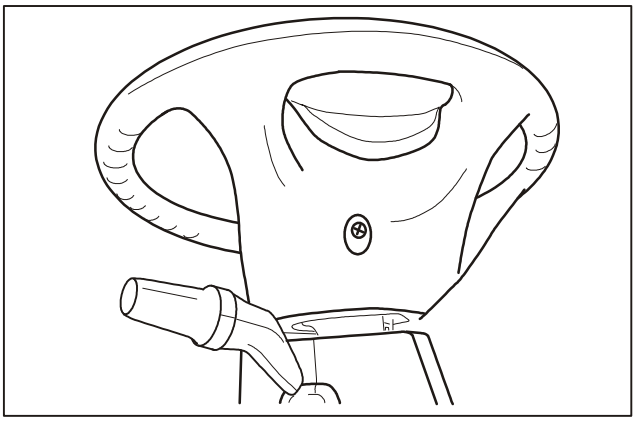

3. There are two mounting screws on the left and right sides of upper cover of steering wheel.

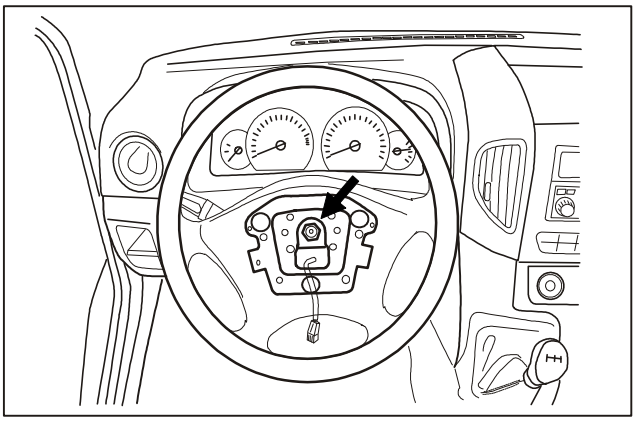

4. Unscrew the mounting nuts of steering wheel and take down the steering wheel.

Downloaded from www.Manualslib.com manuals search engine

Removal/Installation (Continued)

Instrument panel

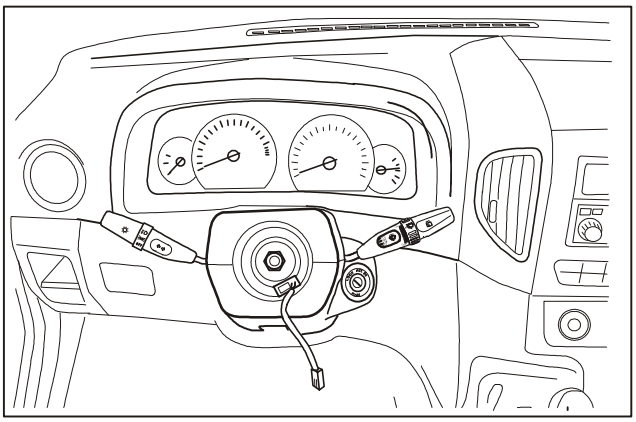

5. Remove the instrument cover.

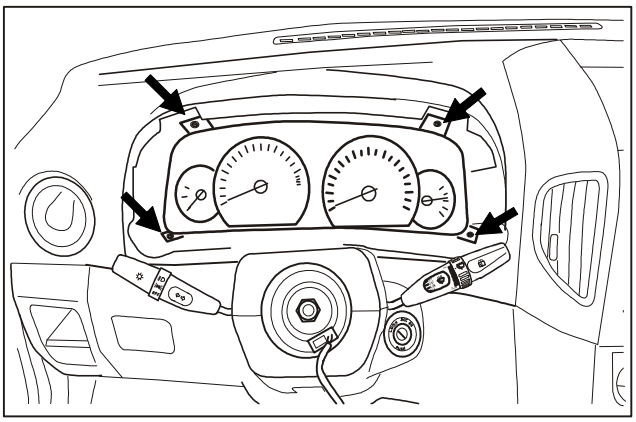

6. Remove four mounting screws of instrument.

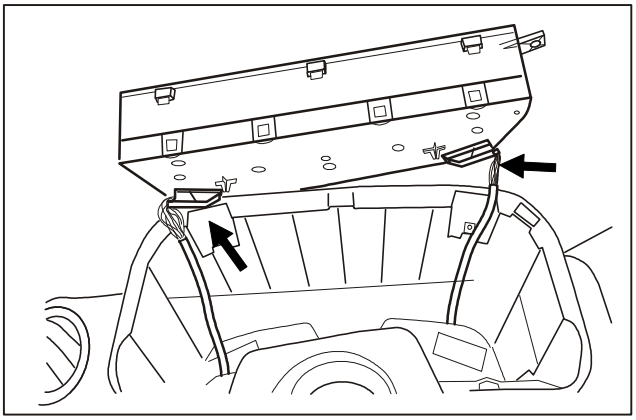

7. Remove the harness connectors of instruments.

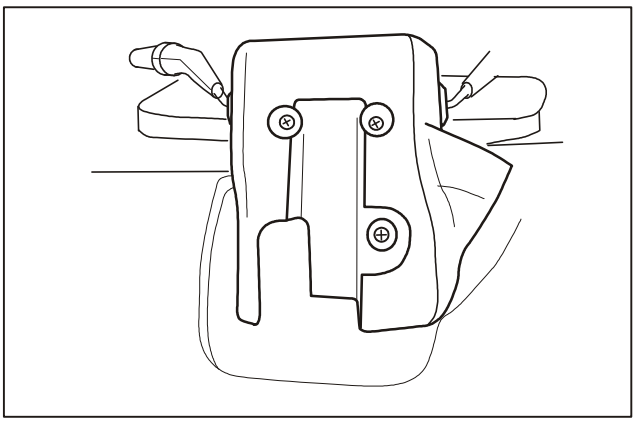

8. Remove three mounting screws on the lower cover of steering wheel and take down the lower cover.

Downloaded from www.Manualslib.com manuals search engine

Removal/Installation (Continued)

Instrument panel

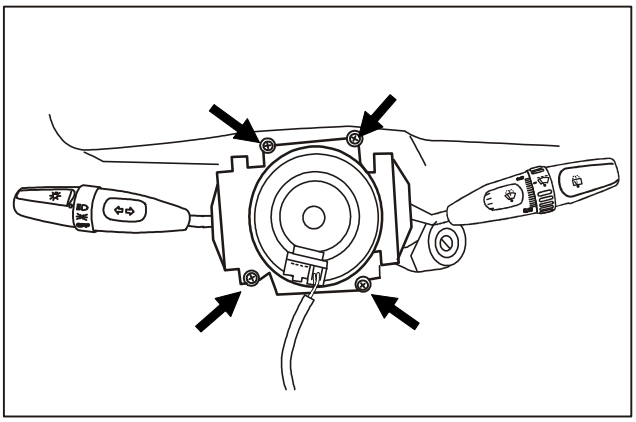

9. Remove four mounting screws of the clock spring and take down the clock spring.

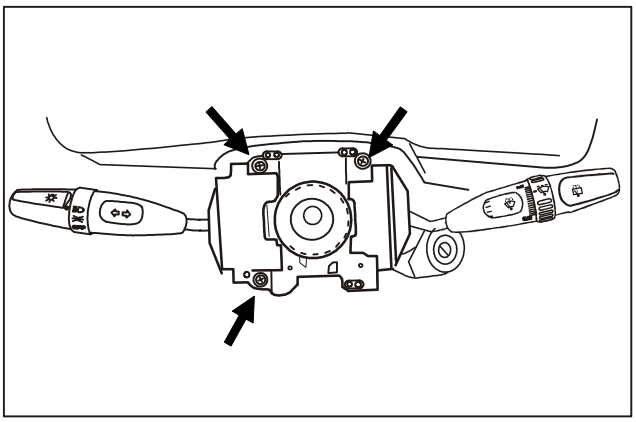

10. Remove three mounting screws of combined switch and take down the switch.

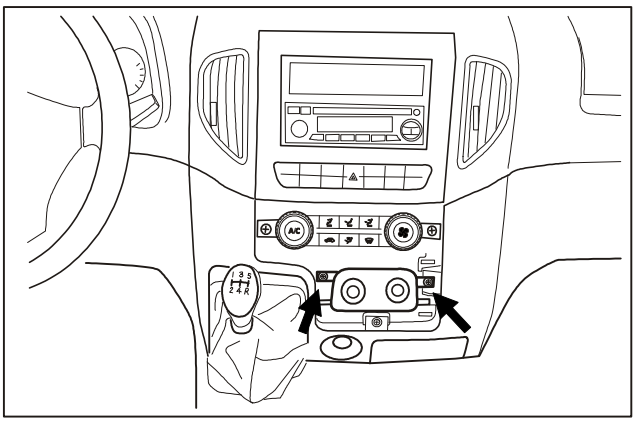

11. Remove two mounting screws of rear A/C control panel.

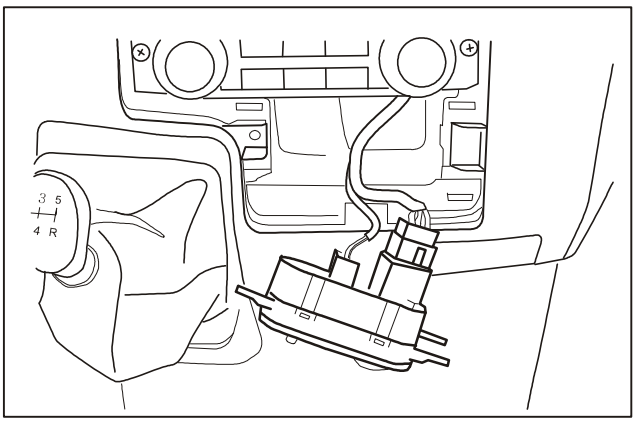

12. Disconnect the harness of rear A/C control panel.

Downloaded from www.Manualslib.com manuals search engine

Removal/Installation (Continued)

Instrument panel

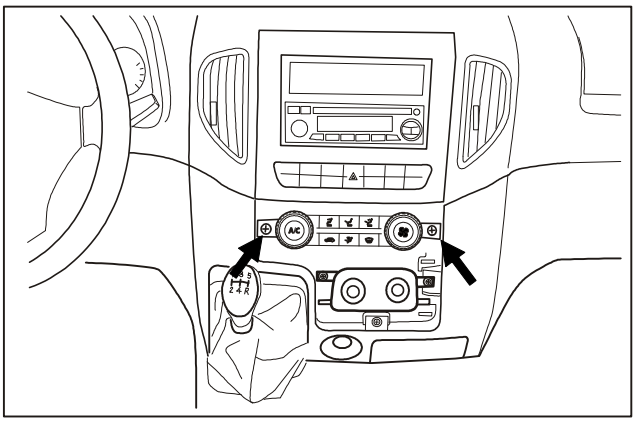

13. Remove two mounting screws of A/C control panel.

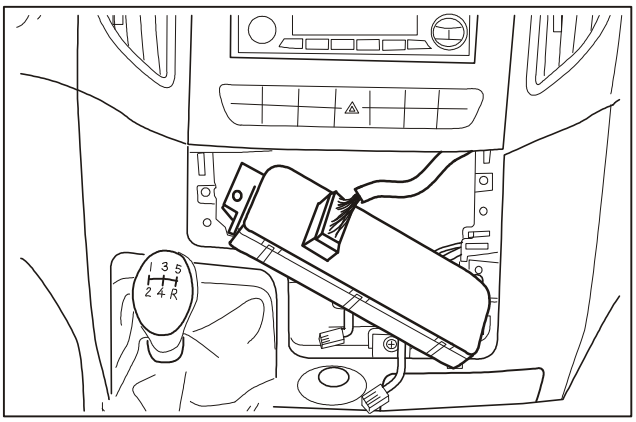

14. Disconnect the harness of A/C control panel.

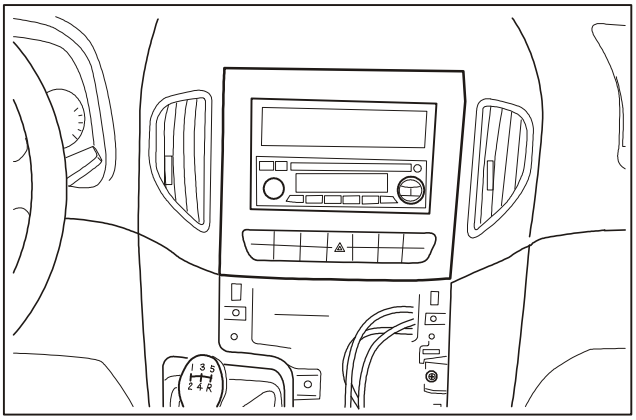

15. Remove audio cover with tool.

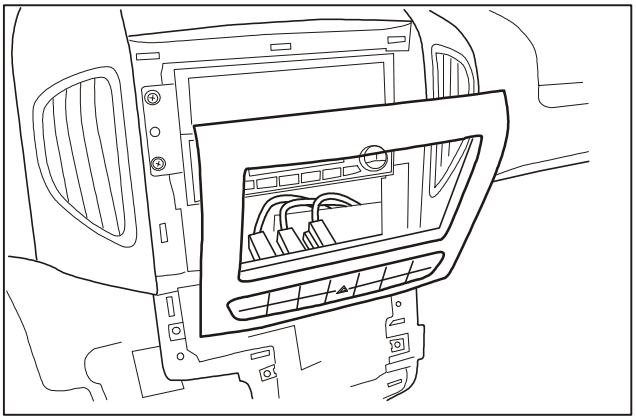

16. Disconnect the harness connector of audio cover.

Downloaded from www.Manualslib.com manuals search engine

Removal/Installation (Continued)

Instrument panel

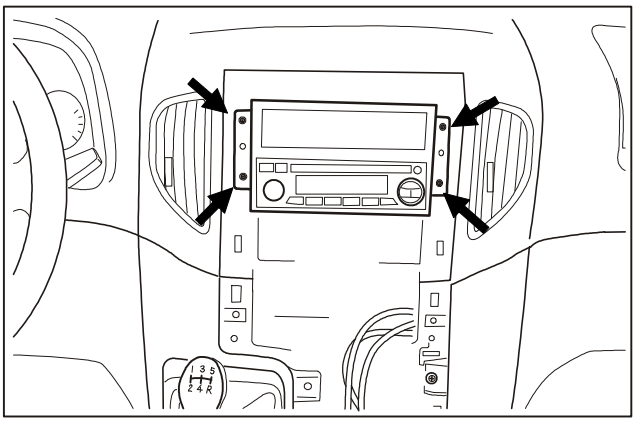

17. Remove four mounting screws of audio.

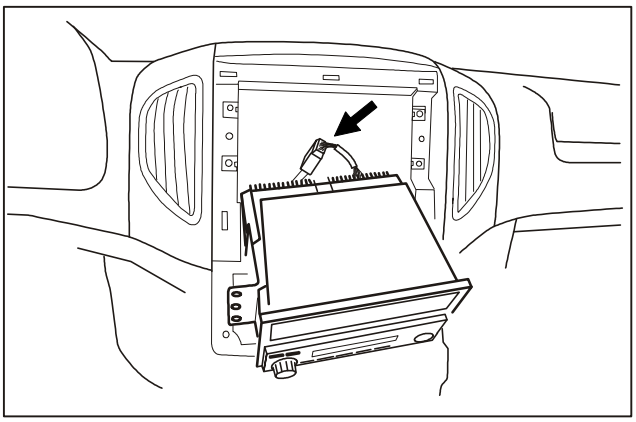

18. Disconnect the harness connector of audio.

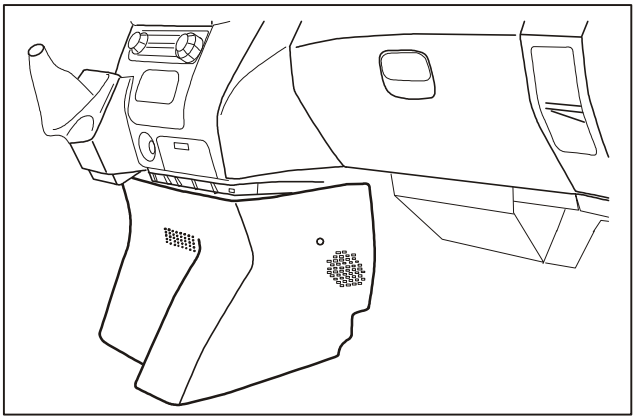

19. Remove the lower cover of instrument panel.

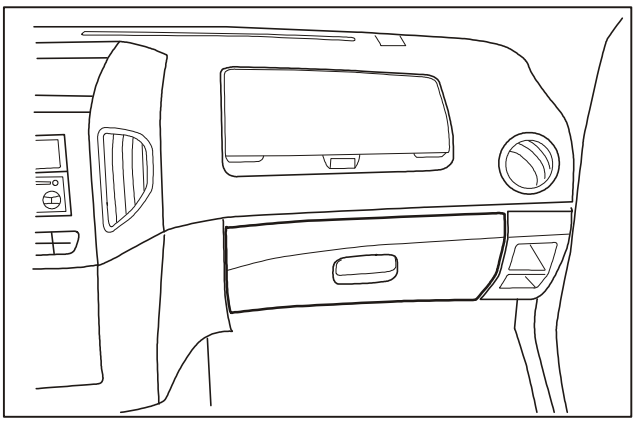

20. Remove the glove box.

Downloaded from www.Manualslib.com manuals search engine

Removal/Installation (Continued)

Instrument panel

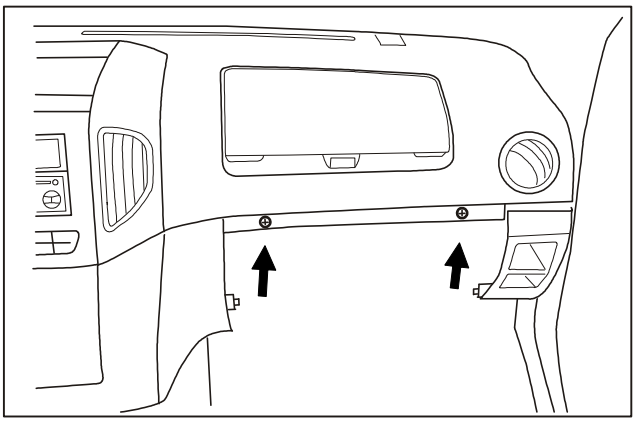

21. Loosen two mounting screws of instrument panel.

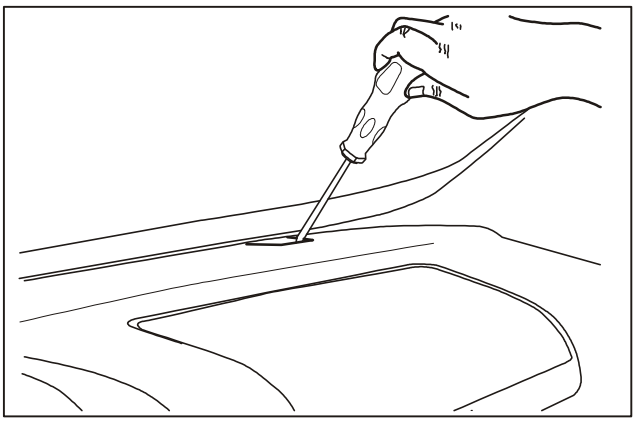

22. Remove the mounting bolt on the left side of instrument panel.

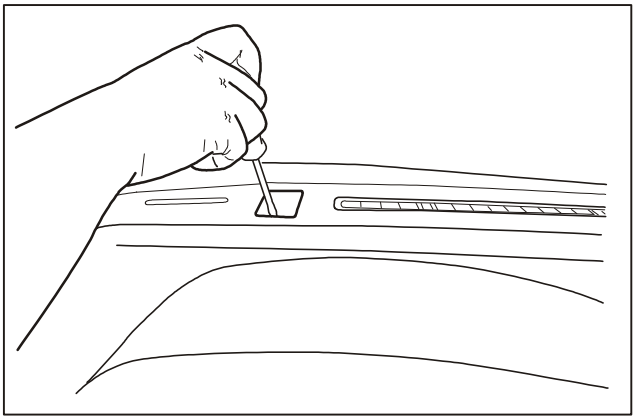

23. Remove the mounting bolt on the right side of instrument panel.

    Note:

    There are three mounting screws on instrument panel in total, respectively on the left, middle and right part.

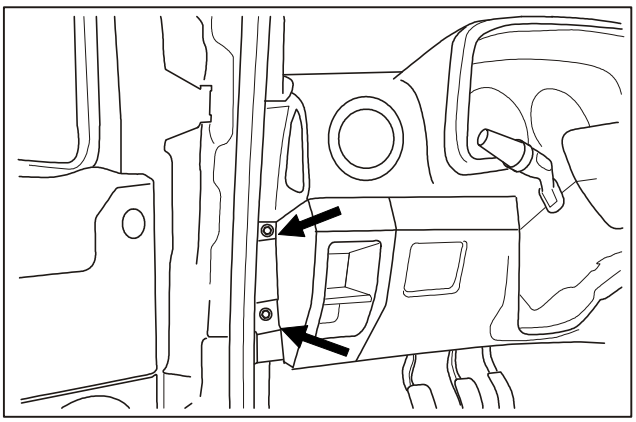

24. Remove two mounting bolts on the left side of instrument panel.

Downloaded from www.Manualslib.com manuals search engine

Removal/Installation (Continued)

Instrument panel

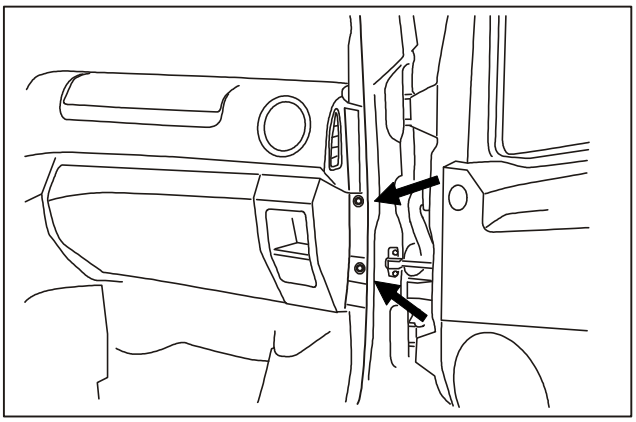

25. Remove two mounting bolt on the right side of instrument panel.

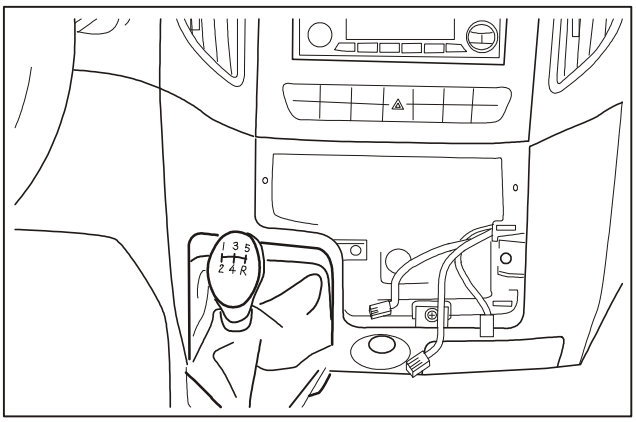

26. Remove the shift lever.

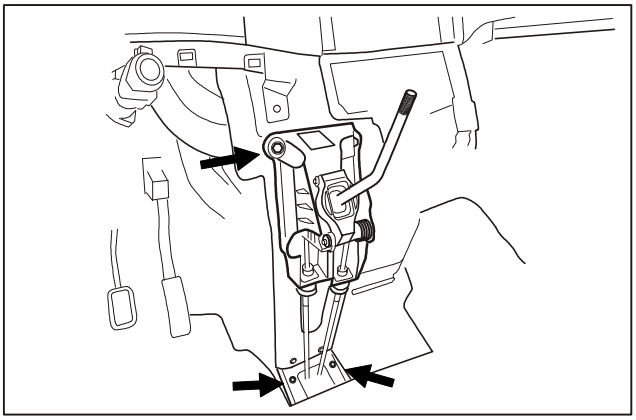

27. Remove the mounting bolts for shift lever assembly.

28. Remove the instrument panel carefully.

    Note:

    Two service persons are necessary for removal of instrument panel.

Downloaded from www.Manualslib.com manuals search engine

Removal/Installation

Instrument panel

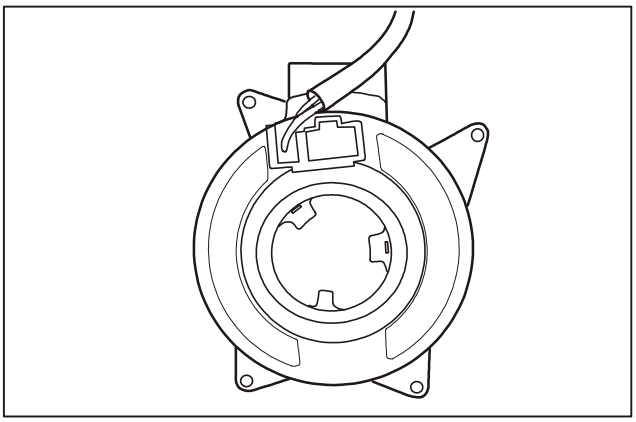

Installation

1. During the installation of instrument panel, the clock spring should be installed under the premise that the wheels face forward and it should be rotated clockwise until rotation disabled (rotating with proper force instead of using too much force), and then rotated counterclockwise by three circles with centering triangle marks aligned.
2. Install other parts in reverse order of removal.

Downloaded from www.Manualslib.com manuals search engine

Instruction and Operation

Roof lining

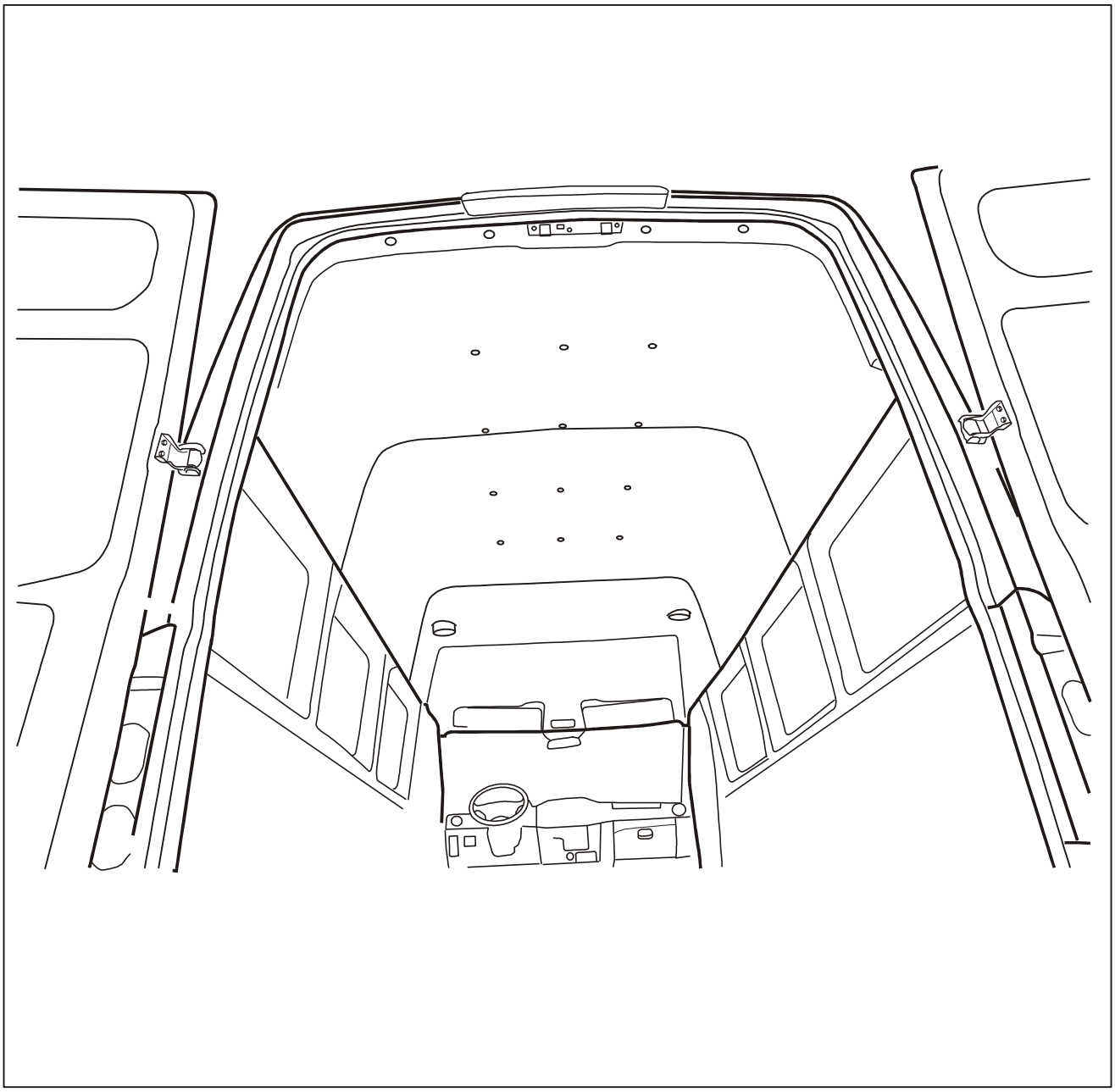

Downloaded from www.Manualslib.com manuals search engine

Removal/Installation

Roof lining

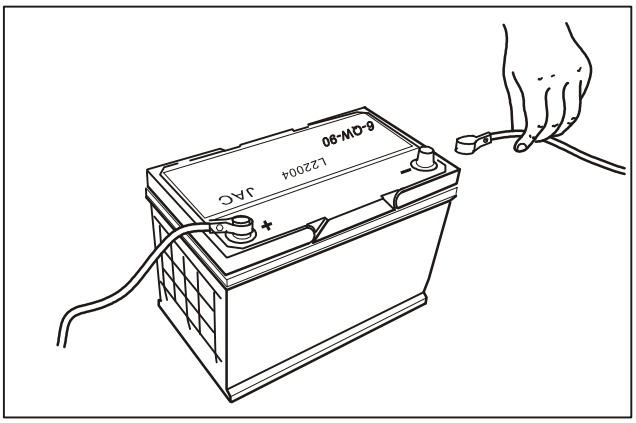

Removal

1. Remove the negative cable of battery.

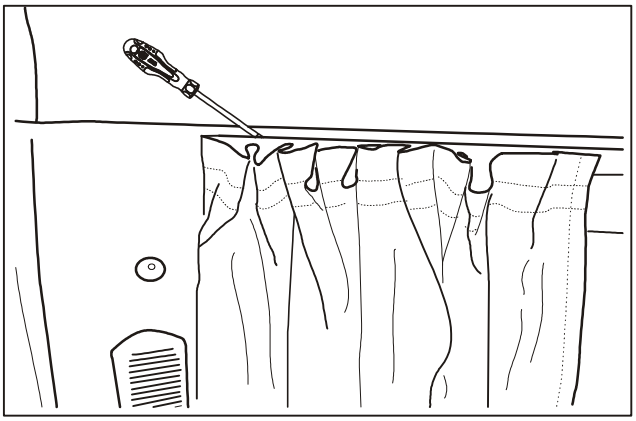

2. Remove curtains.

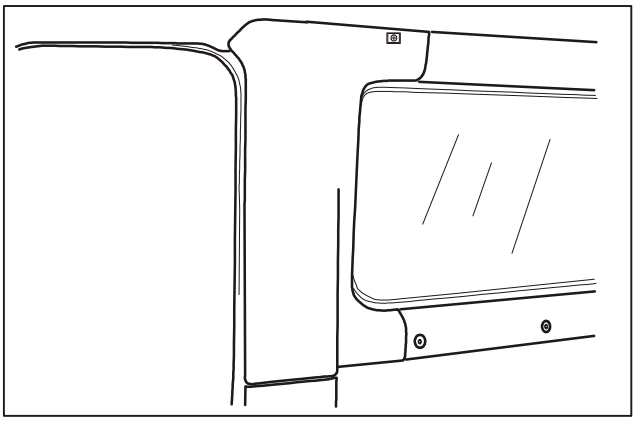

3. Remove upper and lower trim panels of B-pillar.

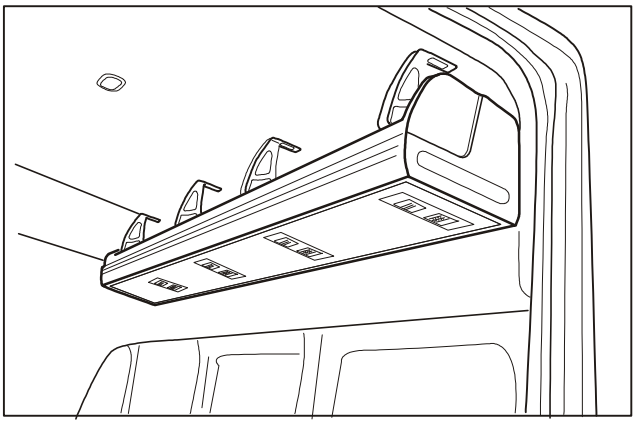

4. Remove luggage racks on bolt left and right sides.

Downloaded from www.Manualslib.com manuals search engine

Removal/Installation

Roof lining

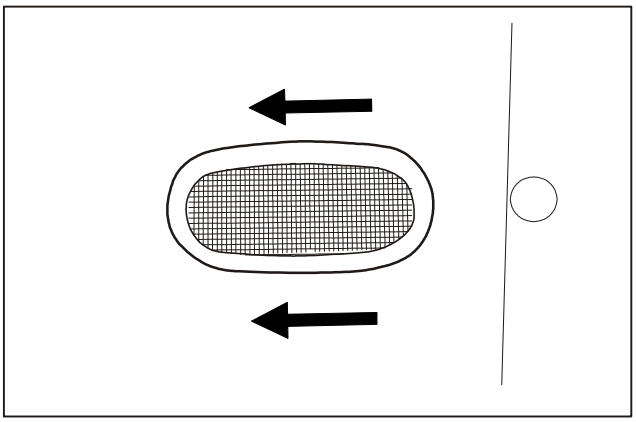

5. Remove interior ceiling lamp 1.

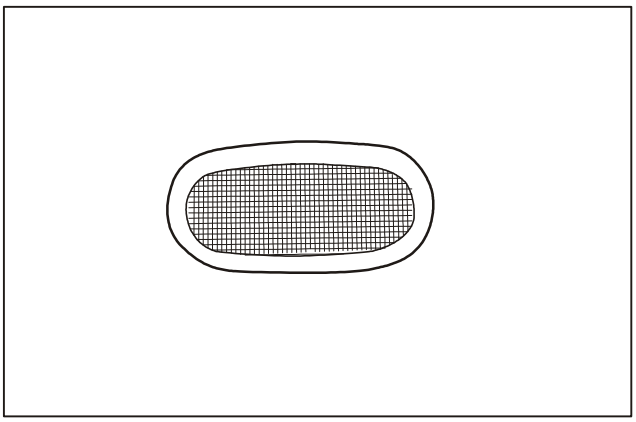

6. Remove interior ceiling lamp 2.

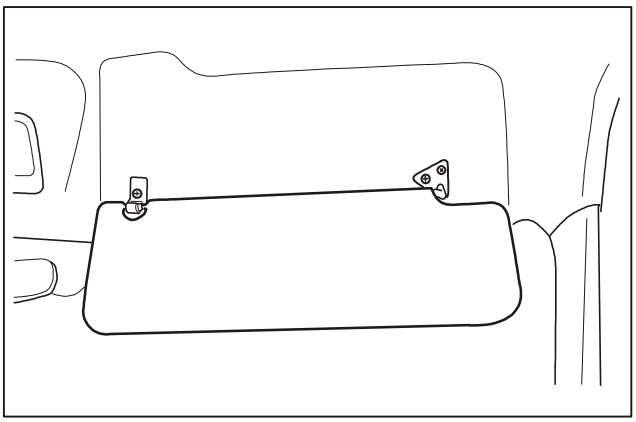

7. Remove right sun visor.

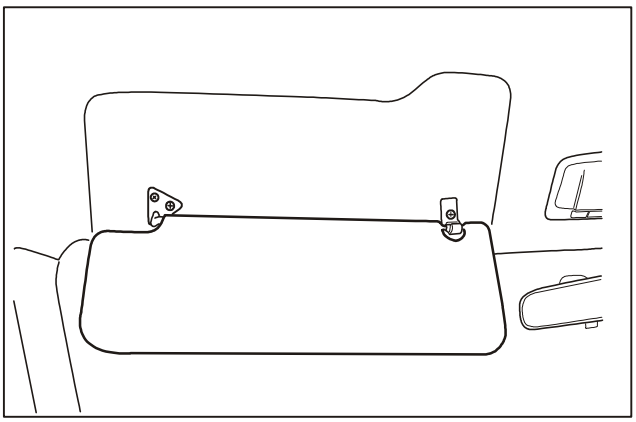

8. Remove left sun visor.

Downloaded from www.Manualslib.com manuals search engine

Removal/Installation

Roof lining

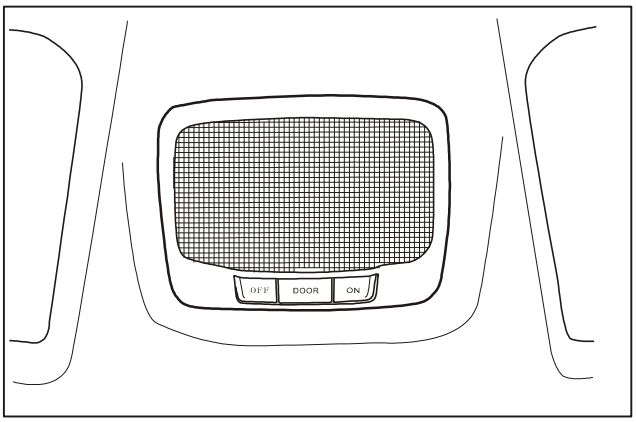

9. Remove front interior ceiling lamp.

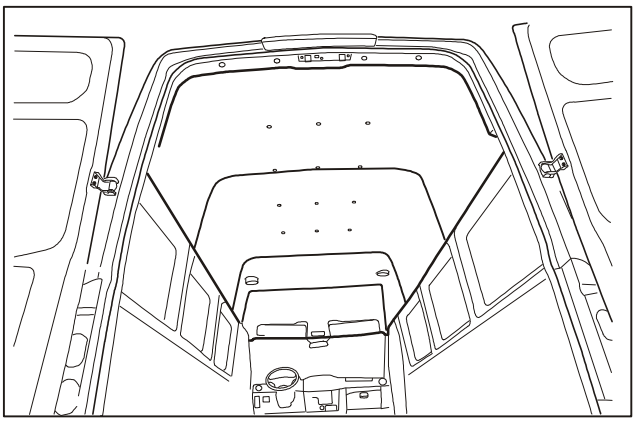

10. Remove clips of rear roof lining and take down the rear roof lining.

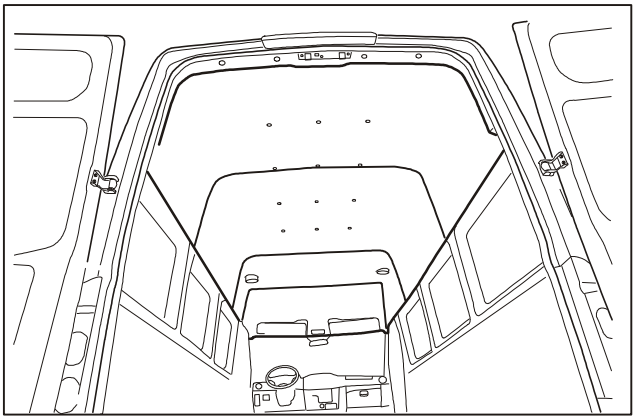

11. Remove clips of middle roof lining and take down the middle roof lining.

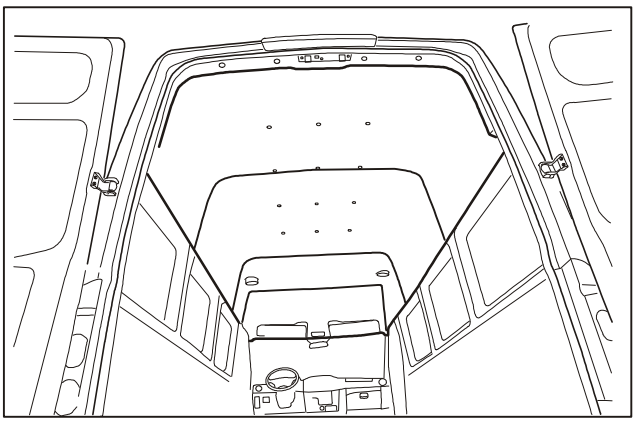

12. Remove clips of front roof lining and take down the front roof lining.

Downloaded from www.Manualslib.com manuals search engine

Removal/Installation

Roof lining

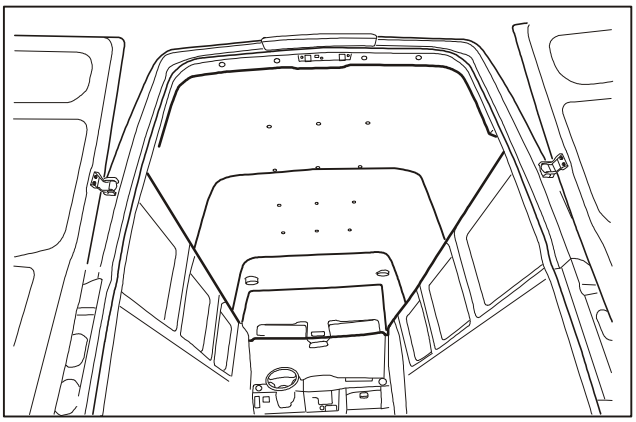

Installation

Two service persons are necessary for installation of roof lining, to avoid fracture of roof interior trim.

Downloaded from www.Manualslib.com manuals search engine

Removal/Installation

Right/Left upper trim panel of A-pillar

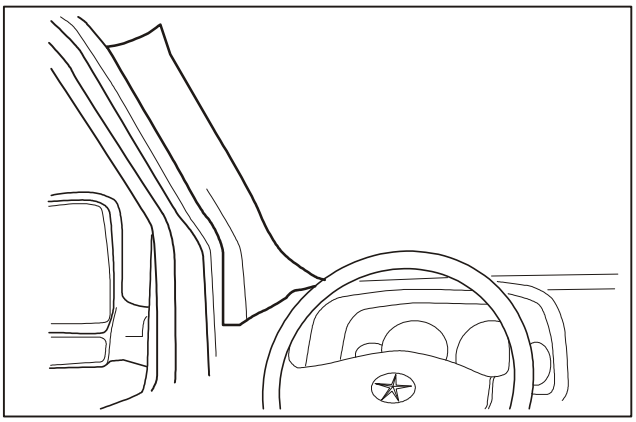

Removal

1. Remove left upper trim panel of A-pillar with tool.

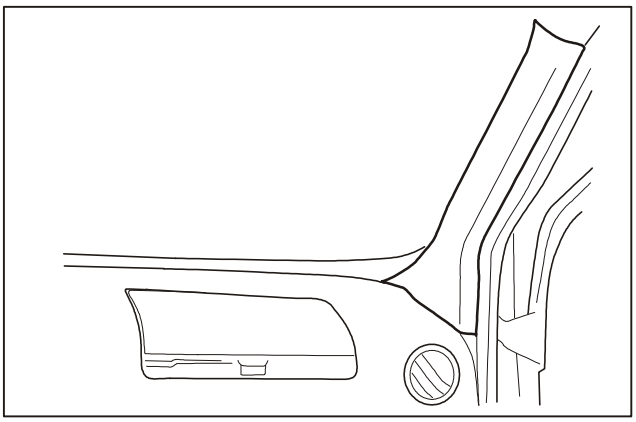

2. Remove right upper trim panel of A-pillar with tool.

Installation

Install it in reverse order of removal.

Downloaded from www.Manualslib.com manuals search engine

Removal/Installation

Right upper/lower trim panel of B-pillar

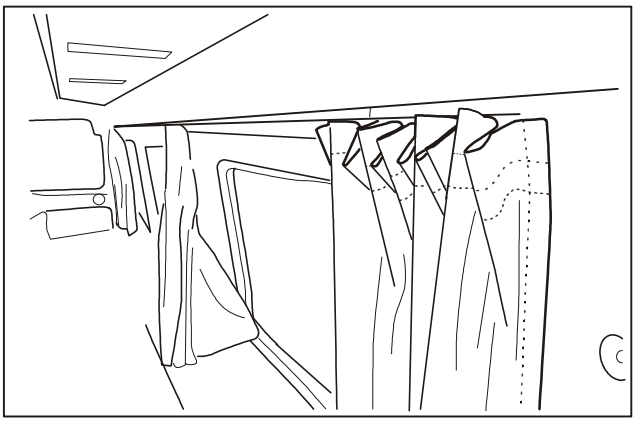

Removal

1. Remove curtains.

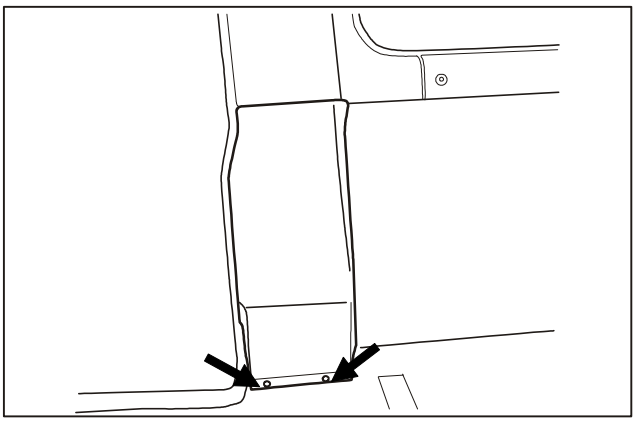

2. Remove two mounting screws for right lower trim panel of B-pillar and then remove the lower trim panel.

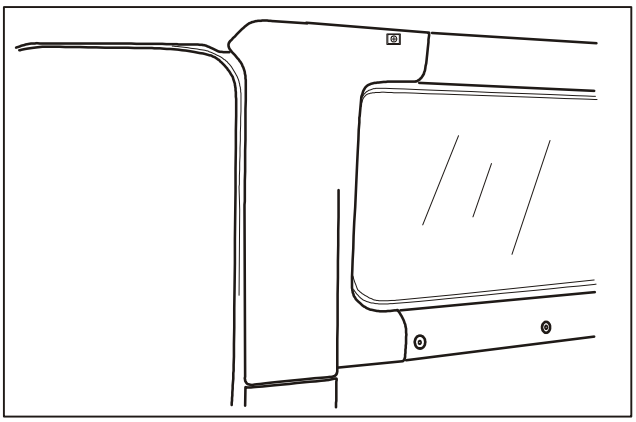

3. Remove a mounting screw for upper trim panel of B-pillar and then remove the upper trim panel.

Installation

Install it in reverse order of removal.

Downloaded from www.Manualslib.com manuals search engine

Removal/Installation for B-pillar Trim Panel

Left upper/lower trim panel of B-pillar

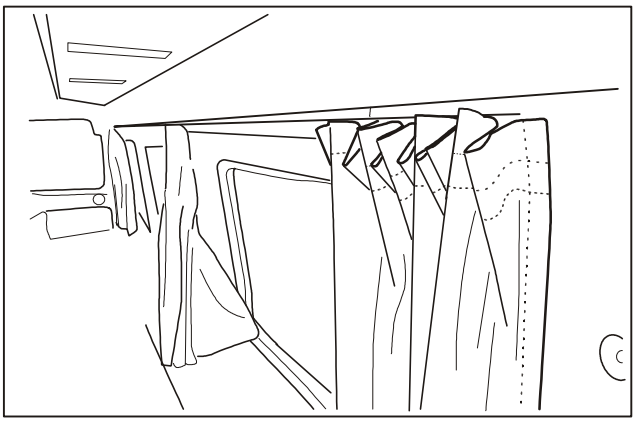

Removal

1. Remove curtains.

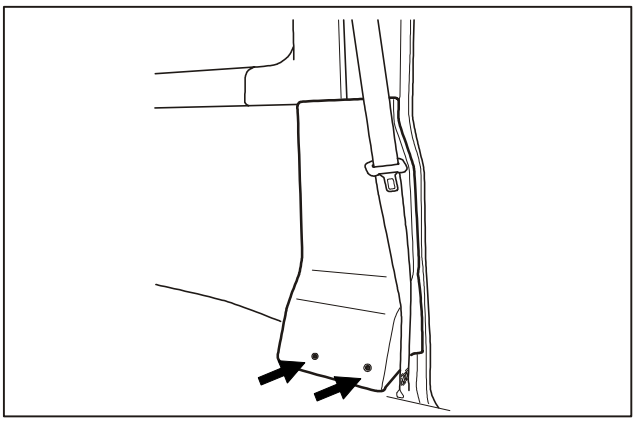

2. Remove two mounting screws for left lower trim panel of B-pillar and then remove the lower trim panel.

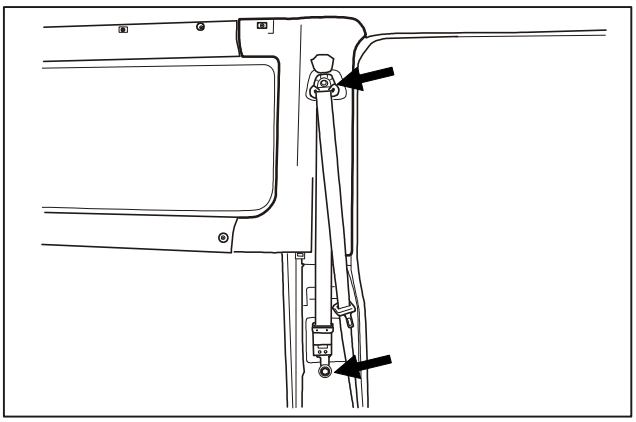

3. Remove mounting bolts for seat belt.

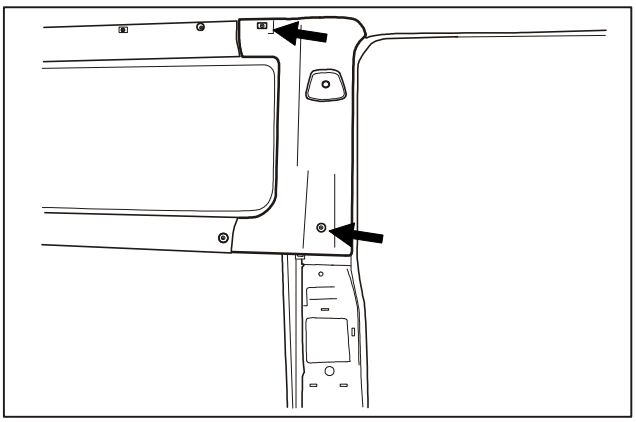

4. Remove mounting screws for right upper trim panel of B-pillar and then remove the upper trim panel.

Downloaded from www.Manualslib.com manuals search engine

Removal/Installation

Left upper/lower trim panel of B-pillar

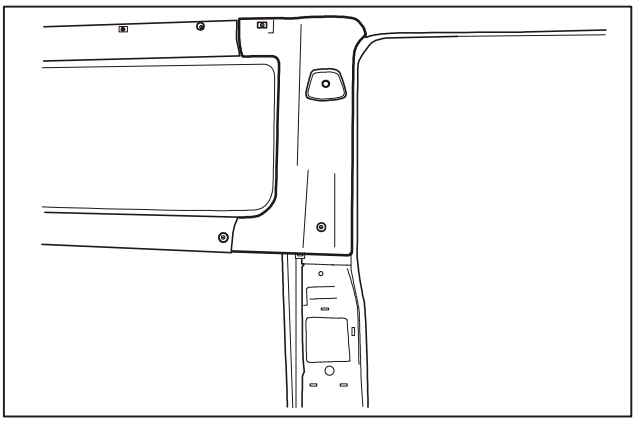

Installation

Install it in reverse order of removal.

Downloaded from www.Manualslib.com manuals search engine

Removal/Installation for C-pillar Trim Panel

Left/Right trim panel of C-pillar

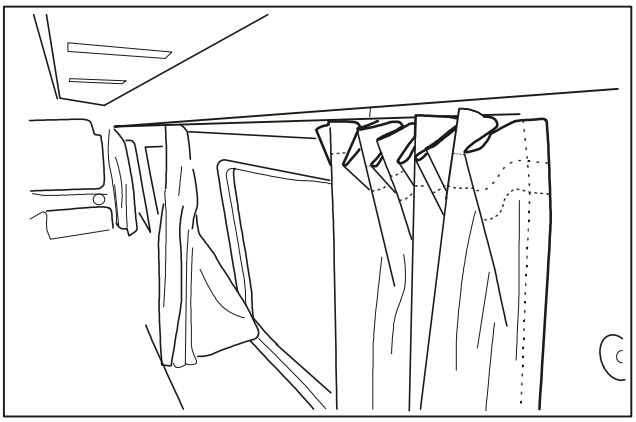

Removal

1. Remove curtains.

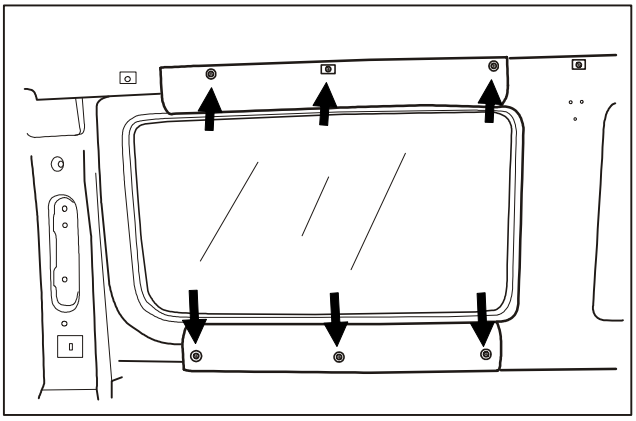

2. Remove right upper and lower trim panels of C-pillar.

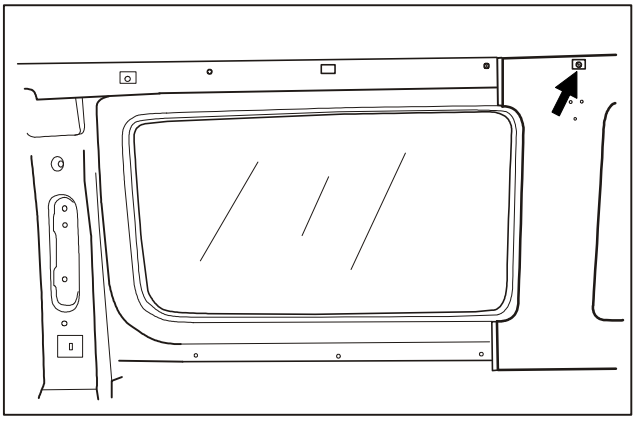

3. Remove right trim panel of C-pillar.

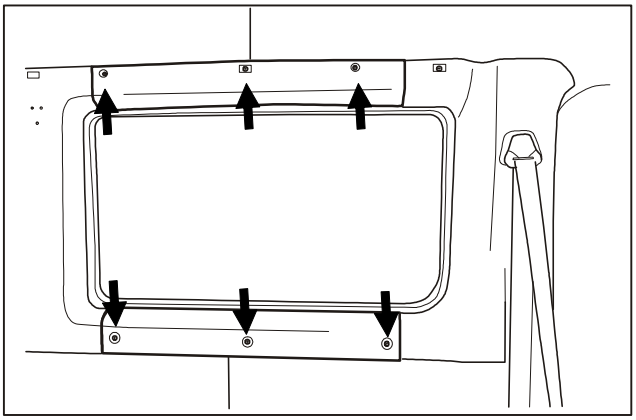

4. Remove left upper and lower trim panels of C-pillar.

Downloaded from www.Manualslib.com manuals search engine

Removal/Installation (Continued)

Left/Right trim panel of C-pillar

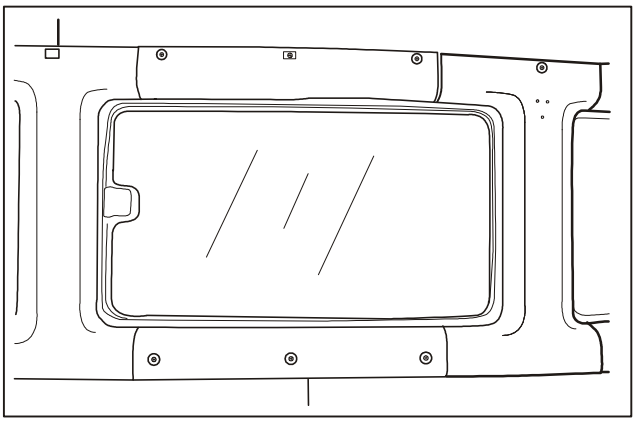

5. Remove left trim panel of C-pillar.

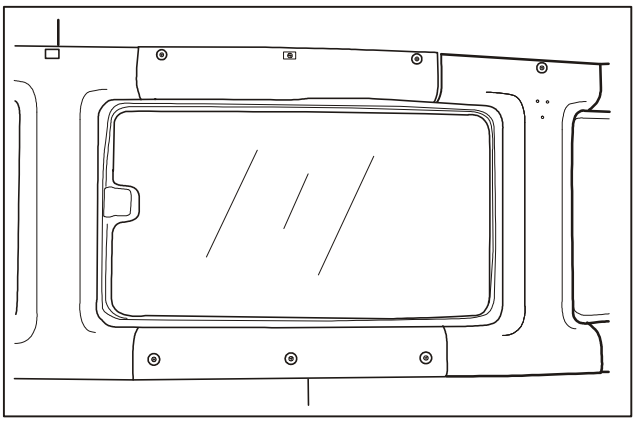

Installation
Install it in reverse order of removal.

Downloaded from www.Manualslib.com manuals search engine

Removal/Installation

Right side wall window trim panel

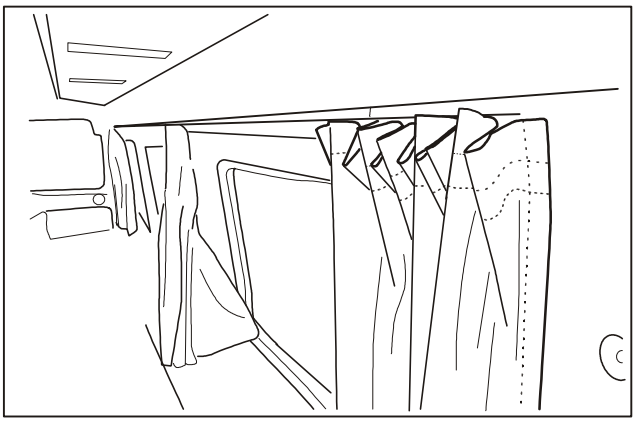

Removal

1. Remove curtains.

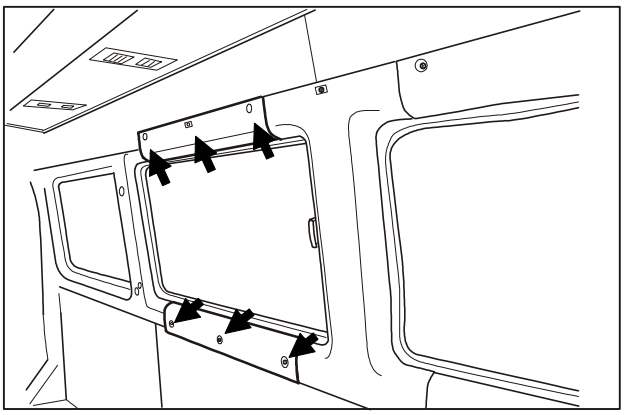

2. Remove upper trim panel 1 and lower trim panel 1 of right side wall window pillar.

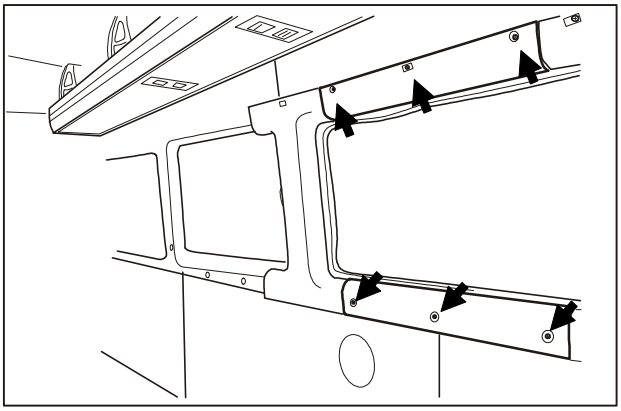

3. Remove upper trim panel 2 and lower trim panel 2 of right side wall window pillar.

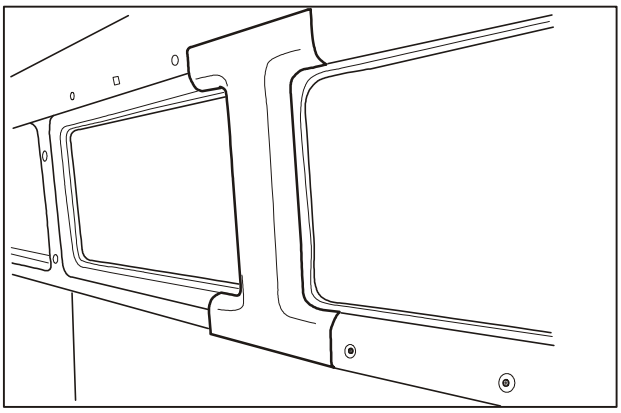

4. Remove trim panel for right side wall window pillar.

Downloaded from www.Manualslib.com manuals search engine

Removal/Installation (Continued)

Right side wall window trim panel

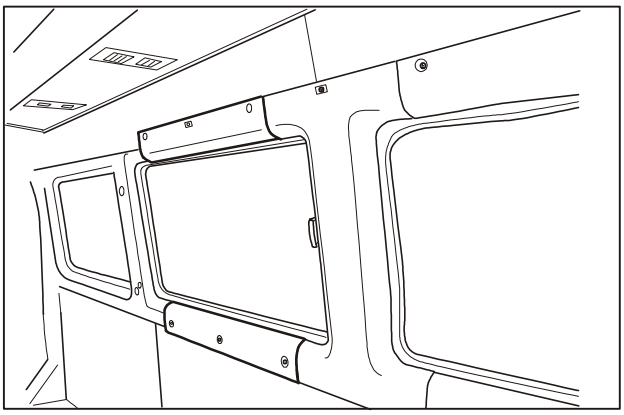

Installation

1. Install it in reverse order of removal.

Downloaded from www.Manualslib.com manuals search engine

Removal/Installation

Left side wall window trim panel

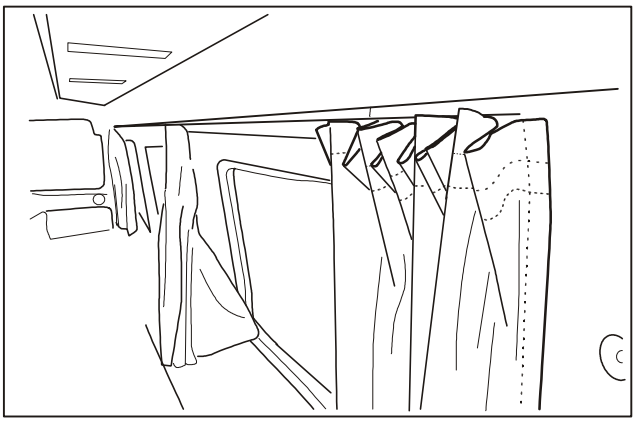

Removal

1. Remove curtains.

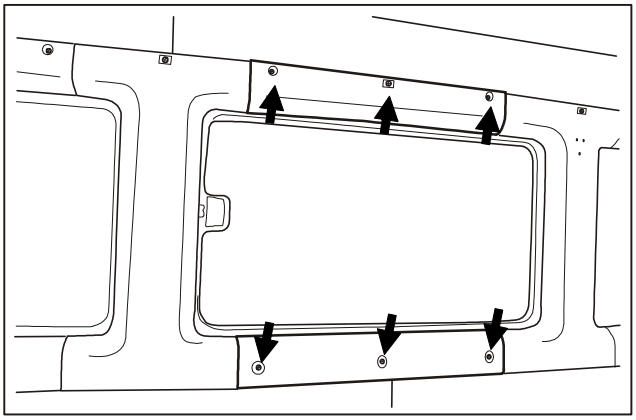

2. Remove upper trim panel 1 and lower trim panel 1 of left side wall window pillar.

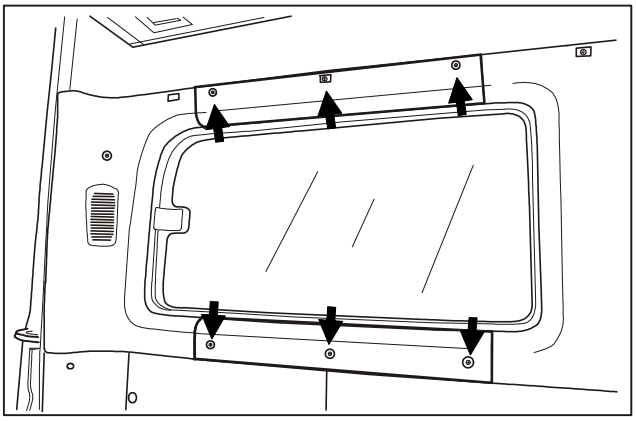

3. Remove upper trim panel 2 and lower trim panel 2 of left side wall window pillar.

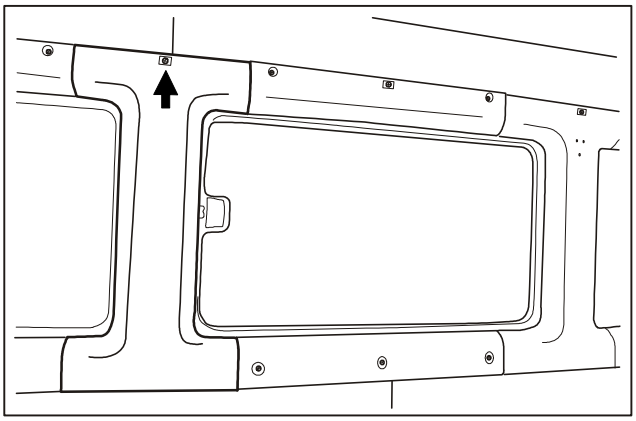

4. Remove left side wall window pillar.

Downloaded from www.Manualslib.com manuals search engine

Removal/Installation (Continued)

Left side wall window trim panel

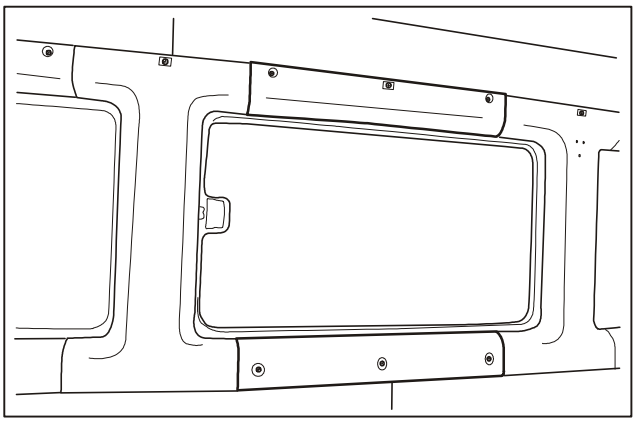

Installation
Install it in reverse order of removal.

Downloaded from www.Manualslib.com manuals search engine

Removal/Installation

Upper/lower trim panel of right D-pillar

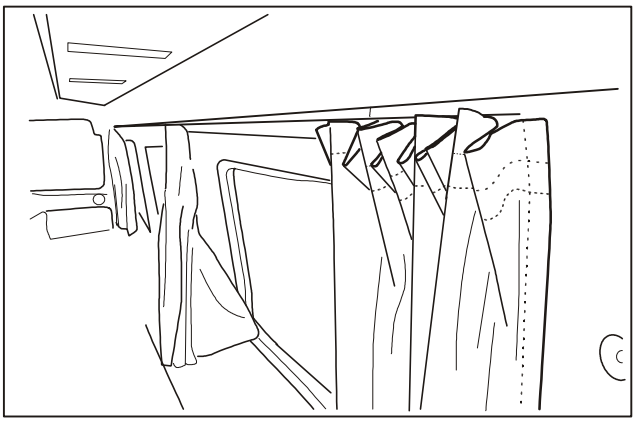

Removal

1. Remove curtains.

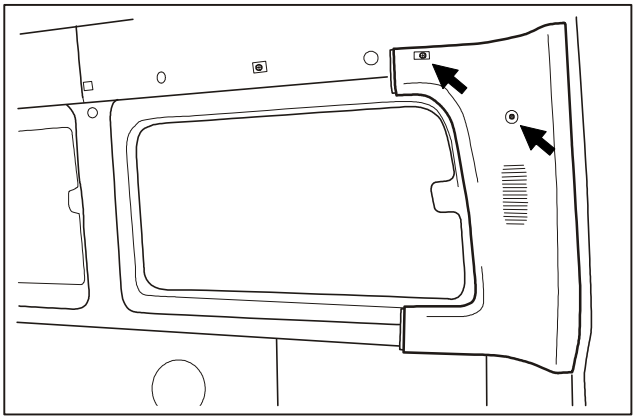

2. Remove mounting screws for upper trim panel of right D-pillar and take down the upper trim panel.

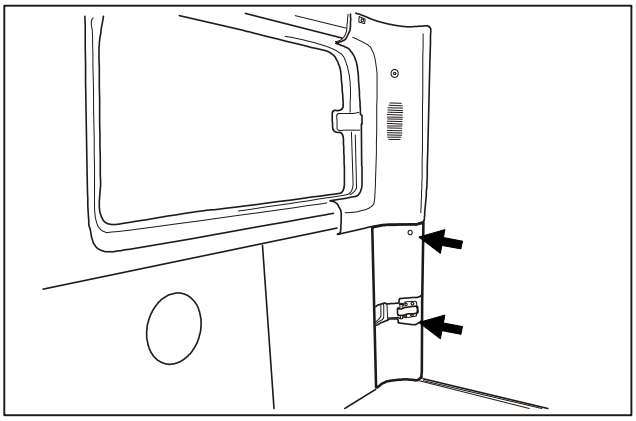

3. Remove mounting screws for lower trim panel of right D-pillar and take down the lower trim panel.

Installation

Install it in reverse order of removal.

Downloaded from www.Manualslib.com manuals search engine

Removal/Installation

Upper/lower trim panel of left D-pillar

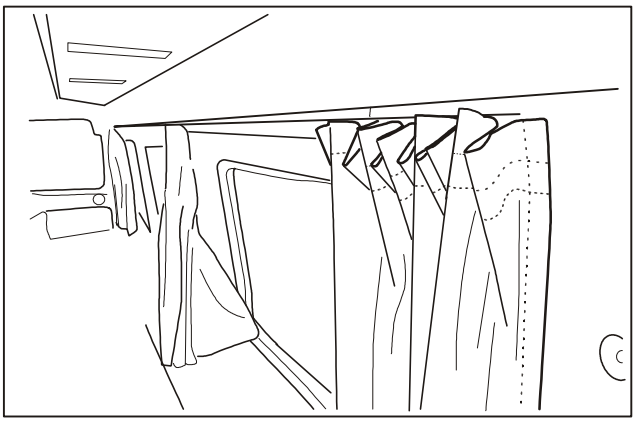

Removal

1. Remove curtains.

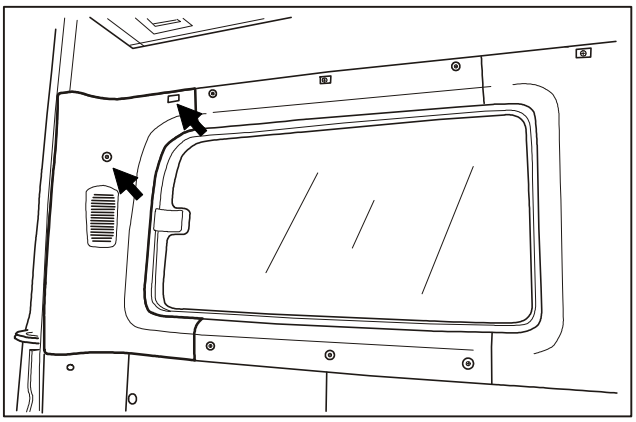

2. Remove mounting screws for upper trim panel of left D-pillar and take down the upper trim panel.

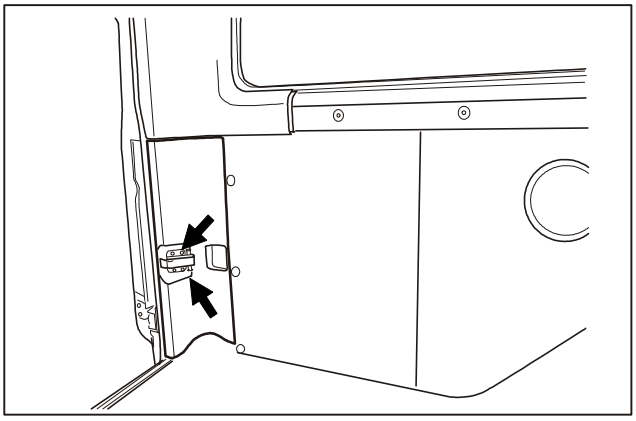

3. Remove mounting screws for lower trim panel of left D-pillar and take down the lower trim panel.

Installation

Install it in reverse order of removal.

Downloaded from www.Manualslib.com manuals search engine

Removal/Installation

Left trim panels 1, 2, 3 and 4 and right trim panels 1, 2 and 3

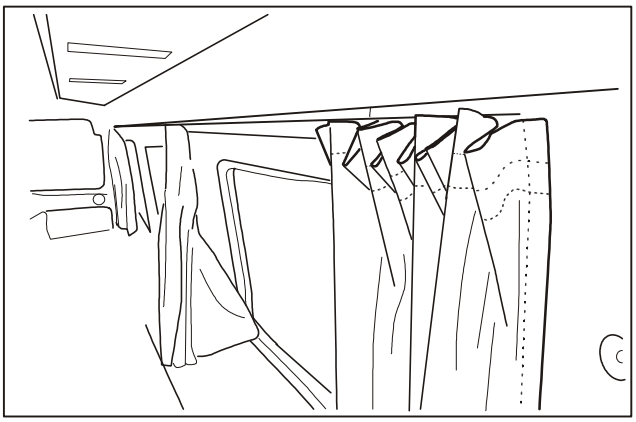

Removal

1. Remove curtains.

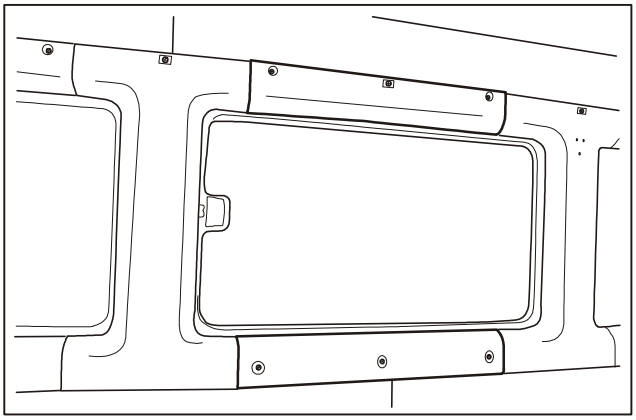

2. Remove upper and lower trim panels for right B-pillar, C-pillar, side pillar and D-pillar.

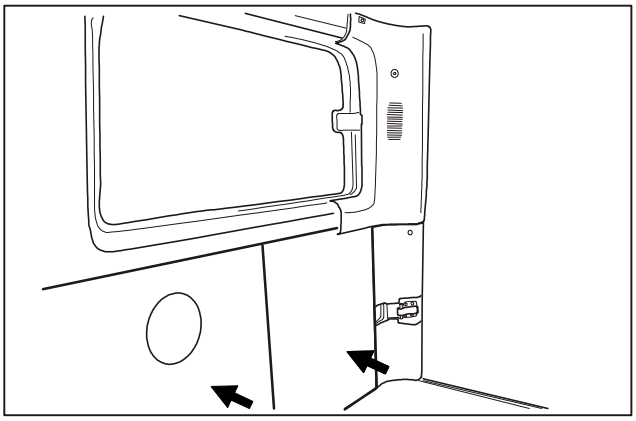

3. Remove right trim panels 1, 2 and 3.

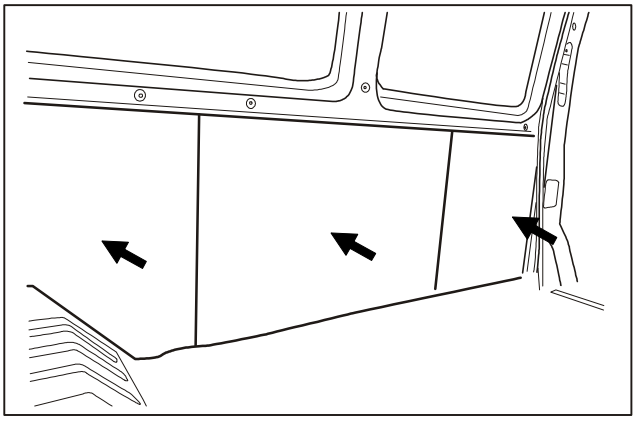

4. Remove upper and lower trim panels for left B-pillar, C-pillar, side pillar and D-pillar. Remove left trim panels 1, 2, 3 and 4.

Downloaded from www.Manualslib.com manuals search engine

Removal/Installation (Continued)

Left trim panels 1, 2, 3 and 4 and right trim panels 1, 2 and 3

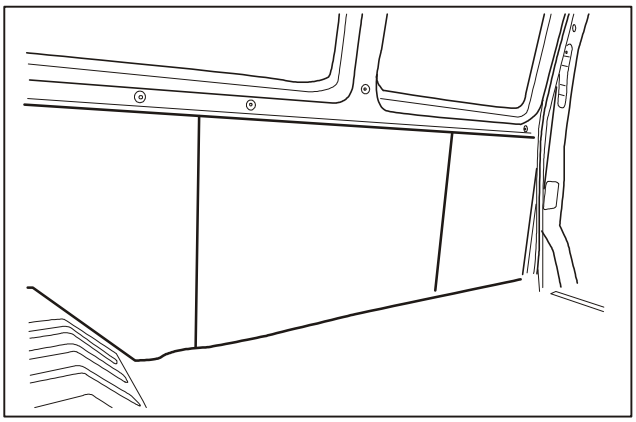

Installation

Install it in reverse order of removal.

Downloaded from www.Manualslib.com manuals search engine

Removal/Installation

Left trim panel of front door trim panel

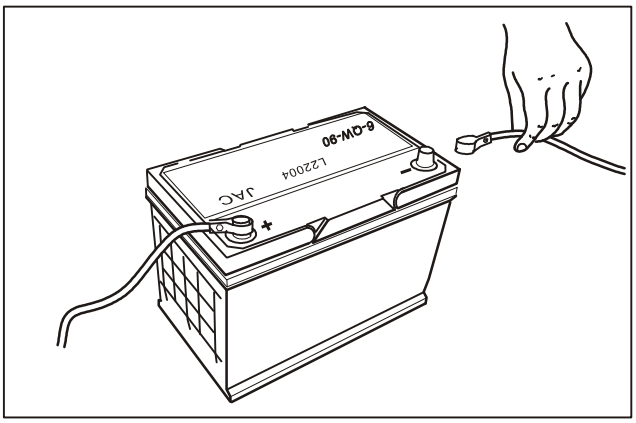

Removal

1. Remove the negative cable of battery.

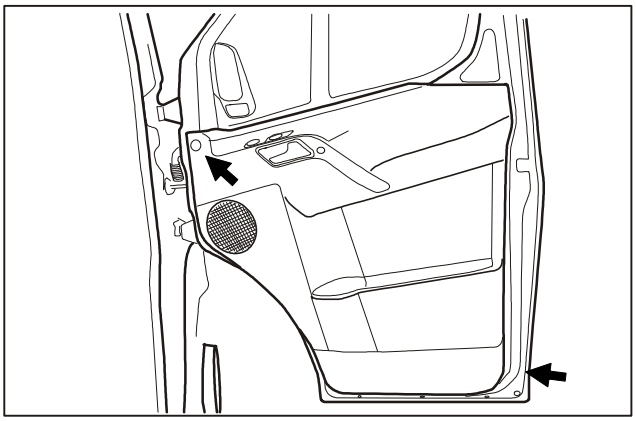

2. Remove mounting screws of door trim panel and take down the trim panel.

Installation

Install it in reverse order of removal.

Downloaded from www.Manualslib.com manuals search engine

Removal/Installation

Left door

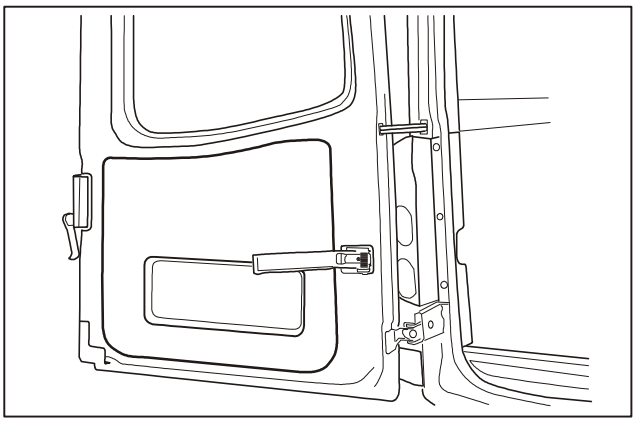

Removal

1. Pry up the left door lower trim panel with tool carefully.

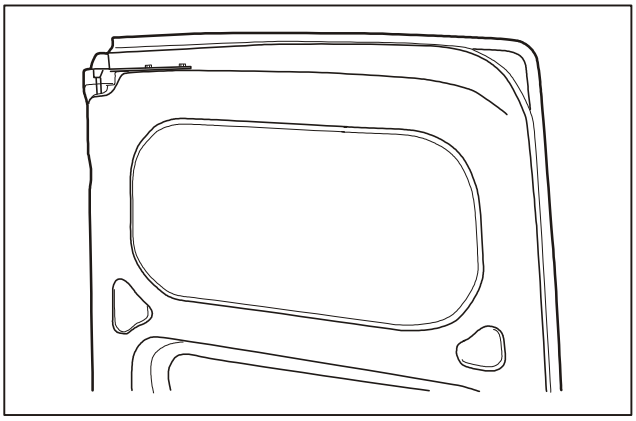

2. Pry up the left door upper trim panel with tool carefully.

Installation

Install it in reverse order of removal.

Downloaded from www.Manualslib.com manuals search engine

Removal/Installation

Right door

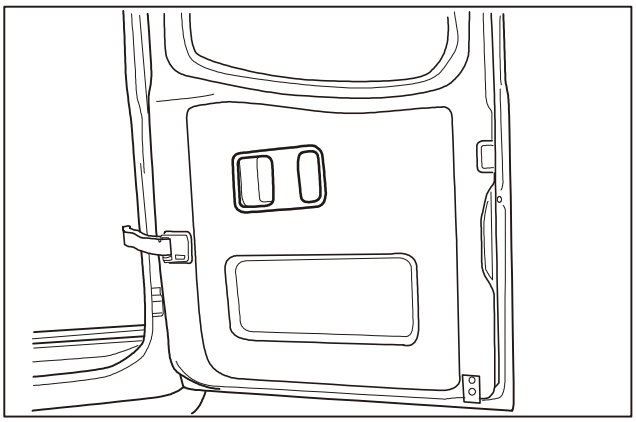

Removal

1. Remove inner handle cover of door.

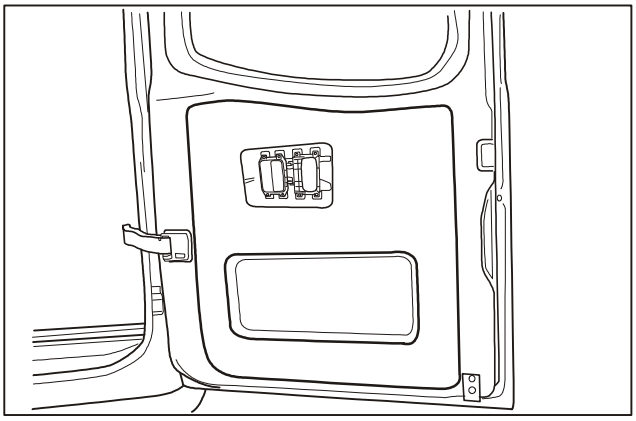

2. Remove the right door lower trim panel with tool.

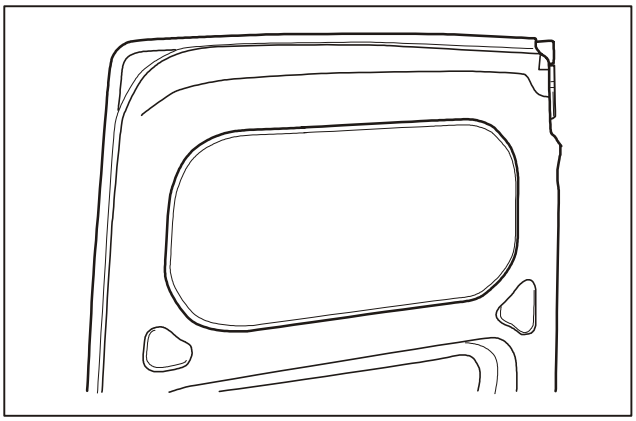

3. Remove right door upper trim panel with tool.

Installation

Install it in reverse order of removal.

Downloaded from www.Manualslib.com manuals search engine

Removal/Installation

Interior rear-view mirror

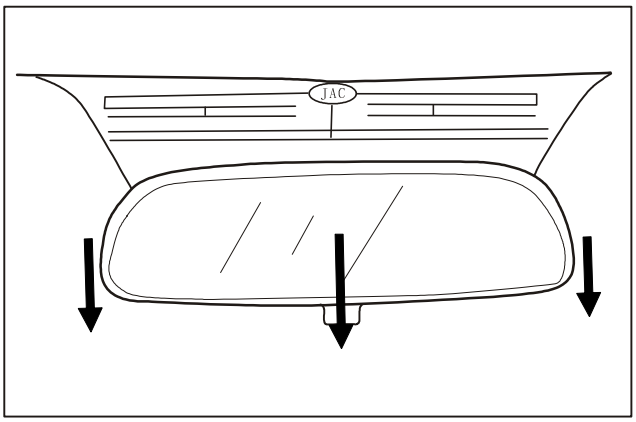

Removal

1. Pull the interior rear-view mirror downwards carefully in the direction shown in the figure.

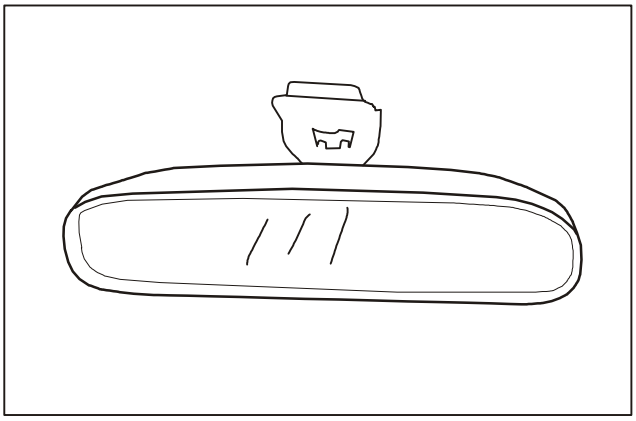

2. Take out the interior rear-view mirror assembly.

Installation

Install it in reverse order of removal.

Downloaded from www.Manualslib.com manuals search engine

Removal/Installation

Sun visor

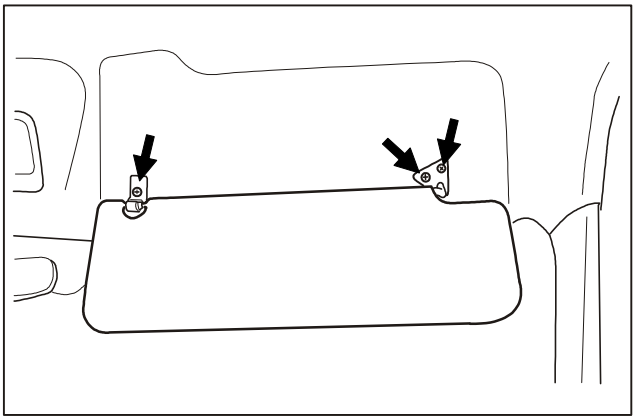

Removal

1. Remove mounting screws of right sun visor.

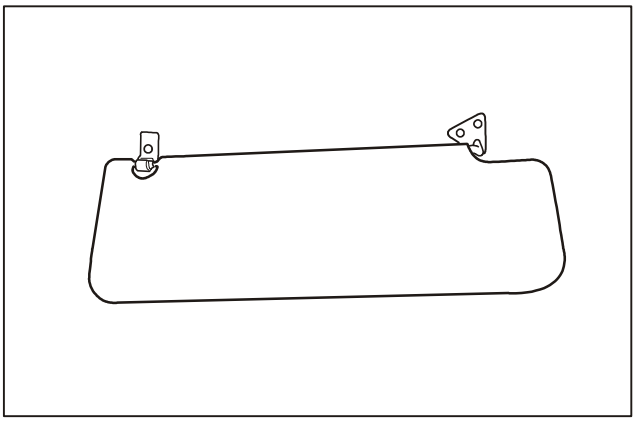

2. Take down the sun visor.

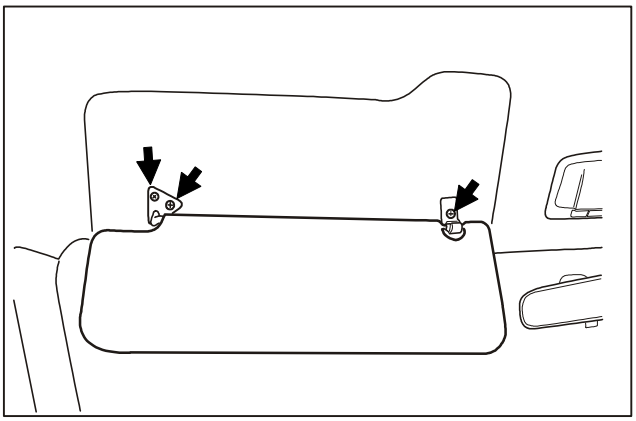

3. Remove mounting screws of left sun visor and take down the sun visor.

Installation

Install it in reverse order of removal.

Downloaded from www.Manualslib.com manuals search engine

Removal/Installation

Curtains

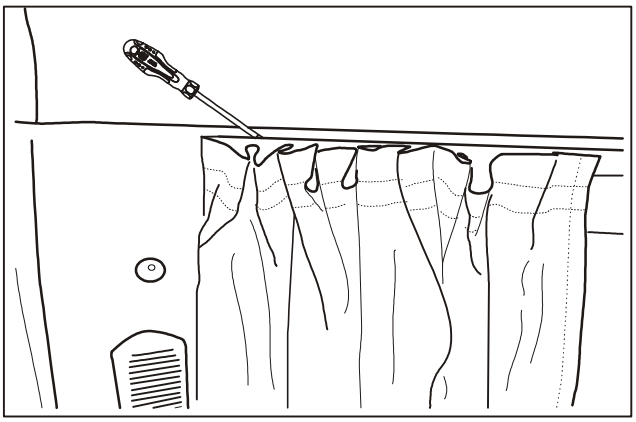

Removal

1. Pry out the curtain slide rail with screwdriver and make it separated from the clips mounted on the trim panel.

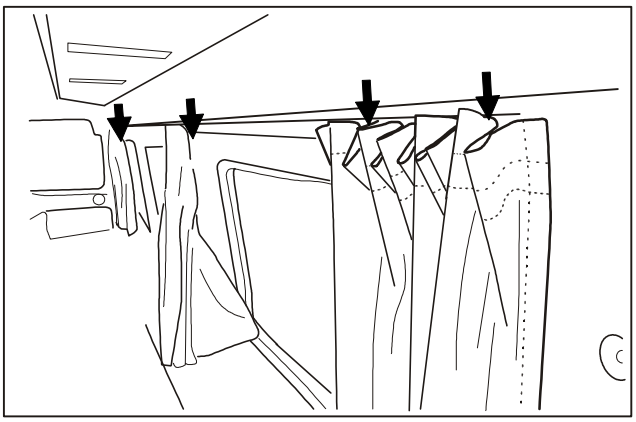

2. Clips are positioned at the middle of each pillar and at the middle of each side window glass.

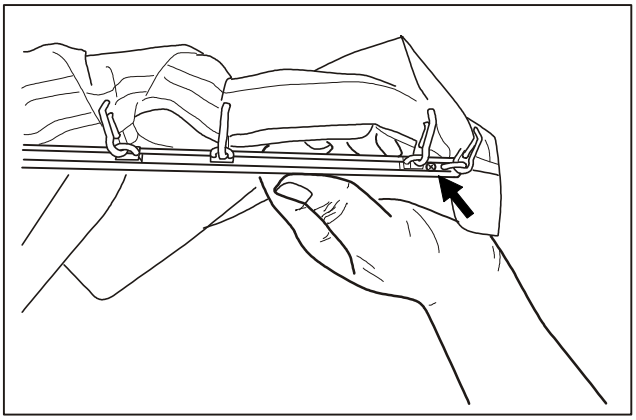

3. Remove the mounting screws of curtain plug and take down the curtain.

Installation

Install it in reverse order of removal. Install the slide rail in order from front to back.

Downloaded from www.Manualslib.com manuals search engine

Removal/Installation

Luggage rack

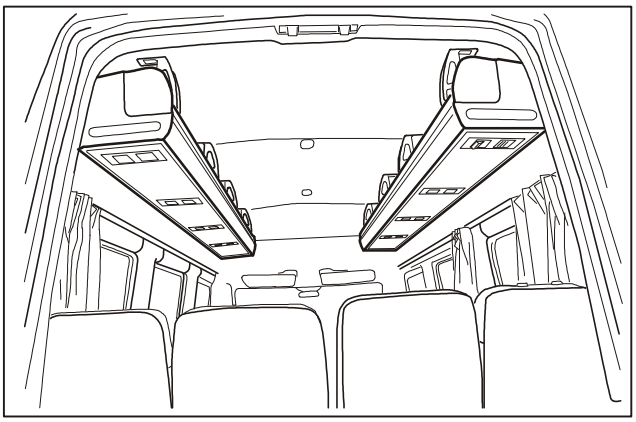

Removal

1. Two service persons are necessary for removal of luggage rack, in order to avoid personal injury and damage to luggage rack.

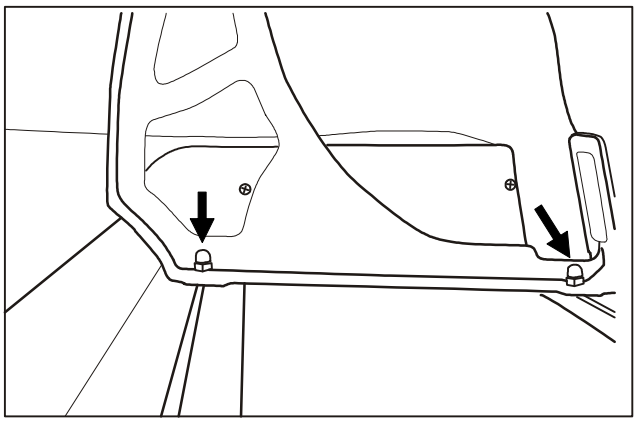

2. Remove mounting nuts for luggage rack.

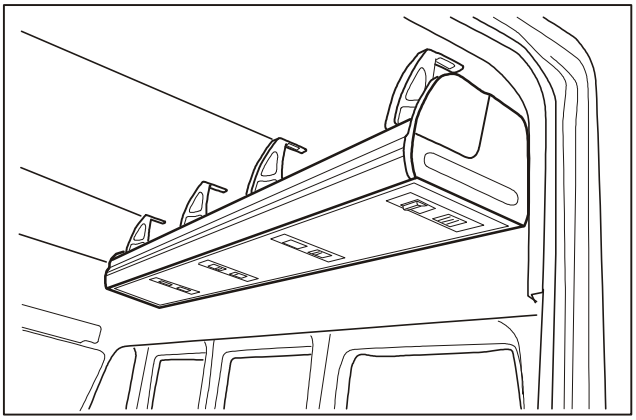

3. Hold the luggage rack during the removal.

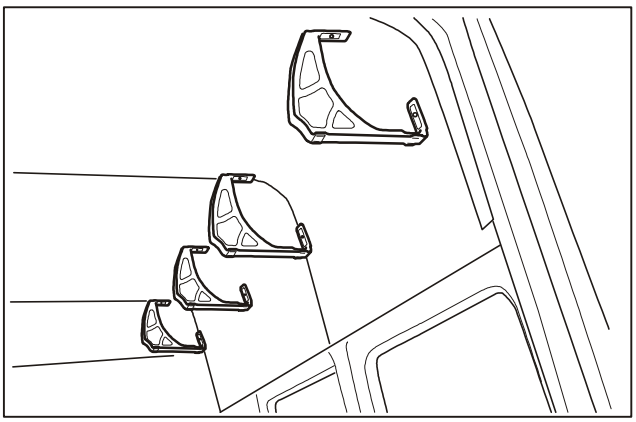

4. Remove brackets of luggage rack.

Downloaded from www.Manualslib.com manuals search engine

Removal/Installation (Continued)

Luggage rack

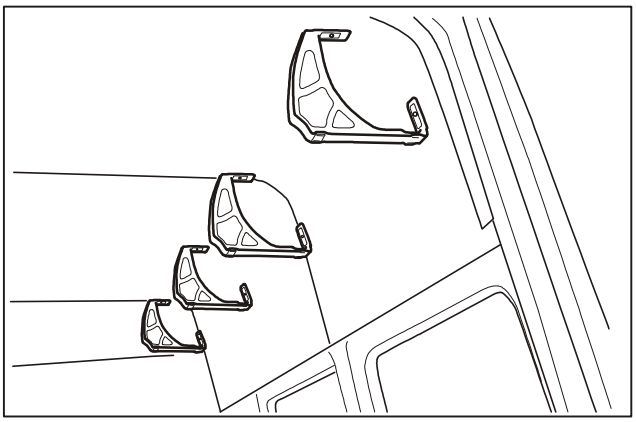

Installation
Install it in reverse order of removal.

Downloaded from www.Manualslib.com manuals search engine

Removal/Installation

Step plate assembly

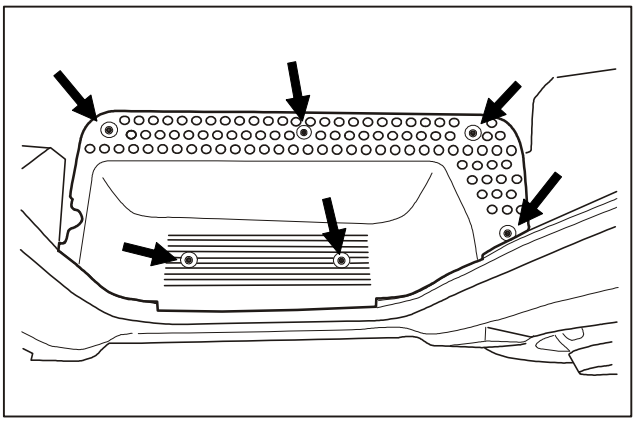

Removal

1. Remove mounting screws of step plate.

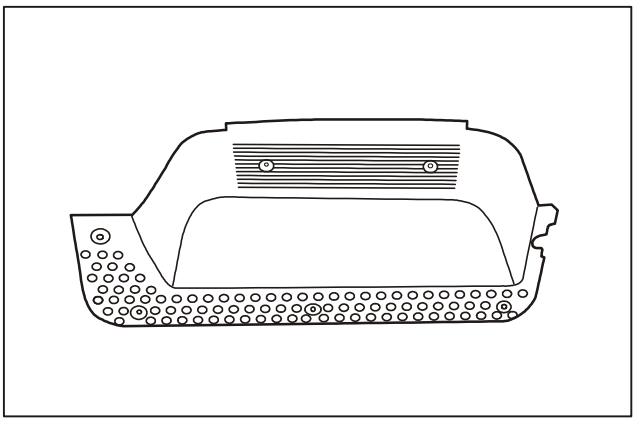

2. Take down the step plate assembly.

Installation

Install it in reverse order of removal.

Downloaded from www.Manualslib.com manuals search engine

Removal/Installation

Front bumper

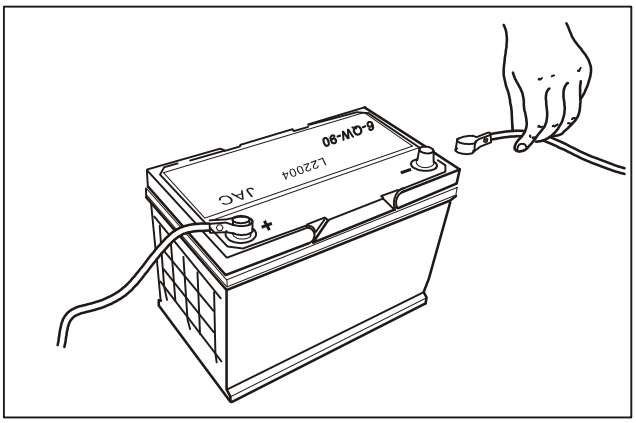

Removal

1. Remove the negative cable of battery.

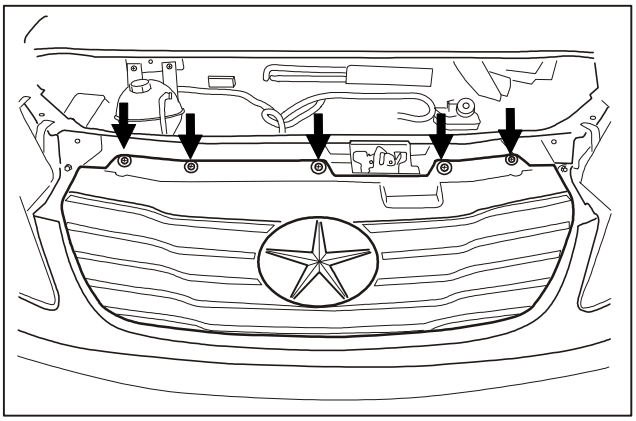

2. Remove screws of front grille and take down the front grille.

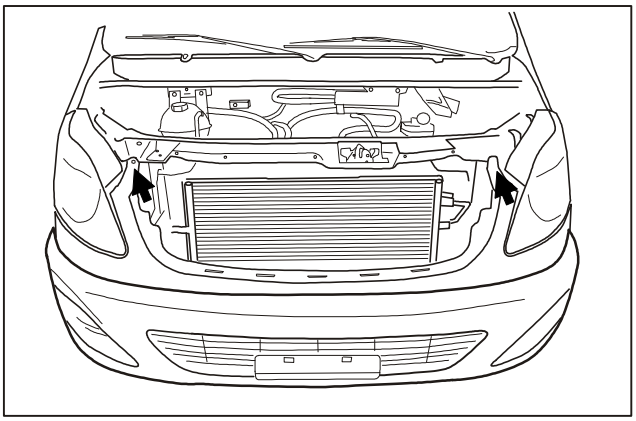

3. Remove the front trim panel.

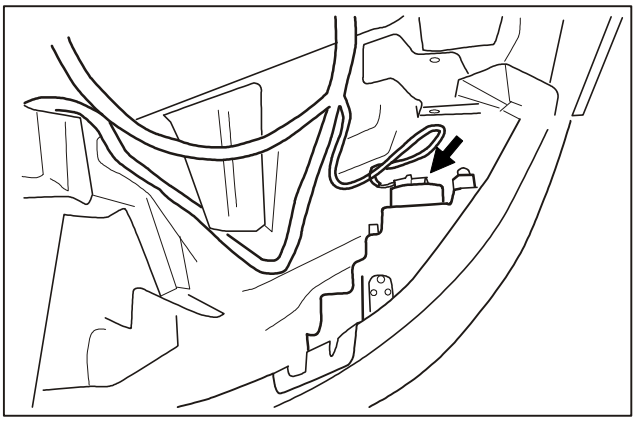

4. Disconnect the harness connector of fog lamp.

Downloaded from www.Manualslib.com manuals search engine

Removal/Installation

Front bumper

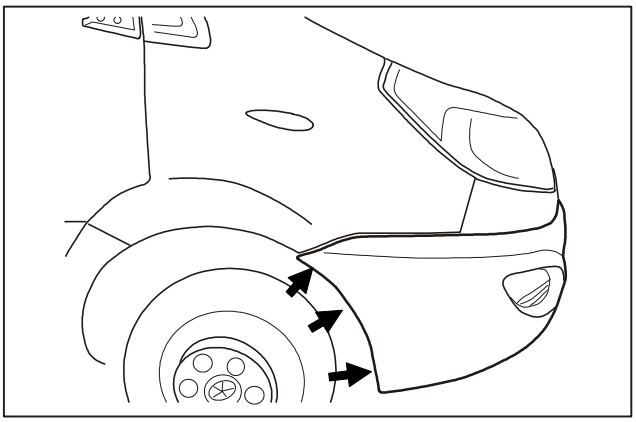

5. Remove mounting screws of bumper.

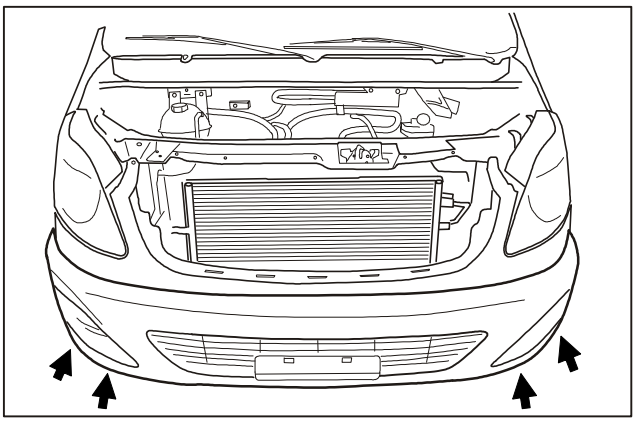

6. Remove four mounting screws of bumper.

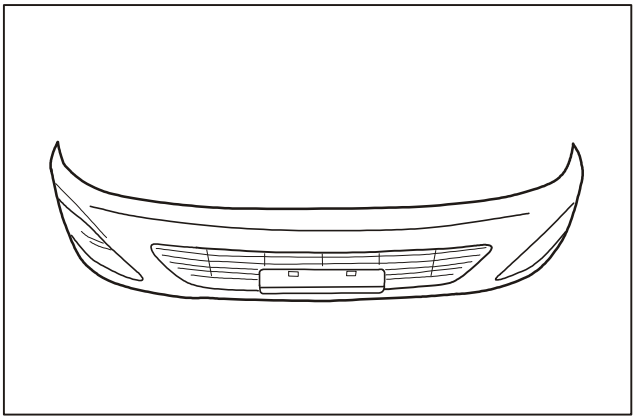

7. Take down front bumper.

Installation Install it in reverse order of removal.

Downloaded from www.Manualslib.com manuals search engine

Removal/Installation

Rear bumper

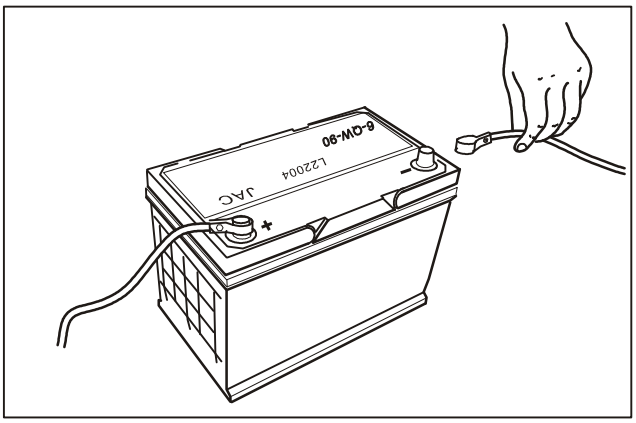

1. Remove the negative cable of battery.

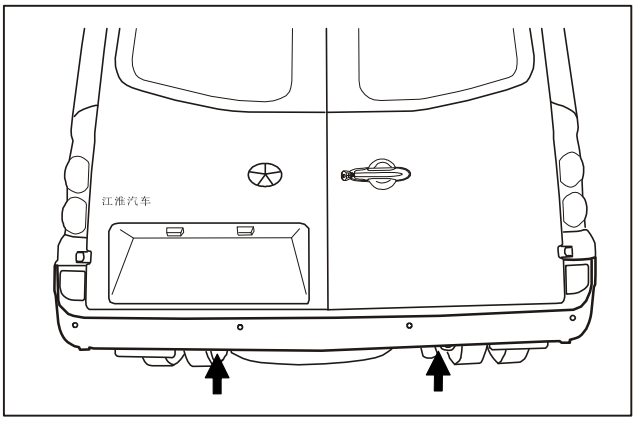

2. Remove mounting screws below rear bumper.

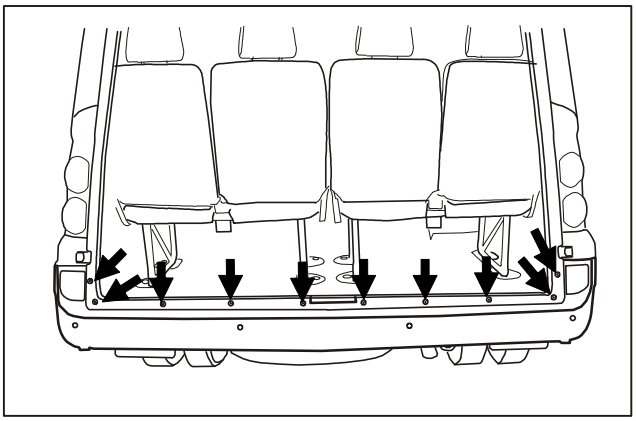

3. Remove mounting screws from rear bumper.

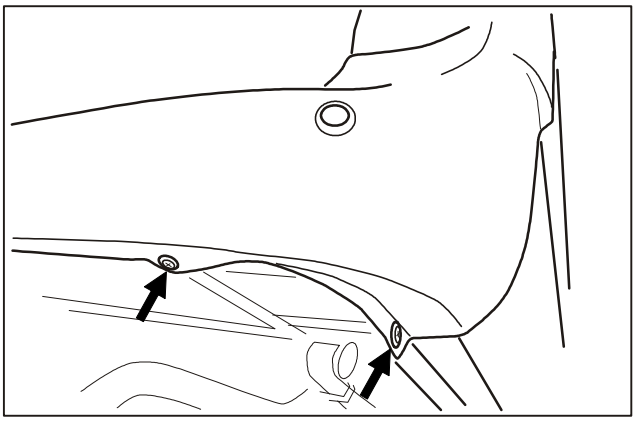

4. Remove side mounting screws from rear bumper.

Downloaded from www.Manualslib.com manuals search engine

Removal/Installation (Continued)

Rear bumper

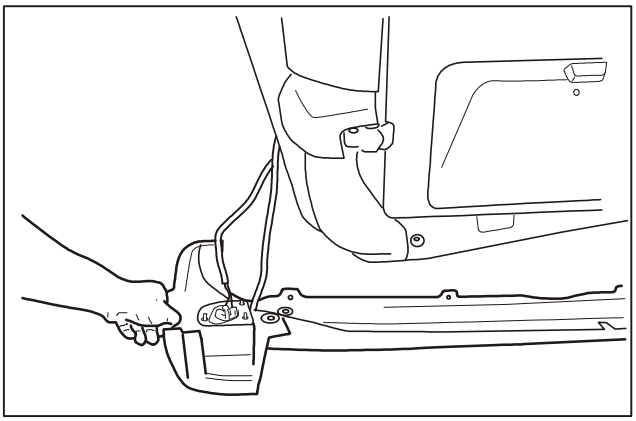

5. Disconnect the harness connector of rear bumper and take down the rear bumper.

Installation
Install it in reverse order of removal.

Downloaded from www.Manualslib.com manuals search engine

Removal/Installation

Front grille

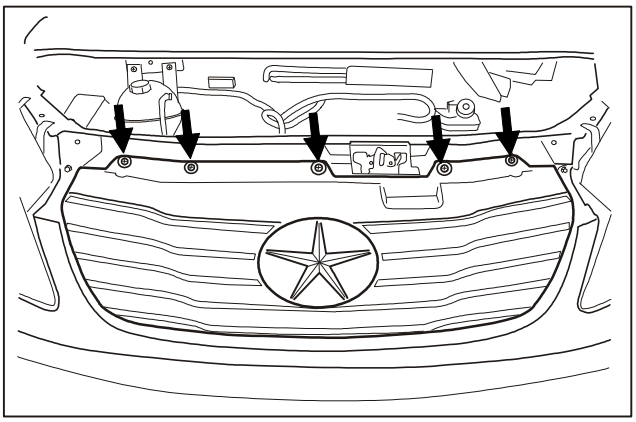

Removal

1. Remove mounting screws for front grille.

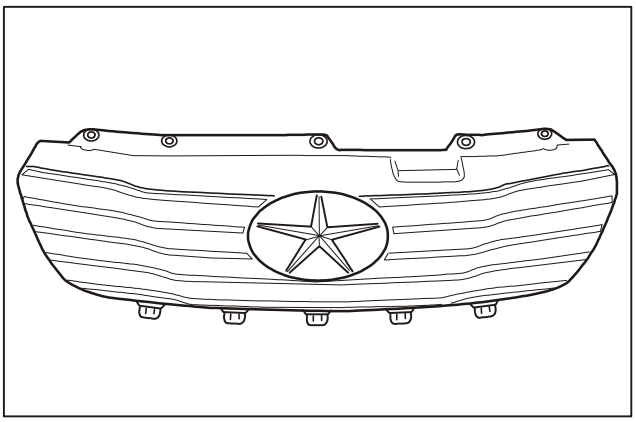

2. Take down the front grille.

Installation

Install it in reverse order of removal.

Downloaded from www.Manualslib.com manuals search engine

Removal/Installation

Fender

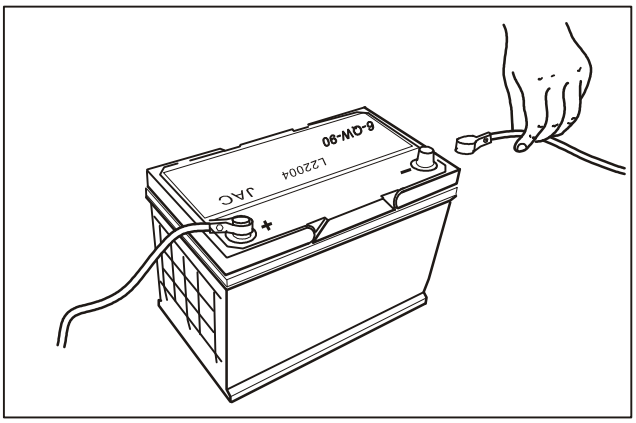

Removal

1. Remove the negative cable of battery.

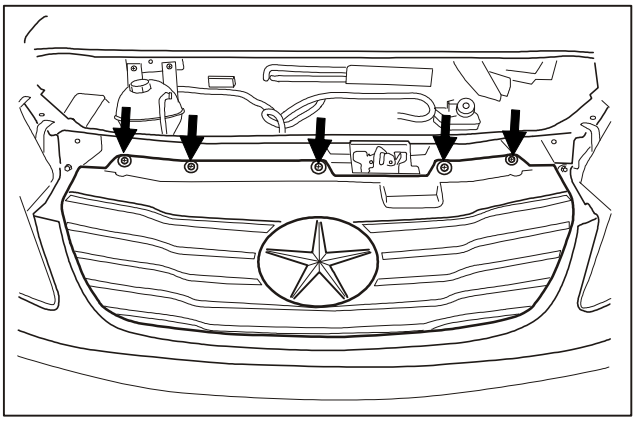

2. Remove the front grille.

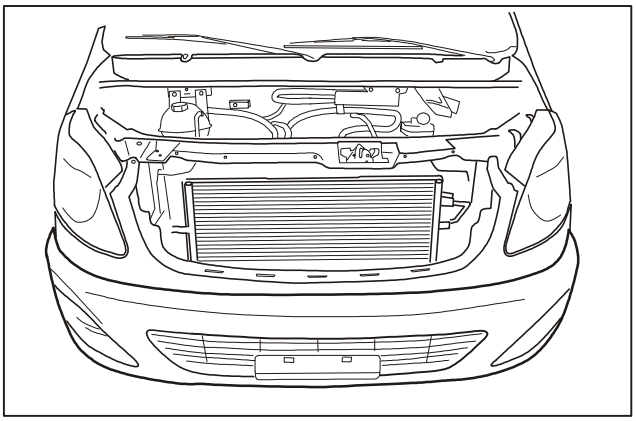

3. Remove front trim panel and headlamps.

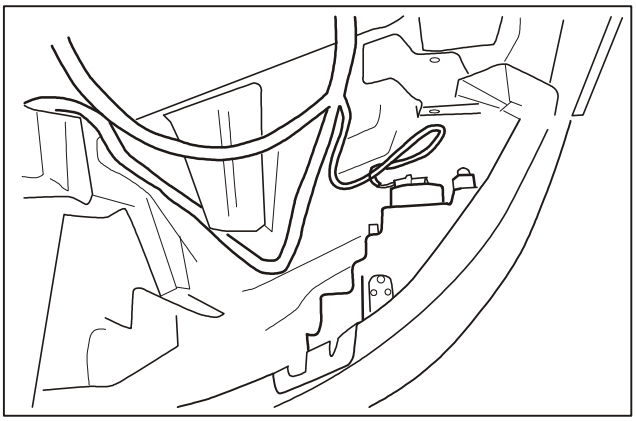

4. Disconnect harness connector of fog lamp.

Downloaded from www.Manualslib.com manuals search engine

Removal/Installation (Continued)

Fender

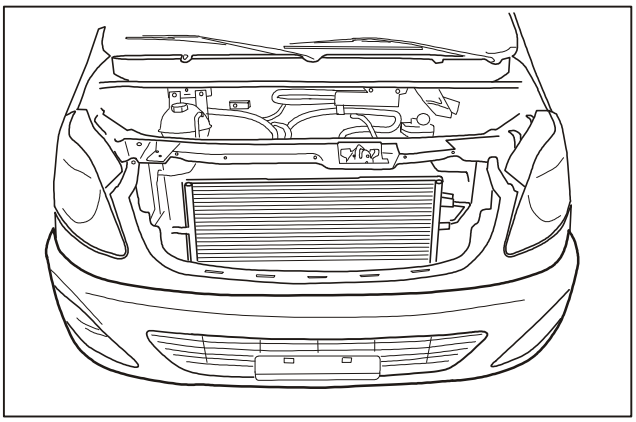

5. Remove front bumper.

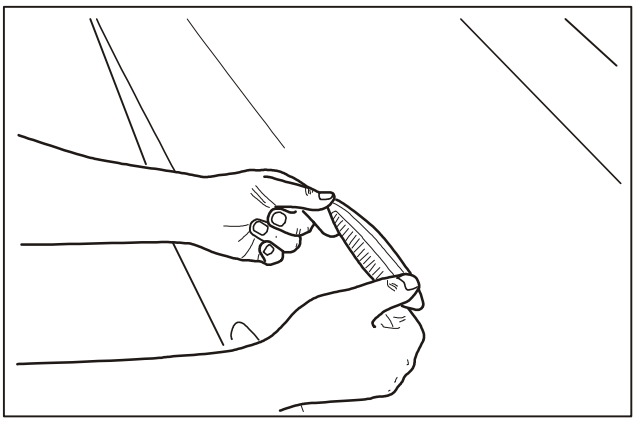

6. Remove clearance lamps.

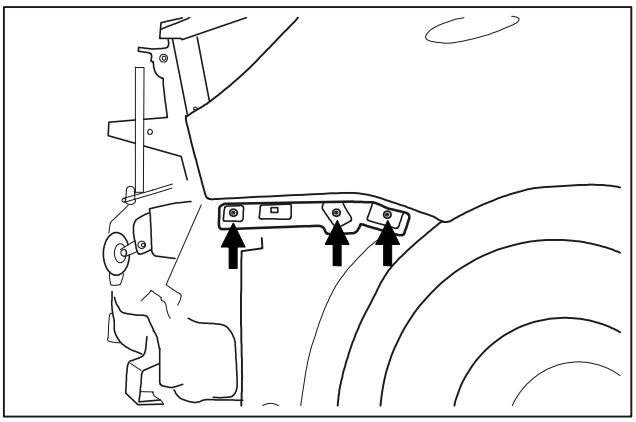

7. Remove pads for front bumper.

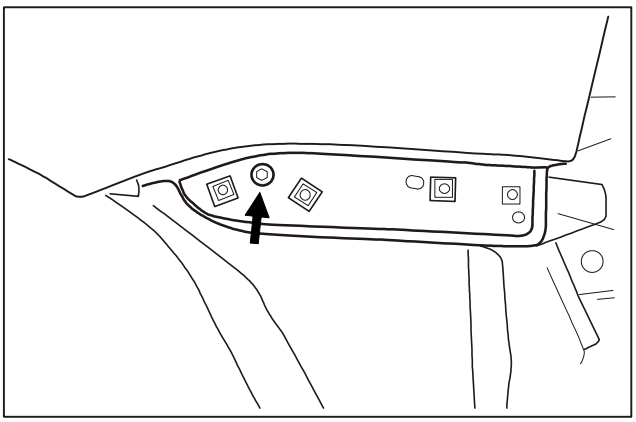

8. Remove mounting bolts for fender.

Downloaded from www.Manualslib.com manuals search engine

Removal/Installation (Continued)

Fender

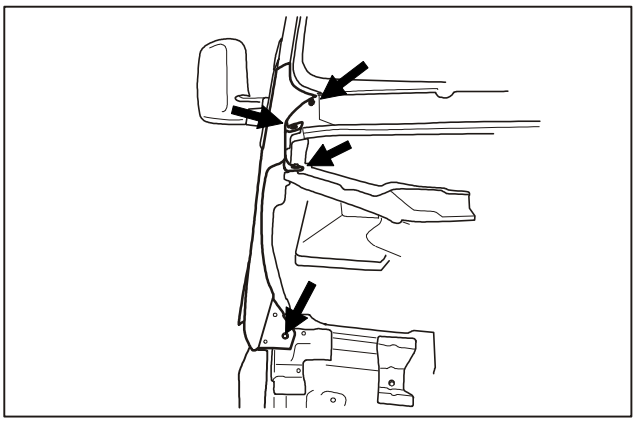

9. Remove mounting bolts for fender.

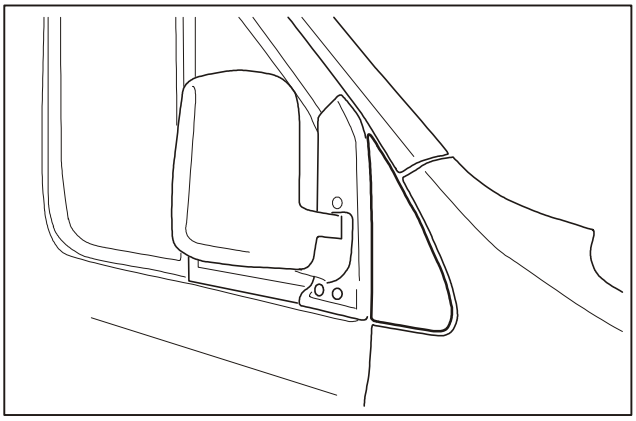

10. Remove rear-view mirror trim panel.

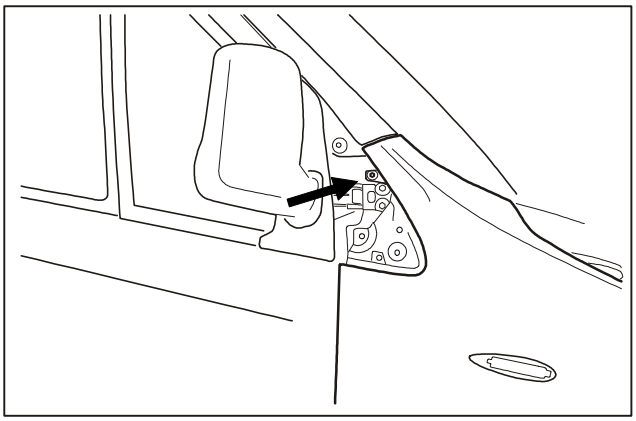

11. Remove mounting bolts for fender.

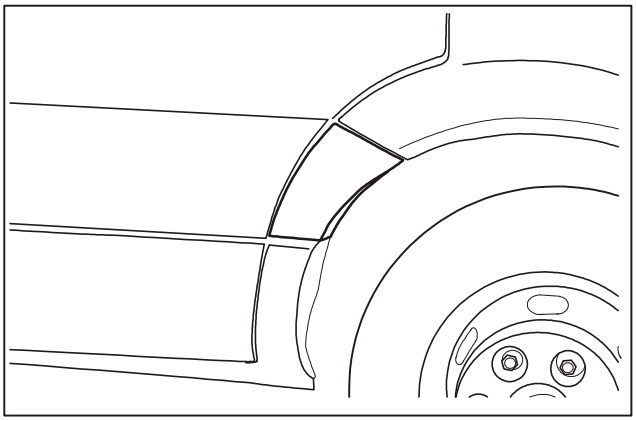

12. Remove front wheel trim panel.

Downloaded from www.Manualslib.com manuals search engine

Removal/Installation (Continued)

Fender

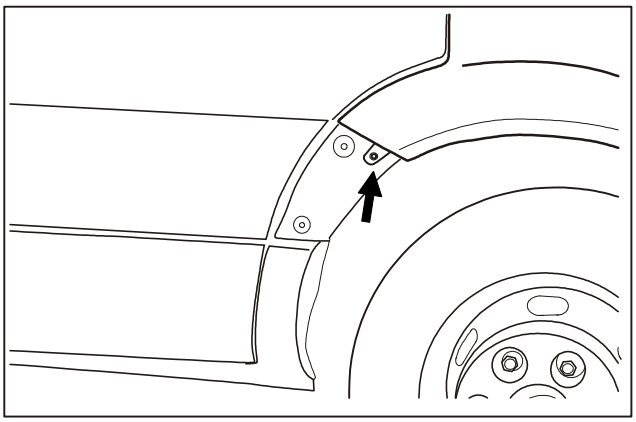

13. Remove mounting screws for fender.

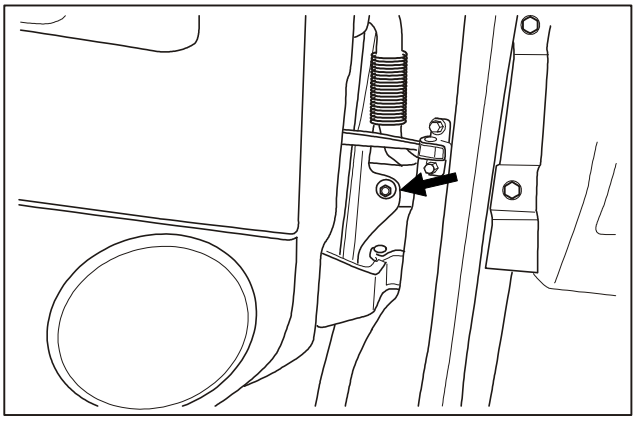

14. Remove mounting screws for fender and take down the fender.

Installation
Install it in reverse order of removal.

Downloaded from www.Manualslib.com manuals search engine

Removal/Installation

Front door skirt trim panel

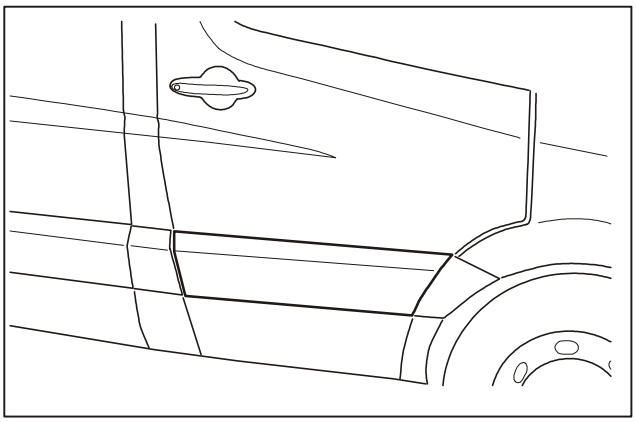

Removal

1. Remove front door skirt trim panel with tool.

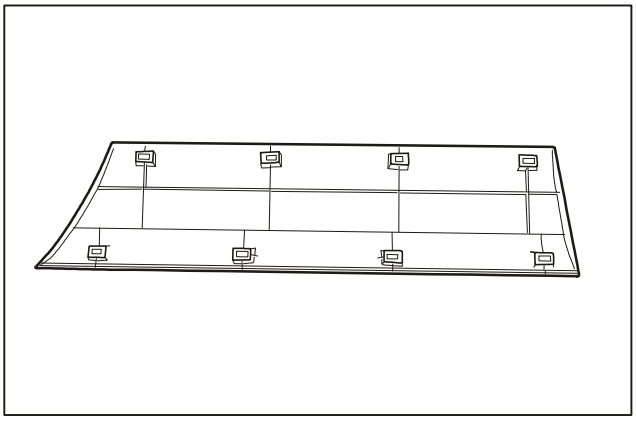

2. Clip position of front door skirt trim panel.

Installation

Install it in reverse order of removal.

Downloaded from www.Manualslib.com manuals search engine

Removal/Installation

Front side wall skirt trim panel

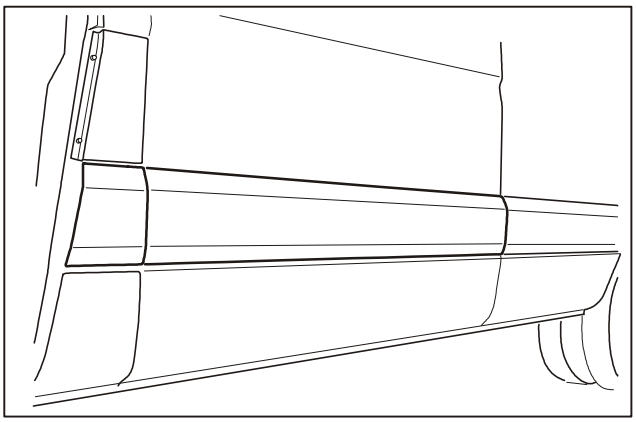

Removal

1. Remove front side wall skirt trim panel with tool.

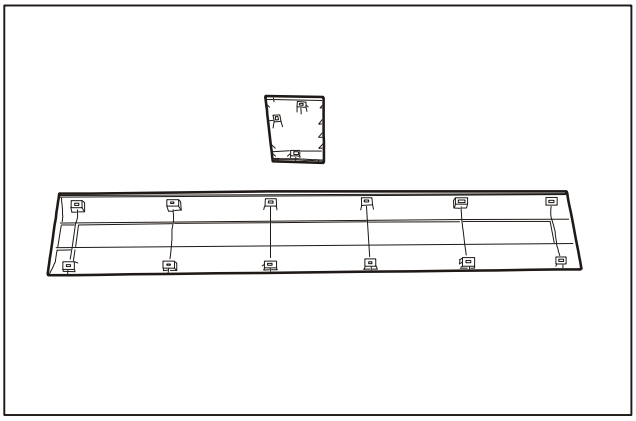

2. Clip position of front side wall skirt trim panel.

Installation

Install it in reverse order of removal.

Downloaded from www.Manualslib.com manuals search engine

Removal/Installation

Middle side wall skirt trim panel

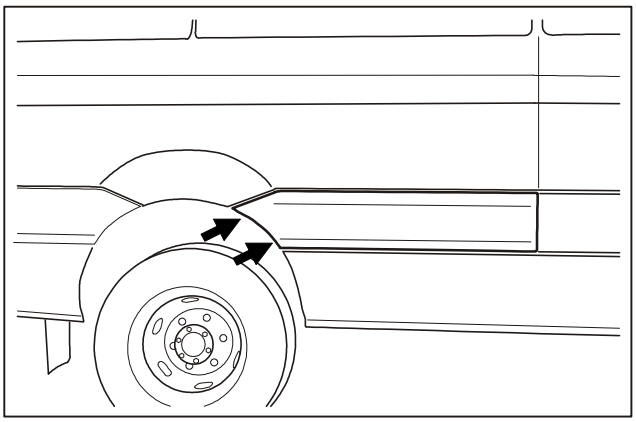

Removal

1. Remove mounting screws for middle side wall skirt trim panel.

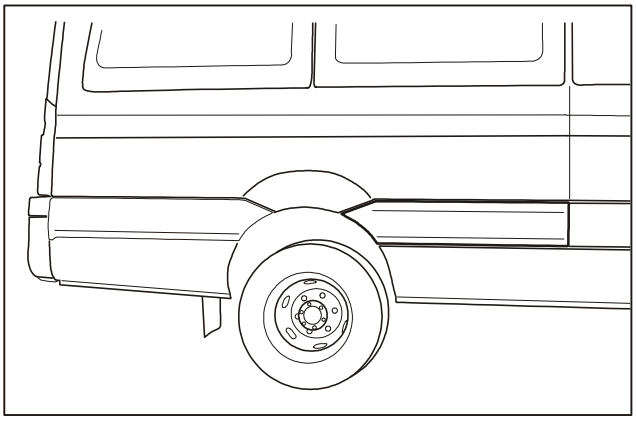

2. Remove middle side wall skirt trim panel with tool.

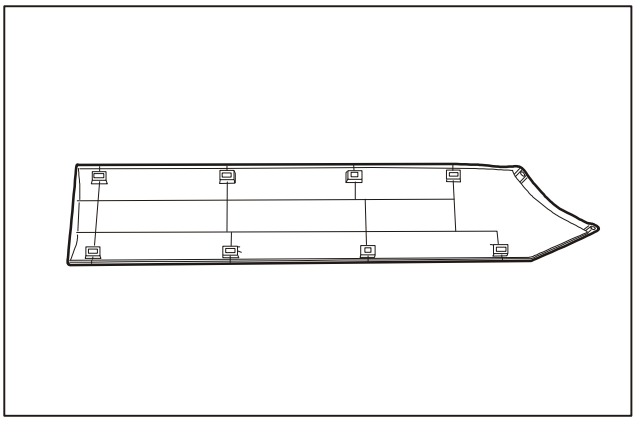

3. Clip position of middle side wall skirt trim panel.

Installation

Install it in reverse order of removal.

Downloaded from www.Manualslib.com manuals search engine

Removal/Installation

Rear wheel skirt trim panel

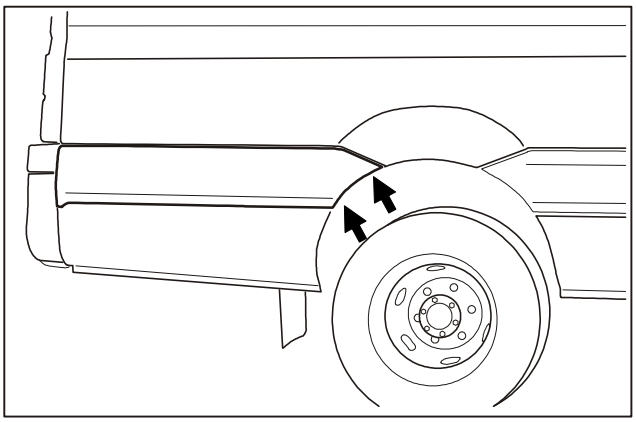

Removal

1. Remove mounting screws.

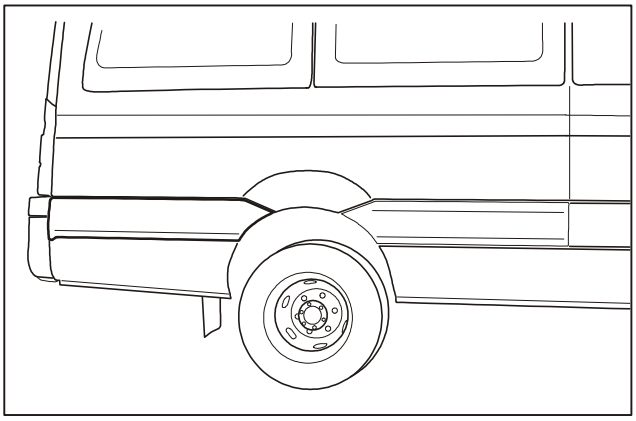

2. Remove rear wheel skirt trim panel with tool.

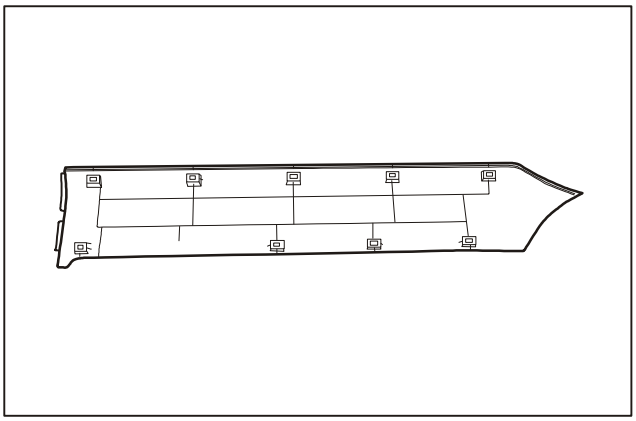

3. Clip position of rear wheel skirt trim panel.

Installation

Install it in reverse order of removal.

Downloaded from www.Manualslib.com manuals search engine

Removal/Installation

Rear tire mud guard

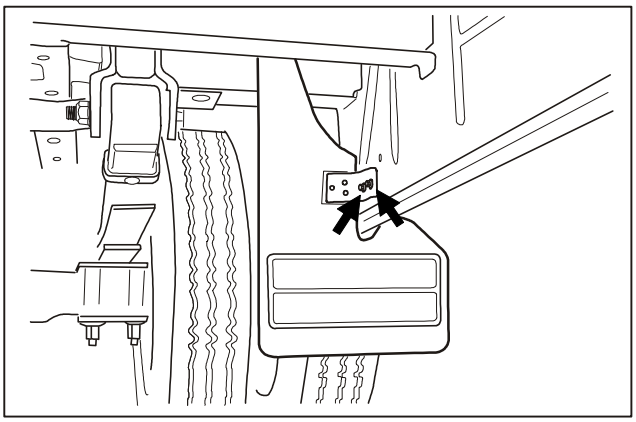

Removal

1. Remove mounting screws for rear tire mud guard and take down the mud guard.

Installation

Install it in reverse order of removal.

Downloaded from www.Manualslib.com manuals search engine

Seats

Applied models: SUNRAY products manufactured by JAC

Subject Page

Instruction and Operation

Driver's seat..... 112
Front row twin bench-type seat..... 114
Front row individual seat..... 115

Removal/Installation

Driver's seat..... 116
Front row twin bench-type seat..... 119
Front row individual seat..... 120
back row seats..... 121

Downloaded from www.Manualslib.com manuals search engine

Instruction and Operation

Components of driver's seat

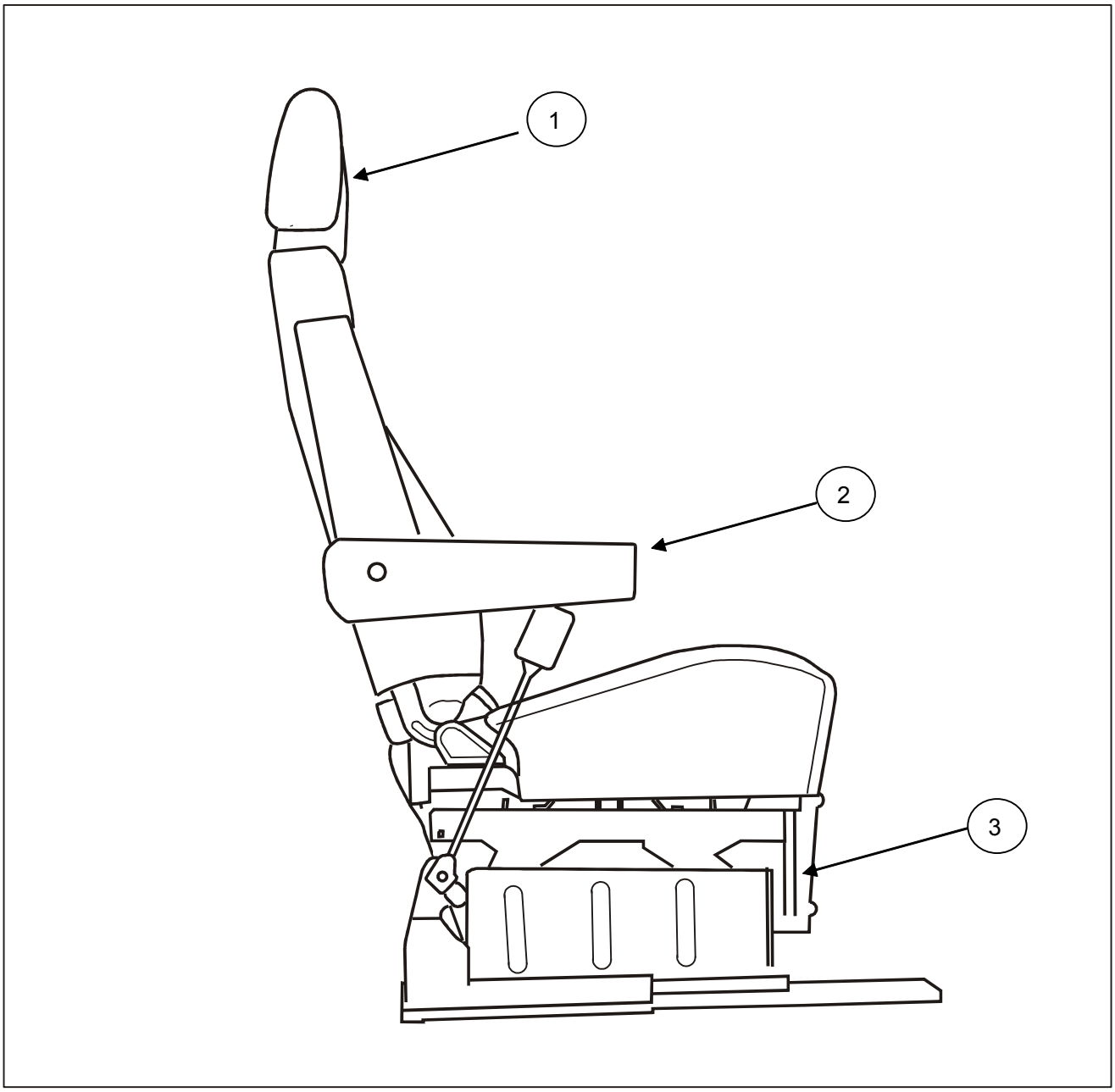

1. Vertical adjustable headrest 2. Angle adjustable armrest 3. Front and rear height adjustable seat

Eight adjusting ways for driver's seat can be achieved, viz. forward/rearward and upward/downward adjustment of seat, angle forward/rearward adjustment of backrest, upward/downward adjustment of headrest, which can provide the driver with comfortable driving environment.

Downloaded from www.Manualslib.com manuals search engine

Instruction and Operation

Driver's seat

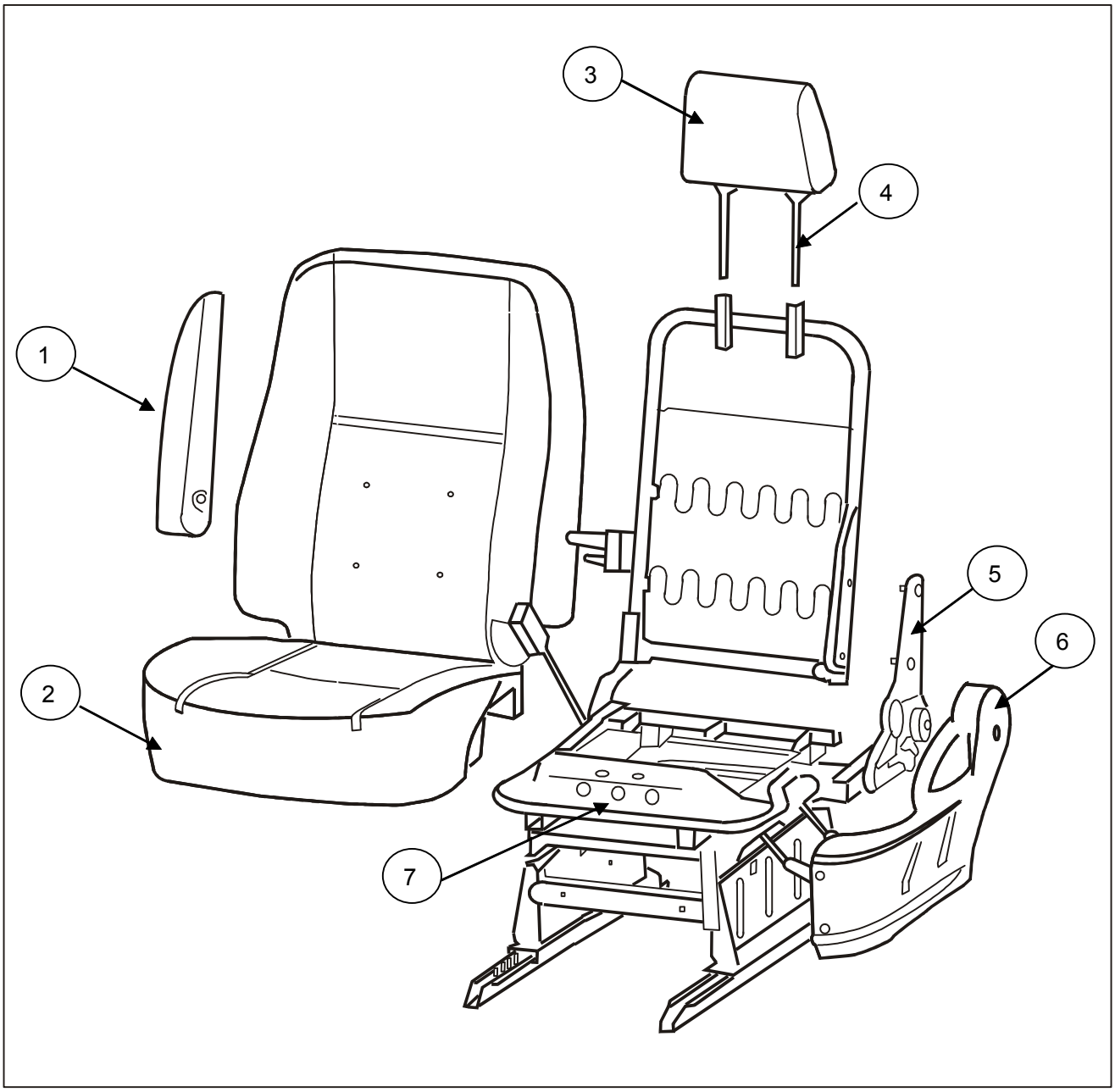

1. Armrest
2. Backrest cushion
3. Headrest assembly
4. Headrest latch
5. Angle adjuster
6. Plastic cover
7. Backrest frame

Downloaded from www.Manualslib.com manuals search engine

Instruction and Operation

Front row twin bench-type seat

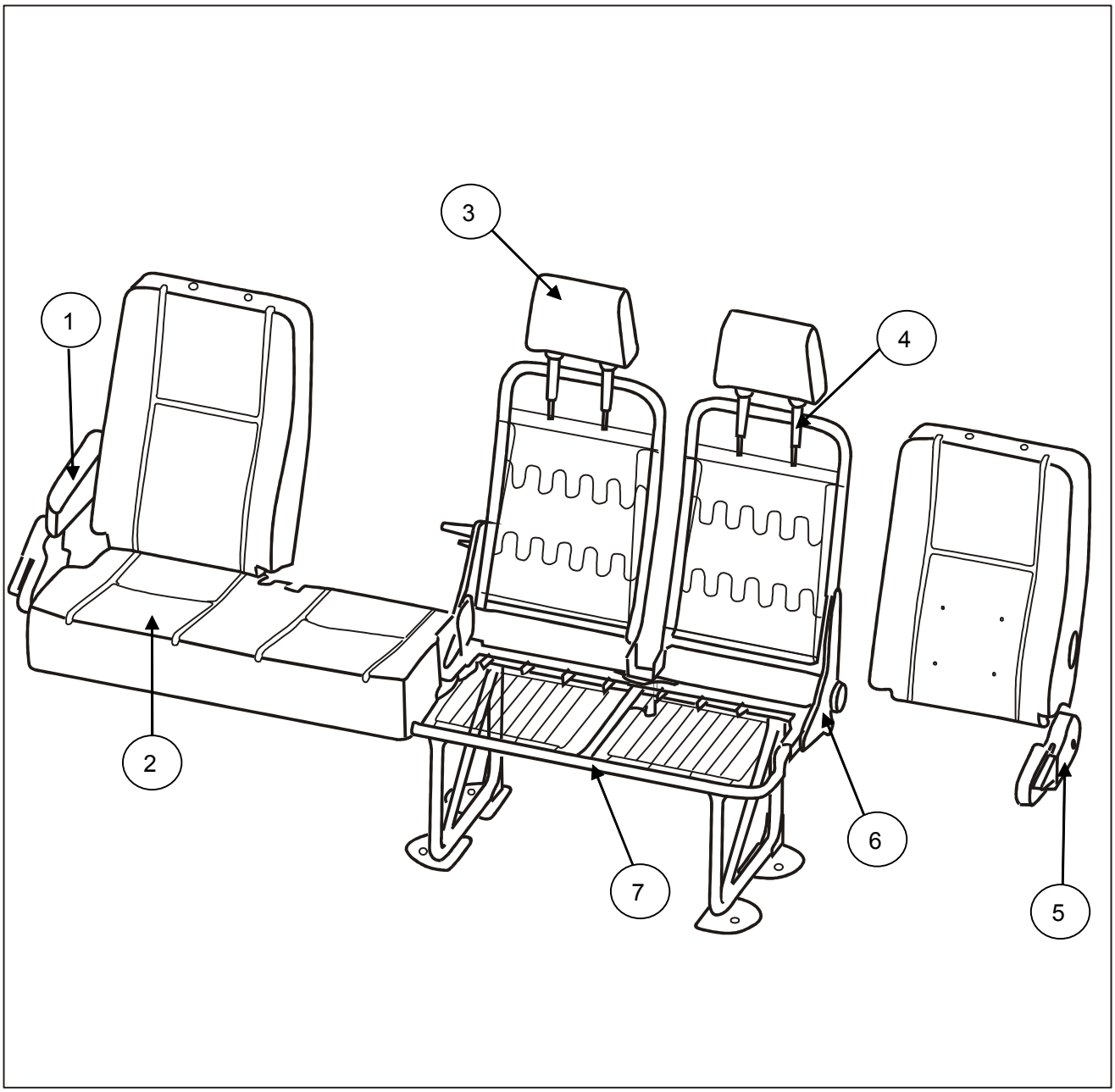

1. Armrest
2. Backrest cushion
3. Headrest assembly
4. Headrest latch
5. Plastic cover
6. Angle adjuster
7. Backrest frame

Downloaded from www.Manualslib.com manuals search engine

Instruction and Operation

Front row individual seat

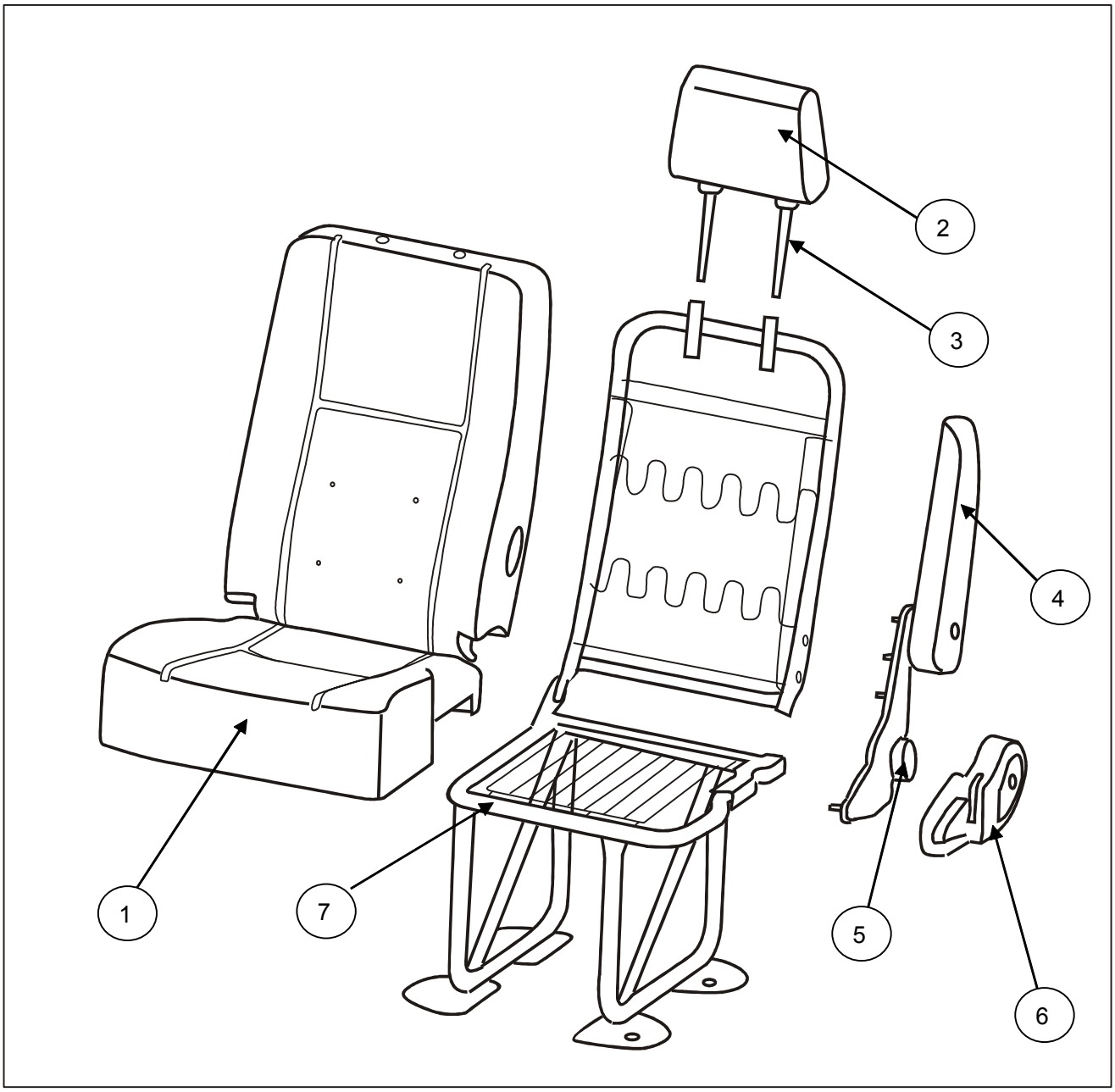

1. Backrest cushion
2. Headrest assembly
3. Headrest latch
4. Armrest
5. Angle adjuster
6. Plastic cover
7. Backrest frame

Downloaded from www.Manualslib.com manuals search engine

Removal/Installation

Driver's seat

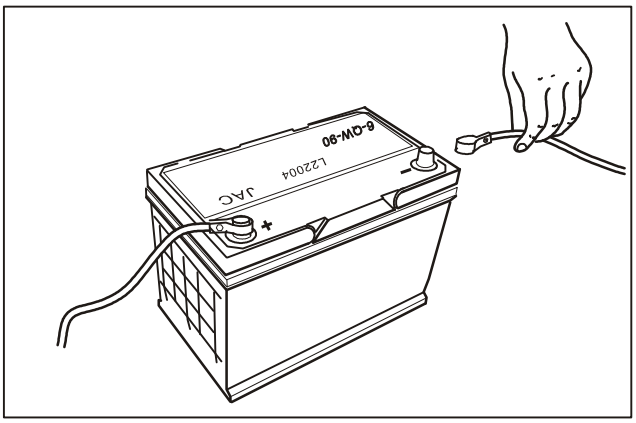

1. Disconnect the negative cable of battery.

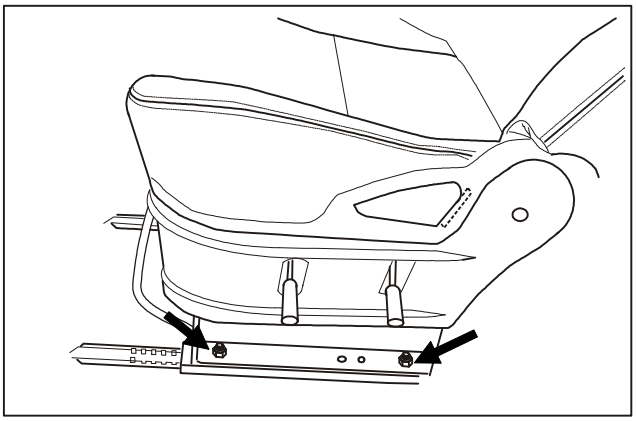

2. Remove two mounting nuts on the left side of seat.

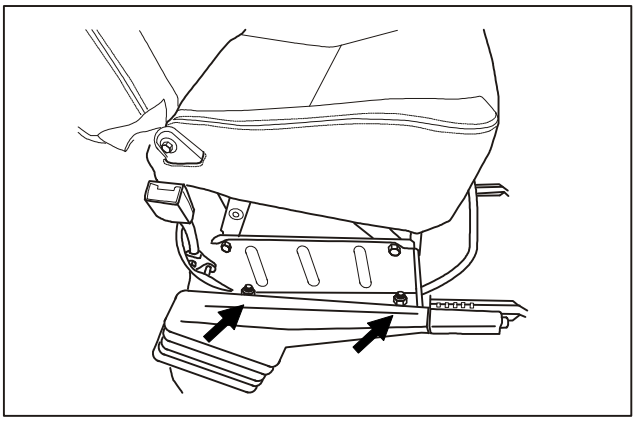

3. Remove two nuts on the right side of seat and disconnect the harness.

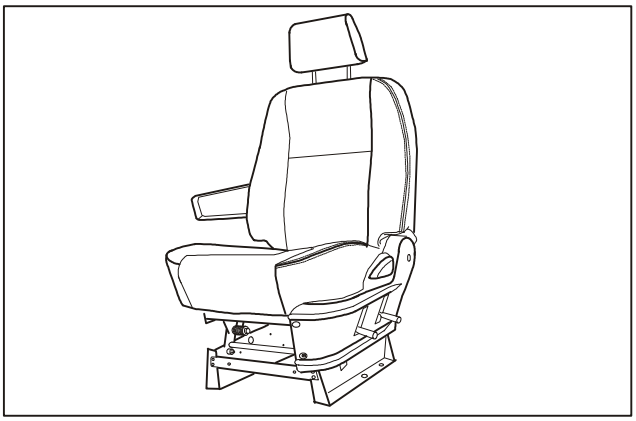

4. Take down the driver's seat from sliding rail.

Downloaded from www.Manualslib.com manuals search engine

Removal/Installation

Sliding rail and seat

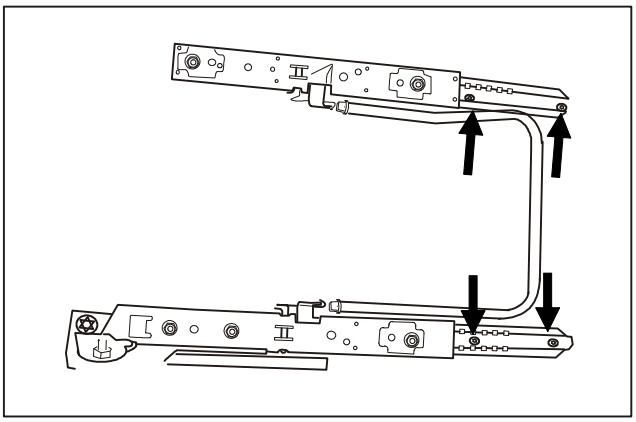

1. Push the sliding rail rearwards and remove four mounting bolts.

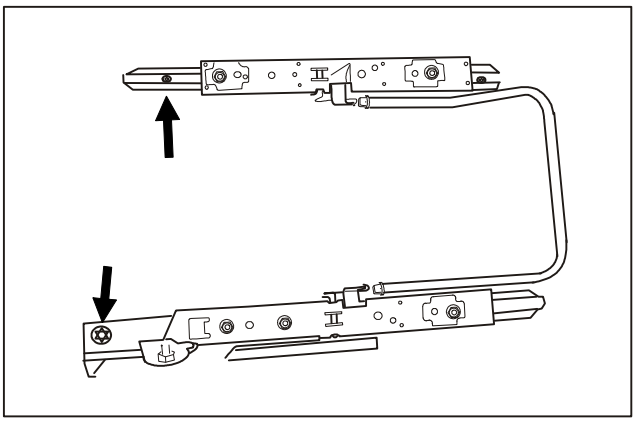

2. Pull the sliding rail forwards and remove three mounting bolts on the rear part.

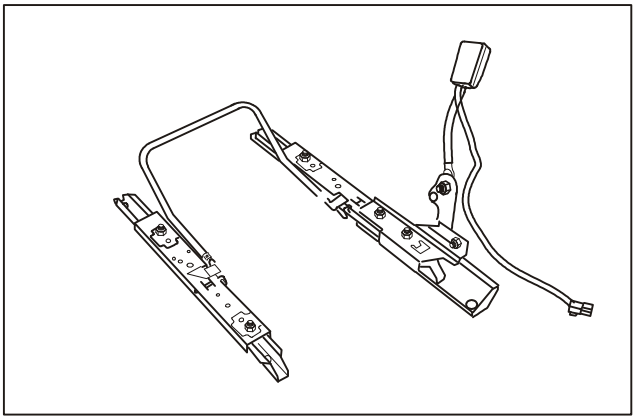

3. Take down the sliding rail assembly.

Downloaded from www.Manualslib.com manuals search engine

Removal/Installation (continued)

Sliding rail and seat

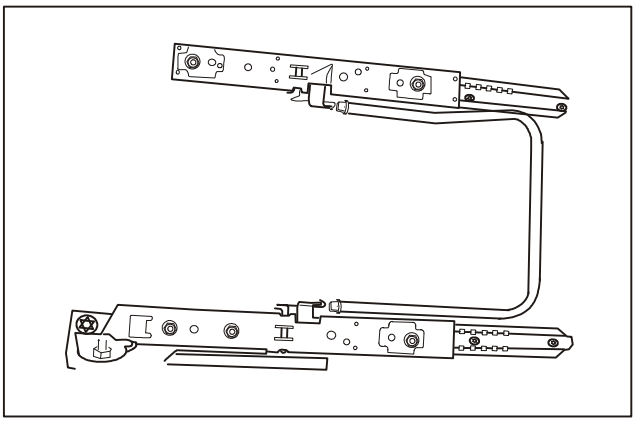

1. Install the sliding rail onto the vehicle and install seven mounting bolts in reverse order of removal.

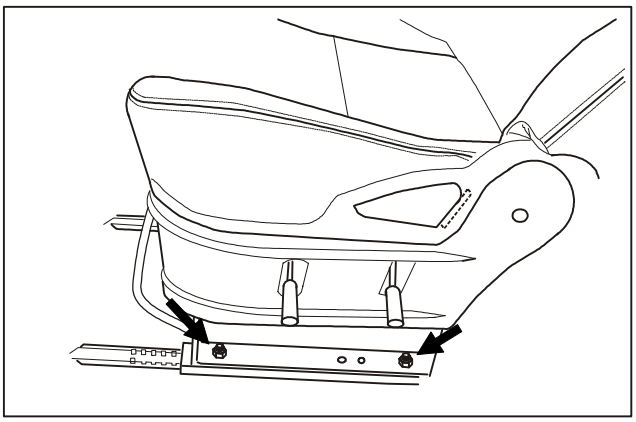

2. Install the seat onto sliding rail and tighten two mounting nuts on the left side.

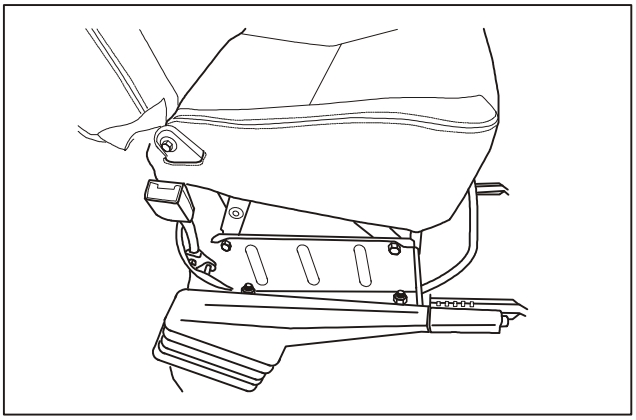

3. Tighten two mounting nuts on the right side in the same way and tighten nuts on both sides to the specified torque.

Tightening torque: 45～55N.m

Downloaded from www.Manualslib.com manuals search engine

Removal/Installation

Front row twin bench-type seat

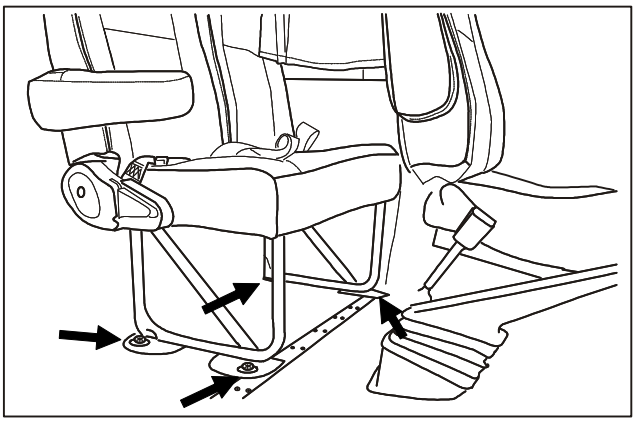

Removal

1. Remove four mounting bolts below front row seat.

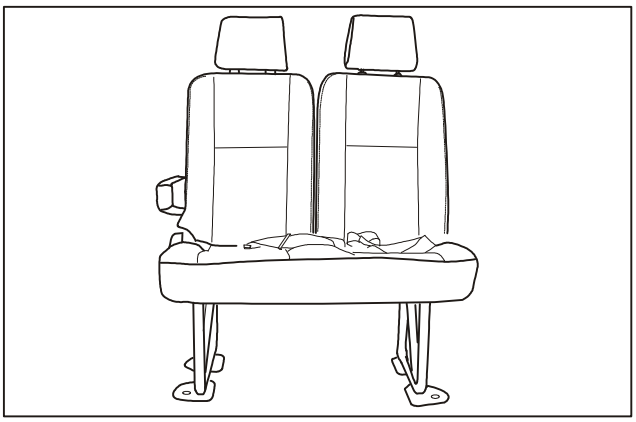

2. Remove the front row twin bench-type seat from vehicle.

Installation

1. Install the front row seat in reverse order of removal.

   Note:
   Bolts should be tightened to the specified torque.
   Tightening torque: 45～55N.m

Downloaded from www.Manualslib.com manuals search engine

Removal/Installation

Front row individual seat

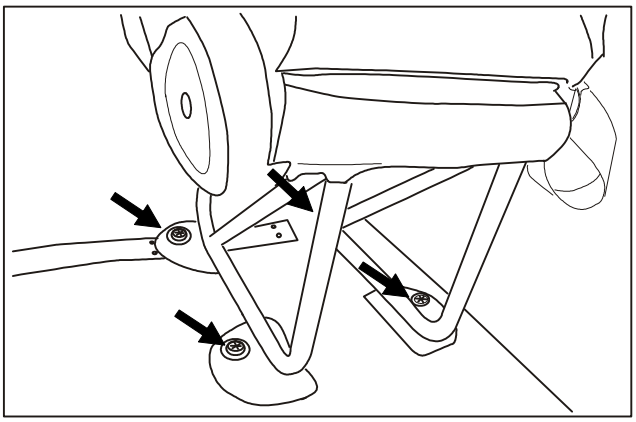

Removal

1. Remove four mounting bolts below front row seat.

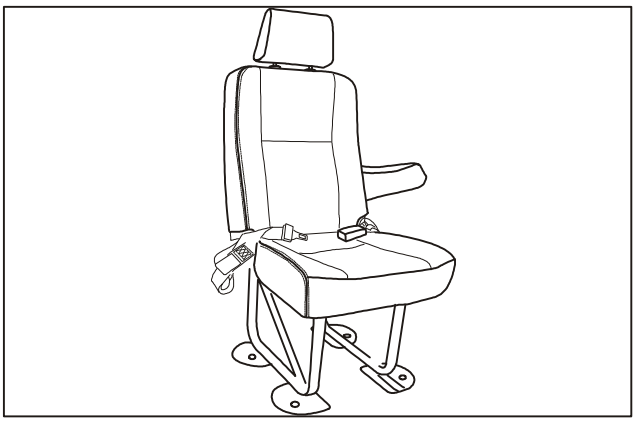

2. Remove the front row individual seat from vehicle.

Installation

1. Install the front row individual seat in reverse order of removal.

   Note:
   Bolts should be tightened to the specified torque.
   Tightening torque: 45～55N.m

Downloaded from www.Manualslib.com manuals search engine

Removal/Installation

Back row seats

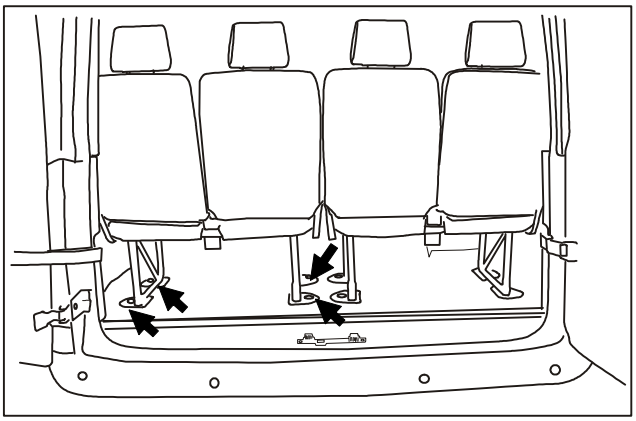

Removal

1. Remove four mounting bolts below back row seats.

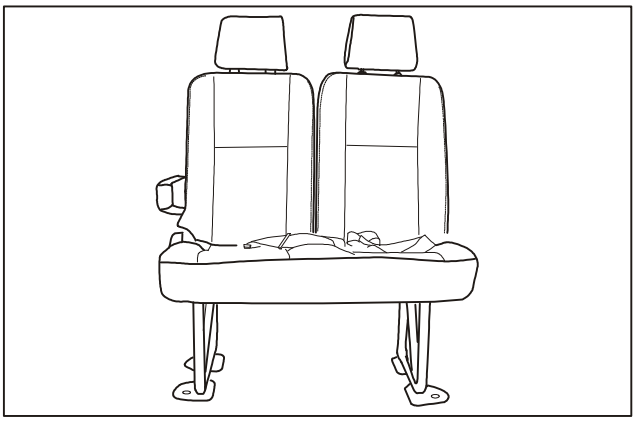

2. Remove the back row twin bench-type seat from vehicle.

Installation

1. Install the back row twin bench-type seat in reverse order of removal.

   Note:

   Bolts should be tightened to the specified torque.

   Tightening torque: 45～55N.m

Downloaded from www.Manualslib.com manuals search engine

Sealing Elements

Applied models: SUNRAY products manufactured by JAC

Subject Page

Removal/Installation

Inner acoustic baffle of front wall....124
Outer heat shield of front wall....125
Front door seal....125
Rear door seal....126
Fender seal....126
Front compartment seal....127
Waterproof membrane....127

Downloaded from www.Manualslib.com manuals search engine

Removal/Installation

Inner acoustic baffle of front wall

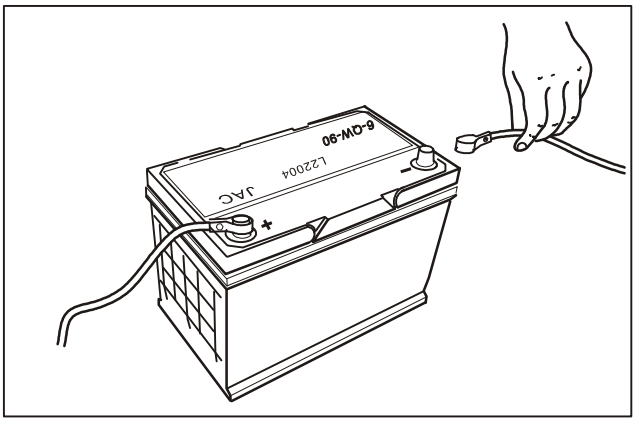

1. Disconnect the negative cable of battery.

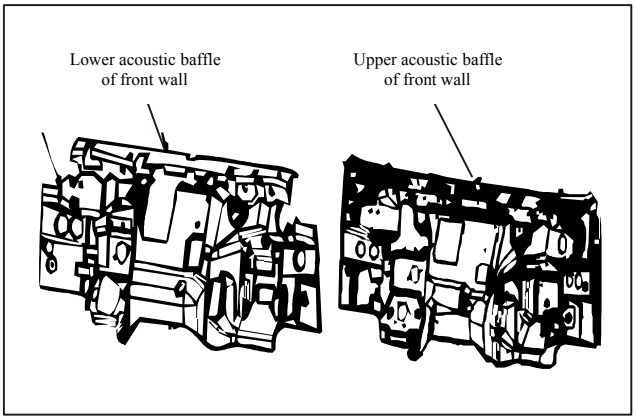

2. Remove upper acoustic baffle of front wall.
3. Clip.
4. Remove lower acoustic baffle of front wall.

Downloaded from www.Manualslib.com manuals search engine

Removal/Installation

Outer heat shield of front wall

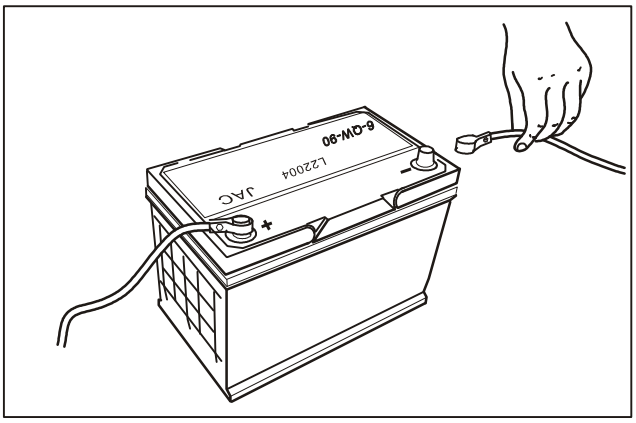

1. Disconnect the negative cable of battery.

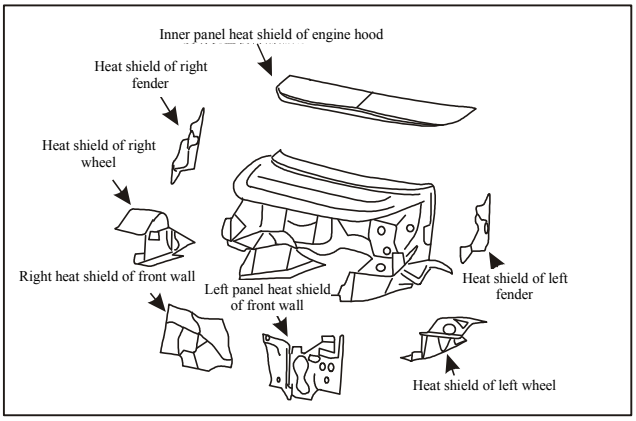

2. Remove clips.
3. Remove inner panel heat shield of engine hood.
4. Remove heat shields of left and right fenders.
5. Remove heat shields of left and right wheels.
6. Remove front and right acoustic baffles of front wall.

Removal/Installation

Front door seal

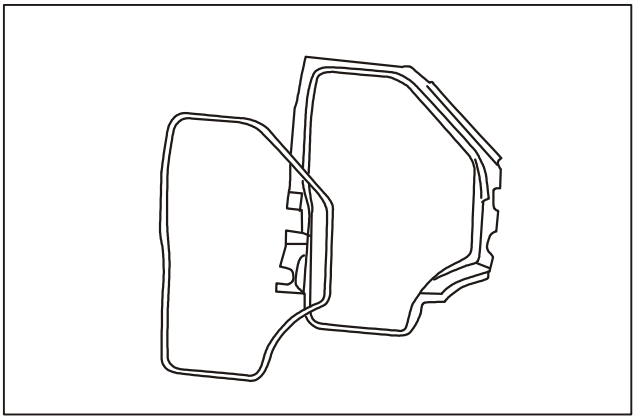

1. Remove the front door seal.

Downloaded from www.Manualslib.com manuals search engine

Removal/Installation

Rear door seal

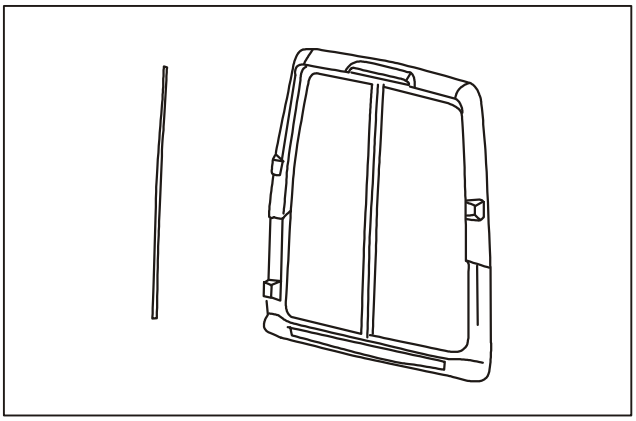

1. Remove middle seal of rear door frame.

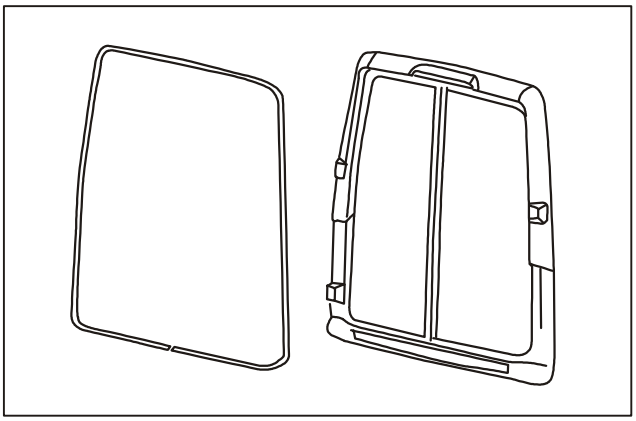

2. Remove seal of rear door frame.

Removal/Installation

Fender seal

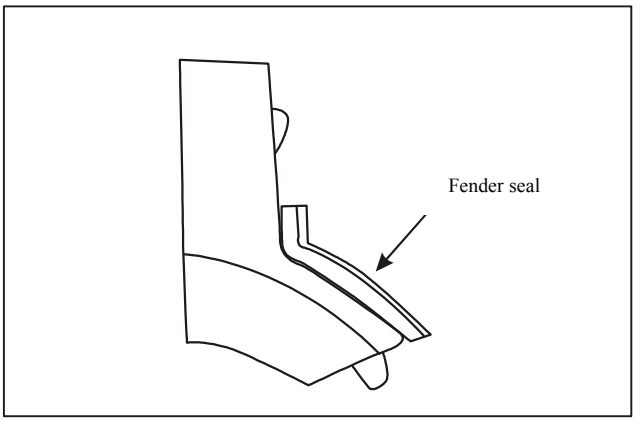

1. Remove fender seal.

Downloaded from www.Manualslib.com manuals search engine

Removal/Installation

Front compartment seal

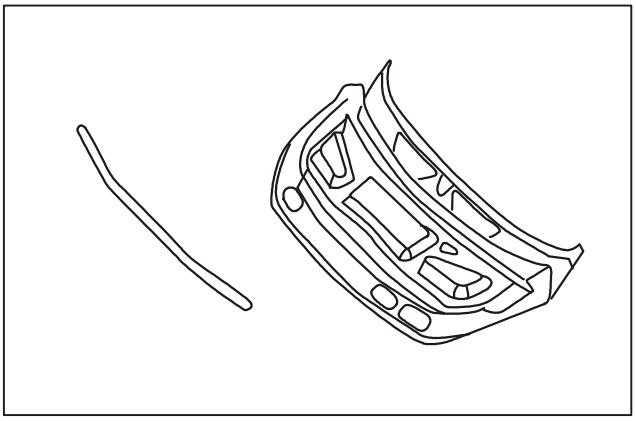

1. Remove the rear end seal of front compartment.

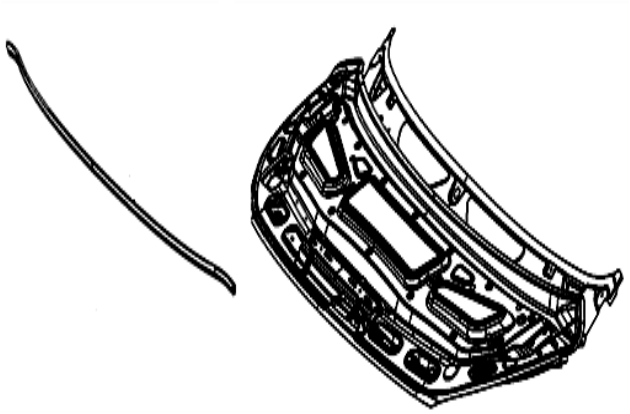

2. Remove the front section seal assembly of front compartment.

Removal/Installation

Waterproof membrane

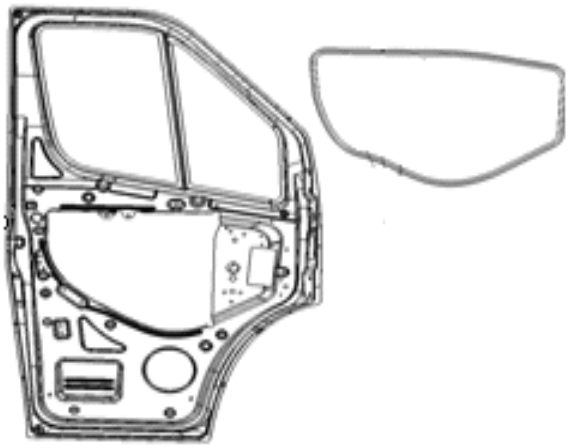

1. Remove the rear end seal of front compartment.

Downloaded from www.Manualslib.com manuals search engine

Body Repair Parameters

Applied models: SUNRAY products manufactured by JAC

Subject Page

Engine Compartment Repair Parameters.....130
Windshield Repair Parameters.....131
Front Door Repair Parameters.....132
Rear Double-Door Repair Parameters.....133
Girder Repair Parameters.....134

Downloaded from www.Manualslib.com manuals search engine

Engine Compartment Repair Parameters

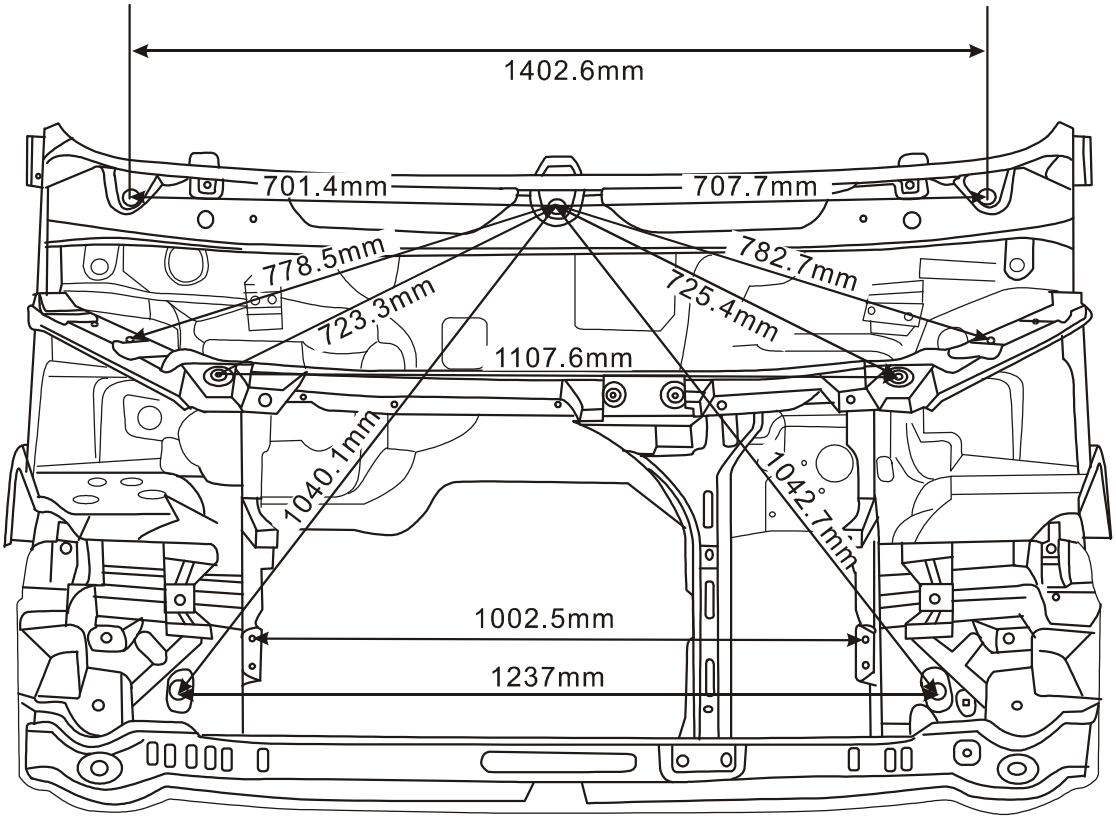

Downloaded from www.Manualslib.com manuals search engine

Windshield Repair Parameters

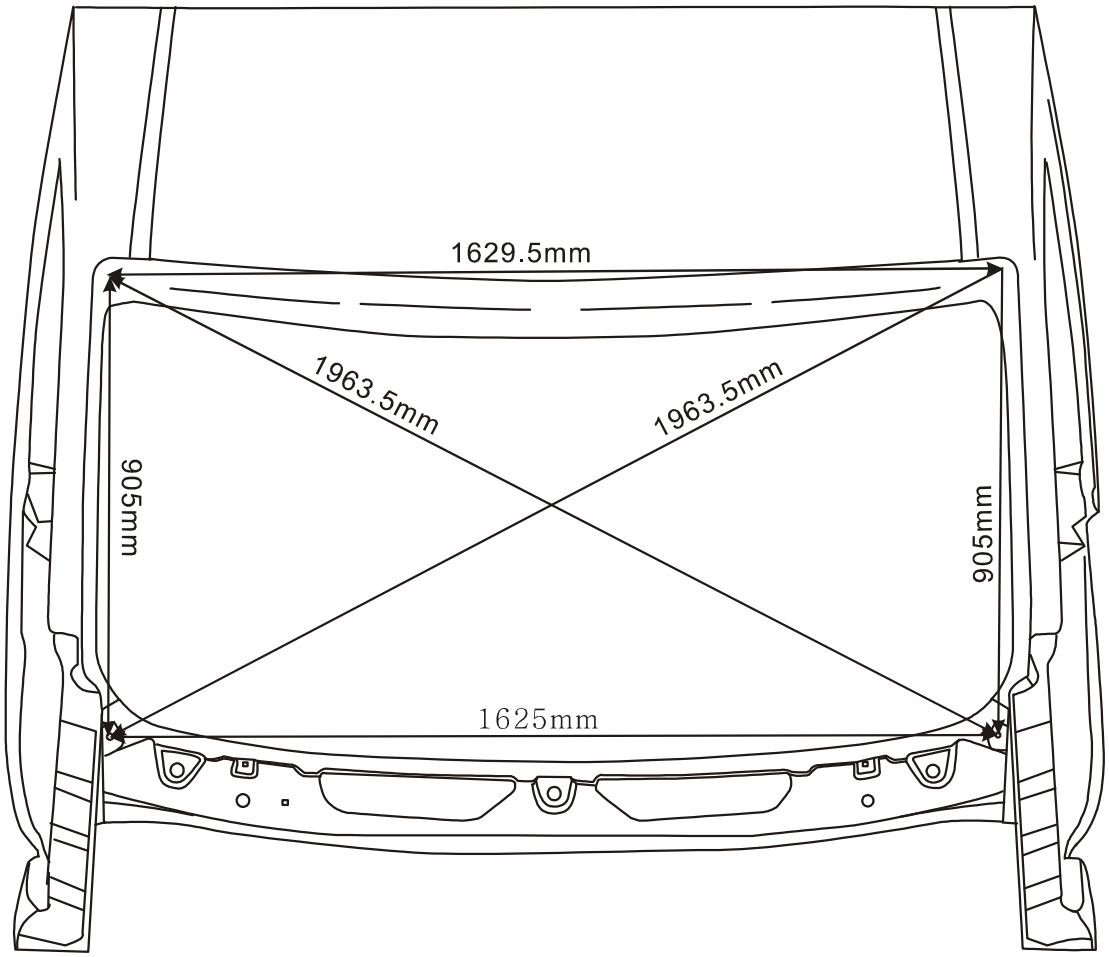

Downloaded from www.Manualslib.com manuals search engine

Front Door Repair Parameters

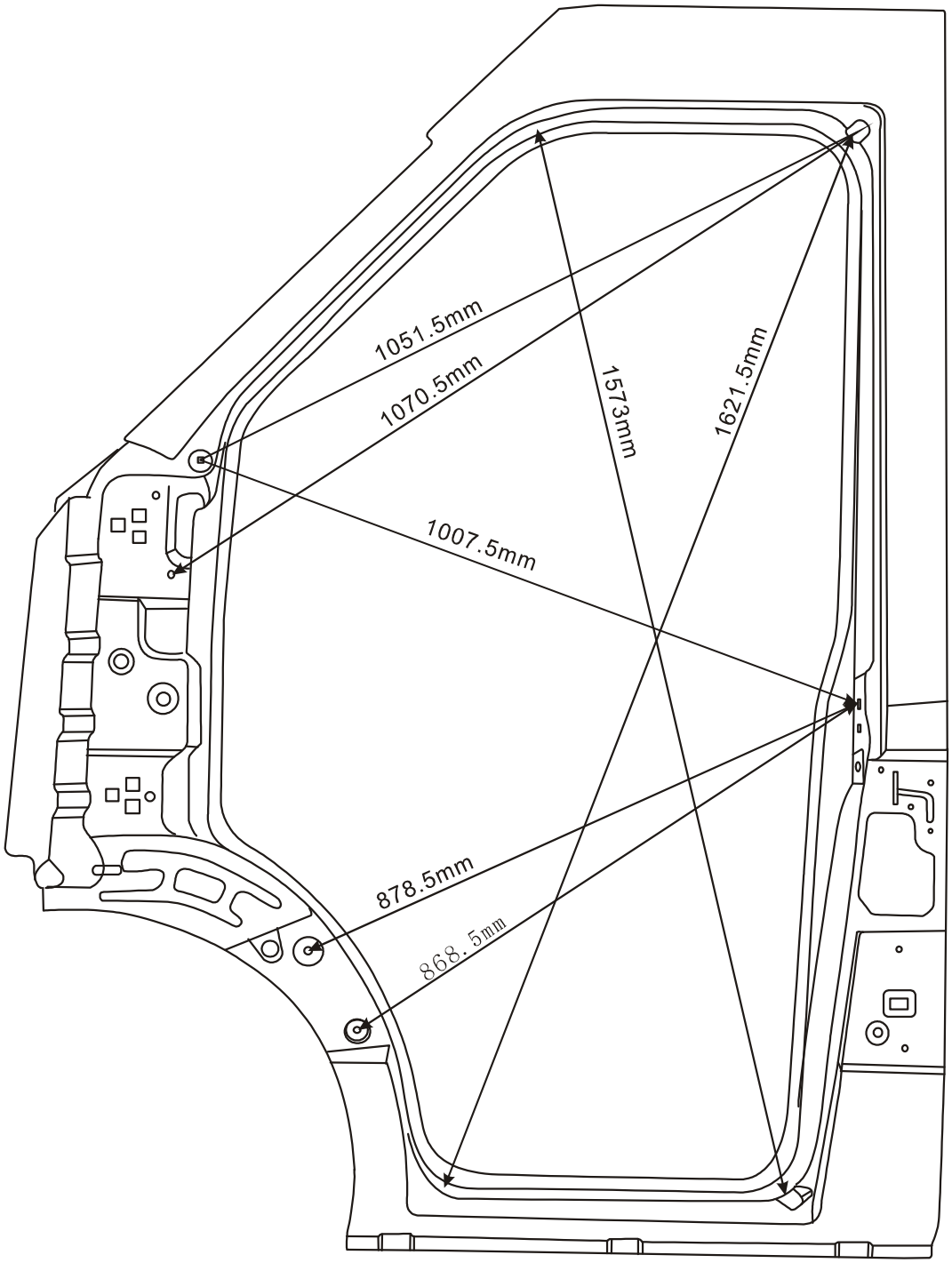

Downloaded from www.Manualslib.com manuals search engine

Rear Double-Door Repair Parameters

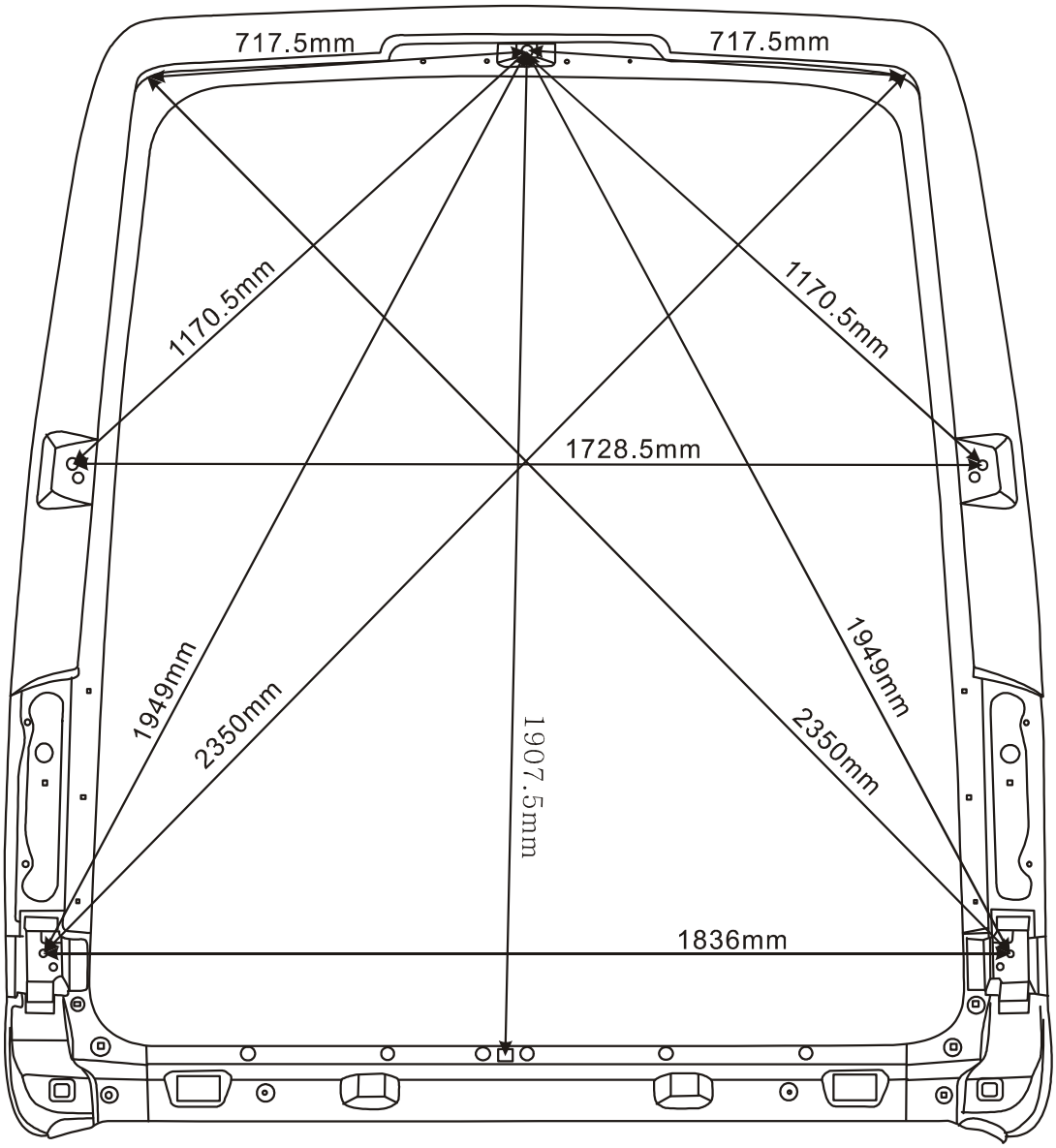

Downloaded from www.Manualslib.com manuals search engine

Girder Repair Parameters

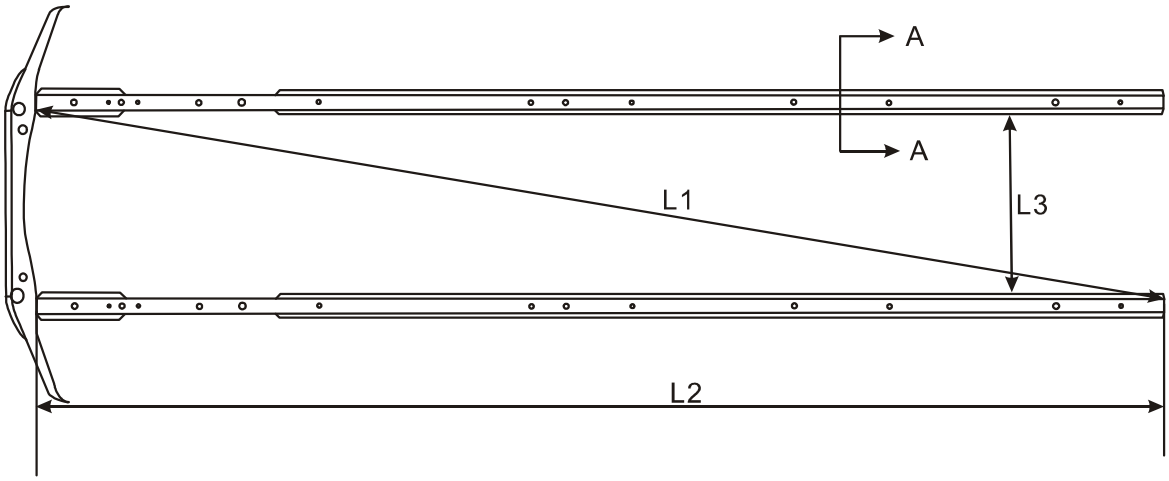

Side member repair parameters: Diagonal L1=5068mm
Side member length L2=4998mm
Side member ledge L3=840mm

A-A

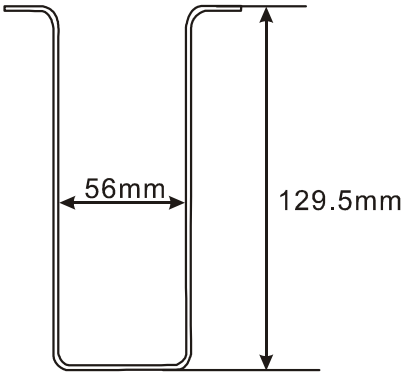

Downloaded from www.Manualslib.com manuals search engine

Attached List—SUNRAY Special Service Tools

Applied models: SUNRAY products manufactured by JAC

Tool Number	Tool Name	Illustration	Function/Applied Part
JAC-T8F001	Piston pin puller		For removal/installation of engine piston pin (engine)
JAC-T8F002	Handle		For installing bearing together with relevant installer (transmission)
JAC-T8F003	Flywheel stopper		For fixing flywheel to facilitate removal (engine)
JAC-T8F004	Cooling system detector		For checking engine cooling system for leakage (engine)
JAC-T8F005	Oil filter wrench		For removal/installation of oil filter (engine)
JAC-T8F006	Valve oil seal installer		For installation of valve oil seal (engine)
JAC-T8F007	Fuel pressure gauge		For measuring fuel pressure (engine)
JAC-T8F008	Compression pressure gauge		For measuring engine cylinder pressure (engine)
JAC-T8F009	Pressure gauge connector		For connection when measuring cylinder pressure (engine)
JAC-T8F010	Valve spring compressor		For compressing valve spring, removing engine valves and relevant parts (engine)
JAC-T8F011	Camshaft gear puller		For removing camshaft gear (engine)
JAC-T8F012	Cylinder liner installer (incl. jack)		For installing cylinder liner (engine)

Downloaded from www.Manualslib.com manuals search engine

SUNRAY Special Service Tools

Tool Number	Tool Name	Illustration	Function/Applied Part
JAC-T8F013	Cylinder liner puller	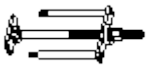	For removing cylinder liner (engine)
JAC-T8F014	Piston installer		For installing piston (engine)
JAC-T8F015	Crankshaft front oil seal installer		For installing crankshaft front oil seal (engine)
JAC-T8F016	Camshaft bushing puller		For removal/installation of camshaft bushing (engine)
JAC-T8F017	V-block for camshaft measurement		For measuring damage of camshaft (engine)
JAC-T8F018	Hose clamp pliers		For removing hose clamp
JAC-T8F019	Piston ring extractor		For removal/installation of piston circlip (engine)
JAC-T8F020	Valve oil seal extractor		For removing valve oil seal (engine)
JAC-T8F021	End fork clip		For fixing flywheel (engine)
JAC-T8F022	Crankshaft rear bearing puller		For removing crankshaft rear bearing
JAC-T8F023	Crankshaft rear bearing installer		For installing crankshaft rear bearing
JAC-T8F024	Diesel common rail tool kit		Diesel common rail detector can diagnose accurately and efficiently the diesel engine injection by performed diesel common rail system.
JAC-T8B001	Fork lock pin puller		For removing shift fork spring pin (transmission)

Downloaded from www.Manualslib.com manuals search engine

星锐专用工具

Tool Number	Tool Name	Illustration	Function/Applied Part
JAC-T8B002	Oil seal puller		For removing oil seal (transmission)
JAC-T8B003	Clutch guider		For center alignment of clutch disc (transmission)
JAC-T8B004	Input shaft bearing installer		For installing input shaft bearing (transmission)
JAC-T8B005	Output shaft bearing installer		For installing output shaft bearing (transmission)
JAC-T8B006	Countershaft front bearing installer		For installing countershaft front bearing (transmission)
JAC-T8B007	Input shaft protective sleeve		For protecting input shaft front end teeth (transmission)
JAC-T8B008	Output shaft protective sleeve		For protecting output shaft front end teeth (transmission)
JAC-T8B009	Transmission bearing removal tool kit		For removing transmission bearing (transmission)
JAC-T8B010	Input shaft oil seal installer		For installing input shaft oil seal (transmission)
JAC-T8B011	Oil seal puller of transmission rear end cover		For removing oil seal of rear end cover (transmission)
JAC-T8B012	Oil seal installer of rear end cover		For installing oil seal of rear end cover (transmission)
JAC-T8D001	Steering linkage drawing die		For disengaging front wheel end control arm ball joint from steering knuckle (chassis)
JAC-T8D002	Interior trim crow plate		For prying up interior trim of vehicle

Downloaded from www.Manualslib.com manuals search engine

Downloaded from www.Manualslib.com manuals search engine