Back To Article

COMPONENT LOCATOR

DISASSEMBLED VIEWS (8L90)

Case and Associated Parts (1 of 2)

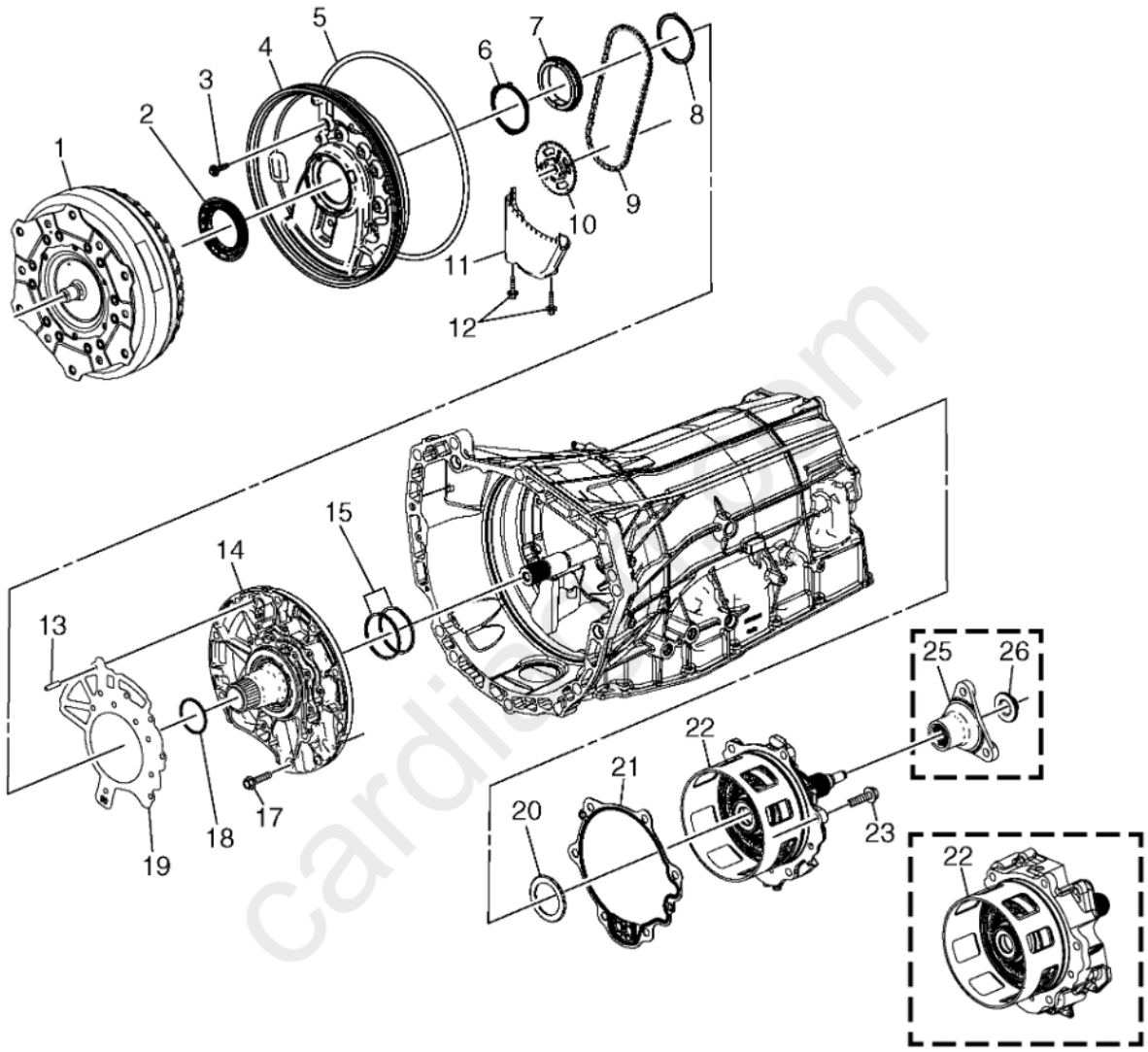

Fig. 1: Case and Associated Parts (1 of 2)
Courtesy of GENERAL MOTORS COMPANY

Callout	Component Name
1	Torque Converter
2	Torque Converter Fluid Seal
3	A/Trans Case Front Cover Bolt
4	A/Trans Case Front Cover
5	A/Trans Case Front Cover Seal
6	Drive Sprocket Thrust Washer - Front
7	Drive Sprocket
8	Drive Sprocket Thrust Washer - Rear
9	Drive Link Assembly
10	Driven Sprocket
11	A/Trans Fluid Baffle

Callout	Component Name
12	A/Trans Fluid Baffle Bolt
13	A/Trans Case Front Cover Locating Pin
14	Stator Shaft Support
15	1-3-5-6-7 Clutch Fluid Seal Ring
17	Stator Shaft Support Bolt
18	Torque Converter Fluid Seal
19	A/Trans Front Support Cover Gasket
20	Output Carrier Thrust Bearing
21	A/Trans Case Extension Seal
22	A/Trans Case Extension Assembly
23	A/Trans Case Extension Bolt
25	Propeller Shaft Transmission Flange
26	Front Propeller Shaft Flange Nut

Case and Associated Parts (2 of 2)

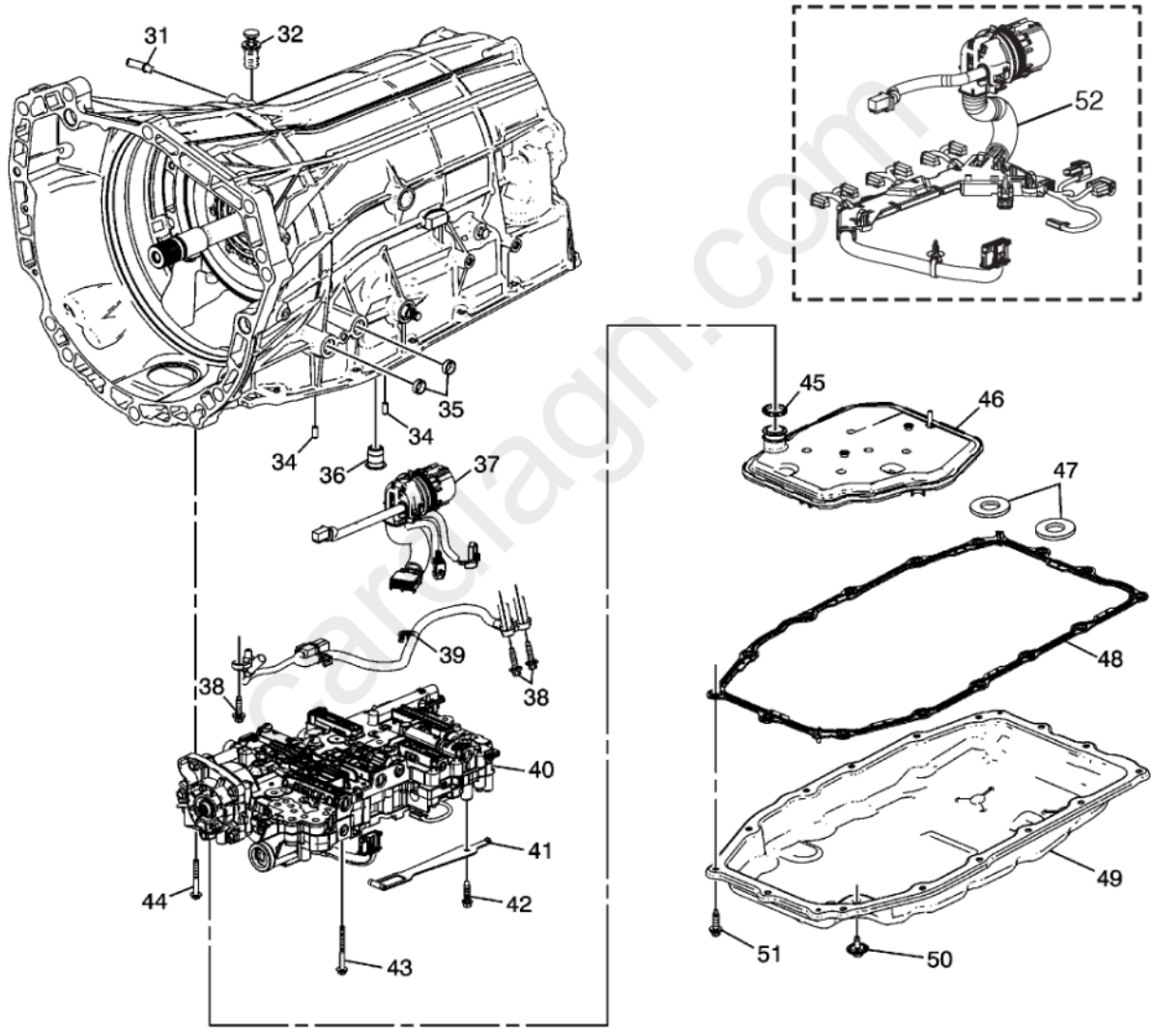

Fig. 2: Case and Associated Parts (2 of 2)
Courtesy of GENERAL MOTORS COMPANY

Callout	Component Name
31	A/Trans Vent
32	Transmission Fluid Fill Tube Plug
34	Control Valve Body Locating Pin
35	Transmission Cooler Pipe Fitting Seal
36	Clutch Housing Fluid Passage Seal
37	A/Trans Wiring Harness

Callout	Component Name
38	Output Speed Sensor Wiring Harness Bolt
39	Output Speed Sensor Wiring Harness
40	Control (with Body and Valve) Valve Assembly
41	Manual Shaft Detent Lever Spring
42	Manual Shaft Detent Lever Spring Bolt
43	Control Valve Solenoid Body Bolt
44	Control Valve Solenoid Body Bolt
45	A/Trans Fluid Filter Seal
46	A/Trans Fluid Filter
47	A/Trans Fluid Pan Magnet
48	A/Trans Fluid Pan Gasket
49	A/Trans Fluid Pan
50	A/Trans Fluid Pan Drain Plug
51	A/Trans Fluid Pan Bolt

Clutch Assemblies and Associated Parts

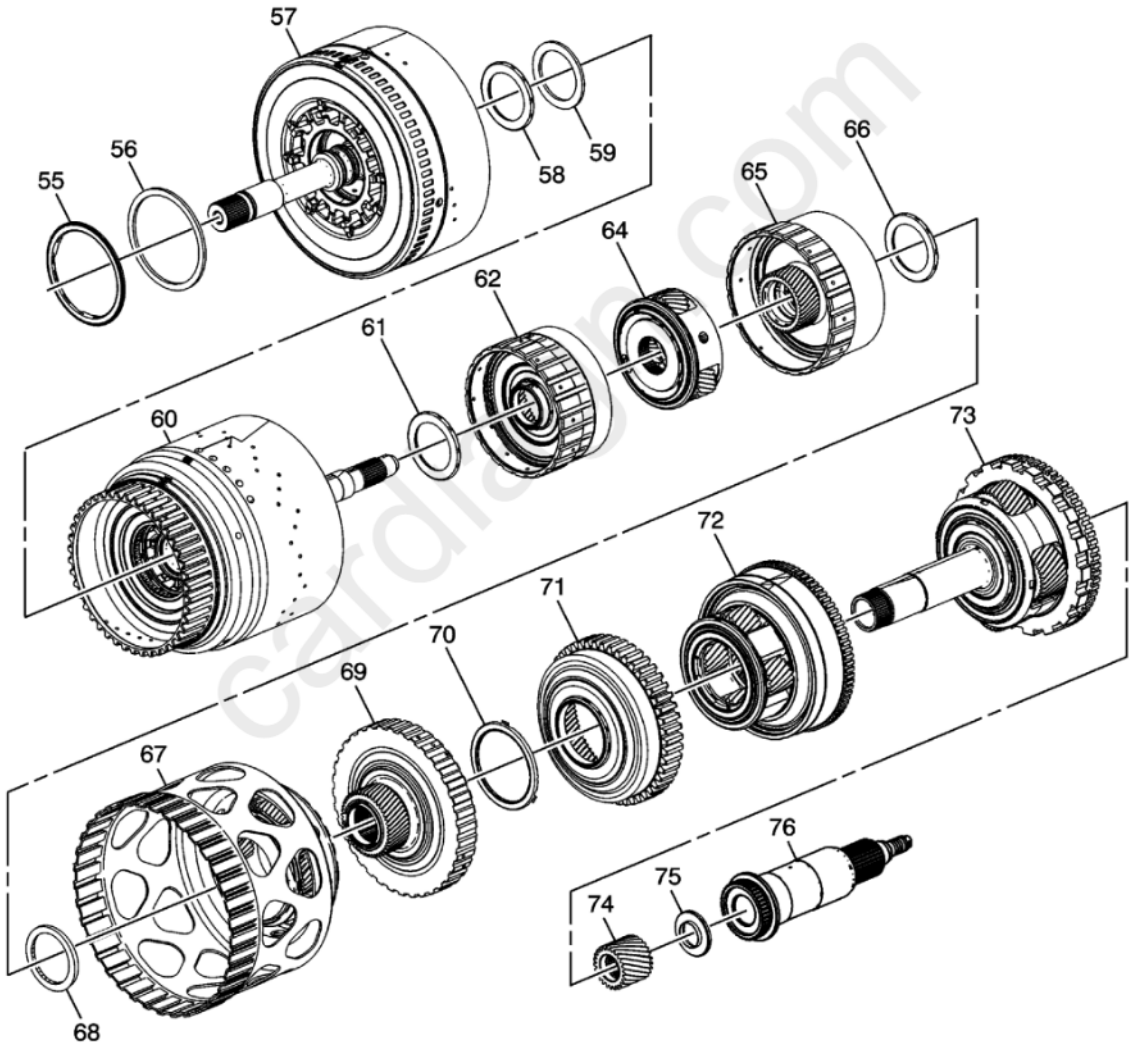

Fig. 3: Clutch Assemblies and Associated Parts
Courtesy of GENERAL MOTORS COMPANY

Callout	Component Name
55	1-3-5-6-7 Clutch Thrust Bearing
56	1-3-5-6-7 Clutch Thrust Bearing Washer
57	1-3-5-6-7 Clutch Assembly
58	2-3-4-6-8 and 4-5-6-7-8 Reverse Clutch Thrust Bearing
59	2-3-4-6-8 and 4-5-6-7-8 Reverse Clutch Thrust Bearing Washer
60	2-3-4-6-8 and 4-5-6-7-8 Reverse Clutch Assembly

Callout	Component Name
61	4-5-6-7-8 Reverse Clutch and Direct Overdrive Internal Gear Hub Thrust Bearing
62	Direct/Overdrive Internal Gear Assembly
64	Direct/Overdrive Carrier Assembly
65	Input Internal Gear Assembly
66	Input Sun Gear Thrust Bearing
67	Input Carrier Assembly
68	Input Sun Gear Spacer
69	Input Sun Gear Assembly
70	1-2-3-4-5 Reverse Clutch Hub Thrust Bearing
71	Reaction Internal Gear and 1-2-3-4-5 Reverse Hub Assembly
72	Reaction Carrier Assembly with Output Internal Gear Assembly
73	Output Carrier Assembly
74	Output Sun Gear
75	Output Sun Gear Thrust Bearing
76	Output Shaft

Control (with Body and Valve) Valve Assembly (1 of 2)

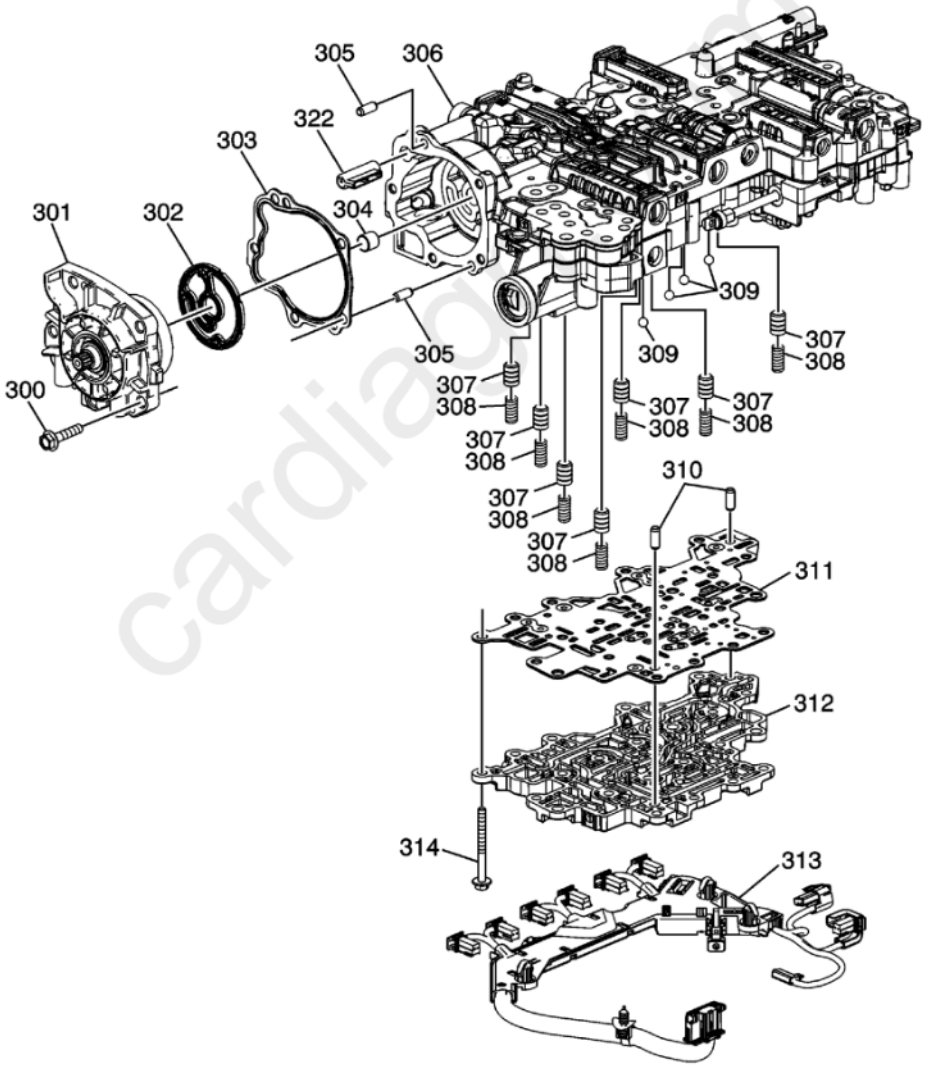

Fig. 4: Control (with Body and Valve) Valve Assembly (1 of 2)
Courtesy of GENERAL MOTORS COMPANY

Callout	Component Name
300	A/Trans Fluid Pump Bolt
301	A/Trans Fluid Pump Assembly
302	A/Trans Fluid Pump Seal
303	A/Trans Fluid Pump Gasket

Callout	Component Name
304	A/Trans Fluid Pump Drive Shaft Bushing
305	A/Trans Fluid Pump Locator Pin
306	Control Valve Upper Body Assembly
307	Signal Accumulator Piston
308	Signal Accumulator Piston Spring
309	Cooler Flow Blowoff Ball Valve
310	Control Valve Body Locator Pin
311	Control Valve Channel Plate Spacer Plate Assembly
312	Control Valve Channel Plate
313	A/Trans Control Wiring Harness Assembly
314	Control Valve Channel Plate Bolt
322	A/Trans Fluid Passage Sleeve

Control (with Body and Valve) Valve Assembly (2 of 2)

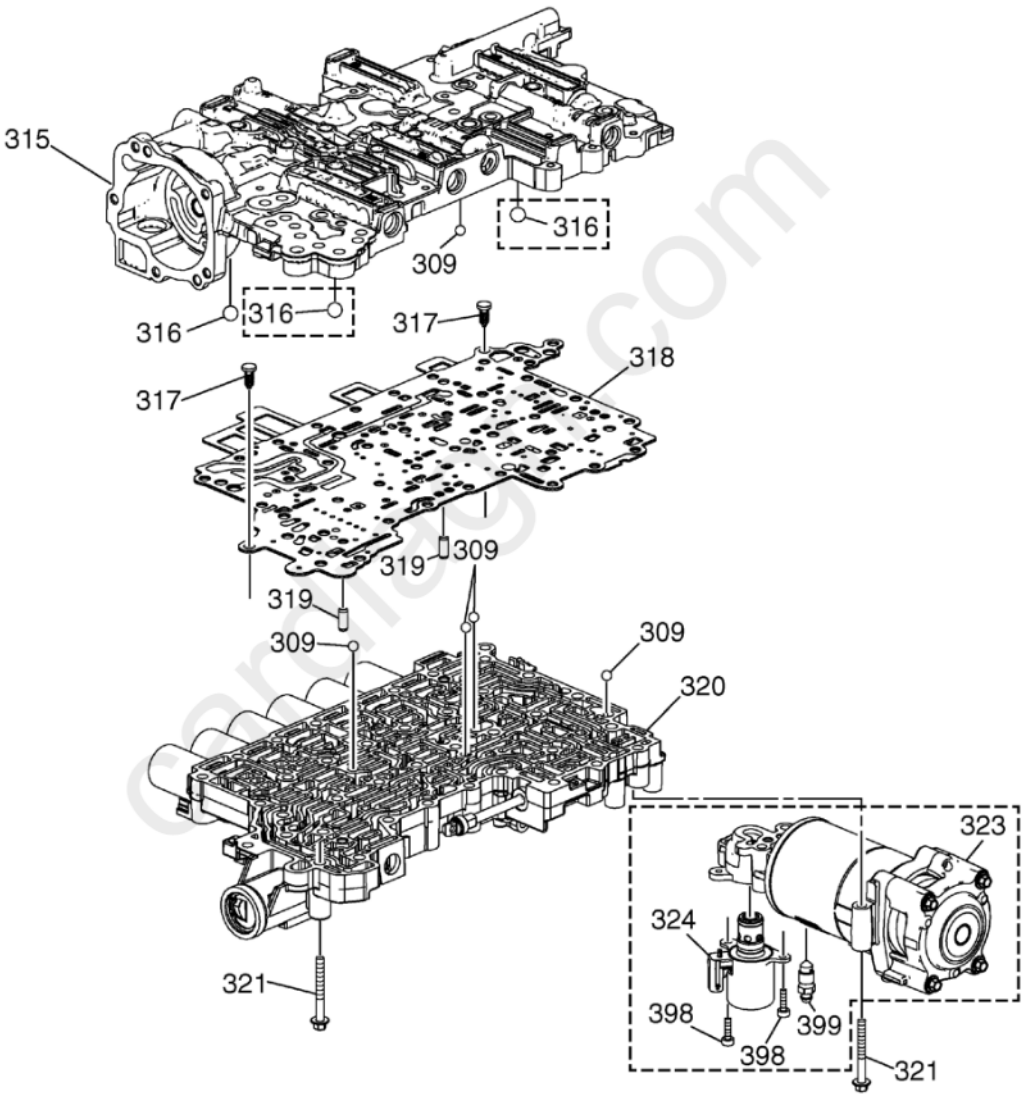

Fig. 5: Control (with Body and Valve) Valve Assembly (2 of 2)
Courtesy of GENERAL MOTORS COMPANY

Callout	Component Name
309	Cooler Flow Blowoff Ball Valve
315	Control Valve Upper Body
316	Control Valve Body Ball Check Valve
317	Control Valve Body Spacer Plate Retainer
318	Control Valve Body Spacer Plate (with Gasket)
319	Control Valve Body Locator Pin
320	Control Valve Solenoid Body Assembly

Callout	Component Name
321	Control Valve Lower Body Bolt
323	A/Trans Auxiliary Fluid Accumulator - Model Dependent
324	A/Trans Auxiliary Fluid Accumulator Solenoid - Model Dependent
398	A/Trans Auxiliary Fluid Accumulator Bolt - Model Dependent
399	A/Trans Auxiliary Fluid Accumulator Bleeder Valve - Model Dependent

Control Valve Upper Body Assembly

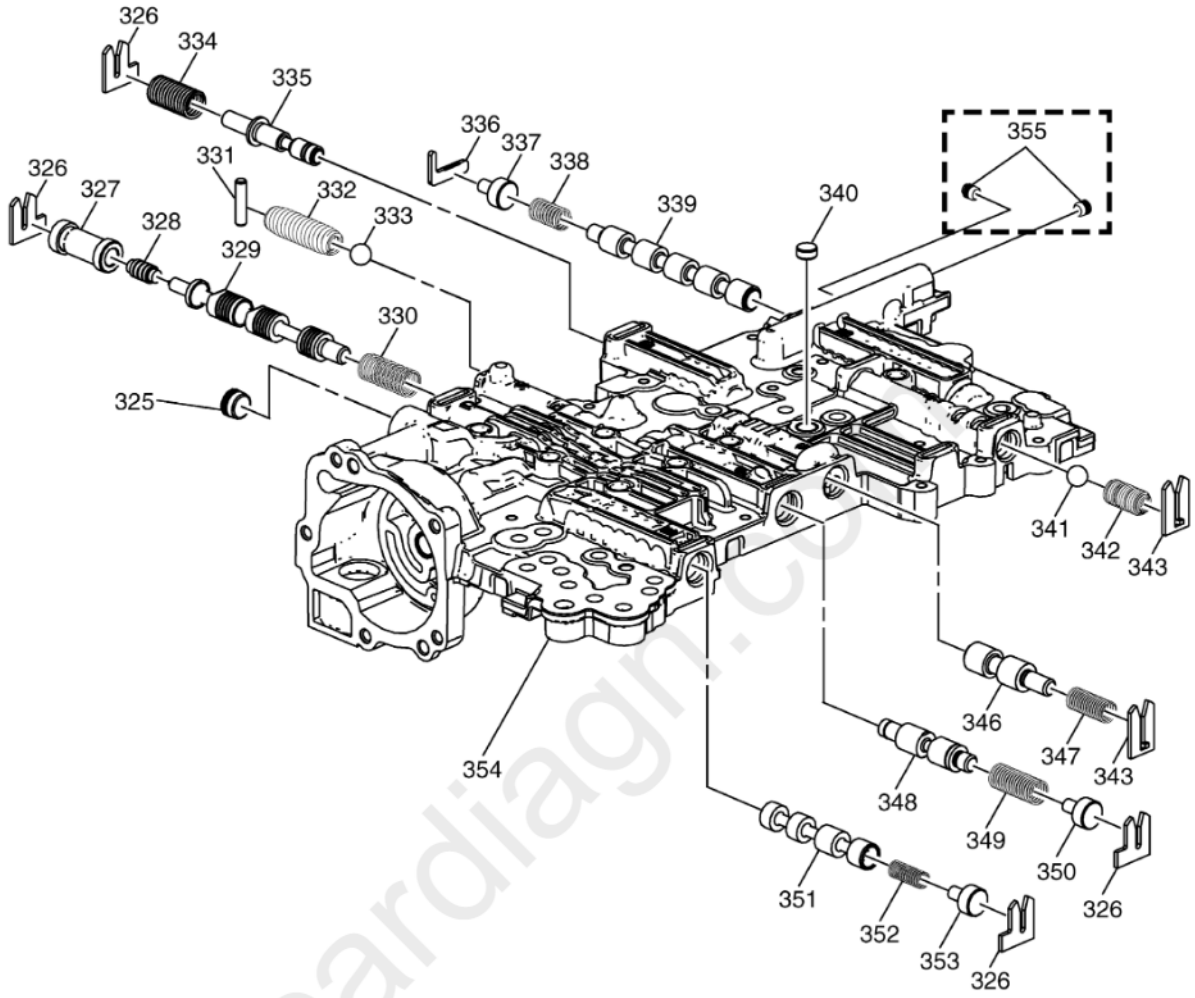

Fig. 6: Control Valve Upper Body Assembly
Courtesy of GENERAL MOTORS COMPANY

Callout	Component Name
325	Transmission Fluid Passage Plug
326	Valve Spring Retainer
327	Pressure Regulator Valve Bore Bushing
328	Pressure Regulator Shuttle Valve
329	Pressure Regulator Valve
330	Pressure Regulator Valve Spring
331	Pressure Relief Ball Valve Spring Retainer
332	Pressure Relief Ball Valve Spring
333	Pressure Relief Ball Valve
334	Feed Limit Valve Spring
335	Actuator Feed Limit Valve
336	Default Override Valve Bore Plug Retainer
337	Default Override Valve Bore Plug
338	Default Override Valve Spring

Callout	Component Name
339	Default Override Valve
340	Control Valve Center Body Hole Plug
341	Clutch Piston Exhaust Blowoff Ball Valve
342	Clutch Piston Exhaust Blowoff Ball Valve Spring
343	Valve Spring Retainer
346	TCC Valve
347	TCC Valve Spring
348	Lube Regulator Valve
349	Lube Regulator Valve Spring
350	Lube Regulator Valve Bore Plug
351	TCC Control Valve
352	TCC Control Valve Spring
353	TCC Control Valve Bore Plug
354	Control Valve Upper Body
355	Line Pressure Bore Plug - Model Dependent

Control Solenoid Valve Body Assembly

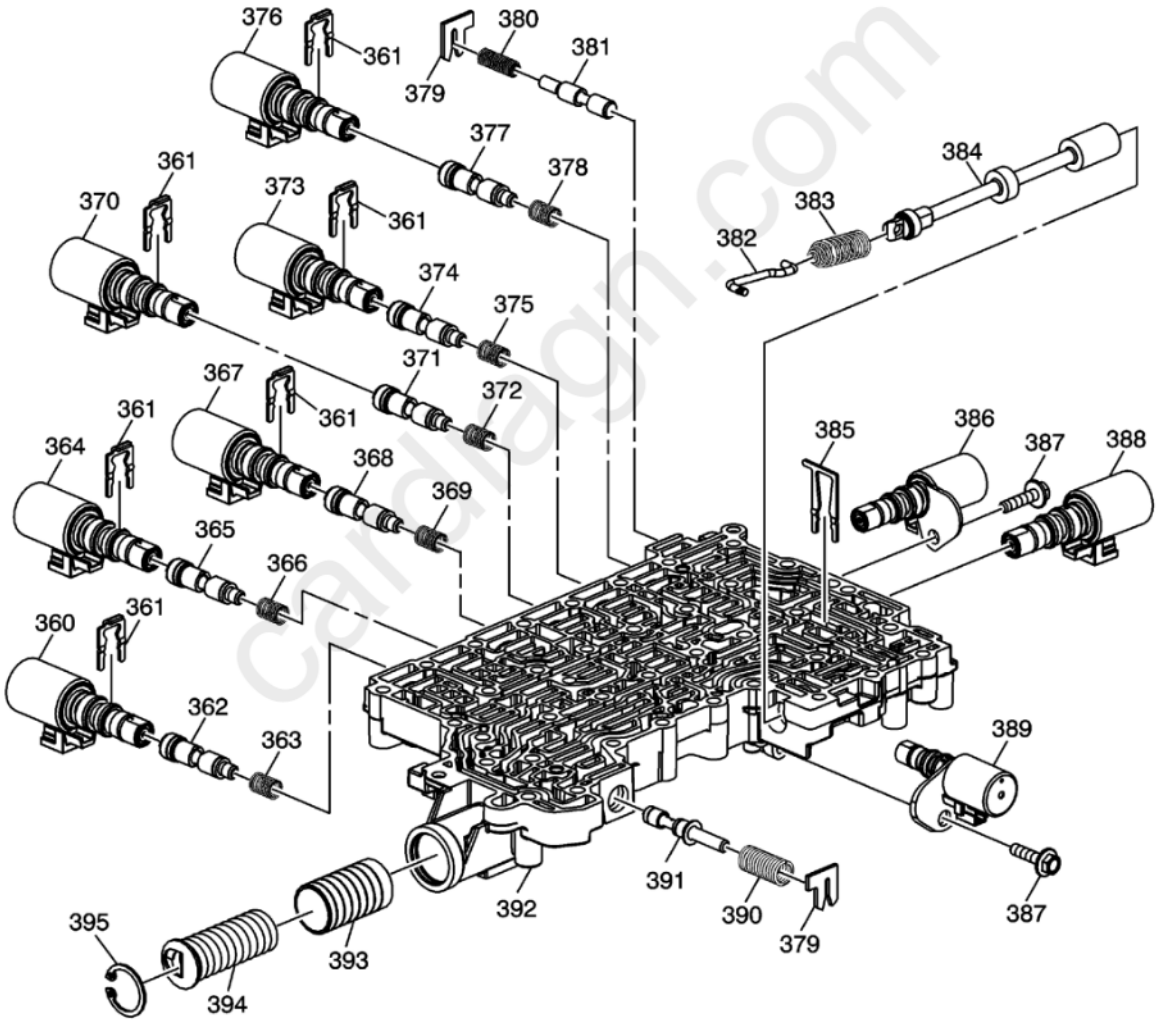

Fig. 7: Control Solenoid Valve Body Assembly
Courtesy of GENERAL MOTORS COMPANY

Callout	Component Name
360	TCC Control Solenoid Valve Assembly
361	Control Solenoid Valve Retainer
362	TCC Control Valve
363	TCC Control Valve Spring
364	2-3-4-6-8 Control Solenoid Valve Assembly

Callout	Component Name
365	2-3-4-6-8 Control Valve
366	2-3-4-6-8 Control Valve Spring
367	1-3-5-6-7 Control Solenoid Valve Assembly
368	1-3-5-6-7 Control Valve
369	1-3-5-6-7 Control Valve Spring
370	4-5-6-7-8 Reverse Control Solenoid Valve Assembly
371	4-5-6-7-8 Reverse Control Valve
372	4-5-6-7-8 Reverse Control Valve Spring
373	1-2-7-8 Reverse Control Solenoid Valve Assembly
374	1-2-7-8 Reverse Control Valve
375	1-2-7-8 Reverse Control Valve Spring
376	1-2-3-4-5 Reverse Low Solenoid Valve Assembly
377	1-2-3-4-5 Reverse Low Solenoid Valve
378	1-2-3-4-5 Reverse Low Solenoid Valve Spring
379	Valve Spring Retainer
380	1-2-3-4-5 Reverse Clutch Boost Valve Spring
381	1-2-3-4-5 Reverse Clutch Boost Valve
382	Manual Valve Link
383	Manual Valve Spring
384	Manual Valve
385	Control Solenoid Valve Retainer
386	Default Control Solenoid Valve Assembly
387	Solenoid Valve Assembly Bolt
388	Line Pressure Control Solenoid Valve Assembly
389	1-2-3-4-5 Reverse Boost Solenoid Valve Assembly
390	Converter Feed Limit Valve Spring
391	Converter Feed Limit Valve
392	Control Valve Solenoid Body
393	1-3-5-6-7 Accumulator Piston
394	1-3-5-6-7 Accumulator Piston Spring
395	Accumulator Piston Spring Retainer

A/Trans Case Extension Assembly

carmagn.com

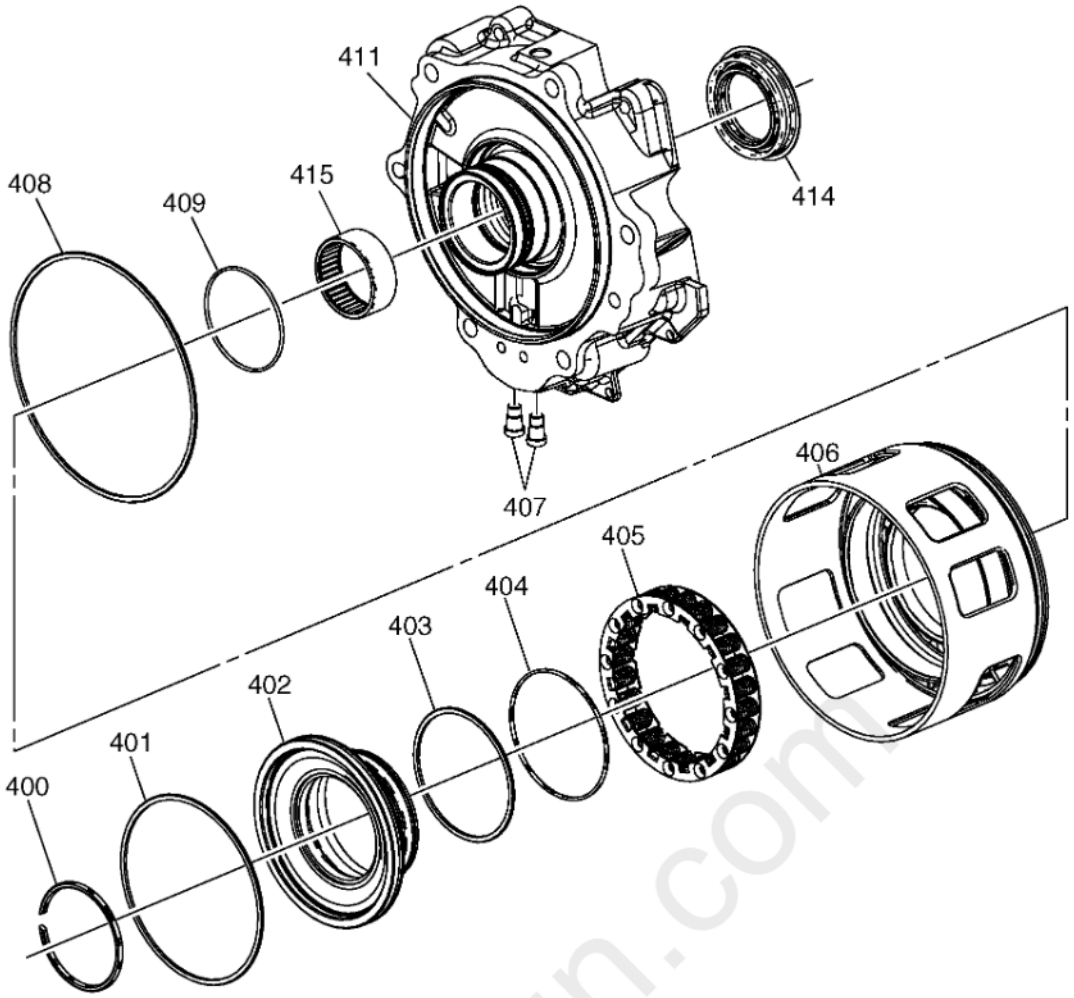

Fig. 8: A/Trans Case Extension Assembly
Courtesy of GENERAL MOTORS COMPANY

Callout	Component Name
400	1-2-3-4-5-Reverse Clutch Piston Dam Retaining Ring
401	1-2-3-4-5-Reverse Clutch Piston Dam Seal
402	1-2-3-4-5-Reverse Clutch Piston Dam
403	1-2-3-4-5-Reverse Clutch Piston Inner Seal
404	1-2-3-4-5-Reverse Clutch Piston O-ring Seal
405	1-2-3-4-5-Reverse Clutch Piston Return Spring
406	1-2-3-4-5-Reverse Clutch Piston
407	A/Trans Case Extension Hole Plug
408	1-2-3-4-5- Reverse Clutch Piston Outer Seal
409	1-2-3-4-5-Reverse Clutch Piston Dam Inner O-ring Seal
411	A/Trans Case Extension
414	Propeller Shaft Transmission Flange Fluid Seal (Outer)
415	Output Shaft Bearing

1-3-5-6-7 Clutch Housing Assembly

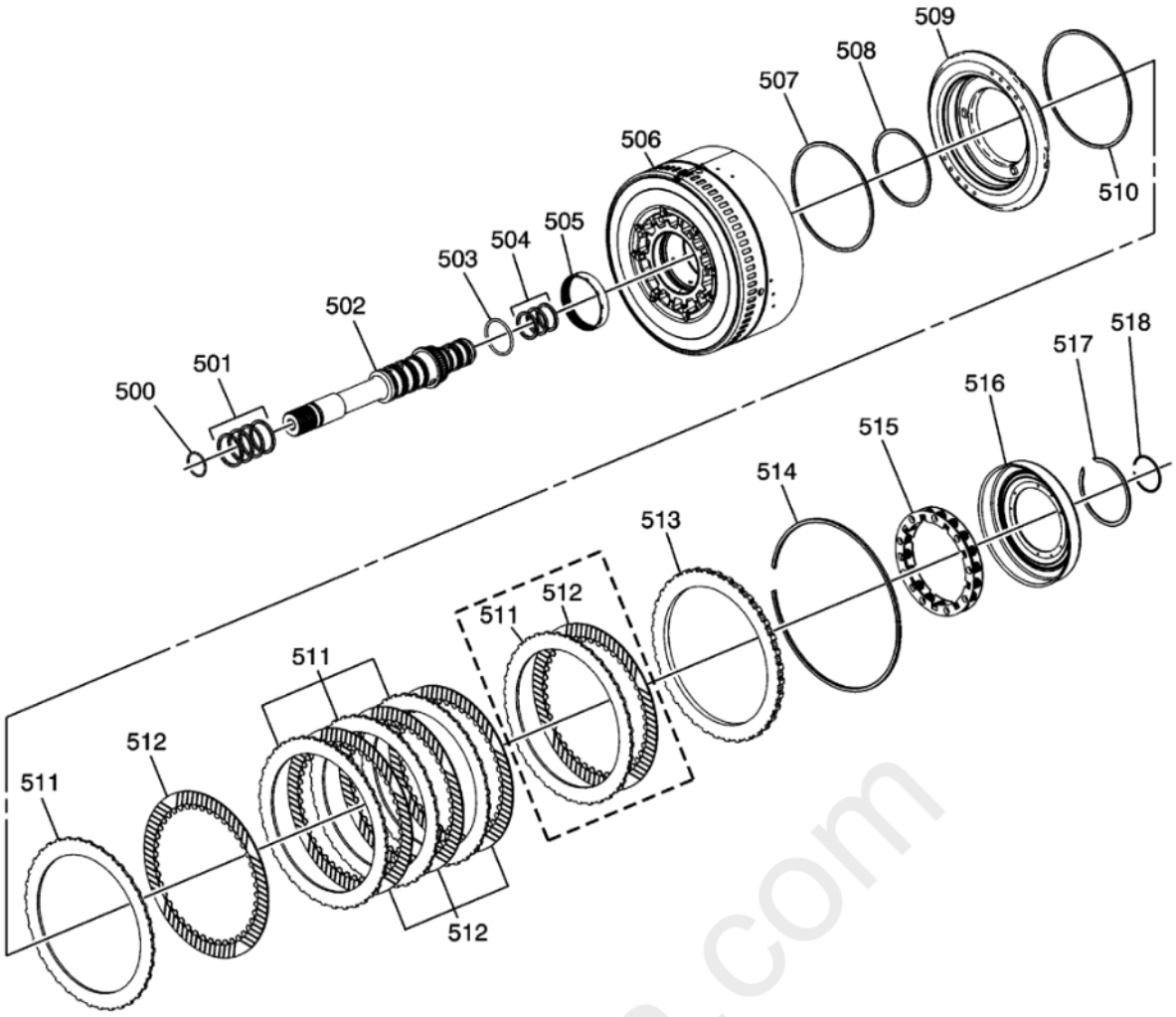

Fig. 9: 1-3-5-6-7 Clutch Housing Assembly
Courtesy of GENERAL MOTORS COMPANY

Callout	Component Name
500	Turbine Shaft O-ring Seal
501	Turbine Shaft Fluid Seal Ring
502	Turbine Shaft
503	Turbine Shaft O-ring Seal
504	Turbine Shaft Fluid Seal
505	1-3-5-6-7 Clutch Bearing
506	1-3-5-6-7 Clutch Housing
507	1-3-5-6-7 Clutch Piston Outer Seal
508	1-3-5-6-7 Clutch Piston Inner Seal
509	1-3-5-6-7 Clutch Piston
510	1-3-5-6-7 Clutch Piston Dam Seal
511	1-3-5-6-7 Clutch Plate - with LT1 (Qty: 4), with LT4 (Qty: 5)
512	1-3-5-6-7 Clutch Plate Assembly - with LT1 (Qty: 4), with LT4 (Qty: 5)
513	1-3-5-6-7 Clutch Backing Plate
514	1-3-5-6-7 Clutch Backing Plate Retaining Ring (Selective)
515	1-3-5-6-7 Clutch Piston Return Spring
516	1-3-5-6-7 Clutch Piston Dam
517	1-3-5-6-7 Clutch Piston Dam Retaining Ring
518	Turbine Shaft Retaining Ring

2-3-4-6-8 and 4-5-6-7-8 Reverse Clutch Housing Assembly

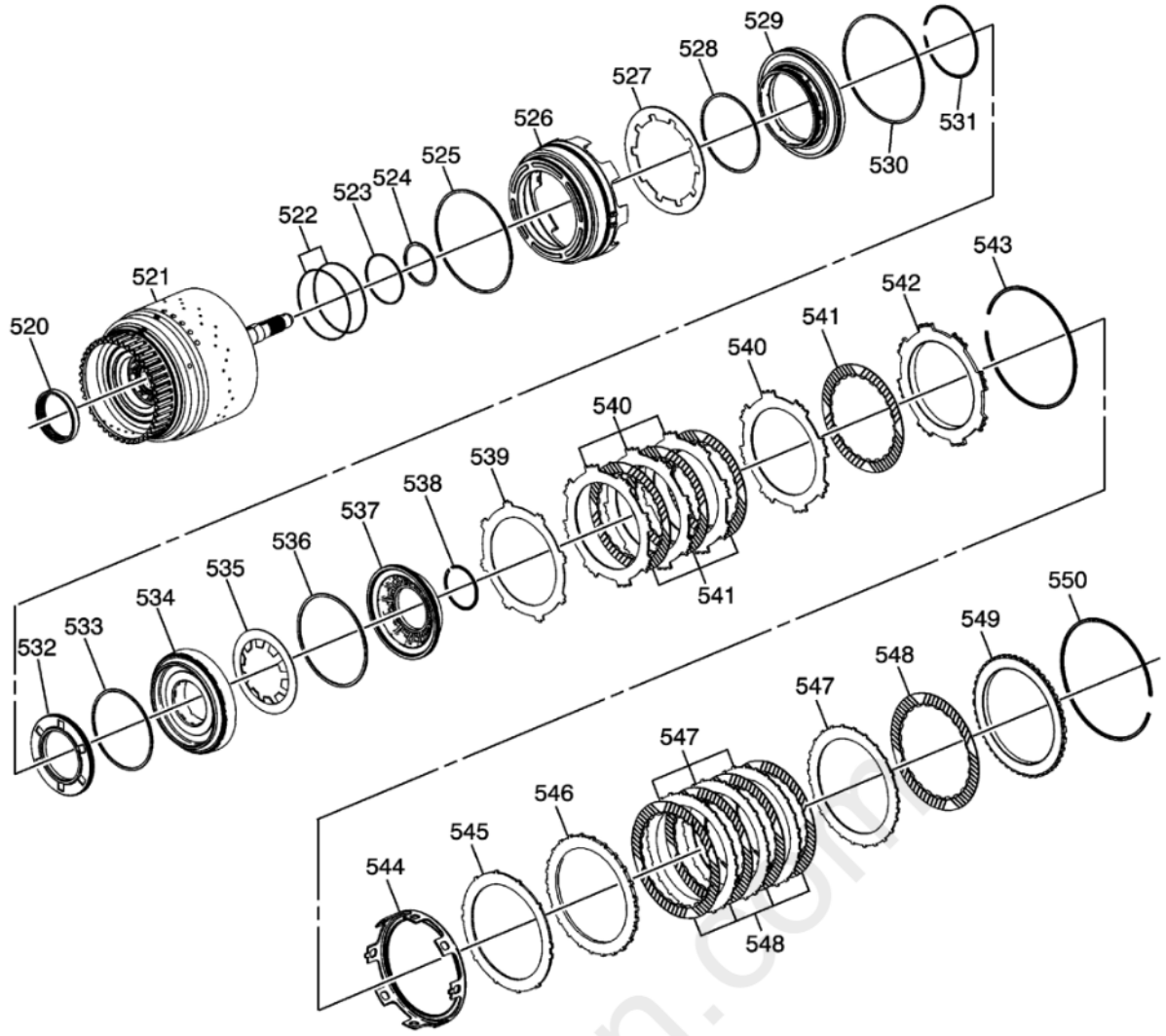

Fig. 10: 2-3-4-6-8 and 4-5-6-7-8 Reverse Clutch Housing Assembly
Courtesy of GENERAL MOTORS COMPANY

Callout	Component Name
520	2-3-4-6-8 and 4-5-6-7-8 Reverse Clutch Housing Bearing
521	2-3-4-6-8 and 4-5-6-7-8 Reverse Clutch Housing
522	2-3-4-6-8 Clutch Piston Dam Seal
523	4-5-6-7-8 Reverse Clutch Piston Stop O-ring Seal
524	4-5-6-7-8 Reverse Clutch Piston Seal
525	2-3-4-6-8 Clutch Piston Seal
526	2-3-4-6-8 Clutch Piston
527	2-3-4-6-8 Clutch Piston Return Spring
528	2-3-4-6-8 Clutch Piston Dam Inner Seal
529	2-3-4-6-8 Clutch Piston Dam
530	2-3-4-6-8 Clutch Piston Dam Outer Seal
531	2-3-4-6-8 Clutch Piston Dam Retaining Ring
532	4-5-6-7-8 Reverse Clutch Piston Stop
533	4-5-6-7-8 Reverse Clutch Piston Seal
534	4-5-6-7-8 Reverse Clutch Piston
535	4-5-6-7-8 Reverse Clutch Piston Return Spring
536	4-5-6-7-8 Reverse Clutch Piston Dam Seal
537	4-5-6-7-8 Reverse Clutch Piston Dam
538	4-5-6-7-8 Reverse Clutch Piston Dam Retaining Ring
539	4-5-6-7-8 Reverse Clutch (Waved) Plate
540	4-5-6-7-8 Reverse Clutch Plate
541	4-5-6-7-8 Reverse Clutch Plate Assembly
542	4-5-6-7-8 Reverse Clutch Backing Plate

Callout	Component Name
543	4-5-6-7-8 Reverse Clutch Backing Plate Retaining Ring (Selective)
544	2-3-4-6-8 Clutch Apply Ring
545	2-3-4-6-8 Clutch (Waved) Plate
546	2-3-4-6-8 Clutch Apply Plate
547	2-3-4-6-8 Clutch Plate
548	2-3-4-6-8 Clutch Plate Assembly
549	2-3-4-6-8 Clutch Backing Plate
550	2-3-4-6-8 Clutch Backing Plate Retaining Ring (Selective)

Direct/Overdrive Internal Gear Assembly

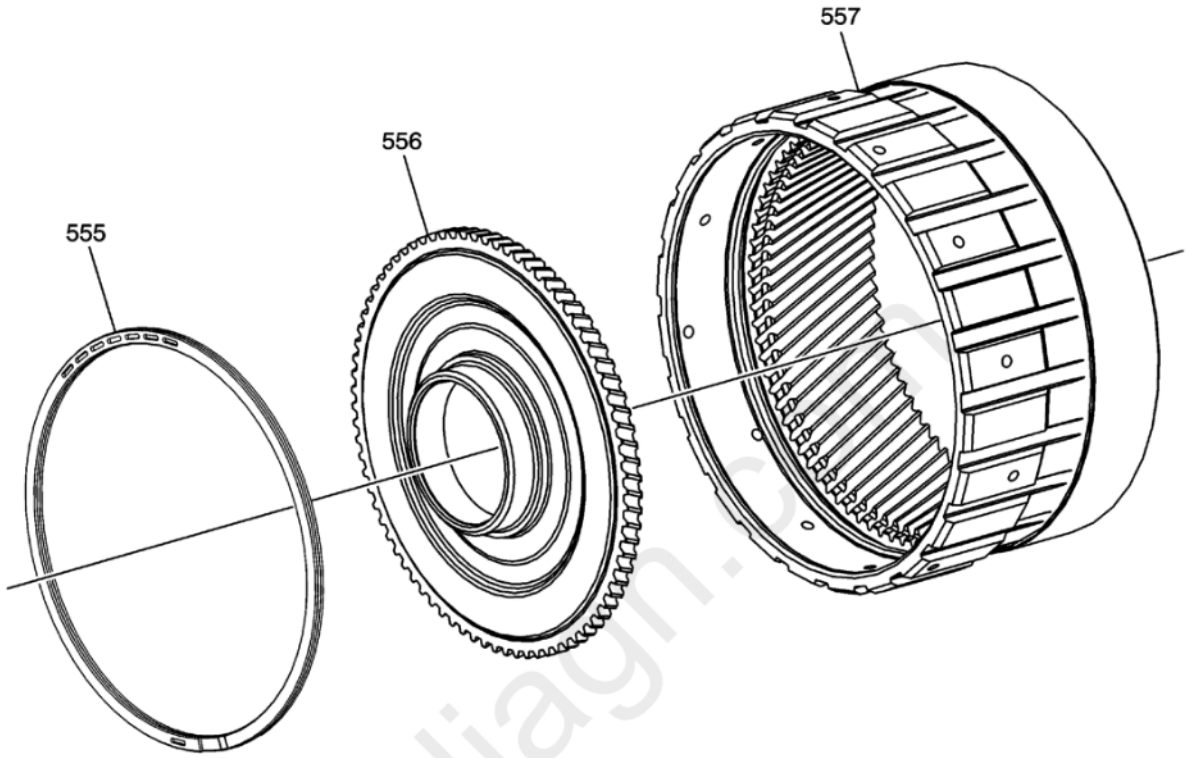

Fig. 11: Direct/Overdrive Internal Gear Assembly
Courtesy of GENERAL MOTORS COMPANY

Callout	Component Name
555	Direct/Overdrive Internal Gear Retaining Ring
556	Direct/Overdrive Internal Gear Flange
557	Direct/Overdrive Internal Gear

Input Internal Gear Assembly

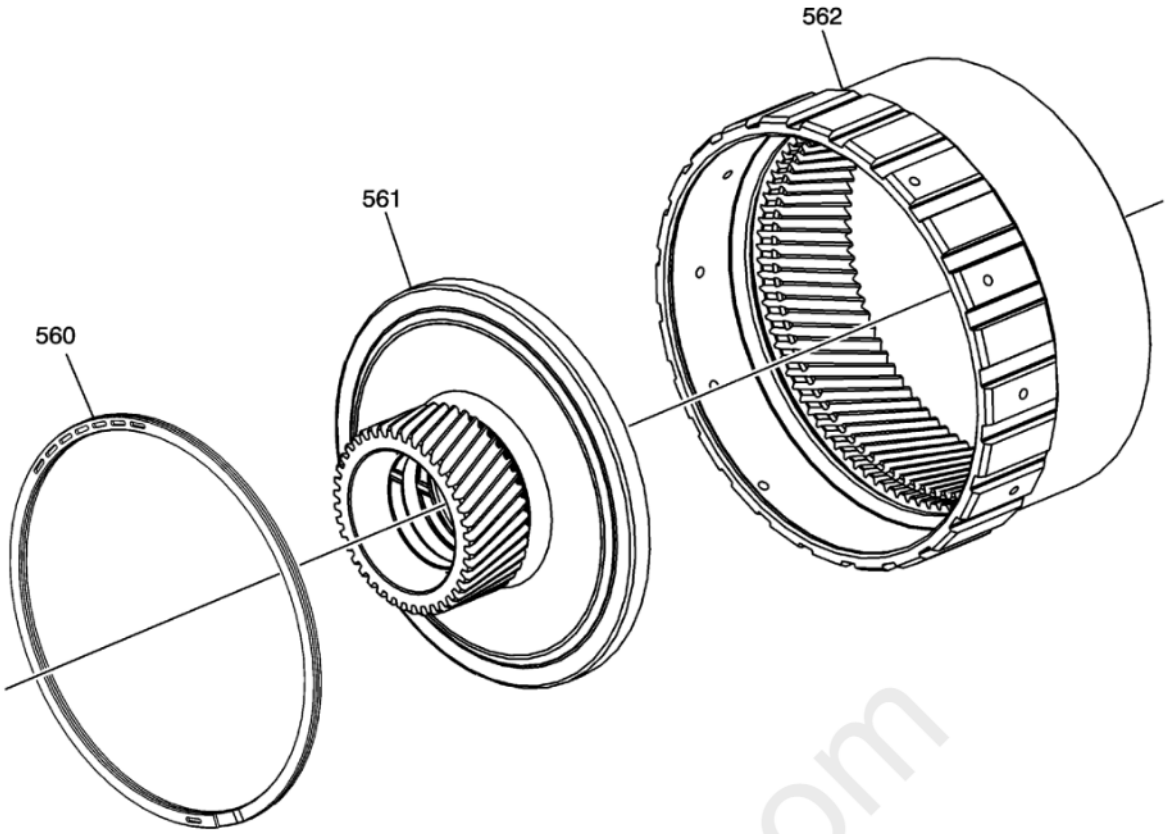

Fig. 12: Input Internal Gear Assembly
Courtesy of GENERAL MOTORS COMPANY

Callout	Component Name
560	Input Internal Gear Retaining Ring
561	Direct/Overdrive Sun Gear
562	Input Internal Gear

Input Carrier Assembly

carmagn.com

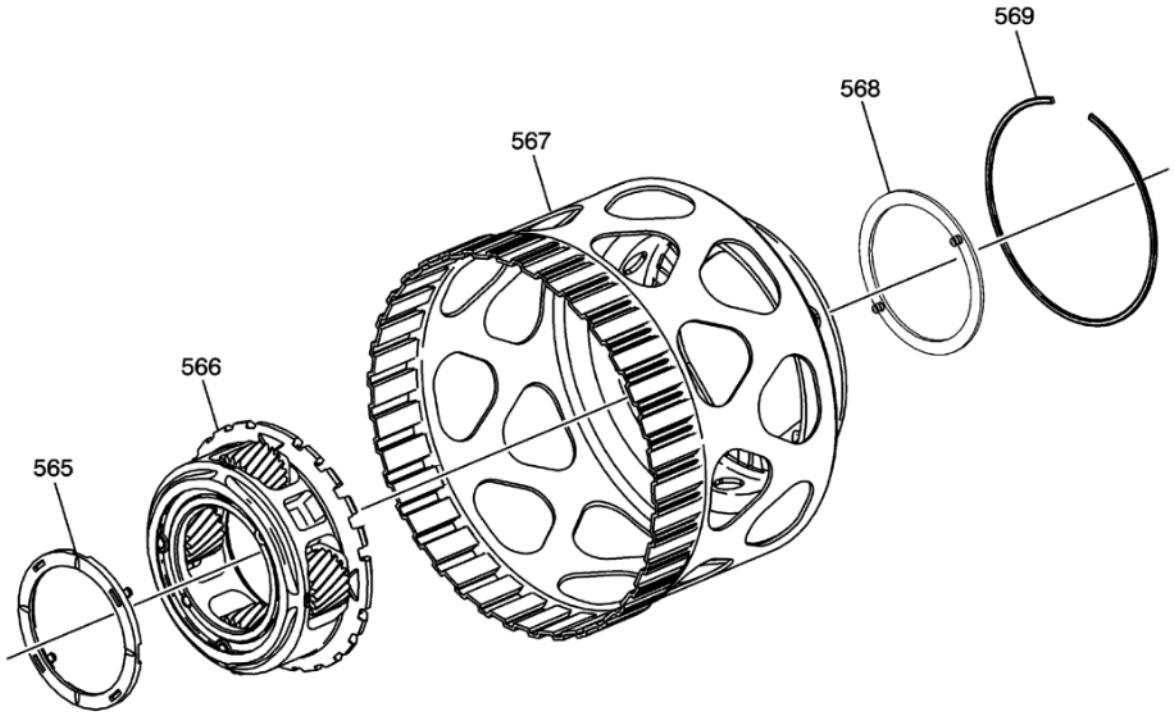

Fig. 13: Input Carrier Assembly
Courtesy of GENERAL MOTORS COMPANY

Callout	Component Name
565	Input Carrier Thrust Washer
566	Input Carrier
567	Input Carrier Shell
568	Input Carrier Thrust Washer
569	Input Carrier Shell Retaining Ring

Input Sun Gear Assembly

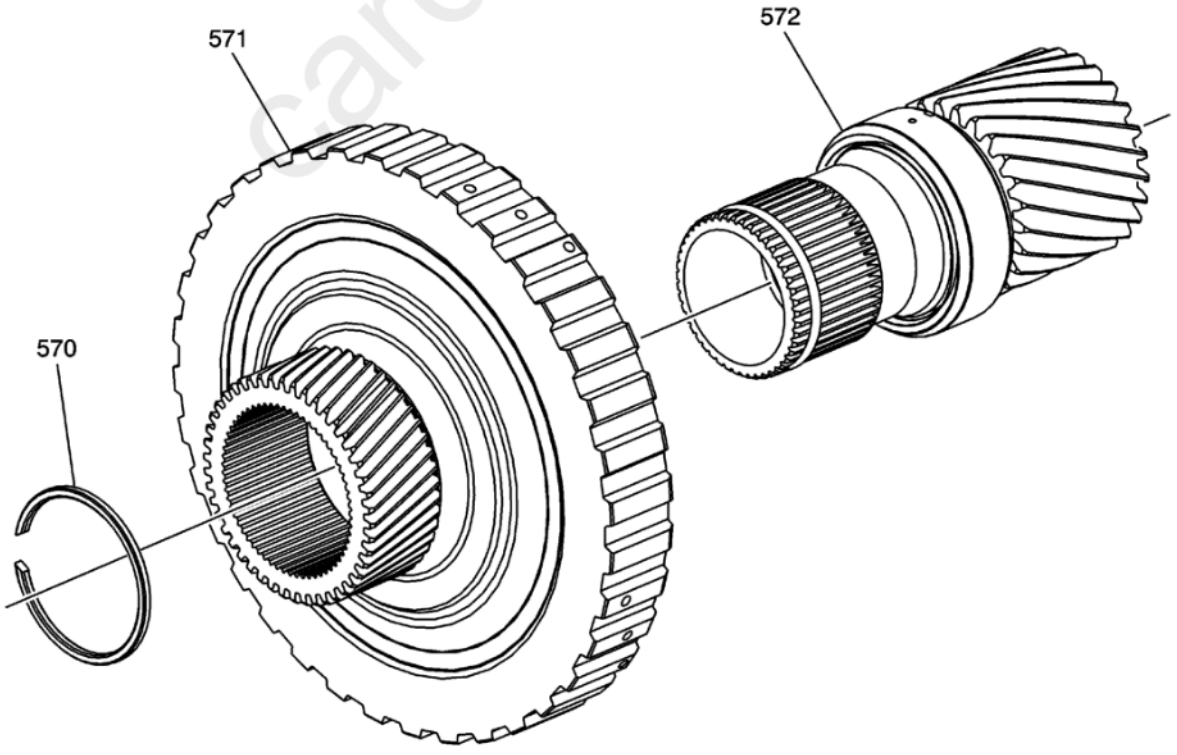

Fig. 14: Input Sun Gear Assembly
Courtesy of GENERAL MOTORS COMPANY

cardiagn.com

Callout	Component Name
570	Input Sun Gear Retaining Ring
571	Input Sun Gear Assembly
572	Reaction Sun Gear Assembly

Reaction Internal Gear and 1-2-3-4-5 Reverse Clutch Hub Assembly

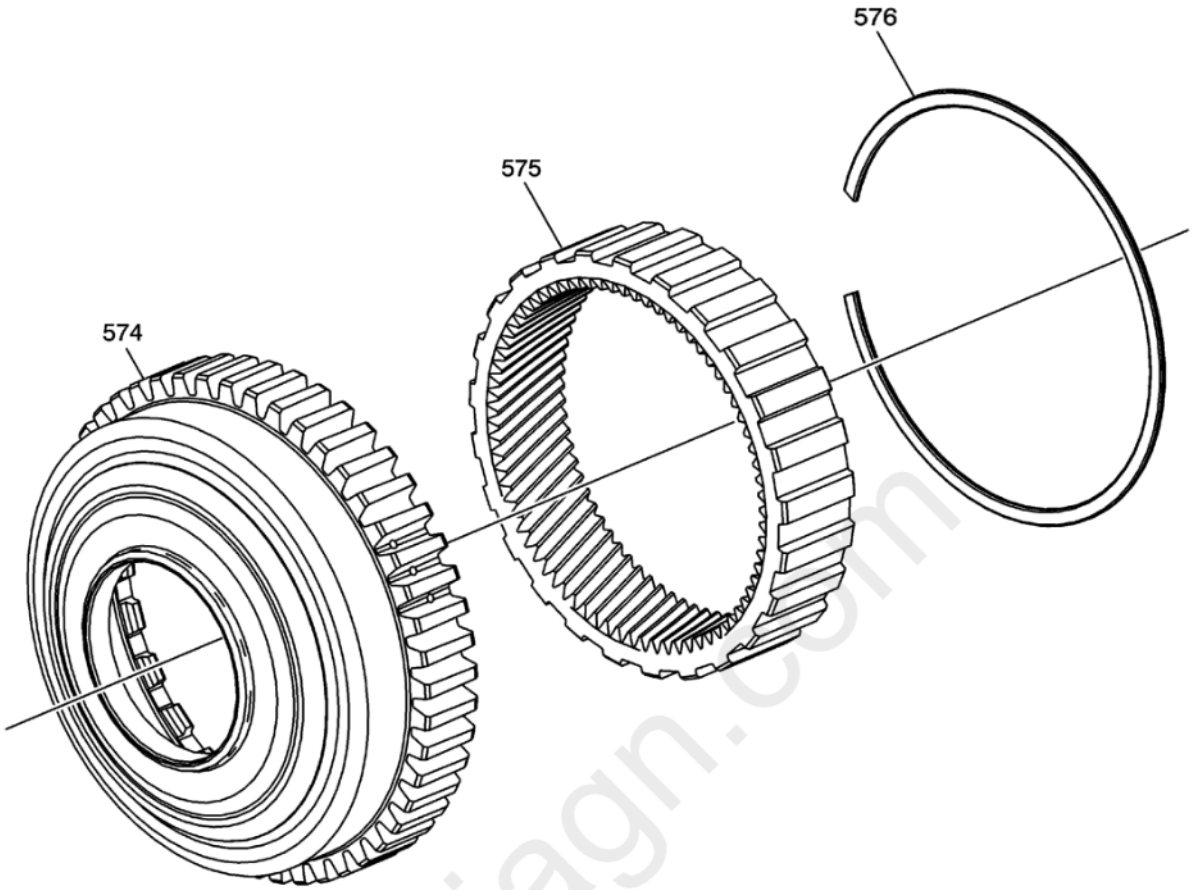

cardiagn.com

Fig. 15: Reaction Internal Gear and 1-2-3-4-5 Reverse Clutch Hub Assembly
Courtesy of GENERAL MOTORS COMPANY

Callout	Component Name
574	Reaction Internal Gear and 1-2-3-4-5 Reverse Clutch Hub
575	Reaction Internal Gear
576	Reaction Internal Gear Retaining Ring

Reaction Carrier Assembly

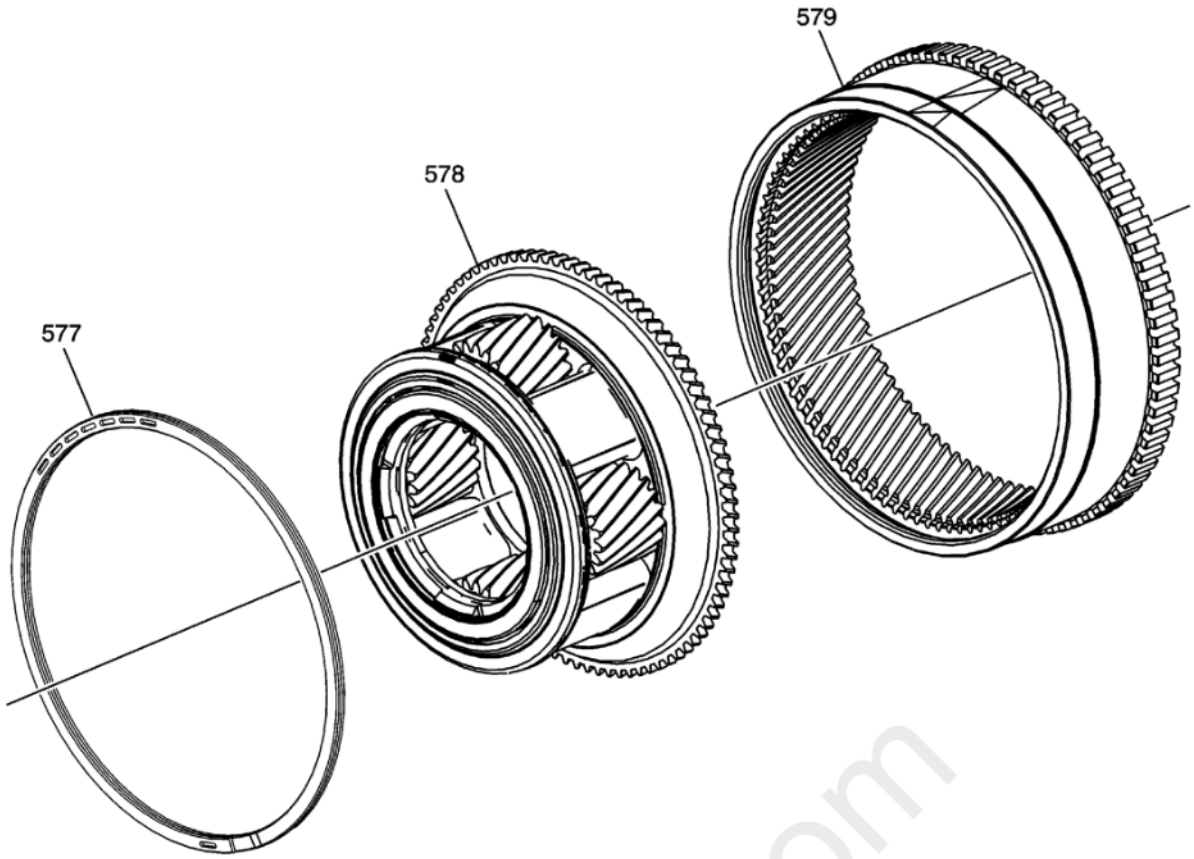

Fig. 16: Reaction Carrier Assembly
Courtesy of GENERAL MOTORS COMPANY

Callout	Component Name
577	Output Internal Gear Retaining Ring
578	Reaction Carrier Assembly
579	Output Carrier Internal Gear

1-2-3-4-5 Reverse and 1-2-7-8 Reverse Clutch Assemblies

carmagn.com

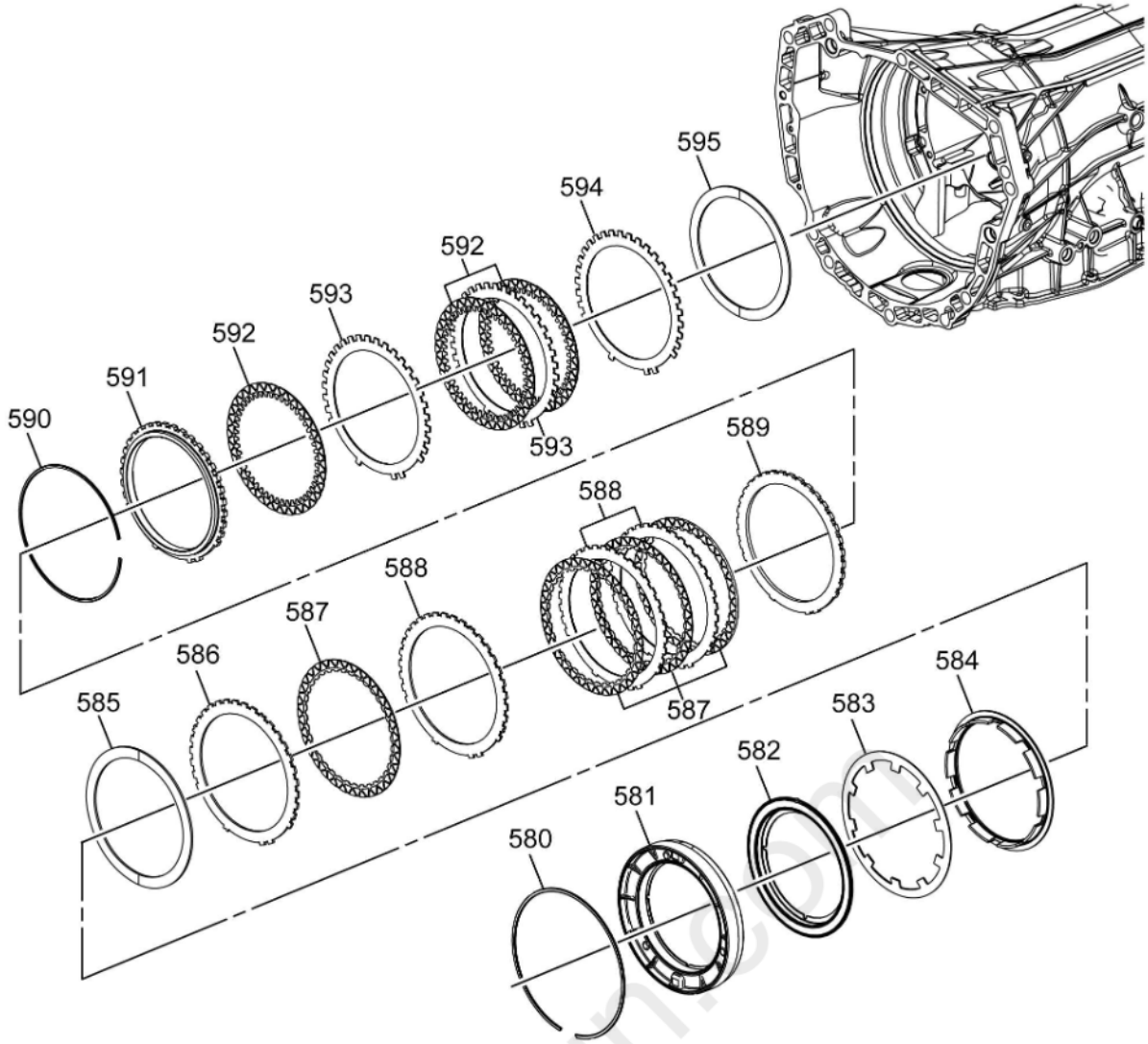

Fig. 17: 1-2-3-4-5 Reverse and 1-2-7-8 Reverse Clutch Assemblies
Courtesy of GENERAL MOTORS COMPANY

Callout	Component Name
580	1-2-7-8 Reverse Clutch Piston Housing Retaining Ring
581	1-2-7-8 Reverse Clutch Piston Housing
582	1-2-7-8 Reverse Clutch Piston
583	1-2-7-8 Reverse Clutch Return Spring
584	1-2-7-8 Reverse Clutch Apply Ring
585	1-2-7-8 Reverse Clutch (Waved) Plate
586	1-2-7-8 Reverse Clutch Apply Plate
587	1-2-7-8 Reverse Clutch Plate Assembly
588	1-2-7-8 Reverse Clutch Plate
589	1-2-7-8 Reverse Clutch Backing Plate (Selective)
590	1-2-3-4-5 Reverse Clutch Backing Plate Retaining Ring (Selective)
591	1-2-3-4-5 Reverse Clutch Backing Plate
592	1-2-3-4-5 Reverse Clutch Plate Assembly
593	1-2-3-4-5 Reverse Clutch Plate
594	1-2-3-4-5 Reverse Clutch Apply Plate
595	1-2-3-4-5 Reverse Clutch (Waved) Plate

Park System Components

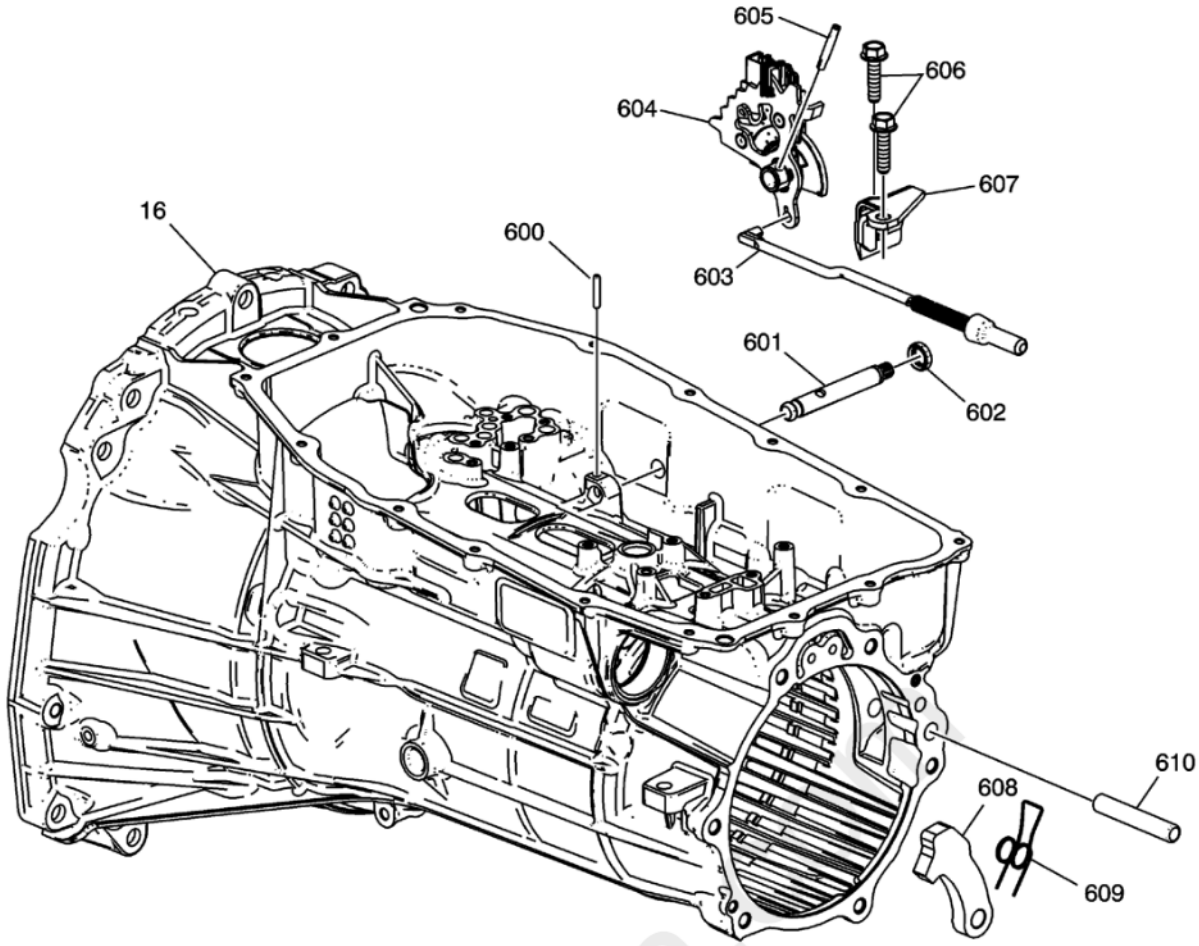

Fig. 18: Park System Components
Courtesy of GENERAL MOTORS COMPANY

Callout	Component Name
16	A/Trans Case Assembly
600	Manual Shift Shaft Pin
601	Manual Shift Shaft
602	Manual Shift Shaft Seal
603	Park Pawl Actuator Assembly
604	Manual Shift Shaft Position Switch Assembly
605	Manual Shift Shaft Detent Lever Hub Pin
606	Park Pawl Actuator Bracket Bolt
607	Park Pawl Actuator Bracket
608	Park Pawl
609	Park Pawl Spring
610	Park Pawl Shaft

DISASSEMBLED VIEWS (8L45)

Case and Associated Parts (1 of 2)

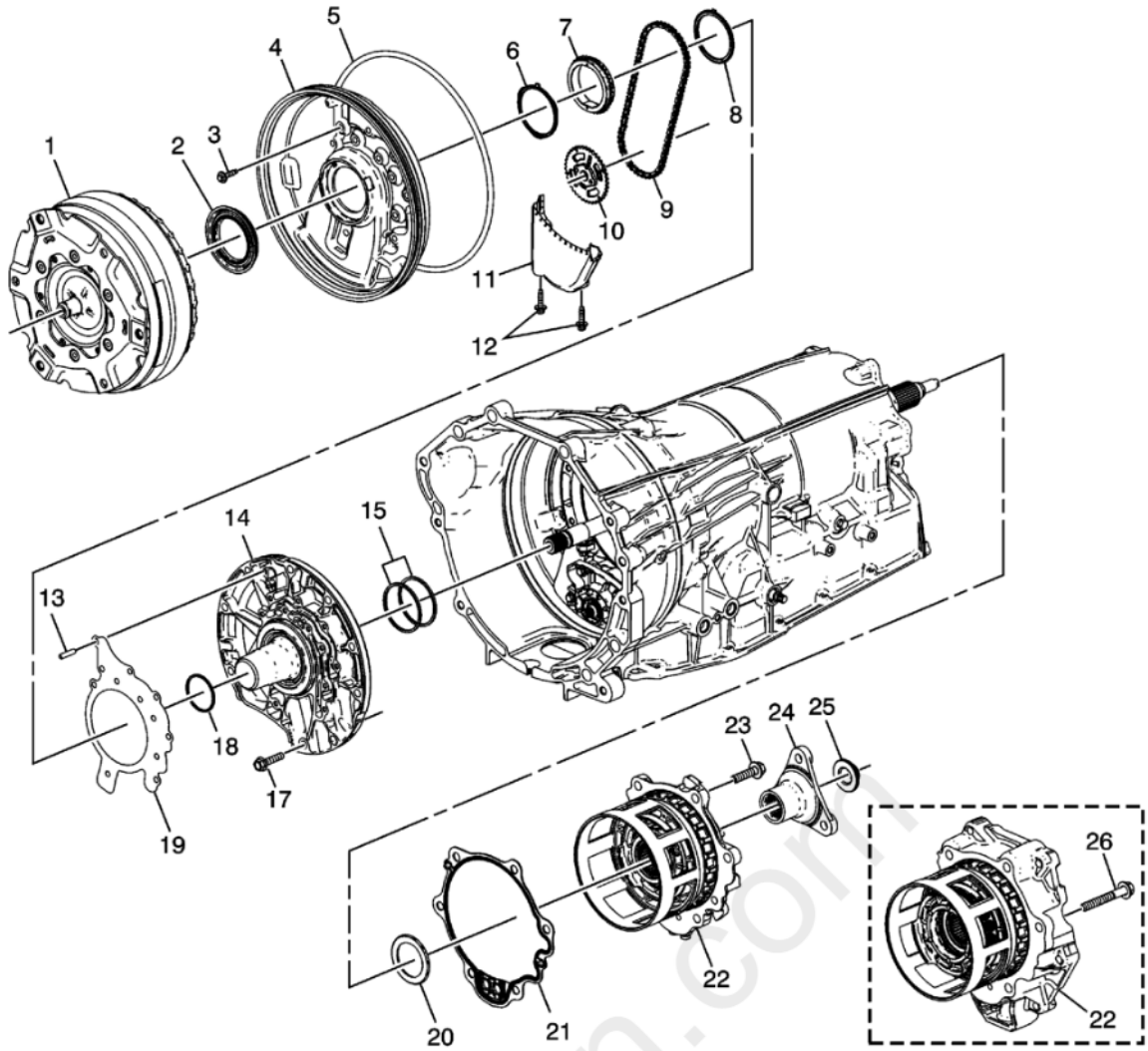

Fig. 19: Case and Associated Parts (1 of 2)
Courtesy of GENERAL MOTORS COMPANY

Callout	Component Name
1	Torque Converter
2	Torque Converter Fluid Seal
3	A/Trans Case Front Cover Bolt
4	A/Trans Case Front Cover
5	A/Trans Case Front Cover Seal
6	Drive Sprocket Thrust Washer - Front
7	Drive Sprocket
8	Drive Sprocket Thrust Washer - Rear
9	Drive Link Assembly
10	Driven Sprocket
11	A/Trans Fluid Baffle
12	A/Trans Fluid Baffle Bolt
13	A/Trans Case Front Cover Locating Pin
14	Stator Shaft Support
15	1-3-5-6-7 Clutch Fluid Seal Ring
17	Stator Shaft Support Bolt
18	Torque Converter Fluid Seal
19	A/Trans Front Support Cover Gasket
20	Output Carrier Thrust Bearing
21	A/Trans Case Extension Seal
22	A/Trans Case Extension Assembly
23	A/Trans Case Extension Bolt
24	Propeller Shaft Transmission Flange

Callout	Component Name
25	Front Propeller Shaft Flange Nut
26	A/Trans Case Extension Bolt

Case and Associated Parts (2 of 2)

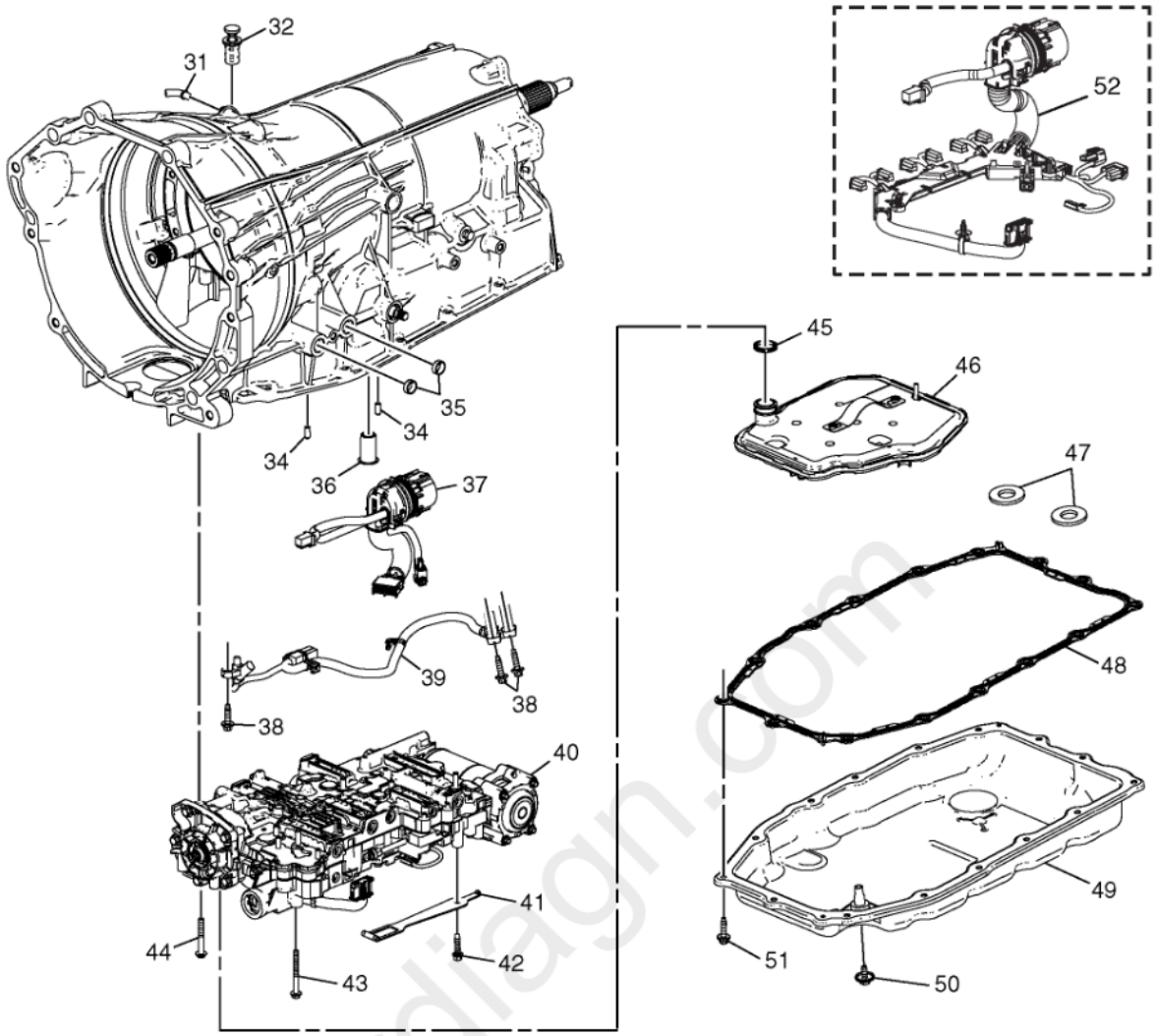

Fig. 20: Case and Associated Parts (2 of 2)
Courtesy of GENERAL MOTORS COMPANY

Callout	Component Name
31	A/Trans Pipe Vent
32	Transmission Fluid Fill Tube Plug
34	Control Valve Body Locating Pin
35	Transmission Fluid Cooler Pipe Fitting Seal
36	Clutch Housing Fluid Passage Seal
37	A/Trans Wiring Harness
38	Output Speed Sensor Wiring Harness Bolt
39	Output Speed Sensor Wiring Harness
40	Control (with Body and Valve) Valve Assembly
41	Manual Shaft Detent Lever Spring
42	Manual Shaft Detent Lever Spring Bolt
43	Control Valve Solenoid Body Bolt
44	Control Valve Solenoid Body Bolt
45	A/Trans Fluid Filter Seal
46	A/Trans Fluid Filter
47	A/Trans Fluid Pan Magnet
48	A/Trans Fluid Pan Gasket

cardiagn.com

Callout	Component Name
49	A/Trans Fluid Pan
50	Transmission Oil Level Check Plug
51	A/Trans Fluid Pan Bolt

Clutch Assemblies and Associated Parts

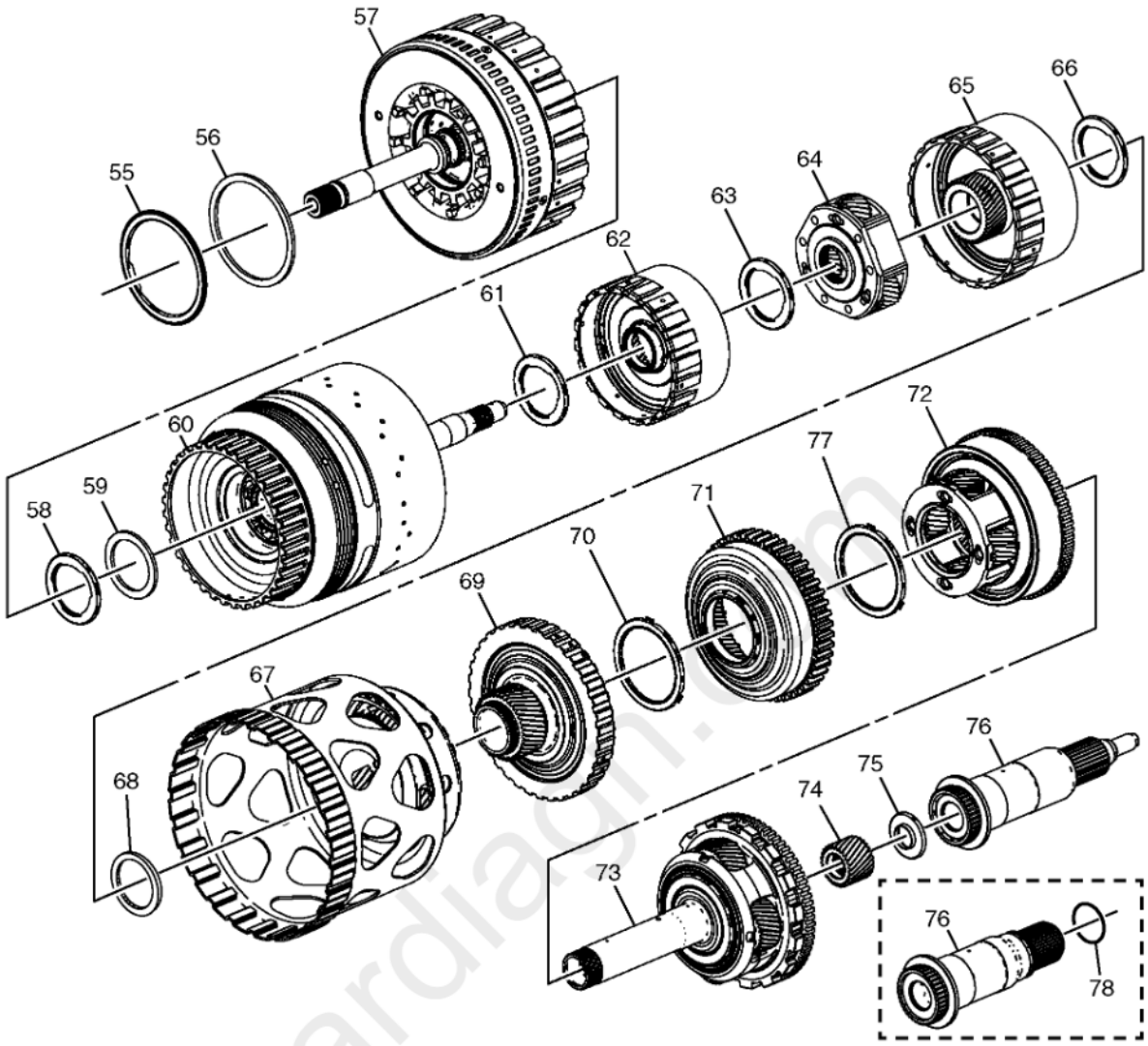

Fig. 21: Clutch Assemblies and Associated Parts
Courtesy of GENERAL MOTORS COMPANY

Callout	Component Name
55	1-3-5-6-7 Clutch Thrust Bearing
56	1-3-5-6-7 Clutch Thrust Bearing Washer (Selective)
57	1-3-5-6-7 Clutch Assembly
58	2-3-4-6-8 and 4-5-6-7-8 Reverse Clutch Thrust Bearing
59	2-3-4-6-8 and 4-5-6-7-8 Reverse Clutch Thrust Bearing Washer
60	2-3-4-6-8 and 4-5-6-7-8 Reverse Clutch Assembly
61	4-5-6-7-8 Reverse Clutch and Direct/Overdrive Internal Gear Hub Thrust Bearing
62	Direct/Overdrive Internal Gear Flange Assembly
63	Direct/Overdrive Carrier Thrust Bearing
64	Direct/Overdrive Carrier Assembly
65	Input Internal Gear Assembly
66	Input Sun Gear Thrust Bearing
67	Input Carrier Assembly
68	Input Sun Gear Spacer
69	Input Sun Gear Assembly

Callout	Component Name
70	1-2-3-4-5 Reverse Clutch Hub Thrust Bearing
71	Reaction Internal Gear and 1-2-3-4-5 Reverse Hub Assembly
72	Reaction Carrier Assembly
73	Output Carrier Assembly
74	Output Sun Gear
75	Output Sun Gear Thrust Bearing
76	Output Shaft
77	Reaction Carrier Thrust Bearing
78	Output Shaft Seal (O-ring)

Control (with Body and Valve) Valve Assembly (1 of 2)

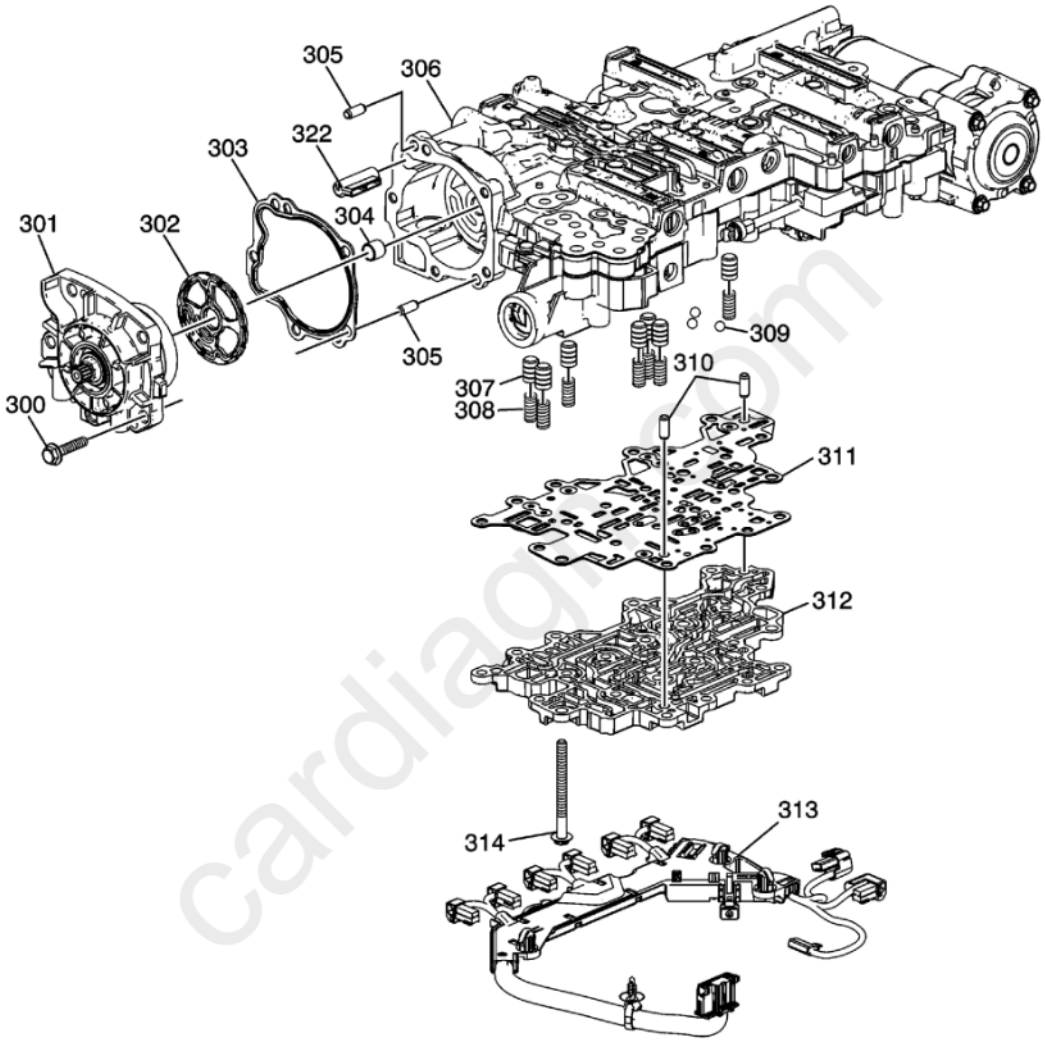

Fig. 22: Control (with Body and Valve) Valve Assembly (1 of 2)
Courtesy of GENERAL MOTORS COMPANY

Callout	Component Name
300	A/Trans Fluid Pump Bolt
301	A/Trans Fluid Pump Assembly
302	A/Trans Fluid Pump Seal
303	A/Trans Fluid Pump Seal
304	A/Trans Fluid Pump Drive Shaft Bushing
305	A/Trans Fluid Pump Pin
306	Control (with Body & Valve) Valve Assembly
307	Signal Accumulator Piston
308	Signal Accumulator Piston Spring
309	Cooler Flow Blowoff Ball Valve
310	Control Valve Body Locator Pin

Callout	Component Name
311	Control Valve Channel Plate Spacer Plate Assembly
312	Control Valve Channel Plate
313	A/Trans Control Wiring Harness Assembly
314	Control Valve Channel Plate Bolt
322	A/Trans Fluid Passage Sleeve

Control (with Body and Valve) Valve Assembly (2 of 2)

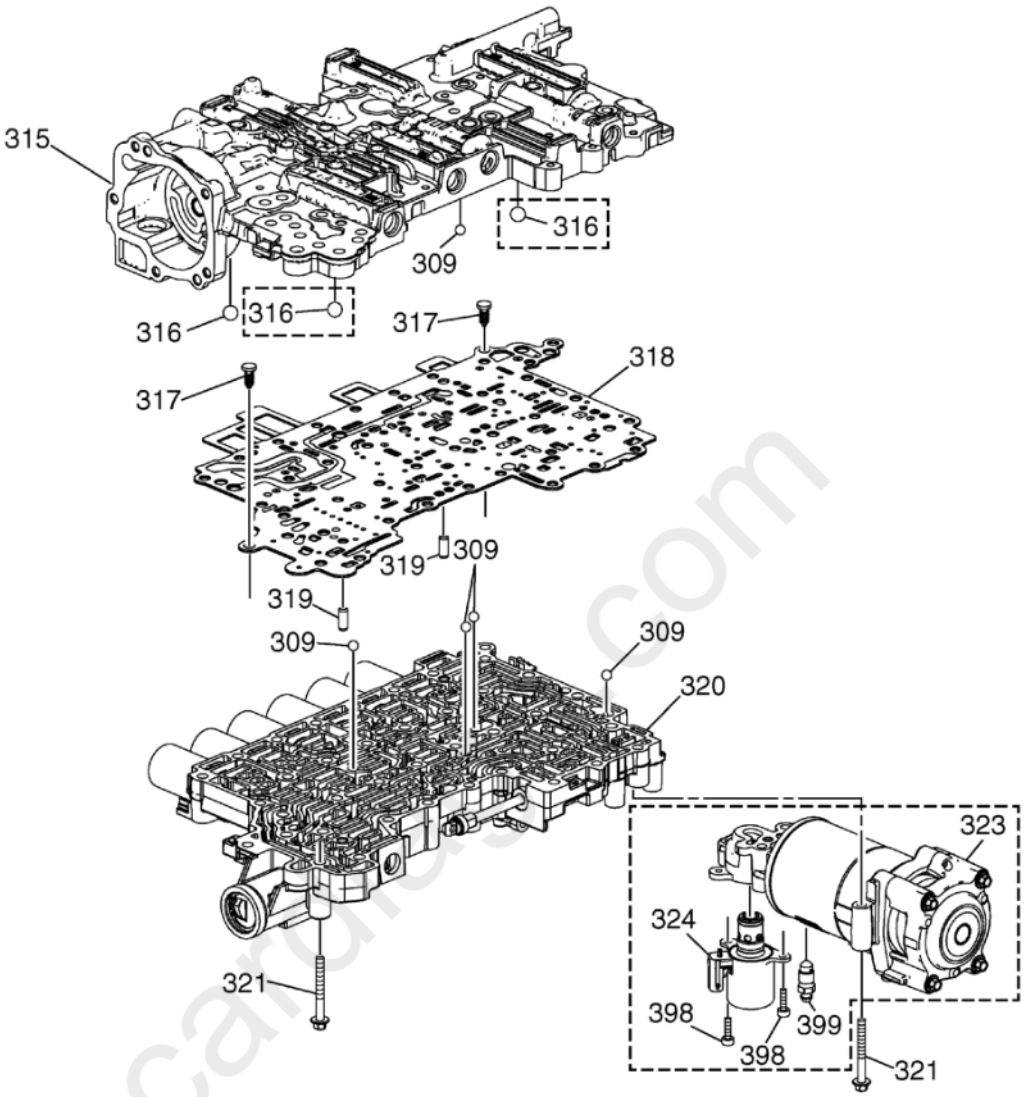

Fig. 23: Control (with Body and Valve) Valve Assembly (2 of 2)
Courtesy of GENERAL MOTORS COMPANY

Callout	Component Name
309	Cooler Flow Blowoff Ball Valve
315	Control Valve Upper Body
316	Control Valve Body Ball Check Valve
317	Control Valve Body Spacer Plate Retainer
318	Control Valve Body Spacer Plate (with Gasket)
319	Control Valve Body Locator Pin
320	Control Valve Solenoid Body Assembly
321	Control Valve Lower Body Bolt
323	A/Trans Auxiliary Fluid Accumulator - Model Dependent
324	A/Trans Auxiliary Fluid Accumulator Solenoid - Model Dependent
398	A/Trans Auxiliary Fluid Accumulator Bolt - Model Dependent
399	A/Trans Auxiliary Fluid Accumulator Bleeder Valve - Model Dependent

Control Valve Upper Body Assembly

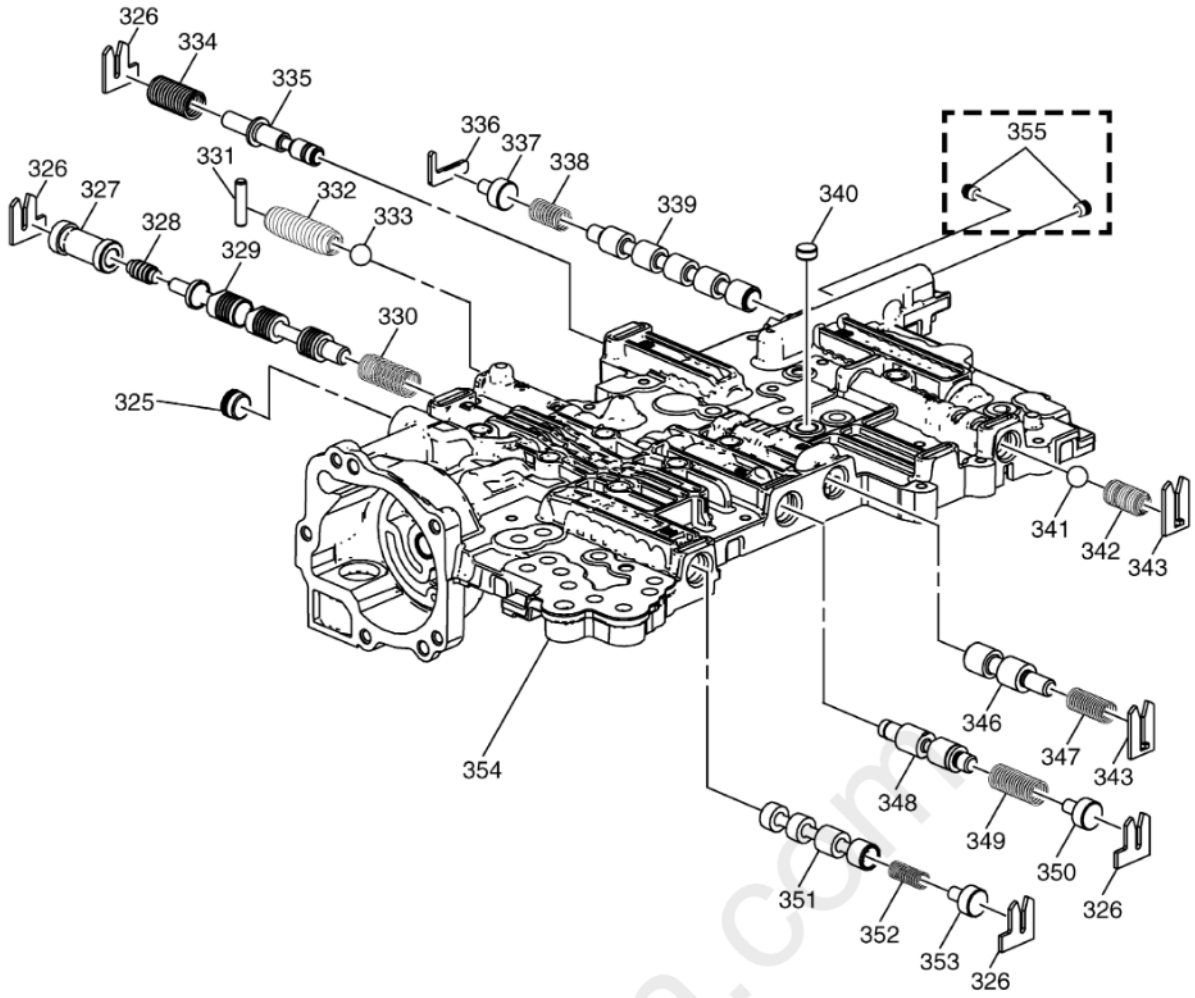

Fig. 24: Control Valve Upper Body Assembly
Courtesy of GENERAL MOTORS COMPANY

Callout	Component Name
325	Transmission Fluid Passage Plug
326	Valve Spring Retainer
327	Pressure Regulator Valve Bore Bushing
328	Pressure Regulator Shuttle Valve
329	Pressure Regulator Valve
330	Pressure Regulator Valve Spring
331	Pressure Relief Ball Valve Spring Retainer
332	Pressure Relief Ball Valve Spring
333	Pressure Relief Ball Valve
334	Feed Limit Valve Spring
335	Actuator Feed Limit Valve
336	Default Override Valve Bore Plug Retainer
337	Default Override Valve Bore Plug
338	Default Override Valve Spring
339	Default Override Valve
340	Control Valve Center Body Hole Plug
341	Clutch Piston Exhaust Blowoff Ball Valve
342	Clutch Piston Exhaust Blowoff Ball Valve Spring
343	Valve Spring Retainer
346	TCC Valve
347	TCC Valve Spring
348	Lube Regulator Valve

Callout	Component Name
349	Lube Regulator Valve Spring
350	Lube Regulator Valve Bore Plug
351	TCC Control Valve
352	TCC Control Valve Spring
353	TCC Control Valve Bore Plug
354	Control Valve Upper Body
355	Line Pressure Bore Plug - Model Dependent

Control Solenoid Valve Body Assembly

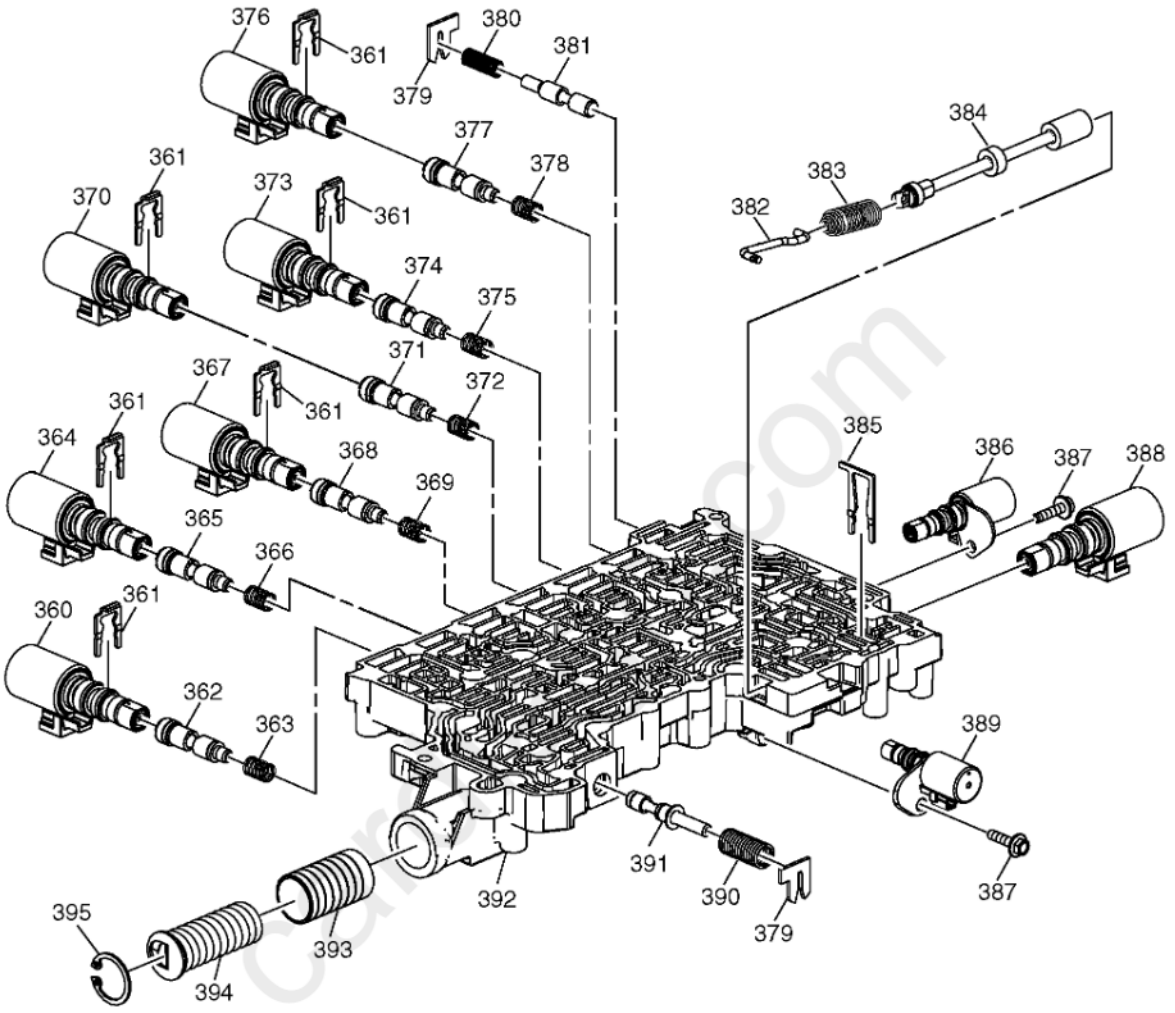

Fig. 25: Control Solenoid Valve Body Assembly
Courtesy of GENERAL MOTORS COMPANY

Callout	Component Name
360	TCC Control Solenoid Valve Assembly
361	Control Solenoid Valve Retainer
362	TCC Control Valve
363	TCC Control Valve Spring
364	2-3-4-6-8 Control Solenoid Valve Assembly
365	2-3-4-6-8 Control Valve
366	2-3-4-6-8 Control Valve Spring
367	1-3-5-6-7 Reverse Control Solenoid Valve Assembly
368	1-3-5-6-7 Reverse Control Solenoid Valve
369	1-3-5-6-7 Reverse Control Solenoid Valve Spring
370	4-5-6-7-8 Reverse Control Solenoid Valve Assembly
371	4-5-6-7-8 Reverse Control Valve

Callout	Component Name
372	4-5-6-7-8 Reverse Control Valve Spring
373	1-2-7-8 Reverse Control Solenoid Valve Assembly
374	1-2-7-8 Reverse Control Valve
375	1-2-7-8 Reverse Control Valve Spring
376	1-2-3-4-5 Reverse Control Solenoid Valve Assembly
377	1-2-3-4-5 Reverse Control Solenoid Valve
378	1-2-3-4-5 Reverse Control Solenoid Valve Spring
379	Valve Spring Retainer
380	Lube Regulator Valve Spring
381	Lube Regulator Valve
382	Manual Valve Link
383	Manual Valve Spring
384	Manual Valve
385	Control Solenoid Valve Retainer
386	Shift Solenoid Valve Assembly
387	Control Valve Solenoid Body Bolt
388	Shift Solenoid Valve Assembly
389	Shift Solenoid Valve Assembly
390	Converter Feed Limit Valve Spring
391	Converter Feed Limit Valve
392	Control Valve Solenoid Body
393	1-3-5-6-7 Clutch Accumulator Piston
394	1-3-5-6-7 Accumulator Piston Spring
395	1-3-5-6-7 Clutch Accumulator Piston Retaining Ring

A/Trans Case Extension Assembly (Two Wheel Drive)

cardiagn.com

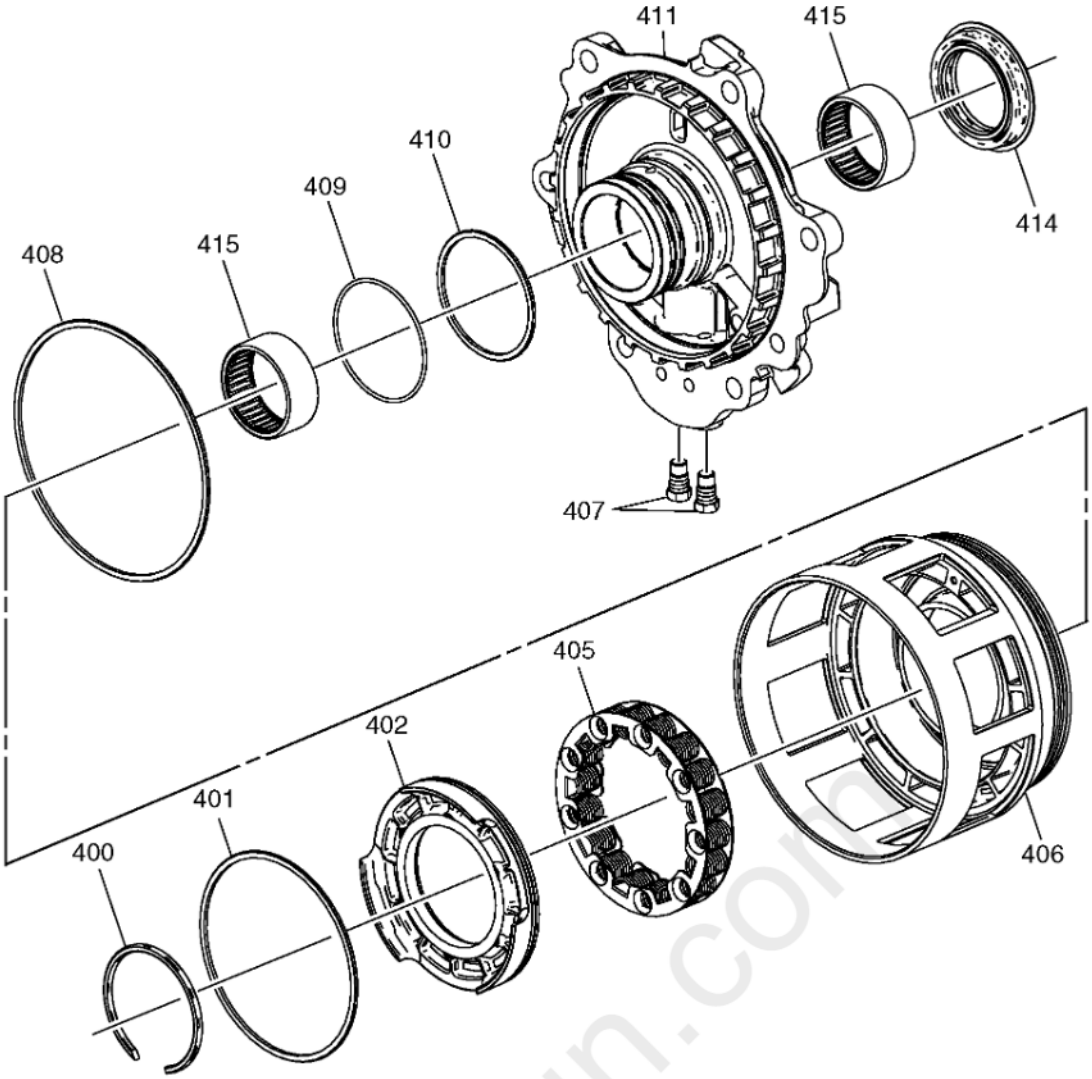

Fig. 26: A/Trans Case Extension Assembly (Two Wheel Drive)
Courtesy of GENERAL MOTORS COMPANY

Callout	Component Name
400	1-2-3-4-5 Reverse Clutch Piston Dam Retaining Ring
401	1-2-3-4-5 Reverse Clutch Piston Dam Seal
402	1-2-3-4-5 Reverse Clutch Piston Dam
405	1-2-3-4-5 Reverse Clutch Piston Return Spring
406	1-2-3-4-5 Reverse Clutch Piston
407	A/Trans Case Extension Hole Plug
408	1-2-3-4-5 Reverse Clutch Piston Outer Seal
409	1-2-3-4-5 Reverse Clutch Piston Dam Inner Seal (O-ring)
410	1-2-3-4-5 Reverse Clutch Piston Inner Seal
411	A/Trans Case Extension
414	Propeller Shaft Transmission Flange Fluid Seal
415	Output Shaft Bearing

1-3-5-6-7 Clutch Housing Assembly

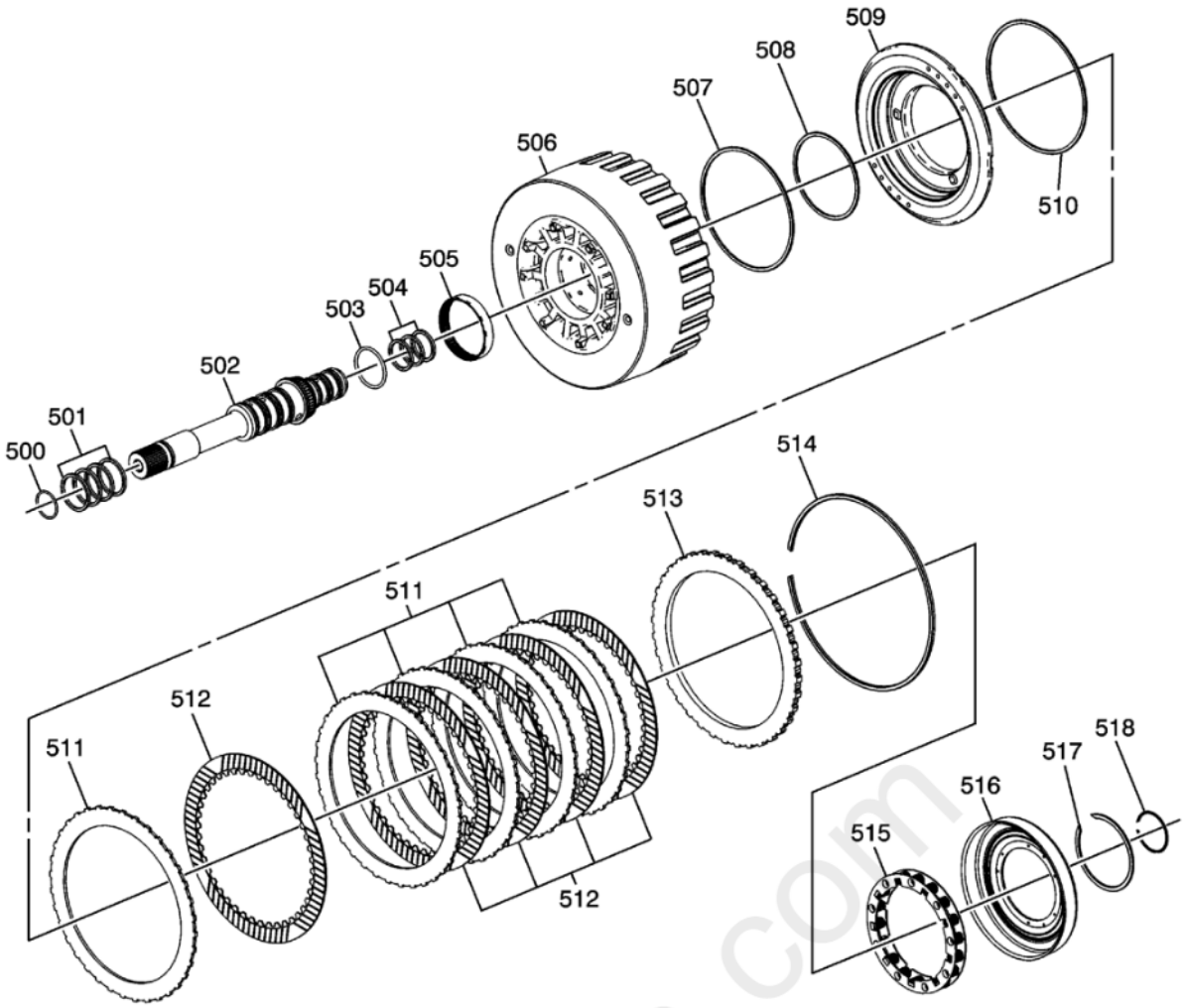

Fig. 27: 1-3-5-6-7 Clutch Housing Assembly
Courtesy of GENERAL MOTORS COMPANY

Callout	Component Name
500	Turbine Shaft O-ring Seal
501	Turbine Shaft Fluid Seal Ring
502	Turbine Shaft
503	Turbine Shaft O-ring Seal
504	Turbine Shaft Fluid Seal Ring
505	1-3-5-6-7 Clutch Bearing
506	1-3-5-6-7 Clutch Housing
507	1-3-5-6-7 Clutch Piston Seal (Outer)
508	1-3-5-6-7 Clutch Piston Seal (Inner)
509	1-3-5-6-7 Clutch Piston
510	1-3-5-6-7 Clutch Piston Dam Seal
511	1-3-5-6-7 Clutch Plate
512	1-3-5-6-7 Clutch Plate Assembly
513	1-3-5-6-7 Clutch Backing Plate
514	1-3-5-6-7 Clutch Backing Plate Retaining Ring (Selective)
515	1-3-5-6-7 Clutch Piston Return Spring
516	1-3-5-6-7 Clutch Piston Dam
517	1-3-5-6-7 Clutch Piston Dam Retaining Ring
518	Turbine Shaft Retaining Ring

2-3-4-6-8 and 4-5-6-7-8 Reverse Clutch Housing Assembly

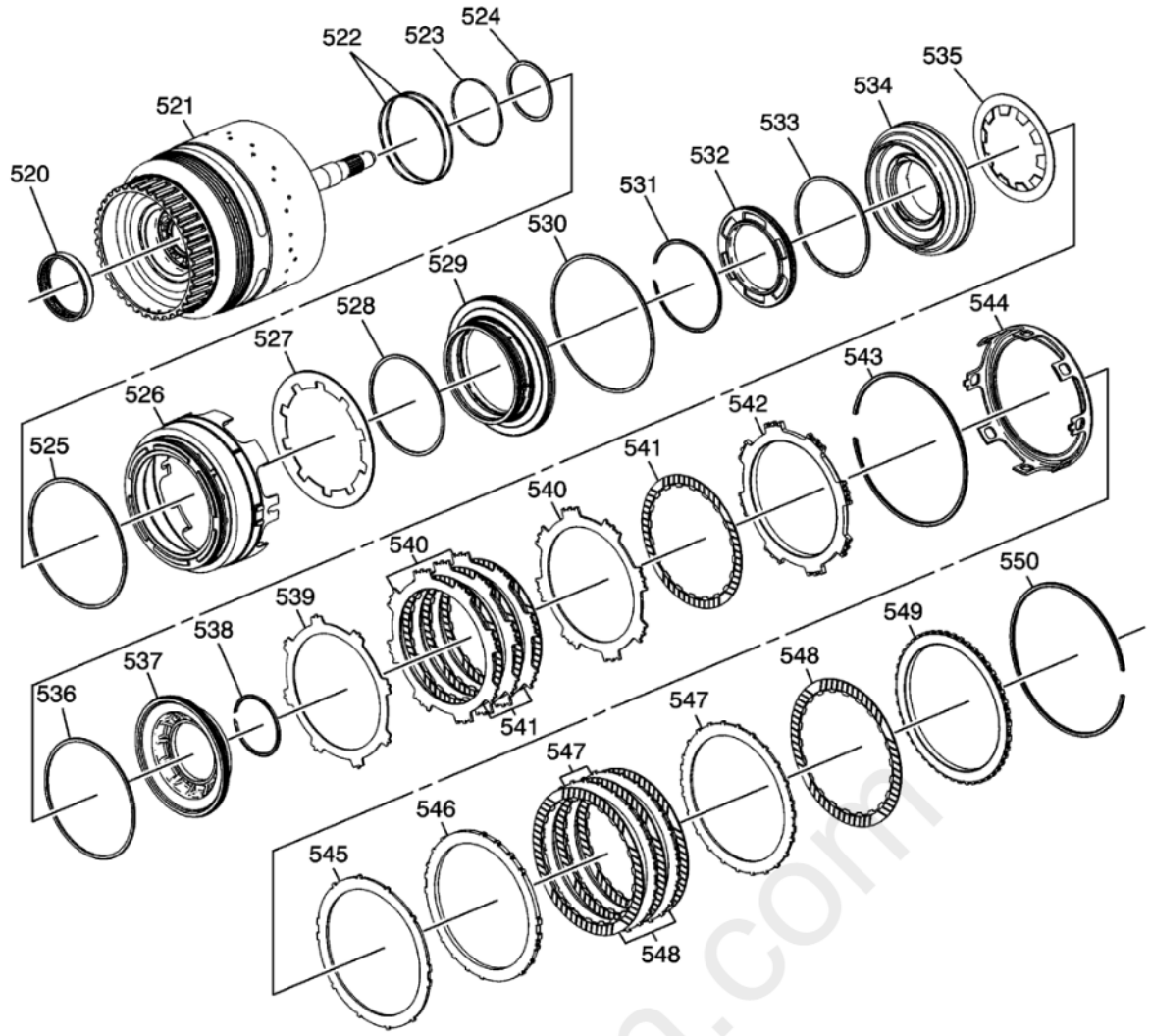

Fig. 28: 2-3-4-6-8 and 4-5-6-7-8 Reverse Clutch Housing Assembly
Courtesy of GENERAL MOTORS COMPANY

Callout	Component Name
520	2-3-4-6-8 and 4-5-6-7-8 Reverse Clutch Housing Bearing
521	2-3-4-6-8 and 4-5-6-7-8 Reverse Clutch Housing
522	2-3-4-6-8 Clutch Piston Dam Seal
523	4-5-6-7-8 Reverse Clutch Piston Stop Seal (O-ring)
524	4-5-6-7-8 Reverse Clutch Piston Seal
525	2-3-4-6-8 Clutch Piston Seal
526	2-3-4-6-8 Clutch Piston
527	2-3-4-6-8 Clutch Piston Return Spring
528	2-3-4-6-8 Clutch Piston Dam Seal (Inner)
529	2-3-4-6-8 Clutch Piston Dam
530	2-3-4-6-8 Clutch Piston Dam Seal (Outer)
531	2-3-4-6-8 Clutch Piston Dam Retaining Ring
532	4-5-6-7-8 Reverse Clutch Piston Stop
533	4-5-6-7-8 Reverse Clutch Piston Seal
534	4-5-6-7-8 Reverse Clutch Piston
535	4-5-6-7-8 Reverse Clutch Piston Return Spring
536	4-5-6-7-8 Reverse Clutch Piston Seal
537	4-5-6-7-8 Reverse Clutch Piston Dam
538	4-5-6-7-8 Reverse Clutch Piston Dam Retaining Ring
539	4-5-6-7-8 Reverse Clutch (Waved) Plate
540	4-5-6-7-8 Reverse Clutch Plate
541	4-5-6-7-8 Reverse Clutch Plate Assembly
542	4-5-6-7-8 Reverse Clutch Backing Plate

Callout	Component Name
543	4-5-6-7-8 Reverse Clutch Backing Plate Retaining Ring (Selective)
544	2-3-4-6-8 Clutch Apply Ring
545	2-3-4-6-8 Clutch (Waved) Plate
546	2-3-4-6-8 Clutch Apply Plate
547	2-3-4-6-8 Clutch Plate
548	2-3-4-6-8 Clutch Plate Assembly
549	2-3-4-6-8 Clutch Backing Plate
550	2-3-4-6-8 Clutch Backing Plate Retaining Ring

Direct/Overdrive Internal Gear Assembly

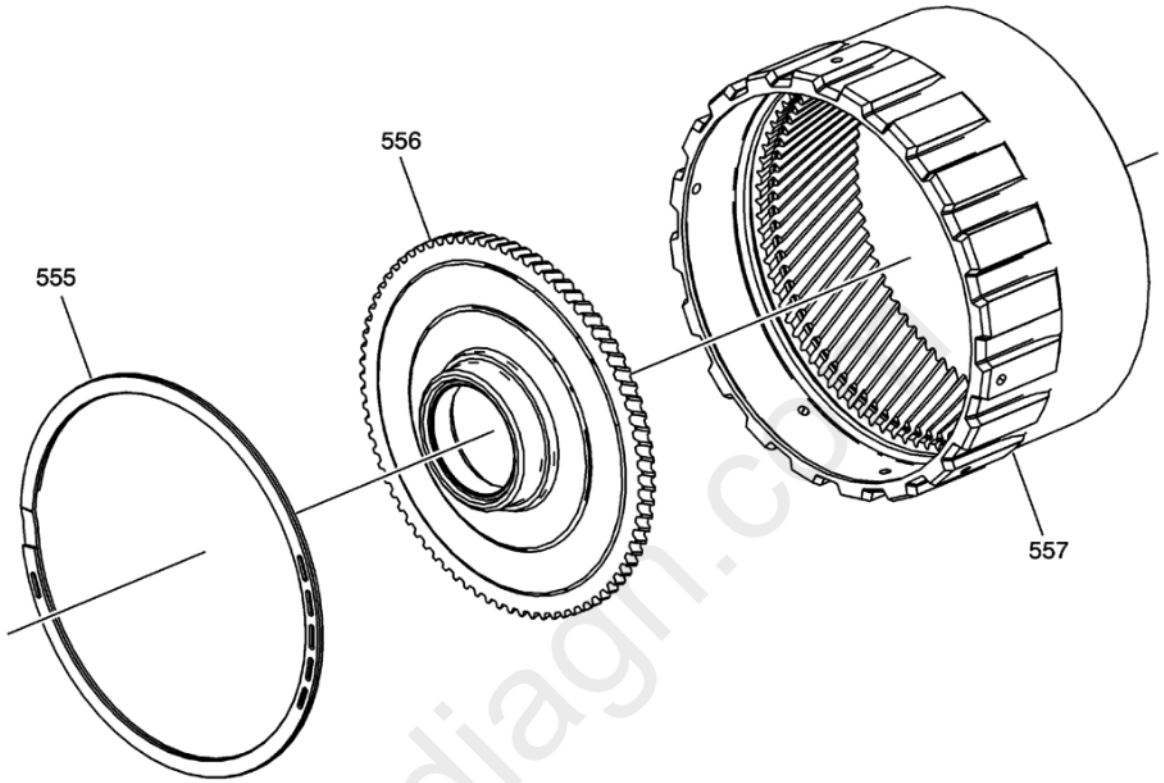

Fig. 29: Direct/Overdrive Internal Gear Assembly
Courtesy of GENERAL MOTORS COMPANY

Callout	Component Name
555	Direct/Overdrive Internal Gear Retaining Ring
556	Direct/Overdrive Internal Gear Flange
557	Direct/Overdrive Internal Gear

Input Internal Gear Assembly

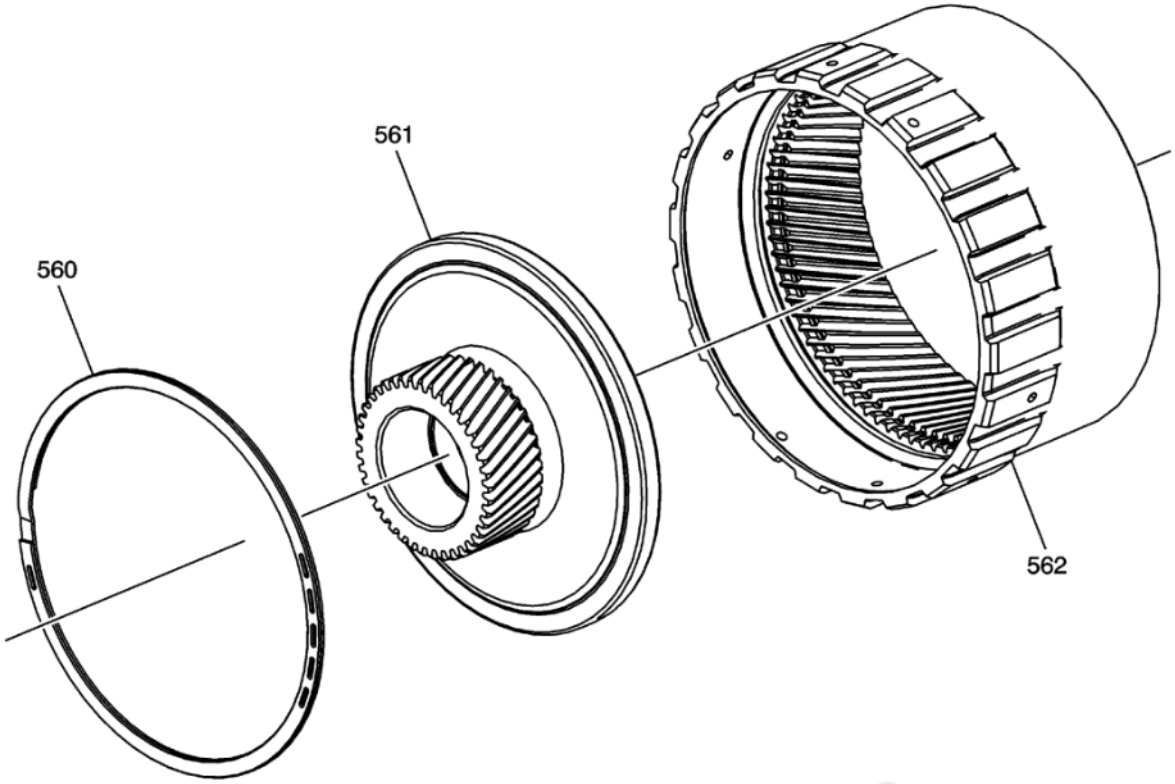

Fig. 30: Input Internal Gear Assembly
Courtesy of GENERAL MOTORS COMPANY

Callout	Component Name
560	Input Internal Gear Retaining Ring
561	Direct/Overdrive Sun Gear
562	Input Internal Gear

Input Carrier Assembly

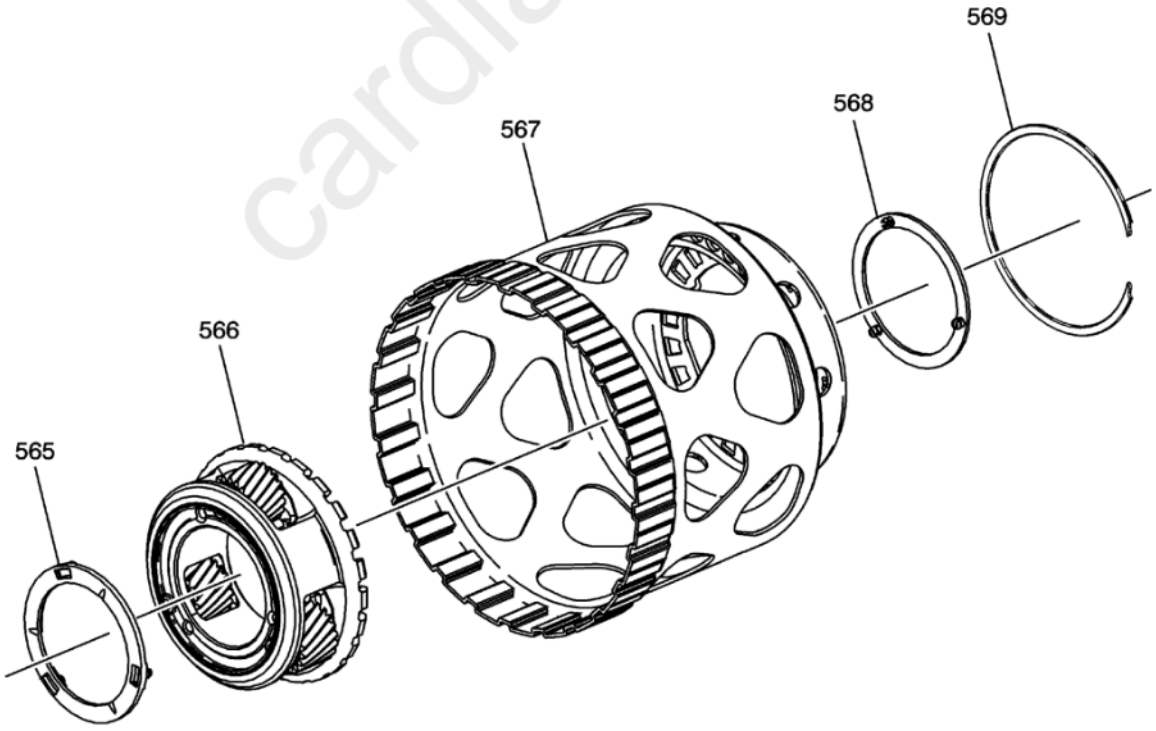

Fig. 31: Input Carrier Assembly
Courtesy of GENERAL MOTORS COMPANY

Callout	Component Name
565	Input Carrier Thrust Washer

cardiagn.com

Callout	Component Name
566	Input Carrier
567	Input Carrier Shell
568	Input Carrier Thrust Washer
569	Input Carrier Shell Retaining Ring

Input Sun Gear Assembly

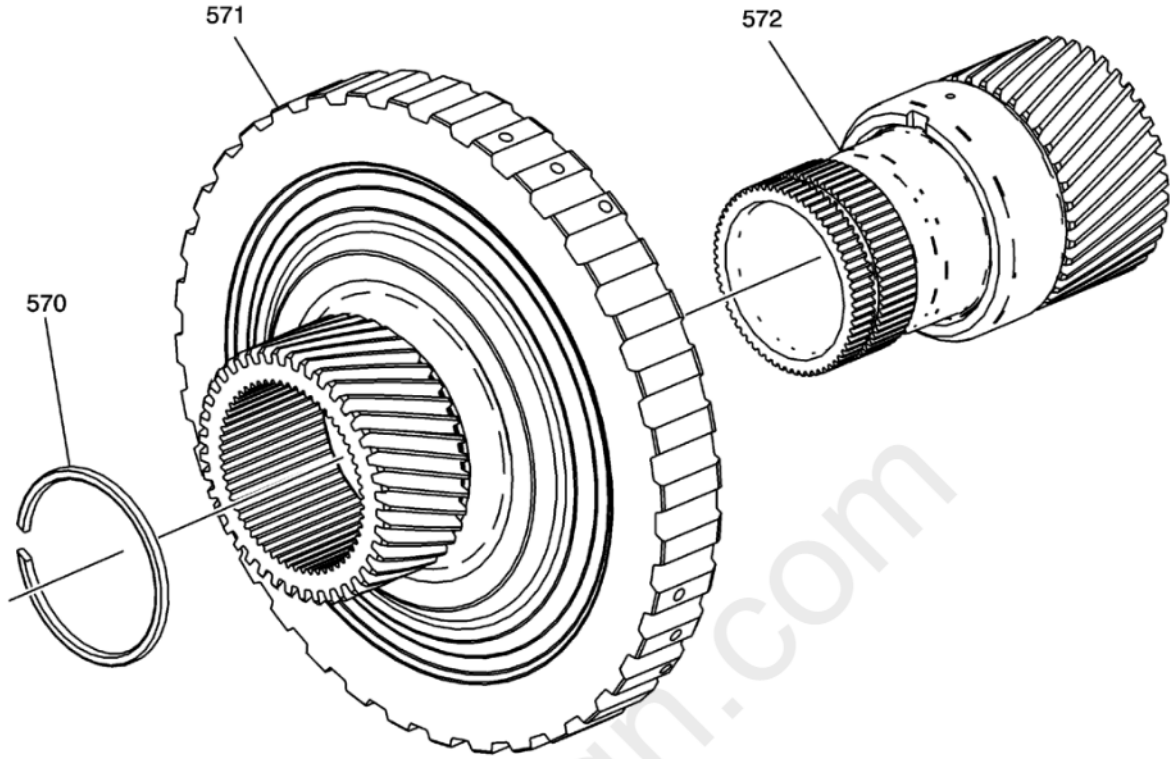

Fig. 32: Input Sun Gear Assembly
Courtesy of GENERAL MOTORS COMPANY

Callout	Component Name
570	Input Sun Gear Retaining Ring
571	Input Sun Gear Assembly
572	Reaction Sun Gear Assembly

Reaction Internal Gear and 1-2-3-4-5 Reverse Clutch Hub Assembly

cardiagn.com

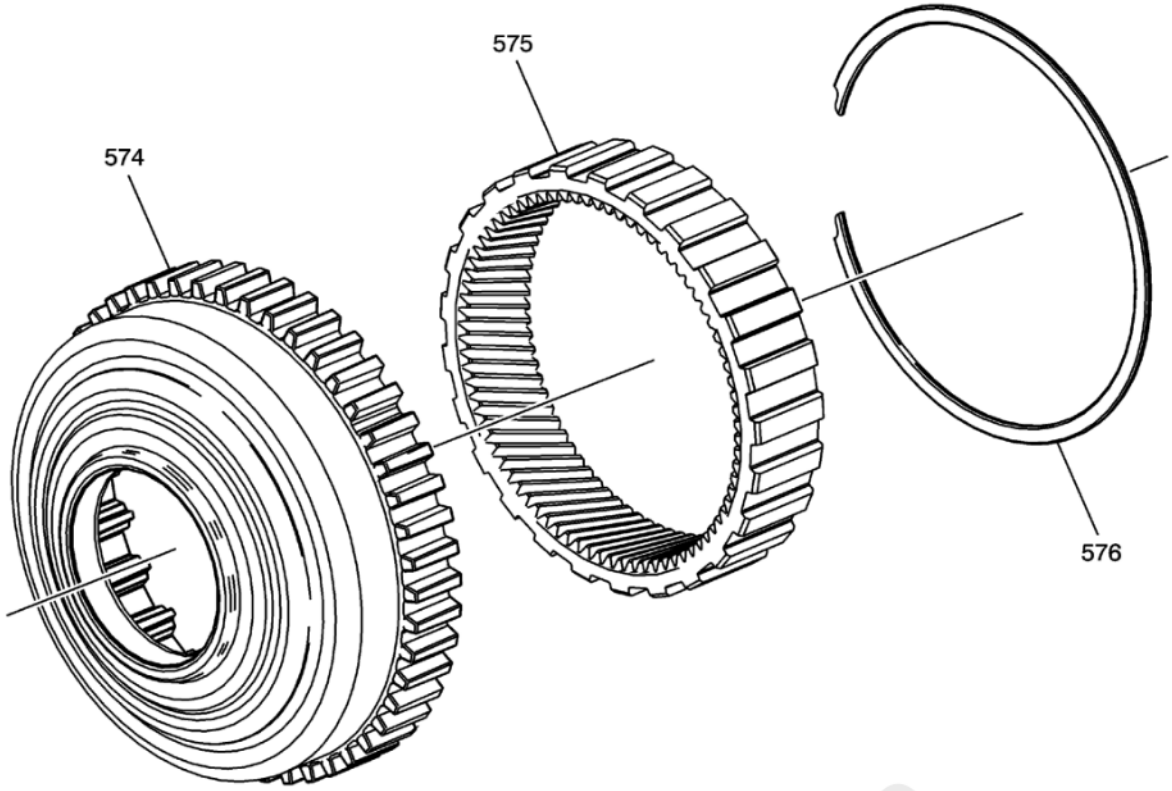

Fig. 33: Reaction Internal Gear and 1-2-3-4-5 Reverse Clutch Hub Assembly
Courtesy of GENERAL MOTORS COMPANY

Callout	Component Name
574	Reaction Internal Gear and 1-2-3-4-5 Reverse Clutch Hub
575	Reaction Internal Gear
576	Reaction Internal Gear Retaining Ring

Reaction Carrier Assembly

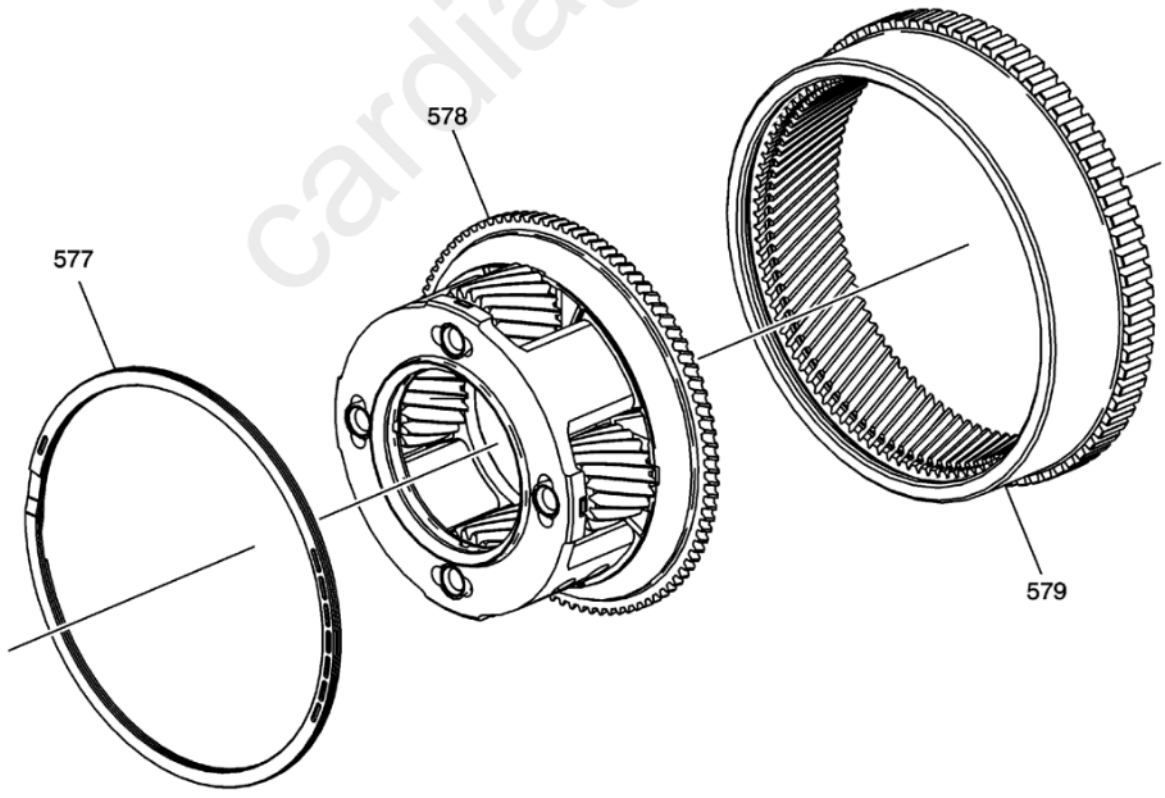

Fig. 34: Reaction Carrier Assembly
Courtesy of GENERAL MOTORS COMPANY

Callout	Component Name
577	Output Internal Gear Retaining Ring

Callout	Component Name
578	Reaction Carrier Assembly
579	Output Carrier Internal Gear

1-2-3-4-5 Reverse and 1-2-7-8 Reverse Clutch Assemblies

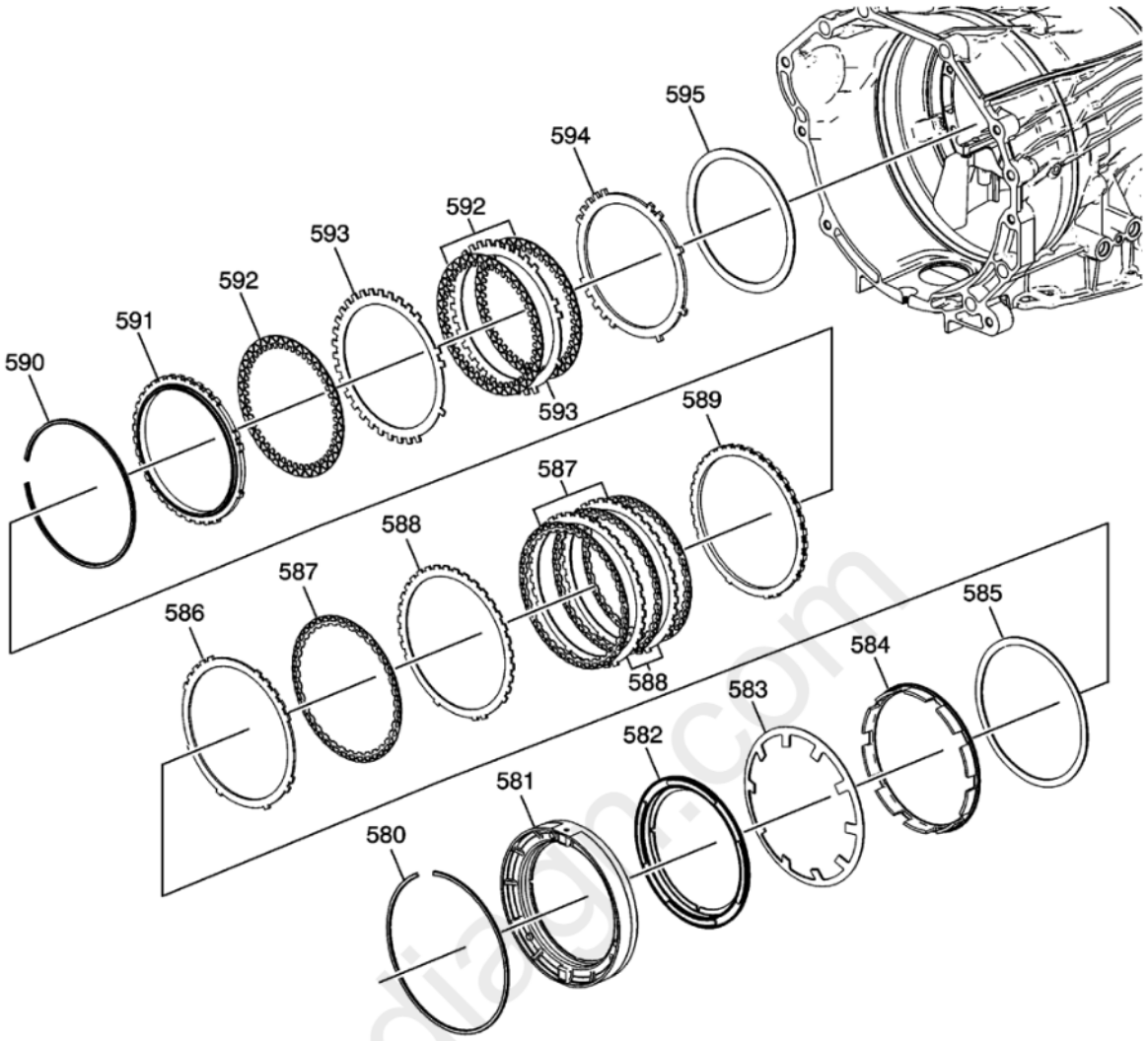

Fig. 35: 1-2-3-4-5 Reverse and 1-2-7-8 Reverse Clutch Assemblies
Courtesy of GENERAL MOTORS COMPANY

Callout	Component Name
580	1-2-7-8 Reverse Clutch Piston Housing Retaining Ring
581	1-2-7-8 Reverse Clutch Piston Housing (with Orifice)
582	1-2-7-8 Reverse Clutch Piston (Bonded Lip)
583	1-2-7-8 Reverse Clutch Return Spring
584	1-2-7-8 Reverse Clutch Apply Ring
585	1-2-7-8 Reverse Clutch (Waved) Plate
586	1-2-7-8 Reverse Clutch Apply Plate
587	1-2-7-8 Reverse Clutch Plate Assembly
588	1-2-7-8 Reverse Clutch Plate
589	1-2-7-8 Reverse Clutch Backing Plate
590	1-2-3-4-5 Reverse Clutch Backing Plate Retaining Ring (Selective)
591	1-2-3-4-5 Reverse Clutch Backing Plate
592	1-2-3-4-5 Reverse Clutch Plate Assembly
593	1-2-3-4-5 Reverse Clutch Plate
594	1-2-3-4-5 Reverse Clutch Apply Plate
595	1-2-3-4-5 Reverse Clutch (Waved) Plate

Park System Components

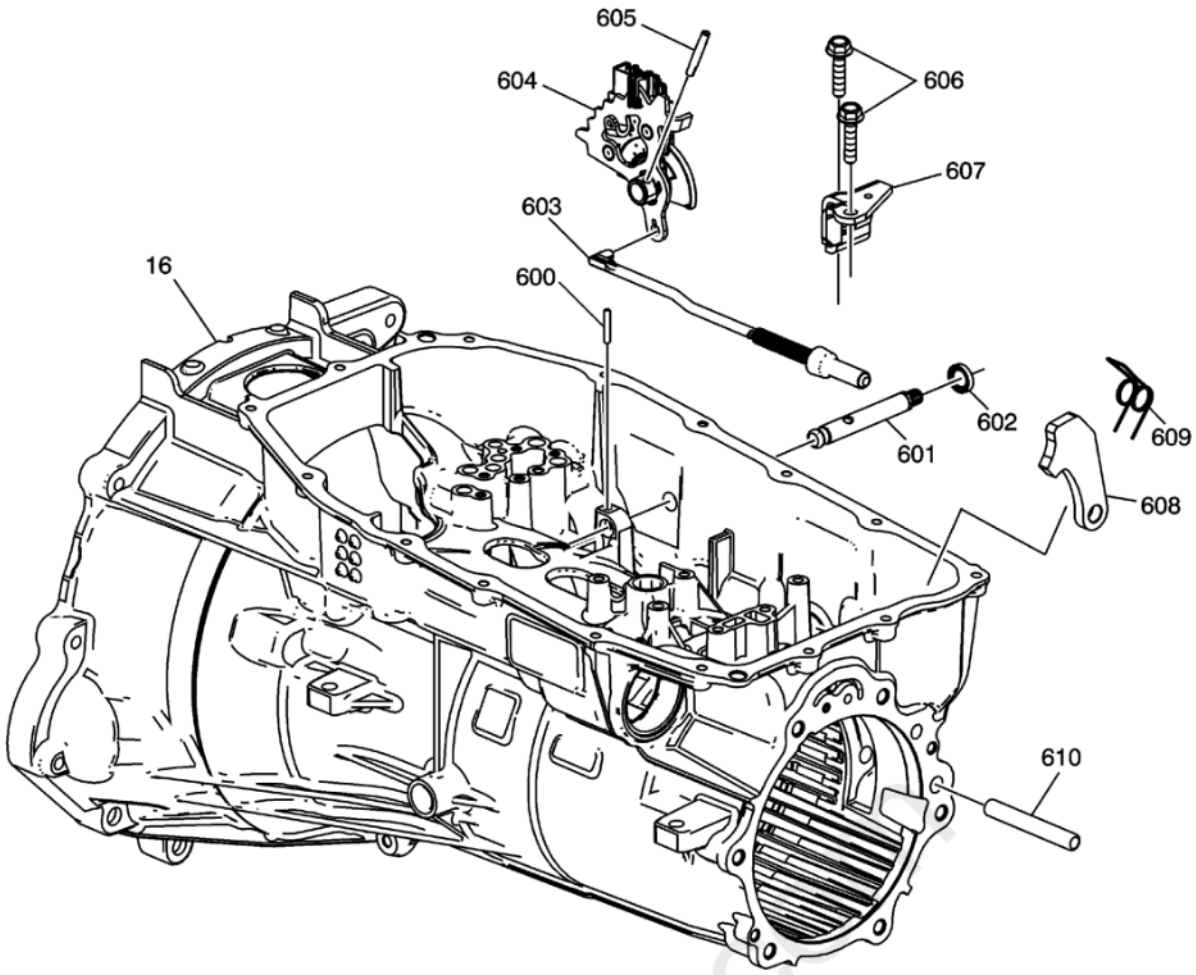

Fig. 36: Park System Components
Courtesy of GENERAL MOTORS COMPANY

Callout	Component Name
16	A/Trans Case Assembly
600	Manual Shift Shaft Pin
601	Manual Shift Shaft
602	Manual Shift Shaft Seal
603	Park Pawl Actuator Assembly
604	Manual Shift Shaft Position Switch Assembly
605	Manual Shaft Detent Lever Hub Pin
606	Park Pawl Actuator Bracket Bolt
607	Park Pawl Actuator Bracket
608	Park Pawl
609	Park Pawl Spring
610	Park Pawl Shaft

COMPONENT LOCATION

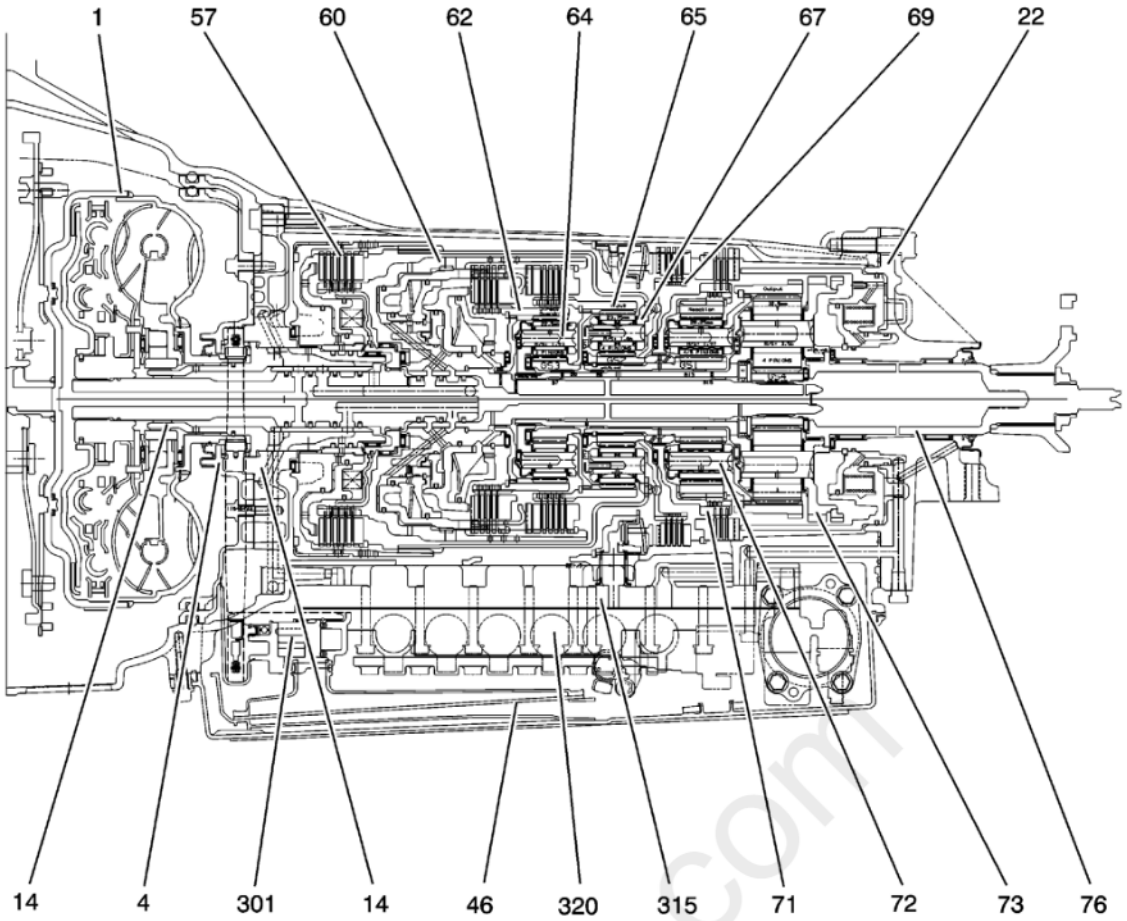

Fig. 37: Automatic Transmission Component Locations -- 8L90
Courtesy of GENERAL MOTORS COMPANY

Callout	Component Name
1	Torque Converter
4	A/Trans Case Front Cover
14	Stator Shaft Support
22	A/Trans Case Extension Assembly
46	A/Trans Fluid Filter
57	1-3-5-6-7 Clutch Assembly
60	2-3-4-6-8 and 4-5-6-7-8 Reverse Clutch Assembly
62	Direct/Overdrive Internal Gear Assembly
64	Direct/Overdrive Carrier Assembly
65	Input Internal Gear Assembly
67	Input Carrier Assembly
69	Input Sun Gear Assembly
71	Reaction Internal Gear and 1-2-3-4-5 Reverse Hub Assembly
72	Reaction Carrier Assembly with Output Internal Gear Assembly
73	Output Carrier Assembly
76	Output Shaft
301	A/Trans Fluid Pump Assembly
315	Control Valve Upper Body
320	Control Valve Solenoid Body Assembly

BUSHING, BEARING AND WASHER LOCATIONS

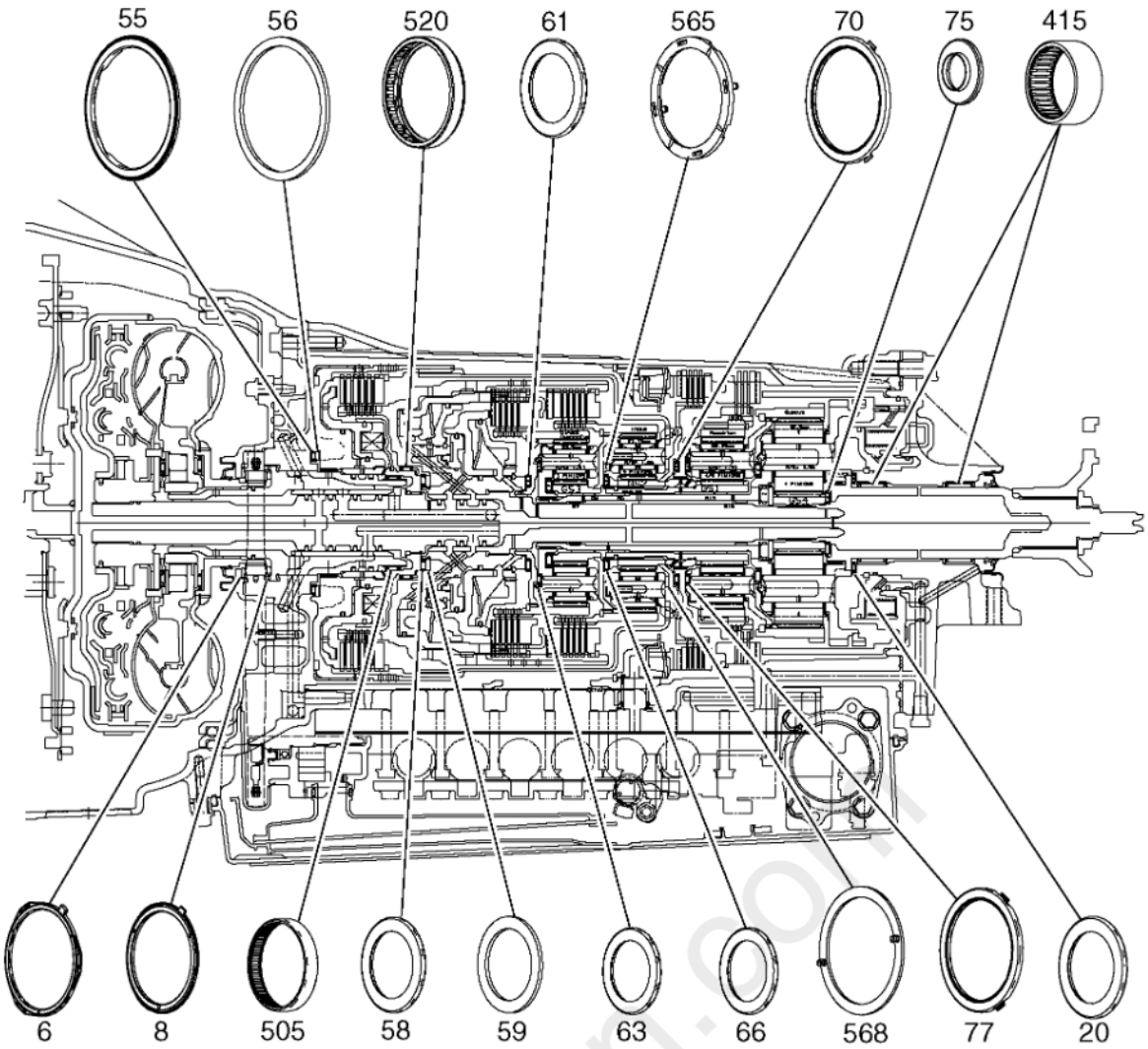

Fig. 38: Bushing, Bearing and Washer Locations
Courtesy of GENERAL MOTORS COMPANY

Callout	Component Name
6	Drive Sprocket Thrust Washer - Front
8	Drive Sprocket Thrust Washer - Rear
20	Output Shaft Bearing
55	1-3-5-6-7 Clutch Thrust Bearing
56	1-3-5-6-7 Clutch Thrust Bearing Washer
58	2-3-4-6-8 and 4-5-6-7-8 Reverse Clutch Thrust Bearing
59	2-3-4-6-8 and 4-5-6-7-8 Reverse Clutch Thrust Bearing Washer
61	Input Sun Gear Thrust Bearing
63	Direct/Overdrive Carrier Thrust Bearing (8L45 Only)
66	Input Sun Gear Thrust Bearing
70	1-2-3-4-5 Reverse Clutch Hub Thrust Bearing
75	Output Sun Gear Thrust Bearing
77	Reaction Carrier Thrust Bearing (8L45 Only)
415	Output Shaft Bearing (Quantity Model Dependent)
505	1-3-5-6-7 Clutch Bearing
520	2-3-4-6-8 and 4-5-6-7-8 Reverse Clutch Housing Bearing
565	Input Carrier Thrust Washer
568	Input Carrier Thrust Washer

SEAL LOCATIONS

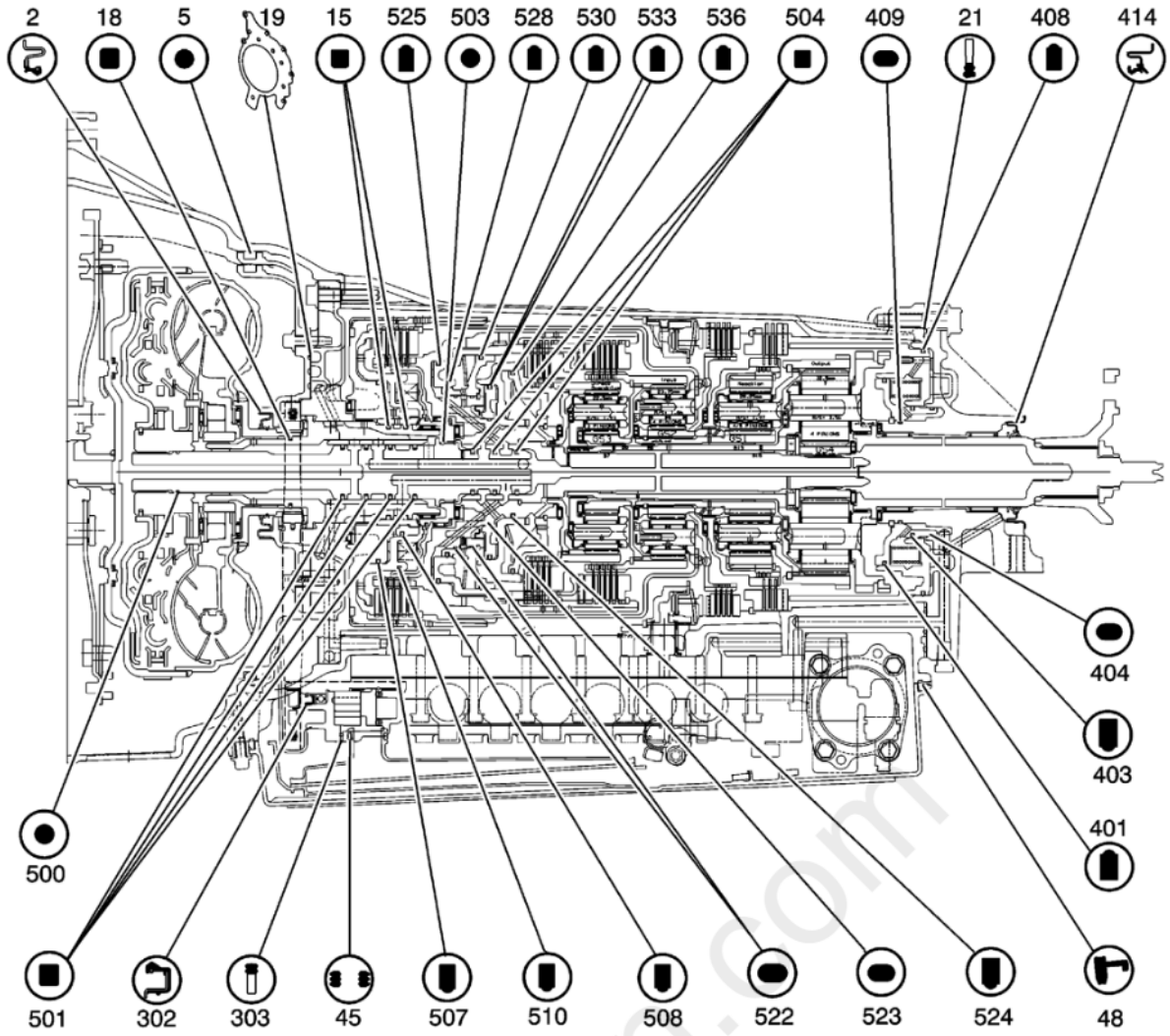

Fig. 39: Seal Locations
Courtesy of GENERAL MOTORS COMPANY

Callout	Component Name
2	Torque Converter Fluid Seal
5	A/Trans Case Front Cover Seal
15	1-3-5-6-7 Clutch Fluid Seal Ring
18	Torque Converter Fluid Seal
19	A/Trans Front Support Cover Gasket
21	A/Trans Case Extension Seal
45	A/Trans Fluid Filter Seal
48	A/Trans Fluid Pan Gasket
302	A/Trans Fluid Pump Seal
303	A/Trans Fluid Pump Gasket
401	1-2-3-4-5 Reverse Clutch Piston Dam Seal
403	1-2-3-4-5 Reverse Clutch Piston Inner Seal
404	1-2-3-4-5 Reverse Clutch Piston O-ring Seal
408	1-2-3-4-5 Reverse Clutch Piston Outer Seal
409	1-2-3-4-5 Reverse Clutch Piston Dam Inner O-ring Seal
414	Propeller Shaft Transmission Flange Fluid Seal (Outer)
500	Turbine Shaft O-ring Seal
501	Turbine Shaft Fluid Seal Ring
503	Turbine Shaft O-ring Seal
504	Turbine Shaft Fluid Seal
507	1-3-5-6-7 Clutch Piston Outer Seal
508	1-3-5-6-7 Clutch Piston Inner Seal
510	1-3-5-6-7 Clutch Piston Dam Seal

Callout	Component Name
522	2-3-4-6-8 Clutch Piston Dam Seal
523	4-5-6-7-8 Reverse Clutch Piston Stop O-ring Seal
524	4-5-6-7-8 Reverse Clutch Piston Seal
525	2-3-4-6-8 Clutch Piston Seal
528	2-3-4-6-8 Clutch Piston Dam Inner Seal
530	2-3-4-6-8 Clutch Piston Dam Outer Seal
533	4-5-6-7-8 Reverse Clutch Piston Seal
536	4-5-6-7-8 Reverse Clutch Piston Dam Seal

BALL CHECK VALVE LOCATIONS

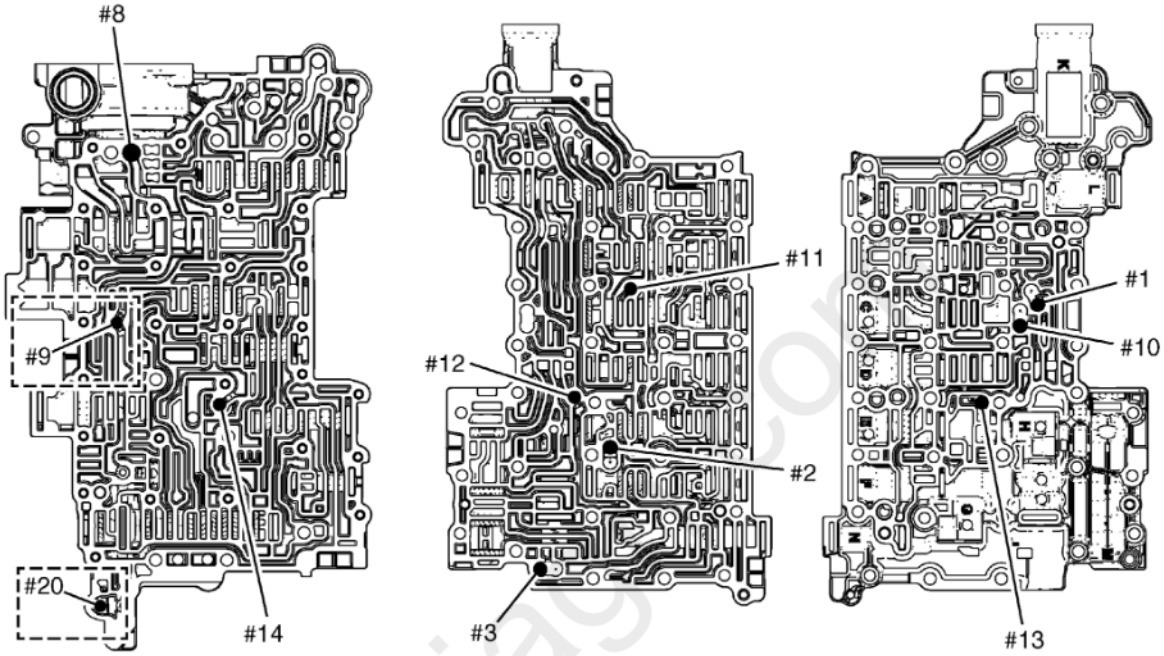

Fig. 40: Ball Check Valve Locations
Courtesy of GENERAL MOTORS COMPANY

I.D.	Input Oil	Input Oil	Output Oil
#1	C23468	Reverse	C23468/Reverse
#2	C45678R Drive Feed	Reverse	C45678 Feed
#3	Default Latch	S9 On/Off Signal	Default Latch/S9 On/Off Signal
#8	Line	-	Secondary Line
#9	Line	-	Line
#10	C23468	C45678R	C45678R/C23468
#11	C13567/C23468 Feed	-	C13567/C23468 Feed
#12	Actuator Feed	-	C45678R Feedback
#13	C45678R Feed	-	C45678R Feed
#14	C1278R Feedback	-	Actuator Feed
#20	Line	-	Line

TRANSMISSION SOLENOID INFORMATION

Transmission Control Solenoids

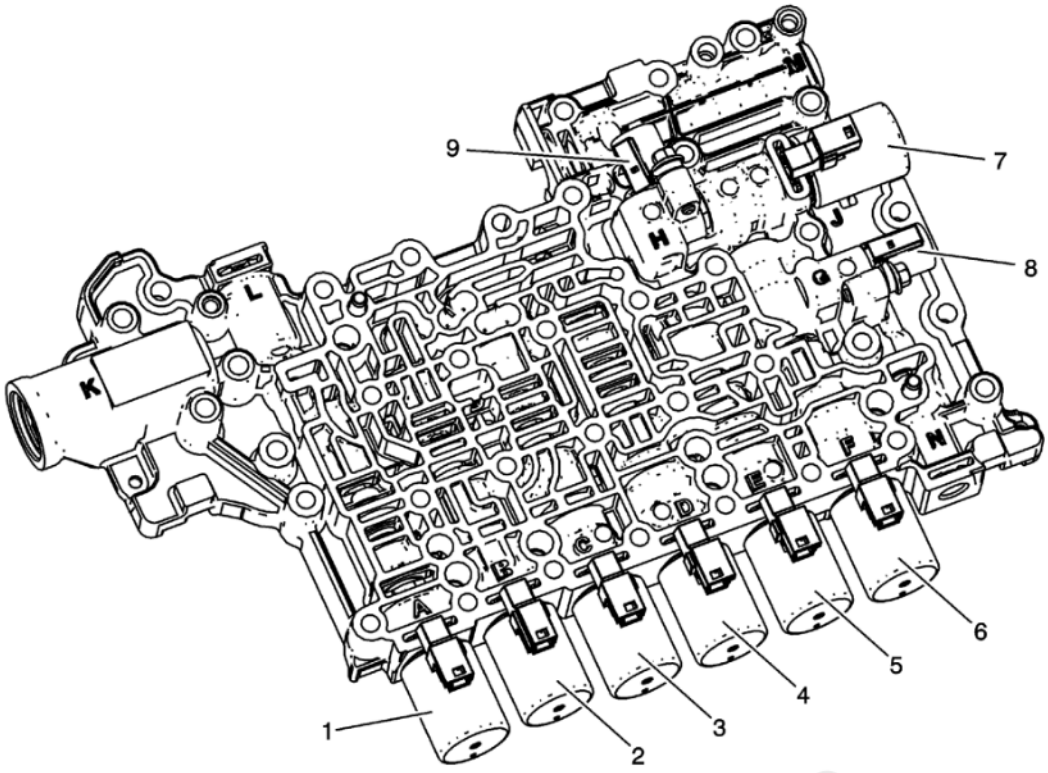

Fig. 41: Transmission Control Solenoids
Courtesy of GENERAL MOTORS COMPANY

NOTE: **The letter B is not cast on the lower control valve solenoid body. It is shown on the above graphic for illustration only.**

Transmission Control Solenoids

Callout Number	Actuator High Control Circuit Group	Solenoid Name	Solenoid Type	Controlled Element	Lower Control Valve Body Bore Location	Resistance Value at 20Ã‚Â°C (68Ã‚Â°F)
1	2	Transmission Control Solenoid Valve 7	High Pressure, Normally Low, Variable Force	Torque Converter Clutch (TCC)	A	4.5-5.5 Ω
2	1	Transmission Control Solenoid Valve 4	High Pressure, Normally High, Variable Force	2-3-4-6-8 Clutch	B	4.5-5.5 Ω
3	2	Transmission Control Solenoid Valve 3	High Pressure, Normally Low, Variable Force	1-3-5-6-7 Clutch	C	4.5-5.5 Ω
4	1	Transmission Control Solenoid Valve 5	Low Pressure, Normally High, Variable Force	4-5-6-7-8-Reverse Clutch	D	4.5-5.5 Ω

cardiagn.com

Callout Number	Actuator High Control Circuit Group	Solenoid Name	Solenoid Type	Controlled Element	Lower Control Valve Body Bore Location	Resistance Value at 20Ã‚Â°C (68Ã‚Â°F)
5	2	Transmission Control Solenoid Valve 1	Low Pressure, Normally High, Variable Force	1-2-7-8-Reverse Clutch	E	4.5-5.5 Ω
6	2	Transmission Control Solenoid Valve 2	High Pressure, Normally Low, Variable Force	1-2-3-4-5-Reverse Clutch	F	4.5-5.5 Ω
7	2	Transmission Control Solenoid Valve 6	Low Pressure, Normally High, Variable Force	Line Pressure	J	4.5-5.5 Ω
8	2	Transmission Control Solenoid Valve 9	Normally Closed, ON - OFF	Boost Valve	G	11.0-13.0Ω
9	1	Transmission Control Solenoid Valve 8	Normally Closed, ON - OFF	Default Valve	H	11.0-13.0 Ω

Transmission Fluid Pressure Accumulator Solenoid Valve - If Equipped

cardiagn.com

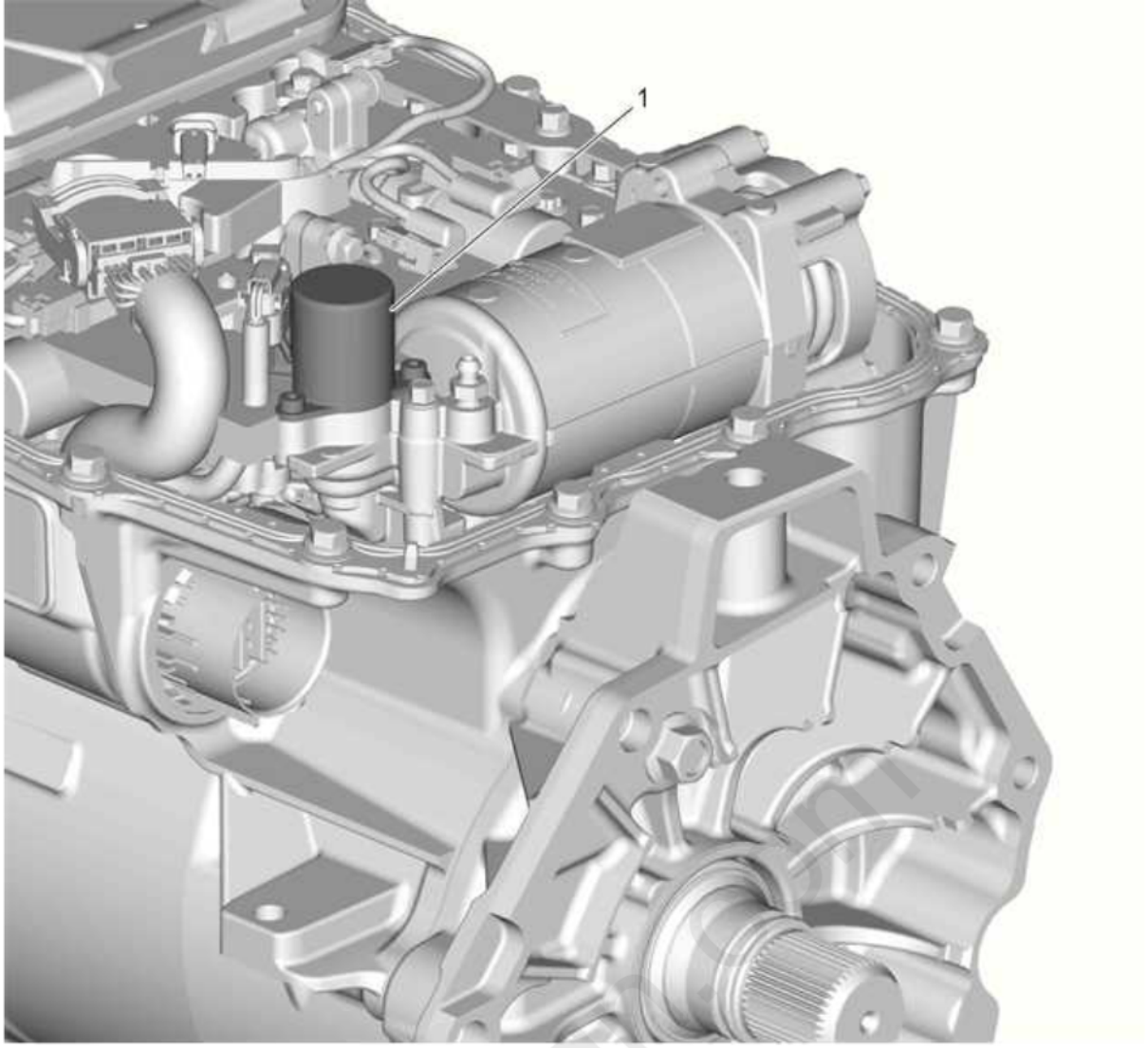

Fig. 42: Transmission Fluid Pressure Accumulator Solenoid Valve - If Equipped
Courtesy of GENERAL MOTORS COMPANY

Transmission Fluid Pressure Accumulator Solenoid Valve - If Equipped

Callout Number	Solenoid Name	Solenoid Type	Controlled Elements	Location	Resistance Value @ 20Ã‚Â°C (68Ã‚Â°F)
1	Transmission Fluid Pressure Accumulator Solenoid Valve	Normally Closed, ON-OFF	Sends captured pressurized fluid to apply clutches for 1st gear operation	Bolted to the Transmission Fluid Pressure Accumulator Housing	17-19 Ω

Back To Article

DESCRIPTION AND OPERATION

TRANSMISSION IDENTIFICATION INFORMATION

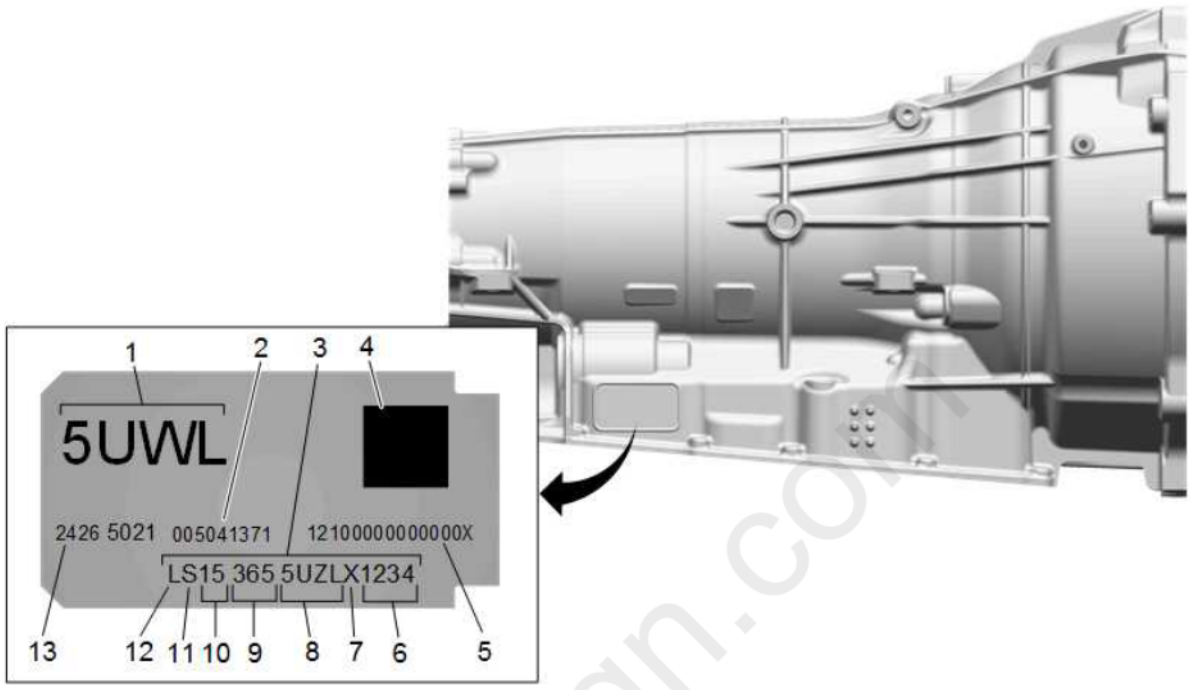

Fig. 1: Transmission Identification Label
Courtesy of GENERAL MOTORS COMPANY

1. Broadcast Code
2. Source DUNS Number
3. Transmission Unique Number (TUN)
4. 2D Machine Readable Matrix
5. VPPS Code
6. Part Sequence Number
7. Site ID
8. Broadcast Code
9. Julian Date
10. Year of Build
11. Shift ID
12. Line Plant ID
13. GM Part Number

CONTROL VALVE SOLENOID BODY IDENTIFICATION INFORMATION

cardiagn.com

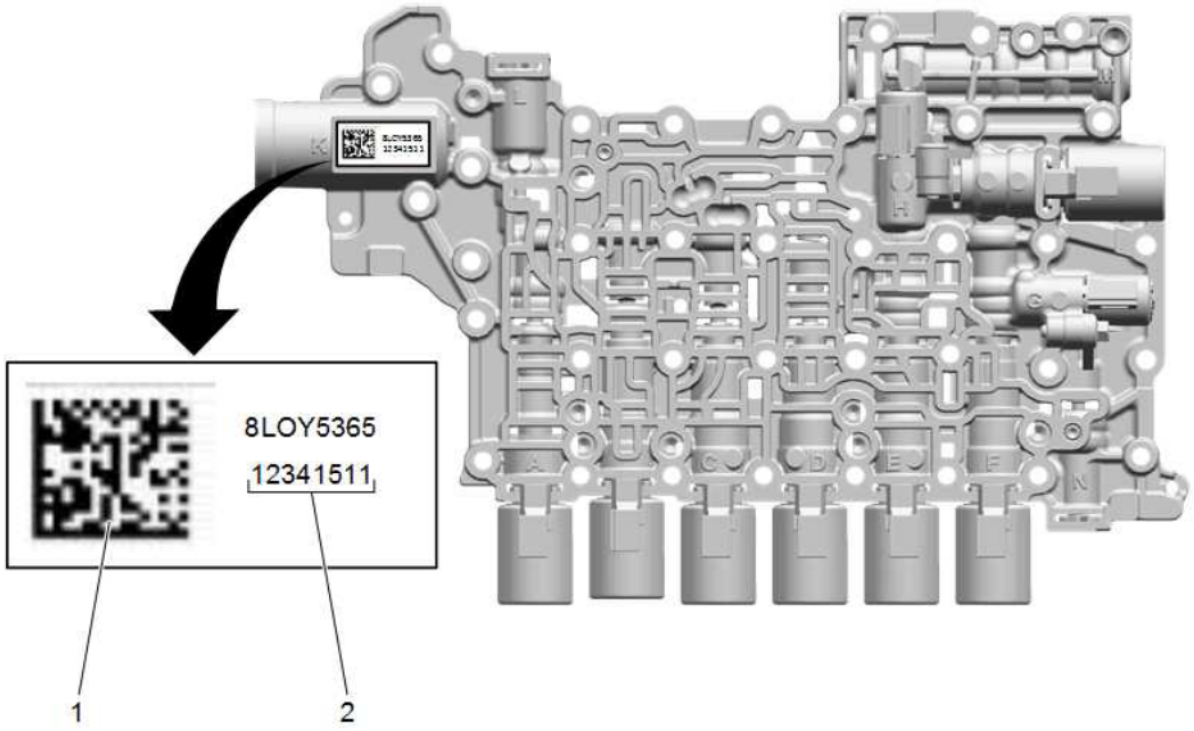

Fig. 2: Control Valve Solenoid Body Identification Information
Courtesy of GENERAL MOTORS COMPANY

1. Data Matrix
2. Part Unique Number (PUN)

TRANSMISSION GENERAL DESCRIPTION

The Hydra-matic 8-Speed RWD is a fully automatic, 8-speed, rear-wheel drive, electronic-controlled transmission. The eight speed ratios are generated using four simple planetary gearsets, two brake clutches and three rotating clutches. The resultant on-axis transmission architecture utilizes a squashed torque converter, an off-axis pump and four close coupled gearsets. The three rotating clutches have been located forward of the gearsets to minimize the length of oil feeds which provides for enhanced shift response. There are different variants of the transmission, all based on torque capacity. Architecture is common between the variants and component differences are primarily related to size.

The transmission architecture features a case with integral bell housing for enhanced powertrain stiffness. A unique pump drive design allows for off-axis packaging very low in the transmission. The pump is a binary vane type which effectively allows for two pumps in the packaging size of one. This design and packaging strategy not only enables low parasitic losses and optimum priming capability but also provides for ideal oil routing to the controls system, with the pump located in the valve body itself. The transmission control module (TCM) is externally mounted, enabling packaging and powertrain integration flexibility. The controller makes use of three speed sensors which provide for enhanced shift response and accuracy.

The 4-element torque converter contains a pump, a turbine, a pressure plate splined to the turbine and a stator assembly. The torque converter acts as a fluid coupling to smoothly transmit power from the engine to the transmission. It also hydraulically provides additional torque multiplication when required. The pressure plate, when applied, provides a mechanical direct drive coupling of the engine to the transmission.

The planetary gear sets provide the 8 forward gear ratios and reverse. Changing gear ratios is fully automatic and is accomplished through the use of a transmission control module (TCM). The TCM receives and monitors various electronic sensor inputs and uses this information to shift the transmission at the optimum time.

The hydraulic system primarily consists of an off-axis chain-driven binary vane-type pump located in the valve body and 2 control valve body assemblies. The pump maintains the working pressures needed to stroke the clutch pistons that apply or release the friction components. These friction components, when applied or released, support the automatic shifting qualities of the transmission.

The friction components used in this transmission consist of 5 multiple disc clutches. The multiple disc clutches deliver 7 different gear ratios, 8 forward and one reverse, through the gear sets. The gear sets then transfer torque through the output shaft.

The transmission may be operated in any of the following gear ranges:

PARK (P)

This position locks the rear wheels and prevents the vehicle from rolling either forward or backward. PARK is the best position to use when starting the vehicle. Because the transmission utilizes a shift lock control system, it is necessary to fully depress the brake pedal before shifting out of PARK. For safety reasons, use the parking brake in addition to the PARK position.

REVERSE (R)

This position allows the vehicle to be operated in a rearward direction.

NEUTRAL (N)

This position allows the engine to be started and operated while driving the vehicle. If necessary, you may select this position in order to restart the engine with the vehicle moving. This position should also be used when towing the vehicle.

DRIVE (D)

Drive range should be used for all normal driving conditions for maximum efficiency and fuel economy. Drive range allows the transmission to operate in each of the 8 forward gear ratios. Downshifts to a lower gear or higher gear ratio, are available for safe passing by depressing the accelerator or by manually selecting a lower gear in the manual mode range.

MANUAL (M) SPORT MODE (S)

This position allows the driver to utilize the Driver Shift Control (DSC) system or manual mode. When the shift selector lever is moved to the M/S position, the driver may select upshifts or downshifts by using the paddle switches located on the steering wheel. An upshift is requested by pushing either + button forward. A downshift is requested by pulling either + button rearward toward the driver.
To protect the engine or transmission from damage, the TCM will only allow you to shift into a gear appropriate for engine speed and vehicle speed.

TRANSMISSION COMPONENT AND SYSTEM DESCRIPTION

The mechanical components of the 8-Speed RWD are as follows:

- A torque converter with an electronically controlled capacity clutch (ECCC). ECCC was developed to reduce the possibility of noise, vibration or chuggle caused by TCC apply. In a torque converter with ECCC, the pressure plate does not always fully lock to the torque converter cover. Instead, the pressure plate maintains a small amount of slippage. In RWD 8-Speed transmissions, this slippage can range from 0-50 RPM. Full lockup (0 RPM slip) is still available on some applications. TCC may apply in 1st trough 8th gear. The specific TCC apply points and the amount of clutch slippage are determined by a number of operating conditions, including throttle position, vehicle speed, gear, as well as specific vehicle application. Transmission fluid temperature will also affect TCC apply points.
- Binary Vane-Type Fluid Pump Assembly
- 1-3-5-6-7 Clutch Assembly
- 2-3-4-6-8 and 4-5-6-7-8 Reverse Clutch Assembly
- Direct/Overdrive Internal Gear Assembly
- Direct/Overdrive Carrier Assembly
- Input Internal Gear Assembly
- Input Carrier Assembly
- Input Sun Gear Assembly

- Reaction Internal Gear and 1-2-3-4-5 Reverse Hub Assembly
- Reaction Carrier Assembly with Output Internal Gear Assembly
- Output Carrier Assembly
- Output Shaft
- Control Valve Body Assembly

The electrical components of the 8-Speed RWD are as follows:

- Input and Output Speed Sensor Assembly
- Manual Shift Shaft Position Switch
- Control Solenoid Valve Body, which contains the following components:
  - 8 Transmission Control Solenoids
  - Torque Converter Clutch (TCC) Control Solenoid
  - Default Control Solenoid
  - 1-2-3-4-5 Reverse Boost Solenoid

MANUAL MODE DESCRIPTION AND OPERATION

Transmission Gear Shift Lever

Manual Mode operation can be entered into when the shift lever is place in Manual (M) position. When manual mode is selected, the letter M of the PRNDM display will illuminate to indicate the transmission is in manual mode.

Transmission Manual Shift Switch - Right and Left

The Transmission Manual Shift Switches consist of 2 separate switches mounted on the forward facing (back) side of the steering wheel. The upshift (+) switch is located on the right side and the downshift (-) switch is located on the left side of the steering wheel. The letter M will also change to a number (1 through 8), indicting the current gear the transmission is in or the desired gear that the operator has selected.

The Transmission Manual Shift Switch - Right and Left signals are hard wire and interface with the Body Control Module. The upshift and downshift commands are sent out on the serial data line from the Body Control Module to the Transmission Control Module and Engine Control Module.

Transmission Control Module

In manual mode, the Transmission Control Module will always have final authority of when to allow an upshift or downshift. The Transmission Control Module only allows an upshift or downshift into the appropriate gear based on engine RPM, vehicle speed and other control parameters. The transmission will not automatically downshift to the next lower gear if it would cause an engine over speed condition or an upshift if it would result in too low of engine RPM.

If the Transmission Control Module prevents an upshift or downshift for any reason, a SHIFT DENIED message will be displayed on the instrument cluster.

Manual Mode Shifting Operation

1. With the engine running, place the shift lever in Manual (M) position. The letter M of PRNDM display will initially illuminate to indicate Manual Mode and then change to indicate the current gear.
2. Momentary pressing the Transmission Manual Shift Switch - Right will command the transmission to the next higher gear. The current number indicated on the PRNDM display will change to a number to indicate the gear that the vehicle operator has selected and if conditions are appropriate, commands the Transmission Control Module to upshift to that gear.
3. Momentary pressing the Transmission Manual Shift Switch - Left will command the transmission to the next lower gear. The current number indicated on the PRNDM display will change to a number to indicate the gear that the vehicle operator has selected and if conditions are appropriate, commands the Transmission Control Module to downshift to that gear.

4. To exit Manual Mode, place the shift lever in Drive (D) position.

TRANSMISSION ADAPTIVE FUNCTIONS

The Hydra-MaticÂ® 8-Speed RWD transmission utilizes a line pressure control system during upshifts to compensate for new transmission build variation and the normal wear of transmission components. New transmission to transmission variation and normal wear of the apply components within the transmission over time can cause shift time (the time required to apply a clutch) to be longer or shorter than desired. In order to compensate for these changes, the transmission control module (TCM) adjusts the pressure commands to the various pressure control (PC) solenoids, to maintain the originally calibrated shift timing. The automatic adjusting process is referred to as "adaptive learning" and it is used to ensure consistent shift feel plus increase transmission durability. The TCM monitors the A/T input speed sensor (ISS) and the A/T output speed sensor (OSS) during commanded shifts to determine if a shift is occurring too fast (harsh) or too slow (soft) and adjusts the corresponding PC solenoid signal to maintain the set shift feel.

The purpose of the adapt function is to automatically compensate the shift quality for the various vehicle shift control systems. The adapt function is a continuous process that will help to maintain optimal shift quality throughout the life of the vehicle.

TRANSMISSION INDICATORS AND MESSAGES

The following transmission related indicators and messages may be displayed on the Instrument Panel Cluster (IPC). Also, the malfunction indicator lamp (MIL) may be illuminated, indicating a powertrain DTC has set, along with an IPC message. If a DTC is set, refer to **Diagnostic Trouble Code (DTC) List - Vehicle** .

Service Transmission

This message displays if there is a problem with the transmission or a DTC has been set.

Shift Denied - Manual Mode

This message displays when attempting to shift to a gear not appropriate for the vehicle speed and engine RPM.

Transmission Hot

This message displays when the transmission control module (TCM) detects a transmission fluid temperature of 132Â°C (270Â°F) or greater for 5 seconds.

ELECTRONIC COMPONENT DESCRIPTION

Transmission Control Module

cardiagn.com

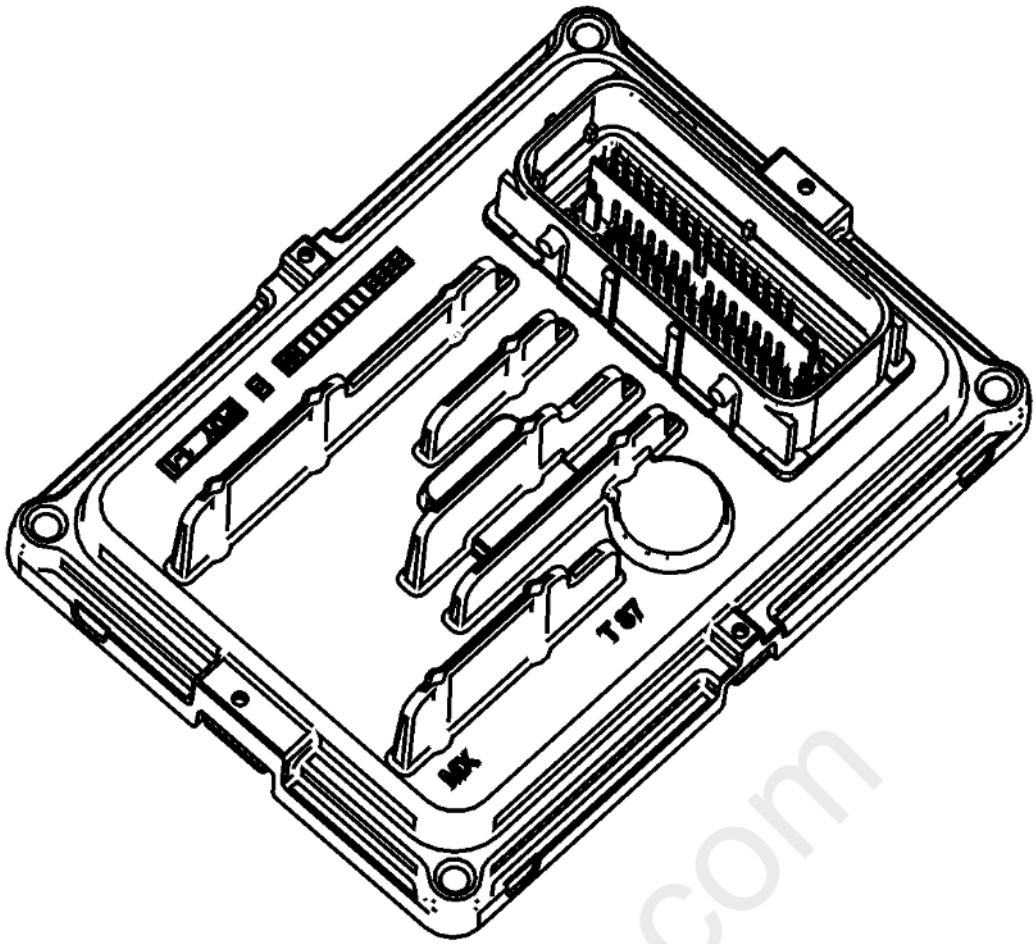

Fig. 3: Transmission Control Module
Courtesy of GENERAL MOTORS COMPANY

The Transmission Control Module (TCM) for this transmission is a standalone controller mounted to the vehicle. The TCM has one 66 way connector to interface with vehicle electrical system, transmission assembly and other vehicle control modules. The TCM sends and receives various input and output signals from a number of switches and sensors internal and external to the transmission. In addition, the TCM is part of a network of other control modules on the vehicle. The network of control modules will share information with each other, over a common serial data communications line. Based upon the calibrations and input information the TCM receives, it will always have final authority of when to allow an upshift or downshift whether in manual mode operation or in drive position for automatic shifting.

Transmission Solenoid Valves

The 8L45/90 transmission contains a total of nine individual solenoids installed in various bore locations on the lower control valve body assembly. Seven of the nine solenoid valves are used to control pressure regulation and direction of transmission fluid and the two ON/OFF solenoid valves are only used to direct transmission fluid.

There are three slightly different variations of the pressure regulating solenoid valves used on this transmission. They are; high pressure normally low, high pressure normally high and low pressure normally high, variable force solenoid valves.

- High Pressure = Indicates the solenoid valve is controlling or directing line pressure.
- Low Pressure = Indicates the solenoid valve is directing a pressurized fluid that is less than line pressure.
- Normally Low = When no current is applied to the solenoid valve coil the variable restriction is closed, resulting in no or low pressure.
- Normally High = When no current is applied to the solenoid valve coil the variable restriction is open, resulting in maximum or high pressure.

- Variable Force Solenoid Valve = This type of solenoid can increase or decrease the amount of pressurized fluid based on the amount of current applied to solenoid valve coil.

Pressure Regulating Solenoid Valves

High Pressure, Normally Low, Variable Force Solenoid Valves

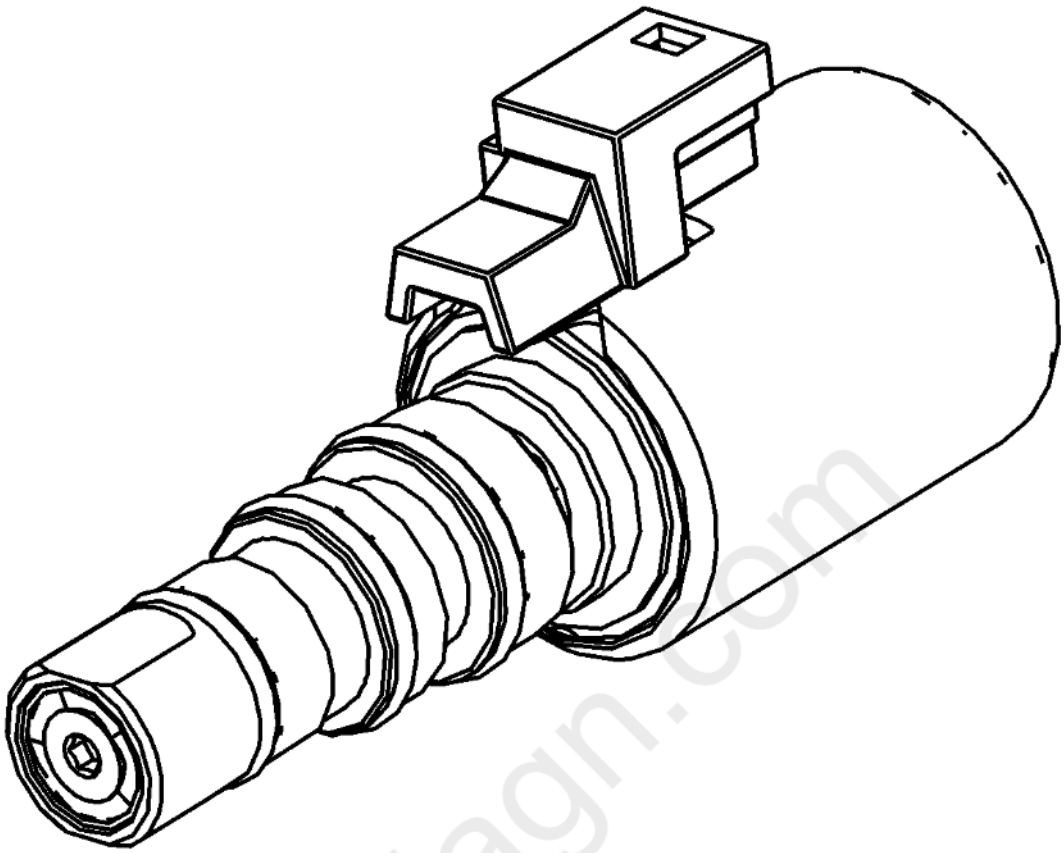

Fig. 4: Transmission Control Solenoid Valve
Courtesy of GENERAL MOTORS COMPANY

Transmission Control Solenoid Valves 2, 3 and 7 are high pressure, normally low, variable force solenoid valves. This type of solenoid valve regulates hydraulic fluid pressure based on current flow through the solenoid valve coil windings. Each solenoid valve receives 12 V from a high side driver internal to the TCM. Each solenoid valve has a control circuit to an individual low side driver internal to the TCM, which turns ON and OFF to control the amount of current. As an increasing current is applied to the solenoid coil windings, the force imparted to the armature overcomes the armature spring pressure resulting in an increase in fluid pressure to the controlled element. The normal operating current range for these solenoid valves is between 0-1.2 A. If the TCM detects an electrical circuit malfunction or excessive current flow, the TCM turn off the high side driver to that solenoid and sets a DTC. The high side driver will reset when the circuit fault is corrected and the ignition switch is cycled.

Low Pressure Normally High, Variable Force Solenoid Valves

cardiagn.com

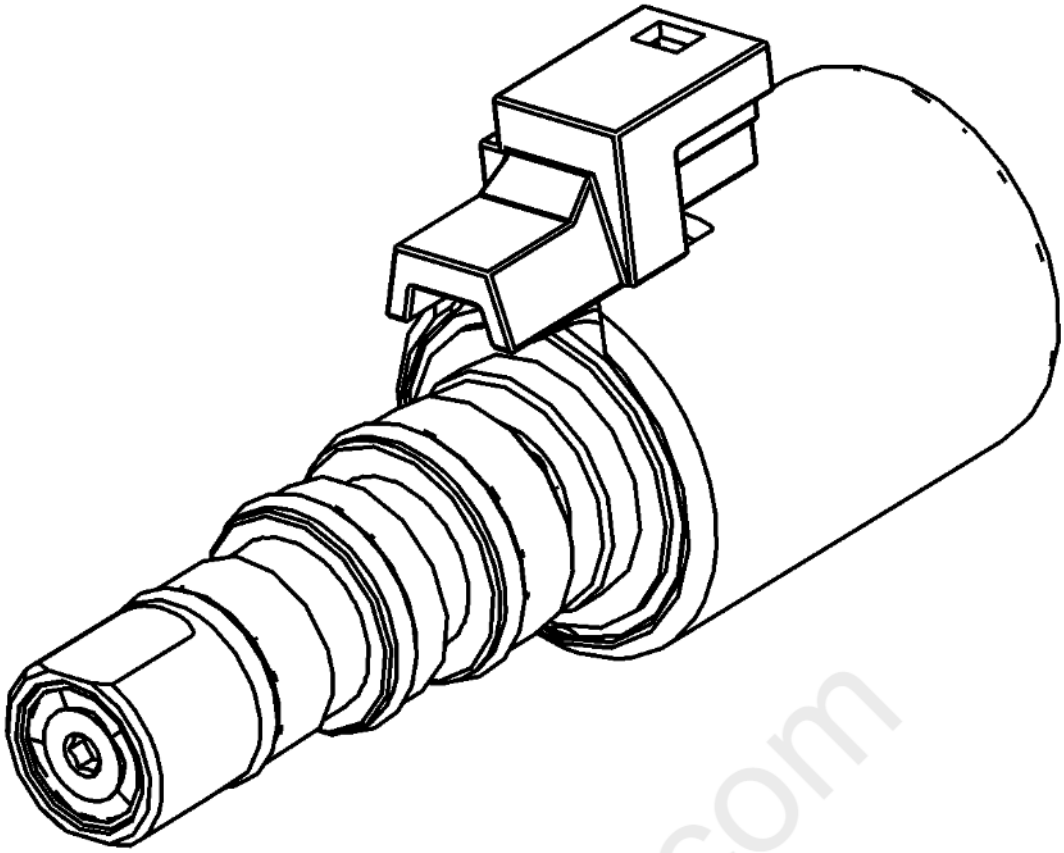

Fig. 5: Transmission Control Solenoid Valve
Courtesy of GENERAL MOTORS COMPANY

Transmission Control Solenoid Valves 1, 5 and 6 are low pressure, normally high, variable force solenoid valves. This type of solenoid valve regulates hydraulic fluid pressure based on current flow through the solenoid valve coil windings. Each solenoid valve receives 12 V from a high side driver internal to the TCM. Each solenoid valve has a control circuit to an individual low side driver internal to the TCM, which turns ON and OFF to control the amount current. As an increasing current is applied to the coil windings, the force imparted to the armature overcomes the low fluid pressure acting on the armature resulting in a decrease in fluid pressure to the controlled element. The normal operating current range for these solenoids is between 0-1.2 A. If the TCM detects an electrical circuit malfunction or excessive current flow, the TCM turns off the high side driver to that solenoid valve and sets a DTC. The high side driver will reset when the circuit fault is corrected and the ignition switch is cycled.

High Pressure Normally High, Variable Force Solenoid Valve

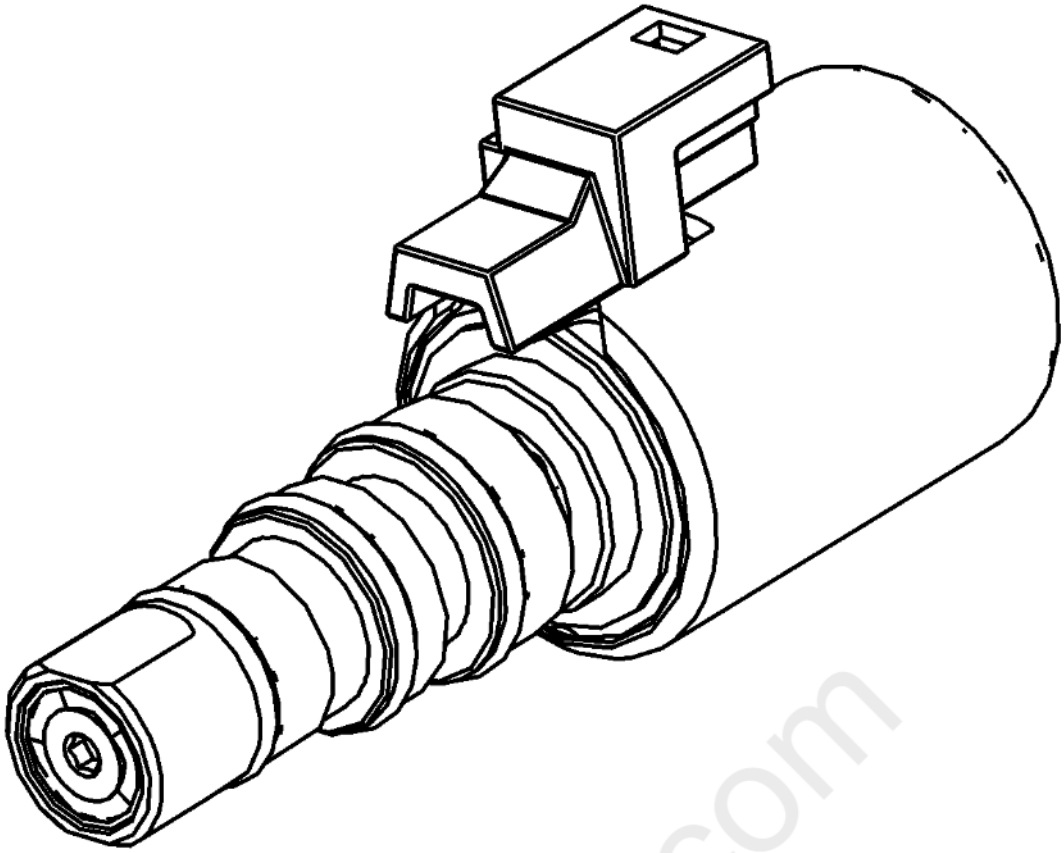

Fig. 6: Transmission Control Solenoid Valve
Courtesy of GENERAL MOTORS COMPANY

Transmission Control Solenoid Valve 4 is a high pressure, normally high, variable force solenoid valve. This type of solenoid valve regulates hydraulic fluid pressure based on current flow through the solenoid valve coil windings. Each solenoid receives 12 V from a high side driver internal to the TCM. This solenoid has a control circuit to an individual low side driver internal to the TCM, which turns ON and OFF to control the amount of current. As an increasing current is applied to the coil windings, the force imparted to the armature overcomes the high fluid pressure acting on the solenoid valve armature resulting in a decrease in fluid pressure to the controlled element. The normal operating current range for this solenoid is between 0-1.2 A. If the TCM detects an electrical circuit malfunction or excessive current flow, the TCM turns off the high side driver to that solenoid and sets a DTC. The high side driver will reset when the circuit fault is corrected and the ignition switch is cycled.

ON/OFF Solenoid Valves

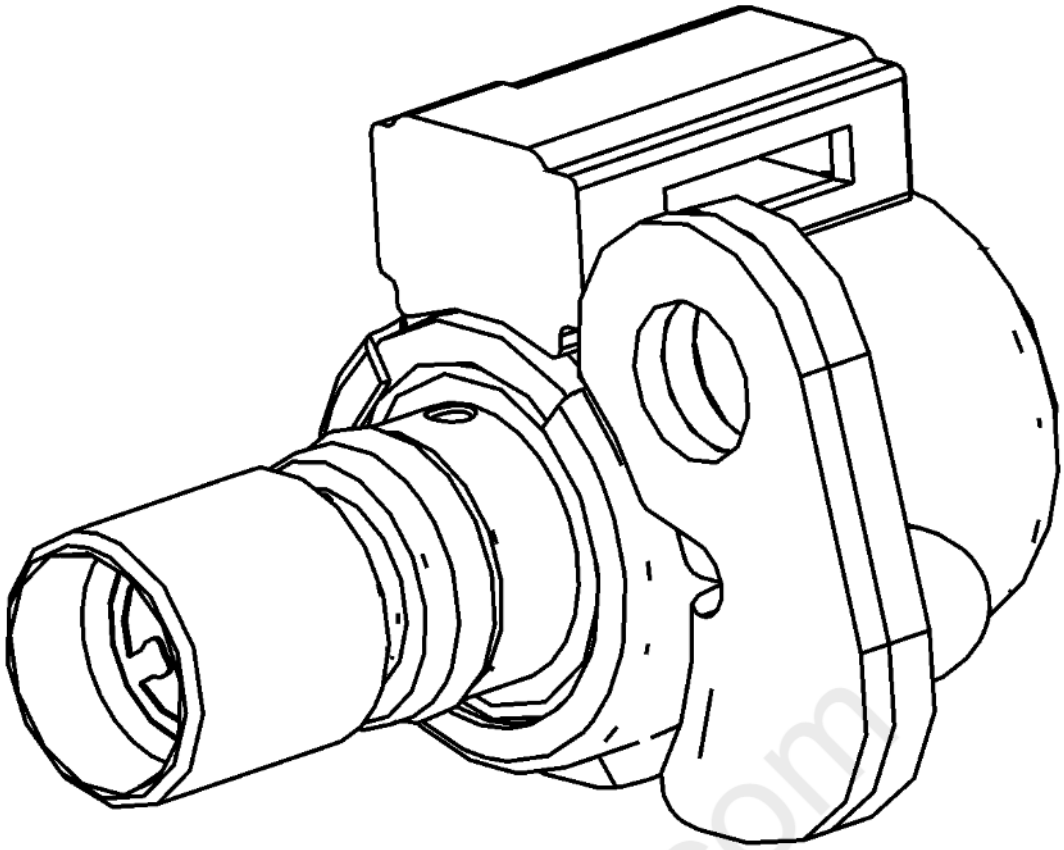

Fig. 7: Transmission Control Solenoid Valve
Courtesy of GENERAL MOTORS COMPANY

Transmission Control Solenoid Valve 8 and 9 are normally low, ON/OFF solenoids. These solenoids only direct hydraulic fluid pressure when commanded ON. Each solenoid receives 12 V from a high side driver internal to the TCM. Each solenoid valve has a control circuit to an individual low side driver internal to the TCM. The normal operating current range for these solenoids is between 0-1 A. If the TCM detects an electrical circuit malfunction or excessive current flow, the TCM turns off the high side driver to that solenoid and sets a DTC. The high side driver will reset when the circuit fault is corrected and the ignition switch is cycled.

Transmission Fluid Pressure Accumulator Solenoid Valve - If Equipped

Fig. 8: Transmission Fluid Pressure Accumulator Solenoid Valve
Courtesy of GENERAL MOTORS COMPANY

The Transmission Fluid Pressure Accumulator Solenoid Valve is part of the Stop/Start system on the vehicle. The automatic transmission auxiliary fluid accumulator is used to supply transmission fluid line pressure to the appropriate clutches for an auto start event. Attached to the accumulator is a normally closed ON/OFF solenoid. When the ignition is ON, the engine control ignition relay supplies 12 V to the accumulator solenoid. To complete the circuit, the engine control module (ECM) supplies a control circuit to the accumulator solenoid. When the ECM requests an auto start event, the solenoid is commanded ON, allowing captured pressurized fluid to exit the accumulator to apply the clutches for a 1st gear start.

Solenoid Characterization

Transmission Control Solenoid Valves 1-7 are pressure regulating valves. Each solenoid valve is tested after assembly to determine the output fluid pressure at certain electrical current values, applied to coil windings. This information is refer to as solenoid current/pressure data points. The solenoid valves are tested two ways, with an increasing and decreasing electrical current applied to the coil windings. The resultant current versus pressure data points are saved and assigned a file number. The file number is marked on the solenoid valve housing end. The performance data file is stored on the TIS web site. This data file is programmed and stored in the vehicle's TCM. Replacing any of the following components will require the TCM to be programmed with the new or existing solenoid valve performance data.

- TCM - program the new TCM with the existing solenoid data files stored on the TIS web site for all 7 pressure regulating solenoid valves
- One or more solenoid valves - program the TCM with the new data file for only the individual pressure regulating solenoid valves that were replaced
- Lower Control Valve Body Assembly with Solenoid Valves - program the TCM with the new data files stored on the TIS web site for all pressure regulating solenoid valves
- Transmission Assembly - program the TCM with the new data files stored on the TIS web site for all pressure regulating solenoid valves

Speed Sensors

cardiagn.com

Fig. 9: Speed Sensors
Courtesy of GENERAL MOTORS COMPANY

Input Speed Sensor

The input speed sensor assembly is a two wire hall-effect type sensor. The TCM supplies a 9 V signal circuit and a low reference circuit to the input speed sensor. The input speed sensor produces a square wave signal by toggling the 9 V signal circuit low and high based on the leading and trailing edges on the outside diameter of the 1-3-5-6-7 clutch housing. As the rotational speed of the 1-3-5-6-7 clutch housing increases, the frequency of the input speed sensor signal increases. The TCM uses the input speed sensor signal along with the intermediate and output speed sensor signals to determine transmission line pressure, shift patterns, torque converter clutch slip speed and the correct gear ratio.

Intermediate Speed Sensor

The intermediate speed sensor assembly is a two wire hall-effect type sensor. The TCM supplies a 9 V signal circuit and a low reference circuit to the intermediate speed sensor. The intermediate speed sensor produces a square wave signal by toggling the 9 V signal circuit low and high based on the leading and trailing edges on the outside diameter of the reaction carrier/output internal gear assembly. As the rotational speed of the reaction carrier/output internal gear assembly increases, the frequency of the intermediate speed sensor signal increases. The TCM uses the intermediate speed sensor signal along with the input and output speed sensor signals to determine transmission line pressure, shift patterns, torque converter clutch slip speed and the correct gear ratio.

Output Speed Sensor

The output speed sensor assembly is a two wire hall-effect type sensor. The TCM supplies a 9 V signal circuit and a low reference circuit to the output speed sensor. The output speed sensor produces a square wave signal by toggling the 9 V signal circuit low and high based on the leading and trailing edges on the outside diameter of the output carrier assembly. As the rotational speed of the output carrier assembly increases, the frequency of the output speed sensor signal increases. The TCM uses the output speed sensor signal along with the input and intermediate speed sensor signals to determine transmission line pressure, shift patterns, torque converter clutch slip speed and the correct gear ratio.

Transmission Fluid Temperature Sensor

cardiagn.com

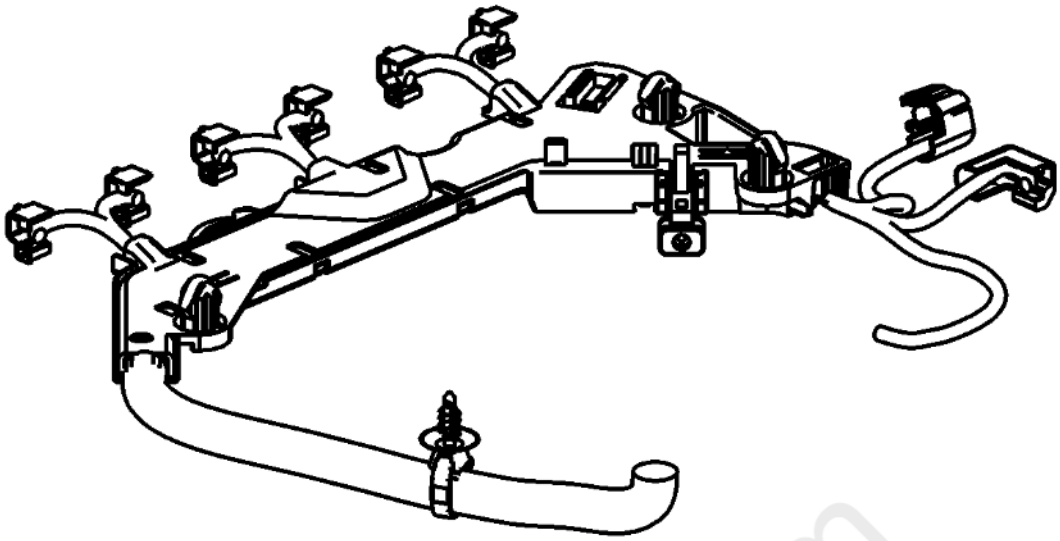

Fig. 10: Transmission Fluid Temperature Sensor (Part Of Transmission Internal Wire Harness Assembly)
Courtesy of GENERAL MOTORS COMPANY

The transmission fluid temperature sensor is a 2 wire negative temperature coefficient thermistor. The TCM supplies a 5 V signal circuit and a low reference circuit to the transmission fluid temperature sensor. The transmission fluid temperature sensor measures the temperature of the fluid the in the transmission fluid pan. As the temperature of the fluid increases, the resistance of the sensor decreases, varying the voltage on the signal circuit. The transmission fluid temperature sensor is part of the transmission internal wire harness assembly and has no serviceable parts. If the transmission fluid temperature sensor is faulty, then replace the internal transmission wire harness assembly that has the temp sensor attached to it.

Internal Mode Switch (IMS)

cardiagn.com

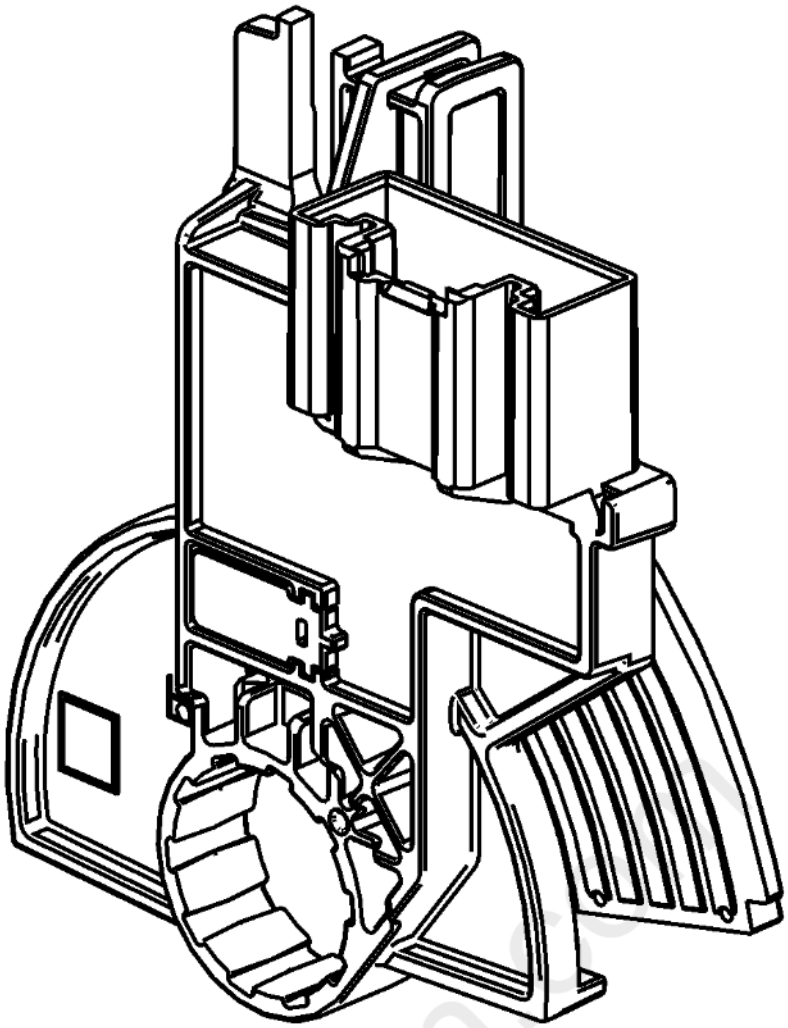

Fig. 11: Internal Mode Switch (IMS)
Courtesy of GENERAL MOTORS COMPANY

Internal Mode Switch (IMS)

The IMS contains 6 separate switches in one assembly. One mechanical switch circuit is for the park/neutral position switch which is used for engine starting. The other 5 electronic switches are called the transmission range switches and are used to indicate the gear position the vehicle operator has selected. The IMS switch assembly is mounted on the interior left side of the transmission case.

Park Neutral Position Switch of IMS

The park/neutral position switch indicates to the Engine Control Module (ECM) if the vehicle is in park/neutral or in a drive gear range. With the ignition ON, the ECM provides 12 V on the park/neutral signal circuit to the park/neutral position switch. A separate ground wire from the park/neutral position switch to chassis ground completes the circuit. When the gear shift lever in park or neutral, the switch closes and drops the voltage on the signal circuit to 0 V. In this state the engine will start and run. In reverse or drive range the park/neutral position switch opens, 12 V is then present on the signal circuit which will inhibit engine starting.

Transmission Range Switches of the IMS

The internal mode switch (IMS) indicates to the transmission control module (TCM) which gear position the vehicle operator has selected. The IMS consists of 5 separate hall effect switches. Each hall effect switch is supplied a 9 V reference circuit and a signal circuit from the TCM. Each signal circuit for each gear selector position will have either a voltage reading of 0.70-0.96 V indicting ON or 1.68-2.38 V indicating OFF. The voltage values on each IMS circuit will change and are dependent on the position of the gear selector. The state of each IMS A/B/C/P/S circuit is displayed on the scan tool.

PARK - ENGINE RUNNING

When the gear selector lever is in the Park (P) position, fluid is drawn into the pump through the transmission fluid filter assembly, from the transmission fluid pan assembly. Line pressure is then directed to the following valves:

Fluid Pressure Directed in Preparation for a Shift

Manual Valve

Mechanically controlled by the gear selector lever, the manual valve is in the Park (P) position and prevents line pressure from the pressure regulator valve from entering the reverse and drive circuits.

1-2-7-8 Reverse Control Solenoid Valve Assembly

The 1-2-7-8 reverse control solenoid is energized (HIGH) allowing actuator feed fluid to enter the S1 VFS SIG fluid circuit which applies fluid pressure against the S1 VFS ACCUM spring force and against the 1278R control valve spring force. This allows line fluid to pass through into the 1278R CLUTCH fluid circuit.

1-2-7-8 Reverse Clutch Assembly

1278R CLU fluid is routed to the 1278 reverse clutch piston to hold the piston against spring force which holds the 1278R clutch plates.

#14 Ball Check Valve

Line fluid travels through the 1278R control valve orifice #40 into the 1278R CLU FDBK fluid circuit and into the #14 ball check valve unseating the ball allowing fluid into the ACT FEED circuit.

1-2-3-4-5 Reverse Control Solenoid Valve Assembly

The 1-2-3-4-5 reverse control solenoid is energized (HIGH) allowing actuator feed fluid to enter the S2 VFS SIG fluid circuit which applies fluid pressure against the S2 VFS ACCUM spring force and against the 12345R control valve spring force. This allows line fluid to pass through into the 12345R CLUTCH fluid circuit.

1-2-3-4-5 Reverse Clutch Assembly

12345R CLU fluid is routed to the 12345 reverse clutch piston to hold the piston against spring force which holds the 12345R clutch plates.

Park - Engine Running

cardiagn.com

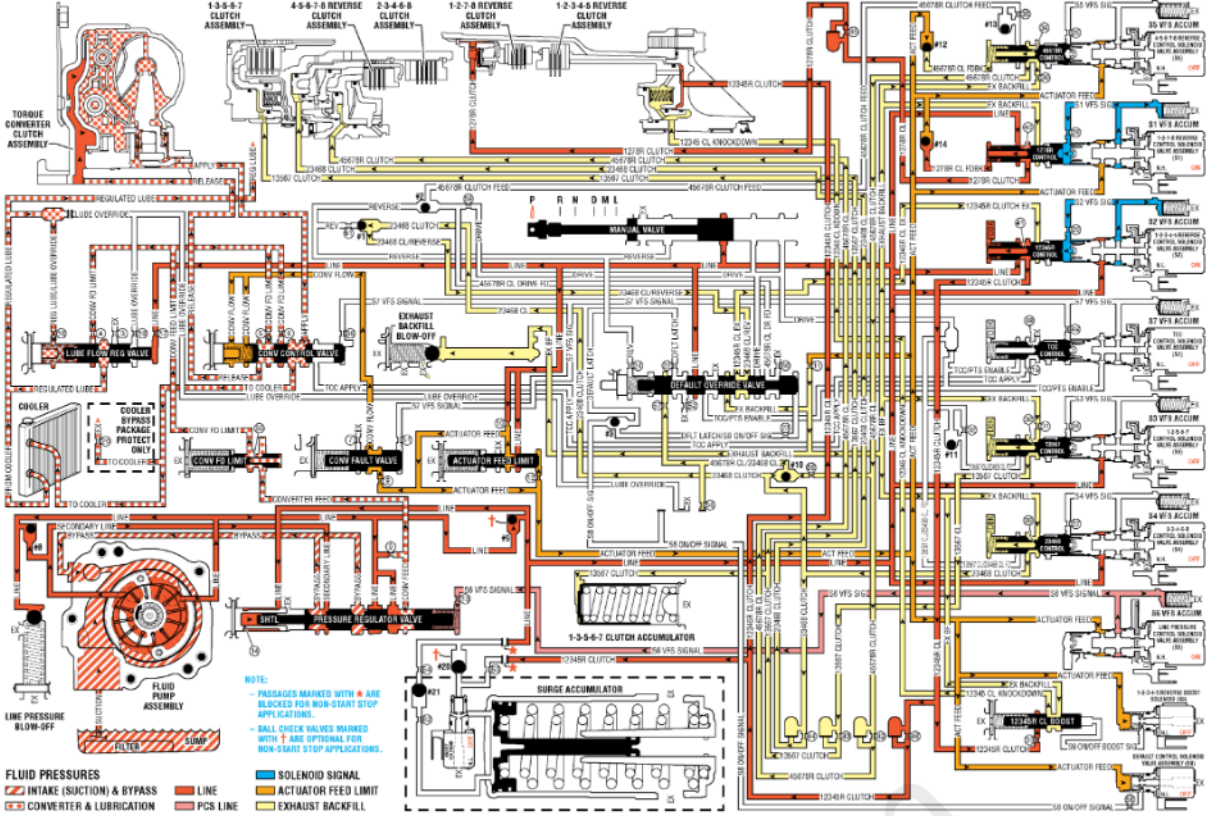

Fig. 12: Park - Engine Running Hydraulic Diagram
Courtesy of GENERAL MOTORS COMPANY

REVERSE

When the gear selector lever is moved to the Reverse (R) position (from the Park position) the normally high 4-5-6-7-8 reverse control solenoid valve and the 1-2-3-4-5 reverse boost solenoid is commanded ON and the following changes occur in the transmission's hydraulic and electrical systems:

Fluid Pressure Directed in Preparation for a Shift

Manual Valve

With the manual valve in the reverse position, line pressure is directed into the reverse fluid circuit to the default override valve, #1 ball check valve and the #2 ball check valve.

Default Override Valve

Reverse fluid from the manual valve is routed to the default override valve to combine with the default override valve springforce to keep the valve in the off position.

#1 Ball Check Valve

Reverse fluid passes through orifice #61 to seat the #1 ball check valve against the 23468 CLU fluid circuit allowing REV fluid to enter the 23468 CL/REV fluid circuit. The 23468 CL/REV fluid is routed to the default override valve. The 23468 CL/REV fluid passes through the default override valve and into the 12345R CL EX fluid circuit. The 12345R CL EX fluid is directed to the 12345R control valve.

#2 Ball Check Valve

Reverse fluid seats the #2 ball check valve against the 45678R CL DRIVE FD fluid circuit allowing reverse fluid to be routed into the 45678 CLU FD fluid circuit. The 45678 CLU FEED fluid is directed to the #13 ball check valve and through orifice #35 to the 45678R control valve.

4-5-6-7-8 Reverse Clutch Applies

4-5-6-7-8 Reverse Control Solenoid

The 4-5-6-7-8 reverse control solenoid is energized allowing ACT FEED to enter the S5 VFS SIG fluid circuit which applies fluid pressure against the S5 VFS Accum spring force and through orifice #34 to

the 45678R control valve spring force. This allows 45678R CLU FD fluid to enter the 45678R CLU fluid circuit. 45678R CL FD fluid also enters orifice #34 which is in the 45678R control valve. Fluid then enters the 45678R CL FDBK fluid circuit unseating the #12 ball check valve allowing 45678R CL FDBK fluid into the ACT FD fluid circuit.

#10 Ball Check Valve

45678R CLU fluid enters orifice #55 and unseats #10 ball check valve against the 23468 CLU fluid circuit. This allows 45678R CL fluid to enter the 45678R CL/23468 CL fluid circuit. 45678R CL/23468 CL fluid passes through orifice #56 and into the lube override enable valve. 45678R CL/23468 CL fluid applies pressure against the lube override enable valve spring force. 45678R CL/23468 CL fluid also passes through orifice #57 and into the default override valve.

4-5-6-7-8 Reverse Clutch Assembly

45678R CLU fluid is directed through orifice #42 into the 4-5-6-7-8 rev clutch piston spring force which applies holding force to the 4-5-6-7-8 rev clutch plates.

1-2-3-4-5 Reverse Clutch Applied

1-2-3-4-5 Reverse Boost Solenoid

The 1-2-3-4-5 reverse boost solenoid is energized allowing ACT FD fluid to enter the S8 ON/OFF BOOST SIG fluid circuit.

1-2-3-4-5 Reverse Clutch Boost Valve

S8 ON/OFF BOOST SIG fluid enters the 12345R clu boost valve applying pressure against the 12345R clu boost valve spring force. This allows 12345R CLU fluid through orifice #33 into the 12345R clu boost valve then into the 12345 CL KNOCKDOWN fluid circuit.

1-2-3-4-5 Reverse Clutch

12345 CL KNOCKDOWN fluid enters the 1-2-3-4-5 rev clu piston applying force with the 1-2-3-4-5 rev clu piston return spring.

Reverse

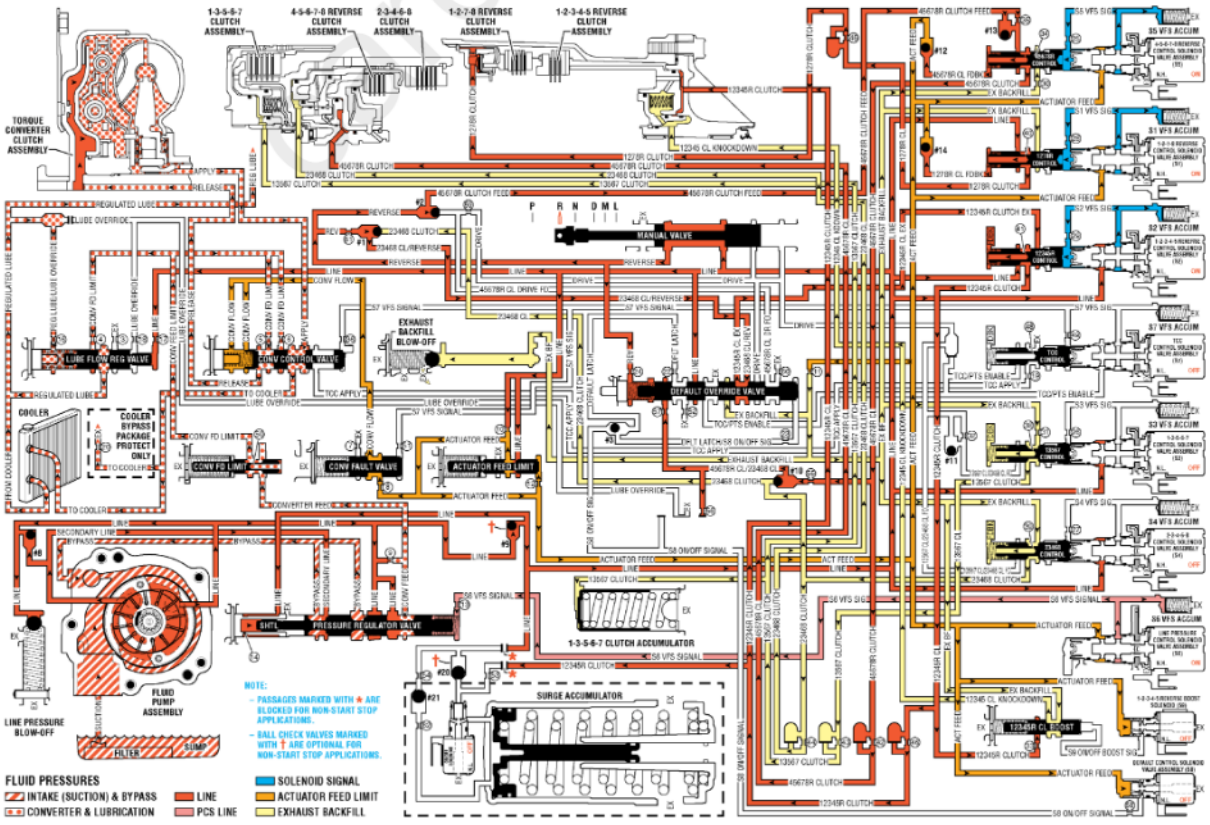

Fig. 13: Reverse Hydraulic Diagram
Courtesy of GENERAL MOTORS COMPANY

NEUTRAL - ENGINE RUNNING

When the gear selector is moved to the Neutral (N) position, the hydraulic and electrical system operation is identical to Park (P) range. However, if Neutral is selected after the vehicle was operating in Reverse (R), the normally high 4-5-6-7-8 reverse control solenoid and normally low 1-2-3-4-5 reverse boost solenoid is commanded OFF and the following changes would occur in the hydraulic system:

4-5-6-7-8 Reverse Clutch Releases

Manual Valve

The manual valve is moved to the Neutral position and blocks line pressure from entering the reverse and drive fluid circuits. The reverse fluid from the default override valve, #1 and #2 ball check valve is opened to a exhaust passage at the manual valve.

4-5-6-7-8 Reverse Control Solenoid

The 4-5-6-7-8 reverse control solenoid. is commanded off. The 45678 rev cont valve spring force moves the valve to allow S5 VFS SIG fluid to exhaust through the 45678 rev control solenoid. This also allows 45678R CL FDBK and 45678R CLUTCH fluid to exhaust into the EX BACKFILL fluid circuit.

1-2-3-4-5 Reverse Boost Solenoid

The 1-2-3-4-5 reverse boost solenoid is commanded off. This allows S8 ON/OFF BOOST SIGNAL fluid to exhaust through the 1-2-3-4-5 rev boost solenoid.

1-2-3-4-5 Reverse Clutch Boost Valve

The 12345R clutch boost valve spring force moves the valve to allow EX BACKFILL fluid to enter 12345 CL KNOCKDOWN. When REV fluid is exhausted the #1 ball check valve seats against the REV circuit allowing 23468 CLU fluid to enter 23468 CL/REV circuit.

#10 Ball Check Valve

When 45678R CLUTCH fluid is exhausted the #10 ball check valve unseats allowing 23468 CLUTCH fluid to enter the 45678R CL/23468 CL fluid circuit which is directed through orifice #56 to the lube override enable valve and through orifice #57 to the default override valve.

4-5-6-7-8 Reverse Clutch Assembly

45678R CLUTCH fluid is exhausted from the 4-5-6-7- 8 reverse clutch assembly through orifice #42. 45678R CLUTCH fluid continues to the 45678R control valve where it is directed thru orifice #30 into EX BACKFILL.

Neutral - Engine Running

cardiagn.com

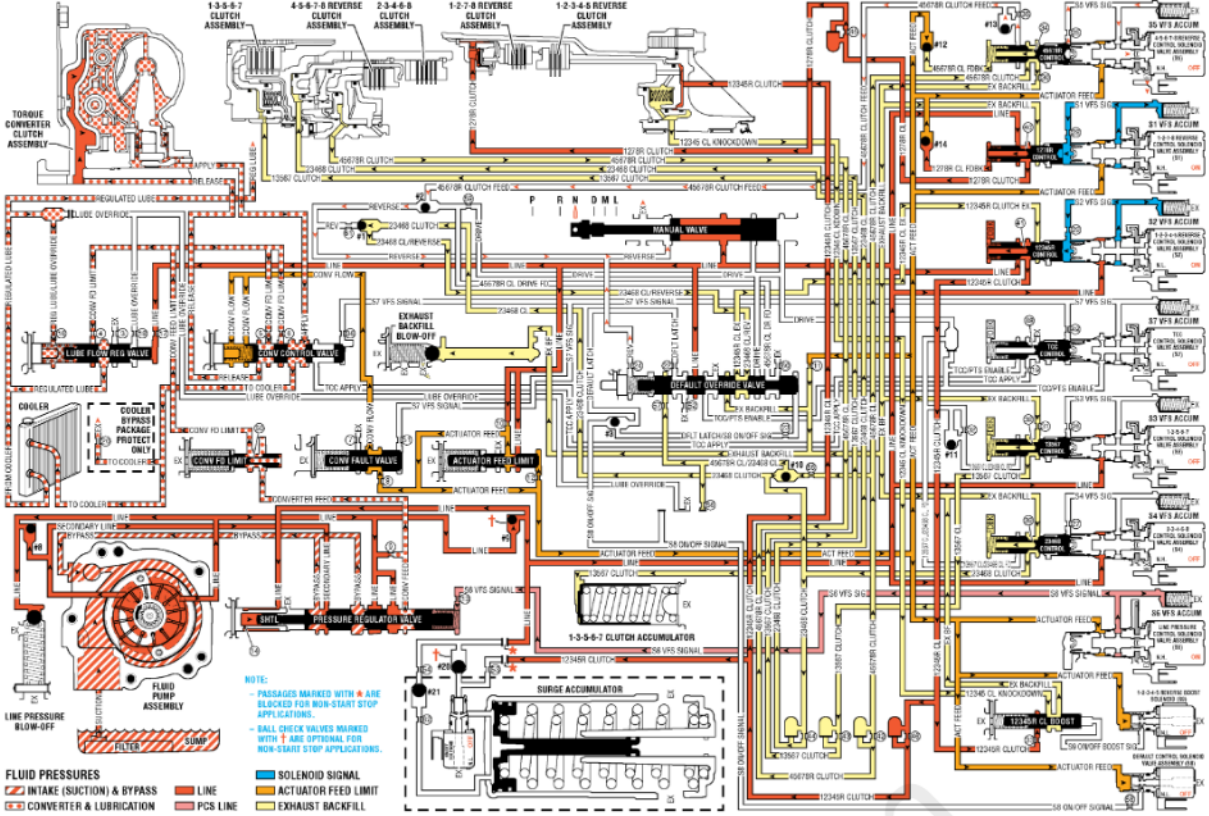

Fig. 14: Neutral - Engine Running Hydraulic Diagram
Courtesy of GENERAL MOTORS COMPANY

DRIVE RANGE, FIRST GEAR

As the vehicle speed increases, the transmission control module (TCM) receives input signals from the automatic transmission input and output speed sensors, throttle position sensor and other vehicle sensors to determine the precise moment to energize or "turn on" 1-2-3-5-7 control solenoid and command ON the normally-low 1-2-3-4-5 reverse boost solenoid and default control solenoid.

Fluid Pressure is Directed to the 1-3-5-6-7 Clutch Assembly

Manual Valve

The manual valve is moved to the drive position and allows line fluid pressure to enter the drive fluid circuit. Drive fluid is then routed to the default override valve.

#2 Ball Check Valve

Drive fluid is directed thru orifice #59 into the 45678R CL DR FD fluid circuit which seats the #2 ball check valve against the reverse circuit allowing fluid to enter the 45678R CLUTCH FEED circuit. 45678R CLU FEED fluid is directed thru orifice #35 then to the 45678R control valve.

1-3-5-6-7 Clutch Applies

1-3-5-6-7 Control Solenoid Valve Assembly

The 1-3-5-6-7 control solenoid is energized allowing line fluid to enter the S3 VFS SIG fluid circuit which applies fluid pressure against the S3 VFS SIG accumulator spring force and against the 13567 control valve spring force. This allows 13567 CL/23468 CL FD fluid to enter the 13567 clutch fluid circuit and thru the 13567 control valve orifice #38 to FDBK.

1-3-5-6-7 Clutch Accumulator

13567 CLU fluid is directed thru orifice #43 and into the 1-3-5-6-7 clutch accumulator where it applies pressure against the 1-3-5-6-7 clutch accumulator spring force.

1-3-5-6-7 Clutch Assembly

13567 CLU fluid is also directed to the 1-3-5-6-7 clutch assembly housing. 13567 CLU fluid moves the piston against spring force to apply holding of the 1-3-5-6-7 clutch plates.

1-2-3-4-5 Reverse Boost Solenoid

The 1-2-3-4-5 rev boost solenoid is energized allowing ACT FD fluid to enter the S9 ON/OFF BOOST SIG fluid circuit.

1-2-3-4-5 Reverse Clutch Boost Valve

S9 ON/OFF BOOST SIG fluid enters the 12345R clu boost valve applying pressure against the 12345R clu boost valve spring force. This allows 12345R CLU fluid through orifice #33 into the 12345R clu boost valve then into the 12345 CL KNOCKDOWN fluid circuit.

1-2-3-4-5 Reverse Clutch

12345 CL KNOCKDOWN fluid enters the 1-2-3-4-5 rev clu piston applying force with the 1-2-3-4-5 rev clu piston return spring.

Default Control Solenoid

The default control solenoid valve is energized allowing ACT FEED fluid to enter the S8 ON/OFF SIG fluid circuit. S8 ON/OFF SIG fluid passes thru orifice #58 into the lube override enable valve and to the #3 ball check valve.

#3 Ball Check Valve

The S8 ON/OFF SIG fluid seats the #3 ball check valve against the DEFAULT LATCH circuit allowing S8 ON/OFF SIG fluid to enter the DFLT LATCH /S8 ON/OFF SIG circuit. DFLT LATCH/S8 ON/OFF SIG fluid passes thru orifice #23 to enter the default override valve applying pressure against the default override valve spring force. This allows DRIVE fluid to enter the 45678R CL DR FD circuit which seats the #2 ball check valve against the REV circuit.

Drive Range, First Gear

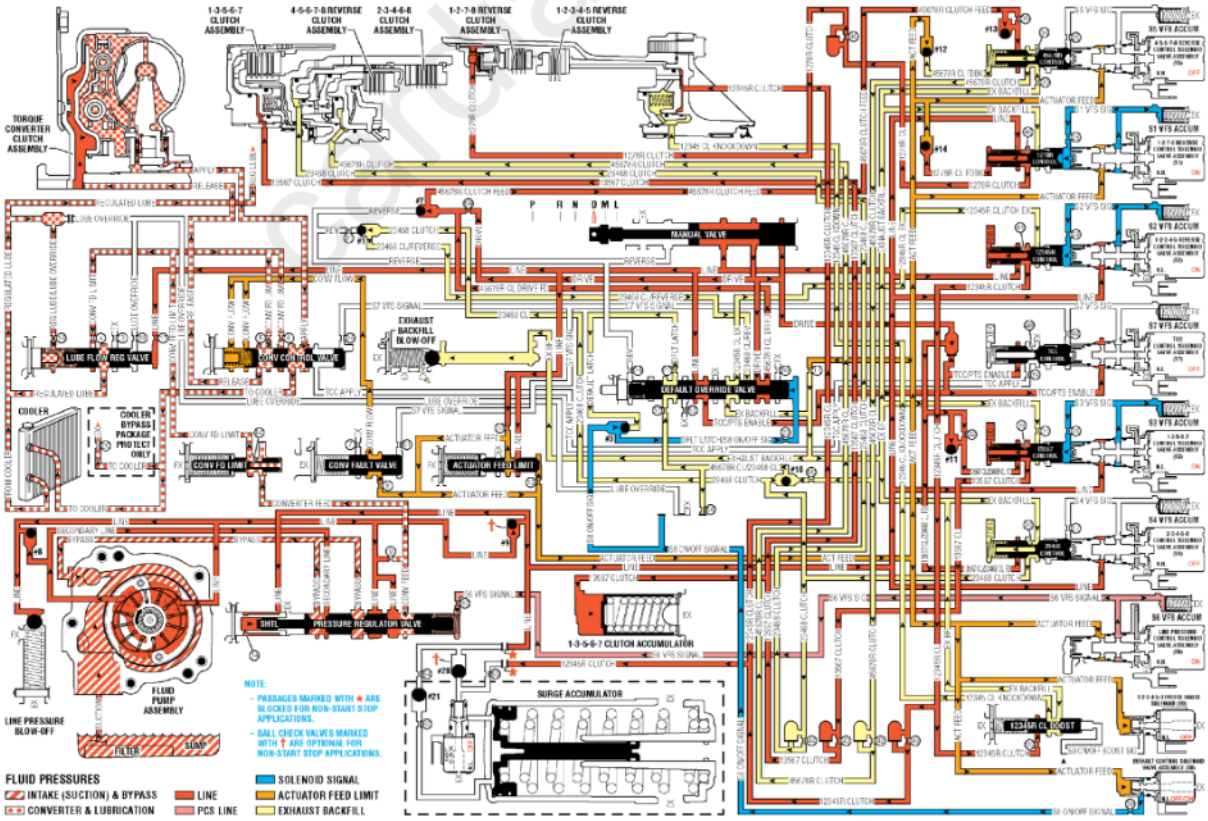

Fig. 15: Drive Range, First Gear Hydraulic Diagram
Courtesy of GENERAL MOTORS COMPANY

DRIVE RANGE, SECOND GEAR

As the vehicle speed increases, the transmission control module (TCM) receives input signals from the automatic transmission input and output speed sensors, the throttle position sensor and other vehicle sensors to determine the precise moment to command ON the normally-low pressure control solenoid 4.

2-3-4-6-8 Clutch Applies

CB26 Pressure Control Solenoid 4

The 2-3-4-6-8 control solenoid energizes allowing line fluid to enter the S4 VFS SIG fluid circuit which applies pressure against the S4 vfs accum spring force and against the 23468 control valve spring force. This allows 13567 CL/23468 CL FD fluid to enter the 23468 CLU fluid circuit. 13567 CL/23468 CL FD fluid also passes thru the 23468 control valve orifice #39 into FDBK. 23468 CLUTCH fluid is directed to the #10 ball check valve and thru orifice #44 to the 23468 clutch assembly housing.

#10 Ball Check Valve

The 23468 CLU fluid seats the #10 ball check valve against the 45678R CLU fluid circuit. 23468 CLU fluid is also directed to the #1 ball check valve.

#1 Ball Check Valve

23468 CLU fluid seats the #1 ball check valve against the REV fluid circuit. This allows 23468 CLU fluid to enter the 23468 C/REV fluid circuit which is directed to the default override valve.

#3 Ball Check Valve

Default Latch fluid seats the #3 ball check valve against the S8 ON/OFF SIG fluid circuit. Allowing DEFAULT LATCH fluid to enter the DFLT LATCH/S8 ON/OFF SIG fluid circuit. DFLT LATCH/S8 ON/OFF SIG fluid passes thru orifice #23 to enter the default override valve applying pressure against the default override valve spring force. This allows DRIVE fluid to enter the 45678R CL DR FD circuit which seats the #2 ball check valve against the REV circuit.

2-3-4-6-8 Clutch Assembly

The 23468 CLU fluid passes thru orifice #44 continuing to the 2-3-4-6-8 clutch assembly housing. 23468 CLUTCH fluid applies pressure against the 23468 clutch piston which applies holding pressure to the 2-3-4-6-8 clutch plates.

1-3-5-6-7 Clutch Releases

1-3-5-6-7 Control Solenoid

The 1-3-5-6-7 control solenoid is signaled off allowing S3 VFS SIG fluid to exhaust. Spring pressure shifts the valve to allow 13567 CLUTCH fluid to exhaust into EX BACKFILL from the 1-3-5-6-7 clutch accumulator and the 1-3-5-6-7 clutch assembly housing.

Default Control Solenoid

The default control solenoid is signaled off allowing S8 ON/ OFF SIGNAL fluid to exhaust.

Drive Range, Second Gear

cardiagn.com

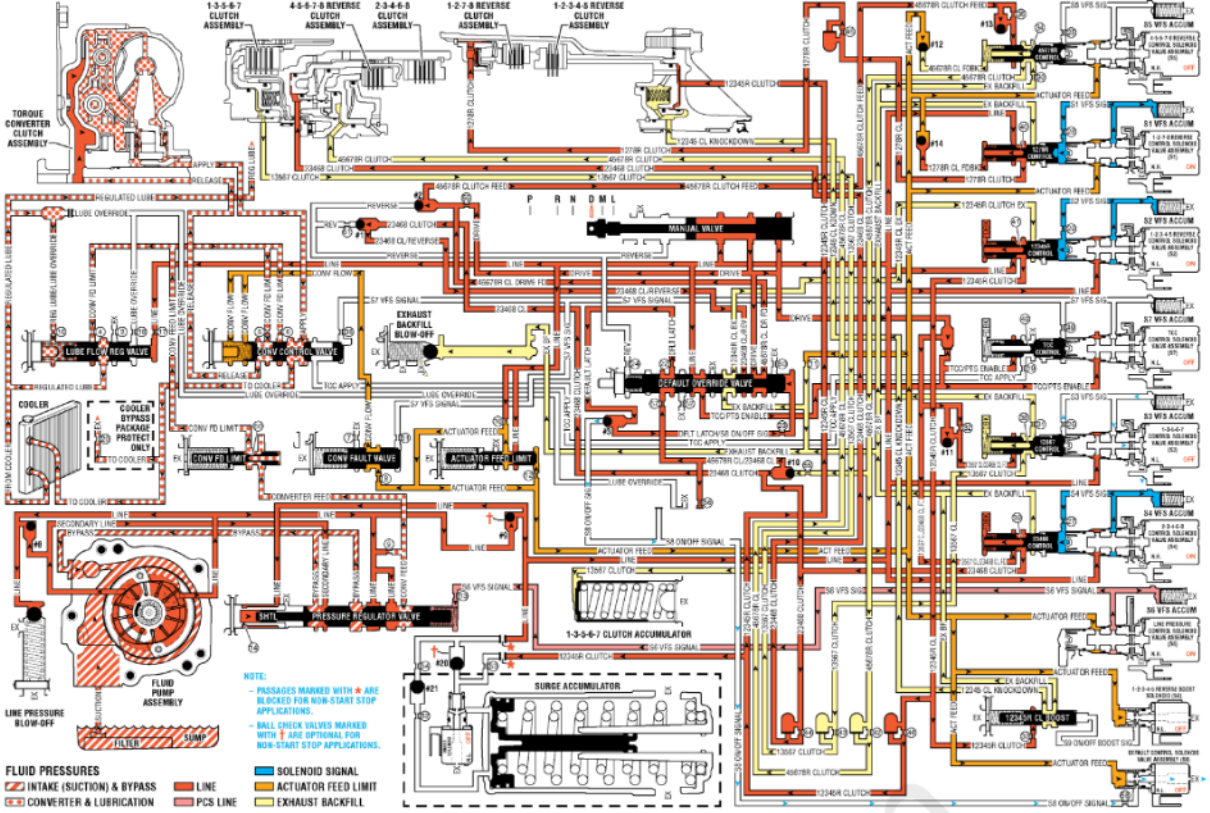

Fig. 16: Drive Range, Second Gear Hydraulic Diagram
Courtesy of GENERAL MOTORS COMPANY

DRIVE RANGE, THIRD GEAR

As the vehicle speed increases, the transmission control module (TCM) receives input signals from the automatic transmission input and output speed sensors, the throttle position sensor and other vehicle sensors to determine the precise moment to command OFF the normally-high 1-2- 7-8 reverse control solenoid. At the same time the 1-3-5-6-7 control solenoid is also commanded ON to regulate 1-3-5-6-7 clutch apply.

1-3-5-6-7 Clutch Applies

1-3-5-6-7 Control Solenoid Valve Assembly

The 1-3-5-6-7 control solenoid is energized allowing line fluid to enter the S3 VFS SIG fluid circuit which applies fluid pressure against the S3 VFS SIG accumulator spring force and against the 13567 control valve spring force. This allows 13567 CL/23468 CL FD fluid to enter the 13567 clutch fluid circuit and thru the 13567 control valve orifice #38 to FDBK.

1-3-5-6-7 Clutch Accumulator

13567 CLU fluid is directed thru orifice #43 and into the 1-3-5-6-7 clutch accumulator where it applies pressure against the 1-3-5-6-7 clutch accumulator spring force.

1-3-5-6-7 Clutch Assembly

13567 CLU fluid is also directed to the 1-3-5-6-7 clutch assembly housing. 13567 CLU fluid moves the piston against spring force to apply holding of the 1-3-5-6-7 clutch plates.

1-2-7-8 Clutch Releases

1-2-7-8 Reverse Control Solenoid

The 1-2-7-8 reverse control solenoid is signaled off allowing S1 VFS SIG fluid to exhaust and the 1278R control valve to shift do to the 1278R control valve spring force. 1278R CLU fluid exhaust into the EX BACKFILL fluid circuit from the release of the 1-2-7-8R clutch assembly plates.

Drive Range, Third Gear

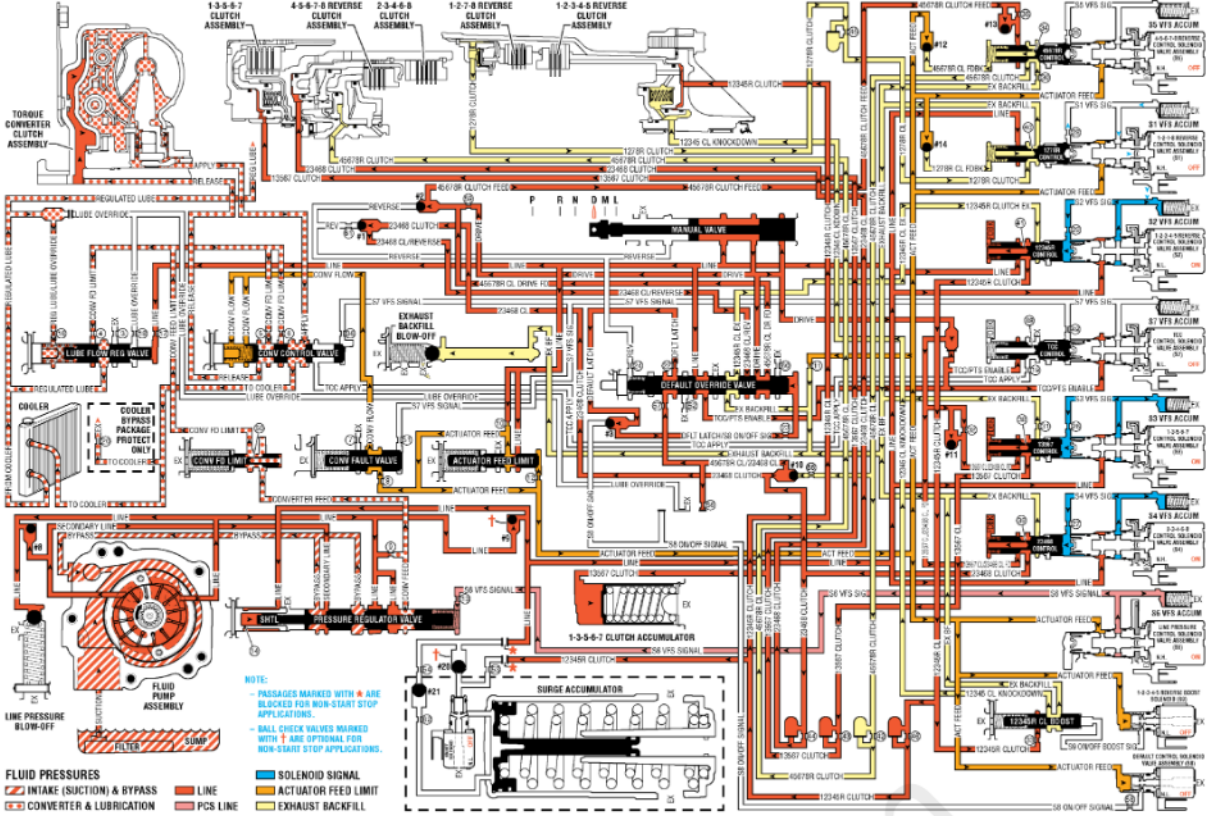

Fig. 17: Drive Range, Third Gear Hydraulic Diagram
Courtesy of GENERAL MOTORS COMPANY

DRIVE RANGE, FOURTH GEAR

As the vehicle speed increases, the transmission control module (TCM) receives input signals from the automatic transmission input and output speed sensors, the throttle position sensor and other vehicle sensors to determine the precise moment to command OFF the normally-low 1-3- 5-6-7 control solenoid. At the same time the normally-high 4-5-6-7-8 reverse control solenoid is commanded ON to regulate 4-5-6-7-8 reverse clutch apply.

4-5-6-7-8 Reverse Clutch Applies

4-5-6-7-8 Reverse Control Solenoid

The 4-5-6-7-8 reverse control solenoid is energized allowing ACT FEED to enter the S3 VFS SIG fluid circuit which applies fluid pressure against the S3 VFS Accum spring force and through orifice #34 to the 45678R control valve spring force. This allows 45678R CLU FD fluid to enter the 45678R CLU fluid circuit. 45678R CL FD fluid also enters orifice #34 which is in the 45678R control valve. Fluid then enters the 45678R CL FDBK fluid circuit unseating the #12 ball check valve allowing 45678R CL FDBK fluid into the ACT FD fluid circuit.

#10 Ball Check Valve

45678R CLU fluid enters orifice #55 and unseats #10 ball check valve. This allows 45678R CL fluid to enter the 45678R CL/23468 CL fluid circuit. 45678R CL/23468 CL fluid passes through orifice #56 and into the lube override enable valve. 45678R CL/23468 CL fluid applies pressure against the lube override enable valve spring force. 45678R CL/23468 CL fluid also passes through orifice #57 and into the default override valve.

4-5-6-7-8 Reverse Clutch Assembly

45678R CLU fluid is directed through orifice #42 into the 4-5-6- 7-8 rev clutch piston spring force which applies holding force to the 4-5-6-7-8 rev clutch plates.

Default Control Solenoid

The default control solenoid valve is energized allowing ACT FEED fluid to enter the S8 ON/OFF SIG fluid circuit. S8 ON/OFF SIG fluid passes thru orifice #58 thru the lube override enable valve and into

the LUBE OVERRIDE fluid circuit which continues to the lube flow regulator valve. S8 ON/OFF SIG fluid is also directed to the #3 ball check valve.

1-3-5-6-7 Clutch Releases

1-3-5-6-7 Control Solenoid

The 1-3-5-6-7 control solenoid is signaled off allowing S3 VFS SIG fluid to exhaust. Spring pressure shifts the valve to allow 13567 CLUTCH fluid to exhaust into EX BACKFILL from the 1-3-5-6-7 clutch accumulator and the 1-3-5-6-7 clutch assembly housing.

1-3-5-6-7 Clutch Assembly

The 1-3-5-6-7 clutch is released allowing 13567 CLUTCH fluid to exhaust thru the 1-3-5-6-7 control solenoid.

1-3-5-6-7 Clutch Accumulator

The 1-3-5-6-7 clutch accumulator is released allowing 13567 CLUTCH fluid to exhaust thru the 1-3-5-6-7 control solenoid.

Drive Range, Fourth Gear

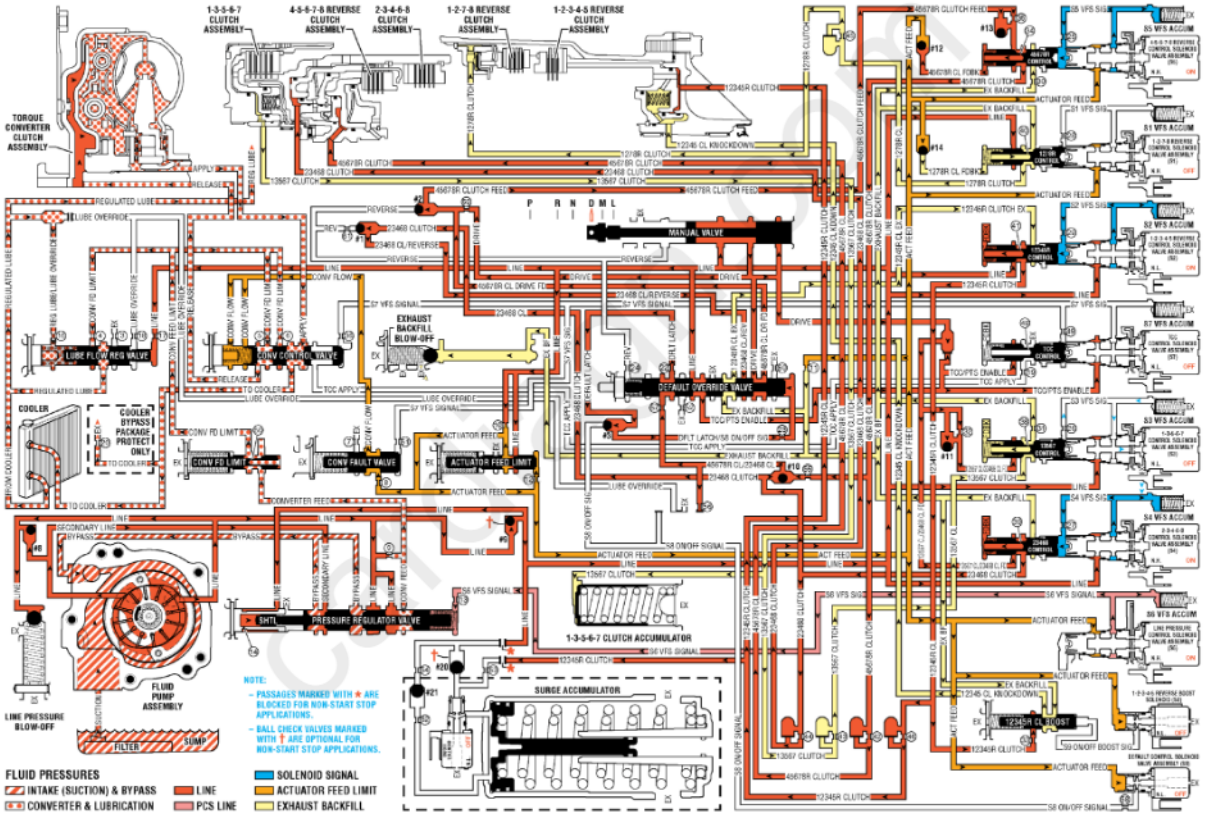

[Fig. 18: Drive Range, Fourth Gear Hydraulic Diagram]
Courtesy of GENERAL MOTORS COMPANY

DRIVE RANGE, FIFTH GEAR

As the vehicle speed increases, the transmission control module (TCM) receives input signals from the automatic transmission input and output speed sensors, the throttle position sensor and other vehicle sensors to determine the precise moment to command ON the normally-low 1-3-5-6- 7 control solenoid. At the same time the normally-high 2-3-4-6-8 control solenoid is commanded OFF.

1-3-5-6-7 Clutch Applies

1-3-5-6-7 Control Solenoid Valve Assembly

The 1-3-5-6-7 control solenoid is energized allowing line fluid to enter the S3 VFS SIG fluid circuit which applies fluid pressure against the S3 VFS SIG accumulator spring force and against the 13567 control valve spring force. This allows

13567 CL/23468 CL FD fluid to enter the 13567 clutch fluid circuit and thru the 13567 control valve orifice #38 to FDBK.

1-3-5-6-7 Clutch Accumulator

13567 CLU fluid is directed thru orifice #43 and into the 1-3-5-6-7 clutch accumulator where it applies pressure against the 1-3-5-6-7 clutch accumulator spring force.

1-3-5-6-7 Clutch Assembly

13567 CLU fluid is also directed to the 1-3-5-6-7 clutch assembly housing. 13567 CLU fluid moves the piston against spring force to apply holding of the 1-3-5-6-7 clutch plates.

2-3-4-6-8 Clutch Releases

2-3-4-6-8 Control Solenoid

The 2-3-4-6-8 control solenoid is signaled off allowing S4 VFS SIG fluid to exhaust. Spring pressure shifts the valve to allow 23468 CLUTCH fluid to exhaust into EX BACKFILL from the 2-3-4-6-8 clutch assembly housing.

2-3-4-6-8 Clutch Assembly

The 2-3-4-6-8 clutch is released allowing 23468 CLUTCH fluid to exhaust thru the 2-3-4-6-8 control solenoid.

Drive Range, Fifth Gear

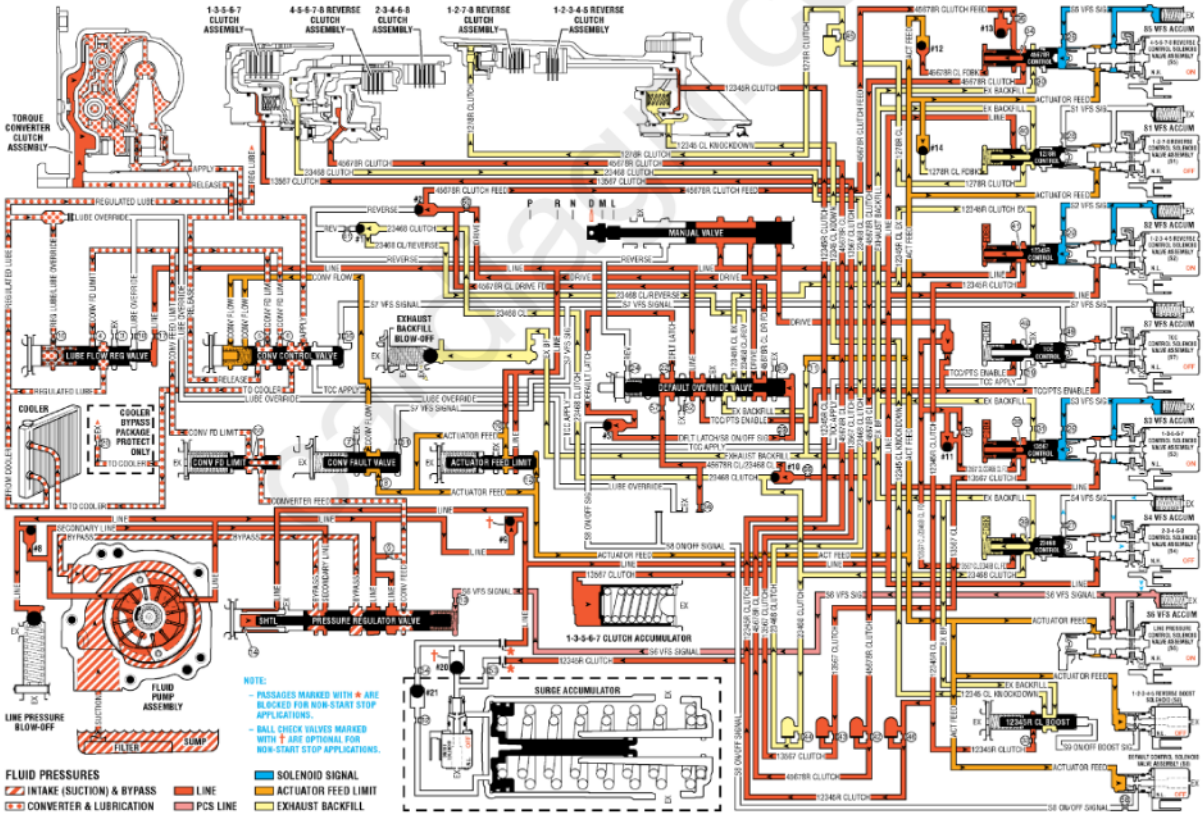

Fig. 19: Drive Range, Fifth Gear Hydraulic Diagram
Courtesy of GENERAL MOTORS COMPANY

DRIVE RANGE, SIXTH GEAR

As the vehicle speed increases, the transmission control module (TCM) receives input signals from the automatic transmission input and output speed sensors, the throttle position sensor and other vehicle sensors to determine the precise moment to command ON the normally-high 2-3-4-6-8 control solenoid. At the same time the normally-low 1-2-3-4-5 reverse control solenoid and the normally-low 1-2-3-4-5 reverse boost solenoid is commanded OFF.

2-3-4-6-8 Clutch Applies

2-3-4-6-8 Control Solenoid

The 2-3-4-6-8 control solenoid energizes allowing line fluid to enter the S4 VFS SIG fluid circuit which applies pressure against the S4 vfs accum spring force and against the 23468 control valve spring force. This allows 13567 CL/23468 CL FD fluid to enter the 23468 CLU fluid circuit. 13567 CL/23468 CL FD fluid also passes thru the 23468 control valve orifice #39 into FDBK. 23468 CLUTCH fluid is directed to the #10 ball check valve and thru orifice #44 to the 23468 clutch assembly housing.

2-3-4-6-8 Clutch Assembly

The 23468 CLU fluid passes thru orifice #44 continuing to the 2-3-4-6-8 clutch assembly housing. 23468 CLUTCH fluid applies pressure against the 23468 clutch piston which applies holding pressure to the 2-3-4-6-8 clutch plates.

1-2-3-4-5 Clutch Releases

1-2-3-4-5 Control Solenoid

The 1-2-3-4-5 control solenoid is signaled off allowing S2 VFS SIG fluid to exhaust. Spring pressure shifts the valve to allow 12345R CLUTCH fluid to exhaust into 12345R CLUTCH EX fluid circuit from the 12345R clutch boost and the 1-2-3-4-5 reverse clutch assembly housing.

1-2-3-4-5 Reverse Clutch Assembly

The 1-2-3-4-5 reverse clutch is released allowing 12345R CLUTCH fluid to exhaust thru the 1-2-3-4-5 reverse control solenoid.

1-2-3-4-5 Reverse Boost Solenoid

The 1-2-3-4-5 reverse boost solenoid is commanded off. This allows S9 ON/OFF BOOST SIGNAL fluid to exhaust through the 1-2-3-4-5 rev boost solenoid.

1-2-3-4-5 Reverse Clutch Boost Valve

The 12345R clutch boost valve spring force moves the valve to allow 12345 CL KNOCKDOWN fluid from the 1-2-3-4- 5 reverse clutch housing to exhaust into the 12345R clutch boost valve then into the EX BACKFILL fluid circuit.

Drive Range, Sixth Gear

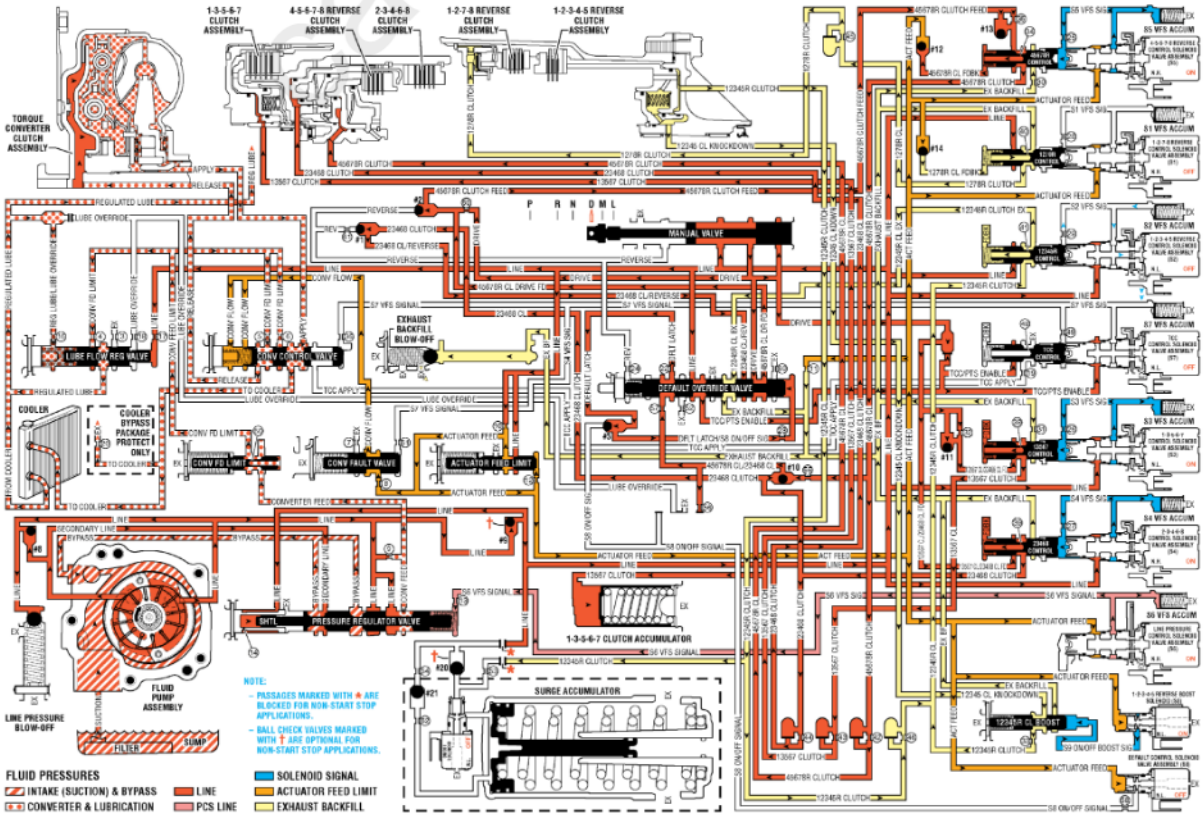

Fig. 20: Drive Range, Sixth Gear Hydraulic Diagram
Courtesy of GENERAL MOTORS COMPANY

DRIVE RANGE, SEVENTH GEAR

As the vehicle speed increases, the transmission control module (TCM) receives input signals from the automatic transmission input and output speed sensors, the throttle position sensor and other vehicle sensors to determine the precise moment to command ON the normally-high 1-2-7-8 reverse control solenoid. At the same time the normally-high 2-3-4-6-8 control solenoid is commanded OFF.

1-2-7-8 Reverse Clutch Applies

1-2-7-8 Reverse Control Solenoid Valve Assembly

The 1-2-7-8 reverse control solenoid is energized (HIGH) allowing actuator feed fluid to enter the S1 VFS SIG fluid circuit which applies fluid pressure against the S1 VFS ACCUM spring force and against the 1278R control valve spring force. This allows line fluid to pass through into the 1278R CLUTCH fluid circuit.

1-2-7-8 Reverse Clutch Assembly

1278R CLU fluid is routed to the 1278 reverse clutch piston to hold the piston against spring force which holds the 1278R clutch plates.

#14 Ball Check Valve

Line fluid travels through the 1278R control valve orifice #40 into the 1278R CLU FDBK fluid circuit and into the #14 ball check valve unseating the ball allowing fluid into the ACT FEED circuit.

2-3-4-6-8 Clutch Releases

2-3-4-6-8 Control Solenoid

The 2-3-4-6-8 control solenoid is signaled off allowing S4 VFS SIG fluid to exhaust. Spring pressure shifts the valve to allow 23468 CLUTCH fluid to exhaust into EX BACKFILL from the 2-3-4-6-8 clutch assembly housing.

2-3-4-6-8 Clutch Assembly

The 2-3-4-6-8 clutch is released allowing 23468 CLUTCH fluid to exhaust thru the 2-3-4-6-8 control solenoid.

Drive Range, Seventh Gear

cardiagn.com

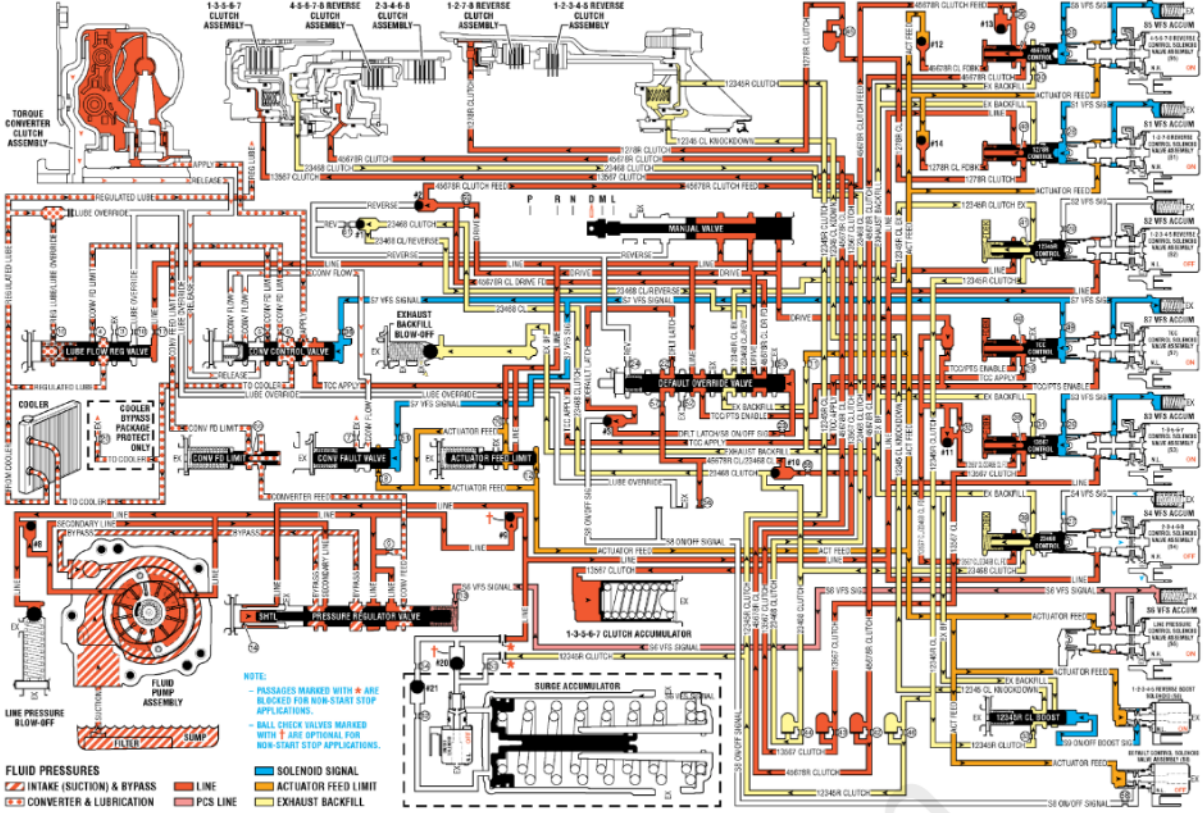

Fig. 21: Drive Range, Seventh Gear Hydraulic Diagram
Courtesy of GENERAL MOTORS COMPANY

DRIVE RANGE, EIGHTH GEAR

As the vehicle speed increases, the transmission control module (TCM) receives input signals from the automatic transmission input and output speed sensors, the throttle position sensor and other vehicle sensors to determine the precise moment to command ON the normally-high 2-3-4-6-8 control solenoid. At the same time the normally-low 1-3-5-6-7 control solenoid is commanded OFF.

2-3-4-6-8 Clutch Applies

2-3-4-6-8 Control Solenoid

The 2-3-4-6-8 control solenoid energizes allowing line fluid to enter the S4 VFS SIG fluid circuit which applies pressure against the S4 vfs accum spring force and against the 23468 control valve spring force. This allows 13567 CL/23468 CL FD fluid to enter the 23468 CLU fluid circuit. 13567 CL/23468 CL FD fluid also passes thru the 23468 control valve orifice #39 into FDBK. 23468 CLUTCH fluid is directed to the #10 ball check valve and thru orifice #44 to the 23468 clutch assembly housing.

2-3-4-6-8 Clutch Assembly

The 23468 CLU fluid passes thru orifice #44 continuing to the 2-3-4-6-8 clutch assembly housing. 23468 CLUTCH fluid applies pressure against the 23468 clutch piston which applies holding pressure to the 2-3-4-6-8 clutch plates.

1-3-5-6-7 Clutch Releases

1-3-5-6-7 Control Solenoid

The 1-3-5-6-7 control solenoid is signaled off allowing S3 VFS SIG fluid to exhaust. Spring pressure shifts the valve to allow 13567 CLUTCH fluid to exhaust into EX BACKFILL from the 1-3-5-6-7 clutch accumulator and the 1-3-5-6-7 clutch assembly housing.

1-3-5-6-7 Clutch Assembly

The 1-3-5-6-7 clutch is released allowing 13567 CLUTCH fluid to exhaust thru the 1-3-5-6-7 control solenoid.

1-3-5-6-7 Clutch Accumulator

The 1-3-5-6-7 clutch accumulator is released allowing 13567 CLUTCH fluid to exhaust thru the 1-3-5-6-7 control solenoid.

Drive Range, Eighth

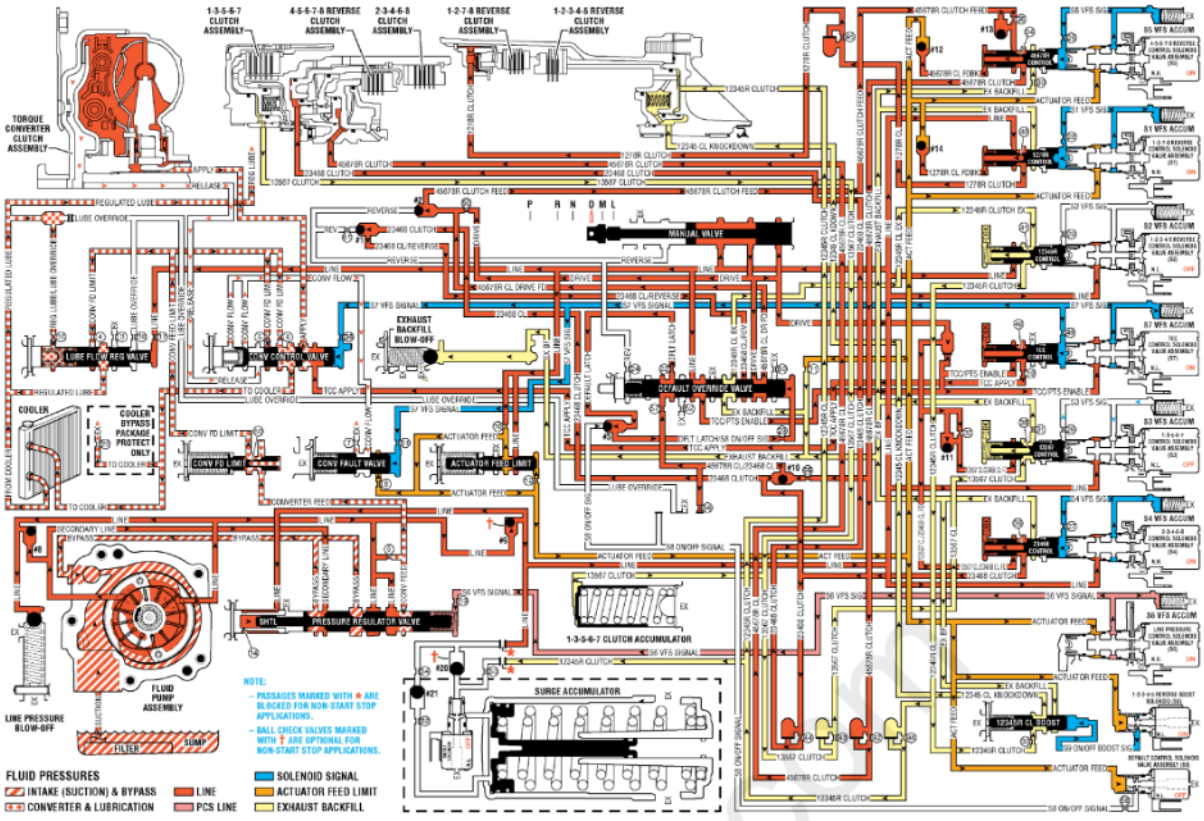

Fig. 22: Drive Range, Eighth Gear Hydraulic Diagram
Courtesy of GENERAL MOTORS COMPANY

FLUID PASSAGES

Stator Shaft Support - Front Cover Side

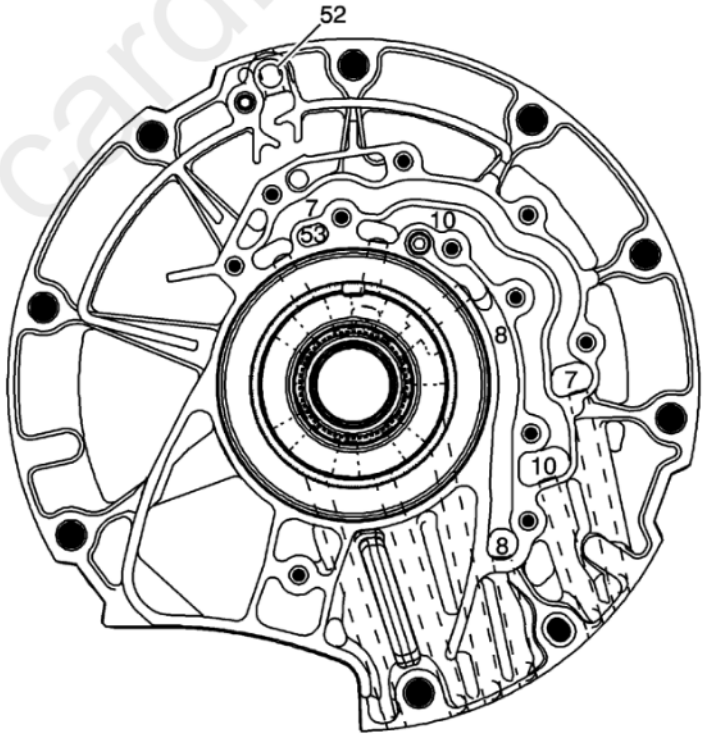

Fig. 23: Stator Shaft Support Fluid Passages -- Front Cover Side
Courtesy of GENERAL MOTORS COMPANY

Callout	Component Name

Callout	Component Name
7	Release
8	Apply
10	From Cooler
52	Vent
53	Void

Stator Shaft Support - Case Assembly Side

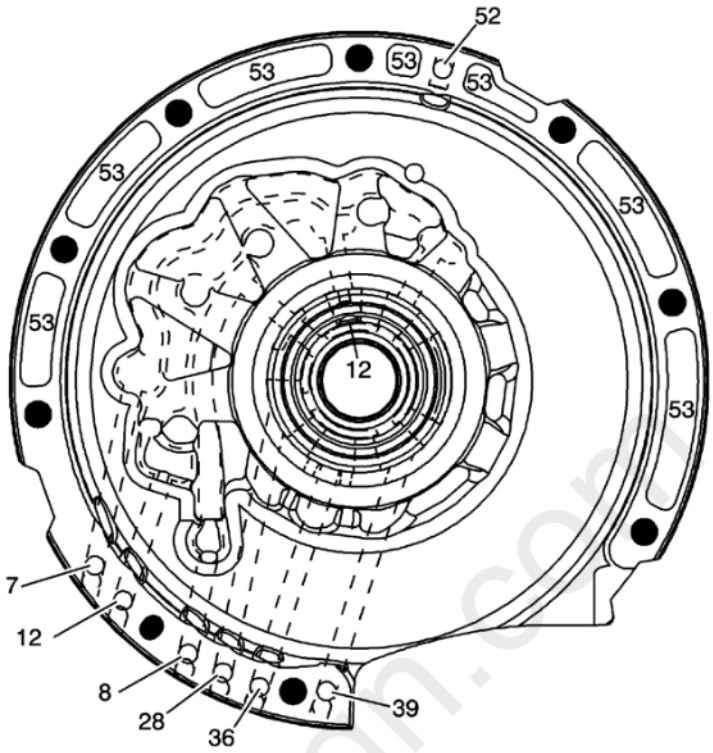

Fig. 24: Stator Shaft Support Fluid Passages -- Case Assembly Side
Courtesy of GENERAL MOTORS COMPANY

Callout	Component Name
7	Release
8	Apply
12	Regulated Lube
28	45678R Clutch
36	13567 Clutch
39	23468 Clutch
52	Vent
53	Void

Case Assembly - Stator Shaft Support Side

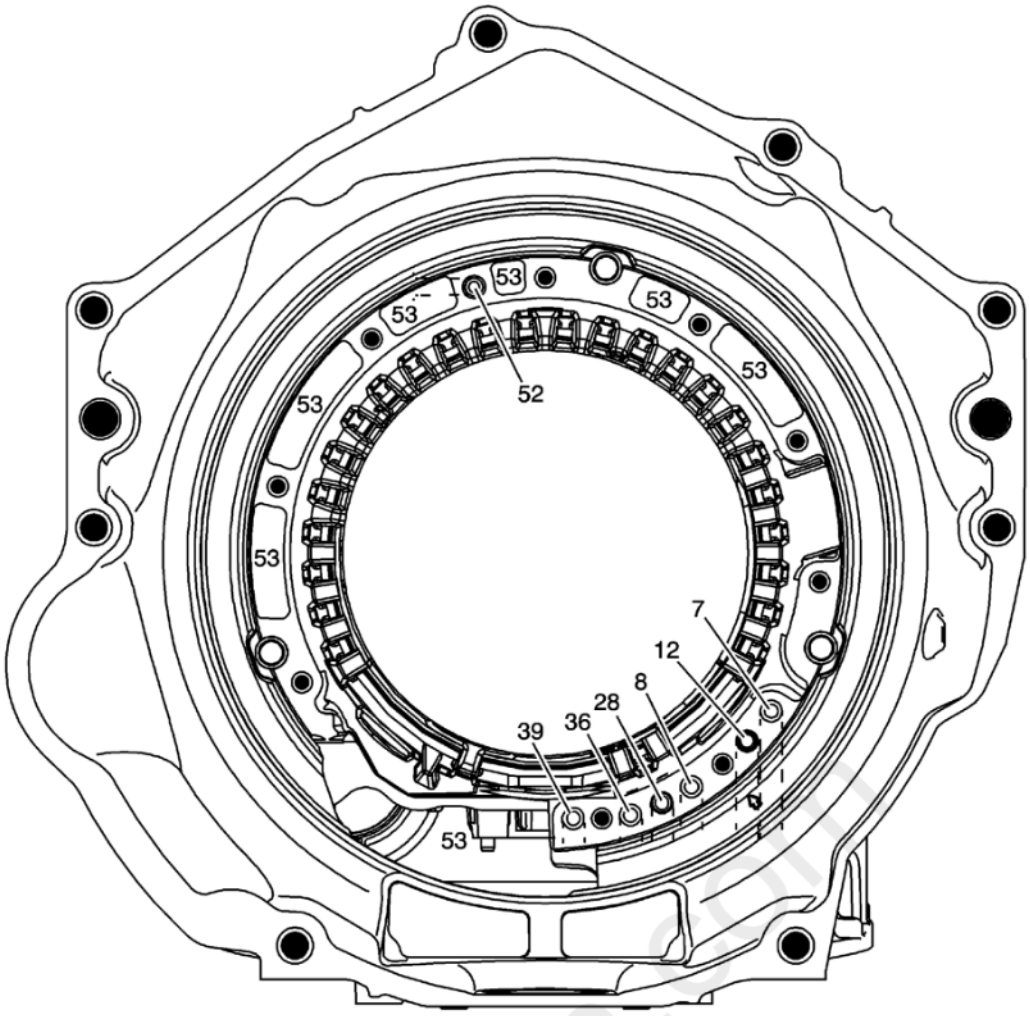

Fig. 25: Case Assembly Fluid Passages -- Stator Shaft Support Side
Courtesy of GENERAL MOTORS COMPANY

Callout	Component Name
7	Release
8	Apply
12	Regulated Lube
28	45678R Clutch
36	13567 Clutch
39	23468 Clutch
52	Vent
53	Void

Case Assembly - Case Extension Side

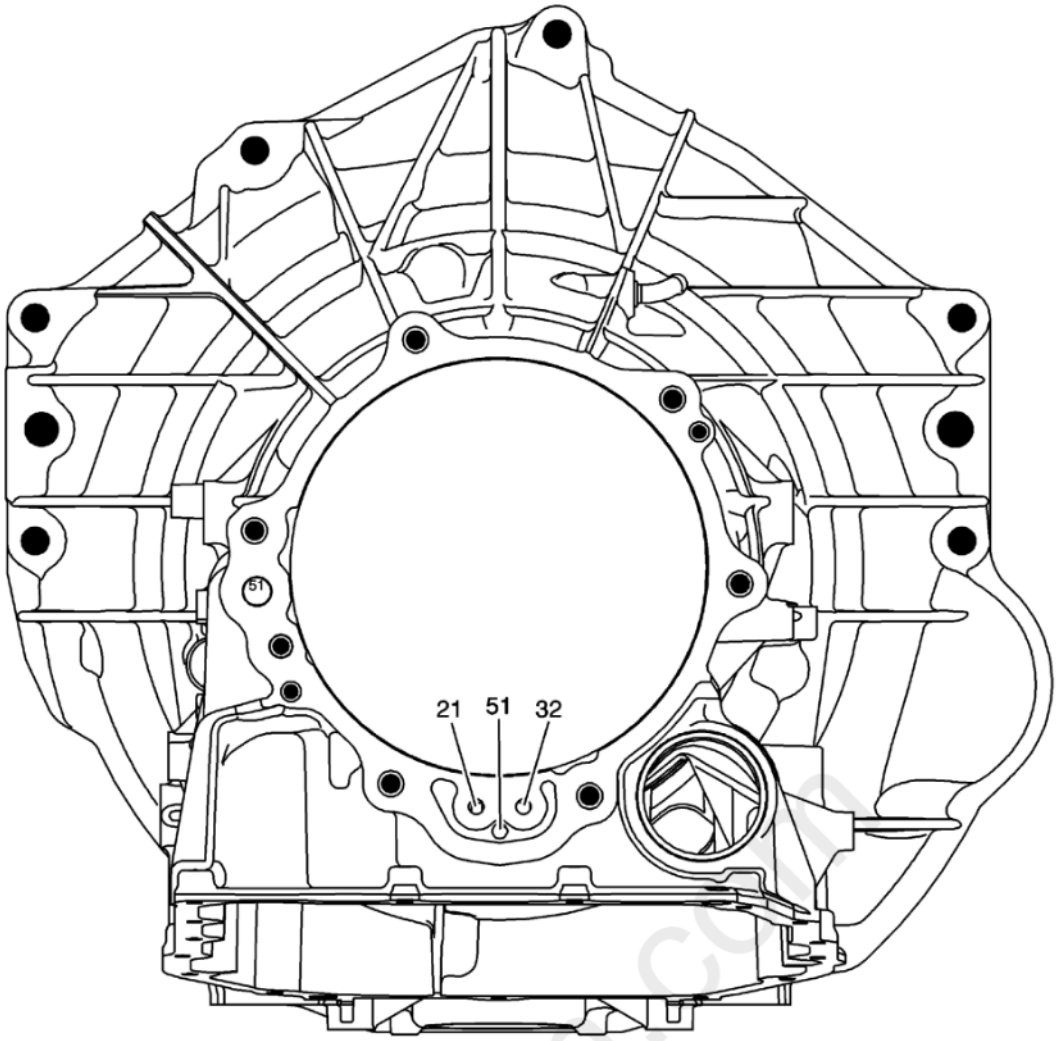

Fig. 26: Case Assembly -- Case Extension Side
Courtesy of GENERAL MOTORS COMPANY

Callout	Component Name
21	12345R Clutch
32	12345 Clutch Knockdown
51	Void

Case Extension Seal - Case Assembly Side

cardiagn.com

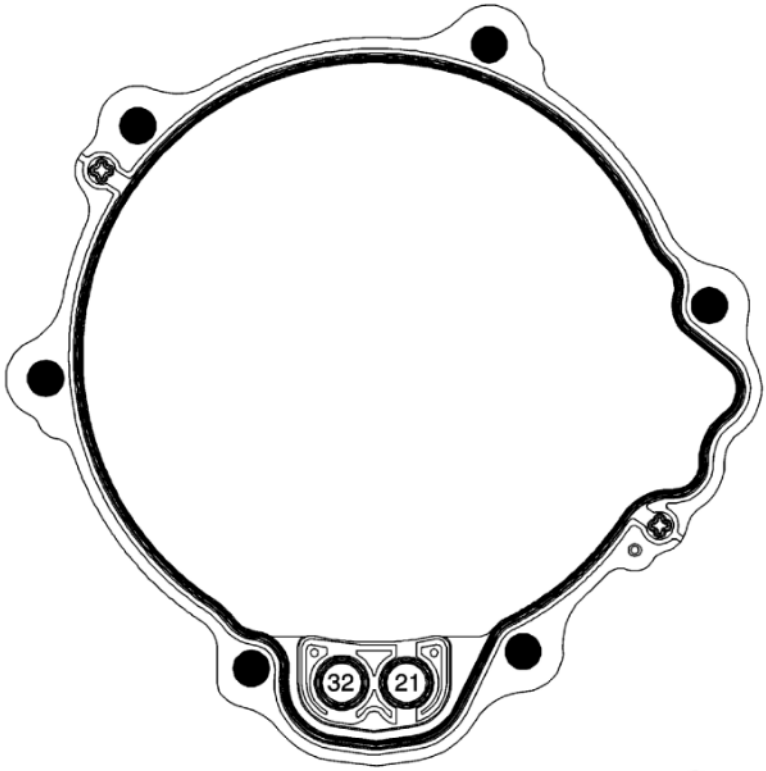

Fig. 27: Case Extension Seal -- Case Assembly Side
Courtesy of GENERAL MOTORS COMPANY

Callout	Component Name
21	12345R Clutch
32	12345 Clutch Knockdown

Case Extension - Case Assembly Side

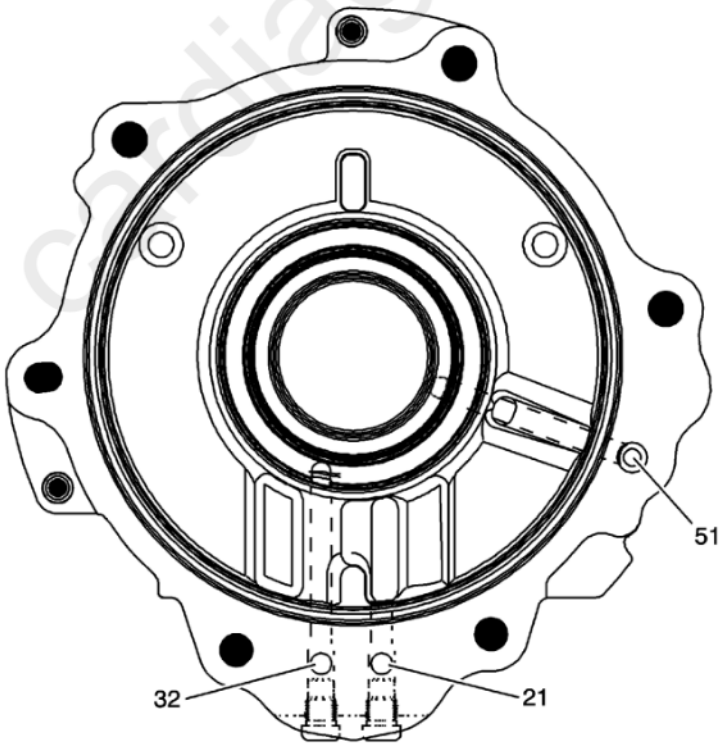

Fig. 28: Case Extension - Case Assembly Side
Courtesy of GENERAL MOTORS COMPANY

Callout	Component Name
21	12345R Clutch
32	12345 Clutch Knockdown

Callout	Component Name
51	Void

Control Valve Upper Body Assembly - Fluid Pump Side

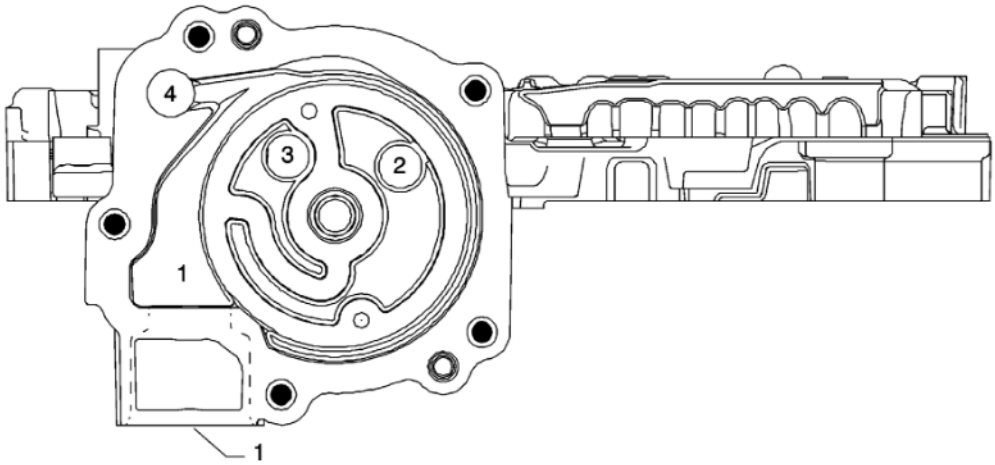

Fig. 29: Control Valve Upper Body Assembly - Fluid Pump Side
Courtesy of GENERAL MOTORS COMPANY

Callout	Component Name
1	Trans Case Locator Pin
1	Suction
2	Line
3	Secondary Line
4	Bypass

Case Assembly - Control Valve Upper Body Assembly Side

cardiagn.com

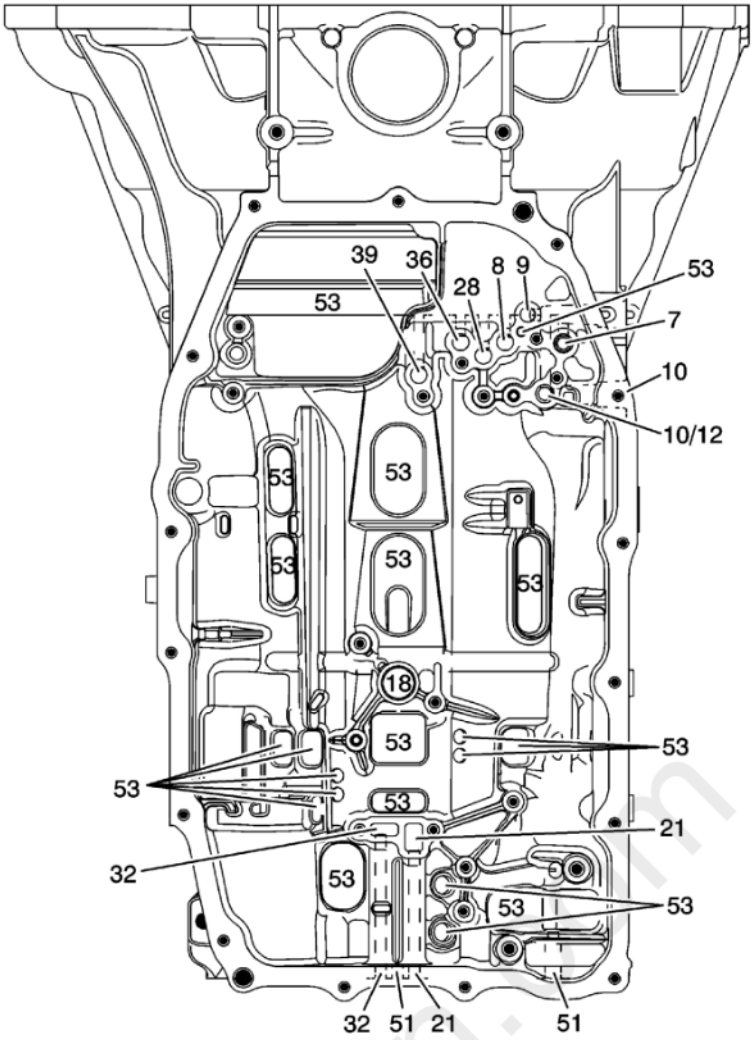

Fig. 30: Case Assembly -- Control Valve Upper Body Assembly Side
Courtesy of GENERAL MOTORS COMPANY

Callout	Component Name
7	Release
8	Apply
9	To Cooler
10	From Cooler
12	Regulated Lube
18	1278R Clutch
21	12345R Clutch
28	45678R Clutch
32	12345 Clutch Knockdown
36	13567 Clutch
39	23468 Clutch
51	Void
53	Void

Control Valve Upper Body Assembly - Case Assembly Side

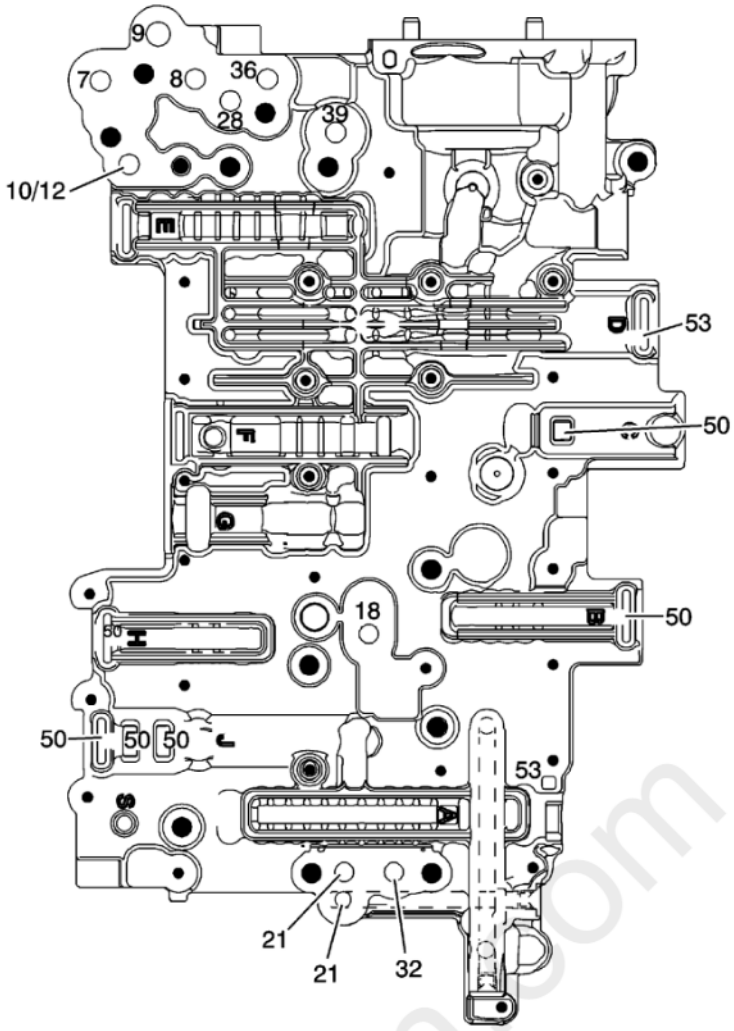

Fig. 31: Control Valve Upper Body Assembly -- Case Assembly Side
Courtesy of GENERAL MOTORS COMPANY

Callout	Component Name
7	Release
8	Apply
9	To Cooler
10	From Cooler
12	Regulated Lube
18	1278R Clutch
21	12345R Clutch
28	45678R Clutch
32	12345 Clutch Knockdown
36	13567 Clutch
39	23468 Clutch
50	Exhaust
53	Void

Control Valve Upper Body Assembly - Control Valve Solenoid Body Side

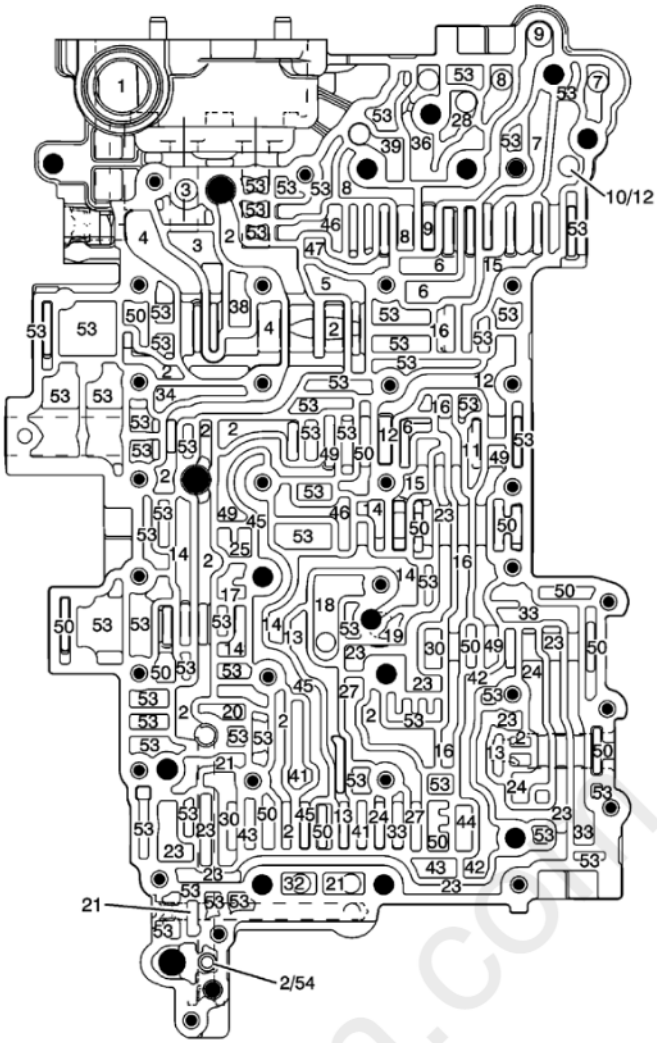

Fig. 32: Control Valve Upper Body Assembly -- Control Valve Solenoid Body Side
Courtesy of GENERAL MOTORS COMPANY

Callout	Component Name
1	Suction
2	Line
3	Secondary Line
4	Bypass
5	Converter Feed
6	Converter Feed Limit
7	Release
8	Apply
9	To Cooler
10	From Cooler
11	From Cooler/Lube Override
12	Regulated Lube
13	Exhaust Backfill
14	Actuator Feed
15	Converter Flow
16	S6 VFS Signal (PCS Line)
17	S1 VFS Signal
18	1278R Clutch
19	1278R Clutch Feedback
20	S2 VFS Signal
21	12345R Clutch
23	Reverse
24	23468 Clutch/Reverse

Callout	Component Name
25	S5 VFS Signal
27	45678R Clutch Drive Feed
28	45678R Clutch
30	45678R Clutch/23468 Clutch
32	12345 Clutch Knockdown
33	Drive
34	S3 VFS Signal
36	13567 Clutch
38	S4 VFS Signal
39	23468 Clutch
41	12345R Clutch Exhaust
42	S8 ON/OFF Signal
43	Default Latch
44	Default Latch/S9 ON/OFF Signal
45	TCC PTS Enable
46	S7 VFS Signal
47	TCC Apply
49	Lube Override
50	Exhaust
53	Void
54	Auxiliary Fluid signal

Control Valve Body Spacer Plate Assembly - Control Valve Upper Body Side

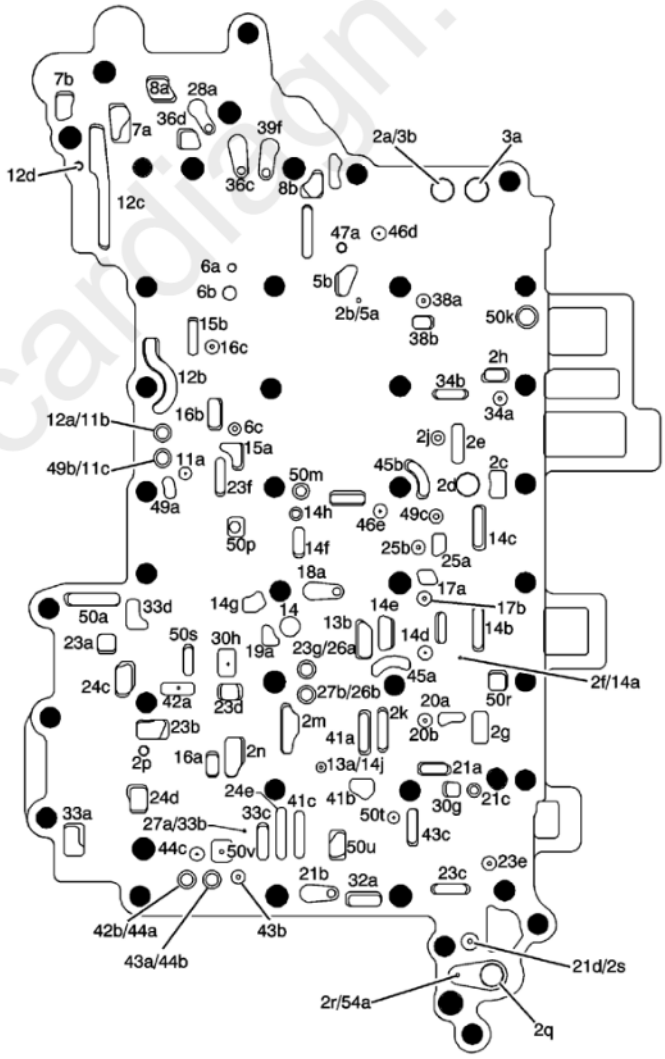

Fig. 33: Control Valve Body Spacer Plate Assembly -- Control Valve Upper Body Side
Courtesy of GENERAL MOTORS COMPANY

Callout	Component Name
2a	Line
2b	Line
2c	Line
2d	Line
2e	Line
2f	Line
2g	Line
2h	Line
2j	Line
2k	Line
2m	Line
2n	Line
2p	Line
2q	Line
2r	Line
2s	Line
3a	Secondary Line
3b	Secondary Line
5a	Converter Feed
5b	Converter Feed
6a	Converter Feed Limit
6b	Converter Feed Limit
6c	Converter Feed Limit
7a	Release
7b	Release
8a	Apply
8b	Apply
11a	From Cooler/Lube Override
11b	From Cooler/Lube Override
11c	From Cooler/Lube Override
12a	Regulated Lube
12b	Regulated Lube
12c	Regulated Lube
12d	Regulated Lube
13a	Exhaust Backfill
13b	Exhaust Backfill
14	Actuator Feed
14a	Actuator Feed
14b	Actuator Feed
14c	Actuator Feed
14d	Actuator Feed
14e	Actuator Feed
14f	Actuator Feed
14g	Actuator Feed
14h	Actuator Feed
14j	Actuator Feed
15a	Converter Flow
15b	Converter Flow
16a	S6 VFS Signal (PCS Line)
16b	S6 VFS Signal (PCS Line)
16c	S6 VFS Signal (PCS Line)
17a	S1 VFS Signal

Callout	Component Name
17b	S1 VFS Signal
18a	1278R Clutch
19a	1278R Clutch Feedback
20a	S2 VFS Signal
20b	S2 VFS Signal
21a	12345R Clutch
21b	12345R Clutch
21c	12345R Clutch
21d	12345R Clutch
23a	Reverse
23b	Reverse
23c	Reverse
23d	Reverse
23e	Reverse
23f	Reverse
23g	Reverse
24c	23468 Clutch /Reverse
24d	23468 Clutch /Reverse
24e	23468 Clutch /Reverse
25a	S5 VFS Signal
25b	S5 VFS Signal
26a	45678R Clutch Feed
26b	45678R Clutch Feed
27a	45678R Clutch Drive Feed
27b	45678R Clutch Drive Feed
28a	45678R Clutch
30g	45678R Clutch/23468 Clutch
30h	45678R Clutch/23468 Clutch
32a	12345 Clutch Knockdown
33a	Drive
33b	Drive
33c	Drive
33d	Drive
34a	S3 VFS Signal
34b	S3 VFS Signal
36c	13567 Clutch
36d	13567 Clutch
38a	S4 VFS Signal
38b	S4 VFS Signal
39f	23468 Clutch
41a	12345R Clutch Exhaust
41b	12345R Clutch Exhaust
41c	12345R Clutch Exhaust
42a	S8 ON/OFF Signal
42b	S8 ON/OFF Signal
43a	Default Latch
43b	Default Latch
43c	Default Latch
44a	Default Latch/S9 ON/OFF Signal
44b	Default Latch/S9 ON/OFF Signal
44c	Default Latch/S9 ON/OFF Signal
45a	TCC PTS Enable

carofdiagn.com

Callout	Component Name
45b	TCC PTS Enable
46d	S7 VFS Signal
46e	S7 VFS Signal
47a	TCC Apply
49a	Lube Override
49b	Lube Override
49c	Lube Override
50a	Exhaust
50k	Exhaust
50m	Exhaust
50p	Exhaust
50r	Exhaust
50s	Exhaust
50t	Exhaust
50u	Exhaust
50v	Exhaust
54a	Auxiliary Fluid Signal

Control Valve Solenoid Body - Control Valve Upper Body Side

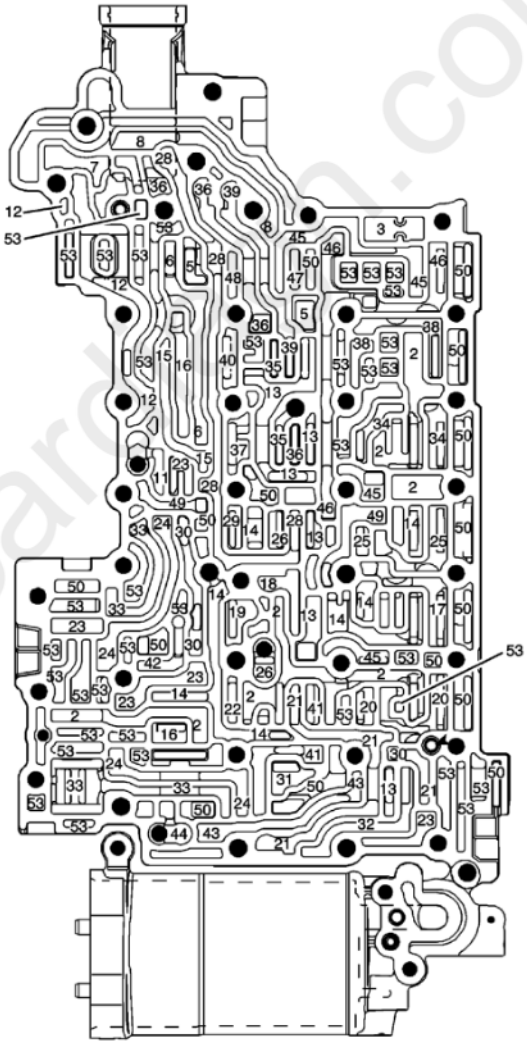

Fig. 34: Control Valve Solenoid Body -- Control Valve Upper Body Side
Courtesy of GENERAL MOTORS COMPANY

Callout	Component Name
2	Line
3	Secondary Line
5	Converter Feed

Callout	Component Name
6	Converter Feed Limit
7	Release
8	Apply
11	From Cooler/Lube Override
12	Regulated Lube
13	Exhaust Backfill
14	Actuator Feed
15	Converter Flow
16	S6 VFS Signal (PCS Line)
17	S1 VFS Signal
18	1278R Clutch
19	1278R Clutch Feedback
20	S2 VFS Signal
22	12345R Clutch Feedback
21	12345R Clutch
23	Reverse
24	23468 Clutch/Reverse
25	S5 VFS Signal
26	45678R Clutch Feed
27	45678R Clutch Drive Feed
28	45678R Clutch
29	45678R Clutch Feedback
30	45678R Clutch/23468 Clutch
31	S9 ON/OFF Boost Signal
32	12345 Clutch Knockdown
33	Drive
34	S3 VFS Signal
35	13567 Clutch Feed
36	13567 Clutch
37	13567 Clutch Feedback
38	S4 VFS Signal
39	23468 Clutch
40	23468 Clutch Feedback
41	12345R Clutch Exhaust
42	S8 ON/OFF Signal
43	Default Latch
44	Default Latch/S9 ON/OFF Signal
45	TCC PTS Enable
46	S7 VFS Signal
47	TCC Apply
48	TCC Apply Feedback
49	Lube Override
50	Exhaust
53	Void
54	Auxiliary Fluid Signal

Control Valve Solenoid Body - Control Valve Channel Plate Side

.com

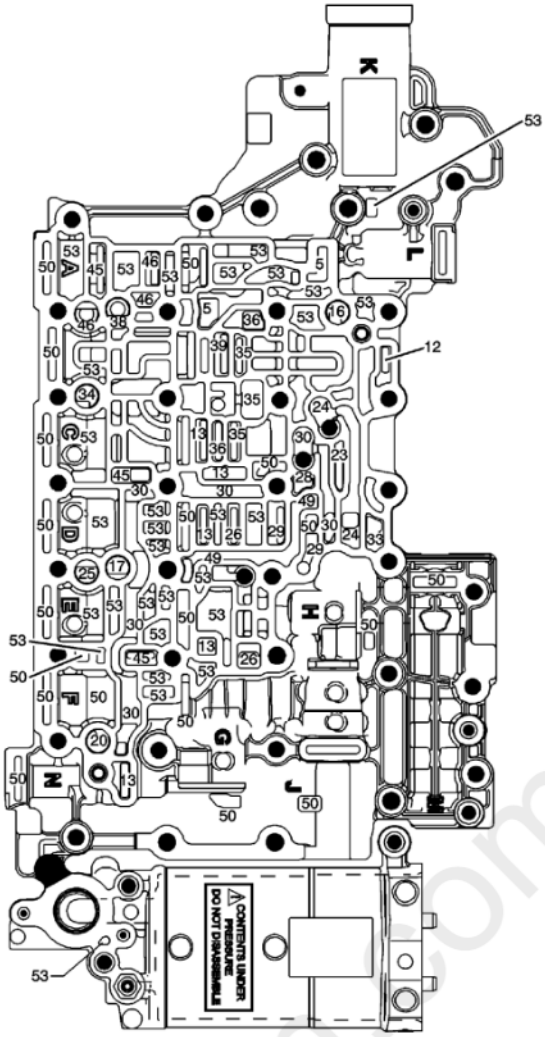

Fig. 35: Control Valve Solenoid Body -- Control Valve Channel Plate Side
Courtesy of GENERAL MOTORS COMPANY

Callout	Component Name
5	Converter Feed
12	Regulated Lube
13	Exhaust Backfill
16	S6 VFS Signal (PCS Line)
17	S1 VFS Signal
20	S2 VFS Signal
23	Reverse
24	23468 Clutch/Reverse
25	S5 VFS Signal
26	45678R Clutch Feed
28	45678R Clutch
29	45678R Clutch Feedback
30	45678R Clutch/23468 Clutch
33	Drive
34	S3 VFS Signal
35	13567 Clutch Feed
36	13567 Clutch
38	S4 VFS Signal
39	23468 Clutch
45	TCC PTS Enable
46	S7 VFS Signal
49	Lube Override
50	Exhaust

Callout	Component Name
53	Void
54	Auxiliary Fluid Signal

Control Valve Channel Plate Spacer Plate Assembly - Control Valve Solenoid Body Side

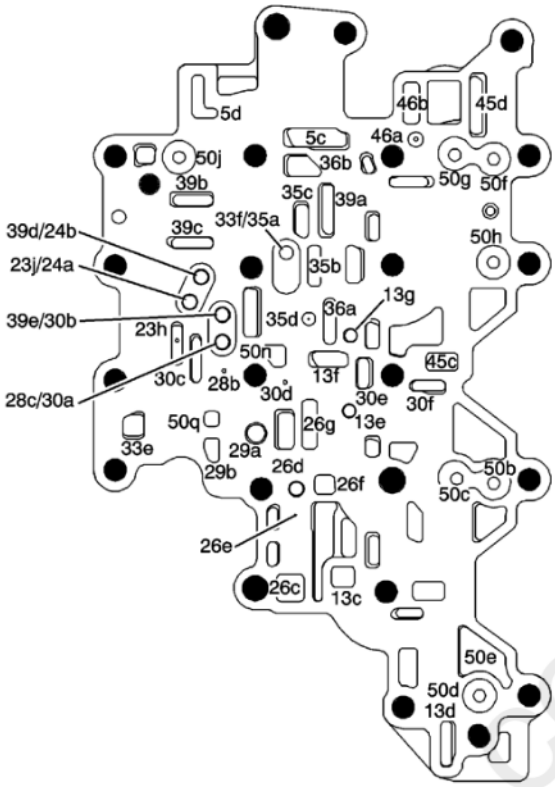

Fig. 36: Control Valve Channel Plate Spacer Plate Assembly -- Control Valve Solenoid Body Side
Courtesy of GENERAL MOTORS COMPANY

Callout	Component Name
5c	Converter Feed
5d	Converter Feed
13c	Exhaust Backfill
13d	Exhaust Backfill
13e	Exhaust Backfill
13f	Exhaust Backfill
13g	Exhaust Backfill
23h	Reverse
23j	Reverse
24a	23468 Clutch/Reverse
24b	23468 Clutch/Reverse
26c	45678R Clutch Feed
26d	45678R Clutch Feed
26e	45678R Clutch Feed
26f	45678R Clutch Feed
26g	45678R Clutch Feed
28b	45678R Clutch
28c	45678R Clutch
29a	45678R Clutch Feedback
29b	45678R Clutch Feedback
30a	45678R Clutch/23468 Clutch
30b	45678R Clutch/23468 Clutch
30c	45678R Clutch/23468 Clutch
30d	45678R Clutch/23468 Clutch

Callout	Component Name
30e	45678R Clutch/23468 Clutch
30f	45678R Clutch/23468 Clutch
33e	Drive
33f	Drive
35b	13567 Clutch Feed
35c	13567 Clutch Feed
35d	13567 Clutch Feed
36a	13567 Clutch
36b	13567 Clutch
39a	23468 Clutch
39b	23468 Clutch
39c	23468 Clutch
39d	23468 Clutch
39e	23468 Clutch
45c	TCC PTS Enable
45d	TCC PTS Enable
46a	S7 VFS Signal
46b	S7 VFS Signal
50b	Exhaust
50c	Exhaust
50d	Exhaust
50e	Exhaust
50f	Exhaust
50g	Exhaust
50h	Exhaust
50j	Exhaust
50n	Exhaust
50q	Exhaust

Control Valve Channel Plate - Control Valve Solenoid Body Side

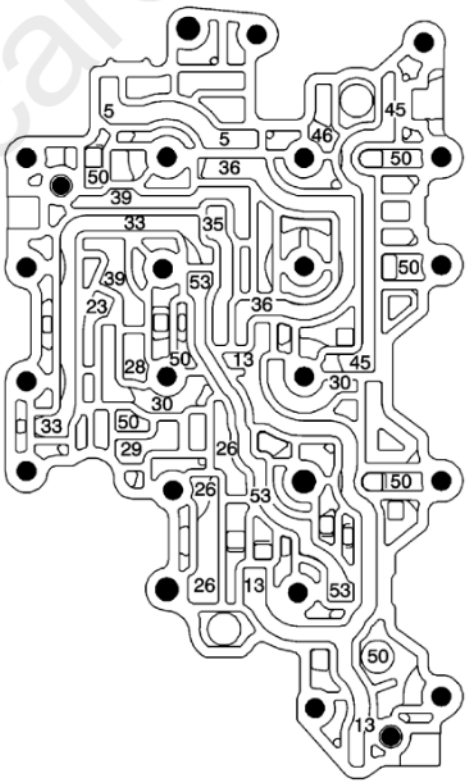

Fig. 37: Control Valve Channel Plate -- Control Valve Solenoid Body Side
Courtesy of GENERAL MOTORS COMPANY

cardiagn.com

Callout	Component Name
5	Converter Feed
13	Exhaust Backfill
23	Reverse
26	45678R Clutch Feed
28	45678R Clutch
29	45678R Clutch Feedback
30	45678R Clutch/23468 Clutch
33	Drive
35	13567 Clutch Feed
36	13567 Clutch
39	23468 Clutch
45	TCC PTS Enable
46	S7 VFS Signal
50	Exhaust
53	Void

Control Valve Channel Plate - Fluid Pan Side

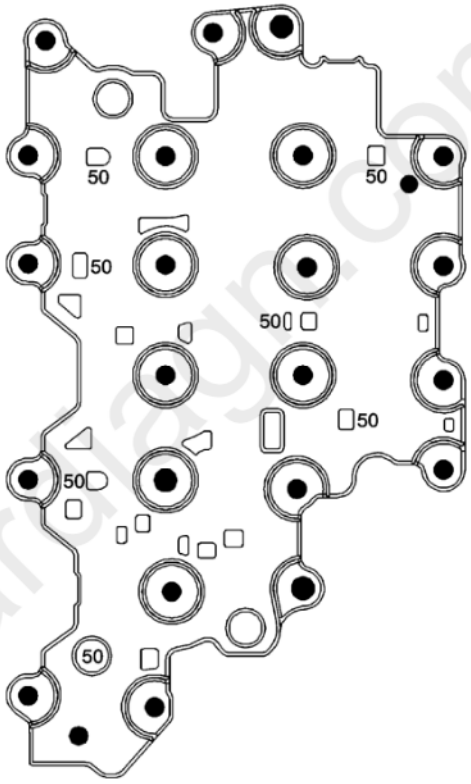

Fig. 38: Control Valve Channel Plate -- Fluid Pan Side
Courtesy of GENERAL MOTORS COMPANY

Callout	Component Name
50	Exhaust

carmanuals.com

Back To Article

Automatic Transmission - 8L45 (M5N) or 8L90 (M5X) - Diagnostic Information and Procedures - CT6

DIAGNOSTIC INFORMATION AND PROCEDURES

DTC P0601-P0604, P0606, P062F, P16F3, P16F4 OR P16FB: CONTROL MODULE MEMORY

Diagnostic Instructions

- Perform the **Diagnostic System Check - Vehicle** prior to using this diagnostic procedure.
- Review **Strategy Based Diagnosis** for an overview of the diagnostic approach.
- **Diagnostic Procedure Instructions** provides an overview of each diagnostic category.

DTC Descriptors

DTC P0601

Control Module Read Only Memory Performance

DTC P0602

Control Module Not Programmed

DTC P0603

Control Module Long Term Memory Reset

DTC P0604

Control Module Random Access Memory Performance

DTC P0606

Control Module Processor Performance

DTC P062F

Control Module Long Term Memory Performance

DTC P16F3

Control Module Redundant Memory Performance

DTC P16F4

Control Module Transmission Range Switch Input Circuitry Performance

DTC P16FB

Control Module Speed Signal Analog to Digital Converter Performance

Circuit/System Description

This diagnostic applies to internal integrity conditions within the transmission control module (TCM). This diagnostic also addresses if the TCM is not programmed.

Conditions for Running the DTC

- P0601, P0602, P0603, P0604, P0606, P062F, P16F3, P16F4 or P16FB is not set.

cardiagn.com

- Ignition On.
- Battery voltage is between 9-32 V.
- Ignition voltage is 9 V or greater for 5 s.

Conditions for Setting the DTC

The TCM detects an internal failure or incomplete programming during TCM initialization.

Action Taken When the DTC Sets

P0601, P0603, P0604, P0606, P062F, P16F3 or P16FB

- P0601, P0603, P0604, P0606, P062F, P16F3 and P16FB are Type A DTCs.
- TCM turns Off power to all shift and pressure control solenoids.
- TCC is disabled.
- 2nd gear is obtained if fault was detected with the default valve in the low state.
- 8th gear is obtained if fault was detected with the default valve in the high state.
- TCM disables transmission adapts learning and freezes current adapt values.
- TCM inhibits Tap Up/Tap Down.
- TCM inhibits TCC.
- TCM requests the ECM to disable powertrain braking.
- TCM commands maximum line pressure for all shifts
- TCM request the ECM to limit engine torque based on transmission input speed.
- TCM request the ECM to disable neutral idle.
- TCM requests the ECM to disable auto grade braking.
- TCM request the ECM to disable auto stop function.

P0602 or P16F4

- P0602 and P16F4 are Type A DTCs.
- No other default action taken.

Conditions for Clearing the DTC

P0601, P0602, P0603, P0604, P0606, P062F, P16F3, P16F4 and P16FB are Type A DTCs.

Reference Information

Schematic Reference

Automatic Transmission Controls Schematics

Connector End View Reference

- **COMPONENT CONNECTOR END VIEWS - INDEX**
- **INLINE HARNESS CONNECTOR END VIEWS - INDEX**

Description and Operation

- **Electronic Component Description**
- **Transmission Component and System Description**
- **Transmission General Description**

Electrical Information Reference

- **Circuit Testing**
- **Connector Repairs**
- **Testing for Intermittent Conditions and Poor Connections**

cardiagn.com

- **Wiring Repairs**

DTC Type Reference

Powertrain Diagnostic Trouble Code (DTC) Type Definitions

Scan Tool Reference

Control Module References for scan tool information

Circuit/System Verification

1. Ignition On.

> **NOTE:** **Replacing a K71 Transmission Control Module also requires a solenoid valve characterization reprogramming and a transmission service fast learn procedure.**

2. Verify DTC P0602 is not set.
   - **If the DTC is set**
   1. Program the K71 Control Module.
   2. Verify the DTC does not set.
      - If the DTC sets, replace the K71 Transmission Control Module.
      - If the DTC does not set
   3. All OK.
   - **If the DTC is not set**
3. Ignition OFF and all vehicle systems OFF.
4. Disconnect the connector at the K71 Transmission Control Module.
5. Verify and inspect each connector terminal of the K71 Transmission Control Module and terminals on the wire harness connector.
   - **If the terminals are not OK**

     Repair or replace as necessary.

   - **If the terminals are OK**
6. Connect the connector at the K71 Transmission Control Module.
7. Ignition ON.
8. Clear DTC P0601, P0602, P0603, P0604, P0606, P062F, P16F3, P16F4 or P16FB from memory.
9. Ignition Off and all vehicle system OFF.
10. Ignition ON.
11. Operate the vehicle within the Conditions for Running the DTC. You may also operate the vehicle within the conditions that you observed from the Freeze Frame/Failure Records data.
12. Verify DTC P0601, P0602, P0603, P0604, P0606, P062F, P16F3 or P16F4 is not set.
    - **If any DTC are set**

      Replace the K71 Transmission Control Module.

    - **If none of the DTCs set**
13. All OK.

Repair Instructions

Perform the **Diagnostic Repair Verification** after completing the repair.

- **Solenoid Valve Characterization Reprogramming**
- Perform the **Transmission Service Fast Learn Procedure** following all transmission related repairs.

cardiagn.com

- Refer to **K71 Transmission Control Module: Programming and Setup**

DTC P0658 OR P0659: ACTUATOR HIGH CONTROL CIRCUIT GROUP 1 VOLTAGE

Diagnostic Instructions

- Perform the **Diagnostic System Check - Vehicle** prior to using this diagnostic procedure.
- Review **Strategy Based Diagnosis** for an overview of the diagnostic approach.
- **Diagnostic Procedure Instructions** provides an overview of each diagnostic category.

DTC Descriptors

DTC P0658

Actuator High Control Circuit Group 1 Low Voltage

DTC P0659

Actuator High Control Circuit Group 1 High Voltage

Diagnostic Fault Information

Circuits	Short to Ground	Open/High Resistance	Short to Voltage	Signal Performance
Ignition	P0658	P0659	P0659	-

Typical Scan Tool Data

High Side Driver 1

Circuits	Short to Ground	Open	Short to Voltage
Operating Conditions: Ignition On **Parameter Normal Range:** On			
High Side Driver 1	Off	On	Off

Circuit/System Description

The high side driver 1 is internal to the transmission control module (TCM). With the ignition On, the high side driver 1 provides 12 V to the transmission control solenoid valve 4, 5 and 8. If excessive current flow is detected in high side driver 1 circuit, the high side driver 1 will turn Off. When the circuit fault is corrected, the high side driver 1 will reset.

Conditions for Running the DTC

P0658

- Ignition is On.
- High side driver 1 is On.
- P0658 is not pending for this ignition cycle.

P0659

- Ignition is On.
- P0659 is not pending for this ignition cycle.

Conditions for Setting the DTC

P0658

TCM has detected a short to ground on the high side driver 1 circuit during TCM initialization.

P0659

TCM has detected a short to voltage on the high side driver 1 circuit during TCM initialization.

cardiagn.com

Action Taken When the DTC Sets

P0658

- P0658 is a Type A DTC.
- TCM turns Off power to all shift and pressure control solenoids.
- TCM inhibits TCC.
- 2nd gear is obtained if fault was detected with the default valve in the low state.
- 8th gear is obtained if fault was detected with the default valve in the high state.
- TCM disables transmission adapts learning and freezes current adapt values.
- TCM commands default shift pattern and ignores all other shift requests.
- TCM inhibits Tap Up/Tap Down.
- TCM commands maximum line pressure for all shifts.
- TCM request the ECM to disable powertrain braking.
- TCM request the ECM to disable neutral idle.
- TCM request the ECM to disable auto grade braking.
- TCM request the ECM to disable auto stop function.
- TCM request the ECM to limit engine torque based on transmission input speed.

P0659

- P0659 is a Type C DTC.
- No default actions taken.

Conditions for Clearing the DTC

- DTC P0658 is a Type A DTC
- DTC P0659 is a Type C DTC

Reference Information

Schematic Reference

Automatic Transmission Controls Schematics

Connector End View Reference

- **COMPONENT CONNECTOR END VIEWS - INDEX**
- **INLINE HARNESS CONNECTOR END VIEWS - INDEX**

Description and Operation

- **Electronic Component Description**
- **Transmission Component and System Description**
- **Transmission General Description**

Electrical Information Reference

- **Circuit Testing**
- **Connector Repairs**
- **Testing for Intermittent Conditions and Poor Connections**
- **Wiring Repairs**

DTC Type Reference

Powertrain Diagnostic Trouble Code (DTC) Type Definitions

Scan Tool Reference

cardiagn.com

Control Module References for scan tool information

Circuit/System Verification

1. Ignition On.
2. Verify the scan tool High Side Driver 1 Command parameter displays On.
   - **If On is not displayed**

     Refer to Circuit/System Testing.

   - **If On is displayed**
3. Verify the parameters listed below do not display Malfunction when commanding the high side driver 1, On and Off with a scan tool.
   - High Side Driver 1 Circuit Low Voltage Test Status
   - High Side Driver 1 Circuit Open Test Status
   - High Side Driver 1 Circuit High Voltage Test Status
   - **If Malfunction is displayed**

     Refer to Circuit/System Testing.

   - **If Malfunction is not displayed**
4. Operate the vehicle within the Conditions for Running the DTC. You may also operate the vehicle within the conditions that you observe from the Freeze Frame/Failure Records data.
5. Verify the DTC does not set.
   - **If the DTC sets**

     Refer to Circuit/System Testing.

   - **If the DTC does not set**
6. All OK.

Circuit/System Testing

1. Ignition Off and all vehicle systems Off. Disconnect the X175 harness connector at the T12 Automatic Transmission Assembly. It may take up to 2 min for all vehicle systems to power down. Ignition On.
2. Command the high side driver 1 Off.
3. Connect a test lamp between the ignition circuit terminal 18 and ground.
4. Verify the test lamp does not illuminate.
   - **If the test lamp illuminates**
   1. Ignition Off.
   2. Disconnect the harness connector at the K71 Transmission Control Module. Ignition On.
   3. Verify a test lamp does not illuminate between the ignition circuit terminal 18 and ground.
      - **If the test lamp illuminates**

        Repair the short to voltage in the ignition circuit.

      - **If the test lamp does not illuminate**

        Replace the K71 Transmission Control Module.

   - **If the test lamp does not illuminate**
5. Ignition On.
6. Verify the test lamp turns On and Off when commanding the high side driver 1 On and Off with a scan tool.
   - **If the test lamp is always Off**
   1. Ignition Off, disconnect the harness connector at the K71 Transmission Control Module.

cardiagn.com

2. Test for infinite resistance between the ignition circuit and ground.
    - If less than infinite resistance, repair the short to ground on the circuit.
    - If infinite resistance
3. Test for less than 2 Ω in the ignition circuit end to end.
    - If 2 Ω or greater, repair the open/high resistance in the circuit.
    - If less than 2 Ω, replace the K71 Transmission Control Module.

- **If the test lamp turns On and Off**

7. Perform the Component Testing

Component Testing

1. Perform the Circuit/System Testing first.
2. Ignition Off, connect the X175 harness connector.
3. Remove the fluid pan from the T12 Automatic Transmission.
4. Disconnect the harness connector at the following solenoids listed below. Refer to **Transmission Solenoid Information** .
    - Q77D Transmission Control Solenoid Valve 4
    - Q77E Transmission Control Solenoid Valve 5
    - Q77H Transmission Control Solenoid Valve 8
5. Ignition On.
6. Command the high side driver 1 Off.
7. Connect a test lamp between terminal 2 and ground on each solenoid harness connector for the following solenoids listed below:
    - Q77D Transmission Control Solenoid Valve 4
    - Q77E Transmission Control Solenoid Valve 5
    - Q77H Transmission Control Solenoid Valve 8
8. Verify the test lamp does not illuminate.
    - **If the test lamp illuminates**
    1. Disconnect the X176 harness connector.
    2. Verify a test lamp does not illuminate between the ignition circuit terminal 4 and ground.
        - If the test lamp illuminates

          Replace the automatic transmission wiring harness, electrical connector passage sleeve.

        - If the test lamp does not illuminate

          Replace the transmission control wiring harness.

    - **If the test lamp does not illuminate**
9. Connect a test lamp between terminal 2 and ground on each solenoid harness connector for the following solenoids listed below:
    - Q77D Transmission Control Solenoid Valve 4
    - Q77E Transmission Control Solenoid Valve 5
    - Q77H Transmission Control Solenoid Valve 8
10. Verify the test lamp turns On and Off when commanding the high side driver 1 On and Off with a scan tool for each of the following solenoids listed below:
    - Q77D Transmission Control Solenoid Valve 4
    - Q77E Transmission Control Solenoid Valve 5
    - Q77H Transmission Control Solenoid Valve 8
    - **If the test lamp is always Off**
    1. Ignition Off, disconnect the X176 harness connector.

cardiagn.com

2. Connect a test lamp between terminal 4 and ground on the automatic transmission wiring harness, electrical connector passage sleeve.
3. Verify the test lamp turns On and Off when commanding the high side driver 1 On and Off.
    - If the test lamp is always Off

      Replace the automatic transmission wiring harness, electrical connector passage sleeve.

    - If the test lamp turns On and Off

      Replace the transmission control wiring harness.

- **If the test lamp turns On and Off**

11. Disconnect the test lamp.
12. Test for 4.5-5.5 Ω between the ignition terminal 2 and the control terminal 1 on the following solenoids:
    - Q77D Transmission Control Solenoid Valve 4
    - Q77E Transmission Control Solenoid Valve 5
    - **If not between 4.5-5.5 Ω**

      Replace the solenoid that is not between 4.5-5.5 Ω.

    - **If between 4.5-5.5 Ω**
13. Test for 11.0-13.0 Ω between the ignition terminal 2 and the control terminal 1 on the Q77H Transmission Control Solenoid Valve 8.
    - **If not between 11.0-13.0 Ω**

      Replace the Q77H Transmission Control Solenoid Valve 8.

    - **If between 11.0-13.0 Ω**
14. Test for infinite resistance between each ignition terminal 1 and ground and then each control terminal 2 and ground on the following solenoids:
    - Q77D Transmission Control Solenoid Valve 4
    - Q77E Transmission Control Solenoid Valve 5
    - Q77H Transmission Control Solenoid Valve 8
    - **If not infinite resistance**

      Replace the solenoid that has continuity to ground.

    - **If infinite resistance**
15. All OK.

Repair Instructions

Perform the **Diagnostic Repair Verification** after completing the repair.

- **Automatic Transmission Fluid, Fluid Pan and/or Filter Replacement (Rear Wheel Drive)**
  Automatic Transmission Fluid, Fluid Pan and/or Filter Replacement (All Wheel Drive)
- **Automatic Transmission Wiring Harness Replacement (Electrical Connector Passage Sleeve)**
- **Control Valve Body Replacement**
- **Solenoid Valve Characterization Reprogramming**
- Perform the **Transmission Service Fast Learn Procedure** following all transmission related repairs.
- **Transmission Control Wiring Harness Replacement (M5N)**
- Refer to **K71 Transmission Control Module: Programming and Setup**

DTC P0711-P0713: TRANSMISSION FLUID TEMPERATURE SENSOR

cardiagn.com

Diagnostic Instructions

- Perform the **Diagnostic System Check - Vehicle** prior to using this diagnostic procedure.
- Review **Strategy Based Diagnosis** for an overview of the diagnostic approach.
- **Diagnostic Procedure Instructions** provides an overview of each diagnostic category.

DTC Descriptors

DTC P0711

Transmission Fluid Temperature Sensor Performance

DTC P0712

Transmission Fluid Temperature Sensor Circuit Low Voltage

DTC P0713

Transmission Fluid Temperature Sensor Circuit High Voltage

Diagnostic Fault Information

Circuits	Short to Ground	Open/High Resistance	Short to Voltage	Signal Performance
Signal	P0712	P0713	P0713	P0711
Low Reference	P0712	P0713	P0713	P0711

Typical Scan Tool Data

Transmission Fluid Temperature Sensor

Circuits	Short to Ground	Open	Short to Voltage
Operating Conditions: Ignition On **Parameter Normal Range:** Transmission Fluid Temperature -40Â° to +130Â°C (-40Â° to +266Â°F)			
Signal	130Â°C (266Â°F)	-40Â° (-40Â°F)	-40Â° (-40Â°F)
Low Reference	130Â°C (266Â°F)	-40Â° (-40Â°F)	-40Â° (-40Â°F)

Circuit/System Description

The transmission fluid temperature sensor is a 2 wire negative temperature coefficient thermistor. The transmission control module (TCM) supplies a 5 V signal circuit and a low reference circuit to the transmission fluid temperature sensor. The transmission fluid temperature sensor measures the temperature of the oil in the transmission fluid pan. As the temperature of the fluid increases, the resistance of the sensor decreases, varying the voltage on the signal circuit. The transmission fluid temperature sensor is part of the transmission internal wire harness assembly and has no serviceable parts.

Conditions for Running the DTC

P0711

- DTC P0101, P0102, P0103, P0106, P0107, P0108, P0171, P0172, P0174, P0175, P0201, P0202, P0203, P0204, P0205, P0206, P0207, P0208, P0300, P0301, P0302, P0303, P0304, P0305, P0306, P0307, P0308, P0712, P0713, P0716, P0717, P0722, P0723, P077C, P0770 or P2809 is not set.
- Battery voltage is between 9-32 V.
- Ignition voltage is between 9-32 V.
- Transmission fluid temperature is between -40Â°C to +130Â°C (-40Â° to +266Â°F).

P0712 or P0713

- Battery voltage is between 9-32 V.

carlogic.com

- Ignition voltage is between 9-32 V.

Conditions for Setting the DTC

P0711 - Condition 1

Transmission fluid temperature rate of change is 15Â°C (59Â°F) for 60 s.

P0711 - Condition 2

Transmission fluid temperature rate of change is 10Â°C (50Â°F) or greater for 8 s.

P0711 - Condition 3

Transmission fluid temperature change is 0Â°C (32Â°F) or less for 300 s.

P0712

Transmission fluid temperature sensor resistance is 47.45 Ω or less for 10 s.

P0713

Transmission fluid temperature sensor resistance is 105445 Ω or greater for 10 s.

Action Taken When the DTC Sets

P0711, P0712 or P0713 are Type B DTCs.

Conditions for Clearing the DTC

P0711, P0712 or P0713 are Type B DTCs.

Diagnostic Aids

During a road test, the transmission fluid temperature should steadily increase to a normal operating and then stabilize.

Reference Information

Schematic Reference

Automatic Transmission Controls Schematics

Connector End View Reference

- **COMPONENT CONNECTOR END VIEWS - INDEX**
- **INLINE HARNESS CONNECTOR END VIEWS - INDEX**

Description and Operation

Electronic Component Description

Electrical Information Reference

- **Circuit Testing**
- **Connector Repairs**
- **Testing for Intermittent Conditions and Poor Connections**
- **Wiring Repairs**

DTC Type Reference

Powertrain Diagnostic Trouble Code (DTC) Type Definitions

Scan Tool Reference

cardiagn.com

Control Module References for scan tool information

Circuit/System Verification

1. Verify the transmission fluid level and condition is correct. Refer to **Transmission Fluid Level and Condition Check**.
   - **If the transmission fluid level and condition is not correct**

     Repair as necessary.

   - **If the transmission fluid level and condition is correct**
2. Engine idling at operating temperature.
3. Verify the scan tool Transmission Fluid Temperature parameter is between -40Â°C to +130Â°C (-40Â° to +266Â°F).
   - **If not between -40Â°C to +130Â°C (-40Â° to +266Â°F)**

     Refer to Circuit/System Testing.

   - **If between -40Â°C to +130Â°C (-40Â° to +266Â°F)**
4. Verify the Transmission Fluid Temperature parameter increases greater than 15Â°C (59Â°F) after operating the vehicle at 64 km/h (40 mph) for 10 min.
   - **If the temperature does not increase greater than 2Â°C (35Â°F)**

     Refer to Circuit/System Testing.

   - **If the temperature does increase greater than 2Â°C (35Â°F)**
5. Operate the vehicle within the Conditions for Running the DTC. You may also operate the vehicle within the conditions that you observe from the Freeze Frame/Failure Records data.
6. Verify the DTC does not set.
   - **If the DTC sets**

     Refer to Circuit/System Testing.

   - **If the DTC does not set**
7. All OK.

Circuit/System Testing

1. Ignition Off and all vehicle systems Off. Disconnect the X175 harness connector at the T12 Automatic Transmission Assembly. It may take up to 2 min. for all vehicle systems to power down.
2. Test for less than 10 Ω between the low reference circuit terminal 11 on the X175 harness connector and ground.
   - **If 10 Ω or greater**
   1. Ignition Off, disconnect the harness connector at the K71 Transmission Control Module.
   2. Test for less than 2 Ω in the low reference circuit end to end.
      - If 2 Ω or greater, repair the open/high resistance in the circuit.
      - If less than 2 Ω, replace the K71 Transmission Control Module.
   - **If less than 10 Ω**
3. Ignition On.
4. Test for 4.8-5.2 V between the signal circuit terminal 12 and ground.
   - **If not between 4.8-5.2 V**
   1. Ignition Off, disconnect the harness connector at the K71 Transmission Control Module.
   2. Test for infinite resistance between the signal circuit terminal 12 and ground.
      - If less than infinite resistance, repair the short to ground on the circuit.
      - If infinite resistance

cardiagn.com

3. Test for less than 1 Ω in the signal circuit end to end.
    - If 1 Ω or greater, repair the open/high resistance in the circuit.
    - If less than 1 Ω, replace the K71 Transmission Control Module.
- **If between 4.8-5.2 V**

5. Perform the Component Testing.

Component Testing

1. Perform the Circuit/System Testing first.
2. Ignition Off, remove the transmission fluid pan from the T12 Automatic Transmission Assembly.
3. Disconnect the vehicle harness connector at X175.
4. Remove the automatic transmission wiring harness electrical connector passage sleeve.
5. Disconnect the transmission control wiring harness.
6. Connector a jumper wire between X176 terminal 15 and terminal 16.
7. Test for infinite resistance between X175 terminal 11 and ground.
    - **If less than infinite resistance**

      Replace the automatic transmission wire harness electrical connector passage sleeve.

    - **If infinite resistance**
8. Test for less than 2 Ω between X175 terminal 11 and terminal 12.
    - **If 2 Ω or greater**

      Replace the automatic transmission wire harness electrical connector passage sleeve.

    - **If less than 2 Ω**
9. Replace the B13 Transmission Fluid Temperature Sensor.

> **NOTE:** **The B13 Transmission Fluid Temperature Sensor is part of the transmission control wiring harness assembly.**

Repair Instructions

Perform the **Diagnostic Repair Verification** after completing the repair.

- **Automatic Transmission Wiring Harness Replacement (Electrical Connector Passage Sleeve)** - Electrical Connector Passage Sleeve
- **Transmission Control Wiring Harness Replacement (M5N)**
- Perform the **Transmission Service Fast Learn Procedure** following all transmission related repairs.
- Refer to **K71 Transmission Control Module: Programming and Setup**

DTC P0716, P0717, P07BF OR P07C0: INPUT SPEED SENSOR

Diagnostic Instructions

- Perform the **Diagnostic System Check - Vehicle** prior to using this diagnostic procedure.
- Review **Strategy Based Diagnosis** for an overview of the diagnostic approach.
- **Diagnostic Procedure Instructions** provides an overview of each diagnostic category.

DTC Descriptors

DTC P0716

Input Speed Sensor Performance

DTC P0717

Input Speed Sensor Circuit No Signal

mardian.com

DTC P07BF

Input Speed Sensor Circuit Low Voltage

DTC P07C0

Input Speed Sensor Circuit High Voltage

Diagnostic Fault Information

Circuits	Short to Ground	Open/High Resistance	Short to Voltage	Signal Performance
9 V Reference	P0717/P07BF	P07C0	P07C0	P0716
Signal	P0717/P07BF	P0717/P07BF	P07C0	P0716

Typical Scan Tool Data

Transmission Input Speed

Circuits	Short to Ground	Open	Short to Voltage
Operating Conditions: Engine Running **Parameter Normal Range:** 0-7500 RPM			
Transmission Input Speed	0 RPM	0 RPM	-

Circuit/System Description

The transmission input speed sensor is a 2 wire hall effect sensor. The transmission input speed sensor signal pick up end faces the machined trigger slots on the outside diameter of the 1-3-5-6-7 clutch housing. The 9 V reference circuit is supplied by the transmission control module (TCM) to the input speed sensor. As the 1-3-5-6-7 clutch housing begins to rotate, the transmission input speed sensor produces a square wave signal. As the rotational speed of the clutch housing increases, the number or frequency of the square wave signal increases. The square wave is transmitted back to the TCM on the input speed signal circuit. The TCM uses the input speed signal to calculate transmission input shaft speed. The input, intermediate and output speed sensor signals are used to determine line pressures, shift patterns, gear ratio and torque converter clutch (TCC) apply and release.

Conditions for Running the DTC

P0716

- P0101, P0102, P0103, P0121, P0122, P0123, P0716, P0717, P07BF or P07C0 is not set.
- Transmission input speed sensor signal is 170 RPM or greater.
- Transmission output speed sensor signal is 214 RPM or greater.
- Accelerator pedal position is 5% or greater.
- Engine torque is between 30-8191 N.m (22-6041 lb ft).
- Ignition voltage is between 9-32 V.

P0717

- P0101, P0102, P0103, P0716, P0722, P0723, P077C, P0770, P07BF or P07C0 is not set.
- Transmission output speed sensor signal is 214 RPM or greater in 6th, 7th or 8th gear.
- Transmission output speed sensor signal is 68 RPM or greater in 1st, 2nd, 3rd 4th or 5th gear.
- Accelerator pedal position is 5% or greater.
- Engine torque is between 30-8191 N.m (22-6041 lb ft).
- Ignition voltage is between 9-32 V.

P07BF

- P07C0 is not set.
- Battery voltage is between 9-32 V.

cardiagn.com

P07C0

- P07BF is not set.
- Battery voltage is between 9-32 V.

Conditions for Setting the DTC

P0716

TCM has detected a 640 RPM or greater drop in the input speed sensor signal for 1.5 s.

P0717

TCM has detected a low transmission input speed sensor signal with high vehicle speed for 4 s.

P07BF

TCM has detected a low transmission input speed sensor signal voltage of 0.25 V or less for 0.05 s.

P07C0

TCM has detected a high voltage input speed sensor voltage of 4.75 V or greater for 0.05 s.

Action Taken When the DTC Sets

- P0716, P0717, P07BF or P07C0 are Type A DTCs.
- TCM disables transmission adapts learning and freezes current adapt values.
- TCM commands default shift pattern and ignores all other shift requests.
- TCM inhibits Tap Up/Tap Down.
- TCM inhibits TCC.
- TCM request the ECM to disable powertrain braking.
- TCM request the ECM to disable neutral idle.
- TCM request the ECM to disable auto grade braking.
- TCM request the ECM to disable auto stop function.
- Transmission shifts to 4th gear.
- Transmission reverse gear is available.

Conditions for Clearing the DTC

P0716, P0717, P07BF or P07C0 are Type A DTCs.

Reference Information

Schematic Reference

Automatic Transmission Controls Schematics

Connector End View Reference

- **COMPONENT CONNECTOR END VIEWS - INDEX**
- **INLINE HARNESS CONNECTOR END VIEWS - INDEX**

Description and Operation

- **Electronic Component Description**
- **Transmission Component and System Description**
- **Transmission General Description**

Electrical Information Reference

- **Circuit Testing**

cardiagn.com

- Connector Repairs
- Testing for Intermittent Conditions and Poor Connections
- Wiring Repairs

DTC Type Reference

Powertrain Diagnostic Trouble Code (DTC) Type Definitions

Scan Tool Reference

Control Module References for scan tool information

Special Tools

J-38522 Variable Signal Generator

For equivalent regional tools, refer to Special Tools .

Circuit/System Verification

1. Ignition On.
2. Verify the scan tool 9V Reference 2 Circuit Status parameter does not display Malfunction.
   - **If Malfunction is displayed**

     Refer to Circuit/System Testing.
   - **If Malfunction is not displayed**
3. Verify the ISS/OSS supply voltage parameter does not display Out of Range.
   - **If Out of Range is displayed**

     Refer to Circuit/System Testing.
   - **If Out of Range is not displayed**
4. Engine idling in park position.
5. Verify the scan tool Transmission Input Speed parameter varies with engine speed and does not drop out.
   - **If the transmission input speed does not vary with engine speed or drops out**

     Refer to Circuit/System Testing.
   - **If the transmission input speed does vary with engine speed and does not drop out**
6. Operate the vehicle within the Conditions for Running the DTC. You may also operate the vehicle within the conditions that you observe from the Freeze Frame/Failure Records data.
7. Verify the DTC does not set.
   - **If the DTC sets**

     Refer to Circuit/System Testing.
   - **If the DTC does not set**
8. All OK.

Circuit/System Testing

1. Ignition Off and all vehicle systems Off. Disconnect the X175 harness connector at the T12 Automatic Transmission Assembly. It may take up to 2 min for all vehicle systems to power down, ignition On.
2. Test for 8.3-9.8 V between the 9 V reference 2 circuit terminal 27 and ground.
   - **If less than 8.3 V**
     1. Ignition Off, disconnect the harness connector at the K71 Transmission Control Module.

cardiagn.com

2. Test for infinite resistance between the 9 V reference 2 circuit terminal 27 and ground.
    - If less than infinite resistance, repair the short to ground on the circuit.
    - If infinite resistance
3. Test for less than 1 Ω in the 9 V reference 2 circuit end to end.
    - If 1 Ω or greater, repair the open/high resistance in the circuit.
    - If less than 1 Ω, replace the K71 Transmission Control Module.

- **If greater than 9.8 V**

1. Ignition Off.
2. Disconnect the harness connector at the K71 Transmission Control Module, ignition On.
3. Test for less than 1 V between the 9 V reference 2 circuit terminal 27 and ground.
    - If greater than the specified value, repair the short to voltage on the circuit.
    - If less than the specified value, replace the K71 Transmission Control Module.

- **If between 8.3-9.8 V**

3. Ignition Off.
4. Connect the red lead of the **J-38522** generator, to the signal circuit terminal 26 and connect the black lead of the **J-38522** generator to ground.
5. Set the **J-38522** generator to the specifications listed below:
    - Signal switch to 5 V
    - Frequency switch to 300 Hz
    - Duty cycle switch to the 50% or the Normal position
6. Ignition On.
7. Verify the scan tool Transmission Input Speed parameter is between 250-280 RPM.
    - **If not between 250-280 RPM**

    1. Ignition Off, disconnect the harness connector at the K71 Transmission Control Module.
    2. Test for infinite resistance between the signal circuit terminal 26 and ground.
        - If less than infinite resistance, repair the short to ground on the circuit.
        - If infinite resistance
    3. Test for less than 1 Ω in the signal circuit end to end.
        - If 1 Ω or greater, repair the open/high resistance in the circuit.
        - If less than 1 Ω, replace the K71 Transmission Control Module.

    - **If between 250-280 RPM**

8. Perform the Component Testing.

Component Testing

1. Perform the Circuit/System Testing first.
2. Ignition Off.
3. Connect the X175 harness connector.
4. Remove the fluid pan from the T12 Automatic Transmission Assembly.
5. Remove the control valve upper body.
6. Disconnect X177 harness connector, ignition On.
7. Test for 8.3-9.8 V between the 9 V reference 2 circuit terminal 4 and ground.
    - **If not between 8.3-9.8 V**

      Replace the automatic transmission wiring harness, electrical connector passage sleeve.

    - **If between 8.3-9.8 V**

8. Connect the red lead of the **J-38522** generator to the signal circuit terminal 5 and connect the black lead of the **J-38522** generator to ground.
9. Set the **J-38522** generator to the specifications listed below:
    - Signal switch to 5 V

cardiagn.com

- Frequency switch to 300 Hz
- Duty cycle switch to the 50% or the Normal position

10. Verify the scan tool transmission input speed parameter is between 250-280 RPM.
    - **If not between 250-280 RPM**

      Replace the automatic transmission wiring harness, electrical connector passage sleeve.

    - **If between 250-280 RPM**
11. Remove the B14C Transmission Input Shaft Speed Sensor from the T12 Automatic Transmission Assembly.
12. Verify there is no damage or misalignment with the machine slots on the outside diameter of the 1-3-5-6-7-Clutch housing and the B14C Transmission Input Shaft Speed Sensor.
    - **If damage or misalignment**

      Repair or replace the necessary components.

    - **If no damage or misalignment**
13. Replace the B14C Transmission Input Shaft Speed Sensor.

Repair Instructions

Perform the **Diagnostic Repair Verification** after completing the repair.

- **Automatic Transmission Fluid, Fluid Pan and/or Filter Replacement (Rear Wheel Drive)**
  Automatic Transmission Fluid, Fluid Pan and/or Filter Replacement (All Wheel Drive)
- **Automatic Transmission Wiring Harness Replacement (Electrical Connector Passage Sleeve)**
- **Control Valve Body Replacement**
- **Input and Output Speed Sensor Replacement**
- **Solenoid Valve Characterization Reprogramming**
- **Transmission Control Wiring Harness Replacement (M5N)**
- Perform the **Transmission Service Fast Learn Procedure** following all transmission related repairs.
- Refer to **K71 Transmission Control Module: Programming and Setup**

DTC P0722, P0723, P077C OR P077D: OUTPUT SPEED SENSOR CIRCUIT

Diagnostic Instructions

- Perform the **Diagnostic System Check - Vehicle** prior to using this diagnostic procedure.
- Review **Strategy Based Diagnosis** for an overview of the diagnostic approach.
- **Diagnostic Procedure Instructions** provides an overview of each diagnostic category.

DTC Descriptors

DTC P0722

Output Speed Sensor Circuit No Signal

DTC P0723

Output Speed Sensor Circuit Intermittent

DTC P077C

Output Speed Sensor Circuit Low Voltage

DTC P077D

Output Speed Sensor Circuit High Voltage

cardiagn.com

Diagnostic Fault Information

Circuits	Short to Ground	Open/High Resistance	Short to Voltage	Signal Performance
9 V Reference	P0722/P077C	P077D	P07C0	P0723
Signal	P0722/P077C	P0722/P077C	P07C0	P0723

Typical Scan Tool Data

Transmission Output Speed

Circuits	Short to Ground	Open	Short to Voltage
Operating Conditions: Engine running, drive range drive wheels rotating **Parameter Normal Range:** 0-7500 RPM			
Transmission Output Speed	0 RPM	0 RPM	-

Circuit/System Description

The transmission output speed sensor is a 2 wire hall effect sensor. The transmission output speed sensor signal pick up end faces the machined trigger slots on the outside diameter of the output carrier assembly. A 9 V reference circuit is supplied by the transmission control module (TCM) to the output speed sensor. As the output carrier assembly begins to rotate, the transmission output speed sensor produces a square wave signal. As the rotational speed of the output carrier assembly increases, the number or frequency of the square wave signal increases. The square wave is transmitted back to the TCM on the transmission output speed sensor signal circuit. The TCM uses the transmission output speed signal to calculate transmission output shaft speed. The input, intermediate and output speed sensor signals are used to determine line pressures, shift patterns, gear ratio and torque converter clutch (TCC) apply and release.

Conditions for Running the DTC

P0722

- P0101, P0102, P0103, P0121, P0122, P0123, P0716, P0717, P0723, P077C or P077D is not set.
- Ignition voltage is between 9-32 V.
- Engine speed is between 3500 - 8200 RPM.
- Transmission fluid temperature is 40Â°C (104Â°F) or greater.
- Transmission input speed sensor signal is between 175 - 8200 RPM.

P0723

- P077C, P077D, P2771, P279A, P279B or P279C is not set.
- Ignition voltage is between 9-32 V.
- Engine speed is between 400-7500 RPM for 5 s.
- Transmission is in drive or reverse range.
- Transmission output speed sensor signal is 105 RPM or greater.

P077C

- P077C or P077D is not set.
- Battery voltage is between 10 - 32 V.
- Ignition voltage is 10 V or greater.

P077D

- P077C or P077D is not set.
- Battery voltage is between 10 - 32 V.
- Ignition voltage is 10 V or greater.

Conditions for Setting the DTC

cardiagn.com

P0722

TCM has detected the transmission output speed sensor signal is 30 RPM or less for 5 s.

P0723

TCM has detected the transmission output speed sensor signal has drop 1000 RPM or more instantaneously.

P077C

TCM has detected a low transmission output speed sensor signal voltage of 0.25 V for 6.25 ms.

P077D

TCM has detected a high transmission output speed sensor signal voltage of 4.75 V for 12.5 ms.

Action Taken When the DTC Sets

- P0722, P0723, P077C or P077D are Type A DTCs.
- TCM turns Off power to all shift and pressure control solenoids.
- TCM inhibits TCC.
- 2nd gear is obtained if fault was detected with the default valve in the low state.
- 8th gear is obtained if fault was detected with the default valve in the high state.
- TCM disables transmission adapts learning and freezes current adapt values
- TCM commands default shift pattern and ignores all other shift requests.
- TCM inhibits Tap Up/Tap Down.
- TCM request the ECM to disable powertrain braking.
- TCM request the ECM to disable neutral idle.
- TCM request the ECM to disable auto grade braking.
- TCM request the ECM to disable auto stop function.

Conditions for Clearing the DTC

P0722, P0723, P077C and P077D are Type A DTCs.

Reference Information

Schematic Reference

Automatic Transmission Controls Schematics

Connector End View Reference

- **COMPONENT CONNECTOR END VIEWS - INDEX**
- **INLINE HARNESS CONNECTOR END VIEWS - INDEX**

Description and Operation

- **Electronic Component Description**
- **Transmission Component and System Description**
- **Transmission General Description**

Electrical Information Reference

- **Circuit Testing**
- **Connector Repairs**
- **Testing for Intermittent Conditions and Poor Connections**
- **Wiring Repairs**

cardiagn.com

DTC Type Reference

Powertrain Diagnostic Trouble Code (DTC) Type Definitions

Scan Tool Reference

Control Module References for scan tool information

Special Tools

J-38522 Variable Signal Generator

For equivalent regional tools, refer to **Special Tools** .

Circuit/System Verification

1. Ignition On.
2. Verify the scan tool 9 V Reference 1 Circuit Status parameter does not display Malfunction.
   - **If Malfunction is displayed**

     Refer to Circuit/System Testing.

   - **If Malfunction is not displayed**
3. Verify the ISS/OSS supply voltage parameter does not display Out of Range.
   - **If Out of Range is displayed**

     Refer to Circuit/System Testing.

   - **If Out of Range is not displayed**
4. Road test the vehicle.
5. Verify the scan tool transmission output speed parameter increases with wheel speed and does not drop out.
   - **If the transmission output speed does not increase with wheel speed or drops out**

     Refer to Circuit/System Testing.

   - **If the transmission output speed does increase with wheel speed and does not drop out**
6. Operate the vehicle within the Conditions for Running the DTC. You may also operate the vehicle within the conditions that you observe from the Freeze Frame/Failure Records data.
7. Verify the DTC does not set.
   - **If the DTC sets**

     Refer to Circuit/System Testing.

   - **If the DTC does not set**
8. All OK.

Circuit/System Testing

1. Ignition Off and all vehicle systems Off. Disconnect the X175 harness connector at the T12 Automatic Transmission Assembly. It may take up to 2 min for all vehicle systems to power down, ignition On.
2. Test for 8.3-9.8 V between the 9 V reference 1 circuit terminal 25 and ground.
   - **If less than 8.3 V**
   1. Ignition Off, disconnect the harness connector at the K71 Transmission Control Module.
   2. Test for infinite resistance between the 9 V reference 1 circuit terminal 25 and ground.
      - If less than infinite resistance, repair the short to ground on the circuit.
      - If infinite resistance
   3. Test for less than 1 Ω in the 9 V reference 1 circuit end to end.

cardiagn.com

- If 1 Ω or greater, repair the open/high resistance in the circuit.
- If less than 1 Ω, replace the K71 Transmission Control Module.

- **If greater than 9.8 V**

1. Ignition Off.
2. Disconnect the harness connector at the K71 Transmission Control Module, ignition On.
3. Test for less than 1 V between the 9 V reference 1 circuit terminal 25 and ground.
    - If greater than the specified value, repair the short to voltage on the circuit.
    - If less than the specified value, replace the K71 Transmission Control Module.

- **If between 8.3-9.8 V**

3. Ignition Off.
4. Connect the red lead of the **J-38522** generator, to the signal circuit terminal 24 and connect the black lead of the **J-38522** generator to ground.
5. Set the **J-38522** generator to the specifications listed below:
    - Signal switch to 5 V
    - Frequency switch to 300 Hz
    - Duty cycle switch to the 50% or the Normal position
6. Ignition On.
7. Verify the scan tool Transmission Output Speed parameter is between 230-280 RPM.
    - **If not between 230-280 RPM**

    1. Ignition Off, disconnect the harness connector at the K71 Transmission Control Module.
    2. Test for infinite resistance between the signal circuit terminal 24 and ground.
        - If less than infinite resistance, repair the short to ground on the circuit.
        - If infinite resistance
    3. Test for less than 1 Ω in the signal circuit end to end.
        - If 1 Ω or greater, repair the open/high resistance in the circuit.
        - If less than 1 Ω, replace the K71 Transmission Control Module.

    - **If between 230-280 RPM**

8. Perform the Component Testing.

Component Testing

1. Perform the Circuit/System Testing first.
2. Ignition Off.
3. Connect the X175 harness connector.
4. Remove the fluid pan from the T12 Automatic Transmission Assembly.
5. Remove the control valve upper body.
6. Disconnect X177 harness connector, ignition On.
7. Test for 8.3-9.8 V between the 9 V reference 1 circuit terminal 2 and ground.
    - **If not between 8.3-9.8 V**

      Replace the automatic transmission wiring harness, electrical connector passage sleeve.

    - **If between 8.3-9.8 V**

8. Connect the red lead of the **J-38522** generator to the signal circuit terminal 1 and connect the black lead of the **J-38522** generator to ground.
9. Set the **J-38522** generator to the specifications listed below:
    - Signal switch to 5 V
    - Frequency switch to 300 Hz
    - Duty cycle switch to the 50% or the Normal position
10. Verify the scan tool transmission input speed parameter is between 230-280 RPM.
    - **If not between 230-280 RPM**

cardiagn.com

Replace the automatic transmission wiring harness, electrical connector passage sleeve.

- **If between 230-280 RPM**

11. Remove the B14A Transmission Output Shaft Speed Sensor from the T12 Automatic Transmission Assembly.
12. Verify there is no damage or misalignment with the machine slots on the outside diameter of the output carrier and the B14A Transmission Output Shaft Speed Sensor.
    - **If damage or misalignment**

      Repair or replace the necessary components.

    - **If no damage or misalignment**
13. Replace the B14A Transmission Output Shaft Speed Sensor.

Repair Instructions

Perform the **Diagnostic Repair Verification** after completing the repair.

- **Automatic Transmission Fluid, Fluid Pan and/or Filter Replacement (Rear Wheel Drive)**
  Automatic Transmission Fluid, Fluid Pan and/or Filter Replacement (All Wheel Drive)
- **Automatic Transmission Wiring Harness Replacement (Electrical Connector Passage Sleeve)**
- **Control Valve Body Replacement**
- **Input and Output Speed Sensor Replacement**
- **Solenoid Valve Characterization Reprogramming**
- **Transmission Control Wiring Harness Replacement (M5N)**
- Perform the **Transmission Service Fast Learn Procedure** following all transmission related repairs.
- Refer to **K71 Transmission Control Module: Programming and Setup**

DTC P0746 OR P0747: TRANSMISSION CONTROL SOLENOID VALVE 1 STUCK OFF/ON

Diagnostic Instructions

- Perform the **Diagnostic System Check - Vehicle** prior to using this diagnostic procedure.
- Review **Strategy Based Diagnosis** for an overview of the diagnostic approach.
- **Diagnostic Procedure Instructions** provides an overview of each diagnostic category.

DTC Descriptors

NOTE: **The DTCs listed below set due to a transmission hydraulic/mechanical condition. Perform the Circuit/System Verification and Circuit/System Testing to identify the cause.**

DTC P0746

Transmission Control Solenoid Valve 1 Stuck Off - The 1-2-7-8-Reverse Clutch did not apply due to a hydraulic/mechanical condition.

DTC P0747

Transmission Control Solenoid Valve 1 Stuck On - The 1-2-7-8-Reverse Clutch did not release due to a hydraulic/mechanical condition.

Circuit/System Description

The transmission control solenoid valve 1 is a low pressure, normally high, variable force solenoid. The transmission control solenoid valve 1 regulates and directs pressurized oil to the 1-2-7-8-Reverse regulator valve. The 1-2-7-8-Reverse regulator valve then directs pressurized oil to the 1-2-7-8-Reverse clutch assembly to apply the clutch. The transmission control module (TCM) uses information from the

cardiagn.com

transmission speed sensors along with serial data information from other control modules to calculate the correct gear ratio and apply the correct clutch assemblies. The TCM compares the calculated gear ratio to the commanded gear ratio. The calculated and commanded gear ratios must match.

Conditions for Running the DTC

P0746

- DTC P0101, P0102, P0103, P0106, P0107, P0108, P0171, P0172, P0174, P0175, P0201, P0202, P0203, P0204, P0205, P0206, P0207, P0208, P0300, P0301, P0302, P0303, P0304, P0305, P0306, P0307, P0308, P0716, P0717, P0722, P0723, P077C, P077D, P07BF, P07C0, P1824, P182A, P182B, P182C, P182D, P182E P182F, P1838, P1839, P1840, P1841, P18B5, P18B6, P18B7, P18B8, P18B9, P18BA, P18BB, P18BC, P18BD, P18BE, P18BF, P18C0, P18C1, P18C2, P18C3, P1915 or P2534 is not set.
- Battery voltage is between 9-32 V.
- Ignition voltage is between 9-32 V.
- High side driver 1 is On.
- High side driver 2 is On.
- Accelerator pedal position signal is 1% or greater.
- Transmission is in drive range.
- Transmission output speed is 100 RPM or greater.

P0747

- DTC P0101, P0102, P0103, P0106, P0107, P0108, P0171, P0172, P0174, P0175, P0201, P0202, P0203, P0204, P0205, P0206, P0207, P0208, P0300, P0301, P0302, P0303, P0304, P0305, P0306, P0307, P0308, P0716, P0717, P0722, P0723, P077C, P077D, P07BF, P07C0, P1824, P182A, P182B, P182C, P182D, P182E P182F, P1838, P1839, P1840, P1841, P18B5, P18B6, P18B7, P18B8, P18B9, P18BA, P18BB, P18BC, P18BD, P18BE, P18BF, P18C0, P18C1, P18C2, P18C3, P1915 or P2534 is not set.
- Battery voltage is between 9-32 V.
- Ignition voltage is between 9-32 V.
- High side driver 1 is On.
- High side driver 2 is On.
- Transmission output speed is 100 RPM or greater.

Conditions for Setting the DTC

P0746

TCM has detected the 1-2-7-8-Reverse Clutch did not apply, resulting in a neutral condition.

P0747

TCM has detected the 1-2-7-8-Reverse Clutch did not release, resulting in a tie-up condition.

Action Taken When the DTC Sets

P0746 or P0747

- P0746 or P0747 are Type A DTCs.
- TCM disables transmission adapts learning and freezes current adapt values.
- TCM commands default shift pattern and ignores all other shift requests.
- TCM inhibits Tap Up/Tap Down.
- TCM inhibits TCC.
- TCM requests the ECM to disable powertrain braking.
- TCM requests the ECM to disable neutral idle.
- TCM requests the ECM to disable auto grade braking.

cardiagn.com

- TCM requests the ECM to disable auto stop function.
- Transmission shifts to 4th gear, if P0746 sets.
- Transmission shifts to 2nd gear, if P0747 sets.
- Transmission reverse gear is available.

Conditions for Clearing the DTC

P0746 and P0747 are Type A DTCs.

Reference Information

Schematic Reference

Automatic Transmission Controls Schematics

Connector End View Reference

- **COMPONENT CONNECTOR END VIEWS - INDEX**
- **INLINE HARNESS CONNECTOR END VIEWS - INDEX**

Description and Operation

- **Drive Range, First Gear**
- **Drive Range, Second Gear**
- **Drive Range, Third Gear**
- **Drive Range, Fourth Gear**
- **Drive Range, Fifth Gear**
- **Drive Range, Sixth Gear**
- **Drive Range, Seventh Gear**
- **Drive Range, Eighth Gear**
- **Electronic Component Description**
- **Neutral - Engine Running**
- **Park - Engine Running**
- **Reverse**
- **Transmission Component and System Description**
- **Transmission General Description**

Electrical Information Reference

- **Circuit Testing**
- **Connector Repairs**
- **Testing for Intermittent Conditions and Poor Connections**
- **Wiring Repairs**

DTC Type Reference

Powertrain Diagnostic Trouble Code (DTC) Type Definitions

Scan Tool Reference

Control Module References for scan tool information

Circuit/System Verification

1. Verify the transmission fluid level and condition is correct. Refer to **Transmission Fluid Level and Condition Check**.
    - **If the transmission fluid and condition is not correct**

cardiagn.com

Repair as necessary.

- **If the transmission fluid level and condition is correct**

2. Ignition On, clear the DTCs from the K71 Transmission Control Module with a scan tool.
3. Verify the transmission operation performs as indicated in the road test instructions and DTC P0746 or P0747 did not set. Refer to **Road Test**.
   - **If DTC P0746 or P0747 did set and the transmission does not shift correctly**

     Refer to Circuit/System Testing.

   - **If DTC P0746 or P0747 did not set and the transmission shifts correctly**
4. Operate the vehicle within the Conditions for Running the DTC. You may also operate the vehicle within the conditions that you observe from the Freeze Frame/Failure Records data.
5. Verify the DTC does not set.
   - **If the DTC sets**

     Refer to Circuit/System Testing.

   - **If the DTC does not set**
6. All OK.

Circuit/System Testing

1. Verify the conditions listed below do not exist. Carefully inspect each component for that condition. Repair or replace as necessary.

P0746 or P0747 - Control Valve Solenoid Body

Transmission Control Solenoid Valve 1 stuck/sticking-debris, binding, damage valve.

P0746 or P0747 - Control Valve Solenoid Body

1-2-7-8-Reverse control valve stuck/sticking - debris, binding, damage valve, scored bore.

P0746 or P0747 - 1-2-7-8-Reverse Clutch

1-2-7-8-Reverse Clutch piston housing retaining ring not seated or clutch piston seals missing or damaged.

P0746 or P0747 - 1-2-7-8-Reverse Clutch

Fluid circuit - plugged with debris or leaks due to missing or damage O-rings, seals or gaskets.

Repair Instructions

Perform the **Diagnostic Repair Verification** after completing the repair.

- **1-2-7-8 Reverse Clutch Piston Removal**
- **1-2-7-8 Reverse Clutch Plate Assembly and Input Sun Gear Assembly Removal**
- **Control Valve Body Replacement**
- **Solenoid Valve Characterization Reprogramming**
- **Transmission Solenoid Information**
- Perform the **Transmission Service Fast Learn Procedure** following all transmission related repairs.
- Refer to **K71 Transmission Control Module: Programming and Setup**

DTC P0776 OR P0777: TRANSMISSION CONTROL SOLENOID VALVE 2 STUCK OFF/ON

Diagnostic Instructions

- Perform the **Diagnostic System Check - Vehicle** prior to using this diagnostic procedure.

cardiagn.com

- Review **Strategy Based Diagnosis** for an overview of the diagnostic approach.
- **Diagnostic Procedure Instructions** provides an overview of each diagnostic category.

DTC Descriptors

NOTE: **The DTCs listed below set due to a transmission hydraulic/mechanical condition. Perform the Circuit/System Verification and Circuit/System Testing to identify the cause.**

DTC P0776

Transmission Control Solenoid Valve 2 Stuck Off - The 1-2-3-4-5-Reverse Clutch did not apply due to a hydraulic/mechanical condition.

DTC P0777

Transmission Control Solenoid Valve 2 Stuck On - The 1-2-3-4-5-Reverse Clutch did not release due to a hydraulic/mechanical condition.

Circuit/System Description

The transmission control solenoid valve 2 is a high pressure, normally low, variable force solenoid. The transmission control solenoid valve 2 regulates and directs pressurized oil to the 1-2-3-4-5-Reverse regulator valve. The 1-2-3-4-5-Reverse regulator valve then directs pressurized oil to the 1-2-3-4-5-Reverse clutch assembly to apply the clutch. The transmission control module (TCM) uses information from the transmission speed sensors along with serial data information from other control modules to calculate the correct gear ratio and apply the correct clutch assemblies. The TCM compares the calculated gear ratio to the commanded gear ratio. The calculated and commanded gear ratios must match.

Conditions for Running the DTC

P0776

- DTC P0101, P0102, P0103, P0106, P0107, P0108, P0171, P0172, P0174, P0175, P0201, P0202, P0203, P0204, P0205, P0206, P0207, P0208, P0300, P0301, P0302, P0303, P0304, P0305, P0306, P0307, P0308, P0716, P0717, P0722, P0723, P077C, P077D, P07BF, P07C0, P1824, P182A, P182B, P182C, P182D, P182E P182F, P1838, P1839, P1840, P1841, P18B5, P18B6, P18B7, P18B8, P18B9, P18BA, P18BB, P18BC, P18BD, P18BE, P18BF, P18C0, P18C1, P18C2, P18C3, P1915 or P2534 is not set.
- Battery voltage is between 9-32 V.
- Ignition voltage is between 9-32 V.
- High side driver 1 is On.
- High side driver 2 is On.
- Accelerator pedal position signal is 1% or greater.
- Transmission is in drive range.
- Transmission output speed is 100 RPM or greater.

P0777

- DTC P0101, P0102, P0103, P0106, P0107, P0108, P0171, P0172, P0174, P0175, P0201, P0202, P0203, P0204, P0205, P0206, P0207, P0208, P0300, P0301, P0302, P0303, P0304, P0305, P0306, P0307, P0308, P0716, P0717, P0722, P0723, P077C, P077D, P07BF, P07C0, P1824, P182A, P182B, P182C, P182D, P182E P182F, P1838, P1839, P1840, P1841, P18B5, P18B6, P18B7, P18B8, P18B9, P18BA, P18BB, P18BC, P18BD, P18BE, P18BF, P18C0, P18C1, P18C2, P18C3, P1915 or P2534 is not set.
- Battery voltage is between 9-32 V.
- Ignition voltage is between 9-32 V.
- High side driver 1 is On.
- High side driver 2 is On.

carmagn.com

- Transmission output speed is 100 RPM or greater.

Conditions for Setting the DTC

P0776

TCM has detected the 1-2-3-4-5-Reverse Clutch did not apply, resulting in a neutral condition.

P0777

TCM has detected the 1-2-3-4-5-Reverse Clutch did not release, resulting in a tie-up condition.

Action Taken When the DTC Sets

P0776 or P0777

- P0776 or P0777 are Type A DTCs.
- TCM disables transmission adapts learning and freezes current adapt values.
- TCM commands default shift pattern and ignores all other shift requests.
- TCM inhibits Tap Up/Tap Down.
- TCM inhibits TCC.
- TCM requests the ECM to disable powertrain braking.
- TCM requests the ECM to disable neutral idle.
- TCM requests the ECM to disable auto grade braking.
- TCM requests the ECM to disable auto stop function.
- Transmission shifts to 6th gear, if P0776 sets.
- Transmission shifts to 2nd gear, if P0777 sets.
- Transmission reverse gear is available.

Conditions for Clearing the DTC

P0776 and P0777 are Type A DTCs.

Reference Information

Schematic Reference

Automatic Transmission Controls Schematics

Connector End View Reference

- **COMPONENT CONNECTOR END VIEWS - INDEX**
- **INLINE HARNESS CONNECTOR END VIEWS - INDEX**

Description and Operation

- **Drive Range, First Gear**
- **Drive Range, Second Gear**
- **Drive Range, Third Gear**
- **Drive Range, Fourth Gear**
- **Drive Range, Fifth Gear**
- **Drive Range, Sixth Gear**
- **Drive Range, Seventh Gear**
- **Drive Range, Eighth Gear**
- **Electronic Component Description**
- **Neutral - Engine Running**
- **Park - Engine Running**
- **Reverse**

cardiagn.com

- Transmission Component and System Description
- Transmission General Description

Electrical Information Reference

- Circuit Testing
- Connector Repairs
- Testing for Intermittent Conditions and Poor Connections
- Wiring Repairs

DTC Type Reference

Powertrain Diagnostic Trouble Code (DTC) Type Definitions

Scan Tool Reference

Control Module References for scan tool information

Circuit/System Verification

1. Verify the transmission fluid level and condition is correct. Refer to Transmission Fluid Level and Condition Check.
   - **If the transmission fluid and condition is not correct**

     Repair as necessary.

   - **If the transmission fluid level and condition is correct**
2. Ignition On, clear the DTCs from the K71 Transmission Control Module with a scan tool.
3. Verify the transmission operation performs as indicated in the road test instructions and DTC P0776 or P0777 did not set. Refer to Road Test.
   - **If DTC P0776 or P0777 did set and the transmission does not shift correctly**

     Refer to Circuit/System Testing.

   - **If DTC P0776 or P0777 did not set and the transmission shifts correctly**
4. Operate the vehicle within the Conditions for Running the DTC. You may also operate the vehicle within the conditions that you observe from the Freeze Frame/Failure Records data.
5. Verify the DTC does not set.
   - **If the DTC sets**

     Refer to Circuit/System Testing.

   - **If the DTC does not set**
6. All OK.

Circuit/System Testing

1. Verify the conditions listed below do not exist. Carefully inspect each component for that condition. Repair or replace as necessary.

P0776 or P0777 - Control Valve Solenoid Body

Transmission Control Solenoid Valve 2 stuck/sticking-debris, binding, damage valve.

P0776 or P0777 - Control Valve Solenoid Body

1-2-3-4-5-Reverse control valve stuck/sticking - debris, binding, damage valve, scored bore.

P0776 or P0777 - 1-2-3-4-5-Reverse Clutch

cardiagn.com

1-2-3-4-5-Reverse Clutch piston housing retaining ring not seated or clutch piston seals missing or damaged.

P0776 or P0777 - 1-2-3-4-5-Reverse Clutch

Fluid circuit - plugged with debris or leaks due to missing or damage O-rings, seals or gaskets.

Repair Instructions

Perform the **Diagnostic Repair Verification** after completing the repair.

- **Control Valve Body Assembly Disassemble**
- **Control Valve Body Replacement**
- **Reaction Internal Gear and 1-2-3-4-5 Reverse Hub and 1-2-3-4-5 Reverse Clutch Plate Assembly Removal**
- **Solenoid Valve Characterization Reprogramming**
- **Transmission Solenoid Information**
- Perform the **Transmission Service Fast Learn Procedure** following all transmission related repairs.
- Refer to **K71 Transmission Control Module: Programming and Setup**

DTC P0796 OR P0797: TRANSMISSION CONTROL SOLENOID VALVE 3 STUCK OFF/ON

Diagnostic Instructions

- Perform the **Diagnostic System Check - Vehicle** prior to using this diagnostic procedure.
- Review **Strategy Based Diagnosis** for an overview of the diagnostic approach.
- **Diagnostic Procedure Instructions** provides an overview of each diagnostic category.

DTC Descriptors

NOTE: **The DTCs listed below set due to a transmission hydraulic/mechanical condition. Perform the Circuit/System Verification and Circuit/System Testing to identify the cause.**

DTC P0796

Transmission Control Solenoid Valve 3 Stuck Off - The 1-3-5-6-7 Clutch did not apply due to a hydraulic/mechanical condition.

DTC P0797

Transmission Control Solenoid Valve 3 Stuck On - The 1-3-5-6-7 Clutch did not release due to a hydraulic/mechanical condition.

Circuit/System Description

The transmission control solenoid valve 3 is a high pressure, normally low, variable force solenoid. The transmission control solenoid valve 3 regulates and directs pressurized oil to the 1-3-5-6-7 regulator valve. The 1-3-5-6-7 regulator valve then directs pressurized oil to the 1-3-5-6-7 clutch assembly to apply the clutch. The transmission control module (TCM) uses information from the transmission speed sensors along with serial data information from other control modules to calculate the correct gear ratio and apply the correct clutch assemblies. The TCM compares the calculated gear ratio to the commanded gear ratio. The calculated and commanded gear ratios must match.

Conditions for Running the DTC

P0796

- DTC P0101, P0102, P0103, P0106, P0107, P0108, P0171, P0172, P0174, P0175, P0201, P0202, P0203, P0204, P0205, P0206, P0207, P0208, P0300, P0301, P0302, P0303, P0304, P0305, P0306, P0307, P0308, P0716, P0717, P0722, P0723, P077C, P077D, P07BF, P07C0, P1824, P182A,

carmgn.com

P182B, P182C, P182D, P182E P182F, P1838, P1839, P1840, P1841, P18B5, P18B6, P18B7, P18B8, P18B9, P18BA, P18BB, P18BC, P18BD, P18BE, P18BF, P18C0, P18C1, P18C2, P18C3, P1915 or P2534 is not set.
- Battery voltage is between 9-32 V.
- Ignition voltage is between 9-32 V.
- High side driver 1 is On.
- High side driver 2 is On.
- Accelerator pedal position signal is 1% or greater.
- Transmission is in drive range.
- Transmission output speed is 100 RPM or greater.

P0797

- DTC P0101, P0102, P0103, P0106, P0107, P0108, P0171, P0172, P0174, P0175, P0201, P0202, P0203, P0204, P0205, P0206, P0207, P0208, P0300, P0301, P0302, P0303, P0304, P0305, P0306, P0307, P0308, P0716, P0717, P0722, P0723, P077C, P077D, P07BF, P07C0, P1824, P182A, P182B, P182C, P182D, P182E P182F, P1838, P1839, P1840, P1841, P18B5, P18B6, P18B7, P18B8, P18B9, P18BA, P18BB, P18BC, P18BD, P18BE, P18BF, P18C0, P18C1, P18C2, P18C3, P1915 or P2534 is not set.
- Battery voltage is between 9-32 V.
- Ignition voltage is between 9-32 V.
- High side driver 1 is On.
- High side driver 2 is On.
- Transmission output speed is 100 RPM or greater.

Conditions for Setting the DTC

P0796

TCM has detected the 1-3-5-6-7 Clutch did not apply, resulting in a neutral condition.

P0797

TCM has detected the 1-3-5-6-7 Clutch did not release, resulting in a tie-up condition.

Action Taken When the DTC Sets

P0796 or P0797

- P0796 or P0797 are Type A DTCs.
- TCM disables transmission adapts learning and freezes current adapt values.
- TCM commands default shift pattern and ignores all other shift requests.
- TCM inhibits Tap Up/Tap Down.
- TCM inhibits TCC.
- TCM requests the ECM to disable powertrain braking.
- TCM requests the ECM to disable neutral idle.
- TCM requests the ECM to disable auto grade braking.
- TCM requests the ECM to disable auto stop function.
- Transmission shifts to 4th gear, if DTC P0796 sets.
- Transmission shifts to 3rd gear, if DTC P0797 sets.
- Transmission reverse gear is available.

Conditions for Clearing the DTC

P0796 and P0797 are Type A DTCs.

Reference Information

cardiagn.com

Schematic Reference

Automatic Transmission Controls Schematics

Connector End View Reference

- **COMPONENT CONNECTOR END VIEWS - INDEX**
- **INLINE HARNESS CONNECTOR END VIEWS - INDEX**

Description and Operation

- **Drive Range, First Gear**
- **Drive Range, Second Gear**
- **Drive Range, Third Gear**
- **Drive Range, Fourth Gear**
- **Drive Range, Fifth Gear**
- **Drive Range, Sixth Gear**
- **Drive Range, Seventh Gear**
- **Drive Range, Eighth Gear**
- **Electronic Component Description**
- **Neutral - Engine Running**
- **Park - Engine Running**
- **Reverse**
- **Transmission Component and System Description**
- **Transmission General Description**

Electrical Information Reference

- **Circuit Testing**
- **Connector Repairs**
- **Testing for Intermittent Conditions and Poor Connections**
- **Wiring Repairs**

DTC Type Reference

Powertrain Diagnostic Trouble Code (DTC) Type Definitions

Scan Tool Reference

Control Module References for scan tool information

Circuit/System Verification

1. Verify the transmission fluid level and condition is correct. Refer to **Transmission Fluid Level and Condition Check**.
   - **If the transmission fluid and condition is not correct**

     Repair as necessary.

   - **If the transmission fluid level and condition is correct**
2. Ignition On, clear the DTCs from the K71 Transmission Control Module with a scan tool.
3. Verify the transmission operation performs as indicated in the road test instructions and DTC P0796 or P0797 did not set. Refer to **Road Test**.
   - **If DTC P0796 or P0797 did set and the transmission does not shift correctly**

     Refer to Circuit/System Testing.

   - **If DTC P0796 or P0797 did not set and the transmission shifts correctly**

cardiagn.com

4. Operate the vehicle within the Conditions for Running the DTC. You may also operate the vehicle within the conditions that you observe from the Freeze Frame/Failure Records data.
5. Verify the DTC does not set.
    - **If the DTC sets**

      Refer to Circuit/System Testing.

    - **If the DTC does not set**
6. All OK.

Circuit/System Testing

1. Verify the conditions listed below do not exist. Carefully inspect each component for that condition. Repair or replace as necessary.

P0796 or P0797 - Control Valve Solenoid Body

Transmission Control Solenoid Valve 3 stuck/sticking-debris, binding, damage valve.

P0796 or P0797 - Control Valve Solenoid Body

1-3-5-6-7 Clutch regulator valve stuck/sticking - debris, binding, damage valve, scored bore.

P0796 or P0797 - 1-3-5-6-7 Clutch Assembly

1-3-5-6-7 Clutch piston housing retaining ring not seated or clutch piston seals missing or damaged.

P0796 or P0797 - 1-3-5-6-7 Clutch

Fluid circuit - plugged with debris or leaks due to missing or damage O-rings, seals or gaskets.

Repair Instructions

Perform the **Diagnostic Repair Verification** after completing the repair.

- **1-3-5-6-7 Clutch Disassemble**
- **Control Valve Body Assembly Disassemble**
- **Control Valve Body Replacement**
- **Solenoid Valve Characterization Reprogramming**
- **Transmission Solenoid Information**
- Perform the **Transmission Service Fast Learn Procedure** following all transmission related repairs.
- Refer to **K71 Transmission Control Module: Programming and Setup**

DTC P0815, P0816 OR P0826: UPSHIFT/DOWNSHIFT SWITCH CIRCUIT

Diagnostic Instructions

- Perform the **Diagnostic System Check - Vehicle** prior to using this diagnostic procedure.
- Review **Strategy Based Diagnosis** for an overview of the diagnostic approach.
- **Diagnostic Procedure Instructions** provides an overview of each diagnostic category.

DTC Descriptors

DTC P0815

Upshift Switch Circuit

DTC P0816

Downshift Switch Circuit

carldiagn.com

DTC P0826

Up and Down Shift Switch Circuit

Diagnostic Fault Information

Driver Shift Control Mode

Circuit	Short to Ground	Open/High Resistance	Short to Voltage	Signal Performance
Normal Range = None				
Tap Up/Tap Down Switch Signal Circuit	0 V	0 V	5-12 V	-

Typical Scan Tool Data

Driver Shift Control Mode

Circuits	Short to Ground	Open	Short to Voltage
Operating Conditions: Engine running, In Drive Range, Manual Mode selected **Parameter Normal Range:** Active/Inactive			
Signal	Active	Inactive	-
Ground	-	Inactive	Active

Up and Down Shift Switch

Circuits	Short to Ground	Open	Short to Voltage
Operating Conditions: Engine running, In Drive Range, Manual Mode selected **Parameter Normal Range:** Active/Inactive, None, Invalid			
Signal	Active	Inactive	None
Ground	Inactive	Inactive	Active

Circuit/System Description

The transmission manual mode shift switches consists of 2 separate switches mounted on the forward facing side of the steering wheel. The 2 switches consist of voltage dropping resistors that are in series - parallel to each other. A 12 V signal circuit is provided by the body control module (BCM). Both the right and left switches are connected to a common chassis ground. The BCM is constantly monitoring the signal circuit for a change in voltage. When either the upshift or downshift switch is momentarily depressed, the voltage will change on the signal circuit. Depending on which switch is depressed, this will indicate either an upshift or downshift to the BCM. A signal is then sent out on the serial data line to the ECM and TCM to perform the desired upshift or downshift.

Conditions for Running the DTC

- U0100, P0815, P0816, P0826, P1761, P182E or P1915 is not set.
- The ignition voltage is 8.6 V or greater.
- The engine speed is 400 RPM or greater for 5 s.

Conditions for Setting the DTC

P0815 - Condition 1

The BCM detects a stuck On Tap Up switch for 1 s in Park or Neutral.

P0815 - Condition 2

The BCM detects a stuck On Tap Up switch for 10 min in any forward gear.

P0816 - Condition 1

The BCM detects a stuck On Tap Down switch for 1 s in Park or Neutral.

P0816 - Condition 2

The BCM detects a stuck On Tap Down switch for 10 min in any forward gear.

P0826

The BCM detects an invalid voltage on the TAP up/down signal circuit for 1 min.

Action Taken When the DTC Sets

- P0815, P0816 and P0826 are Type C DTCs.
- The TCM disables TAP shift operation.

Conditions for Clearing the DTC

P0815, P0816 and P0826 are Type C DTCs.

Reference Information

Schematic Reference

Automatic Transmission Controls Schematics

Connector End View Reference

- **COMPONENT CONNECTOR END VIEWS - INDEX**
- **INLINE HARNESS CONNECTOR END VIEWS - INDEX**

Description and Operation

- **Electronic Component Description**
- **Transmission Component and System Description**
- **Transmission General Description**

Electrical Information Reference

- **Circuit Testing**
- **Connector Repairs**
- **Testing for Intermittent Conditions and Poor Connections**
- **Wiring Repairs**

DTC Type Reference

Powertrain Diagnostic Trouble Code (DTC) Type Definitions

Scan Tool Reference

Control Module References for scan tool information

Circuit/System Verification

1. Ignition On, place the transmission shift lever into manual mode position.
2. Verify the scan tool driver shift control mode parameter displays Active.
   - **If the parameter does not display Active**

     Refer to Circuit/System Testing.

   - **If the parameter does display Active**
3. Verify the scan tool, Up and Down Shift Switch parameter displays Upshift, when pushing rearward on the S2R Transmission Manual Shift Switch - Right.
   - **If the parameter does not display Upshift**

     Refer to Circuit/System Testing.

cardiagn.com

- **If the parameter does display Upshift**

4. Verify the scan tool, Up and Down Shift Switch parameter displays Downshift, when pushing rearward on the S2L Transmission Manual Shift Switch - Left.
    - **If the parameter does not display Downshift**

      Refer to Circuit/System Testing.

    - **If the parameter does display Downshift**
5. Operate the vehicle within the Conditions for Running the DTC. You may also operate the vehicle within the conditions that you observe from the Freeze Frame/Failure Records data.
6. Verify the DTC does not set.
    - **If the DTC sets**

      Refer to Circuit/System Testing.

    - **If the DTC does not set**
7. All OK.

Circuit/System Testing

1. Ignition Off and all vehicle systems Off. Disconnect the harness connector at the S2R Transmission Manual Shift - Right. It may take up to 2 min. for all vehicle systems to power down.
2. Test for less than 5 Ω between the ground circuit terminal 2 and ground.
    - **If 5 Ω or greater**
    1. Ignition Off.
    2. Test for less than 2 Ω in the ground circuit end to end.
        - If 2 Ω or greater, repair the open/high resistance in the wire circuit.
        - If less than 2 Ω, repair the open/high resistance in the ground connection.
    - **If less than 5 Ω**
3. Ignition On.
4. Test for 11.6-12.4 V between the signal circuit terminal 1 and ground.
    - **If not between 11.6-12.4 V**
    1. Ignition Off. Disconnect the X3 connector at the K9 Body Control Module.
    2. Test for infinite resistance between the signal circuit and ground.
        - If less than infinite resistance, repair the short to ground in the signal circuit.
        - If infinite resistance
    3. Test for less than 2 Ω in the signal circuit end to end.
        - If greater than 2 Ω, repair the open/high resistance in the circuit.
        - If less than 2 Ω, replace the K9 Body Control Module.
    - **If between 11.6-12.4 V**
5. Ignition Off.
6. Disconnect the harness connector at the S2L Transmission Manual Shift Switch - Left.
7. Test for less than 2 Ω between terminal 2 on the S2L Transmission Manual Shift Switch - Left harness connector and terminal 3 on the S2R Transmission Manual Shift Switch - Right harness connector.
    - **If 2 Ω or greater**

      Repair the open/high resistance in the signal circuit between the S2L Transmission Manual Shift Switch - Left and the S2R Transmission Manual Shift Switch - Right.

    - **If less than 2 Ω**
8. Test for less than 5 Ω between the ground circuit terminal 1 and ground on the S2L Transmission Manual Shift Switch - Left.
    - **If 5 Ω or greater**

cardiagn.com

1. Ignition Off.
2. Test for less than 2 Ω in the ground circuit end to end.
    - If 2 Ω or greater, repair the open/high resistance in the wire circuit.
    - If less than 2 Ω, repair the open/high resistance in the ground connection.
- **If less than 5 Ω**

9. Perform the Component Testing.

Component Testing

1. Perform the Circuit/System Testing first.
2. Test for infinite resistance between terminal 1 and terminal 2 on S2R Transmission Manual Shift Switch - Right.
    - **If not infinite resistance**

      Replace the S2R Transmission Manual Shift Switch - Right.

    - **If infinite resistance**
3. Test for 500-750 Ω between terminal 1 and terminal 2 on the S2R Transmission Manual Shift Switch - Right, while depressing the switch.
    - **If not within the specified range**

      Replace the S2R Transmission Manual Shift Switch - Right.

    - **If within the specified range**
4. Test for 5400-5800 Ω between terminal 1 and terminal 2 on the S2L Transmission Manual Shift Switch - Left.
    - **If not within the specified range**

      Replace the S2L Transmission Manual Shift Switch - Left.

    - **If within the specified range**
5. Test for 1200-1500 Ω between terminal 1 and terminal 2 on the S2L Transmission Manual Switch - Left with the switch depressed.
    - **If not within the specified range**

      Replace the S2L Transmission Manual Shift Switch - Left.

    - **If within the specified range**
6. Replace the K9 Body Control Module.

Repair Instructions

Perform the **Diagnostic Repair Verification** after completing the repair.

- **Manual Shift Auxiliary Position Switch Replacement - Steering Wheel (Left Side) Manual Shift Auxiliary Position Switch Replacement - Steering Wheel (Right Side)**
- Refer to **K71 Transmission Control Module: Programming and Setup**

DTC P0851: PARK/NEUTRAL POSITION SWITCH CIRCUIT

Diagnostic Instructions

- Perform the **Diagnostic System Check - Vehicle** prior to using this diagnostic procedure.
- Review **Strategy Based Diagnosis** for an overview of the diagnostic approach.
- **Diagnostic Procedure Instructions** provides an overview of each diagnostic category.

DTC Descriptor

DTC P0851

cardiagn.com

Park/Neutral Position Switch Circuit Low Voltage

Diagnostic Fault Information

Circuits	Short to Ground	Open/High Resistance	Short to Voltage	Signal Performance
Signal	P0851	P0851	-	P1915
Ground	-	-	-	P1915

Typical Scan Tool Data

Park/Neutral Position Switch

Circuits	Short to Ground	Open	Short to Voltage
Operating Conditions: Ignition On **Parameter Normal Range:** Park/Neutral or In Gear			
Signal	Park/Neutral	In Gear	-
Ground	-	In Gear	-

Circuit/System Description

The park/neutral position switch is internal to and part of the internal mode switch. The park/neutral switch indicates to the engine control module (ECM) if the vehicle is in park/neutral or in a drive gear range. With the ignition On, the ECM provides 12 V on the park/neutral signal to the park/neutral position switch. A separate ground wire from the park/neutral position switch to the Transmission Control Module (TCM) completes the path to ground. When the gear shift lever in park or neutral, the switch closes and drops the voltage on the signal circuit to 0 V. In this state the engine will start and run. In reverse or drive range the park/neutral switch opens, 12 V is then present on the signal circuit which will inhibit engine starting.

Conditions for Running the DTC

- Ignition voltage is between 9-32 V.
- Vehicle speed is 10 km/h (6 mph).

Conditions for Setting the DTC

The ECM detects the Park/Neutral signal is less than 1 V, when the transmission internal mode switch reports a drive range.

Action Taken When the DTC Sets

P0851 is Type C DTC.

Conditions for Clearing the DTC

P0851 is Type C DTC.

Reference Information

Schematic Reference

Automatic Transmission Controls Schematics

Connector End View Reference

- **COMPONENT CONNECTOR END VIEWS - INDEX**
- **INLINE HARNESS CONNECTOR END VIEWS - INDEX**

Description and Operation

- **Electronic Component Description**
- **Transmission Component and System Description**

cardiagn.com

- **Transmission General Description**

Electrical Information Reference

- **Circuit Testing**
- **Connector Repairs**
- **Testing for Intermittent Conditions and Poor Connections**
- **Wiring Repairs**

DTC Type Reference

Powertrain Diagnostic Trouble Code (DTC) Type Definitions

Scan Tool Reference

Control Module References for scan tool information

Circuit/System Verification

1. Verify the range selector lever cable adjustment is correct. Refer to **Range Selector Lever Cable Adjustment** .
   - **If the range selector lever cable adjustment is not OK**

     Adjust, repair or replace as necessary.

   - **If the range selector lever cable adjustment is OK**
2. Ignition On.
3. Verify the scan tool Engine Control Module Park/Neutral Position Switch parameter displays Park/Neutral when in Park or Neutral and In Gear when in Reverse or Drive range.
   - **If Park/Neutral or In Gear is not displayed correctly**

     Refer to Circuit/System Testing.

   - **If Park/Neutral or In Gear is displayed correctly**
4. Operate the vehicle within the Conditions for Running the DTC. You may also operate the vehicle within the conditions that you observe from the Freeze Frame/Failure Records data.
5. Verify the DTC does not set.
   - **If the DTC sets**

     Refer to Circuit/System Testing.

   - **If the DTC does not set**
6. All OK.

Circuit/System Testing

1. Ignition Off and all vehicle systems Off, disconnect the X175 harness connector at the T12 Automatic Transmission Assembly. It may take up to 2 min for all vehicle systems to power down.
2. Test for less than 5 Ω between the ground circuit terminal 30 and ground.
   - **If 5 Ω or greater**
   1. Disconnect the harness connector at the K71 Transmission Control Module.
   2. Test for less than 2 Ω in the ground circuit end to end.
      - If 2 Ω or greater, repair the open/high resistance in the circuit.
      - If less than 2 Ω, replace the K71 Transmission Control Module.
   - **If less than 5 Ω**
3. Ignition On.
4. Test for 11-13 V at the signal circuit terminal 35 and ground.

carmagn.com

- **If not between 11-13 V**

1. Ignition Off, disconnect the X1 harness connector at the K20 Engine Control Module.
2. Test for infinite resistance between the harness connector X175, terminal 35 and ground.
    - If less than infinite resistance, repair the short to ground in the circuit.
    - If infinite resistance
3. Test for less than 2 Ω in the signal circuit end to end.
    - If 2 Ω or greater, repair the open/high resistance in the circuit.
    - If less than 2 Ω, replace the K20 Engine Control Module.

- **If between 11-13 V**

5. Connect a 3 A fused jumper wire between signal circuit terminal 35 and the ground circuit terminal 30.
6. Verify the scan tool park/neutral position switch parameter displays Park/Neutral.
    - **If Park/Neutral is not displayed**

      Replace the K20 Engine Control Module.

    - **If Park/Neutral is displayed**
7. Perform the Component Testing.

Component Testing

1. Perform the Circuit/System Testing first.
2. Ignition Off, remove the transmission fluid pan from the T12 Automatic Transmission Assembly.
3. Disconnect the harness connector from the B15 Transmission Internal Mode Switch.
4. Connect a jumper wire between terminal 1 and terminal 2.
5. Disconnect the X176 harness connector.
6. Test for infinite resistance between terminal 12 and ground.
    - **If less than infinite resistance**

      Replace the transmission control wiring harness.

    - If infinite
    1. Test for less than 2 Ω between terminal 12 and terminal 20.
    2. If 2 Ω or greater, replace the transmission control wiring harness.
    - **If infinite resistance**
7. Disconnect the jumper wire.
8. Remove the automatic transmission wiring harness, electrical connector passage sleeve.
9. Connect a jumper wire between terminal 12 and terminal 20.
10. Test for infinite resistance between harness connector X175 terminal 30 and ground.
    - **If less than infinite resistance**

      Replace the automatic transmission wiring harness, electrical connector passage sleeve.

    - If infinite
    1. Test for less than 2 Ω between terminal 30 and terminal 35.
    2. If 2 Ω or greater, replace the automatic transmission wiring harness, electrical connector passage sleeve.
    - **If infinite resistance**
11. Replace the B15 Transmission Internal Mode Switch.

Repair Instructions

Perform the **Diagnostic Repair Verification** after completing the repair.

cardiagn.com

- Automatic Transmission Fluid, Fluid Pan and/or Filter Replacement (Rear Wheel Drive)
  Automatic Transmission Fluid, Fluid Pan and/or Filter Replacement (All Wheel Drive)
- Automatic Transmission Wiring Harness Replacement (Electrical Connector Passage Sleeve) - Electrical Connector Passage Sleeve
- Manual Shift Detent Lever with Shaft Position Switch Assembly and Park Pawl Actuator Removal - for B15 Transmission Internal Mode Switch replacement.
- Perform the Transmission Service Fast Learn Procedure following all transmission related repairs.
- Transmission Control Wiring Harness Replacement (M5N)
- Refer to Control Module References for control solenoid valve assembly replacement, programming and setup.

DTC P0960, P0962 OR P0963: TRANSMISSION CONTROL SOLENOID VALVE 1 CONTROL CIRCUIT

Diagnostic Instructions

- Perform the Diagnostic System Check - Vehicle prior to using this diagnostic procedure.
- Review Strategy Based Diagnosis for an overview of the diagnostic approach.
- Diagnostic Procedure Instructions provides an overview of each diagnostic category.

DTC Descriptors

DTC P0960

Transmission Control Solenoid Valve 1 Control Circuit Open

DTC P0962

Transmission Control Solenoid Valve 1 Control Circuit Low Voltage

DTC P0963

Transmission Control Solenoid Valve 1 Control Circuit High Voltage

Diagnostic Fault Information

Circuits	Short to Ground	Open/High Resistance	Short to Voltage	Signal Performance
Ignition	P2760	P2761	P2761	-
Control	P0962	P0960	P0963	-

Typical Scan Tool Data

Transmission Control Solenoid Valve 1 Control Circuit Open Test Status

Circuits	Short to Ground	Open	Short to Voltage
Operating Conditions: Ignition On **Parameter Normal Range:** OK or Not Run			
Ignition	Malfunction	Malfunction	Malfunction
Control	-	Malfunction	-

Transmission Control Solenoid Valve 1 Control Circuit Low Voltage Test Status

Circuits	Short to Ground	Open	Short to Voltage
Operating Conditions: Ignition On **Parameter Normal Range:** OK or Not Run			
Ignition	Malfunction	Malfunction	Malfunction
Control	Malfunction	-	-

Transmission Control Solenoid Valve 1 Control Circuit High Voltage Test Status

Circuits	Short to Ground	Open	Short to Voltage

Circuits	Short to Ground	Open	Short to Voltage
Operating Conditions: Ignition On **Parameter Normal Range:** OK or Not Run			
Ignition	Malfunction	Malfunction	Malfunction
Control	-	-	Malfunction

Circuit/System Description

The transmission control solenoid valve 1 is a low pressure, normally high, variable force solenoid valve. The transmission control module (TCM) high side driver 2, supplies 12 V to the transmission control solenoid valve 1. A low side driver circuit in the TCM is pulsed width modulated to vary the current to the solenoid. If excessive current flow is detected, the high side driver 2 will turn Off. When the circuit fault is corrected, the high side driver 2 will reset.

Conditions for Running the DTC

- Ignition On.
- High side driver 2 On.
- Battery voltage is between 11-32 V for 1 s or greater.
- TCM power mode state is in accessory or ignition.

Conditions for Setting the DTC

P0960

TCM detects an open/high resistance in the transmission control solenoid valve 1 control circuit, for 0.3 s.

P0962

TCM detects a short to ground in the transmission control solenoid valve 1 control circuit, for 0.3 s.

P0963

TCM detects a short to power in the transmission control solenoid valve 1 control circuit, for 0.3 s.

Action Taken When the DTC Sets

P0960 or P0963

- P0960 or P0963 is a Type A DTC.
- TCM disables transmission adapts learning and freezes current adapt values.
- TCM commands default shift pattern and ignores all other shift requests.
- TCM inhibits Tap Up/Tap Down.
- TCM inhibits TCC.
- TCM request the ECM to disable powertrain braking.
- TCM request the ECM to disable neutral idle.
- TCM request the ECM to disable auto grade braking.
- TCM request the ECM to disable auto stop function.
- Transmission shifts to 2nd or 7th gear depending on vehicle speed.
- Transmission reverse gear is available.

P0962

- P0962 is a Type A DTC.
- TCM disables transmission adapts learning and freezes current adapt values.
- TCM commands default shift pattern and ignores all other shift requests.
- TCM inhibits Tap Up/Tap Down.
- TCM inhibits TCC.

cardiagn.com

- TCM request the ECM to disable powertrain braking.
- TCM request the ECM to disable neutral idle.
- TCM request the ECM to disable auto grade braking.
- TCM request the ECM to disable auto stop function.
- Transmission shifts to 4th gear.
- Transmission reverse gear is available.

Conditions for Clearing the DTC

P0960, P0962 and P0963 are Type A DTCs.

Reference Information

Schematic Reference

Automatic Transmission Controls Schematics

Connector End View Reference

- **COMPONENT CONNECTOR END VIEWS - INDEX**
- **INLINE HARNESS CONNECTOR END VIEWS - INDEX**

Description and Operation

- **Electronic Component Description**
- **Transmission Component and System Description**
- **Transmission General Description**

Electrical Information Reference

- **Circuit Testing**
- **Connector Repairs**
- **Testing for Intermittent Conditions and Poor Connections**
- **Wiring Repairs**

DTC Type Reference

Powertrain Diagnostic Trouble Code (DTC) Type Definitions

Scan Tool Reference

Control Module References for scan tool information

Circuit/System Verification

1. Ignition On.
2. Verify the parameters listed below do not display Malfunction when commanding the Transmission Control Solenoid Valve 1 On and Off with a scan tool.
    - Transmission Control Solenoid Valve 1 Control Circuit Open Voltage Test Status
    - Transmission Control Solenoid Valve 1 Control Circuit Low Voltage Test Status
    - Transmission Control Solenoid Valve 1 Control Circuit High Voltage Test Status
    - **If Malfunction is displayed**

      Refer to Circuit/System Testing.

    - **If Malfunction is not displayed**
3. Operate the vehicle within the Conditions for Running the DTC. You may also operate the vehicle within the conditions that you observe from the Freeze Frame/Failure Records data.
4. Verify the DTC does not set.

cardiagn.com

- **If the DTC sets**

  Refer to Circuit/System Testing.

- **If the DTC does not set**

5. All OK.

Circuit/System Testing

1. Ignition Off and all vehicle systems Off. Disconnect the X175 harness connector at the T12 Automatic Transmission Assembly. It may take up to 2 min for all vehicle systems to power down, ignition On.
2. Command the high side driver 2 Off.
3. Connect a test lamp between the ignition circuit terminal 19 and ground.
4. Verify the test lamp does not illuminate.
   - **If the test lamp illuminates**
   1. Ignition Off.
   2. Disconnect the harness connector at the K71 Transmission Control Module, ignition On.
   3. Verify a test lamp does not illuminate between the ignition circuit terminal 19 and ground.
      - If the test lamp illuminates, repair the short to voltage in the ignition circuit.
      - If the test lamp does not illuminate, replace the K71 Transmission Control Module.
   - **If the test lamp does not illuminate**
5. Ignition On.
6. Verify the test lamp turns On and Off when commanding the high side driver 2 On and Off with a scan tool.
   - **If the test lamp is always Off**
   1. Ignition Off, disconnect the harness connector at the K71 Transmission Control Module.
   2. Test for infinite resistance between the ignition circuit and ground.
      - If less than infinite resistance, repair the short to ground on the circuit.
      - If infinite resistance
   3. Test for less than 2 Ω in the ignition circuit end to end.
      - If 2 Ω or greater, repair the open/high resistance in the circuit.
      - If less than 2 Ω, replace the K71 Transmission Control Module.
   - **If the test lamp turns On and Off**
7. Remove the test lamp.
8. Test for 1.8-2.2 V between the transmission control solenoid valve 1 control circuit terminal 5 and ground.
   - **If less than 1.8 V**
   1. Ignition Off, disconnect the harness connector at the K71 Transmission Control Module.
   2. Test for infinite resistance between the control circuit and ground.
      - If less than infinite resistance, repair the short to ground on the circuit.
      - If infinite resistance
   3. Test for less than 2 Ω in the control circuit end to end.
      - If 2 Ω or greater, repair the open/high resistance in the circuit.
      - If less than 2 Ω, replace the K71 Transmission Control Module.
   - **If greater than 2.2 V**
   1. Ignition Off, disconnect the harness connector at the K71 Transmission Control Module, ignition On.
   2. Test for less than 1 V between the control circuit and ground.
      - If 1 V or greater, repair the short to voltage on the circuit.
      - If less than 1 V, replace the K71 Transmission Control Module.
   - **If between 1.8-2.2 V**

cardiagn.com

9. Perform the Component Testing.

Component Testing

1. Perform the Circuit/System Testing first.
2. Ignition Off, connect the X175 harness connector.
3. Remove the fluid pan from the T12 Automatic Transmission.
4. Disconnect the harness connector at the Q77A Transmission Control Solenoid Valve 1. Refer to **Transmission Solenoid Information** . Ignition On.
5. Command the high side driver 2 Off.
6. Connect a test lamp between terminal 2 and ground.
7. Verify the test lamp does not illuminate.
   - **If the test lamp illuminates**
   1. Disconnect the X176 harness connector.
   2. Verify a test lamp does not illuminate between the ignition circuit terminal 18 and ground.
      - If the test lamp illuminates

        Replace the automatic transmission wiring harness, electrical connector passage sleeve.

      - If the test lamp does not illuminate

        Replace the transmission control wiring harness.

   - **If the test lamp does not illuminate**
8. Verify the test lamp turns On and Off when commanding the high side driver 2 On and Off with a scan tool.
   - **If the test lamp is always Off**
   1. Ignition Off, disconnect the X176 harness connector.
   2. Test for infinite resistance in the ignition circuit between terminal 18 and ground.
      - If less than infinite resistance

        Replace the automatic transmission wiring harness, electrical connector passage sleeve.

   3. Test for less than 2 Ω in the ignition circuit end to end.
      - If 2 Ω or greater

        Replace the automatic transmission wiring harness, electrical connector passage sleeve.

      - If less than 2 Ω

        Replace the transmission control wiring harness.

   - **If the test lamp turns On and Off**
9. Disconnect the test lamp.
10. Test for 1.8-2.2 V between the control circuit terminal 1 and ground.
    - **If less than 1.8 V**
    1. Ignition Off, disconnect the X176 connector, ignition On.
    2. Test for 1.8-2.2 V at the control circuit terminal 21 and ground.
       - If less than 1.8 V

         Replace the automatic transmission wiring harness, electrical connector passage sleeve.

       - If between 1.8-2.2 V

cardiagn.com

Replace the transmission control wiring harness.

- **If greater than 2.2 V**

1. Ignition Off, disconnect the X176 connector, ignition On.
2. Test for 1.8-2.2 V at the control circuit terminal 21 and ground.
    - If greater than 2.2 V

      Replace the automatic transmission wiring harness, electrical connector passage sleeve.

    - If between 1.8-2.2 V

      Replace the transmission control wiring harness.

- **If between 1.8-2.2 V**

11. Test for 4.5-5.5 Ω at 20Â°C (68Â°F) between terminal 1 and terminal 2 on the Q77A Transmission Control Solenoid Valve 1.
    - **If not between 4.5 - 5.5 Ω**

      Replace the Q77A Transmission Control Solenoid Valve 1.

    - **If between 4.5 - 5.5 Ω**
12. Test for infinite resistance on the Q77A Transmission Control Solenoid Valve 1, as listed below:
    - Solenoid terminal 1 and ground
    - Solenoid terminal 2 and ground
    - **If not infinite resistance**

      Replace the Q77A Transmission Control Solenoid Valve 1.

    - **If infinite resistance**
13. Replace the K71 Transmission Control Module.

Repair Instructions

Perform the **Diagnostic Repair Verification** after completing the repair.

- **Automatic Transmission Wiring Harness Replacement (Electrical Connector Passage Sleeve)**
- **Control Valve Assembly and Transmission Wiring Harness Removal**
- **Transmission Control Wiring Harness Replacement (M5N)**
- **Transmission Fluid Pan and Filter Assembly Removal**
- Perform the **Transmission Service Fast Learn Procedure** following all transmission related repairs.
- Refer to **K71 Transmission Control Module: Programming and Setup**

DTC P0964, P0966 OR P0967: TRANSMISSION CONTROL SOLENOID VALVE 2 CONTROL CIRCUIT

Diagnostic Instructions

- Perform the **Diagnostic System Check - Vehicle** prior to using this diagnostic procedure.
- Review **Strategy Based Diagnosis** for an overview of the diagnostic approach.
- **Diagnostic Procedure Instructions** provides an overview of each diagnostic category.

DTC Descriptors

DTC P0964

Transmission Control Solenoid Valve 2 Control Circuit Open

cardiagn.com

DTC P0966

Transmission Control Solenoid Valve 2 Control Circuit Low Voltage

DTC P0967

Transmission Control Solenoid Valve 2 Control Circuit High Voltage

Diagnostic Fault Information

Circuits	Short to Ground	Open/High Resistance	Short to Voltage	Signal Performance
Ignition	P2760	P2761	P2761	-
Control	P0966	P0964	P0967	-

Typical Scan Tool Data

Transmission Control Solenoid Valve 2 Control Circuit Open Test Status

Circuits	Short to Ground	Open	Short to Voltage
Operating Conditions: Ignition On **Parameter Normal Range:** OK or Not Run			
Ignition	Malfunction	Malfunction	Malfunction
Control	-	Malfunction	-

Transmission Control Solenoid Valve 2 Control Circuit Low Voltage Test Status

Circuits	Short to Ground	Open	Short to Voltage
Operating Conditions: Ignition On **Parameter Normal Range:** OK or Not Run			
Ignition	Malfunction	Malfunction	Malfunction
Control	Malfunction	-	-

Transmission Control Solenoid Valve 2 Control Circuit High Voltage Test Status

Circuits	Short to Ground	Open	Short to Voltage
Operating Conditions: Ignition On **Parameter Normal Range:** OK or Not Run			
Ignition	Malfunction	Malfunction	Malfunction
Control	-	-	Malfunction

Circuit/System Description

The transmission control solenoid valve 2 is a high pressure, normally low, variable force solenoid valve. The transmission control module (TCM) high side driver 2, supplies 12 V to the transmission control solenoid valve 2. A low side driver circuit in the TCM is pulsed width modulated to vary the current to the solenoid. If excessive current flow is detected, the high side driver 2 will turn Off. When the circuit fault is corrected, the high side driver 2 will reset.

Conditions for Running the DTC

- Ignition On.
- High side driver 2 On.
- Battery voltage is between 11-32 V for 1 s or greater.
- TCM power mode state is in accessory or ignition.

Conditions for Setting the DTC

P0964

TCM detects an open/high resistance in the transmission control solenoid valve 2 control circuit, for 0.3 s.

carmagn.com

P0966

TCM detects a short to ground in the transmission control solenoid valve 2 control circuit, for 0.3 s.

P0967

TCM detects a short to power in the transmission control solenoid valve 2 control circuit, for 0.3 s.

Action Taken When the DTC Sets

P0964 or P0967

- P0964 or P0967 is a Type A DTC.
- TCM disables transmission adapts learning and freezes current adapt values.
- TCM commands default shift pattern and ignores all other shift requests.
- TCM inhibits Tap Up/Tap Down.
- TCM inhibits TCC.
- TCM request the ECM to disable powertrain braking.
- TCM request the ECM to disable neutral idle.
- TCM request the ECM to disable auto grade braking.
- TCM request the ECM to disable auto stop function.
- Transmission shifts to 4th gear.
- Transmission reverse gear is available.

P0966

- P0966 is a Type A DTC.
- TCM disables transmission adapts learning and freezes current adapt values.
- TCM commands default shift pattern and ignores all other shift requests.
- TCM inhibits Tap Up/Tap Down.
- TCM inhibits TCC.
- TCM request the ECM to disable powertrain braking.
- TCM request the ECM to disable neutral idle.
- TCM request the ECM to disable auto grade braking.
- TCM request the ECM to disable auto stop function.
- Transmission shifts to 5th gear.
- Transmission reverse gear is available.

cardiagn.com

Conditions for Clearing the DTC

P0964, P0966 and P0967 are Type A DTCs.

Reference Information

Schematic Reference

Automatic Transmission Controls Schematics

Connector End View Reference

- **COMPONENT CONNECTOR END VIEWS - INDEX**
- **INLINE HARNESS CONNECTOR END VIEWS - INDEX**

Description and Operation

- **Electronic Component Description**
- **Transmission Component and System Description**
- **Transmission General Description**

Electrical Information Reference

- **Circuit Testing**
- **Connector Repairs**
- **Testing for Intermittent Conditions and Poor Connections**
- **Wiring Repairs**

DTC Type Reference

Powertrain Diagnostic Trouble Code (DTC) Type Definitions

Scan Tool Reference

Control Module References for scan tool information

Circuit/System Verification

1. Ignition On.
2. Verify the parameters listed below do not display Malfunction when commanding the Transmission Control Solenoid Valve 2 On and Off with a scan tool.
    - Transmission Control Solenoid Valve 2 Control Circuit Open Voltage Test Status
    - Transmission Control Solenoid Valve 2 Control Circuit Low Voltage Test Status
    - Transmission Control Solenoid Valve 2 Control Circuit High Voltage Test Status
    - **If Malfunction is displayed**

      Refer to Circuit/System Testing.

    - **If Malfunction is not displayed**
3. Operate the vehicle within the Conditions for Running the DTC. You may also operate the vehicle within the conditions that you observe from the Freeze Frame/Failure Records data.
4. Verify the DTC does not set.
    - **If the DTC sets**

      Refer to Circuit/System Testing.

    - **If the DTC does not set**
5. All OK.

Circuit/System Testing

1. Ignition Off and all vehicle systems Off. Disconnect the X175 harness connector at the T12 Automatic Transmission Assembly. It may take up to 2 min for all vehicle systems to power down, ignition On.
2. Command the high side driver 2 Off.
3. Connect a test lamp between the ignition circuit terminal 19 and ground.
4. Verify the test lamp does not illuminate.
    - **If the test lamp illuminates**
    1. Ignition Off.
    2. Disconnect the harness connector at the K71 Transmission Control Module, ignition On.
    3. Verify a test lamp does not illuminate between the ignition circuit terminal 19 and ground.
        - If the test lamp illuminates, repair the short to voltage in the ignition circuit.
        - If the test lamp does not illuminate, replace the K71 Transmission Control Module.
    - **If the test lamp does not illuminate**
5. Ignition On.
6. Verify the test lamp turns On and Off when commanding the high side driver 2 On and Off with a scan tool.
    - **If the test lamp is always Off**

cardiagn.com

1. Ignition Off, disconnect the harness connector at the K71 Transmission Control Module.
2. Test for infinite resistance between the ignition circuit and ground.
    - If less than infinite resistance, repair the short to ground on the circuit.
    - If infinite resistance
3. Test for less than 2 Ω in the ignition circuit end to end.
    - If 2 Ω or greater, repair the open/high resistance in the circuit.
    - If less than 2 Ω, replace the K71 Transmission Control Module.

- **If the test lamp turns On and Off**

7. Remove the test lamp.
8. Test for 1.8-2.2 V between the transmission control solenoid valve 2 control circuit terminal 6 and ground.

- **If less than 1.8 V**

1. Ignition Off, disconnect the harness connector at the K71 Transmission Control Module.
2. Test for infinite resistance between the control circuit and ground.
    - If less than infinite resistance, repair the short to ground on the circuit.
    - If infinite resistance
3. Test for less than 2 Ω in the control circuit end to end.
    - If 2 Ω or greater, repair the open/high resistance in the circuit.
    - If less than 2 Ω, replace the K71 Transmission Control Module.

- **If greater than 2.2 V**

1. Ignition Off, disconnect the harness connector at the K71 Transmission Control Module, ignition On.
2. Test for less than 1 V between the control circuit and ground.
    - If 1 V or greater, repair the short to voltage on the circuit.
    - If less than 1 V, replace the K71 Transmission Control Module.

- **If between 1.8-2.2 V**

9. Perform the Component Testing.

Component Testing

1. Perform the Circuit/System Testing first.
2. Ignition Off, connect the X175 harness connector.
3. Remove the fluid pan from the T12 Automatic Transmission.
4. Disconnect the harness connector at the Q77B Transmission Control Solenoid Valve 2. Refer to **Transmission Solenoid Information** . Ignition On.
5. Command the high side driver 2 Off.
6. Connect a test lamp between terminal 2 and ground.
7. Verify the test lamp does not illuminate.

- **If the test lamp illuminates**

1. Disconnect the X176 harness connector.
2. Verify a test lamp does not illuminate between the ignition circuit terminal 18 and ground.
    - If the test lamp illuminates

      Replace the automatic transmission wiring harness, electrical connector passage sleeve.

    - If the test lamp does not illuminate

      Replace the transmission control wiring harness.

- **If the test lamp does not illuminate**

8. Verify the test lamp turns On and Off when commanding the high side driver 2 On and Off with a scan tool.

cardiagn.com

- **If the test lamp is always Off**

1. Ignition Off, disconnect the X176 harness connector.
2. Test for infinite resistance in the ignition circuit between terminal 18 and ground.
    - If less than infinite resistance

      Replace the automatic transmission wiring harness, electrical connector passage sleeve.

3. Test for less than 2 Ω in the ignition circuit end to end.
    - If 2 Ω or greater

      Replace the automatic transmission wiring harness, electrical connector passage sleeve.

    - If less than 2 Ω

      Replace the transmission control wiring harness.

- **If the test lamp turns On and Off**

9. Disconnect the test lamp.
10. Test for 1.8-2.2 V between the control circuit terminal 1 and ground.
    - **If less than 1.8 V**

    1. Ignition Off, disconnect the X176 connector, ignition On.
    2. Test for 1.8-2.2 V at the control circuit terminal 22 and ground.
        - If less than 1.8 V

          Replace the automatic transmission wiring harness, electrical connector passage sleeve.

        - If between 1.8-2.2 V

          Replace the transmission control wiring harness.

    - **If greater than 2.2 V**

    1. Ignition Off, disconnect the X176 connector, ignition On.
    2. Test for 1.8-2.2 V at the control circuit terminal 22 and ground.
        - If greater than 2.2 V

          Replace the automatic transmission wiring harness, electrical connector passage sleeve.

        - If between 1.8-2.2 V

          Replace the transmission control wiring harness.

    - **If between 1.8-2.2 V**

11. Test for 4.5-5.5 Ω at 20Â°C (68Â°F) between terminal 1 and terminal 2 on the Q77B Transmission Control Solenoid Valve 2.
    - **If not between 4.5-5.5 Ω**

      Replace the Q77B Transmission Control Solenoid Valve 2.

    - **If between 4.5-5.5 Ω**

12. Test for infinite resistance on the Q77B Transmission Control Solenoid Valve 2, as listed below:
    - Solenoid terminal 1 and ground
    - Solenoid terminal 2 and ground
    - **If not infinite resistance**

cardiagn.com

Replace the Q77B Transmission Control Solenoid Valve 2.

- **If infinite resistance**

13. Replace the K71 Transmission Control Module.

Repair Instructions

Perform the **Diagnostic Repair Verification** after completing the repair.

- **Automatic Transmission Wiring Harness Replacement (Electrical Connector Passage Sleeve)**
- **Solenoid Valve Characterization Reprogramming**
- **Transmission Control Wiring Harness Replacement (M5N)**
- **Transmission Fluid Pan and Filter Assembly Removal**
- Perform the **Transmission Service Fast Learn Procedure** following all transmission related repairs.
- Refer to **K71 Transmission Control Module: Programming and Setup**

DTC P0968, P0970 OR P0971: TRANSMISSION CONTROL SOLENOID VALVE 3 CONTROL CIRCUIT

Diagnostic Instructions

- Perform the **Diagnostic System Check - Vehicle** prior to using this diagnostic procedure.
- Review **Strategy Based Diagnosis** for an overview of the diagnostic approach.
- **Diagnostic Procedure Instructions** provides an overview of each diagnostic category.

DTC Descriptors

DTC P0968

Transmission Control Solenoid Valve 3 Control Circuit Open

DTC P0970

Transmission Control Solenoid Valve 3 Control Circuit Low Voltage

DTC P0971

Transmission Control Solenoid Valve 3 Control Circuit High Voltage

Diagnostic Fault Information

Circuits	Short to Ground	Open/High Resistance	Short to Voltage	Signal Performance
Ignition	P2760	P2761	P2761	-
Control	P0970	P0968	P0971	-

Typical Scan Tool Data

Transmission Control Solenoid Valve 3 Control Circuit Open Test Status

Circuits	Short to Ground	Open	Short to Voltage
Operating Conditions: Ignition On **Parameter Normal Range:** OK or Not Run			
Ignition	Malfunction	Malfunction	Malfunction
Control	-	Malfunction	-

Transmission Control Solenoid Valve 3 Control Circuit Low Voltage Test Status

Circuits	Short to Ground	Open	Short to Voltage

cardiagn.com

Circuits	Short to Ground	Open	Short to Voltage
Operating Conditions: Ignition On **Parameter Normal Range:** OK or Not Run			
Ignition	Malfunction	Malfunction	Malfunction
Control	Malfunction	-	-

Transmission Control Solenoid Valve 3 Control Circuit High Voltage Test Status

Circuits	Short to Ground	Open	Short to Voltage
Operating Conditions: Ignition On **Parameter Normal Range:** OK or Not Run			
Ignition	Malfunction	Malfunction	Malfunction
Control	-	-	Malfunction

Circuit/System Description

The transmission control solenoid valve 3 is a high pressure, normally low, variable force solenoid valve. The transmission control module (TCM) high side driver 2 supplies 12 V to the transmission control solenoid valve 3. A low side driver circuit in the TCM is pulsed width modulated to vary the current to the solenoid. If excessive current flow is detected, the high side driver 2 will turn Off. When the circuit fault is corrected, the high side driver 2 will reset.

Conditions for Running the DTC

- Ignition On.
- High side driver 2 On.
- Battery voltage is between 11-32 V for 1 s or greater.
- TCM power mode state is in accessory or ignition.

Conditions for Setting the DTC

P0968

TCM detects an open/high resistance in the transmission control solenoid valve 3 control circuit, for 0.3 s.

P0970

TCM detects a short to ground in the transmission control solenoid valve 3 control circuit, for 0.3 s.

P0971

TCM detects a short to power in the transmission control solenoid valve 3 control circuit, for 0.3 s.

Action Taken When the DTC Sets

P0968 or P0971

- P0968 or P0971 is a Type A DTC.
- TCM disables transmission adapts learning and freezes current adapt values.
- TCM commands default shift pattern and ignores all other shift requests.
- TCM inhibits Tap Up/Tap Down.
- TCM inhibits TCC.
- TCM request the ECM to disable powertrain braking.
- TCM request the ECM to disable neutral idle.
- TCM request the ECM to disable auto grade braking.
- TCM request the ECM to disable auto stop function.
- Transmission shifts to 4th gear.
- Transmission reverse gear is available.

cardiagn.com

P0970

- P0970 is a Type A DTC.
- TCM disables transmission adapts learning and freezes current adapt values.
- TCM commands default shift pattern and ignores all other shift requests.
- TCM inhibits Tap Up/Tap Down.
- TCM inhibits TCC.
- TCM request the ECM to disable powertrain braking.
- TCM request the ECM to disable neutral idle.
- TCM request the ECM to disable auto grade braking.
- TCM request the ECM to disable auto stop function.
- Transmission shifts to 5th gear.
- Transmission reverse gear is available.

Conditions for Clearing the DTC

P0968, P0970, P0971 are Type A DTCs.

Reference Information

Schematic Reference

Automatic Transmission Controls Schematics

Connector End View Reference

- **COMPONENT CONNECTOR END VIEWS - INDEX**
- **INLINE HARNESS CONNECTOR END VIEWS - INDEX**

Description and Operation

- **Electronic Component Description**
- **Transmission Component and System Description**
- **Transmission General Description**

Electrical Information Reference

- **Circuit Testing**
- **Connector Repairs**
- **Testing for Intermittent Conditions and Poor Connections**
- **Wiring Repairs**

DTC Type Reference

Powertrain Diagnostic Trouble Code (DTC) Type Definitions

Scan Tool Reference

Control Module References for scan tool information

Circuit/System Verification

1. Ignition On.
2. Verify the parameters listed below do not display Malfunction when commanding the Transmission Control Solenoid Valve 3 On and Off with a scan tool.
    - Transmission Control Solenoid Valve 3 Control Circuit Open Voltage Test Status
    - Transmission Control Solenoid Valve 3 Control Circuit Low Voltage Test Status
    - Transmission Control Solenoid Valve 3 Control Circuit High Voltage Test Status

cardiagn.com

- **If Malfunction is displayed**

  Refer to Circuit/System Testing.

- **If Malfunction is not displayed**

3. Operate the vehicle within the Conditions for Running the DTC. You may also operate the vehicle within the conditions that you observe from the Freeze Frame/Failure Records data.
4. Verify the DTC does not set.
   - **If the DTC sets**

     Refer to Circuit/System Testing.

   - **If the DTC does not set**
5. All OK.

Circuit/System Testing

1. Ignition Off and all vehicle systems Off. Disconnect the X175 harness connector at the T12 Automatic Transmission Assembly. It may take up to 2 min for all vehicle systems to power down, ignition On.
2. Command the high side driver 2 Off.
3. Connect a test lamp between the ignition circuit terminal 19 and ground.
4. Verify the test lamp does not illuminate.
   - **If the test lamp illuminates**
   1. Ignition Off.
   2. Disconnect the harness connector at the K71 Transmission Control Module, ignition On.
   3. Verify a test lamp does not illuminate between the ignition circuit terminal 19 and ground.
      - If the test lamp illuminates, repair the short to voltage on the circuit.
      - If the test lamp does not illuminate, replace the K71 Transmission Control Module.
   - **If the test lamp does not illuminate**
5. Ignition On.
6. Verify the test lamp turns On and Off when commanding the high side driver 2 On and Off with a scan tool.
   - **If the test lamp is always Off**
   1. Ignition Off, disconnect the harness connector at the K71 Transmission Control Module.
   2. Test for infinite resistance between the ignition circuit and ground.
      - If less than infinite resistance, repair the short to ground on the circuit.
      - If infinite resistance
   3. Test for less than 2 Ω in the ignition circuit end to end.
      - If 2 Ω or greater, repair the open/high resistance in the circuit.
      - If less than 2 Ω, replace the K71 Control Module.
   - **If the test lamp turns On and Off**
7. Remove the test lamp.
8. Test for 1.8-2.2 V between the transmission control solenoid valve 3 control circuit terminal 10 and ground.
   - **If less than 1.8 V**
   1. Ignition Off, disconnect the harness connector at the K71 Transmission Control Module.
   2. Test for infinite resistance between the control circuit and ground.
      - If less than infinite resistance, repair the short to ground on the circuit.
      - If infinite resistance
   3. Test for less than 2 Ω in the control circuit end to end.
      - If 2 Ω or greater, repair the open/high resistance in the circuit.
      - If less than 2 Ω, replace the K71 Transmission Control Module.

cardiagn.com

- **If greater than 2.2 V**

1. Ignition Off, disconnect the harness connector at the K71 Transmission Control Module, ignition On.
2. Test for less than 1 V between the control circuit and ground.

- If 1 V or greater, repair the short to voltage on the circuit.
- If less than 1 V, replace the K71 Transmission Control Module.
- **If between 1.8-2.2 V**

9. Perform the Component Testing.

Component Testing

1. Perform the Circuit/System Testing first.
2. Ignition Off, connect the X175 harness connector.
3. Remove the fluid pan from the T12 Automatic Transmission.
4. Disconnect the harness connector at the Q77C Transmission Control Solenoid Valve 3. Refer to **Transmission Solenoid Information** . Ignition On.
5. Command the high side driver 2 Off.
6. Connect a test lamp between terminal 2 and ground.
7. Verify the test lamp does not illuminate.
   - **If the test lamp illuminates**

   1. Disconnect the X176 harness connector.
   2. Verify a test lamp does not illuminate between the ignition circuit terminal 18 and ground.
      - If the test lamp illuminates

        Replace the automatic transmission wiring harness, electrical connector passage sleeve.

      - If the test lamp does not illuminate

        Replace the transmission control wiring harness.

   - **If the test lamp does not illuminate**

8. Verify the test lamp turns On and Off when commanding the high side driver 2 On and Off with a scan tool.
   - **If the test lamp is always Off**

   1. Ignition Off, disconnect the X176 harness connector.
   2. Test for infinite resistance in the ignition circuit between terminal 18 and ground.
      - If less than infinite resistance

        Replace the automatic transmission wiring harness, electrical connector passage sleeve.

   3. Test for less than 2 Ω in the ignition circuit end to end.
      - If 2 Ω or greater

        Replace the automatic transmission wiring harness, electrical connector passage sleeve.

      - If less than 2 Ω

        Replace the transmission control wiring harness.

   - **If the test lamp turns On and Off**

9. Disconnect the test lamp.
10. Test for 1.8-2.2 V between the control circuit terminal 1 and ground.
    - **If less than 1.8 V**

carmagn.com

1. Ignition Off, disconnect the X176 connector, ignition On.
2. Test for 1.8-2.2 V at the control circuit terminal 13 and ground.
    - If less than 1.8 V

      Replace the automatic transmission wiring harness, electrical connector passage sleeve.

    - If between 1.8-2.2 V

      Replace the transmission control wiring harness.

- **If greater than 2.2 V**

1. Ignition Off, disconnect the X176 connector, ignition On.
2. Test for 1.8-2.2 V at the control circuit terminal 13 and ground.
    - If greater than 2.2 V

      Replace the automatic transmission wiring harness, electrical connector passage sleeve.

    - If between 1.8-2.2 V

      Replace the transmission control wiring harness.

- **If between 1.8-2.2 V**

11. Test for 4.5-5.5 Ω at 20Â°C (68Â°F) between terminal 1 and terminal 2 on the Q77C Transmission Control Solenoid Valve 3.
    - **If not between 4.5-5.5 Ω**

      Replace the Q77C Transmission Control Solenoid Valve 3.

    - **If between 4.5-5.5 Ω**
12. Test for infinite resistance on the Q77C Transmission Control Solenoid Valve 3, as listed below:
    - Solenoid terminal 1 and ground
    - Solenoid terminal 2 and ground
    - **If not infinite resistance**

      Replace the Q77C Transmission Control Solenoid Valve 3.

    - **If infinite resistance**
13. Replace the K71 Transmission Control Module.

Repair Instructions

Perform the **Diagnostic Repair Verification** after completing the repair.

- **Automatic Transmission Wiring Harness Replacement (Electrical Connector Passage Sleeve)**
- **Solenoid Valve Characterization Reprogramming**
- **Transmission Control Wiring Harness Replacement (M5N)**
- **Transmission Fluid Pan and Filter Assembly Removal**
- Perform the **Transmission Service Fast Learn Procedure** following all transmission related repairs.
- Refer to **K71 Transmission Control Module: Programming and Setup**

DTC P171A-P171C: TRANSMISSION FLUID PRESSURE ACCUMULATOR SOLENOID VALVE CONTROL CIRCUIT

Diagnostic Instructions

cardiagn.com

- Perform the **Diagnostic System Check - Vehicle** prior to using this diagnostic procedure.
- Review **Strategy Based Diagnosis** for an overview of the diagnostic approach.
- **Diagnostic Procedure Instructions** provides an overview of each diagnostic category.

DTC Descriptors

DTC P171A

Transmission Fluid Pressure Accumulator Solenoid Valve Control Circuit

DTC P171B

Transmission Fluid Pressure Accumulator Solenoid Valve Control Circuit Low Voltage

DTC P171C

Transmission Fluid Pressure Accumulator Solenoid Valve Control Circuit High Voltage

Diagnostic Fault Information

Circuits	Short to Ground	Open/High Resistance	Short to Voltage	Signal Performance
Ignition	P171B	P171B	-	-
Control	P171B	P171B	P171C	P171A

Typical Scan Tool Data

Transmission Fluid Pressure Accumulator Solenoid Valve Control Circuit Low Voltage Test Status

Circuit	Short to Ground	Open	Short to Voltage
Operating Conditions: Ignition ON **Parameter Normal Range:** OK or Not Run			
Transmission Fluid Pressure Accumulator Solenoid Valve Control Circuit Low Voltage Test Status	Malfunction	OK/Not Run	OK/Not Run

Transmission Fluid Pressure Accumulator Solenoid Valve Control Circuit High Voltage Test Status

Circuit	Short to Ground	Open	Short to Voltage
Operating Conditions: Ignition ON **Parameter Normal Range:** OK or Not Run			
Transmission Fluid Pressure Accumulator Solenoid Valve Control Circuit High Voltage Test Status	OK/Not Run	OK/Not Run	Malfunction

Transmission Fluid Pressure Accumulator Solenoid Valve Control Circuit Open Voltage Test Status

Circuit	Short to Ground	Open	Short to Voltage
Operating Conditions: Ignition ON **Parameter Normal Range:** OK or Not Run			
Transmission Fluid Pressure Accumulator Solenoid Valve Control Circuit Open Test Status	Malfunction	OK/Not Run	OK/Not Run

Circuit/System Description

cardiagn.com

The automatic transmission auxiliary fluid accumulator is used to supply transmission fluid line pressure to the appropriate clutches during an auto start event. The accumulator is mounted to the transmission upper valve body assembly. Attached to the accumulator is a normally closed ON/OFF solenoid. When the ignition is ON, the engine control ignition relay supplies 12 V to the accumulator solenoid. To complete the circuit, the engine control module (ECM) supplies a control circuit to the accumulator solenoid. When the ECM requests an auto start event, the solenoid is commanded ON, allowing pressurized oil to exit the accumulator to apply the clutches.

Conditions for Running the DTC

- Ignition voltage is 6.41 V or greater.
- Runs continuously when above condition is met.

Conditions for Setting the DTC

P171A

The ECM detects an open circuit on the transmission accumulator solenoid control circuit for 1 s.

P171B

The ECM detects a short to ground on the transmission accumulator solenoid control circuit for 1 s.

P171C

The ECM detects a short to power on the transmission accumulator solenoid control circuit for 1 s.

Action Taken When the DTC Sets

- P171A, P171B and P171C are Type B DTCs.
- Autostop is disabled.

Conditions for Clearing the DTC

P171A, P171B and P171C are Type B DTCs.

Diagnostic Aids

- The Autostart/Autostop command is located in the scan tool ECM control functions menu.
- The hood must be closed when commanding Autostart/Autostop or an error message will be displayed on the scan tool.

Reference Information

Schematic Reference

Automatic Transmission Controls Schematics

Connector End View Reference

- **COMPONENT CONNECTOR END VIEWS - INDEX**
- **INLINE HARNESS CONNECTOR END VIEWS - INDEX**

Description and Operation

Electronic Component Description

Electrical Information Reference

- **Circuit Testing**
- **Connector Repairs**
- **Testing for Intermittent Conditions and Poor Connections**
- **Wiring Repairs**

cardiagn.com

DTC Type Reference

Powertrain Diagnostic Trouble Code (DTC) Type Definitions

Scan Tool Reference

K20 Engine Control Module: Scan Tool Information for scan tool information

Circuit/System Verification

1. Ignition ON.
2. Verify the parameters listed below do not display Malfunction when commanding the Transmission Fluid Pressure Accumulator Solenoid Valve ON/OFF with a scan tool.
   - Transmission Fluid Pressure Accumulator Solenoid Valve Control Circuit Low Voltage Test Status
   - Transmission Fluid Pressure Accumulator Solenoid Valve Control Circuit Open Test Status
   - Transmission Fluid Pressure Accumulator Solenoid Valve Control Circuit High Voltage Test Status
   - **If Malfunction is displayed**

     Refer to Circuit/System Testing.

   - **If Malfunction is not displayed**
3. Operate the vehicle within the Conditions for Running the DTC. You may also operate the vehicle within the conditions that you observe from the Freeze Frame/Failure Records data.
4. Verify the DTC does not set.
   - **If the DTC sets**

     Refer to Circuit/System Testing.

   - **If the DTC does not set**
5. All OK.

Circuit/System Testing

1. Ignition ON.
2. Verify a test lamp illuminates on both test points of the circuit fuse.
   - **If the test lamp does not illuminate on either test point of the fuse**

     Refer to **DTC P0685-P0687, P0689, P0690 or P1682** .

   - **If the test lamp illuminates on 1 test point and the fuse is open**
   1. Ignition OFF, remove the test lamp.
   2. Test for infinite resistance between the ignition circuit and ground.

      NOTE: There are multiple ignition circuits protected by this fuse.

      - If less than infinite resistance, repair the short to ground on the circuit.
   - **If the test lamp illuminates on both test points of the circuit fuse**
3. Ignition OFF, disconnect the X175 harness connector at the T12 Automatic Transmission Assembly, ignition ON.
4. Verify a test lamp illuminates between the ignition circuit terminal 2 and ground.
   - **If the test lamp does not illuminate**
   1. Ignition OFF, remove the test lamp.
   2. Test for less than 2 Ω in the ignition circuit end to end.
      - If 2 Ω or greater, repair the open/high resistance in the circuit.
      - If less than 2 Ω, replace the X50A Fused Block-Underhood.

cardiagn.com

- **If the test lamp illuminates**

5. Verify that a test lamp does not illuminate between the ignition circuit terminal 2 and the control circuit terminal 8.
    - **If the test lamp illuminates**
    1. Ignition OFF, remove the test lamp, disconnect the harness connector at the K20 Engine Control Module.
    2. Test for infinite resistance between the control circuit and ground.
        - If less than infinite resistance, repair the short to ground on the circuit.
        - If infinite resistance, replace the K20 Engine Control Module.
    - **If the test lamp does not illuminate**
6. Remove the test lamp.
7. Verify the scan tool Transmission Fluid Pressure Accumulator Solenoid Valve Control Circuit High Voltage Test Status parameter is OK when commanding the Transmission Fluid Pressure Accumulator Solenoid Valve ON with a scan tool.
    - **If OK is not displayed**
    1. Ignition OFF, disconnect the harness connector at the K20 Engine Control Module, ignition ON.
    2. Test for less than 1 V between the control circuit and ground.
        - If 1 V or greater, repair the short to voltage on the circuit.
        - If less than 1 V, replace the K20 Engine Control Module.
    - **If OK is displayed**
8. Install a 3 A fused jumper wire between the control circuit terminal 8 and the ignition circuit terminal 2.
9. Verify the scan tool Transmission Fluid Pressure Accumulator Solenoid Valve Control Circuit High Voltage Test Status parameter is Malfunction when commanding the Transmission Fluid Pressure Accumulator Solenoid Valve On with a scan tool.
    - **If Malfunction is not displayed**
    1. Ignition OFF, remove the jumper wire, disconnect the harness connector at the K20 Engine Control Module.
    2. Test for less than 2 Ω in the control circuit end to end.
        - If 2 Ω or greater, repair the open/high resistance in the circuit.
        - If less than 2 Ω, replace the K20 Engine Control Module.
    - **If Malfunction is displayed**
10. Perform the Component Testing.

cardiagn.com

Component Testing

1. Perform the Circuit/System Testing first.
2. Ignition Off, connect the X175 harness connector.
3. Remove the fluid pan from the T12 Automatic Transmission Assembly.
4. Disconnect the harness connector at the B280 Automatic Transmission Accumulator Solenoid Valve.
5. Test for 17-19 Ω at 20Â°C (68Â°F) between the control terminal 2 and the ignition terminal 1.
    - **If not between 17-19 Ω**

      Replace the Auxiliary Fluid Accumulator Assembly.

    - **If between 17-19 Ω**
6. Test for infinite resistance on the B280 Automatic Transmission Accumulator Solenoid Valve as listed below:
    - Solenoid ignition terminal 1 and ground
    - Solenoid control terminal 2 and ground
    - **If less than infinite resistance**

Replace the Auxiliary Fluid Accumulator Assembly.

- **If infinite resistance**

7. Verify the internal transmission wire harness does not have a short to ground, short to power or an open/high resistance in the circuits for the solenoid valve.
   - **If a condition exist**

     Replace the automatic transmission wiring harness, electrical connector passage sleeve.

   - **If a condition does not exist**
8. All OK.

Repair Instructions

Perform the **Diagnostic Repair Verification** after completing the repair.

- **Automatic Transmission Fluid, Fluid Pan and/or Filter Replacement (Rear Wheel Drive)**
  Automatic Transmission Fluid, Fluid Pan and/or Filter Replacement (All Wheel Drive)
- **Automatic Transmission Wiring Harness Replacement (Electrical Connector Passage Sleeve)**
- **Auxiliary Fluid Accumulator Replacement**
- **Transmission Service Fast Learn Procedure**
- Refer to **K71 Transmission Control Module: Programming and Setup**

DTC P171D: TRANSMISSION FLUID PRESSURE ACCUMULATOR SYSTEM PERFORMANCE

Diagnostic Instructions

- Perform the **Diagnostic System Check - Vehicle** prior to using this diagnostic procedure.
- Review **Strategy Based Diagnosis** for an overview of the diagnostic approach.
- **Diagnostic Procedure Instructions** provides an overview of each diagnostic category.

DTC Descriptor

DTC P171D

Transmission Fluid Pressure Accumulator System Performance

Circuit/System Description

The transmission control module (TCM) monitors the input speed sensor for excessive input shaft speed during an autostart event. The DTC will set if there is excessive input shaft speed indicating the accumulator system is not capable of supplying the necessary fluid pressure, to the clutches during autostart.

Conditions for Running the DTC

- DTCs P171A, P171B, P171C, P182E, P1915 or U0101 is not set.
- Transmission shift lever is in a forward drive range.
- Ignition voltage is between 9-32 V.
- Transmission fluid temperature is 0-110Â°C (32-230Â°F).
- Engine has been in autostop mode for 1.2 s or greater.
- Engine speed is 5 RPM or less during an autostop.

Conditions for Setting the DTC

The TCM detects the transmission turbine speed is greater than a calculated turbine speed during an autostart event. This condition must occur 3 separate times on consecutive autostarts.

Action Taken When the DTC Sets

cardiagn.com

- P171D is a Type B DTC.
- Autostop is disabled.

Conditions for Clearing the DTC

P171D is a Type B DTC.

Diagnostic Aids

- The Autostart/Autostop command is located in the scan tool ECM control functions menu.
- The hood must be closed when commanding Autostart/Autostop or an error message will be displayed on the scan tool.

Reference Information

Schematic Reference

Automatic Transmission Controls Schematics

Connector End View Reference

- **COMPONENT CONNECTOR END VIEWS - INDEX**
- **INLINE HARNESS CONNECTOR END VIEWS - INDEX**

Description and Operation

Electronic Component Description

Electrical Information Reference

- **Circuit Testing**
- **Connector Repairs**
- **Testing for Intermittent Conditions and Poor Connections**
- **Wiring Repairs**

DTC Type Reference

Powertrain Diagnostic Trouble Code (DTC) Type Definitions

Scan Tool Reference

K20 Engine Control Module: Scan Tool Information for scan tool information

Circuit/System Verification

1. Verify the transmission fluid level and condition is correct. Refer to **Transmission Fluid Level and Condition Check**.
   - **If the transmission fluid level and condition is not correct**

     Repair as necessary.

   - **If the transmission fluid level and condition is correct**
2. Clear the ECM and TCM DTCs with a scan tool.
3. Verify DTC P171D does not set while performing a road test. Refer to **Road Test**.
   - **If DTC P171D sets**

     Replace the Auxiliary Fluid Accumulator Assembly.

   - **If DTC P171D does not set**
4. Operate the vehicle within the Conditions for Running the DTC. You may also operate the vehicle within the conditions that you observed from the Freeze Frame/Failure Records data.
5. Verify the DTC does not set.

cardiagn.com

- **If the DTC sets**

  Replace the Auxiliary Fluid Accumulator Assembly.

- **If the DTC does not set**

6. All OK.

Repair Instructions

Perform the **Diagnostic Repair Verification** after completing the repair.

- **Automatic Transmission Fluid, Fluid Pan and/or Filter Replacement (Rear Wheel Drive)**
  Automatic Transmission Fluid, Fluid Pan and/or Filter Replacement (All Wheel Drive)
- **Auxiliary Fluid Accumulator Replacement**
- **Transmission Service Fast Learn Procedure**

DTC P175F: ACCELERATION SENSOR SIGNAL MESSAGE COUNTER INCORRECT

Diagnostic Instructions

- Perform the **Diagnostic System Check - Vehicle** prior to using this diagnostic procedure.
- Review **Strategy Based Diagnosis** for an overview of the diagnostic approach.
- **Diagnostic Procedure Instructions** provides an overview of each diagnostic category.

DTC Descriptor

DTC P175F

Acceleration Sensor Signal Message Counter Incorrect

Circuit/System Description

The Multi-Axis Acceleration sensor sends the amount or rate of acceleration to the Electronic Brake Control Module (EBCM). To improve vehicle performance and transmission shift feel, the EBCM is constantly sending the Transmission Control Module (TCM) serial data messages with information regarding the rate of vehicle acceleration. The TCM sets this DTC when it detects a discrepancy in the structure of the message, causing the signal message integrity to be questioned.

Conditions for Running the DTC

- Battery voltage is between 9-32 V.
- Ignition voltage is between 9-32 V.
- No other serial data errors are present.

Conditions for Setting the DTC

The TCM detects an error in the rolling count value that does not match with the rolling count value sent by the EBCM.

Action Taken When the DTC Sets

- P175F is a Type C DTC.
- The TCM inhibits manual mode shift operation.

Conditions for Clearing the DTC

P175F is a Type C DTC.

Reference Information

Schematic Reference

Automatic Transmission Controls Schematics

carDiagn.com

Connector End View Reference

- COMPONENT CONNECTOR END VIEWS - INDEX
- INLINE HARNESS CONNECTOR END VIEWS - INDEX

Description and Operation

- Electronic Component Description
- Transmission Component and System Description
- Transmission General Description

Electrical Information Reference

- Circuit Testing
- Connector Repairs
- Testing for Intermittent Conditions and Poor Connections
- Wiring Repairs

DTC Type Reference

Powertrain Diagnostic Trouble Code (DTC) Type Definitions

Scan Tool Reference

Control Module References for scan tool information

Circuit/System Verification

1. Verify there are no other K71 Transmission Control Module or K17 Electronic Brake Control Module DTCs set.

   NOTE:
   - **P175F is an informational DTC.**
   - **Diagnose all other K71 Transmission Control Module and K17 Electronic Brake Control Module DTCs prior to DTC P175F.**

   - **If a DTC is set**

     Refer to Diagnostic Trouble Code (DTC) List - Vehicle .

   - **If a DTC is not set**
2. Complete the diagnosis by looking for a serial data fault. Refer to Scan Tool Does Not Communicate with Low Speed GMLAN Device .
   - **If a serial data circuit fault is found**

     Repair as necessary.

   - **If a serial data circuit fault is not found**
3. All OK.

Repair Instructions

Perform the Diagnostic Repair Verification after completing the repair.

- Solenoid Valve Characterization Reprogramming
- Perform the Transmission Service Fast Learn Procedure following all transmission related repairs.
- Refer to K71 Transmission Control Module: Programming and Setup

DTC P1761: UP AND DOWN SHIFT SWITCH SIGNAL MESSAGE COUNTER

Diagnostic Instructions

cardiagn.com

- Perform the **Diagnostic System Check - Vehicle** prior to using this diagnostic procedure.
- Review **Strategy Based Diagnosis** for an overview of the diagnostic approach.
- **Diagnostic Procedure Instructions** provides an overview of each diagnostic category.

DTC Descriptor

DTC P1761

Up and Down Shift Switch Signal Message Counter Incorrect

Circuit/System Description

The driver shift request, also known as the manual mode shift function, allows the driver to select the desired range of gears for current driving conditions. The driver shift request shift system is activated when the gear selector is in the manual position. The driver shift request is deactivated in all other range positions. When driver shift is requested, a signal is sent to the Body Control Module (BCM) and also to the Transmission Control Module (TCM). Each time a signal is sent, an internal counter in the BCM and TCM increments. Both counters must have the same count value. This code sets when the rolling count value of the TCM does not match the same rolling count value sent from the BCM.

Conditions for Running the DTC

Ignition voltage is between 9-32 V.

Conditions for Setting the DTC

The TCM detects an error in the rolling count value that does not match with the rolling count value sent by the BCM.

Action Taken When the DTC Sets

- P1761 is a Type C DTC.
- The TCM inhibits manual mode shift operation.

Conditions for Clearing the DTC

P1761 is a Type C DTC.

Reference Information

Schematic Reference

Automatic Transmission Controls Schematics

Connector End View Reference

- **COMPONENT CONNECTOR END VIEWS - INDEX**
- **INLINE HARNESS CONNECTOR END VIEWS - INDEX**

Description and Operation

- **Electronic Component Description**
- **Transmission Component and System Description**
- **Transmission General Description**

Electrical Information Reference

- **Circuit Testing**
- **Connector Repairs**
- **Testing for Intermittent Conditions and Poor Connections**
- **Wiring Repairs**

DTC Type Reference

cardiagn.com

Powertrain Diagnostic Trouble Code (DTC) Type Definitions

Scan Tool Reference

Control Module References for scan tool information

Circuit/System Verification

1. Verify with a scan tool, there are no other K71 Transmission Control Module or K9 Body Control Module DTCs set.

   NOTE:
   - **P1761 is an informational DTC.**
   - **Diagnose all other K71 Transmission Control Module and K9 Body Control Module DTCs prior to DTC P1761.**

   - **If a DTC is set**

     Refer to Diagnostic Trouble Code (DTC) List - Vehicle .

   - **If a DTC is not set**
2. Complete the diagnosis by looking for a serial data fault. Refer to Scan Tool Does Not Communicate with Low Speed GMLAN Device .
   - **If a serial data circuit fault is found**

     Repair as necessary.

   - **If a serial data circuit fault is not found**
3. All OK.

Repair Instructions

Perform the Diagnostic Repair Verification after completing the repair.

- Solenoid Valve Characterization Reprogramming
- Perform the Transmission Service Fast Learn Procedure following all transmission related repairs.
- Refer to K71 Transmission Control Module: Programming and Setup

DTC P176B-P176D: INTERMEDIATE SPEED SENSOR CIRCUIT

Diagnostic Instructions

- Perform the Diagnostic System Check - Vehicle prior to using this diagnostic procedure.
- Review Strategy Based Diagnosis for an overview of the diagnostic approach.
- Diagnostic Procedure Instructions provides an overview of each diagnostic category.

DTC Descriptors

DTC P176B

Intermediate Speed Sensor Circuit Performance

DTC P176C

Intermediate Speed Sensor Circuit Low Voltage

DTC P176D

Intermediate Speed Sensor Circuit High Voltage

Diagnostic Fault Information

cardiagn.com

Circuits	Short to Ground	Open/High Resistance	Short to Voltage	Signal Performance
9 V Reference	P176C	P176D	P176D	P176B
Signal	P176C	P176C	P176D	P176B

Typical Scan Tool Data

Transmission Intermediate Speed Sensor

Circuits	Short to Ground	Open	Short to Voltage
Operating Conditions: Drive wheel rotating **Parameter Normal Range:** 0-7500 RPM			
Transmission Intermediate Speed Sensor	0 RPM	0 RPM	-

Circuit/System Description

The intermediate speed sensor is a 2 wire hall effect sensor. The intermediate speed sensor signal pick up end faces the machined trigger slots on the outside diameter of the reaction carrier/output internal gear assembly. A 9 V reference circuit is supplied by the transmission control module (TCM) to the intermediate speed sensor. As the reaction carrier/output internal gear assembly begins to rotate, the intermediate speed sensor produces a square wave signal. As the rotational speed of the reaction carrier/output internal gear assembly increases, the number or frequency of the square wave signal increases. The square wave is transmitted back to the TCM on the signal circuit. The TCM uses the intermediate speed sensor signal to calculate transmission reaction carrier speed. The input, intermediate and output speed sensor signals are used to determine line pressures, shift patterns, gear ratio and torque converter clutch (TCC) apply and release.

Conditions for Running the DTC

P176B

- P0716, P0717, P0722, P0723, P077C, P077D, P07BF or P07C0 is not set.
- Battery voltage is between 9-32 V.
- Ignition voltage is between 9-32 V.

P176C

- P176D is not set.
- Battery voltage is between 9-32 V.

P176D

- P176C is not set.
- Battery voltage is between 9-32 V.

Conditions for Setting the DTC

P176B Condition 1

TCM has detected the transmission intermediate speed sensor signal of 20 RPM or greater in 1st, 2nd or 3rd gear.

Condition 2

TCM has detected the transmission intermediate speed sensor signal gear slip of 20 RPM or greater in 3rd, 4th, 5th, 6th, 7th or 8th gear.

P176C

TCM has detected a low transmission intermediate speed sensor signal of 0.25 V for 0.05 s.

P176D

cardiagn.com

TCM has detected a high transmission intermediate speed sensor signal voltage of 4.75 V for 0.05 s.

Action Taken When the DTC Sets

P176B, P176C and P176D are Type B DTCs.

Conditions for Clearing the DTC

P176B, P176C and P176D are Type B DTCs.

Reference Information

Schematic Reference

Automatic Transmission Controls Schematics

Connector End View Reference

- **COMPONENT CONNECTOR END VIEWS - INDEX**
- **INLINE HARNESS CONNECTOR END VIEWS - INDEX**

Description and Operation

- **Electronic Component Description**
- **Transmission Component and System Description**
- **Transmission General Description**

Electrical Information Reference

- **Circuit Testing**
- **Connector Repairs**
- **Testing for Intermittent Conditions and Poor Connections**
- **Wiring Repairs**

DTC Type Reference

Powertrain Diagnostic Trouble Code (DTC) Type Definitions

Scan Tool Reference

Control Module References for scan tool information

Special Tools

J-38522 Variable Signal Generator

For equivalent regional tools, refer to **Special Tools** .

Circuit/System Verification

1. Ignition On.
2. Verify the scan tool 9 V Reference 1 Circuit Status parameter does not display Malfunction.
   - **If Malfunction is displayed**

     Refer to Circuit/System Testing.

   - **If Malfunction is not displayed**
3. Verify the ISS/OSS supply voltage parameter does not display Out of Range.
   - **If Out of Range is displayed**

     Refer to Circuit/System Testing.

cardiagn.com

- **If Out of Range is not displayed**

4. Road test the vehicle.
5. Verify the scan tool transmission intermediate speed sensor parameter increases with wheel speed and does not drop out.
    - **If the transmission intermediate speed sensor parameter does not increase with wheel speed or drops out**

      Refer to Circuit/System Testing.

    - **If the transmission intermediate speed sensor parameter does increase with wheel speed and does not drop out**
6. Operate the vehicle within the Conditions for Running the DTC. You may also operate the vehicle within the conditions that you observe from the Freeze Frame/Failure Records data.
7. Verify the DTC does not set.
    - **If the DTC sets**

      Refer to Circuit/System Testing.

    - **If the DTC does not set**
8. All OK.

Circuit/System Testing

1. Ignition Off and all vehicle systems Off. Disconnect the X175 harness connector at the T12 Automatic Transmission Assembly. It may take up to 2 min for all vehicle systems to power down, ignition On.
2. Test for 8.3-9.8 V between the 9 V reference 1 circuit terminal 25 and ground.
    - **If less than 8.3 V**
    1. Ignition Off, disconnect the harness connector at the K71 Transmission Control Module.
    2. Test for infinite resistance between the 9 V reference 1 circuit terminal 25 and ground.
        - If less than infinite resistance, repair the short to ground on the circuit.
        - If infinite resistance
    3. Test for less than 1 Ω in the 9 V reference 1 circuit end to end.
        - If 1 Ω or greater, repair the open/high resistance in the circuit.
        - If less than 1 Ω, replace the K71 Transmission Control Module.
    - **If greater than 9.8 V**
    1. Ignition Off.
    2. Disconnect the harness connector at the K71 Transmission Control Module, ignition On.
    3. Test for less than 1 V between the 9 V reference 1 circuit terminal 25 and ground.
        - If greater than the specified value, repair the short to voltage on the circuit.
        - If less than the specified value, replace the K71 Transmission Control Module.
    - **If between 8.3-9.8 V**
3. Ignition Off.
4. Connect the red lead of the **J-38522** generator, to the signal circuit terminal 32 and connect the black lead of the **J-38522** generator to ground.
5. Set the **J-38522** generator to the specifications listed below:
    - Signal switch to 5 V
    - Frequency switch to 300 Hz
    - Duty cycle switch to the 50% or the Normal position
6. Ignition ON.
7. Verify the scan tool Intermediate Speed Sensor parameter is between 210-240 RPM.
    - **If not between the specified range**
    1. Ignition Off, disconnect the harness connector at the K71 Transmission Control Module.

cardiagn.com

2. Test for infinite resistance between the signal circuit terminal 32 and ground.
    - If less than infinite resistance, repair the short to ground on the circuit.
    - If infinite resistance
3. Test for less than 1 Ω in the signal circuit end to end.
    - If 1 Ω or greater, repair the open/high resistance in the circuit.
    - If less than 1 Ω, replace the K71 Transmission Control Module.

- **If between the specified range**

8. Perform the Component Testing.

Component Testing

1. Perform the Circuit/System Testing first.
2. Ignition Off.
3. Connect the X175 harness connector.
4. Remove the fluid pan from the T12 Automatic Transmission Assembly.
5. Remove the control valve upper body.
6. Disconnect X177 harness connector, ignition On.
7. Test for 8.3-9.8 V between the 9 V reference 1 circuit terminal 3 and ground.
    - **If not between 8.3-9.8 V**

      Replace the automatic transmission wiring harness, electrical connector passage sleeve.

    - **If between 8.3-9.8 V**
8. Connect the red lead of the **J-38522** generator to the signal circuit terminal 6 and connect the black lead of the **J-38522** generator to ground.
9. Set the **J-38522** generator to the specifications listed below:
    - Signal switch to 5 V
    - Frequency switch to 300 Hz
    - Duty cycle switch to the 50% or the Normal position
10. Verify the scan tool transmission input speed parameter is between 210-240 RPM.
    - **If not between 210-240 RPM**

      Replace the automatic transmission wiring harness, electrical connector passage sleeve.

    - **If between 210-240 RPM**
11. Remove the B14D Transmission Intermediate Shaft Speed Sensor from the T12 Automatic Transmission Assembly.
12. Verify there is no damage or misalignment with the machine slots on the outside diameter of the reaction carrier/output internal ring gear assembly and the B14D Transmission Intermediate Shaft Speed Sensor.
    - **If damage or misalignment**

      Repair or replace the necessary components.

    - **If no damage or misalignment**
13. Replace the B14D Transmission Intermediate Shaft Speed Sensor.

Repair Instructions

Perform the **Diagnostic Repair Verification** after completing the repair.

- **Automatic Transmission Fluid, Fluid Pan and/or Filter Replacement (Rear Wheel Drive)**
  Automatic Transmission Fluid, Fluid Pan and/or Filter Replacement (All Wheel Drive)
- **Automatic Transmission Wiring Harness Replacement (Electrical Connector Passage Sleeve)**
- **Control Valve Body Replacement**

cardiagn.com

- Input and Output Speed Sensor Replacement
- Solenoid Valve Characterization Reprogramming
- Transmission Control Wiring Harness Replacement (M5N)
- Perform the Transmission Service Fast Learn Procedure following all transmission related repairs.
- Refer to K71 Transmission Control Module: Programming and Setup

DTC P1824, P182D, P18B8, P18BD OR P18C2: INTERNAL MODE SWITCH P CIRCUIT

Diagnostic Instructions

- Perform the Diagnostic System Check - Vehicle prior to using this diagnostic procedure.
- Review Strategy Based Diagnosis for an overview of the diagnostic approach.
- Diagnostic Procedure Instructions provides an overview of each diagnostic category.

DTC Descriptors

DTC P1824

Internal Mode Switch P Circuit Low Voltage

DTC P182D

Internal Mode Switch P Circuit High Voltage

DTC P18B8

Internal Mode Switch P Circuit Shorted

DTC P18BD

Internal Mode Switch P Circuit Stuck Off - Invalid Voltage Range

DTC P18C2

Internal Mode Switch P Circuit Stuck On - Invalid Voltage Range

Diagnostic Fault Information

Circuits	Short to Ground	Open/High Resistance	Short to Voltage	Signal Performance
9 V Reference	P1824	P1824	-	-
Signal	P1824	P1824	P182D	P18BA/P18BF

Typical Scan Tool Data

Internal Mode Switch P

Circuits	Short to Ground	Open	Short to Voltage
Operating Conditions: Ignition On **Parameter Normal Range:** 9 V Reference Circuit = OK or Not Run. Internal Mode Switch P Signal Circuit 0.70-0.96 V or 1.68-2.38 V.			
9 V Reference	Malfunction	Malfunction	Malfunction
Internal Mode Switch P	0 V	0 V	4.8-5.2 V

Circuit/System Description

The internal mode switch indicates to the transmission control module (TCM) which gear position the vehicle operator has selected. The internal mode switch consists of 5 separate hall effect switches. Each hall effect switch is supplied a 9 V reference circuit and a signal circuit from the TCM. Each signal circuit for each gear selector position will have either a voltage reading of 0.70-0.96 V indicting On or 1.68-2.38 V indicating Off. The voltage values on each internal mode switch circuit will change and are

cardiagn.com

dependent on the position of the gear selector. The state of each internal mode switch A/B/C/P/S signal circuit is displayed on the scan tool.

Conditions for Running the DTC

Ignition voltage is between 9-32 V

Conditions for Setting the DTC

P1824

TCM has detected the internal mode switch P signal circuit voltage is less than 0.7 V, for 1.75 s.

P182D

TCM has detected the internal mode switch P signal circuit voltage is greater than 2.38 V, for 1.75 s.

P18B8

TCM has detected the internal mode switch P signal circuit voltage is between 0.966-1.68 V, for 1.75 s.

P18BD

TCM has detected the internal mode switch P signal circuit has an invalid voltage range of 1.68 - 2.38 V for 2.7 s.

P18C2

TCM has detected the internal mode switch P signal circuit has an invalid voltage range of 0.70 - 0.96 V for 2.7 s.

Action Taken When the DTC Sets

- P1824, P182D, P18B8, P18BD and P18C2 are Type B DTCs.
- TCM will substitute voltage values for the internal mode switch P signal circuit.

Conditions for Clearing the DTC

P1824, P182D, P18B8, P18BD and P18C2 are Type B DTCs.

Reference Information

Schematic Reference

Automatic Transmission Controls Schematics

Connector End View Reference

- **COMPONENT CONNECTOR END VIEWS - INDEX**
- **INLINE HARNESS CONNECTOR END VIEWS - INDEX**

Description and Operation

- **Electronic Component Description**
- **Transmission Component and System Description**
- **Transmission General Description**

Electrical Information Reference

- **Circuit Testing**
- **Connector Repairs**
- **Testing for Intermittent Conditions and Poor Connections**
- **Wiring Repairs**

cardiagn.com

DTC Type Reference

Powertrain Diagnostic Trouble Code (DTC) Type Definitions

Scan Tool Reference

Control Module References for scan tool information

Circuit/System Verification

1. Ignition On.
2. Verify the range selector lever cable adjustment is correct. Refer to **Range Selector Lever Cable Adjustment** .
   - **If the range selector lever cable adjustment is not OK**

     Adjust, repair or replace as necessary.
   - **If the range selector lever cable adjustment is OK**
3. Verify the scan tool the 9 V Reference 1 Circuit Status does not display Malfunction.
   - **If Malfunction is displayed**

     Refer to Circuit/System Testing.
   - **If Malfunction is not displayed**
4. Verify the scan tool the internal mode switch A/B/C/P/S signal circuit voltages are correct for Park, Reverse, Neutral, Drive and Manual Mode position. Refer to **Transmission Internal Mode Switch Voltage** .
   - **If the internal mode switch voltages are not OK**

     Refer to Circuit/System Testing.
   - **If the internal mode switch voltages are OK**
5. Operate the vehicle within the Conditions for Running the DTC. You may also operate the vehicle within the conditions that you observe from the Freeze Frame/Failure Records data.
6. Verify the DTC does not set.
   - **If the DTC sets**

     Refer to Circuit/System Testing.
   - **If the DTC does not set**
7. All OK.

Circuit/System Testing

1. Ignition Off and all vehicle systems Off. Disconnect the X175 harness connector at the T12 Automatic Transmission Assembly. It may take up to 2 min for all vehicle systems to power down, ignition On.
2. Test for 8.3-9.3 V between the 9 V reference 1 circuit terminal 31 and ground.
   - **If less than 8.3 V**
   1. Ignition Off, disconnect the harness connector at the K71 Transmission Control Module, ignition On.
   2. Test for infinite resistance between the 9 V reference 1 circuit terminal 31 and ground.
      - If less than infinite resistance, repair the short to ground on the circuit.
      - If infinite resistance
   3. Test for less than 1 Ω in the 9 V reference 1 circuit end to end.
      - If 1 Ω or greater, repair the open/high resistance in the circuit.
      - If less than 1 Ω, replace the K71 Transmission Control Module.
   - **If greater than 9.3 V**

cardiagn.com

1. Ignition Off.
2. Disconnect the harness connector at the K71 Transmission Control Module, ignition On.
3. Test for less than 1 V between the 9 V reference 1 circuit terminal 31 and ground.
    - If greater than the specified value, repair the short to voltage on the circuit.
    - If less than the specified value, replace the K71 Transmission Control Module.

- **If between 8.3-9.3 V**

3. Ignition Off.
4. Using the **J-35616** terminal test kit, connect a 3 A fused jumper wire from the 9 V reference 1 circuit terminal 31, to the internal mode switch P signal circuit, terminal 23 at the X175 transmission connector, ignition On.
5. Verify with a scan tool the internal mode switch P signal circuit parameter displays 4.8-5.2 V.

- **If greater than 5.2 V**

1. Ignition Off, disconnect the harness connector at the K71 Transmission Control Module, ignition On.
2. Test for less than 1 V between the internal mode switch P signal circuit, terminal 23 and ground.
    - If greater than the specified value, repair the short to voltage on the circuit.
    - If less than the specified value, replace the K71 Transmission Control Module.

- **If less than 4.8 V**

1. Ignition Off, disconnect the harness connector at the K71 Transmission Control Module.
2. Test for infinite resistance between the internal mode switch P signal circuit terminal 23 and ground.
    - If less than infinite resistance, repair the short to ground on the circuit.
    - If infinite resistance
3. Test for less than 1 Ω in the internal mode switch P signal circuit end to end.
    - If 1 Ω or greater, repair the open/high resistance in the circuit.
    - If less than 1 Ω, replace the K71 Transmission Control Module.
4. Test for infinite resistance between the internal mode switch P signal circuit and the internal mode switch A/B/C/S signal circuits, at the X175 harness connector.
    - If less than infinite resistance on any circuit, repair the short between the 2 or more IMS signal circuits.
    - If infinite resistance, replace the K71 Transmission Control Module.

- **If between 4.8-5.2 V**

6. Perform the Component Testing.

Component Testing

1. Perform the Circuit/System Testing first.
2. Ignition Off.
3. Connect the X175 harness connector.
4. Remove the fluid pan from the T12 Automatic Transmission Assembly.
5. Disconnect the harness connector at the B15 Transmission Internal Mode Switch, ignition On.
6. Test for 8.3-9.4 V between the 9 V reference 1 circuit terminal 10 and ground.

- **If less than 8.3 V**

1. Ignition Off.
2. Disconnect the X176 connector, ignition On.
3. Test for 8.3-9.4 V between terminal 19 and ground.
    - If less than 8.3 V

      Replace the automatic transmission wiring harness, electrical connector passage sleeve.

- If between 8.3-9.4 V

  Replace the transmission control wiring harness.

- **If greater than 9.3 V**

1. Ignition Off.
2. Disconnect the X176 connector, ignition On.
3. Test for 8.3-9.4 V between terminal 19 and ground.
   - If greater than 9.4 V

     Replace the automatic transmission wiring harness, electrical connector passage sleeve.

   - If between 8.3-9.4 V

     Replace the transmission control wiring harness.

- **If between 8.3-9.4 V**

7. Connect a 3 A fused jumper wire between the 9 V reference 1 circuit terminal 10 and the signal P circuit terminal 9.
8. Verify the scan tool signal P circuit parameter displays 4.8-5.2 V.
   - **If less than 4.8 V**

   1. Ignition Off.
   2. Disconnect the X176 connector.
   3. Connect a 3 A fused jumper wire between the 9 V reference 1 circuit terminal 19 and the signal P circuit terminal 17, ignition On.
   4. Verify the scan tool signal P parameter displays 4.8-5.2 V.
      - If less than 4.8 V

        Replace the automatic transmission wiring harness, electrical connector passage sleeve.

      - If between 4.8-5.2 V

        Replace the transmission control wiring harness.

   - **If greater than 5.2 V**

   1. Ignition Off.
   2. Disconnect the X176 connector.
   3. Connect a 3 A fused jumper wire between the 9 V reference 1 circuit terminal 19 and the signal P circuit terminal 17, ignition On.
   4. Verify the scan tool signal P parameter displays 4.8-5.2 V.
      - If greater than 5.2 V

        Replace the automatic transmission wiring harness replacement, electrical connector passage sleeve.

      - If between 4.8-5.2 V

        Replace the transmission control wiring harness.

   - **If between 4.8-5.2 V**

9. Replace the B15 Transmission Internal Mode Switch.

Repair Instructions

Perform the **Diagnostic Repair Verification** after completing the repair.

cardiagn.com

- Automatic Transmission Fluid, Fluid Pan and/or Filter Replacement (Rear Wheel Drive)
  Automatic Transmission Fluid, Fluid Pan and/or Filter Replacement (All Wheel Drive)
- Automatic Transmission Wiring Harness Replacement (Electrical Connector Passage Sleeve)
- Manual Shift Shaft Position Switch Replacement
- Transmission Control Wiring Harness Replacement (M5N)
- Perform the Transmission Service Fast Learn Procedure following all transmission related repairs.
- Refer to K71 Transmission Control Module: Programming and Setup

DTC P182A, P1838, P18B5, P18BA OR P18BF: INTERNAL MODE SWITCH A CIRCUIT

Diagnostic Instructions

- Perform the Diagnostic System Check - Vehicle prior to using this diagnostic procedure.
- Review Strategy Based Diagnosis for an overview of the diagnostic approach.
- Diagnostic Procedure Instructions provides an overview of each diagnostic category.

DTC Descriptors

DTC P182A

Internal Mode Switch A Circuit Low Voltage

DTC P1838

Internal Mode Switch A Circuit High Voltage

DTC P18B5

Internal Mode Switch A Circuit Shorted

DTC P18BA

Internal Mode Switch A Circuit Stuck Off - Invalid Voltage Range

DTC P18BF

Internal Mode Switch A Circuit Stuck On - Invalid Voltage Range

Diagnostic Fault Information

Circuits	Short to Ground	Open/High Resistance	Short to Voltage	Signal Performance
9 V Reference	P182A	P182A	-	-
Signal	P182A	P182A	P1838	P18BA/P18BF

Typical Scan Tool Data

Internal Mode Switch A

Circuits	Short to Ground	Open	Short to Voltage
Operating Conditions: Ignition On **Parameter Normal Range:** 9 V Reference Circuit = OK or Not Run. Internal Mode Switch A Signal Circuit 0.70-0.96 V or 1.68-2.38 V.			
9 V Reference	Malfunction	Malfunction	Malfunction
Internal Mode Switch A	0 V	0 V	4.8-5.2 V

Circuit/System Description

The internal mode switch indicates to the transmission control module (TCM) which gear position the vehicle operator has selected. The internal mode switch consists of 5 separate hall effect switches. Each

cardiagn.com

hall effect switch is supplied a 9 V reference circuit and a signal circuit from the TCM. Each signal circuit for each gear selector position will have either a voltage reading of 0.70-0.96 V indicting On or 1.68-2.38 V indicating Off. The voltage values on each internal mode switch circuit will change and are dependent on the position of the gear selector. The state of each internal mode switch A/B/C/P/S signal circuit is displayed on the scan tool.

Conditions for Running the DTC

Ignition voltage is between 9-32 V

Conditions for Setting the DTC

P182A

TCM has detected the internal mode switch A signal circuit voltage is less than 0.7 V, for 1.75 s.

P1838

TCM has detected the internal mode switch A signal circuit voltage is greater than 2.38 V, for 1.75 s.

P18B5

TCM has detected the internal mode switch A signal circuit voltage is between 0.966-1.68 V, for 1.75 s.

P18BA

TCM has detected the internal mode switch A signal circuit has an invalid voltage range of 1.68 - 2.38 V, for 2.7 s.

P18BF

TCM has detected the internal mode switch A signal circuit has an invalid voltage range of 0.70 - 0.96 V, for 2.7 s.

Action Taken When the DTC Sets

- P182A, P1838, P18B5, P18BA and P18BF are Type B DTCs.
- TCM will substitute voltage values for the internal mode switch A signal circuit.

Conditions for Clearing the DTC

P182A, P1838, P18B5, P18BA and P18BF are Type B DTCs.

Reference Information

Schematic Reference

Automatic Transmission Controls Schematics

Connector End View Reference

- **COMPONENT CONNECTOR END VIEWS - INDEX**
- **INLINE HARNESS CONNECTOR END VIEWS - INDEX**

Description and Operation

- **Electronic Component Description**
- **Transmission Component and System Description**
- **Transmission General Description**

Electrical Information Reference

- **Circuit Testing**
- **Connector Repairs**

cardiagn.com

- Testing for Intermittent Conditions and Poor Connections
- Wiring Repairs

DTC Type Reference

Powertrain Diagnostic Trouble Code (DTC) Type Definitions

Scan Tool Reference

Control Module References for scan tool information

Circuit/System Verification

1. Ignition On.
2. Verify the range selector lever cable adjustment is correct. Refer to Range Selector Lever Cable Adjustment .
   - **If the range selector lever cable adjustment is not OK**

     Adjust, repair or replace as necessary.

   - **If the range selector lever cable adjustment is OK**
3. Verify the scan tool the 9 V Reference 2 Circuit Status does not display Malfunction.
   - **If Malfunction is displayed**

     Refer to Circuit/System Testing.

   - **If Malfunction is not displayed**
4. Verify the scan tool the internal mode switch A/B/C/P/S signal circuit voltages are correct for Park, Reverse, Neutral, Drive and Manual Mode position. Refer to Transmission Internal Mode Switch Voltage .
   - **If the internal mode switch voltages are not OK**

     Refer to Circuit/System Testing.

   - **If the internal mode switch voltages are OK**
5. Operate the vehicle within the Conditions for Running the DTC. You may also operate the vehicle within the conditions that you observe from the Freeze Frame/Failure Records data.
6. Verify the DTC does not set.
   - **If the DTC sets**

     Refer to Circuit/System Testing.

   - **If the DTC does not set**
7. All OK.

Circuit/System Testing

1. Ignition Off and all vehicle systems Off. Disconnect the X175 harness connector at the T12 Automatic Transmission Assembly. It may take up to 2 min for all vehicle systems to power down, ignition On.
2. Test for 8.3-9.3 V between the 9 V reference 2 circuit terminal 29 and ground.
   - **If less than 8.3 V**
   1. Ignition Off, disconnect the harness connector at the K71 Transmission Control Module, ignition On.
   2. Test for infinite resistance between the 9 V reference 2 circuit terminal 29 and ground.
      - If less than infinite resistance, repair the short to ground on the circuit.
      - If infinite resistance
   3. Test for less than 1 Ω in the 9 V reference 2 circuit end to end.
      - If 1 Ω or greater, repair the open/high resistance in the circuit.

cardiagn.com

- If less than 1 Ω, replace the K71 Transmission Control Module.

- **If greater than 9.3 V**

1. Ignition Off.
2. Disconnect the harness connector at the K71 Transmission Control Module, ignition On.
3. Test for less than 1 V between the 9 V reference 2 circuit terminal 29 and ground.
    - If greater than the specified value, repair the short to voltage on the circuit.
    - If less than the specified value, replace the K71 Transmission Control Module.

- **If between 8.3-9.3 V**

3. Ignition Off.
4. Using the **J-35616** terminal test kit, connect a 3 A fused jumper wire from the 9 V reference 2 circuit terminal 29, to the internal mode switch A signal circuit, terminal 22 at the X175 transmission connector, ignition On.
5. Verify with a scan tool the internal mode switch A signal circuit parameter displays 4.8-5.2 V.
    - **If greater than 5.2 V**

    1. Ignition Off, disconnect the harness connector at the K71 Transmission Control Module, ignition On.
    2. Test for less than 1 V between the internal mode switch A signal circuit, terminal 22 and ground.
        - If greater than the specified value, repair the short to voltage on the circuit.
        - If less than the specified value, replace the K71 Transmission Control Module.

    - **If less than 4.8 V**

    1. Ignition Off, disconnect the harness connector at the K71 Transmission Control Module.
    2. Test for infinite resistance between the internal mode switch A signal circuit terminal 22 and ground.
        - If less than infinite resistance, repair the short to ground on the circuit.
        - If infinite resistance
    3. Test for less than 1 Ω in the internal mode switch A signal circuit end to end.
        - If 1 Ω or greater, repair the open/high resistance in the circuit.
        - If less than 1 Ω, replace the K71 Transmission Control Module.
    4. Test for infinite resistance between the internal mode switch A signal circuit and the internal mode switch B/C/P/S signal circuits, at the X175 harness connector.
        - If less than infinite resistance on any circuit, repair the short between the 2 or more internal mode switch signal circuits.
        - If infinite resistance, replace the K71 Transmission Control Module.

    - **If between 4.8-5.2 V**

6. Perform the Component Testing.

Component Testing

1. Perform the Circuit/System Testing first.
2. Ignition Off.
3. Connect the X175 harness connector.
4. Remove the fluid pan from the T12 Automatic Transmission Assembly.
5. Disconnect the harness connector at the B15 Transmission Internal Mode Switch, ignition On.
6. Test for 8.3-9.4 V between the 9 V reference 2 circuit terminal 4 and ground.
    - **If less than 8.3 V**

    1. Ignition Off.
    2. Disconnect the X176 connector, ignition On.
    3. Test for 8.3-9.4 V between terminal 5 and ground.
        - If less than 8.3 V

carlegn.com

Replace the automatic transmission wiring harness, electrical connector passage sleeve.

- If between 8.3-9.4 V

  Replace the transmission control wiring harness.

- **If greater than 9.3 V**

1. Ignition Off.
2. Disconnect the X176 connector, ignition On.
3. Test for 8.3-9.4 V between terminal 5 and ground.
   - If greater than 9.4 V

     Replace the automatic transmission wiring harness, electrical connector passage sleeve.

   - If between 8.3-9.4 V

     Replace the transmission control wiring harness.

- **If between 8.3-9.4 V**

7. Connect a 3 A fused jumper wire between the 9 V reference 2 circuit terminal 4 and the signal A circuit terminal 5.
8. Verify the scan tool signal A circuit parameter displays 4.8-5.2 V.
   - **If less than 4.8 V**

   1. Ignition Off.
   2. Disconnect the X176 connector.
   3. Connect a 3 A fused jumper wire between the 9 V reference 2 circuit terminal 5 and the signal A circuit terminal 2, ignition On.
   4. Verify the scan tool signal A parameter displays 4.8-5.2 V.
      - If less than 4.8 V

        Replace the automatic transmission wiring harness, electrical connector passage sleeve.

      - If between 4.8-5.2 V

        Replace the transmission control wiring harness.

   - **If greater than 5.2 V**

   1. Ignition Off.
   2. Disconnect the X176 connector.
   3. Connect a 3 A fused jumper wire between the 9 V reference 2 circuit terminal 5 and the signal A circuit terminal 2, ignition On.
   4. Verify the scan tool signal A parameter displays 4.8-5.2 V.
      - If greater than 5.2 V

        Replace the automatic transmission wiring harness, electrical connector passage sleeve.

      - If between 4.8-5.2 V

        Replace the transmission control wiring harness.

   - **If between 4.8-5.2 V**

9. Replace the B15 Transmission Internal Mode Switch.

Repair Instructions

cardiagn.com

Perform the **Diagnostic Repair Verification** after completing the repair.

- **Automatic Transmission Fluid, Fluid Pan and/or Filter Replacement (Rear Wheel Drive)**
  Automatic Transmission Fluid, Fluid Pan and/or Filter Replacement (All Wheel Drive)
- **Automatic Transmission Wiring Harness Replacement (Electrical Connector Passage Sleeve)**
- **Manual Shift Shaft Position Switch Replacement**
- **Transmission Control Wiring Harness Replacement (M5N)**
- Perform the **Transmission Service Fast Learn Procedure** following all transmission related repairs.
- Refer to **K71 Transmission Control Module: Programming and Setup**

DTC P182B, P182C, P18B6, P18BB OR P18C0: INTERNAL MODE SWITCH B CIRCUIT

Diagnostic Instructions

- Perform the **Diagnostic System Check - Vehicle** prior to using this diagnostic procedure.
- Review **Strategy Based Diagnosis** for an overview of the diagnostic approach.
- **Diagnostic Procedure Instructions** provides an overview of each diagnostic category.

DTC Descriptors

DTC P182B

Internal Mode Switch B Circuit Low Voltage

DTC P182C

Internal Mode Switch B Circuit High Voltage

DTC P18B6

Internal Mode Switch B Circuit Shorted

DTC P18BB

Internal Mode Switch B Circuit Stuck Off - Invalid Voltage Range

DTC P18C0

Internal Mode Switch B Circuit Stuck On - Invalid Voltage Range

cardiagn.com

Diagnostic Fault Information

Circuits	Short to Ground	Open/High Resistance	Short to Voltage	Signal Performance
9 V Reference	P182B	P182B	-	-
Signal	P182B	P182B	P182C	P18BB/P18C0

Typical Scan Tool Data

Internal Mode Switch B

Circuits	Short to Ground	Open	Short to Voltage
Operating Conditions: Ignition On **Parameter Normal Range:** 9 V Reference Circuit = OK or Not Run. Internal Mode Switch B Signal Circuit 0.70-0.96 V or 1.68-2.38 V.			
9 V Reference	Malfunction	Malfunction	Malfunction
Internal Mode Switch B	0 V	0 V	4.8-5.2 V

Circuit/System Description

The internal mode switch indicates to the transmission control module (TCM) which gear position the vehicle operator has selected. The internal mode switch consists of 5 separate hall effect switches. Each hall effect switch is supplied a 9 V reference circuit and a signal circuit from the TCM. Each signal circuit for each gear selector position will have either a voltage reading of 0.70-0.96 V indicting On or 1.68-2.38 V indicating Off. The voltage values on each internal mode switch circuit will change and are dependent on the position of the gear selector. The state of each internal mode switch A/B/C/P/S signal circuit is displayed on the scan tool.

Conditions for Running the DTC

Ignition voltage is between 9-32 V

Conditions for Setting the DTC

P182B

TCM has detected the internal mode switch B signal circuit voltage is less than 0.7 V, for 1.75 s.

P182C

TCM has detected the internal mode switch B signal circuit voltage is greater than 2.38 V, for 1.75 s.

P18B6

TCM has detected the internal mode switch B signal circuit voltage is between 0.966-1.68 V, for 1.75 s.

P18BB

TCM has detected the internal mode switch B signal circuit has an invalid voltage range of 1.68 - 2.38 V for 2.7 s.

P18C0

TCM has detected the internal mode switch B signal circuit has an invalid voltage range of 0.70 - 0.96 V for 2.7 s.

Action Taken When the DTC Sets

- P182B, P182C, P18B6, P18BB and P18C0 are Type B DTCs.
- TCM will substitute voltage values for the internal mode switch B signal circuit.

Conditions for Clearing the DTC

P182B, P182C, P18B6, P18BB and P18C0 are Type B DTCs.

Reference Information

Schematic Reference

Automatic Transmission Controls Schematics

Connector End View Reference

- **COMPONENT CONNECTOR END VIEWS - INDEX**
- **INLINE HARNESS CONNECTOR END VIEWS - INDEX**

Description and Operation

- **Electronic Component Description**
- **Transmission Component and System Description**
- **Transmission General Description**

Electrical Information Reference

cardiagn.com

- Circuit Testing
- Connector Repairs
- Testing for Intermittent Conditions and Poor Connections
- Wiring Repairs

DTC Type Reference

Powertrain Diagnostic Trouble Code (DTC) Type Definitions

Scan Tool Reference

Control Module References for scan tool information

Circuit/System Verification

1. Ignition On.
2. Verify the range selector lever cable adjustment is correct. Refer to Range Selector Lever Cable Adjustment .
   - **If the range selector lever cable adjustment is not OK**

     Adjust, repair or replace as necessary.

   - **If the range selector lever cable adjustment is OK**
3. Verify the scan tool the 9 V Reference 1 Circuit Status does not display Malfunction.
   - **If Malfunction is displayed**

     Refer to Circuit/System Testing.

   - **If Malfunction is not displayed**
4. Verify the scan tool the internal mode switch A/B/C/P/S circuit signal voltages are correct for Park, Reverse, Neutral, Drive and Manual Mode position. Refer to Transmission Internal Mode Switch Voltage .
   - **If the internal mode switch voltages are not OK**

     Refer to Circuit/System Testing.

   - **If the internal mode switch voltages are OK**
5. Operate the vehicle within the Conditions for Running the DTC. You may also operate the vehicle within the conditions that you observe from the Freeze Frame/Failure Records data.
6. Verify the DTC does not set.
   - **If the DTC sets**

     Refer to Circuit/System Testing.

   - **If the DTC does not set**
7. All OK.

Circuit/System Testing

1. Ignition Off and all vehicle systems Off. Disconnect the X175 harness connector at the T12 Automatic Transmission Assembly. It may take up to 2 min for all vehicle systems to power down. Ignition On.
2. Test for 8.3-9.3 V between the 9 V reference 1 circuit terminal 31 and ground.
   - **If less than 8.3 V**
   1. Ignition Off, disconnect the harness connector at the K71 Transmission Control Module, ignition On.
   2. Test for infinite resistance between the 9 V reference 1 circuit terminal 31 and ground.
      - If less than infinite resistance, repair the short to ground on the circuit.
      - If infinite resistance

cardiagn.com

3. Test for less than 1 Ω in the 9 V reference 1 circuit end to end.
    - If 1 Ω or greater, repair the open/high resistance in the circuit.
    - If less than 1 Ω, replace the K71 Transmission Control Module.
- **If greater than 9.3 V**

1. Ignition Off.
2. Disconnect the harness connector at the K71 Transmission Control Module, ignition On.
3. Test for less than 1 V between the 9 V reference 1 circuit terminal 31 and ground.
    - If greater than the specified value, repair the short to voltage on the circuit.
    - If less than the specified value, replace the K71 Transmission Control Module.

- **If between 8.3-9.3 V**

3. Ignition Off.
4. Using the **J-35616** terminal test kit, connect a 3 A fused jumper wire from the 9 V reference 1 circuit terminal 31, to the internal mode switch B signal circuit, terminal 28, ignition On.
5. Verify with a scan tool the internal mode switch B signal circuit parameter displays 4.8-5.2 V.
    - **If greater than 5.2 V**

    1. Ignition Off, disconnect the harness connector at the K71 Transmission Control Module, ignition On.
    2. Test for less than 1 V between the internal mode switch B signal circuit, terminal 28 and ground.
        - If greater than the specified value, repair the short to voltage on the circuit.
        - If less than the specified value, replace the K71 Transmission Control Module.

    - **If less than 4.8 V**

    1. Ignition Off, disconnect the harness connector at the K71 Transmission Control Module.
    2. Test for infinite resistance between the internal mode switch B signal circuit terminal 28 and ground.
        - If less than infinite resistance, repair the short to ground on the circuit.
        - If infinite resistance
    3. Test for less than 1 Ω in the internal mode switch B signal circuit end to end.
        - If 1 Ω or greater, repair the open/high resistance in the circuit.
        - If less than 1 Ω, replace the K71 Transmission Control Module.
    4. Test for infinite resistance between the internal mode switch B signal circuit and the internal mode switch A/C/P/S signal circuits, at the X175 harness connector.
        - If less than infinite resistance on any circuit, repair the short between the 2 or more internal mode switch signal circuits.
        - If infinite resistance, replace the K71 Transmission Control Module.

    - **If between 4.8-5.2 V**

6. Perform the Component Testing.

Component Testing

1. Perform the Circuit/System Testing first.
2. Ignition Off.
3. Connect the X175 harness connector.
4. Remove the fluid pan from the T12 Automatic Transmission Assembly.
5. Disconnect the harness connector at the B15 Transmission Internal Mode Switch, ignition On.
6. Test for 8.3-9.4 V between the 9 V reference 1 circuit terminal 10 and ground.
    - **If less than 8.3 V**

    1. Ignition Off.
    2. Disconnect the X176 connector, ignition On.
    3. Test for 8.3-9.4 V between terminal 19 and ground.
        - If less than 8.3 V

cardiagn.com

Replace the automatic transmission wiring harness, electrical connector passage sleeve.

- If between 8.3-9.4 V

  Replace the transmission control wiring harness.

- **If greater than 9.3 V**

1. Ignition Off.
2. Disconnect the X176 connector, ignition On.
3. Test for 8.3-9.4 V between terminal 19 and ground.
   - If greater than 9.4 V

     Replace the automatic transmission wiring harness, electrical connector passage sleeve.

   - If between 8.3-9.4 V

     Replace the transmission control wiring harness.

- **If between 8.3-9.4 V**

7. Connect a 3 A fused jumper wire between the 9 V reference 1 circuit terminal 10 and the signal B circuit terminal 8.
8. Verify the scan tool signal B circuit parameter displays 4.8-5.2 V.
   - **If less than 4.8 V**

   1. Ignition Off.
   2. Disconnect the X176 connector.
   3. Connect a 3 A fused jumper wire between the 9 V reference 1 circuit terminal 19 and the signal B circuit terminal 3, ignition On.
   4. Verify the scan tool signal B parameter displays 4.8-5.2 V.
      - If less than 4.8 V

        Replace the automatic transmission wiring harness, electrical connector passage sleeve.

      - If between 4.8-5.2 V

        Replace the transmission control wiring harness.

   - **If greater than 5.2 V**

   1. Ignition Off.
   2. Disconnect the X176 connector.
   3. Connect a 3 A fused jumper wire between the 9 V reference 1 circuit terminal 19 and the signal B circuit terminal 3, ignition On.
   4. Verify the scan tool signal B parameter displays 4.8-5.2 V.
      - If greater than 5.2 V

        Replace the automatic transmission wiring harness, electrical connector passage sleeve.

      - If between 4.8-5.2 V

        Replace the transmission control wiring harness.

   - **If between 4.8-5.2 V**

9. Replace the B15 Transmission Internal Mode Switch.

Repair Instructions

cardiagn.com

Perform the **Diagnostic Repair Verification** after completing the repair.

- **Automatic Transmission Fluid, Fluid Pan and/or Filter Replacement (Rear Wheel Drive)**
  Automatic Transmission Fluid, Fluid Pan and/or Filter Replacement (All Wheel Drive)
- **Automatic Transmission Wiring Harness Replacement (Electrical Connector Passage Sleeve)**
- **Manual Shift Shaft Position Switch Replacement**
- **Transmission Control Wiring Harness Replacement (M5N)**
- Perform the **Transmission Service Fast Learn Procedure** following all transmission related repairs.
- Refer to **K71 Transmission Control Module: Programming and Setup**

DTC P182E OR P1915: INTERNAL MODE SWITCH

Diagnostic Instructions

- Perform the **Diagnostic System Check - Vehicle** prior to using this diagnostic procedure.
- Review **Strategy Based Diagnosis** for an overview of the diagnostic approach.
- **Diagnostic Procedure Instructions** provides an overview of each diagnostic category.

DTC Descriptors

DTC P182E

Internal Mode Switch Indicates Invalid Range

DTC P1915

Internal Mode Switch Does Not Indicate Park/Neutral During Start

Diagnostic Fault Information

Circuits	Short to Ground	Open/High Resistance	Short to Voltage	Signal Performance
Signal A	P182A	P182A	P1838	P182E
Signal B	P182B	P182B	P182C	P182E
Signal C	P1839	P1839	P182F	P182E
Signal P	P1840	P1840	P1841	P182E
Signal S	P1824	P1824	P182D	P182E
Park/Neutral Signal	P0851	P0851	-	P1915
Park/Neutral Ground	-	-	-	P1915

Typical Scan Tool Data

Internal Mode Switch A/B/C/P/S Circuits

Circuits	Short to Ground	Open	Short to Voltage
Operating Conditions: Ignition On **Parameter Normal Range:** Internal Mode Switch A/B/C/PS Signal Circuits - High or Low			
Signal A	Low	Low	High
Signal B	Low	Low	High
Signal C	Low	Low	High
Signal P	Low	Low	High
Signal S	Low	Low	High

Park/Neutral Position Switch

Circuits	Short to Ground	Open	Short to Voltage
Operating Conditions: Ignition On **Parameter Normal Range:** Park/Neutral or In Gear			
Signal	Park/Neutral	In Gear	-

Circuits	Short to Ground	Open	Short to Voltage
Ground	-	In Gear	-

Circuit/System Description

The park/neutral position switch and the 5 Hall Effect switches are internal to and part of the internal mode switch assembly.

Park/Neutral Circuit

The park/neutral switch indicates to the engine control module (ECM) if the vehicle is in park/neutral or in a drive gear range. With the ignition ON, the ECM provides 12 V on the park/neutral signal to the park/neutral position switch. A separate ground wire from the park/neutral position switch to the Transmission Control Module (TCM) completes the path to ground. When the gear shift lever in park or neutral, the switch closes and drops the voltage on the signal circuit to 0 V. In this state the engine will start and run. In reverse or drive range the park/neutral switch opens, 12 V is then present on the signal circuit which will inhibit engine starting.

Hall Effect Switch Circuits

The internal mode switch indicates to the transmission control module (TCM) which gear position the vehicle operator has selected. The internal mode switch consists of 5 separate Hall Effect switches. Each Hall Effect switch is supplied a 9 V reference circuit and a signal circuit from the TCM. Each signal circuit for each gear selector position will have either a voltage reading of 0.70-0.96 V indicting On or 1.68-2.38 V indicating Off. The voltage values on each circuit will change and are dependent on the position of the gear selector. The state of each Hall Effect switch circuit is displayed on the scan tool.

Conditions for Running the DTC

P182E

- Ignition is On.
- Ignition voltage is between 9-32 V.

P1915

P0722 or P0723 are not set.

Conditions for Setting the DTC

P182E

The internal mode switch does not indicate a valid Park, Reverse, Neutral or Drive range gear position.

P1915

The internal mode switch Park/Neutral circuit does indicate Park or Neutral during engine start.

Action Taken When the DTC Sets

P182E or P1915

The TCM will substitute values for the Hall Effect and Park/Neutral switch circuits.

Conditions for Clearing the DTC

P182E and P1915 are Type B DTCs.

Reference Information

Schematic Reference

Automatic Transmission Controls Schematics

Connector End View Reference

cardiagn.com

- COMPONENT CONNECTOR END VIEWS - INDEX
- INLINE HARNESS CONNECTOR END VIEWS - INDEX

Description and Operation

Electronic Component Description

Electrical Information Reference

- Circuit Testing
- Connector Repairs
- Testing for Intermittent Conditions and Poor Connections
- Wiring Repairs

DTC Type Reference

Powertrain Diagnostic Trouble Code (DTC) Type Definitions

Scan Tool Reference

Control Module References for scan tool information

Circuit/System Verification

1. Verify the range selector lever cable adjustment is correct. Refer to Range Selector Lever Cable Adjustment .
   - **If the range selector lever cable adjustment is not OK**

     Adjust, repair or replace as necessary.

   - **If the range selector lever cable adjustment is OK**
2. Ignition On.
3. Verify the scan tool Engine Control Module Park/Neutral Position Switch parameter displays Park/Neutral when in Park or Neutral and In Gear when in Reverse or Drive range.
   - **If Park/Neutral or In Gear is not displayed correctly**

     Refer to Circuit/System Testing.

   - **If Park/Neutral or In Gear is displayed correctly**
4. Verify the scan tool the 9 V Reference 1 and 9 V Reference 2 Circuit Status does not display Malfunction.
   - **If Malfunction is displayed**

     Refer to Circuit/System Testing.

   - **If Malfunction is not displayed**
5. Verify the scan tool the internal mode switch A/B/C/P/S circuit voltages are correct for Park, Reverse, Neutral, Drive and Manual Mode position. Refer to Transmission Internal Mode Switch Voltage .
   - **If the circuit voltages are not OK**

     Refer to Circuit/System Testing.

   - **If the circuit voltages are OK**
6. Operate the vehicle within the Conditions for Running the DTC. You may also operate the vehicle within the conditions that you observe from the Freeze Frame/Failure Records data.
7. Verify the DTC does not set.
   - **If the DTC sets**

     Refer to Circuit/System Testing.

carmagn.com

- **If the DTC does not set**

8. All OK.

Circuit/System Testing

1. Ignition Off and all vehicle systems Off, disconnect the X175 harness connector at the T12 Automatic Transmission Assembly.
2. Test for less than 5 Ω between the ground circuit terminal 30 and ground.
   - **If 5 Ω or greater**
   1. Ignition Off, disconnect the harness connector at the K71 Transmission Control Module.
   2. Test for less than 2 Ω in the ground circuit end to end.
      - If 2 Ω or greater, repair the open/high resistance in the circuit.
      - If less than 2 Ω, replace the K71 Transmission Control Module.
   - **If less than 5 Ω**
3. Ignition On.
4. Test for 8.3-9.3 V between the 9 V Reference 1 circuit terminal 31 and the 9 V Reference circuit 2 terminal 29 and ground.
   - **If either circuit is greater than 9.3 V**
   1. Ignition Off, disconnect the harness connector at the K71 Transmission Control Module. Ignition On.
   2. Test for less than 1 V between the affected 9 V Reference circuit and ground.
      - If greater than 1 V, repair the short to voltage on the circuit.
      - If less than 1 V, replace the K71 Transmission Control Module.
   - **If either circuit is less than 8.3 V**
   1. Ignition Off, disconnect the harness connector at the K71 Transmission Control Module. Ignition On.
   2. Test for infinite resistance between the affected 9 V Reference circuit and ground.
      - If less than infinite resistance, repair the short to ground on the circuit.
      - If infinite resistance
   3. Test for less than 2 Ω in the affected 9 V Reference circuit end to end.
      - If greater than 2 Ω, repair the open/high resistance in the circuit.
      - If less than 2 Ω, replace the K71 Transmission Control Module.
   - **If both circuits are between 8.3-9.3 V**
5. Verify the scan tool Internal Mode Switch A/B/C/P/S parameters display High.
   - **If not High**
   1. Ignition Off, disconnected the harness connector at the K71 Transmission Control Module.
   2. Test for infinite resistance between the affected signal circuit and ground.
      - If less than infinite resistance, repair the short to ground on the circuit.
      - If infinite resistance replace the K71 Transmission Control Module.
   - **If High**
6. Install a 3 A fused jumper wire between the affected circuit and ground.
7. Verify the scan tool affected circuit parameter displays Low.
   - **If not Low**
   1. Ignition Off, remove the jumper wire, disconnect the harness connector at the K71 Transmission Control Module.
   2. Test for less than 1 V between the affected signal circuit and ground.
      - If 1 V or greater, repair the short to voltage on the circuit.
      - If less than 1 V
   3. Test for less than 2 Ω in the signal circuit end to end.
      - If 2 Ω or greater, repair the open/high resistance in the circuit.
      - If less than 2 Ω, replace the K71 Transmission Control Module.

cardiagn.com

- **If Low**

8. Test for 11-13 V at the signal circuit terminal 35 and ground.
    - **If not between 11-13 V**
    1. Ignition Off, disconnect the X1 harness connector at the K20 Engine Control Module.
    2. Test for infinite resistance between the harness connector X175 terminal 35 and ground.
        - If less than infinite resistance, repair the short to ground in the circuit.
        - If infinite resistance
    3. Test for less than 2 Ω in the signal circuit end to end.
        - If 2 Ω or greater, repair the open/high resistance in the circuit.
        - If less than 2 Ω, replace the K20 Engine Control Module.
    - **If between 11-13 V**
9. Connect a 3 A fused jumper wire between the signal circuit terminal 35 and the ground circuit terminal 30.
10. Verify the scan tool Park/Neutral Position Switch parameter displays Park/Neutral.
    - **If Park/Neutral is not displayed**

      Replace the K20 Engine Control Module.

    - **If Park/Neutral is displayed**
11. Perform the Component Testing.

Component Testing

1. Perform the Circuit/System Testing first.
2. Ignition Off, remove the transmission fluid pan from the T12 Automatic Transmission Assembly.
3. Disconnect the X175 harness connector at the T12 Automatic Transmission Assembly.
4. Disconnect the harness connector at the B15 Transmission Internal Mode Switch.
5. Connect a jumper wire between the 9 V Reference 1 circuit terminal 10 and each signal circuit listed below one at a time:
    - Signal B - Terminal 8
    - Signal P - Terminal 9
    - Signal S - Terminal 7
6. Test for infinite resistance between X175 terminal 31 and ground, for each signal circuit.
    - **If less than infinite resistance**
    1. Remove the jumper wire.
    2. Connect a jumper wire the 9 V Reference 1 circuit terminal 19 and each signal circuit listed below one at a time:
        - Signal B - Terminal 8
        - Signal P - Terminal 17
        - Signal S - Terminal 6
    3. Test for infinite resistance between X175 terminal 31 and ground.
        - If less than infinite resistance

          Replace the automatic transmission wiring harness, electrical connector passage sleeve.

        - If infinite resistance

          Replace the transmission control wiring harness.

    - **If infinite resistance**
7. Connect a jumper wire between the 9 V Reference 1 circuit terminal 10 and each signal circuit listed below one at a time:
    - Signal B - Terminal 8

cardiagn.com

- Signal P - Terminal 9
- Signal S - Terminal 7

8. Test for less than 2 Ω between X175 and terminal 31 and each signal circuit listed below:
    - Signal B - Terminal 28
    - Signal P - Terminal 23
    - Signal S - Terminal 34
    - **If greater than 2 Ω**
    1. Remove the jumper wire.
    2. Connect a jumper wire between the 9 V Reference 1 circuit, X176 terminal 19 and each signal circuit listed below one at a time:
        - Signal B - Terminal 3
        - Signal P - Terminal 17
        - Signal S - Terminal 6
    3. Test for less than 2 Ω between the 9 V Reference 1 circuit, X175 and each signal circuit listed below one at a time.
        - Signal B - Terminal 28
        - Signal P - Terminal 23
        - Signal S - Terminal 34
        - If greater than 2 Ω

          Replace the automatic transmission wiring harness, electrical connector passage sleeve.

        - If less than 2 Ω

          Replace the transmission control wiring harness.

    - **If less than 2 Ω**
9. Connect a jumper wire between the 9 V Reference 2 circuit terminal 4 and each signal circuit listed below one at a time:
    - Signal A - Terminal 5
    - Signal C - Terminal 6
10. Test for infinite resistance between X175 terminal 29 and ground, for each signal circuit.
    - **If less than infinite resistance**
    1. Remove the jumper wire.
    2. Connect a jumper wire from the 9 V Reference 2 circuit terminal 5 and each signal circuit listed below one at a time:
        - Signal A - Terminal 2
        - Signal C - Terminal 11
    3. Test for infinite resistance between X175 terminal 29 and ground.
        - If less than infinite resistance

          Replace the automatic transmission wiring harness, electrical connector passage sleeve.

        - If infinite resistance

          Replace the transmission control wiring harness.

    - **If infinite resistance**
11. Connect a jumper wire between the 9 V Reference 2 circuit, X176 terminal 5 and each signal circuit listed below one at a time:
    - Signal A - Terminal 2
    - Signal C - Terminal 11

cardiagn.com

12. Test for less than 2 Ω between X175 and terminal 29 and each signal circuit listed below:
    - Signal A - Terminal 22
    - Signal C - Terminal 21
    - **If greater than 2 Ω**
    1. Remove the jumper wire.
    2. Connect a jumper wire between the 9 V Reference 2 circuit, X176 terminal 5 and each signal circuit listed below one at a time:
        - Signal A - Terminal 2
        - Signal C - Terminal 11
    3. Test for less than 2 Ω between the 9 V Reference 2 circuit, X175 terminal 29 and each signal circuit listed below one at a time:
        - Signal A - Terminal 22
        - Signal C - Terminal 21
        - If greater than 2 Ω

          Replace the automatic transmission wiring harness, electrical connector passage sleeve.

        - If less than 2 Ω

          Replace the transmission control wiring harness.

    - **If less than 2 Ω**
13. Connect a jumper wire between terminal 1 and terminal 2.
14. Test for infinite resistance between X176 terminal 12 and ground.
    - **If less than infinite resistance**

      Replace the transmission control wiring harness.

    - If infinite
    1. Test for less than 2 Ω between terminal 12 and terminal 20.
    2. If 2 Ω or greater, replace the transmission control wiring harness.
    - **If infinite resistance**
15. Disconnect the jumper wire.
16. Connect a jumper wire between X176 terminal 12 and terminal 20.
17. Test for infinite resistance between harness connector X175 terminal 35 and ground.
    - **If less than infinite resistance**

      Replace the automatic transmission wiring harness, electrical connector passage sleeve.

    - If infinite
    1. Test for less than 2 Ω between terminal 30 and terminal 35.
    2. If 2 Ω or greater, replace the automatic transmission wiring harness, electrical connector passage sleeve.
    - **If infinite resistance**
18. Replace the B15 Transmission Internal Mode Switch.

Repair Instructions

Perform the **Diagnostic Repair Verification** after completing the repair.

- **Automatic Transmission Wiring Harness Replacement (Electrical Connector Passage Sleeve)**
- **Manual Shift Detent Lever with Shaft Position Switch Assembly and Park Pawl Actuator Removal**
- **Solenoid Valve Characterization Reprogramming**

cardiagn.com

- Transmission Control Wiring Harness Replacement (M5N)
- Transmission Fluid Pan and Filter Assembly Removal
- Perform the Transmission Service Fast Learn Procedure following all transmission related repairs.
- Refer to Control Module References for control solenoid valve assembly replacement, programming and setup.

DTC P182F, P1839, P18B7, P18BC OR P18C1: INTERNAL MODE SWITCH C CIRCUIT

Diagnostic Instructions

- Perform the Diagnostic System Check - Vehicle prior to using this diagnostic procedure.
- Review Strategy Based Diagnosis for an overview of the diagnostic approach.
- Diagnostic Procedure Instructions provides an overview of each diagnostic category.

DTC Descriptors

DTC P182F

Internal Mode Switch C Circuit High Voltage

DTC P1839

Internal Mode Switch C Circuit Low Voltage

DTC P18B7

Internal Mode Switch C Circuit Shorted

DTC P18BC

Internal Mode Switch C Circuit Stuck Off - Invalid Voltage Range

DTC P18C1

Internal Mode Switch C Circuit Stuck On - Invalid Voltage Range

Diagnostic Fault Information

Circuits	Short to Ground	Open/High Resistance	Short to Voltage	Signal Performance
9 V Reference	P1839	P1839	-	-
Signal	P1839	P1839	P182F	P18BC/P18C1

Typical Scan Tool Data

Internal Mode Switch C

Circuit	Short to Ground	Open	Short to Voltage
Operating Conditions: Ignition On **Parameter Normal Range:** 9 V Reference Circuit = OK or Not Run. Internal Mode Switch C Signal Circuit 0.70-0.96 V or 1.68-2.38 V.			
9 V Reference	Malfunction	Malfunction	Malfunction
Internal Mode Switch C Signal	0 V	0 V	4.8-5.2 V

Circuit/System Description

The internal mode switch indicates to the transmission control module (TCM) which gear position the vehicle operator has selected. The internal consists of 5 separate hall effect switches. Each hall effect switch is supplied a 9 V reference circuit and a signal circuit from the TCM. Each signal circuit for each gear selector position will have either a voltage reading of 0.70-0.96 V indicting On or 1.68-2.38 V indicating Off. The voltage values on each internal mode switch circuit will change and are dependent

carldiagn.com

on the position of the gear selector. The state of each internal mode switch A/B/C/P/S signal circuit is displayed on the scan tool.

Conditions for Running the DTC

Ignition voltage is between 9-32 V

Conditions for Setting the DTC

P182F

TCM has detected the internal mode switch C signal circuit voltage is greater than 2.38 V, for 1.75 s.

P1839

TCM has detected the internal mode switch C signal circuit voltage is less than 0.7 V, for 1.75 s.

P18B7

TCM has detected the internal mode switch C signal circuit voltage is between 0.966-1.68 V, for 1.75 s.

P18BC

TCM has detected the internal mode switch C signal circuit has an invalid voltage range of 1.68 - 2.38 V, for 2.7 s.

P18C1

TCM has detected the internal mode switch C signal circuit has an invalid voltage range of 0.70 - 0.96 V, for 2.7 s.

Action Taken When the DTC Sets

- P182F, P1839, P18B7, P18BC and P18C1 are Type B DTCs.
- TCM will substitute voltage values for the internal mode switch C signal circuit.

Conditions for Clearing the DTC

P182F, P1839, P18B7, P18BC and P18C1 are Type B DTCs.

Reference Information

Schematic Reference

Automatic Transmission Controls Schematics

Connector End View Reference

- **COMPONENT CONNECTOR END VIEWS - INDEX**
- **INLINE HARNESS CONNECTOR END VIEWS - INDEX**

Description and Operation

- **Electronic Component Description**
- **Transmission Component and System Description**
- **Transmission General Description**

Electrical Information Reference

- **Circuit Testing**
- **Connector Repairs**
- **Testing for Intermittent Conditions and Poor Connections**
- **Wiring Repairs**

cardiagn.com

DTC Type Reference

Powertrain Diagnostic Trouble Code (DTC) Type Definitions

Scan Tool Reference

Control Module References for scan tool information

Circuit/System Verification

1. Ignition On.
2. Verify the range selector lever cable adjustment is correct. Refer to **Range Selector Lever Cable Adjustment** .
   - **If the range selector lever cable adjustment is not OK**

     Adjust, repair or replace as necessary.
   - **If the range selector lever cable adjustment is OK**
3. Verify the scan tool the 9 V Reference 2 Circuit Status does not display Malfunction.
   - **If Malfunction is displayed**

     Refer to Circuit/System Testing.
   - **If Malfunction is not displayed**
4. Verify the scan tool the internal mode switch A/B/C/P/S signal circuit voltages are correct for Park, Reverse, Neutral, Drive and Manual Mode position. Refer to **Transmission Internal Mode Switch Voltage** .
   - **If the internal mode switch voltages are not OK**

     Refer to Circuit/System Testing.
   - **If the internal mode switch voltages are OK**
5. Operate the vehicle within the Conditions for Running the DTC. You may also operate the vehicle within the conditions that you observe from the Freeze Frame/Failure Records data.
6. Verify the DTC does not set.
   - **If the DTC sets**

     Refer to Circuit/System Testing.
   - **If the DTC does not set**
7. All OK.

Circuit/System Testing

1. Ignition Off and all vehicle systems Off. Disconnect the X175 harness connector at the T12 Automatic Transmission Assembly. It may take up to 2 min for all vehicle systems to power down, ignition On.
2. Test for 8.3-9.3 V between the 9 V reference 2 circuit terminal 29 and ground.
   - **If less than 8.3 V**
   1. Ignition Off, disconnect the harness connector at the K71 Transmission Control Module, ignition On.
   2. Test for infinite resistance between the 9 V reference 2 circuit terminal 29 and ground.
      - If less than infinite resistance, repair the short to ground on the circuit.
      - If infinite resistance
   3. Test for less than 1 Ω in the 9 V reference 2 circuit end to end.
      - If 1 Ω or greater, repair the open/high resistance in the circuit.
      - If less than 1 Ω, replace the K71 Transmission Control Module.
   - **If greater than 9.3 V**

cardiagn.com

1. Ignition Off.
2. Disconnect the harness connector at the K71 Transmission Control Module, ignition On.
3. Test for less than 1 V between the 9 V reference 2 circuit terminal 29 and ground.
    - If greater than the specified value, repair the short to voltage on the circuit.
    - If less than the specified value, replace the K71 Transmission Control Module.

- **If between 8.3-9.3 V**

3. Ignition Off.
4. Using the **J-35616** terminal test kit, connect a 3 A fused jumper wire from the 9 V reference 2 circuit terminal 29, to the internal mode switch C signal circuit, terminal 21 at the X175 transmission connector, ignition On.
5. Verify with a scan tool the internal mode switch C signal circuit parameter displays 4.8-5.2 V.

- **If greater than 5.2 V**

1. Ignition Off, disconnect the harness connector at the K71 Transmission Control Module, ignition On.
2. Test for less than 1 V between the internal mode switch C signal circuit, terminal 21 and ground.
    - If greater than the specified value, repair the short to voltage on the circuit.
    - If less than the specified value, replace the K71 Transmission Control Module.

- **If less than 4.8 V**

1. Ignition Off, disconnect the harness connector at the K71 Transmission Control Module.
2. Test for infinite resistance between the internal mode switch C signal circuit terminal 21 and ground.
    - If less than infinite resistance, repair the short to ground on the circuit.
    - If infinite resistance
3. Test for less than 1 Ω in the internal mode switch C signal circuit end to end.
    - If 1 Ω or greater, repair the open/high resistance in the circuit.
    - If less than 1 Ω, replace the K71 Transmission Control Module.
4. Test for infinite resistance between the internal mode switch C signal circuit and the internal mode switch A/B/P/S signal circuits, at the X175 harness connector.
    - If less than infinite resistance on any circuit, repair the short between the 2 or more internal mode switch signal circuits.
    - If infinite resistance, replace the K71 Transmission Control Module.

- **If between 4.8-5.2 V**

6. Perform the Component Testing.

Component Testing

1. Perform the Circuit/System Testing first.
2. Ignition Off.
3. Connect the X175 harness connector.
4. Remove the fluid pan from the T12 Automatic Transmission Assembly.
5. Disconnect the harness connector at the B15 Transmission Internal Mode Switch, ignition On.
6. Test for 8.3-9.4 V between the 9 V reference 2 circuit terminal 4 and ground.

- **If less than 8.3 V**

1. Ignition Off.
2. Disconnect the X176 connector, ignition On.
3. Test for 8.3-9.4 V between terminal 5 and ground.
    - If less than 8.3 V

      Replace the automatic transmission wiring harness, electrical connector passage sleeve.

- If between 8.3-9.4 V

  Replace the transmission control wiring harness.

- **If greater than 9.3 V**

1. Ignition Off.
2. Disconnect the X176 connector, ignition On.
3. Test for 8.3-9.4 V between terminal 5 and ground.
   - If greater than 9.4 V

     Replace the automatic transmission wiring harness, electrical connector passage sleeve.

   - If between 8.3-9.4 V

     Replace the transmission control wiring harness.

- **If between 8.3-9.4 V**

7. Connect a 3 A fused jumper wire between the 9 V reference 2 circuit terminal 4 and the signal C circuit terminal 6.
8. Verify the scan tool signal C circuit parameter displays 4.8-5.2 V.
   - **If less than 4.8 V**

   1. Ignition Off.
   2. Disconnect the X176 connector.
   3. Connect a 3 A fused jumper wire between the 9 V reference 2 circuit terminal 5 and the signal C circuit terminal 11, ignition On.
   4. Verify the scan tool signal C parameter displays 4.8-5.2 V.
      - If less than 4.8 V

        Replace the automatic transmission wiring harness, electrical connector passage sleeve.

      - If between 4.8-5.2 V

        Replace the transmission control wiring harness.

   - **If greater than 5.2 V**

   1. Ignition Off.
   2. Disconnect the X176 connector.
   3. Connect a 3 A fused jumper wire between the 9 V reference 2 circuit terminal 5 and the signal C circuit terminal 11, ignition On.
   4. Verify the scan tool signal C parameter displays 4.8-5.2 V.
      - If greater than 5.2 V

        Replace the automatic transmission wiring harness, electrical connector passage sleeve.

      - If between 4.8-5.2 V

        Replace the transmission control wiring harness.

   - **If between 4.8-5.2 V**

9. Replace the B15 Transmission Internal Mode Switch.

Repair Instructions

Perform the **Diagnostic Repair Verification** after completing the repair.

cardiagn.com

- Automatic Transmission Fluid, Fluid Pan and/or Filter Replacement (Rear Wheel Drive)
  Automatic Transmission Fluid, Fluid Pan and/or Filter Replacement (All Wheel Drive)
- Automatic Transmission Wiring Harness Replacement (Electrical Connector Passage Sleeve)
- Manual Shift Shaft Position Switch Replacement
- Transmission Control Wiring Harness Replacement (M5N)
- Perform the Transmission Service Fast Learn Procedure following all transmission related repairs.
- Refer to K71 Transmission Control Module: Programming and Setup

DTC P1840, P1841, P18B9, P18BE OR P18C3: INTERNAL MODE SWITCH S CIRCUIT

Diagnostic Instructions

- Perform the Diagnostic System Check - Vehicle prior to using this diagnostic procedure.
- Review Strategy Based Diagnosis for an overview of the diagnostic approach.
- Diagnostic Procedure Instructions provides an overview of each diagnostic category.

DTC Descriptors

DTC P1840

Internal Mode Switch S Circuit Low Voltage

DTC P1841

Internal Mode Switch S Circuit High Voltage

DTC P18B9

Internal Mode Switch S Circuit Shorted

DTC P18BE

Internal Mode Switch S Circuit Stuck Off - Invalid Voltage Range

DTC P18C3

Internal Mode Switch S Circuit Stuck On - Invalid Voltage Range

Diagnostic Fault Information

Circuits	Short to Ground	Open/High Resistance	Short to Voltage	Signal Performance
9 V Reference	P1840	P1840	-	-
Signal	P1840	P1840	P1841	P18BA/P18BF

Typical Scan Tool Data

Internal Mode Switch S

Circuits	Short to Ground	Open	Short to Voltage
Operating Conditions: Ignition On **Parameter Normal Range:** 9 V Reference Circuit = OK or Not Run. Internal Mode Switch S Signal Circuit = 0.70-0.96 V or 1.68-2.38 V.			
9 V Reference	Malfunction	Malfunction	Malfunction
Internal Mode Switch S	0 V	0 V	4.8-5.2 V

Circuit/System Description

The internal mode switch indicates to the transmission control module (TCM) which gear position the vehicle operator has selected. The internal mode switch consists of 5 separate hall effect switches. Each

cardiagn.com

hall effect switch is supplied a 9 V reference circuit and a signal circuit from the TCM. Each signal circuit for each gear selector position will have either a voltage reading of 0.70-0.96 V indicting On or 1.68-2.38 V indicating Off. The voltage values on each internal mode switch circuit will change and are dependent on the position of the gear selector. The state of each internal mode switch A/B/C/P/S signal circuit is displayed on the scan tool.

Conditions for Running the DTC

Ignition voltage is between 9-32 V

Conditions for Setting the DTC

P1840

TCM has detected the internal mode switch S signal circuit voltage is less than 0.7 V, for 1.75 s.

P1841

TCM has detected the internal mode switch S signal circuit voltage is greater than 2.38 V, for 1.75 s.

P18B9

TCM has detected the internal mode switch S signal circuit voltage is between 0.966-1.68 V, for 1.75 s.

P18BE

TCM has detected the internal mode switch S signal circuit has an invalid voltage range of 1.68 - 2.38 V, for 2.7 s.

P18C3

TCM has detected has an internal mode switch S signal circuit has an invalid voltage range of 0.70 - 0.96 V, for 2.7 s.

Action Taken When the DTC Sets

- P1840, P1841, P18B9, P18BE and P18BE are Type B DTCs.
- TCM will substitute voltage values for the internal mode switch S signal circuit.

Conditions for Clearing the DTC

P1840, P1841, P18B9, P18BE and P18BE are Type B DTCs.

Reference Information

Schematic Reference

Automatic Transmission Controls Schematics

Connector End View Reference

- **COMPONENT CONNECTOR END VIEWS - INDEX**
- **INLINE HARNESS CONNECTOR END VIEWS - INDEX**

Description and Operation

- **Electronic Component Description**
- **Transmission Component and System Description**
- **Transmission General Description**

Electrical Information Reference

- **Circuit Testing**
- **Connector Repairs**

cardiagn.com

- Testing for Intermittent Conditions and Poor Connections
- Wiring Repairs

DTC Type Reference

Powertrain Diagnostic Trouble Code (DTC) Type Definitions

Scan Tool Reference

Control Module References for scan tool information

Circuit/System Verification

1. Ignition On.
2. Verify the range selector lever cable adjustment is correct. Refer to Range Selector Lever Cable Adjustment .
   - **If the range selector lever cable adjustment is not OK**

     Adjust, repair or replace as necessary.

   - **If the range selector lever cable adjustment is OK**
3. Verify the scan tool the 9 V Reference 1 Circuit Status does not display Malfunction.
   - **If Malfunction is displayed**

     Refer to Circuit/System Testing.

   - **If Malfunction is not displayed**
4. Verify the scan tool the internal mode switch A/B/C/P/S signal circuit voltages are correct for Park, Reverse, Neutral, Drive and Manual Mode position. Refer to Transmission Internal Mode Switch Voltage .
   - **If the internal mode switch voltages are not OK**

     Refer to Circuit/System Testing.

   - **If the internal mode switch voltages are OK**
5. Operate the vehicle within the Conditions for Running the DTC. You may also operate the vehicle within the conditions that you observe from the Freeze Frame/Failure Records data.
6. Verify the DTC does not set.
   - **If the DTC sets**

     Refer to Circuit/System Testing.

   - **If the DTC does not set**
7. All OK.

Circuit/System Testing

1. Ignition Off and all vehicle systems Off. Disconnect the X175 harness connector at the T12 Automatic Transmission Assembly. It may take up to 2 min for all vehicle systems to power down, ignition On.
2. Test for 8.3-9.3 V between the 9 V reference 1 circuit terminal 31 and ground.
   - **If less than 8.3 V**
   1. Ignition Off, disconnect the harness connector at the K71 Transmission Control Module, ignition On.
   2. Test for infinite resistance between the 9 V reference 1 circuit terminal 31 and ground.
      - If less than infinite resistance, repair the short to ground on the circuit.
      - If infinite resistance
   3. Test for less than 1 Ω in the 9 V reference 1 circuit end to end.
      - If 1 Ω or greater, repair the open/high resistance in the circuit.

cardiagn.com

- If less than 1 Ω, replace the K71 Transmission Control Module.

- **If greater than 9.3 V**

1. Ignition Off.
2. Disconnect the harness connector at the K71 Transmission Control Module, ignition On.
3. Test for less than 1 V between the 9 V reference 1 circuit terminal 31 and ground.
    - If greater than the specified value, repair the short to voltage on the circuit.
    - If less than the specified value, replace the K71 Transmission Control Module.

- **If between 8.3-9.3 V**

3. Ignition Off.
4. Using the **J-35616** terminal test kit, connect a 3 A fused jumper wire from the 9 V reference 1 circuit terminal 31, to the internal mode switch S signal circuit, terminal 34 at the X175 transmission connector, ignition On.
5. Verify with a scan tool the internal mode switch S signal circuit parameter displays 4.8-5.2 V.
    - **If greater than 5.2 V**

    1. Ignition Off, disconnect the harness connector at the K71 Transmission Control Module, ignition On.
    2. Test for less than 1 V between the internal mode switch S signal circuit, terminal 34 and ground.
        - If greater than the specified value, repair the short to voltage on the circuit.
        - If less than the specified value, replace the K71 Transmission Control Module.

    - **If less than 4.8 V**

    1. Ignition Off, disconnect the harness connector at the K71 Transmission Control Module.
    2. Test for infinite resistance between the internal mode switch S signal circuit terminal 34 and ground.
        - If less than infinite resistance, repair the short to ground on the circuit.
        - If infinite resistance
    3. Test for less than 1 Ω in the internal mode switch S signal circuit end to end.
        - If 1 Ω or greater, repair the open/high resistance in the circuit.
        - If less than 1 Ω, replace the K71 Transmission Control Module.
    4. Test for infinite resistance between the internal mode switch S signal circuit and the internal mode switch A/B/C/P signal circuits, at the X175 harness connector.
        - If less than infinite resistance on any circuit, repair the short between the 2 or more internal mode switch signal circuits.
        - If infinite resistance, replace the K71 Transmission Control Module.

    - **If between 4.8-5.2 V**

6. Perform the Component Testing.

Component Testing

1. Perform the Circuit/System Testing first.
2. Ignition Off.
3. Connect the X175 harness connector.
4. Remove the fluid pan from the T12 Automatic Transmission Assembly.
5. Disconnect the harness connector at the B15 Transmission Internal Mode Switch, ignition On.
6. Test for 8.3-9.4 V between the 9 V reference 1 circuit terminal 10 and ground.
    - **If less than 8.3 V**

    1. Ignition Off.
    2. Disconnect the X176 connector, ignition On.
    3. Test for 8.3-9.4 V between terminal 19 and ground.
        - If less than 8.3 V

carlogic.com

Replace the automatic transmission wiring harness, electrical connector passage sleeve.

- If between 8.3-9.4 V

  Replace the transmission control wiring harness.

- **If greater than 9.3 V**

1. Ignition Off.
2. Disconnect the X176 connector, ignition On.
3. Test for 8.3-9.4 V between terminal 19 and ground.
   - If greater than 9.4 V

     Replace the automatic transmission wiring harness, electrical connector passage sleeve.

   - If between 8.3-9.4 V

     Replace the transmission control wiring harness.

- **If between 8.3-9.4 V**

7. Connect a 3 A fused jumper wire between the 9 V reference 1 circuit terminal 10 and the signal S circuit terminal 7.
8. Verify the scan tool signal S circuit parameter displays 4.8-5.2 V.
   - **If less than 4.8 V**

   1. Ignition Off.
   2. Disconnect the X176 connector.
   3. Connect a 3 A fused jumper wire between the 9 V reference 1 circuit terminal 19 and the signal S circuit terminal 6, ignition On.
   4. Verify the scan tool signal S parameter displays 4.8-5.2 V.
      - If less than 4.8 V

        Replace the automatic transmission wiring harness, electrical connector passage sleeve.

      - If between 4.8-5.2 V

        Replace the transmission control wiring harness.

   - **If greater than 5.2 V**

   1. Ignition Off.
   2. Disconnect the X176 connector.
   3. Connect a 3 A fused jumper wire between the 9 V reference 1 circuit terminal 19 and the signal S circuit terminal 6, ignition On.
   4. Verify the scan tool signal S parameter displays 4.8-5.2 V.
      - If greater than 5.2 V

        Replace the automatic transmission wiring harness, electrical connector passage sleeve.

      - If between 4.8-5.2 V

        Replace the transmission control wiring harness.

   - **If between 4.8-5.2 V**

9. Replace the B15 Transmission Internal Mode Switch.

Repair Instructions

cardiagn.com

Perform the **Diagnostic Repair Verification** after completing the repair.

- **Automatic Transmission Fluid, Fluid Pan and/or Filter Replacement (Rear Wheel Drive)**
  Automatic Transmission Fluid, Fluid Pan and/or Filter Replacement (All Wheel Drive)
- **Automatic Transmission Wiring Harness Replacement (Electrical Connector Passage Sleeve)**
- **Manual Shift Shaft Position Switch Replacement**
- **Transmission Control Wiring Harness Replacement (M5N)**
- Perform the **Transmission Service Fast Learn Procedure** following all transmission related repairs.
- Refer to **K71 Transmission Control Module: Programming and Setup**

DTC P2670 OR P2671: ACTUATOR HIGH CONTROL CIRCUIT GROUP 2 VOLTAGE

Diagnostic Instructions

- Perform the **Diagnostic System Check - Vehicle** prior to using this diagnostic procedure.
- Review **Strategy Based Diagnosis** for an overview of the diagnostic approach.
- **Diagnostic Procedure Instructions** provides an overview of each diagnostic category.

DTC Descriptors

DTC P2670

Actuator High Control Circuit Group 2 Low Voltage

DTC P2671

Actuator High Control Circuit Group 2 High Voltage

Diagnostic Fault Information

Circuits	Short to Ground	Open/High Resistance	Short to Voltage	Signal Performance
Ignition	P2670	P2671	P2670	-

Typical Scan Tool Data

High Side Driver 2

Circuits	Short to Ground	Open	Short to Voltage
Operating Conditions: Ignition On **Parameter Normal Range:** On			
High Side Driver 2	Off	On	Off

Circuit/System Description

The high side driver 2 is internal to the transmission control module (TCM). With the ignition ON, the high side driver 2 provides 12 V to the transmission control solenoid valve 1, 2, 3, 6, 7 and 9. If excessive current flow is detected in the high side driver 2 circuit, the high side driver 2 will turn Off. When the circuit fault is corrected, the high side driver 2 will reset.

Conditions for Running the DTC

P2670

- Ignition is On.
- High side driver 1 is On.
- P2670 is not pending for this ignition cycle.

P2671

cardiagn.com

- Ignition is On.
- P2671 is not pending for this ignition cycle.

Conditions for Setting the DTC

P2670

TCM has detected a short to ground on the high side driver 2 circuit during TCM initialization.

P2671

TCM has detected a short to voltage on the high side driver 2 circuit during TCM initialization.

Action Taken When the DTC Sets

P2670

- P2670 is a Type A DTC.
- TCM turns Off power to all shift and pressure control solenoids.
- TCM inhibits TCC.
- 2nd gear is obtained if fault was detected with the default valve in the low state.
- 8th gear is obtained if fault was detected with the default valve in the high state.
- TCM disables transmission adapts learning and freezes current adapt values.
- TCM commands default shift pattern and ignores all other shift requests.
- TCM inhibits Tap Up/Tap Down.
- TCM commands maximum line pressure for all shifts.
- TCM request the ECM to disable powertrain braking.
- TCM request the ECM to disable neutral idle.
- TCM request the ECM to disable auto grade braking.
- TCM request the ECM to disable auto stop function.
- TCM request the ECM to limit engine torque based on transmission input speed.

P2671

- P2671 is a Type C DTC.
- No default actions taken.

Conditions for Clearing the DTC

- P2670 is a Type A DTC
- P2671 is a Type C DTC

Reference Information

Schematic Reference

Automatic Transmission Controls Schematics

Connector End View Reference

- **COMPONENT CONNECTOR END VIEWS - INDEX**
- **INLINE HARNESS CONNECTOR END VIEWS - INDEX**

Description and Operation

- **Electronic Component Description**
- **Transmission Component and System Description**
- **Transmission General Description**

cardiagn.com

Electrical Information Reference

- **Circuit Testing**
- **Connector Repairs**
- **Testing for Intermittent Conditions and Poor Connections**
- **Wiring Repairs**

DTC Type Reference

Powertrain Diagnostic Trouble Code (DTC) Type Definitions

Scan Tool Reference

Control Module References for scan tool information

Circuit/System Verification

1. Ignition On.
2. Verify the scan tool High Side Driver 2 Command parameter displays On.
   - **If On is not displayed**

     Refer to Circuit/System Testing.

   - **If On is displayed**
3. Verify the parameters listed below do not display Malfunction when commanding the high side driver 2, On and Off with a scan tool.
   - High Side Driver 2 Circuit Low Voltage Test Status
   - High Side Driver 2 Circuit Open Test Status
   - High Side Driver 2 Circuit High Voltage Test Status
   - **If Malfunction is displayed**

     Refer to Circuit/System Testing.

   - **If Malfunction is not displayed**
4. Operate the vehicle within the Conditions for Running the DTC. You may also operate the vehicle within the conditions that you observe from the Freeze Frame/Failure Records data.
5. Verify the DTC does not set.
   - **If the DTC sets**

     Refer to Circuit/System Testing.

   - **If the DTC does not set**
6. All OK.

Circuit/System Testing

1. Ignition Off and all vehicle systems Off. Disconnect the X175 harness connector at the T12 Automatic Transmission Assembly. It may take up to 2 min for all vehicle systems to power down. Ignition On.
2. Command the high side driver 2 Off.
3. Connect a test lamp between the ignition circuit terminal 19 and ground.
4. Verify the test lamp does not illuminate.
   - **If the test lamp illuminates**
   1. Ignition Off.
   2. Disconnect the harness connector at the K71 Transmission Control Module. Ignition On.
   3. Verify a test lamp does not illuminate between the ignition circuit terminal 19 and ground.
      - **If the test lamp illuminates**

cardiagn.com

Repair the short to B+ in the ignition circuit.

- **If the test lamp does not illuminate**

  Replace the K71 Transmission Control Module.

- **If the test lamp does not illuminate**

5. Ignition On.
6. Verify the test lamp turns On and Off when commanding the high side driver 2 On and Off with a scan tool.
   - **If the test lamp is always Off**
   1. Ignition Off, disconnect the harness connector at the K71 Transmission Control Module.
   2. Test for infinite resistance between the ignition circuit and ground.
      - If less than infinite resistance, repair the short to ground on the circuit.
      - If infinite resistance
   3. Test for less than 2 Ω in the ignition circuit end to end.
      - If 2 Ω or greater, repair the open/high resistance in the circuit.
      - If less than 2 Ω, replace the K71 Transmission Control Module.
   - **If the test lamp turns On and Off**
7. Perform the Component Testing.

Component Testing

1. Perform the Circuit/System Testing first.
2. Ignition Off, connect the X175 harness connector.
3. Remove the fluid pan from the T12 Automatic Transmission.
4. Disconnect the harness connector at the following solenoids listed below. Refer to **Transmission Solenoid Information** .
   - Q77A Transmission Control Solenoid Valve 1
   - Q77B Transmission Control Solenoid Valve 2
   - Q77C Transmission Control Solenoid Valve 3
   - Q77F Transmission Control Solenoid Valve 6
   - Q77G Transmission Control Solenoid Valve 7
   - Q77J Transmission Control Solenoid Valve 9
5. Ignition On.
6. Command the high side driver 2 Off.
7. Connect a test lamp between terminal 2 and ground on each solenoid harness connector for the following solenoids listed below:
   - Q77A Transmission Control Solenoid Valve 1
   - Q77B Transmission Control Solenoid Valve 2
   - Q77C Transmission Control Solenoid Valve 3
   - Q77F Transmission Control Solenoid Valve 6
   - Q77G Transmission Control Solenoid Valve 7
   - Q77J Transmission Control Solenoid Valve 9
8. Verify the test lamp does not illuminate.
   - **If the test lamp illuminates**
   1. Disconnect the X176 harness connector.
   2. Verify a test lamp does not illuminate between the ignition circuit terminal 18 and ground.
      - If the test lamp illuminates

        Replace the automatic transmission wiring harness, electrical connector passage sleeve.

carlogic.com

- If the test lamp does not illuminate

  Replace the transmission control wiring harness.

- **If the test lamp does not illuminate**

9. Connect a test lamp between terminal 2 and ground on each solenoid harness connector for the following solenoids listed below:
   - Q77A Transmission Control Solenoid Valve 1
   - Q77B Transmission Control Solenoid Valve 2
   - Q77C Transmission Control Solenoid Valve 3
   - Q77F Transmission Control Solenoid Valve 6
   - Q77G Transmission Control Solenoid Valve 7
   - Q77J Transmission Control Solenoid Valve 9
10. Verify the test lamp turns On and Off when commanding the high side driver 2 On and Off with a scan tool for each of the following solenoids listed below:
    - Q77A Transmission Control Solenoid Valve 1
    - Q77B Transmission Control Solenoid Valve 2
    - Q77C Transmission Control Solenoid Valve 3
    - Q77F Transmission Control Solenoid Valve 6
    - Q77G Transmission Control Solenoid Valve 7
    - Q77J Transmission Control Solenoid Valve 9
    - **If the test lamp is always Off**

    1. Ignition Off, disconnect the X176 harness connector.
    2. Connect a test lamp between terminal 18 and ground on the automatic transmission wiring harness, electrical connector passage sleeve.
    3. Verify the test lamp turns On and Off when commanding the high side driver 2 On and Off.
       - If the test lamp is always Off

         Replace the automatic transmission wiring harness, electrical connector passage sleeve.

       - If the test lamp turns On and Off

         Replace the transmission control wiring harness.

    - **If the test lamp turns On and Off**

11. Disconnect the test lamp.
12. Test for 4.5-5.5 Ω between the ignition terminal 2 and the control terminal 1 on the following solenoids:
    - Q77A Transmission Control Solenoid Valve 1
    - Q77B Transmission Control Solenoid Valve 2
    - Q77C Transmission Control Solenoid Valve 3
    - Q77F Transmission Control Solenoid Valve 6
    - Q77G Transmission Control Solenoid Valve 7
    - **If not between 4.5-5.5 Ω**

      Replace the solenoid that is not between 4.5-5.5 Ω.

    - **If between 4.5-5.5 Ω**
13. Test for 11.0-13.0 Ω between the ignition terminal 2 and the control terminal 1 on the Q77J Transmission Control Solenoid Valve 9.
    - **If not between 11.0-13.0 Ω**

      Replace the Q77J Transmission Control Solenoid Valve 9.

cardiagn.com

- **If between 11.0-13.0 Ω**

14. Test for infinite resistance between each ignition terminal 1 and ground and then each control terminal 2 and ground on the following solenoids:
    - Q77A Transmission Control Solenoid Valve 1
    - Q77B Transmission Control Solenoid Valve 2
    - Q77C Transmission Control Solenoid Valve 3
    - Q77F Transmission Control Solenoid Valve 6
    - Q77G Transmission Control Solenoid Valve 7
    - Q77J Transmission Control Solenoid Valve 9
    - **If not infinite resistance**

      Replace the solenoid that has continuity to ground.

    - **If infinite resistance**
15. All OK.

Repair Instructions

Perform the **Diagnostic Repair Verification** after completing the repair.

- **Automatic Transmission Fluid, Fluid Pan and/or Filter Replacement (Rear Wheel Drive)**
  Automatic Transmission Fluid, Fluid Pan and/or Filter Replacement (All Wheel Drive)
- **Automatic Transmission Wiring Harness Replacement (Electrical Connector Passage Sleeve)**
- **Control Valve Body Replacement**
- **Transmission Control Wiring Harness Replacement (M5N)**
- Perform the **Transmission Service Fast Learn Procedure** following all transmission related repairs.
- Refer to **K71 Transmission Control Module: Programming and Setup**

DTC P2714 OR P2715: TRANSMISSION CONTROL SOLENOID VALVE 4 STUCK OFF/ON

Diagnostic Instructions

- Perform the **Diagnostic System Check - Vehicle** prior to using this diagnostic procedure.
- Review **Strategy Based Diagnosis** for an overview of the diagnostic approach.
- **Diagnostic Procedure Instructions** provides an overview of each diagnostic category.

DTC Descriptors

NOTE: **The DTCs listed below set due to a transmission hydraulic/mechanical condition. Perform the Circuit/System Verification and Circuit/System Testing to identify the cause.**

DTC P2714

Transmission Control Solenoid Valve 4 Stuck Off - The 2-3-4-6-8 clutch did not apply due to a hydraulic/mechanical condition.

DTC P2715

Transmission Control Solenoid Valve 4 Stuck On - The 2-3-4-6-8 clutch did not release due to a hydraulic/mechanical condition.

Circuit/System Description

The transmission control solenoid valve 4 is a high pressure, normally high, variable force solenoid. The transmission control solenoid valve 4 regulates and directs pressurized oil to the 2-3-4-6-8 clutch regulator valve. The 2-3-4-6-8 clutch regulator valve then directs pressurized oil to the 2-3-4-6-8 Clutch

cardiagn.com

assembly to apply the clutch. The transmission control module (TCM) uses information from the transmission speed sensors along with serial data information from other control modules to calculate the correct gear ratio and apply the correct clutch assemblies. The TCM compares the calculated gear ratio to the commanded gear ratio. The calculated and commanded gear ratios must match.

Conditions for Running the DTC

P2714

- DTC P0101, P0102, P0103, P0106, P0107, P0108, P0171, P0172, P0174, P0175, P0201, P0202, P0203, P0204, P0205, P0206, P0207, P0208, P0300, P0301, P0302, P0303, P0304, P0305, P0306, P0307, P0308, P0716, P0717, P0722, P0723, P077C, P077D, P07BF, P07C0, P1824, P182A, P182B, P182C, P182D, P182E P182F, P1838, P1839, P1840, P1841, P18B5, P18B6, P18B7, P18B8, P18B9, P18BA, P18BB, P18BC, P18BD, P18BE, P18BF, P18C0, P18C1, P18C2, P18C3, P1915 or P2534 is not set.
- Battery voltage is between 9-32 V.
- Ignition voltage is between 9-32 V.
- High side driver 1 is On.
- High side driver 2 is On.
- Accelerator pedal position signal is 1% or greater.
- Transmission is in drive range.
- Transmission output speed is 100 RPM or greater.

P2715

- DTC P0101, P0102, P0103, P0106, P0107, P0108, P0171, P0172, P0174, P0175, P0201, P0202, P0203, P0204, P0205, P0206, P0207, P0208, P0300, P0301, P0302, P0303, P0304, P0305, P0306, P0307, P0308, P0716, P0717, P0722, P0723, P077C, P077D, P07BF, P07C0, P1824, P182A, P182B, P182C, P182D, P182E P182F, P1838, P1839, P1840, P1841, P18B5, P18B6, P18B7, P18B8, P18B9, P18BA, P18BB, P18BC, P18BD, P18BE, P18BF, P18C0, P18C1, P18C2, P18C3, P1915 or P2534 is not set.
- Battery voltage is between 9-32 V.
- Ignition voltage is between 9-32 V.
- High side driver 1 is On.
- High side driver 2 is On.
- Transmission output speed is 100 RPM or greater.

Conditions for Setting the DTC

P2714

TCM has detected the 2-3-4-6-8 Clutch did not apply, resulting in a neutral condition.

P2715

TCM has detected the 2-3-4-6-8 Clutch did not release, resulting in tie-up condition.

Action Taken When the DTC Sets

P2714 or P2715

- P2714 or P2715 are Type A DTCs.
- TCM disables transmission adapts learning and freezes current adapt values.
- TCM commands default shift pattern and ignores all other shift requests.
- TCM inhibits Tap Up/Tap Down.
- TCM inhibits TCC.
- TCM requests the ECM to disable powertrain braking.
- TCM requests the ECM to disable neutral idle.

cardiagn.com

- TCM requests the ECM to disable auto grade braking.
- TCM requests the ECM to disable auto stop function.
- Transmission shifts to 5th gear, if P2714 sets.
- Transmission shifts to 4th gear, if P2715 sets.
- Transmission reverse gear is available.

Conditions for Clearing the DTC

P2714 and P2715 are Type A DTCs.

Reference Information

Schematic Reference

Connector End View Reference

COMPONENT CONNECTOR END VIEWS - INDEX

Description and Operation

Electronic Component Description

Electrical Information Reference

- **Circuit Testing**
- **Connector Repairs**
- **Testing for Intermittent Conditions and Poor Connections**
- **Wiring Repairs**

DTC Type Reference

Powertrain Diagnostic Trouble Code (DTC) Type Definitions

Scan Tool Reference

Control Module References for scan tool information

Circuit/System Verification

1. Verify the transmission fluid level and condition is correct. Refer to **Transmission Fluid Level and Condition Check**.
   - **If the transmission fluid and condition is not correct**

     Repair as necessary.

   - **If the transmission fluid level and condition is correct**
2. Ignition On, clear the DTCs from the K71 Transmission Control Module with a scan tool.
3. Verify the transmission operation performs as indicated in the road test instructions and DTC P2714 or P2715 did not set. Refer to **Road Test**.
   - **If DTC P2714 or P2715 did set and the transmission does not shift correctly**

     Refer to Circuit/System Testing.

   - **If DTC P2714 or P2715 did not set and the transmission shifts correctly**
4. Operate the vehicle within the Conditions for Running the DTC. You may also operate the vehicle within the conditions that you observe from the Freeze Frame/Failure Records data.
5. Verify the DTC does not set.
   - **If the DTC sets**

     Refer to Circuit/System Testing.

cardiagn.com

- **If the DTC does not set**

6. All OK.

Circuit/System Testing

1. Verify the conditions listed below do not exist. Carefully inspect each component for that condition. Repair or replace as necessary.

P2714 or P2715 - Control Valve Solenoid Body

Transmission Control Solenoid Valve 4 stuck/sticking-debris, binding, damage valve.

P2714 or P2715 - Control Valve Solenoid Body

2-3-4-6-8 Clutch regulator valve stuck/sticking - debris, binding, damage valve, scored bore.

P2714 or P2715 - 2-3-4-6-8 Clutch

2-3-4-6-8 Clutch piston housing retaining ring not seated or clutch piston seals missing or damaged.

P2714 or P2715 - 2-3-4-6-8 Clutch

Fluid circuit - plugged with debris or leaks due to missing or damage O-rings, seals or gaskets.

Repair Instructions

Perform the **Diagnostic Repair Verification** after completing the repair.

- **2-3-4-6-8 and 4-5-6-7-8 Reverse Clutch Disassemble**
- **Control Valve Body Assembly Disassemble**
- **Control Valve Body Replacement**
- **Solenoid Valve Characterization Reprogramming**
- Perform the **Transmission Service Fast Learn Procedure** following all transmission related repairs.
- Refer to **K71 Transmission Control Module: Programming and Setup**

DTC P2718, P2720 OR P2721: TRANSMISSION CONTROL SOLENOID VALVE 4 CONTROL CIRCUIT

Diagnostic Instructions

- Perform the **Diagnostic System Check - Vehicle** prior to using this diagnostic procedure.
- Review **Strategy Based Diagnosis** for an overview of the diagnostic approach.
- **Diagnostic Procedure Instructions** provides an overview of each diagnostic category.

DTC Descriptors

DTC P2718

Transmission Control Solenoid Valve 4 Control Circuit Open

DTC P2720

Transmission Control Solenoid Valve 4 Control Circuit Low Voltage

DTC P2721

Transmission Control Solenoid Valve 4 Control Circuit High Voltage

Diagnostic Fault Information

Circuits	Short to Ground	Open/High Resistance	Short to Voltage	Signal Performance

cardiagn.com

Circuits	Short to Ground	Open/High Resistance	Short to Voltage	Signal Performance
Ignition	P0658	P0659	P0659	-
Control	P2720	P2718	P2721	-

Typical Scan Tool Data

Transmission Control Solenoid Valve 4 Control Circuit Open Test Status

Circuits	Short to Ground	Open	Short to Voltage
Operating Conditions: Ignition On **Parameter Normal Range:** OK or Not Run			
Ignition	Malfunction	Malfunction	Malfunction
Control	-	Malfunction	-

Transmission Control Solenoid Valve 4 Control Circuit Low Voltage Test Status

Circuits	Short to Ground	Open	Short to Voltage
Operating Conditions: Ignition On **Parameter Normal Range:** OK or Not Run			
Ignition	Malfunction	Malfunction	Malfunction
Control	Malfunction	-	-

Transmission Control Solenoid Valve 4 Control Circuit High Voltage Test Status

Circuit	Short to Ground	Open	Short to Voltage
Operating Conditions: Ignition On **Parameter Normal Range:** OK or Not Run			
Ignition	Malfunction	Malfunction	Malfunction
Control	-	-	Malfunction

Circuit/System Description

The transmission control solenoid valve 4 is a high pressure, normally high, variable force solenoid valve. The transmission control module (TCM) high side driver 1, supplies 12 V to the transmission control solenoid valve 4. A low side driver circuit in the TCM is pulsed width modulated to vary the current to the solenoid. If excessive current flow is detected, the high side driver 1 will turn Off. When the circuit fault is corrected, the high side driver 1 will reset.

Conditions for Running the DTC

- Ignition On.
- High side driver 1 On.
- Battery voltage is between 11-32 V for 1 s or greater.
- TCM power mode state is in accessory or ignition.

Conditions for Setting the DTC

P2718

TCM detects an open/high resistance in the transmission control solenoid valve 4 control circuit, for 0.3 s.

P2720

TCM detects a short to ground in the transmission control solenoid valve 4 control circuit, for 0.3 s.

P2721

TCM detects a short to power in the transmission control solenoid valve 4 control circuit, for 0.3 s.

Action Taken When the DTC Sets

carmgn.com

P2718 or P2721

- P2718 or P2721 is a Type A DTC.
- TCM disables transmission adapts learning and freezes current adapt values.
- TCM commands default shift pattern and ignores all other shift requests.
- TCM inhibits Tap Up/Tap Down.
- TCM inhibits TCC.
- TCM request the ECM to disable powertrain braking.
- TCM request the ECM to disable neutral idle.
- TCM request the ECM to disable auto grade braking.
- TCM request the ECM to disable auto stop function.
- Transmission shifts to 4th gear.
- Transmission reverse gear is available.

P2720

- P2720 is a Type A DTC.
- TCM disables transmission adapts learning and freezes current adapt values.
- TCM commands default shift pattern and ignores all other shift requests.
- TCM inhibits Tap Up/Tap Down.
- TCM inhibits TCC.
- TCM request the ECM to disable powertrain braking.
- TCM request the ECM to disable neutral idle.
- TCM request the ECM to disable auto grade braking.
- TCM request the ECM to disable auto stop function.
- Transmission shifts to 5th gear.
- Transmission reverse gear is available.

Conditions for Clearing the DTC

P2718, P2720 and P2721 are Type A DTCs.

Reference Information

Schematic Reference

Automatic Transmission Controls Schematics

Connector End View Reference

- **COMPONENT CONNECTOR END VIEWS - INDEX**
- **INLINE HARNESS CONNECTOR END VIEWS - INDEX**

Description and Operation

- **Electronic Component Description**
- **Transmission Component and System Description**
- **Transmission General Description**

Electrical Information Reference

- **Circuit Testing**
- **Connector Repairs**
- **Testing for Intermittent Conditions and Poor Connections**
- **Wiring Repairs**

DTC Type Reference

cardiagn.com

Powertrain Diagnostic Trouble Code (DTC) Type Definitions

Scan Tool Reference

Control Module References for scan tool information

Circuit/System Verification

1. Ignition On.
2. Verify the parameters listed below do not display Malfunction when commanding the Transmission Control Solenoid Valve 4 On and Off with a scan tool.
    - Transmission Control Solenoid Valve 4 Control Circuit Open Voltage Test Status
    - Transmission Control Solenoid Valve 4 Control Circuit Low Voltage Test Status
    - Transmission Control Solenoid Valve 4 Control Circuit High Voltage Test Status
    - **If Malfunction is displayed**

      Refer to Circuit/System Testing.

    - **If Malfunction is not displayed**
3. Operate the vehicle within the Conditions for Running the DTC. You may also operate the vehicle within the conditions that you observe from the Freeze Frame/Failure Records data.
4. Verify the DTC does not set.
    - **If the DTC sets**

      Refer to Circuit/System Testing.

    - **If the DTC does not set**
5. All OK.

Circuit/System Testing

1. Ignition Off and all vehicle systems Off. Disconnect the X175 harness connector at the T12 Automatic Transmission Assembly. It may take up to 2 min for all vehicle systems to power down, ignition On.
2. Command the high side driver 1 Off.
3. Connect a test lamp between the ignition circuit terminal 18 and ground.
4. Verify the test lamp does not illuminate.
    - **If the test lamp illuminates**
    1. Ignition Off.
    2. Disconnect the harness connector at the K71 Transmission Control Module, ignition On.
    3. Command the high side driver 1 Off.
    4. Verify a test lamp does not illuminate between the ignition circuit terminal 18 and ground.
        - If the test lamp illuminates, repair the short to voltage in the circuit.
        - If the test lamp does not illuminate, replace the K71 Transmission Control Module.
    - **If the test lamp does not illuminate**
5. Verify the test lamp turns On and Off when commanding the high side driver On and Off with a scan tool.
    - **If the test lamp is always Off**
    1. Ignition Off, disconnect the harness connector at the K71 Transmission Control Module.
    2. Test for infinite resistance between the ignition circuit and ground.
        - If less than infinite resistance, repair the short to ground on the circuit.
        - If infinite resistance
    3. Test for less than 2 Ω in the ignition circuit end to end.
        - If 2 Ω or greater, repair the open/high resistance in the circuit.
        - If less than 2 Ω, replace the K71 Transmission Control Module.

cardiagn.com

- **If the test lamp turns On and Off**

6. Disconnect the test lamp.
7. Test for less than 1 V between the control circuit terminal 13 and ground.
    - **If 1 V or greater**
    1. Ignition Off, disconnect the harness connector at the K71 Transmission Control Module, ignition On.
    2. Test for less than 1 V between the control circuit terminal 13 and ground.
        - If greater than the specified value, repair the short to voltage on the circuit.
        - If less than the specified value, replace the K71 Transmission Control Module.
    - **If less than 1 V**
8. Ignition Off, disconnect the harness connector at the K71 Transmission Control Module.
9. Test for less than 2 Ω in the control circuit end to end.
    - **If 2 Ω or greater**

      Repair the open/high resistance in the circuit.

    - **If less than 2 Ω**
10. Test for infinite resistance between terminal 13 and ground.
    - **If less than infinite resistance**

      Repair the short to ground in the circuit.

    - **If infinite resistance**
11. Perform the Component Testing.

Component Testing

1. Perform the Circuit/System Testing first.
2. Ignition Off, remove the fluid pan from the T12 Automatic Transmission Assembly.
3. Disconnect the harness connector at the Q77D Transmission Control Solenoid Valve 4. Refer to **Transmission Solenoid Information** .
4. Connect a jumper wire between terminal 1 and terminal 2 of the Q77D Transmission Control Solenoid Valve 4 harness connector.
5. Disconnect the X176 harness connector.
6. Test for less than 2 Ω on X176 connector terminal 4 and terminal 9.
    - **If greater than 2 Ω**

      Replace the transmission control wiring harness.

    - **If less than 2 Ω**
7. Disconnect the jumper wire.
8. Remove the automatic transmission wiring harness, electrical connector passage sleeve.
9. Connect a jumper wire between X176 harness connector terminal 4 and terminal 9.
10. Test for less than 2 Ω between X175 connector terminal 13 and terminal 18.
    - **If greater than 2 Ω**

      Replace the automatic transmission wiring harness, electrical connector passage sleeve.

    - **If less than 2 Ω**
11. Test for 4.5-5.5 Ω at 20Â°C (68Â°F) between terminal 1 and terminal 2 on the Q77D Transmission Control Solenoid Valve 4.
    - **If not between 4.5-5.5 Ω**

      Replace the Q77D Transmission Control Solenoid Valve 4.

    - **If between 4.5-5.5 Ω**

cardiagn.com

12. Test for infinite resistance on the Q77D Transmission Control Solenoid Valve 4, as listed below:
    - Solenoid terminal 1 and ground
    - Solenoid terminal 2 and ground
    - **If not infinite resistance**

      Replace the Q77D Transmission Control Solenoid Valve 4.

    - **If infinite resistance**
13. Replace the K71 Transmission Control Module.

Repair Instructions

Perform the **Diagnostic Repair Verification** after completing the repair.

- **Automatic Transmission Wiring Harness Replacement (Electrical Connector Passage Sleeve)**
- **Solenoid Valve Characterization Reprogramming**
- **Transmission Control Wiring Harness Replacement (M5N)**
- **Transmission Fluid Pan and Filter Assembly Removal**
- Perform the **Transmission Service Fast Learn Procedure** following all transmission related repairs.
- Refer to **K71 Transmission Control Module: Programming and Setup**

DTC P2723 OR P2724: TRANSMISSION CONTROL SOLENOID VALVE 5 STUCK OFF/ON

Diagnostic Instructions

- Perform the **Diagnostic System Check - Vehicle** prior to using this diagnostic procedure.
- Review **Strategy Based Diagnosis** for an overview of the diagnostic approach.
- **Diagnostic Procedure Instructions** provides an overview of each diagnostic category.

DTC Descriptors

NOTE: **The DTCs listed below set due to a transmission hydraulic/mechanical condition. Perform the Circuit/System Verification and Circuit/System Testing to identify the cause.**

DTC P2723

Transmission Control Solenoid Valve 5 Stuck Off - The 4-5-6-7-8-Reverse Clutch did not apply due to a hydraulic/mechanical condition.

DTC P2724

Transmission Control Solenoid Valve 5 Stuck On - The 4-5-6-7-8-Reverse Clutch did not release due to a hydraulic/mechanical condition.

Circuit/System Description

The transmission control solenoid valve 5 is a low pressure, normally high, variable force solenoid. The transmission control solenoid valve 5 regulates and directs pressurized oil to the 4-5-6-7-8-Reverse regulator valve. The 4-5-6-7-8-Reverse regulator valve then directs pressurized oil to the 4-5-6-7-8-Reverse clutch assembly to apply the clutch. The transmission control module (TCM) uses information from the transmission speed sensors along with serial data information from other control modules to calculate the correct gear ratio and apply the correct clutch assemblies. The TCM compares the calculated gear ratio to the commanded gear ratio. The calculated and commanded gear ratios must match.

Conditions for Running the DTC

P2723

cardiagn.com

- DTC P0101, P0102, P0103, P0106, P0107, P0108, P0171, P0172, P0174, P0175, P0201, P0202, P0203, P0204, P0205, P0206, P0207, P0208, P0300, P0301, P0302, P0303, P0304, P0305, P0306, P0307, P0308, P0716, P0717, P0722, P0723, P077C, P077D, P07BF, P07C0, P1824, P182A, P182B, P182C, P182D, P182E, P182F, P1838, P1839, P1840, P1841, P18B5, P18B6, P18B8, P18B9, P18BA, P18BB, P18BC, P18BD, P18BE, P18BF, P18C0, P18C1, P18C2, P18C3, P1915 or P2534 is not set.
- Battery voltage is between 9-32 V.
- Ignition voltage is between 9-32 V.
- High side driver 1 is On.
- High side driver 2 is On.
- Accelerator pedal position signal is 1% or greater.
- Transmission is in drive range.
- Transmission output speed is 100 RPM or greater.

P2724

- DTC P0101, P0102, P0103, P0106, P0107, P0108, P0171, P0172, P0174, P0175, P0201, P0202, P0203, P0204, P0205, P0206, P0207, P0208, P0300, P0301, P0302, P0303, P0304, P0305, P0306, P0307, P0308, P0716, P0717, P0722, P0723, P077C, P077D, P07BF, P07C0, P1824, P182A, P182B, P182C, P182D, P182E, P182F, P1838, P1839, P1840, P1841, P18B5, P18B6, P18B8, P18B9, P18BA, P18BB, P18BC, P18BD, P18BE, P18BF, P18C0, P18C1, P18C2, P18C3, P1915 or P2534 is not set.
- Battery voltage is between 9-32 V.
- Ignition voltage is between 9-32 V.
- High side driver 1 is On.
- High side driver 2 is On.
- Transmission output speed is 100 RPM or greater.

Conditions for Setting the DTC

P2723

TCM has detected the 4-5-6-7-8-Reverse clutch did not apply, resulting in a neutral condition.

P2724

TCM has detected the 4-5-6-7-8-Reverse clutch did not release, resulting in a tie-up condition.

Action Taken When the DTC Sets

P2723 or P2724

- P2723 or P2724 are Type A DTCs.
- TCM disables transmission adapts learning and freezes current adapt values.
- TCM commands default shift pattern and ignores all other shift requests.
- TCM inhibits Tap Up/Tap Down.
- TCM inhibits TCC.
- TCM requests the ECM to disable powertrain braking.
- TCM requests the ECM to disable neutral idle.
- TCM requests the ECM to disable auto grade braking.
- TCM requests the ECM to disable auto stop function.
- Transmission shifts to 3rd gear, if P2723 sets.
- Transmission shifts to 4th gear, if P2724 sets.
- Transmission reverse gear is available.

Conditions for Clearing the DTC

cardiagn.com

P2723 and P2724 are Type A DTCs.

Reference Information

Schematic Reference

Automatic Transmission Controls Schematics

Connector End View Reference

- **COMPONENT CONNECTOR END VIEWS - INDEX**
- **INLINE HARNESS CONNECTOR END VIEWS - INDEX**

Description and Operation

- **Drive Range, First Gear**
- **Drive Range, Second Gear**
- **Drive Range, Third Gear**
- **Drive Range, Fourth Gear**
- **Drive Range, Fifth Gear**
- **Drive Range, Sixth Gear**
- **Drive Range, Seventh Gear**
- **Drive Range, Eighth Gear**
- **Electronic Component Description**
- **Neutral - Engine Running**
- **Park - Engine Running**
- **Reverse**
- **Transmission Component and System Description**
- **Transmission General Description**

Electrical Information Reference

- **Circuit Testing**
- **Connector Repairs**
- **Testing for Intermittent Conditions and Poor Connections**
- **Wiring Repairs**

DTC Type Reference

Powertrain Diagnostic Trouble Code (DTC) Type Definitions

Scan Tool Reference

Control Module References for scan tool information

Circuit/System Verification

1. Verify the transmission fluid level and condition is correct. Refer to **Transmission Fluid Level and Condition Check**.
   - **If the transmission fluid and condition is not correct**

     Repair as necessary.

   - **If the transmission fluid level and condition is correct**
2. Ignition On, clear the DTCs from the K71 Transmission Control Module with a scan tool.
3. Verify the transmission operation performs as indicated in the road test instructions and DTC P2723 or P2724 did not set. Refer to **Road Test**.
   - **If DTC P2723 or P2724 did set and the transmission does not shift correctly**

cardiagn.com

Refer to Circuit/System Testing.

- **If DTC P2723 or P2724 did not set and the transmission shifts correctly**

4. Operate the vehicle within the Conditions for Running the DTC. You may also operate the vehicle within the conditions that you observe from the Freeze Frame/Failure Records data.
5. Verify the DTC does not set.
   - **If the DTC sets**

     Refer to Circuit/System Testing.

   - **If the DTC does not set**
6. All OK.

Circuit/System Testing

1. Verify the conditions listed below do not exist. Carefully inspect each component for that condition. Repair or replace as necessary.

P2723 or P2724 - Control Valve Solenoid Body

Transmission Control Solenoid Valve 5 stuck/sticking-debris, binding, damage valve.

P2723 or P2724 - Control Valve Solenoid Body

4-5-6-7-8-Reverse Clutch regulator valve stuck/sticking - debris, binding, damage valve, scored bore.

P2723 or P2724 - 4-5-6-7-8-Reverse Clutch Assembly

4-5-6-7-8-Reverse Clutch piston housing retaining ring not seated or clutch piston seals missing or damaged.

P2723 or P2724 - 4-5-6-7-8-Reverse Clutch

Fluid circuit - plugged with debris or leaks due to missing or damage O-rings, seals or gaskets.

Repair Instructions

Perform the **Diagnostic Repair Verification** after completing the repair.

- **2-3-4-6-8 and 4-5-6-7-8 Reverse Clutch Disassemble**
- **Control Valve Body Assembly Disassemble**
- **Control Valve Body Replacement**
- **Solenoid Valve Characterization Reprogramming**
- **Transmission Solenoid Information**
- Perform the **Transmission Service Fast Learn Procedure** following all transmission related repairs.
- Refer to **K71 Transmission Control Module: Programming and Setup**

DTC P2727, P2729 OR P2730: TRANSMISSION CONTROL SOLENOID VALVE 5 CONTROL CIRCUIT

Diagnostic Instructions

- Perform the **Diagnostic System Check - Vehicle** prior to using this diagnostic procedure.
- Review **Strategy Based Diagnosis** for an overview of the diagnostic approach.
- **Diagnostic Procedure Instructions** provides an overview of each diagnostic category.

DTC Descriptors

DTC P2727

Transmission Control Solenoid Valve 5 Control Circuit Open

cardiagn.com

DTC P2729

Transmission Control Solenoid Valve 5 Control Circuit Low Voltage

DTC P2730

Transmission Control Solenoid Valve 5 Control Circuit High Voltage

Diagnostic Fault Information

Circuits	Short to Ground	Open/High Resistance	Short to Voltage	Signal Performance
Ignition	P0658	P0659	P0659	-
Control	P2729	P2727	P2730	-

Typical Scan Tool Data

Transmission Control Solenoid Valve 5 Control Circuit Open Test Status

Circuits	Short to Ground	Open	Short to Voltage
Operating Conditions: Ignition On **Parameter Normal Range:** OK or Not Run			
Ignition	Malfunction	Malfunction	Malfunction
Control	-	Malfunction	-

Transmission Control Solenoid Valve 5 Control Circuit Low Voltage Test Status

Circuits	Short to Ground	Open	Short to Voltage
Operating Conditions: Ignition On **Parameter Normal Range:** OK or Not Run			
Ignition	Malfunction	Malfunction	Malfunction
Control	Malfunction	-	-

Transmission Control Solenoid Valve 5 Control Circuit High Voltage Test Status

Circuits	Short to Ground	Open	Short to Voltage
Operating Conditions: Ignition On **Parameter Normal Range:** OK or Not Run			
Ignition	Malfunction	Malfunction	Malfunction
Control	-	-	Malfunction

Circuit/System Description

The transmission control solenoid valve 5 is a low pressure, normally high, variable force solenoid valve. The transmission control module (TCM) high side driver 1, supplies 12 V to the transmission control solenoid valve 5. A low side driver circuit in the TCM is pulsed width modulated to vary the current to the solenoid. If excessive current flow is detected, the high side driver 1 will turn Off. When the circuit fault is corrected, the high side driver 1 will reset.

Conditions for Running the DTC

- Ignition On.
- High side driver 1 On.
- Battery voltage is between 11-32 V for 1 s or greater.
- TCM power mode state is in accessory or ignition.

Conditions for Setting the DTC

P2727

TCM detects an open/high resistance in the transmission control solenoid valve 5 control circuit, for 0.3 s.

carlogic.com

P2729

TCM detects a short to ground in the transmission control solenoid valve 5 control circuit, for 0.3 s.

P2730

TCM detects a short to power in the transmission control solenoid valve 5 control circuit, for 0.3 s.

Action Taken When the DTC Sets

P2727 or P2730

- P2727 or P2730 is a Type A DTC.
- TCM disables transmission adapts learning and freezes current adapt values.
- TCM commands default shift pattern and ignores all other shift requests.
- TCM inhibits Tap Up/Tap Down.
- TCM inhibits TCC.
- TCM request the ECM to disable powertrain braking.
- TCM request the ECM to disable neutral idle.
- TCM request the ECM to disable auto grade braking.
- TCM request the ECM to disable auto stop function.
- Transmission shifts to 4th gear.
- Transmission reverse gear is available.

P2729

- P2729 is a Type A DTC.
- TCM disables transmission adapts learning and freezes current adapt values.
- TCM commands default shift pattern and ignores all other shift requests.
- TCM inhibits manual up/manual down function.
- TCM inhibits TCC.
- TCM request the ECM to disable powertrain braking.
- TCM request the ECM to disable neutral idle.
- TCM request the ECM to disable auto grade braking.
- TCM request the ECM to disable auto stop function.
- Transmission shifts to 3rd gear.
- Transmission reverse gear is available.

Conditions for Clearing the DTC

P2727, P2729 and P2730 are Type A DTCs.

Reference Information

Schematic Reference

Automatic Transmission Controls Schematics

Connector End View Reference

- **COMPONENT CONNECTOR END VIEWS - INDEX**
- **INLINE HARNESS CONNECTOR END VIEWS - INDEX**

Description and Operation

- **Electronic Component Description**
- **Transmission Component and System Description**
- **Transmission General Description**

cardiagn.com

Electrical Information Reference

- **Circuit Testing**
- **Connector Repairs**
- **Testing for Intermittent Conditions and Poor Connections**
- **Wiring Repairs**

DTC Type Reference

Powertrain Diagnostic Trouble Code (DTC) Type Definitions

Scan Tool Reference

Control Module References for scan tool information

Circuit/System Verification

1. Ignition On.
2. Verify the parameters listed below do not display Malfunction when commanding the Transmission Control Solenoid Valve 5 On and Off with a scan tool.
    - Transmission Control Solenoid Valve 5 Control Circuit Open Voltage Test Status
    - Transmission Control Solenoid Valve 5 Control Circuit Low Voltage Test Status
    - Transmission Control Solenoid Valve 5 Control Circuit High Voltage Test Status
    - **If Malfunction is displayed**

      Refer to Circuit/System Testing.

    - **If Malfunction is not displayed**
3. Operate the vehicle within the Conditions for Running the DTC. You may also operate the vehicle within the conditions that you observe from the Freeze Frame/Failure Records data.
4. Verify the DTC does not set.
    - **If the DTC sets**

      Refer to Circuit/System Testing.

    - **If the DTC does not set**
5. All OK.

Circuit/System Testing

1. Ignition Off and all vehicle systems Off. Disconnect the X175 harness connector at the T12 Automatic Transmission Assembly. It may take up to 2 min for all vehicle systems to power down, ignition On.
2. Command the high side driver 1 Off.
3. Connect a test lamp between the ignition circuit terminal 18 and ground.
4. Verify the test lamp does not illuminate.
    - **If the test lamp illuminates**
    1. Ignition Off.
    2. Disconnect the harness connector at the K71 Transmission Control Module, ignition On.
    3. Verify a test lamp does not illuminate between the ignition circuit terminal 18 and ground at the transmission case.
        - If the test lamp illuminates, repair the short to voltage in the circuit.
        - If the test lamp does not illuminate, replace the K71 Transmission Control Module.
    - **If the test lamp does not illuminate**
5. Verify the test lamp turns On and Off when commanding the high side driver On and Off with a scan tool.
    - **If the test lamp is always Off**

cardiagn.com

1. Ignition Off, disconnect the harness connector at the K71 Transmission Control Module.
2. Test for infinite resistance between the ignition circuit and ground.
    - If less than infinite resistance, repair the short to ground on the circuit.
    - If infinite resistance
3. Test for less than 2 Ω in the ignition circuit end to end.
    - If 2 Ω or greater, repair the open/high resistance in the circuit.
    - If less than 2 Ω, replace the K71 Transmission Control Module.

- **If the test lamp turns On and Off**

6. Disconnect the test lamp.
7. Test for 1 V between the control circuit terminal 14 and ground.

- **If 1 V or greater**

1. Ignition Off, disconnect the harness connector at the K71 Transmission Control Module. Ignition On.
2. Test for less than 1 V between the control circuit terminal 14 and ground.
    - If greater than the specified value, repair the short to voltage on the circuit.
    - If less than the specified value, replace the K71 Transmission Control Module.

- **If less than 1 V**

8. Ignition Off, disconnect the harness connector at the K71 Transmission Control Module.
9. Test for less than 2 Ω in the control circuit end to end.

- **If 2 Ω or greater**

  Repair the open/high resistance in the circuit.

- **If less than 2 Ω**

10. Test for infinite resistance between terminal 14 and ground.

- **If less than infinite resistance**

  Repair the short to ground in the circuit.

- **If infinite resistance**

11. Perform the Component Testing.

Component Testing

1. Perform the Circuit/System Testing first.
2. Ignition Off, remove the fluid pan from the T12 Automatic Transmission Assembly.
3. Disconnect the harness connector at the Q77E Transmission Control Solenoid Valve 5. Refer to **Transmission Solenoid Information** .
4. Connect a jumper wire between terminal 1 and terminal 2 of the Q77E Transmission Control Solenoid Valve 5 harness connector.
5. Disconnect the X176 harness connector.
6. Test for less than 2 Ω on X176 connector terminal 4 and terminal 7.

- **If greater than 2 Ω**

  Replace the transmission control wiring harness.

- **If less than 2 Ω**

7. Disconnect the jumper wire.
8. Remove the automatic transmission wiring harness, electrical connector passage sleeve.
9. Connect a jumper wire between X176 harness connector terminal 4 and terminal 7.
10. Test for less than 2 Ω between X175 connector terminal 14 and terminal 18.

- **If greater than 2 Ω**

  Replace the automatic transmission wiring harness, electrical connector passage sleeve.

cardiagn.com

- **If less than 2 Ω**

11. Test for 4.5-5.5 Ω at 20Â°C (68Â°F) between terminal 1 and terminal 2 on the Q77E Transmission Control Solenoid Valve 5.
    - **If not between 4.5-5.5 Ω**

      Replace the Q77E Transmission Control Solenoid Valve 5.

    - **If between 4.5-5.5 Ω**
12. Test for infinite resistance on the Q77E Transmission Control Solenoid Valve 5, as listed below:
    - Solenoid terminal 1 and ground
    - Solenoid terminal 2 and ground
    - **If not infinite resistance**

      Replace the Q77E Transmission Control Solenoid Valve 5.

    - **If infinite resistance**
13. Replace the K71 Transmission Control Module.

Repair Instructions

Perform the **Diagnostic Repair Verification** after completing the repair.

- **Automatic Transmission Wiring Harness Replacement (Electrical Connector Passage Sleeve)**
- **Solenoid Valve Characterization Reprogramming**
- **Transmission Control Wiring Harness Replacement (M5N)**
- **Transmission Fluid Pan and Filter Assembly Removal**
- Perform the **Transmission Service Fast Learn Procedure** following all transmission related repairs.
- Refer to **K71 Transmission Control Module: Programming and Setup**

DTC P2736, P2738 OR P2739: TRANSMISSION CONTROL SOLENOID VALVE 6 CONTROL CIRCUIT

Diagnostic Instructions

- Perform the **Diagnostic System Check - Vehicle** prior to using this diagnostic procedure.
- Review **Strategy Based Diagnosis** for an overview of the diagnostic approach.
- **Diagnostic Procedure Instructions** provides an overview of each diagnostic category.

DTC Descriptors

DTC P2736

Transmission Control Solenoid Valve 6 Control Circuit Open

DTC P2738

Transmission Control Solenoid Valve 6 Control Circuit Low Voltage

DTC P2739

Transmission Control Solenoid Valve 6 Control Circuit High Voltage

Diagnostic Fault Information

Circuits	Short to Ground	Open/High Resistance	Short to Voltage	Signal Performance
Ignition	P2760	P2761	P2761	-
Control	P2738	P2736	P2739	-

cardiagn.com

Typical Scan Tool Data

Transmission Control Solenoid Valve 6 Control Circuit Open Test Status

Circuits	Short to Ground	Open	Short to Voltage
Operating Conditions: Ignition On **Parameter Normal Range:** OK or Not Run			
Ignition	Malfunction	Malfunction	Malfunction
Control	-	Malfunction	-

Transmission Control Solenoid Valve 6 Control Circuit Low Voltage Test Status

Circuits	Short to Ground	Open	Short to Voltage
Operating Conditions: Ignition On **Parameter Normal Range:** OK or Not Run			
Ignition	Malfunction	Malfunction	Malfunction
Control	Malfunction	-	-

Transmission Control Solenoid Valve 6 Control Circuit High Voltage Test Status

Circuits	Short to Ground	Open	Short to Voltage
Operating Conditions: Ignition On **Parameter Normal Range:** OK or Not Run			
Ignition	Malfunction	Malfunction	Malfunction
Control	-	-	Malfunction

Circuit/System Description

The transmission control solenoid valve 6 is a low pressure, normally high, variable force solenoid valve. This solenoid is also referred to as, the line pressure solenoid. The transmission control module (TCM) high side driver 2, supplies 12 V to the transmission control solenoid valve 6. A low side driver circuit in the TCM is pulsed width modulated to vary the current to the solenoid. If excessive current flow is detected, the high side driver 2 will turn Off. When the circuit fault is corrected, the high side driver 2 will reset.

Conditions for Running the DTC

- Ignition On.
- High side driver 2 On.
- Battery voltage is between 11-32 V for 1 s or greater.
- TCM power mode state is in accessory or ignition.

Conditions for Setting the DTC

P2736

TCM detects an open/high resistance in the transmission control solenoid valve 6 control circuit, for 0.3 s.

P2738

TCM detects a short to ground in the transmission control solenoid valve 6 control circuit, for 0.3 s.

P2739

TCM detects a short to power in the transmission control solenoid valve 6 control circuit, for 0.3 s.

Action Taken When the DTC Sets

P2736

- P2736 is a Type A DTC.
- TCM disables transmission adapts learning and freezes current adapt values.

cardiagn.com

- TCM commands maximum line pressure for all shifts.
- TCM request the ECM to disable auto stop function.

P2738

- P2738 is a Type A DTC.
- TCM turns Off power to all shift and pressure control solenoids.
- TCM inhibits TCC.
- 2nd gear is obtained if fault was detected with the default valve in the low state.
- 8th gear is obtained if fault was detected with the default valve in the high state.
- TCM commands maximum line pressure, for all shifts.
- TCM disables transmission adapts learning and freezes current adapt values.
- TCM commands default shift pattern and ignores all other shift requests.
- TCM inhibits Tap Up/Tap Down.
- TCM request the ECM to disable powertrain braking.
- TCM requests the ECM to limit engine torque based on transmission input speed.
- TCM request the ECM to disable neutral idle.
- TCM request the ECM to disable auto grade braking.
- TCM request the ECM to disable auto stop function.

P2739

- P2739 is a Type A DTC.
- TCM disables transmission adapts learning and freezes current values.
- TCM commands maximum line pressure for all shifts.

Conditions for Clearing the DTC

P2736, P2738 and P2739 are Type A DTCs.

Reference Information

Schematic Reference

Automatic Transmission Controls Schematics

Connector End View Reference

- **COMPONENT CONNECTOR END VIEWS - INDEX**
- **INLINE HARNESS CONNECTOR END VIEWS - INDEX**

Description and Operation

- **Electronic Component Description**
- **Transmission Component and System Description**
- **Transmission General Description**

Electrical Information Reference

- **Circuit Testing**
- **Connector Repairs**
- **Testing for Intermittent Conditions and Poor Connections**
- **Wiring Repairs**

DTC Type Reference

Powertrain Diagnostic Trouble Code (DTC) Type Definitions

cardiagn.com

Scan Tool Reference

Control Module References for scan tool information

Circuit/System Verification

1. Ignition On.
2. Verify the parameters listed below do not display Malfunction when commanding the Transmission Control Solenoid Valve 6 On and Off with a scan tool.
    - Transmission Control Solenoid Valve 6 Control Circuit Open Voltage Test Status
    - Transmission Control Solenoid Valve 6 Control Circuit Low Voltage Test Status
    - Transmission Control Solenoid Valve 6 Control Circuit High Voltage Test Status
    - **If Malfunction is displayed**

      Refer to Circuit/System Testing.

    - **If Malfunction is not displayed**
3. Operate the vehicle within the Conditions for Running the DTC. You may also operate the vehicle within the conditions that you observe from the Freeze Frame/Failure Records data.
4. Verify the DTC does not set.
    - **If the DTC sets**

      Refer to Circuit/System Testing.

    - **If the DTC does not set**
5. All OK.

Circuit/System Testing

1. Ignition Off and all vehicle systems Off. Disconnect the X175 harness connector at the T12 Automatic Transmission Assembly. It may take up to 2 min for all vehicle systems to power down, ignition On.
2. Command the high side driver 2 Off.
3. Connect a test lamp between the ignition circuit terminal 19 and ground.
4. Verify the test lamp does not illuminate.
    - **If the test lamp illuminates**
    1. Ignition Off.
    2. Disconnect the harness connector at the K71 Transmission Control Module, ignition On.
    3. Verify a test lamp does not illuminate between the ignition circuit terminal 19 and ground.
        - If the test lamp illuminates, repair the short to voltage on the circuit.
        - If the test lamp does not illuminate, replace the K71 Transmission Control Module.
    - **If the test lamp does not illuminate**
5. Ignition On.
6. Verify the test lamp turns On and Off when commanding the high side driver 2 On and Off with a scan tool.
    - **If the test lamp is always Off**
    1. Ignition Off, disconnect the harness connector at the K71 Transmission Control Module.
    2. Test for infinite resistance between the ignition circuit and ground.
        - If less than infinite resistance, repair the short to ground on the circuit.
        - If infinite resistance
    3. Test for less than 2 Ω in the ignition circuit end to end.
        - If 2 Ω or greater, repair the open/high resistance in the circuit.
        - If less than 2 Ω, replace the K71 Transmission Control Module.
    - **If the test lamp turns On and Off**

cardiagn.com

7. Remove the test lamp.
8. Test for 1.8-2.2 V between the control circuit terminal 4 and ground.
    - **If less than 1.8 V**
    1. Ignition Off, disconnect the harness connector at the K71 Transmission Control Module.
    2. Test for infinite resistance between the control circuit and ground.
        - If less than infinite resistance, repair the short to ground on the circuit.
        - If infinite resistance
    3. Test for less than 2 Ω in the control circuit end to end.
        - If 2 Ω or greater, repair the open/high resistance in the circuit.
        - If less than 2 Ω, replace the K71 Transmission Control Module.
    - **If greater than 2.2 V**
9. Ignition Off, disconnect the harness connector at the K71 Transmission Control Module, ignition On.
10. Test for less than 1 V between the control circuit and ground.
    - If 1 V or greater, repair the short to voltage on the circuit.
    - If less than 1 V, replace the K71 Transmission Control Module.
    - **If between 1.8-2.2 V**
11. Perform the Component Testing

Component Testing

1. Perform the Circuit/System Testing first.
2. Ignition Off, connect the X175 harness connector.
3. Remove the fluid pan from the T12 Automatic Transmission.
4. Disconnect the harness connector at the Q77F Transmission Control Solenoid Valve 6. Refer to **Transmission Solenoid Information** . Ignition On.
5. Command the high side driver 2 Off.
6. Connect a test lamp between terminal 2 and ground.
7. Verify the test lamp does not illuminate.
    - **If the test lamp illuminates**
    1. Disconnect the X176 harness connector.
    2. Verify a test lamp does not illuminate between the ignition circuit terminal 18 and ground.
        - If the test lamp illuminates

          Replace the automatic transmission wiring harness, electrical connector passage sleeve.

        - If the test lamp does not illuminate

          Replace the transmission control wiring harness.

    - **If the test lamp does not illuminate**
8. Verify the test lamp turns On and Off when commanding the high side driver 2 On and Off with a scan tool.
    - **If the test lamp is always Off**
    1. Ignition Off, disconnect the X176 harness connector.
    2. Test for infinite resistance in the ignition circuit between terminal 18 and ground.
        - If less than infinite resistance

          Replace the automatic transmission wiring harness, electrical connector passage sleeve.

    3. Test for less than 2 Ω in the ignition circuit end to end.
        - If 2 Ω or greater

cardiagn.com

Replace the automatic transmission wiring harness, electrical connector passage sleeve.

- If less than 2 Ω

  Replace the transmission control wiring harness.

- **If the test lamp turns On and Off**

9. Disconnect the test lamp.
10. Test for 1.8-2.2 V between the control circuit terminal 1 and ground.
    - **If less than 1.8 V**
    1. Ignition Off, disconnect the X176 connector, ignition On.
    2. Test for 1.8-2.2 V at the control circuit terminal 8 and ground.
        - If less than 1.8 V

          Replace the automatic transmission wiring harness, electrical connector passage sleeve.

        - If between 1.8-2.2 V

          Replace the transmission control wiring harness.

    - **If greater than 2.2 V**
    1. Ignition Off, disconnect the X176 connector, ignition On.
    2. Test for 1.8-2.2 V at the control circuit terminal 8 and ground.
        - If greater than 2.2 V

          Replace the automatic transmission wiring harness, electrical connector passage sleeve.

        - If between 1.8-2.2 V

          Replace the transmission control wiring harness.

    - **If between 1.8-2.2 V**
11. Test for 4.5-5.5 Ω at 20Â°C (68Â°F) between terminal 1 and terminal 2 on the Q77F Transmission Control Solenoid Valve 6.
    - **If not between 4.5-5.5 Ω**

      Replace the Q77F Transmission Control Solenoid Valve 6.

    - **If between 4.5-5.5 Ω**
12. Test for infinite resistance on the Q77F Transmission Control Solenoid Valve 6, as listed below:
    - Solenoid terminal 1 and ground
    - Solenoid terminal 2 and ground
    - **If not infinite resistance**

      Replace the Q77F Transmission Control Solenoid Valve 6.

    - **If infinite resistance**
13. Replace the K71 Transmission Control Module.

Repair Instructions

Perform the **Diagnostic Repair Verification** after completing the repair.

- **Automatic Transmission Wiring Harness Replacement (Electrical Connector Passage Sleeve)**
- **Solenoid Valve Characterization Reprogramming**

cardiagn.com

- Transmission Control Wiring Harness Replacement (M5N)
- Transmission Fluid Pan and Filter Assembly Removal
- Perform the Transmission Service Fast Learn Procedure following all transmission related repairs.
- Refer to K71 Transmission Control Module: Programming and Setup

DTC P27A7-P27AD: TRANSMISSION CONTROL SOLENOID VALVE CALIBRATION INCORRECT

Diagnostic Instructions

- Perform the Diagnostic System Check - Vehicle prior to using this diagnostic procedure.
- Review Strategy Based Diagnosis for an overview of the diagnostic approach.
- Diagnostic Procedure Instructions provides an overview of each diagnostic category.

DTC Descriptors

DTC P27A7

Transmission Control Solenoid Valve 1 Calibration Incorrect

DTC P27A8

Transmission Control Solenoid Valve 2 Calibration Incorrect

DTC P27A9

Transmission Control Solenoid Valve 3 Calibration Incorrect

DTC P27AA

Transmission Control Solenoid Valve 4 Calibration Incorrect

DTC P27AB

Transmission Control Solenoid Valve 5 Calibration Incorrect

DTC P27AC

Transmission Control Solenoid Valve 6 Calibration Incorrect

DTC P27AD

Transmission Control Solenoid Valve 7 Calibration Incorrect

Circuit/System Description

The transmission control solenoids in this transmission require unique electrical current vs. oil pressure performance matching data values in order to function at maximum performance and efficiency. This data is programmed and stored in the vehicle's transmission control module (TCM). When a transmission assembly, transmission control solenoids or TCM is replaced, the TCM must be programmed with the new or existing solenoid performance data.

Conditions for Running the DTC

- Ignition On.
- TCM has completed initialization.

Conditions for Setting the DTC

P27A7

Transmission control solenoid valve 1 matching performance data is not programmed into the TCM.

cardiagn.com

P27A8

Transmission control solenoid valve 2 matching performance data is not programmed into the TCM.

P27A9

Transmission control solenoid valve 3 matching performance data is not programmed into the TCM.

P27AA

Transmission control solenoid valve 4 matching performance data is not programmed into the TCM.

P27AB

Transmission control solenoid valve 5 matching performance data is not programmed into the TCM.

P27AC

Transmission control solenoid valve 6 matching performance data is not programmed into the TCM.

P27AD

Transmission control solenoid valve 7 matching performance data is not programmed into the TCM.

Action Taken When the DTC Sets

- P27A7, P27A8, P27A9, P27AA, P27AB, P27AC or P27AD are Type A DTCs.
- TCM will default to predetermined solenoid current vs. pressure values stored in memory.

Conditions for Clearing the DTC

P27A7, P27A8, P27A9, P27AA, P27AB, P27AC or P27AD are Type A DTCs.

Diagnostic Aids

Obtain the replacement solenoid information code for all solenoids that were replaced, from the TIS Service Information web site.

Reference Information

Schematic Reference

Automatic Transmission Controls Schematics

Connector End View Reference

COMPONENT CONNECTOR END VIEWS - INDEX

Description and Operation

Electronic Component Description

Electrical Information Reference

- **Circuit Testing**
- **Connector Repairs**
- **Testing for Intermittent Conditions and Poor Connections**
- **Wiring Repairs**

DTC Type Reference

Powertrain Diagnostic Trouble Code (DTC) Type Definitions

Scan Tool Reference

cardiagn.com

Control Module References for scan tool information

Circuit/System Verification

NOTE: **P27A7, P27AE, P27A9, P27AA, P27AB, P27AC and P27AD are informational DTCs.**

NOTE: **Solenoid performance data is only available for the variable force solenoids, not the On/Off solenoids.**

1. If the T12 Automatic Transmission Assembly was replaced.
   - Obtain the solenoid performance data for the variable force solenoids from the TIS Service Information web site. Program the data into the existing K71 Transmission Control Module. Perform the Transmission Service Fast Learn Procedure.
   - If the T12 Automatic Transmission was not replaced.
2. If the K71 Transmission Control Module was replaced.
   - Obtain the existing solenoid performance data for the variable force solenoids from the TIS Service Information web site. Program the data into the new K71 Transmission Control Module. Perform the Transmission Service Fast Learn Procedure.
   - If the K71 Transmission Control Module was not replaced.
3. If 1 or more of the variable force solenoids were replaced.
   - Obtain the solenoid performance data form the TIS Service Information web site for the new solenoids. Program the data into the existing K71 Transmission Control Module. Perform the Transmission Service Fast Learn Procedure.

Repair Instructions

Perform the **Diagnostic Repair Verification** after completing the repair.

- Perform the **Solenoid Valve Characterization Reprogramming**.
- Perform the **Transmission Service Fast Learn Procedure** following all transmission related repairs.
- Refer to **K71 Transmission Control Module: Programming and Setup**

DTC P2808 OR P2809: TORQUE CONVERTER CLUTCH (TCC) SYSTEM STUCK OFF/ON

Diagnostic Instructions

- Perform the **Diagnostic System Check - Vehicle** prior to using this diagnostic procedure.
- Review **Strategy Based Diagnosis** for an overview of the diagnostic approach.
- **Diagnostic Procedure Instructions** provides an overview of each diagnostic category.

DTC Descriptors

NOTE: **The DTCs listed below set due to a transmission hydraulic/mechanical condition. Perform the Circuit/System Verification and Circuit/System Testing to identify the cause.**

DTC P2808

Torque Converter Clutch (TCC) System Stuck Off - The TCC did not apply due to a hydraulic/mechanical condition.

DTC P2809

Torque Converter Clutch (TCC) System Stuck On - The TCC did not release due to a hydraulic/mechanical condition.

Circuit/System Description

cardiagn.com

The transmission control solenoid valve 7 is a high pressure, normally low, variable force solenoid. This solenoid is also referred to as, the torque converter clutch (TCC) control solenoid valve assembly. The transmission control solenoid valve 7 regulates and directs pressurized oil to the TCC regulator valve, which regulates and directs pressurized oil on to the TCC control valve and finally to the torque converter to apply the clutch. The transmission control module (TCM) uses information from the transmission speed sensors along with serial data information from other control modules to calculate torque converter slip speed.

Conditions for Running the DTC

P2808

- DTC P0101, P0102, P0103, P0106, P0107, P0108, P0171, P0172, P0174, P0175, P0201, P0202, P0203, P0204, P0205, P0206, P0207, P0208, P0300, P0301, P0302, P0303, P0304, P0305, P0306, P0307, P0308, P0716, P0717, P0722, P0723, P077C, P077D, P07BF, P07C0, P2808, P2812, P2814 or P2815 is not set.
- Battery voltage is between 9-32 V.
- Ignition voltage is between 9-32 V.
- Engine torque is between 50-8191 N.m (37-6041 lb ft).
- Throttle position is between 8-100%.
- Transmission fluid temperature is 130Â°C (226Â°F) or less.
- TCC is commanded on.
- Transmission has attained 4th gear.

P2809

- DTC P0101, P0102, P0103, P0106, P0107, P0108, P0171, P0172, P0174, P0175, P0201, P0202, P0203, P0204, P0205, P0206, P0207, P0208, P0300, P0301, P0302, P0303, P0304, P0305, P0306, P0307, P0308, P0716, P0717, P0722, P0723, P077C, P077D, P07BF, P07C0, P2809, P2812, P2814 or P2815 is not set.
- Battery voltage is between 9-32 V.
- Ignition voltage is between 9-32 V.
- Engine torque is between 55-800 N.m (41-590 lb ft).
- Engine speed is 550 RPM or less.
- Throttle position is between 4% or greater.
- Vehicle speed is 45 km/h (28 mph) or less.
- Transmission fluid temperature is -6.667-130Â°C (20-226Â°F) or less.
- Transmission is in drive range.
- TCC is commanded Off.
- TCC slip speed is 300 RPM or less.

Conditions for Setting the DTC

P2808

TCM has detected a high TCC slip speed with TCC commanded On.

P2809

TCM has detected a low TCC slip speed with TCC commanded Off.

Action Taken When the DTC Sets

P2808

- P2808 is a Type B DTC.
- TCM disables transmission adapts learning and freezes current adapt values.
- TCM inhibits TCC.

cardiagn.com

- TCM inhibits maximum gear when in hot mode.
- TCM inhibits maximum gear when not in hot mode.
- TCM commands hot mode transmission shifting pattern.

P2809

- P2809 is a Type A DTC.
- TCM disables transmission adapts learning and freezes current adapt values.
- TCM commands TCC apply.
- TCM commands hot mode transmission shifting pattern.
- TCM limits the amount of line pressure.
- TCM requests the ECM to limit amount of torque according to each gear ratio.
- TCM requests the ECM disable neutral idle.
- TCM requests the ECM to disable auto stop function.

Conditions for Clearing the DTC

- P2808 is a Type B DTC.
- P2809 is a Type A DTC.

Reference Information

Schematic Reference

Automatic Transmission Controls Schematics

Connector End View Reference

- **COMPONENT CONNECTOR END VIEWS - INDEX**
- **INLINE HARNESS CONNECTOR END VIEWS - INDEX**

Description and Operation

- **Drive Range, First Gear**
- **Drive Range, Second Gear**
- **Drive Range, Third Gear**
- **Drive Range, Fourth Gear**
- **Drive Range, Fifth Gear**
- **Drive Range, Sixth Gear**
- **Drive Range, Seventh Gear**
- **Drive Range, Eighth Gear**
- **Electronic Component Description**
- **Neutral - Engine Running**
- **Park - Engine Running**
- **Reverse**
- **Transmission Component and System Description**
- **Transmission General Description**

Electrical Information Reference

- **Circuit Testing**
- **Connector Repairs**
- **Testing for Intermittent Conditions and Poor Connections**
- **Wiring Repairs**

DTC Type Reference

cardiagn.com

Powertrain Diagnostic Trouble Code (DTC) Type Definitions

Scan Tool Reference

Control Module References for scan tool information

Circuit/System Verification

1. Verify the transmission fluid level and condition is correct. Refer to **Transmission Fluid Level and Condition Check**.
   - **If the transmission fluid and condition is not correct**

     Repair as necessary.

   - **If the transmission fluid level and condition is correct**
2. Ignition On, clear the DTCs from the K71 Transmission Control Module with a scan tool.
3. Verify the transmission operation performs as indicated in the road test instructions and DTC P2808 or P2809 did not set. Refer to **Road Test**.
   - **If DTC P2808 or P2809 did set and the transmission does not shift correctly**

     Refer to Circuit/System Testing.

   - **If DTC P2808 or P2809 did not set and the transmission shifts correctly**
4. Operate the vehicle within the Conditions for Running the DTC. You may also operate the vehicle within the conditions that you observe from the Freeze Frame/Failure Records data.
5. Verify the DTC does not set.
   - **If the DTC sets**

     Refer to Circuit/System Testing.

   - **If the DTC does not set**
6. All OK.

Circuit/System Testing

1. Verify the conditions listed below do not exist. Carefully inspect each component for that condition. Repair or replace as necessary.

P2808 or P2809 - Control Valve Solenoid Body

Transmission Control Solenoid Valve 7 stuck/sticking-debris, binding, damage valve.

P2808 or P2809 - Control Valve Solenoid Body

TCC Control Valve stuck/sticking-debris, binding damage valve.

P2808 or P2809 - Control Valve Upper Body Assembly

- TCC regulator valve stuck/sticking - debris, binding, damage valve, scored bore.
- Converter control valve stuck/sticking - debris, binding, damage valve, scored bore.

P2808 or P2809 - Torque Converter Assembly

Torque Converter clutch piston seals missing or damaged.

P2808 or P2809 - Torque Converter

Fluid circuit - plugged with debris or leaks due to missing or damage O-rings, seals or gaskets.

Repair Instructions

Perform the **Diagnostic Repair Verification** after completing the repair.

cardiagn.com

- Control Valve Body Assembly Disassemble
- Control Valve Body Replacement
- Solenoid Valve Characterization Reprogramming
- Transmission Solenoid Information
- Perform the Transmission Service Fast Learn Procedure following all transmission related repairs.
- Refer to K71 Transmission Control Module: Programming and Setup

DTC P2812, P2814 OR P2815: TRANSMISSION CONTROL SOLENOID VALVE 7 CONTROL CIRCUIT

Diagnostic Instructions

- Perform the Diagnostic System Check - Vehicle prior to using this diagnostic procedure.
- Review Strategy Based Diagnosis for an overview of the diagnostic approach.
- Diagnostic Procedure Instructions provides an overview of each diagnostic category.

DTC Descriptors

DTC P2812

Transmission Control Solenoid Valve 7 Control Circuit Open

DTC P2814

Transmission Control Solenoid Valve 7 Control Circuit Low Voltage

DTC P2815

Transmission Control Solenoid Valve 7 Control Circuit High Voltage

Diagnostic Fault Information

Circuits	Short to Ground	Open/High Resistance	Short to Voltage	Signal Performance
Ignition	P2760	P2761	P2761	-
Control	P2814	P2812	P2815	-

Typical Scan Tool Data

Transmission Control Solenoid Valve 7 Control Circuit Open Test Status

Circuits	Short to Ground	Open	Short to Voltage
Operating Conditions: Ignition On **Parameter Normal Range:** OK or Not Run			
Ignition	Malfunction	Malfunction	Malfunction
Control	-	Malfunction	-

Transmission Control Solenoid Valve 7 Control Circuit Low Voltage Test Status

Circuits	Short to Ground	Open	Short to Voltage
Operating Conditions: Ignition On **Parameter Normal Range:** OK or Not Run			
Ignition	Malfunction	Malfunction	Malfunction
Control	Malfunction	-	-

Transmission Control Solenoid Valve 7 Control Circuit High Voltage Test Status

Circuits	Short to Ground	Open	Short to Voltage
Operating Conditions: Ignition On **Parameter Normal Range:** OK or Not Run			
Ignition	Malfunction	Malfunction	Malfunction

cardiagn.com

Circuits	Short to Ground	Open	Short to Voltage
Control	-	-	Malfunction

Circuit/System Description

The transmission control solenoid valve 7 is a high pressure, normally low, variable force solenoid valve. This solenoid is also referred to as, torque converter clutch (TCC) control solenoid valve assembly. The transmission control module (TCM) high side driver 2, supplies 12 V to the transmission control solenoid valve 7. A low side driver circuit in the TCM is pulsed width modulated to vary the current to the solenoid. If excessive current flow is detected, the high side driver 2 will turn Off. When the circuit fault is corrected, the high side driver 2 will reset.

Conditions for Running the DTC

- Ignition On.
- High side driver 2 On.
- Battery voltage is between 11-32 V for 1 s or greater.
- TCM power mode state is in accessory or ignition.

Conditions for Setting the DTC

P2812

TCM detects an open/high resistance in the transmission control solenoid valve 7 control circuit, for 0.3 s.

P2814

TCM detects a short to ground in the transmission control solenoid valve 7 control circuit, for 0.3 s.

P2815

TCM detects a short to power in the transmission control solenoid valve 7 control circuit, for 0.3 s.

Action Taken When the DTC Sets

P2812 or P2815

- P2812 or P2815 is a Type A DTC.
- TCM disables transmission adapts learning and freezes current adapt values.
- TCM inhibits TCC.
- TCM inhibits maximum gear when in hot mode.
- TCM inhibits maximum gear when not in hot mode.

P2814

- P2814 is a Type A DTC.
- TCM turns Off power to all shift and pressure control solenoids.
- TCM inhibits TCC.
- 2nd gear is obtained if fault was detected with the default valve in the low state.
- 8th gear is obtained if fault was detected with the default valve in the high state.
- TCM commands maximum line pressure for all shifts.
- TCM disables transmission adapts learning and freezes current adapt values.
- TCM commands default shift pattern and ignores all other shift requests.
- TCM commands hot mode transmission shifting pattern.
- TCM inhibits Tap Up/Tap Down.
- TCM request the ECM to disable powertrain braking.
- TCM requests the ECM to limit amount of torque according to each gear ratio.

cardiagn.com

- TCM request the ECM to disable neutral idle.
- TCM request the ECM to disable auto grade braking.
- TCM limits the amount of line pressure.
- TCM request the ECM to disable auto stop function.

Conditions for Clearing the DTC

P2812, P2814 and P2815 are Type A DTCs.

Reference Information

Schematic Reference

Automatic Transmission Controls Schematics

Connector End View Reference

- **COMPONENT CONNECTOR END VIEWS - INDEX**
- **INLINE HARNESS CONNECTOR END VIEWS - INDEX**

Description and Operation

- **Electronic Component Description**
- **Transmission Component and System Description**
- **Transmission General Description**

Electrical Information Reference

- **Circuit Testing**
- **Connector Repairs**
- **Testing for Intermittent Conditions and Poor Connections**
- **Wiring Repairs**

DTC Type Reference

Powertrain Diagnostic Trouble Code (DTC) Type Definitions

Scan Tool Reference

Control Module References for scan tool information

Circuit/System Verification

1. Ignition On.
2. Verify the parameters listed below do not display Malfunction when commanding the Transmission Control Solenoid Valve 7 On and Off with a scan tool.
    - Transmission Control Solenoid Valve 7 Control Circuit Open Voltage Test Status
    - Transmission Control Solenoid Valve 7 Control Circuit Low Voltage Test Status
    - Transmission Control Solenoid Valve 7 Control Circuit High Voltage Test Status
    - **If Malfunction is displayed**

      Refer to Circuit/System Testing.

    - **If Malfunction is not displayed**
3. Operate the vehicle within the Conditions for Running the DTC. You may also operate the vehicle within the conditions that you observe from the Freeze Frame/Failure Records data.
4. Verify the DTC does not set.
    - **If the DTC sets**

      Refer to Circuit/System Testing.

cardiagn.com

- **If the DTC does not set**

5. All OK.

Circuit/System Testing

1. Ignition Off and all vehicle systems Off. Disconnect the X175 harness connector at the T12 Automatic Transmission Assembly. It may take up to 2 min for all vehicle systems to power down, ignition On.
2. Command the high side driver 2 Off.
3. Connect a test lamp between the ignition circuit terminal 19 and ground.
4. Verify the test lamp does not illuminate.
    - **If the test lamp illuminates**
    1. Ignition Off.
    2. Disconnect the harness connector at the K71 Transmission Control Module, ignition On.
    3. Verify a test lamp does not illuminate between the ignition circuit terminal 19 and ground.
        - If the test lamp illuminates, repair the short to voltage on the circuit.
        - If the test lamp does not illuminate, replace the K71 Transmission Control Module.
    - **If the test lamp does not illuminate**
5. Ignition On.
6. Verify the test lamp turns On and Off when commanding the high side driver 2 On and Off with a scan tool.
    - **If the test lamp is always Off**
    1. Ignition Off, disconnect the harness connector at the K71 Transmission Control Module.
    2. Test for infinite resistance between the ignition circuit and ground.
        - If less than infinite resistance, repair the short to ground on the circuit.
        - If infinite resistance
    3. Test for less than 2 Ω in the high side driver 2 circuit end to end.
        - If 2 Ω or greater, repair the open/high resistance in the circuit.
        - If less than 2 Ω, replace the K71 Transmission Control Module.
    - **If the test lamp turns On and Off**
7. Remove the test lamp.
8. Test for 1.8-2.2 V between the control circuit terminal 3 and ground.
    - **If less than 1.8 V**
    1. Ignition Off, disconnect the harness connector at the K71 Transmission Control Module.
    2. Test for infinite resistance between the control circuit and ground.
        - If less than infinite resistance, repair the short to ground on the circuit.
        - If infinite resistance
    3. Test for less than 2 Ω in the control circuit end to end.
        - If 2 Ω or greater, repair the open/high resistance in the circuit.
        - If less than 2 Ω, replace the K71 Transmission Control Module.
    - **If greater than 2.2 V**
9. Ignition Off, disconnect the harness connector at the K71 Transmission Control Module, ignition On.
10. Test for less than 1 V between the control circuit and ground.
    - If 1 V or greater, repair the short to voltage on the circuit.
    - If less than 1 V, replace the K71 Transmission Control Module.
    - **If between 1.8-2.2 V**
11. Perform the Component Test.

Component Testing

1. Perform the Circuit/System Testing first.

carsign.com

2. Ignition Off, connect the X175 harness connector.
3. Remove the fluid pan from the T12 Automatic Transmission.
4. Disconnect the harness connector at the Q77G Transmission Control Solenoid Valve 7. Refer to **Transmission Solenoid Information** . Ignition On.
5. Command the high side driver 2 Off.
6. Connect a test lamp between terminal 2 and ground.
7. Verify the test lamp does not illuminate.
    - **If the test lamp illuminates**
    1. Disconnect the X176 harness connector.
    2. Verify a test lamp does not illuminate between the ignition circuit terminal 18 and ground.
        - If the test lamp illuminates

          Replace the automatic transmission wiring harness, electrical connector passage sleeve.

        - If the test lamp does not illuminate

          Replace the transmission control wiring harness.

    - **If the test lamp does not illuminate**
8. Verify the test lamp turns On and Off when commanding the high side driver 2 On and Off with a scan tool.
    - **If the test lamp is always Off**
    1. Ignition Off, disconnect the X176 harness connector.
    2. Test for infinite resistance in the ignition circuit between terminal 18 and ground.
        - If less than infinite resistance

          Replace the automatic transmission wiring harness, electrical connector passage sleeve.

    3. Test for less than 2 Ω in the ignition circuit end to end.
        - If 2 Ω or greater

          Replace the automatic transmission wiring harness, electrical connector passage sleeve.

        - If less than 2 Ω

          Replace the transmission control wiring harness.

    - **If the test lamp turns On and Off**
9. Disconnect the test lamp.
10. Test for 1.8-2.2 V between the control circuit terminal 1 and ground.
    - **If less than 1.8 V**
    1. Ignition Off, disconnect the X176 connector, ignition On.
    2. Test for 1.8-2.2 V at the control circuit terminal 14 and ground.
        - If less than 1.8 V

          Replace the automatic transmission wiring harness, electrical connector passage sleeve.

        - If between 1.8-2.2 V

          Replace the transmission control wiring harness.

    - **If greater than 2.2 V**
    1. Ignition Off, disconnect the X176 connector, ignition On.

cardiagn.com

2. Test for 1.8-2.2 V at the control circuit terminal 14 and ground.
    - If greater than 2.2 V

      Replace the automatic transmission wiring harness, electrical connector passage sleeve.

    - If between 1.8-2.2 V

      Replace the transmission control wiring harness.

- **If between 1.8-2.2 V**

11. Test for 4.5-5.5 Ω at 20Â°C (68Â°F) between terminal 1 and terminal 2 on the Q77G Transmission Control Solenoid Valve 7.
    - **If not within the specified range**

      Replace the Q77G Transmission Control Solenoid Valve 7.

    - **If within the specified range**
12. Test for infinite resistance on the Q77G Transmission Control Solenoid Valve 7, as listed below:
    - Solenoid terminal 1 and ground
    - Solenoid terminal 2 and ground
    - **If not infinite resistance**

      Replace the Q77G Transmission Control Solenoid Valve 7.

    - **If infinite resistance**
13. Replace the K71 Transmission Control Module.

Repair Instructions

Perform the **Diagnostic Repair Verification** after completing the repair.

- **Automatic Transmission Wiring Harness Replacement (Electrical Connector Passage Sleeve)**
- **Solenoid Valve Characterization Reprogramming**
- **Transmission Control Wiring Harness Replacement (M5N)**
- **Transmission Fluid Pan and Filter Assembly Removal**
- Perform the **Transmission Service Fast Learn Procedure** following all transmission related repairs.
- Refer to **K71 Transmission Control Module: Programming and Setup**

DTC P2817 OR P2818: TRANSMISSION CONTROL SOLENOID VALVE 8 STUCK OFF/ON

Diagnostic Instructions

- Perform the **Diagnostic System Check - Vehicle** prior to using this diagnostic procedure.
- Review **Strategy Based Diagnosis** for an overview of the diagnostic approach.
- **Diagnostic Procedure Instructions** provides an overview of each diagnostic category.

DTC Descriptors

NOTE: **The DTCs listed below set due to a transmission hydraulic/mechanical condition. Perform the Circuit/System Verification and Circuit/System Testing to identify the cause.**

DTC P2817

Transmission Control Solenoid Valve 8 Stuck Off - During the 3-4 upshift the transmission did not obtain 4th gear, due to a hydraulic/mechanical condition.

cardiagn.com

DTC P2818

Transmission Control Solenoid Valve 8 Stuck On - The TCC RPM slip speed is to low when commanded on in park position due to a hydraulic/mechanical condition.

Circuit/System Description

The transmission control solenoid valve 8 is a normally closed, On - Off solenoid. The transmission control solenoid valve 8 directs pressurized oil to the default valve. The transmission control module (TCM) uses information from the transmission speed sensors along with serial data information from other control modules to calculate the correct gear ratio and apply the correct clutch assemblies.

Conditions for Running the DTC

P2817

- DTC P0101, P0102, P0103, P0106, P0107, P0108, P0171, P0172, P0174, P0175, P0201, P0202, P0203, P0204, P0205, P0206, P0207, P0208, P0300, P0301, P0302, P0303, P0304, P0305, P0306, P0307, P0308, P0716, P0717, P0722, P0723, P077C, P077D, P07BF, P07C0, P1824, P182A, P182B, P182C, P182D, P182E, P182F, P1838, P1839, P1840, P1841, P18B5, P18B6, P18B7, P18B8, P18B9, P18BA, P18BB, P18BC, P18BD, P18BE, P18BF, P18C0, P18C1, P18C2, P18C3, P1915 or P2534 is not set.
- High side driver 1 is On.
- High side driver 2 is On.
- Battery voltage is between 9-32 V.
- Ignition voltage is between 9-32 V.
- Accelerator pedal position is 1% or greater.
- Transmission output speed is 100 RPM or greater.
- Transmission is not in park or neutral.

P2818

- DTC P0716, P0717, P07BF, P07C0, P2812, P2814 or P2815 is not set.
- Battery voltage is between 9-32 V.
- Ignition voltage is between 9-32 V.
- Engine speed is between 400-900 RPM.
- Transmission is in park.
- Transmission temperature is between 0-40Â°C (32-104Â°F).

cardiagn.com

Conditions for Setting the DTC

P2817

During the 3-4 upshift the transmission did not obtain 4th gear, due to the transmission control solenoid valve 8, stuck in the Off position.

P2818

The torque converter clutch (TCC) slip speed obtains a low RPM value when the TCC is commanded on in park position, due to the transmission control solenoid valve 8, stuck in the On position.

Action Taken When the DTC Sets

P2817

- P2817 is a Type A DTC.
- TCM disables transmission adapts learning and freezes current adapt values.
- TCM commands default shift pattern and ignores all other shift requests.
- TCM inhibits Tap Up/Tap Down.
- TCM inhibits TCC.

- TCM requests the ECM to disable powertrain braking.
- TCM requests the ECM to disable neutral idle.
- TCM requests the ECM to disable auto grade braking.
- TCM requests the ECM to disable auto stop function.
- Transmission shifts to 3rd gear.
- Transmission reverse gear is available.

P2818

- P2818 is a Type B DTC.
- TCM disables transmission adapts learning and freezes current adapt values.
- TCM inhibits TCC.

Conditions for Clearing the DTC

- P2817 is a Type A DTC.
- P2818 is a Type B DTC.

Reference Information

Schematic Reference

Automatic Transmission Controls Schematics

Connector End View Reference

- **COMPONENT CONNECTOR END VIEWS - INDEX**
- **INLINE HARNESS CONNECTOR END VIEWS - INDEX**

Description and Operation

- **Drive Range, First Gear**
- **Drive Range, Second Gear**
- **Drive Range, Third Gear**
- **Drive Range, Fourth Gear**
- **Drive Range, Fifth Gear**
- **Drive Range, Sixth Gear**
- **Drive Range, Seventh Gear**
- **Drive Range, Eighth Gear**
- **Electronic Component Description**
- **Neutral - Engine Running**
- **Park - Engine Running**
- **Reverse**
- **Transmission Component and System Description**
- **Transmission General Description**

Electrical Information Reference

- **Circuit Testing**
- **Connector Repairs**
- **Testing for Intermittent Conditions and Poor Connections**
- **Wiring Repairs**

DTC Type Reference

Powertrain Diagnostic Trouble Code (DTC) Type Definitions

cardiagn.com

Scan Tool Reference

Control Module References for scan tool information

Circuit/System Verification

1. Verify the transmission fluid level and condition is correct. Refer to **Transmission Fluid Level and Condition Check**.
   - **If the transmission fluid and condition is not correct**

     Repair as necessary.

   - **If the transmission fluid level and condition is correct**
2. Ignition On, clear the TCM DTCs with a scan tool.
3. Verify the transmission operation performs as indicated in the road test instructions and DTC P2817 or P2818 did not set. Refer to **Road Test**.
   - **If DTC P2817 or P2818 did set and the transmission does not shift correctly**

     Refer to Circuit/System Testing.

   - **If DTC P2817 or P2818 did not set and the transmission shifts correctly**
4. Operate the vehicle within the Conditions for Running the DTC. You may also operate the vehicle within the conditions that you observe from the Freeze Frame/Failure Records data.
5. Verify the DTC does not set.
   - **If the DTC sets**

     Refer to Circuit/System Testing.

   - **If the DTC does not set**
6. All OK.

Circuit/System Testing

1. Verify the conditions listed below do not exist. Carefully inspect each component for that condition. Repair or replace as necessary.

P2817 or P2818 - Control Valve Solenoid Body

Transmission Control Solenoid Valve 8 stuck/sticking-debris, binding, damage valve.

P2817 or P2818 - Control Valve Upper Body

Default valve stuck/sticking - debris, binding, damage valve, scored bore.

P2817 or P2818 - Default Valve

Fluid circuits - plugged with debris or leaks due to missing or damage O-rings, seals or gaskets.

Repair Instructions

Perform the **Diagnostic Repair Verification** after completing the repair.

- **Control Valve Body Assembly Disassemble**
- **Control Valve Body Replacement**
- **Solenoid Valve Characterization Reprogramming**
- **Transmission Solenoid Information**
- Perform the **Transmission Service Fast Learn Procedure** following all transmission related repairs.
- Refer to **K71 Transmission Control Module: Programming and Setup**

cardiagn.com

DTC P281D OR P281E: TRANSMISSION CONTROL SOLENOID VALVE 8 CONTROL CIRCUIT

Diagnostic Instructions

- Perform the **Diagnostic System Check - Vehicle** prior to using this diagnostic procedure.
- Review **Strategy Based Diagnosis** for an overview of the diagnostic approach.
- **Diagnostic Procedure Instructions** provides an overview of each diagnostic category.

DTC Descriptors

DTC P281D

Transmission Control Solenoid Valve 8 Control Circuit Low Voltage

DTC P281E

Transmission Control Solenoid Valve 8 Control Circuit High Voltage

Diagnostic Fault Information

Circuits	Short to Ground	Open/High Resistance	Short to Voltage	Signal Performance
Ignition	P0658	P0659	P0659	-
Control	P281D	P281D	P281E	-

Typical Scan Tool Data

Transmission Control Solenoid Valve 8 Control Circuit Open Test Status

Circuits	Short to Ground	Open	Short to Voltage
Operating Conditions: Ignition On **Parameter Normal Range:** OK or Not Run			
Ignition	Malfunction	Malfunction	Malfunction
Control	-	Malfunction	-

Transmission Control Solenoid Valve 8 Control Circuit Low Voltage Test Status

Circuits	Short to Ground	Open	Short to Voltage
Operating Conditions: Ignition On **Parameter Normal Range:** OK or Not Run			
Ignition	Malfunction	Malfunction	Malfunction
Control	Malfunction	-	-

Transmission Control Solenoid Valve 8 Control Circuit High Voltage Test Status

Circuits	Short to Ground	Open	Short to Voltage
Operating Conditions: Ignition On **Parameter Normal Range:** OK or Not Run			
Ignition	Malfunction	Malfunction	Malfunction
Control	-	-	Malfunction

Circuit/System Description

The transmission control solenoid valve 8 is a normally closed, On/Off solenoid. This solenoid is also referred to as the default solenoid valve. The transmission control module (TCM) high side driver 1, supplies 12 V to the transmission control solenoid valve 8. A low side driver circuit in the TCM turns the solenoid On/Off. If excessive current flow is detected, the high side 1 will turn Off. When the circuit fault is corrected, the high side driver 1 will reset.

Conditions for Running the DTC

- Ignition On.
- High side driver 2 On.

- Battery voltage is between 11-32 V for 1 s or greater.
- TCM power mode state is in accessory or ignition.

Conditions for Setting the DTC

P281D

TCM detects a short to ground in the transmission control solenoid valve 8 control circuit, for 0.3 s.

P281E

TCM detects a short to power in the transmission control solenoid valve 8 control circuit, for 0.3 s.

Action Taken When the DTC Sets

P281D

- P281D is a Type A DTC.
- TCM disables transmission adapts learning and freezes current adapt values.
- TCM commands default shift pattern and ignores all other shift requests.
- TCM inhibits Tap up/Tap down.
- TCM inhibits TCC.
- TCM request the ECM to disable powertrain braking.
- TCM request the ECM to disable neutral idle.
- TCM request the ECM to disable auto grade braking.
- TCM request the ECM to disable auto stop function.
- Transmission shifts to 4th gear.
- Transmission reverse gear is available.

P281E

- P281E is a Type A DTC.
- TCM disables transmission adapts learning and freezes current adapt values.
- TCM commands default shift pattern and ignores all other shift requests.
- TCM inhibits Tap up/Tap down.
- TCM inhibits TCC.
- TCM request the ECM to disable powertrain braking.
- TCM request the ECM to disable neutral idle.
- TCM request the ECM to disable auto grade braking.
- TCM request the ECM to disable auto stop function.
- Transmission shifts to 3rd gear.
- Transmission reverse gear is available.

Conditions for Clearing the DTC

P281D and P281E are Type A DTCs.

Reference Information

Schematic Reference

Automatic Transmission Controls Schematics

Connector End View Reference

- **COMPONENT CONNECTOR END VIEWS - INDEX**
- **INLINE HARNESS CONNECTOR END VIEWS - INDEX**

cardiagn.com

Description and Operation

- **Electronic Component Description**
- **Transmission Component and System Description**
- **Transmission General Description**

Electrical Information Reference

- **Circuit Testing**
- **Connector Repairs**
- **Testing for Intermittent Conditions and Poor Connections**
- **Wiring Repairs**

DTC Type Reference

Powertrain Diagnostic Trouble Code (DTC) Type Definitions

Scan Tool Reference

Control Module References for scan tool information

Circuit/System Verification

1. Ignition On.
2. Verify the parameters listed below do not display Malfunction when commanding the Transmission Control Solenoid Valve 8 On and Off with a scan tool.
   - Transmission Control Solenoid Valve 8 Control Circuit Open Voltage Test Status
   - Transmission Control Solenoid Valve 8 Control Circuit Low Voltage Test Status
   - Transmission Control Solenoid Valve 8 Control Circuit High Voltage Test Status
   - **If Malfunction is displayed**

     Refer to Circuit/System Testing.

   - **If Malfunction is not displayed**
3. Operate the vehicle within the Conditions for Running the DTC. You may also operate the vehicle within the conditions that you observe from the Freeze Frame/Failure Records data.
4. Verify the DTC does not set.
   - **If the DTC sets**

     Refer to Circuit/System Testing.

   - **If the DTC does not set**
5. All OK.

Circuit/System Testing

1. Ignition Off and all vehicle systems Off. Disconnect the X175 harness connector at the T12 Automatic Transmission Assembly. It may take up to 2 min for all vehicle systems to power down, ignition On.
2. Command the high side driver 1 Off.
3. Connect a test lamp between the ignition circuit terminal 18 and ground.
4. Verify the test lamp does not illuminate.
   - **If the test lamp illuminates**
   1. Ignition Off.
   2. Disconnect the harness connector at the K71 Transmission Control Module, ignition On.
   3. Verify a test lamp does not illuminate between the ignition circuit terminal 18 and ground.
      - If the test lamp illuminates, repair the short to voltage on the circuit.

cardiagn.com

- If the test lamp does not illuminate, replace the K71 Transmission Control Module.

- **If the test lamp does not illuminate**

5. Ignition On.
6. Verify the test lamp turns On and Off when commanding the high side driver 1 On and Off with a scan tool.
    - **If the test lamp is always Off**
    1. Ignition Off, disconnect the harness connector at the K71 Transmission Control Module.
    2. Test for infinite resistance between the ignition circuit and ground.
        - If less than infinite resistance, repair the short to ground on the circuit.
        - If infinite resistance
    3. Test for less than 2 Ω in the ignition circuit end to end.
        - If 2 Ω or greater, repair the open/high resistance in the circuit.
    - **If less than 2 Ω**

      Replace the K71 Transmission Control Module.

    - **If the test lamp turns On and Off**
7. Remove the test lamp.
8. Test for 1.4-2.2 V between the control circuit terminal 1 and ground.
    - **If less than 1.4 V**
    1. Ignition Off, disconnect the harness connector at the K71 Transmission Control Module.
    2. Test for infinite resistance between the control circuit and ground.
        - If less than infinite resistance, repair the short to ground on the circuit.
        - If infinite resistance
    3. Test for less than 2 Ω in the control circuit end to end.
        - If 2 Ω or greater, repair the open/high resistance in the circuit.
        - If less than 2 Ω, replace the K71 Transmission Control Module.
    - **If greater than 2.2 V**
9. Ignition Off, disconnect the harness connector at the K71 Transmission Control Module, ignition On.
10. Test for less than 1 V between the control circuit and ground.
    - If 1 V or greater, repair the short to voltage on the circuit.
    - If less than 1 V, replace the K71 Transmission Control Module.
    - **If between 1.8-2.2 V**
11. Perform the Component Testing.

Component Testing

1. Perform the Circuit/System Testing first.
2. Ignition Off, connect the X175 harness connector.
3. Remove the fluid pan from the T12 Automatic Transmission.
4. Disconnect the harness connector at the Q77H Transmission Control Solenoid Valve 8. Refer to **Transmission Solenoid Information** . Ignition On.
5. Command the high side driver 1 Off.
6. Connect a test lamp between terminal 2 and ground.
7. Verify the test lamp does not illuminate.
    - **If the test lamp illuminates**
    1. Disconnect the X176 harness connector.
    2. Verify a test lamp does not illuminate between the ignition circuit terminal 4 and ground.
        - If the test lamp illuminates

cardiagn.com

Replace the automatic transmission wiring harness, electrical connector passage sleeve.

- If the test lamp does not illuminate

  Replace the transmission control wiring harness.

- **If the test lamp does not illuminate**

8. Verify the test lamp turns On and Off when commanding the high side driver 1 On and Off with a scan tool.
   - **If the test lamp is always Off**
   1. Ignition Off, disconnect the X176 harness connector.
   2. Test for infinite resistance in the ignition circuit between terminal 4 and ground.
      - If less than infinite resistance

        Replace the automatic transmission wiring harness, electrical connector passage sleeve.

   3. Test for less than 2 Ω in the ignition circuit end to end.
      - If 2 Ω or greater

        Replace the automatic transmission wiring harness, electrical connector passage sleeve.

      - If less than 2 Ω

        Replace the transmission control wiring harness.

   - **If the test lamp turns On and Off**
9. Disconnect the test lamp.
10. Test for 1.8-2.2 V between the control circuit terminal 1 and ground.
    - **If less than 1.8 V**
    1. Ignition Off, disconnect the X176 connector, ignition On.
    2. Test for 1.8-2.2 V at the control circuit terminal 1 and ground.
       - If less than 1.8 V

         Replace the automatic transmission wiring harness, electrical connector passage sleeve.

       - If between 1.8-2.2 V

         Replace the transmission control wiring harness.

    - **If greater than 2.2 V**
    1. Ignition Off, disconnect the X176 connector, ignition On.
    2. Test for 1.8-2.2 V at the control circuit terminal 1 and ground.
       - If greater than 2.2 V

         Replace the automatic transmission wiring harness, electrical connector passage sleeve.

       - If between 1.8-2.2 V

         Replace the transmission control wiring harness.

    - **If between 1.8-2.2 V**
11. Test for 11.0 - 13.0 Ω at 20Â°C (68Â°F) between terminal 1 and terminal 2 on the Q77H Transmission Control Solenoid Valve 8.
    - **If not between 11.0 - 13.0 Ω**

cardiagn.com

Replace the Q77H Transmission Control Solenoid Valve 8.

- **If between 11.0 - 13.0 Ω**

12. Test for infinite resistance on the Q77H Transmission Control Solenoid Valve 8, as listed below:
    - Solenoid terminal 1 and ground
    - Solenoid terminal 2 and ground
    - **If not infinite resistance**

      Replace the Q77H Transmission Control Solenoid Valve 8.

    - **If infinite resistance**
13. Replace the K71 Transmission Control Module.

Repair Instructions

Perform the **Diagnostic Repair Verification** after completing the repair.

- **Automatic Transmission Wiring Harness Replacement (Electrical Connector Passage Sleeve)**
- **Solenoid Valve Characterization Reprogramming**
- **Transmission Control Wiring Harness Replacement (M5N)**
- **Transmission Fluid Pan and Filter Assembly Removal**
- Perform the **Transmission Service Fast Learn Procedure** following all transmission related repairs.
- Refer to **K71 Transmission Control Module: Programming and Setup**

DTC P2824, P2826 OR P2827: TRANSMISSION CONTROL SOLENOID VALVE 9 CONTROL CIRCUIT

Diagnostic Instructions

- Perform the **Diagnostic System Check - Vehicle** prior to using this diagnostic procedure.
- Review **Strategy Based Diagnosis** for an overview of the diagnostic approach.
- **Diagnostic Procedure Instructions** provides an overview of each diagnostic category.

DTC Descriptors

DTC P2824

Transmission Control Solenoid Valve 9 Control Circuit Open

DTC P2826

Transmission Control Solenoid Valve 9 Control Circuit Low Voltage

DTC P2827

Transmission Control Solenoid Valve 9 Control Circuit High Voltage

Diagnostic Fault Information

Circuits	Short to Ground	Open/High Resistance	Short to Voltage	Signal Performance
Ignition	P2760	P2761	P2761	-
Control	P2824/P2826	P2824/P2826	P2827	-

Typical Scan Tool Data

Transmission Control Solenoid Valve 9 Control Circuit Open Test Status

Circuits	Short to Ground	Open	Short to Voltage

Circuits	Short to Ground	Open	Short to Voltage
Operating Conditions: Ignition On **Parameter Normal Range:** OK or Not Run			
Ignition	Malfunction	Malfunction	Malfunction
Control	-	Malfunction	-

Transmission Control Solenoid Valve 9 Control Circuit Low Voltage Test Status

Circuits	Short to Ground	Open	Short to Voltage
Operating Conditions: Ignition On **Parameter Normal Range:** OK or Not Run			
Ignition	Malfunction	Malfunction	Malfunction
Control	Malfunction	-	-

Transmission Control Solenoid Valve 9 Control Circuit High Voltage Test Status

Circuits	Short to Ground	Open	Short to Voltage
Operating Conditions: Ignition On **Parameter Normal Range:** OK or Not Run			
Ignition	Malfunction	Malfunction	Malfunction
Control	-	-	Malfunction

Circuit/System Description

The transmission control solenoid valve 9 is a normally closed, On/Off solenoid. This solenoid is also referred to as, the boost control solenoid valve assembly. The transmission control module (TCM) high side driver 2, supplies 12 V to the transmission control solenoid valve 9. A low side driver circuit in the TCM turns the solenoid On/Off. If excessive current flow is detected, the high side driver 2 will turn Off. When the circuit fault is corrected, the high side driver 2 will reset.

Conditions for Running the DTC

- Ignition On.
- High side driver 2 On.
- Battery voltage is between 11-32 V for 1 s or greater.
- TCM power mode state is in accessory or ignition.

Conditions for Setting the DTC

P2824

TCM detects an open in the transmission control solenoid valve 9 control circuit, for 0.3 s.

P2826

TCM detects a short to ground in the transmission control solenoid valve 9 control circuit, for 0.3 s.

P2827

TCM detects a short to power in the transmission control solenoid valve 9 control circuit, for 0.3 s.

Action Taken When the DTC Sets

P2824, P2826 or P2827

- P2824, P2826 and P2827 are Type A DTCs.
- TCM disables transmission adapts learning and freezes current adapt values.
- TCM commands default shift pattern and ignores all other shift requests.
- TCM inhibits Tap up/Tap down.
- TCM inhibits TCC.
- TCM request the ECM to disable powertrain braking.

cardiagn.com

- TCM request the ECM to disable neutral idle.
- TCM request the ECM to disable auto grade braking.
- TCM request the ECM to disable auto stop function.
- Transmission shifts to 4th gear.
- Transmission reverse gear is available.

Conditions for Clearing the DTC

P2824, P2826 and P2827 are Type A DTCs.

Reference Information

Schematic Reference

Automatic Transmission Controls Schematics

Connector End View Reference

- **COMPONENT CONNECTOR END VIEWS - INDEX**
- **INLINE HARNESS CONNECTOR END VIEWS - INDEX**

Description and Operation

Electronic Component Description

Electrical Information Reference

- **Circuit Testing**
- **Connector Repairs**
- **Testing for Intermittent Conditions and Poor Connections**
- **Wiring Repairs**

DTC Type Reference

Powertrain Diagnostic Trouble Code (DTC) Type Definitions

Scan Tool Reference

Control Module References for scan tool information

Circuit/System Verification

1. Ignition On.
2. Verify the parameters listed below do not display Malfunction when commanding the Transmission Control Solenoid Valve 9 On and Off with a scan tool.
    - Transmission Control Solenoid Valve 9 Control Circuit Open Voltage Test Status
    - Transmission Control Solenoid Valve 9 Control Circuit Low Voltage Test Status
    - Transmission Control Solenoid Valve 9 Control Circuit High Voltage Test Status
    - **If Malfunction is displayed**

      Refer to Circuit/System Testing.

    - **If Malfunction is not displayed**
3. Operate the vehicle within the Conditions for Running the DTC. You may also operate the vehicle within the conditions that you observe from the Freeze Frame/Failure Records data.
4. Verify the DTC does not set.
    - **If the DTC sets**

      Refer to Circuit/System Testing.

cardiagn.com

- **If the DTC does not set**

5. All OK.

Circuit/System Testing

1. Ignition Off and all vehicle systems Off. Disconnect the X175 harness connector at the T12 Automatic Transmission Assembly. It may take up to 2 min for all vehicle systems to power down, ignition On.
2. Command the high side driver 2 Off.
3. Connect a test lamp between the ignition circuit terminal 19 and ground.
4. Verify the test lamp does not illuminate.
    - **If the test lamp illuminates**
    1. Ignition Off.
    2. Disconnect the harness connector at the K71 Transmission Control Module, ignition On.
    3. Verify a test lamp does not illuminate between the ignition circuit terminal 19 and ground.
        - If the test lamp illuminates, repair the short to voltage on the circuit.
        - If the test lamp does not illuminate, replace the K71 Transmission Control Module.
    - **If the test lamp does not illuminate**
5. Ignition On.
6. Verify the test lamp turns On and Off when commanding the high side driver 2 On and Off with a scan tool.
    - **If the test lamp is always Off**
    1. Ignition Off, disconnect the harness connector at the K71 Transmission Control Module.
    2. Test for infinite resistance between the ignition circuit and ground.
        - If less than infinite resistance, repair the short to ground on the circuit.
        - If infinite resistance
    3. Test for less than 2 Ω in the ignition circuit end to end.
        - If 2 Ω or greater, repair the open/high resistance in the circuit.
        - If less than 2 Ω, replace the K71 Transmission Control Module.
    - **If the test lamp turns On and Off**
7. Remove the test lamp.
8. Test for 1.8-2.2 V between the control circuit terminal 7 and ground.
    - **If less than 1.8 V**
    1. Ignition Off, disconnect the harness connector at the K71 Transmission Control Module.
    2. Test for infinite resistance between the control circuit and ground.
        - If less than infinite resistance, repair the short to ground on the circuit.
        - If infinite resistance
    3. Test for less than 2 Ω in the control circuit end to end.
        - If 2 Ω or greater, repair the open/high resistance in the circuit.
        - If less than 2 Ω, replace the K71 Transmission Control Module.
    - **If greater than 2.2 V**
    1. Ignition Off, disconnect the harness connector at the K71 Transmission Control Module, ignition On.
    2. Test for less than 1 V between the control circuit and ground.
    - If 1 V or greater, repair the short to voltage on the circuit.
    - If less than 1 V, replace the K71 Transmission Control Module.
    - **If between 1.8-2.2 V**
9. Perform the Component Testing.

Component Testing

1. Perform the Circuit/System Testing first.

carsign.com

2. Ignition Off, connect the X175 harness connector.
3. Remove the fluid pan from the T12 Automatic Transmission.
4. Disconnect the harness connector at the Q77J Transmission Control Solenoid Valve 9. Refer to **Transmission Solenoid Information** . Ignition On.
5. Command the high side driver 2 Off.
6. Connect a test lamp between terminal 2 and ground.
7. Verify the test lamp does not illuminate.
    - **If the test lamp illuminates**
    1. Disconnect the X176 harness connector.
    2. Verify a test lamp does not illuminate between the ignition circuit terminal 18 and ground.
        - If the test lamp illuminates

          Replace the automatic transmission wiring harness, electrical connector passage sleeve.

        - If the test lamp does not illuminate

          Replace the transmission control wiring harness.

    - **If the test lamp does not illuminate**
8. Verify the test lamp turns On and Off when commanding the high side driver 2 On and Off with a scan tool.
    - **If the test lamp is always Off**
    1. Ignition Off, disconnect the X176 harness connector.
    2. Test for infinite resistance in the ignition circuit between terminal 18 and ground.
        - If less than infinite resistance

          Replace the automatic transmission wiring harness, electrical connector passage sleeve.

    3. Test for less than 2 Ω in the ignition circuit end to end.
        - If 2 Ω or greater

          Replace the automatic transmission wiring harness, electrical connector passage sleeve.

        - If less than 2 Ω

          Replace the transmission control wiring harness.

    - **If the test lamp turns On and Off**
9. Disconnect the test lamp.
10. Test for 1.8-2.2 V between the control circuit terminal 1 and ground.
    - **If less than 1.8 V**
    1. Ignition Off, disconnect the X176 connector, ignition On.
    2. Test for 1.8-2.2 V at the control circuit terminal 10 and ground.
        - If less than 1.8 V

          Replace the automatic transmission wiring harness, electrical connector passage sleeve.

        - If between 1.8-2.2 V

          Replace the transmission control wiring harness.

    - **If greater than 2.2 V**
    1. Ignition Off, disconnect the X176 connector, ignition On.

cardiagn.com

2. Test for 1.8-2.2 V at the control circuit terminal 10 and ground.
    - If greater than 2.2 V

      Replace the automatic transmission wiring harness, electrical connector passage sleeve.

    - If between 1.8-2.2 V

      Replace the transmission control wiring harness.

- **If between 1.8-2.2 V**

11. Test for 11.0 - 13.0 Ω at 20Â°C (68Â°F) between terminal 1 and terminal 2 on the Q77J Transmission Control Solenoid Valve 9.
    - **If not between 11.0 - 13.0 Ω**

      Replace the Q77J Transmission Control Solenoid Valve 9.

    - **If between 11.0 - 13.0 Ω**
12. Test for infinite resistance on the Q77J Transmission Control Solenoid Valve 9, as listed below:
    - Solenoid terminal 1 and ground
    - Solenoid terminal 2 and ground
    - **If not infinite resistance**

      Replace the Q77J Transmission Control Solenoid Valve 9.

    - **If infinite resistance**
13. Replace the K71 Transmission Control Module.

Repair Instructions

Perform the **Diagnostic Repair Verification** after completing the repair.

- **Automatic Transmission Wiring Harness Replacement (Electrical Connector Passage Sleeve)**
- **Solenoid Valve Characterization Reprogramming**
- **Transmission Control Wiring Harness Replacement (M5N)**
- **Transmission Fluid Pan and Filter Assembly Removal**
- Perform the **Transmission Service Fast Learn Procedure** following all transmission related repairs.
- Refer to **K71 Transmission Control Module: Programming and Setup**

SOLENOID VALVE CHARACTERIZATION REPROGRAMMING

The solenoids in this transmission require unique performance characteristic data in order to function at maximum efficiency. This data is programmed and stored in the vehicle's transmission control module (TCM). When a transmission assembly, TCM or solenoids are replaced during service, the performance characteristic data for the solenoids must be retrieved from a web server "cloud" repository and reprogrammed into the TCM.

Reprogramming also ensures that the characteristic data relationship is properly matched between the solenoids, valve body and transmission.

Solenoid characterization reprogramming is performed using the TIS2 Web Service Programming System (SPS).

Solenoid Reprogramming Procedure

Perform solenoid characterization reprogramming after one of the following service procedures:

- Replace transmission assembly

cardiagn.com

NOTE: **Select "Replace Transmission" at the MCVM Characterization selection screen.**

- Replace valve body assembly

  NOTE: **Select "Replace Valve Body" at the MCVM Characterization selection screen.**

- Replace solenoid (currently not an available Service Procedure)

  NOTE: **Select "Replace Solenoid" at the MCVM Characterization selection screen.**

- Replace TCM

  NOTE: **Select "Refresh Characterization Data" at the MCVM Characterization selection screen.**

- Solenoid characterization may also be performed to "refresh" characterization data.

  NOTE: **Select "Refresh Characterization Data" at the MCVM Characterization selection screen.**

To perform solenoid characterization after a transmission component replacement:

1. Document the new Transmission Unique Number (TUN) or Part Unique Number (PUN) as required.
   - The TUN location may be found here: **Transmission Identification Information** . Since the TUN can be difficult to access when the transmission is installed in the vehicle, ensure you document the 16-digit TUN prior to installing the transmission in the vehicle.
   - The PUN location may be found here: **Control Valve Solenoid Body Identification Information** . Before installing the control valve solenoid body onto the transmission, document the 16-digit PUN. If the control valve solenoid body PUN has not been saved for reference, it may be necessary to disassemble the control valve solenoid body from the transmission to clearly read the control valve solenoid body PUN.
2. Log into TIS2Web/SPS.
3. Type the vehicle identification number (VIN).
4. Perform the SPS Transmission Control Module programming event.
   - Select "Transmission Control Module - Programming" to update TCM calibrations and Solenoid Characterization data.

     OR

   - Select "Transmission Control Module - MCVM Operations" to update Solenoid Characterization data only.
5. From the "MCVM (Mechanical Characterization and Virtual Matching) Operation Selection" screen, select the applicable service procedure to be performed. You will be prompted to provide the necessary Transmission Unique Number (TUN) or Part Unique Number (PUN) when replacing a transmission part.

At this point, the system will read the VIN from the engine control module (ECM) using the multiple diagnostic interface (MDI) and then retrieve the applicable genealogy data tree from the cloud. This data tree accesses the original characterization data so that it may be updated with the new component information. The system acquires characterization data for the given TUN/PUN via the cloud and updates the genealogy tree. The TCM is updated with the correct solenoid characterization data and the cloud is updated with the new genealogy relationship.

SYMPTOMS - AUTOMATIC TRANSMISSION

IMPORTANT: Use the symptom tables only if the following conditions are met:

- Refer to **Diagnostic Starting Point - Vehicle** .
- There are no DTCs set.
- The control modules can communicate via the serial data link.
- Review the system operation in order to familiarize yourself with the system functions. Refer to **Transmission General Description** and **Transmission Component and System Description** .

Visual/Physical Inspection

Inspect the easily accessible or visible system components for obvious damage or conditions which could cause the symptom.

Intermittent

Faulty electrical connections or wiring may be the cause of intermittent conditions. Refer to **Testing for Intermittent Conditions and Poor Connections** .

Symptom List

Refer to a symptom diagnostic procedure from the following list in order to diagnose the symptom:

- Fluid Diagnosis
  - **Transmission Fluid Level and Condition Check**
  - **Fluid Pressure High or Low**
  - **Automatic Transmission Fluid Leaks**
  - **Fluid Leak Diagnosis**
- Noise and Vibration Diagnosis
  - **Whine/Growl Noise That Changes with Vehicle Speed**
  - **Vibration**
  - **Flex Plate/Torque Converter Vibration Test**
  - **Noise and Vibration Analysis**
- Range Performance Diagnosis
  - **No Park or Drive**
  - **No Drive in All Ranges**
- Shift Quality Feel Diagnosis
  - **Harsh Garage Shift**
  - **Harsh, Soft, Delayed or Slipping First, Third, Fifth, Sixth or Seventh Shift**
  - **Harsh, Soft, Delayed or Slipping Second, Third, Fourth, Sixth or Eighth Shift**
  - **Harsh, Soft, Delayed or Slipping Fourth, Fifth, Sixth, Seventh, Eighth or Reverse Shift**
  - **Harsh, Soft, Delayed or Slipping First, Second, Seventh, Eighth or Reverse Shift**
  - **Harsh, Soft, Delayed or Slipping First, Second, Third, Fourth, Fifth or Reverse Shift**
- Shift Pattern
  - **No First, Third, Fifth, Sixth or Seventh Gear**
  - **No Second, Third, Fourth, Sixth or Eighth Gear**
  - **No Fourth, Fifth, Sixth, Seventh, Eighth or Reverse Gear**
  - **No First, Second, Seventh, Eighth or Reverse Gear**
  - **No First, Second, Third, Fourth, Fifth or Reverse Gear**
- Torque Converter Diagnosis
  - **Torque Converter Diagnosis**
  - **No Torque Converter Clutch Apply**
  - **No Torque Converter Clutch Release**
- Symptom Not Found or No Symptom Detected

cardiagn.com

- Transmission Fluid Level and Condition Check
- Road Test

TRANSMISSION FLUID LEVEL AND CONDITION CHECK

This procedure checks both the transmission fluid level, as well as the condition of the fluid itself. Since the transmission on this vehicle is not equipped with a fill tube and dipstick, a tube in the bottom pan is used to set the fluid level.

WARNING: **The transmission fluid level must be checked when the transmission fluid temperature (TFT) is between 35-45Â°C (95-113Â°F). If the TFT is not within this range, either idle or brake torque the vehicle to raise the fluid temperature or shut off the vehicle to allow the fluid to cool as required. Setting the fluid level with a TFT outside this range will result in either an under or over-filled transmission. TFT 45Â°C=under-filled, TFT 35Â°C=over-filled. An under-filled transmission will cause premature component wear or damage. An over-filled transmission will cause fluid to discharge out the vent tube, possibly causing a fire that may result in serious bodily injury or severe vehicle damage, fluid foaming or pump cavitation.**

NOTE:

- **CTS-V/LT1 Camaro, if running a track session, should have the transmission fluid level checked when the TFT is between 55-65Â°C (131-149Â°F).**
- **If vehicle is equipped with a thermal bypass valve, the transmission fluid level should be checked only after the TFT has reached or exceeded an operating temperature of 90Â°C (194Â°F). Once the TFT has reached or exceeded 90Â°C (194Â°F), then turn OFF the vehicle and allow the TFT to cool back down to 35-45Â°C (95-113Â°F) before checking the fluid level as required. Reaching or exceeding an operating temperature of 90Â°C (194Â°F) opens the bypass valve and allows the cooler to fill up with fluid, which will result in a more accurate fluid level check.**

1. Observe the TFT using the driver information center (DIC) or a scan tool.
2. Start and idle the engine.
3. Depress the brake pedal and move the shift lever through each gear range. Pause for at least 3 seconds in each range. Move the shift lever back to PARK. Ensure the engine RPM is low (500-800 RPM).
4. Allow the engine to idle for at least 1 minute.
5. Raise the vehicle on a hoist. The vehicle must be level, with the engine running and the shift lever in the PARK range.
6. Remove the transmission oil level check plug (1) from the transmission fluid pan. Allow any fluid to drain.

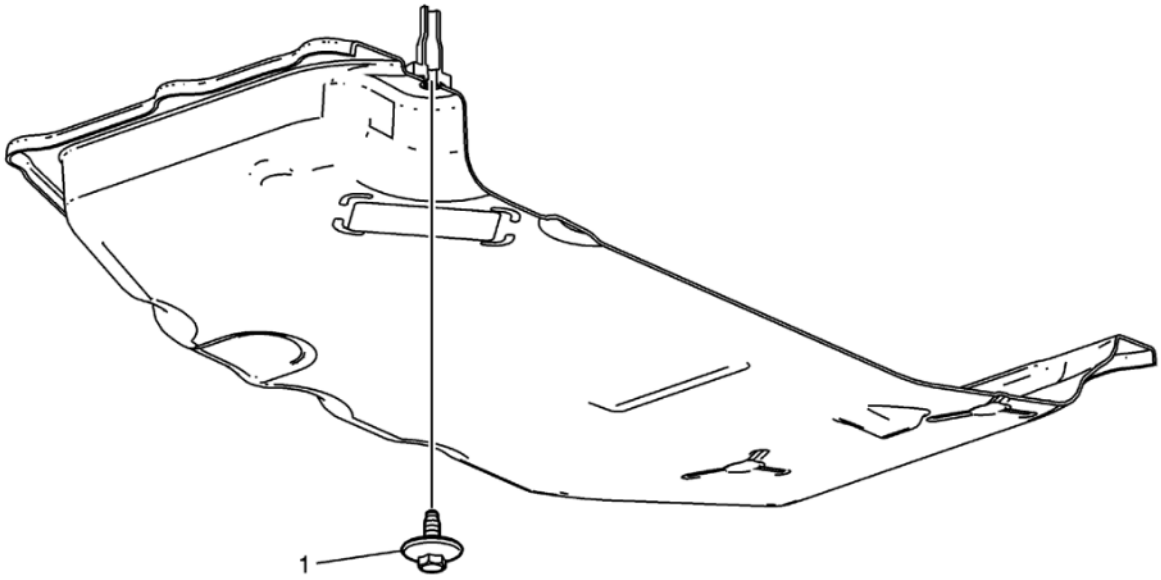

Fig. 1: Transmission Oil Level Check Plug
Courtesy of GENERAL MOTORS COMPANY

CAUTION: **THE ENGINE MUST BE RUNNING when the trans oil level check plug is removed or excessive fluid loss will occur, resulting in an under-filled condition. An under-filled transmission will cause premature component wear or damage.**

NOTE: **Continue to monitor the TFT. If the TFT is not within the specified values, reinstall the trans oil level check plug and repeat the previous steps.**

- If the fluid is flowing as a steady stream, wait until the fluid begins to drip.
- If no fluid comes out, add fluid until fluid drips out. Refer to **Transmission Fluid Fill Procedure**.

7. Inspect the fluid color. The fluid should be red or dark brown.
   - If the fluid color is very dark or black and has a burnt odor, inspect the fluid and inside of the bottom pan for excessive metal particles or other debris. A small amount of "friction" material in the bottom pan is a "normal" condition. If large pieces and/or metal particles are noted in the fluid or bottom pan, flush the oil cooler and cooler lines and overhaul the transmission. If there are no signs of transmission internal damage noted, replace the fluid filter assembly, repair the oil cooler and flush the cooler lines.
   - Fluid that is cloudy or milky or appears to be contaminated with water indicates engine coolant or water contamination. Refer to **Engine Coolant/Water in Transmission**.
8. Reinstall the transmission oil level check plug and tighten to 9 N.m (80 lb in).

CAUTION: **Refer to Fastener Caution .**

9. Inspect for external leaks. Refer to **Fluid Leak Diagnosis**.

TRANSMISSION FLUID FILL PROCEDURE

Special Tools

- **DT-45096** Transmission Oil Cooling System Flush and Flow Test Tool
- **DT-45096-30** Transmission Cooler Flush Adapters
- **DT-45096-40** Transflow Oil Fill Adapter

- **DT-51190** Transmission Fluid Fill Adapter

For equivalent regional tools, refer to **Special Tools** .

CAUTION: **Use DexronÂ® HP transmission fluid only. Failure to use the proper fluid may result in transmission internal damage.**

CAUTION: **Check the transmission fluid level immediately after adding fluid and before vehicle operation. Do not overfill the transmission. An overfilled transmission may result in foaming or fluid to be expelled out the vent tube when the vehicle is operated. Overfilling will result in possible damage to the transmission.**

Check the transmission fluid level, refer to **Transmission Fluid Level and Condition Check**.

Fill Tube Plug Method

1. Based on accessibility, transmission fluid may be added through the fluid fill tube plug assembly (1) hole or through the oil level check plug (2) hole in the bottom of the transmission fluid pan.

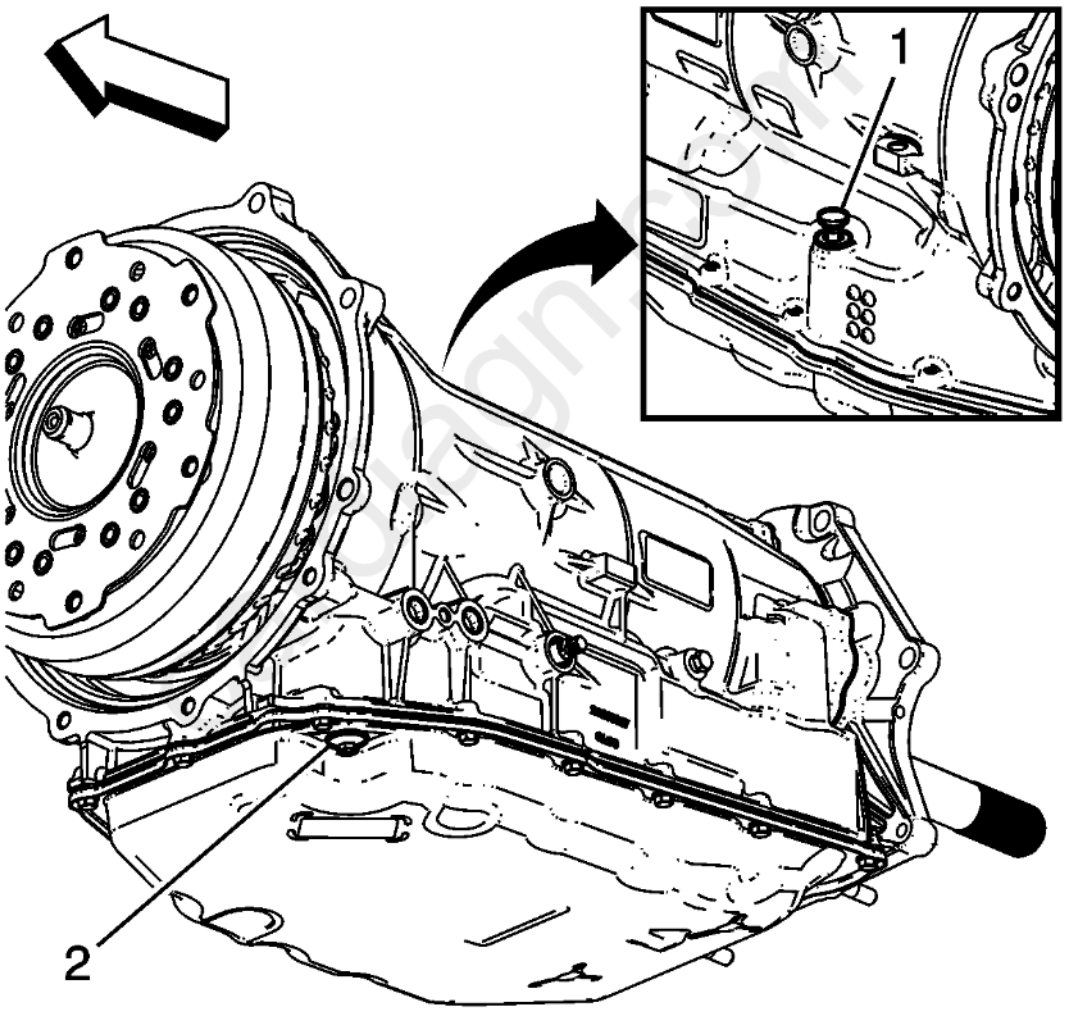

Fig. 2: Fluid Fill Tube Plug And Oil Level Check Plug
Courtesy of GENERAL MOTORS COMPANY

CAUTION: **Use DexronÂ® HP transmission fluid only. Failure to use the proper fluid may result in transmission internal damage.**

2. Clean around the fluid fill tube plug (1).

CAUTION: **Before removing the transmission fluid fill tube plug assembly, thoroughly clean around the plug to prevent dirt or contaminants from entering the transmission during plug removal. Use**

compressed air to dislodge any caked dirt that may be stuck on and around the plug area. Use a mirror to confirm the area is free of dirt before removing the plug. Failure to clean around the plug may result in transmission contamination.

3. Unlock the fill tube plug by lifting the plunger. Once the plunger is lifted, remove the entire plug assembly (1).

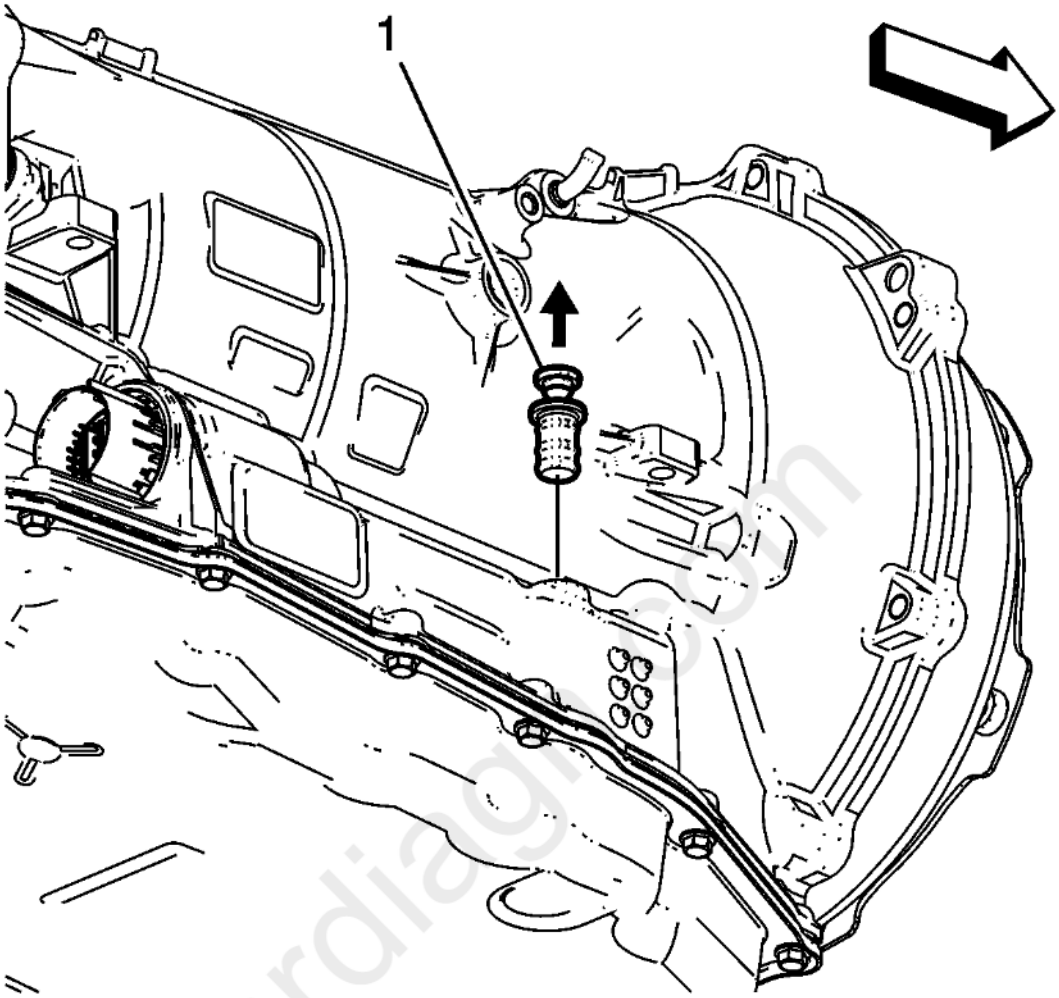

Fig. 3: Plug Assembly
Courtesy of GENERAL MOTORS COMPANY

NOTE: **It may be necessary to use a long pair of 90 degree needle nose pliers to lift the plunger and remove the plug assembly.**

4. Determine the approximate amount of fluid needed to fill the transmission, based on the repair performed. Refer to **Approximate Fluid Capacities** . To avoid an under-fill condition, slightly overfill the transmission and then allow the extra fluid to drain out through the oil level check plug during the transmission fluid level and condition check procedure.
5. Using the **DT-45096-40** transflow oil fill adapter (1) and the **DT-45096** flush and flow test tool (2) or a suitable hand pump, add transmission fluid through the fill tube plug opening. Refer to **Transmission Fluid Cooler Flow Test and Flushing (8L90)** for complete **DT-45096** flush and flow test tool operating instructions. Use the FLOW position on the main function switch to pump the fluid.

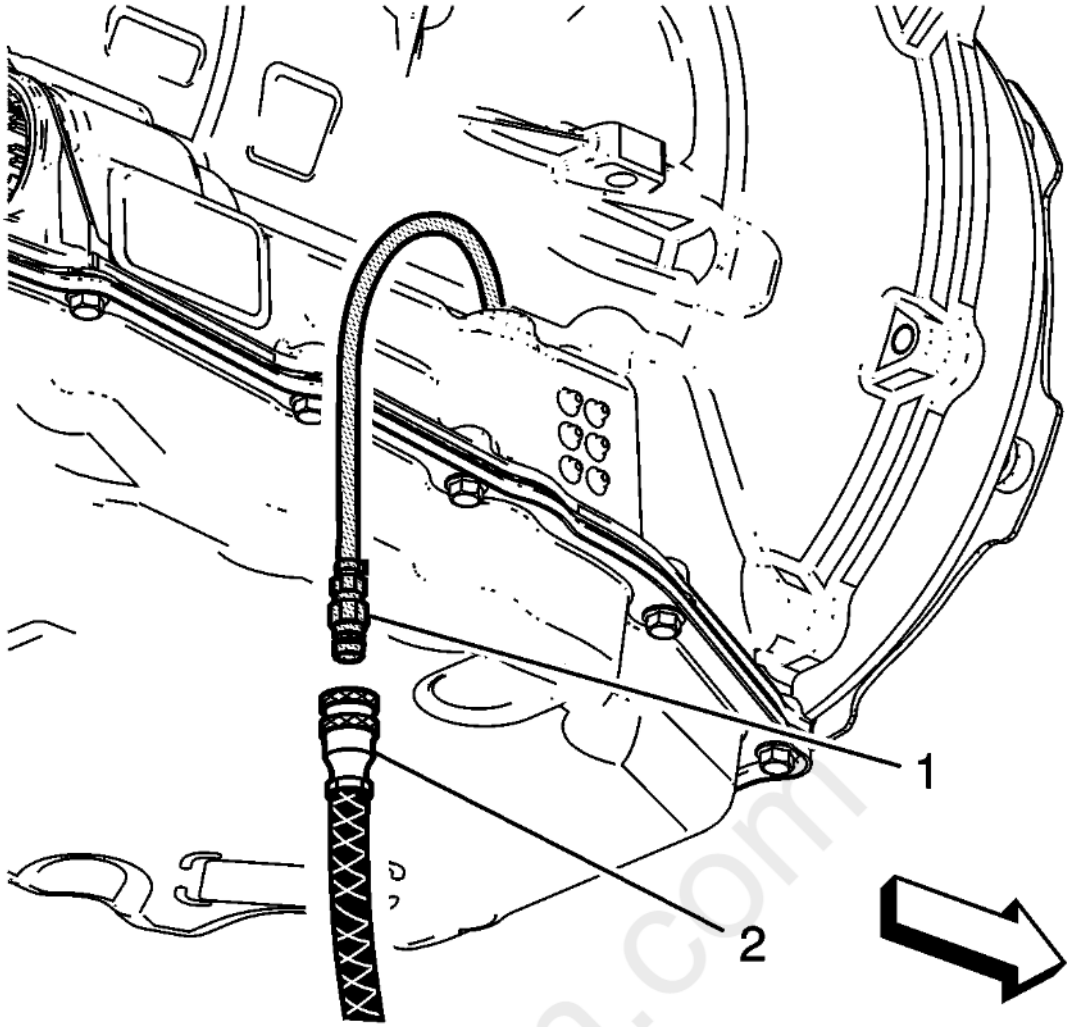

Fig. 4: Transflow Oil Fill Adapter And Test Tool
Courtesy of GENERAL MOTORS COMPANY

NOTE: **The DT-45096 flush and flow test tool is being utilized as a convenient method to pump the fluid into the bottom pan. A suitable hand pump may also be used instead. When using the DT-45096 flush and flow test tool, monitor the display panel to determine the amount of fluid being pumped from the tool supply tank into the transmission.**

6. Check the fluid level. Refer to **Transmission Fluid Level and Condition Check**.

CAUTION: **Check the transmission fluid level immediately after adding fluid and before vehicle operation. Do not overfill the transmission. An overfilled transmission may result in foaming or fluid to be expelled out the vent tube when the vehicle is operated. Overfilling will result in possible damage to the transmission.**

Check Plug Method

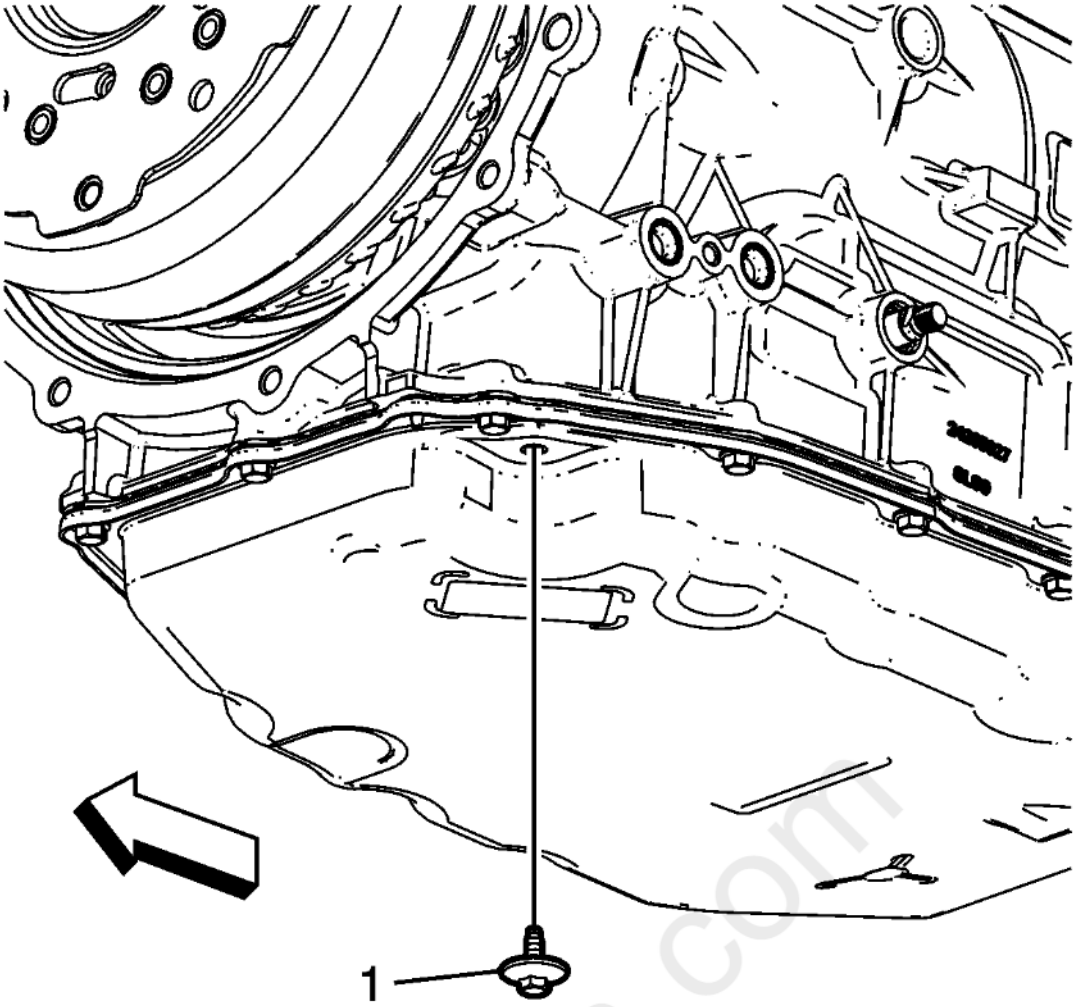

Fig. 5: Oil Level Check Plug
Courtesy of GENERAL MOTORS COMPANY

1. Remove the oil level check plug.

CAUTION: **Use DexronÂ® HP transmission fluid only. Failure to use the proper fluid may result in transmission internal damage.**

NOTE: **When the oil level check plug is removed with the engine OFF, transmission fluid may drain from the hole.**

2. Install the **DT-51190** fluid fill pan adapter (1) and, if necessary, one adapter from the **DT 45096-30** cooler flush adapters (2).

cardiagn.com

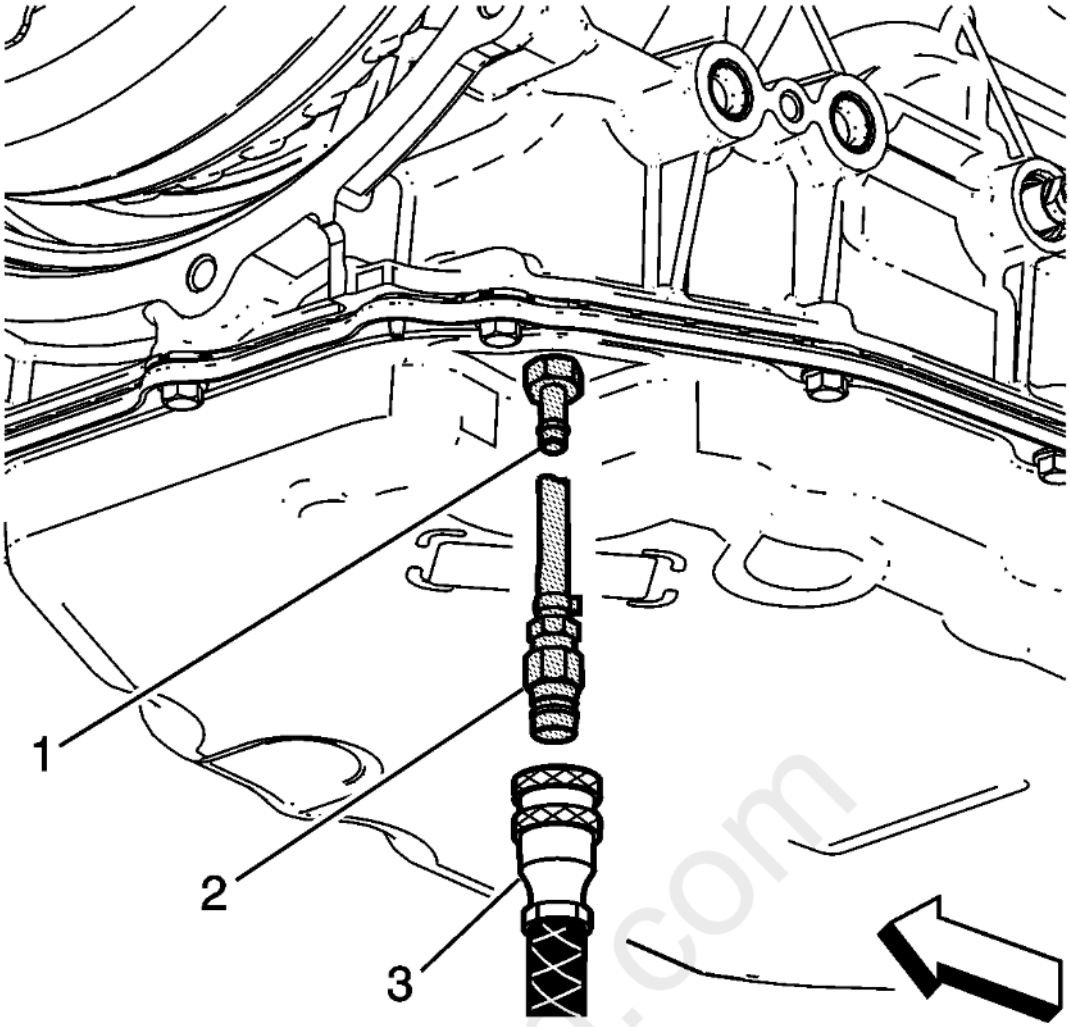

Fig. 6: Fluid Fill Pan Adapter
Courtesy of GENERAL MOTORS COMPANY

3. Determine the approximate amount of fluid needed to fill the transmission, based on the repair performed. Refer to **Approximate Fluid Capacities** . To avoid an under-fill condition, slightly overfill the transmission and then allow the extra fluid to drain out through the oil level check plug during the transmission fluid level and condition check procedure.
4. Using the **DT-51190** fluid fill pan adapter (1), **DT-45096-30** cooler flush adapters (2) and the **DT-45096** flush and flow test tool (3), add transmission fluid through the check plug hole. Refer to **Transmission Fluid Cooler Flow Test and Flushing (8L90)** for complete **DT-45096** operating instructions. Use the FLOW position on the main function switch to pump the fluid.

NOTE: **The DT-45096 flush and flow test tool is being utilized as a convenient method to pump the fluid into the bottom pan. A suitable hand pump may also be used instead. When using the DT-45096 flush and flow test tool, monitor the display panel to determine the amount of fluid being pumped from the tool supply tank into the transmission.**

5. Start the engine and move the shift lever through each gear range. Pause for at least 3 seconds in each gear range.

NOTE: **Failure to start the engine and move the shift lever through the gear ranges before removing the DT-51190 fluid fill pan adapter and DT-45096-30 cooler flush adapters from the bottom pan will result in an excess amount of fluid draining from the check plug hole. This may lead to an under-fill condition.**

6. With the engine still running, remove the **DT-51190** fluid fill pan adapter (1), (2) and **DT-45096** flush and flow test tool (3) and then check the fluid level. Refer to **Transmission Fluid Level and Condition Check**.

CAUTION: **Check the transmission fluid level immediately after adding fluid and before vehicle operation. Do not overfill the transmission. An overfilled transmission may result in foaming or fluid to be expelled out the vent tube when the vehicle is operated. Overfilling will result in possible damage to the transmission.**

ROAD TEST

The following test provides a method of evaluating the condition of the automatic transmission. The test is structured so that most driving conditions would be achieved. The test is divided into the following parts:

- Electrical Function Check
- Upshift Control and Torque Converter Clutch (TCC) Apply
- Part Throttle Step-In Downshifts
- Manual Downshifts
- Coasting Downshifts
- Manual Gear Range Selection
  - REVERSE
  - Driver Shift Control

NOTE: **Complete the test in the sequence given. Incomplete testing cannot guarantee an accurate evaluation.**

NOTE: **If the vehicle you are testing is a Hybrid/Electric Vehicle and is equipped with an eAssist or BAS propulsion system, please refer to the applicable vehicle Owner Manual/Supplement for a complete description and an explanation of operating conditions for the automatic stop/start feature. When performing this Road Test, the auto stop/start must be verified to ensure the shifting characteristics of this feature are operating as designed.**

Before the road test, ensure the following:

- The engine is performing properly.
- Transmission fluid level is correct. Refer to **Transmission Fluid Level and Condition Check**.
- Tire pressure is correct.

During the road test:

- Perform the test only when traffic conditions permit.
- Operate the vehicle in a controlled, safe manner.
- Observe all traffic regulations.
- View the scan tool data while conducting this test.

  Take along qualified help in order to operate the vehicle safely.

- Observe any unusual sounds or smells.

After the road test, check the following:

- Inspect for proper transmission fluid level. Refer to **Transmission Fluid Level and Condition Check**.
- Inspect for any diagnostic trouble codes (DTCs) that may have set during the testing. Refer to the applicable DTC.
- Monitor the scan tool data for any abnormal readings or data.
- Inspect for fluid leaks. Refer to **Fluid Leak Diagnosis**.

cardiagn.com

Electrical Function Check

Perform this procedure first in order to ensure the electronic transmission components are functioning properly. If these components are not checked, a simple electrical condition could be misdiagnosed.

1. Connect the scan tool.
2. Ensure the gear selector is in PARK and set the parking brake.
3. Start the engine.
4. Verify that the following scan tool data can be obtained and is functioning properly.
    - Engine Speed
    - Transmission ISS
    - Transmission OSS
    - Vehicle Speed
    - IMS
    - Commanded Gear
    - Gear Ratio
    - Line PC Sol. Pressure Cmd.
    - Brake Switch
    - ECT, Engine Data List
    - Trans. Fluid Temp.
    - TCM Temperature
    - Calc. Throttle Position
    - Ignition Voltage
    - PC Sol. 2 Pressure Cmd.
    - PC Sol. 3 Pressure Cmd.
    - PC Sol. 4 Pressure Cmd.
    - PC Sol. 5 Pressure Cmd.
    - Shift Solenoid 1
    - Shift Solenoid 2
    - TCC PC Sol. Duty Cycle
    - TCC Slip Speed
5. Check the garage shifts.
    1. Apply the brake pedal and ensure the parking brake is set.
    2. Move the gear selector through the following ranges:
        1. PARK to REVERSE
        2. REVERSE to NEUTRAL
        3. NEUTRAL to DRIVE
        4. DRIVE to REVERSE
        5. REVERSE to DRIVE
    3. Pause 2 to 3 seconds in each gear position.
    4. Verify the gear engagements are immediate (less than 2 seconds to complete if trans fluid temperature is above 20Â°C) and not harsh. Note that these shifts may be almost imperceptible in some applications. Using the scan tool to monitor Transmission ISS achieving 0 rpm can be used to check delay in these cases.
6. Monitor transmission range on the scan tool, transmission data list.

NOTE: **Harsh engagement may be caused by any of the following conditions:**

- **High engine idle speed-Compare engine idle speed to desired idle speed.**
- **Incorrect line pressure-Investigate Line PC Sol. Pressure Cmd. kPa (psi), also perform Line Pressure Check.**

cardiagn.com

- **A default condition caused by certain DTCs that result in maximum line pressure to prevent clutch slippage.**
- **Incomplete adapting or incorrect adapting-Repeat maneuver multiple times to see if shift quality improves. If it does not, refer to the service procedures for Harsh Garage Shift.**

NOTE: **Delayed engagement may be caused by any of the following conditions:**

- **Low idle speed-Compare engine idle speed to desired idle speed.**
- **Low fluid level**
- **Incorrect line pressure-Investigate Line PC Sol. Pressure Cmd. kPa (psi), also perform Line Pressure Check.**
- **Cold transmission fluid temperature (TFT)-Use the scan tool to determine TFT.**
- **Selector linkage-Inspect and adjust as necessary.**
- **Incomplete adapting or incorrect adapting-Repeat maneuver multiple times to see if delay improves. If it does not, refer to the service procedures for Harsh, Soft, Delayed or Slipping First, Second, Seventh, Eighth or Reverse Shift.**

1. Apply the brake pedal and ensure the parking brake is set.
2. Move the gear selector through all ranges.
3. Pause 2 to 3 seconds in each range.
4. Return gear selector to PARK.
5. Verify that all selector positions match the scan tool display.

7. Check throttle position input.
    1. Apply the brake pedal and ensure the parking brake is set.
    2. Ensure the gear selector is in PARK.
    3. Monitor the scan tool Calc. Throttle Position while increasing and decreasing engine speed with the throttle pedal. The scan tool Calc. Throttle Position percentage should increase and decrease with engine speed.

If any of the above checks do not perform properly, record the result for reference after completion of the road test.

Upshift Control and Torque Converter Clutch (TCC) Apply

The TCM calculates the upshift points based primarily on 2 inputs: throttle position and vehicle speed. When the TCM determines that conditions are met for a shift to occur, the TCM commands the shift by varying current to the appropriate PC solenoids to control oncoming and offgoing clutch pressures.

Perform the following steps:

1. Monitor the following scan tool parameters:
    - Calc. Throttle Position
    - Vehicle Speed
    - Engine Speed
    - Transmission ISS
    - Transmission OSS
    - Commanded Gear
    - TCC PC Sol. Pressure Cmd.
    - TCC Slip Speed
    - PC Sol. 2 Pressure Cmd.
    - PC Sol. 3 Pressure Cmd.

carmagn.com

- PC Sol. 4 Pressure Cmd.
- PC Sol. 5 Pressure Cmd.
- Shift Solenoid 1 and 2

2. Place the gear selector in the DRIVE position.
3. Accelerate the vehicle using a steady throttle position between 15 and 20 percent. Hold the throttle steady.
4. As the transmission upshifts, there should be a noticeable shift feel or engine speed change within 1 to 2 seconds of the commanded gear change. The PC solenoid pressure command should change to "YES" for the oncoming clutch and the PC solenoid pressure command should change to "NO" for the offgoing clutch.
5. Note any harsh, soft or delayed shifts or slipping. Note any noise or vibration.
6. The TCC feel may not be noticeable. In many applications the TCC will apply after the 1-2 shift and TCC events will not be easily detected using engine speed.
7. Monitor TCC PC solenoid pressure command while driving and check TCC slip speed when the pressure command indicates that the TCC is commanded to apply:

NOTE: **This transmission is equipped with an electronically controlled capacity clutch (ECCC), which allows operation of the clutch without fully locking to the torque converter cover. The clutch maintains a small amount of slippage, approximately 20 RPM, in 2nd, 3rd, 4th, 5th and 6th gears, depending on the vehicle application. ECCC was developed to reduce the possibility of noise, vibration or chuggle caused by TCC apply. Full lockup is available at highway speeds on some applications.**

When the TCC applies, slip speed should be controlled to below 100 RPM when the transmission is not shifting and the throttle is held steady. If the TCC slip exceeds this value for more than 6 seconds after the TCC PC Sol. Pressure Command indicates that the TCC is commanded on:

- Check for DTCs.
- Refer to **Torque Converter Diagnosis**.

Part Throttle Step-In Downshifts

1. Place the gear selector in the DRIVE position.
2. Accelerate the vehicle at light throttle (5-15 percent) until 3rd gear is just achieved.
3. Quickly increase throttle angle until commanded gear indicates that a downshift to 2nd gear is commanded.
4. Verify that the transmission downshifts within 2 seconds of the throttle movement.
5. Repeat steps 2 to 4 at higher speed to achieve 4th gear and then step in to command a 4th gear to 3rd gear downshift.
6. Repeat steps 2 to 4 at higher speed to achieve 5th gear and then step in to command a 5th to 4th gear downshift.
7. Repeat steps 2 to 4 at higher speed to achieve 6th gear and then step in to command a 6th gear to 5th gear downshift.
8. Note any harsh, soft or delayed shifts or slipping. Note any noise or vibration.

Manual Downshifts

Manual downshift testing is not required since all vehicles equipped with the 8L90 are also equipped with some form of Driver Shift Control (DSC). The TCM will automatically override DSC downshifts to protect the transmission from damage.

Coasting Downshifts

1. Place the gear selector in the DRIVE position.
2. Accelerate the vehicle to 6th gear with the TCC applied.
3. Release the throttle and apply the brakes.

cardiagn.com

4. Verify that the downshifts occur as commanded by monitoring gear ratio, which should change after commanded gear changes.

Manual Gear Range Selection

This application does not utilize manual forward gear ranges.

Reverse

Perform the following test using a 10-15 percent throttle position.

1. With the vehicle stopped, move the gear selector to REVERSE.
2. Slowly accelerate the vehicle.
3. Verify that there is no noticeable slip, noise or vibration.

Driver Shift Control (DSC)

Refer to the owner's manual for specific instructions on the type of DSC available in this application. Utilize the DSC to ensure that the transmission responds appropriately to driver's commands. The TCM will upshift automatically when maximum engine speed is achieved and will protect from any downshift which may cause excessive engine RPMs.

TORQUE CONVERTER DIAGNOSIS

Torque Converter Stator

The torque converter stator roller clutch can have 2 different malfunctions.

- The stator assembly freewheels in both directions.
- The stator assembly remains locked up in both directions.

Poor Acceleration at Low Speed - Stator Roller Clutch Freewheels at All Times

If the stator is freewheeling at all times, the vehicle tends to have poor acceleration from a standstill and at speeds below 48-55 km/h (30-34 mph). At speeds above 48-55 km/h (30-34 mph), the vehicle may act normally.

For poor acceleration at low speeds, you should first determine that the exhaust system is not blocked and the transmission is in First gear when starting out. If the engine freely accelerates to high RPM in NEUTRAL, you can assume that the engine and the exhaust system are normal. Check for poor performance in DRIVE and REVERSE to help determine if the stator is freewheeling at all times.

Poor Acceleration at High Speed - Stator Roller Clutch is Locked Up at All Times

If the stator is locked up at all times, performance is normal when accelerating from a standstill. Engine RPM and vehicle speed are limited or restricted at speeds above 48-55 km/h (30-34 mph). Visual examination of the converter may reveal a blue color from overheating.

Torque Converter Bearing Noise

NOTE: **Do not confuse this noise with pump whine noise, which is usually noticeable in all gear ranges. Pump whine will vary with line pressure.**

Torque converter whine is noticed when the vehicle is stopped and the transmission is in DRIVE or REVERSE. This noise will increase as you increase the engine RPM. The noise will stop when the vehicle is moving or when you apply the torque converter clutch, because there is no slip speed across the bearings.

Perform a stall test to verify that the noise is actually coming from the torque converter:

1. Place your foot on the brake.
2. Put the gear selector in DRIVE.
3. Depress the accelerator to approximately 1, 200 RPM for no more than six seconds.

carlion.com

CAUTION: **You may damage the transmission if you depress the accelerator for more than 6 seconds.**

A torque converter noise will increase under this load.

Torque Converter Clutch

The torque converter clutch (TCC) is applied by fluid pressure, which is controlled by a TCC pressure control (PC) solenoid. This solenoid is part of the control solenoid valve assembly, which is located inside the automatic transmission assembly. The solenoid is controlled through a combination of computer controlled switches and sensors. Electronically controlled capacity clutch (ECCC) is controlled slip across the TCC.

Torque Converter Clutch Shudder

The key to diagnosing torque converter clutch (TCC) shudder is to note when it happens and under what conditions. TCC shudder should only occur during the apply, release or ECCC conditions of the converter clutch. Shudder should never occur after the TCC is fully locked (approximately 0 RPM slip).

If Shudder Occurs During TCC Apply, Release and ECCC

If the shudder occurs while the TCC is applying, the problem can be within the transmission or the torque converter. Something is causing one of the following conditions to occur:

- The clutch is not engaging completely.
- The clutch is not releasing completely.
- The clutch is releasing and applying rapidly and continuously.

One of the following conditions may be causing the TCC Shudder to occur:

- Leaking turbine shaft/TCC seals
- A restricted release orifice
- A distorted clutch or converter cover due to long flexplate to converter bolts
- Defective friction material on the TCC plate

If Shudder Occurs After TCC has Locked

Engine problems may go unnoticed under light throttle and load, but they become noticeable after the TCC has locked when going up a hill or accelerating.

Refer to Symptoms - Engine Controls in order to avoid misdiagnosis of TCC shudder and the unnecessary disassembly of a transmission or the unnecessary replacement of a torque converter.

Torque Converter Vibration Test

NOTE: **The Noise and Vibration Analysis procedure should be performed prior to performing this test.**

Isolating Vibration

NOTE: **Some engine/transmission combinations cannot be balanced in this manner due to restricted access or limited clearances between the torque converter bolts and the engine.**

To isolate and correct a flexplate or torque converter vibration:

1. With the engine at idle speed and the transmission in PARK or NEUTRAL, observe the vibration.
2. Turn the engine OFF.
3. Raise and suitably support the vehicle. Refer to **Lifting and Jacking the Vehicle** .
4. Remove the torque converter access cover and the bolts (if equipped).
5. Mark the relationship of the torque converter to the flexplate.

cardiagn.com

6. Rotate the torque converter to inspect for defects or missing balance weights.
7. Index the converter according to "Indexing Torque Converter" procedure located within this procedure.
8. If the vibration remains, it is most likely caused by the engine.
9. Refer to "Torque Converter Replacement Guide" located within this procedure.

Indexing Torque Converter

To determine and correct a torque converter vibration, the following procedure may have to be performed several times to achieve the best possible torque converter to flexplate balance.

1. Remove the torque converter bolts.
2. Rotate the torque converter one bolt position from the original marked position.
3. Align the torque converter pilot (2) in the engine crankshaft (3). Install the torque converter to flexplate bolts and tighten according to **Fastener Specifications (On Vehicle)** **Fastener Specifications (Off Vehicle)** .

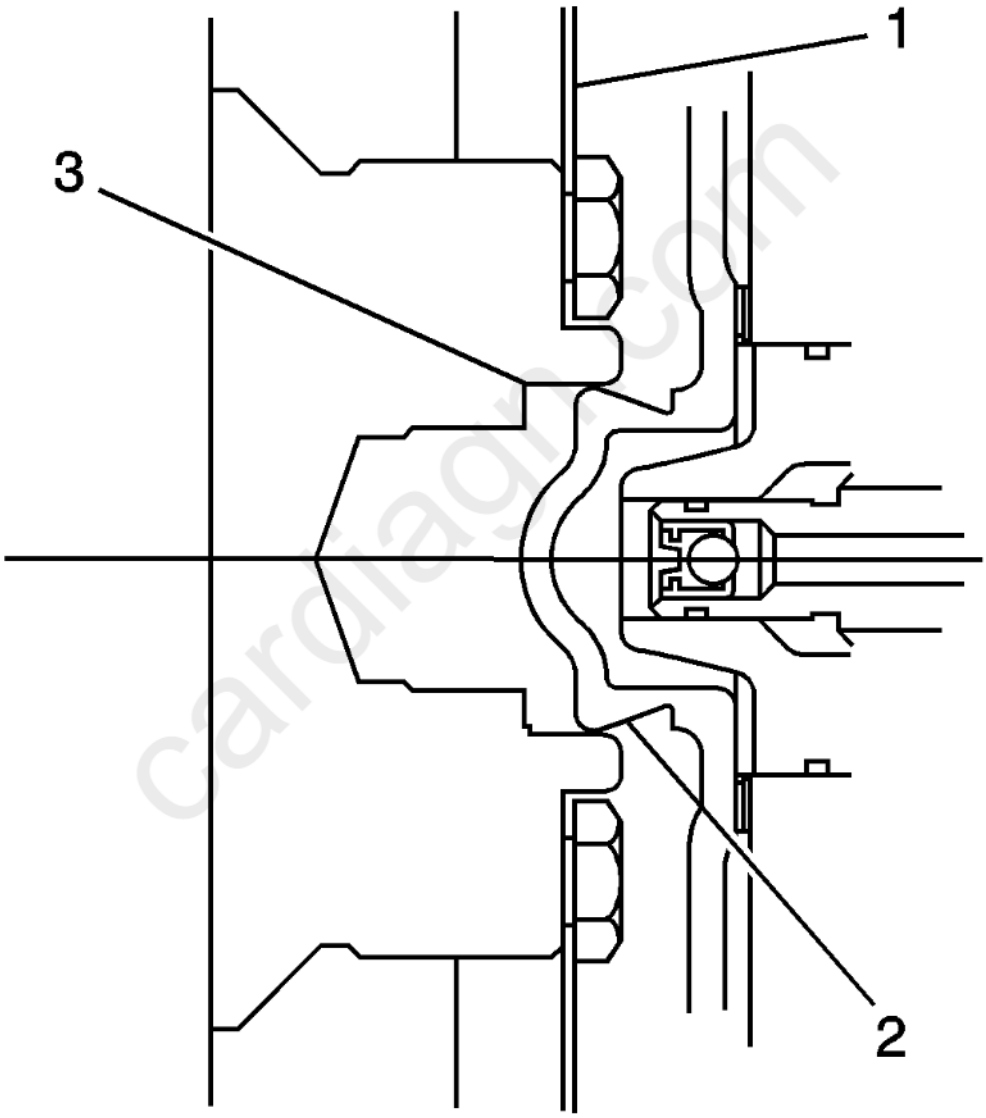

Fig. 7: View Of Torque Converter Hub In Engine Crankshaft
Courtesy of GENERAL MOTORS COMPANY

CAUTION: **When installing the torque converter to the flexplate, make sure to use specified bolts. DO NOT use longer bolts. Using longer bolts will result in deformation of the torque converter cover and cause internal damage.**

CAUTION: **Refer to Fastener Caution .**

4. Lower the vehicle.

5. With the engine at idle speed and the transmission in PARK or NEUTRAL, observe the vibration.

   Repeat this procedure until the best possible balance is obtained.

6. Install the torque converter access cover and bolts (if equipped) and tighten according to **Fastener Specifications (On Vehicle)** **Fastener Specifications (Off Vehicle)** .

Torque Converter Replacement Guide

Condition	Action
• Transmission Fluid Oxidized/Discolored • Clutch Fiber Material	Do not replace the torque converter. Refer to **Transmission Fluid Level and Condition Check**.
Transmission Fluid Contaminated with Metal Particles	Do not replace the torque converter for clutch system or gearset component damage. Fine metallic debris or clutch plate material that is suspended in the fluid will not cause damage to the internal torque converter components nor any internal transmission components.
Harsh Gear Shifts	Do not replace the torque converter. Refer to **Symptoms - Automatic Transmission**.
Noise-Whine	• Refer to **Symptoms - Automatic Transmission**. • Do not replace the torque converter if noise is present in Neutral/Park. Refer to Symptoms - Engine Mechanical.
Vibration-Out of Balance	Refer to Torque Converter Vibration Test in this procedure.
No Drive/Slips in Drive	Do not replace the torque converter until completing all engine and transmission diagnostics.
Idle Surge/Rough Idle	Do not replace the torque converter. Refer to Symptoms - Engine Controls.
TCC Apply/Release Shudder	Do not replace the torque converter. Refer to Torque Converter Clutch Shudder in this procedure.
TCC Chuggle	Do not replace the torque converter. Refer to Symptoms - Engine Controls.
Transmission Fluid Contaminated with Sludge/Metal Particles as a result of: • Engine Coolant/Oil • Pump damage • Drive sprocket support damage • Turbine/stator shaft damage • Internal converter damage with no damage found in the transmission	Replace the torque converter.
Poor Acceleration above 48 km/h (30 mph) - Good Launch	Do not replace the torque converter until completing all engine and transmission diagnostics. • Refer to Torque Converter Stator in this procedure. • Refer to Symptoms - Engine Controls.

cardiagn.com

Condition	Action
Poor Launch - Good Acceleration above 48 km/h (30 mph)	Do not replace the torque converter until completing all engine and transmission diagnostics. • Refer to Torque Converter Stator in this procedure. • Refer to Symptoms - Engine Controls.
Stripped Converter Bolt Holes	• Replace the torque converter. • Inspect flexplate.
Torque Converter Pilot Damaged	Replace the torque converter.
Torque Converter Hub surface is damaged - scored, raised/transferred metal.	Replace the torque converter.
External Leaks in the weld areas - hub, lug or closure weld.	Replace the torque converter.
Broken/Cracked Flexplate	Replace the torque converter.
Torque Converter Discolored/Overheated	Replace the torque converter.

FLEX PLATE/TORQUE CONVERTER VIBRATION TEST

Isolating Vibration

CAUTION: **Some engine/transaxle combinations cannot be balanced in this manner due to restricted access or limited clearances between the torque converter bolts and the engine. Ensure that the bolts do not bottom out in the lug nuts or the torque converter cover which could dent and cause internal damage.**

To isolate and correct a flywheel or torque converter vibration, separate the torque converter from the flywheel to determine if vibration is in the engine or transmission.

1. With the engine at idle speed and the transmission in PARK or NEUTRAL, observe the vibration.
2. Turn the engine OFF.
3. Raise and suitably support the vehicle. Refer to **Lifting and Jacking the Vehicle** .
4. Remove the transmission converter cover bolts and the cover.
5. Mark the relationship of the converter to the flywheel.
6. Remove the bolts attaching the converter to the flywheel.
7. Slide the torque converter away from the flywheel.
8. Rotate the flywheel and torque converter to inspect for defects or missing balance weights.
9. Lower the vehicle.
10. With the engine at idle speed and the transmission in PARK or NEUTRAL, observe the vibration. Refer to **Diagnostic System Check - Vehicle** .
11. Turn the engine OFF.

Indexing Torque Converter

To determine and correct a torque converter vibration, the following procedure may have to be performed several times to achieve the best possible torque converter to flywheel balance.

1. Raise and suitably support the vehicle. Refer to **Lifting and Jacking the Vehicle** .
2. Rotate the torque converter one bolt position.
3. Align the torque converter hub (2) in the engine crankshaft (3) and install the torque converter to flywheel bolts.

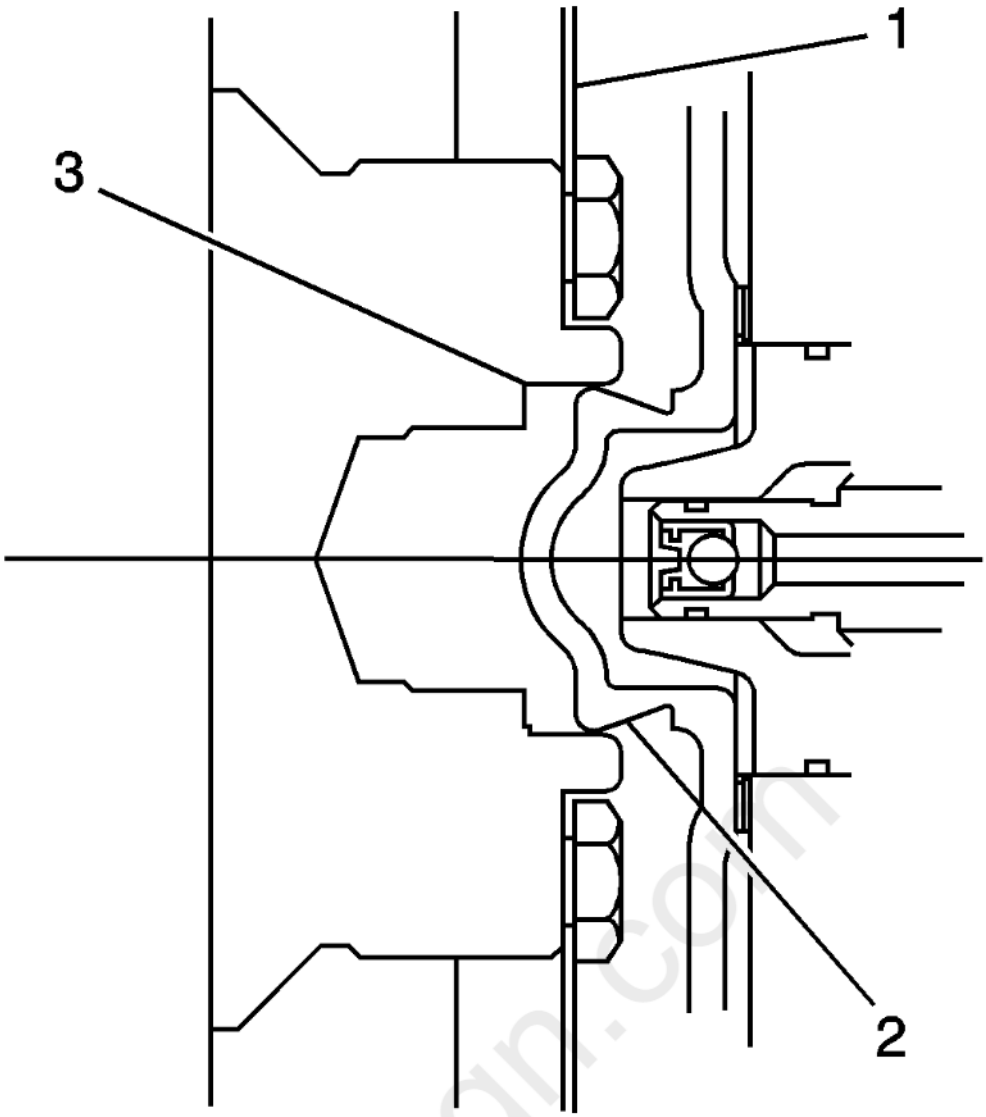

Fig. 8: View Of Torque Converter Hub In Engine Crankshaft
Courtesy of GENERAL MOTORS COMPANY

4. Lower the vehicle.
5. With the engine at idle speed and the transmission in PARK or NEUTRAL, observe the vibration. Refer to **Noise and Vibration Analysis**.

   Repeat this procedure until you obtain the best possible balance.

6. Install the transmission converter cover bolts and the cover.

BUSHING AND MATING SHAFT INSPECTION

NOTE: **Proper bushing and corresponding mating shaft inspection should be performed before replacing the bushing, shaft and in some cases, the component which houses the bushing. Thoroughly clean and dry the bushing and shaft surfaces before inspecting for damage.**

Any of the following bushing conditions require replacement of the bushing and/or housing:

- Discoloration due to heat distress
- Misalignment or displacement of bushing as a result of spinning in housing
- Medium to heavy scoring that can be easily detected with fingernail. Light scoring is a normal condition.
- Debris embedded into the bushing lining material
- Obvious damage, including excessive and uneven wear
- Excessive polishing. Minor polishing of the bushing is an indication of normal wear and does not require replacement.

Any of the following conditions require replacement of the bushing's mating shaft:

- Discoloration due to heat distress
- Rough surface finish that can be easily detected with finger
- Obvious shaft abnormalities, including warping or uneven surfaces
- Obvious damage or cracking

VIBRATION

Checks	Causes
Transmission Case Extension (411)	Inspect for damaged case extension.

NOISE AND VIBRATION ANALYSIS

A noise or vibration that is noticeable when the vehicle is in motion MAY NOT be the result of the transmission.

If noise or vibration is noticeable in PARK and NEUTRAL with the engine at idle, but is less noticeable as RPM increases, the cause may be from poor engine performance.

- Vibration may also be caused by a small amount of water inside the converter.
- Inspect the tires for the following conditions:
  - Uneven wear
  - Imbalance
  - Mixed sizes
  - Mixed radial and bias ply
- Inspect the suspension components for the following conditions:
  - Alignment wear or damage
  - Loose fasteners
  - Driveline damage or wear
- Inspect the engine and transmission mounts for damage and loose bolts.
- Inspect the transmission case mounting holes for the following conditions:
  - Missing bolts, nuts and studs
  - Stripped threads
  - Cracks
- Inspect the flywheel for the following conditions:
  - Missing or loose bolts
  - Cracks
  - Imbalance
- Inspect the torque converter for the following conditions:
  - Missing or loose bolts or lugs
  - Missing or loose balance weights
  - Imbalance caused by heat distortion or fluid contamination

WHINE/GROWL NOISE THAT CHANGES WITH VEHICLE SPEED

Checks	Causes
2-3-4-6-8 and 4-5-6-7-8 Reverse Clutch Thrust Bearing (58)	Inspect the bearing for wear or damage.

cardiagn.com

Checks	Causes
Output Carrier Assembly (73)	• Inspect the carrier assembly for damaged pinion gears, thrust washers, pins and rollers. • Inspect for a damaged center support roller bearing assembly. • Inspect for damaged thrust bearings. • Inspect for damaged sun gears. • Inspect the carrier assembly for damaged output carrier rear sun gear thrust bearing (captured). • Inspect for damaged or stripped splines on the output carrier assembly.
Output Sun Gear Thrust Bearing (75)	Inspect the bearing for wear or damage.
Input Sun Gear Thrust Bearing (61)	Inspect the bearing for wear or damage.
Input Sun Gear Assembly (69)	Inspect for spline wear or damage.
1-2-3-4-5 Reverse Clutch Hub Thrust Bearing (70)	Inspect the bearing for wear or damage.
A/Trans Fluid Filter (46)	• Inspect for damaged or restricted fluid filter assembly (26) • Inspect for damaged fluid filter seal assembly (25) or improper sealing interface (leaks, fluid aeration).
A/Trans Fluid Pump Seal (302)	Inspect for worn or damaged seal.

CLUTCH PLATE DIAGNOSIS

Composition Plates

Dry the plates and inspect the plates for the following conditions:

- Pitting
- Flaking
- Delamination - splitting or separation of bonded clutch material
- Wear
- Glazing
- Cracking
- Charring
- Chips or metal particles embedded in the lining

Replace a composition plate which shows any of these conditions.

Steel Plates

Wipe the plates dry and check the plates for heat discoloration. If the surfaces are smooth, even if color smear is indicated, you can reuse the plate. If the plate is discolored with heat spots or if the surface is scuffed, replace the plate.

Causes of Burned Clutch Plates

The following conditions can result in a burned clutch plate:

- Incorrect usage of clutch or apply plates
- Engine coolant or water in the transmission fluid
- A cracked clutch piston

cardiagn.com

- Damaged or missing seals
- Low line pressure
- Valve body conditions
  - The valve body face is not flat.
  - Porosity is between channels.
  - The valve bushing clips are improperly installed.
  - The checkballs are misplaced.
- The TeflonÂ® seal rings are worn or damaged.

ENGINE COOLANT/WATER IN TRANSMISSION

CAUTION: **The antifreeze or water will deteriorate the seals, gaskets and the glue that bonds the clutch material to the pressure plate. Both conditions may cause damage to the transmission.**

If antifreeze or water has entered the transmission, perform the following:

1. Disassemble the transmission.
2. Replace all of the rubber type seals. The coolant will attack the seal material which will cause leakage.
3. Replace the composition - faced clutch plate assemblies. The facing material may separate from the steel center portion.
4. Replace all of the nylon parts - washers.
5. Replace the torque converter.
6. Thoroughly clean and rebuild the transmission, using new gaskets and oil filter.
7. Flush the cooler lines after the transmission cooler has been properly repaired or replaced.

FLUID LEAK DIAGNOSIS

General Method

1. Verify that the leak is transmission fluid.
2. Thoroughly clean the suspected leak area using a rag.

   CAUTION: **Do not clean using brake cleaner or other reactive solvents as these solvents can damage rubber gaskets, seals and bushings.**

3. Operate the vehicle for 15-20 minutes under city driving conditions until normal operating temperatures are reached.

   NOTE: **Do not idle vehicle, this will not actuate transmission systems and do not drive the vehicle on the freeway as this will splatter oil inhibiting leak diagnosis.**

4. Park the vehicle over clean paper or cardboard.
5. Shut OFF the engine.
6. Look for fluid spots on the paper.
7. Make the necessary repairs.

Powder Method

1. Thoroughly clean the suspected leak area using a rag.

   CAUTION: **Do not clean using brake cleaner or other reactive solvents as these solvents can damage rubber gaskets, seals and bushings.**

2. Apply an aerosol type powder, such as foot powder, to the suspected leak area.

cardiagn.com

3. Operate the vehicle for 15-20 minutes under city driving conditions until normal operating temperatures are reached.

NOTE: **Do not idle vehicle, this will not actuate transmission systems and do not drive the vehicle on the freeway as this will splatter oil inhibiting leak diagnosis.**

4. Shut OFF the engine.
5. Inspect the suspected leak area.
6. Trace the leak path through the powder in order to find the source of the leak.
7. Make the necessary repairs.

Dye and Black Light Method

A fluid dye and black light kit is available from various tool manufacturers.

1. Follow the manufacturer's instructions in order to determine the amount of dye to use.
2. Detect the leak with the black light.
3. Make the necessary repairs.

Find the Cause of the Leak

Pinpoint the leak and trace the leak back to the source. You must determine the cause of the leak in order to repair the leak properly. For example, if you replace a gasket, but the sealing flange is bent, the new gasket will not repair the leak. You must also repair the bent flange. Before you attempt to repair a leak, check for the following conditions and make repairs as necessary:

Gaskets

- Fluid level/pressure is too high
- Plugged vent or drain-back holes
- Improperly tightened fasteners
- Dirty or damaged threads
- Warped flanges or sealing surface
- Scratches, burrs or other damage to the sealing surface
- Damaged or worn gasket
- Cracking or porosity of the component
- Improper sealant used, where applicable
- Incorrect gasket

Seals

- Fluid level/pressure is too high
- Plugged vent or drain-back holes
- Damaged seal bore
- Damaged or worn seal
- Improper installation
- Cracks in component
- Manual or output shaft surface is scratched, nicked or damaged
- Loose or worn bearing causing excess seal wear

Possible Points of Fluid Leaks

Transmission Oil Pan

- Incorrectly tightened oil pan bolts
- Improperly installed or damaged oil pan gasket
- Damaged oil pan or mounting face

cardiagn.com

- Incorrect oil pan gasket

Case Leak

- Damaged vehicle speed sensor seal
- Damaged manual shaft seal
- Loose or damaged oil cooler connector fittings
- Worn or damaged propeller shaft oil seal
- Loose line pressure pipe plug
- Porous casting warped torque converter housing

Leak at the Torque Converter End

- Converter leak in the weld area
- Converter seal lip cut. Check the converter hub for damage
- Converter seal bushing moved forward and damaged
- Converter seal garter spring missing from the seal
- Porous casting of the transmission case or the oil pump

Leak at the Vent Pipe

- Overfilled system
- Water or coolant in the fluid; The fluid will appear milky
- Transmission case porous
- Incorrect fluid level indicator
- Plugged vent
- Drain-back holes plugged
- Mispositioned oil pump to case gasket, if equipped

Leak Inspection Points

cardiagn.com

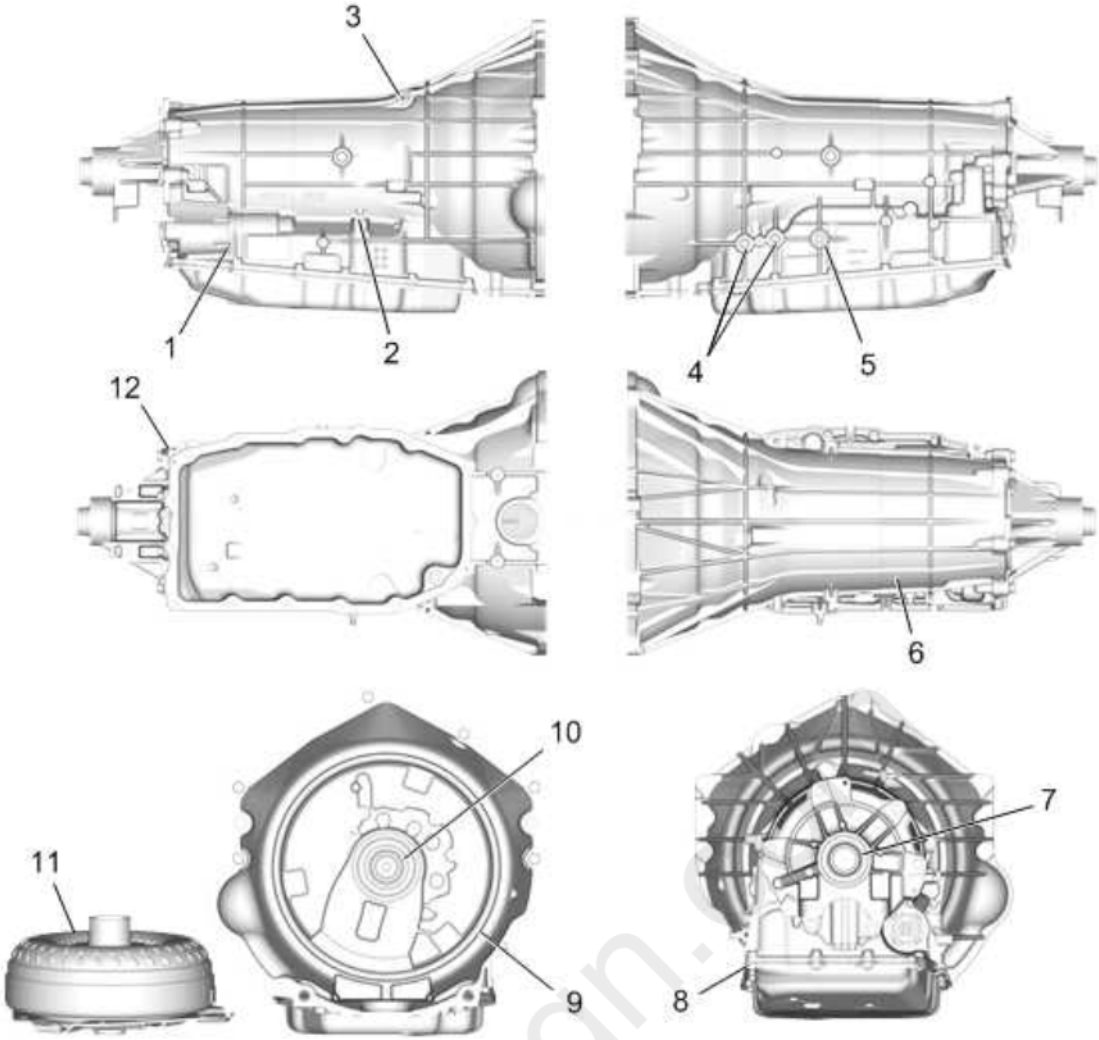

Fig. 9: Leak Inspection Points
Courtesy of GENERAL MOTORS COMPANY

1. A/Trans Wiring Harness
2. Transmission Fluid Fill Tube Plug
3. A/Trans Vent
4. Transmission Cooler Pipe Fitting Seal
5. Manual Shift Shaft Seal
6. A/Trans Case Assembly
7. Propeller Shaft Transmission Flange Fluid Seal
8. A/Trans Fluid Pan Gasket
9. A/Trans Case Front Cover Seal
10. Torque Converter Fluid Seal
11. Torque Converter
12. A/Trans Case Extension Seal

CASE POROSITY REPAIR

Some external leaks are caused by case porosity in non-pressurized areas. You can usually repair these leaks with the transmission in the vehicle.

1. Thoroughly clean the area to be repaired with a cleaning solvent. Air dry the area.
2. Using instructions from the manufacturer, mix a sufficient amount of an epoxy to make the repair.

WARNING: **Epoxy adhesive may cause skin irritations and eye damage. Read and follow all information on the container label as provided by the manufacturer.**

3. While the transmission case is still hot, apply the epoxy. You can use a clean, dry soldering acid brush to clean the area and also to apply the epoxy cement. Make certain that the area to be repaired is fully covered.
4. Allow the epoxy cement to cure for three hours before starting the engine.
5. Repeat the fluid leak diagnosis procedures.

AUTOMATIC TRANSMISSION FLUID LEAKS

Checks	Causes
Torque Converter (1)	Inspect for damage, cracks at the lug, hub and seal welds.
Automatic Transmission Fluid Pump Seal (5)	Inspect for cut, wear or damage.
A/Trans Case Assembly (16)	• Inspect for porosity or damage. • Inspect manual shaft seal. • Inspect control wiring input sleeve seals.
A/Trans Case Extension Assembly (22)	• Verify oil is from transmission and not transfer case assembly (4WD/AWD). • Inspect extension seal assembly (inner seal behind boot - 2WD only). • Inspect extension to case seal (2WD only).
A/Trans Fluid Pan (49)	• Inspect the pan assembly for damage. • Inspect gasket for damage or wear. • Inspect case and pan for damage and flatness at gasket interface area.
Cooler Lines/Coolers	• Inspect and follow cooler lines to front radiator and external coolers. • Some vehicles may have rear differential external and internal coolers.

SHIFT INDICATOR INDICATES WRONG GEAR SELECTION

Checks	Causes
Shift Cable	• Inspect for damage. • Verify proper attachment to shifter. • Verify cable is locked into shifter bracket. • Verify cable is properly attached to the transmission. • Verify that the cable is locked into the transmission bracket. • Verify proper shift cable adjustment.
Manual Shaft	• Verify shift lever is properly attached to the manual shaft. • Verify manual shaft is not twisted or damaged.

Checks	Causes
Manual Shift Detent Lever with Shaft Position Switch Assembly, IMS	Verify proper operation.

NO PARK OR DRIVE

Checks	Causes
Output Shaft Assembly (76)	Inspect for a broken or damaged output shaft. Inspect for worn splines.
A/Trans Case Assembly (16)	• Inspect for broken or damaged case. • Inspect for broken or bent park pawl actuator. • Inspect for broken or missing park pawl actuator guide pin or manual shaft pin. • Inspect for broken, loose or misaligned park pawl guide. • Inspect for binding or broken park pawl or actuator assembly.
Manual Shift Shaft Position Switch Assembly (604)	Inspect for broken or disengaged manual valve detent.

HARSH GARAGE SHIFT

Checks	Causes
NOTE: **On cold days, approximately 32Â°F (0Â°C) or colder, the transmission is designed to shift differently. The transmission uses a warm-up mode shift schedule until the engine reaches normal operating temperature. While the transmission is in warm-up mode, it is normal for transmission upshifts to be delayed or held longer. This feature improves heater performance by giving quicker vehicle warm-ups.**	
Engine	Elevated engine RPM - Verify correct engine operating rpm per application.
Control Solenoid (w/Body and Valve) Valve Assembly (40)	• Incorrect or inadequate adapt activity - Perform **Transmission Service Fast Learn Procedure** procedure. • Incorrect TCM temperature reporting - Monitor TCM temperature using a scan tool. • Line pressure control solenoid incorrect pressure.

NO DRIVE IN ALL RANGES

Checks	Causes
A/Trans Fluid Pan (49)	Verify proper fluid level and condition, inspect transmission assembly for leaks.
A/Trans Fluid Filter (46)	• Inspect for damaged or restricted fluid filter (46). • Inspect for damaged fluid filter seal (45) or improper sealing interface, leaks and fluid aeration.
A/Trans Fluid Pump Seal (302)	Inspect for worn or damaged seal.
A/Trans Cooling/Lubrication System	Inspect transmission oil cooler (radiator) and cooler line seals for restrictions, damage, kinks or leaks.
Torque Converter Assembly (1)	Inspect for overheating (blued), ballooning, leaks or other damage.

Checks	Causes
Manual Valve (384)	Inspect the manual valve detent lever assembly and connection to the manual valve (384).
A/Trans Manual Shift Shaft Position Switch Assembly (308)	Inspect the switch assembly (308) and connection to the manual valve (354).
Manual Shift Shaft Position Switch Assembly (604)	Inspect PRNDL commands to and from vehicle using Tech 2.
Control Solenoid (w/Body and Valve) Valve Assembly (40)	Inspect PRNDL commands to and from vehicle using Tech 2.
Output Shaft (76)	Inspect for spline wear or damage.
Output Carrier Assembly (73)	• Inspect the carrier assembly for damaged pinion gears, thrust washers, pins and rollers. • Inspect for damaged thrust bearings. • Inspect for damaged sun gears. • Inspect the carrier assembly for damaged output carrier rear sun gear thrust bearing (captured).
Input Carrier Assembly (67)	Inspect carrier assembly for damaged pinion gears, thrust washers, pins and rollers.
Input Sun Gear Assembly (69)	Inspect for spline wear or damage.

HARSH, SOFT, DELAYED OR SLIPPING FIRST, THIRD, FIFTH, SIXTH OR SEVENTH SHIFT

Checks	Causes
1-3-5-6-7 Clutch Assembly (57)	• Inspect for damaged or worn 1-3-5-6-7 clutch plates (511-512). • Inspect for damaged 1-3-5-6-7 clutch piston (509), clutch housing (506), return spring (515) and piston dam (516). • Inspect for damaged 1-3-5-6-7 clutch piston dam retaining ring (517). • Inspect for cut, worn or damaged 1-3-5-6-7 clutch piston seals (507, 508) and dam seal (510). • Inspect for improper selective 1-3-5-6-7 clutch backing plate retaining ring (514). • Inspect for damaged 1-3-5-6-7 clutch backing plate (513). Inspect for worn splines on backing plate.

NO FIRST, THIRD, FIFTH, SIXTH OR SEVENTH GEAR

Checks	Causes

cardiagn.com

Checks	Causes
1-3-5-6-7 Clutch Assembly (57)	• Inspect for damaged or worn 1-3-5-6-7 clutch plates (511-512). • Inspect for damaged 1-3-5-6-7 clutch piston (509), clutch housing (506), return spring (515) and piston dam (516). • Inspect for damaged 1-3-5-6-7 clutch piston dam retaining ring (517). • Inspect for cut, worn or damaged 1-3-5-6-7 clutch piston seals (507, 508) and dam seal (510). • Inspect for improper selective 1-3-5-6-7 clutch backing plate retaining ring (514). • Inspect for damaged 1-3-5-6-7 clutch backing plate (513). Inspect for worn splines on backing plate.

HARSH, SOFT, DELAYED OR SLIPPING SECOND, THIRD, FOURTH, SIXTH OR EIGHTH SHIFT

Checks	Causes
2-3-4-6-8 and 4-5-6-7-8 Reverse Clutch Assembly (60)	• Inspect for damaged or worn 2-3-4-6-8 clutch plates (545-548). • Inspect for damaged 2-3-4-6-8 clutch piston (526), clutch housing (521), return spring (527), piston dam (529) and apply ring (544). • Inspect for damaged 2-3-4-6-8 clutch piston dam retaining ring (531). • Inspect for cut, worn or damaged 2-3-4-6-8 clutch piston seal (525) and dam seals (522, 528, 530). • Inspect for improper selective 2-3-4-6-8 clutch backing plate retaining ring (550). • Inspect for damaged 2-3-4-6-8 clutch backing plate (549). Inspect for worn splines on backing plate.

NO SECOND, THIRD, FOURTH, SIXTH OR EIGHTH GEAR

Checks	Causes
2-3-4-6-8 and 4-5-6-7-8 Reverse Clutch Assembly (60)	• Inspect for damaged or worn 2-3-4-6-8 clutch plates (545-548). • Inspect for damaged 2-3-4-6-8 clutch piston (526), clutch housing (521), return spring (527), piston dam (529) and apply ring (544). • Inspect for damaged 2-3-4-6-8 clutch piston dam retaining ring (531). • Inspect for cut, worn or damaged 2-3-4-6-8 clutch piston seal (525) and dam seals (522, 528, 530). • Inspect for improper selective 2-3-4-6-8 clutch backing plate retaining ring (550). • Inspect for damaged 2-3-4-6-8 clutch backing plate (549). Inspect for worn splines on backing plate.

HARSH, SOFT, DELAYED OR SLIPPING FOURTH, FIFTH, SIXTH, SEVENTH, EIGHTH OR REVERSE SHIFT

Checks	Causes
2-3-4-6-8 and 4-5-6-7-8 Reverse Clutch Assembly (60)	• Inspect for damaged or worn 4-5-6-7-8 Reverse clutch plates (539-541). • Inspect for damaged 4-5-6-7-8 Reverse clutch piston (534), clutch housing (521), return spring (535), piston dam (537) and piston stop (532). • Inspect for damaged 4-5-6-7-8 Reverse clutch piston dam retaining ring (538). • Inspect for cut, worn or damaged 4-5-6-7-8 Reverse clutch piston seals (524, 533), piston stop O-ring seal (523) and dam seal (536). • Inspect for improper selective 4-5-6-7-8 Reverse clutch backing plate retaining ring (543). • Inspect for damaged 4-5-6-7-8 Reverse clutch backing plate (542). Inspect for worn splines on backing plate.

NO FOURTH, FIFTH, SIXTH, SEVENTH, EIGHTH OR REVERSE GEAR

Checks	Causes
2-3-4-6-8 and 4-5-6-7-8 Reverse Clutch Assembly (60)	• Inspect for damaged or worn 4-5-6-7-8 Reverse clutch plates (539-541). • Inspect for damaged 4-5-6-7-8 Reverse clutch piston (534), clutch housing (521), return spring (535), piston dam (537) and piston stop (532). • Inspect for damaged 4-5-6-7-8 Reverse clutch piston dam retaining ring (538). • Inspect for cut, worn or damaged 4-5-6-7-8 Reverse clutch piston seals (524, 533), piston stop O-ring seal (523) and dam seal (536). • Inspect for improper selective 4-5-6-7-8 Reverse clutch backing plate retaining ring (543). • Inspect for damaged 4-5-6-7-8 Reverse clutch backing plate (542). Inspect for worn splines on backing plate.

cardiagn.com

HARSH, SOFT, DELAYED OR SLIPPING FIRST, SECOND, SEVENTH, EIGHTH OR REVERSE SHIFT

Checks	Causes
1-2-7-8 Reverse Clutch Assembly	• Inspect for damaged or worn 1-2-7-8 Reverse clutch plates (585-588). • Inspect for damaged 1-2-7-8 Reverse clutch piston (582), clutch piston housing (581), return spring (583) and apply ring (584). • Inspect for damaged 1-2-7-8 Reverse clutch piston housing retaining ring (580). • Inspect for damaged or improper selective 1-2-7-8 Reverse clutch backing plate (589). Inspect for worn splines on backing plate.

NO FIRST, SECOND, SEVENTH, EIGHTH OR REVERSE GEAR

Checks	Causes

Checks	Causes
1-2-7-8 Reverse Clutch Assembly	• Inspect for damaged or worn 1-2-7-8 Reverse clutch plates (585-588). • Inspect for damaged 1-2-7-8 Reverse clutch piston (582), clutch piston housing (581), return spring (583) and apply ring (584). • Inspect for damaged 1-2-7-8 Reverse clutch piston housing retaining ring (580). • Inspect for damaged or improper selective 1-2-7-8 Reverse clutch backing plate (589). Inspect for worn splines on backing plate.

HARSH, SOFT, DELAYED OR SLIPPING FIRST, SECOND, THIRD, FOURTH, FIFTH OR REVERSE SHIFT

Checks	Causes
1-2-3-4-5 Reverse Clutch Assembly	• Inspect for damaged or worn 1-2-3-4-5 Reverse clutch plates (592-595). • Inspect for damaged 1-2-3-4-5 Reverse clutch piston (406), clutch piston dam (402) and return spring (405). • Inspect for cut, worn or damaged 1-2-3-4-5 Reverse clutch piston seals (403, 408), piston O-ring seal (404), dam seal (401) and dam inner O-ring seal (409). • Inspect for damaged 1-2-3-4-5 Reverse clutch piston dam retaining ring (400). • Inspect for damaged or improper selective 1-2-3-4-5 Reverse clutch backing plate retaining ring (590). • Inspect for damaged 1-2-3-4-5 Reverse clutch backing plate (591). Inspect for worn splines on backing plate.

NO FIRST, SECOND, THIRD, FOURTH, FIFTH OR REVERSE GEAR

Checks	Causes
1-2-3-4-5 Reverse Clutch Assembly	• Inspect for damaged or worn 1-2-3-4-5 Reverse clutch plates (592-595). • Inspect for damaged 1-2-3-4-5 Reverse clutch piston (406), clutch piston dam (402) and return spring (405). • Inspect for cut, worn or damaged 1-2-3-4-5 Reverse clutch piston seals (403, 408), piston O-ring seal (404), dam seal (401) and dam inner O-ring seal (409). • Inspect for damaged 1-2-3-4-5 Reverse clutch piston dam retaining ring (400). • Inspect for damaged or improper selective 1-2-3-4-5 Reverse clutch backing plate retaining ring (590). • Inspect for damaged 1-2-3-4-5 Reverse clutch backing plate (591). Inspect for worn splines on backing plate.

NO TORQUE CONVERTER CLUTCH APPLY

Checks	Causes
Torque Converter Assembly (1)	Diagnose torque converter for possible internal damage. Refer to **Torque Converter Diagnosis**.

cardiagn.com

NO TORQUE CONVERTER CLUTCH RELEASE

Checks	Causes
Torque Converter Assembly (1)	Diagnose torque converter for possible internal damage. Refer to **Torque Converter Diagnosis**.

TRANSMISSION SERVICE FAST LEARN PROCEDURE

The transmission service fast learn is a procedure that is performed after any 8L45/90 transmission repair. The service fast learn procedure performs a series of tests which allow the transmission control module (TCM) to learn individual clutch apply pressures. These learn pressure values are used by the TCM for clutch control and timing of shifts. The scan tool is used to perform the transmission service fast learn procedure.

The service fast learn procedure must be performed when any of the following repairs has been made to the transmission.

- Pressure regulating solenoid replacement
- Valve body repair or replacement
- Any service/repair in response to a shift quality concern
- Any internal transmission service, repair, overhaul or replacement
- Torque converter replacement
- TCM replacement
- Transmission assembly replacement
- Reprogramming Transmission Control Module

Failure to perform the procedure may result in poor transmission performance, DTCs being set or customer dissatisfaction. Perform the service fast learn procedure in the exact sequence as listed below.

1. If a pressure regulating solenoid, TCM or transmission assembly was replaced, perform the **Solenoid Valve Characterization Reprogramming**.
2. Ignition ON, clear the DTCs with a scan tool.
3. Ignition OFF and all vehicle systems OFF. It may take up to 2 minutes for all vehicle control modules to power down.
4. Engine running, transmission in drive position with brake applied. Perform the service fast learn procedure with a scan tool. Follow the instructions on the scan tool.

   NOTE: **If the transmission fluid temperature is not between 75Â°C (167Â°F) and 85Â°C (185Â°F) the scan tool will not allow you to perform the service fast learn procedure.**

5. Ignition OFF for 2 minutes.

FLUID PRESSURE HIGH OR LOW

Checks	Causes
A/Trans Fluid Pump Assembly (301)	• Inspect for damaged or porous pump cover assembly. Inspect for pump surfaces not flat. • Inspect for excessive fluid pump shaft clearance or damage. • Inspect for worn or damaged fluid pump seal (302). • Inspect for worn or damaged fluid pump gasket (303).

cardiagn.com

Checks	Causes
Control Valve Upper Body Assembly (315)	• Inspect for worn, sticking or damaged actuator feed limit valve (335) and spring (334). • Inspect for worn, sticking or damaged 1-2-3-4-5 reverse clutch boost valve (344) and spring (345).
A/Trans Fluid Filter (46)	• Inspect for damaged or restricted fluid filter assembly (46). • Inspect for damaged fluid filter seal assembly (45).

cardiagn.com

2017 TRANSMISSION

Automatic Transmission - 8L45 (M5N) or 8L90 (M5X) - Repair Instructions - Off Vehicle - CT6

REPAIR INSTRUCTIONS - OFF VEHICLE

TORQUE CONVERTER REMOVAL AND HOLDING FIXTURE INSTALLATION

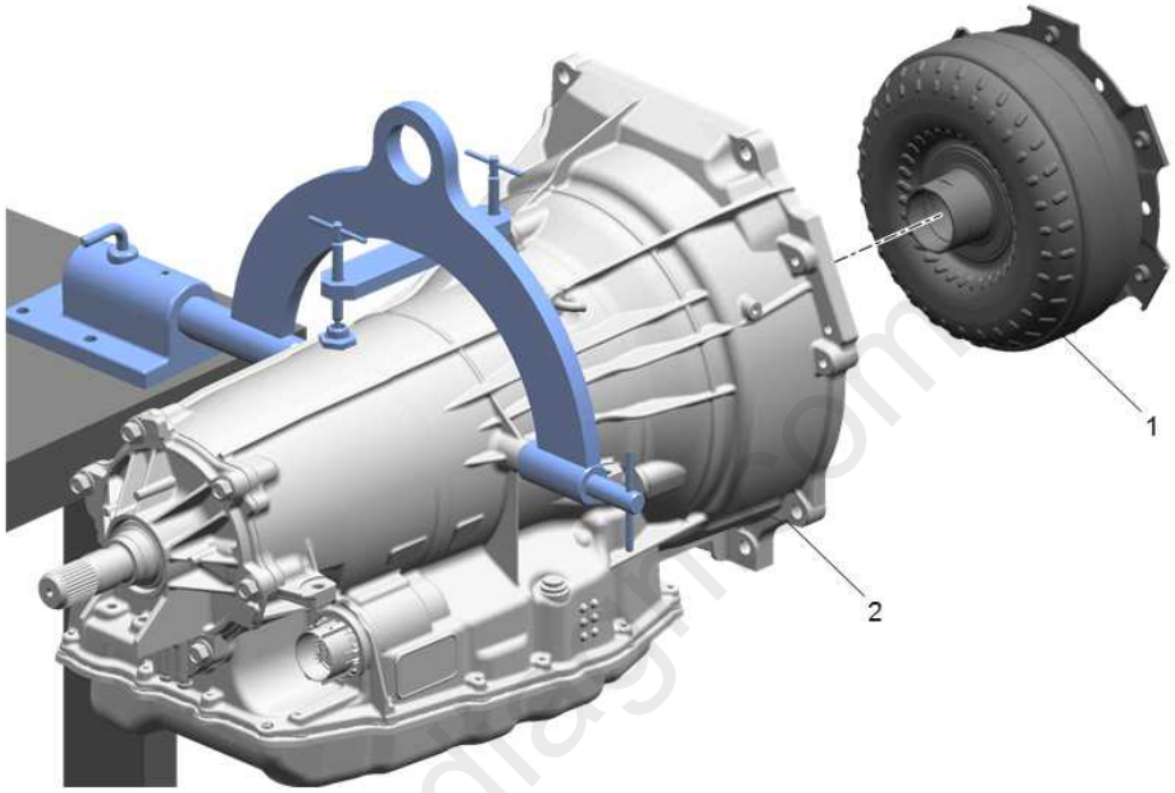

Fig. 1: Torque Converter Removal and Holding Fixture
Courtesy of GENERAL MOTORS COMPANY

Callout	Component Name
1	Torque Converter
2	Automatic Transmission Case Assembly **Procedure** 1. Rotate the transmission so that the converter housing is up and secure with locking pin. 2. Allow any remaining transmission fluid to drain from the case extension. **Special Tools** • **DT-03289-20** Holding Fixture Base Assembly • **DT-48989** Holding Fixture For equivalent regional tools, refer to **Special Tools** .

TRANSMISSION FLUID PAN AND FILTER ASSEMBLY REMOVAL

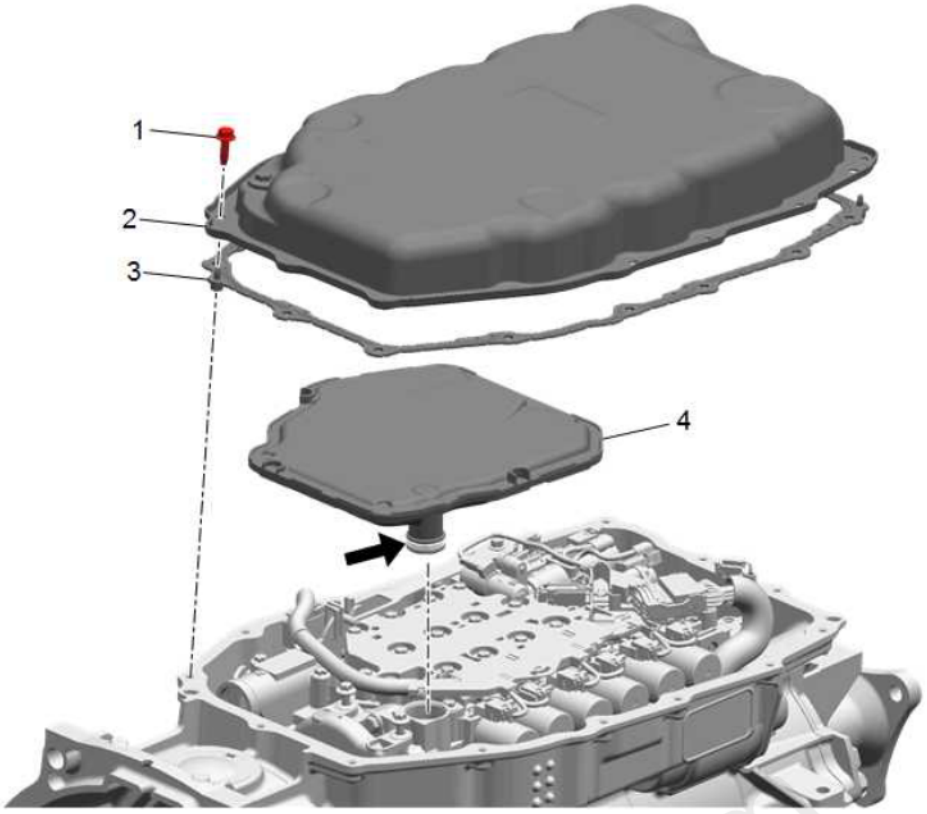

Fig. 2: Transmission Fluid Pan and Filter
Courtesy of GENERAL MOTORS COMPANY

Callout	Component Name
1	A/Trans Fluid Pan Bolt M6 x 20 (Qty: 15)
2	A/Trans Fluid Pan
3	A/Trans Fluid Pan Gasket **NOTE:** **The fluid pan gasket is reusable. Inspect the gasket to determine if it may be reused. If the gasket is stuck to the case or pan, it should be replaced.**
4	A/Trans Fluid Filter **CAUTION:** **Pull the fluid filter assembly straight out to avoid damage. Do not bend or twist the filter neck.** **NOTE:** **The seal is not serviced separately. Inspect the fluid filter seal, if the seal is damaged, replace the filter.**

AUXILIARY FLUID ACCUMULATOR REMOVAL (WITH STOP/START)

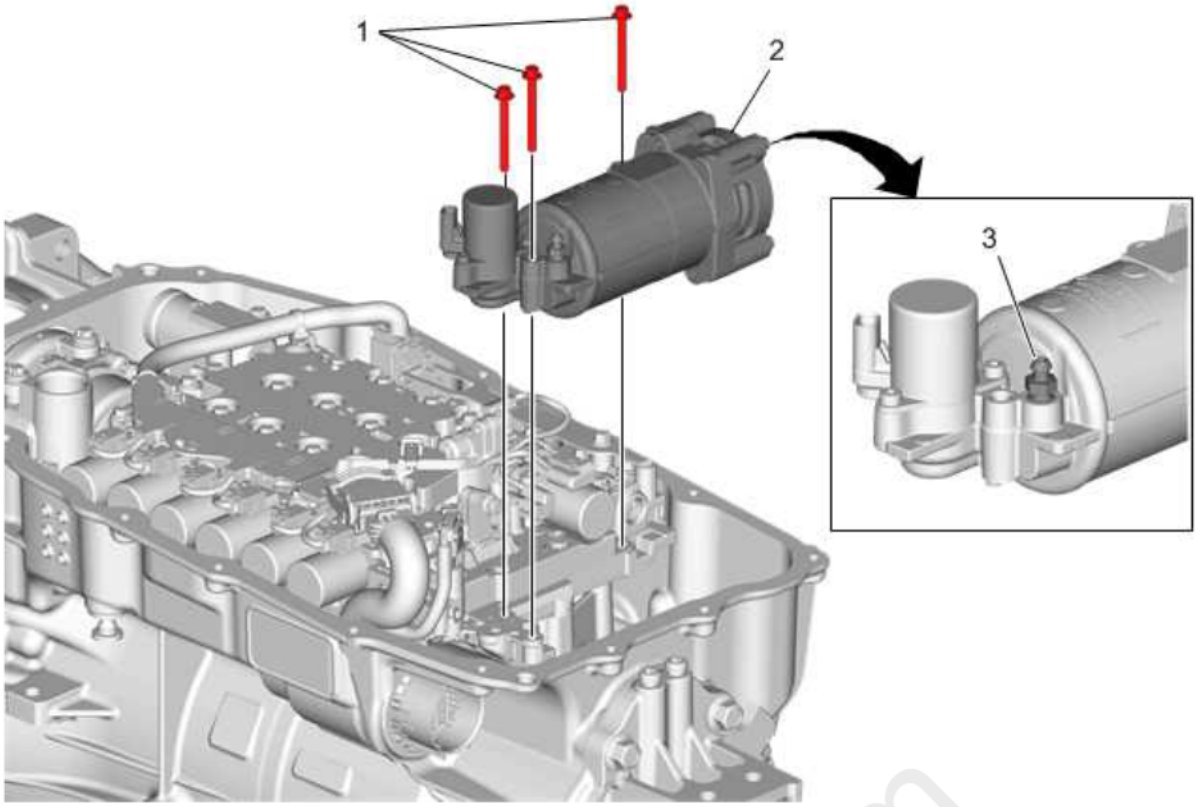

Fig. 3: Auxiliary Fluid Accumulator (With Stop/Start)
Courtesy of GENERAL MOTORS COMPANY

Auxiliary Fluid Accumulator Removal

Callout	Component Name
WARNING: **The automatic transmission fluid accumulator may be pressurized greater than 120 psi (827 kpa) and fluid may be hot. When servicing accumulator, key must be OFF for a minimum of 10 minutes. Do not open bleeder screw until instructed to do so or personal injury may result.** **Preliminary Procedure** 1. Disconnect the auxiliary fluid accumulator solenoid electrical connector. 2. Securely attach a hose from the bleeder valve into an approved container. 3. Slowly loosen bleeder valve until pressure begins to release. 4. Allow all pressure and fluid to be released from the auxiliary fluid accumulator. 5. Remove the bleeder valve to ensure all fluid and pressure has been released.	
1	A/Trans Auxiliary Fluid Accumulator Bolt (Qty: 3)
2	A/Trans Auxiliary Fluid Accumulator
3	A/Trans Auxiliary Fluid Accumulator Bleeder Valve

cardiagn.com

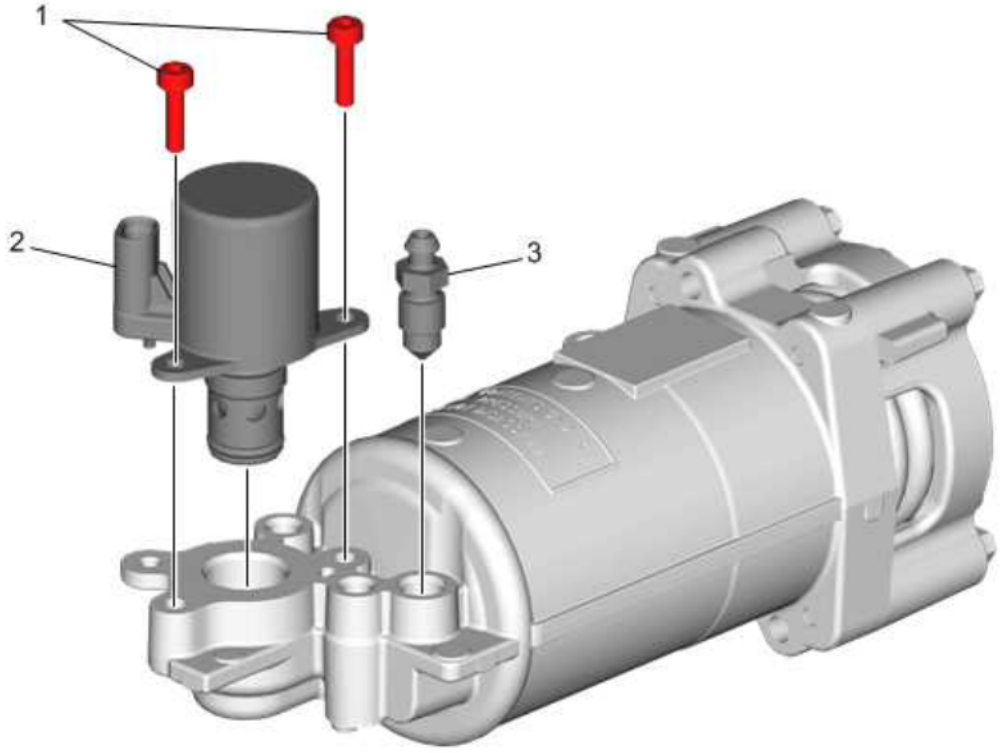

Fig. 4: Auxiliary Fluid Accumulator Solenoid and Bleeder Valve
Courtesy of GENERAL MOTORS COMPANY

Auxiliary Fluid Accumulator Solenoid and Bleeder Valve Removal

Callout	Component Name
1	A/Trans Auxiliary Fluid Accumulator Solenoid Bolts (Qty: 2)
2	A/Trans Auxiliary Fluid Accumulator Solenoid
3	A/Trans Auxiliary Fluid Accumulator Bleeder Valve

CONTROL VALVE ASSEMBLY AND TRANSMISSION WIRING HARNESS REMOVAL

A/Trans Fluid Baffle and Driven Sprocket Removal

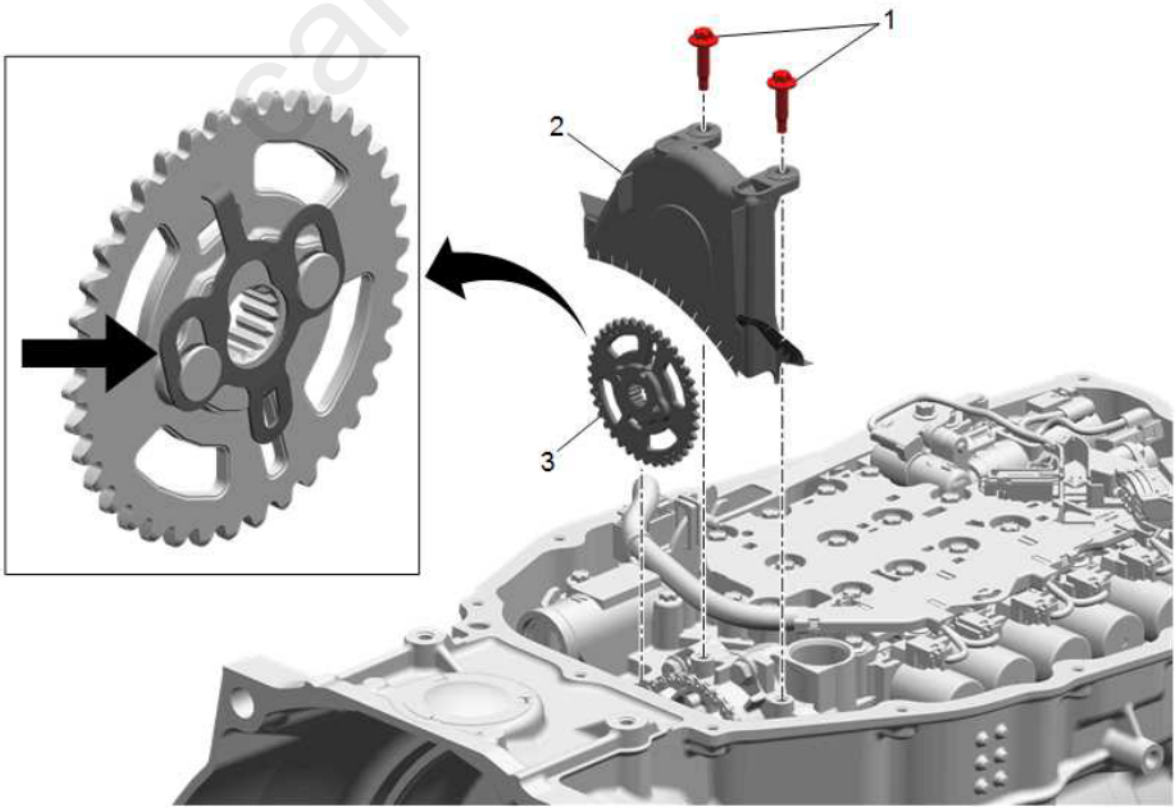

Fig. 5: A/Trans Fluid Baffle and Driven Sprocket
Courtesy of GENERAL MOTORS COMPANY

A/Trans Fluid Baffle and Driven Sprocket Removal

Callout	Component Name
1	A/Trans Fluid Baffle Bolt M6 x 25 [2x] **CAUTION:** **This vehicle is equipped with torque-to-yield or single use fasteners. Install a NEW torque-to-yield or single use fastener when installing this component. Failure to replace the torque-to-yield or single use fastener could cause damage to the vehicle or component.** **NOTE:** **Remove and DISCARD the bolts.**
2	A/Trans Fluid Baffle
3	Driven Sprocket **Procedure** 1. The driven sprocket locking tab is located on the back of the sprocket. 2. Rotate the sprocket as shown and simultaneously pull back and up on the tab to release the retainer. 3. Remove the driven sprocket from the oil pump shaft leaving the drive link (chain) loose in the case.

Control Valve Body Assembly Removal

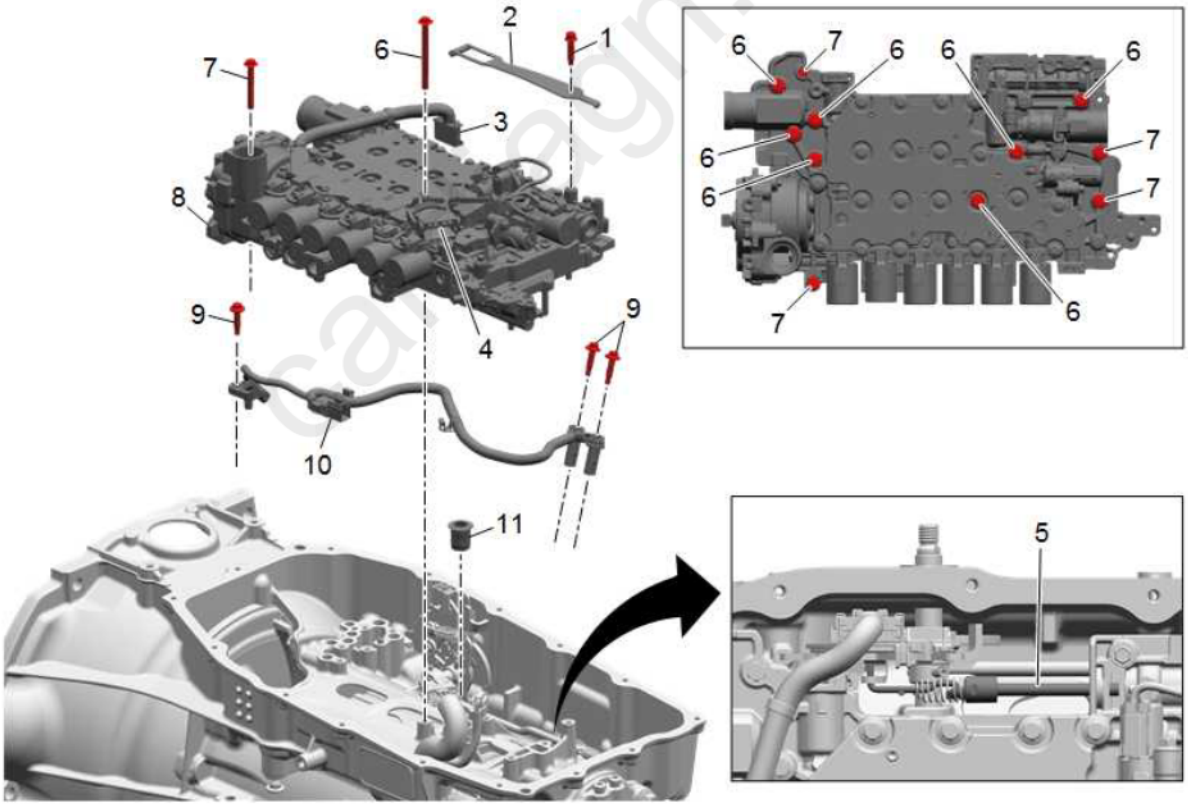

Fig. 6: Control Valve Body
Courtesy of GENERAL MOTORS COMPANY

Control Valve Body Assembly Removal

Callout	Component Name
1	Manual Shaft Detent Lever Spring Bolt M6 x 25 [1x]
2	Manual Shaft Detent Lever Spring

Callout	Component Name
3	A/Trans Control Wiring Harness **Procedure** Disconnect the wiring harness connector from the manual shift shaft position switch.
4	A/Trans Wiring Harness **Procedure** Disconnect the wiring harness connector from the A/Trans control wiring harness.
5	Manual Valve **Procedure** Disconnect the manual valve from the manual valve link.
6	Control Valve Solenoid Body Bolt M6 x 68 [7x] **NOTE:** **Do not remove all the bolts in the control valve body assembly. Remove only the bolts indicated.** **Special Tools** **DT-48285** Valve Body Torx Plus Socket For equivalent regional tools, refer to **Special Tools** .
7	Control Valve Solenoid Body Bolt M6 x 45 [4x] **NOTE:** **Do not remove all the bolts in the control valve body assembly. Remove only the bolts indicated.** **Special Tools** **DT-48285** Valve Body Torx Plus Socket For equivalent regional tools, refer to **Special Tools** .
8	Control Valve Body Assembly **CAUTION:** **Use care when handling the control valve body assembly. If dropped, damage to the control solenoid valve body assembly internal components may result.**
9	Output Speed Sensor Wiring Harness Bolt M6 x 25 [3x] **CAUTION:** **This vehicle is equipped with torque-to-yield or single use fasteners. Install a NEW torque-to-yield or single use fastener when installing this component. Failure to replace the torque-to-yield or single use fastener could cause damage to the vehicle or component.** **NOTE:** **Remove and DISCARD the bolts.** **Special Tools** **DT-48285** Valve Body Torx Plus Socket For equivalent regional tools, refer to **Special Tools** .
10	Output Speed Sensor Wiring Harness
11	Clutch Housing Fluid Passage Seal **NOTE:** **DISCARD the seal.**

cardiagn.com

TRANSMISSION CASE FRONT COVER AND DRIVE LINK REMOVAL

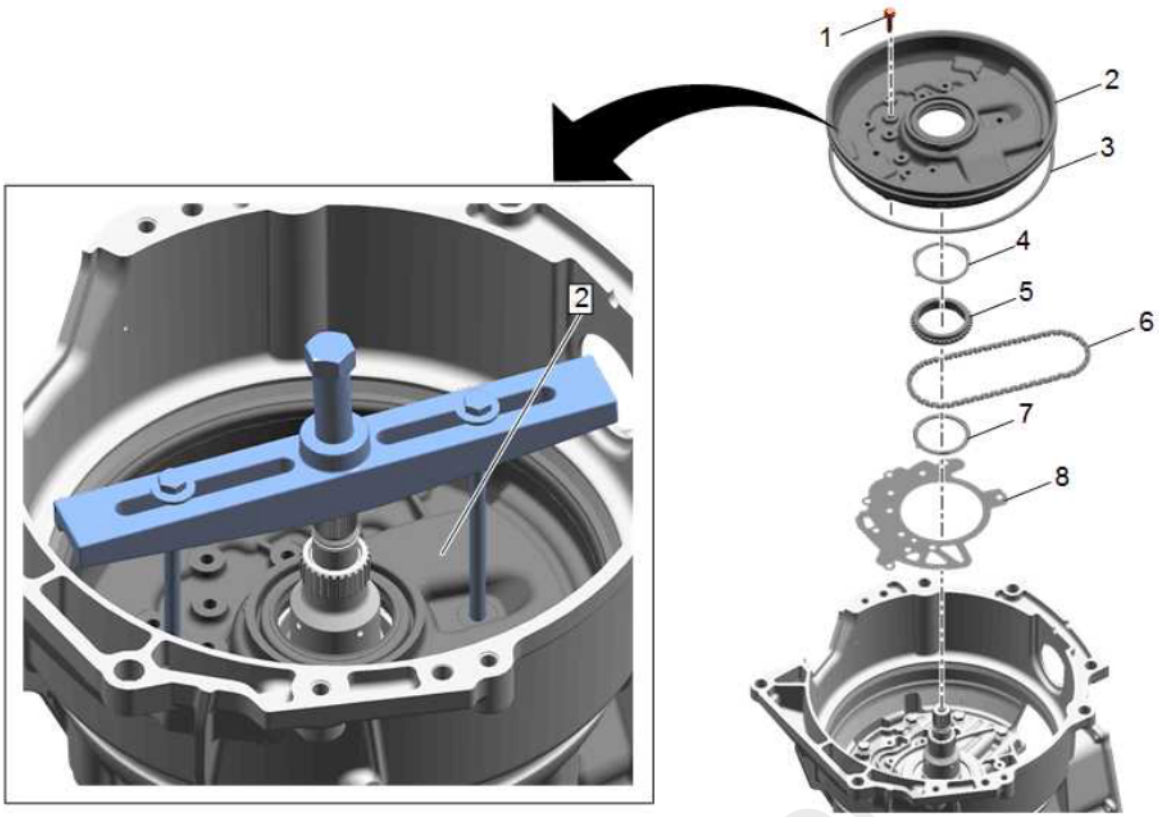

Fig. 7: Transmission Case Front Cover and Drive Link
Courtesy of GENERAL MOTORS COMPANY

Callout	Component Name
1	A/Trans Front Cover Bolt M6 x 30 (Qty: 11) **NOTE:** **DISCARD the bolts.**
2	A/Trans Front Cover **Procedure** Use the **GE-8433** puller bar and 2 bolts in the threaded holes of the front cover to remove it from the case. **Special Tools** **GE-8433** Puller Bar For equivalent regional tools, refer to **Special Tools** .
3	A/Trans Front Cover Seal **NOTE:** **DISCARD the seal.**
4	Drive Sprocket Thrust Washer (Front)
5	Drive Sprocket
6	Drive Link Assembly
7	Drive Sprocket Thrust Washer (Rear)
8	A/Trans Front Support Cover Gasket **NOTE:** **Remove and DISCARD the gasket.**

STATOR SHAFT SUPPORT REMOVAL

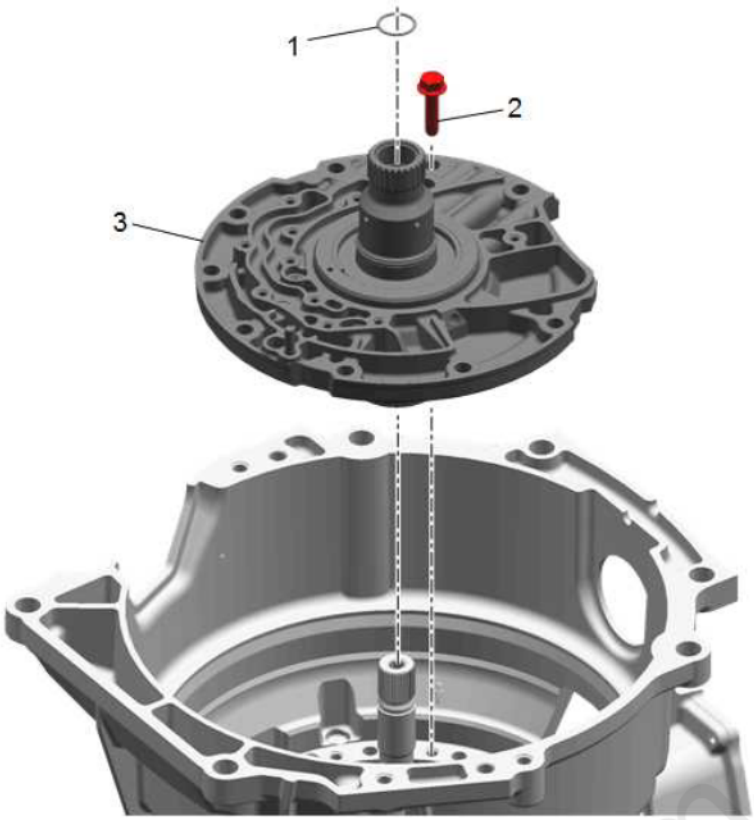

Fig. 8: Stator Shaft Support
Courtesy of GENERAL MOTORS COMPANY

Callout	Component Name
1	Turbine Shaft O-ring Seal **NOTE:** **Remove and DISCARD the O-ring seal.**
2	Stator Shaft Support Bolt M8 x 35 mm (Qty: 9)
3	Stator Support Shaft Assembly

1-3-5-6-7 CLUTCH ASSEMBLY REMOVAL

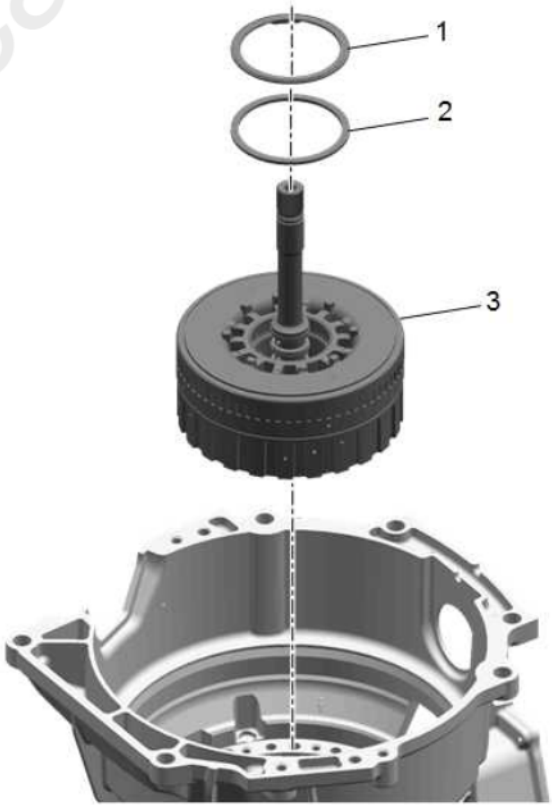

cardiagn.com

Fig. 9: 1-3-5-6-7 Clutch
Courtesy of GENERAL MOTORS COMPANY

Callout	Component Name
1	1-3-5-6-7 Clutch Thrust Bearing
2	1-3-5-6-7 Clutch Thrust Bearing Washer
3	1-3-5-6-7 Clutch Assembly

2-3-4-6-8 AND 4-5-6-7-8 REVERSE CLUTCH ASSEMBLY REMOVAL

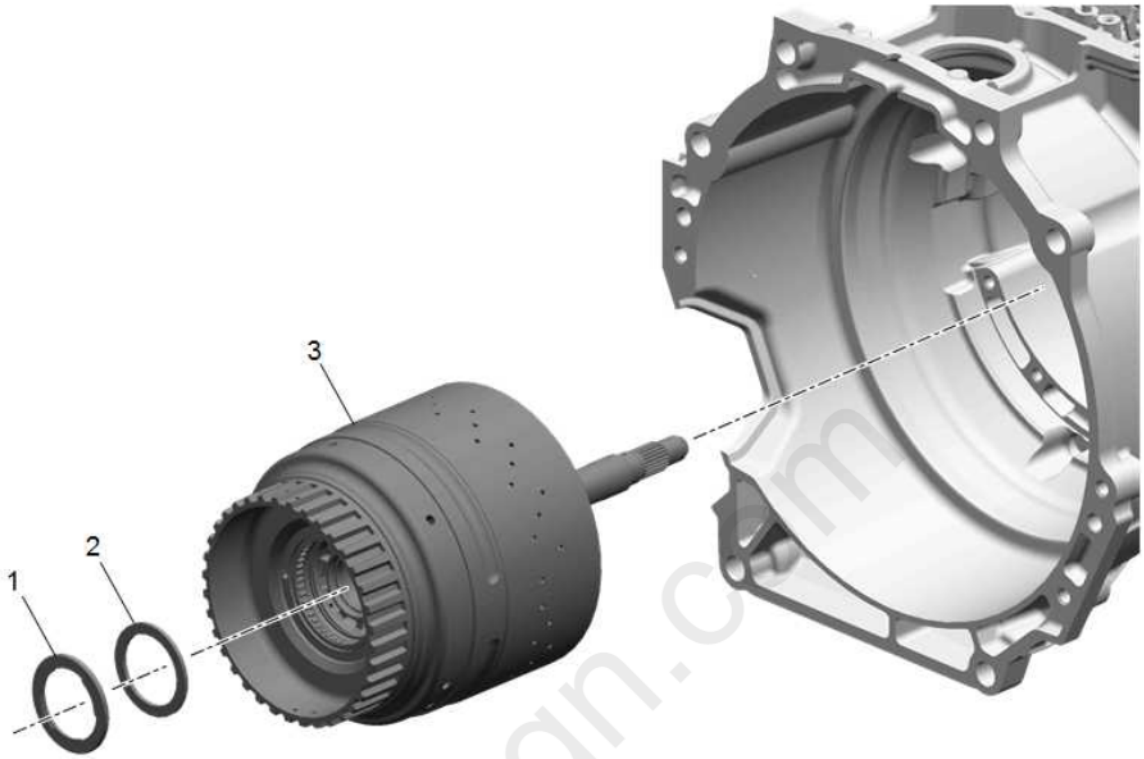

Fig. 10: 2-3-4-6-8 and 4-5-6-7-8 Reverse Clutch
Courtesy of GENERAL MOTORS COMPANY

Callout	Component Name
1	2-3-4-6-8 and 4-5-6-7-8 Reverse Clutch Thrust Bearing
2	2-3-4-6-8 and 4-5-6-7-8 Reverse Clutch Thrust Bearing Washer
3	2-3-4-6-8 and 4-5-6-7-8 Reverse Clutch Assembly **NOTE:** **Rotate the transmission horizontal to aid in removal of the 2-3-4-6-8 and 4-5-6-7-8 reverse clutch assembly.**

DIRECT OVERDRIVE INTERNAL GEAR, DIRECT OVERDRIVE CARRIER, INPUT INTERNAL GEAR AND INPUT CARRIER ASSEMBLY REMOVAL

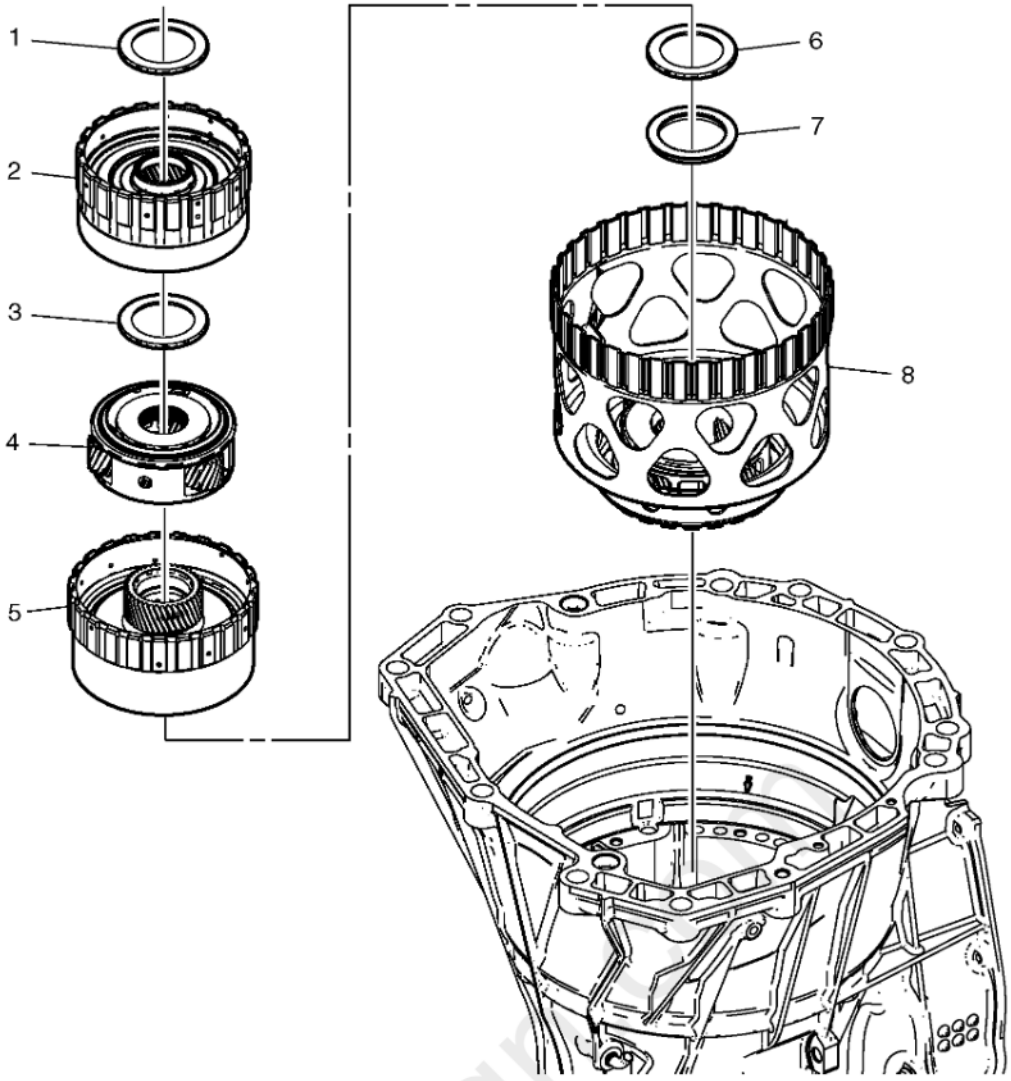

Fig. 11: Direct Overdrive Internal Gear, Direct Overdrive Carrier, Input Internal Gear and Input Carrier Assembly
Courtesy of GENERAL MOTORS COMPANY

Callout	Component Name
1	4-5-6-7-8 Reverse Clutch and Direct Overdrive Internal Gear Hub Thrust Bearing
2	Direct/Overdrive Internal Gear Assembly
3	Direct/Overdrive Carrier Thrust Bearing (8L45 Only)
4	Direct/Overdrive Carrier Assembly
5	Input Internal Gear Assembly
6	Input Sun Gear Thrust Bearing
7	Input Sun Gear Spacer
8	Input Carrier Assembly

1-2-7-8 REVERSE CLUTCH PISTON REMOVAL

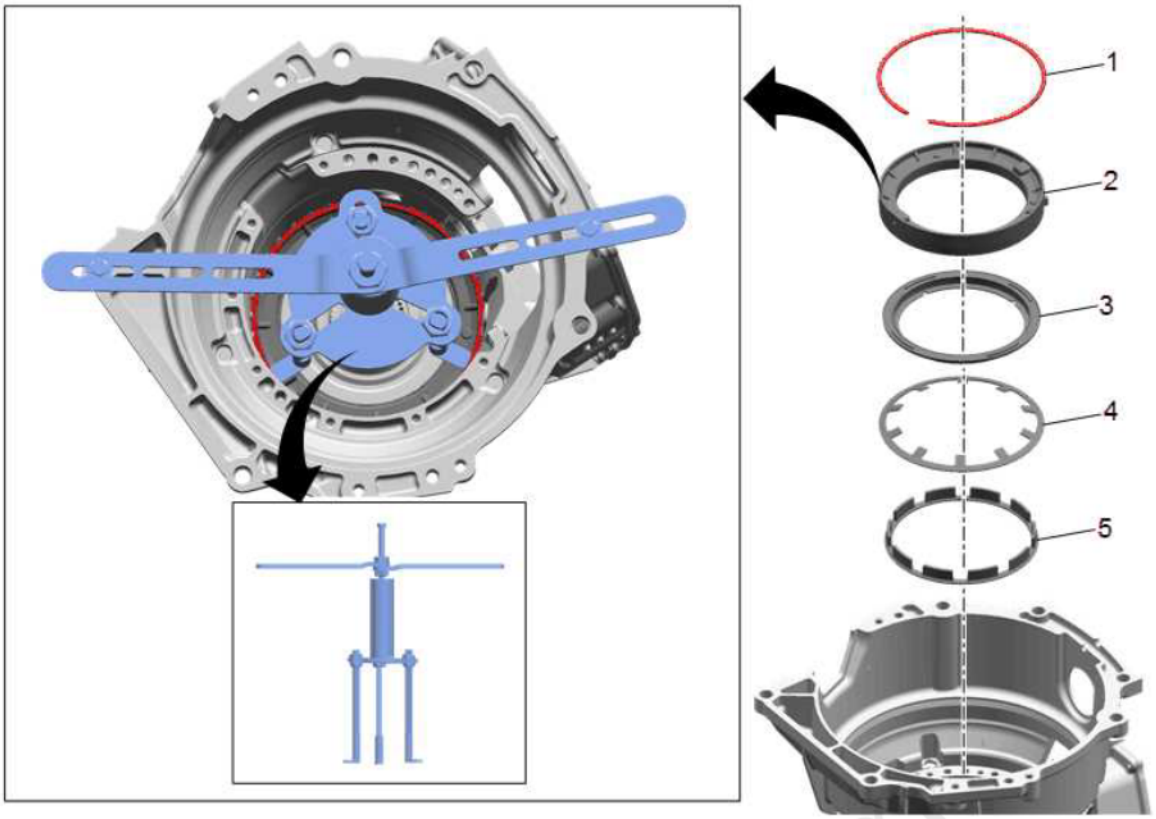

Fig. 12: 1-2-7-8 Reverse Clutch Piston
Courtesy of GENERAL MOTORS COMPANY

Callout	Component Name
1	1-2-7-8 Reverse Clutch Piston Housing Retaining Ring **Special Tools** • **DT-35512** Bearing Installer • **DT-48056** Spring Compressor Bridge • **DT-50902** Adjustable Clutch Spring Compressor For equivalent regional tools, refer to **Special Tools** .
2	1-2-7-8 Reverse Clutch Piston Housing
3	1-2-7-8 Reverse Clutch Piston
4	1-2-7-8 Reverse Clutch Return Spring
5	1-2-7-8 Reverse Clutch Apply Ring

1-2-7-8 REVERSE CLUTCH PLATE ASSEMBLY AND INPUT SUN GEAR ASSEMBLY REMOVAL

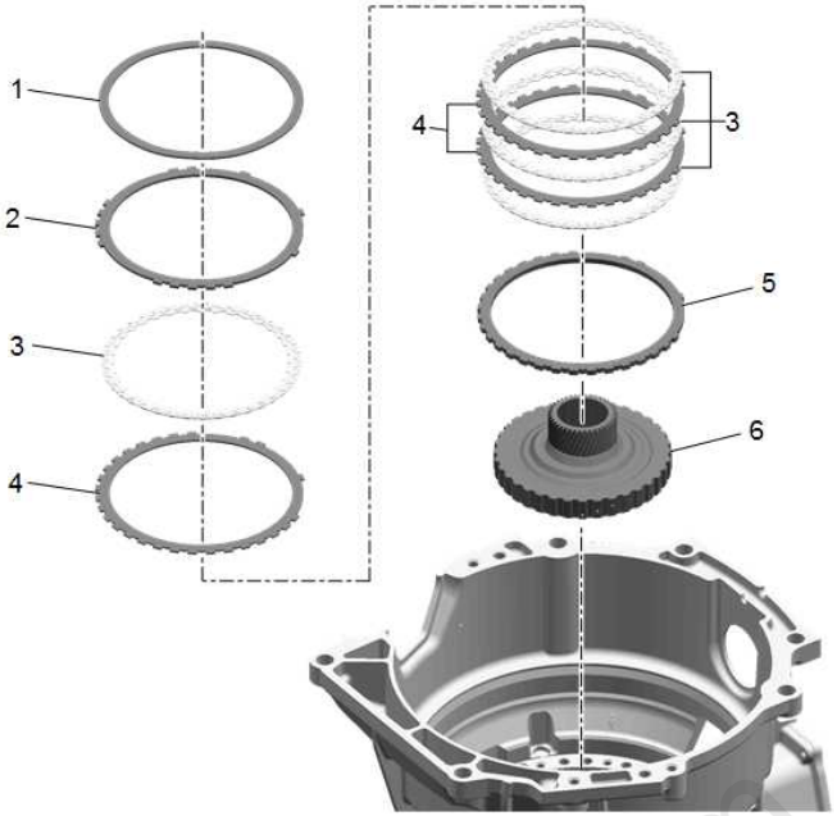

Fig. 13: 1-2-7-8 Reverse Clutch Plate Assembly and Input Sun Gear Assembly
Courtesy of GENERAL MOTORS COMPANY

Callout	Component Name
1	1-2-7-8 Reverse Clutch (Waved) Plate
2	1-2-7-8 Reverse Clutch Apply Plate
3	1-2-7-8 Reverse Clutch Plate Assembly (Qty: 4)
4	1-2-7-8 Reverse Clutch Plate (Qty: 3)
5	1-2-7-8 Reverse Clutch Backing Plate
6	Input Sun Gear Assembly

REACTION INTERNAL GEAR AND 1-2-3-4-5 REVERSE HUB AND 1-2-3-4-5 REVERSE CLUTCH PLATE ASSEMBLY REMOVAL

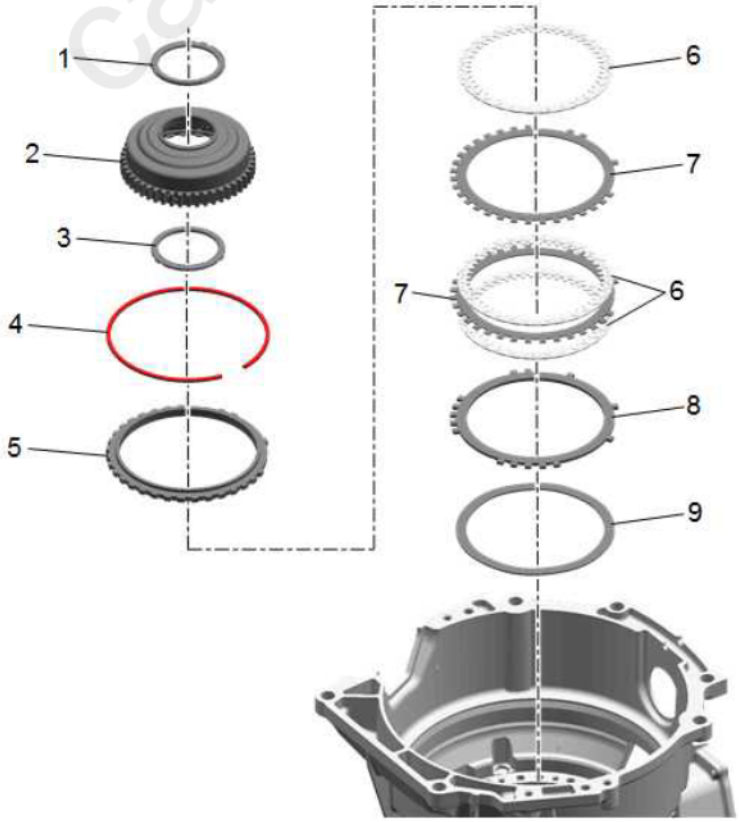

Fig. 14: Reaction Internal Gear and 1-2-3-4-5 Reverse Hub and 1-2-3-4-5 Reverse Clutch Plate
Courtesy of GENERAL MOTORS COMPANY

Callout	Component Name
1	1-2-3-4-5 Reverse Clutch Hub Thrust Bearing
2	Reaction Internal Gear and 1-2-3-4-5 Reverse Hub Assembly
3	Reaction Carrier Thrust Bearing (8L45 Only)
4	1-2-3-4-5 Reverse Clutch Backing Plate Retaining Ring
5	1-2-3-4-5 Reverse Clutch Backing Plate
6	1-2-3-4-5 Reverse Clutch Plate Assembly (Qty: 3)
7	1-2-3-4-5 Reverse Clutch Plate (Qty: 2)
8	1-2-3-4-5 Reverse Clutch Apply Plate
9	1-2-3-4-5 Reverse Clutch (Waved) Plate

REACTION CARRIER ASSEMBLY, OUTPUT CARRIER AND OUTPUT SHAFT REMOVAL

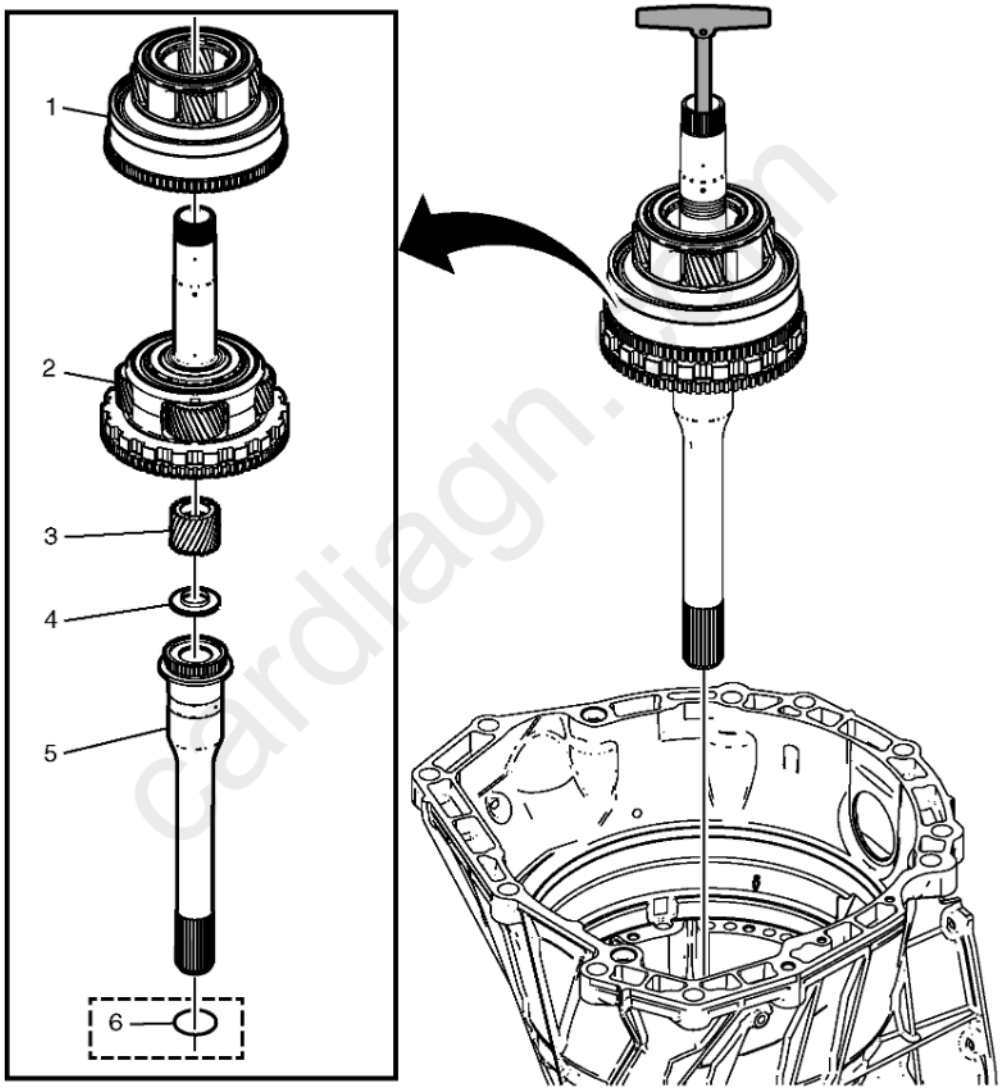

Fig. 15: Reaction Carrier Assembly, Output Carrier and Output Shaft
Courtesy of GENERAL MOTORS COMPANY

Callout	Component Name
1	Reaction Carrier Assembly
2	Output Carrier Assembly
3	Output Sun Gear
4	Output Sun Gear Thrust Bearing
5	Output Shaft **Special Tools** **DT-50921** Output Carrier/Shaft Lifting Tool For equivalent regional tools, refer to **Special Tools** .

Callout	Component Name
6	Output Shaft Seal - O-Ring **NOTE:** **The output shaft seal is only present on All Wheel Drive (AWD) models.**

PROPELLER SHAFT TRANSMISSION FLANGE REMOVAL (REAR WHEEL DRIVE)

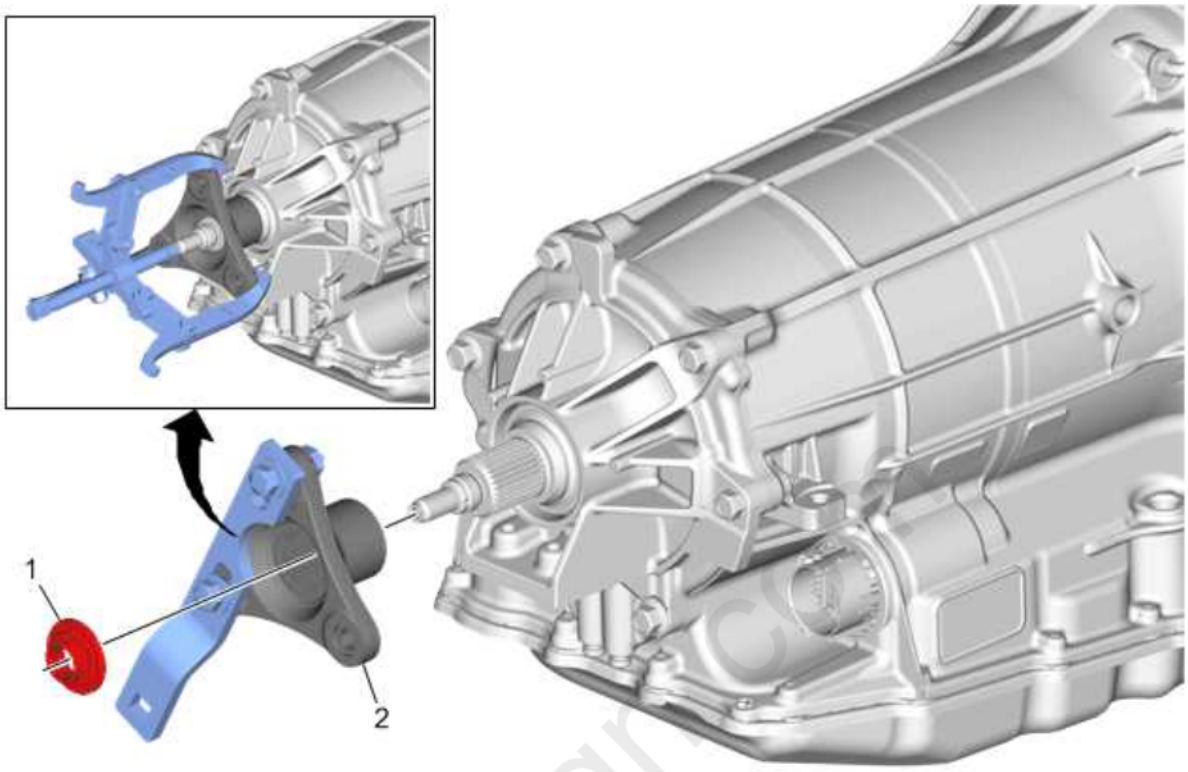

Fig. 16: Propeller Shaft Transmission Flange (Rear Wheel Drive)
Courtesy of GENERAL MOTORS COMPANY

Callout	Component Name
1	Propeller Shaft Transmission Flange Nut **CAUTION:** **Do not reuse the flange nut. Reusing the flange nut may cause damage to the transmission.** **Special Tools** **DT-45012** Holding Fixture For equivalent regional tools, refer to **Special Tools** .
2	Propeller Shaft Transmission Flange **NOTE:** **If the propeller shaft transmission flange is not easily removed with DT-45012 holding fixture use DT-38416-B harmonic balancer remover to remove the flange.** **Special Tools** • **DT-38416-B** Harmonic Balancer Remover • **DT-45012** Holding Fixture For equivalent regional tools, refer to **Special Tools** .

CASE EXTENSION ASSEMBLY REMOVAL

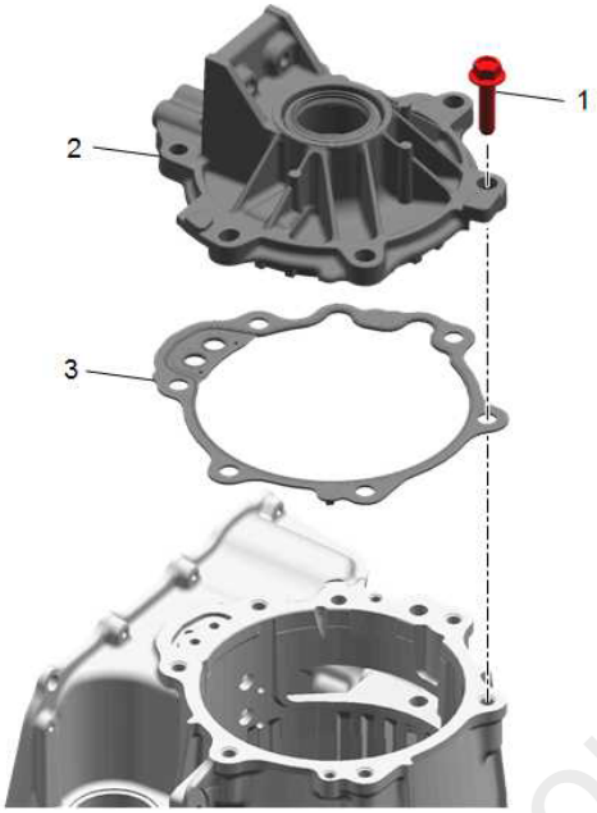

Fig. 17: Case Extension Assembly
Courtesy of GENERAL MOTORS COMPANY

Callout	Component Name
1	A/Trans Case Extension Bolt M10 x 40 mm (Qty: 6)
2	A/Trans Case Extension Assembly **NOTE:** **Ensure the park pawl is not engaged.**
3	Output Carrier Thrust Bearing
4	A/Trans Case Extension Seal **NOTE:** **The seal is reusable, inspect the seal and replace if damaged.**

MANUAL SHIFT DETENT LEVER WITH SHAFT POSITION SWITCH ASSEMBLY AND PARK PAWL ACTUATOR REMOVAL

cardiagn.com

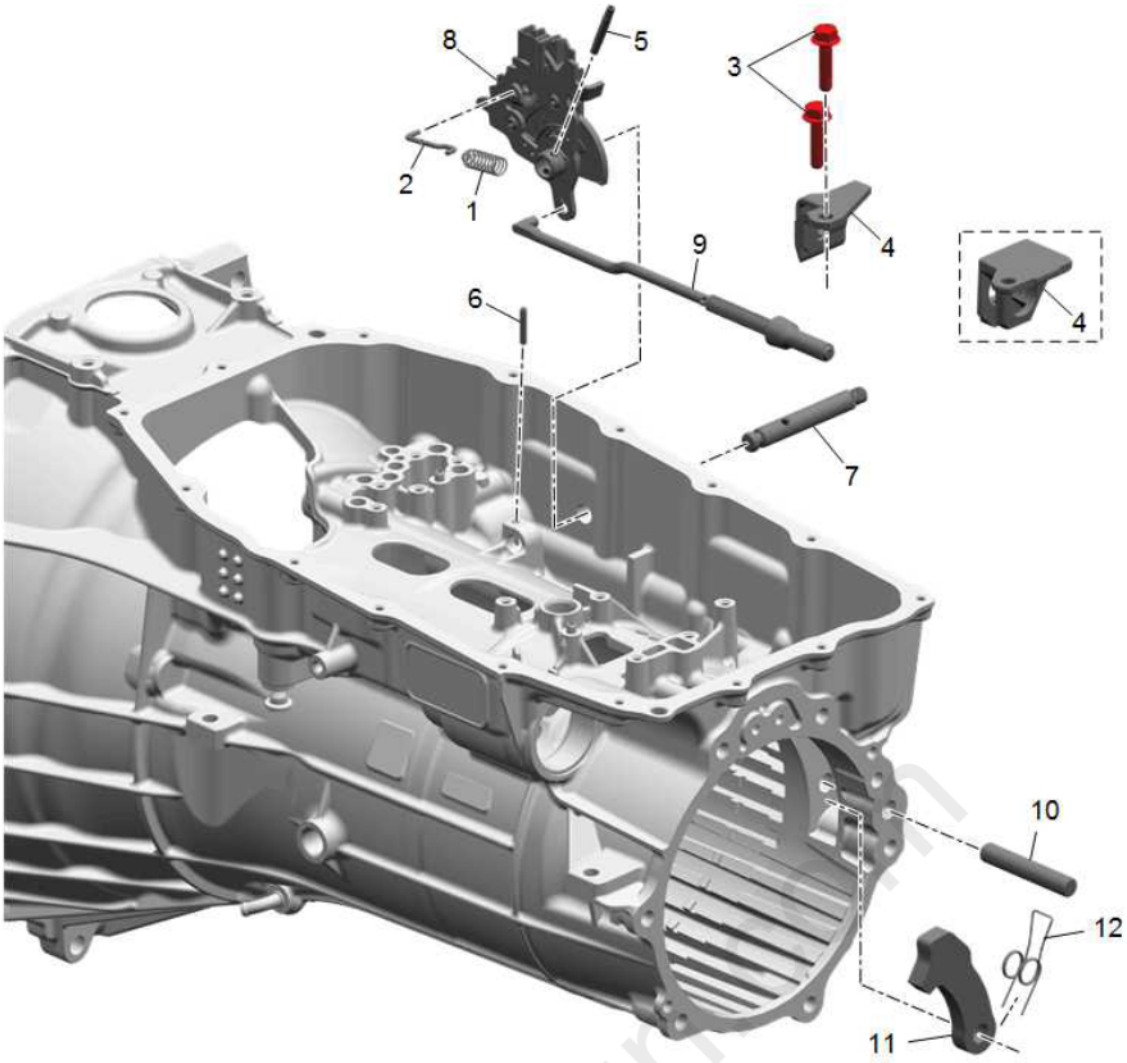

Fig. 18: Manual Shift Detent Lever with Shaft Position Switch Assembly and Park Pawl Actuator
Courtesy of GENERAL MOTORS COMPANY

Callout	Component Name
1	Manual Valve Link Spring
2	Manual Valve Link
3	Park Pawl Actuator Bracket Bolt M8 x 35 (Qty: 2) **NOTE:** **DISCARD the bolts.**
4	Park Pawl Actuator Bracket
5	Manual Shaft Detent Lever Hub Pin **CAUTION:** **Refer to Pin Reuse Caution .**
6	Manual Shift Shaft Pin
7	Manual Shift Shaft
8	Manual Shift Shaft Position Switch Assembly
9	Park Pawl Actuator
10	Park Pawl Shaft
11	Park Pawl
12	Park Pawl Spring

MANUAL SHIFT SHAFT SEAL REMOVAL

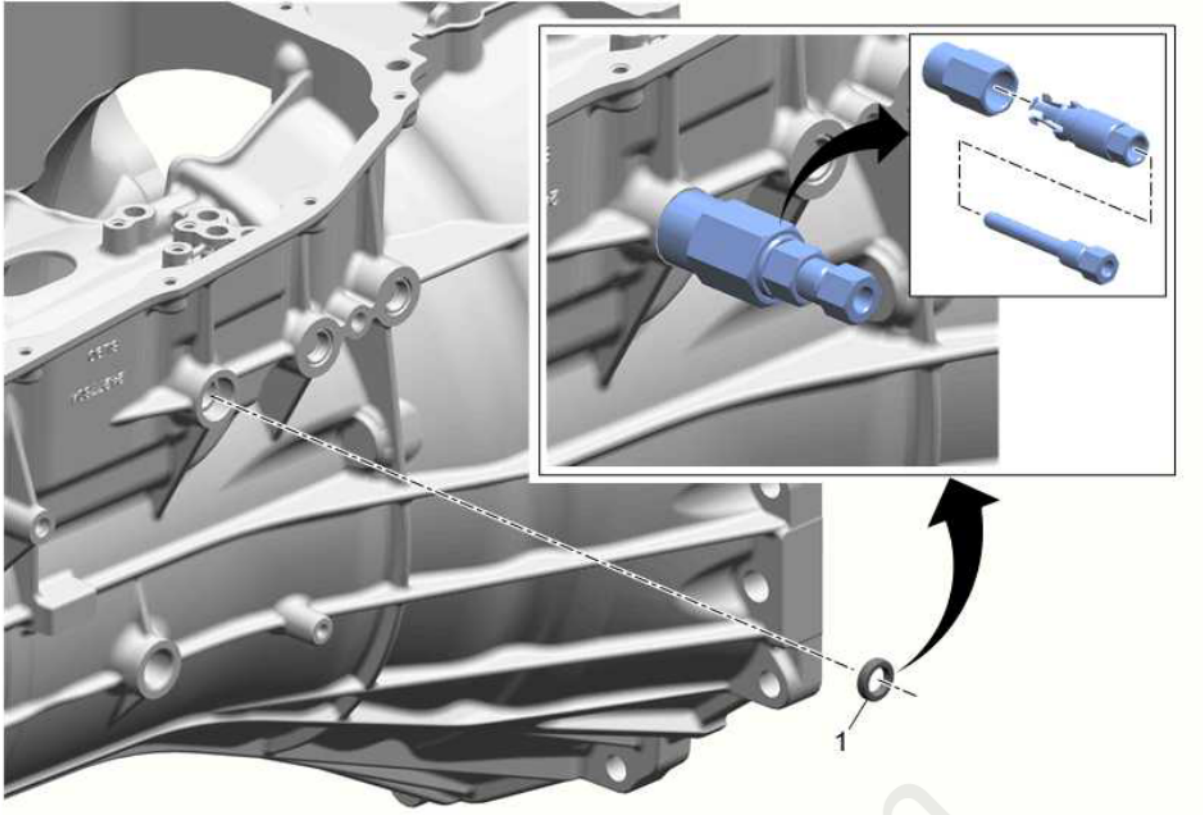

Fig. 19: Manual Shift Shaft Seal
Courtesy of GENERAL MOTORS COMPANY

Callout	Component Name
1	Manual Shift Shaft Seal **CAUTION:** **Do not damage the case bore during removal of the manual shift shaft seal.** **CAUTION:** **Refer to Seal Reuse Caution .** **Special Tools** **DT-45201** Cooler Line Seal Remover For equivalent regional tools, refer to **Special Tools** .

TRANSMISSION CASE CLEANING AND INSPECTION

cardiagn.com

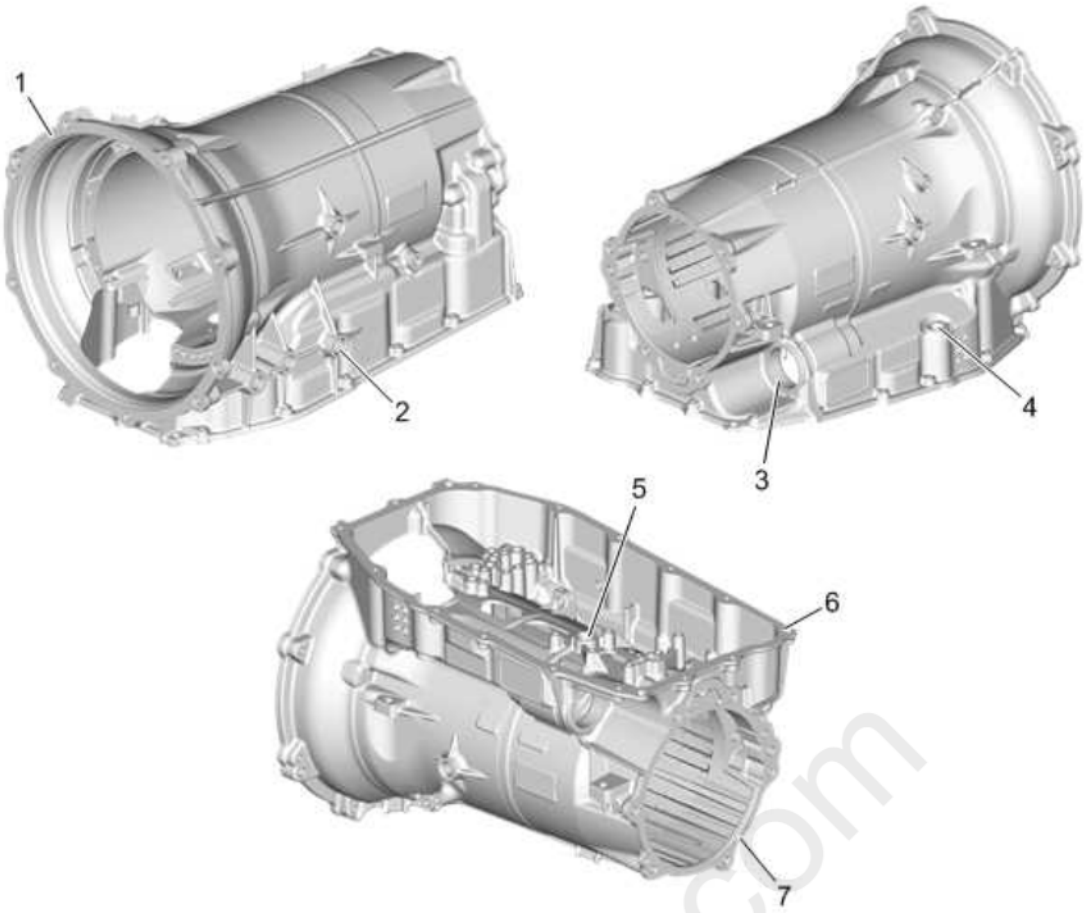

Fig. 20: Transmission Case Cleaning and Inspection Points
Courtesy of GENERAL MOTORS COMPANY

Callout	Component Name
CAUTION: **After cleaning the transmission components, allow to air dry. Do not use cloth or paper towels in order to dry any transmission components. Lint from the towels can cause component failure.** **CAUTION:** **Do not reuse cleaning solvents. Previously used solvents may deposit sediment which may damage the component.** **Preliminary Procedures** 1. Thoroughly clean the transmission case assembly, including case threads, with clean solvent. 2. Clean gasket sealing surfaces. Remove all residual gasket material. 3. Inspect all threaded holes. If necessary, repair any thread damage.	
1	Front Case Sealing Surface
2	Manual Shift Shaft Seal **Procedure** To service the manual shift shaft seal, refer to **Manual Shift Shaft Seal Removal** or **Manual Shift Shaft Seal Installation**.
3	Electrical Connector Passage Sleeve Bore
4	Fill Tube Bore
5	Clutch Housing Fluid Passage Seal Surface

Callout	Component Name
6	Fluid Pan Sealing Surface
7	Rear Case Sealing Surface

MANUAL SHIFT SHAFT SEAL INSTALLATION

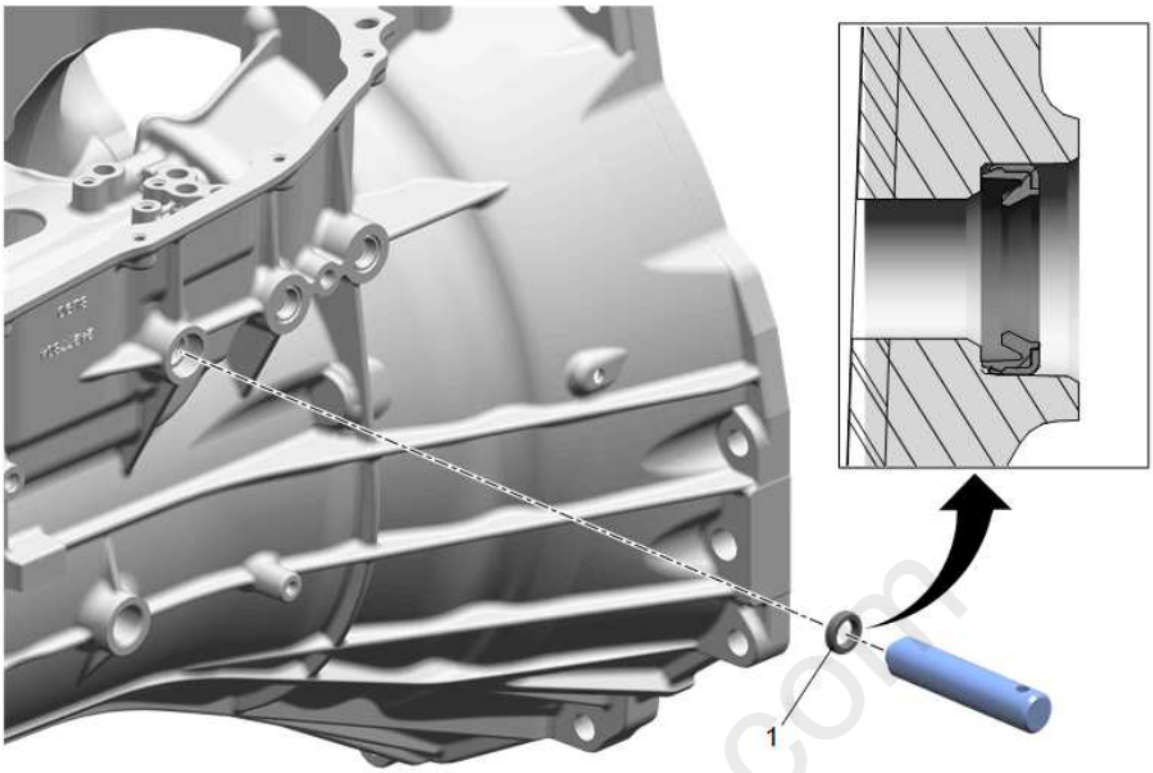

Fig. 21: Manual Shift Shaft Seal
Courtesy of GENERAL MOTORS COMPANY

Callout	Component Name
1	Manual Shift Shaft Seal **CAUTION:** **When installing the seal, ensure the seal lip is firmly seated against the case bore surface. Do not allow the seal lip to be crushed or a leak may result.** **CAUTION:** **Refer to Seal Reuse Caution .** **Special Tools** **DT-47770** Seal Installer For equivalent regional tools, refer to Special Tools .

MANUAL SHIFT DETENT LEVER WITH SHAFT POSITION SWITCH ASSEMBLY AND PARK PAWL ACTUATOR INSTALLATION

cardiagn.com

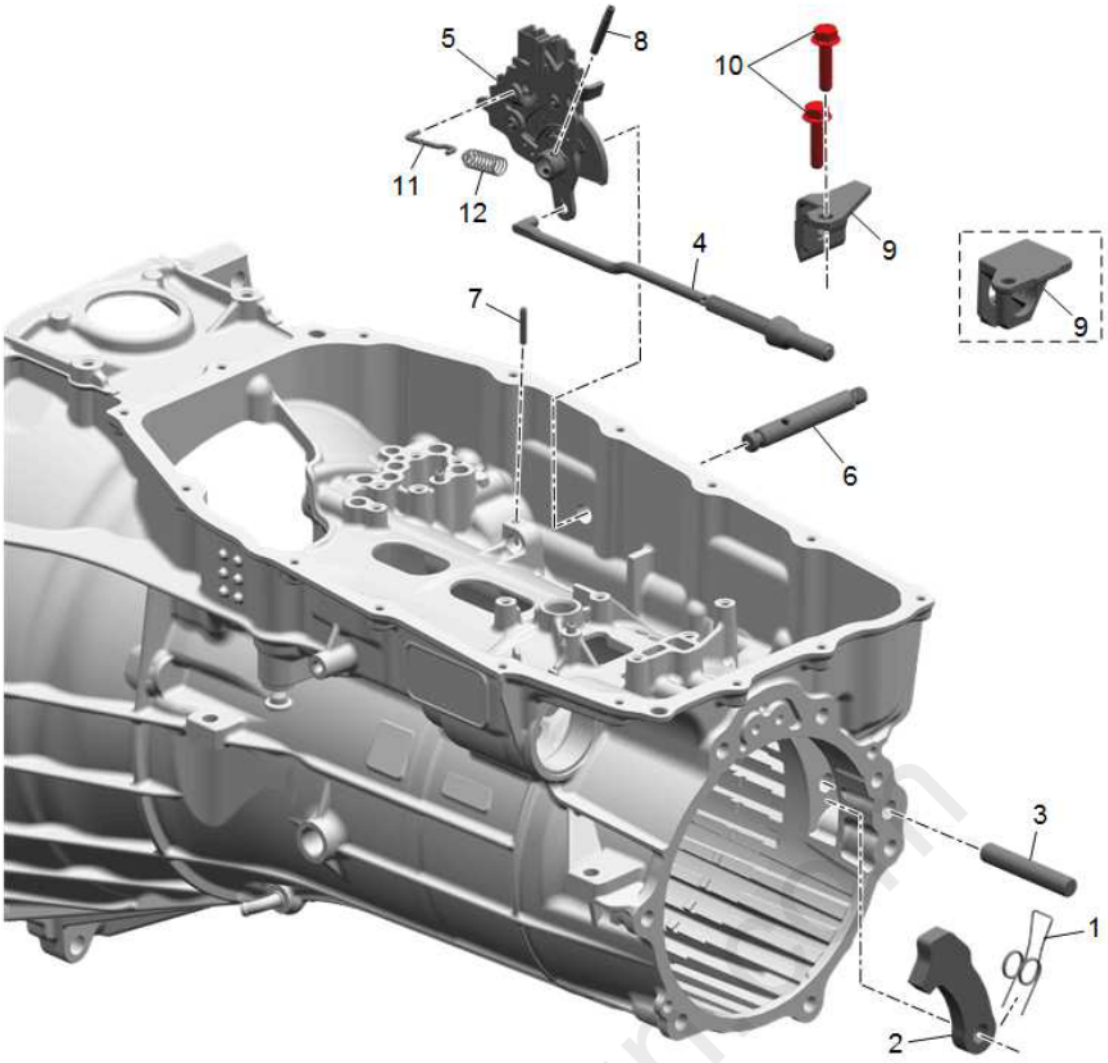

Fig. 22: Manual Shift Detent Lever with Shaft Position Switch Assembly and Park Pawl Actuator
Courtesy of GENERAL MOTORS COMPANY

Callout	Component Name
1	Park Pawl Spring
2	Park Pawl
3	Park Pawl Shaft
4	Park Pawl Actuator
5	Manual Shift Shaft Position Switch Assembly
6	Manual Shift Shaft
7	Manual Shift Shaft Pin **CAUTION:** **Refer to Pin Reuse Caution .**
8	Manual Shaft Detent Lever Hub Pin
9	Park Pawl Actuator Bracket

Callout	Component Name
10	Park Pawl Actuator Bracket Bolt M8 x 35 (Qty: 2) **CAUTION:** **Refer to Fastener Caution .** **NOTE:** **Install NEW bolts.** **Tighten** 40 N.m (30 lb ft)
11	Manual Valve Link
12	Manual Valve Link Spring

CASE EXTENSION DISASSEMBLE (8L90)

1-2-3-4-5-Reverse Clutch Piston Dam Removal

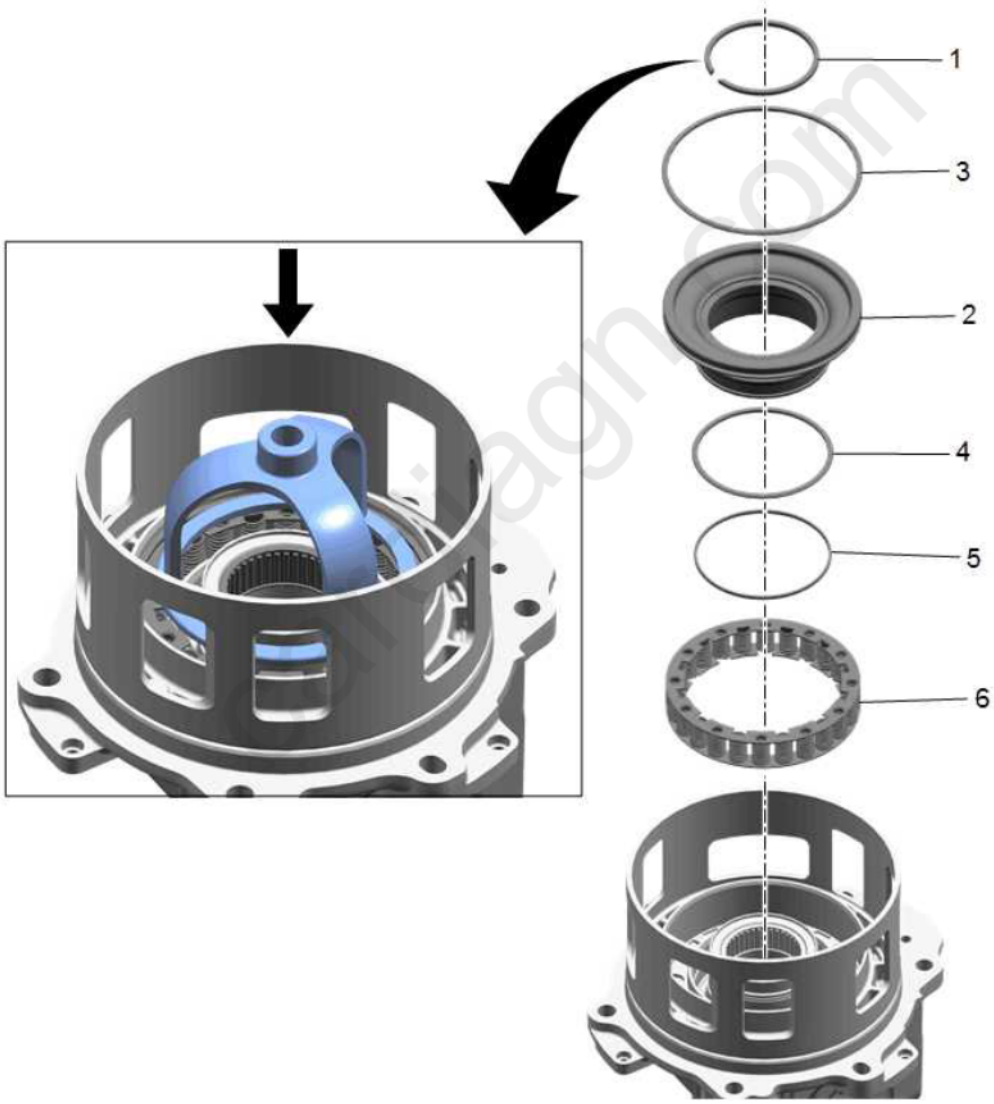

Fig. 23: 1-2-3-4-5-Reverse Clutch Piston Dam
Courtesy of GENERAL MOTORS COMPANY

1-2-3-4-5-Reverse Clutch Piston Dam Removal

Callout	Component Name

Callout	Component Name
1	1-2-3-4-5-Reverse Clutch Piston Dam Retaining Ring **Procedure** Use **DT-38734** adapter and an arbor press to remove the retaining ring. **NOTE:** **Discard the retaining ring, it is not reusable.** **Special Tools** **DT-38734** Intermediate Spring Compressor Adapter For equivalent regional tools, refer to **Special Tools** .
2	1-2-3-4-5-Reverse Clutch Piston Dam
3	1-2-3-4-5-Reverse Clutch Piston Dam Seal **CAUTION:** **Refer to Seal Reuse Caution .**
4	1-2-3-4-5-Reverse Clutch Piston Inner Seal **CAUTION:** **Refer to Seal Reuse Caution .**
5	1-2-3-4-5-Reverse Clutch Piston O-ring Seal **CAUTION:** **Refer to Seal Reuse Caution .**
6	1-2-3-4-5-Reverse Clutch Piston Return Spring

1-2-3-4-5-Reverse Clutch Piston Removal

cardiagn.com

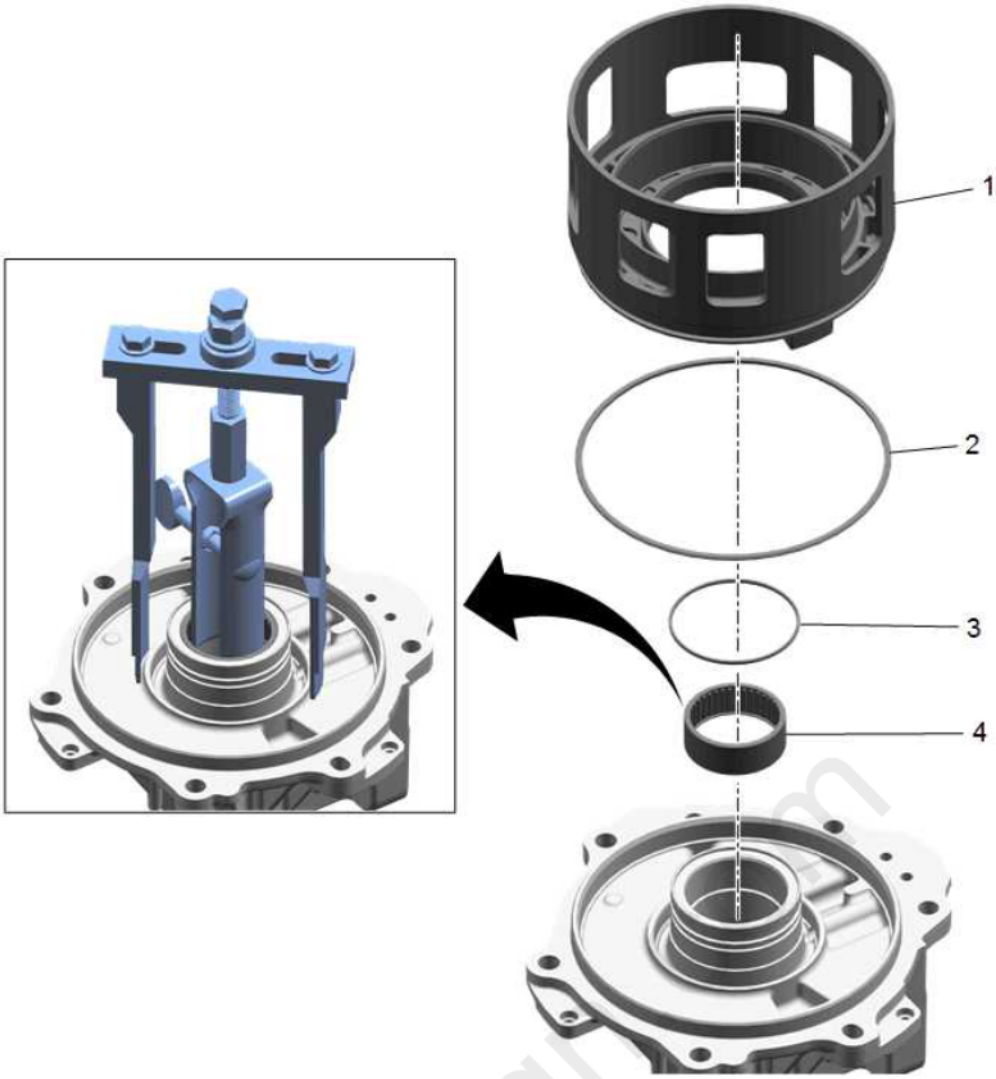

Fig. 24: 1-2-3-4-5-Reverse Clutch Piston
Courtesy of GENERAL MOTORS COMPANY

1-2-3-4-5-Reverse Clutch Piston Removal

Callout	Component Name
1	1-2-3-4-5-Reverse Clutch Piston
2	1-2-3-4-5- Reverse Clutch Piston Outer Seal **CAUTION:** **Refer to Seal Reuse Caution .**
3	1-2-3-4-5-Reverse Clutch Piston Dam Inner O-ring Seal **CAUTION:** **Refer to Seal Reuse Caution .**
4	Output Shaft Bearing **Special Tools** • **DT-26941** Bushing and Bearing Remover • **DT-45124** Removal Bridge • **DT-45124-9** Puller Leg For equivalent regional tools, refer to **Special Tools** .

Automatic Transmission Case Extension Hole Plug Removal

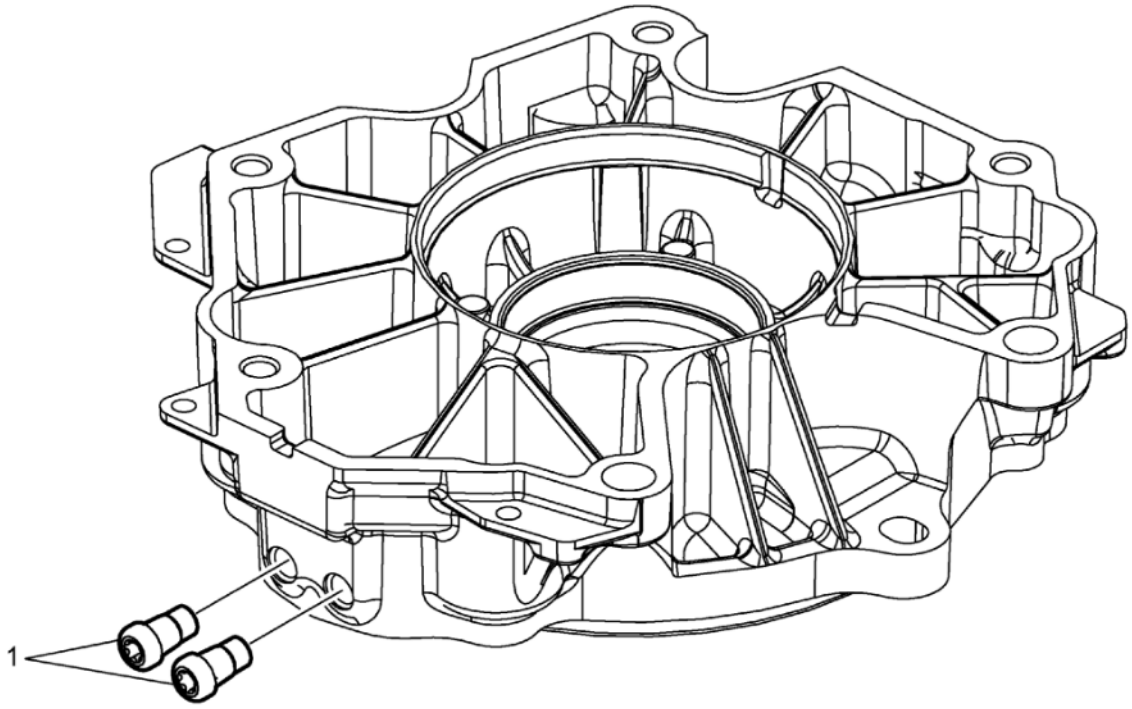

Fig. 25: Automatic Transmission Case Extension Hole Plug
Courtesy of GENERAL MOTORS COMPANY

Automatic Transmission Case Extension Hole Plug Removal

Callout	Component Name
1	Automatic Transmission Case Extension Hole Plug

CASE EXTENSION DISASSEMBLE (8L45)

1-2-3-4-5-Reverse Clutch Piston Dam Removal

cardiagn.com

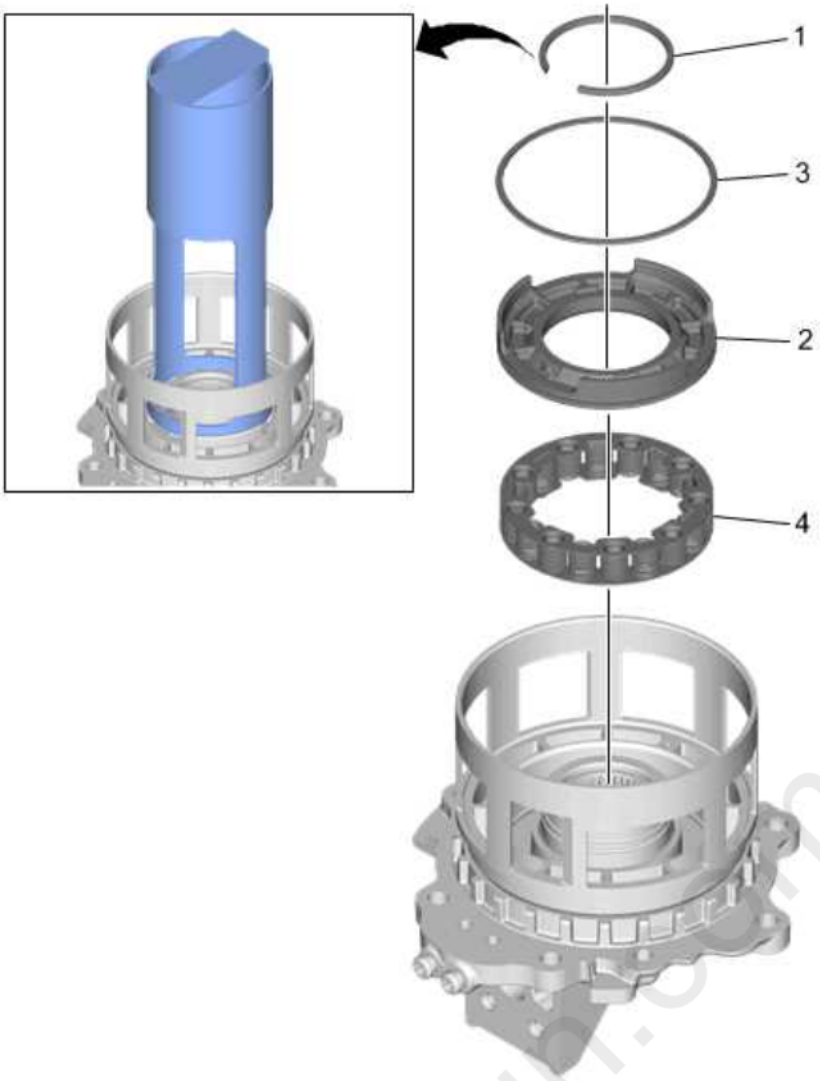

Fig. 26: 1-2-3-4-5-Reverse Clutch Piston Dam
Courtesy of GENERAL MOTORS COMPANY

1-2-3-4-5-Reverse Clutch Piston Dam Removal

Callout	Component Name
1	1-2-3-4-5-Reverse Clutch Piston Dam Retaining Ring **Procedure** Use **DT-47693-2** compressor and an arbor press to remove the retaining ring. **NOTE:** **Discard the retaining ring, it is not reusable.** **Special Tools** **DT-47693-2** Compressor For equivalent regional tools, refer to **Special Tools** .
2	1-2-3-4-5-Reverse Clutch Piston Dam
3	1-2-3-4-5-Reverse Clutch Piston Dam Seal **CAUTION:** **Refer to Seal Reuse Caution .**
4	1-2-3-4-5-Reverse Clutch Piston Return Spring

1-2-3-4-5-Reverse Clutch Piston Removal

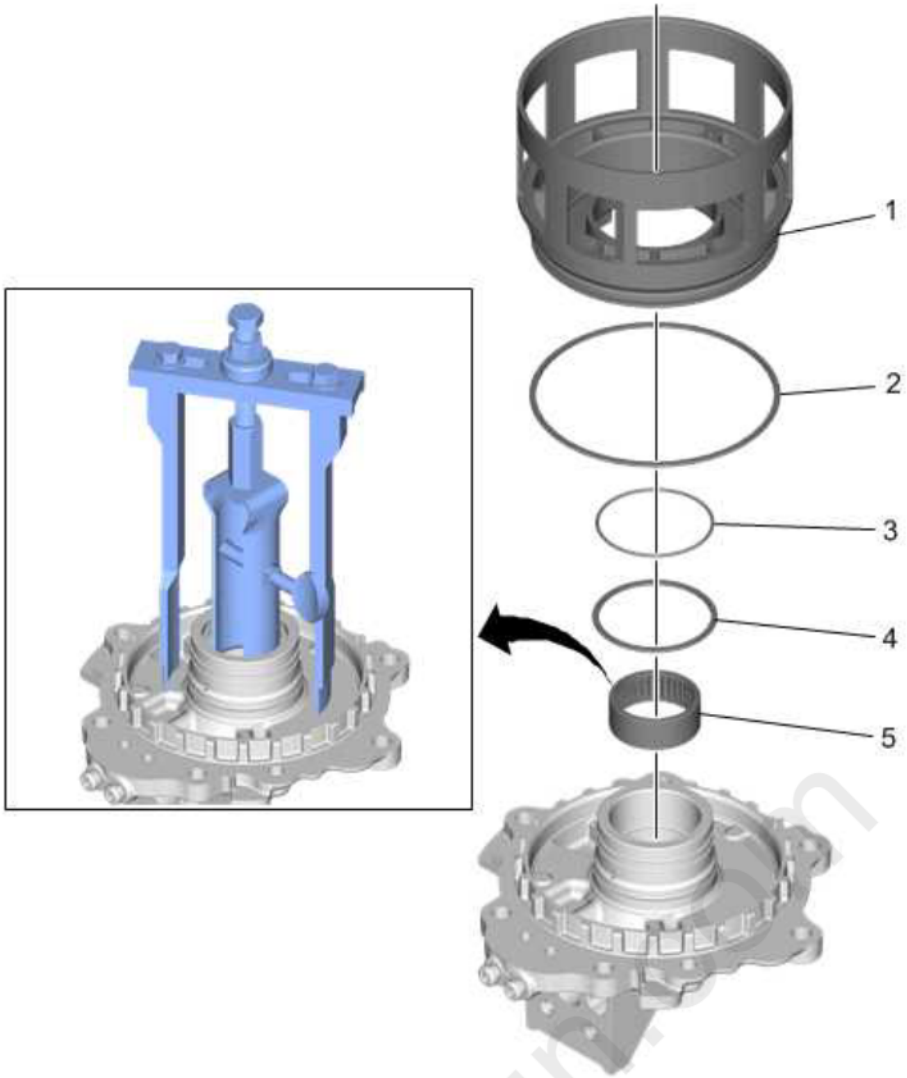

Fig. 27: 1-2-3-4-5-Reverse Clutch Piston
Courtesy of GENERAL MOTORS COMPANY

1-2-3-4-5-Reverse Clutch Piston Removal

Callout	Component Name
1	1-2-3-4-5-Reverse Clutch Piston
2	1-2-3-4-5- Reverse Clutch Piston Outer Seal **CAUTION:** **Refer to Seal Reuse Caution .**
3	1-2-3-4-5- Reverse Clutch Piston Dam Inner Seal (O-ring) **CAUTION:** **Refer to Seal Reuse Caution .**
4	1-2-3-4-5- Reverse Clutch Piston Inner Seal **CAUTION:** **Refer to Seal Reuse Caution .**

Callout	Component Name
5	Output Shaft Bearing **NOTE:** **Ensure the feet of DT-26941 bearing remover are properly engaged with the bearing.** **Special Tools** • **DT-26941** Bushing and Bearing Remover • **DT-45124** Removal Bridge • **DT-45124-9** Puller Leg For equivalent regional tools, refer to **Special Tools** .

Output Shaft Bearing Removal (Rear Wheel Drive Models Only)

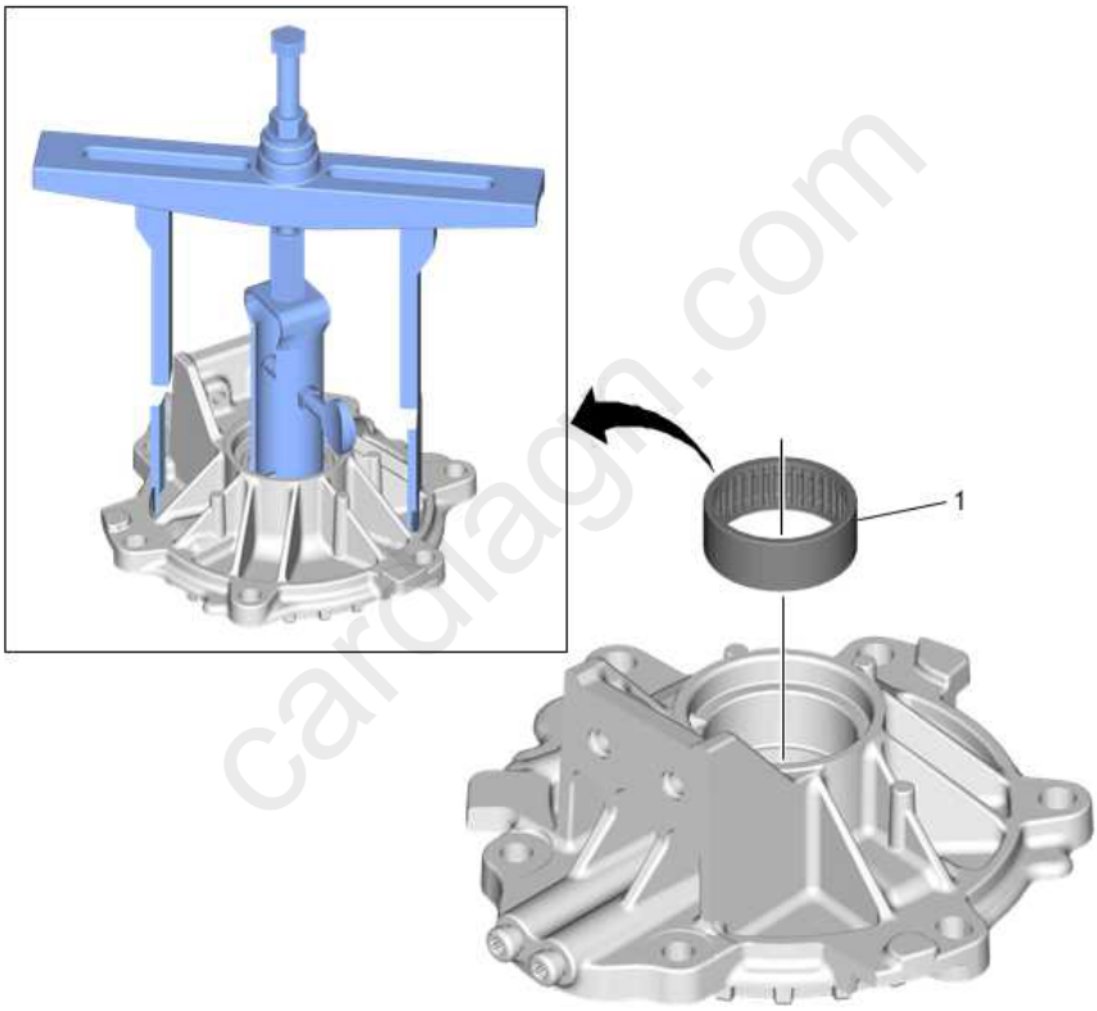

cardiagn.com

Fig. 28: Output Shaft Bearing (Rear Wheel Drive Models Only)
Courtesy of GENERAL MOTORS COMPANY

Output Shaft Bearing Removal (Rear Wheel Drive Models Only)

Callout	Component Name

Callout	Component Name
1	Output Shaft Bearing **Procedure** Assemble the tools as shown. Use the **GE-8433** puller bar with threaded rod, nut, washer and bearing from **DT-45124** removal bridge. **NOTE:** **Ensure the feet of DT-26941 bearing remover are properly engaged with the bearing.** **Special Tools** • **DT-26941** Busing and Bearing Remover • **DT-45124** Removal Bridge • **DT-45124-9** Puller Leg • **GE-8433** Puller Bar For equivalent regional tools, refer to **Special Tools** .

Automatic Transmission Case Extension Hole Plug Removal

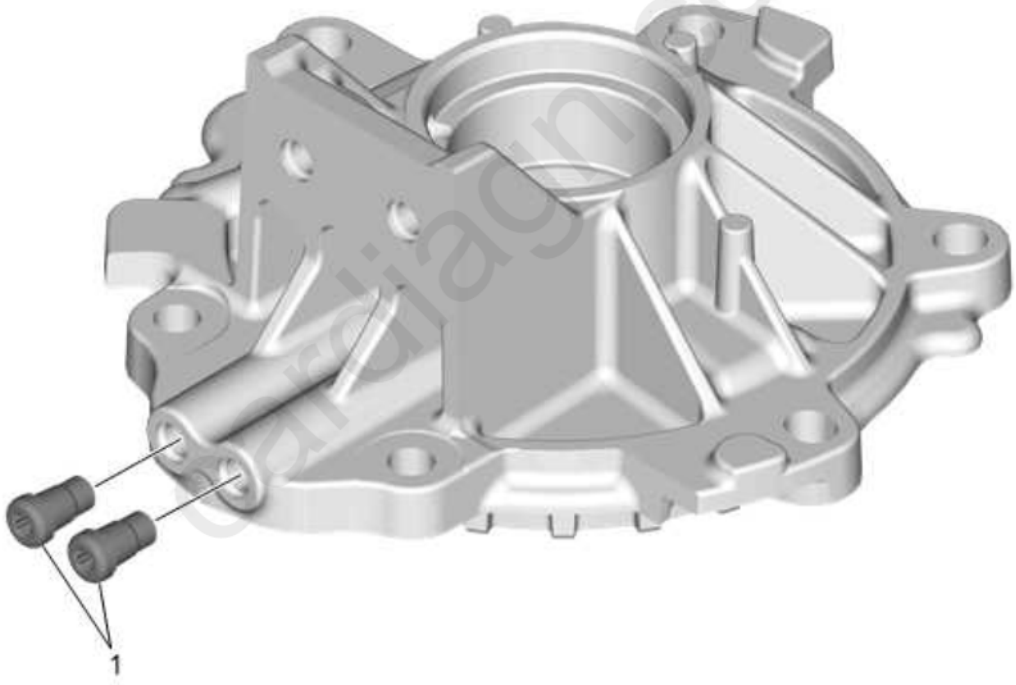

Fig. 29: Automatic Transmission Case Extension Hole Plug
Courtesy of GENERAL MOTORS COMPANY

Automatic Transmission Case Extension Hole Plug Removal

Callout	Component Name
1	Automatic Transmission Case Extension Hole Plug

PROPELLER SHAFT TRANSMISSION FLANGE FLUID SEAL REMOVAL (8L45 OR 8L90)

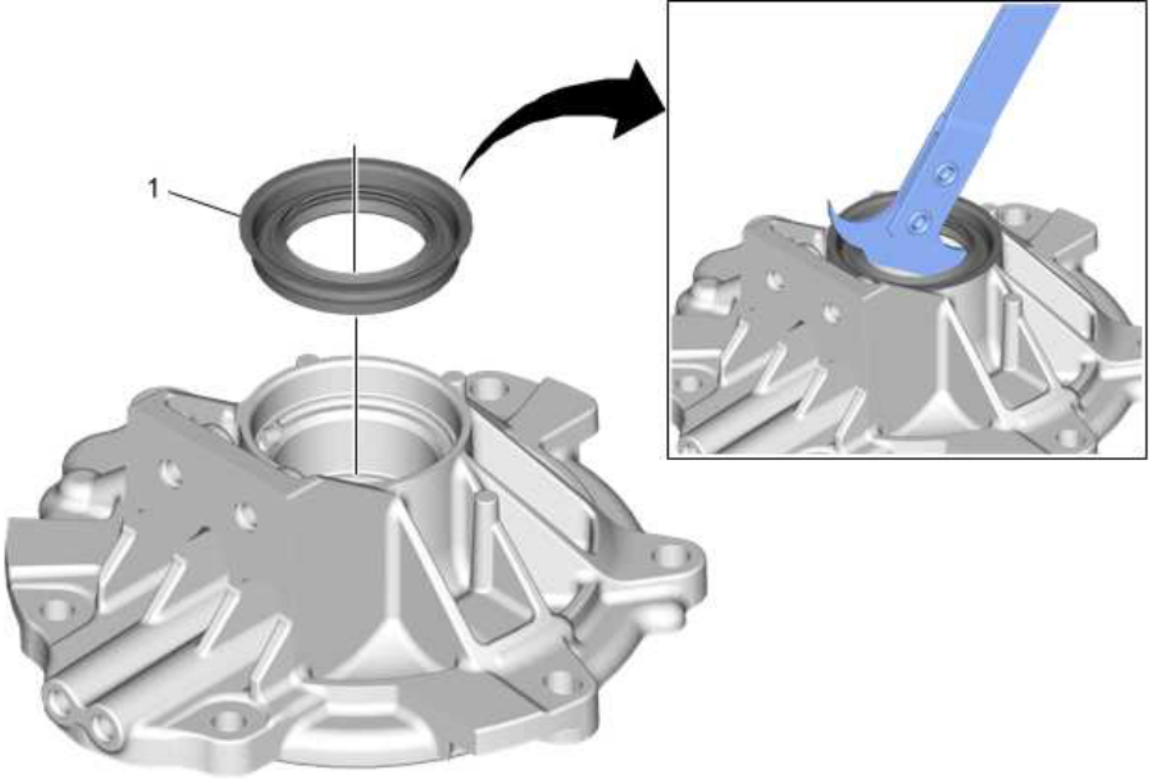

Fig. 30: Propeller Shaft Transmission Flange Fluid Seal
Courtesy of GENERAL MOTORS COMPANY

Callout	Component Name
CAUTION: Refer to **Seal Reuse Caution** .	
1	Propeller Shaft Transmission Flange Fluid Seal **NOTE:** **DISCARD the seal.** **Special Tools** **DT-45000** Seal Remover For equivalent regional tools, refer to **Special Tools** .

PROPELLER SHAFT TRANSMISSION FLANGE FLUID SEAL INSTALLATION (8L90)

cardiagn.com

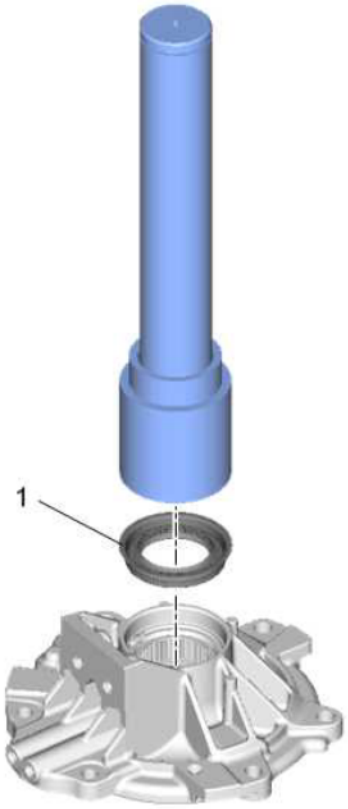

Fig. 31: Propeller Shaft Transmission Flange Fluid Seal (8L90)
Courtesy of GENERAL MOTORS COMPANY

Callout	Component Name
CAUTION: Refer to Seal Reuse Caution .	
1	Propeller Shaft Transmission Flange Fluid Seal **NOTE:** **Install a NEW seal.** **Special Tools** • **DT-22828** Input and Countershaft Race Installer • **DT-50896** Seal Installer Refer to Special Tools

PROPELLER SHAFT TRANSMISSION FLANGE FLUID SEAL INSTALLATION (8L45)

cardiagn.com

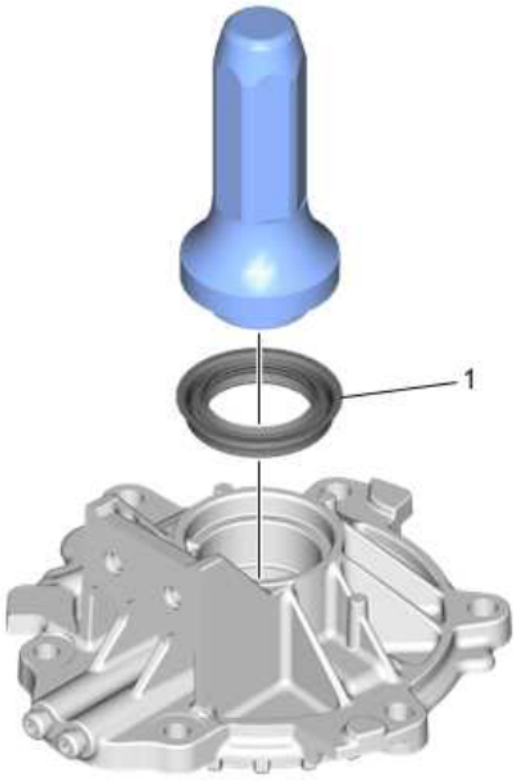

Fig. 32: Propeller Shaft Transmission Flange Fluid Seal (8L45)
Courtesy of GENERAL MOTORS COMPANY

Callout	Component Name
CAUTION: Refer to Seal Reuse Caution .	
1	Propeller Shaft Transmission Flange Fluid Seal **NOTE:** **Install a NEW seal.** **Special Tools** **DT-37212** Front Output Shaft Seal Installer Refer to Special Tools

CASE EXTENSION ASSEMBLE (8L90)

Automatic Transmission Case Extension Hole Plug Installation

cardiagn.com

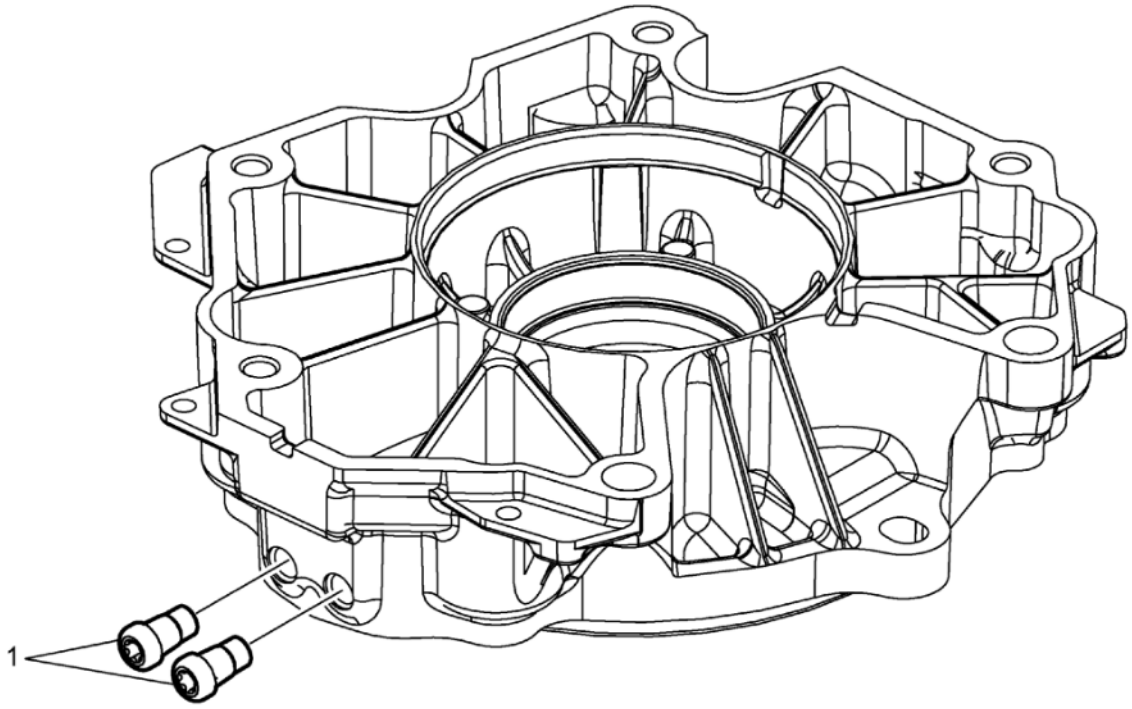

Fig. 33: Automatic Transmission Case Extension Hole Plug
Courtesy of GENERAL MOTORS COMPANY

Automatic Transmission Case Extension Hole Plug Installation

Callout	Component Name
1	Automatic Transmission Case Extension Hole Plug **Tighten** 11 N.m (97 lb ft)

1-2-3-4-5 Reverse Clutch Piston Installation

cardiagn.com

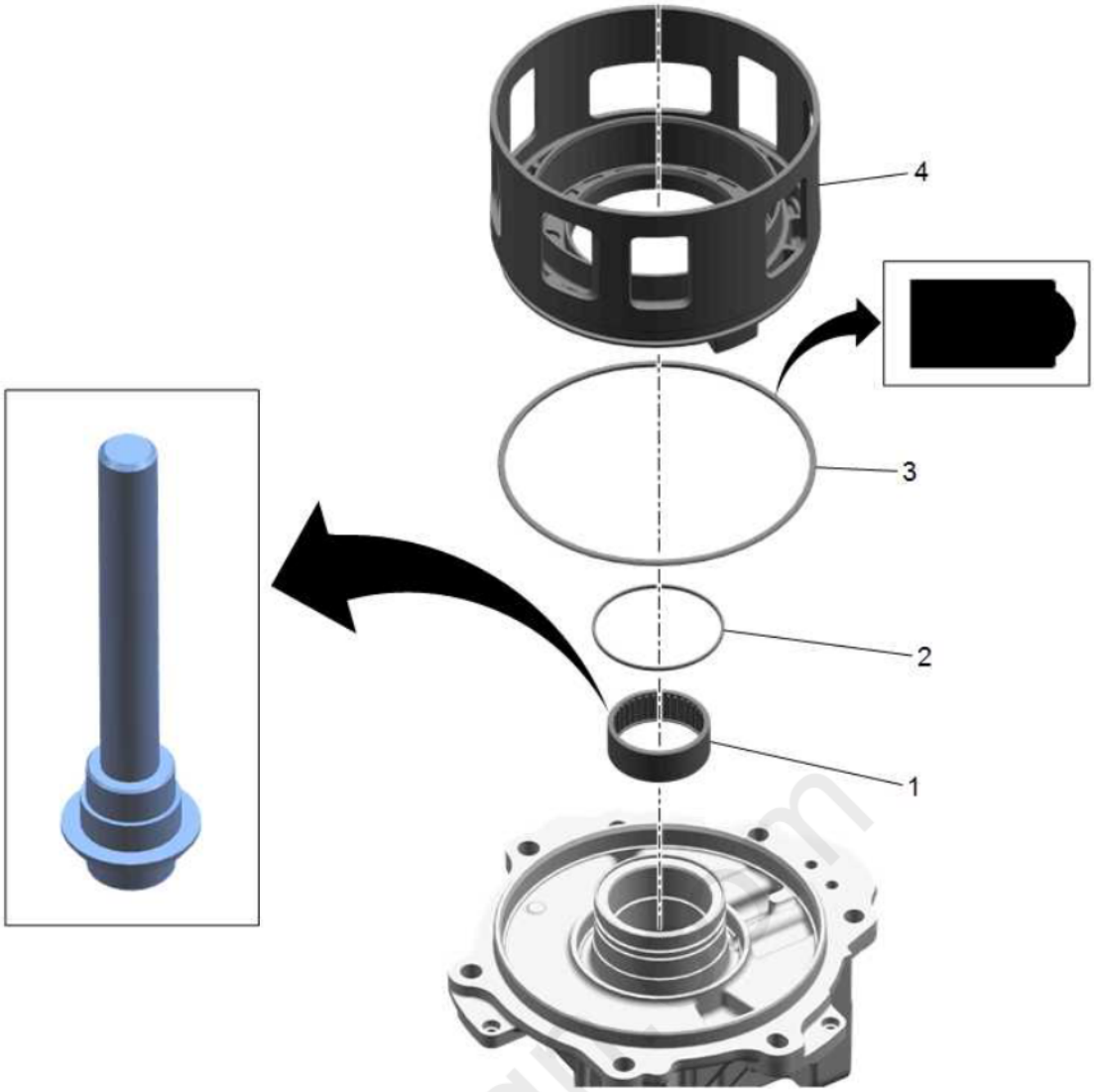

Fig. 34: 1-2-3-4-5 Reverse Clutch Piston
Courtesy of GENERAL MOTORS COMPANY

1-2-3-4-5 Reverse Clutch Piston Installation

Callout	Component Name
1	Output Shaft Bearing **Special Tools** • **DT-50897** Bearing Installer • **GE-8092** Driver Handle For equivalent regional tools, refer to **Special Tools** .
2	1-2-3-4-5-Reverse Clutch Piston Dam Inner O-ring Seal **NOTE:** **Install a NEW seal, it is not reusable.**
3	1-2-3-4-5- Reverse Clutch Piston Outer Seal **NOTE:** **Install a NEW seal, it is not reusable.**
4	1-2-3-4-5-Reverse Clutch Piston

1-2-3-4-5-Reverse Clutch Piston Dam Installation

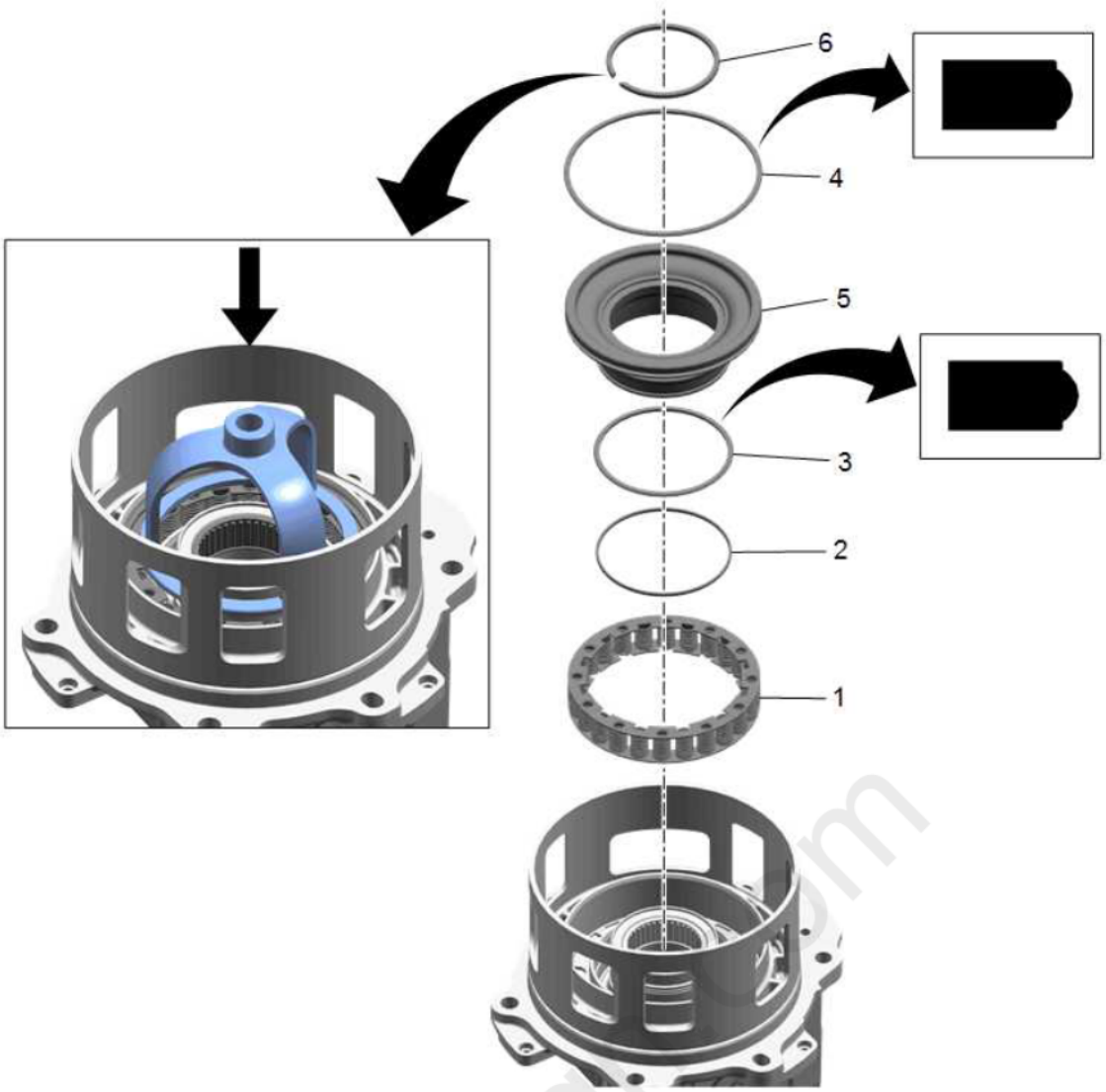

Fig. 35: 1-2-3-4-5-Reverse Clutch Piston Dam
Courtesy of GENERAL MOTORS COMPANY

1-2-3-4-5-Reverse Clutch Piston Dam Installation

Callout	Component Name
1	1-2-3-4-5-Reverse Clutch Piston Return Spring
2	1-2-3-4-5-Reverse Clutch Piston O-ring Seal **NOTE:** **Install a NEW seal, it is not reusable.**
3	1-2-3-4-5-Reverse Clutch Piston Inner Seal **NOTE:** **Install a NEW seal, it is not reusable.**
4	1-2-3-4-5-Reverse Clutch Piston Dam Seal **NOTE:** **Install a NEW seal, it is not reusable.**
5	1-2-3-4-5-Reverse Clutch Piston Dam

Callout	Component Name
6	1-2-3-4-5-Reverse Clutch Piston Dam Retaining Ring **Procedure** Use **DT-38734** adapter and an arbor press to install the retaining ring. **NOTE:** **Install a NEW retaining ring, it is not reusable.** **Special Tools** **DT-38734** Intermediate Spring Compressor Adapter For equivalent regional tools, refer to **Special Tools** .

CASE EXTENSION ASSEMBLE (8L45)

Automatic Transmission Case Extension Hole Plug Installation

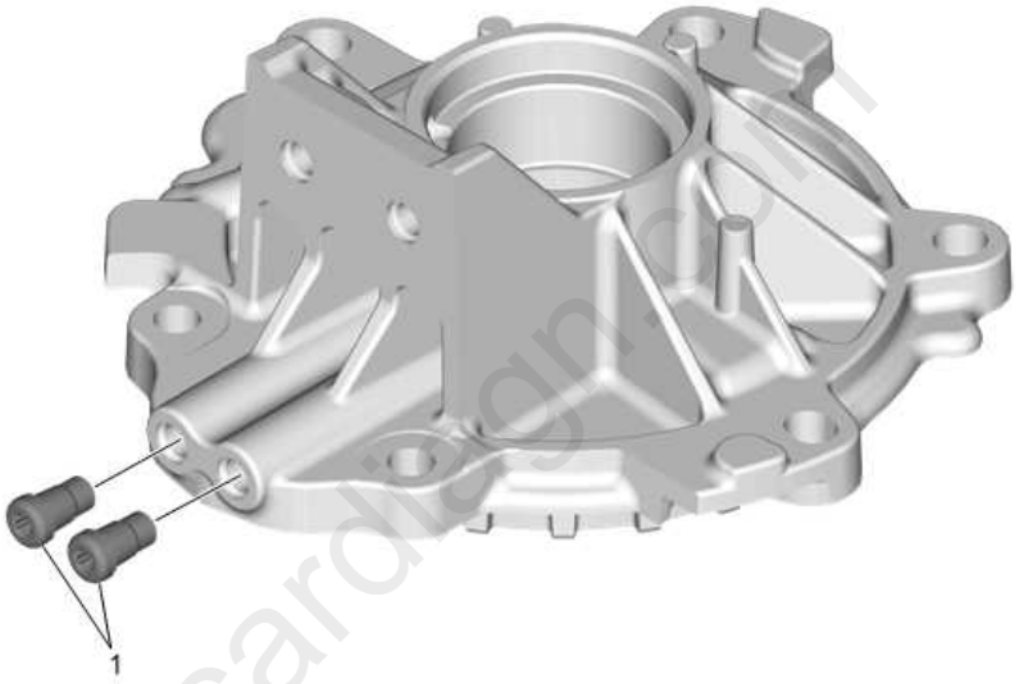

Fig. 36: Automatic Transmission Case Extension Hole Plug
Courtesy of GENERAL MOTORS COMPANY

Automatic Transmission Case Extension Hole Plug Installation

Callout	Component Name
1	Automatic Transmission Case Extension Hole Plug **Tighten** 11 N.m (97 lb ft)

Output Shaft Bearing Installation (Rear Wheel Drive Models Only)

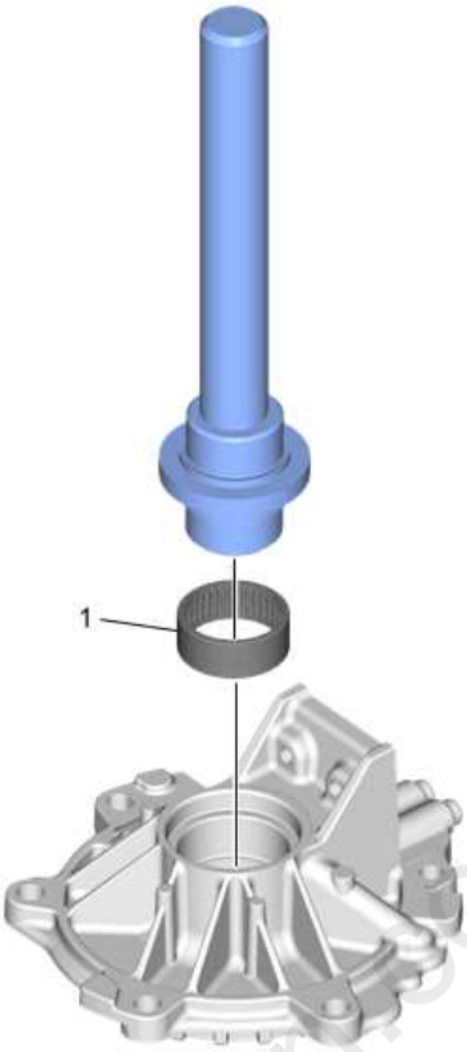

Fig. 37: Output Shaft Bearing (Rear Wheel Drive Models)
Courtesy of GENERAL MOTORS COMPANY

Output Shaft Bearing Installation (Rear Wheel Drive Models Only)

Callout	Component Name
1	Output Shaft Bearing **Special Tools** • **DT-51087** Bearing Installer • **GE-8092** Driver Handle For equivalent regional tools, refer to **Special Tools** .

1-2-3-4-5 Reverse Clutch Piston Installation

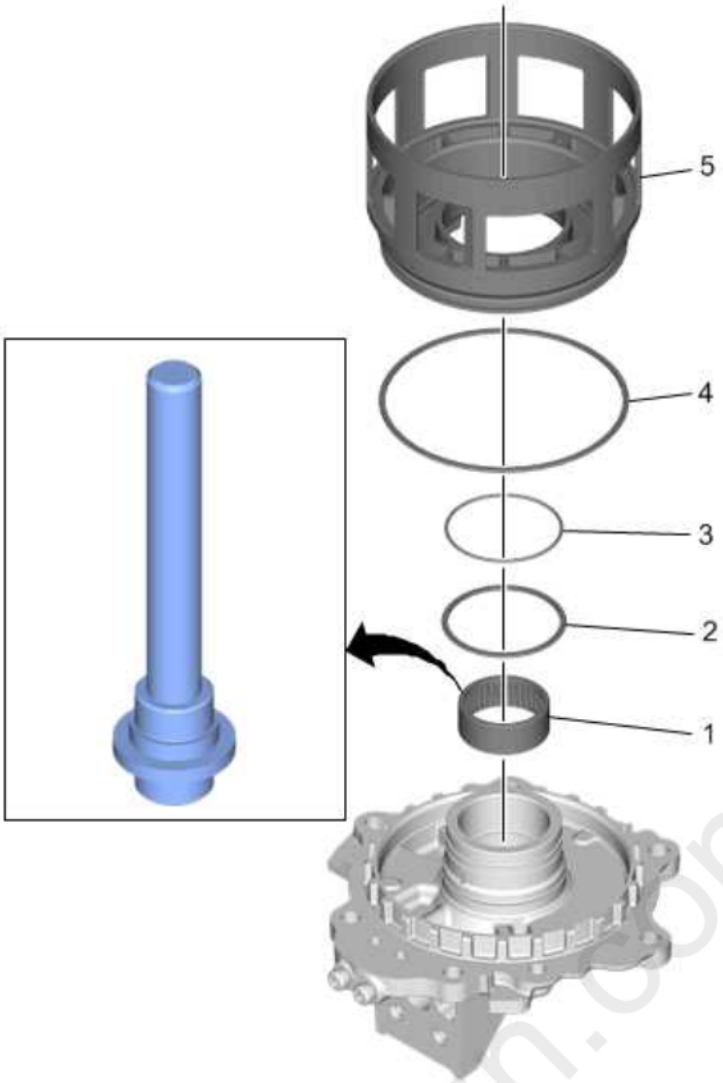

Fig. 38: 1-2-3-4-5 Reverse Clutch Piston
Courtesy of GENERAL MOTORS COMPANY

1-2-3-4-5 Reverse Clutch Piston Installation

Callout	Component Name
1	Output Shaft Bearing **Special Tools** • **DT-51087** Bearing Installer • **GE-8092** Driver Handle For equivalent regional tools, refer to **Special Tools** .
2	1-2-3-4-5-Reverse Clutch Piston Dam Inner Seal (O-ring) **CAUTION:** **Refer to Seal Reuse Caution .** **NOTE:** **Install a NEW seal, it is not reusable.**

cardiagn.com

Callout	Component Name
3	1-2-3-4-5-Reverse Clutch Piston Dam Inner Seal **CAUTION:** **Refer to Seal Reuse Caution .** **NOTE:** **Install a NEW seal, it is not reusable.**
4	1-2-3-4-5- Reverse Clutch Piston Outer Seal **CAUTION:** **Refer to Seal Reuse Caution .** **NOTE:** **Install a NEW seal, it is not reusable.**
5	1-2-3-4-5-Reverse Clutch Piston

1-2-3-4-5-Reverse Clutch Piston Dam Installation

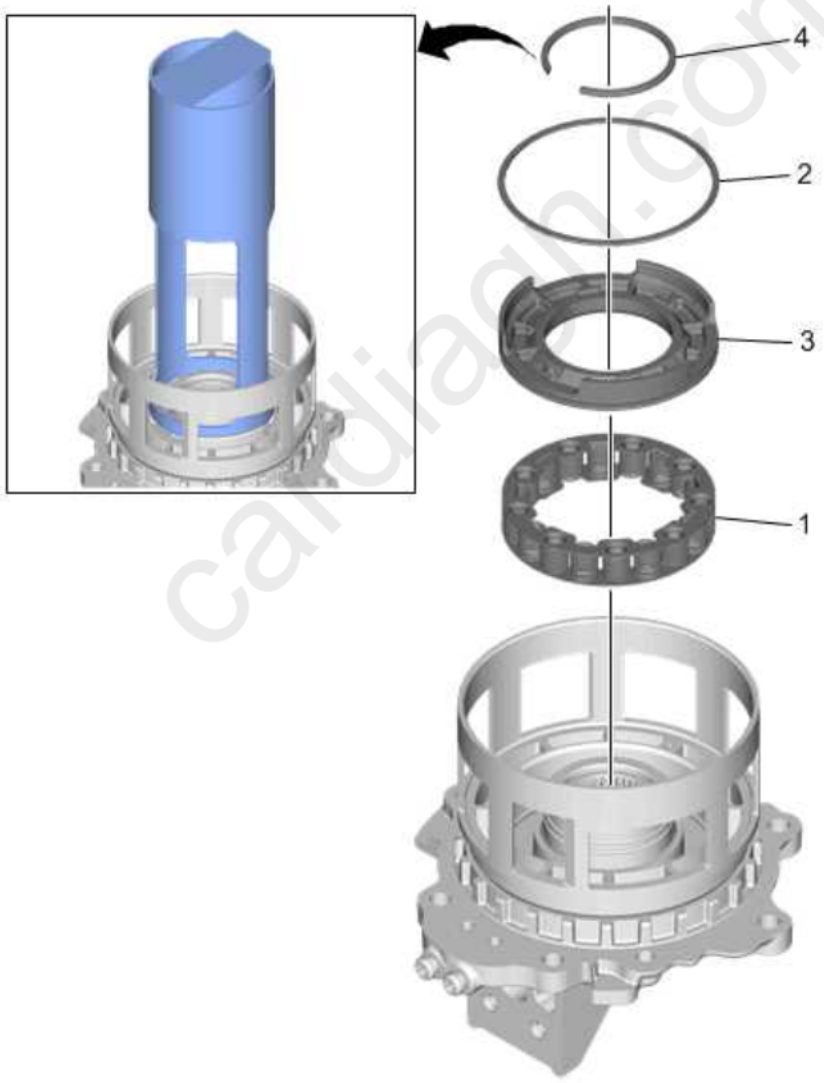

Fig. 39: 1-2-3-4-5-Reverse Clutch Piston Dam
Courtesy of GENERAL MOTORS COMPANY

1-2-3-4-5-Reverse Clutch Piston Dam Installation

Callout	Component Name
1	1-2-3-4-5-Reverse Clutch Piston Return Spring

Callout	Component Name
2	1-2-3-4-5-Reverse Clutch Piston Dam Seal **CAUTION:** **Refer to Seal Reuse Caution .** **NOTE:** **Install a NEW seal, it is not reusable.**
3	1-2-3-4-5-Reverse Clutch Piston Dam
4	1-2-3-4-5-Reverse Clutch Piston Dam Retaining Ring **Procedure** Use **DT-47693-2** compressor and an arbor press to install the retaining ring. **NOTE:** **Install a NEW retaining ring, it is not reusable.** **Special Tools** **DT-47693-2** Compressor Adapter For equivalent regional tools, refer to **Special Tools** .

CASE EXTENSION ASSEMBLY INSTALLATION

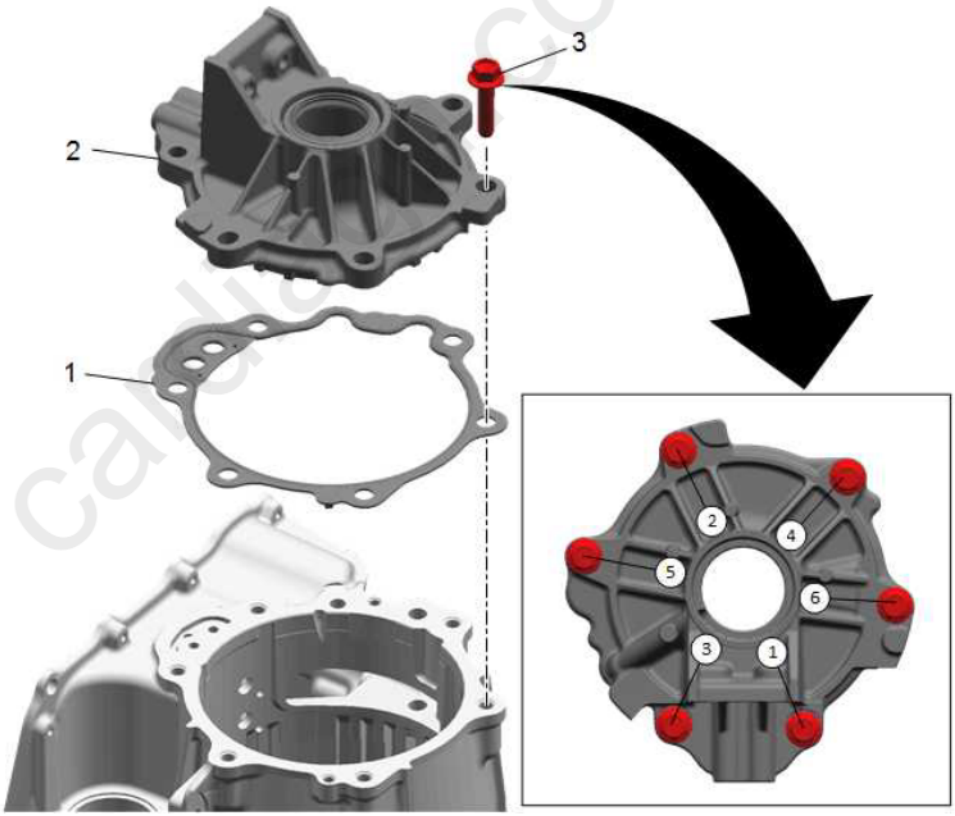

Fig. 40: Case Extension Assembly
Courtesy of GENERAL MOTORS COMPANY

Callout	Component Name
1	Automatic Transmission Case Extension Seal **NOTE:** **The seal is reusable, inspect the seal and replace if damaged.**

Callout	Component Name
2	Automatic Transmission Case Extension Assembly **NOTE:** **Ensure the park pawl is not engaged.**
3	Automatic Transmission Case Extension Bolt M10 x 40 (Qty: 6) **CAUTION:** **Refer to Fastener Caution .** **Procedure** Tighten the bolts in the sequence shown. 1. Tighten the bolts a first pass to 20 N.m (15 lb ft) 2. Tighten the bolts a final pass to 55 Degrees

PROPELLER SHAFT TRANSMISSION FLANGE INSTALLATION (REAR WHEEL DRIVE)

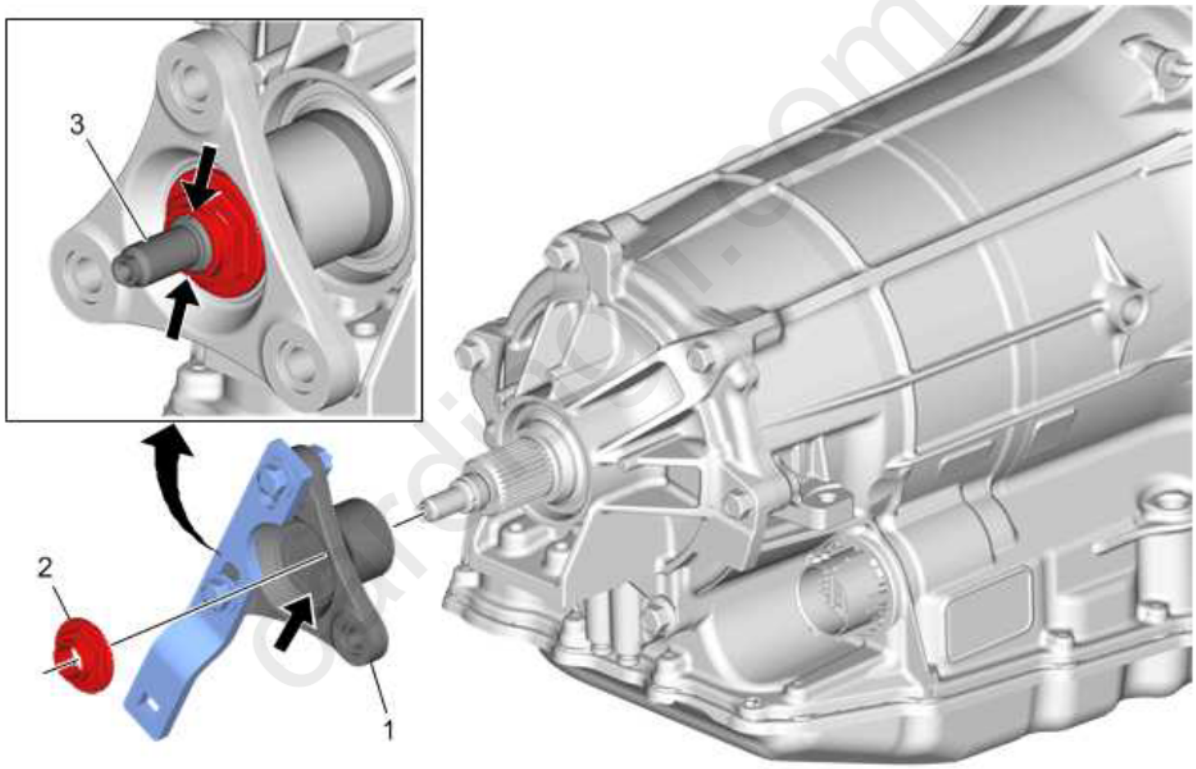

Fig. 41: Propeller Shaft Transmission Flange (Rear Wheel Drive)
Courtesy of GENERAL MOTORS COMPANY

Callout	Component Name

Callout	Component Name
1	Propeller Shaft Transmission Flange **Procedure** 1. The output shaft splines must be thoroughly clean and dry before installing the flange. 2. Apply adhesive across the width of the flange splines and install. Refer to **Adhesives, Fluids, Lubricants and Sealers** . However, if the replacement flange contains a pre-applied adhesive patch, then liquid adhesive is not required and the 24 hour cure time is not necessary. 3. Sufficient application of adhesive to every tooth on the flange will leave excess adhesive on the output shaft after installation. If no excess is observed, reapply adhesive.
2	Propeller Shaft Transmission Flange Nut **CAUTION:** **Refer to Fastener Caution .** **Procedure** 1. The output shaft nut threads must be thoroughly clean and dry before installing the nut. 2. Apply adhesive across the width of the nut threads prior to tightening and staking. Refer to **Adhesives, Fluids, Lubricants and Sealers** . However, if the replacement nut contains a pre-applied adhesive patch, then liquid adhesive is not required. **NOTE:** **Install a NEW nut.** **Tighten** 105 N.m (77 lb ft) **Special Tools** **DT-45012** Holding Fixture For equivalent regional tools, refer to **Special Tools** .
3	Output Shaft **CAUTION:** **Stake the flange nut onto the output shaft. Use the two staking grooves on the shaft to locate the staking points. Failure to stake the flange nut may result in damage to the transmission.**

REACTION CARRIER OVERHAUL

cardiagn.com

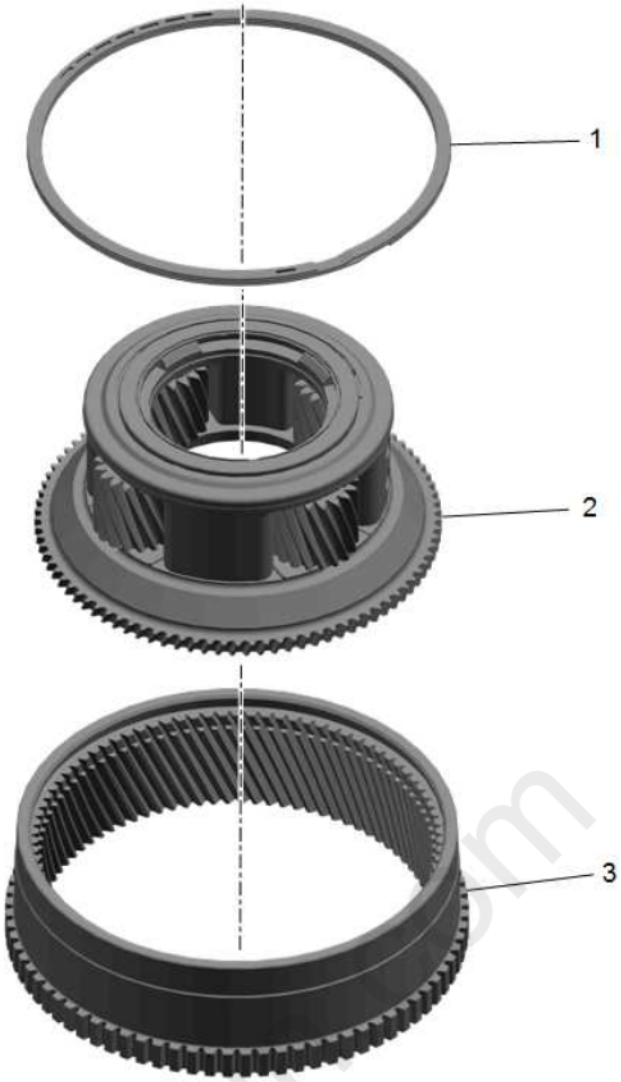

Fig. 42: Reaction Carrier
Courtesy of GENERAL MOTORS COMPANY

Callout	Component Name
1	Output Internal Gear Retaining Ring
2	Reaction Carrier
3	Output Carrier Internal Gear

REACTION CARRIER ASSEMBLY, OUTPUT CARRIER AND OUTPUT SHAFT INSTALLATION

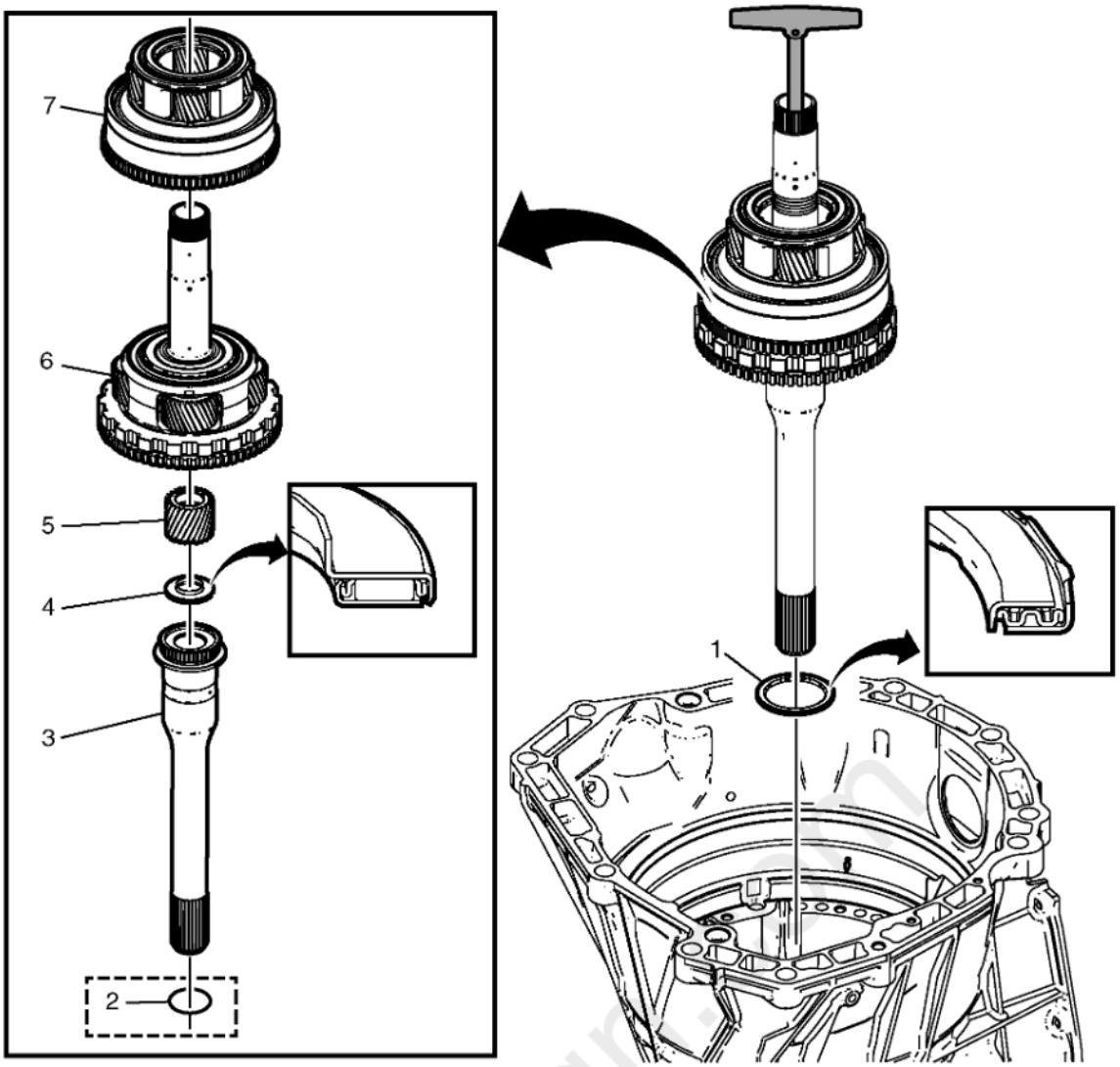

Fig. 43: Reaction Carrier Assembly, Output Carrier and Output Shaft
Courtesy of GENERAL MOTORS COMPANY

Callout	Component Name
1	Output Carrier Thrust Bearing
2	Output Shaft Seal - O-Ring **NOTE:** **The output shaft seal is only present on All Wheel Drive (AWD) models.**
3	Output Shaft **Special Tools** **DT-50921** Output Carrier/Shaft Lifting Tool For equivalent regional tools, refer to **Special Tools** .
4	Output Sun Gear Thrust Bearing
5	Output Sun Gear
6	Output Carrier Assembly
7	Reaction Carrier Assembly **NOTE:** **Ensure the park pawl is not engaged.**

REACTION INTERNAL GEAR AND 1-2-3-4-5 REVERSE HUB OVERHAUL

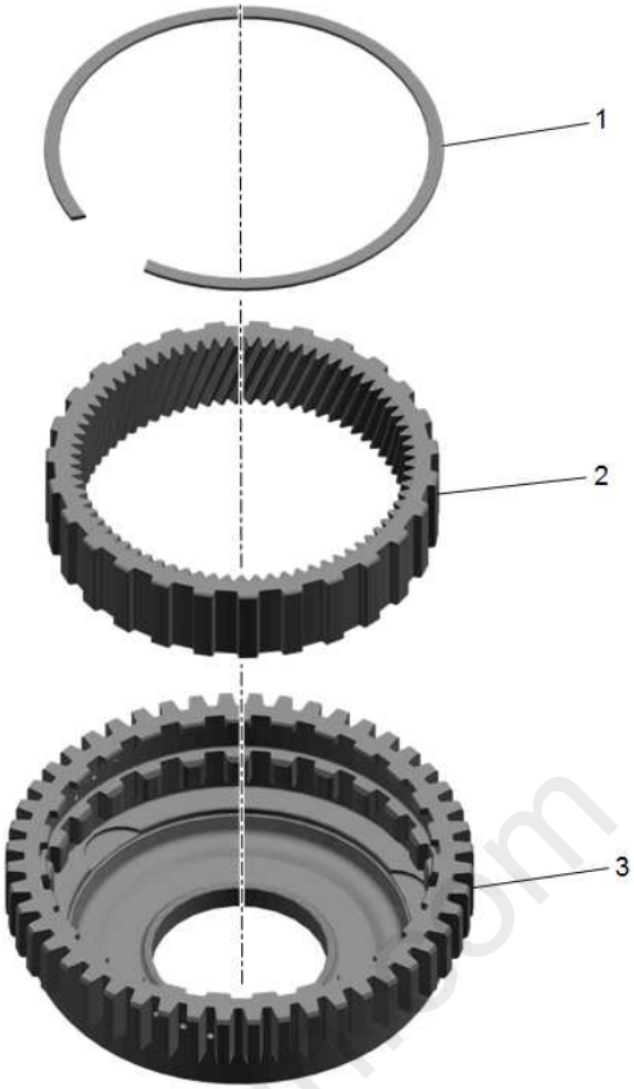

Fig. 44: Reaction Internal Gear and 1-2-3-4-5 Reverse Hub
Courtesy of GENERAL MOTORS COMPANY

Callout	Component Name
1	Reaction Internal Gear Retaining Ring
2	Reaction Internal Gear
3	Reaction Internal Gear and 1-2-3-4-5 Reverse Clutch Hub

REACTION INTERNAL GEAR AND 1-2-3-4-5 REVERSE HUB AND 1-2-3-4-5 REVERSE CLUTCH PLATE ASSEMBLY INSTALLATION

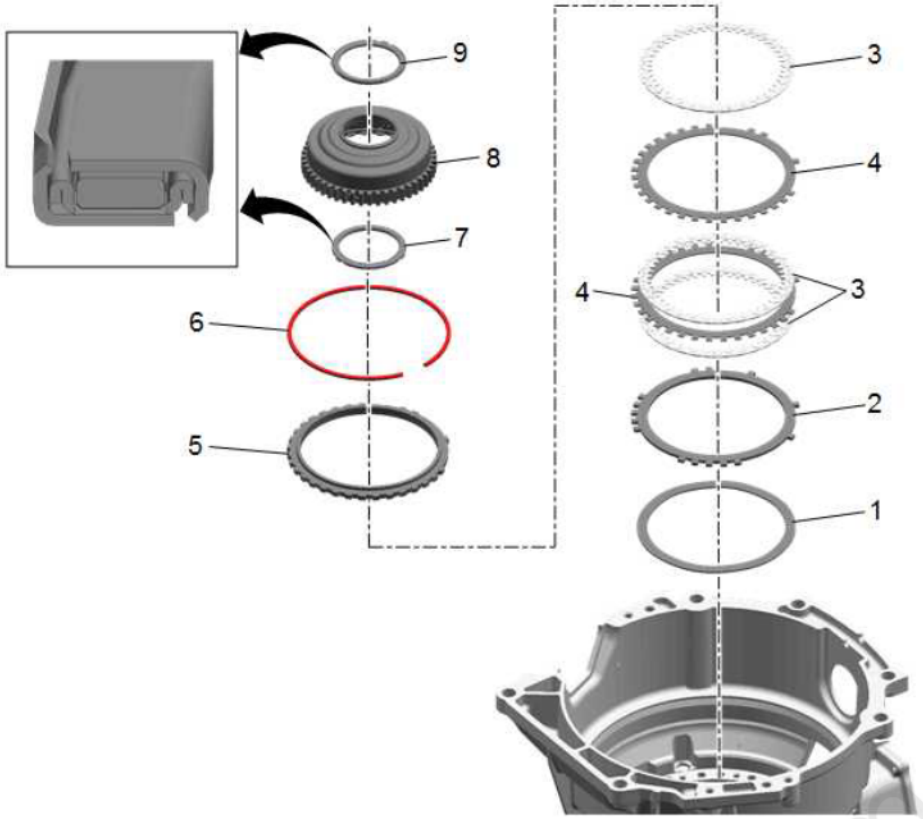

Fig. 45: Reaction Internal Gear and 1-2-3-4-5 Reverse Hub and 1-2-3-4-5 Reverse Clutch Plate Assembly

Courtesy of GENERAL MOTORS COMPANY

Callout	Component Name
1	1-2-3-4-5 Reverse Clutch (Waved) Plate
2	1-2-3-4-5 Reverse Clutch Apply Plate
3	1-2-3-4-5 Reverse Clutch Plate Assembly (Qty: 3)
4	1-2-3-4-5 Reverse Clutch Plate (Qty: 2)
5	1-2-3-4-5 Reverse Clutch Backing Plate
6	1-2-3-4-5 Reverse Clutch Backing Plate Retaining Ring (Selective) **Procedure** Select the correct retaining ring. Refer to 1-2-3-4-5 Reverse Clutch Backing Plate Retaining Ring Measurement. **NOTE:** **The opening of the retaining ring should be in the 9 o'clock position as indicated by the arrow.**
7	Reaction Carrier Thrust Bearing (8L45 Only)
8	Reaction Internal Gear and 1-2-3-4-5 Reverse Hub Assembly
9	1-2-3-4-5 Reverse Clutch Hub Thrust Bearing

1-2-3-4-5 REVERSE CLUTCH BACKING PLATE RETAINING RING MEASUREMENT

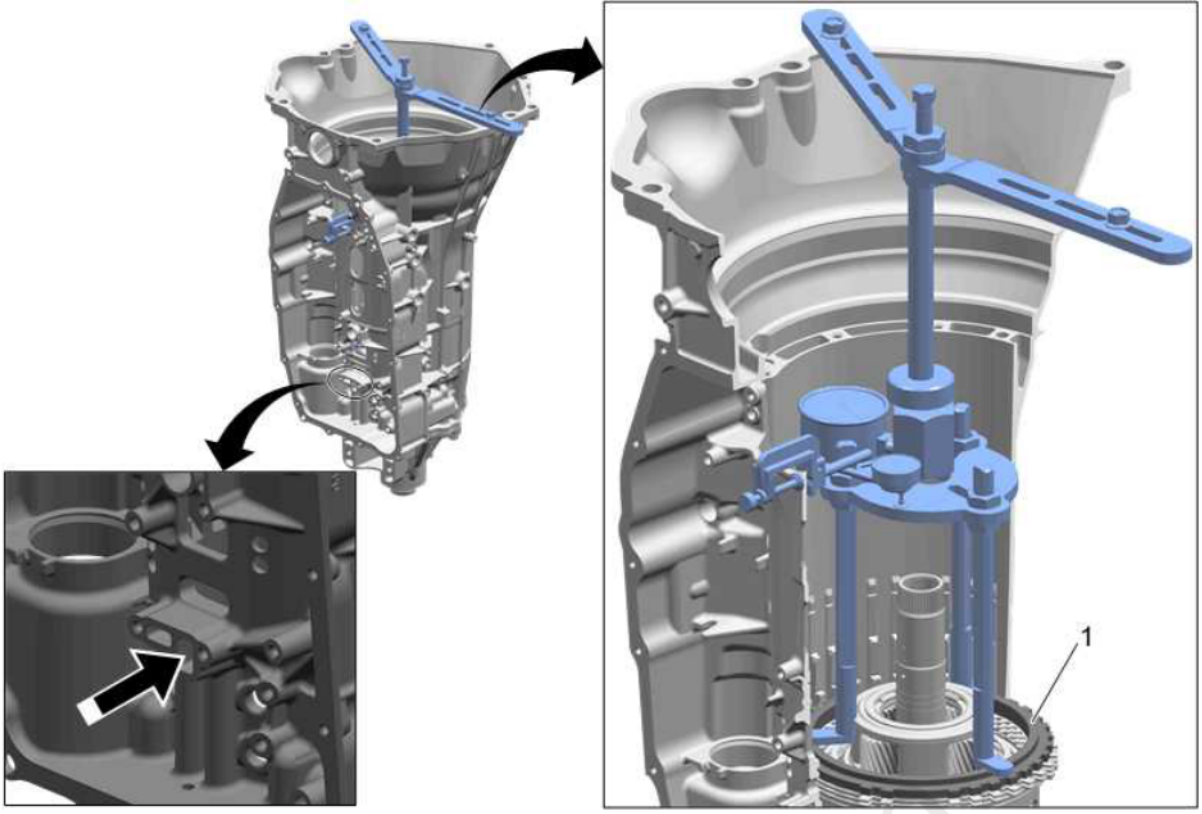

Fig. 46: Reaction Internal Gear and 1-2-3-4-5 Reverse Hub and 1-2-3-4-5 Reverse Clutch Plate
Courtesy of GENERAL MOTORS COMPANY

Callout	Component Name
Preliminary Procedure 1. Install the case extension assembly. Refer to **Case Extension Assembly Installation** 2. Install the 1-2-3-4-5 reverse clutch plate assembly. Refer to **Reaction Internal Gear and 1-2-3-4-5 Reverse Hub and 1-2-3-4-5 Reverse Clutch Plate Assembly Installation**.	

cardiagn.com

Callout	Component Name
1	1-2-3-4-5 Reverse Clutch Backing Plate **Procedure** 1. Assemble the tools as shown and apply 80 pounds of pressure to the load gauge by turning the screw on the **DT-48056** bridge clockwise. 2. Zero out the dial indicator. 3. Remove the pressure on the load gauge by turning the screw on the **DT-48056** bridge one full turn counterclockwise. 4. Apply compressed air to the indicated case passage and simultaneously adjust the screw on the **DT-48056** bridge to apply 80 pounds of pressure to the load gauge. 5. Observe the dial indicator measurement. Refer to **Clutch Backing Plate Retaining Ring Specifications (8L90)** and/or **Clutch Backing Plate Retaining Ring Specifications (8L45)** to determine the correct 1-2-3-4-5 reverse clutch backing plate retaining ring. **Special Tools** • **DT-48056** Spring Compressor Bridge • **DT-50902** Adjustable Clutch Spring Compressor • **DT-50903** Clutch Travel Load Gauge • **DT-51328** Clutch Compressor and Air Travel Check Rod Extension • **GE-8001** Dial Indicator Set For equivalent regional tools, refer to **Special Tools** .

INPUT SUN GEAR OVERHAUL

cardiagn.com

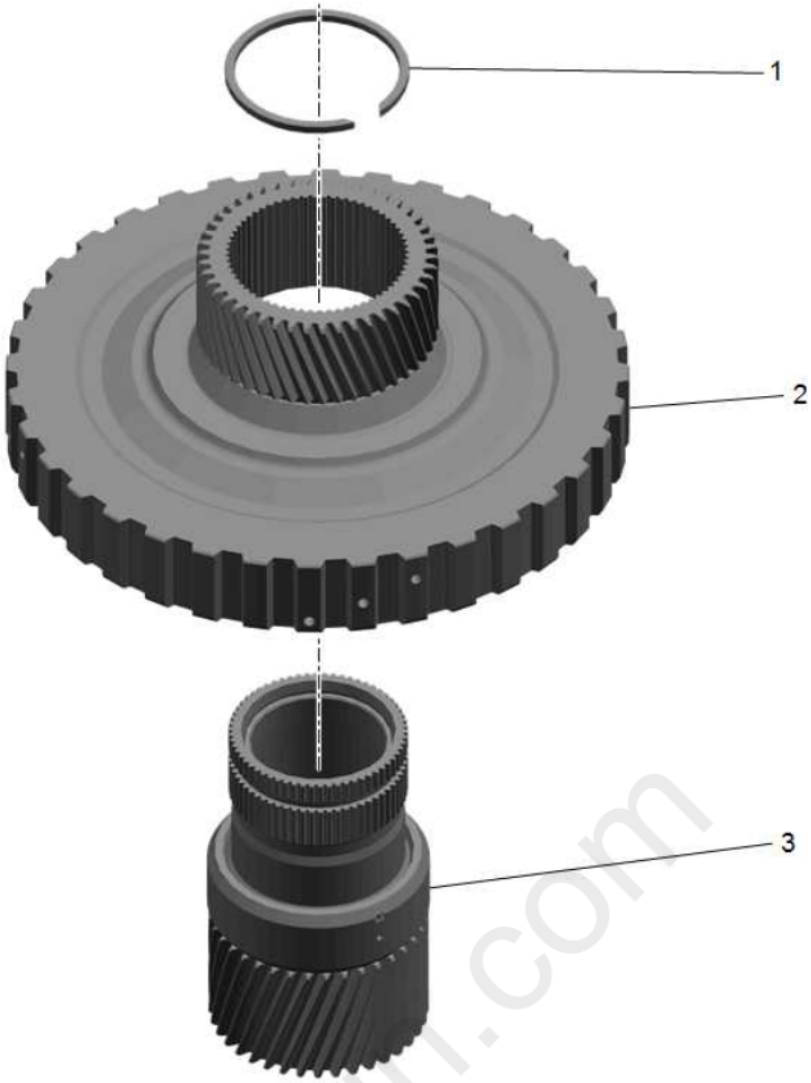

Fig. 47: Input Sun Gear
Courtesy of GENERAL MOTORS COMPANY

Callout	Component Name
1	Input Sun Gear Retaining Ring **NOTE:** **Discard the retaining ring, it is not reusable.**
2	Input Sun Gear Assembly
3	Reaction Sun Gear Assembly

1-2-7-8 REVERSE CLUTCH PLATE ASSEMBLY AND INPUT SUN GEAR ASSEMBLY INSTALLATION

cardiagn.com

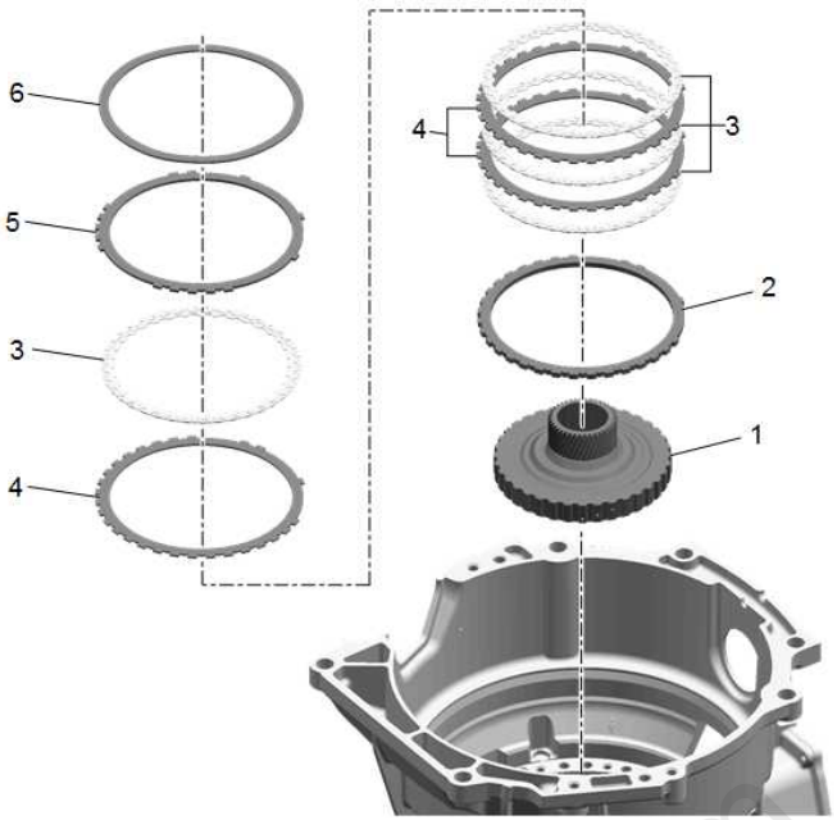

Fig. 48: 1-2-7-8 Reverse Clutch Plate Assembly and Input Sun Gear
Courtesy of GENERAL MOTORS COMPANY

Callout	Component Name
1	Input Sun Gear Assembly
2	1-2-7-8 Reverse Clutch Backing Plate
3	1-2-7-8 Reverse Clutch Plate Assembly (Qty: 4)
4	1-2-7-8 Reverse Clutch Plate (Qty: 3)
5	1-2-7-8 Reverse Clutch Apply Plate
6	1-2-7-8 Reverse Clutch (Waved) Plate

1-2-7-8 REVERSE CLUTCH PISTON INSTALLATION

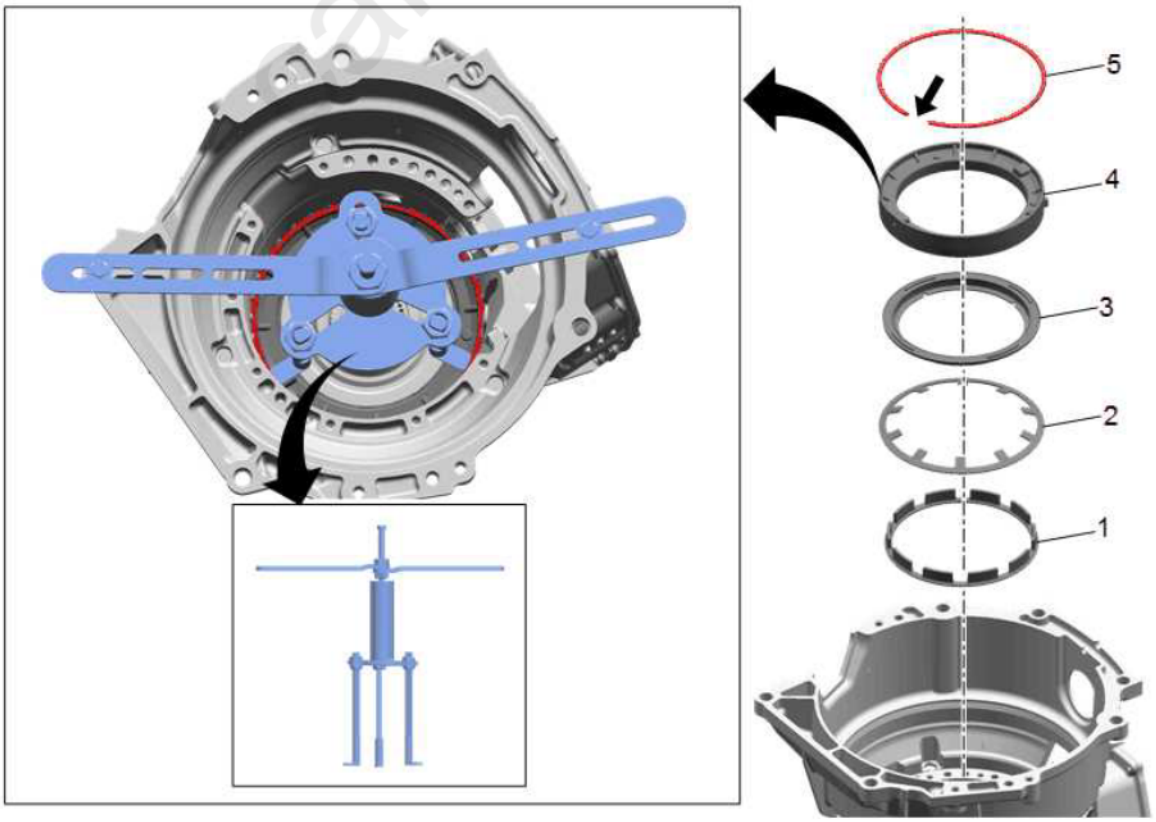

Fig. 49: 1-2-7-8 Reverse Clutch Piston
Courtesy of GENERAL MOTORS COMPANY

Callout	Component Name
1	1-2-7-8 Reverse Clutch Apply Ring
2	1-2-7-8 Reverse Clutch Return Spring
3	1-2-7-8 Reverse Clutch Piston
4	1-2-7-8 Reverse Clutch Piston Housing
5	1-2-7-8 Reverse Clutch Piston Housing Retaining Ring **NOTE:** **The opening of the retaining ring should be in the 9 o'clock position as indicated by the arrow.** **Special Tools** • **DT-35512** Bearing Installer • **DT-48056** Spring Compressor Bridge • **DT-50902** Adjustable Clutch Spring Compressor For equivalent regional tools, refer to **Special Tools** .

DIRECT OVERDRIVE INTERNAL GEAR OVERHAUL

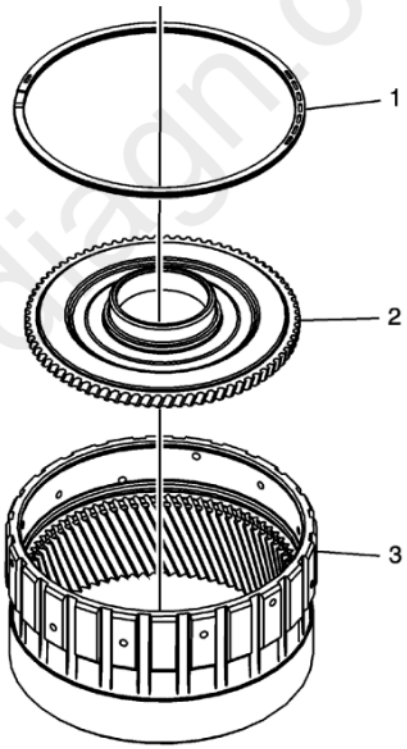

Fig. 50: Direct Overdrive Internal Gear
Courtesy of GENERAL MOTORS COMPANY

Callout	Component Name
1	Direct Overdrive Internal Gear Retaining Ring
2	Direct Overdrive Internal Gear Flange
3	Direct Overdrive Internal Gear

INPUT INTERNAL GEAR OVERHAUL

cardiagn.com

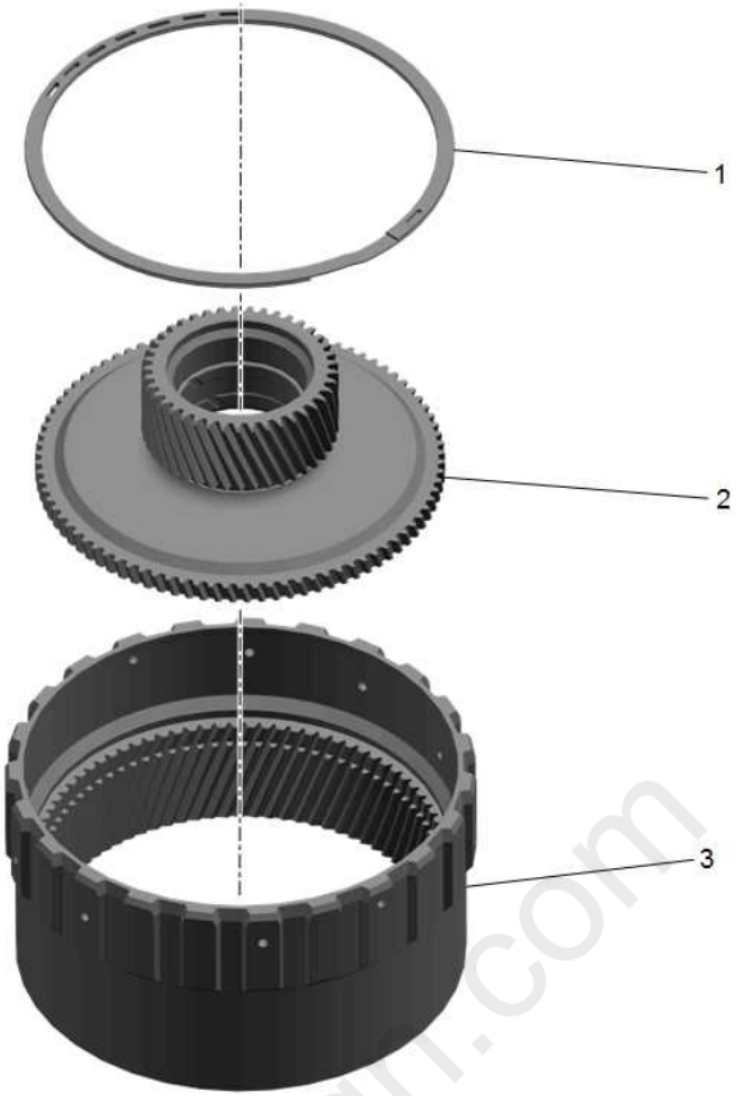

Fig. 51: Input Internal Gear
Courtesy of GENERAL MOTORS COMPANY

Callout	Component Name
1	Input Internal Gear Retaining Ring
2	Direct Overdrive Sun Gear
3	Input Internal Gear

INPUT CARRIER OVERHAUL

cardiagn.com

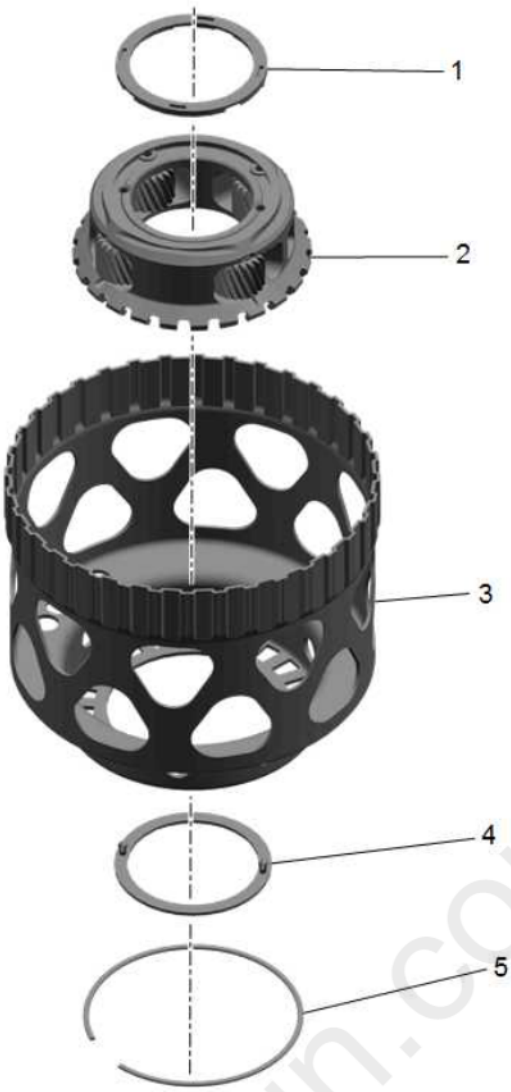

Fig. 52: Input Carrier
Courtesy of GENERAL MOTORS COMPANY

Callout	Component Name
1	Input Carrier Thrust Washer
2	Input Carrier
3	Input Carrier Shell
4	Input Carrier Thrust Washer
5	Input Carrier Shell Retaining Ring

INPUT CARRIER ASSEMBLY INSTALLATION

cardiagn.com

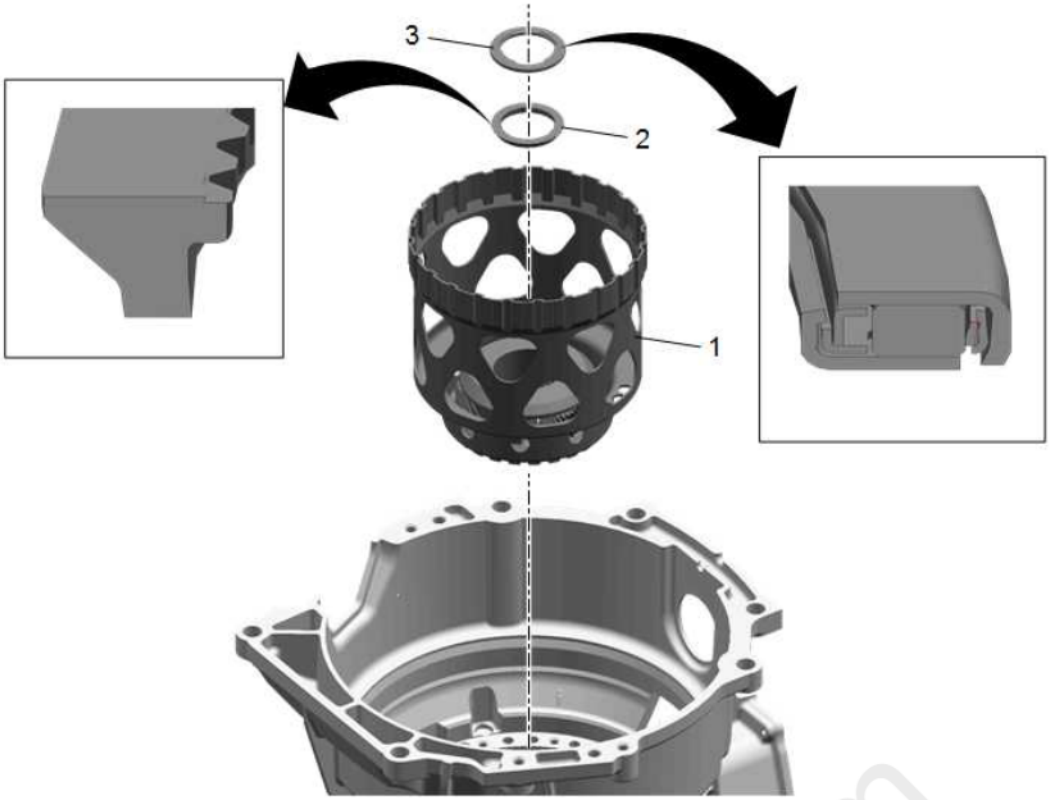

Fig. 53: Input Carrier
Courtesy of GENERAL MOTORS COMPANY

Callout	Component Name
1	Input Carrier Assembly
2	Input Sun Gear Spacer
3	Input Sun Gear Thrust Bearing

2-3-4-6-8 AND 4-5-6-7-8 REVERSE CLUTCH DISASSEMBLE

2-3-4-6-8 Clutch Plates Removal

cardiagn.com

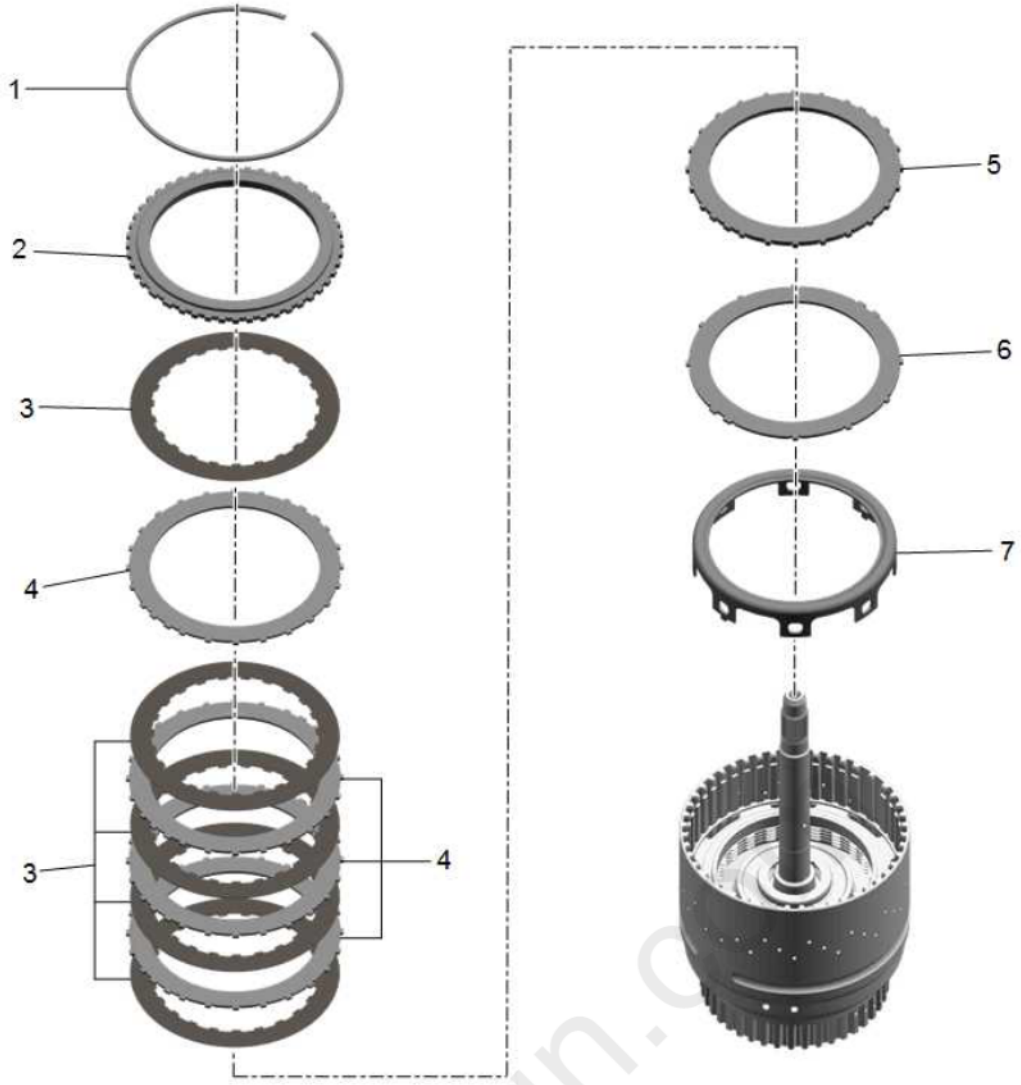

Fig. 54: 2-3-4-6-8 Clutch Plates
Courtesy of GENERAL MOTORS COMPANY

2-3-4-6-8 Clutch Plates Removal

Callout	Component Name
1	2-3-4-6-8 Clutch Backing Plate Retaining Ring (Selective)
2	2-3-4-6-8 Clutch Backing Plate
3	2-3-4-6-8 Clutch Plate Assembly (Qty: 5)
4	2-3-4-6-8 Clutch Plate (Qty: 4)
5	2-3-4-6-8 Clutch Apply Plate
6	2-3-4-6-8 Clutch (Waved) Plate
7	2-3-4-6-8 Clutch Apply Ring

4-5-6-7-8 Reverse Clutch Plates Removal

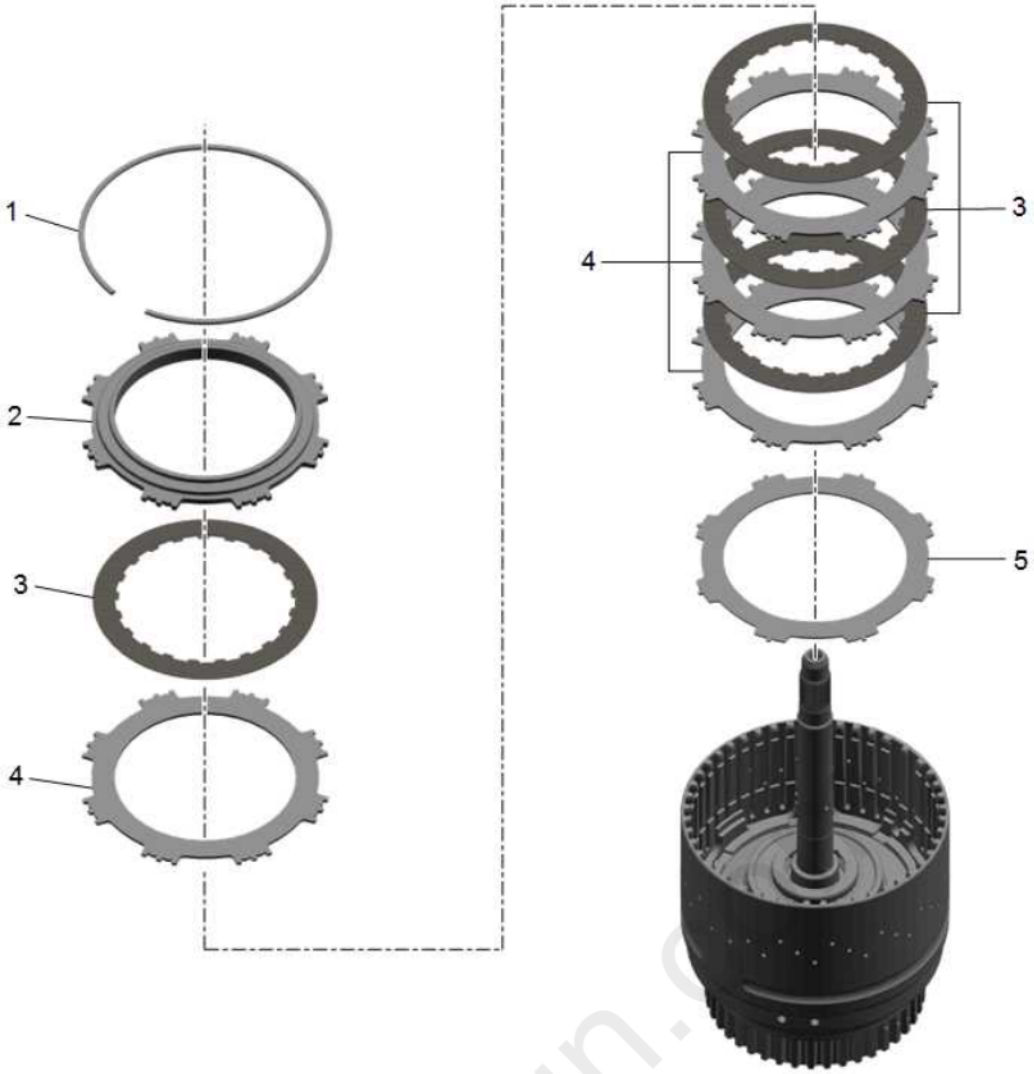

Fig. 55: 4-5-6-7-8 Reverse Clutch Plates
Courtesy of GENERAL MOTORS COMPANY

4-5-6-7-8 Reverse Clutch Plates Removal

Callout	Component Name
1	4-5-6-7-8 Reverse Clutch Backing Plate Retaining Ring (Selective)
2	4-5-6-7-8 Reverse Clutch Backing Plate
3	4-5-6-7-8 Reverse Clutch Plate Assembly (Qty: 4)
4	4-5-6-7-8 Reverse Clutch Plate (Qty: 4)
5	4-5-6-7-8 Reverse Clutch (Waved) Plate

4-5-6-7-8 Reverse Clutch Piston Removal

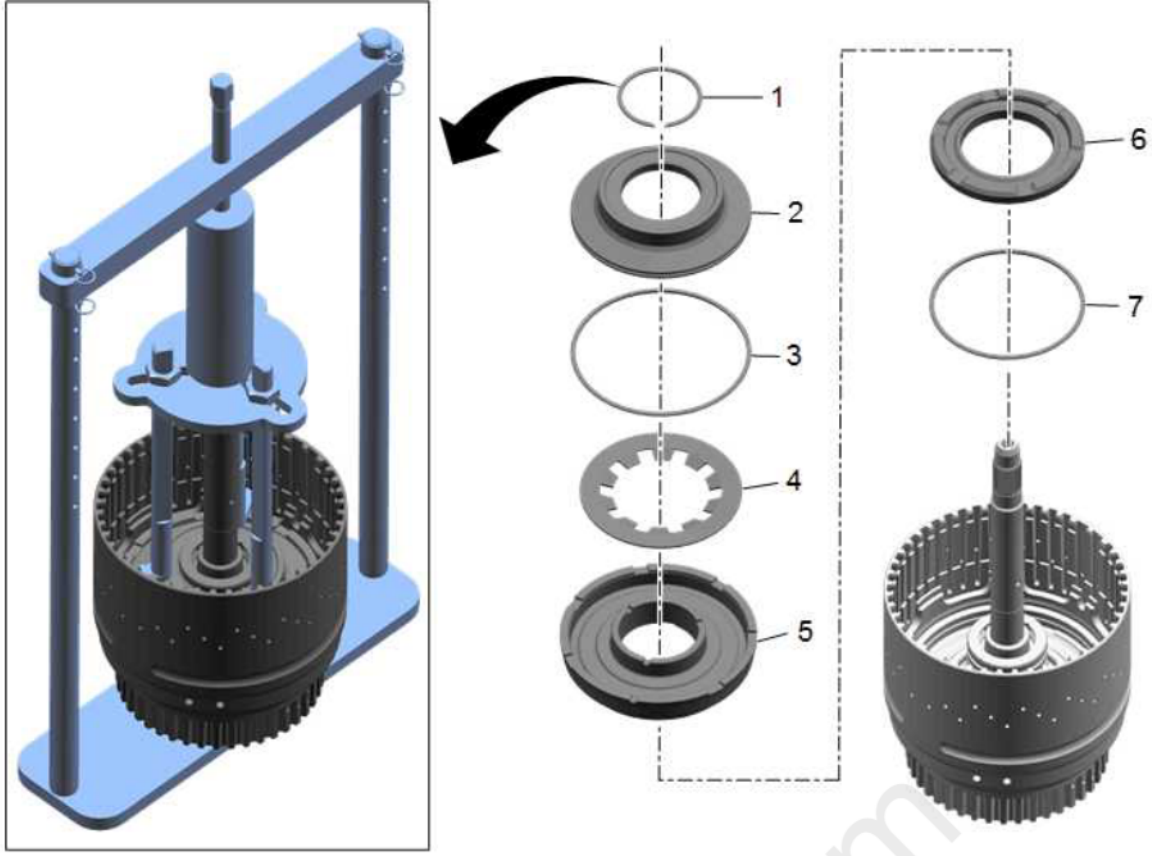

Fig. 56: 4-5-6-7-8 Reverse Clutch Piston
Courtesy of GENERAL MOTORS COMPANY

4-5-6-7-8 Reverse Clutch Piston Removal

Callout	Component Name
1	4-5-6-7-8 Reverse Clutch Piston Dam Retaining Ring **NOTE:** **Discard the retaining ring, it is not reusable.** **Special Tools** • **DT-35512** Bearing Installer • **DT-50900** Clutch Travel Support Fixture • **DT-50902** Adjustable Clutch Spring Compressor For equivalent regional tools, refer to **Special Tools** .
2	4-5-6-7-8 Reverse Clutch Piston Dam **Procedure** Use the **DT-50905** clutch air travel adapter with compressed air to remove the piston and piston dam as an assembly. **Special Tools** **DT-50905** Clutch Air Travel Adapter For equivalent regional tools, refer to **Special Tools** .
3	4-5-6-7-8 Reverse Clutch Piston Dam Seal **CAUTION:** **Refer to Seal Reuse Caution .**
4	4-5-6-7-8 Reverse Clutch Piston Return Spring **NOTE:** **Note the orientation of the spring for assembly.**

cardiagn.com

Callout	Component Name
5	4-5-6-7-8 Reverse Clutch Piston
6	4-5-6-7-8 Reverse Clutch Piston Stop **NOTE:** **Note the orientation of the stop for assembly**
7	4-5-6-7-8 Reverse Clutch Piston Seal **CAUTION:** **Refer to Seal Reuse Caution .**

2-3-4-6-8 Clutch Piston Removal

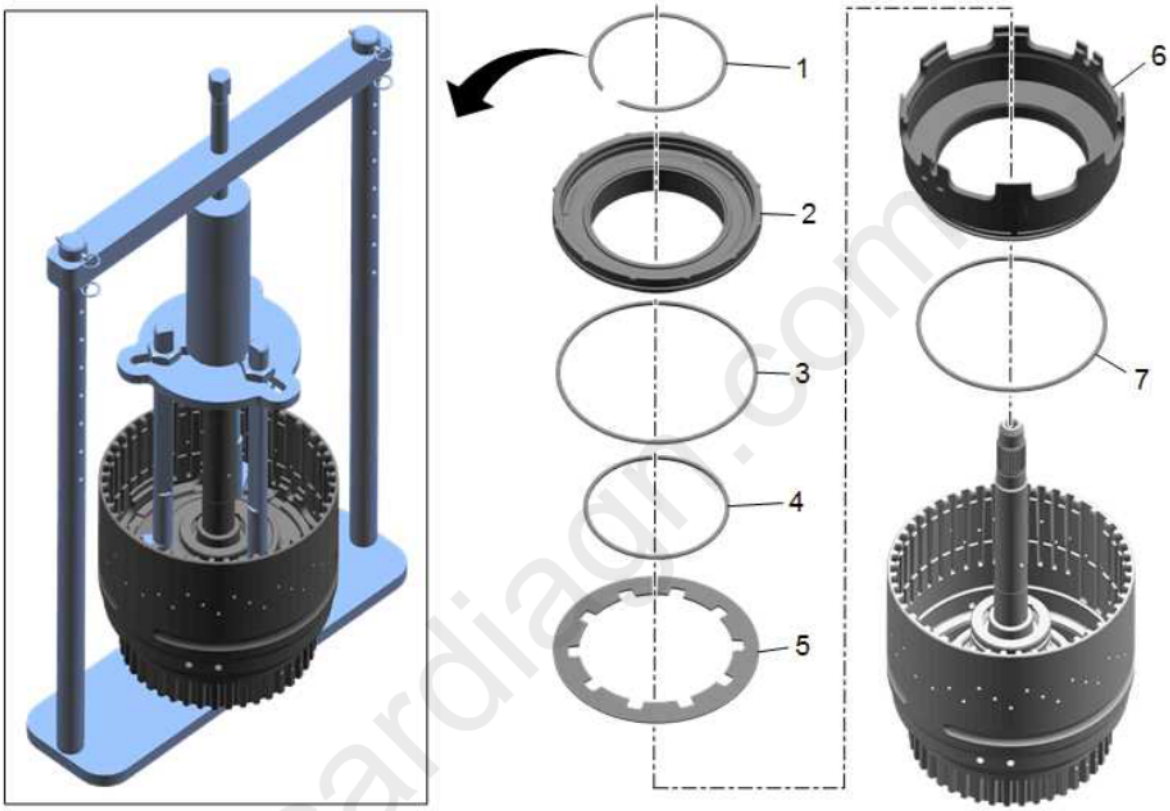

Fig. 57: 2-3-4-6-8 Clutch Piston
Courtesy of GENERAL MOTORS COMPANY

2-3-4-6-8 Clutch Piston Removal

Callout	Component Name
1	2-3-4-6-8 Clutch Piston Dam Retaining Ring **NOTE:** **Discard the retaining ring, it is not reusable.** **Special Tools** • **DT-35512** Bearing Installer • **DT-50900** Clutch Travel Support Fixture • **DT-50902** Adjustable Clutch Spring Compressor For equivalent regional tools, refer to **Special Tools** .

Callout	Component Name
2	2-3-4-6-8 Clutch Piston Dam **Special Tools** **DT-50905** Clutch Air Travel Adapter For equivalent regional tools, refer to **Special Tools** .
3	2-3-4-6-8 Clutch Piston Dam Outer Seal **CAUTION:** **Refer to Seal Reuse Caution .**
4	2-3-4-6-8 Clutch Piston Dam Inner Seal **CAUTION:** **Refer to Seal Reuse Caution .**
5	2-3-4-6-8 Clutch Piston Return Spring **NOTE:** **Note the orientation of the spring for assembly.**
6	2-3-4-6-8 Clutch Piston
7	2-3-4-6-8 Clutch Piston Seal **CAUTION:** **Refer to Seal Reuse Caution .**

2-3-4-6-8 and 4-5-6-7-8 Reverse Clutch Housing Seals Removal

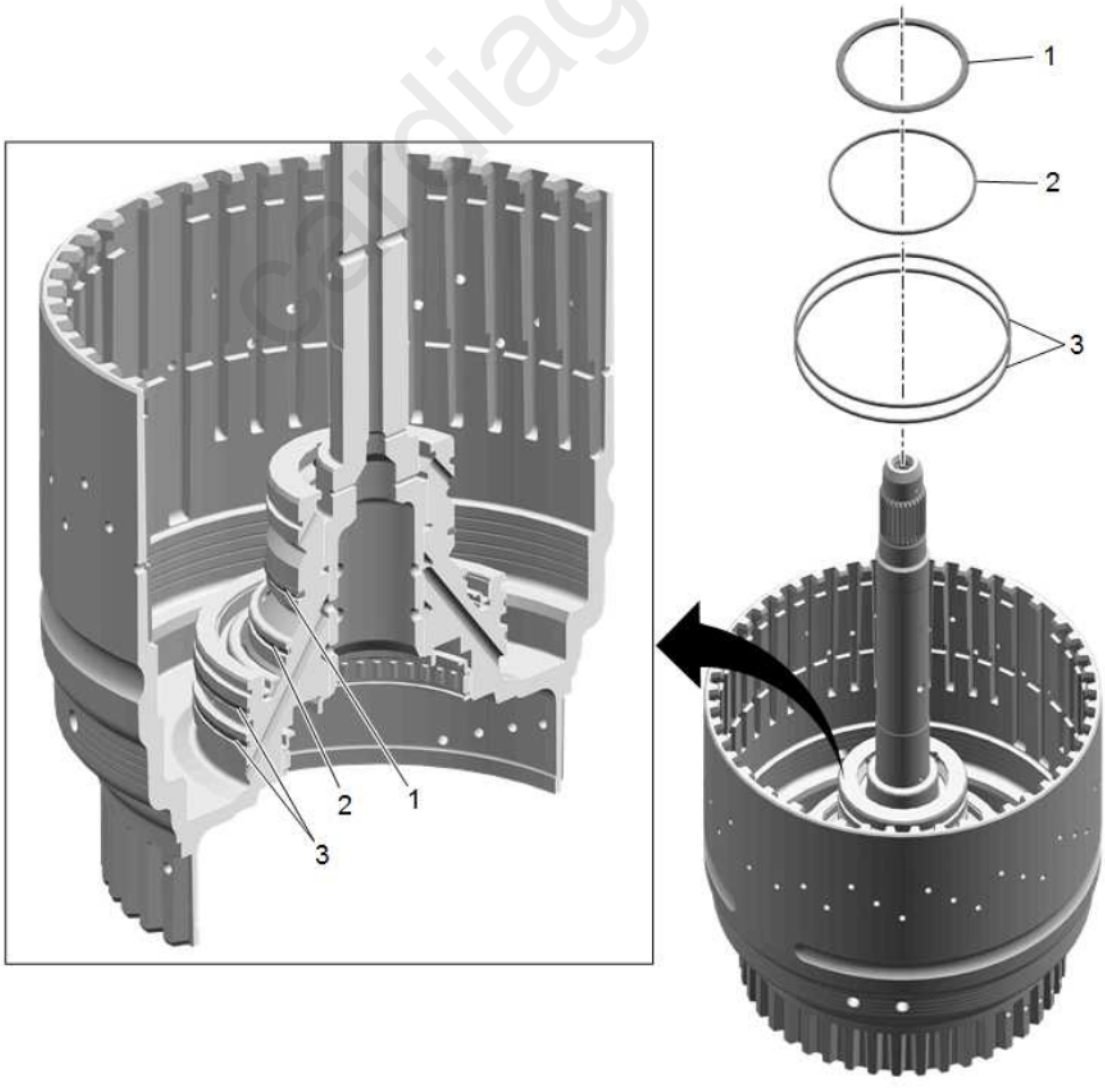

cardiagn.com

Fig. 58: 2-3-4-6-8 and 4-5-6-7-8 Reverse Clutch Housing Seals
Courtesy of GENERAL MOTORS COMPANY

2-3-4-6-8 and 4-5-6-7-8 Reverse Clutch Housing Seals Removal

Callout	Component Name
CAUTION: Refer to Seal Reuse Caution .	
1	4-5-6-7-8 Reverse Clutch Piston Seal
2	4-5-6-7-8 Reverse Clutch Piston Stop O-ring Seal
3	2-3-4-6-8 Clutch Piston Dam Seal

2-3-4-6-8 and 4-5-6-7-8 Reverse Clutch Housing Bearing Removal

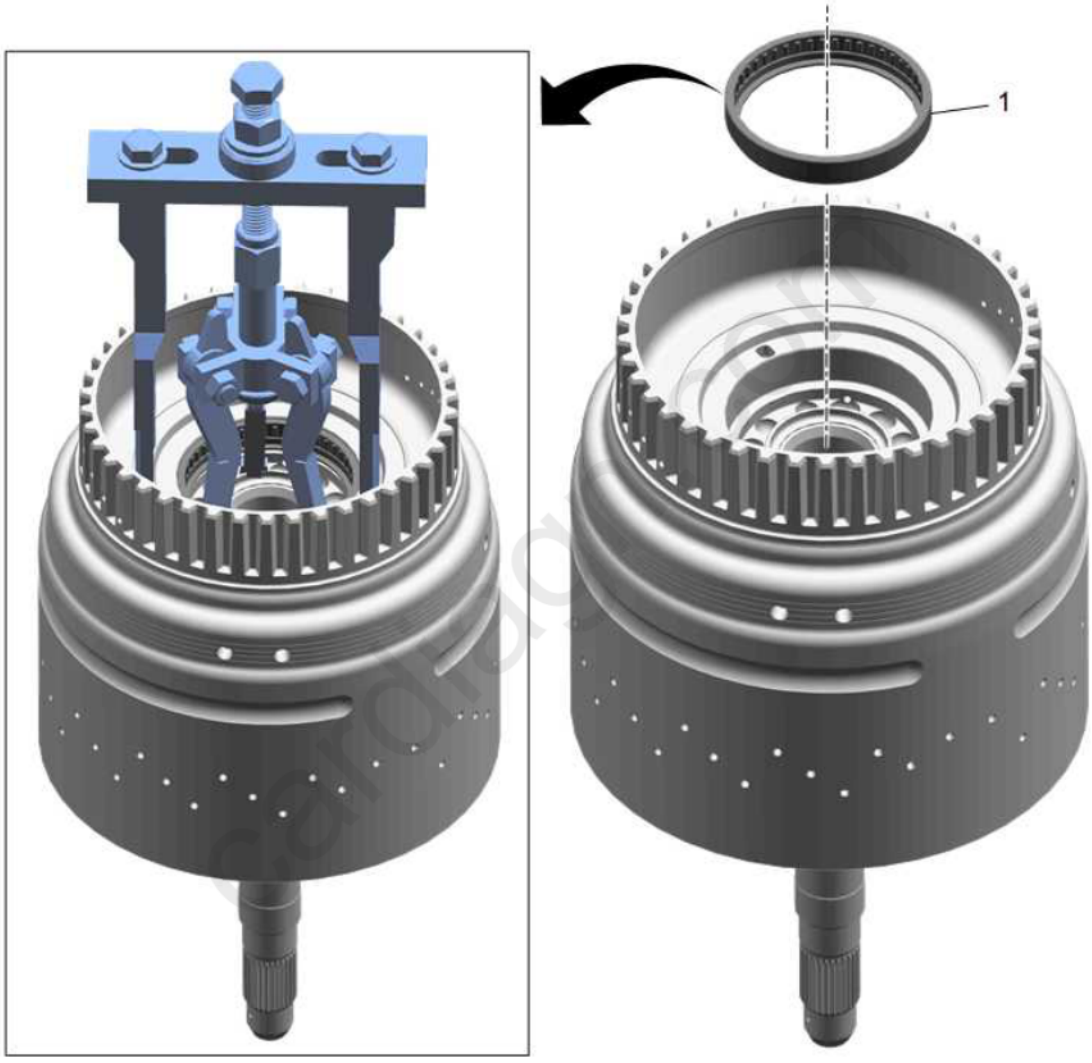

Fig. 59: 2-3-4-6-8 and 4-5-6-7-8 Reverse Clutch Housing Bearing
Courtesy of GENERAL MOTORS COMPANY

2-3-4-6-8 and 4-5-6-7-8 Reverse Clutch Housing Bearing Removal

Callout	Component Name
1	2-3-4-6-8 and 4-5-6-7-8 Reverse Clutch Housing Bearing **Special Tools** • **DT-45124** Removal Bridge • **DT-47865** Bearing Remover For equivalent regional tools, refer to Special Tools .

2-3-4-6-8 AND 4-5-6-7-8 REVERSE CLUTCH ASSEMBLE (8L90)

2-3-4-6-8 and 4-5-6-7-8 Reverse Clutch Housing Bearing Installation

Fig. 60: 2-3-4-6-8 and 4-5-6-7-8 Reverse Clutch Housing Bearing
Courtesy of GENERAL MOTORS COMPANY

2-3-4-6-8 and 4-5-6-7-8 Reverse Clutch Housing Bearing Installation

Callout	Component Name
1	2-3-4-6-8 and 4-5-6-7-8 Reverse Clutch Housing Bearing **Procedure** Use **DT-50906** installer and a press to install the bearing. **Special Tools** **DT-50906** Bearing Installer For equivalent regional tools, refer to **Special Tools** .

2-3-4-6-8 and 4-5-6-7-8 Reverse Clutch Housing Seals Installation

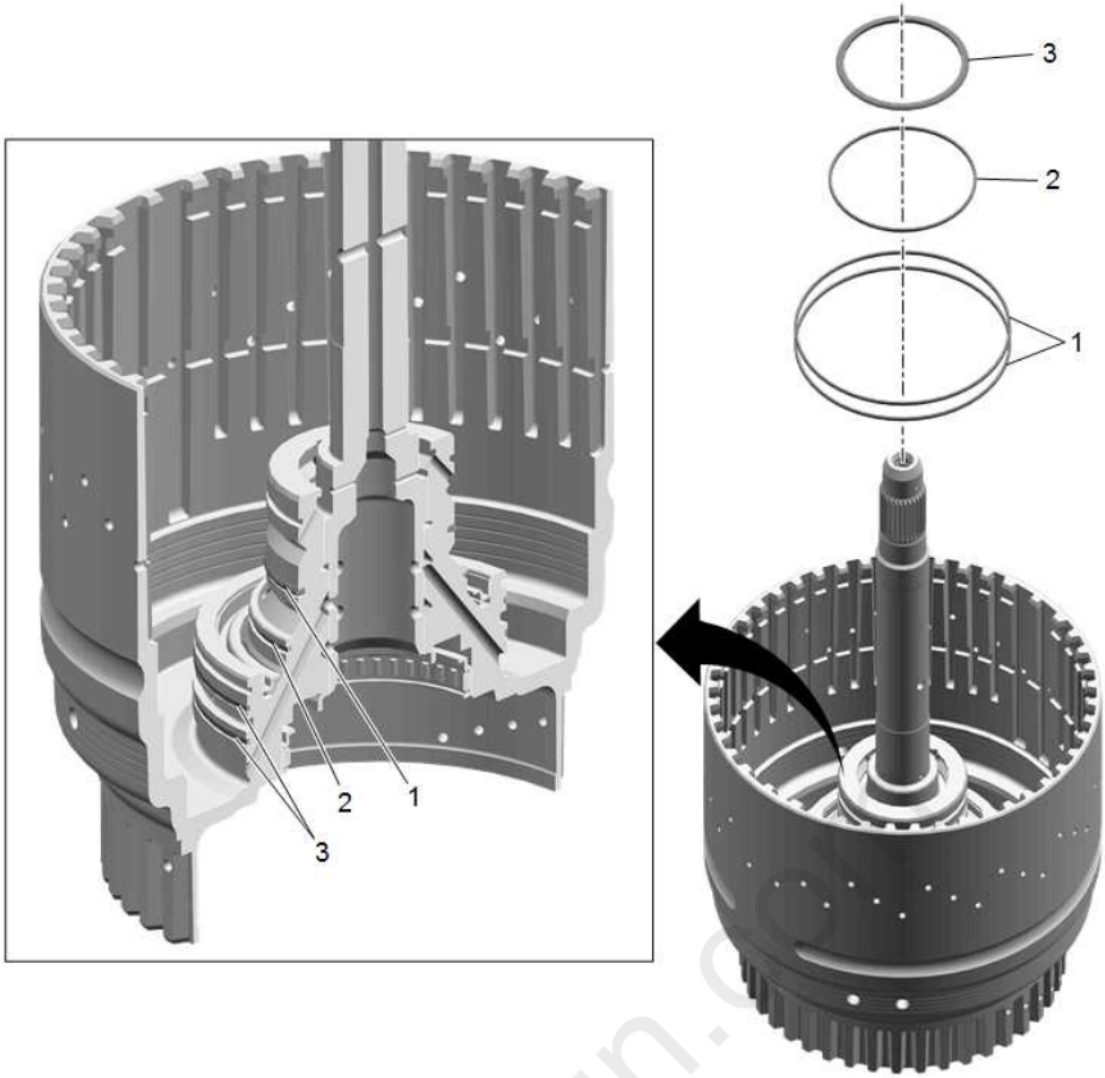

Fig. 61: 2-3-4-6-8 and 4-5-6-7-8 Reverse Clutch Housing Seals
Courtesy of GENERAL MOTORS COMPANY

2-3-4-6-8 and 4-5-6-7-8 Reverse Clutch Housing Seals Installation

Callout	Component Name
CAUTION: Refer to Seal Reuse Caution .	
1	2-3-4-6-8 Clutch Piston Dam Seal
2	4-5-6-7-8 Reverse Clutch Piston Stop O-ring Seal
3	4-5-6-7-8 Reverse Clutch Piston Seal

2-3-4-6-8 Clutch Piston Installation

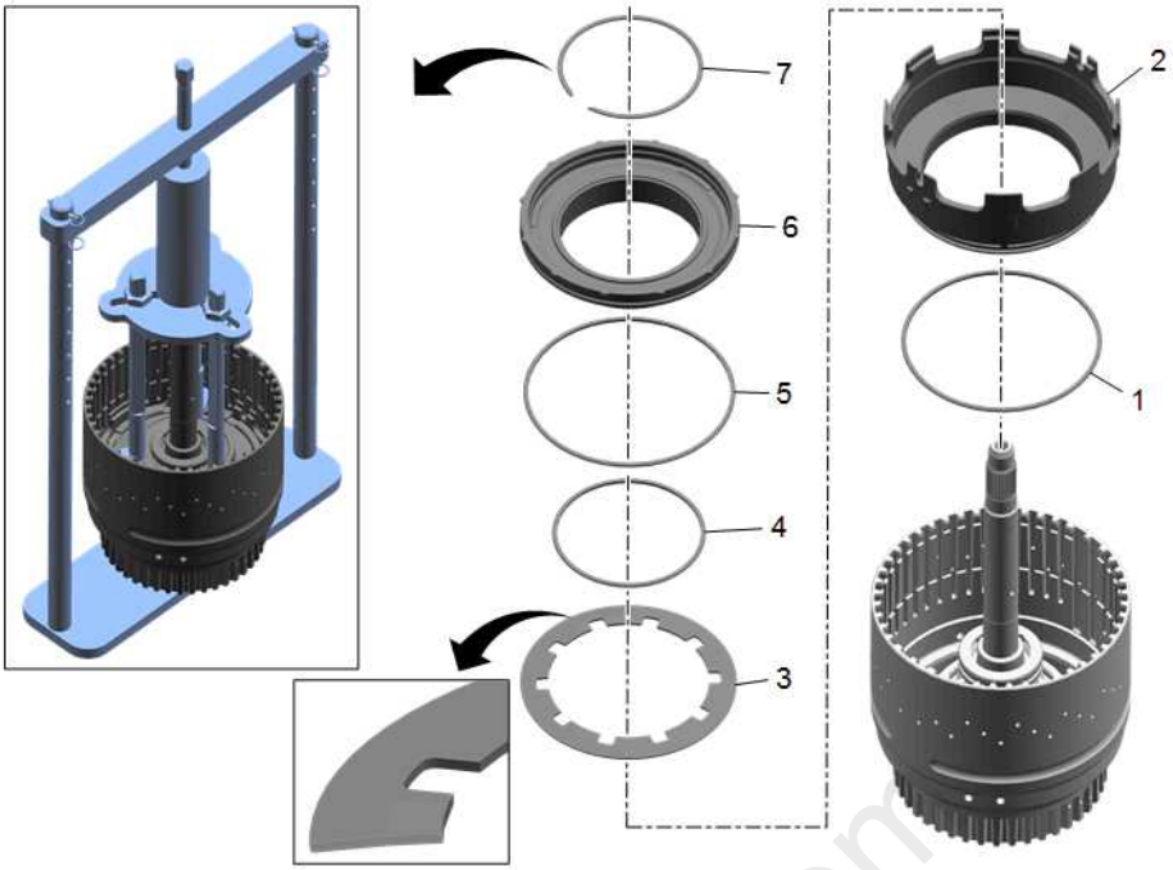

Fig. 62: 2-3-4-6-8 Clutch Piston
Courtesy of GENERAL MOTORS COMPANY

2-3-4-6-8 Clutch Piston Installation

Callout	Component Name
CAUTION: Refer to Seal Reuse Caution .	
1	2-3-4-6-8 Clutch Piston Seal
2	2-3-4-6-8 Clutch Piston
3	2-3-4-6-8 Clutch Piston Return Spring **NOTE:** Note the orientation of the spring for assembly.
4	2-3-4-6-8 Clutch Piston Dam Inner Seal
5	2-3-4-6-8 Clutch Piston Dam Outer Seal
6	2-3-4-6-8 Clutch Piston Dam

cardiagn.com

Callout	Component Name
7	2-3-4-6-8 Clutch Piston Dam Retaining Ring **NOTE:** • **Install a NEW retaining ring, it is not reusable.** • **It may be helpful to loosely install the retaining ring before installing the tool.** **Special Tools** • **DT-35512** Bearing Installer • **DT-50900** Clutch Travel Support Fixture • **DT-50902** Adjustable Clutch Spring Compressor For equivalent regional tools, refer to **Special Tools** .

4-5-6-7-8 Reverse Clutch Piston Installation

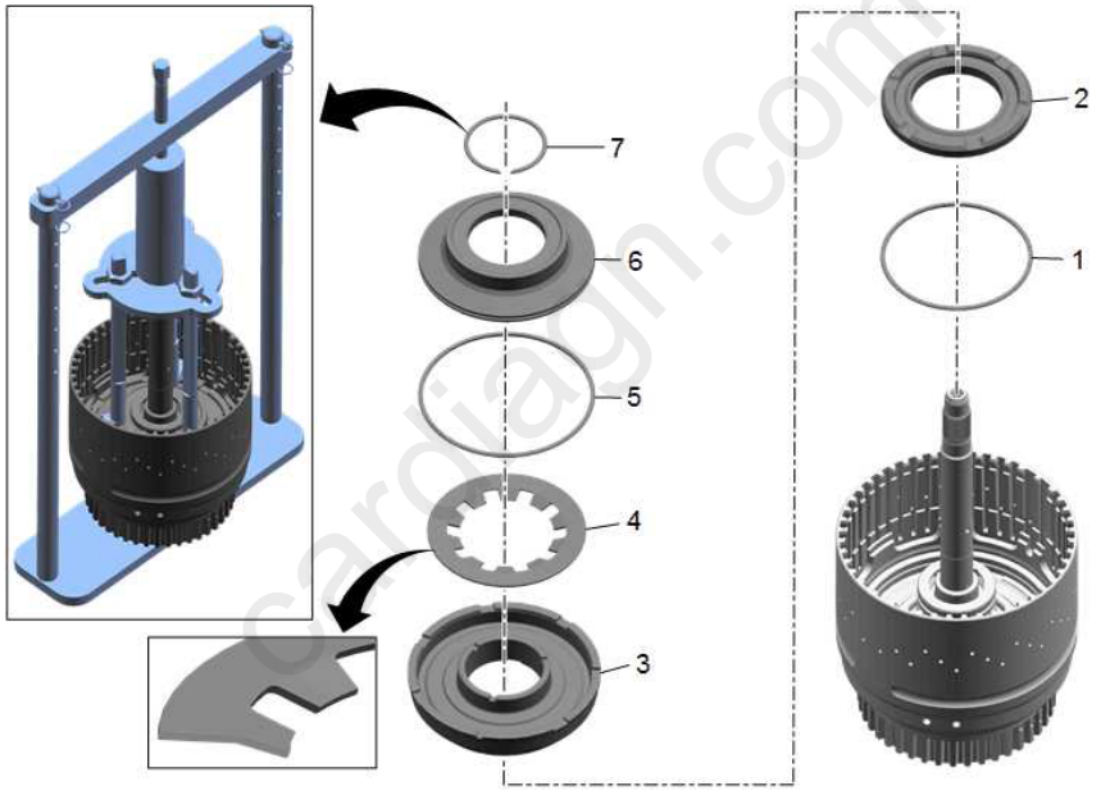

Fig. 63: 4-5-6-7-8 Reverse Clutch Piston
Courtesy of GENERAL MOTORS COMPANY

4-5-6-7-8 Reverse Clutch Piston Installation

Callout	Component Name
CAUTION: **Refer to Seal Reuse Caution .**	
1	4-5-6-7-8 Reverse Clutch Piston Seal
2	4-5-6-7-8 Reverse Clutch Piston Stop **NOTE:** **Note the orientation of the stop.**
3	4-5-6-7-8 Reverse Clutch Piston

cardiagn.com

Callout	Component Name
4	4-5-6-7-8 Reverse Clutch Piston Return Spring **NOTE:** **Note the orientation of the spring.**
5	4-5-6-7-8 Reverse Clutch Piston Dam Seal
6	4-5-6-7-8 Reverse Clutch Piston Dam
7	4-5-6-7-8 Reverse Clutch Piston Dam Retaining Ring **NOTE:** • **Install a NEW retaining ring, it is not reusable.** • **The points on the retaining ring should face up.** • **It may be helpful to loosely install the retaining ring before installing the tool.** **Special Tools** • **DT-35512** Bearing Installer • **DT-50900** Clutch Travel Support Fixture • **DT-50902** Adjustable Clutch Spring Compressor For equivalent regional tools, refer to **Special Tools** .

4-5-6-7-8 Reverse Clutch Plates Installation

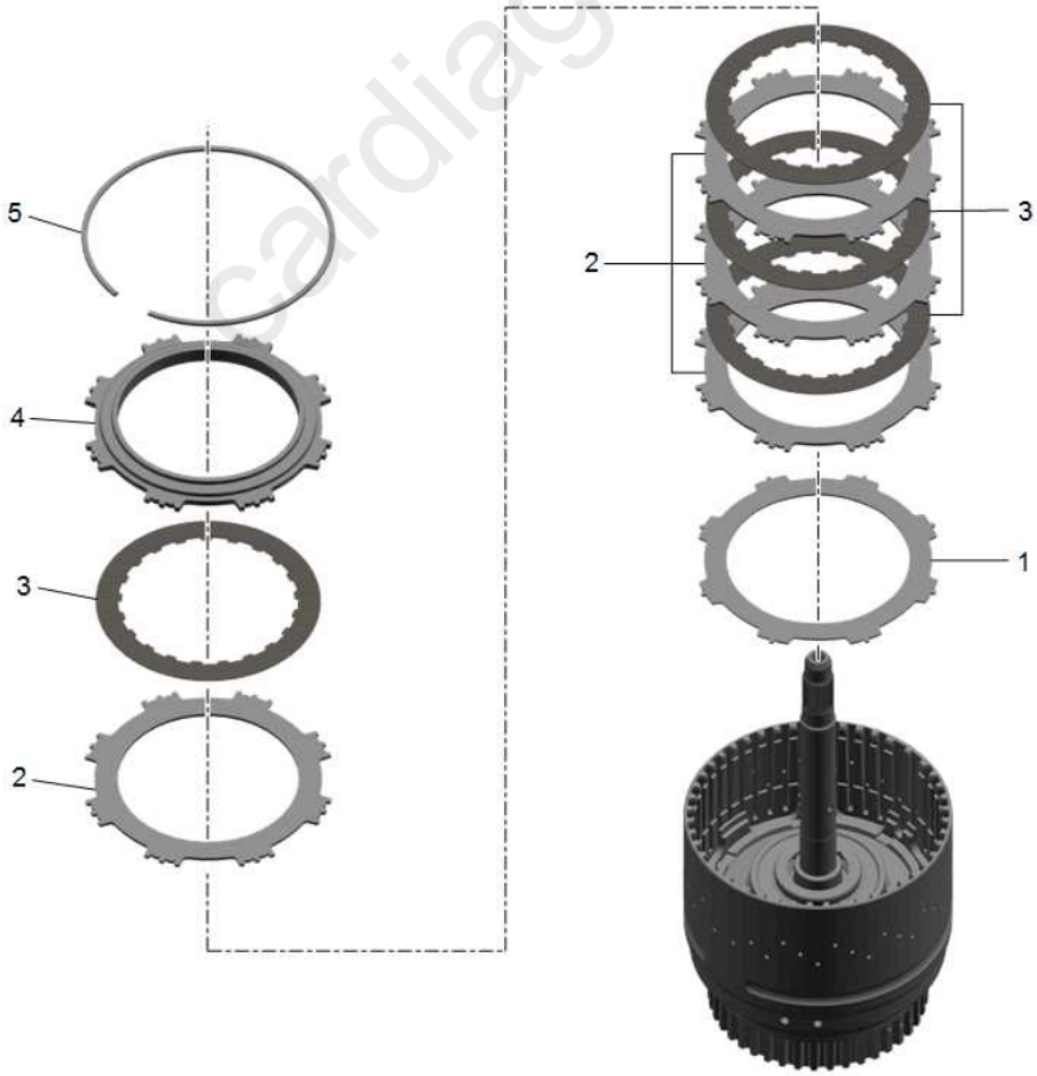

cardiagn.com

Fig. 64: 4-5-6-7-8 Reverse Clutch Plates
Courtesy of GENERAL MOTORS COMPANY

4-5-6-7-8 Reverse Clutch Plates Installation

Callout	Component Name
1	4-5-6-7-8 Reverse Clutch (Waved) Plate **NOTE:** • **Align center tooth with notch on piston.** • **Teeth on clutch plates go between notches on piston.**
2	4-5-6-7-8 Reverse Clutch Plate (Qty: 4)
3	4-5-6-7-8 Reverse Clutch Plate Assembly (Qty: 4)
4	4-5-6-7-8 Reverse Clutch Backing Plate
5	4-5-6-7-8 Reverse Clutch Backing Plate Retaining Ring (Selective) **Procedure** Select the correct retaining ring. Refer to **4-5-6-7-8 Reverse Clutch Backing Plate Retaining Ring Measurement (8L90)**. **NOTE:** **The retaining ring opening should be between the teeth on the clutch plates.**

2-3-4-6-8 Clutch Plates Installation

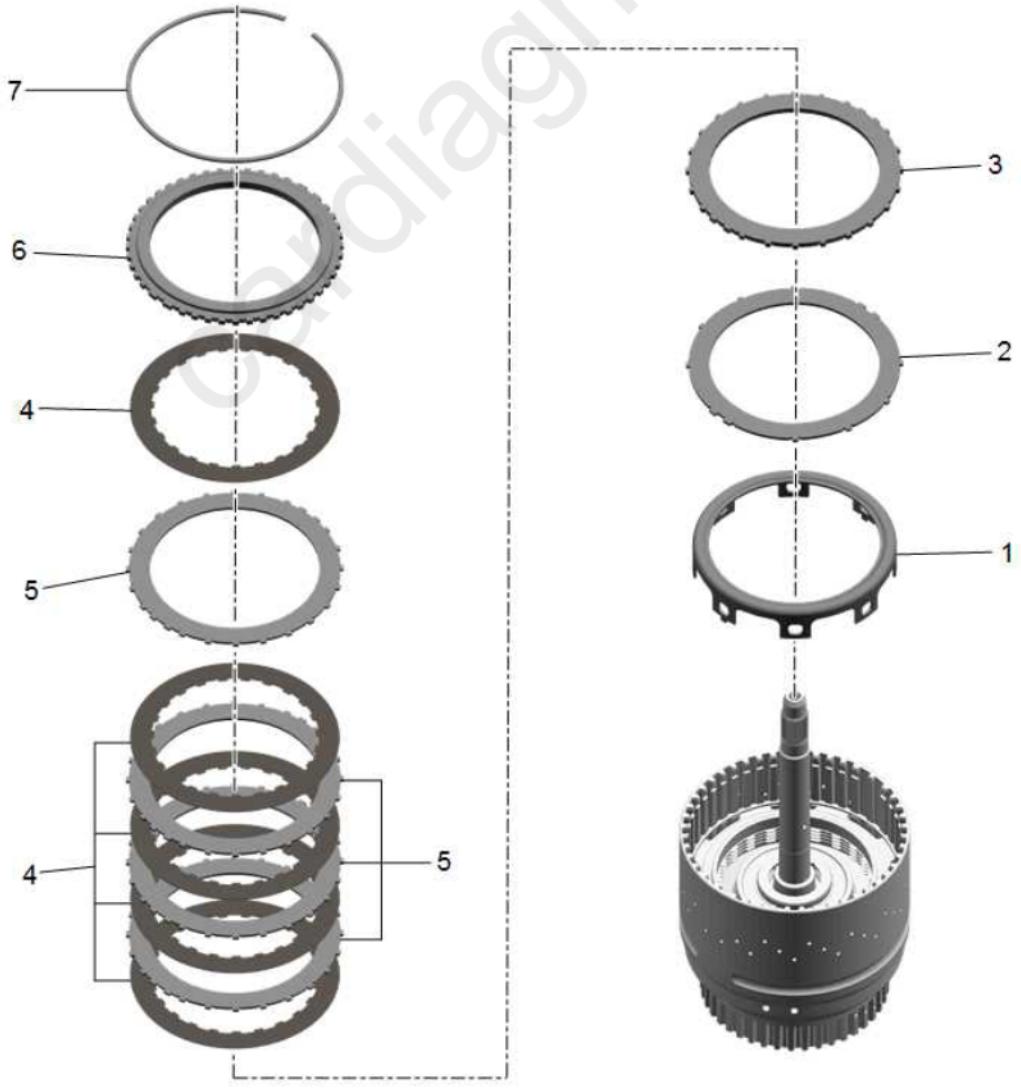

obdiagn.com

Fig. 65: 2-3-4-6-8 Clutch Plates
Courtesy of GENERAL MOTORS COMPANY

2-3-4-6-8 Clutch Plates Installation

Callout	Component Name
1	2-3-4-6-8 Clutch Apply Ring **NOTE:** **Tabs align with notches in piston.**
2	2-3-4-6-8 Clutch (Waved) Plate **NOTE:** **Two tabs on clutch plate align with large notches in housing.**
3	2-3-4-6-8 Clutch Apply Plate
4	2-3-4-6-8 Clutch Plate (Qty: 4)
5	2-3-4-6-8 Clutch Plate Assembly (Qty: 5)
6	2-3-4-6-8 Clutch Backing Plate
7	2-3-4-6-8 Clutch Backing Plate Retaining Ring (Selective) **Procedure** Select the correct retaining ring. Refer to **2-3-4-6-8 Clutch Backing Plate Retaining Ring Measurement (8L90)**. **NOTE:** **The retaining ring opening should align with tooth without notch.**

2-3-4-6-8 AND 4-5-6-7-8 REVERSE CLUTCH ASSEMBLE (8L45)

2-3-4-6-8 and 4-5-6-7-8 Reverse Clutch Housing Bearing Installation

cardiagn.com

Fig. 66: 2-3-4-6-8 and 4-5-6-7-8 Reverse Clutch Housing Bearing
Courtesy of GENERAL MOTORS COMPANY

2-3-4-6-8 and 4-5-6-7-8 Reverse Clutch Housing Bearing Installation

Callout	Component Name
1	2-3-4-6-8 and 4-5-6-7-8 Reverse Clutch Housing Bearing **Procedure** Use **DT-51089** installer and a press to install the bearing. **Special Tools** **DT-51089** Bearing Installer For equivalent regional tools, refer to **Special Tools** .

2-3-4-6-8 and 4-5-6-7-8 Reverse Clutch Housing Seals Installation

cardiagn.com

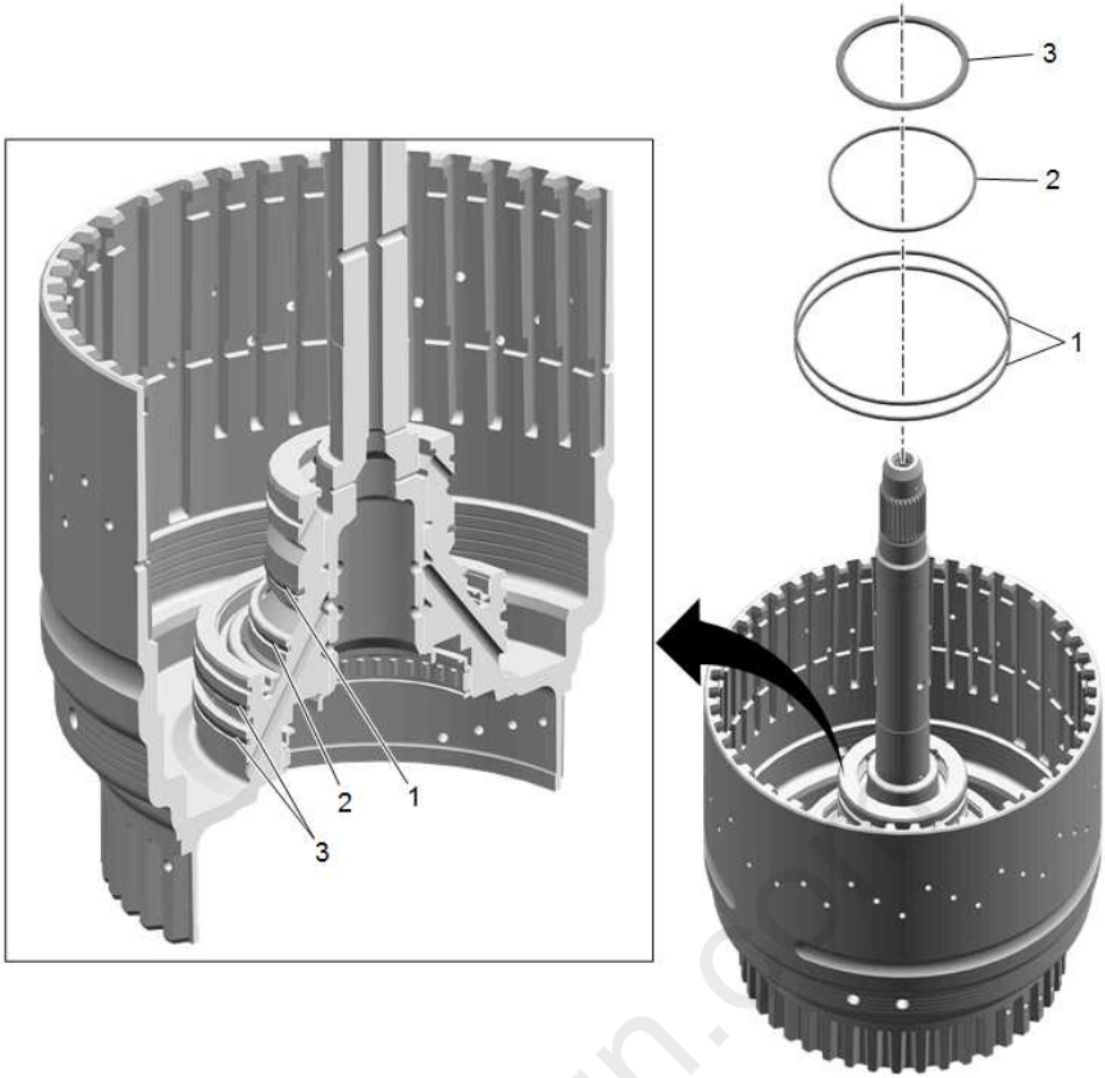

Fig. 67: 2-3-4-6-8 and 4-5-6-7-8 Reverse Clutch Housing Seals
Courtesy of GENERAL MOTORS COMPANY

2-3-4-6-8 and 4-5-6-7-8 Reverse Clutch Housing Seals Installation

Callout	Component Name
CAUTION: Refer to Seal Reuse Caution .	
1	2-3-4-6-8 Clutch Piston Dam Seal
2	4-5-6-7-8 Reverse Clutch Piston Stop O-ring Seal
3	4-5-6-7-8 Reverse Clutch Piston Seal

2-3-4-6-8 Clutch Piston Installation

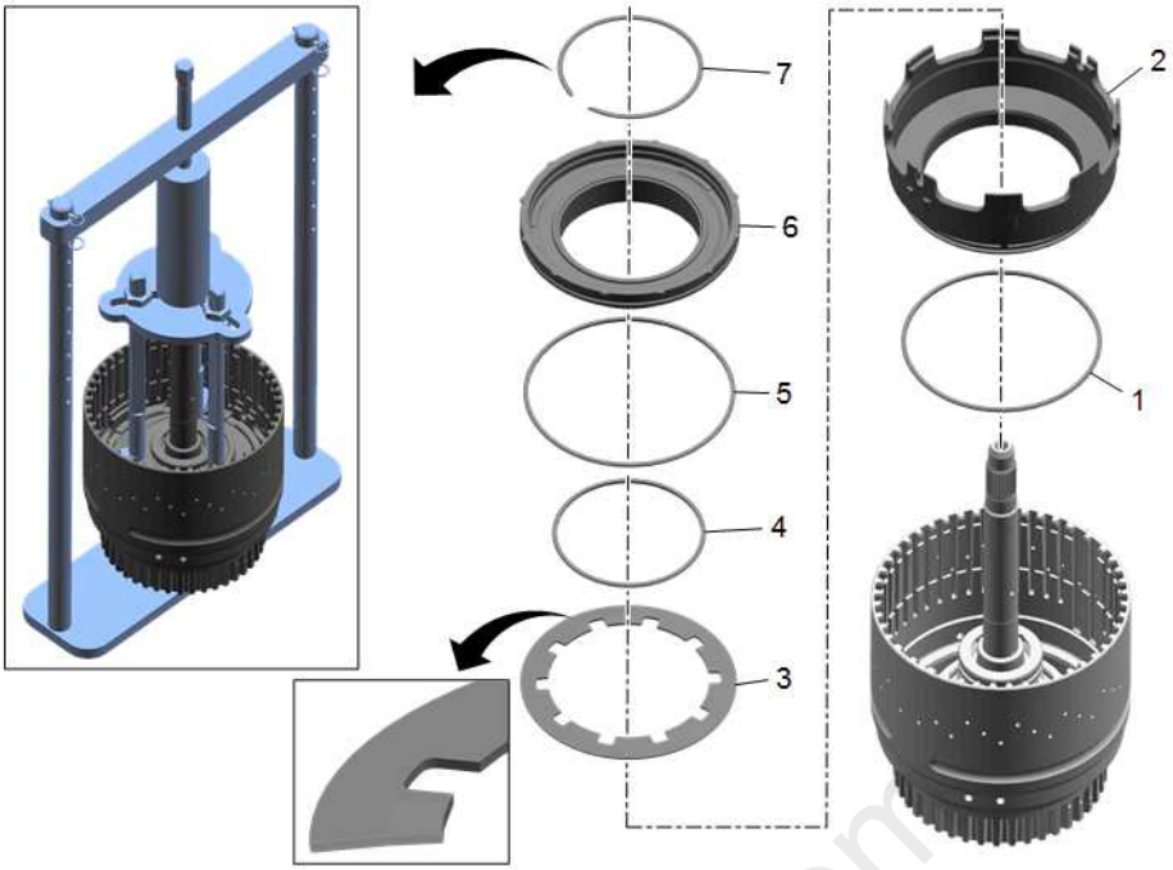

Fig. 68: 2-3-4-6-8 Clutch Piston
Courtesy of GENERAL MOTORS COMPANY

2-3-4-6-8 Clutch Piston Installation

Callout	Component Name
CAUTION: Refer to Seal Reuse Caution .	
1	2-3-4-6-8 Clutch Piston Seal
2	2-3-4-6-8 Clutch Piston
3	2-3-4-6-8 Clutch Piston Return Spring **NOTE:** Note the orientation of the spring for assembly.
4	2-3-4-6-8 Clutch Piston Dam Inner Seal
5	2-3-4-6-8 Clutch Piston Dam Outer Seal
6	2-3-4-6-8 Clutch Piston Dam

cardiagn.com

Callout	Component Name
7	2-3-4-6-8 Clutch Piston Dam Retaining Ring **NOTE:** • **Install a NEW retaining ring, it is not reusable.** • **It may be helpful to loosely install the retaining ring before installing the tool.** **Special Tools** • **DT-35512** Bearing Installer • **DT-50900** Clutch Travel Support Fixture • **DT-50902** Adjustable Clutch Spring Compressor For equivalent regional tools, refer to **Special Tools** .

4-5-6-7-8 Reverse Clutch Piston Installation

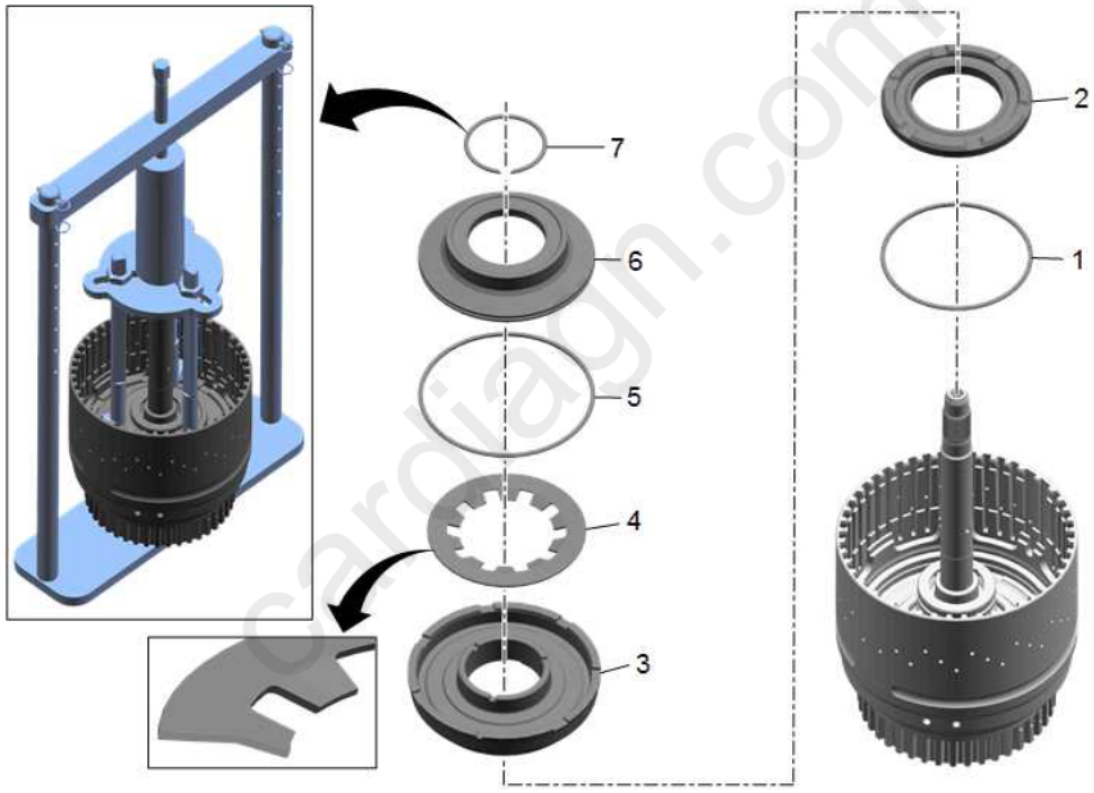

Fig. 69: 4-5-6-7-8 Reverse Clutch Piston
Courtesy of GENERAL MOTORS COMPANY

4-5-6-7-8 Reverse Clutch Piston Installation

Callout	Component Name
CAUTION: **Refer to Seal Reuse Caution .**	
1	4-5-6-7-8 Reverse Clutch Piston Seal
2	4-5-6-7-8 Reverse Clutch Piston Stop **NOTE:** **Note the orientation of the stop.**
3	4-5-6-7-8 Reverse Clutch Piston

cardiagn.com

Callout	Component Name
4	4-5-6-7-8 Reverse Clutch Piston Return Spring **NOTE:** **Note the orientation of the spring.**
5	4-5-6-7-8 Reverse Clutch Piston Dam Seal
6	4-5-6-7-8 Reverse Clutch Piston Dam
7	4-5-6-7-8 Reverse Clutch Piston Dam Retaining Ring **NOTE:** • **Install a NEW retaining ring, it is not reusable.** • **The points on the retaining ring should face up.** • **It may be helpful to loosely install the retaining ring before installing the tool.** **Special Tools** • **DT-35512** Bearing Installer • **DT-50900** Clutch Travel Support Fixture • **DT-50902** Adjustable Clutch Spring Compressor For equivalent regional tools, refer to **Special Tools** .

4-5-6-7-8 Reverse Clutch Plates Installation

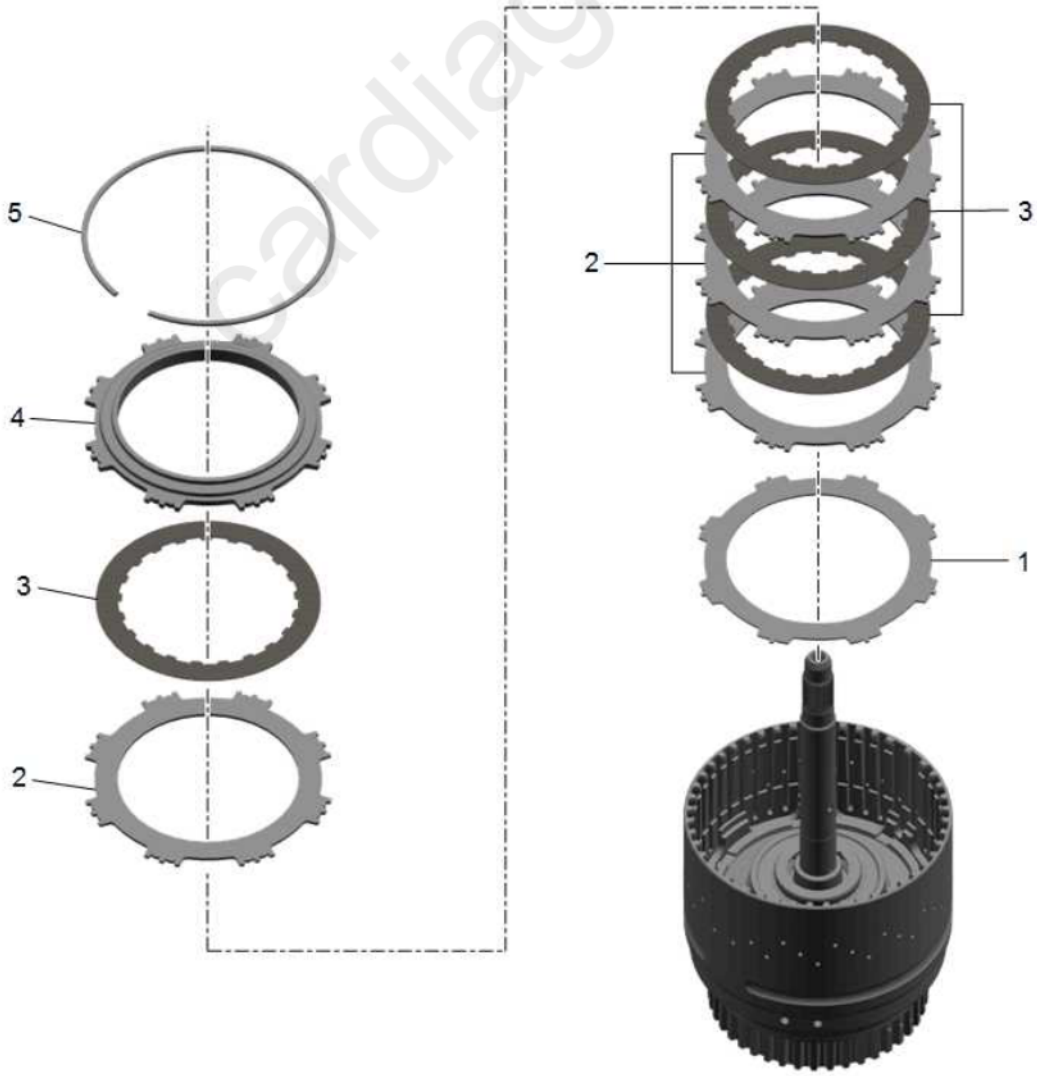

cardiagn.com

Fig. 70: 4-5-6-7-8 Reverse Clutch Plates
Courtesy of GENERAL MOTORS COMPANY

4-5-6-7-8 Reverse Clutch Plates Installation

Callout	Component Name
1	4-5-6-7-8 Reverse Clutch (Waved) Plate **NOTE:** • **Align center tooth with notch on piston.** • **Teeth on clutch plates go between notches on piston.**
2	4-5-6-7-8 Reverse Clutch Plate (Qty: 4)
3	4-5-6-7-8 Reverse Clutch Plate Assembly (Qty: 4)
4	4-5-6-7-8 Reverse Clutch Backing Plate
5	4-5-6-7-8 Reverse Clutch Backing Plate Retaining Ring (Selective) **Procedure** Select the correct retaining ring. Refer to **4-5-6-7-8 Reverse Clutch Backing Plate Retaining Ring Measurement (8L45)**. **NOTE:** **The retaining ring opening should be between the teeth on the clutch plates.**

2-3-4-6-8 Clutch Plates Installation

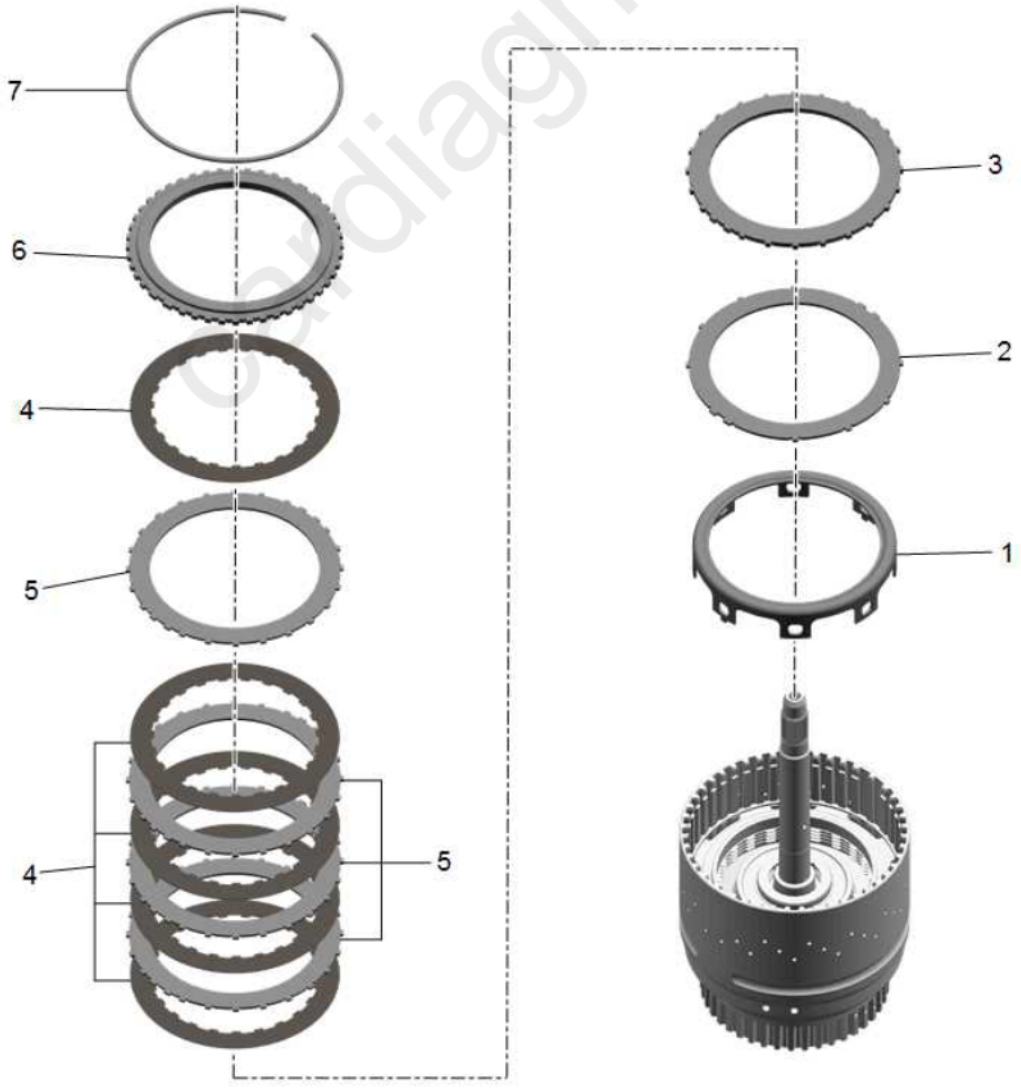

obdiagn.com

Fig. 71: 2-3-4-6-8 Clutch Plates
Courtesy of GENERAL MOTORS COMPANY

2-3-4-6-8 Clutch Plates Installation

Callout	Component Name
1	2-3-4-6-8 Clutch Apply Ring **NOTE:** **Tabs align with notches in piston.**
2	2-3-4-6-8 Clutch (Waved) Plate **NOTE:** **Two tabs on clutch plate align with large notches in housing.**
3	2-3-4-6-8 Clutch Apply Plate
4	2-3-4-6-8 Clutch Plate (Qty: 4)
5	2-3-4-6-8 Clutch Plate Assembly (Qty: 5)
6	2-3-4-6-8 Clutch Backing Plate
7	2-3-4-6-8 Clutch Backing Plate Retaining Ring (Selective) **Procedure** Select the correct retaining ring. Refer to **2-3-4-6-8 Clutch Backing Plate Retaining Ring Measurement (8L45)**. **NOTE:** **The retaining ring opening should align with tooth without notch.**

2-3-4-6-8 CLUTCH BACKING PLATE RETAINING RING MEASUREMENT (8L90)

cardiagn.com

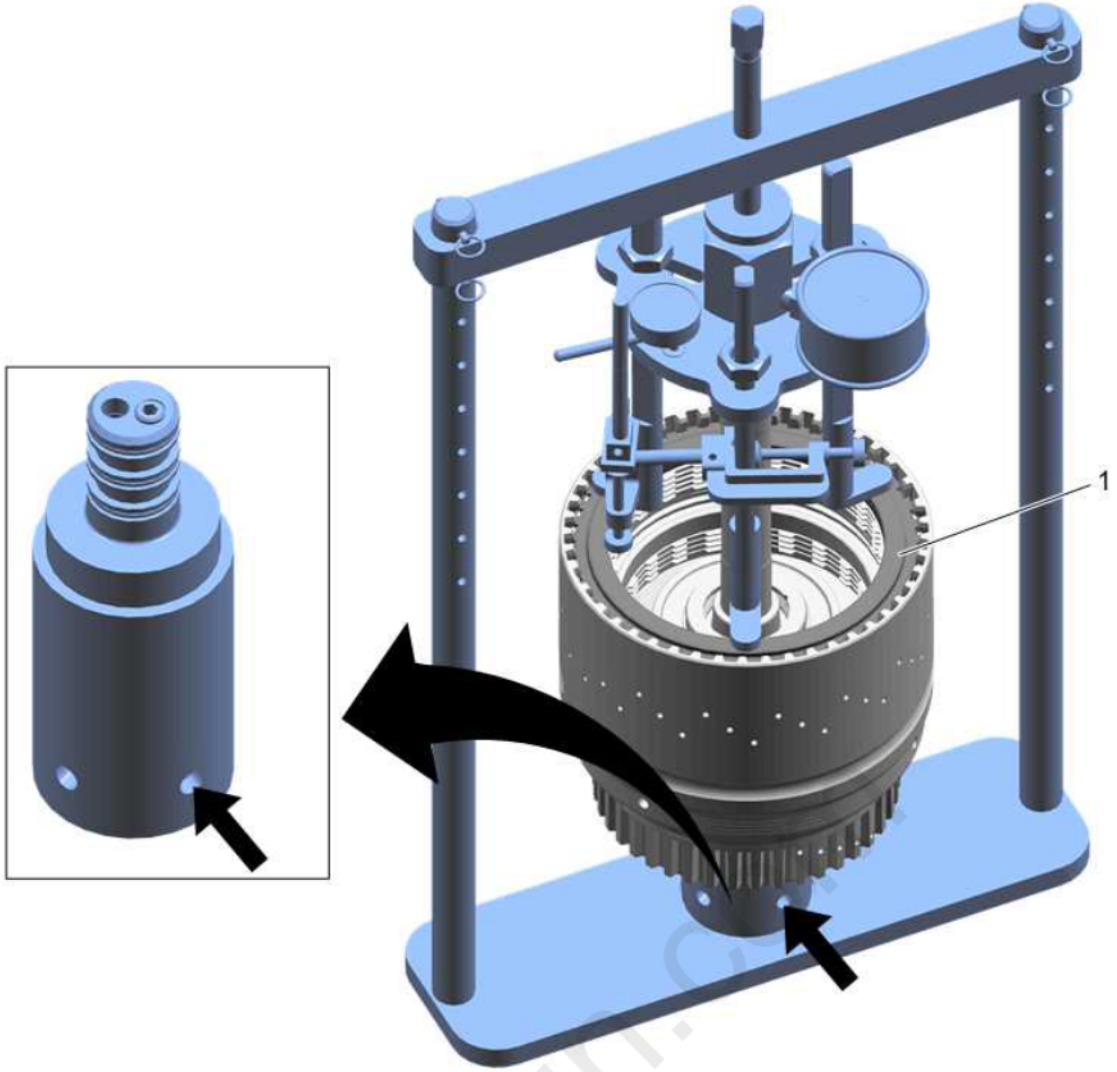

Fig. 72: 2-3-4-6-8 Clutch Backing Plate Retaining Ring Measurement
Courtesy of GENERAL MOTORS COMPANY

Callout	Component Name
Preliminary Procedure Assemble the 2-3-4-6-8 and 4-5-6-7-8 reverse clutch. Refer to **2-3-4-6-8 and 4-5-6-7-8 Reverse Clutch Assemble (8L90)**.	

cardiagn.com

Callout	Component Name
1	2-3-4-6-8 Clutch Backing Plate **Procedure** 1. Assemble the tools as shown and clamp the **DT-50900** fixture to the bench. 2. Apply 60 pounds of pressure to the load gauge by turning the screw on the **DT-50900** fixture clockwise. 3. Zero out the dial indicator. 4. Remove the pressure on the load gauge by turning the screw on the **DT-50900** fixture one full turn counterclockwise. 5. Apply compressed air to the indicated hole on the **DT-50905** air adapter and simultaneously adjust the screw on the **DT-50900** fixture to apply 60 pounds of pressure to the load gauge. 6. Observe the dial indicator measurement. Refer to **Clutch Backing Plate Retaining Ring Specifications (8L90)** to determine the correct 2-3-4-6-8 clutch backing plate retaining ring **Special Tools** • **DT-50900** Clutch Travel Support Fixture • **DT-50902** Adjustable Clutch Spring Compressor • **DT-50903** Clutch Travel Load Gauge • **DT-50905** Clutch Air Travel Adapter • **GE-8001** Dial Indicator Set For equivalent regional tools, refer to **Special Tools** .

2-3-4-6-8 CLUTCH BACKING PLATE RETAINING RING MEASUREMENT (8L45)

cardiagn.com

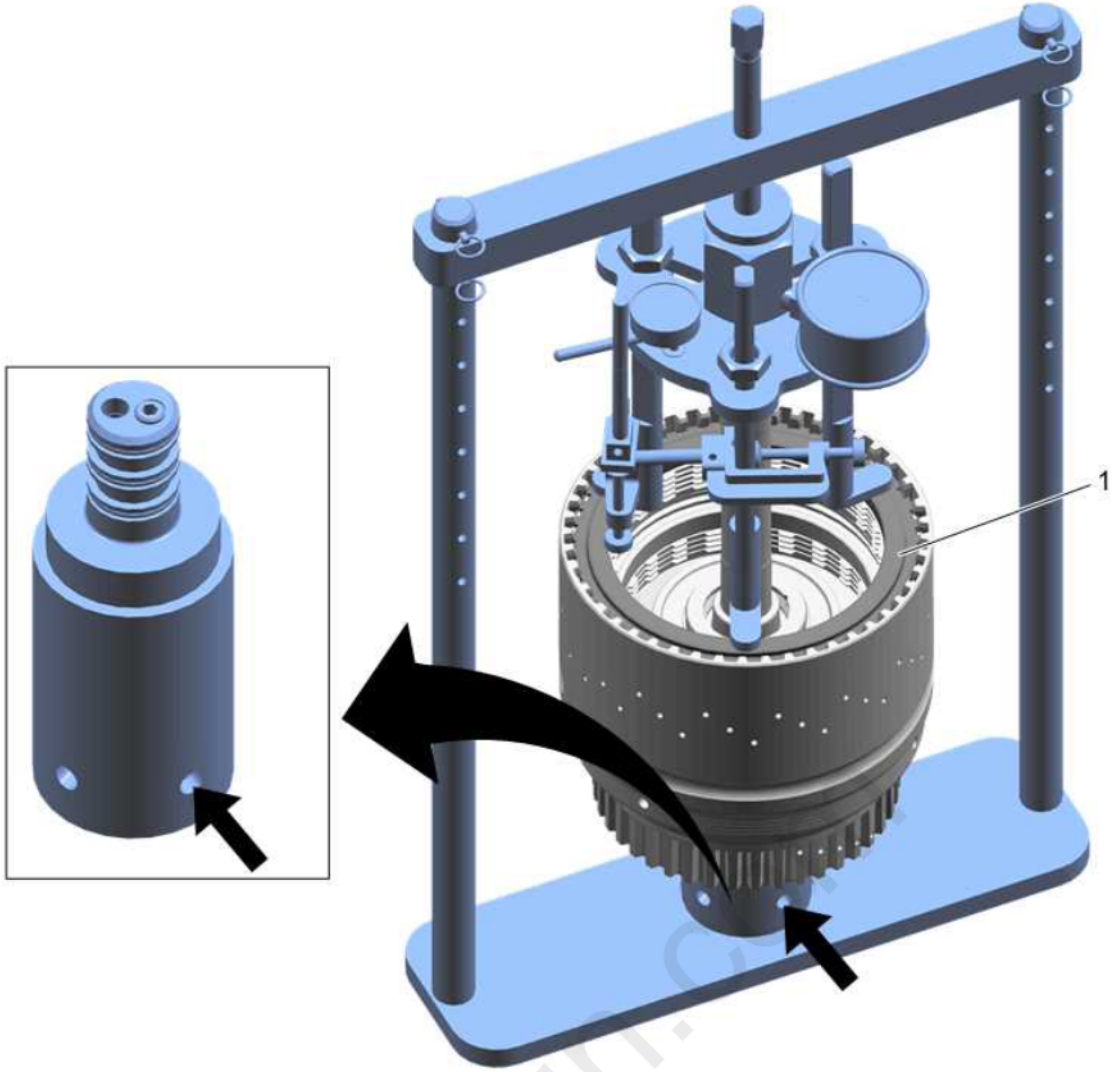

Fig. 73: 2-3-4-6-8 Clutch Backing Plate Retaining Ring Measurement
Courtesy of GENERAL MOTORS COMPANY

Callout	Component Name
Preliminary Procedure Assemble the 2-3-4-6-8 and 4-5-6-7-8 reverse clutch. Refer to **2-3-4-6-8 and 4-5-6-7-8 Reverse Clutch Assemble (8L45)**.	

cardiagn.com

Callout	Component Name
1	2-3-4-6-8 Clutch Backing Plate **Procedure** 1. Assemble the tools as shown and clamp the **DT-50900** fixture to the bench. 2. Apply 50 pounds of pressure to the load gauge by turning the screw on the **DT-50900** fixture clockwise. 3. Zero out the dial indicator. 4. Remove the pressure on the load gauge by turning the screw on the **DT-50900** fixture one full turn counterclockwise. 5. Apply compressed air to the indicated hole on the **DT-50905** air adapter and simultaneously adjust the screw on the **DT-50900** fixture to apply 50 pounds of pressure to the load gauge. 6. Observe the dial indicator measurement. Refer to **Clutch Backing Plate Retaining Ring Specifications (8L45)** to determine the correct 2-3-4-6-8 clutch backing plate retaining ring **Special Tools** • **DT-50900** Clutch Travel Support Fixture • **DT-50902** Adjustable Clutch Spring Compressor • **DT-50903** Clutch Travel Load Gauge • **DT-50905** Clutch Air Travel Adapter • **GE-8001** Dial Indicator Set For equivalent regional tools, refer to **Special Tools** .

4-5-6-7-8 REVERSE CLUTCH BACKING PLATE RETAINING RING MEASUREMENT (8L90)

cardiagn.com

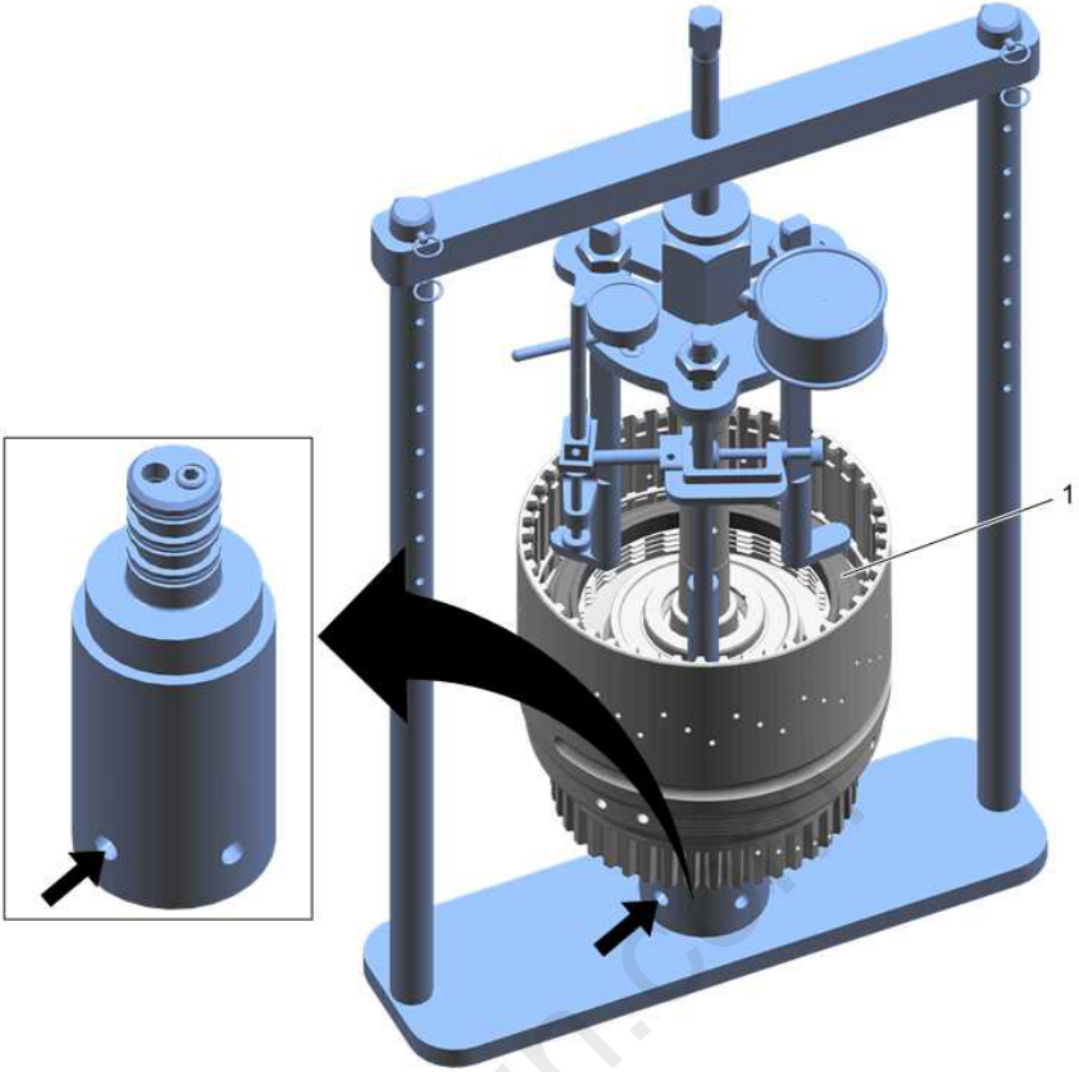

Fig. 74: 4-5-6-7-8 Reverse Clutch Backing Plate Retaining Ring Measurement
Courtesy of GENERAL MOTORS COMPANY

Callout	Component Name
Preliminary Procedure Assemble the 4-5-6-7-8 reverse clutch. Refer to **2-3-4-6-8 and 4-5-6-7-8 Reverse Clutch Assemble (8L90)**.	

cardiagn.com

Callout	Component Name
1	4-5-6-7-8 Reverse Clutch Backing Plate **Procedure** 1. Assemble the tools as shown and clamp the **DT-50900** fixture to the bench. 2. Apply 75 pounds of pressure to the load gauge by turning the screw on the **DT-50900** fixture clockwise. 3. Zero out the dial indicator. 4. Remove the pressure on the load gauge by turning the screw on the **DT-50900** fixture one full turn counterclockwise. 5. Apply compressed air to the indicated hole on the **DT-50905** air adapter and simultaneously adjust the screw on the **DT-50900** fixture to apply 75 pounds of pressure to the load gauge. 6. Observe the dial indicator measurement. Refer to **Clutch Backing Plate Retaining Ring Specifications (8L90)** to determine the correct 4-5-6-7-8 reverse clutch backing plate retaining ring. **Special Tools** • **DT-50900** Clutch Travel Support Fixture • **DT-50902** Adjustable Clutch Spring Compressor • **DT-50903** Clutch Travel Load Gauge • **DT-50905** Clutch Air Travel Adapter • **GE-8001** Dial Indicator Set For equivalent regional tools, refer to **Special Tools** .

4-5-6-7-8 REVERSE CLUTCH BACKING PLATE RETAINING RING MEASUREMENT (8L45)

cardiagn.com

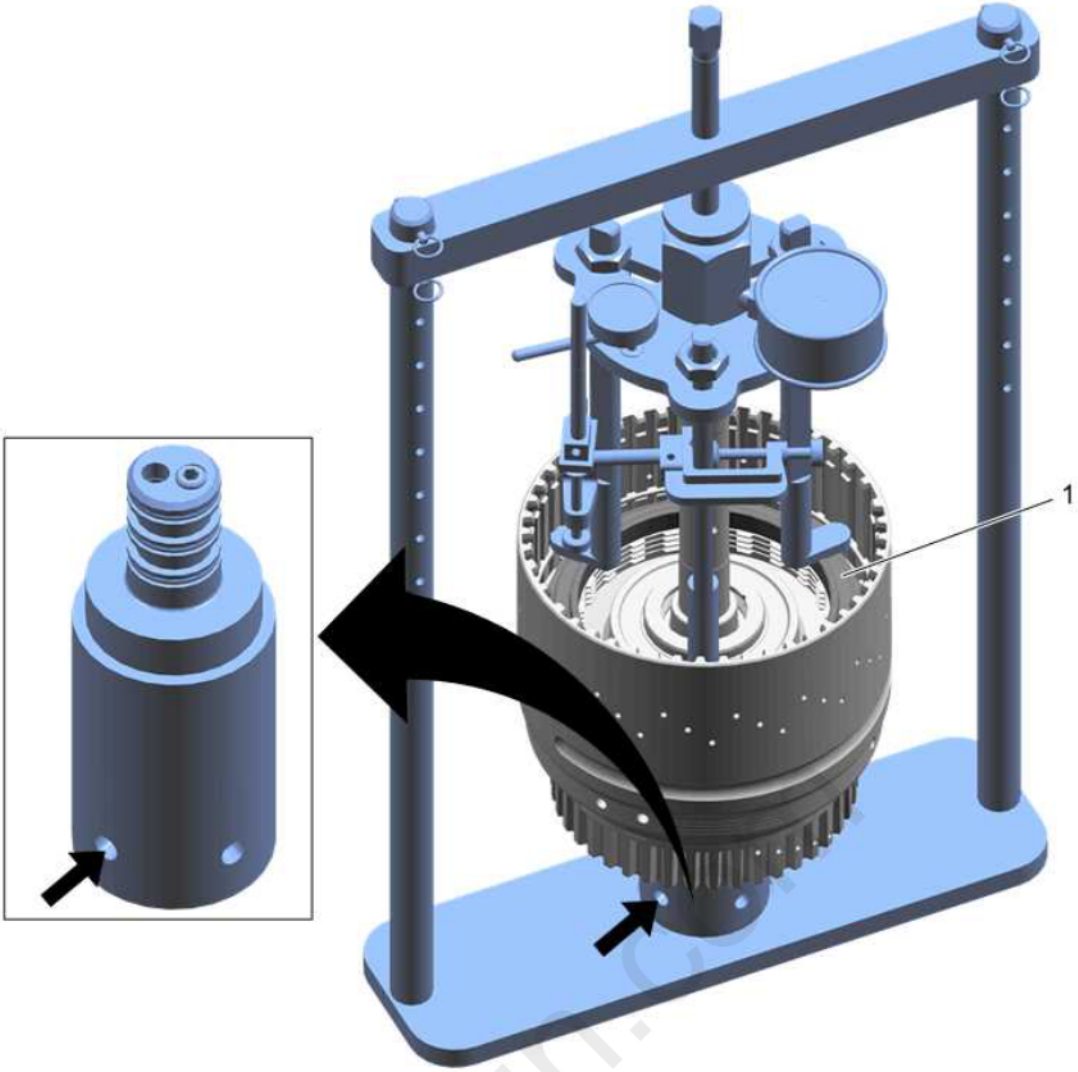

Fig. 75: 4-5-6-7-8 Reverse Clutch Backing Plate Retaining Ring Measurement
Courtesy of GENERAL MOTORS COMPANY

Callout	Component Name
Preliminary Procedure Assemble the 4-5-6-7-8 reverse clutch. Refer to **2-3-4-6-8 and 4-5-6-7-8 Reverse Clutch Assemble (8L45)**.	

cardiagn.com

Callout	Component Name
1	4-5-6-7-8 Reverse Clutch Backing Plate **Procedure** 1. Assemble the tools as shown and clamp the **DT-50900** fixture to the bench. 2. Apply 56 pounds of pressure to the load gauge by turning the screw on the **DT-50900** fixture clockwise. 3. Zero out the dial indicator. 4. Remove the pressure on the load gauge by turning the screw on the **DT-50900** fixture one full turn counterclockwise. 5. Apply compressed air to the indicated hole on the **DT-50905** air adapter and simultaneously adjust the screw on the **DT-50900** fixture to apply 56 pounds of pressure to the load gauge. 6. Observe the dial indicator measurement. Refer to **Clutch Backing Plate Retaining Ring Specifications (8L45)** to determine the correct 4-5-6-7-8 reverse clutch backing plate retaining ring. **Special Tools** • **DT-50900** Clutch Travel Support Fixture • **DT-50902** Adjustable Clutch Spring Compressor • **DT-50903** Clutch Travel Load Gauge • **DT-50905** Clutch Air Travel Adapter • **GE-8001** Dial Indicator Set For equivalent regional tools, refer to **Special Tools** .

DIRECT OVERDRIVE CARRIER, INPUT INTERNAL GEAR AND 2-3-4-6-8 AND 4-5-6-7-8 REVERSE CLUTCH ASSEMBLE

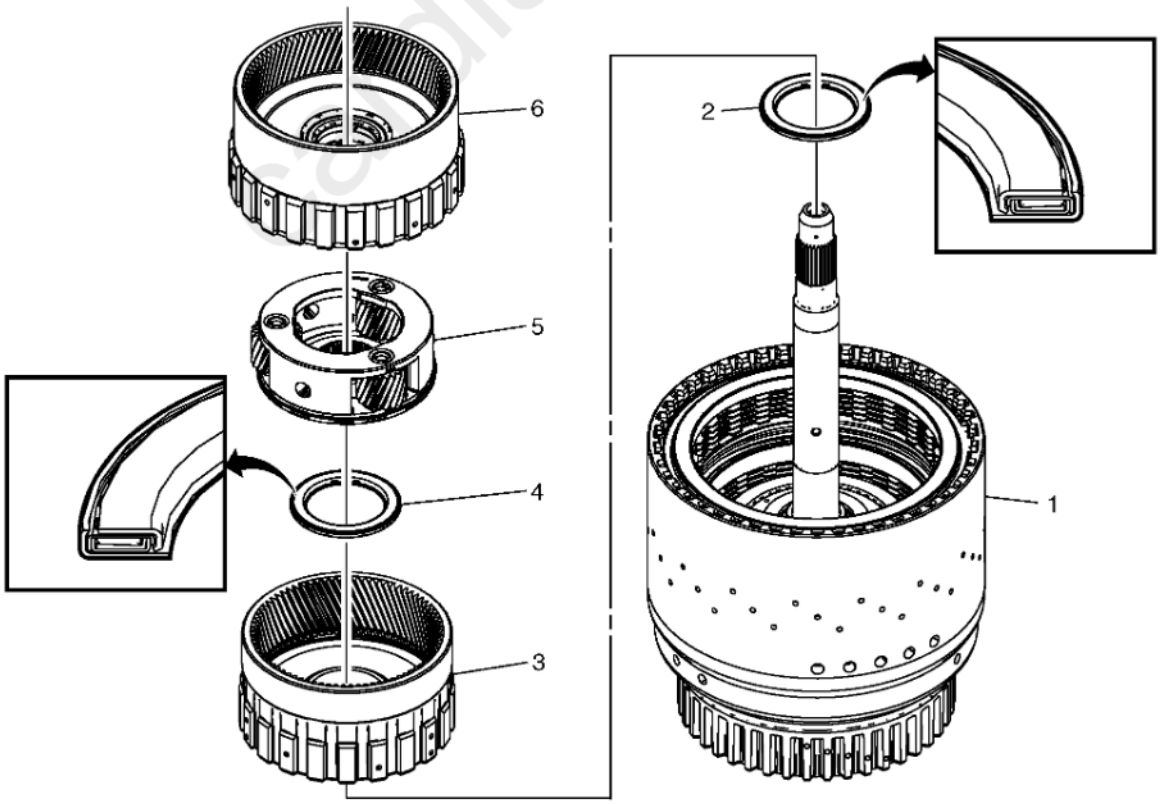

Fig. 76: Direct Overdrive Carrier, Input Internal Gear and 2-3-4-6-8 and 4-5-6-7-8 Reverse Clutch
Courtesy of GENERAL MOTORS COMPANY

Callout	Component Name

Callout	Component Name
1	2-3-4-6-8 and 4-5-6-7-8 Reverse Clutch Assembly
2	4-5-6-7-8 Reverse Clutch and Direct Overdrive Internal Gear Hub Thrust Bearing
3	Direct/Overdrive Internal Gear Assembly
4	Direct/Overdrive Carrier Thrust Bearing (8L45 Only)
5	Direct/Overdrive Carrier Assembly
6	Input Internal Gear Assembly

2-3-4-6-8 AND 4-5-6-7-8 REVERSE CLUTCH ASSEMBLY INSTALLATION

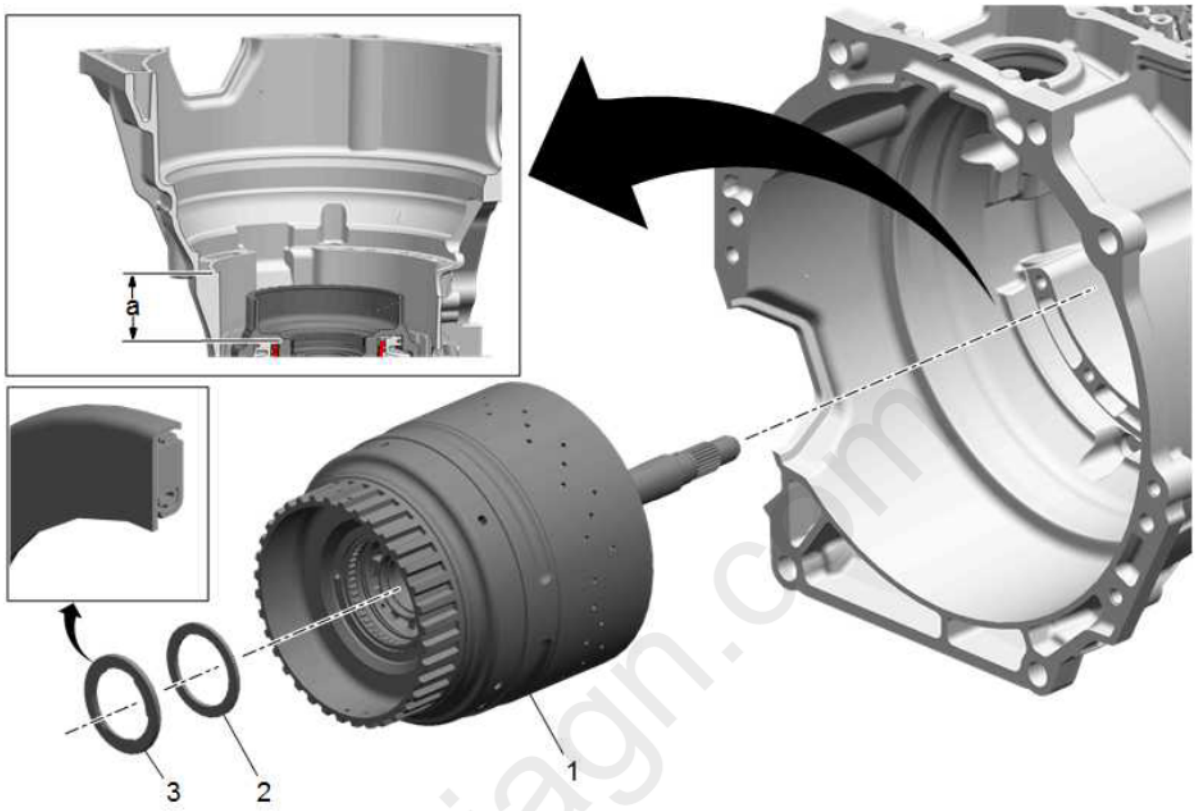

Fig. 77: 2-3-4-6-8 and 4-5-6-7-8 Reverse Clutch
Courtesy of GENERAL MOTORS COMPANY

Callout	Component Name
1	2-3-4-6-8 and 4-5-6-7-8 Reverse Clutch Assembly **NOTE:** • **Rotate the transmission horizontal to aid in installation of the 2-3-4-6-8 and 4-5-6-7-8 reverse clutch assembly.** • **Verify proper installation of the 2-3-4-6-8 and 4-5-6-7-8 reverse clutch assembly by measuring as indicated (a). An approximate measurement of 62.78 mm (2.472 in) indicates correct installation.**
2	2-3-4-6-8 and 4-5-6-7-8 Reverse Clutch Thrust Bearing Washer
3	2-3-4-6-8 and 4-5-6-7-8 Reverse Clutch Thrust Bearing

1-3-5-6-7 CLUTCH DISASSEMBLE

Turbine Shaft Removal

cardiagn.com

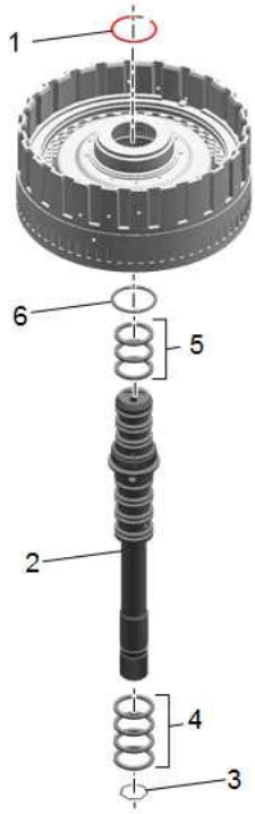

Fig. 78: Turbine Shaft
Courtesy of GENERAL MOTORS COMPANY

Turbine Shaft Removal

Callout	Component Name
CAUTION: Refer to Seal Reuse Caution .	
1	Turbine Shaft Retaining Ring **NOTE:** **Discard the retaining ring, it is not reusable.**
2	Turbine Shaft
3	Turbine Shaft O-ring Seal
4	Turbine Shaft Fluid Seal Ring (Qty: 4)
5	Turbine Shaft Fluid Seal Ring (Qty: 3)
6	Turbine Shaft O-ring Seal

1-3-5-6-7 Clutch Piston Dam Removal

mardiagn.com

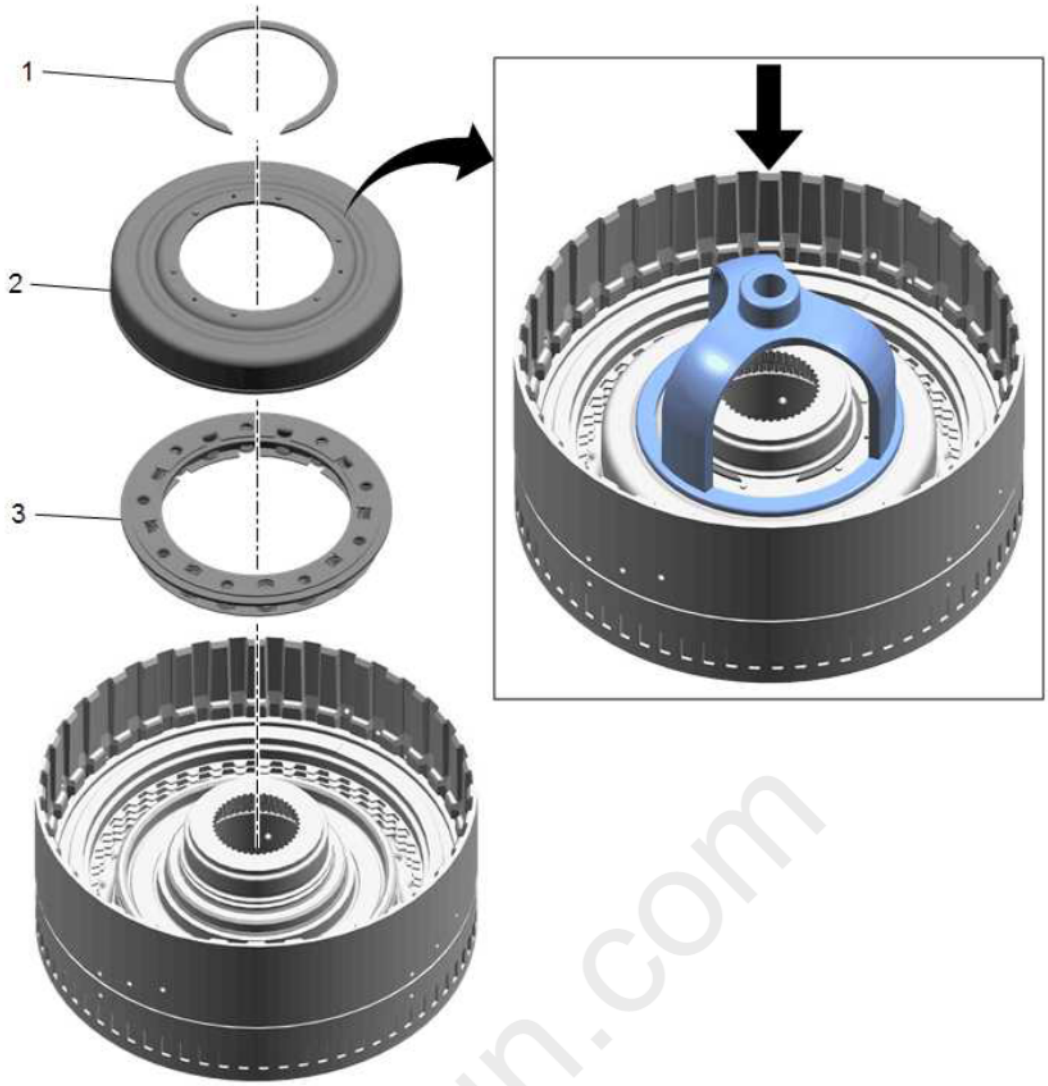

Fig. 79: 1-3-5-6-7 Clutch Piston Dam
Courtesy of GENERAL MOTORS COMPANY

1-3-5-6-7 Clutch Piston Dam Removal

Callout	Component Name
1	1-3-5-6-7 Clutch Piston Dam Retaining Ring **Procedure** Use the **DT-38734** adapter and a press to remove the retaining ring. **NOTE:** **Discard the retaining ring, it is not reusable** **Special Tools** **DT-38734** Intermediate Spring Compressor Adapter For equivalent regional tools, refer to **Special Tools** .
2	1-3-5-6-7 Clutch Piston Dam
3	1-3-5-6-7 Clutch Piston Return Spring

1-3-5-6-7 Clutch Plate Removal

cardiagn.com

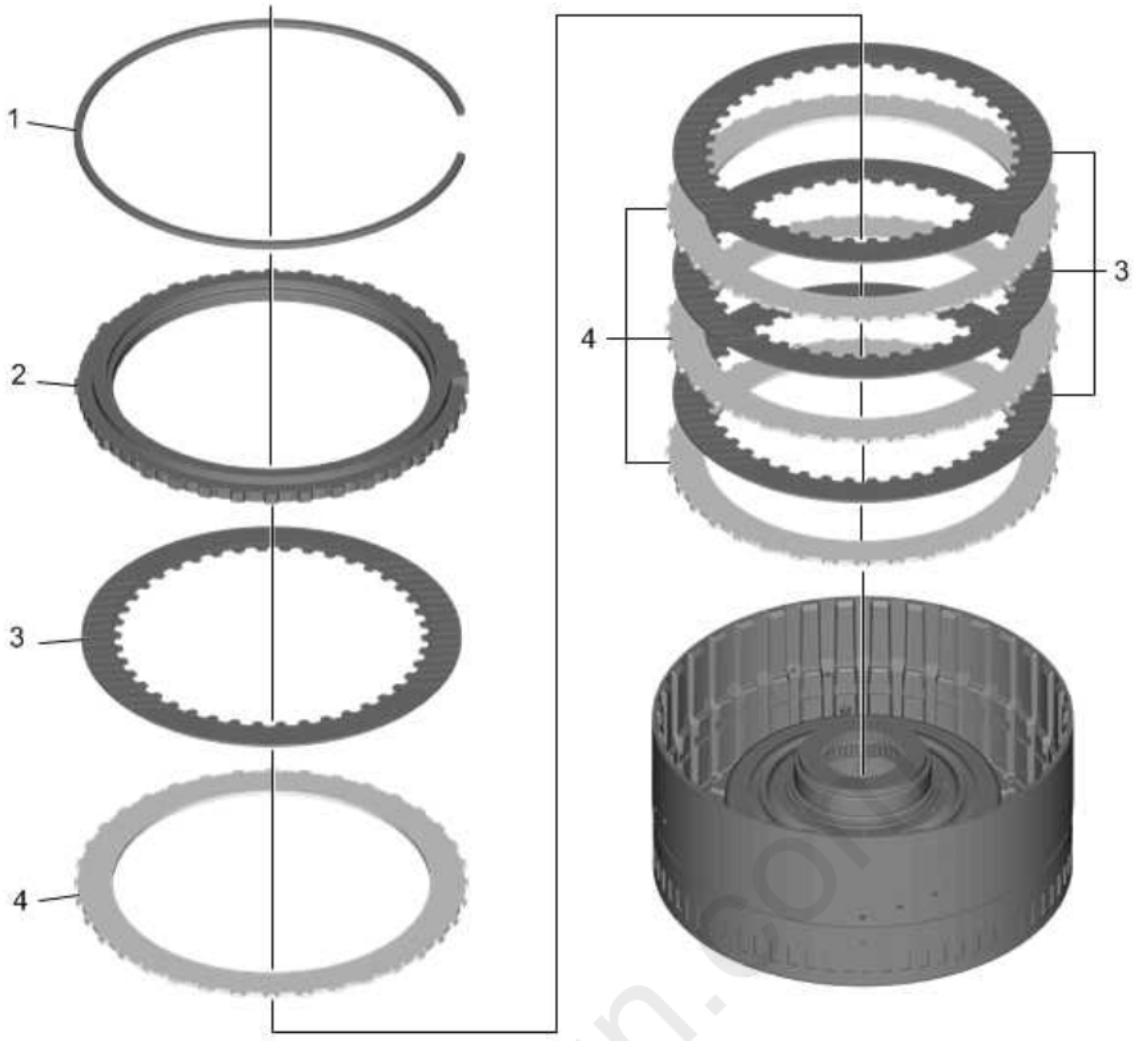

Fig. 80: 1-3-5-6-7 Clutch Plate
Courtesy of GENERAL MOTORS COMPANY

1-3-5-6-7 Clutch Plate Removal

Callout	Component Name
1	1-3-5-6-7 Clutch Backing Plate Retaining Ring (Selective)
2	1-3-5-6-7 Clutch Backing Plate
3	1-3-5-6-7 Clutch Plate -Friction - with LT1 (Qty: 4), with LT4 (Qty: 5)
4	1-3-5-6-7 Clutch Plate - with LT1 (Qty: 4), with LT4 (Qty: 5)

1-3-5-6-7 Clutch Piston Removal

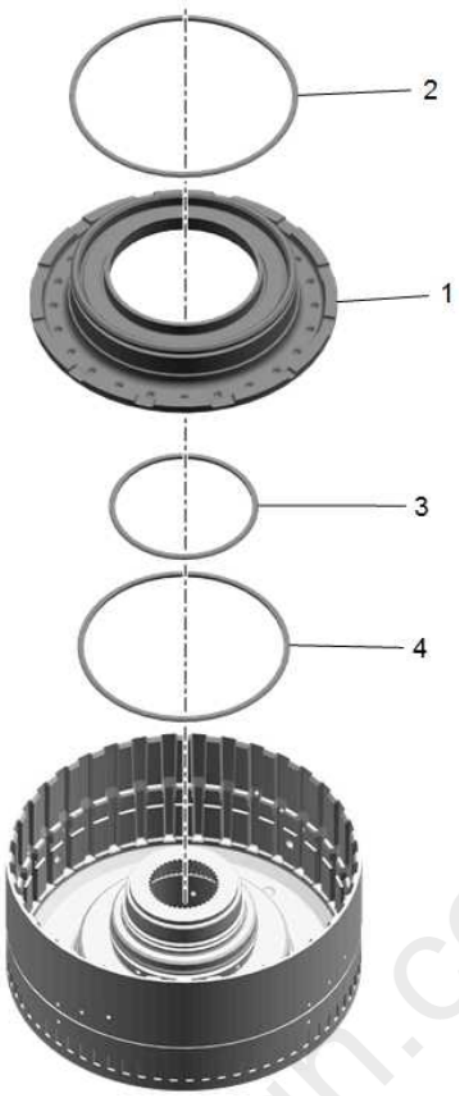

Fig. 81: 1-3-5-6-7 Clutch Piston
Courtesy of GENERAL MOTORS COMPANY

1-3-5-6-7 Clutch Piston Removal

Callout	Component Name
CAUTION: Refer to Seal Reuse Caution .	
1	1-3-5-6-7 Clutch Piston
2	1-3-5-6-7 Clutch Piston Dam Seal **NOTE:** **Remove and DISCARD the seal.**
3	1-3-5-6-7 Clutch Piston Inner Seal **NOTE:** **Remove and DISCARD the seal.**
4	1-3-5-6-7 Clutch Piston Outer Seal **NOTE:** **Remove and DISCARD the seal.**

1-3-5-6-7 Clutch Bearing Removal

cardiagn.com

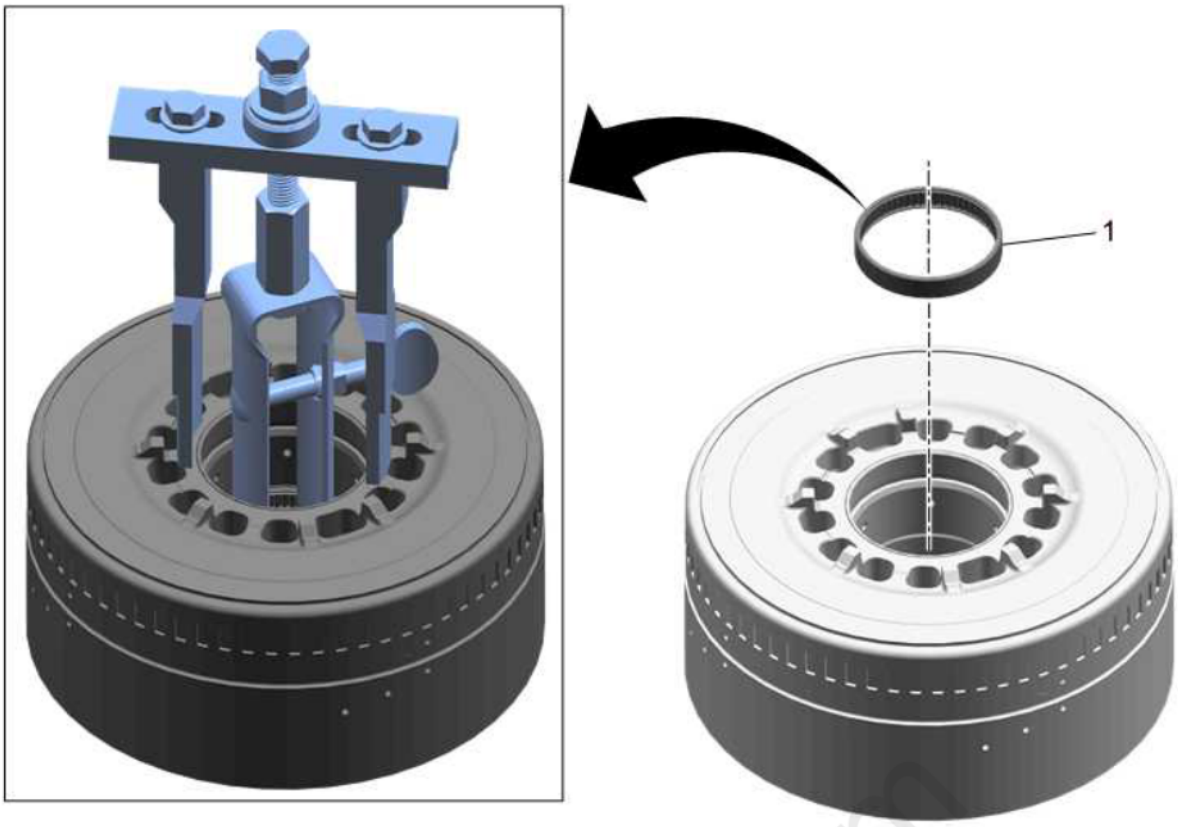

Fig. 82: 1-3-5-6-7 Clutch Bearing
Courtesy of GENERAL MOTORS COMPANY

1-3-5-6-7 Clutch Bearing Removal

Callout	Component Name
1	1-3-5-6-7 Clutch Bearing **Special Tools** • **DT-26941** Bushing and Bearing Remover • **DT-45124** Removal Bridge For equivalent regional tools, refer to **Special Tools** .

1-3-5-6-7 CLUTCH ASSEMBLE (8L90)

1-3-5-6-7 Clutch Bearing Installation

cardiagn.com

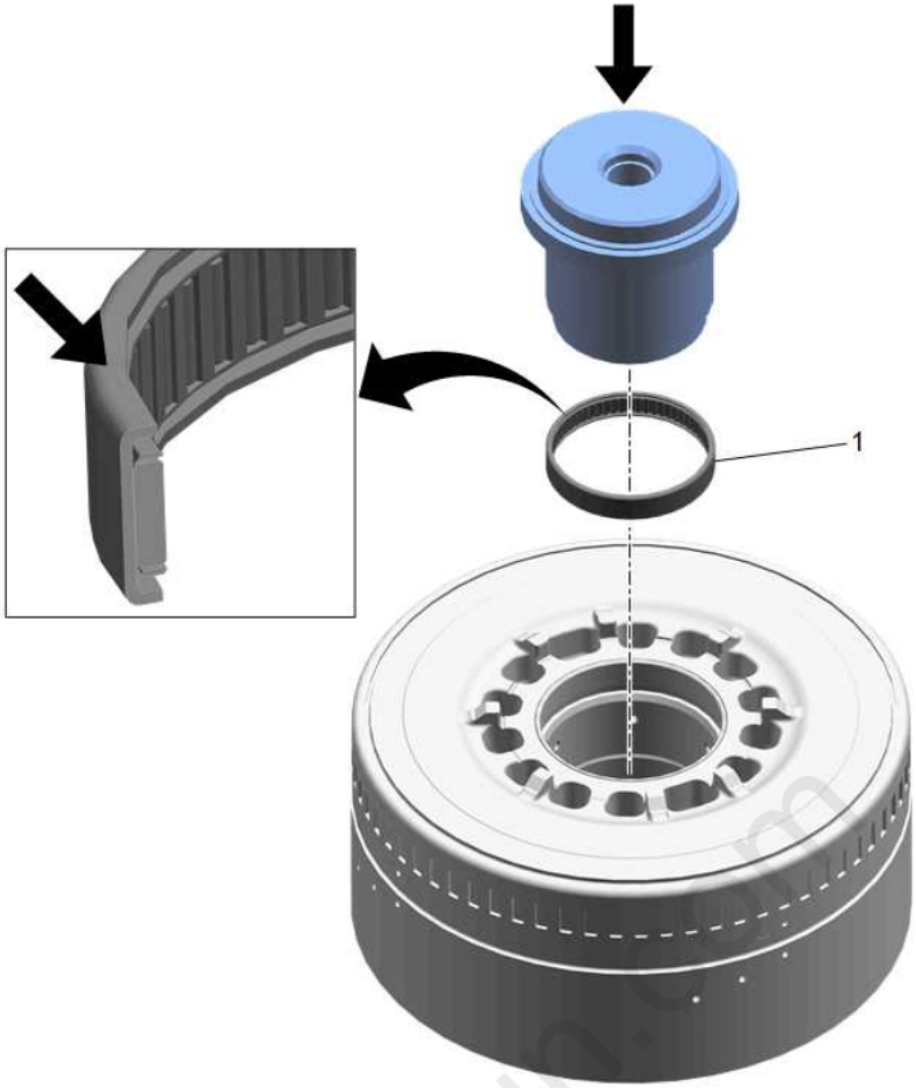

Fig. 83: 1-3-5-6-7 Clutch Bearing
Courtesy of GENERAL MOTORS COMPANY

1-3-5-6-7 Clutch Bearing Installation

Callout	Component Name
1	1-3-5-6-7 Clutch Bearing **Procedure** Use **DT-50906** installer and a press to install the bearing. **NOTE:** **Press on the marked side of the bearing.** **Special Tools** **DT-50906** Bearing Installer For equivalent regional tools, refer to **Special Tools** .

1-3-5-6-7 Clutch Piston Installation

cardiagn.com

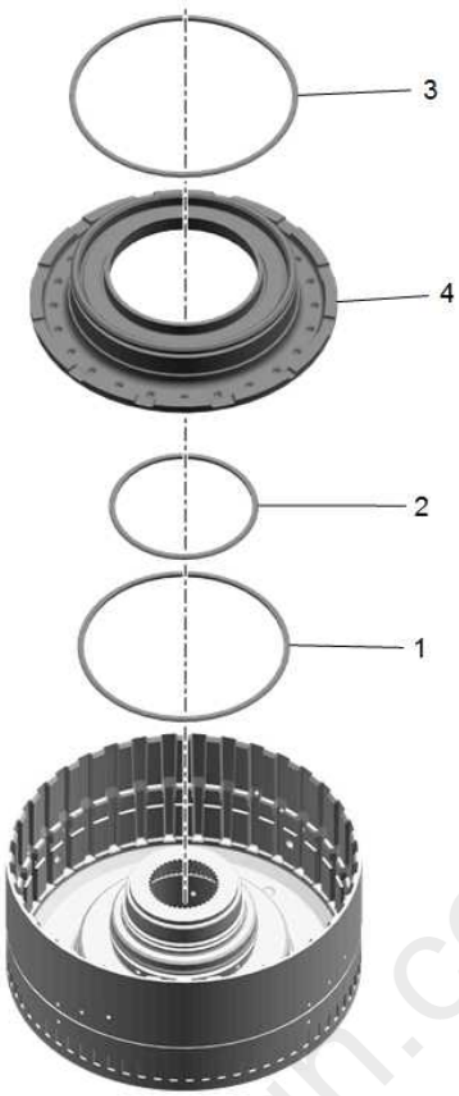

Fig. 84: 1-3-5-6-7 Clutch Piston
Courtesy of GENERAL MOTORS COMPANY

1-3-5-6-7 Clutch Piston Installation

Callout	Component Name
CAUTION: Refer to Seal Reuse Caution .	
1	1-3-5-6-7 Clutch Piston Outer Seal **NOTE:** **Install a NEW seal. Do NOT reuse the old seal.**
2	1-3-5-6-7 Clutch Piston Inner Seal **NOTE:** **Install a NEW seal. Do NOT reuse the old seal.**
3	1-3-5-6-7 Clutch Piston Dam Seal **NOTE:** **Install a NEW seal. Do NOT reuse the old seal.**
4	1-3-5-6-7 Clutch Piston

1-3-5-6-7 Clutch Plate Installation

cardiagn.com

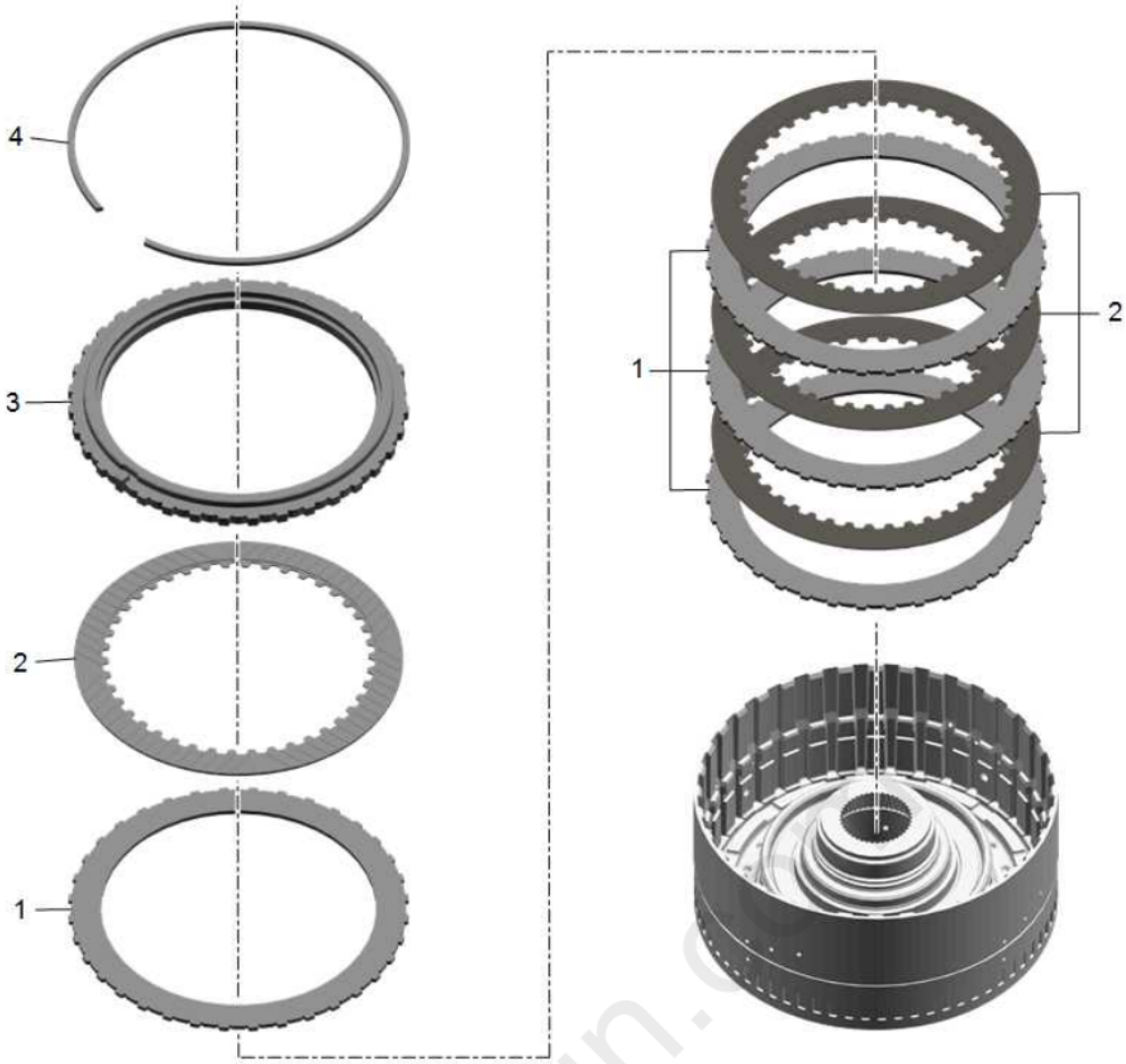

Fig. 85: 1-3-5-6-7 Clutch Plate
Courtesy of GENERAL MOTORS COMPANY

1-3-5-6-7 Clutch Plate Installation

Callout	Component Name
1	1-3-5-6-7 Clutch Plate - with LT1 (Qty: 4), with LT4 (Qty: 5)
2	1-3-5-6-7 Clutch Plate Assembly - with LT1 (Qty: 4), with LT4 (Qty: 5)
3	1-3-5-6-7 Clutch Backing Plate
4	1-3-5-6-7 Clutch Backing Plate Retaining Ring (Selective) **Procedure** Select the correct retaining ring. Refer to **1-3-5-6-7 Clutch Backing Plate Retaining Ring Measurement**.

1-3-5-6-7 Clutch Piston Dam Installation

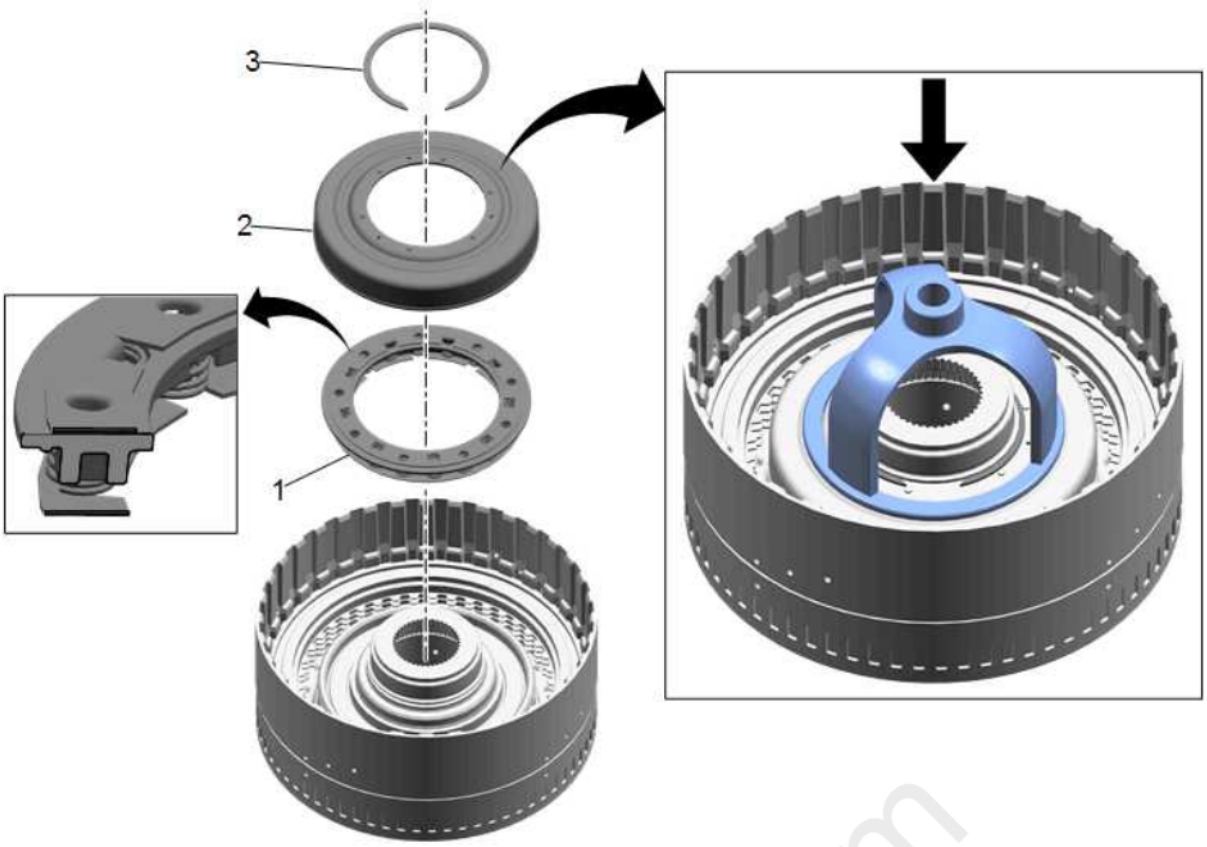

Fig. 86: 1-3-5-6-7 Clutch Piston Dam
Courtesy of GENERAL MOTORS COMPANY

1-3-5-6-7 Clutch Piston Dam Installation

Callout	Component Name
1	1-3-5-6-7 Clutch Piston Return Spring
2	1-3-5-6-7 Clutch Piston Dam
3	1-3-5-6-7 Clutch Piston Dam Retaining Ring **Procedure** Use the **DT-38734** adapter and a press to install the retaining ring. **NOTE:** **Install a NEW retaining ring, it is not reusable.** **Special Tools** **DT-38734** Intermediate Spring Compressor Adapter For equivalent regional tools, refer to **Special Tools** .

Turbine Shaft Installation

cardiagn.com

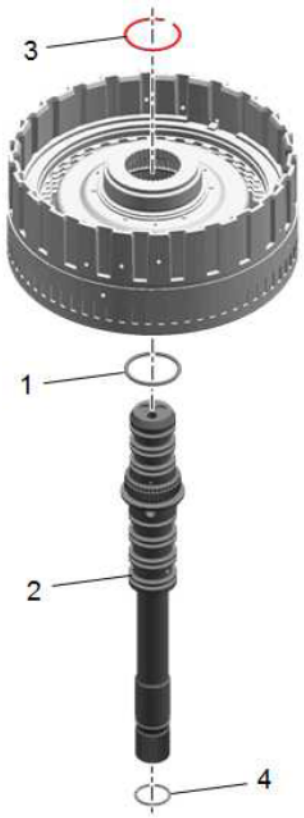

Fig. 87: Turbine Shaft
Courtesy of GENERAL MOTORS COMPANY

Turbine Shaft Installation

Callout	Component Name
CAUTION: Refer to Seal Reuse Caution .	
1	Turbine Shaft O-ring Seal
2	Turbine Shaft
3	Turbine Shaft Retaining Ring
4	Turbine Shaft O-ring Seal

Turbine Shaft Fluid Seal Ring Installation

cardiagn.com

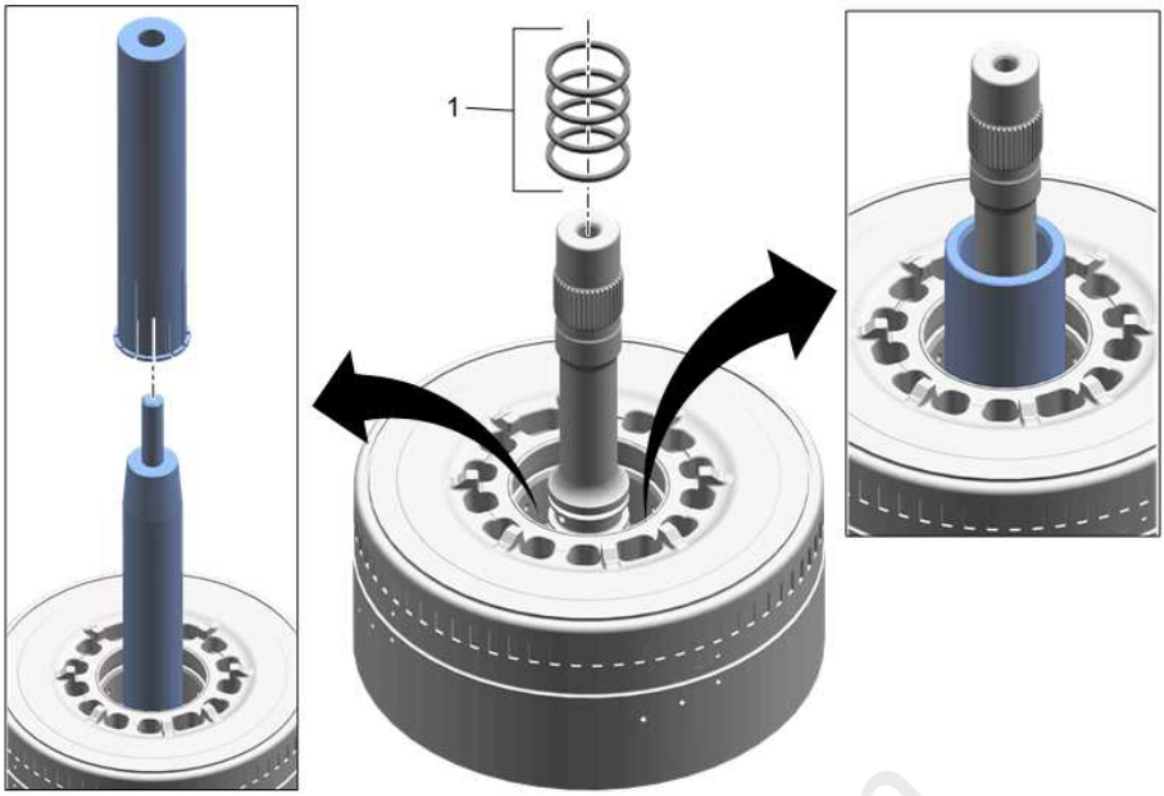

Fig. 88: Turbine Shaft Fluid Seal Ring
Courtesy of GENERAL MOTORS COMPANY

Turbine Shaft Fluid Seal Ring Installation

Callout	Component Name
1	Turbine Shaft Fluid Seal Ring (Qty: 4) **CAUTION:** **Do not use old seal rings. Install NEW seal rings. Reusing old seal rings may cause internal transmission leaks and transmission damage.** **CAUTION:** **Size the fluid seal rings for at least 5 minutes after installation to obtain proper seal ring size. Failure to do so may cause internal transmission leaks and transmission damage.** **Procedure** 1. Adjust the turn screw on **DT-50910-3** seal protector and install the bottom seal ring first. 2. Use the large taper side of **DT-50910-1** seal sizer for initial seal sizing, then flip the tool over for final sizing. **Special Tools** **DT-50910** Seal Installer For equivalent regional tools, refer to **Special Tools** .

Turbine Shaft Fluid Seal Ring Installation

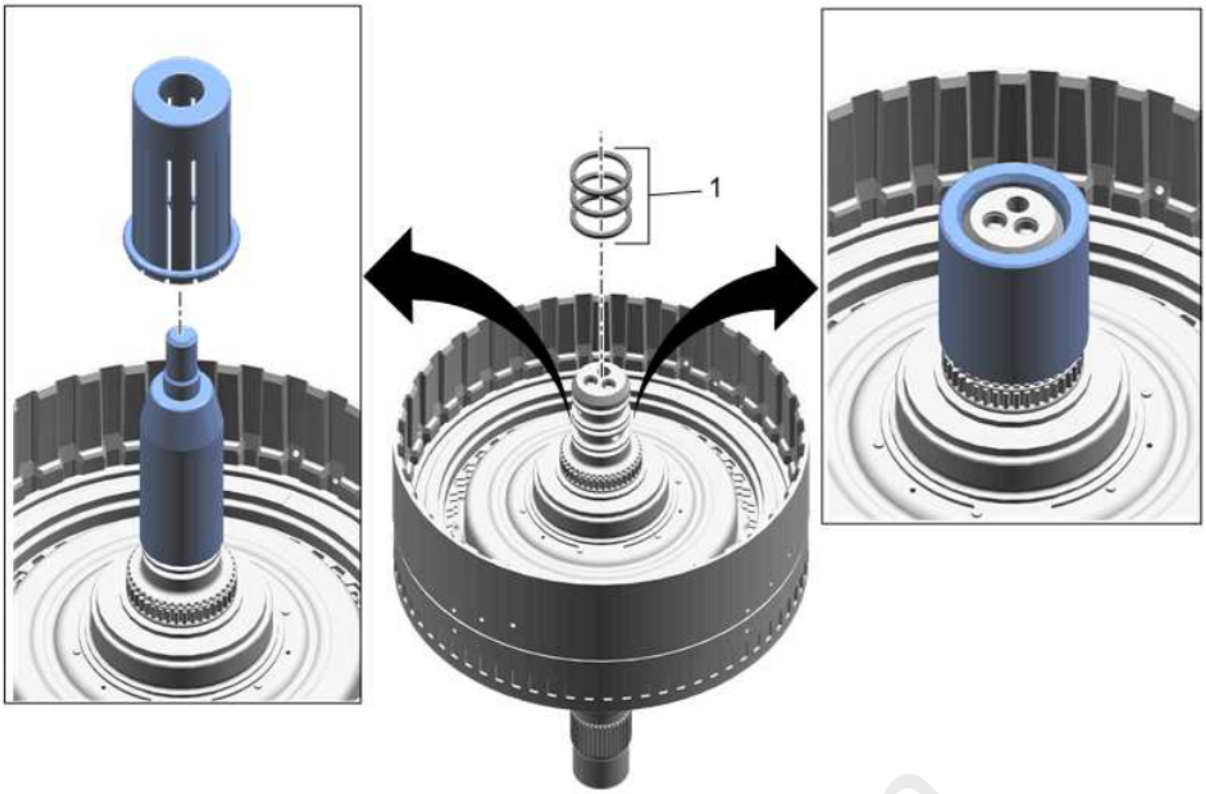

Fig. 89: Turbine Shaft Fluid Seal Ring
Courtesy of GENERAL MOTORS COMPANY

Turbine Shaft Fluid Seal Ring Installation

Callout	Component Name
1	Turbine Shaft Fluid Seal Ring (3x) **CAUTION:** **Do not use old seal rings. Install NEW seal rings. Reusing old seal rings may cause internal transmission leaks and transmission damage.** **CAUTION:** **Size the fluid seal rings for at least 5 minutes after installation to obtain proper seal ring size. Failure to do so may cause internal transmission leaks and transmission damage.** **Procedure** 1. Adjust the turn screw on **DT-50911-3** seal protector and install the bottom seal ring first. 2. Use the large taper side of **DT-50911-1** seal sizer for initial seal sizing, then flip the tool over for final sizing. **Special Tools** **DT-50911** Seal Installer For equivalent regional tools, refer to **Special Tools** .

1-3-5-6-7 CLUTCH ASSEMBLE (8L45)

1-3-5-6-7 Clutch Bearing Installation

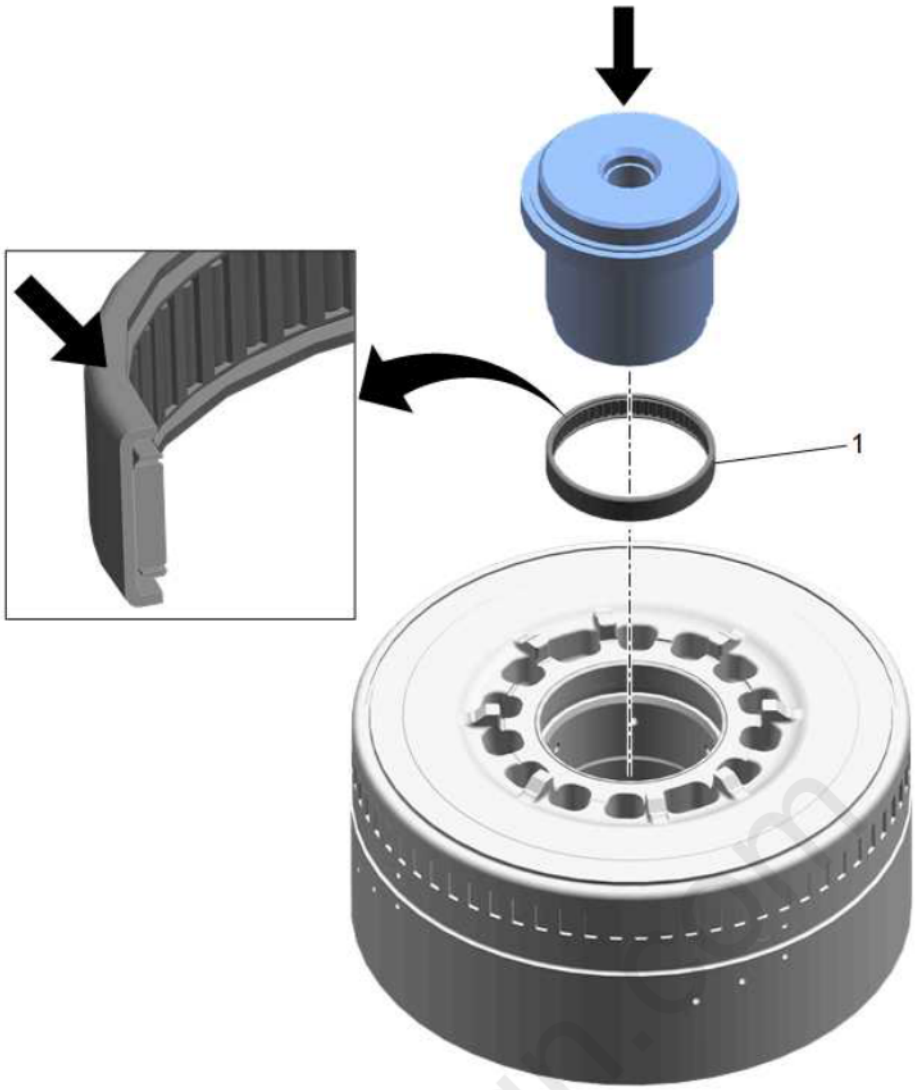

Fig. 90: 1-3-5-6-7 Clutch Bearing
Courtesy of GENERAL MOTORS COMPANY

1-3-5-6-7 Clutch Bearing Installation

Callout	Component Name
1	1-3-5-6-7 Clutch Bearing **Procedure** Use **DT-51089** installer and a press to install the bearing. **NOTE:** **Press from the marked side of the bearing.** **Special Tools** **DT-51089** Bearing Installer For equivalent regional tools, refer to **Special Tools** .

1-3-5-6-7 Clutch Piston Installation

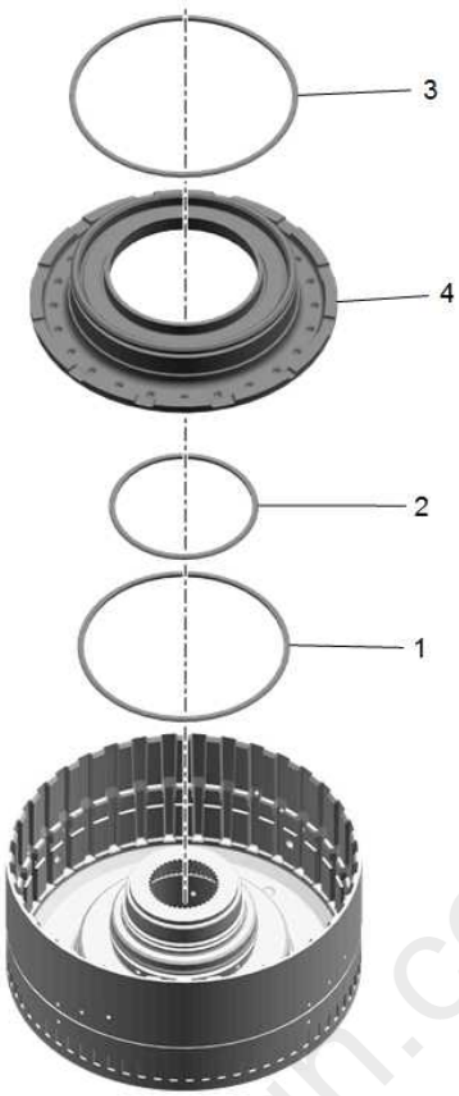

Fig. 91: 1-3-5-6-7 Clutch Piston
Courtesy of GENERAL MOTORS COMPANY

1-3-5-6-7 Clutch Piston Installation

Callout	Component Name
CAUTION: Refer to Seal Reuse Caution .	
1	1-3-5-6-7 Clutch Piston Outer Seal
2	1-3-5-6-7 Clutch Piston Inner Seal
3	1-3-5-6-7 Clutch Piston Dam Seal
4	1-3-5-6-7 Clutch Piston

1-3-5-6-7 Clutch Plate Installation

cardiagn.com

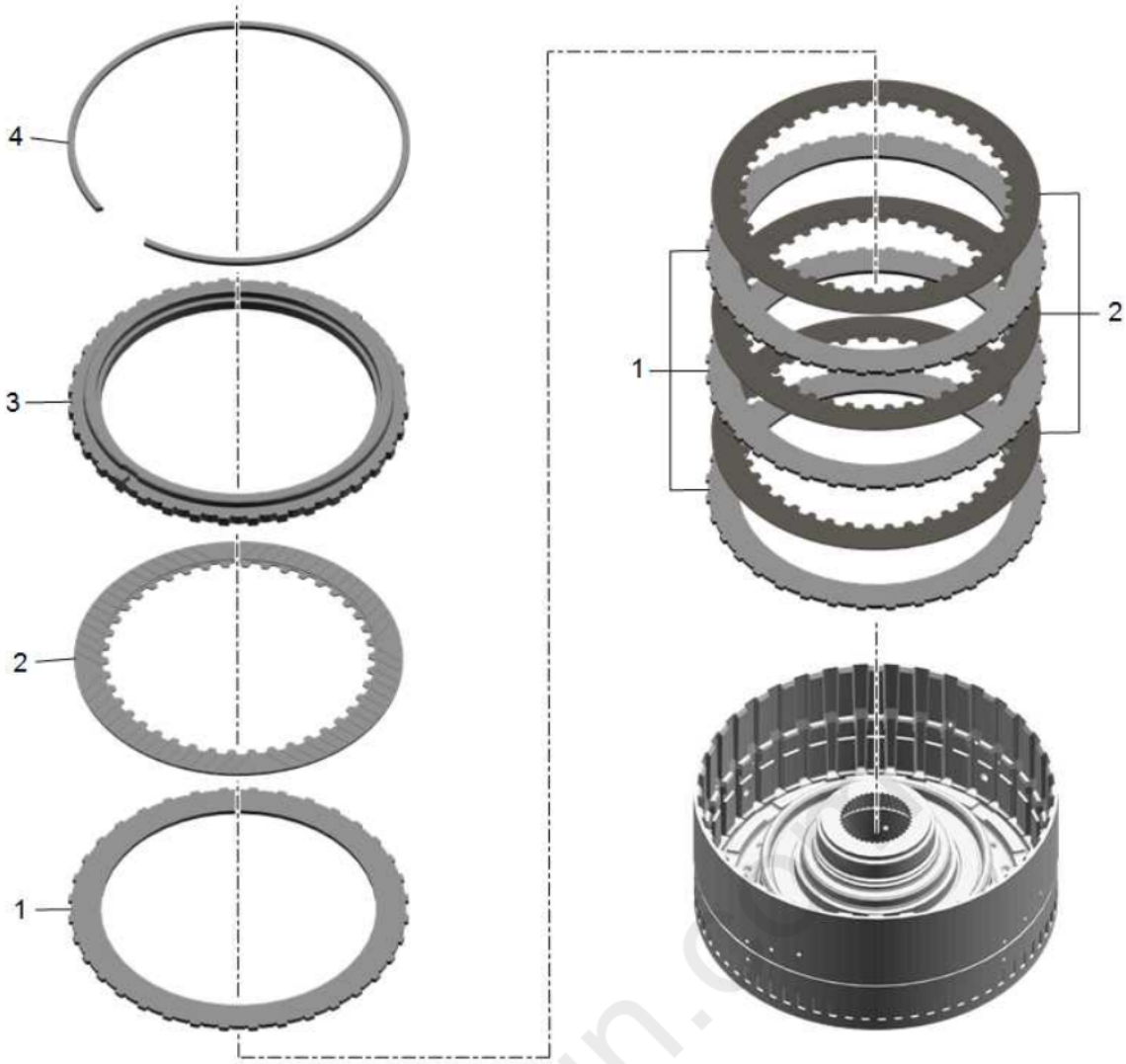

Fig. 92: 1-3-5-6-7 Clutch Plate
Courtesy of GENERAL MOTORS COMPANY

1-3-5-6-7 Clutch Plate Installation

Callout	Component Name
1	1-3-5-6-7 Clutch Plate - with LT1 (Qty: 4), with LT4 (Qty: 5)
2	1-3-5-6-7 Clutch Plate Assembly - with LT1 (Qty: 4), with LT4 (Qty: 5)
3	1-3-5-6-7 Clutch Backing Plate
4	1-3-5-6-7 Clutch Backing Plate Retaining Ring (Selective) **Procedure** Select the correct retaining ring. Refer to **1-3-5-6-7 Clutch Backing Plate Retaining Ring Measurement**.

1-3-5-6-7 Clutch Piston Dam Installation

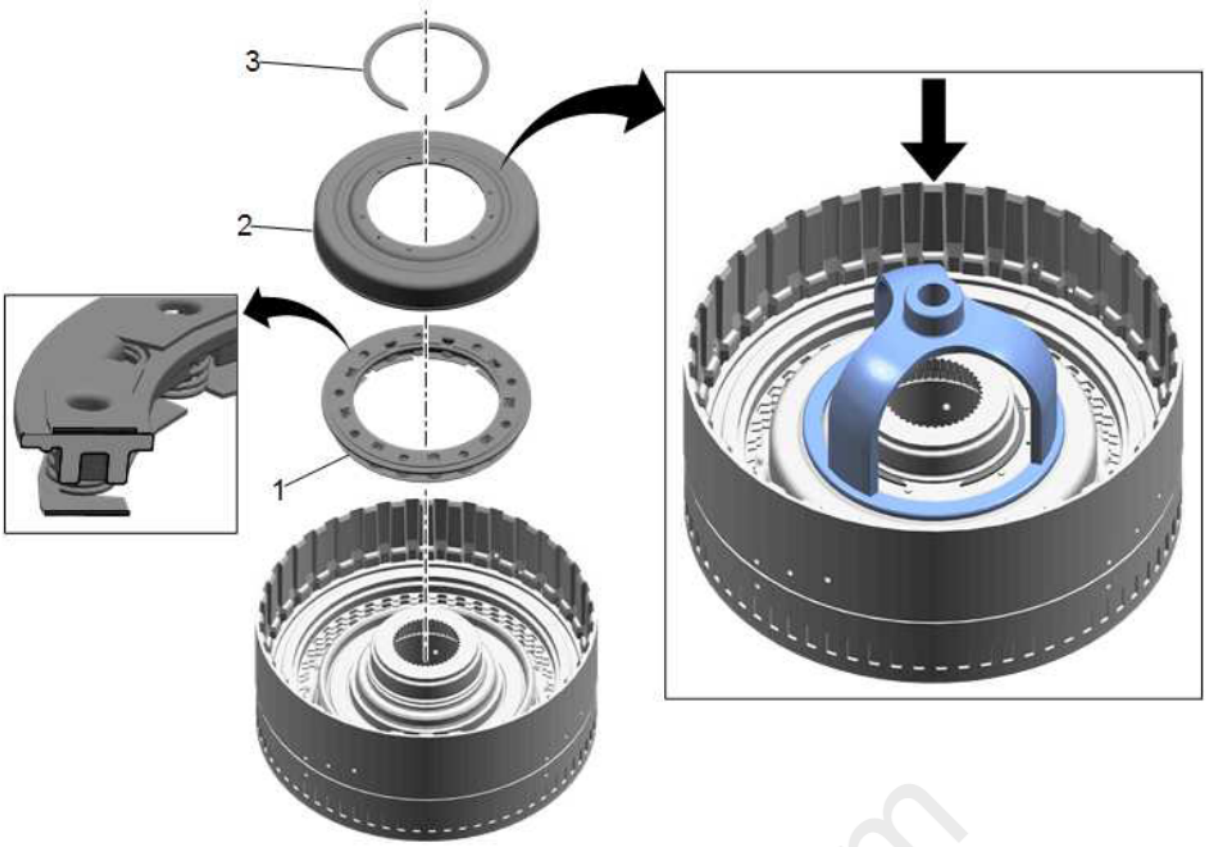

Fig. 93: 1-3-5-6-7 Clutch Piston Dam
Courtesy of GENERAL MOTORS COMPANY

1-3-5-6-7 Clutch Piston Dam Installation

Callout	Component Name
1	1-3-5-6-7 Clutch Piston Return Spring
2	1-3-5-6-7 Clutch Piston Dam
3	1-3-5-6-7 Clutch Piston Dam Retaining Ring **Procedure** Use the **DT-38734** adapter and a press to install the retaining ring. **NOTE:** **Install a NEW retaining ring, it is not reusable.** **Special Tools** **DT-38734** Intermediate Spring Compressor Adapter For equivalent regional tools, refer to **Special Tools** .

Turbine Shaft Installation

cardiagn.com

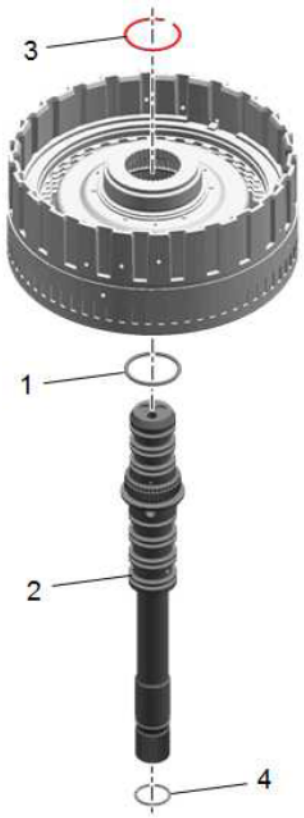

Fig. 94: Turbine Shaft
Courtesy of GENERAL MOTORS COMPANY

Turbine Shaft Installation

Callout	Component Name
CAUTION: Refer to Seal Reuse Caution .	
1	Turbine Shaft O-ring Seal
2	Turbine Shaft
3	Turbine Shaft Retaining Ring
4	Turbine Shaft O-ring Seal

Turbine Shaft Fluid Seal Ring Installation

cardiagn.com

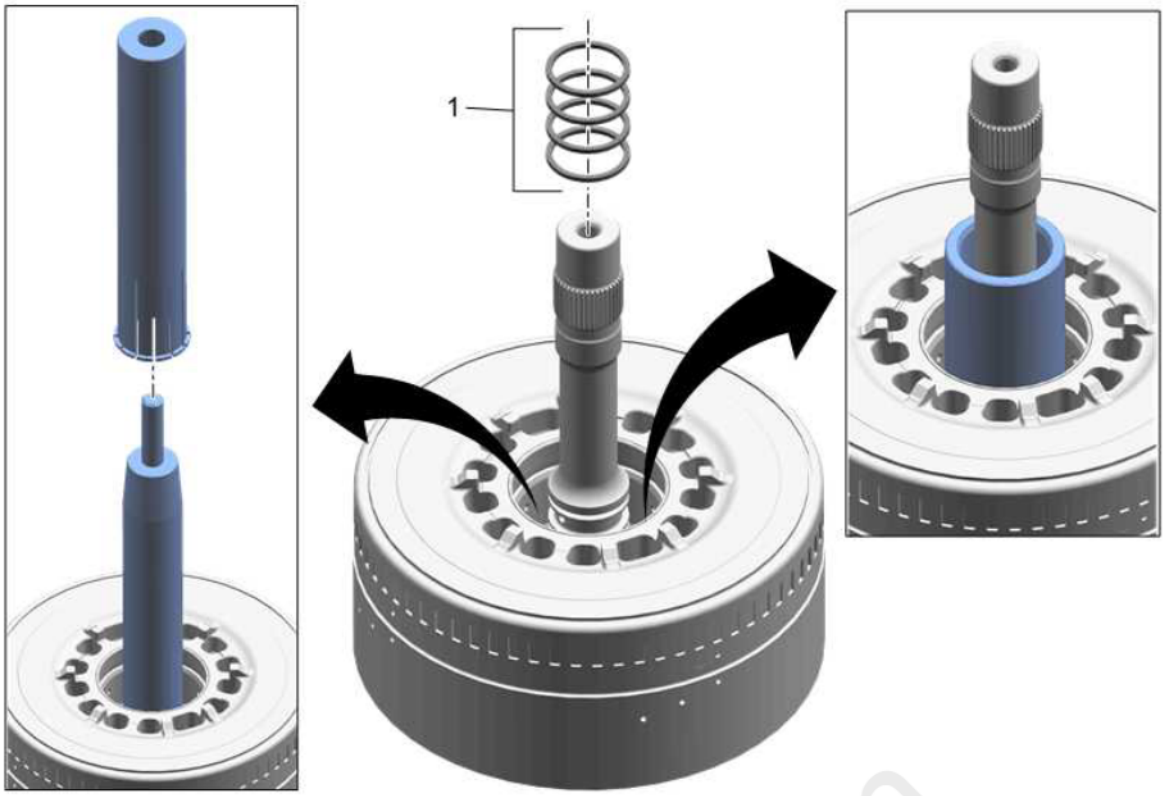

Fig. 95: Turbine Shaft Fluid Seal Ring
Courtesy of GENERAL MOTORS COMPANY

Turbine Shaft Fluid Seal Ring Installation

Callout	Component Name
1	Turbine Shaft Fluid Seal Ring (Qty: 4) **CAUTION:** **Do not use old seal rings. Install NEW seal rings. Reusing old seal rings may cause internal transmission leaks and transmission damage.** **CAUTION:** **Size the fluid seal rings for at least 5 minutes after installation to obtain proper seal ring size. Failure to do so may cause internal transmission leaks and transmission damage.** **Procedure** 1. Adjust the turn screw on **DT-51088-3** seal protector and install the bottom seal ring first. 2. Use the large taper side of **DT-51088-1** seal sizer for initial seal sizing, then flip the tool over for final sizing. **Special Tools** **DT-51088** Seal Installer For equivalent regional tools, refer to **Special Tools** .

Turbine Shaft Fluid Seal Ring Installation

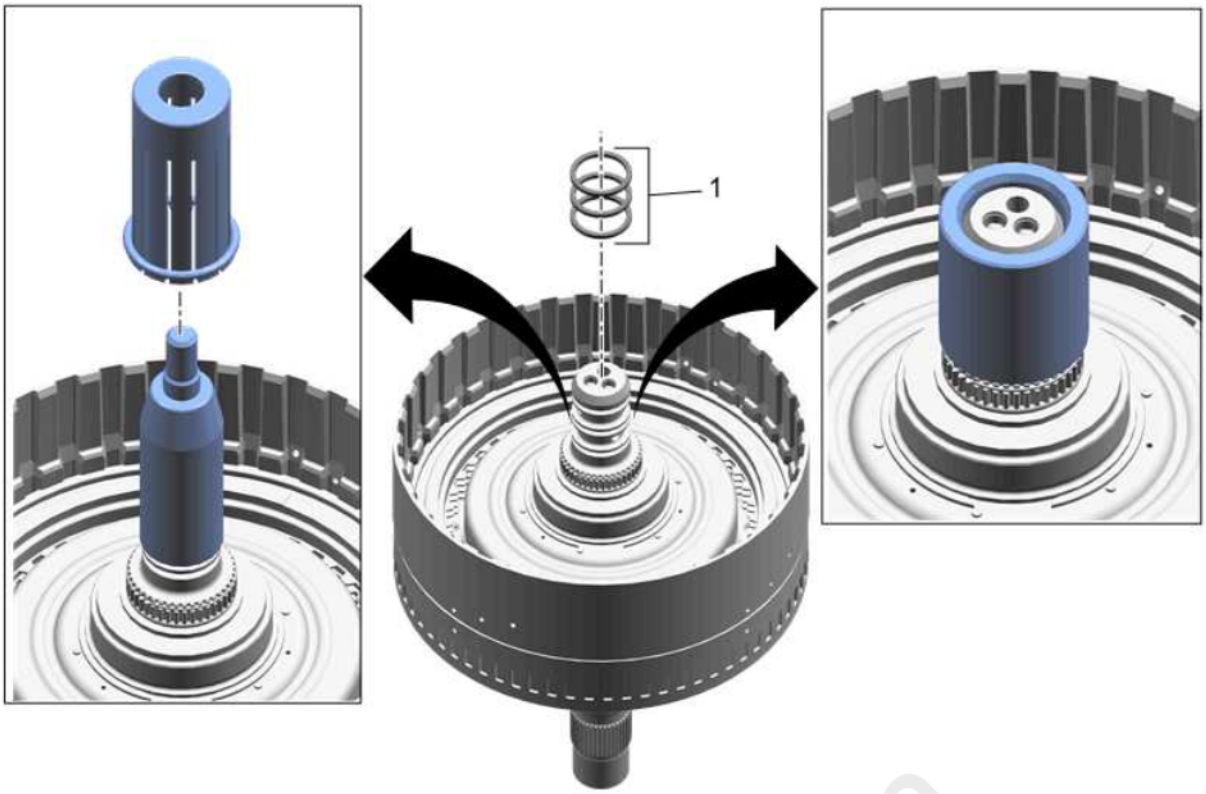

Fig. 96: Turbine Shaft Fluid Seal Ring
Courtesy of GENERAL MOTORS COMPANY

Turbine Shaft Fluid Seal Ring Installation

Callout	Component Name
1	Turbine Shaft Fluid Seal Ring (Qty: 3) **CAUTION:** **Do not use old seal rings. Install NEW seal rings. Reusing old seal rings may cause internal transmission leaks and transmission damage.** **CAUTION:** **Size the fluid seal rings for at least 5 minutes after installation to obtain proper seal ring size. Failure to do so may cause internal transmission leaks and transmission damage.** **Procedure** 1. Adjust the turn screw on **DT-50911-3** seal protector and install the bottom seal ring first. 2. Use the large taper side of **DT-50911-1** seal sizer for initial seal sizing, then flip the tool over for final sizing. **Special Tools** **DT-50911** Seal Installer For equivalent regional tools, refer to **Special Tools** .

1-3-5-6-7 CLUTCH BACKING PLATE RETAINING RING MEASUREMENT

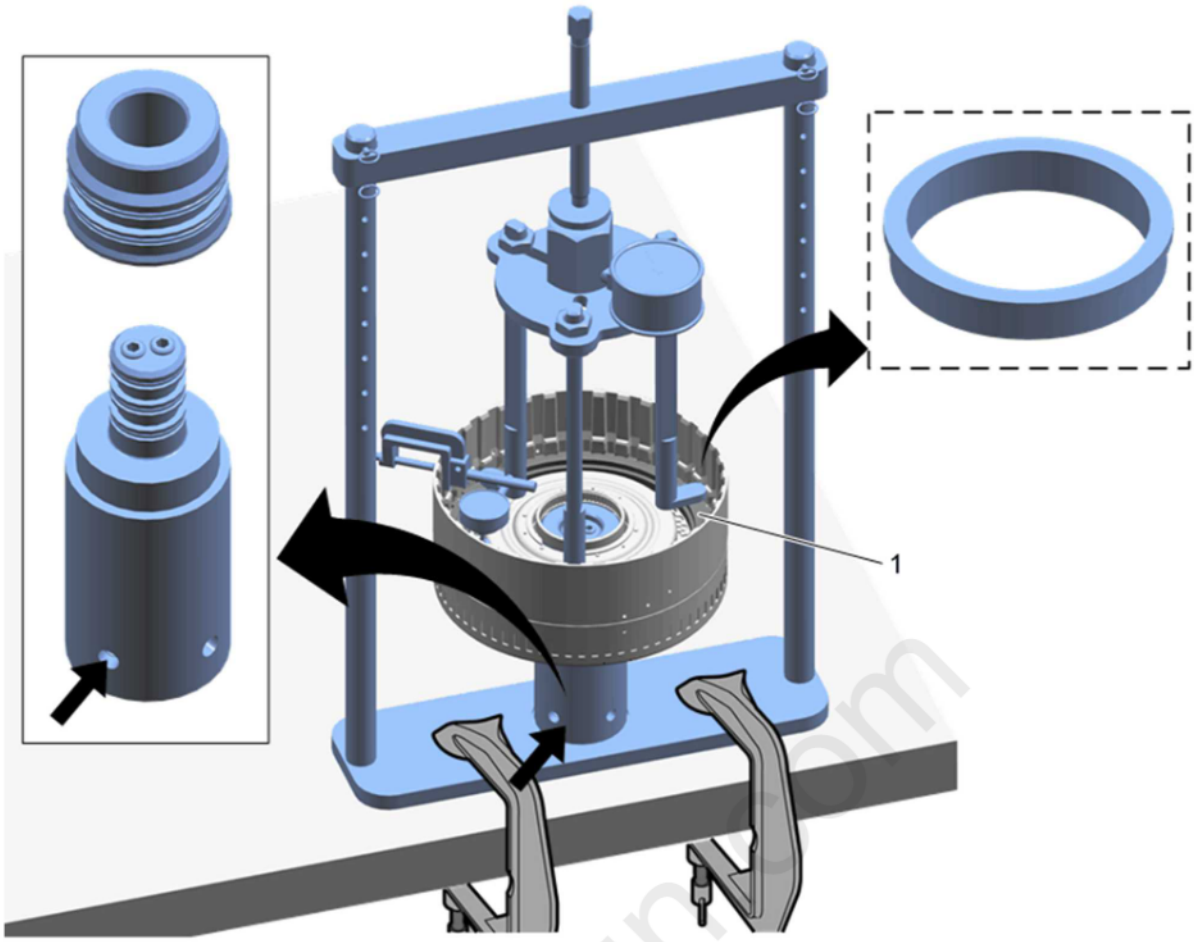

Fig. 97: 1-3-5-6-7 Clutch Backing Plate Retaining Ring Measurement
Courtesy of GENERAL MOTORS COMPANY

Callout	Component Name
Preliminary Procedure Install the 1-3-5-6-7 clutch piston and 1-3-5-6-7 clutch plates. Refer to **1-3-5-6-7 Clutch Assemble (8L90)** and/or **1-3-5-6-7 Clutch Assemble (8L45)**.	

cardiagn.com

Callout	Component Name
1	1-3-5-6-7 Clutch Backing Plate **Procedure** 1. Assemble the tools as shown and clamp the **DT-50900** fixture to the bench. 2. Apply 30 pounds of pressure to the load gauge by turning the screw on the **DT-50900** fixture clockwise. 3. Ensure the plunger of the dial indicator is located on the backing plate. 4. Zero out the dial indicator. 5. Remove the pressure on the load gauge by turning the screw on the **DT-50900** fixture one full turn counterclockwise. 6. Apply compressed air to the indicated hole on the **DT-50905** air adapter and simultaneously adjust the screw on the **DT-50900** fixture to apply 30 pounds of pressure to the load gauge. 7. Observe the dial indicator measurement. Refer to **Clutch Backing Plate Retaining Ring Specifications (8L90)** and/or **Clutch Backing Plate Retaining Ring Specifications (8L45)** to determine the correct 1-3-5-6-7 clutch backing plate retaining ring. **Special Tools** • **DT-50900** Clutch Travel Support Fixture • **DT-50902** Adjustable Clutch Spring Compressor • **DT-50903** Clutch Travel Load Gauge • **DT-50905** Clutch Air Travel Adapter • **GE-8001** Dial Indicator Set For equivalent regional tools, refer to **Special Tools** .

1-3-5-6-7 CLUTCH ASSEMBLY INSTALLATION

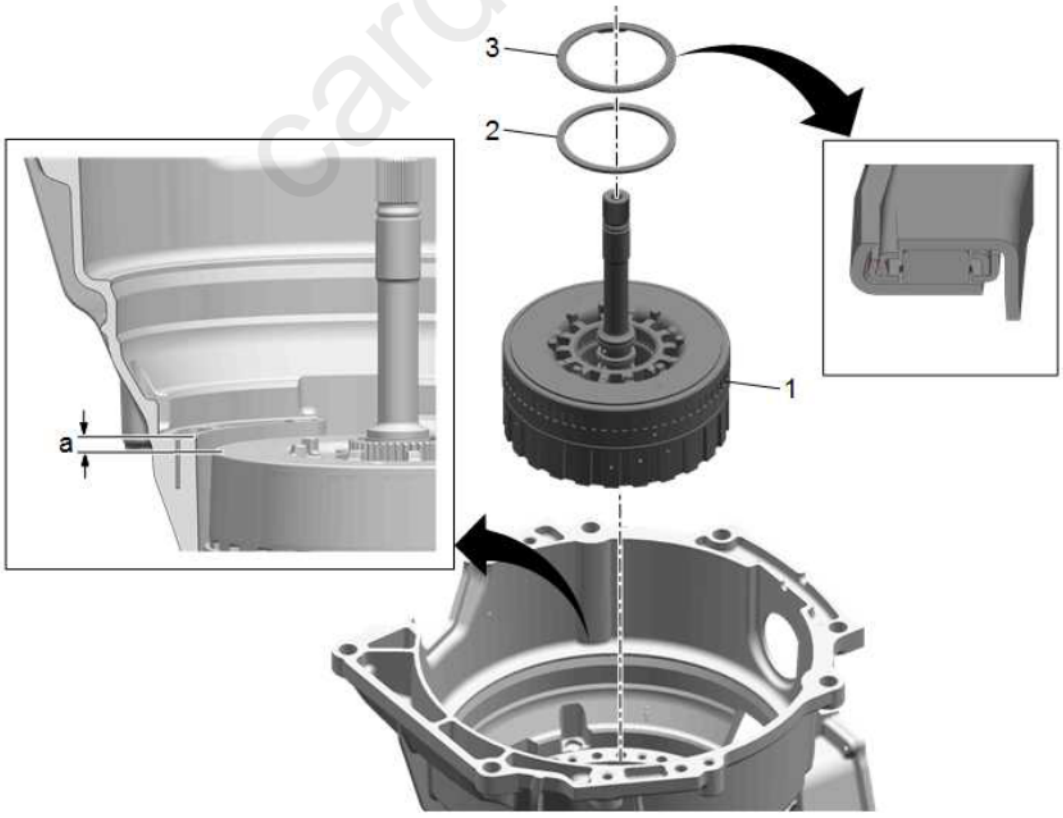

Fig. 98: 1-3-5-6-7 Clutch Assembly
Courtesy of GENERAL MOTORS COMPANY

cardiagn.com

Callout	Component Name
1	1-3-5-6-7 Clutch Assembly **NOTE:** **Verify proper installation of the 1-3-5-6-7 clutch assembly by measuring as indicated (a). An approximate measurement of 6.49 mm (0.256 in) indicates correct installation.**
2	1-3-5-6-7 Clutch Thrust Bearing Washer
3	1-3-5-6-7 Clutch Thrust Bearing

STATOR SHAFT SUPPORT DISASSEMBLE

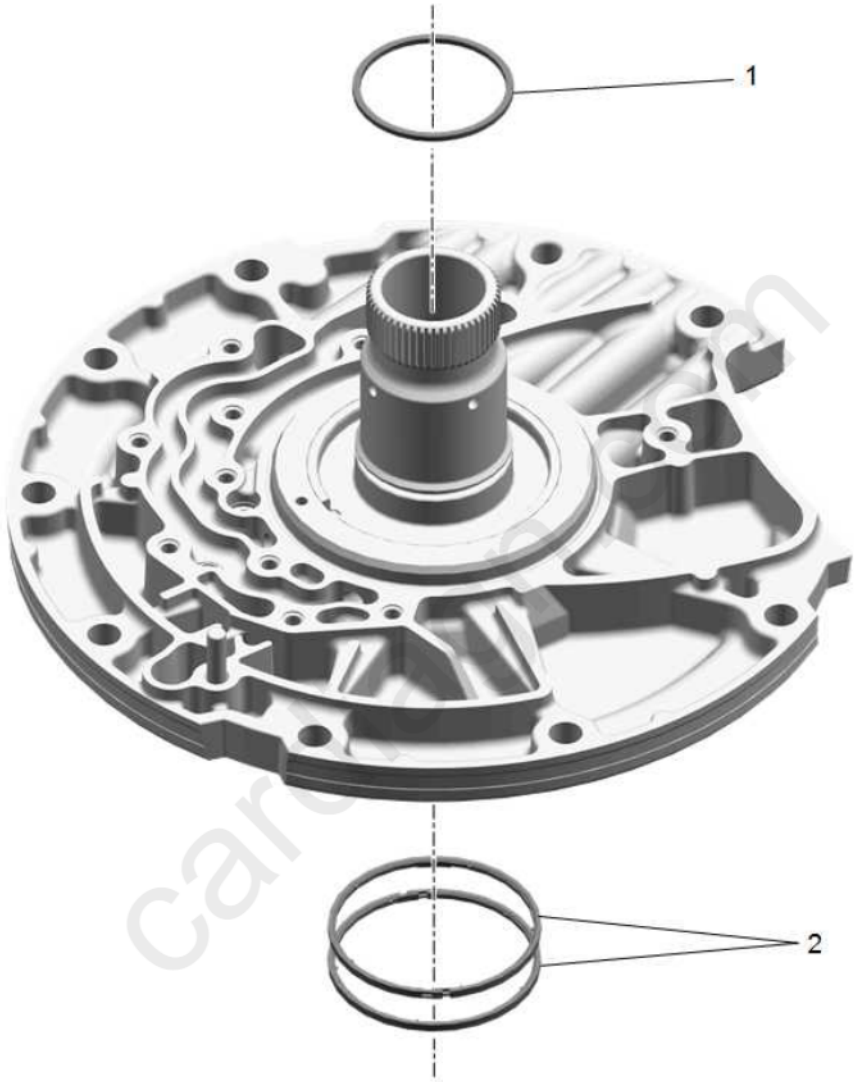

Fig. 99: Stator Shaft Support
Courtesy of GENERAL MOTORS COMPANY

Callout	Component Name
CAUTION: Refer to Seal Reuse Caution .	
1	Torque Converter Fluid Seal
2	1-3-5-6-7 Clutch Fluid Seal Ring (Qty: 2)

STATOR SHAFT SUPPORT ASSEMBLE (8L90)

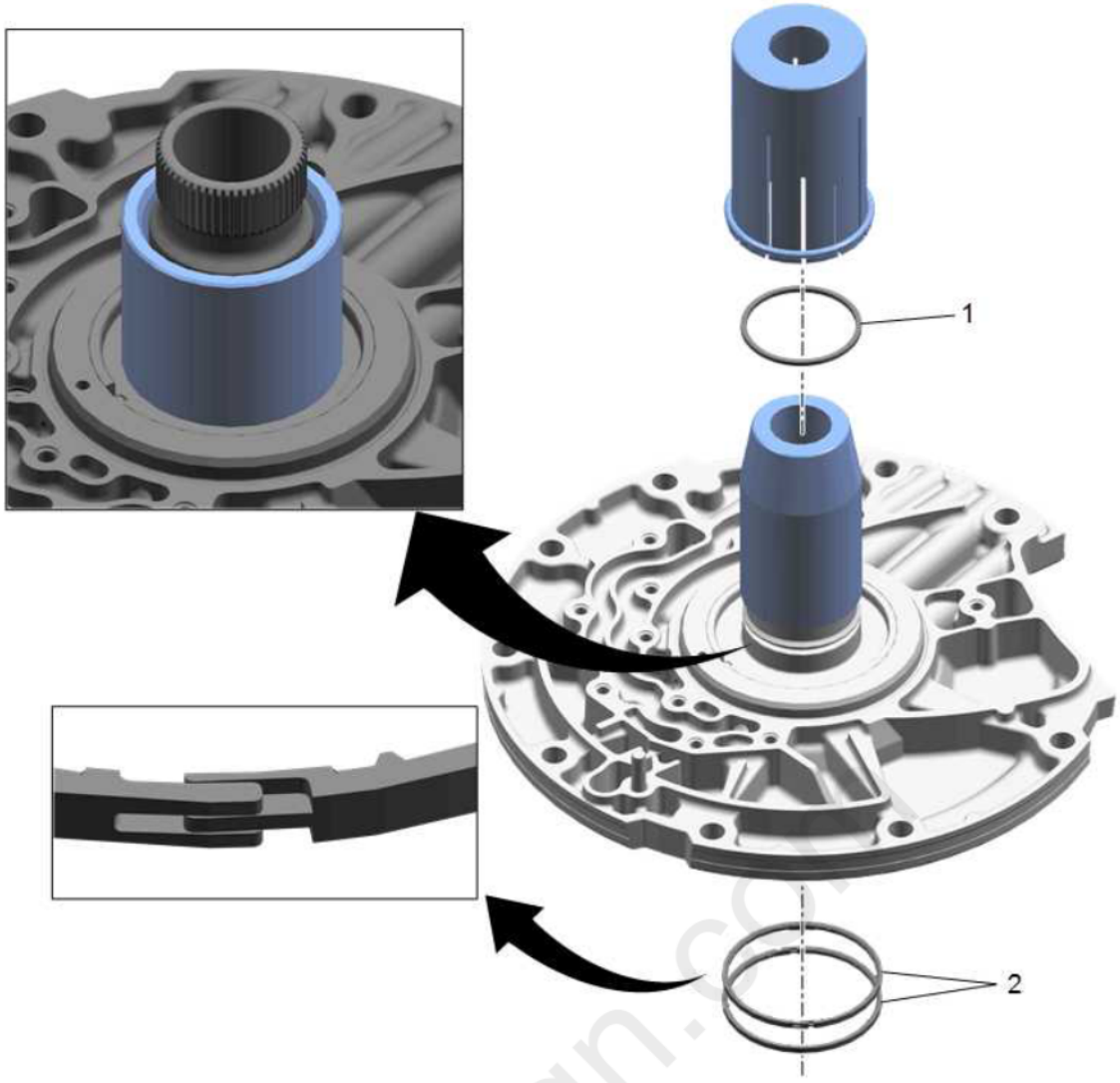

Fig. 100: Stator Shaft Support
Courtesy of GENERAL MOTORS COMPANY

Callout	Component Name
1	Torque Converter Fluid Seal **CAUTION:** **Do not use old seal rings. Install NEW seal rings. Reusing old seal rings may cause internal transmission leaks and transmission damage.** **CAUTION:** **Size the fluid seal rings for at least 5 minutes after installation to obtain proper seal ring size. Failure to do so may cause internal transmission leaks and transmission damage.** **NOTE:** **Install a NEW seal. Do NOT reuse the old seal.** **Procedure** Use the large taper side of **DT-50912-1** seal sizer for initial seal sizing, then flip the tool over for final sizing. **Special Tools** **DT-50912** Seal Installer For equivalent regional tools, refer to **Special Tools** .

cardiagn.com

Callout	Component Name
2	1-3-5-6-7 Clutch Fluid Seal Ring [2x] **NOTE:** • **Ensure fluid seal ring is installed properly as shown.** • **Install NEW seals. Do NOT reuse old seals.**

STATOR SHAFT SUPPORT ASSEMBLE (8L45)

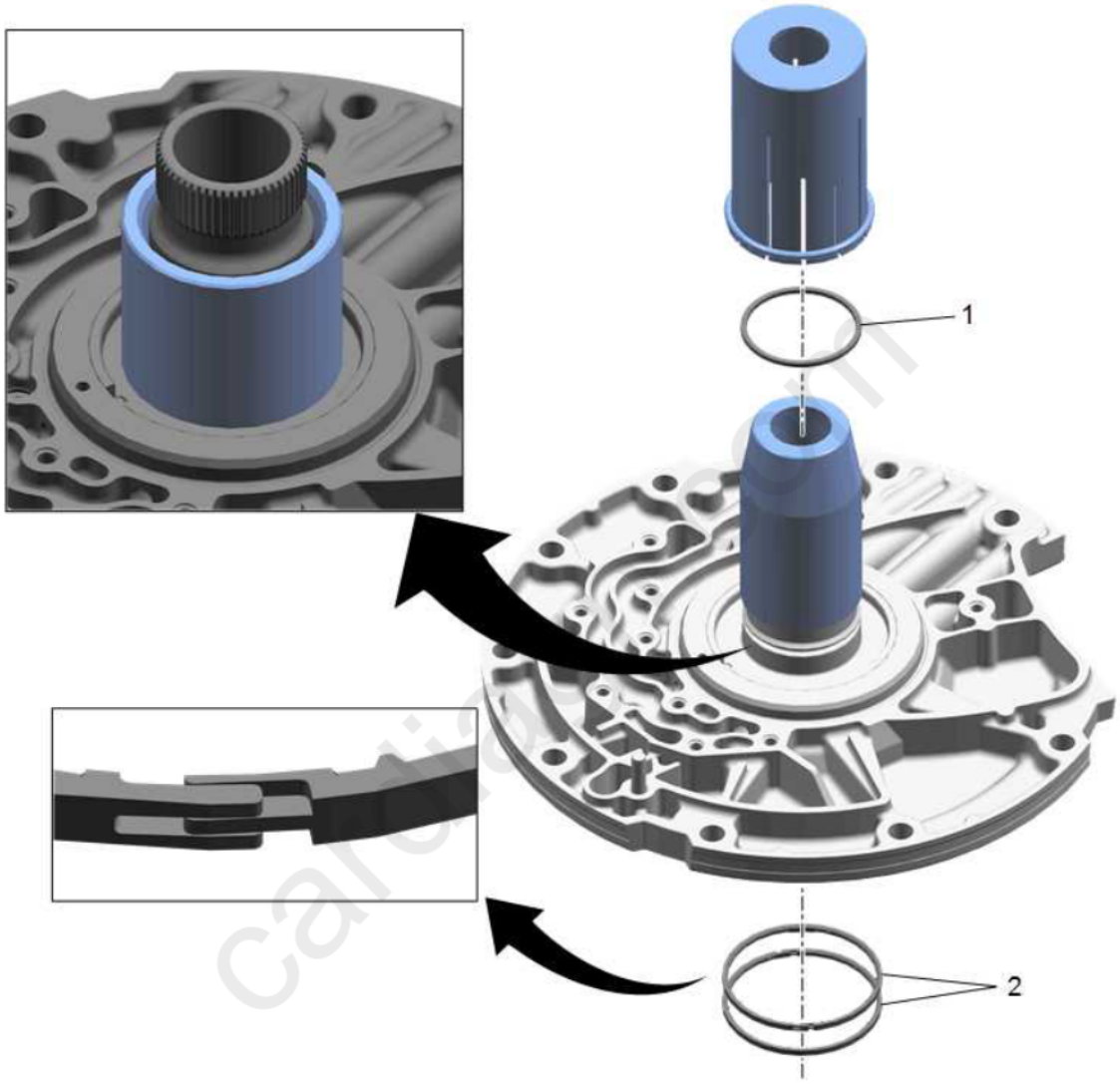

Fig. 101: Stator Shaft Support
Courtesy of GENERAL MOTORS COMPANY

Callout	Component Name

Callout	Component Name
1	Torque Converter Fluid Seal **CAUTION:** **Do not use old seal rings. Install NEW seal rings. Reusing old seal rings may cause internal transmission leaks and transmission damage.** **CAUTION:** **Size the fluid seal rings for at least 5 minutes after installation to obtain proper seal ring size. Failure to do so may cause internal transmission leaks and transmission damage.** **Procedure** 1. Use **DT-51196-1** seal protector and **DT-51196-2** seal pusher to install the seal. 2. Use the large taper side of **DT-50912-1** seal sizer for initial seal sizing, then flip the tool over for final sizing. **Special Tools** • **DT-50912** Seal Installer • **DT-51196** Seal Installer For equivalent regional tools, refer to **Special Tools** .
2	1-3-5-6-7 Clutch Fluid Seal Ring (Qty: 2)

STATOR SHAFT SUPPORT INSTALLATION

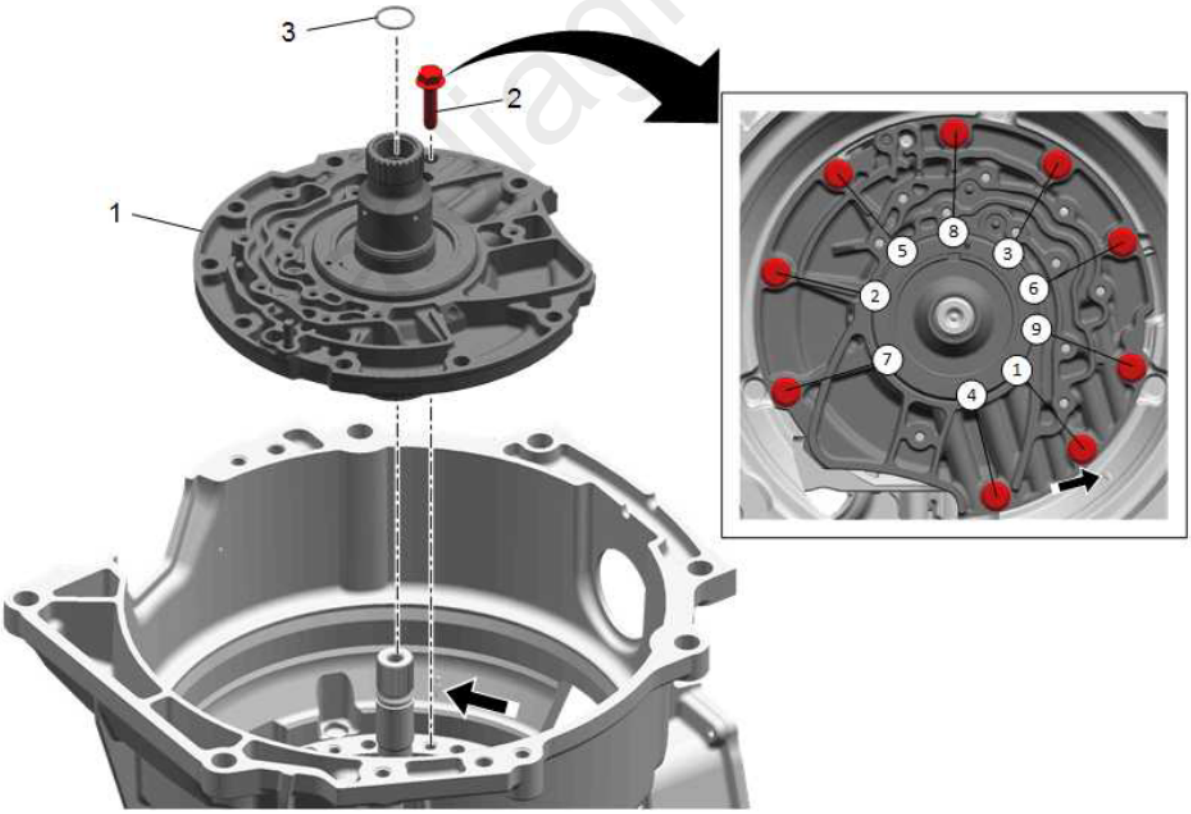

Fig. 102: Stator Shaft Support
Courtesy of GENERAL MOTORS COMPANY

Callout	Component Name
1	Stator Support Shaft Assembly **Procedure** Align the bolt hole indicated by the arrow with the arrow that is cast into the case and push down to seat.

Callout	Component Name
2	Stator Shaft Support Bolt M8 x 33 mm (Qty: 9) **CAUTION:** **Refer to Fastener Caution .** **Procedure** Tighten the bolts in the sequence shown. **Tighten** 35 N.m (26 lb ft)
3	Turbine Shaft O-ring Seal **NOTE:** **Install a NEW seal.**

TRANSMISSION END PLAY CHECK

Transmission End Play Measurement Set Up (Step 1)

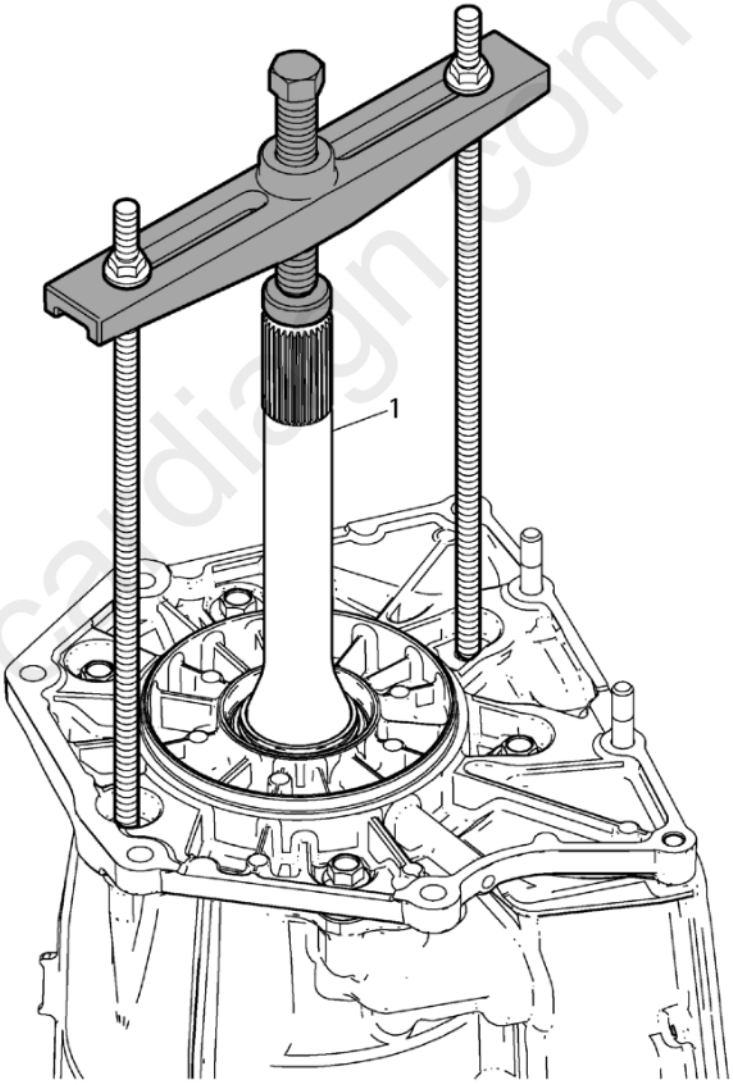

Fig. 103: Transmission End Play Measurement Set Up (Step 1)
Courtesy of GENERAL MOTORS COMPANY

Transmission End Play Measurement Set Up (Step 1)

Callout	Component Name

Callout	Component Name
1	Output Shaft **Procedure** 1. Install the **GE-8433-1** puller bar and thrust bearing from **DT-45124** removal bridge with two 16 in M10x1.5 threaded rods, nuts and washers, as shown. 2. Loosely tighten the forcing screw on **GE-8433-1** puller bar. **Special Tools** • **DT-45124** Removal Bridge • **GE-8433-1** Puller Bar For equivalent regional tools, refer to **Special Tools** .

Transmission End Play Measurement Set Up (Step 2)

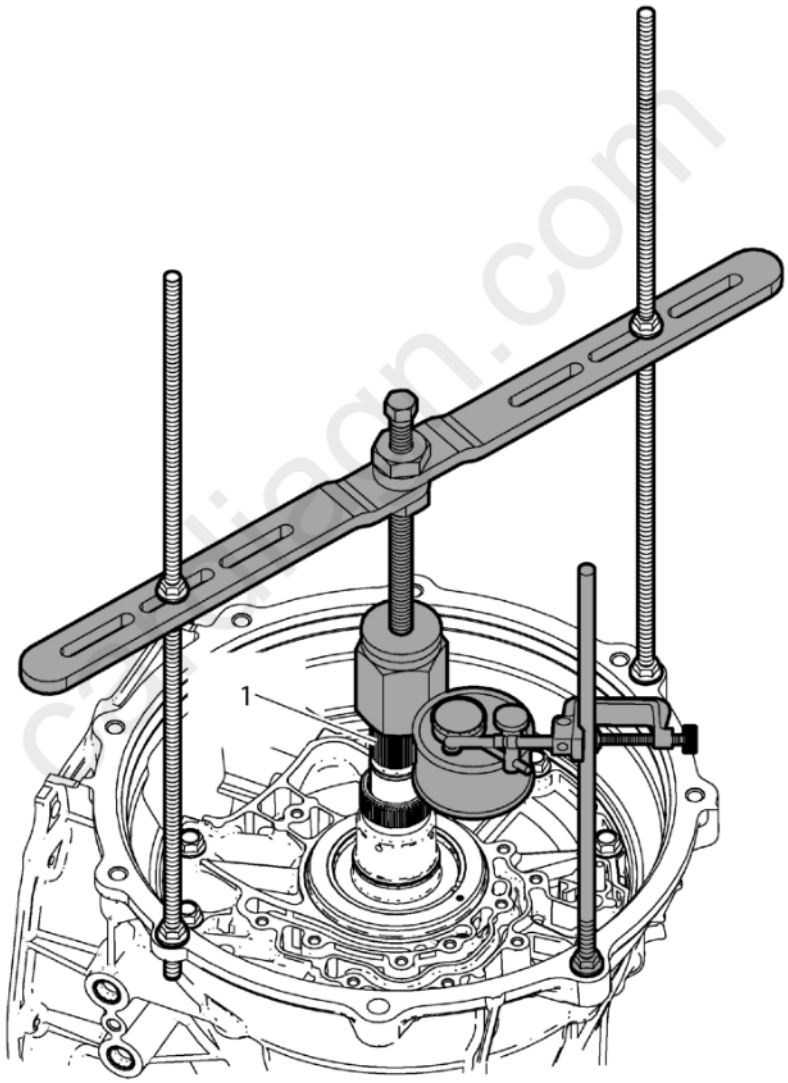

Fig. 104: Transmission End Play Measurement Set Up (Step 2)
Courtesy of GENERAL MOTORS COMPANY

Transmission End Play Measurement Set Up (Step 2)

Callout	Component Name

Callout	Component Name
1	Turbine Shaft **Procedure** 1. Rotate the transmission so the turbine shaft is facing up. 2. Install the **DT-48056** bridge with two 16 in 5/16-18 threaded rods, nuts and washers, as shown. 3. Install the **DT-50903** load gauge and secure with the **DT-48056** bridge forcing screw. 4. Install the **GE-8001** dial indicator in a suitable location. **Special Tools** • **DT-48056** Spring Compressor Bridge • **DT-50903** Clutch Travel Load Gauge • **GE-8001** Dial Indicator Set For equivalent regional tools, refer to **Special Tools** .

Transmission End Play Measurement

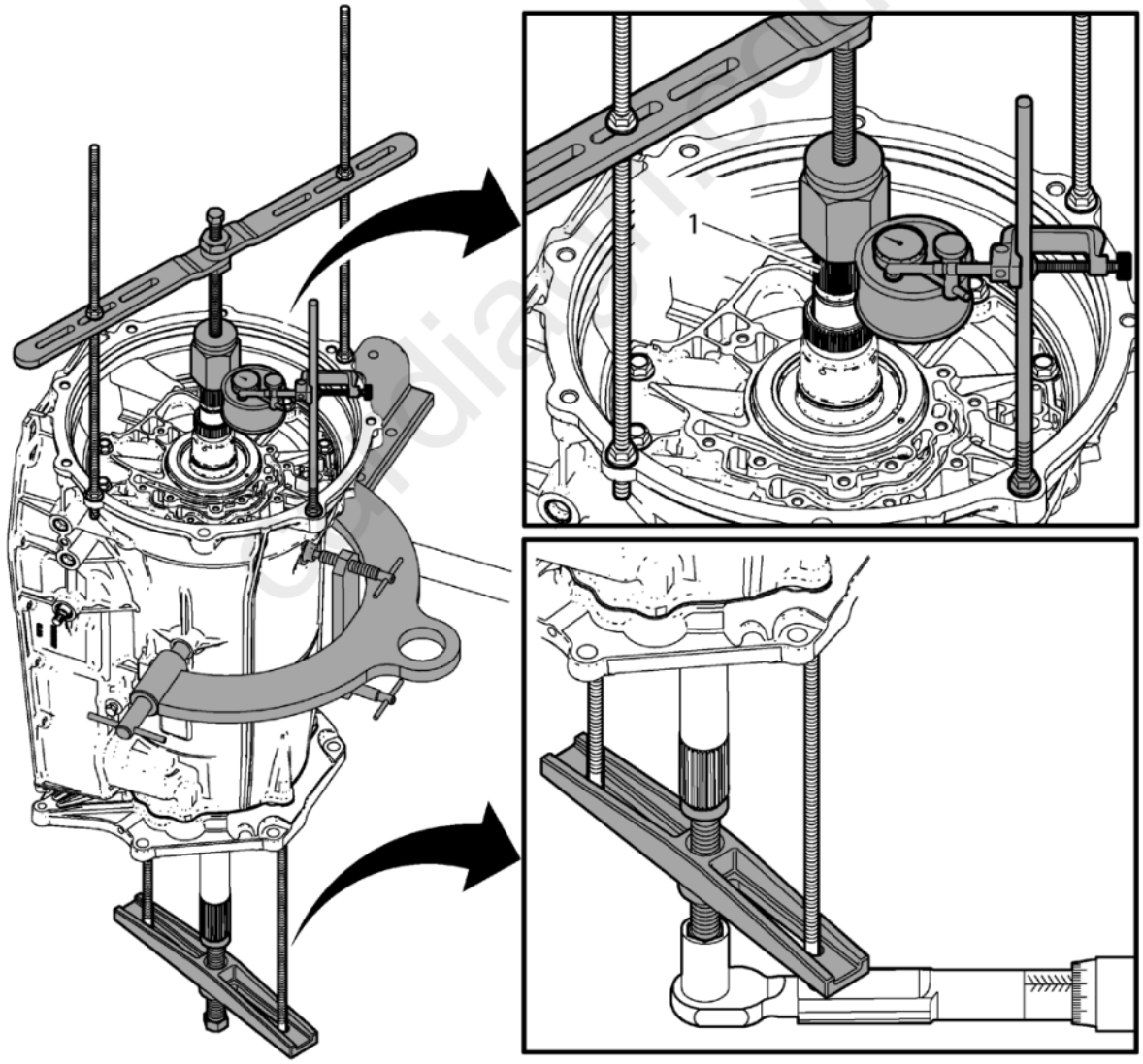

Fig. 105: Transmission End Play Measurement
Courtesy of GENERAL MOTORS COMPANY

Transmission End Play Measurement

Callout	Component Name

Callout	Component Name
1	Turbine Shaft **Procedure** 1. Ensure the foot of the dial indicator is flat with the load gauge face. 2. Apply 50 psi of pressure to **DT-50903** load gauge and zero out the dial indicator. 3. Using a torque wrench, tighten the forcing screw on **GE-8433-1** puller bar to 10 N.m (90 lb in). 4. Observe the dial indicator measurement. Refer to **1-3-5-6-7 Clutch Thrust Bearing Washer Specifications** to determine the correct 1-3-5-6-7 clutch thrust bearing washer. **Special Tools** • **DT-45124** Removal Bridge • **DT-48056** Spring Compressor Bridge • **DT-50903** Clutch Travel Load Gauge • **GE-8001** Dial Indicator Set • **GE-8433-1** Puller Bar For equivalent regional tools, refer to **Special Tools** .

TORQUE CONVERTER FLUID SEAL REMOVAL

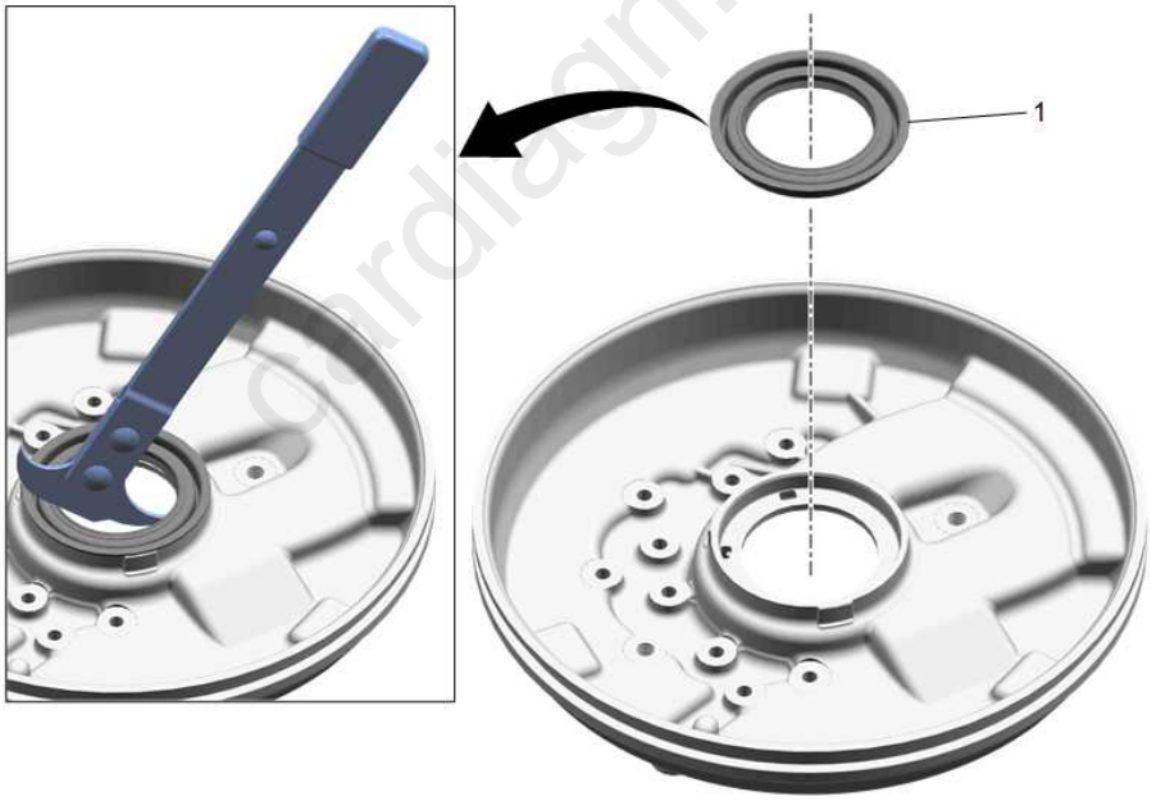

Fig. 106: Torque Converter Fluid Seal Removal
Courtesy of GENERAL MOTORS COMPANY

Callout	Component Name
1	Torque Converter Fluid Seal **Special Tools** **DT-45000** Seal Remover For equivalent regional tools, refer to **Special Tools** .

cardiagn.com

TORQUE CONVERTER FLUID SEAL INSTALLATION

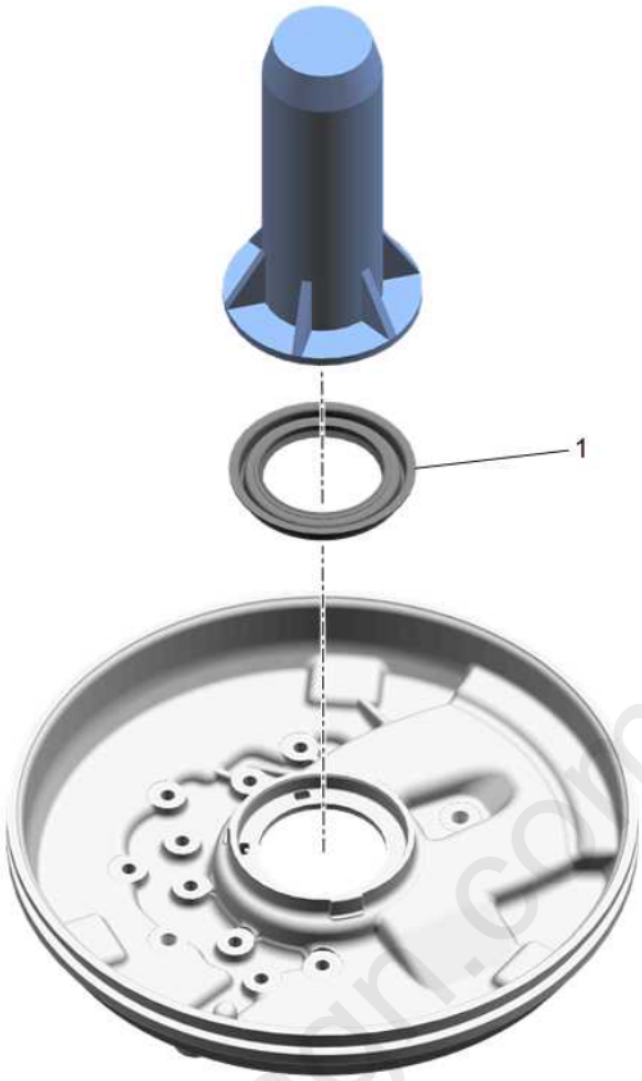

Fig. 107: Torque Converter Fluid Seal Installation
Courtesy of GENERAL MOTORS COMPANY

Callout	Component Name
1	Torque Converter Fluid Seal **Special Tools** **DT-43772** Torque Converter Seal Installer For equivalent regional tools, refer to **Special Tools** .

TRANSMISSION CASE FRONT COVER AND DRIVE LINK INSTALLATION

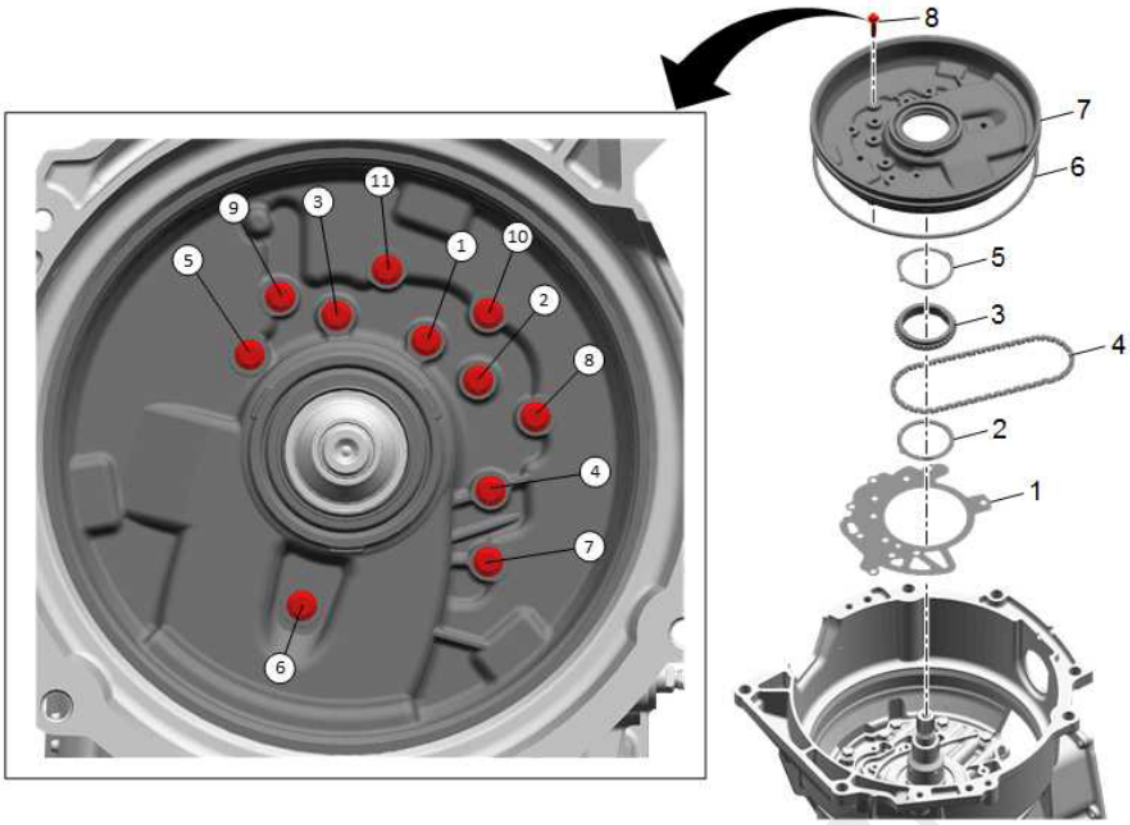

Fig. 108: Transmission Case Front Cover and Drive Link
Courtesy of GENERAL MOTORS COMPANY

Callout	Component Name
1	Automatic Transmission Front Support Cover Gasket **NOTE:** **Install a NEW gasket.**
2	Drive Sprocket Thrust Washer (Rear)
3	Drive Sprocket
4	Drive Link Assembly
5	Drive Sprocket Thrust Washer (Front)
6	Automatic Transmission Front Cover Seal **NOTE:** **Install a NEW seal.**
7	Automatic Transmission Front Cover **NOTE:** **Ensure the drive link assembly is not pinched by the front cover and moves freely on the drive sprocket.**

cardiagn.com

Callout	Component Name
8	Automatic Transmission Front Cover Bolt M6 x 30 (Qty: 11) **CAUTION:** **Refer to Fastener Caution .** **Procedure** Tighten the bolts in the sequence shown. **NOTE:** **Use NEW bolts.** **Tighten** 9.5 N.m (84 lb in)

CONTROL VALVE BODY ASSEMBLY DISASSEMBLE

Automatic Transmission Control Wiring Harness Removal

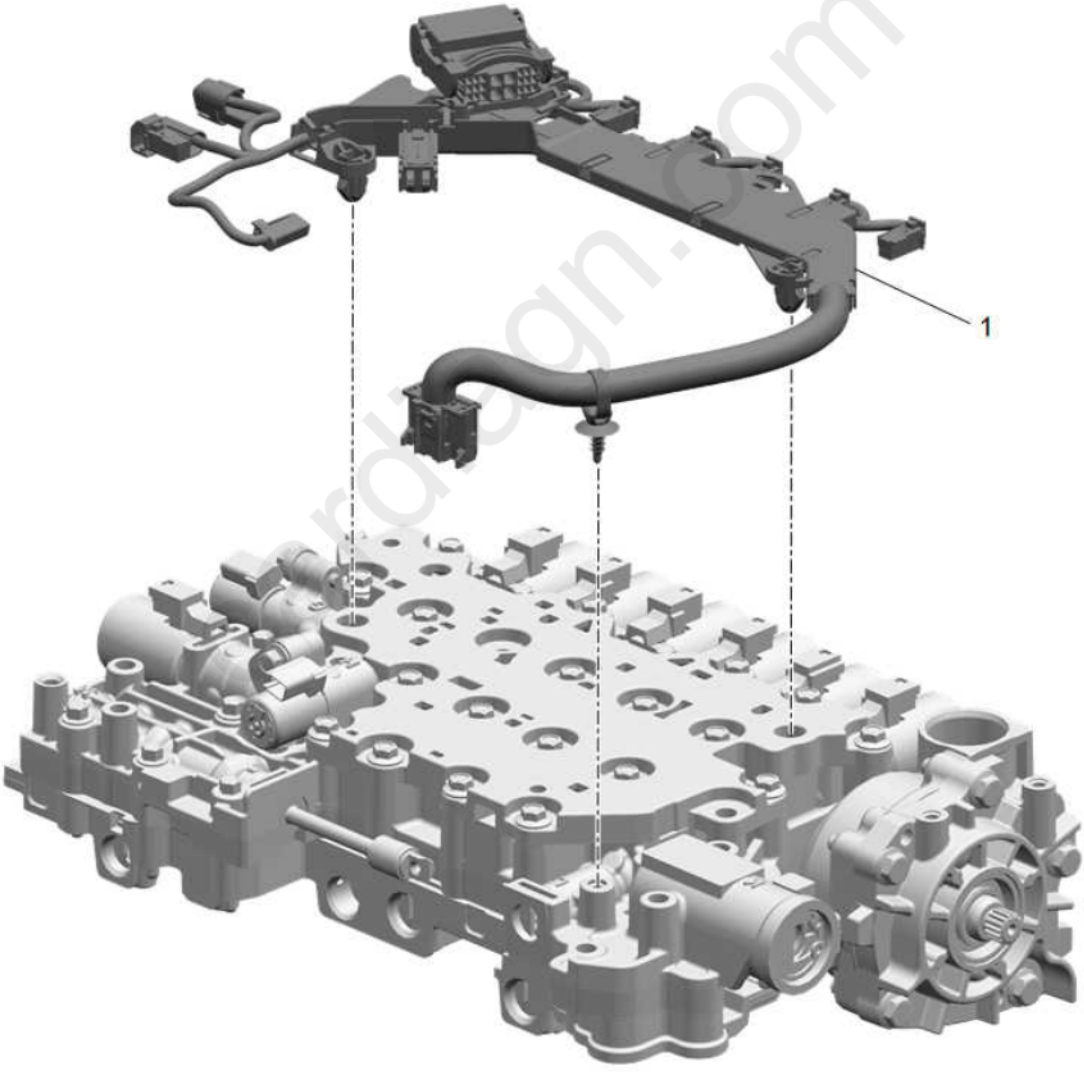

Fig. 109: Automatic Transmission Control Wiring Harness
Courtesy of GENERAL MOTORS COMPANY

Automatic Transmission Control Wiring Harness Removal

Callout	Component Name

Callout	Component Name
1	Automatic Transmission Control Wiring Harness **Procedure** Disconnect the wiring harness connectors. **NOTE:** **Discard the wiring harness clips, they are not reusable.**

Control Valve Channel Plate Removal

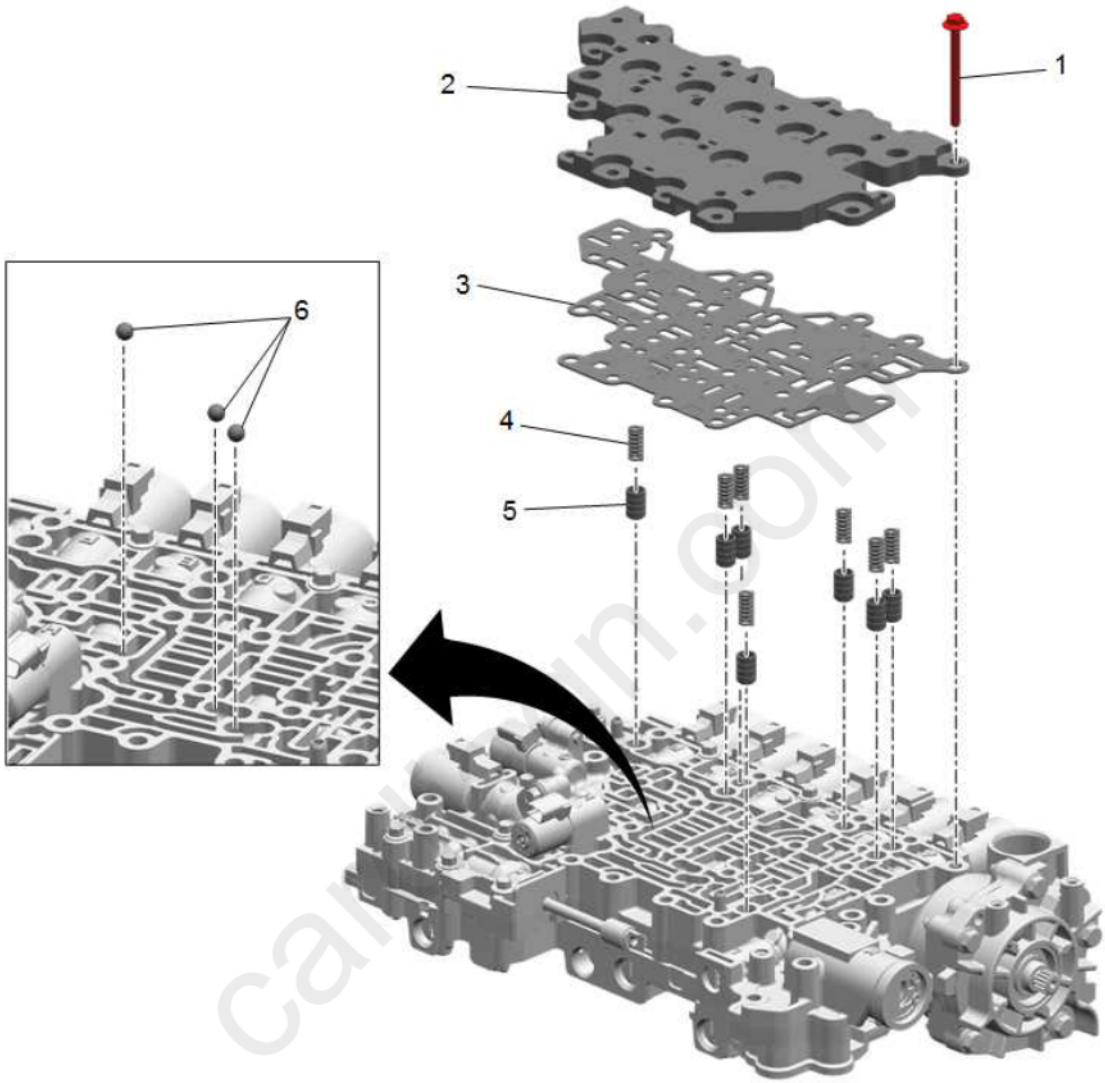

Fig. 110: Control Valve Channel Plate
Courtesy of GENERAL MOTORS COMPANY

Control Valve Channel Plate Removal

Callout	Component Name
1	Control Valve Channel Plate Bolt [19x] M5 x 55
2	Control Valve Channel Plate
3	Control Valve Channel Plate Spacer Plate **CAUTION:** **Do not use the old spacer plate. Install a NEW spacer plate. Reusing an old spacer plate may cause internal transmission leaks and transmission damage.**
4	Signal Accumulator Piston Spring (Qty: 7)
5	Signal Accumulator Piston (Qty: 7)

Callout	Component Name
6	Cooler Flow Blowoff Ball Valve (Qty: 3) **NOTE:** **Note the position of the ball check valves.**

Control Valve Solenoid Body Assembly Removal

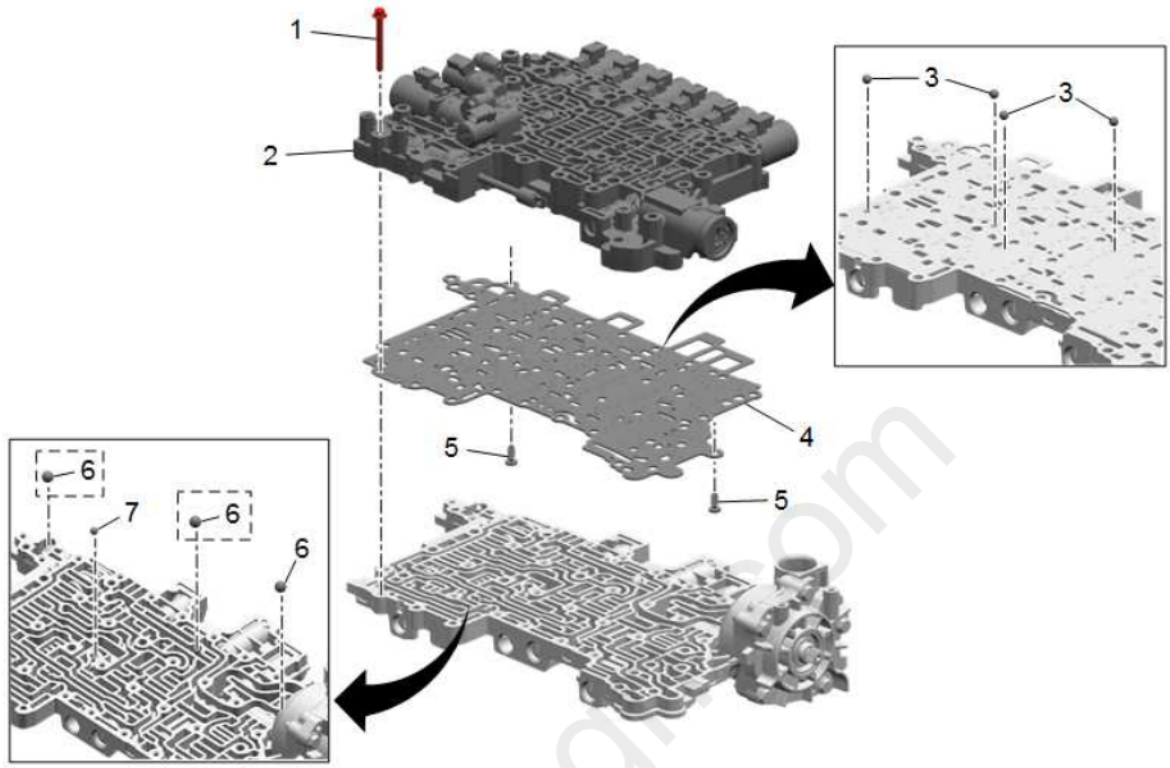

Fig. 111: Control Valve Solenoid Body Assembly
Courtesy of GENERAL MOTORS COMPANY

Control Valve Solenoid Body Assembly Removal

Callout	Component Name
1	Control Valve Solenoid Body Bolt [8x] M5 x 45
2	Control Valve Solenoid Body Assembly
3	Cooler Flow Blowoff Ball Valve [4x] **NOTE:** **Note the position of the ball check valves.**
4	Control Valve Body Spacer Plate Assembly **CAUTION:** **Do not use the old spacer plate. Install a NEW spacer plate. Reusing an old spacer plate may cause internal transmission leaks and transmission damage.**
5	Control Valve Body Spacer Plate Retainer [2x] **NOTE:** **Discard the retainers, they are not reusable.**

Callout	Component Name
6	Automatic Transmission Auxiliary Fluid Pump Ball Check Valve (Qty: 1 Without Surge Accumulator) (Qty: 3 With Surge Accumulator) **NOTE:** **Note the position of the ball check valve.**
7	Cooler Flow Blowoff Ball Valve **NOTE:** **Note the position of the ball check valve.**

Automatic Transmission Fluid Pump Assembly Removal

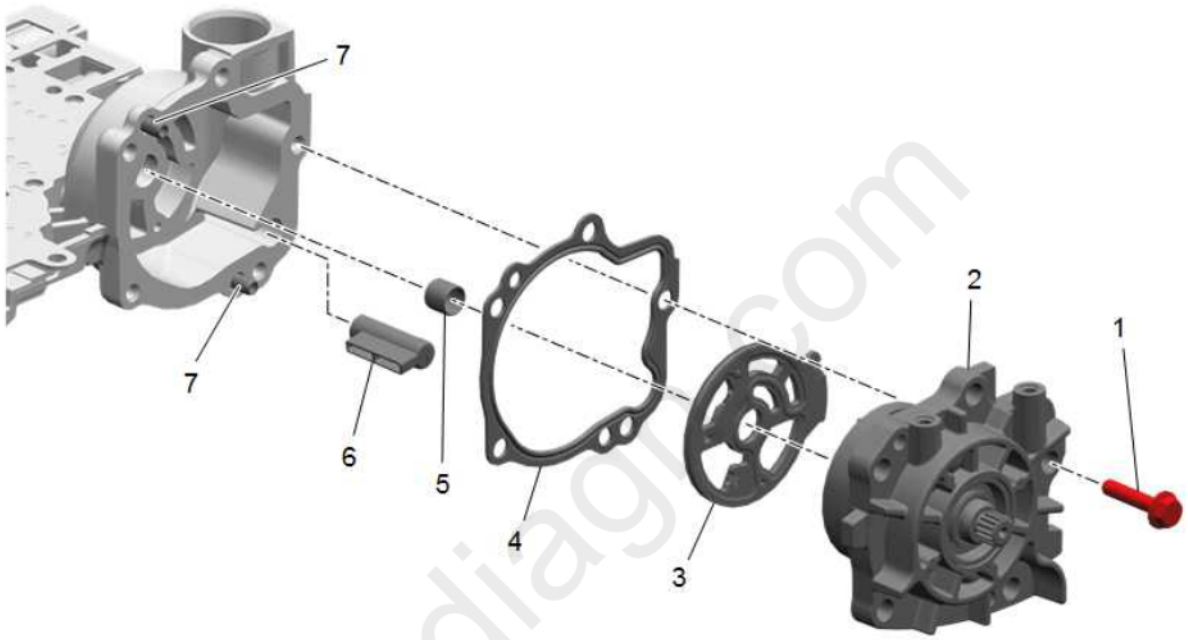

Fig. 112: Automatic Transmission Fluid Pump Assembly
Courtesy of GENERAL MOTORS COMPANY

Automatic Transmission Fluid Pump Assembly Removal

Callout	Component Name
1	Automatic Transmission Fluid Pump Bolt [5x] M6 x 28
2	Automatic Transmission Fluid Pump Assembly
3	Automatic Transmission Fluid Pump Seal **NOTE:** **Discard the seal, it is not reusable.**
4	Automatic Transmission Fluid Pump Gasket **NOTE:** **Discard the gasket, it is not reusable.**
5	Automatic Transmission Fluid Pump Drive Shaft Bushing
6	Automatic Transmission Fluid Passage Sleeve

Callout	Component Name
7	Automatic Transmission Fluid Pump Locator Pin [2x] **NOTE:** **Only remove the locator pins if they need to be replaced.**

CONTROL VALVE SOLENOID BODY CLEANING AND INSPECTION

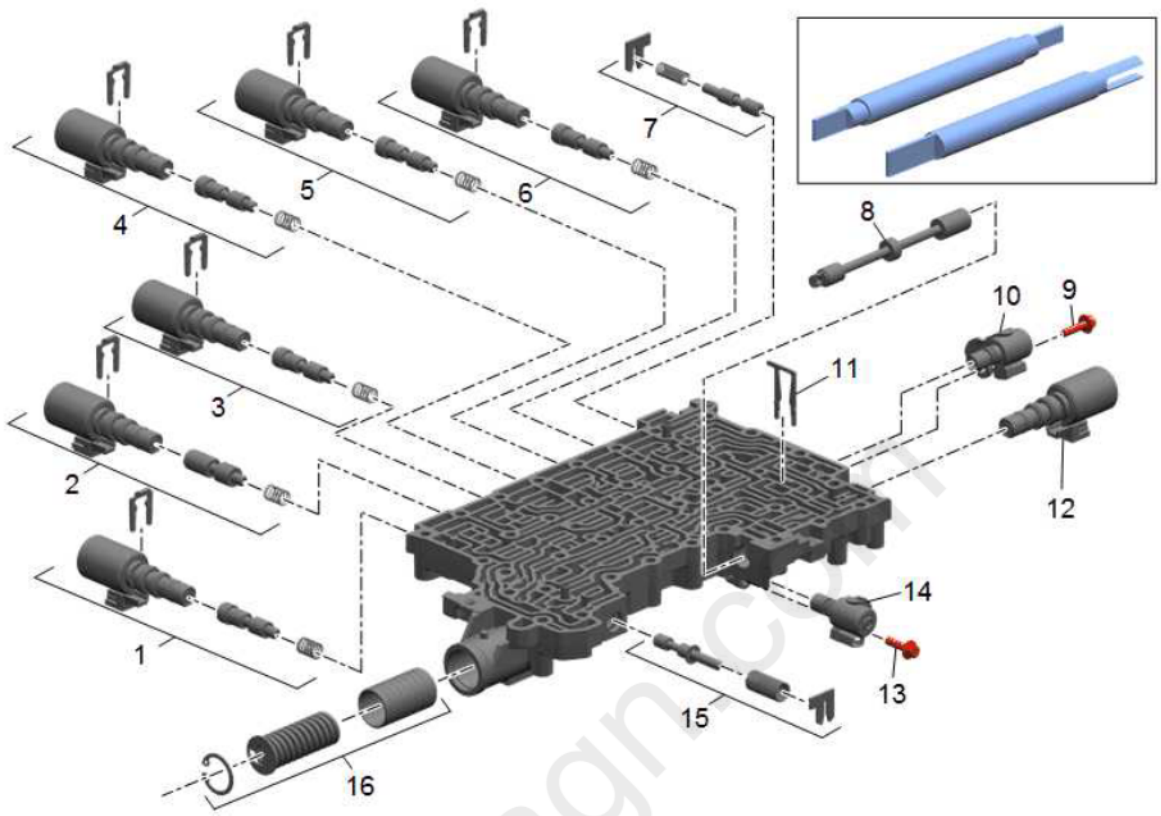

Fig. 113: Control Valve Solenoid Body Exploded View
Courtesy of GENERAL MOTORS COMPANY

Callout	Component Name
	WARNING: **Valve Springs can be tightly compressed. Use care when removing retainers and plugs. Personal injury could result.** **CAUTION:** **After cleaning the transmission components, allow to air dry. Do not use cloth or paper towels in order to dry any transmission components. Lint from the towels can cause component failure.** **CAUTION:** **Do not reuse cleaning solvents. Previously used solvents may deposit sediment which may damage the component.** **Preliminary Procedure** Clean and inspect all valve components and the valve body. The control valve lower body is replaceable only as an assembly.**Special Tools DT-50914** Solenoid Valve Retainer Remover/InstallerFor equivalent regional tools, refer to **Special Tools** .
1	TCC Control Solenoid Valve Train
2	2-3-4-6-8 Control Solenoid Valve Train
3	1-3-5-6-7 Control Solenoid Valve Train
4	4-5-6-7-8 Reverse Control Solenoid Valve Train
5	1-2-7-8 Reverse Control Solenoid Valve Train
6	1-2-3-4-5 Reverse Low Solenoid Valve Train

Callout	Component Name
7	1-2-3-4-5 Reverse Clutch Boost Valve Train
8	Manual Valve
9	Solenoid Valve Assembly Bolt
10	Default Control Solenoid Valve
11	Control Solenoid Valve Retainer
12	Line Pressure Control Solenoid Valve
13	Solenoid Valve Assembly Bolt
14	1-2-3-4-5 Reverse Boost Solenoid Valve
15	Converter Feed Limit Valve
16	1-3-5-6-7 Accumulator Piston

CONTROL VALVE UPPER BODY ASSEMBLY CLEANING AND INSPECTION

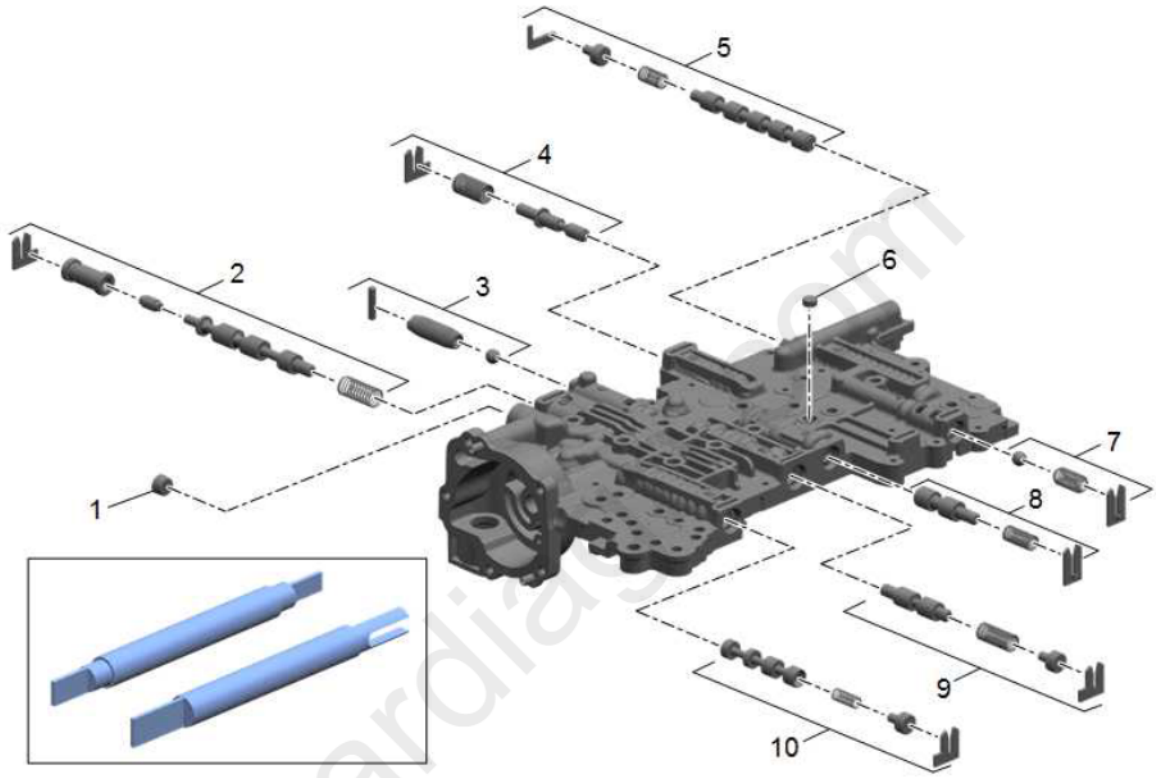

Fig. 114: Control Valve Upper Body Assembly
Courtesy of GENERAL MOTORS COMPANY

Callout	Component Name
WARNING: **Valve Springs can be tightly compressed. Use care when removing retainers and plugs. Personal injury could result.** **CAUTION:** **After cleaning the transmission components, allow to air dry. Do not use cloth or paper towels in order to dry any transmission components. Lint from the towels can cause component failure.** **CAUTION:** **Do not reuse cleaning solvents. Previously used solvents may deposit sediment which may damage the component.** **Preliminary Procedure** Clean and inspect all valve components and the valve body. The control valve lower body is replaceable only as an assembly.**Special Tools DT-50914** Solenoid Valve Retainer Remover/InstallerFor equivalent regional tools, refer to **Special Tools** .	
1	Transmission Fluid Passage Plug

Callout	Component Name
2	Pressure Regulator Valve Train
3	Pressure Relief Ball Valve Train
4	Actuator Feed Limit Valve Train
5	Default Override Valve Train
6	Control Valve Center Body Hole Plug
7	Clutch Piston Exhaust Blowoff Ball Valve Train
8	TCC Valve Train
9	Lube Regulator Valve Train
10	TCC Control Valve Train

CONTROL VALVE BODY ASSEMBLY ASSEMBLE

Automatic Transmission Fluid Pump Assembly Installation

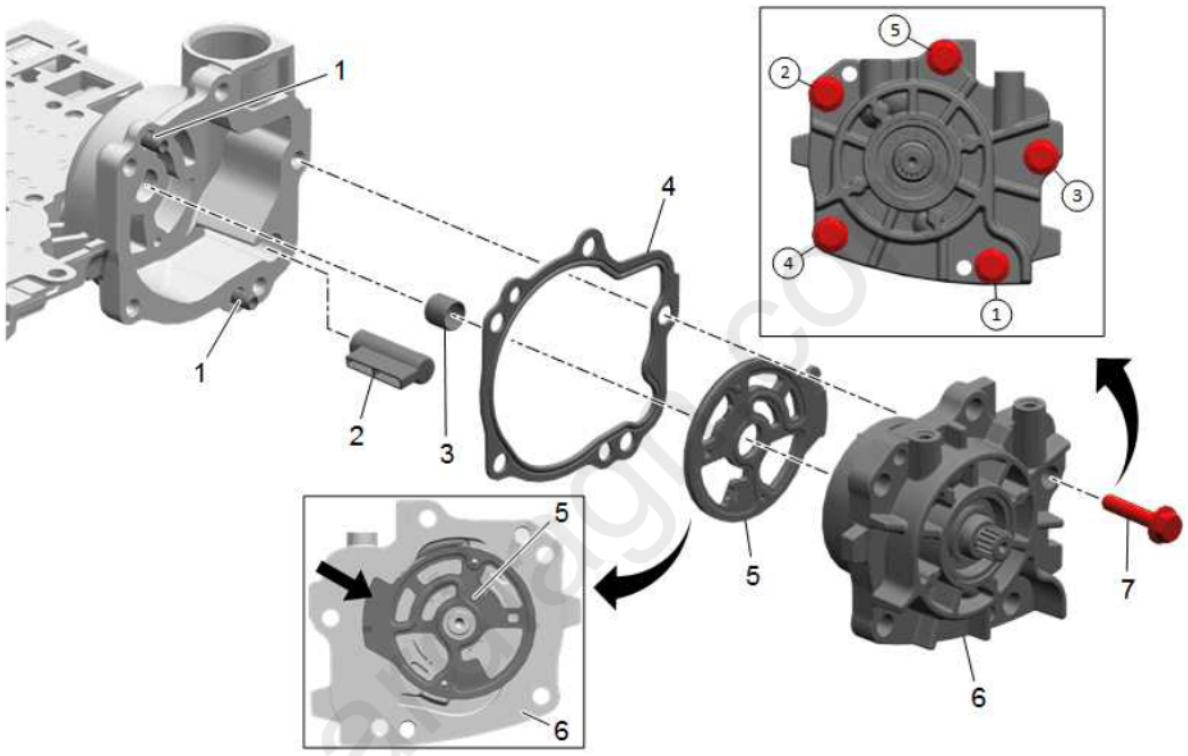

Fig. 115: Automatic Transmission Fluid Pump Assembly
Courtesy of GENERAL MOTORS COMPANY

Automatic Transmission Fluid Pump Assembly Installation

Callout	Component Name
1	Automatic Transmission Fluid Pump Locator Pin [2x]
2	Automatic Transmission Fluid Passage Sleeve
3	Automatic Transmission Fluid Pump Drive Shaft Bushing
4	Automatic Transmission Fluid Pump Gasket **NOTE:** **Install a NEW gasket, it is not reusable.**

Callout	Component Name
5	Automatic Transmission Fluid Pump Seal **Procedure** Install the seal onto the pump as shown. "Side Up", indicated by the arrow, should face away from the pump assembly. **NOTE:** **Install a NEW seal, it is not reusable.**
6	Automatic Transmission Fluid Pump Assembly
7	Automatic Transmission Fluid Pump Bolt [5x] M6 x 28 **CAUTION:** **Refer to Fastener Caution .** **Procedure** Tighten the bolts in the sequence shown. **Tighten** 9 N.m (80 lb in)

Control Valve Solenoid Body Assembly Installation

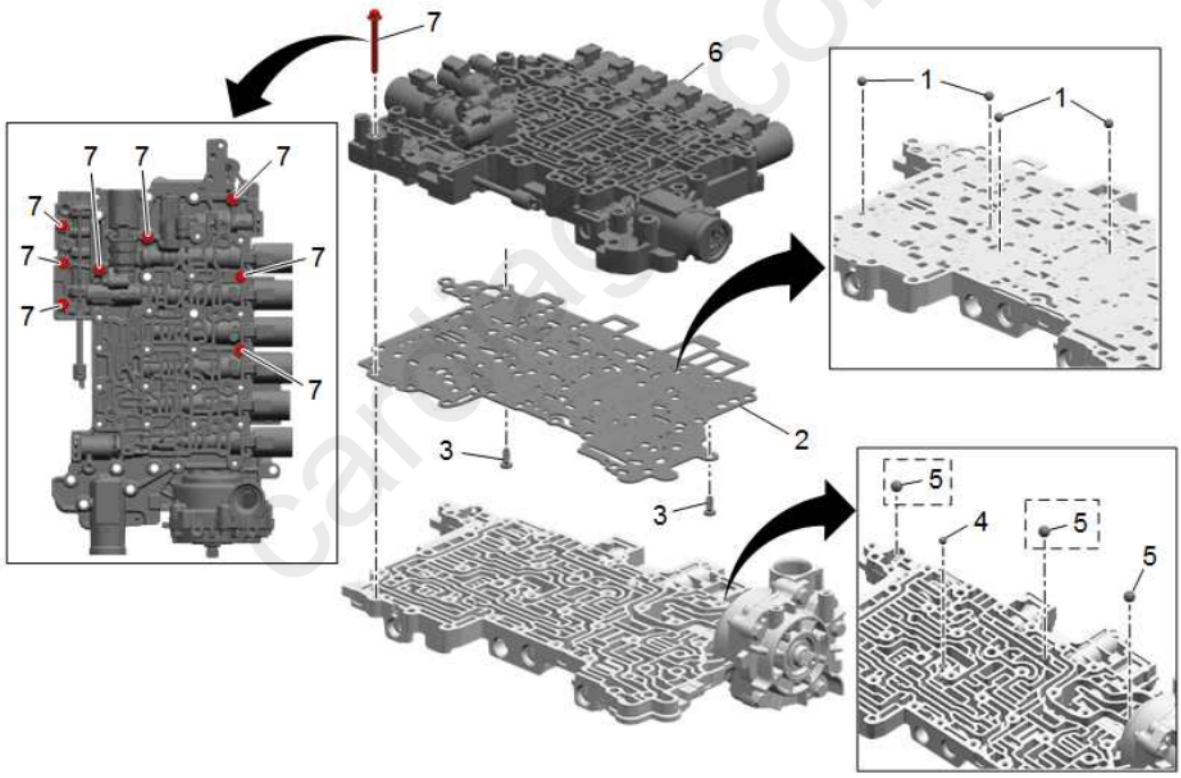

Fig. 116: Control Valve Solenoid Body
Courtesy of GENERAL MOTORS COMPANY

Control Valve Solenoid Body Assembly Installation

Callout	Component Name
1	Cooler Flow Blowoff Ball Valve [4x] **CAUTION:** **Refer to Ball Check Valve Grease Caution .** **Procedure** Install the ball check valves in the correct location in the control valve solenoid body. Refer to **Ball Check Valve Locations** .

Callout	Component Name
2	Control Valve Body Spacer Plate Assembly **CAUTION:** **Do not use the old spacer plate. Install a NEW spacer plate. Reusing an old spacer plate may cause internal transmission leaks and transmission damage.**
3	Control Valve Body Spacer Plate Retainer [2x]
4	Cooler Flow Blowoff Ball Valve **CAUTION:** **Refer to Ball Check Valve Grease Caution .**
5	Automatic Transmission Auxiliary Fluid Pump Ball Check Valve (Qty: 1 Without Surge Accumulator) (Qty: 3 With Surge Accumulator) **CAUTION:** **Refer to Ball Check Valve Grease Caution .**
6	Control Valve Solenoid Body Assembly
7	Control Valve Solenoid Body Bolt M5 x 45 (Qty: 8) **Procedure** Hand tighten the bolts.

Control Valve Channel Plate Installation

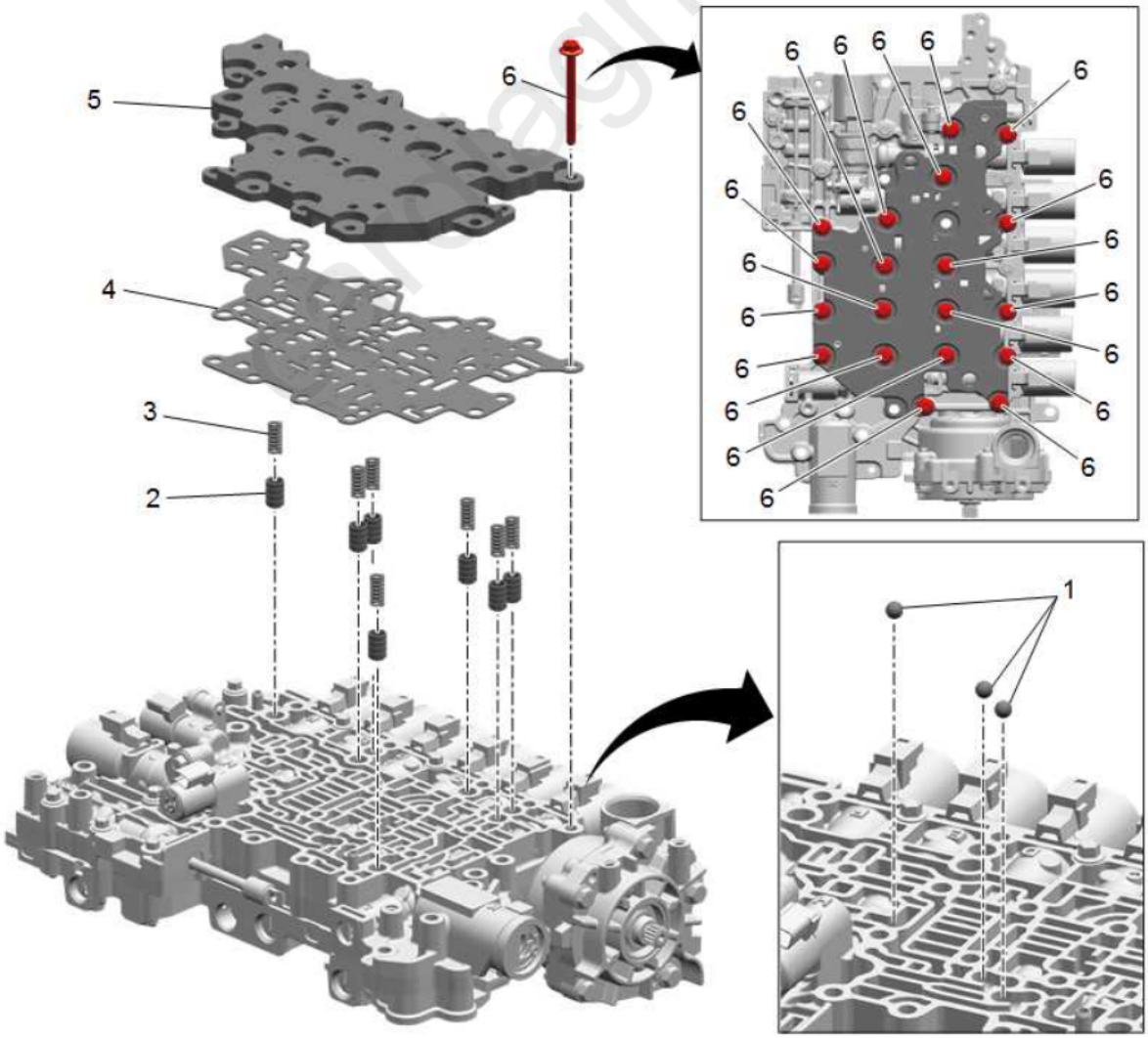

Fig. 117: Control Valve Channel Plate
Courtesy of GENERAL MOTORS COMPANY

Control Valve Channel Plate Installation

Callout	Component Name
1	Cooler Flow Blowoff Ball Valve [3x] **CAUTION:** **Refer to Ball Check Valve Grease Caution .**
2	Signal Accumulator Piston [7x]
3	Signal Accumulator Piston Spring [7x]
4	Control Valve Channel Plate Spacer Plate **CAUTION:** **Do not use the old spacer plate. Install a NEW spacer plate. Reusing an old spacer plate may cause internal transmission leaks and transmission damage.**
5	Control Valve Channel Plate
6	Control Valve Channel Plate Bolt [19x] M5 x 55 **Procedure** Hand tighten the bolts.

Control Valve Body Bolt Torque Sequence

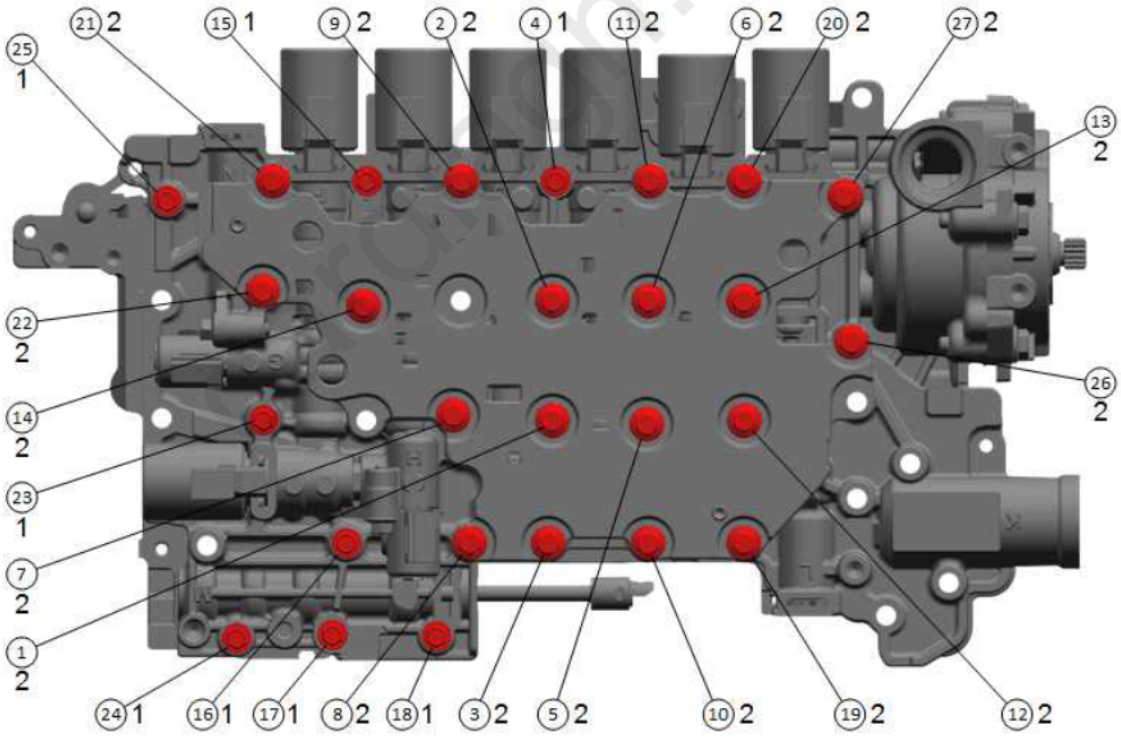

Fig. 118: Control Valve Body Bolt Identification And Bolt Torque Sequence
Courtesy of GENERAL MOTORS COMPANY

Control Valve Body Bolt Torque Sequence

Callout	Component Name

Callout	Component Name
CAUTION: **Bolt torque sequencing is critical to the proper function of the control solenoid valve assembly. Failure to follow the required sequencing may result in transmission malfunction.** **Procedure** Tighten all 27 bolts in the sequence shown.	
1	Control Valve Solenoid Body Bolt [8x] M5 x 45 **Tighten** 8 N.m (71 lb in)
2	Control Valve Channel Plate Bolt [19x] M5 x 55 **Tighten** 8 N.m (71 lb in)

Automatic Transmission Control Wiring Harness Installation

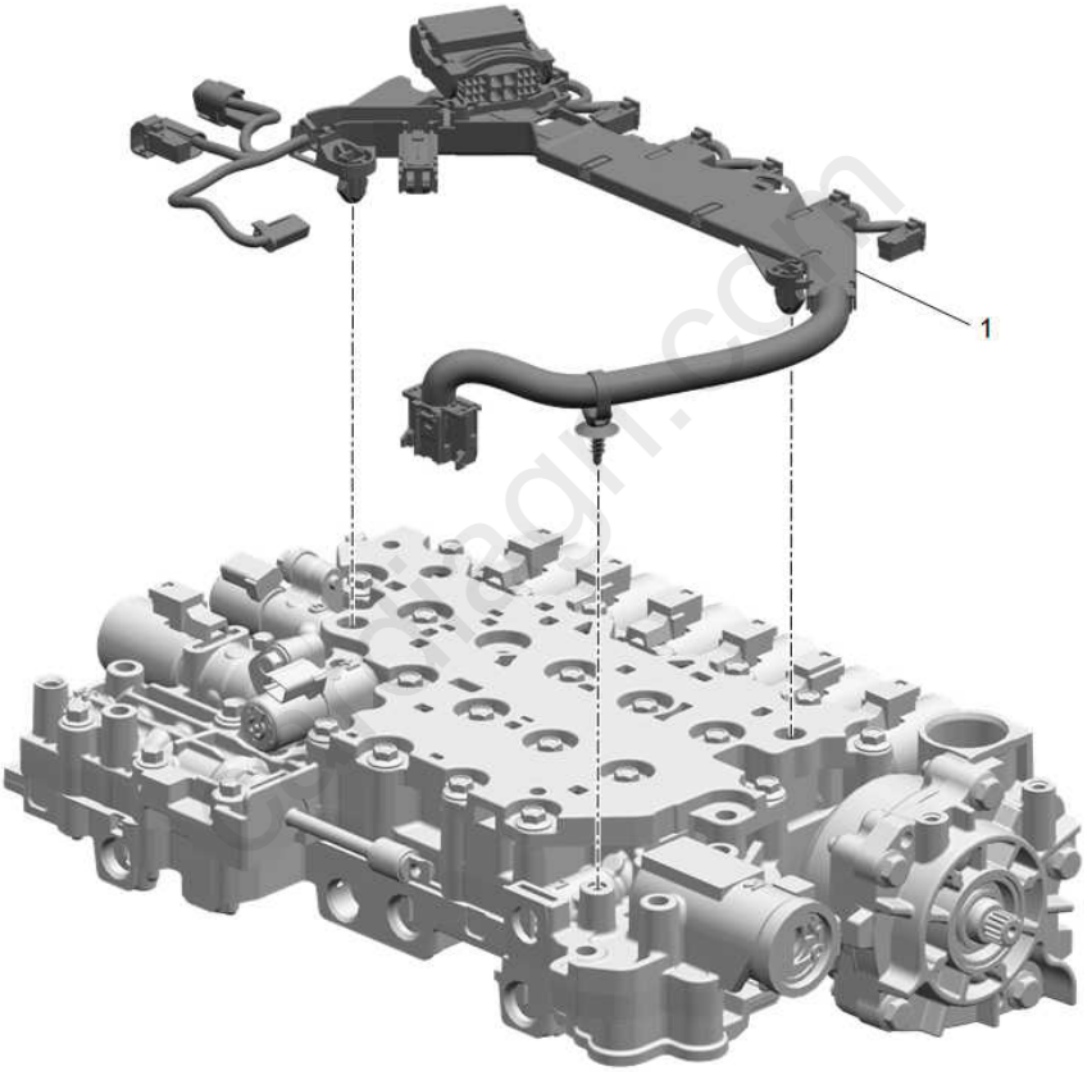

Fig. 119: Automatic Transmission Control Wiring Harness
Courtesy of GENERAL MOTORS COMPANY

Automatic Transmission Control Wiring Harness Installation

Callout	Component Name
1	Automatic Transmission Control Wiring Harness **Procedure** Connect the wiring harness connectors. **NOTE:** **Install NEW wiring harness clips, they are not reusable.**

CONTROL VALVE ASSEMBLY AND TRANSMISSION WIRING HARNESS INSTALLATION

Control Valve Body Assembly Installation

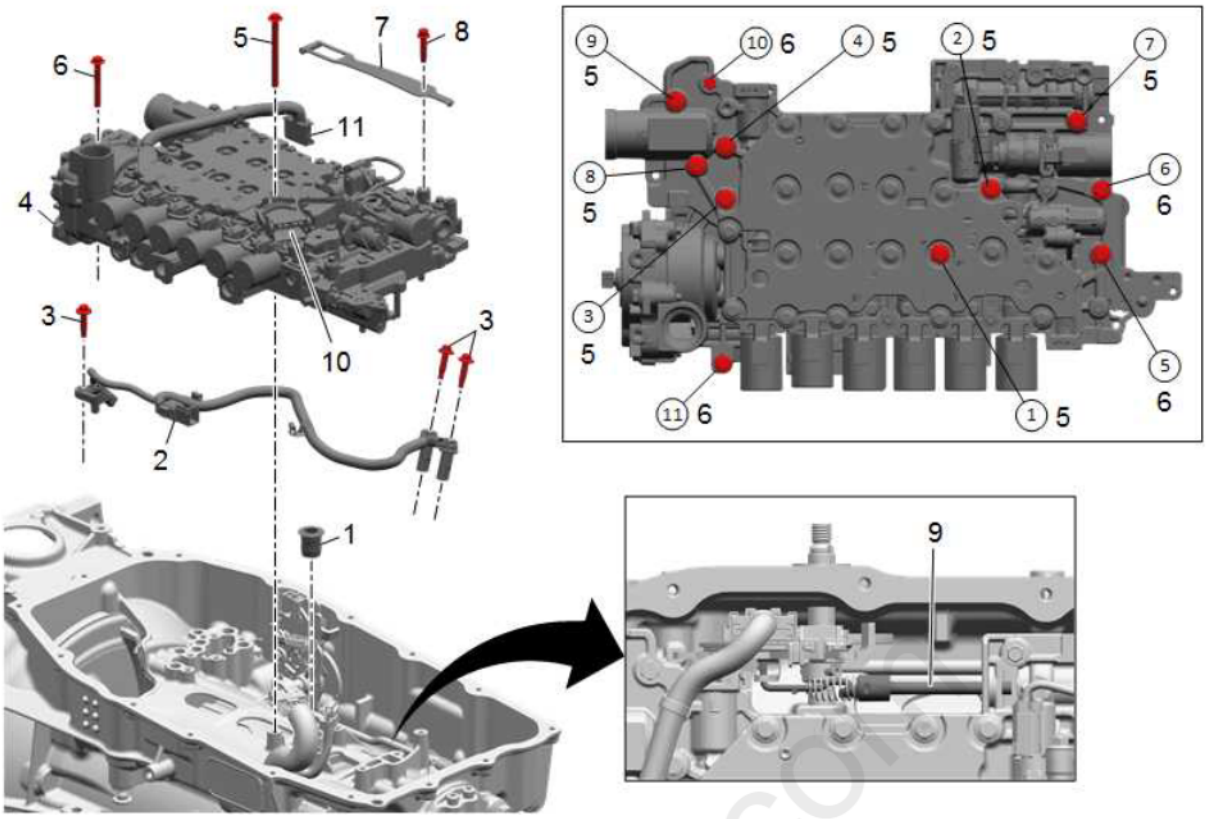

Fig. 120: Control Valve Body Assembly
Courtesy of GENERAL MOTORS COMPANY

Control Valve Body Assembly Installation

Callout	Component Name
1	Clutch Housing Fluid Passage Seal **NOTE:** **Use a NEW seal.**
2	Output Speed Sensor Wiring Harness

cardiagn.com

Callout	Component Name
3	Output Speed Sensor Wiring Harness Bolt M6 x 25 (Qty: 3) **CAUTION:** **Refer to Fastener Caution .** **CAUTION:** **This vehicle is equipped with torque-to-yield or single use fasteners. Install a NEW torque-to-yield or single use fastener when installing this component. Failure to replace the torque-to-yield or single use fastener could cause damage to the vehicle or component.** **NOTE:** **Install NEW bolts.** **Tighten** 1. Tighten the bolts a first pass to 4 N.m (35 lb in). 2. Tighten the bolts a final pass to 45 Degrees. **Special Tools** **DT-48285** Valve Body Torx Plus Socket For equivalent regional tools, refer to **Special Tools** .
4	Control Valve Body Assembly **CAUTION:** **Use care when handling the control valve body assembly. If dropped, damage to the control solenoid valve body assembly internal components may result.** **Procedure** 1. Connect the automatic transmission wiring harness connector to the valve body. 2. Connect the manual valve link to the manual valve.
5	Control Valve Solenoid Body Bolt M6 x 45 (Qty: 4) **Procedure** Tighten the bolts in the sequence shown. **Tighten** 9 N.m (80 lb in)
6	Control Valve Solenoid Body Bolt M6 x 68 (Qty: 7) **Procedure** Tighten the bolts in the sequence shown. **Tighten** 9 N.m (80 lb in)
7	Manual Shaft Detent Lever Spring
8	Manual Shaft Detent Lever Spring Bolt M6 x 25 (Qty: 1) **Tighten** 12 N.m (106 lb in)
9	Manual Valve **Procedure** Connect the manual valve to the manual valve link.
10	A/Trans Wiring Harness **Procedure** Connect the wiring harness connector to the A/Trans control wiring harness.

cardiagn.com

Callout	Component Name
11	A/Trans Control Wiring Harness **Procedure** Connect the wiring harness connector to the manual shift shaft position switch.

A/Trans Fluid Baffle and Driven Sprocket Installation

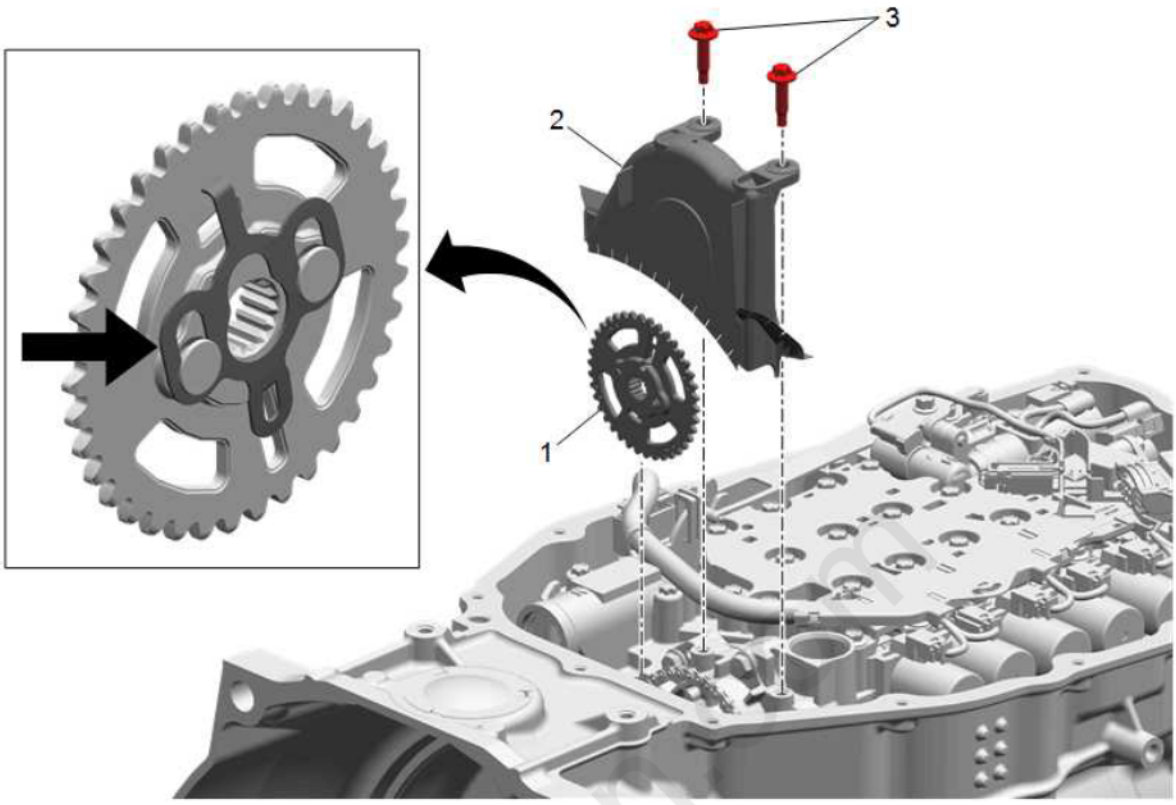

Fig. 121: A/Trans Fluid Baffle and Driven Sprocket
Courtesy of GENERAL MOTORS COMPANY

A/Trans Fluid Baffle and Driven Sprocket Installation

Callout	Component Name
1	Driven Sprocket **Procedure** 1. The driven sprocket locking tab is located on the back of the sprocket and faces the pump. 2. Install the drive link (chain) to the driven sprocket and then install the driven sprocket to the oil pump shaft. 3. Rotate the sprocket as shown and push down on the tab until it locks the driven sprocket in place. **NOTE:** **Ensure the driven sprocket locking tab is in the unlocked position before installing the sprocket.**
2	A/Trans Fluid Baffle

Callout	Component Name
3	A/Trans Fluid Baffle Bolt M6 x 25 (Qty: 2) **CAUTION:** **This vehicle is equipped with torque-to-yield or single use fasteners. Install a NEW torque-to-yield or single use fastener when installing this component. Failure to replace the torque-to-yield or single use fastener could cause damage to the vehicle or component.** **NOTE:** **Install NEW bolts.** **Tighten** 4 N.m (35 lb in) +45 Degrees

AUXILIARY FLUID ACCUMULATOR INSTALLATION (WITH STOP/START)

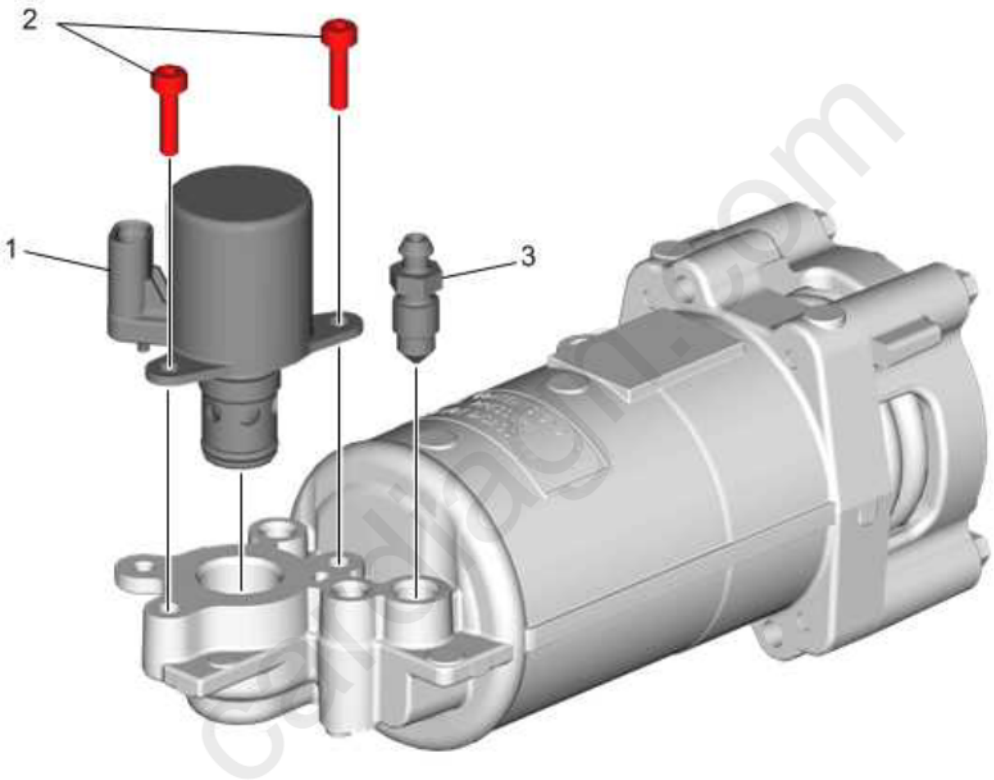

Fig. 122: Auxiliary Fluid Accumulator Solenoid and Bleeder Valve
Courtesy of GENERAL MOTORS COMPANY

Auxiliary Fluid Accumulator Solenoid and Bleeder Valve Installation

Callout	Component Name
1	A/Trans Auxiliary Fluid Accumulator Solenoid
2	A/Trans Auxiliary Fluid Accumulator Solenoid Bolts (Qty: 2) **CAUTION:** **Refer to Fastener Caution .** **Tighten** 3 N.m (27 lb in)
3	A/Trans Auxiliary Fluid Accumulator Bleeder Valve **Tighten** 11 N.m (97 lb in)

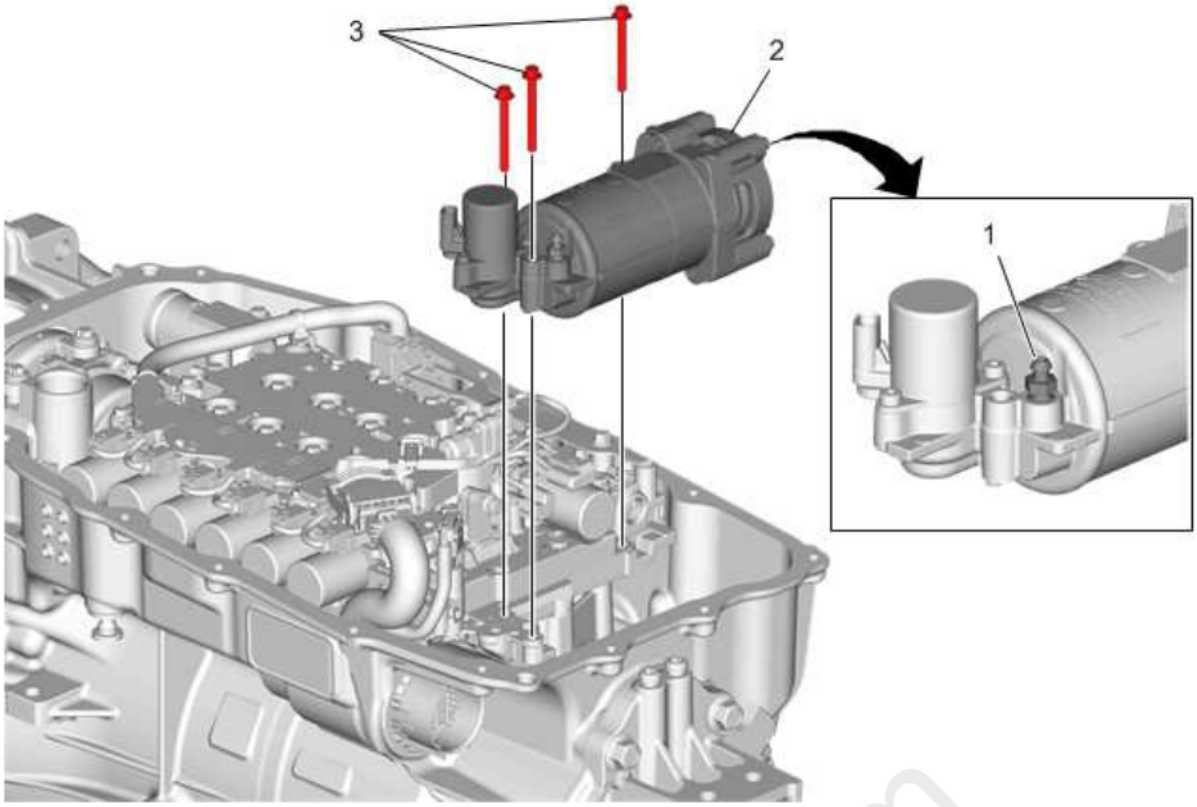

Fig. 123: Auxiliary Fluid Accumulator
Courtesy of GENERAL MOTORS COMPANY

Auxiliary Fluid Accumulator Installation

Callout	Component Name
1	A/Trans Auxiliary Fluid Accumulator Bleeder Valve **NOTE:** **Ensure bleeder valve is securely tightened.**
2	A/Trans Auxiliary Fluid Accumulator
3	A/Trans Auxiliary Fluid Accumulator Bolt (Qty: 3) **Procedure** Connect the accumulator solenoid electrical connector. **Tighten** 8 N.m (71 lb in)

TRANSMISSION FLUID PAN AND FILTER ASSEMBLY INSTALLATION

cardiagn.com

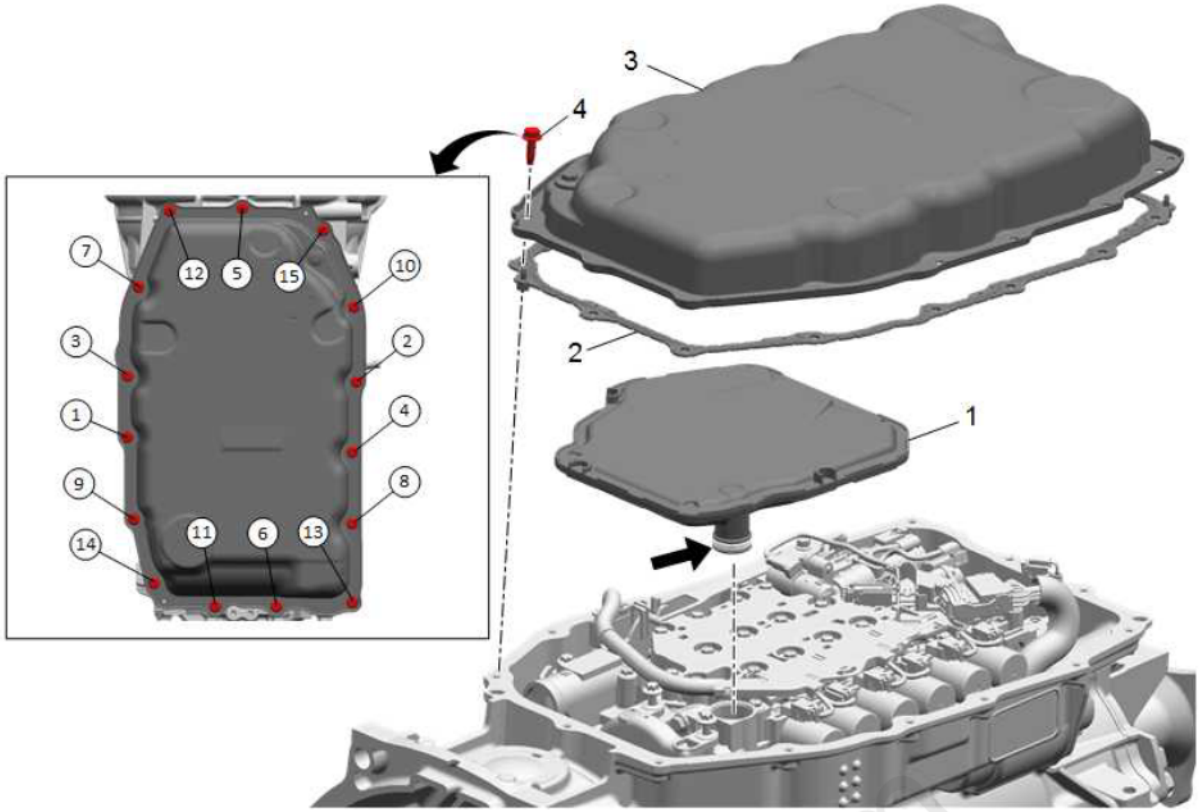

Fig. 124: Transmission Fluid Pan and Filter Assembly
Courtesy of GENERAL MOTORS COMPANY

Callout	Component Name
1	Automatic Transmission Fluid Filter **NOTE:** **The seal is not serviced separately. Inspect the fluid filter seal, if the seal is damaged, replace the filter.**
2	Automatic Transmission Fluid Pan Gasket **NOTE:** **The fluid pan gasket is reusable. Inspect the gasket to determine if it may be reused. If the gasket is stuck to the case or pan, it should be replaced.**
3	Automatic Transmission Fluid Pan
4	Automatic Transmission Fluid Pan Bolt M6 x 20 (Qty: 15) **CAUTION:** **Refer to Fastener Caution .** **Procedure** Tighten the bolts in the sequence shown. **Tighten** 10 N.m (89 lb in)

TORQUE CONVERTER INSTALLATION AND HOLDING FIXTURE REMOVAL

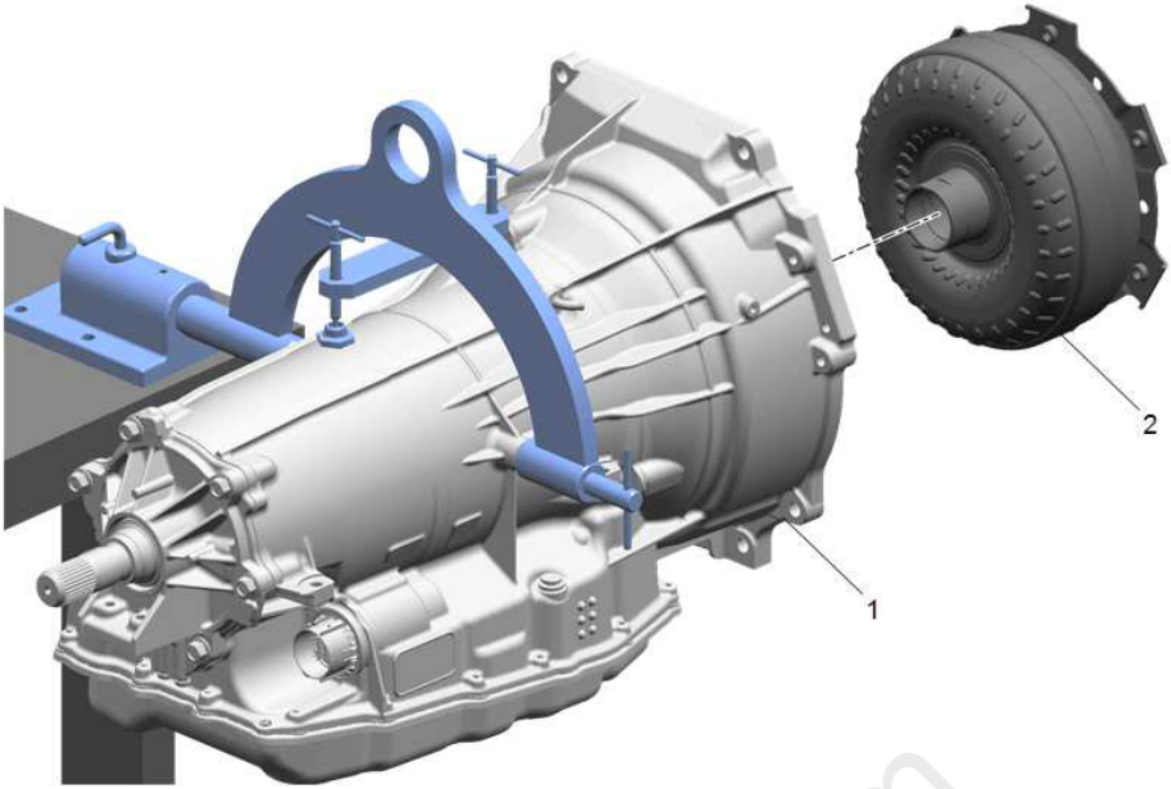

Fig. 125: Torque Converter Installation and Holding Fixture
Courtesy of GENERAL MOTORS COMPANY

Callout	Component Name
1	Automatic Transmission Case Assembly **Procedure** Rotate the transmission so that the fluid pan is down. **Special Tools** • **DT-03289-20** Holding Fixture Base Assembly • **DT-48989** Holding Fixture For equivalent regional tools, refer to **Special Tools** .
2	Torque Converter

cardiagn.com

Back To Article

Automatic Transmission - 8L45 (M5N) or 8L90 (M5X) - Repair Instructions - On Vehicle - CT6

REPAIR INSTRUCTIONS - ON VEHICLE

CONNECTOR RECONNECTION - AUTOMATIC TRANSMISSION

Special Tools

EL-35616 Terminal Test Probe Kit

For equivalent regional tools, refer to **Special Tools** .

When the condition is not currently present, but is indicated in DTC history, the cause may be intermittent. An intermittent may also be the cause when there is a customer complaint, but the symptom cannot be duplicated. Refer to the Symptom Table of the system that is suspect of causing the condition before trying to locate an intermittent condition.

Most intermittent conditions are caused by faulty electrical connections or wiring. Inspect for the following items:

- Loose, corroded or painted terminal stud/fastener
- Wiring broken inside the insulation
- Poor connection between the male and female terminal at a connector
- A terminal not seated all the way into the connector body
- Poor terminal to wire connection - Some conditions which fall under this description are poor crimps, poor solder joints, crimping over the wire insulation rather than the wire itself and corrosion in the wire to terminal contact area, etc.
- Pierced or damaged insulation can allow moisture to enter the wiring causing corrosion. The conductor can corrode inside the insulation, with little visible evidence. Look for swollen and stiff sections of wire in the suspect circuits.
- Wiring which has been pinched, cut or its insulation rubbed through may cause an intermittent open or short as the bare area touches other wiring or parts of the vehicle.
- Wiring that comes in contact with hot or exhaust components
- Refer to **Inducing Intermittent Fault Conditions** in order to duplicate the conditions required, in order to verify the customer concern.
- Refer to **Testing for Electrical Intermittents** for test procedures to detect intermittent open, high resistance, short to ground and short to voltage conditions.
- Refer to **Scan Tool Snapshot Procedure** for advanced intermittent diagnosis and Vehicle Data Recorder operation.

Testing for Terminal Fretting

Some intermittent conditions can be caused by wire terminal fretting corrosion. Fretting corrosion is a build-up of insulating, oxidized wear debris that can form when there is a small motion between electrical contacts. The oxidized wear debris can pile up enough at the electrical contact spots that the electrical resistance across the connection increases. Movement between the contacting surfaces as small as 10 to 100 microns can cause fretting. To put this in perspective, a sheet of paper is about 100 microns thick, so fretting motion is small and hard to see. Vibration and thermal expansion/contraction are the main sources that create fretting motion. Since vehicles vibrate and can experience large temperature swings, they are a good source for fretting motion. Tin, copper, nickel and iron surfaces are all susceptible to fretting corrosion. Fretting corrosion can be difficult to see but it looks like small, dark smudges on the terminals contact surface.

To correct a fretting condition disconnect the suspect connector and add dielectric grease / lubricant (Nyogel 760G or equivalent, meeting GM specification 9986087) to both sides of the connector terminals. Then reconnect the connector and wipe away any excess lubricant. This will correct the additional terminal contact resistance due to the terminal fretting corrosion.

Testing for Proper Terminal Contact

It is important to test terminal contact at the component and any inline connectors before replacing a suspect component. Mating terminals must be inspected to ensure good terminal contact. A poor connection between the male and female terminal at a connector may be the result of contamination or deformation.

Contamination may be caused by the connector halves being improperly connected. A missing or damaged connector seal, damage to the connector itself or exposing the terminals to moisture and dirt can also cause contamination. Contamination, usually in the underhood or underbody connectors, leads to terminal corrosion, causing an open circuit or intermittently open circuit.

Deformation is caused by probing the mating side of a connector terminal without the proper adapter. Always use the **EL-35616** kit when probing connectors. Other causes of terminal deformation are improperly joining the connector halves or repeatedly separating and joining the connector halves. Deformation, usually to the female terminal contact tang, can result in poor terminal contact causing an open or intermittently open circuit.

Testing for Proper Terminal Contact in Bussed Electrical Centers

It is very important to use the correct test adapter when testing for proper terminal contact of fuses and relays in a bussed electrical center. Use the **EL-35616** kit to test for proper terminal contact. Failure to use the **EL-35616** kit can result in improper diagnosis of the bussed electrical center.

Follow the procedure below in order to test terminal contact:

1. Separate the connector halves.
2. Visually inspect the connector halves for contamination. Contamination may result in a white or green build-up within the connector body or between terminals. This causes high terminal resistance, intermittent contact or an open circuit. An underhood or underbody connector that shows signs of contamination should be replaced in its entirety: terminals, seals and connector body.
3. Using an equivalent male terminal/terminated lead, verify that the retention force is significantly different between a known good terminal and the suspect terminal. Replace the female terminal in question.

Flat Wire Connectors

There are no serviceable parts for flat wire connectors on the harness side or the component side.

Follow the procedure below in order to test terminal contact:

1. Remove the component in question.
2. Visually inspect each side of the connector for signs of contamination. Avoid touching either side of the connector as oil from your skin may be a source of contamination as well.
3. Visually inspect the terminal bearing surfaces of the flat wire circuits for splits, cracks or other imperfections that could cause poor terminal contact. Visually inspect the component side connector to ensure that all of the terminals are uniform and free of damage or deformation.
4. Insert the appropriate adapter into the flat wire harness connector in order to test the circuit in question.

Control Module/Component Voltage and Grounds

Poor voltage or ground connections can cause widely varying symptoms.

- Test all control module voltage supply circuits. Many vehicles have multiple circuits supplying voltage to a control module. Other components in the system may have separate voltage supply circuits that may also need to be tested. Inspect connections at the module/component connectors,

cardiagn.com

fuses and any intermediate connections between the voltage source and the module/component. A test lamp or a DMM may indicate that voltage is present, but neither tests the ability of the circuit to carry sufficient current. Operate the component to test the ability of the circuit to carry sufficient current. Refer to **Circuit Testing** and **Power Distribution Schematics** .

- Test all control module ground and system ground circuits. The control module may have multiple ground circuits. Other components in the system may have separate grounds that may also need to be tested. Inspect grounds for clean and tight connections at the grounding point (screw or stud). Inspect the connections at the component and in splice packs, where applicable. Operate the component to test the ability of the circuit to carry sufficient current. Refer to **Circuit Testing** and **Ground Distribution Schematics** .

Temperature Sensitivity

- An intermittent condition may occur when a component/connection reaches normal operating temperature. The condition may occur only when the component/connection is cold or only when the component/connection is hot.
- Freeze Frame, Failure Records, Snapshot or Vehicle Data Recorder data may help with this type of intermittent condition, where applicable.
- If the intermittent is related to heat, review the data for a relationship with the following:
  - High ambient temperatures
  - Underhood/engine generated heat
  - Circuit generated heat due to a poor connection or high electrical load
  - Higher than normal load conditions, towing, etc.
- If the intermittent is related to cold, review the data for the following:
  - Low ambient temperatures - In extremely low temperatures, ice may form in a connection or component. Inspect for water intrusion.
  - The condition only occurs on a cold start.
  - The condition goes away when the vehicle warms up.
- Information from the customer may help to determine if the trouble follows a pattern that is temperature related.
- If temperature is suspected of causing an intermittent fault condition, attempt to duplicate the condition. Refer to **Inducing Intermittent Fault Conditions** in order to duplicate the conditions required.

Electromagnetic Interference and Electrical Noise

Some electrical components/circuits are sensitive to electromagnetic interference or other types of electrical noise. Inspect for the following conditions:

- A mis-routed harness that is too close to high voltage/high current devices such as secondary ignition components, motors, generator etc. - These components may induce electrical noise on a circuit that could interfere with normal circuit operation.
- Electrical system interference caused by a malfunctioning relay or a control module driven solenoid or switch - These conditions can cause a sharp electrical surge. Normally, the condition will occur when the malfunctioning component is operating.
- Installation of non-factory or aftermarket add on accessories such as lights, 2-way radios, amplifiers, electric motors, remote starters, alarm systems, cell phones, etc. - These accessories may create interference in other circuits while operating and the interference would disappear when the accessory is not operating. Refer to **Checking Aftermarket Accessories** .
- Test for an open diode across the A/C compressor clutch and for other open diodes. Some relays may contain a clamping diode.
- The generator may be allowing AC noise into the electrical system.

Incorrect Control Module

- There are only a few situations where reprogramming a control module is appropriate:
  - A new service control module is installed.
  - A control module from another vehicle is installed.

cardiagn.com

- Revised software/calibration files have been released for this vehicle.

- Verify that the control module contains the correct software/calibration. If incorrect programming is found, reprogram the control module with the most current software/calibration. Refer to **Control Module References** for replacement, setup and programming.

NOTE: **DO NOT re-program the control module with the SAME software/calibration files that are already present in the control module. This is not an effective repair for any type of concern.**

TRANSMISSION CONTROL MODULE REPLACEMENT

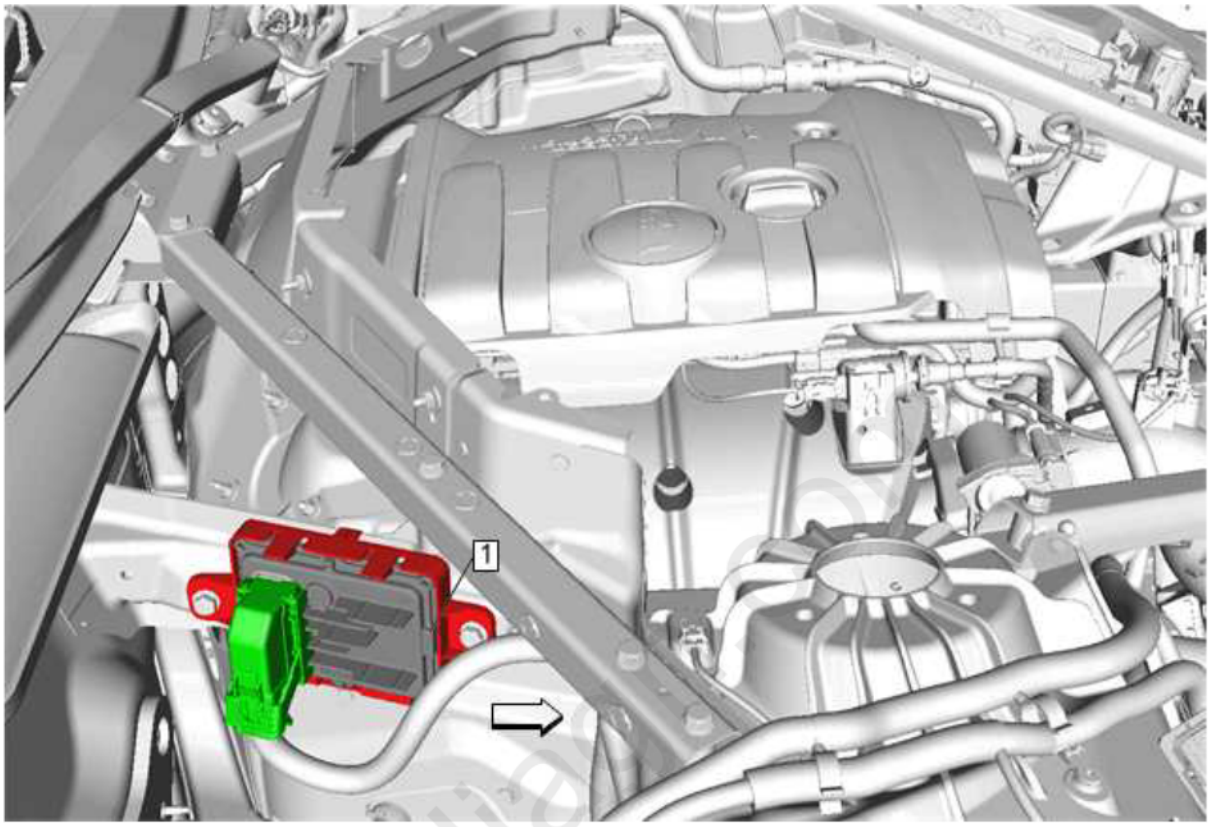

Fig. 1: Transmission Control Module
Courtesy of GENERAL MOTORS COMPANY

Callout	Component Name
Preliminary Procedure **Air Inlet Grille Panel Access Hole Cover Replacement**	
1	Transmission Control Module **Procedure** 1. Disconnect the electrical connector. 2. Remove the module from the module bracket by releasing the retaining tabs. 3. Program the transmission control module, if replaced. **Control Module References**

TRANSMISSION CONTROL MODULE BRACKET REPLACEMENT

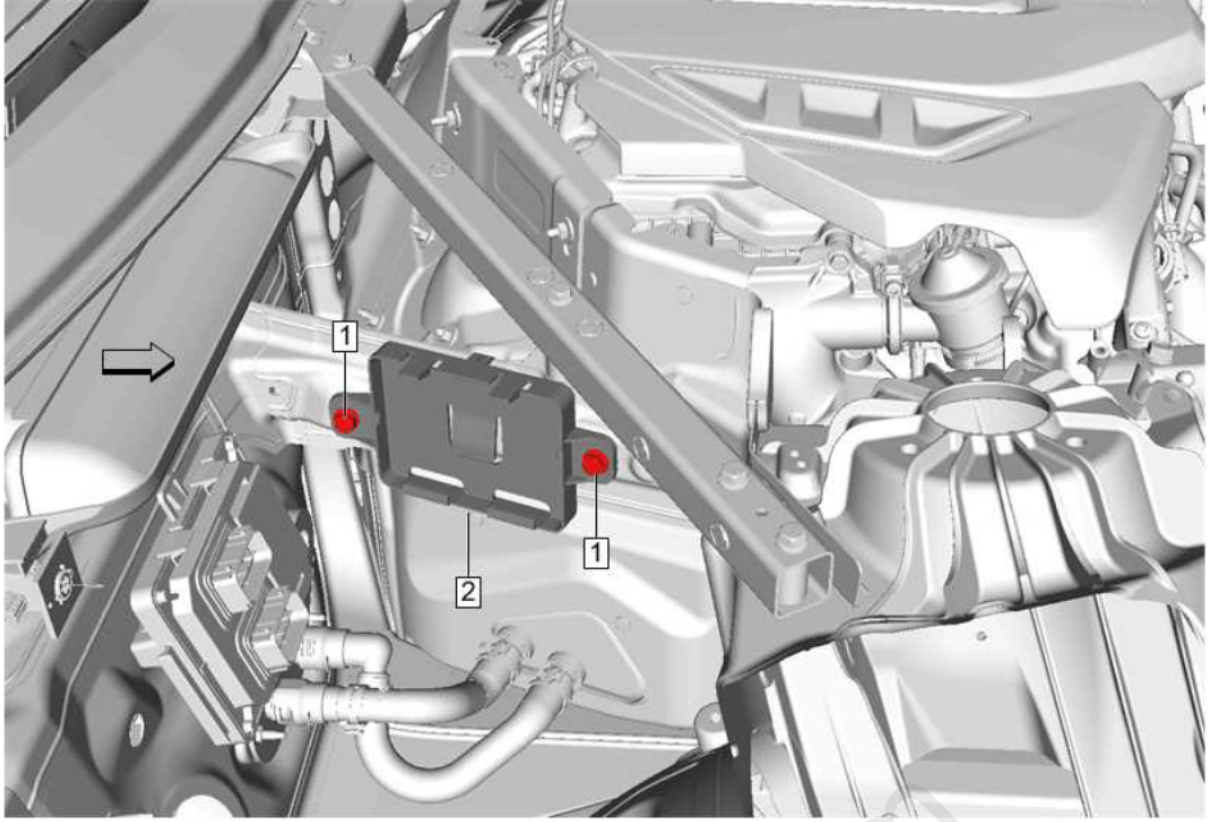

Fig. 2: Transmission Control Module Bracket
Courtesy of GENERAL MOTORS COMPANY

Callout	Component Name
Preliminary Procedure **Transmission Control Module Replacement**	
1	Transmission Control Module Bracket Fastener [2x] **CAUTION:** **Refer to Fastener Caution .** **Tighten** 9 N.m (80 lb in)
2	Transmission Control Module Bracket

RANGE SELECTOR LEVER CABLE REPLACEMENT

Removal Procedure

1. Set the park brake.
2. Raise and support the vehicle. Refer to **Lifting and Jacking the Vehicle** .
3. Disconnect the transmission range selector lever cable terminal (1) from the transmission manual shift lever pin (6).

cardiagn.com

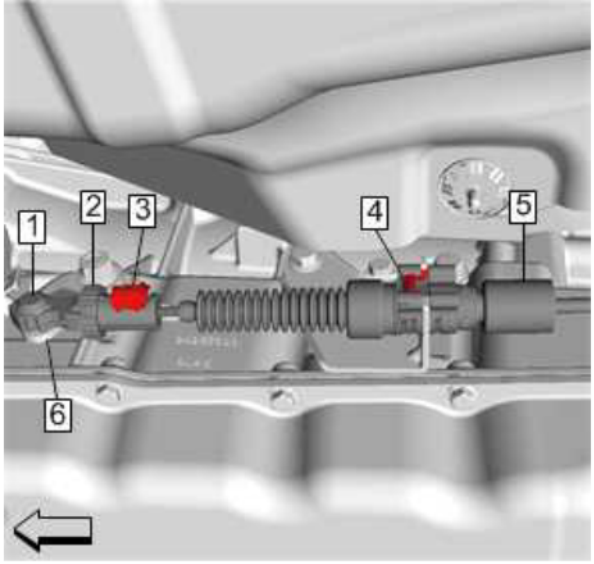

Fig. 3: Transmission Range Selector Lever Cable Terminal
Courtesy of GENERAL MOTORS COMPANY

4. Slide the retainer (4) rearward to release the transmission range selector lever cable from the bracket.
5. Lower the vehicle.
6. **Front Floor Lower Console Replacement (Left Side)** **Front Floor Lower Console Replacement (Right Side)** Â» Left Side Remove
7. Slide the transmission range selector lever cable retainer rearward (2) and remove the transmission range selector cable from the transmission control base.

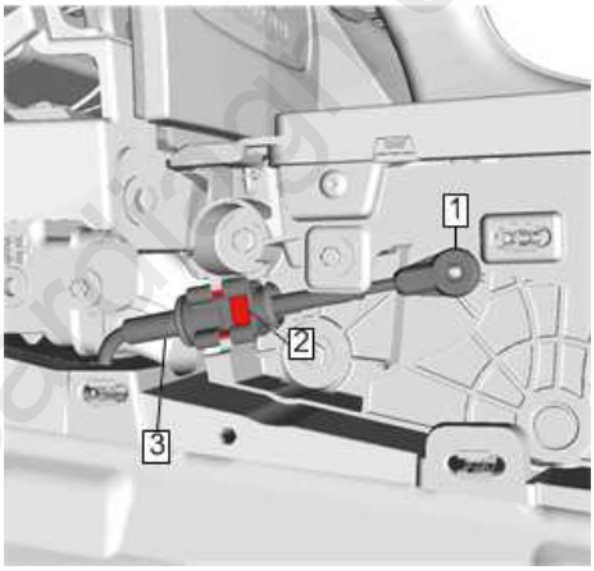

Fig. 4: Transmission Range Selector Lever Cable Retainer Rearward
Courtesy of GENERAL MOTORS COMPANY

8. Disconnect the transmission range selector lever cable terminal (1) from the shift lever pin.
9. **Front Floor Console Replacement** Â» Remove
10. Remove the two fasteners (1) then remove grommet and cable assembly (2) from the floor panel.

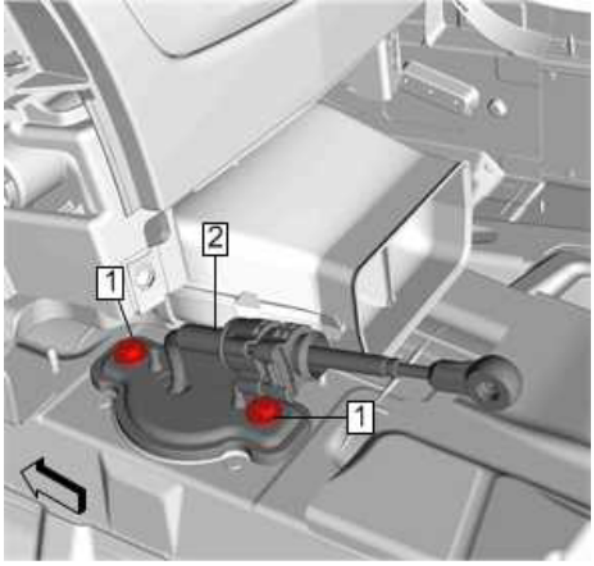

Fig. 5: Fasteners And Cable Assembly
Courtesy of GENERAL MOTORS COMPANY

11. Remove the transmission range selector lever cable from the vehicle.

Installation Procedure

1. Install the grommet and cable assembly (2) in the vehicle.

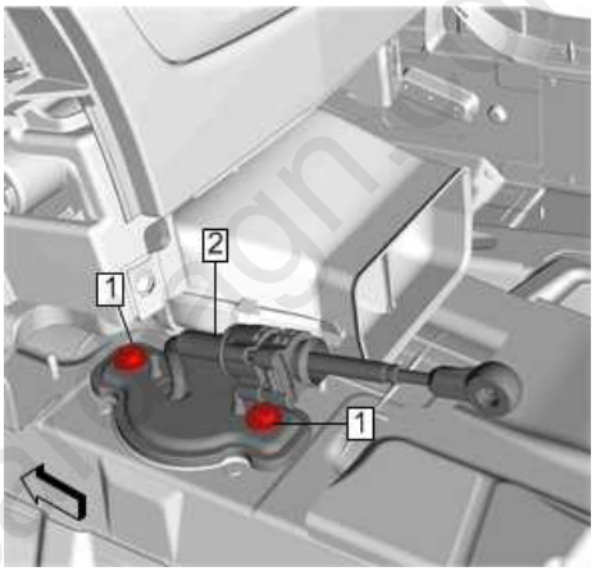

Fig. 6: Fasteners And Cable Assembly
Courtesy of GENERAL MOTORS COMPANY

2. Install the two fasteners (1) and tighten to 9 N.m (80 lb in).

CAUTION: **Refer to Fastener Caution .**

3. **Front Floor Console Replacement** Â» Install
4. Connect the transmission range selector lever cable terminal (1) to the shift lever pin.

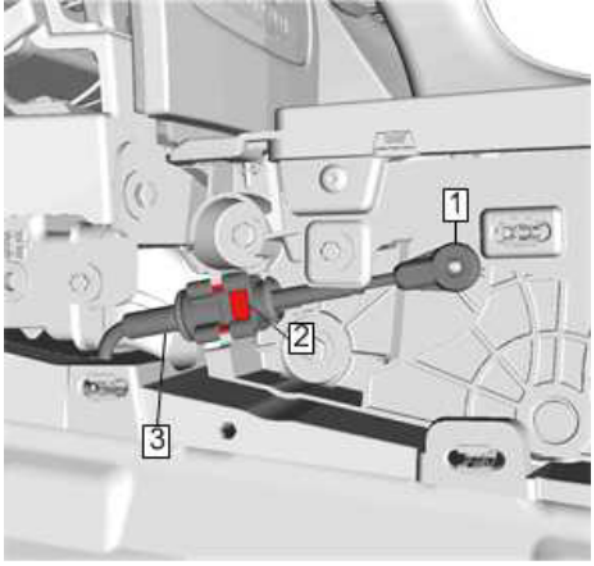

Fig. 7: Transmission Range Selector Lever Cable Retainer Rearward
Courtesy of GENERAL MOTORS COMPANY

WARNING: **After installing the transmission range selector shift cable, pull up and push down on ALL connections to verify that the connections are fully seated and properly engaged. Failure to perform this task can result in the vehicle not being able to shift into PARK causing potential vehicle damage and bodily injury.**

5. Install the transmission range selector cable to the transmission control base by pressing down until it seats into place.
6. Slide the transmission range selector lever cable retainer forward (2) to lock the transmission range selector cable to the transmission control base.
7. Front Floor Lower Console Replacement (Left Side) Front Floor Lower Console Replacement (Right Side) Â» Left Side Install
8. Raise the vehicle.
9. Connect the transmission range selector lever cable terminal (1) to the transmission manual shift lever pin (6).

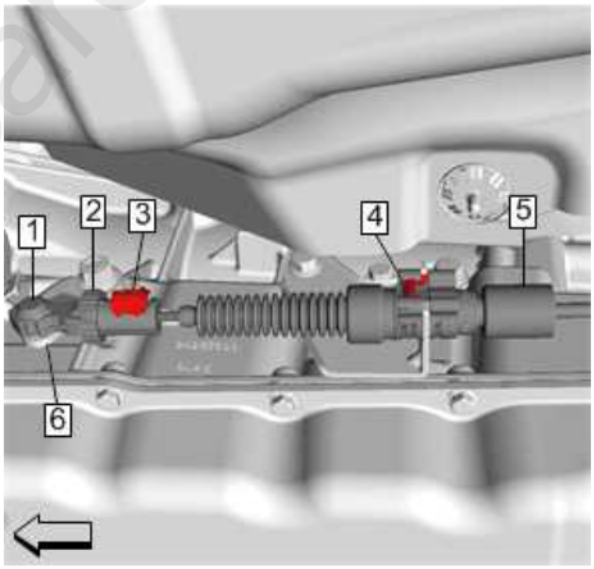

Fig. 8: Transmission Range Selector Lever Cable Terminal
Courtesy of GENERAL MOTORS COMPANY

10. Install the cable (5) into the bracket and ensure cable is fully seated.
11. Slide the transmission range selector lever cable retainer rearward (4) to lock the transmission range selector cable to the bracket.
12. Adjust the cable. Refer to Range Selector Lever Cable Adjustment.

RANGE SELECTOR LEVER CABLE ADJUSTMENT

cardiagn.com

1. Set the park brake and chock the wheels.

NOTE: **Adjust the automatic transmission range selector cable while the transmission and the gear selector are in the Park position only. Failure to do so may cause mis-adjustment.**

2. Verify the transmission range select lever is in the park position.
3. Verify the transmission manual shift lever is in the park position.
4. If installing a new cable, skip this step and go to the next step. Pull the retaining collar (2) forward, then release the range select cable adjuster clip (3) by pushing in on the adjuster clip from the backside.

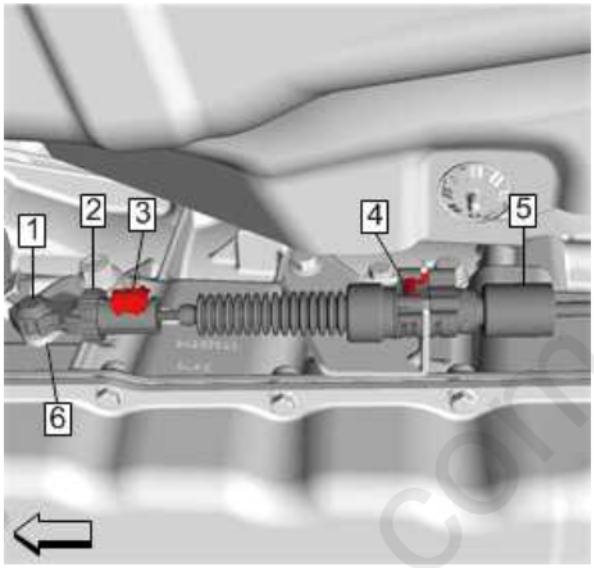

Fig. 9: Transmission Range Selector Lever Cable Terminal
Courtesy of GENERAL MOTORS COMPANY

WARNING: **After installing the transmission range selector shift cable, pull up and push down on ALL connections to verify that the connections are fully seated and properly engaged. Failure to perform this task can result in the vehicle not being able to shift into PARK causing potential vehicle damage and bodily injury.**

5. Depress the adjuster clip (3) inboard, locking the adjuster clip completely.
6. Ensure that the cable adjuster clip (3) is secured with retaining collar (2) covering the adjuster clip.
7. Check the transmission range select lever in all gear selections for proper operation.

RANGE SELECTOR LEVER CABLE BRACKET REPLACEMENT (M5N)

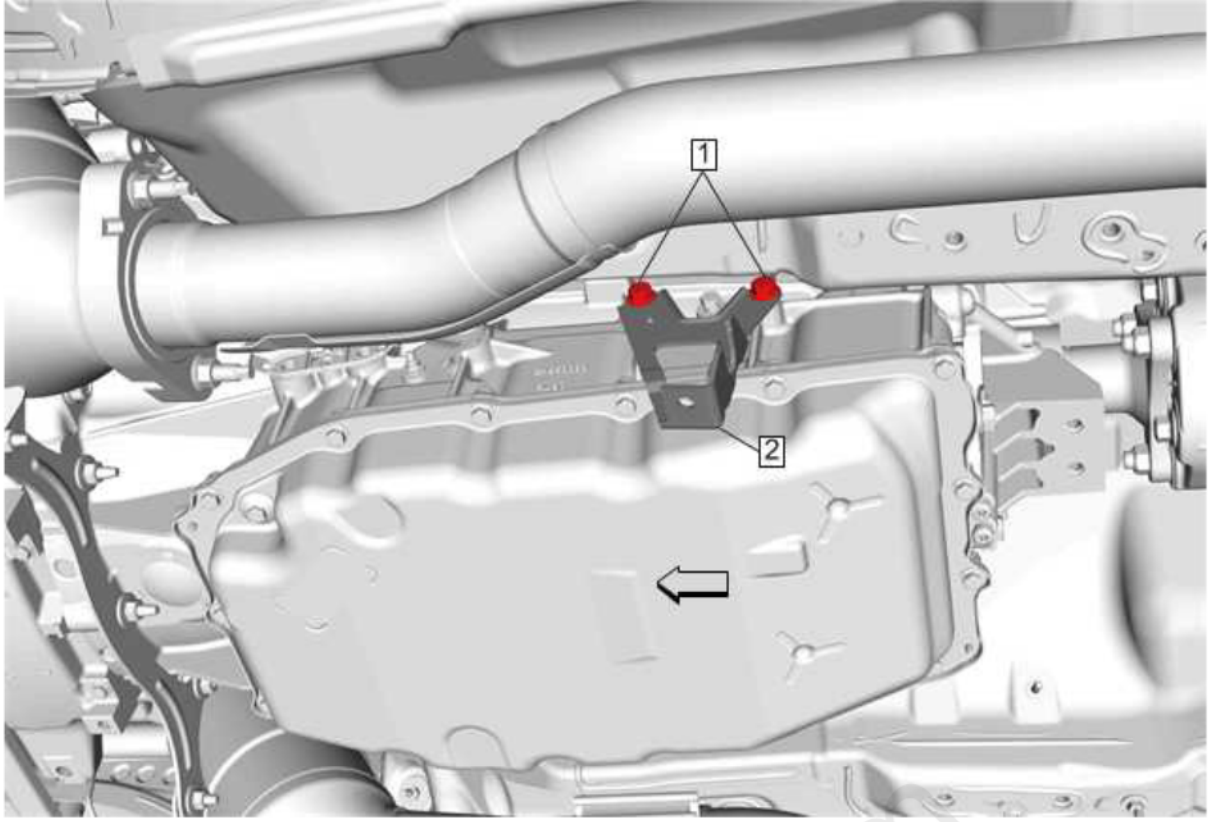

Fig. 10: Range Selector Lever Cable Bracket (M5N)
Courtesy of GENERAL MOTORS COMPANY

Callout	Component Name
Preliminary Procedures 1. Apply the park brake. 2. Shift the transmission into neutral. 3. Lifting and Jacking the Vehicle 4. Disconnect the range selector lever cable from the bracket and reposition out of the way. Refer to Range Selector Lever Cable Replacement	
1	Transmission Range Selector Cable Bracket Bolt [2x] **CAUTION:** **Refer to Fastener Caution .** **Tighten** 22 N.m (16 lb ft)
2	Transmission Range Selector Cable Bracket

AUTOMATIC TRANSMISSION RANGE SELECTOR LEVER REPLACEMENT

carmagn.com

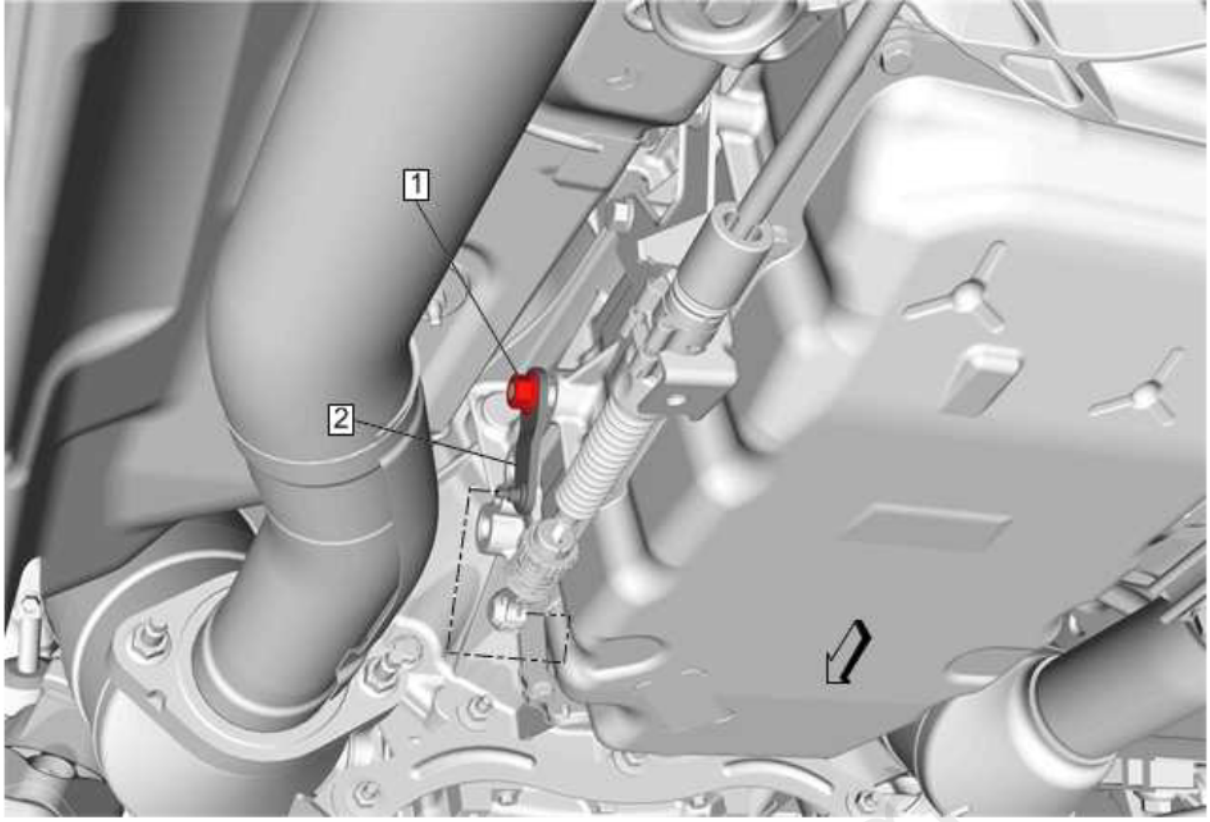

Fig. 11: Automatic Transmission Range Selector Lever
Courtesy of GENERAL MOTORS COMPANY

Callout	Component Name
WARNING: **After installing the transmission range selector shift cable, pull up and push down on ALL connections to verify that the connections are fully seated and properly engaged. Failure to perform this task can result in the vehicle not being able to shift into PARK causing potential vehicle damage and bodily injury.** **Preliminary Procedures** 1. Apply the park brake. 2. Shift the transmission into neutral. 3. Disconnect the transmission range selector cable from the range selector cable lever ball stud.	
1	Transmission Range Selector Cable Lever Nut **WARNING:** **Hold the transmission range selector lever while removing or installing the lever retaining nut. Failure to hold the lever can cause damage to the transmission internal park system components which could allow the vehicle to roll when placed in the park position.** **CAUTION:** **Refer to Fastener Caution .** **Tighten** 25 N.m (18 lb ft)
2	Transmission Range Selector Cable Lever

MANUAL SHIFT AUXILIARY POSITION SWITCH REPLACEMENT - STEERING WHEEL (LEFT SIDE)

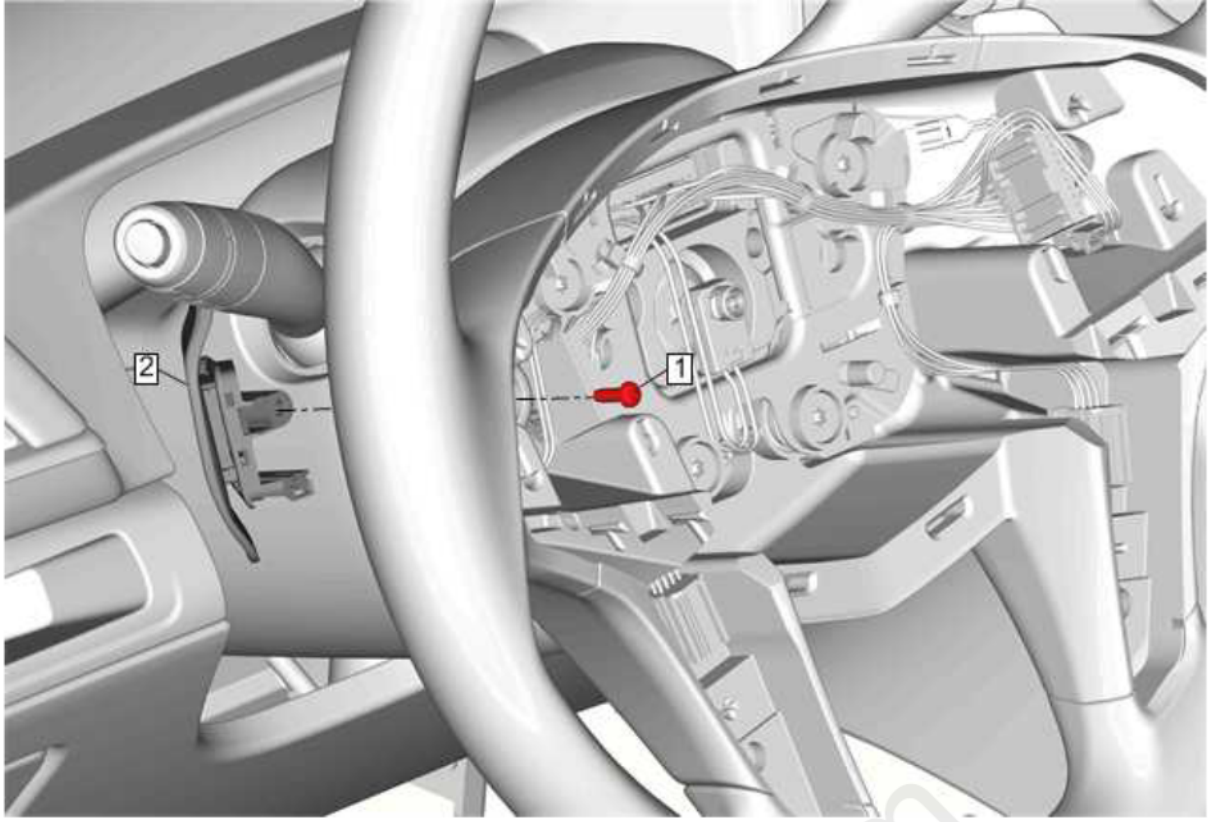

Fig. 12: Manual Shift Auxiliary Position Switch - Steering Wheel (Left Side)
Courtesy of GENERAL MOTORS COMPANY

Callout	Component Name
Preliminary Procedure Steering Wheel Spoke Cover Replacement	
1	Automatic Transmission Manual Shift Auxiliary Position Switch Bolt **CAUTION:** **Refer to Fastener Caution .** **Tighten** 2.5 N.m (22 lb in)
2	Automatic Transmission Manual Shift Auxiliary Position Switch - Left Side **Procedure** 1. Disconnect the electrical connector. 2. Ensure the steering wheel manual shift auxiliary position switch is properly seated on the steering wheel during installation.

MANUAL SHIFT AUXILIARY POSITION SWITCH REPLACEMENT - STEERING WHEEL (RIGHT SIDE)

cardiagn.com

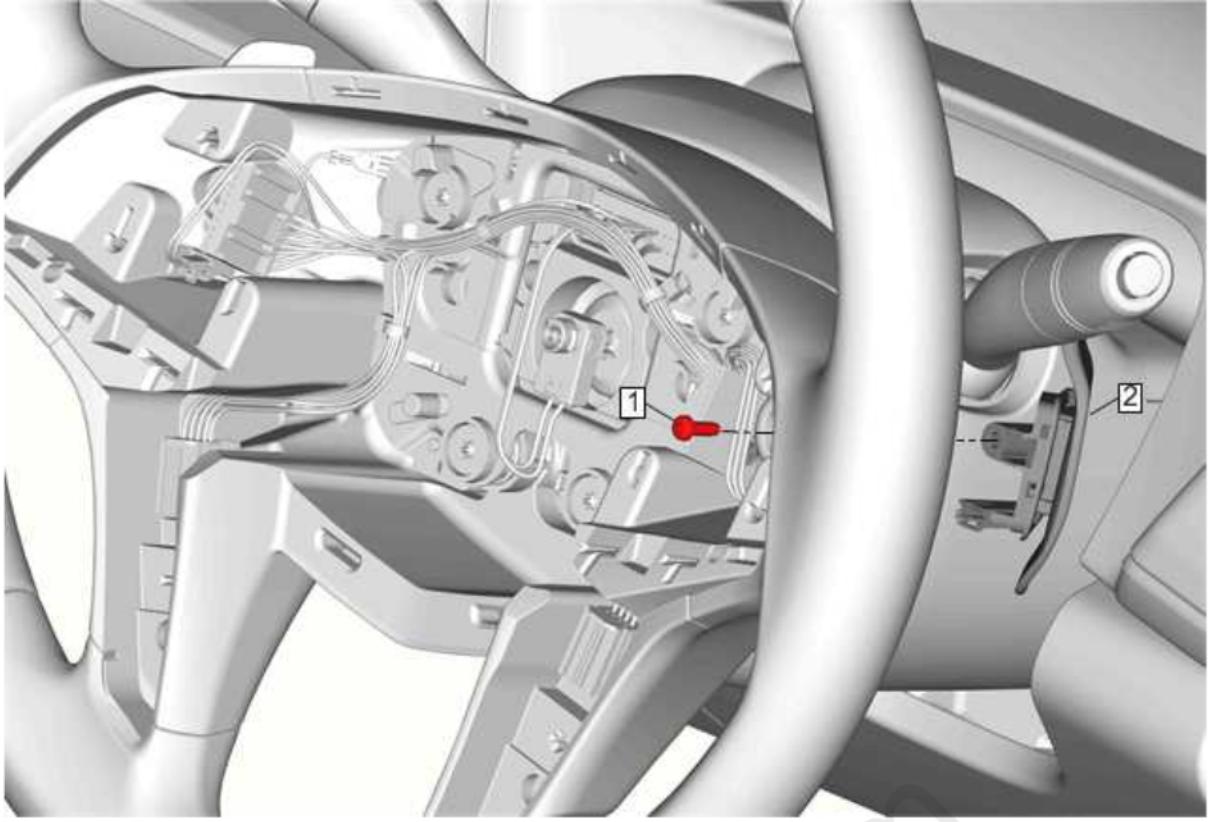

Fig. 13: Manual Shift Auxiliary Position Switch - Steering Wheel (Right Side)
Courtesy of GENERAL MOTORS COMPANY

Callout	Component Name
Preliminary Procedure Steering Wheel Spoke Cover Replacement	
1	Automatic Transmission Manual Shift Auxiliary Position Switch Bolt **CAUTION:** Refer to Fastener Caution . **Tighten** 2.5 N.m (22 lb in)
2	Automatic Transmission Manual Shift Auxiliary Position Switch - Right Side **Procedure** 1. Disconnect the electrical connector. 2. Ensure the steering wheel manual shift auxiliary position switch is properly seated on the steering wheel during installation.

AUTOMATIC TRANSMISSION FLUID PRESSURE TEST HOLE PLUG REPLACEMENT (REAR WHEEL DRIVE)

Removal Procedure

1. Raise and support the vehicle. Refer to Lifting and Jacking the Vehicle .
2. Clean the surrounding area of the automatic transmission fluid pressure test hole plug.

cardiagn.com

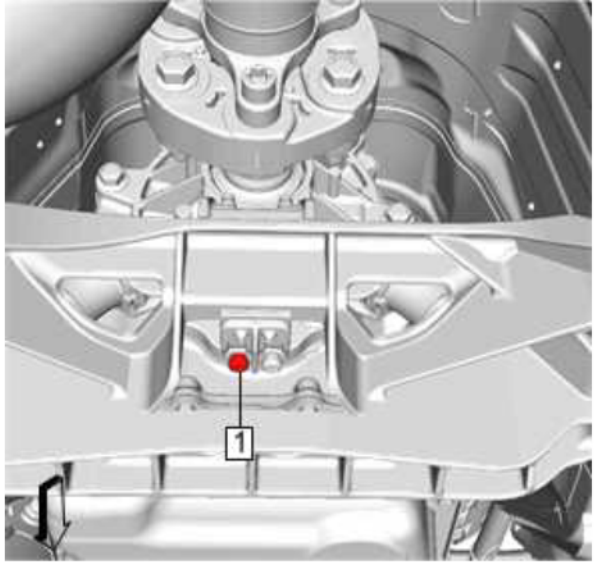

Fig. 14: Automatic Transmission Fluid Pressure Test Hole Plug
Courtesy of GENERAL MOTORS COMPANY

3. Remove the automatic transmission fluid pressure test hole plug (1).

Installation Procedure

1. Install the automatic transmission fluid pressure test hole plug (1) and tighten to 11 N.m (97 lb in).

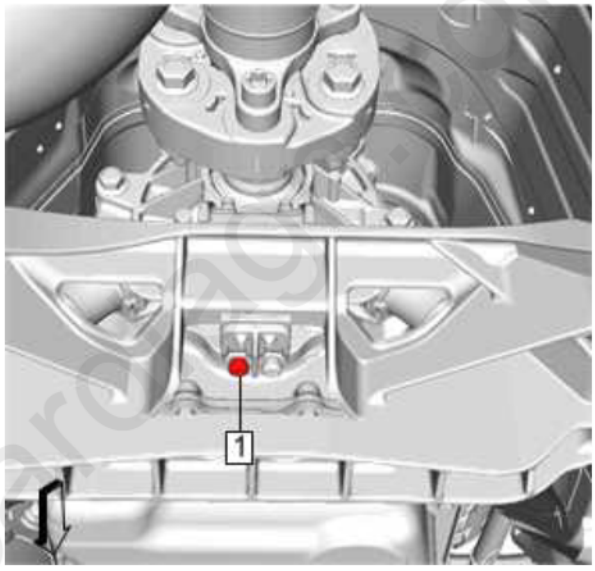

Fig. 15: Automatic Transmission Fluid Pressure Test Hole Plug
Courtesy of GENERAL MOTORS COMPANY

CAUTION: **Refer to Component Fastener Tightening Caution .**

2. Check the transmission fluid level (fill if necessary). Refer to **Transmission Fluid Fill Procedure** .
3. Lower the vehicle.

AUTOMATIC TRANSMISSION FLUID PRESSURE TEST HOLE PLUG REPLACEMENT (ALL WHEEL DRIVE)

Removal Procedure

1. **Transmission Support Crossmember Replacement (LTG)** Â» Remove
2. Clean the surrounding area of the automatic transmission fluid pressure test hole plug.

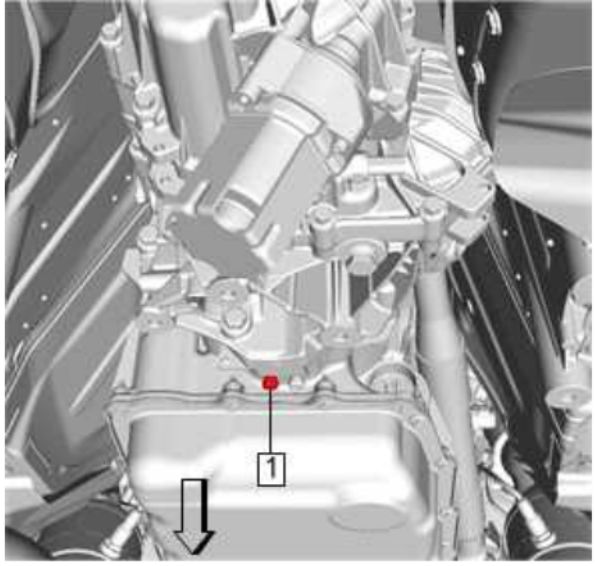

Fig. 16: Automatic Transmission Fluid Pressure Test Hole Plug
Courtesy of GENERAL MOTORS COMPANY

3. Remove the automatic transmission fluid pressure test hole plug (1).

Installation Procedure

1. Install the automatic transmission fluid pressure test hole plug (1) and tighten to 11 N.m (97 lb in).

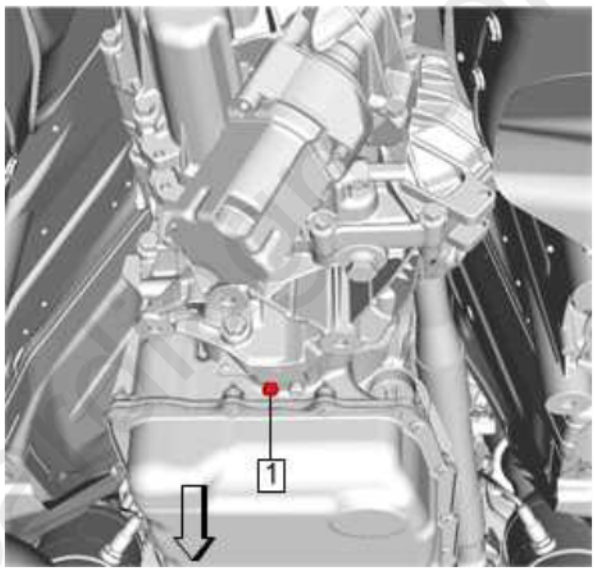

Fig. 17: Automatic Transmission Fluid Pressure Test Hole Plug
Courtesy of GENERAL MOTORS COMPANY

CAUTION: **Refer to Component Fastener Tightening Caution .**

2. Check the transmission fluid level, fill if necessary. Refer to **Transmission Fluid Fill Procedure** .
3. **Transmission Support Crossmember Replacement (LTG)** Â» Install

TRANSMISSION FLUID FILLER TUBE PLUG REPLACEMENT

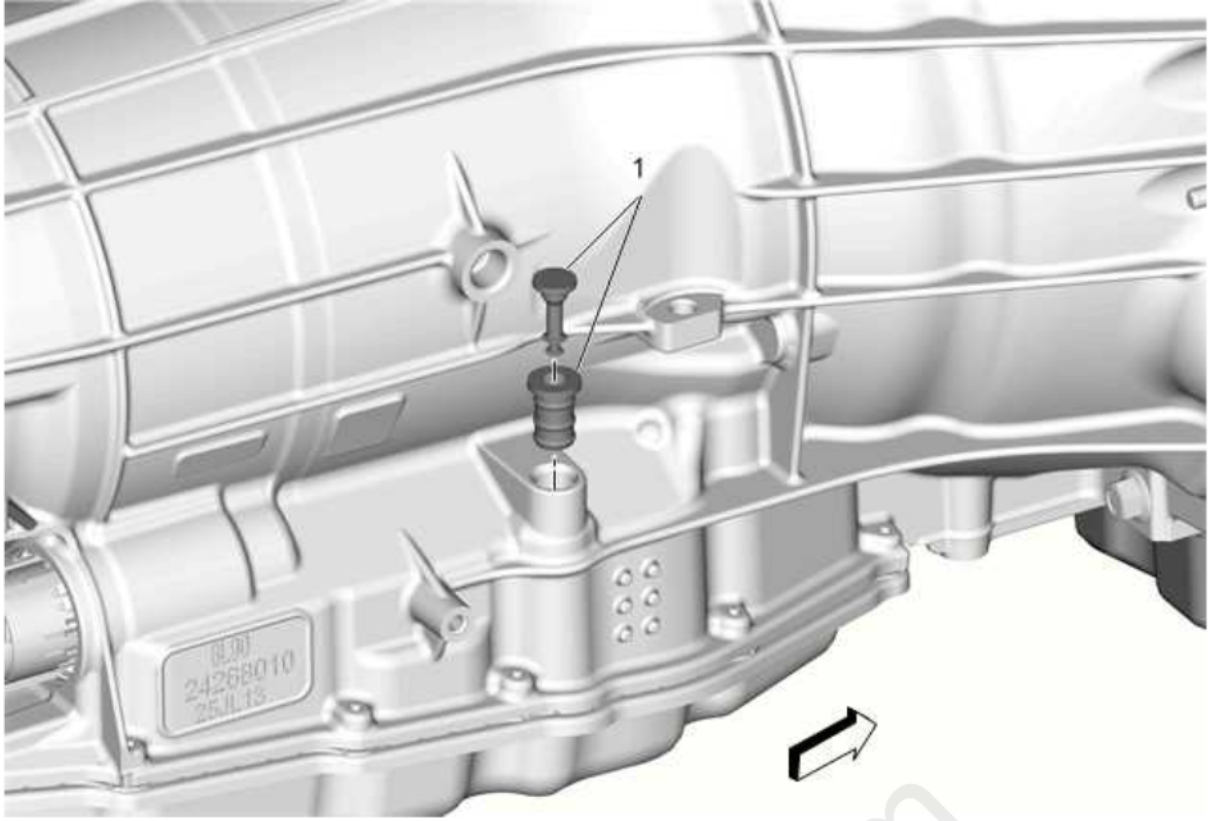

Fig. 18: Transmission Fluid Filler Tube Plug
Courtesy of GENERAL MOTORS COMPANY

Callout	Component Name
Preliminary Procedures {If equipped} Front Axle Propeller Shaft Replacement (LGX, LGW) .	
1	Transmission Fluid Level Tube Plug Assembly

TRANSMISSION MOUNT INSPECTION

CAUTION: **To prevent transmission oil pan damage and possible transmission failure, insert a block of wood that completely covers the bottom of the transmission oil pan surface, between the transmission oil pan and the jack support. If the inserted block of wood does not completely cover the bottom of the transmission oil pan, this may result in damage to the transmission oil pan and possible transmission failure.**

1. Raise the transmission in order to remove the weight from the transmission mount and create slight tension in the rubber.
2. Observe the transmission mount while raising the transmission. Replace the transmission/transaxle mount if the transmission mount exhibits any of the following conditions:
   - The hard rubber surface is covered with heat check cracks.

     NOTE: **Black paint on the rubber will crack with time, this does no constitute a failure.**

   - The rubber is separated from the metal plate of the transmission mount.
   - The rubber is split through the center of the transmission mount.
3. If there is movement between the metal plate of the transmission mount and its attaching points, lower the transmission on the transmission mount. Tighten the bolts or nuts attaching the transmission mount to the frame or transmission mount bracket.

TRANSMISSION MOUNT REPLACEMENT (REAR WHEEL DRIVE)

The transmission mount and transmission support are to be replaced as an assembly. To replace the transmission mount and the transmission support, refer to Transmission Support Crossmember Replacement (LTG) .

TRANSMISSION MOUNT REPLACEMENT (ALL WHEEL DRIVE)

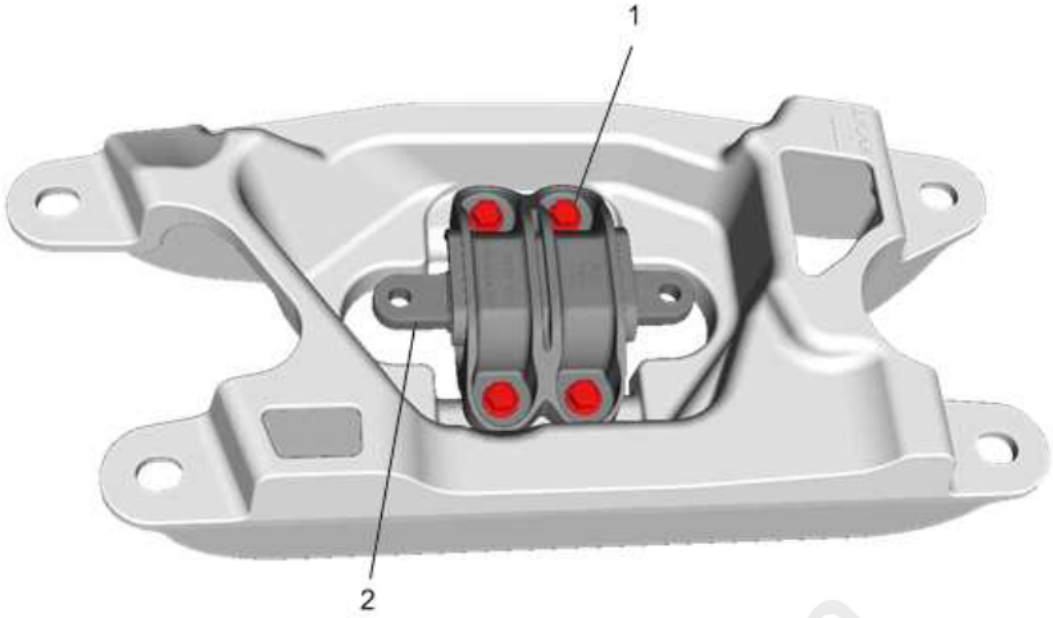

Fig. 19: Transmission Mount (All Wheel Drive)
Courtesy of GENERAL MOTORS COMPANY

Callout	Component Name
Preliminary Procedure **Transmission Support Crossmember Replacement (LTG)**	
1	Transmission Mount Bolt [4x] **CAUTION:** **Refer to Fastener Caution .** **Tighten** 22 N.m (16 lb ft)
2	Transmission Mount

TRANSMISSION MOUNT BRACKET REPLACEMENT

cardiagn.com

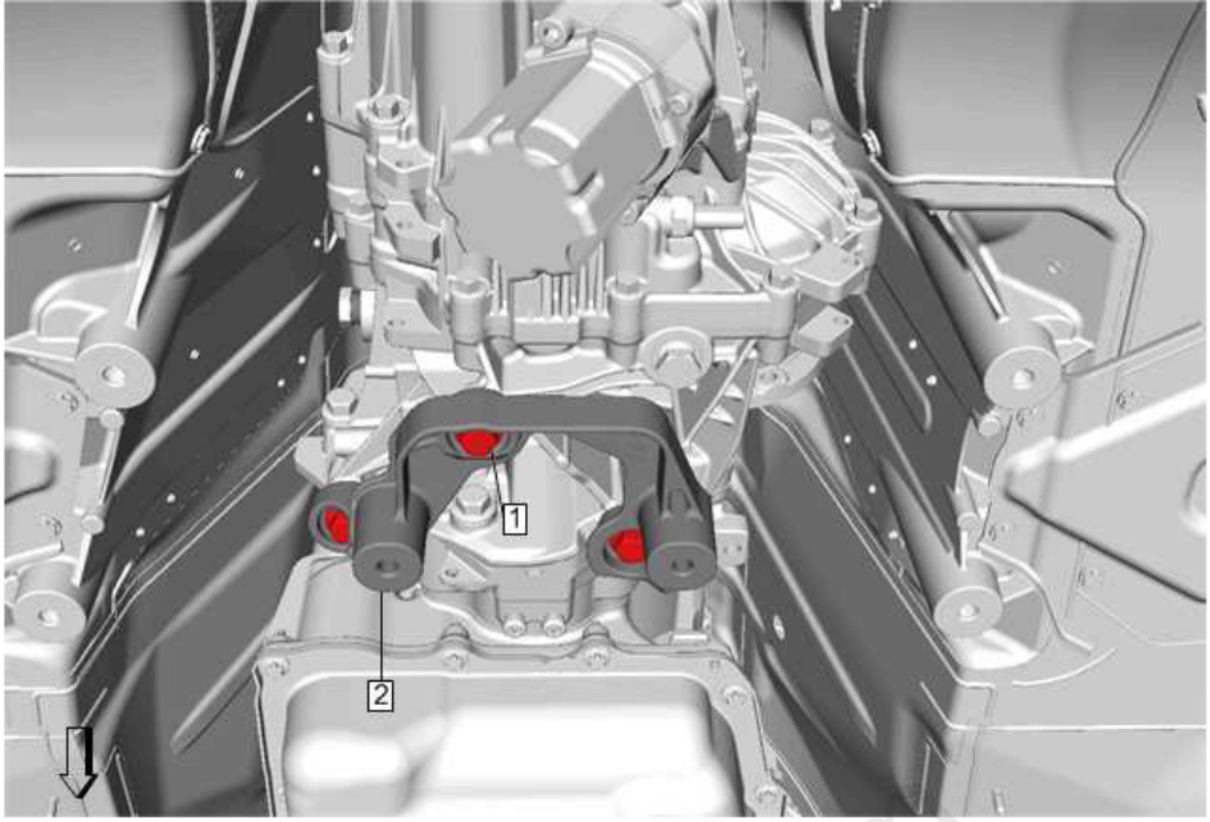

Fig. 20: Transmission Mount Bracket
Courtesy of GENERAL MOTORS COMPANY

Callout	Component Name
Preliminary Procedure Transmission Support Crossmember Replacement (LTG)	
1	Transmission Bracket Bolt [3x] **CAUTION:** **Refer to Fastener Caution .** **Tighten** 58 N.m (43 lb ft)
2	Transmission Bracket

TRANSMISSION CONTROL LEVER KNOB REPLACEMENT

cardiagn.com

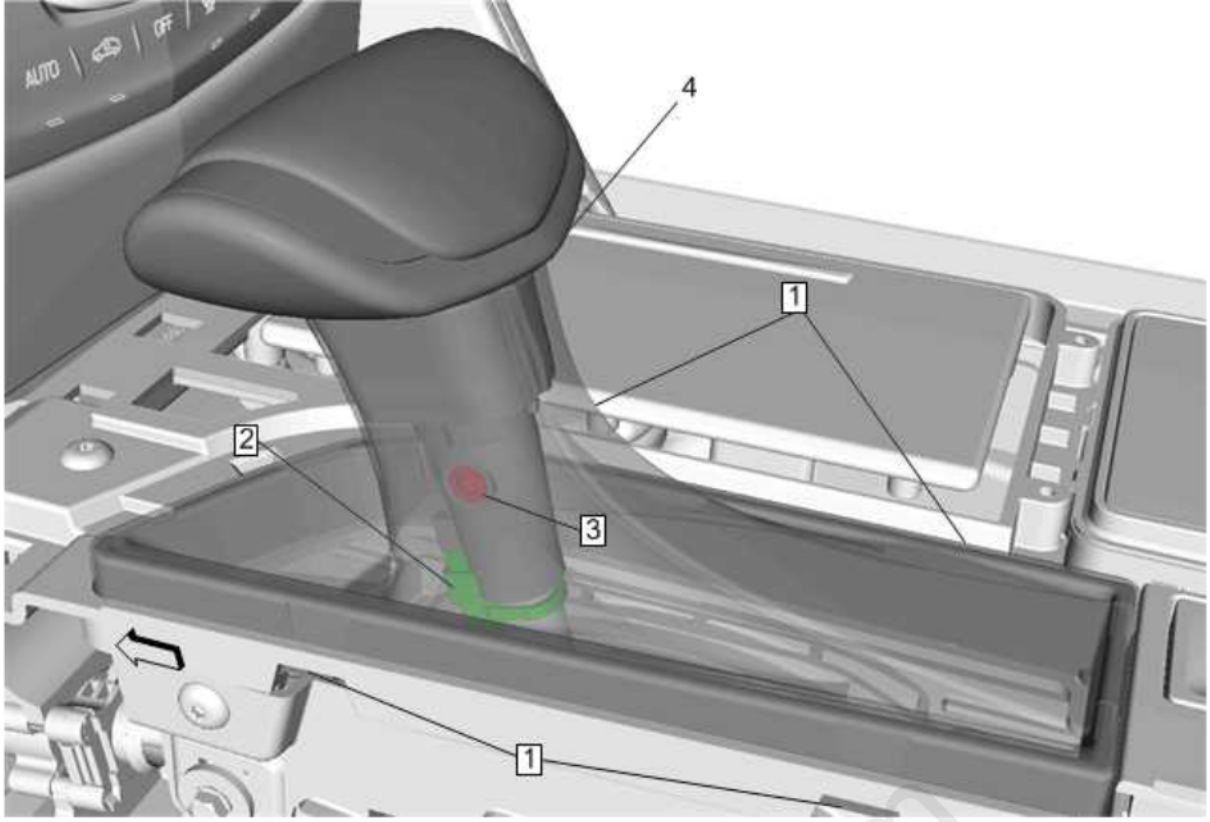

Fig. 21: Transmission Control Lever Knob
Courtesy of GENERAL MOTORS COMPANY

Callout	Component Name
Preliminary Procedure Front Floor Console Extension Panel Replacement - Left Side	
1	Transmission Control Lever Knob Retaining Tabs (Qty: 6) **Procedure** Using a flat-bladed plastic trim tool, release the retainer securing the control lever boot.
2	Electrical Dock & Lock Connector **NOTE:** **Shift boot shown semi-transparent for clarity.** **NOTE:** **Do Not twist the transmission control lever knob.** **Procedure** Lift the transmission control lever knob straight up to disconnect the electrical connector.
3	Retaining Screw **Procedure** Lift the shift boot to access the retaining screw.
4	Transmission Control Lever Knob **NOTE:** • **The control lever boot and knob are replaced as an assembly.** • **DO NOT TWIST the knob to remove, pull upward ONLY.**

TRANSMISSION CONTROL REPLACEMENT

Removal Procedure

1. Set the park brake.
2. Remove the left side front floor console extension panel. Refer to **Front Floor Console Extension Panel Replacement - Left Side** .
3. Remove the transmission control lever knob. Refer to **Transmission Control Lever Knob Replacement**
4. Remove the front floor console trim plate. Refer to **Front Floor Console Trim Plate Replacement**
5. Remove the upper transmission control retaining bolt (1).

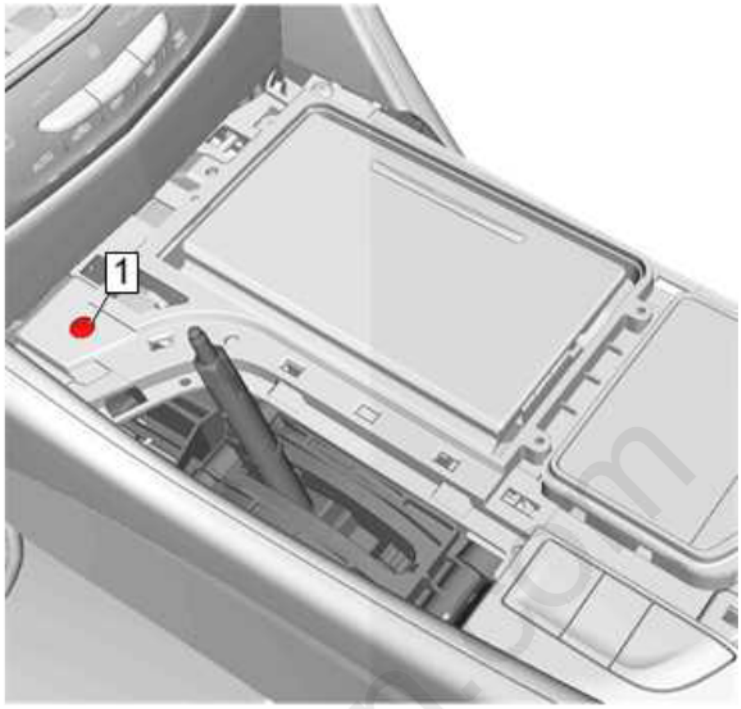

Fig. 22: Upper Transmission Control Retaining Bolt
Courtesy of GENERAL MOTORS COMPANY

6. Slide the transmission range selector lever cable retainer rearward (2) and remove the transmission range selector cable from the transmission control base.

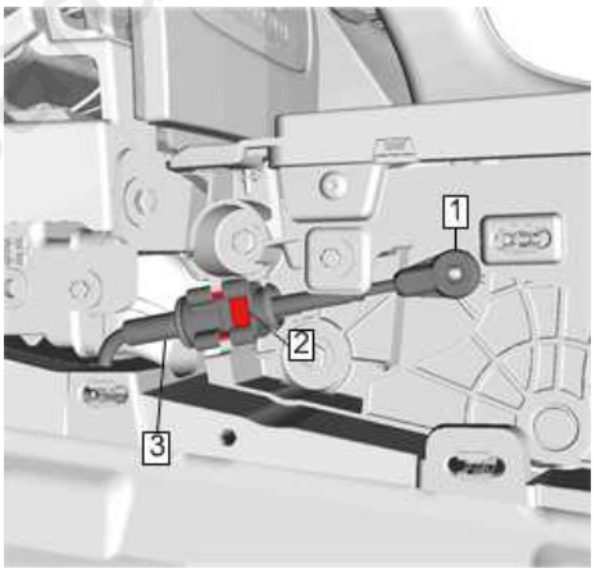

Fig. 23: Transmission Range Selector Lever Cable Retainer Rearward
Courtesy of GENERAL MOTORS COMPANY

7. Disconnect the transmission range selector lever cable terminal (1) from the shift lever pin.
8. Remove the five fasteners (1, 2) then remove the shift cover (3) from the front floor console.

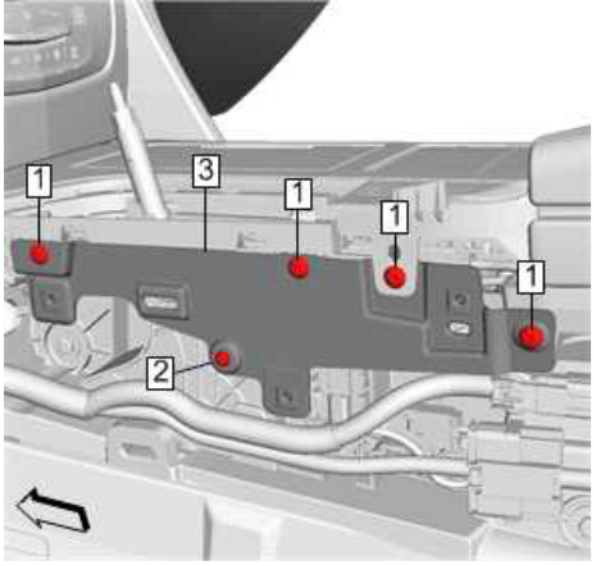

Fig. 24: Fasteners And Shift Cover
Courtesy of GENERAL MOTORS COMPANY

9. Disconnect the electrical connector (2) from the transmission control assembly.

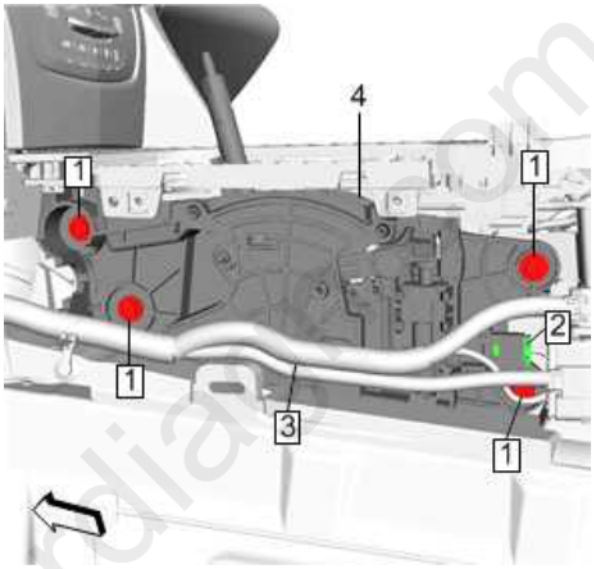

Fig. 25: Electrical Connector And Wiring Harness
Courtesy of GENERAL MOTORS COMPANY

10. Remove the four transmission control fasteners (1).
11. Reposition the wiring harness (3) out of the way.
12. Remove the transmission control (4) from the front floor console.

Installation Procedure

1. Position the transmission control (4) to the front floor console.

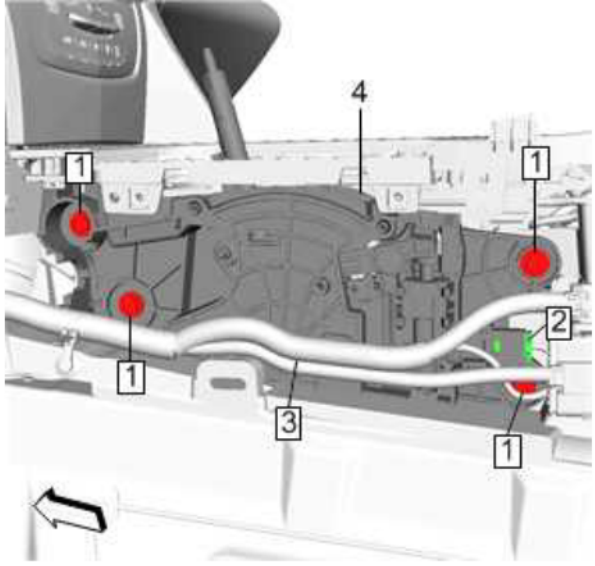

Fig. 26: Electrical Connector And Wiring Harness
Courtesy of GENERAL MOTORS COMPANY

2. Connect the electrical connector (2) to the transmission control assembly.
3. Install the four fasteners (1) and tighten to 9 N.m (80 lb in).

CAUTION: **Refer to Fastener Caution .**

4. Reposition the wiring harness (3) to the front floor console.
5. Install the shift cover (3) to the front floor console, then install the five fasteners (1, 2).

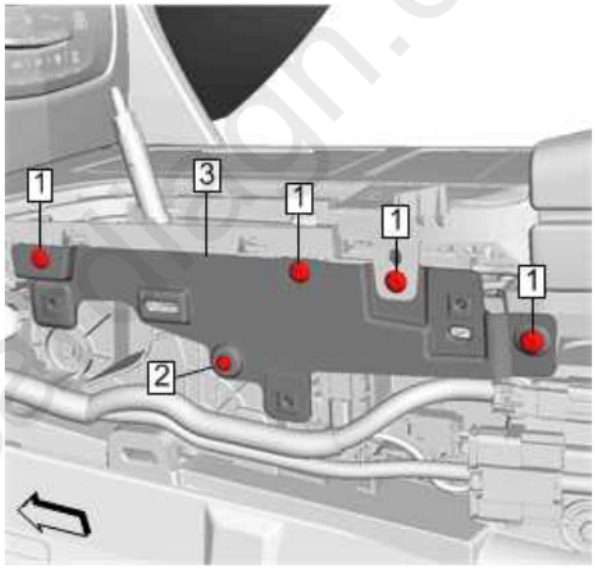

Fig. 27: Fasteners And Shift Cover
Courtesy of GENERAL MOTORS COMPANY

6. Connect the transmission range selector lever cable terminal (1) to the shift lever pin.

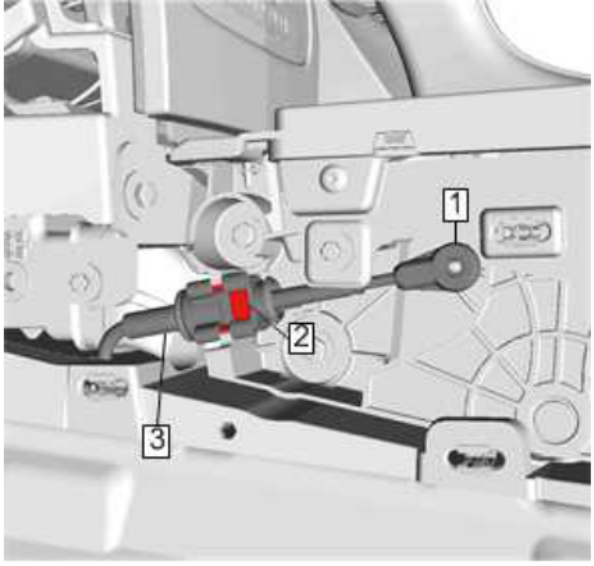

Fig. 28: Transmission Range Selector Lever Cable Retainer Rearward
Courtesy of GENERAL MOTORS COMPANY

WARNING: **After installing the transmission range selector shift cable, pull up and push down on ALL connections to verify that the connections are fully seated and properly engaged. Failure to perform this task can result in the vehicle not being able to shift into PARK causing potential vehicle damage and bodily injury.**

7. Install the transmission range selector cable to the transmission control base by pressing down until it seats into place.
8. Slide the transmission range selector lever cable retainer forward (2) to lock the transmission range selector cable to the transmission control base.
9. Install the upper transmission control retaining bolt (1) and tighten to 2.5 N.m (22 lb in).

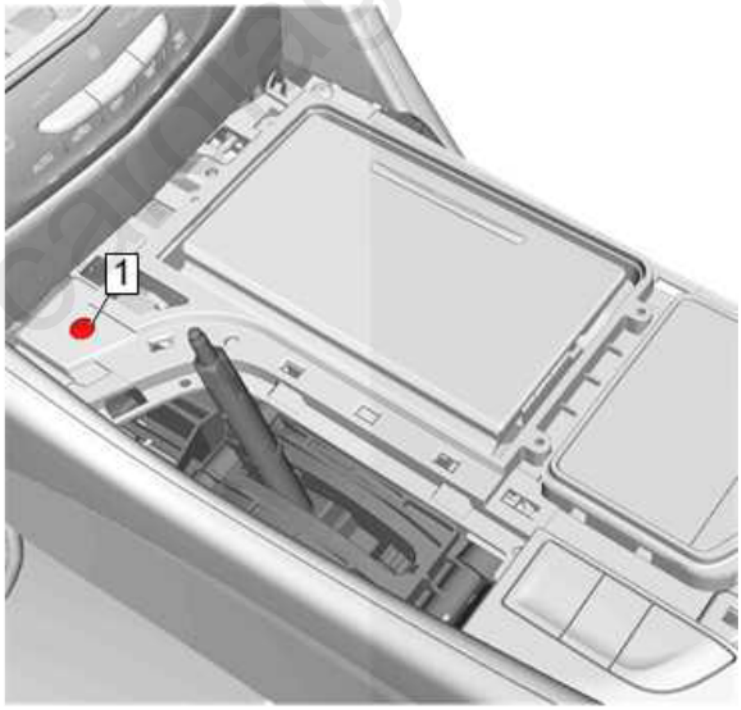

Fig. 29: Upper Transmission Control Retaining Bolt
Courtesy of GENERAL MOTORS COMPANY

10. Install the front floor console trim plate. Refer to **Front Floor Console Trim Plate Replacement**
11. Install the transmission control lever knob. Refer to **Transmission Control Lever Knob Replacement**
12. Install the left side front floor console extension panel. Refer to **Front Floor Console Extension Panel Replacement - Left Side** .

TRANSMISSION CONVERTER COVER REPLACEMENT (RIGHT SIDE, ALL WHEEL DRIVE)

Removal Procedure

1. **Front Axle Propeller Shaft Replacement (LGX, LGW)** Â» Remove
2. Remove the transmission converter cover bolts (1) and transmission converter cover (2).

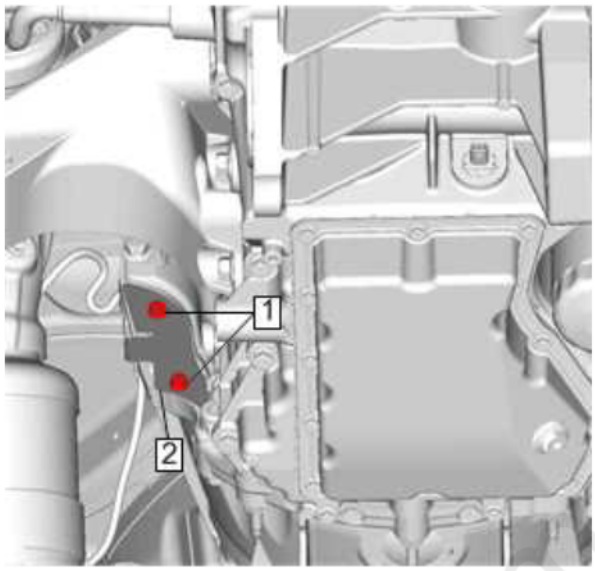

Fig. 30: Transmission Converter Cover And Bolts
Courtesy of GENERAL MOTORS COMPANY

Installation Procedure

1. Install the transmission converter cover (2) and transmission converter cover bolts (1). Tighten the bolt to 9 N.m (80 lb in).

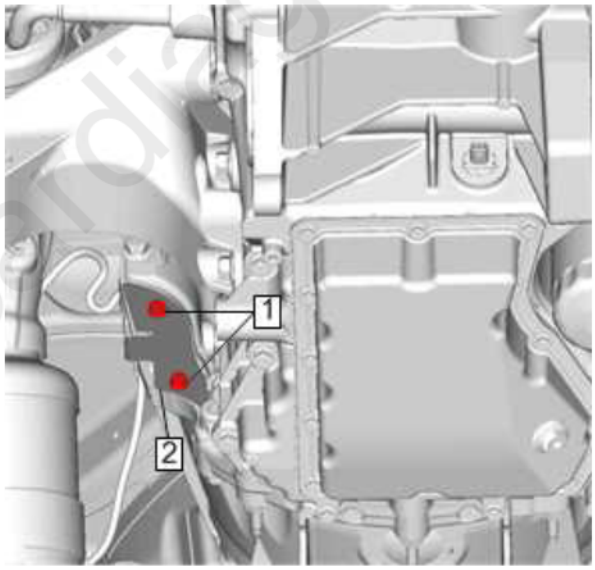

Fig. 31: Transmission Converter Cover And Bolts
Courtesy of GENERAL MOTORS COMPANY

CAUTION: **Refer to Fastener Caution .**

2. **Front Axle Propeller Shaft Replacement (LGX, LGW)** Â» Install

AUTOMATIC TRANSMISSION FLUID, FLUID PAN AND/OR FILTER REPLACEMENT (REAR WHEEL DRIVE)

Removal Procedure

1. Raise and support the vehicle. Refer to **Lifting and Jacking the Vehicle**
2. Place a suitable drain pan under the automatic transmission.

cardiagn.com

3. Clean the surrounding area of the automatic transmission fluid pan (2).

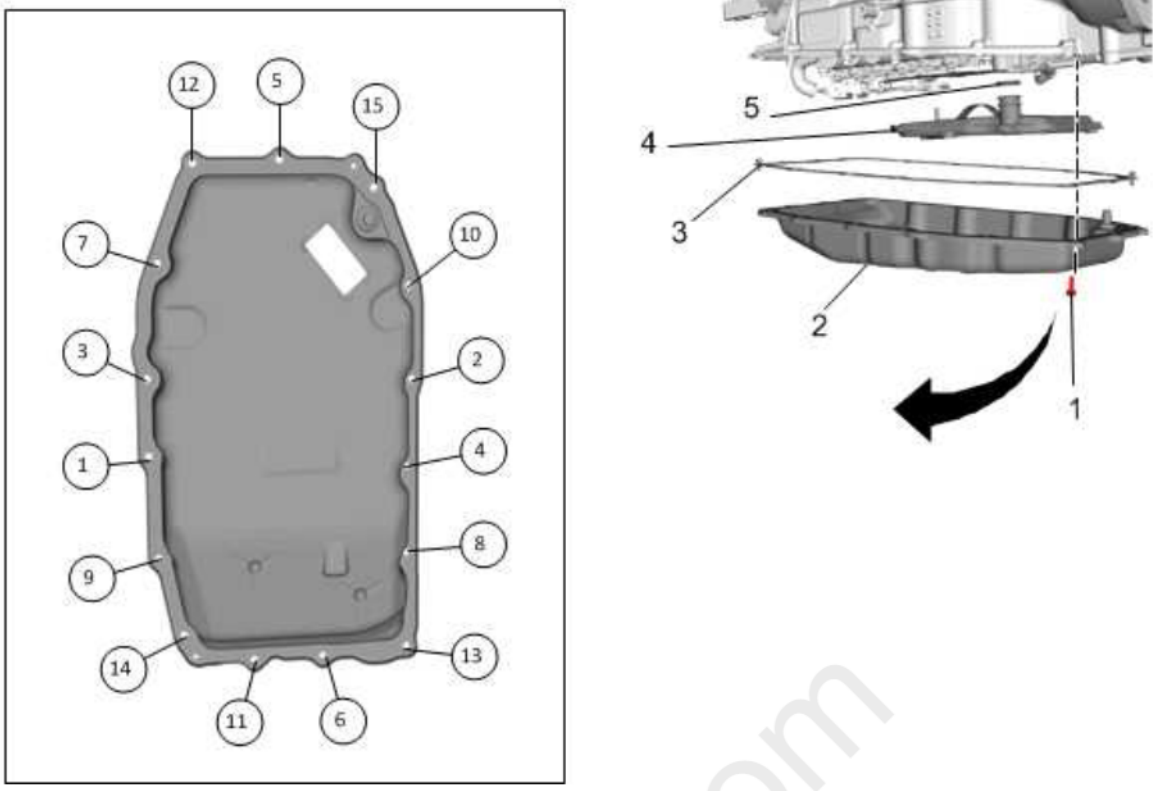

Fig. 32: Transmission Fluid Filter
Courtesy of GENERAL MOTORS COMPANY

4. Remove the automatic transmission fluid pan bolts (1) [15x].
5. Remove the automatic transmission fluid pan (2).
6. Remove the automatic transmission fluid pan gasket (3).
7. Remove the automatic transmission fluid filter (4).

NOTE: **The seal is not serviced separately and comes with the NEW filter assembly.**

8. Use a flat-bladed tool to remove and DISCARD the filter seal (5).

CAUTION: **Do not damage the case sealing surface when removing the filter seal assembly.**

Installation Procedure

1. Install the automatic transmission fluid filter seal (5) into the oil pump assembly.

cardiagn.com

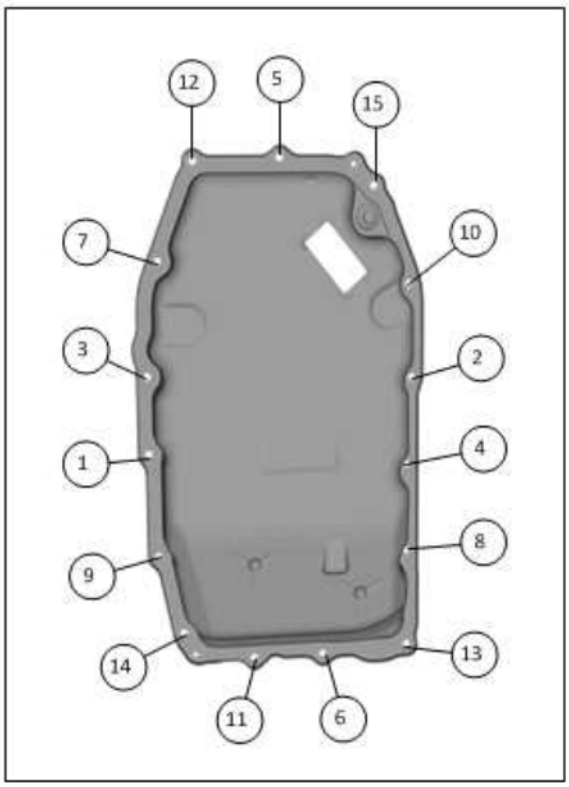

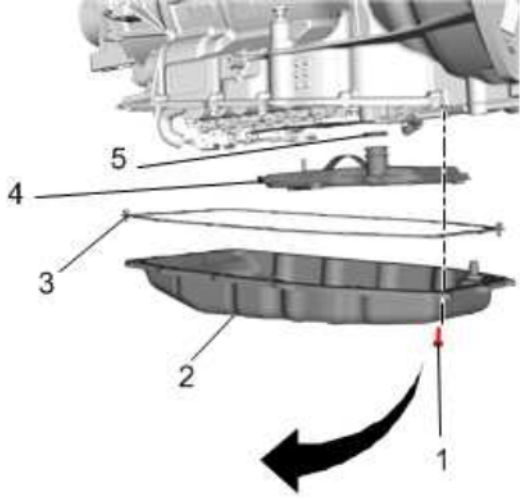

Fig. 33: Transmission Fluid Filter
Courtesy of GENERAL MOTORS COMPANY

NOTE: **Lubricate the filter seal with transmission fluid before installing the filter.**

NOTE: **Install the seal into the oil pump assembly, NOT on the filter.**

2. Install the automatic transmission fluid filter (4).

NOTE: **The seal is not serviced separately and comes with the NEW filter assembly.**

3. Install the automatic transmission fluid pan gasket (3) to the fluid pan.

NOTE: **The fluid pan gasket is reusable. Inspect the gasket to determine if it may be reused. If the gasket is stuck to the case or pan, it should be replaced.**

4. Install the automatic transmission fluid pan (2) to the transmission.
5. Install the automatic transmission fluid pan bolts (1) [15x] and tighten in the sequence shown to 10 N.m (89 lb in).

CAUTION: **Refer to Fastener Caution .**

6. Fill the transmission. Refer to **Transmission Fluid Level and Condition Check**
7. Lower the vehicle.

AUTOMATIC TRANSMISSION FLUID, FLUID PAN AND/OR FILTER REPLACEMENT (ALL WHEEL DRIVE)

cardiagn.com

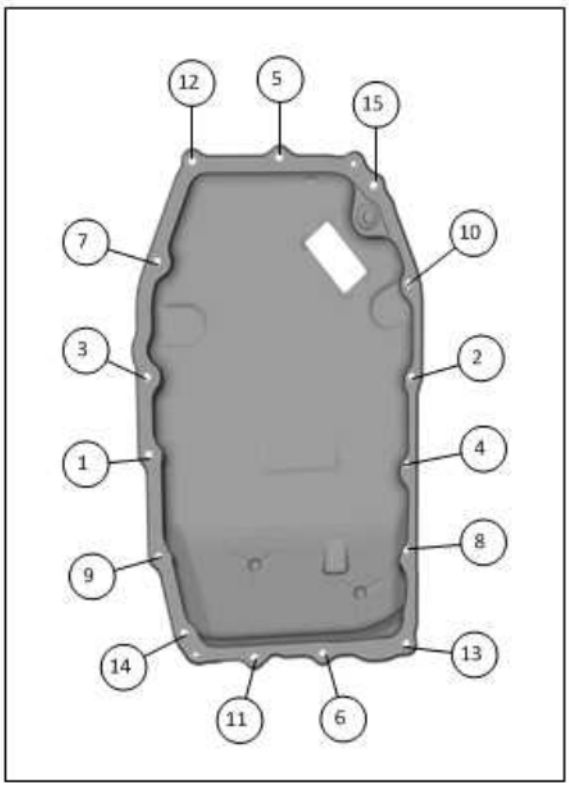

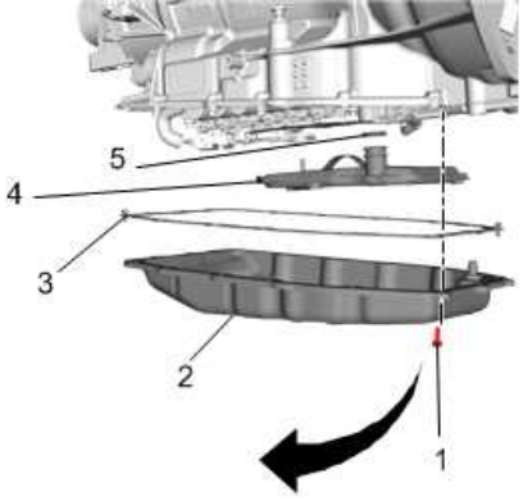

Fig. 34: Transmission Fluid Filter
Courtesy of GENERAL MOTORS COMPANY

Callout	Component Name
Preliminary Procedures 1. Raise and support the vehicle. Refer to **Lifting and Jacking the Vehicle** . 2. Place a suitable drain pan under the transmission.	
1	Transmission Fluid Pan Bolt [15x] **CAUTION:** **Refer to Fastener Caution .** **Procedure** Tighten the bolts in the sequence shown. **Tighten** 4 N.m (35 lb in) plus 86-94 degrees
2	Transmission Fluid Pan Assembly **Procedure** Fill the transmission with the proper amount of transmission fluid. Refer to **Transmission Fluid Fill Procedure** .
3	Transmission Fluid Pan Gasket **Procedure** The fluid pan gasket is reusable. Inspect the gasket to determine if it may be reused.
4	NEW Fluid Filter Assembly **Procedure** Pull the fluid filter assembly straight out. Do not bend or twist the filter neck. **NOTE:** **The seal is not serviced separately and comes with the NEW filter assembly.**

cardiagn.com

Callout	Component Name
5	NEW Fluid Filter Seal Assembly **CAUTION:** **Do not damage the case sealing surface when removing the filter seal assembly.** **Procedure** 1. Use a flat-bladed tool to remove the filter seal and discard. 2. Lubricate the filter seal with transmission fluid before installing the filter.

PROPELLER SHAFT TRANSMISSION FLANGE FLUID SEAL REPLACEMENT (REAR WHEEL DRIVE)

Special Tools

- **DT-22828** Input and Countershaft Race Installer
- **DT-38416-B** Harmonic Balancer Remover
- **DT-45000** Seal Remover
- **DT-45012** Holding Fixture
- For equivalent regional tools, refer to **Special Tools** .

Removal Procedure

1. Remove the propeller shaft. Refer to **Propeller Shaft Replacement** .
2. Install the **DT-45012** Holding Fixture (3) to the propeller shaft transmission flange (2).

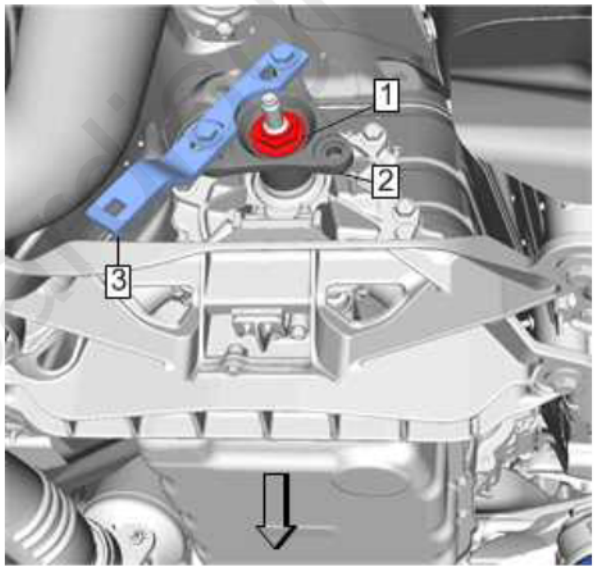

Fig. 35: Holding Fixture And Propeller Shaft Transmission Flange
Courtesy of GENERAL MOTORS COMPANY

3. Remove and Discard the propeller shaft transmission flange nut (1).

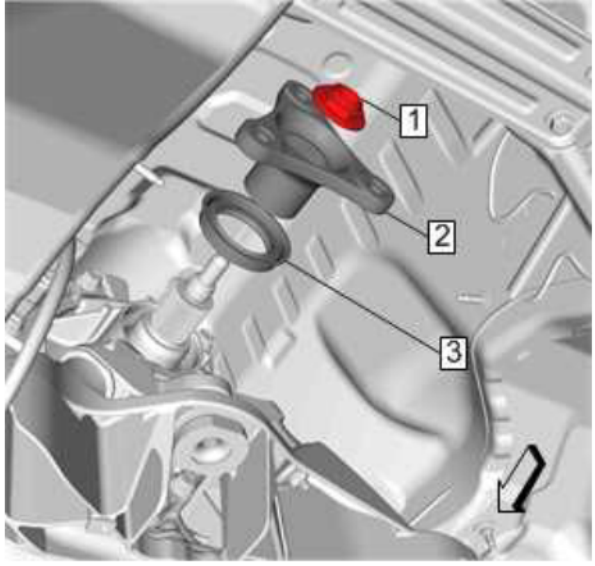

Fig. 36: Propeller Shaft Transmission Flange Nut
Courtesy of GENERAL MOTORS COMPANY

CAUTION: **Do not reuse the flange nut. Reusing the flange nut may cause damage to the transmission.**

4. Remove the propeller shaft transmission flange (2) from the output shaft.

NOTE: **If the propeller shaft transmission flange is not easily removed with DT-45012 Holding Fixture use DT 38416 B Harmonic Balancer Remover to remove the flange.**

5. Use the **DT-45000** Seal Remover to remove the propeller shaft transmission seal (3) from the case extension housing.

NOTE: **Do not scrape or gouge the case extension housing while removing the output shaft seal.**

Installation Procedure

1. Install the NEW propeller shaft transmission seal (3) using **DT-22828** Input and Countershaft Race Installer to the case extension housing.

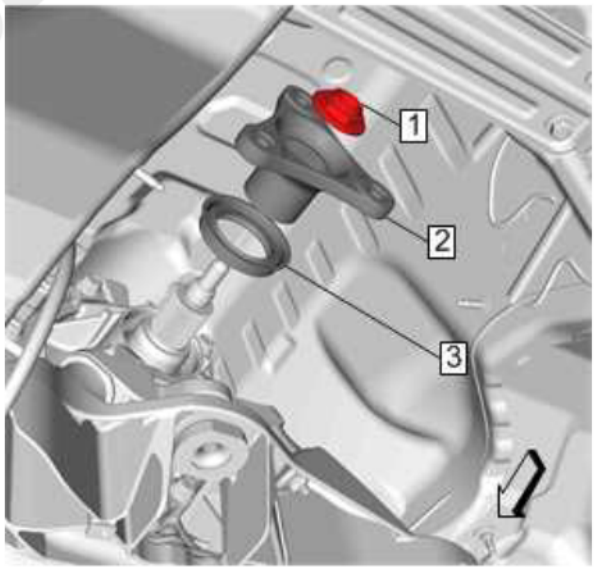

Fig. 37: Propeller Shaft Transmission Flange Nut
Courtesy of GENERAL MOTORS COMPANY

2. Apply adhesive across the width of the flange splines. Refer to **Adhesives, Fluids, Lubricants and Sealers** . However, if the replacement flange contains a pre-applied adhesive patch, then liquid adhesive is not required and the 24 hour cure time is not necessary.

cardiagn.com

NOTE: **The output shaft splines must be thoroughly clean and dry before installing the flange.**

NOTE:

- **When repairing low speed and garage shift clunk - except for moving the vehicle from the hoist, do not operate the vehicle above 5 m.p.h. at light throttle for 24 hours to allow the adhesive to cure.**
- **If the replacement flange contains a pre-applied adhesive patch, then liquid adhesive is not required and the 24 hour cure time is not necessary.**

3. Install the propeller shaft transmission flange (2) to the output shaft.
4. Sufficient application of adhesive to every tooth on the flange will leave excess adhesive on the output shaft after installation. If no excess is observed, reapply adhesive.
5. Apply adhesive across the width of the nut threads prior to tightening and staking. Refer to **Adhesives, Fluids, Lubricants and Sealers** . However, if the replacement nut contains a pre-applied adhesive patch, then liquid adhesive is not required.

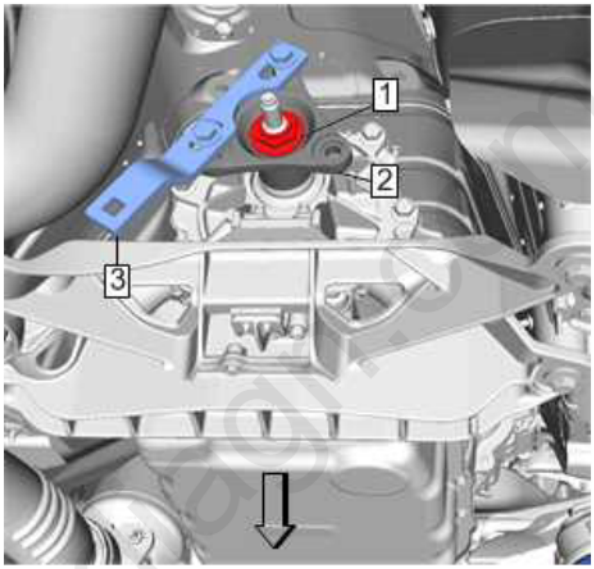

Fig. 38: Holding Fixture And Propeller Shaft Transmission Flange
Courtesy of GENERAL MOTORS COMPANY

NOTE: **The output shaft nut threads must be thoroughly clean and dry before installing the flange.**

CAUTION: **Refer to Fastener Caution .**

Install the NEW propeller shaft transmission flange nut (1) and tighten to 105 N.m (77 lb ft).

6. Remove the **DT-45012** Holding Fixture (3) from the propeller shaft transmission flange (2).
7. Stake the propeller shaft transmission flange nut (1).

CAUTION: **Stake the flange nut onto the output shaft. Use the two staking grooves on the shaft to locate the staking points. Failure to stake the flange nut may result in damage to the transmission.**

8. Install the propeller shaft. Refer to **Propeller Shaft Replacement** .

PROPELLER SHAFT TRANSMISSION FLANGE FLUID SEAL REPLACEMENT (ALL WHEEL DRIVE)

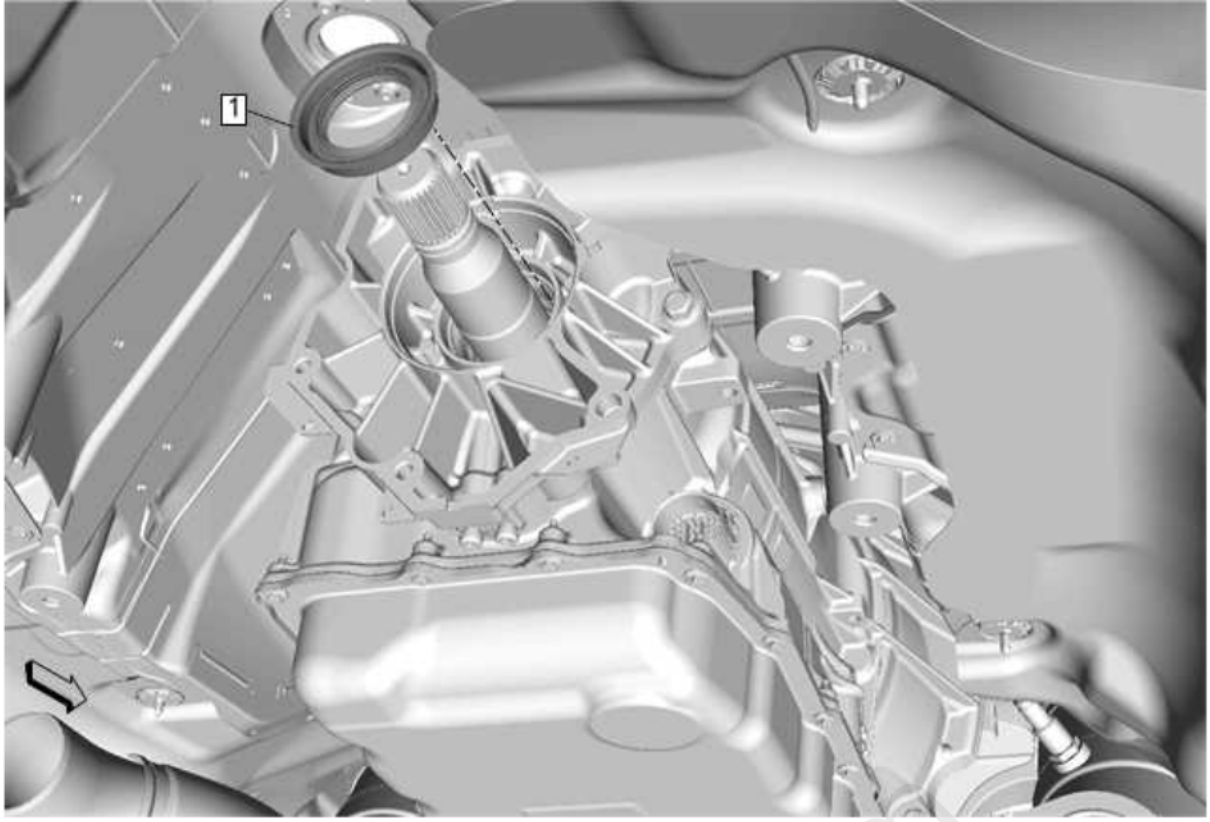

Fig. 39: Propeller Shaft Transmission Flange Fluid Seal (All Wheel Drive)
Courtesy of GENERAL MOTORS COMPANY

Callout	Component Name
Preliminary Procedure Transfer Case Assembly Replacement	
1	Propeller Shaft Transmission Flange Fluid Seal **Procedure** 1. Use the **J-6125-B** hammer and **J-36825-A** remover to remove the seal. Use care in order to avoid damaging the output shaft bushing. 2. Lubricate the seal with clean transmission fluid. 3. Use the **DT-50648** installer to install the seal. **Special Tools** • **DT-50648** Case Seal Installer • **J-6125-B** Slide Hammer with Adaptor • **J-36825-A** Output Shaft Oil Seal Remover For equivalent regional tools, refer to Special Tools .

MANUAL SHIFT SHAFT AND SEAL REPLACEMENT

Special Tools

- **DT-45201** Cooler Line Seal Remover
- **DT-47770** Seal Installer

For equivalent tools, refer to Special Tools .

Removal Procedure

1. Remove the automatic transmission range selector lever. Refer to Automatic Transmission Range Selector Lever Replacement.

cardiagn.com

2. Remove the control valve body. Refer to **Control Valve Body Replacement**.
3. Remove and Discard the manual shift shaft detent lever hub pin (3).

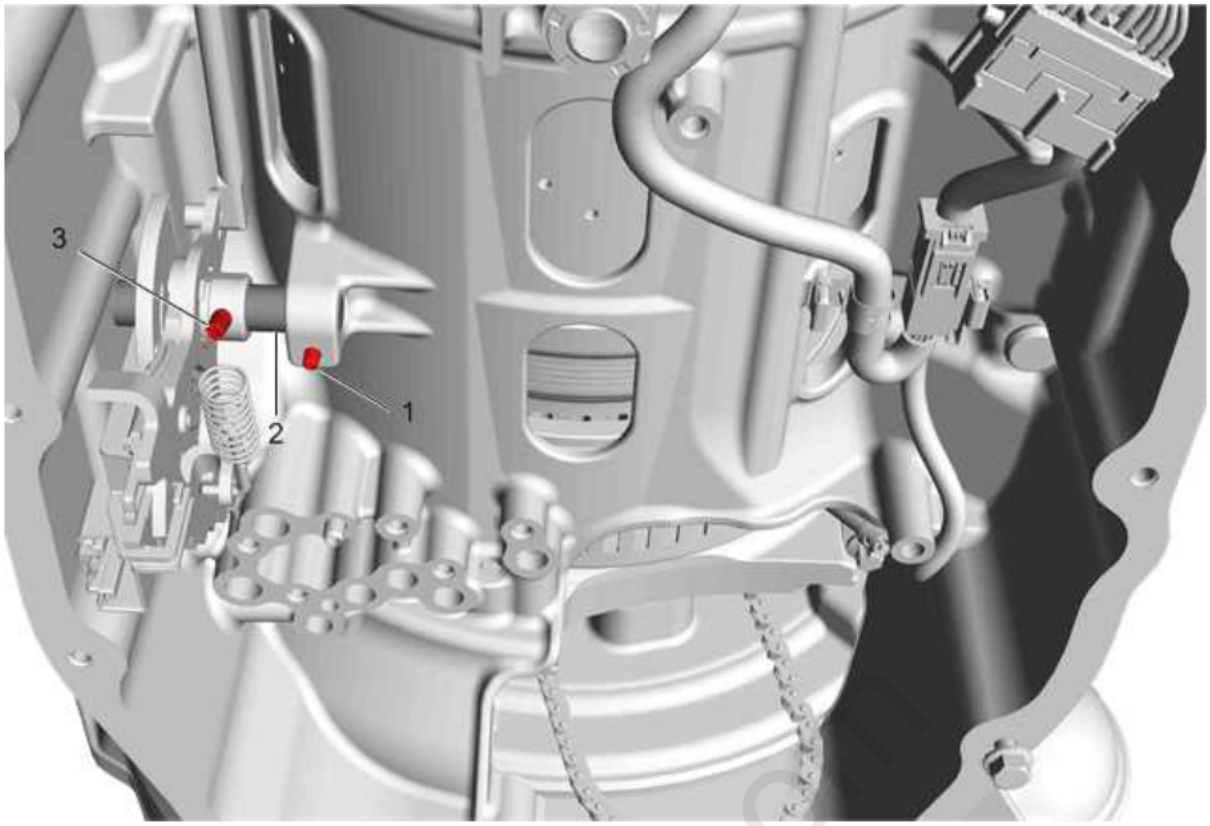

Fig. 40: Manual Shift Shaft And Pins
Courtesy of GENERAL MOTORS COMPANY

4. Remove and Discard the manual shift shaft pin (1).
5. Remove the manual shift shaft (2).
6. Remove and Discard the manual shift shaft seal (1) using **DT-45201** cooler line seal remover.

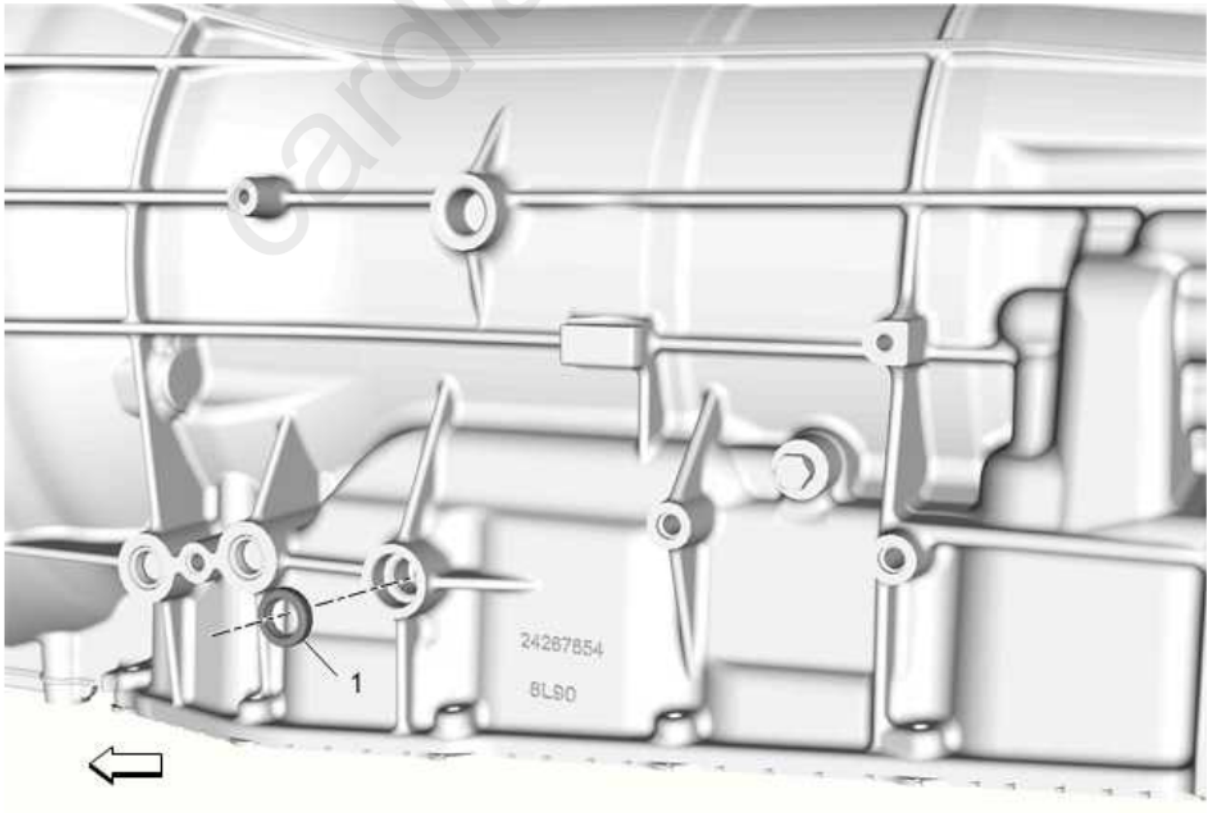

Fig. 41: Manual Shift Shaft Seal
Courtesy of GENERAL MOTORS COMPANY

Installation Procedure

1. Install the NEW manual shift shaft seal (1) using **DT-47770** seal installer.

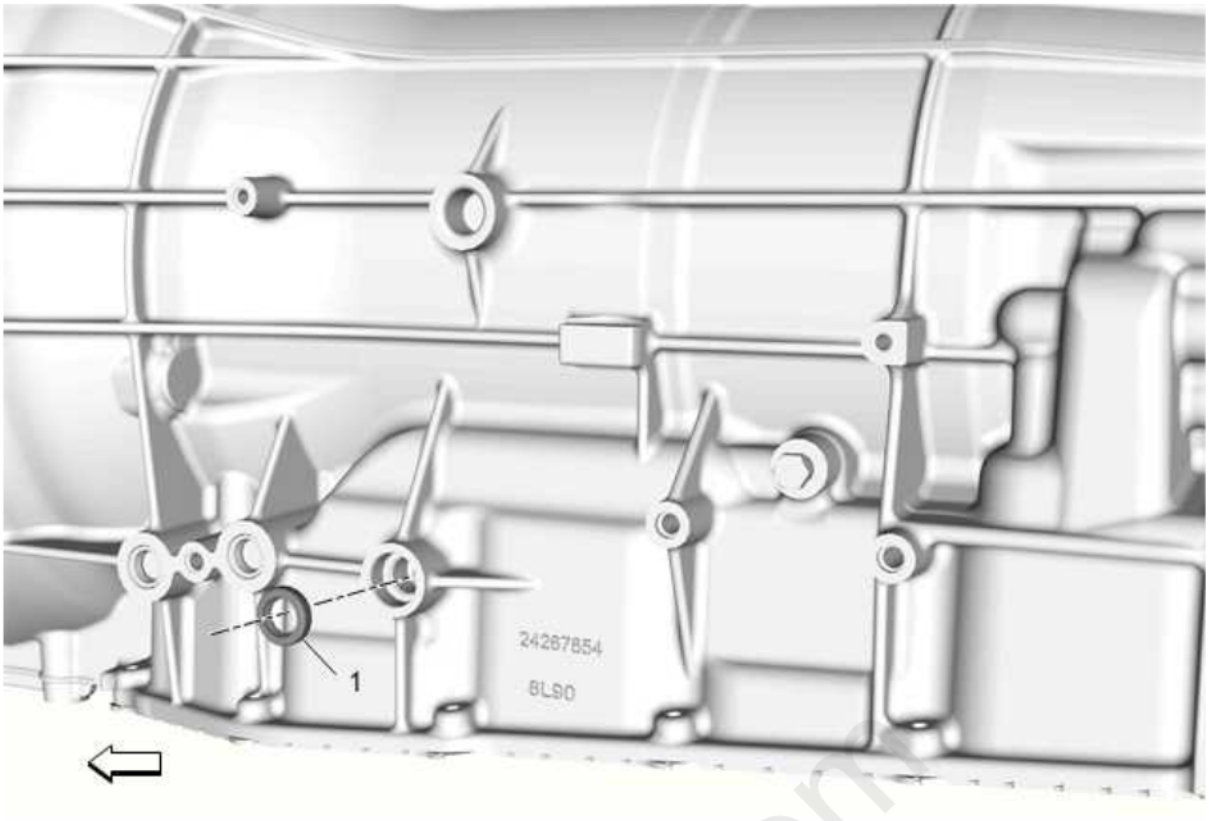

Fig. 42: Manual Shift Shaft Seal
Courtesy of GENERAL MOTORS COMPANY

2. Install the manual shift shaft (2) aligning the position switch assembly onto the shaft.

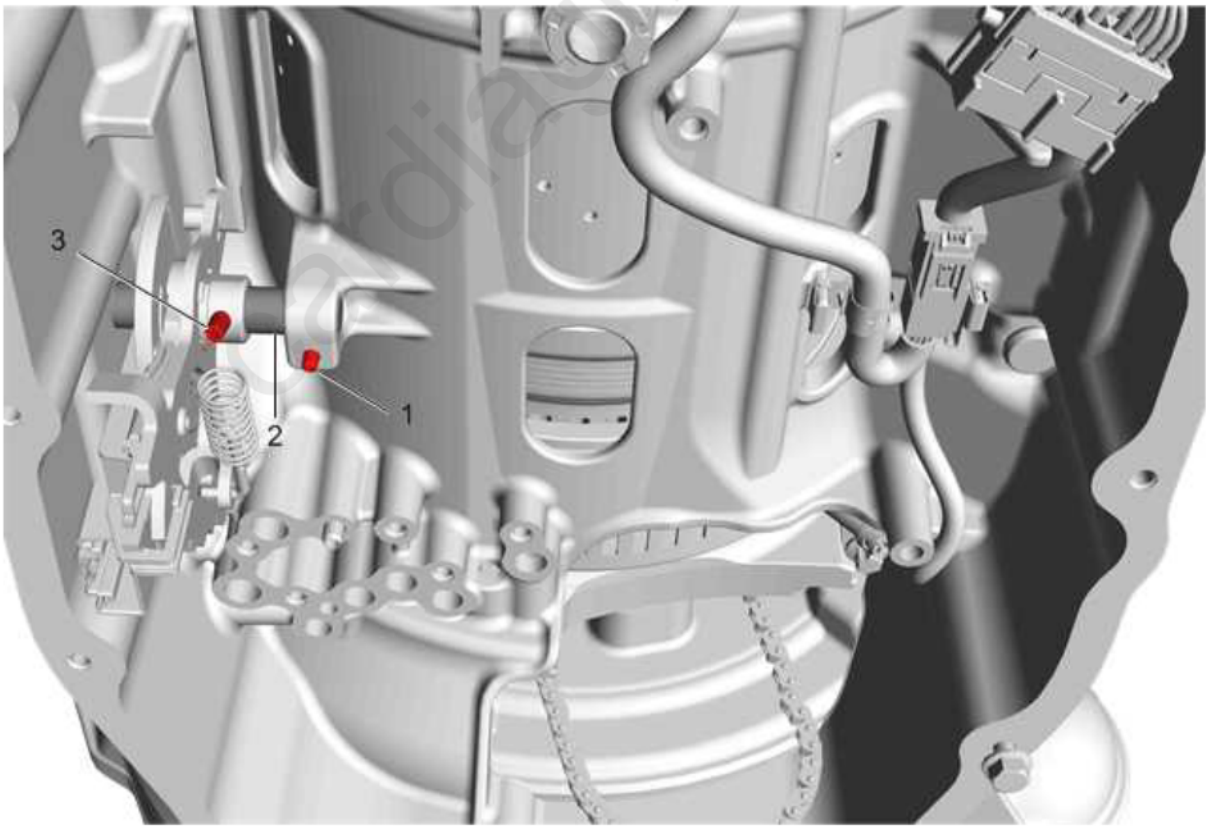

Fig. 43: Manual Shift Shaft And Pins
Courtesy of GENERAL MOTORS COMPANY

3. Install the NEW manual shift shaft pin (1).
4. Install the NEW manual shift shaft detent lever hub pin (3).
5. Install the control valve body. Refer to **Control Valve Body Replacement**.

6. Install the automatic transmission range selector lever. Refer to **Automatic Transmission Range Selector Lever Replacement**.
7. Reprogram the transmission. Refer to **Solenoid Valve Characterization Reprogramming**

MANUAL SHIFT SHAFT POSITION SWITCH REPLACEMENT

Removal Procedure

1. Remove the automatic transmission range selector lever. Refer to **Automatic Transmission Range Selector Lever Replacement**.
2. Remove the control valve body. Refer to **Control Valve Body Replacement**.
3. Remove and Discard the manual shift shaft detent lever hub pin (3).

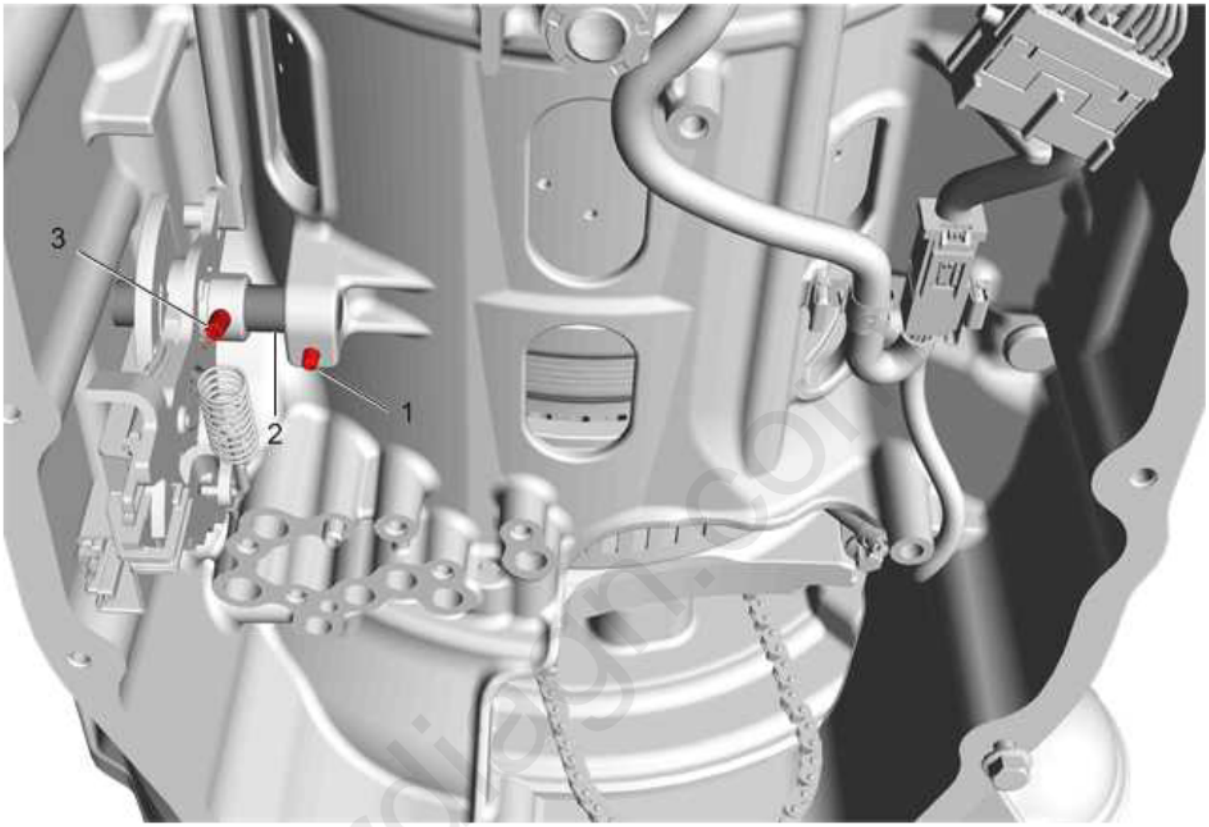

Fig. 44: Manual Shift Shaft And Pins
Courtesy of GENERAL MOTORS COMPANY

4. Remove and Discard the manual shift shaft pin (1).
5. Remove the manual shift shaft (2).
6. Remove or reposition the manual shift shaft position switch assembly as necessary.
7. Disconnect the park pawl actuator rod (2) from the manual shift shaft position switch (1).

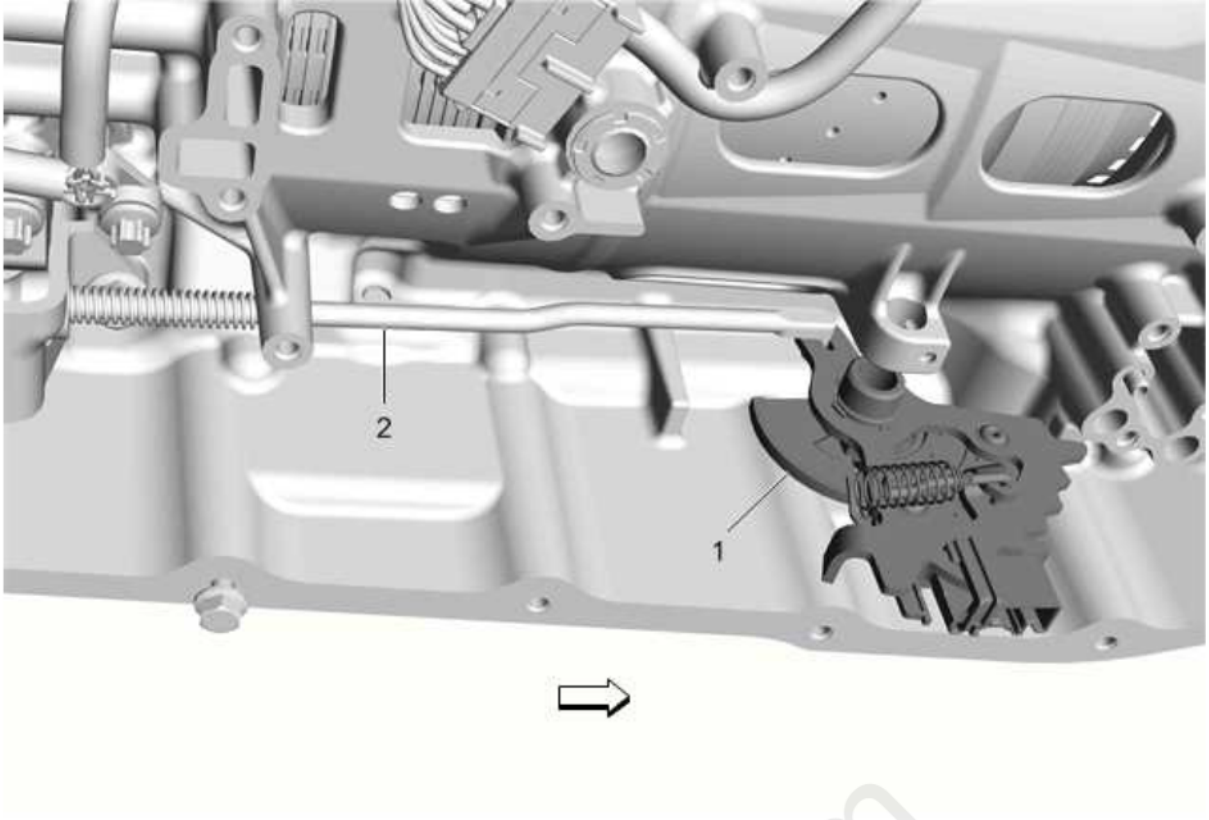

Fig. 45: Manual Shift Shaft Position Switch And Park Pawl Actuator Rod
Courtesy of GENERAL MOTORS COMPANY

Installation Procedure

1. Connect the park pawl actuator rod (2) to the manual shift shaft position switch (1).

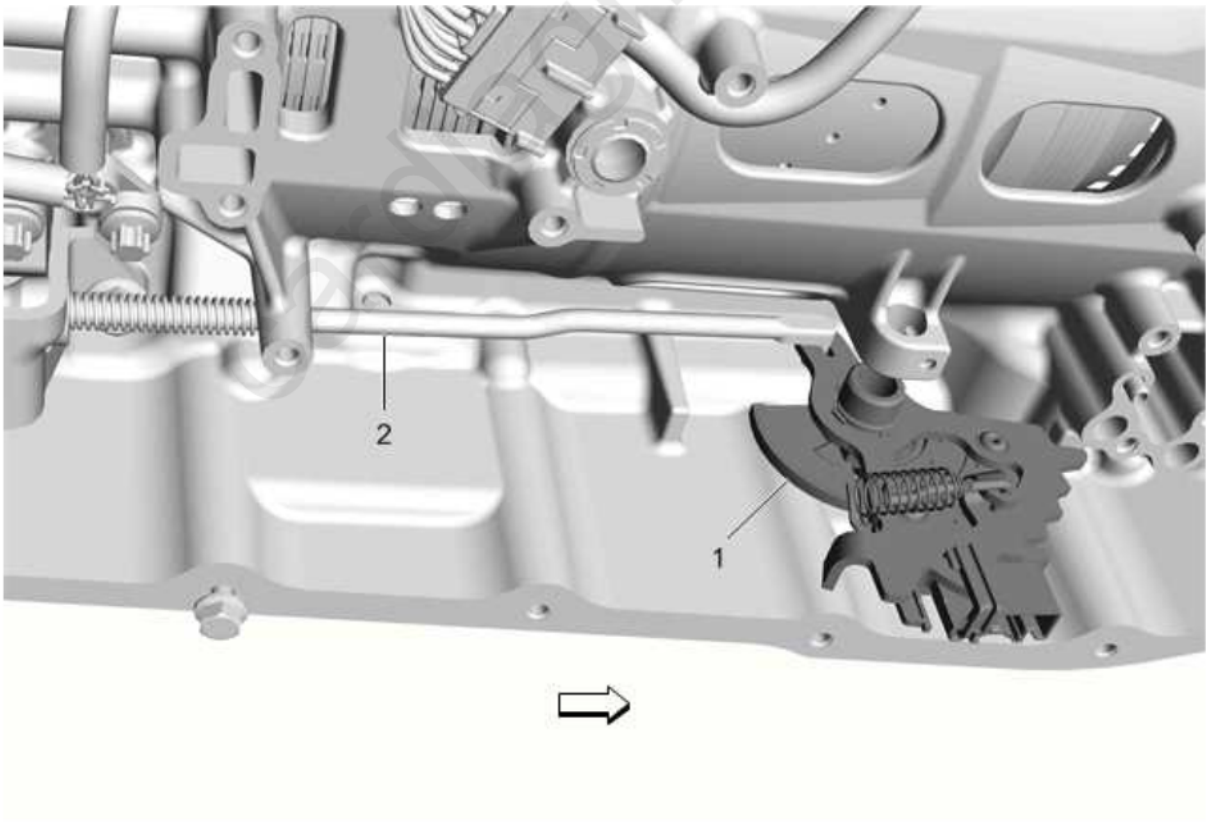

Fig. 46: Manual Shift Shaft Position Switch And Park Pawl Actuator Rod
Courtesy of GENERAL MOTORS COMPANY

2. Install the manual shift shaft position switch assembly (1).
3. Install the manual shift shaft (2) aligning the position switch assembly onto the shaft.

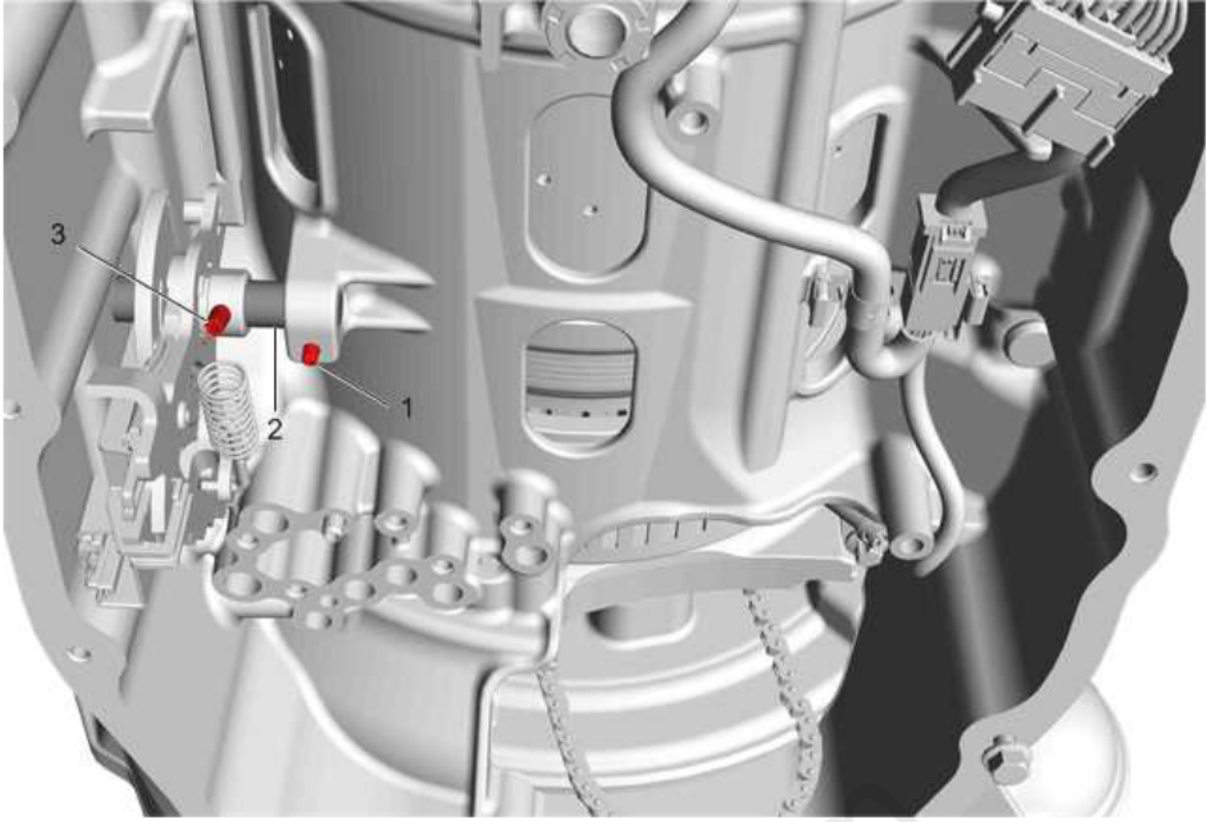

Fig. 47: Manual Shift Shaft And Pins
Courtesy of GENERAL MOTORS COMPANY

4. Install the NEW manual shift shaft pin (1).
5. Install the NEW manual shift shaft detent lever hub pin (3).
6. Install the control valve body. Refer to **Control Valve Body Replacement**.
7. Install the automatic transmission range selector lever. Refer to **Automatic Transmission Range Selector Lever Replacement**.
8. Reprogram the transmission. Refer to **Solenoid Valve Characterization Reprogramming**

INPUT AND OUTPUT SPEED SENSOR REPLACEMENT

Special Tools

- **DT-48285** Valve Body Torx Plus Socket

For equivalent tools, refer to **Special Tools** .

Removal Procedure

1. Remove the control valve body from the transmission. Refer to **Control Valve Body Replacement**.
2. Disconnect the electrical connector (1).

cardiagn.com

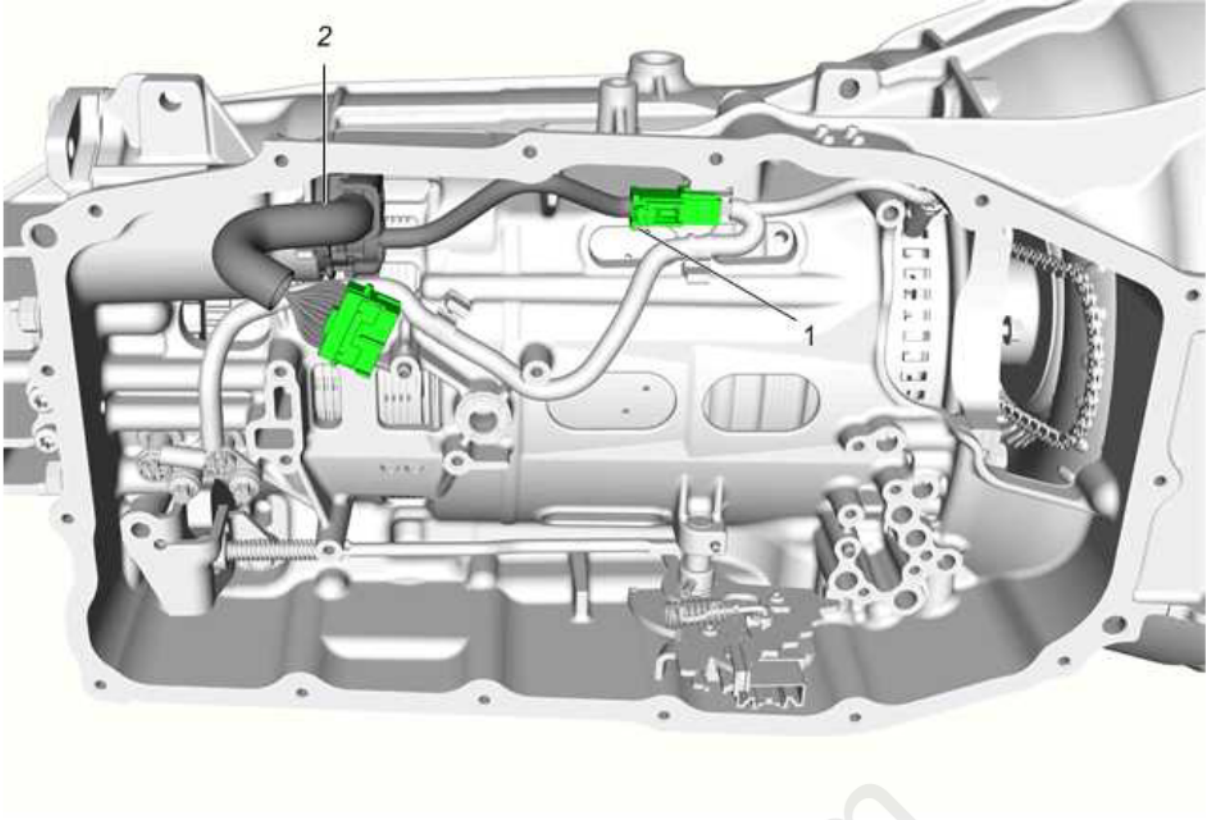

Fig. 48: Electrical Connector
Courtesy of GENERAL MOTORS COMPANY

3. Remove the input and output speed sensor wiring harness bolts and Discard (1).

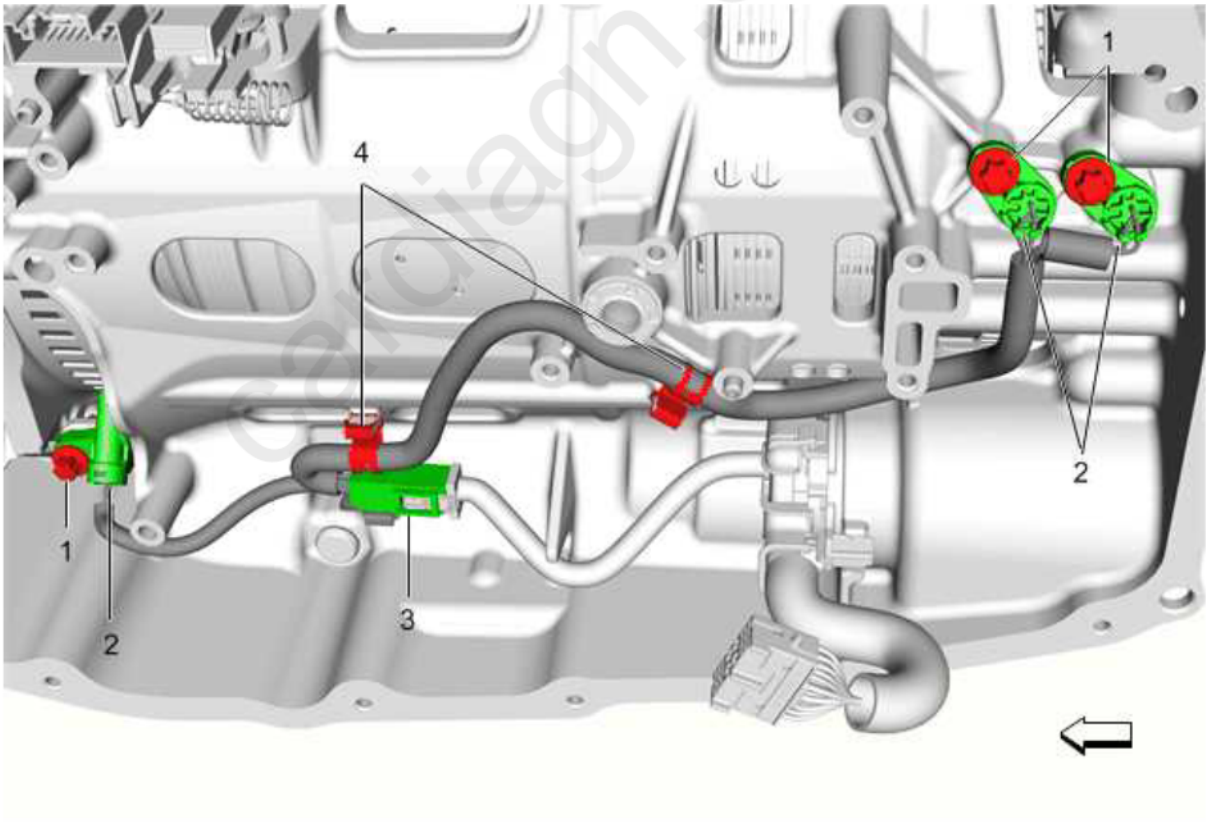

Fig. 49: Input And Output Speed Sensor Wiring Harness Bolts
Courtesy of GENERAL MOTORS COMPANY

CAUTION: **This vehicle is equipped with torque-to-yield or single use fasteners. Install a NEW torque-to-yield or single use fastener when installing this component. Failure to replace the torque-to-yield or single use fastener could cause damage to the vehicle or component.**

4. Disconnect the input and output speed sensor wiring harness retainers (4).

5. Remove the automatic transmission input and output speed sensor wiring harness (3) from the transmission.

Installation Procedure

1. Position the automatic transmission input and output speed sensor wiring harness (3) to the transmission.

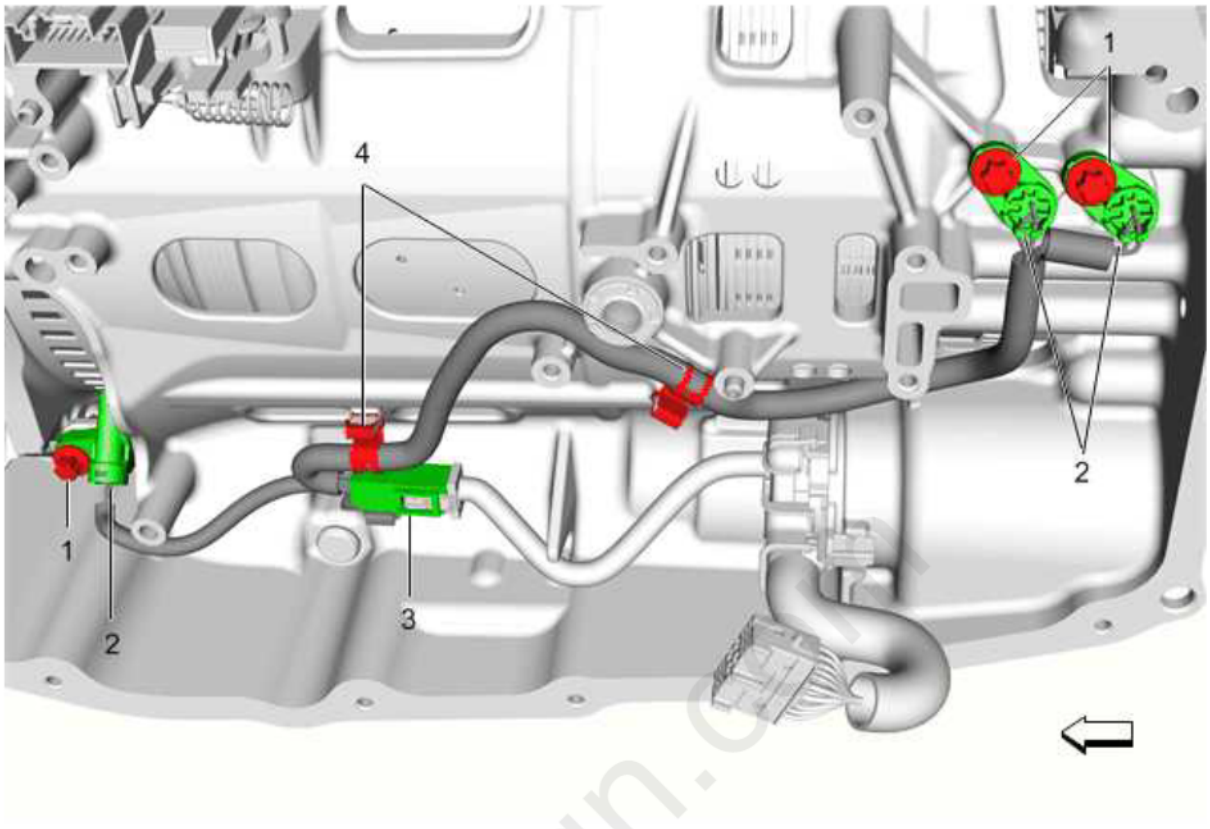

Fig. 50: Input And Output Speed Sensor Wiring Harness Bolts
Courtesy of GENERAL MOTORS COMPANY

2. Connect the input and output speed sensor wiring harness retainers (4).
3. Install the NEW input and output speed sensor wiring harness bolts (1) and tighten the bolts to 4 N.m (35 lb in) plus 45 degrees.

CAUTION: **This vehicle is equipped with torque-to-yield or single use fasteners. Install a NEW torque-to-yield or single use fastener when installing this component. Failure to replace the torque-to-yield or single use fastener could cause damage to the vehicle or component.**

CAUTION: **Refer to Fastener Caution .**

4. Connect the electrical connector (1).

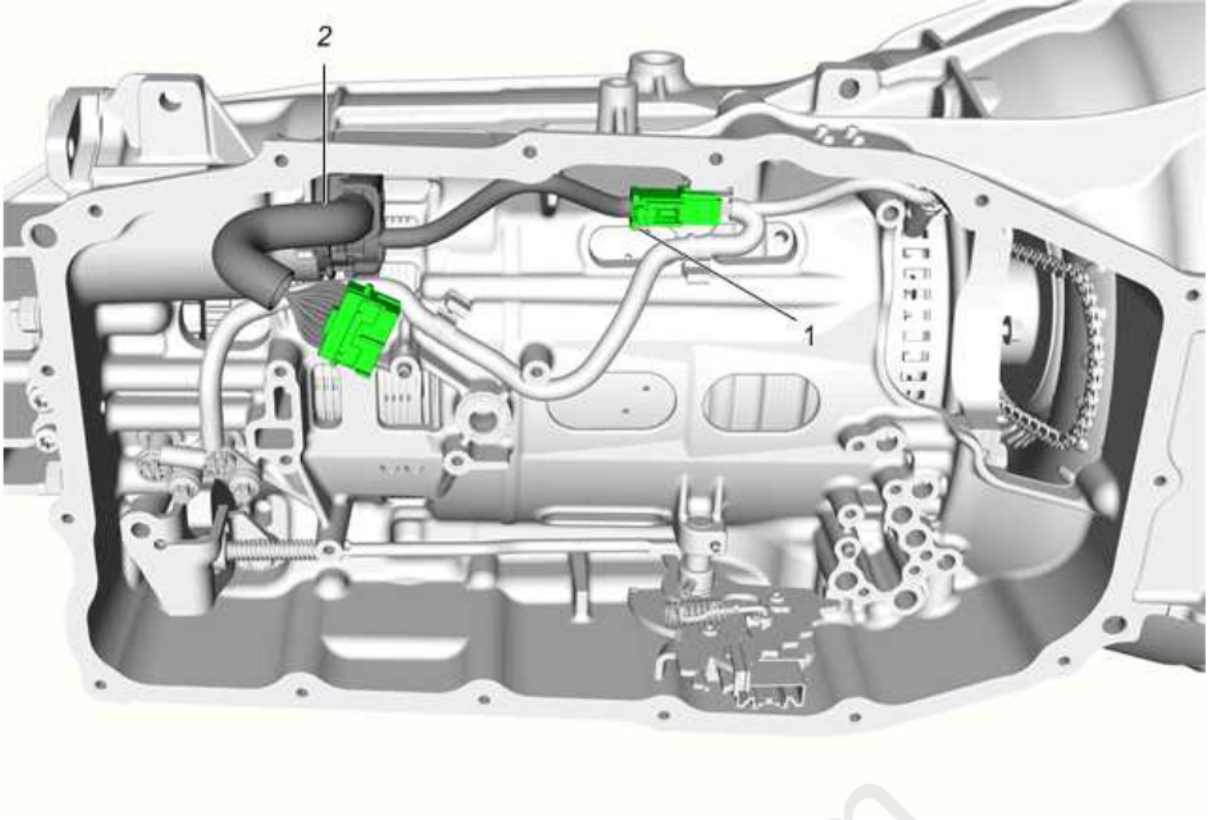

Fig. 51: Electrical Connector
Courtesy of GENERAL MOTORS COMPANY

5. Install the control valve body to the transmission. Refer to **Control Valve Body Replacement**.
6. Reprogram the transmission. Refer to **Solenoid Valve Characterization Reprogramming**

AUTOMATIC TRANSMISSION WIRING HARNESS REPLACEMENT (ELECTRICAL CONNECTOR PASSAGE SLEEVE)

Removal Procedure

1. Remove the control valve body. Refer to **Control Valve Body Replacement**
2. Disconnect the chassis wiring harness from the transmission electrical connector.
3. Disconnect the electrical connector (1).

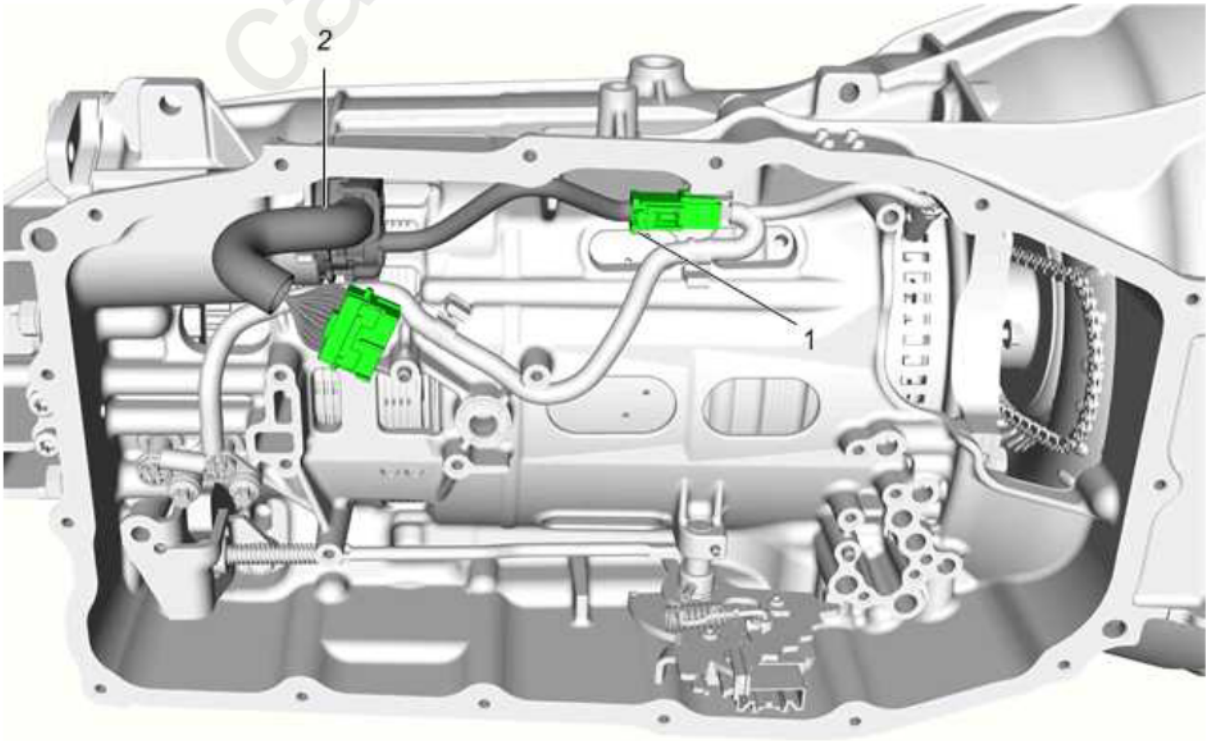

cardiagn.com

Fig. 52: Electrical Connector
Courtesy of GENERAL MOTORS COMPANY

4. Using a flat-bladed tool, press inward the four retaining tabs (1) around the main connector, then slide the main connector (2) inward into the transmission case.

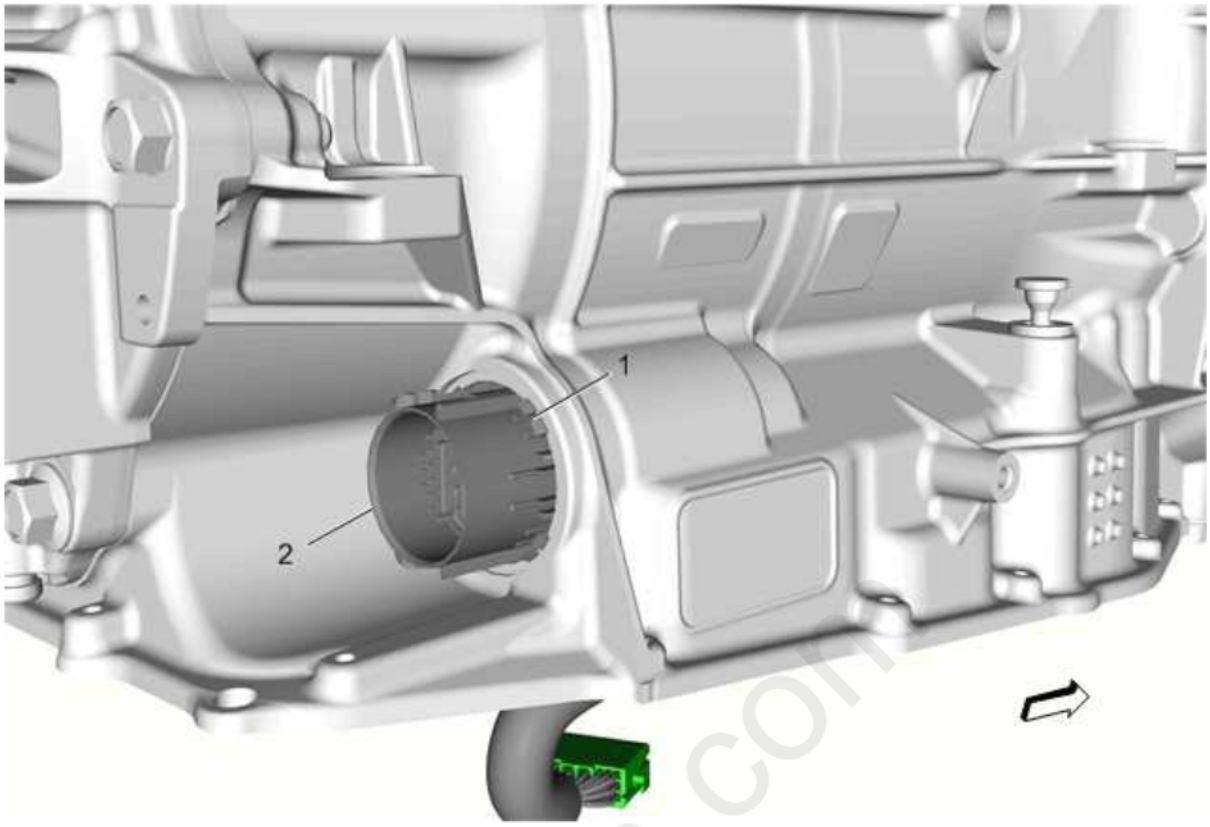

Fig. 53: Retaining Tabs
Courtesy of GENERAL MOTORS COMPANY

5. Remove the automatic transmission wiring harness from the transmission.

Installation Procedure

1. Position the automatic transmission wiring harness into the transmission.
2. Press the main connector into the transmission case until the four retaining tabs (1) around the main connector, lock into place.

cardiagn.com

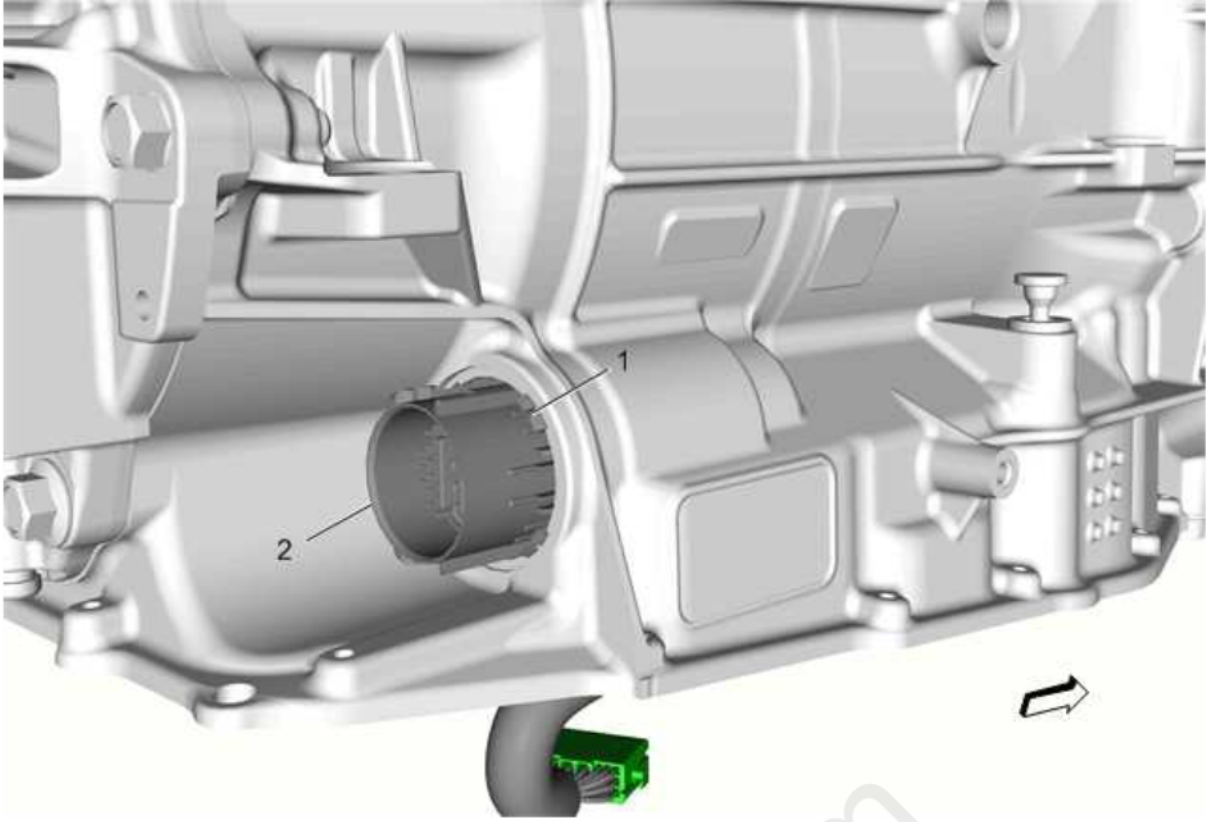

Fig. 54: Retaining Tabs
Courtesy of GENERAL MOTORS COMPANY

3. Connect the electrical connector (1).

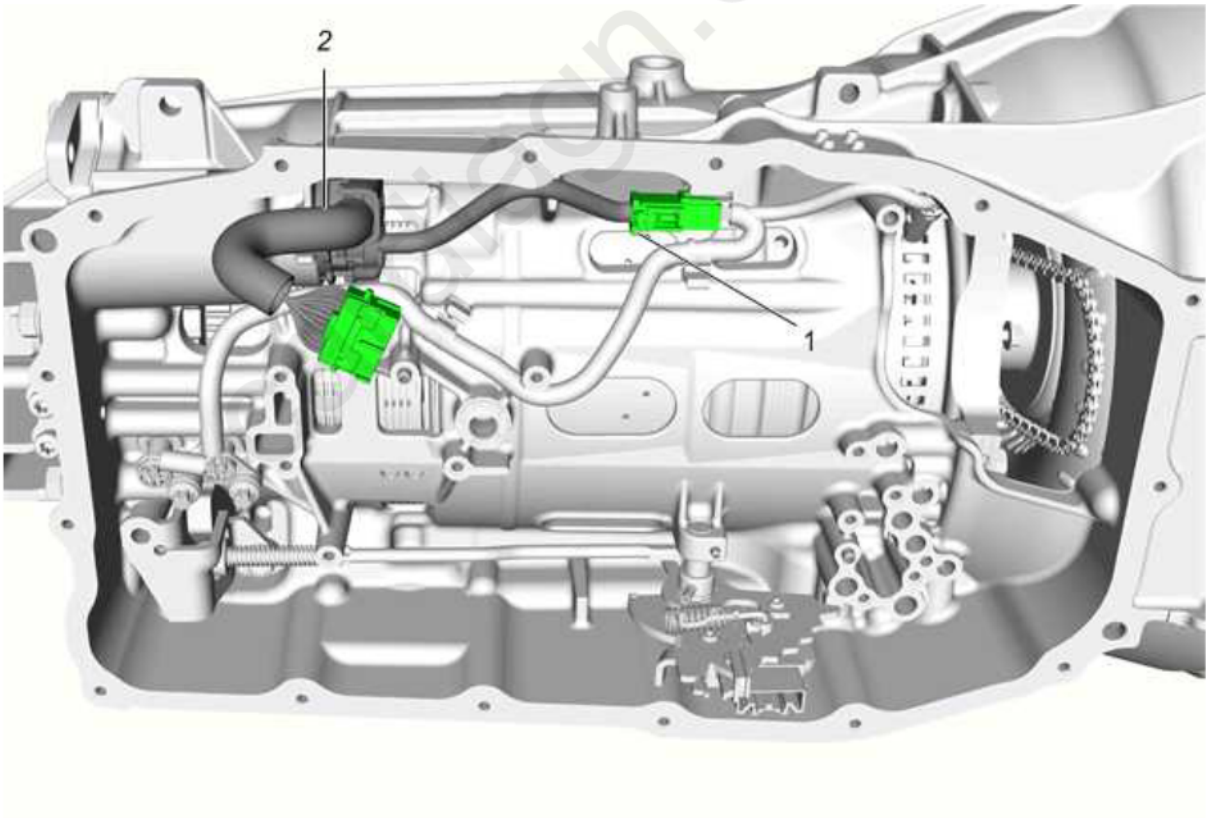

Fig. 55: Electrical Connector
Courtesy of GENERAL MOTORS COMPANY

4. Install the control valve body. Refer to **Control Valve Body Replacement**
5. Connect the chassis wiring harness from the transmission electrical connector.
6. Reprogram the transmission. Refer to **Solenoid Valve Characterization Reprogramming**

CONTROL VALVE BODY REPLACEMENT

Special Tools

- **DT-48285** Valve Body Torx Plus Socket

For equivalent tools, refer to **Special Tools** .

Removal Procedure

1. Remove the transmission fluid filter (4). Refer to **Automatic Transmission Fluid, Fluid Pan and/or Filter Replacement (Rear Wheel Drive)** and/or **Automatic Transmission Fluid, Fluid Pan and/or Filter Replacement (All Wheel Drive)**

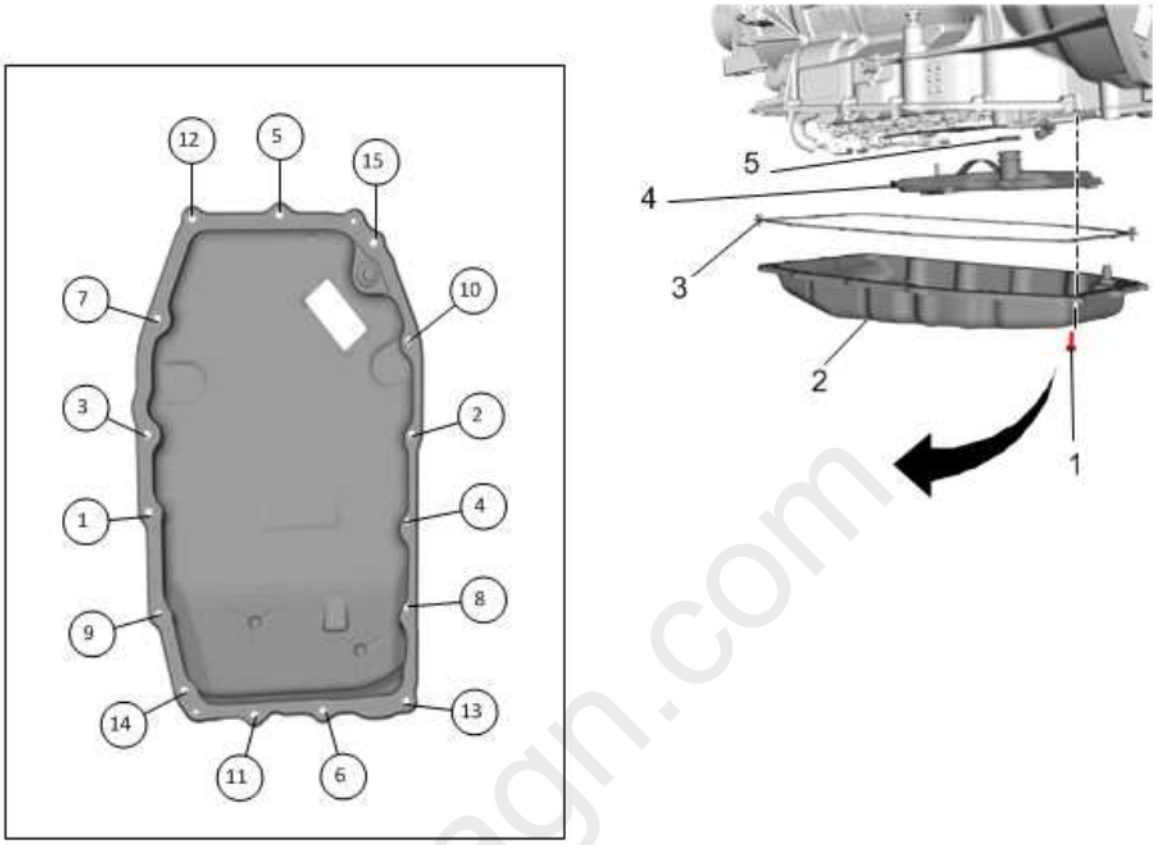

Fig. 56: Transmission Fluid Filter
Courtesy of GENERAL MOTORS COMPANY

2. Remove the auxiliary fluid accumulator. Refer to **Auxiliary Fluid Accumulator Replacement**
3. Remove the transmission fluid baffle (2). Refer to **Transmission Fluid Baffle Replacement**

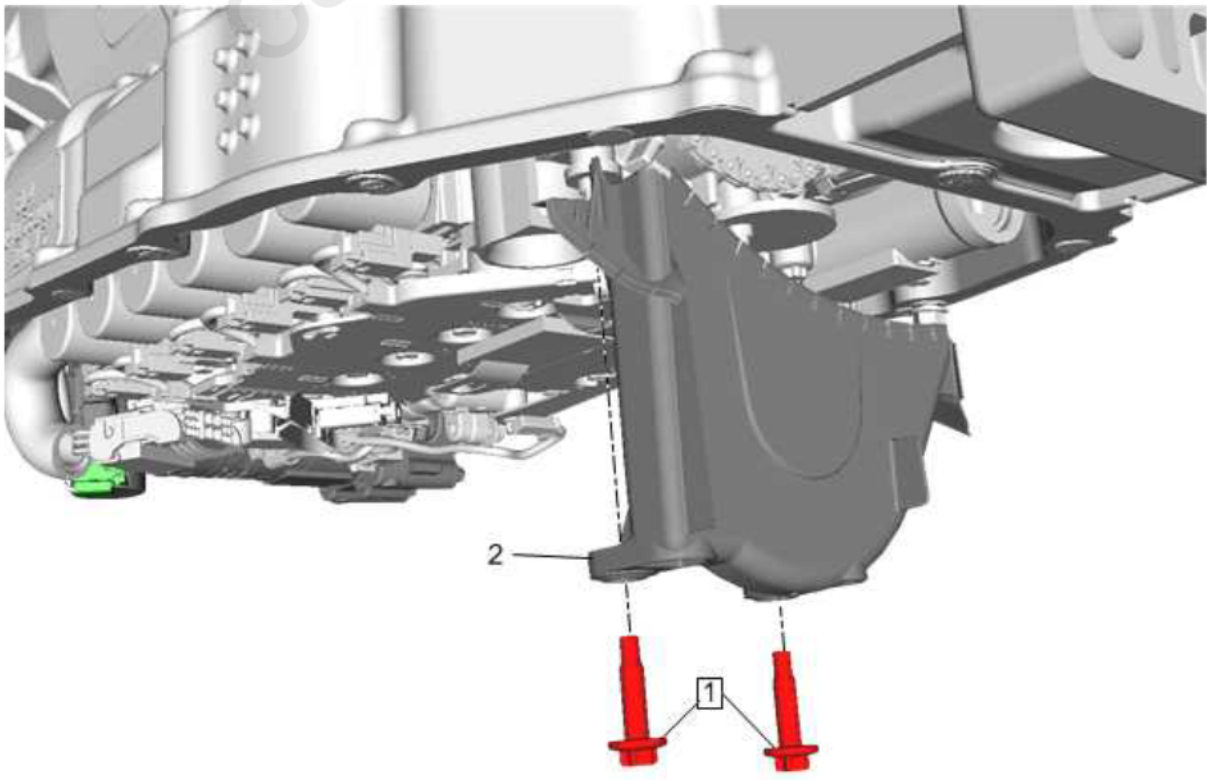

cardiagn.com

Fig. 57: Transmission Fluid Baffle
Courtesy of GENERAL MOTORS COMPANY

4. Remove the transmission control wiring harness. Refer to **Transmission Control Wiring Harness Replacement (M5N)**
5. Remove the manual shaft detent lever spring retaining bolt (1) and the manual shaft detent lever spring (2).

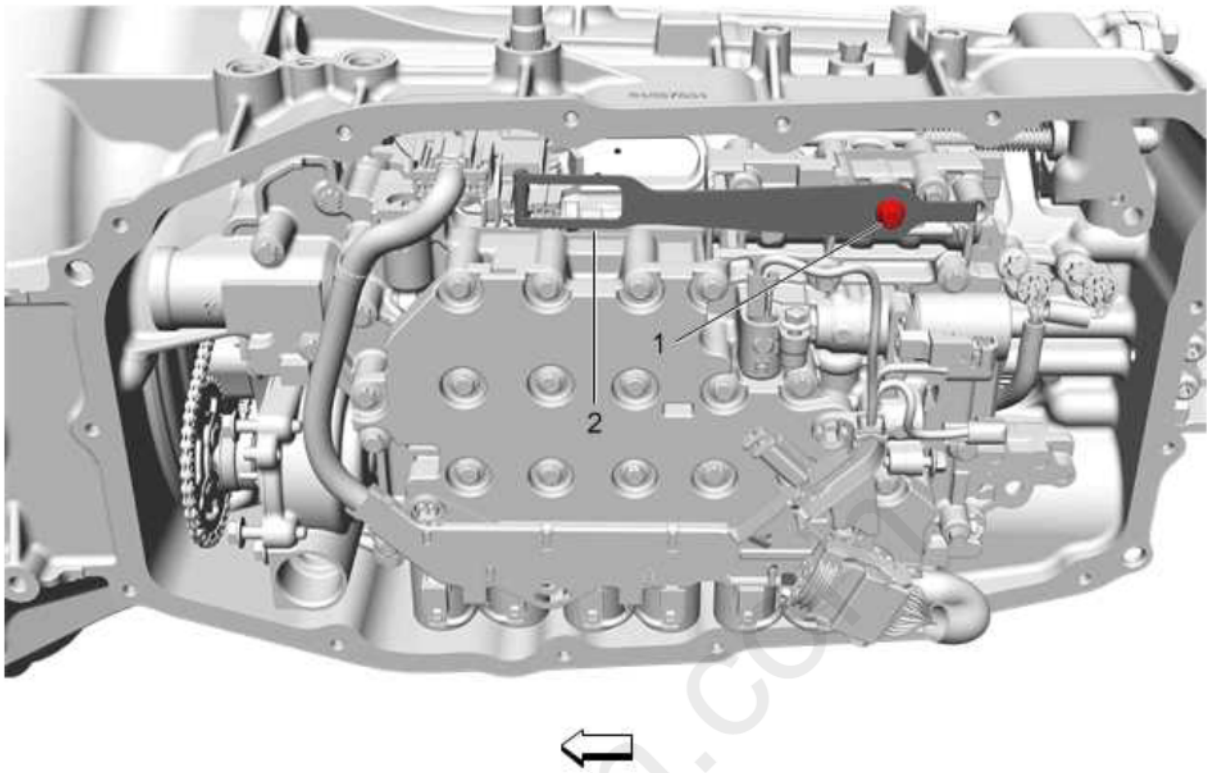

Fig. 58: Manual Shaft Detent Lever Spring
Courtesy of GENERAL MOTORS COMPANY

6. Disconnect the manual valve (1) from the manual shift shaft position switch assembly linkage (2).

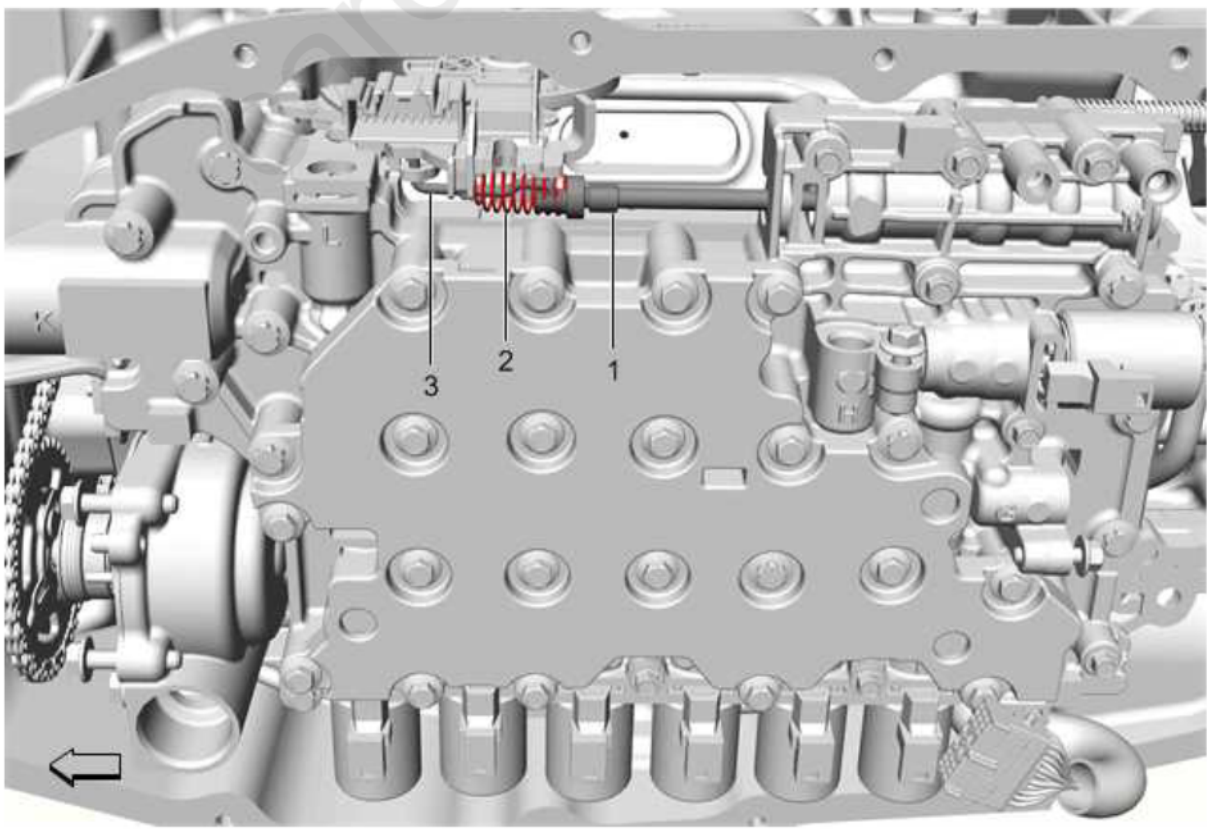

Fig. 59: Manual Valve
Courtesy of GENERAL MOTORS COMPANY

7. Remove the transmission fluid pump driven sprocket (1). Refer to transmission fluid baffle and driven sprocket in **Control Valve Assembly and Transmission Wiring Harness Removal** .

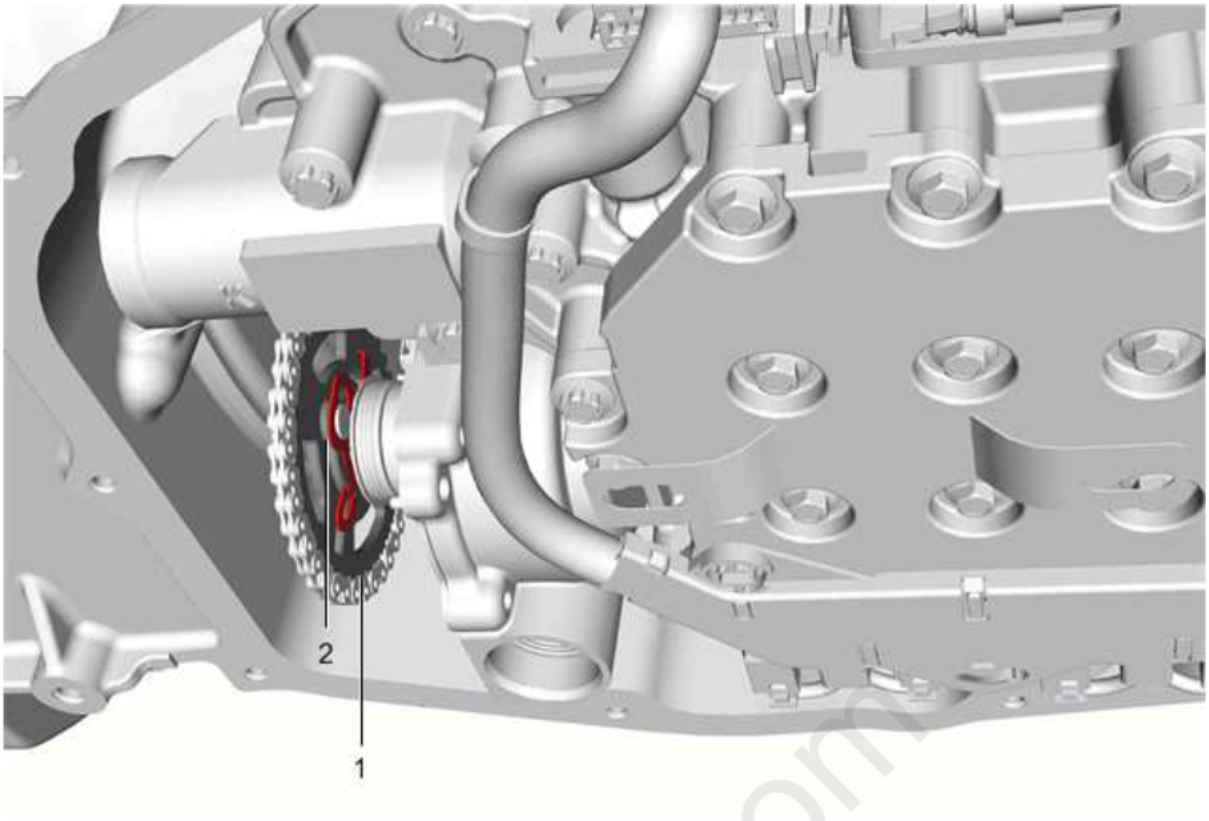

Fig. 60: Retainer
Courtesy of GENERAL MOTORS COMPANY

8. Using **DT-48285** Valve Body Torx Plus Socket remove the valve body bolts (1, 2) and the vale body assembly (3) from the transmission.

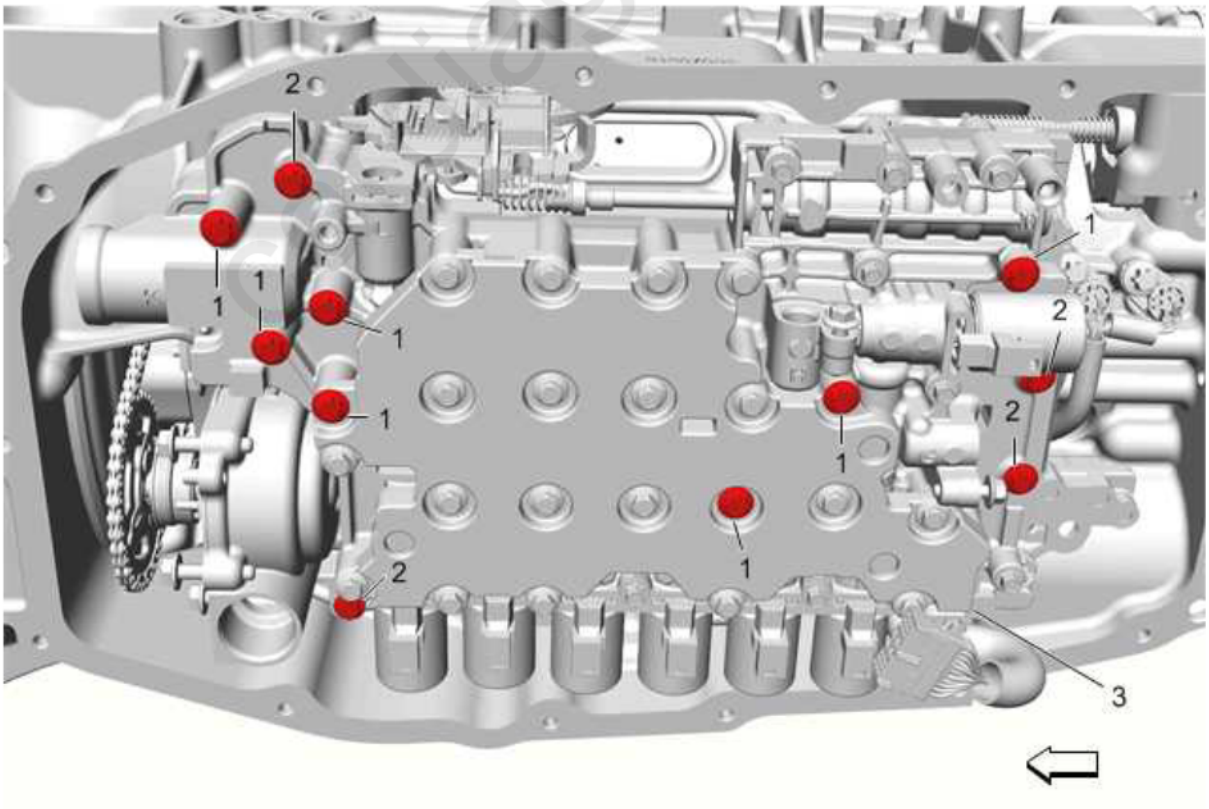

Fig. 61: Valve Body Torx Plus Bolts
Courtesy of GENERAL MOTORS COMPANY

Installation Procedure

1. Using **DT-48285** Valve Body Torx Plus Socket install the valve body (3) and the valve body assembly bolts (1, 2) in the transmission.

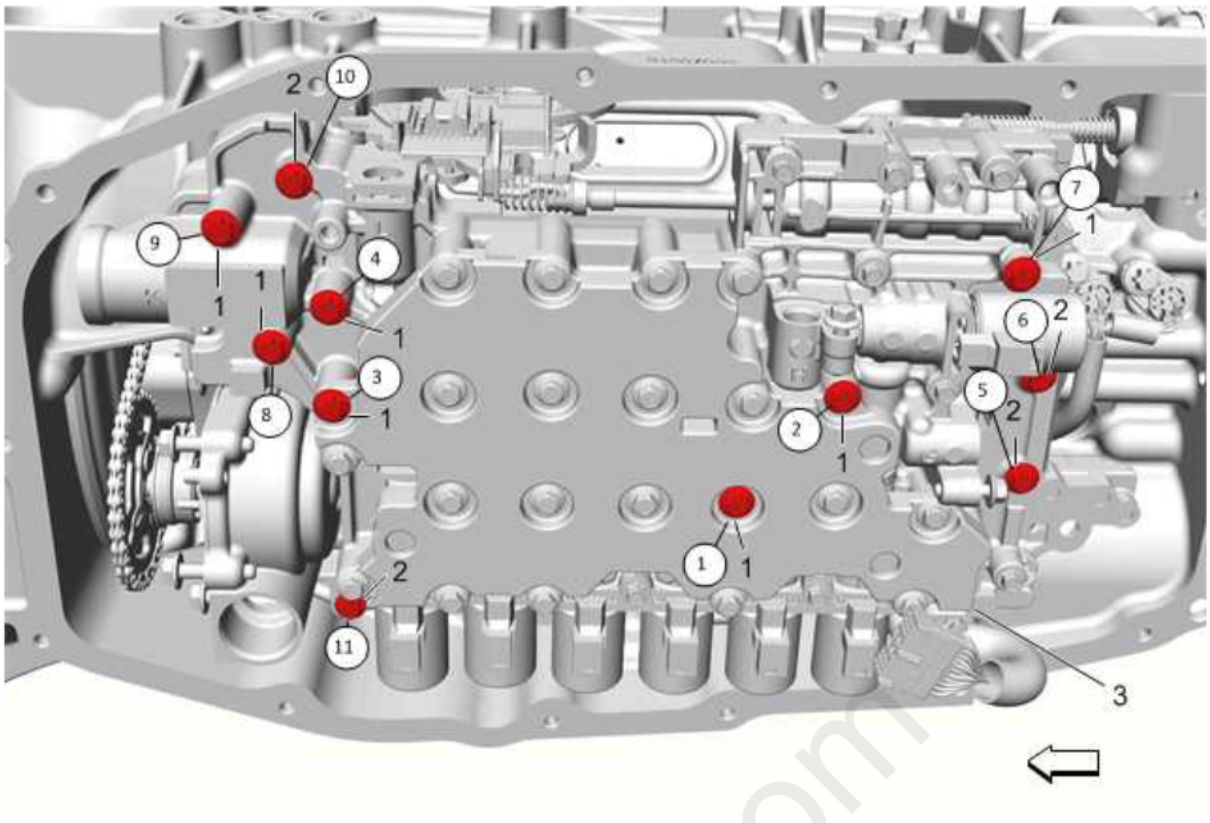

Fig. 62: Valve Body Torx Plus Bolt Tightening Sequence
Courtesy of GENERAL MOTORS COMPANY

2. Tighten the bolts (1 - M6 x 68) and bolts (2 - M6 x 45) to 9 N.m (80 lb in) in the sequence shown.
3. Install the transmission fluid pump driven sprocket (1). Refer to automatic transmission fluid baffle and driven sprocket in **Control Valve Assembly and Transmission Wiring Harness Installation** .

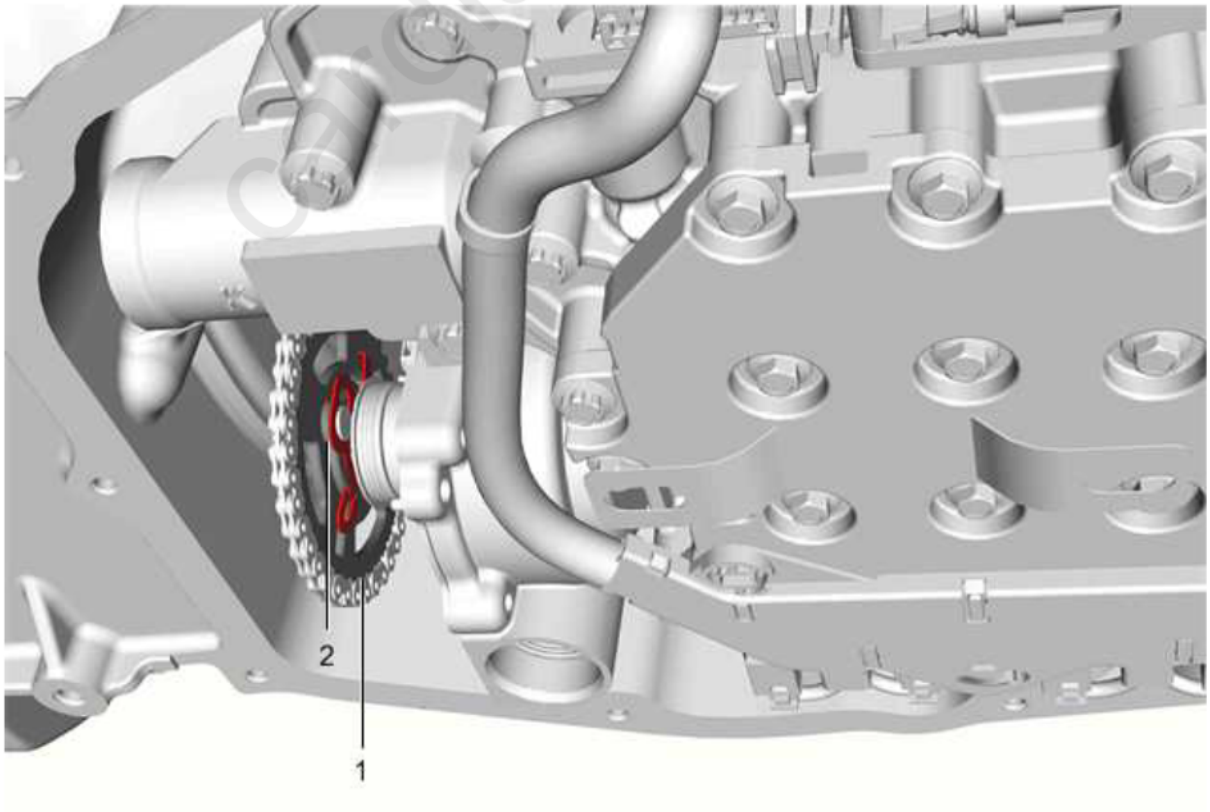

Fig. 63: Retainer
Courtesy of GENERAL MOTORS COMPANY

4. Install the manual shaft detent lever spring (2) and the manual shaft detent lever spring retaining bolt (1) then tighten to 12 N.m (106 lb in).

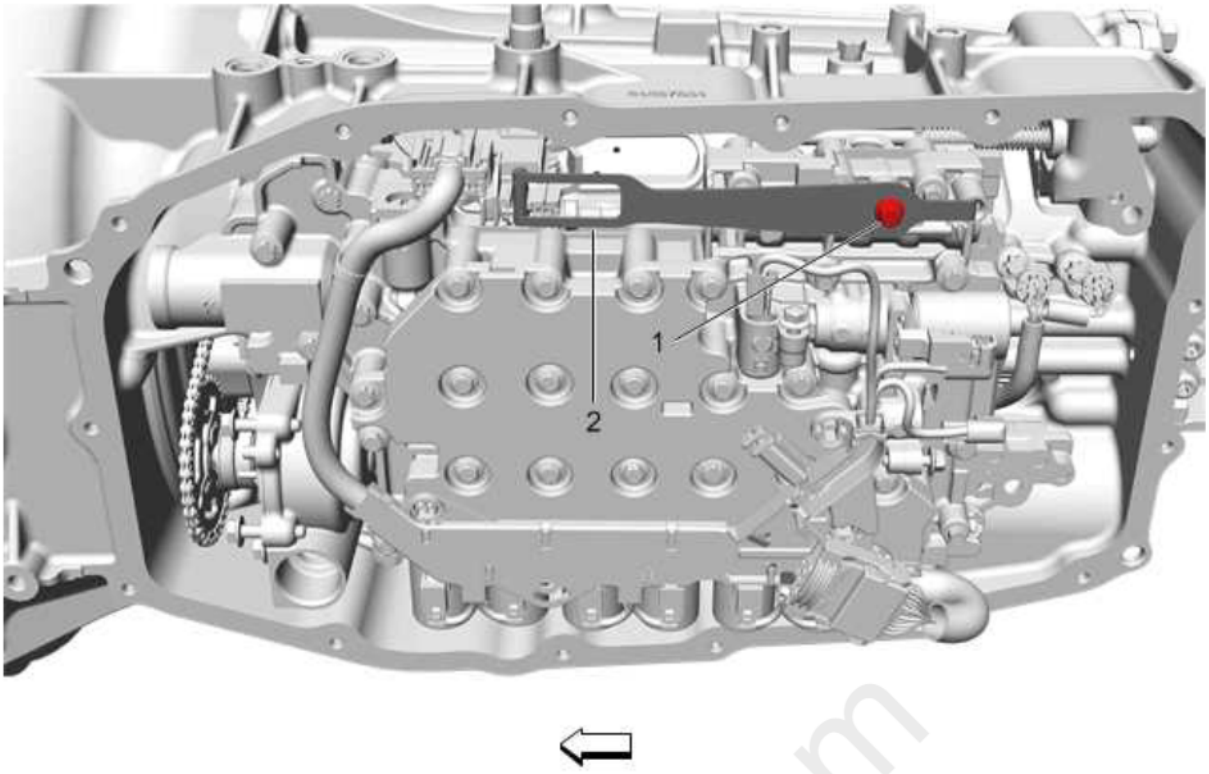

Fig. 64: Manual Shaft Detent Lever Spring
Courtesy of GENERAL MOTORS COMPANY

5. Connect the manual valve (1) to the manual shift shaft position switch assembly linkage (2).

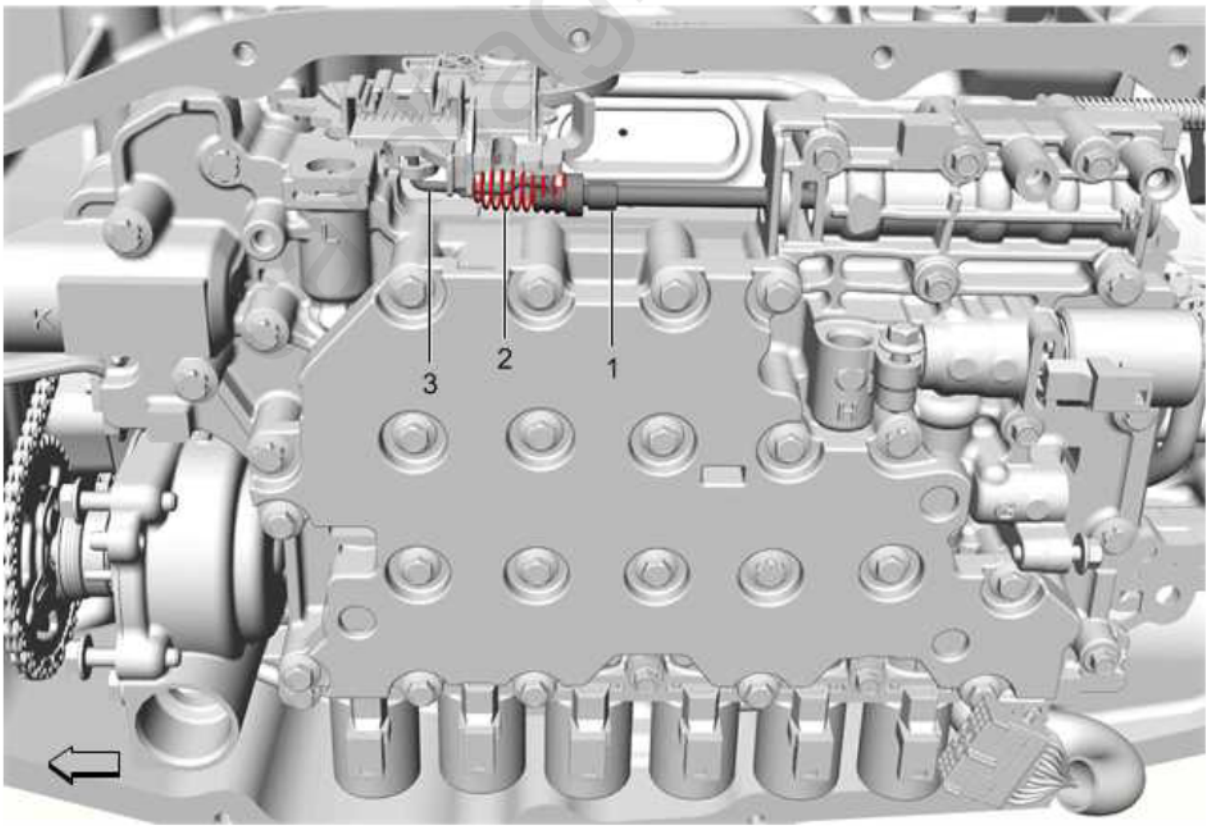

Fig. 65: Manual Valve
Courtesy of GENERAL MOTORS COMPANY

6. Install the transmission fluid baffle (2). Refer to **Transmission Fluid Baffle Replacement**

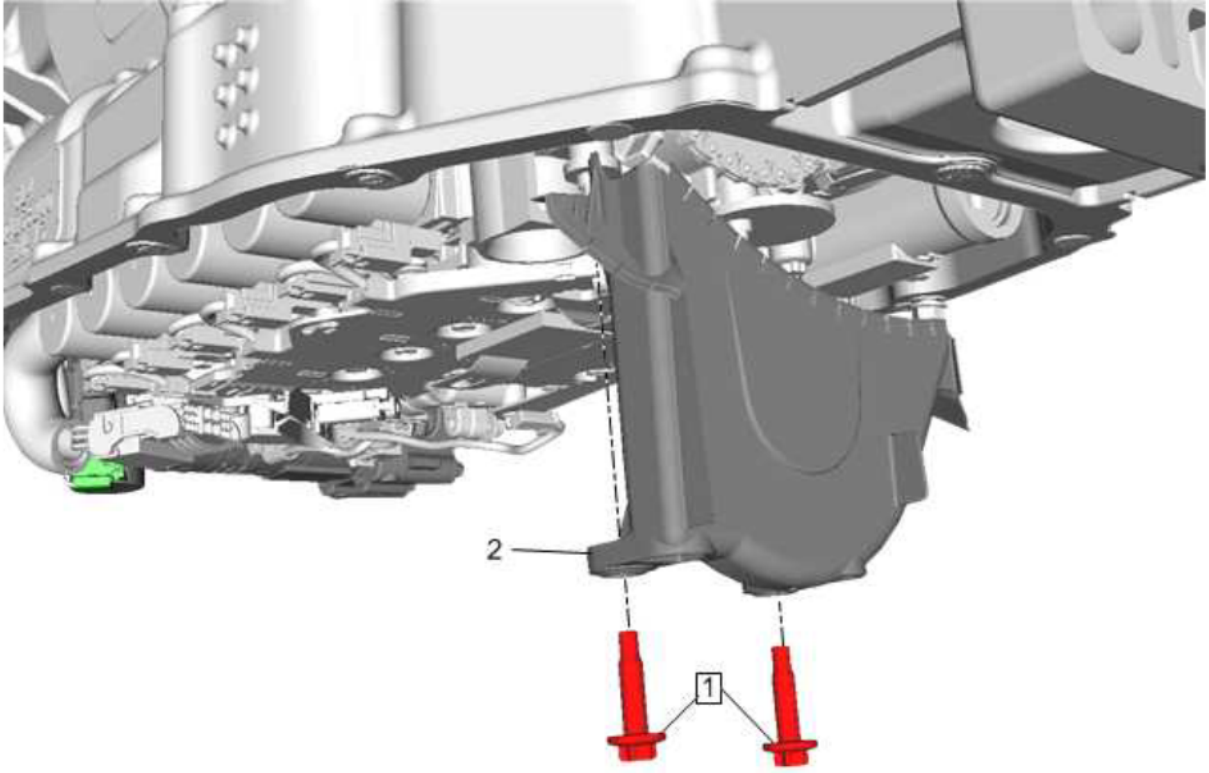

Fig. 66: Transmission Fluid Baffle
Courtesy of GENERAL MOTORS COMPANY

7. Install the auxiliary fluid accumulator. Refer to **Auxiliary Fluid Accumulator Replacement**
8. Install the transmission fluid filter (4). Refer to **Automatic Transmission Fluid, Fluid Pan and/or Filter Replacement (Rear Wheel Drive)** and/or **Automatic Transmission Fluid, Fluid Pan and/or Filter Replacement (All Wheel Drive)**

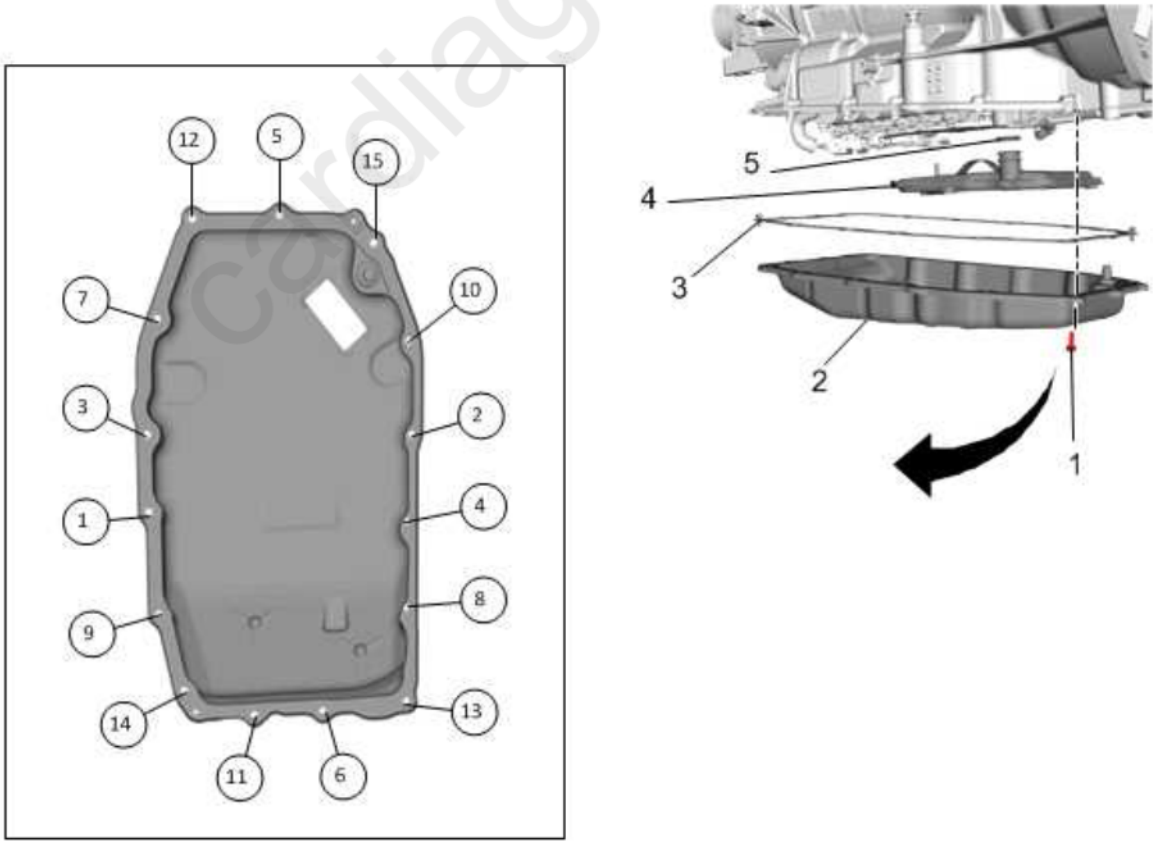

Fig. 67: Transmission Fluid Filter
Courtesy of GENERAL MOTORS COMPANY

9. Reprogram the transmission. Refer to **Solenoid Valve Characterization Reprogramming**
10. Perform the service fast learn procedure. Refer to **Transmission Service Fast Learn Procedure** .

NOTE: **The Service Fast Learn procedure must be performed when one of the following repairs have been made to the vehicle. Failure to perform the procedure after one of the following repairs may result in poor transmission performance, as well as transmission DTCs being set:**

The service fast learn procedure must be performed when any of the following repairs has been made to the transmission.

- **Pressure regulating solenoid replacement**
- **Valve body repair or replacement**
- **Any service/repair in response to a shift quality concern**
- **Any internal transmission service, repair, overhaul or replacement**
- **Torque converter replacement**
- **TCM replacement**
- **Transmission assembly replacement**

PARK PAWL ACTUATOR REPLACEMENT

Removal Procedure

1. Remove the automatic transmission range selector lever. Refer to **Automatic Transmission Range Selector Lever Replacement**.
2. Remove the control valve body. Refer to **Control Valve Body Replacement**.
3. Remove and Discard the manual shift shaft detent lever hub pin (3).

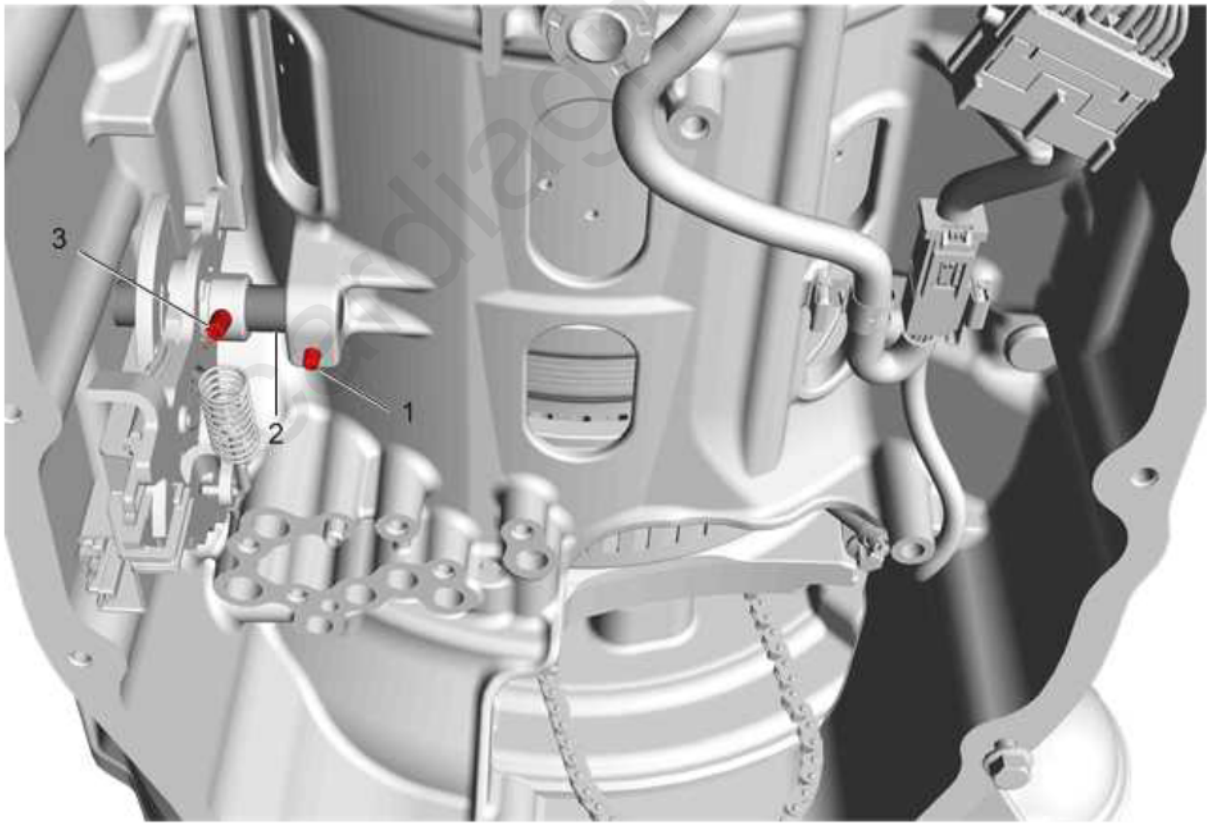

Fig. 68: Manual Shift Shaft And Pins
Courtesy of GENERAL MOTORS COMPANY

4. Remove and Discard the manual shift shaft pin (1).
5. Remove the manual shift shaft (2).
6. Remove or reposition the manual shift shaft position switch assembly as necessary.
7. Disconnect the park pawl actuator rod (2) from the manual shift shaft position switch (1).

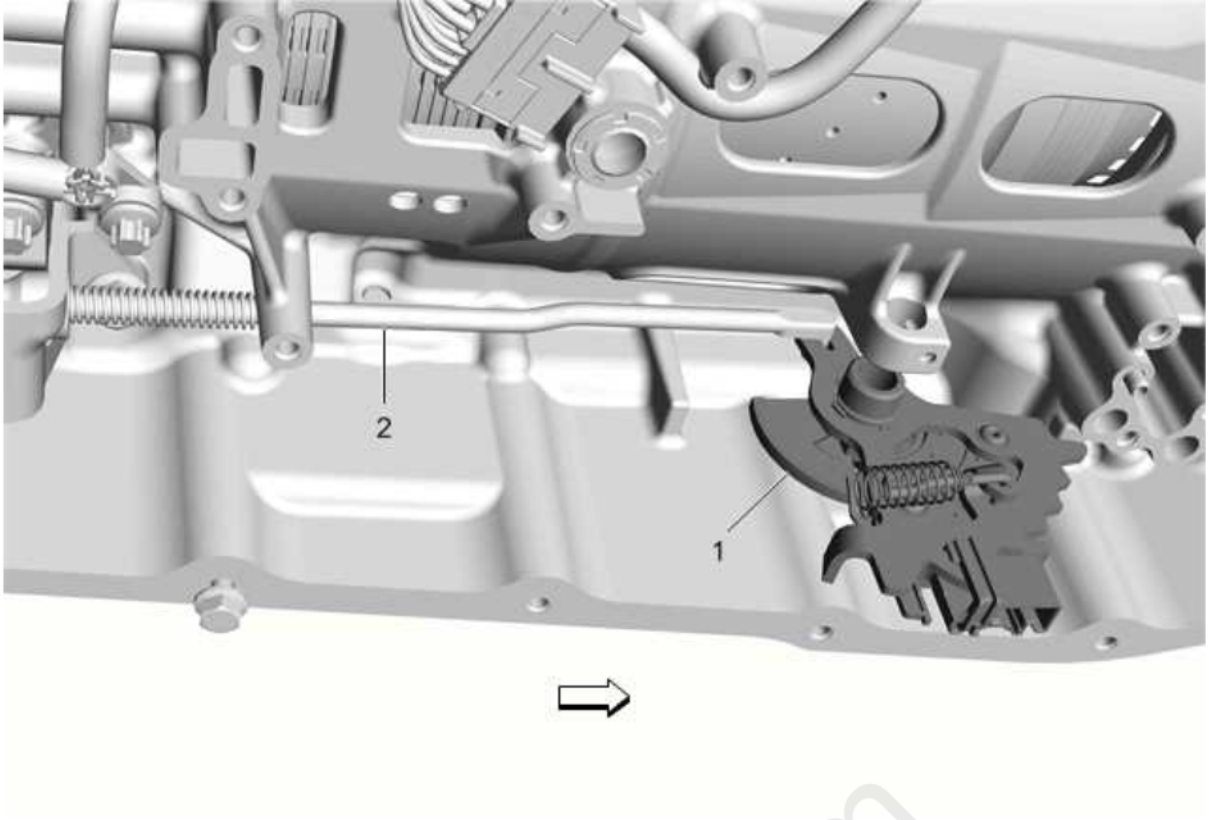

Fig. 69: Manual Shift Shaft Position Switch And Park Pawl Actuator Rod
Courtesy of GENERAL MOTORS COMPANY

8. Remove the park pawl actuator rod.

Installation Procedure

1. Connect the park pawl actuator rod (2) to the manual shift shaft position switch (1).

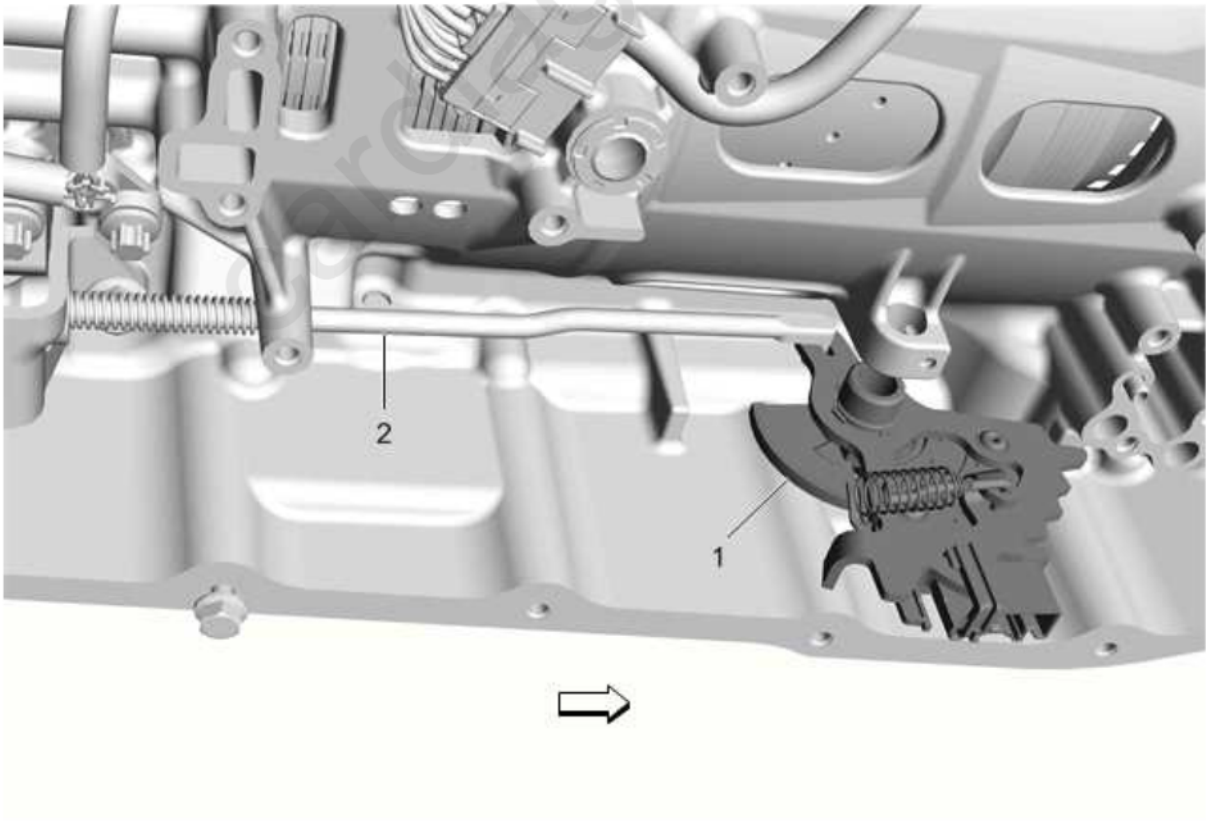

Fig. 70: Manual Shift Shaft Position Switch And Park Pawl Actuator Rod
Courtesy of GENERAL MOTORS COMPANY

2. Install the manual shift shaft position switch and park pawl assembly (1).
3. Install the manual shift shaft (2) aligning the position switch assembly onto the shaft.

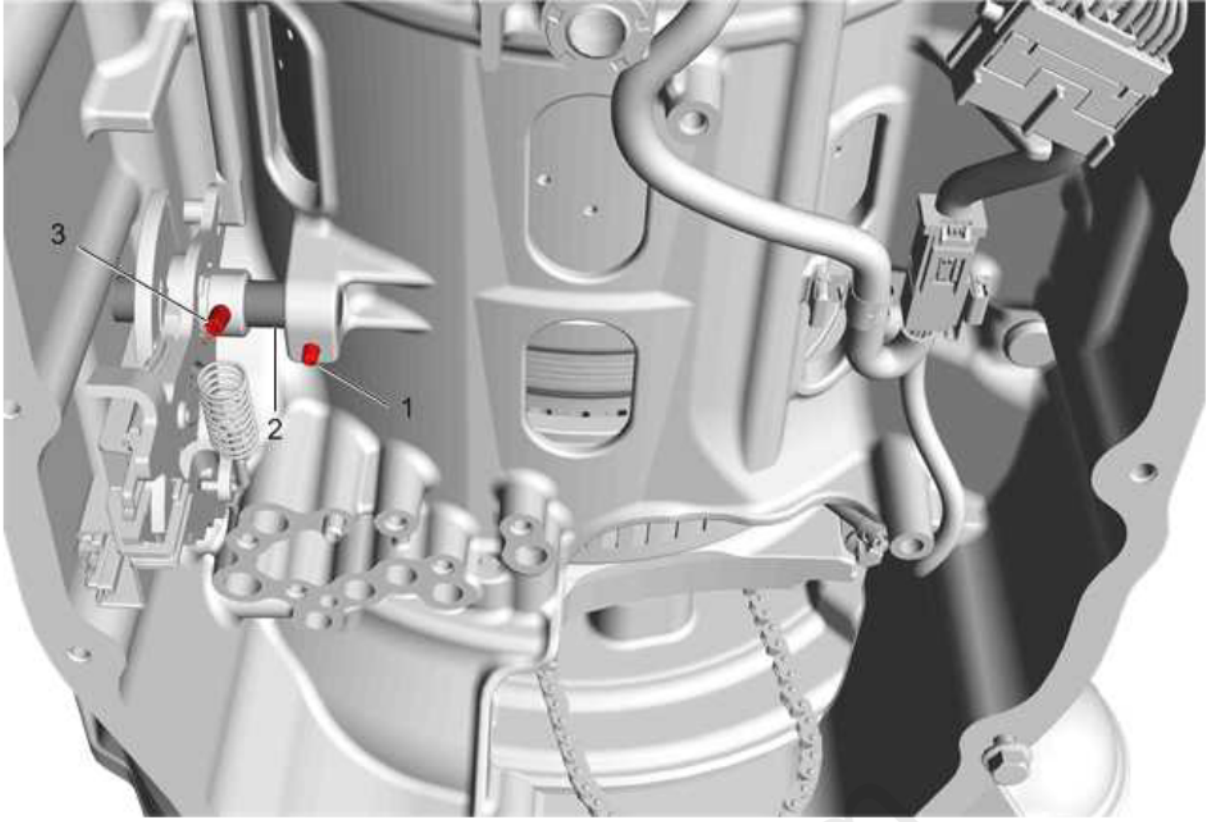

Fig. 71: Manual Shift Shaft And Pins
Courtesy of GENERAL MOTORS COMPANY

4. Install the NEW manual shift shaft pin (1).
5. Install the NEW manual shift shaft detent lever hub pin (3).
6. Install the control valve body. Refer to **Control Valve Body Replacement**.
7. Reprogram the transmission. Refer to **Solenoid Valve Characterization Reprogramming**

TRANSMISSION FLUID BAFFLE REPLACEMENT

Removal Procedure

1. Remove the transmission fluid filter (4). Refer to **Automatic Transmission Fluid, Fluid Pan and/or Filter Replacement (Rear Wheel Drive)** and/or **Automatic Transmission Fluid, Fluid Pan and/or Filter Replacement (All Wheel Drive)**.

cardiagn.com

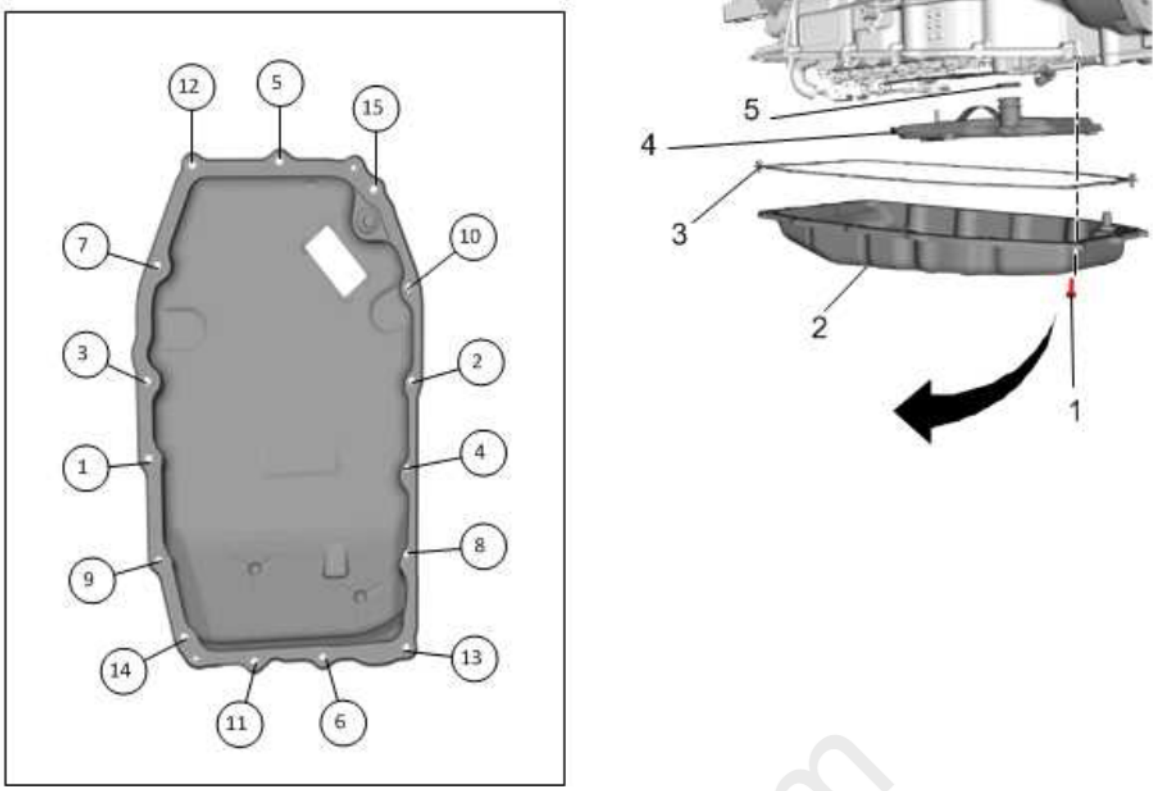

Fig. 72: Transmission Fluid Filter
Courtesy of GENERAL MOTORS COMPANY

2. Remove the transmission fluid baffle bolts (1) and discard.

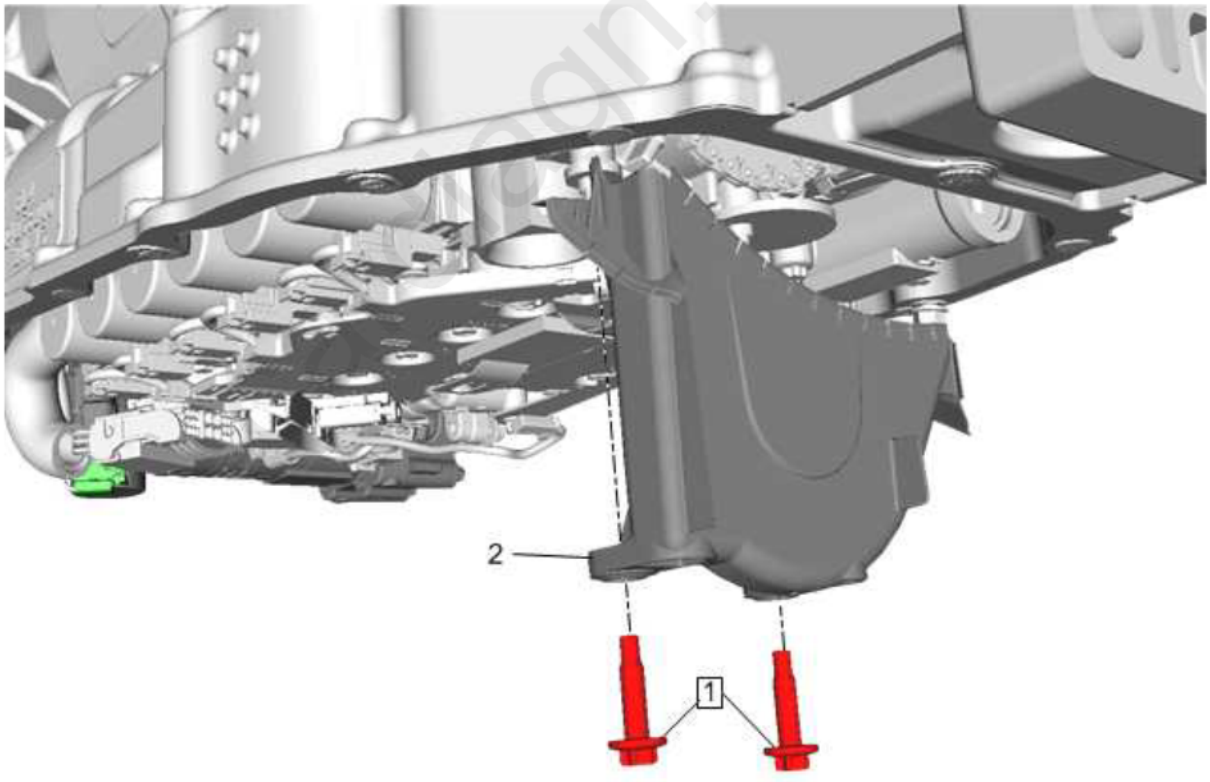

Fig. 73: Transmission Fluid Baffle
Courtesy of GENERAL MOTORS COMPANY

3. Remove the transmission fluid pump baffle (2).

Installation Procedure

1. Install the transmission fluid pump baffle (2).

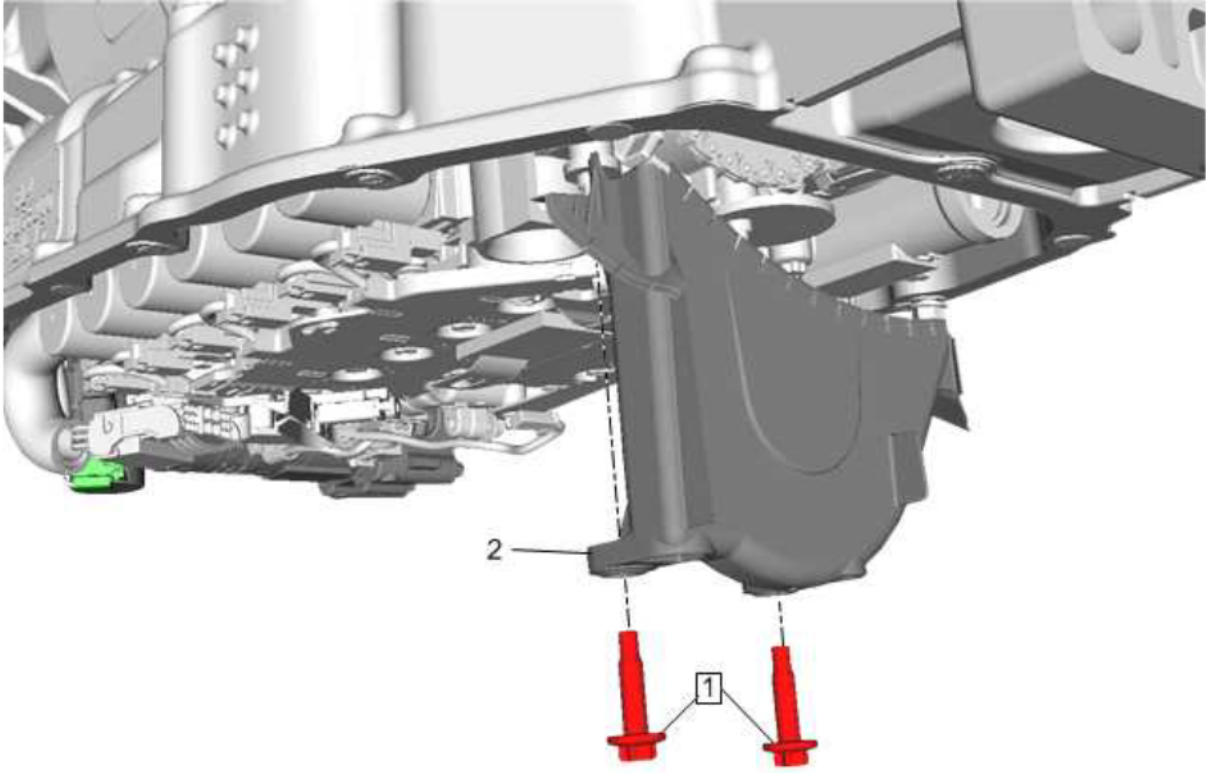

Fig. 74: Transmission Fluid Baffle
Courtesy of GENERAL MOTORS COMPANY

2. Install the NEW transmission fluid baffle bolts (1) and tighten to 4 N.m (35 lb in) plus 45 degrees.
3. Install the transmission fluid filter (4). Refer to **Automatic Transmission Fluid, Fluid Pan and/or Filter Replacement (Rear Wheel Drive)** and/or **Automatic Transmission Fluid, Fluid Pan and/or Filter Replacement (All Wheel Drive)**.

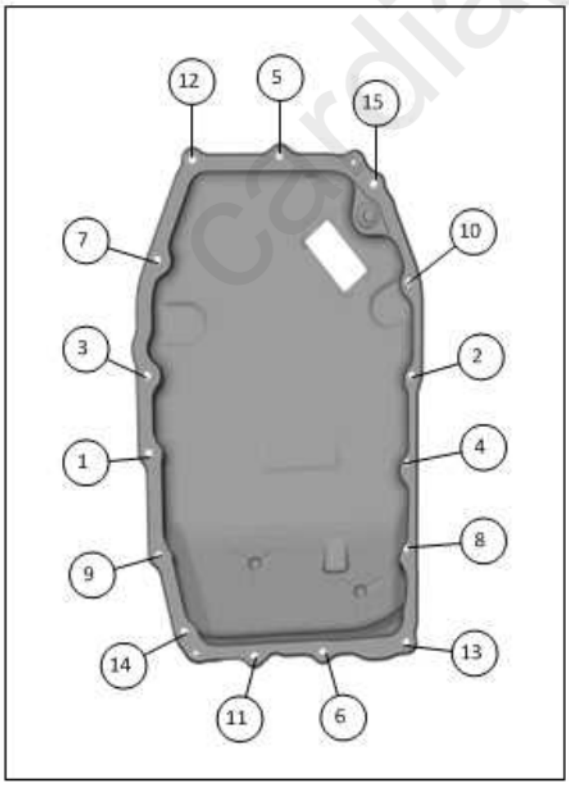

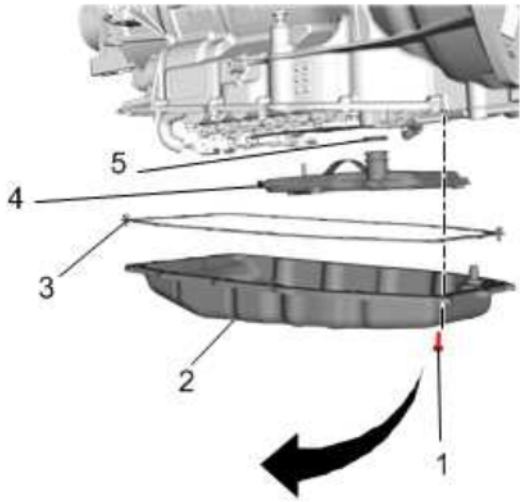

Fig. 75: Transmission Fluid Filter
Courtesy of GENERAL MOTORS COMPANY

TRANSMISSION FLUID PUMP REPLACEMENT

Removal Procedure

1. Remove the control valve body. Refer to **Control Valve Body Replacement**.
2. Remove the automatic transmission fluid pump (2). Refer to automatic transmission fluid pump assembly removal in **Control Valve Body Assembly Disassemble** .

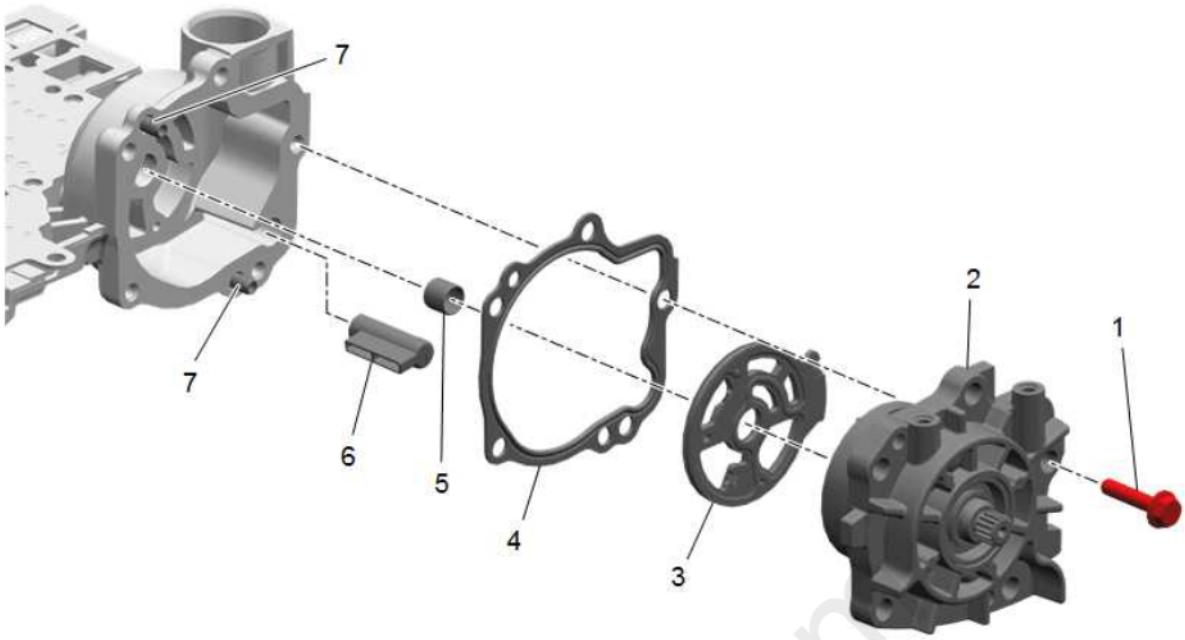

Fig. 76: Automatic Transmission Fluid Pump Assembly
Courtesy of GENERAL MOTORS COMPANY

Installation Procedure

1. Install the automatic transmission fluid pump (2). Refer to automatic transmission fluid pump assembly installation in **Control Valve Body Assembly Assemble** .

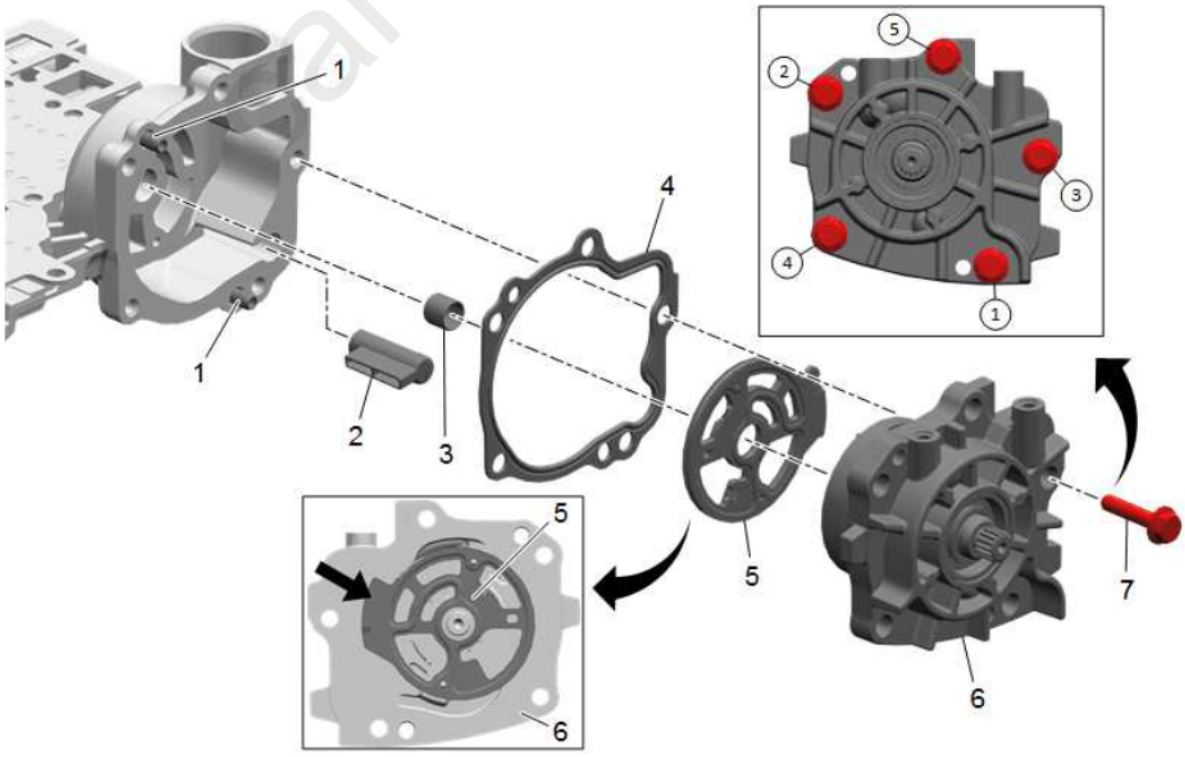

Fig. 77: Automatic Transmission Fluid Pump Assembly
Courtesy of GENERAL MOTORS COMPANY

2. Install the control valve body. Refer to **Control Valve Body Replacement**.
3. Reprogram the transmission. Refer to **Solenoid Valve Characterization Reprogramming**

TRANSMISSION CONTROL WIRING HARNESS REPLACEMENT (M5N)

Removal Procedure

1. Remove the transmission fluid filter (4). Refer to **Automatic Transmission Fluid, Fluid Pan and/or Filter Replacement (Rear Wheel Drive)** and/or **Automatic Transmission Fluid, Fluid Pan and/or Filter Replacement (All Wheel Drive)**.

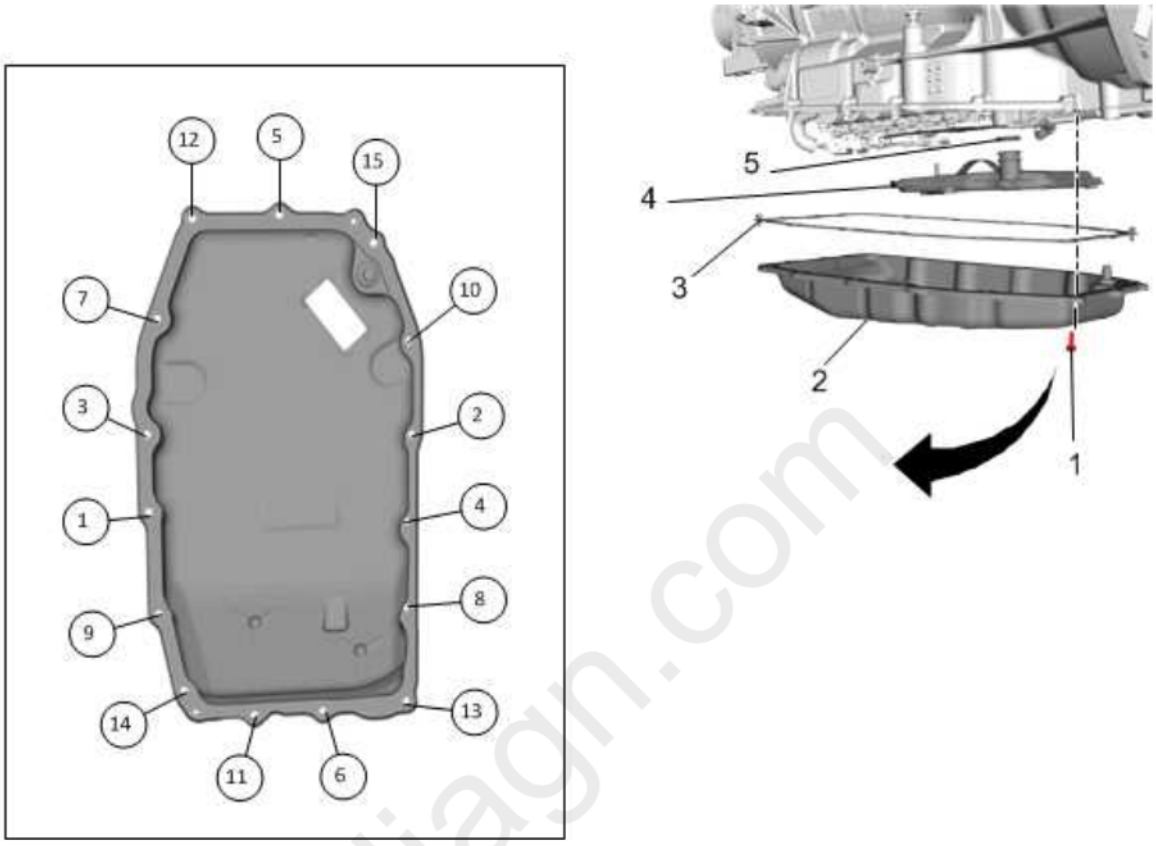

Fig. 78: Transmission Fluid Filter
Courtesy of GENERAL MOTORS COMPANY

2. Release the transmission control wiring harness connectors (1).

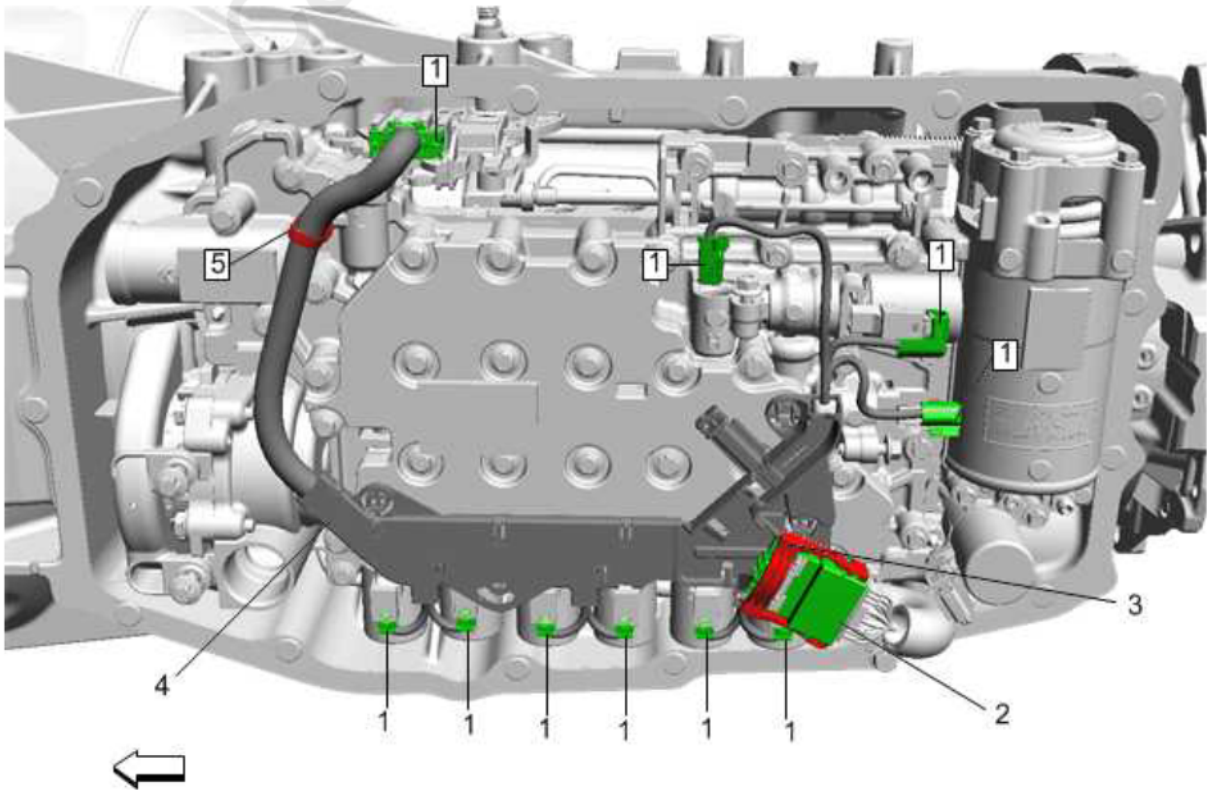

Fig. 79: Transmission Control Wiring Harness Connectors
Courtesy of GENERAL MOTORS COMPANY

3. Carefully disconnect the wiring harness clip (5) from the valve body.
4. Unlatch the connector retainer (3), then disconnect the main connector (2).
5. Remove the transmission control wiring harness (4).

Installation Procedure

1. Install automatic transmission control wiring harness (4).

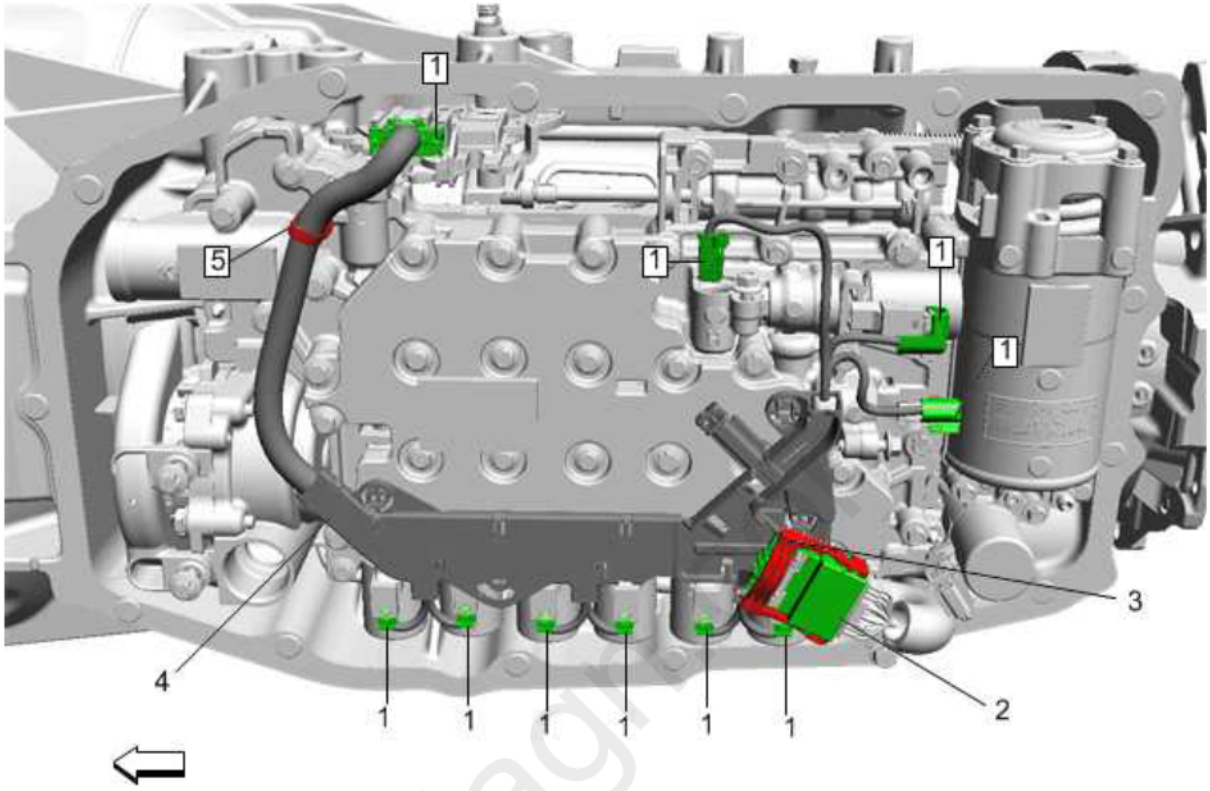

Fig. 80: Transmission Control Wiring Harness Connectors
Courtesy of GENERAL MOTORS COMPANY

2. Connect the wiring harness clip (5) to the valve body.
3. Connect the transmission control wiring harness connectors (1, 2), ensure the valve body connector retainer is latched (3).
4. Install the transmission fluid filter (4) and all other related components. Refer to **Automatic Transmission Fluid, Fluid Pan and/or Filter Replacement (Rear Wheel Drive)** and/or **Automatic Transmission Fluid, Fluid Pan and/or Filter Replacement (All Wheel Drive)**.

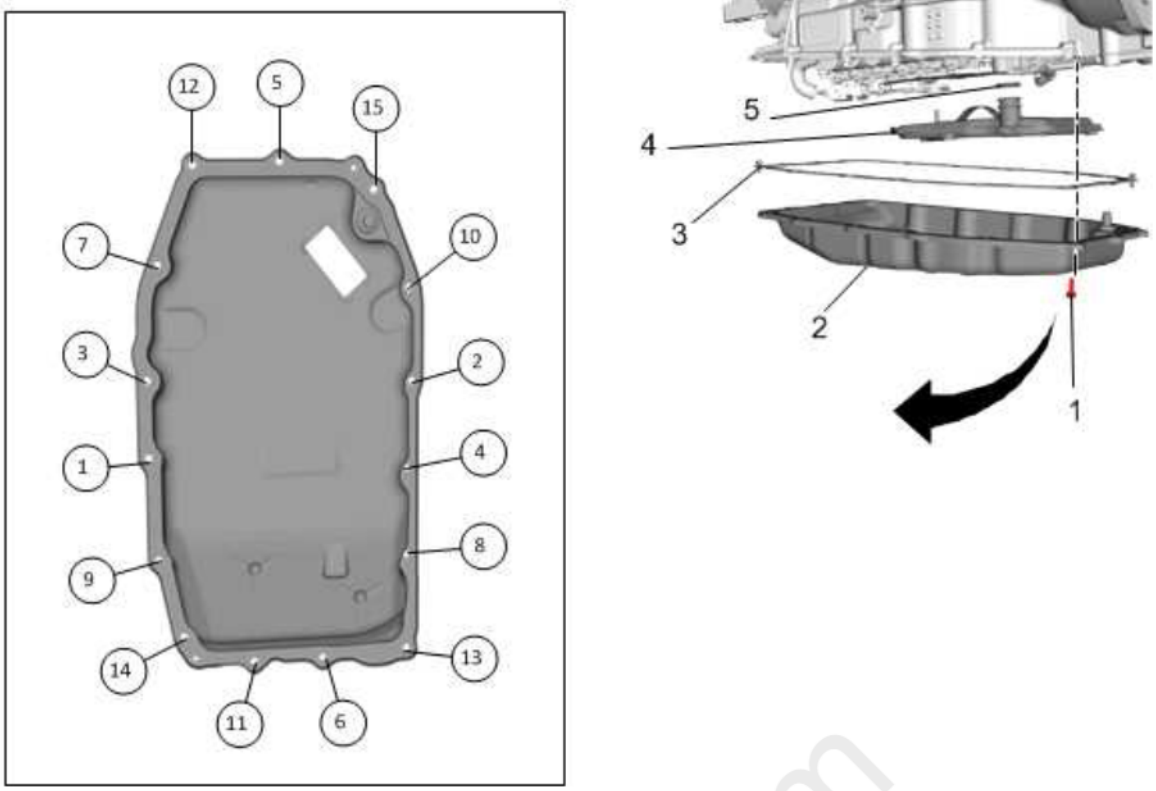

Fig. 81: Transmission Fluid Filter
Courtesy of GENERAL MOTORS COMPANY

AUXILIARY FLUID ACCUMULATOR REPLACEMENT

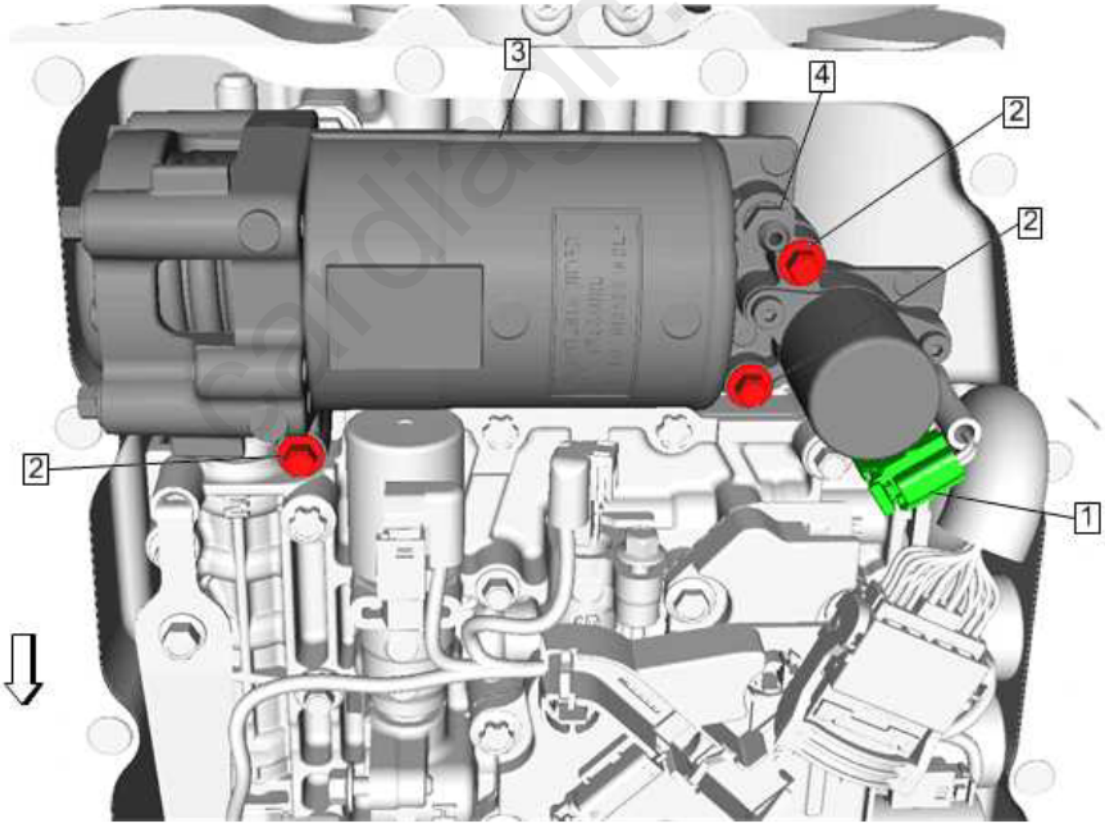

Fig. 82: Auxiliary Fluid Accumulator
Courtesy of GENERAL MOTORS COMPANY

Callout	Component Name

Callout	Component Name
	WARNING: **The automatic transmission fluid accumulator may be pressurized greater than 120 psi (827 kpa) and fluid may be hot. When servicing accumulator, key must be OFF for a minimum of 10 minutes. Do not open bleeder screw until instructed to do so or personal injury may result.** **Preliminary Procedure** 1. Remove the transmission fluid pan. Refer to **Automatic Transmission Fluid, Fluid Pan and/or Filter Replacement (Rear Wheel Drive)** and/or **Automatic Transmission Fluid, Fluid Pan and/or Filter Replacement (All Wheel Drive)** 2. Securely attach a hose from the bleeder valve into an approved container. 3. Slowly loosen bleeder valve until pressure begins to release. 4. Allow all pressure and fluid to be released from the auxiliary fluid accumulator. 5. Remove the bleeder valve to ensure all fluid and pressure has been released.
1	A/Trans Auxiliary Fluid Accumulator electrical connector
2	A/Trans Auxiliary Fluid Accumulator Bolt (Qty: 3) **CAUTION:** **Refer to Fastener Caution .** **Tighten** 8 N.m (71 lb in)
3	A/Trans Auxiliary Fluid Accumulator
4	A/Trans Auxiliary Fluid Accumulator Bleeder Valve **NOTE:** **Ensure bleeder valve is securely tightened.**

AUXILIARY FLUID ACCUMULATOR SOLENOID REPLACEMENT

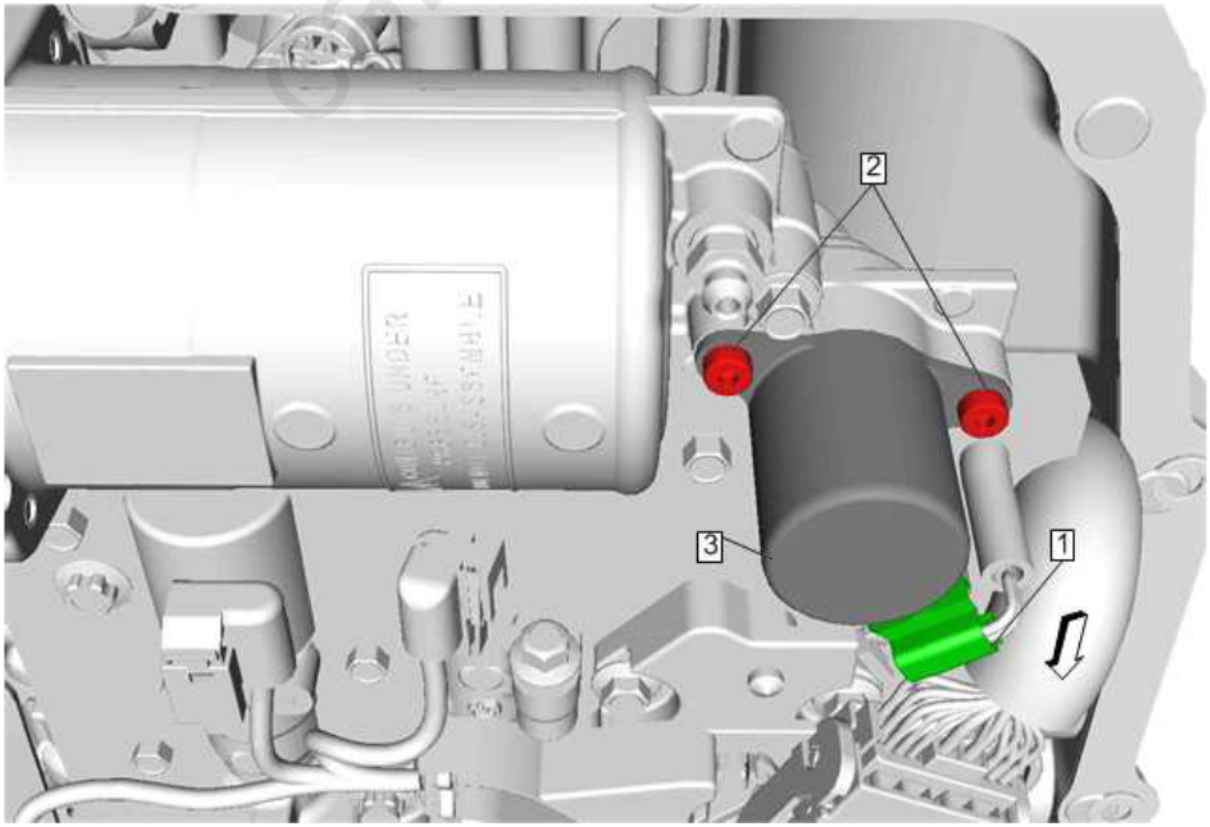

cardiagn.com

Fig. 83: Auxiliary Fluid Accumulator Solenoid
Courtesy of GENERAL MOTORS COMPANY

Callout	Component Name
WARNING: **The automatic transmission fluid accumulator may be pressurized greater than 120 psi (827 kpa) and fluid may be hot. When servicing accumulator, key must be OFF for a minimum of 10 minutes. Do not open bleeder screw until instructed to do so or personal injury may result.** **Preliminary Procedure** 1. Automatic Transmission Fluid, Fluid Pan and/or Filter Replacement (Rear Wheel Drive)Automatic Transmission Fluid, Fluid Pan and/or Filter Replacement (All Wheel Drive) 2. Disconnect the auxiliary fluid accumulator solenoid electrical connector. 3. Securely attach a hose from the bleeder valve into an approved container. 4. Slowly loosen bleeder valve until pressure begins to release. 5. Allow all pressure and fluid to be released from the auxiliary fluid accumulator. 6. Remove the bleeder valve to ensure all fluid and pressure has been released.	
1	Electrical Connector
2	A/Trans Auxiliary Fluid Accumulator Solenoid Bolt (Qty: 2) **CAUTION:** **Refer to Fastener Caution .** **Tighten** 3 N.m (27 lb in)
3	A/Trans Auxiliary Fluid Accumulator Solenoid

AUXILIARY FLUID ACCUMULATOR BLEEDER VALVE REPLACEMENT

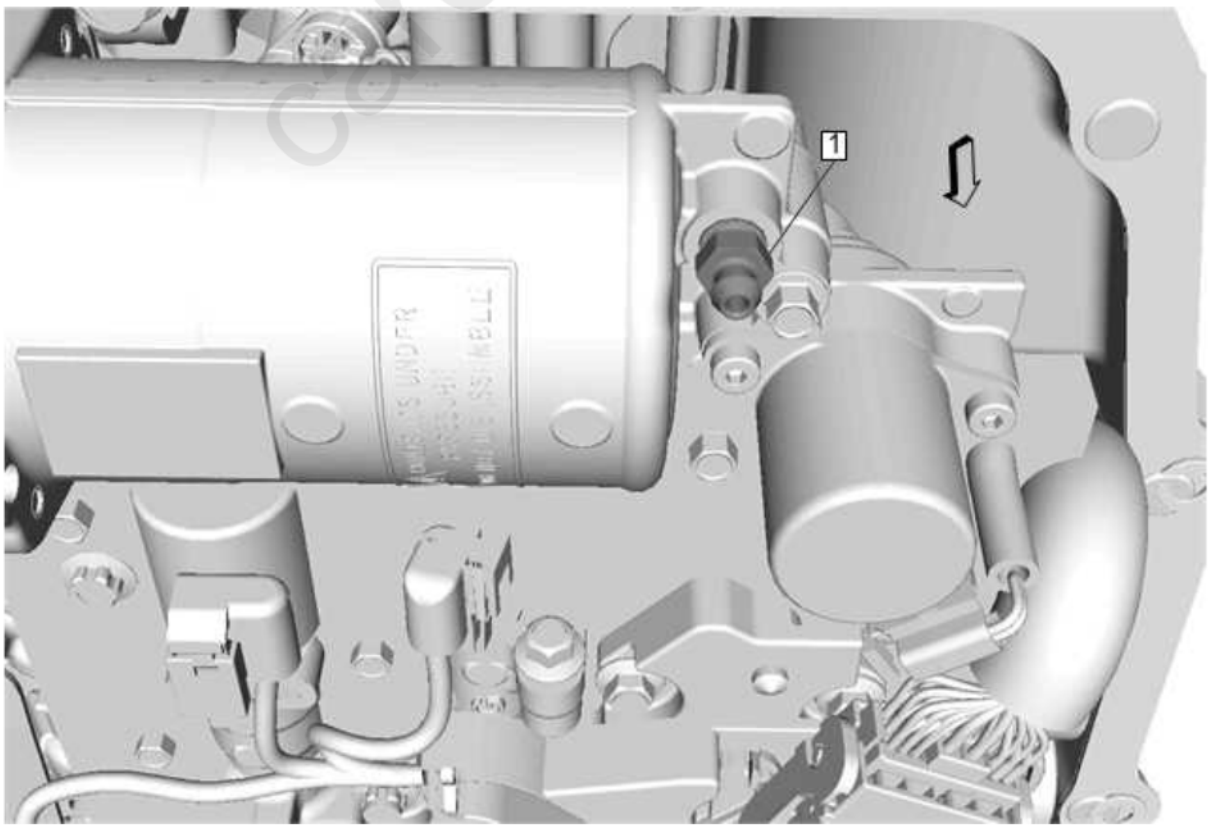

Fig. 84: Auxiliary Fluid Accumulator Bleeder Valve
Courtesy of GENERAL MOTORS COMPANY

cardiagn.com

Callout	Component Name

WARNING:

The automatic transmission fluid accumulator may be pressurized greater than 120 psi (827 kpa) and fluid may be hot. When servicing accumulator, key must be OFF for a minimum of 10 minutes. Do not open bleeder screw until instructed to do so or personal injury may result.

Preliminary Procedure

1. **Automatic Transmission Fluid, Fluid Pan and/or Filter Replacement (Rear Wheel Drive)Automatic Transmission Fluid, Fluid Pan and/or Filter Replacement (All Wheel Drive)**
2. Disconnect the auxiliary fluid accumulator solenoid electrical connector.
3. Securely attach a hose from the bleeder valve into an approved container.
4. Slowly loosen bleeder valve until pressure begins to release.
5. Allow all pressure and fluid to be released from the auxiliary fluid accumulator.
6. Remove the bleeder valve to ensure all fluid and pressure has been released.

1	A/Trans Auxiliary Fluid Accumulator Bleeder Valve **Tighten** 11 N.m (97 lb in)

TORQUE CONVERTER FLUID SEAL REPLACEMENT

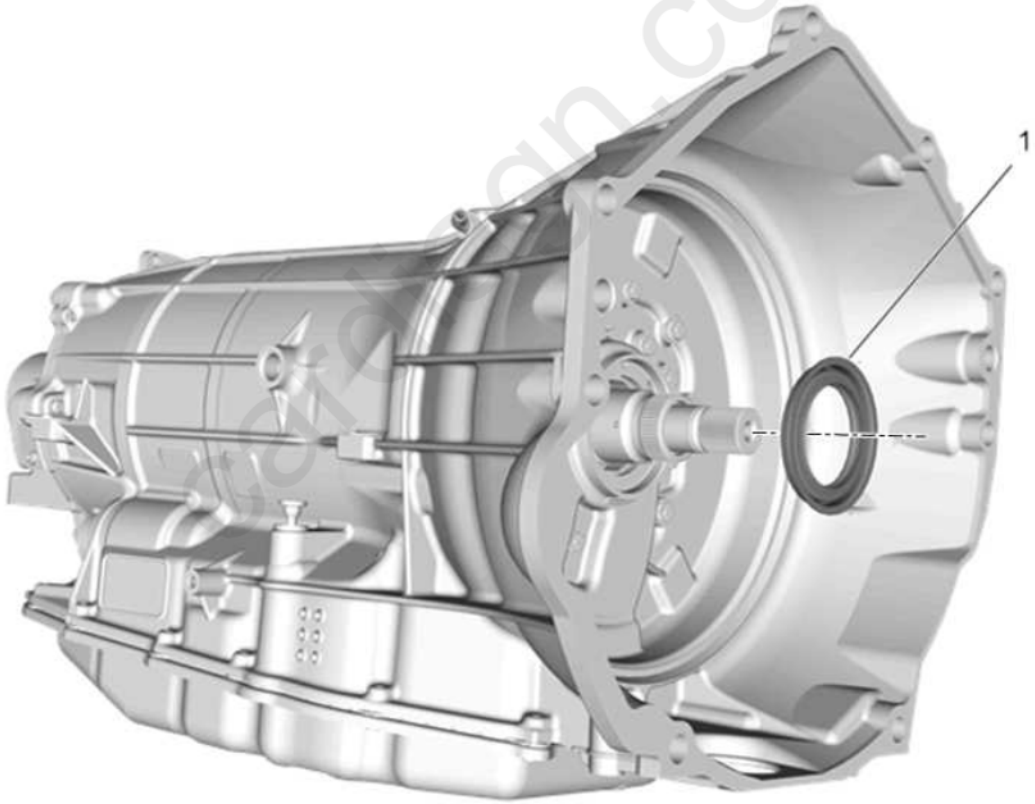

Fig. 85: Torque Converter Fluid Seal
Courtesy of GENERAL MOTORS COMPANY

Callout	Component Name
Preliminary Procedure Remove the torque converter. Refer to **Torque Converter Replacement**.	

Callout	Component Name
1	Torque Converter Fluid Seal Assembly **Special Tools** • **DT-45000** Seal Remover • **DT-43772** Torque Converter Seal Installer For equivalent regional tools, refer to **Special Tools** .

TORQUE CONVERTER REPLACEMENT

Special Tool

DT-21366 Converter Holding Strap

For equivalent regional tools, refer to **Special Tools** .

Removal Procedure

1. Remove the transmission. Refer to **Transmission Replacement (LGW Engine)**, **Transmission Replacement (LTG Engine)** and/or **Transmission Replacement (LGX Engine)**
2. Remove the converter holding strap (1) **DT-21366** Converter Holding Strap from the transmission.

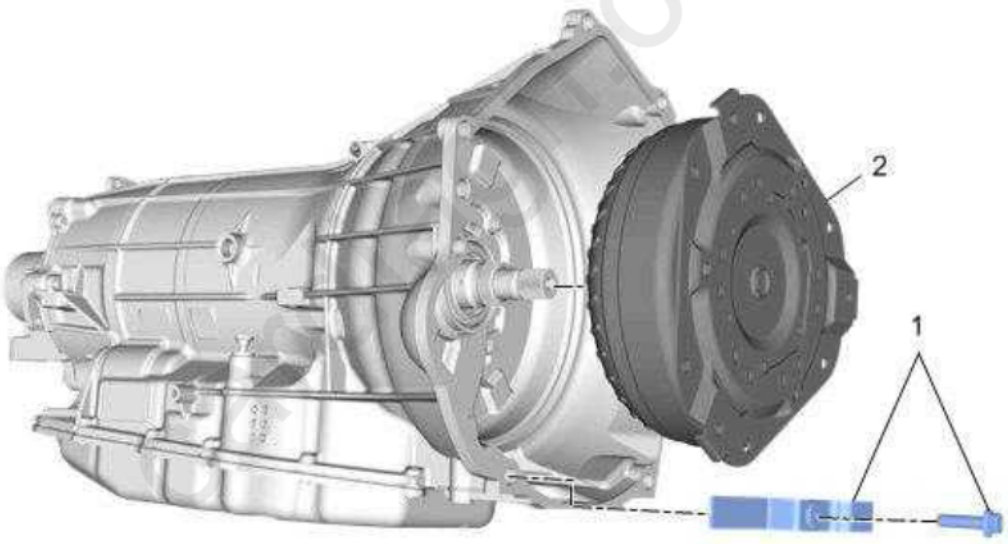

Fig. 86: Torque Converter
Courtesy of GENERAL MOTORS COMPANY

3. Place a drain pan under the front of the transmission.
4. Remove the torque converter (2) from the transmission.

Installation Procedure

1. To install the torque converter (2), spin the torque converter to engage the turbine shaft splines in the torque converter hub, the stator shaft splines in the stator race and to engage the drive flats on the converter pump hub with the oil pump drive gear.

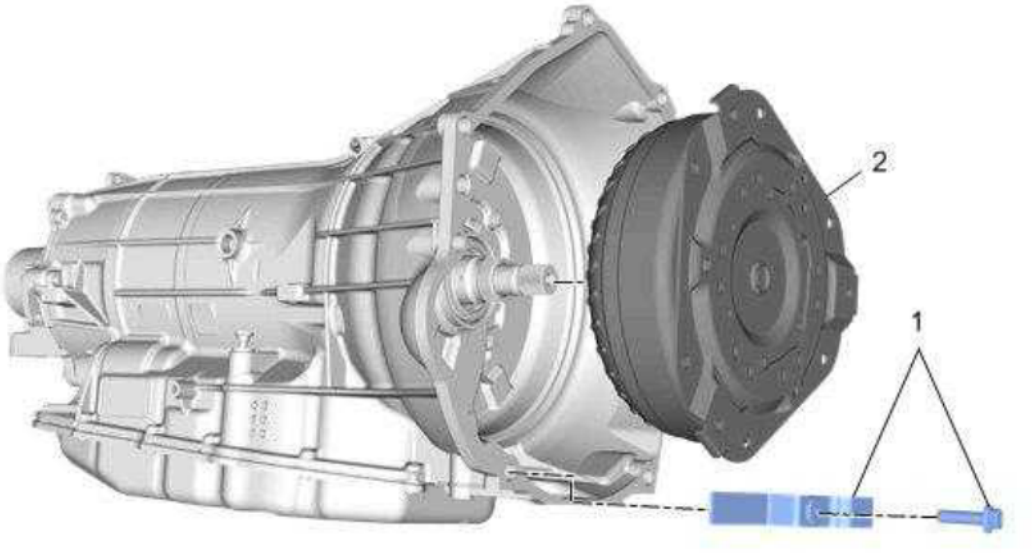

Fig. 87: Torque Converter
Courtesy of GENERAL MOTORS COMPANY

NOTE: **Lubricate the converter pump hub OD and the torque converter seal with clean transmission fluid.**

NOTE: **Use care not to damage the torque converter seal during the installation procedure.**

2. Install the converter holding strap (1) **DT-21366** Converter Holding Strap to the transmission.

WARNING: **The torque converter must be held to the torque converter housing by a retaining device such as shipping brackets. Without the retaining device, the torque converter may slide forward, disengaging the oil pump or may fall completely out of the transmission causing personal injury and/or property damage.**

3. Install the transmission. Refer to **Transmission Replacement (LGW Engine)**, **Transmission Replacement (LTG Engine)** and/or **Transmission Replacement (LGX Engine)**

TRANSMISSION REPLACEMENT (LGW ENGINE)

Special Tools

J-21366 Torque Converter Holding Strap

For equivalent regional tools, refer to **Special Tools** .

Removal Procedure

1. **Propeller Shaft Replacement** Â» Remove
2. **Front Axle Propeller Shaft Replacement (LGX, LGW)** Â» Remove
3. Disconnect the transmission range selector lever cable terminal (1) from the transmission manual shift lever pin (6).

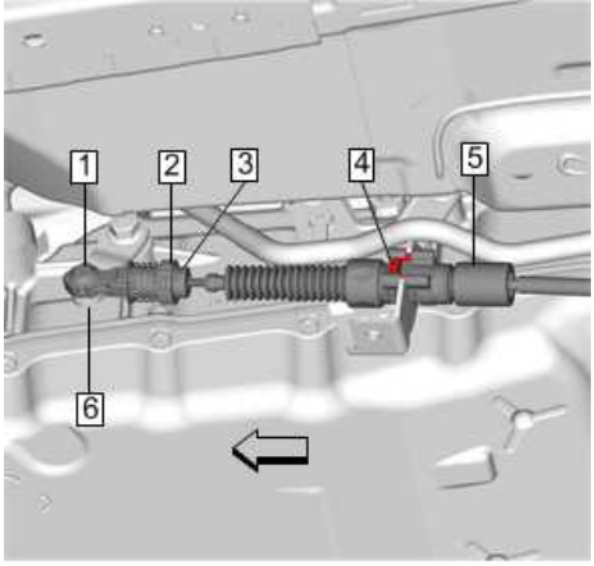

Fig. 88: Transmission Range Selector Lever Cable
Courtesy of GENERAL MOTORS COMPANY

4. Slide the retainer (4) forward to release the transmission range selector lever cable (5) from the bracket.
5. Place an oil drain pan under the transmission fluid cooler pipes.
6. Remove the transmission fluid cooler inlet and outlet pipes from the transmission and position aside or remove from the vehicle as necessary. Refer to **Transmission Fluid Cooler Inlet and Outlet Pipe Replacement (LGW)** .
7. Plug the open fluid ports to prevent fluid loss and contamination.
8. Remove the catalytic converter brace bracket (2) from the transmission.

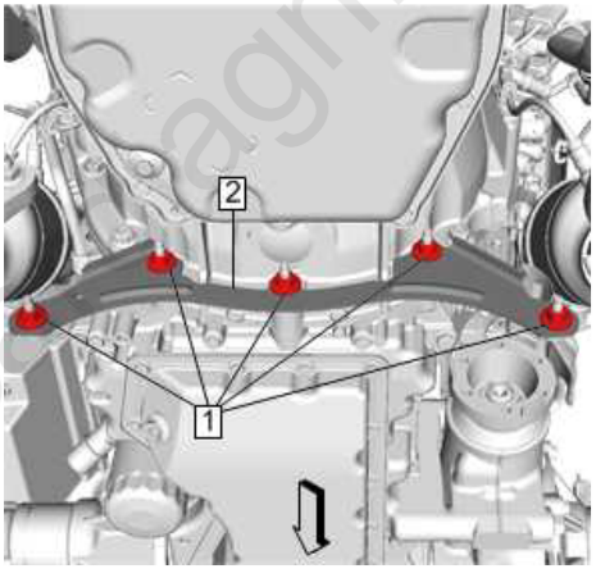

Fig. 89: Catalytic Converter Brace Bracket
Courtesy of GENERAL MOTORS COMPANY

9. Remove the lower transmission to engine bolts (1, 2, 3, 4, 5, 6).

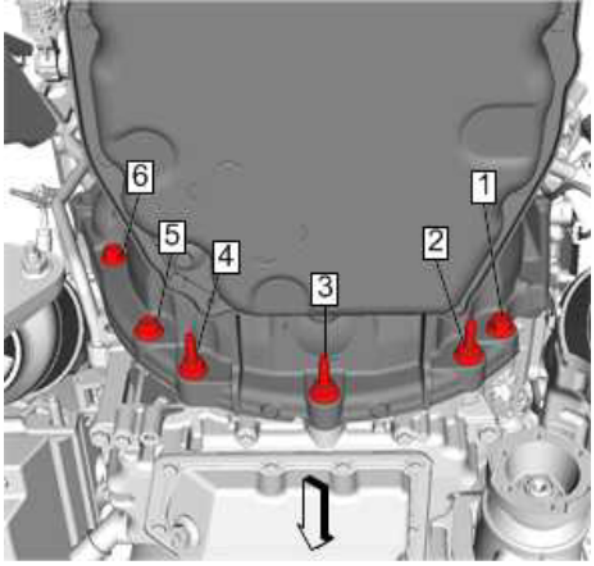

Fig. 90: Lower Transmission Bolts
Courtesy of GENERAL MOTORS COMPANY

10. Remove the right side transmission to engine bolt (1).

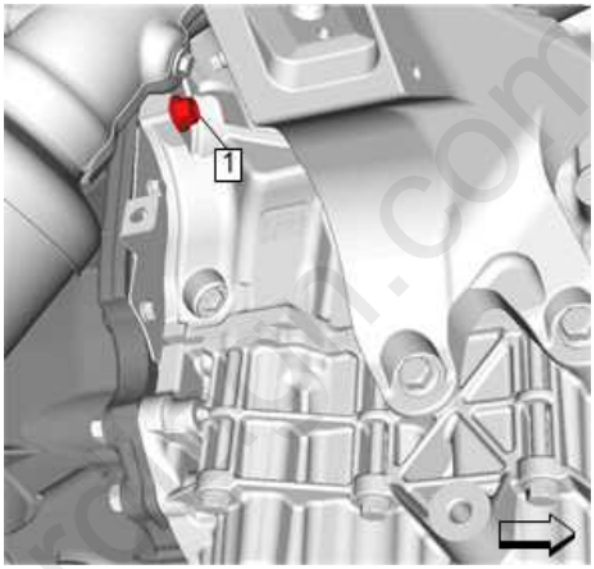

Fig. 91: Right Side Transmission And Engine Bolt
Courtesy of GENERAL MOTORS COMPANY

11. Remove the engine and transmission from the vehicle. Refer to **Engine Replacement (LGW)**
12. **Starter Replacement (LGW)** Â» Remove
13. **Transmission Converter Cover Replacement (Right Side, All Wheel Drive)**Â» Remove
14. Remove the transmission close out plug (1).

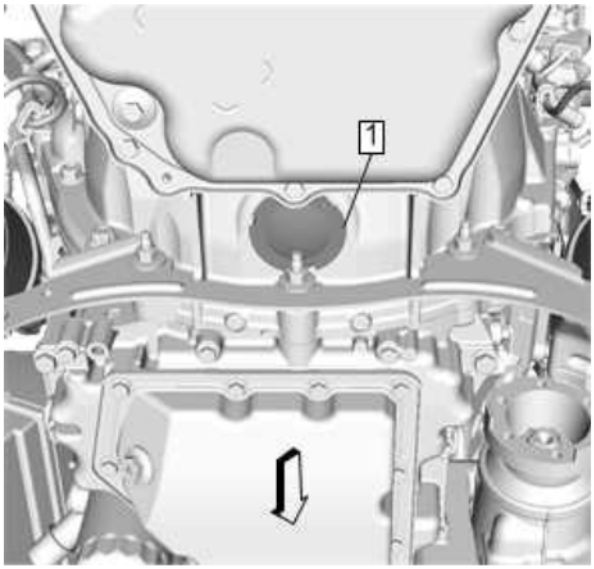

Fig. 92: Transmission Close Out Plug
Courtesy of GENERAL MOTORS COMPANY

15. Mark the torque converter to flexplate orientation to ensure proper realignment.
16. Repeat the following steps for all torque converter bolts (1):

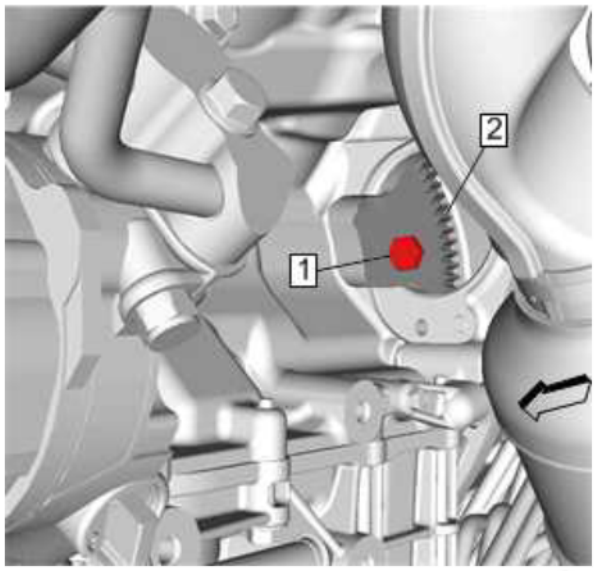

Fig. 93: Torque Converter Bolts
Courtesy of GENERAL MOTORS COMPANY

    1. Rotate the harmonic balancer center bolt clockwise ONLY, in order to align the torque converter bolt with the starter opening.
    2. Remove and DISCARD the torque converter bolt.
17. Disconnect the transmission vent hose retainers (1).

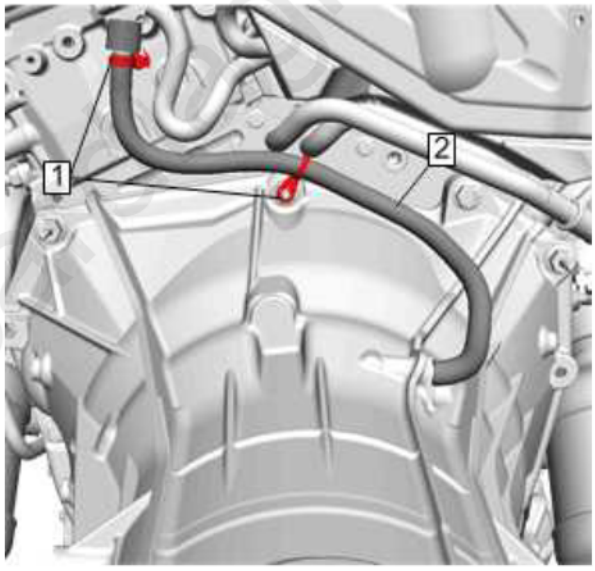

Fig. 94: Transmission Vent Hose Retainers
Courtesy of GENERAL MOTORS COMPANY

18. Disconnect the electrical wiring harness retainers from the transmission to engine fasteners and from the transmission case.
19. Remove the transmission to engine bolts (1, 2, 3, 4, 5).

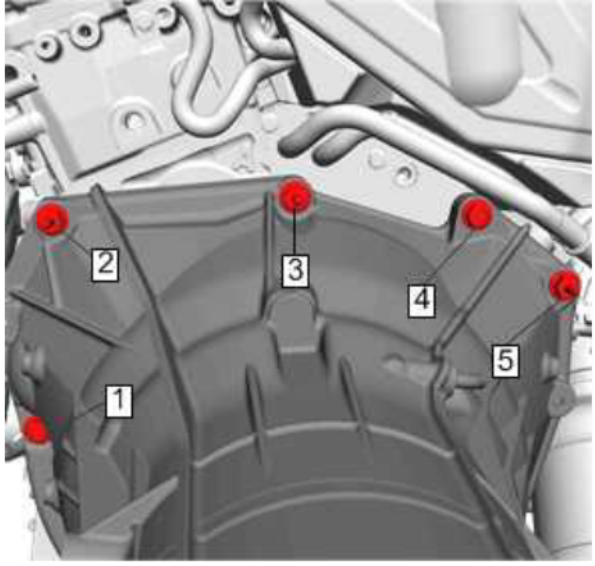

Fig. 95: Transmission Bolts
Courtesy of GENERAL MOTORS COMPANY

20. Pull the transmission straight back.
21. Install the **J-21366** strap onto the transmission bell housing to retain the torque converter.
22. Remove the transmission from the engine.
23. Transfer components as necessary.
24. Flush and flow test the transmission cooler and transmission pipes. Refer to **Transmission Fluid Cooler Flow Test and Flushing (8L90)** and/or **Transmission Fluid Cooler Flow Test and Flushing (4EL70)**

Installation Procedure

1. Remove the **J-21366** strap from the transmission bell housing.
2. Install the transmission to the engine.
3. Install the six transmission to engine bolts (1, 2, 3, 4, 5) and tighten to 58 N.m (43 lb ft).

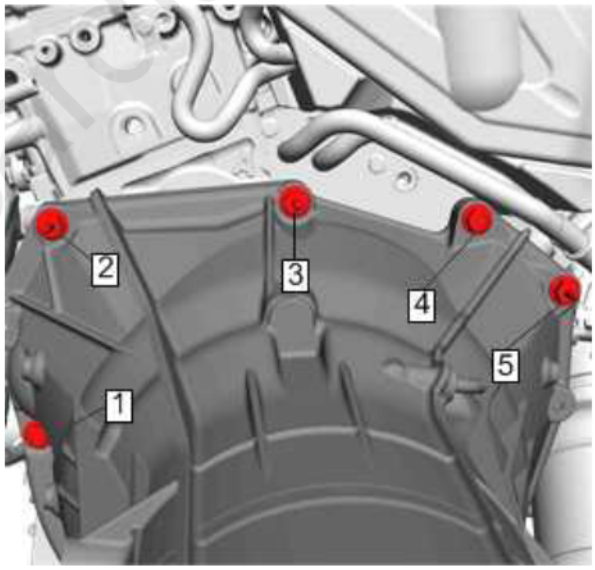

Fig. 96: Transmission Bolts
Courtesy of GENERAL MOTORS COMPANY

CAUTION: **Refer to Fastener Caution .**

4. Connect the transmission vent hose retainers (1).

cardiagn.com

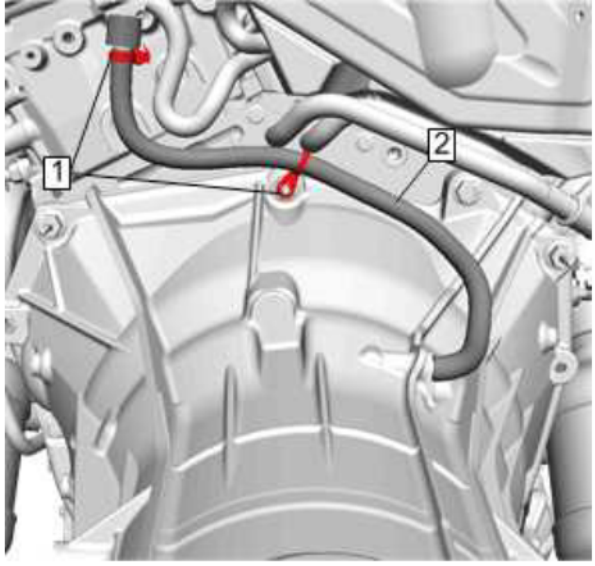

Fig. 97: Transmission Vent Hose Retainers
Courtesy of GENERAL MOTORS COMPANY

5. Align the torque converter to flexplate orientation marks made during the removal procedure.
6. Complete the following steps for all torque converter bolts (1):

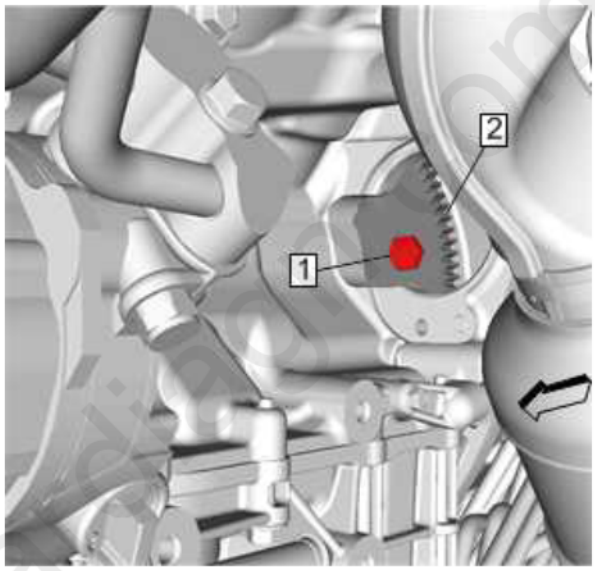

Fig. 98: Torque Converter Bolts
Courtesy of GENERAL MOTORS COMPANY

NOTE: **Torque converter bolts are self-locking and must be replaced with NEW torque converter bolts every time the bolts are removed.**

1. Rotate the harmonic balancer center bolt clockwise ONLY, in order to align the torque converter bolt holes in the flexplate with the starter opening in the engine block.
2. Install all NEW torque converter bolts (1) and tighten to 63 N.m (46 lb ft).
3. Install the starter motor. Refer to **Starter Replacement (LGW)** .

7. Install the engine and transmission to the vehicle. Refer to **Engine Replacement (LGW)**
8. Install the transmission close out plug (1).

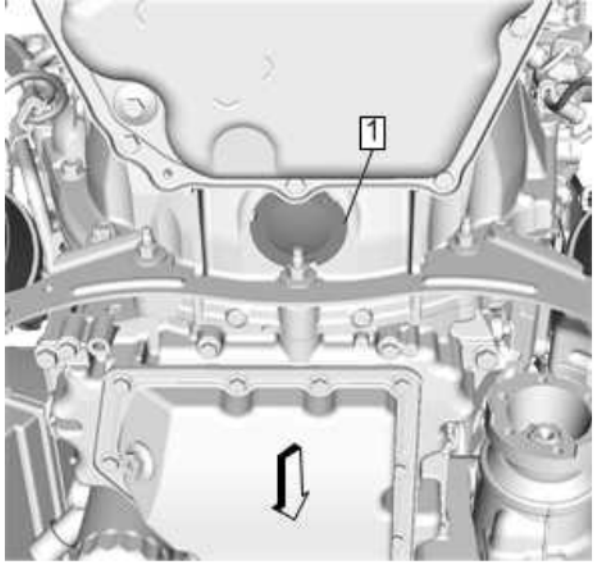

Fig. 99: Transmission Close Out Plug
Courtesy of GENERAL MOTORS COMPANY

9. **Transmission Converter Cover Replacement (Right Side, All Wheel Drive)**Â» Install
10. Install the lower transmission to engine bolts (1, 2, 3, 4, 5, 6) and tighten to 58 N.m (43 lb ft).

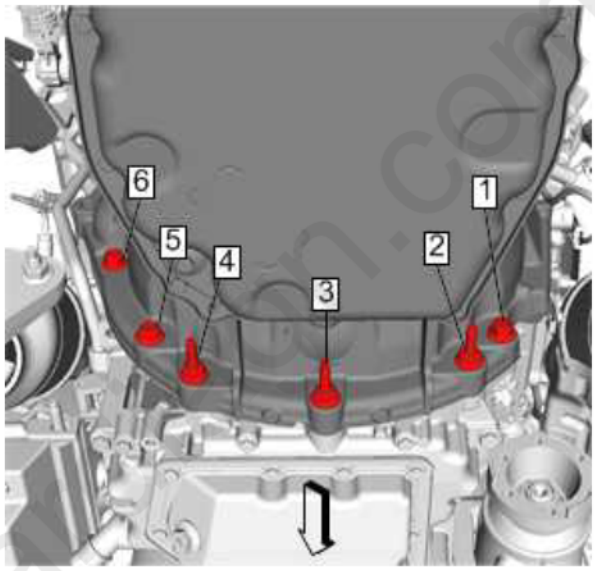

Fig. 100: Lower Transmission Bolts
Courtesy of GENERAL MOTORS COMPANY

11. Install the right side transmission to engine bolt (1) and tighten to 58 N.m (43 lb ft).

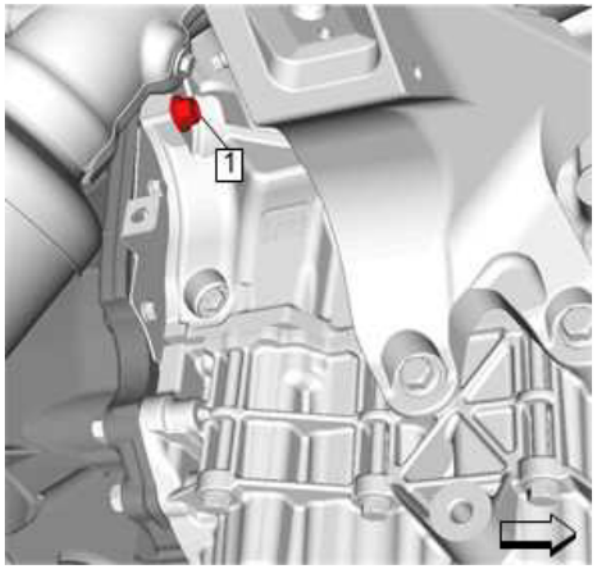

Fig. 101: Right Side Transmission And Engine Bolt
Courtesy of GENERAL MOTORS COMPANY

12. Install the catalytic converter brace bracket (2) to the transmission.

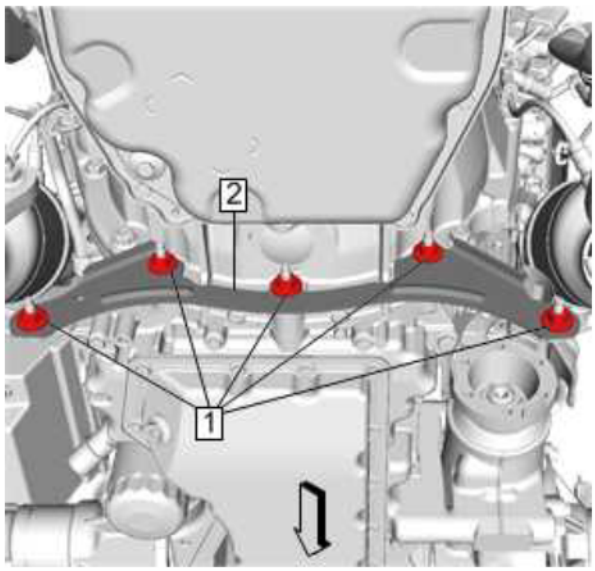

Fig. 102: Catalytic Converter Brace Bracket
Courtesy of GENERAL MOTORS COMPANY

13. Install the five retaining nuts (1) and tighten to 22 N.m (16 lb ft).
14. Install the transmission fluid cooler inlet and outlet pipe to the transmission. Refer to **Transmission Fluid Cooler Inlet and Outlet Pipe Replacement (LGW)** .
15. Connect the electrical wiring harness retainers to the transmission to engine fasteners and to the transmission case.
16. Install the cable in the bracket, then slide the retainer (4) rearward to lock the transmission range selector lever cable in the bracket.

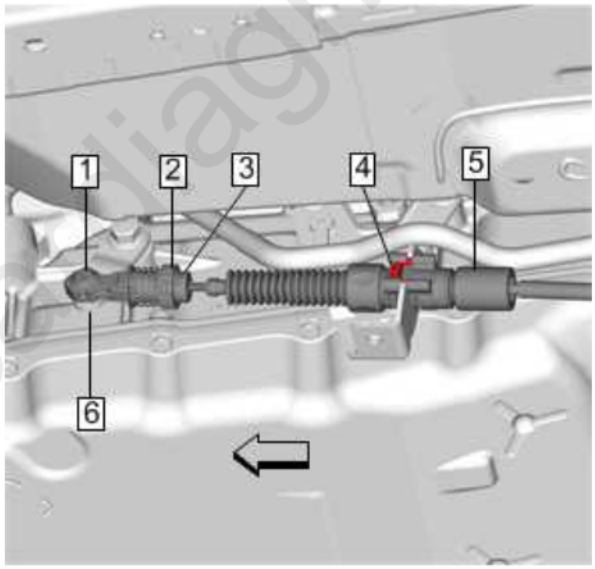

Fig. 103: Transmission Range Selector Lever Cable
Courtesy of GENERAL MOTORS COMPANY

17. Connect the transmission range selector lever cable terminal (1) to the transmission manual shift lever pin (2).
18. Adjust the cable. Refer to **Range Selector Lever Cable Adjustment**.
19. **Propeller Shaft Replacement** Â» Install
20. **Front Axle Propeller Shaft Replacement (LGX, LGW)** Â» Install
21. Check the transmission fluid level and fill if necessary. Refer to **Transmission Fluid Level and Condition Check** .
22. Lower the vehicle.
23. Perform the solenoid valve characterization. Refer to **Solenoid Valve Characterization Reprogramming** .
24. Perform the service fast learn procedure. Refer to **Transmission Service Fast Learn Procedure** .

cadiagn.com

NOTE: **The Service Fast Learn procedure must be performed when one of the following repairs have been made to the vehicle. Failure to perform the procedure after one of the following repairs may result in poor transmission performance, as well as transmission DTCs being set:**

The service fast learn procedure must be performed when any of the following repairs has been made to the transmission.

- **Pressure regulating solenoid replacement**
- **Valve body repair or replacement**
- **Any service/repair in response to a shift quality concern**
- **Any internal transmission service, repair, overhaul or replacement**
- **Torque converter replacement**
- **TCM replacement**
- **Transmission assembly replacement**

TRANSMISSION REPLACEMENT (LTG ENGINE)

Special Tools

J-21366 Torque Converter Holding Strap

For equivalent regional tools, refer to **Special Tools** .

Removal Procedure

1. Disconnect the charge air cooler outlet air tube from the throttle body. Refer to **Charge Air Cooler Outlet Air Tube Replacement**
2. **Starter Replacement (LTG)** Â» Remove
3. **Propeller Shaft Replacement** Â» Remove
4. {If equipped} **Front Axle Propeller Shaft Replacement (LGX, LGW)** Â» Remove
5. **Warm Up Three-Way Catalytic Converter Replacement (LTG)** Â» Remove
6. Disconnect the transmission range selector lever cable terminal (1) from the transmission manual shift lever pin (6).

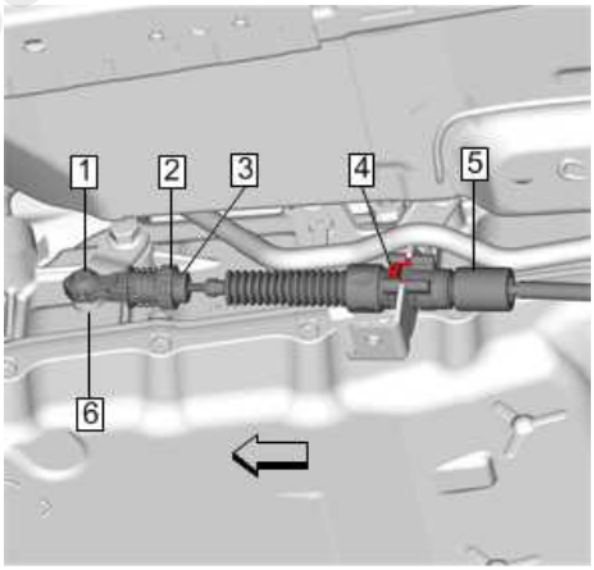

Fig. 104: Transmission Range Selector Lever Cable
Courtesy of GENERAL MOTORS COMPANY

7. Slide the retainer (4) forward to release the transmission range selector lever cable (5) from the bracket.
8. Remove the auxiliary heater pump bracket (3) from the transmission and position aside.

carDiagn.com

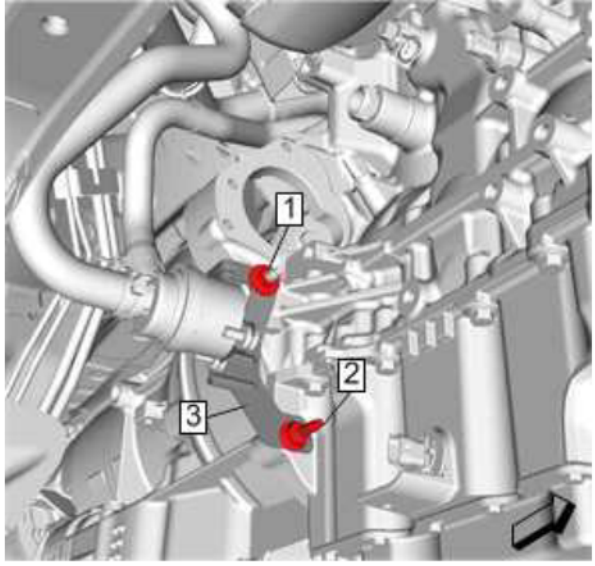

Fig. 105: Auxiliary Heater Pump Bracket
Courtesy of GENERAL MOTORS COMPANY

9. Place an oil drain pan under the transmission fluid cooler pipes (1).

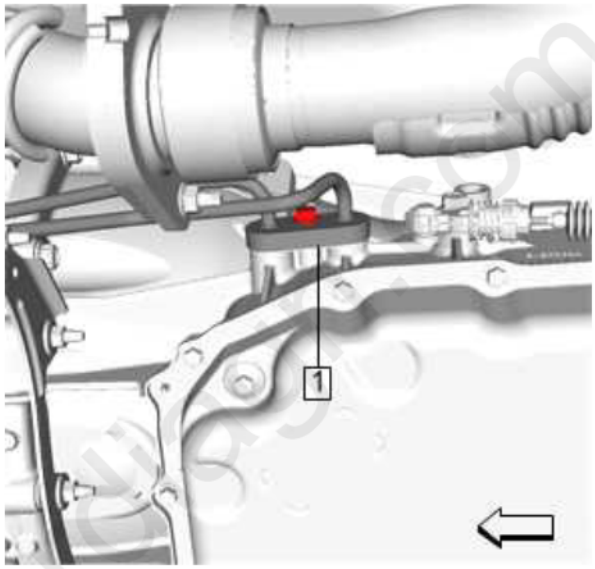

Fig. 106: Transmission Fluid Cooler Pipes
Courtesy of GENERAL MOTORS COMPANY

10. Remove the transmission fluid cooler inlet and outlet pipes (1) from the transmission and position aside or remove from the vehicle as necessary. **Transmission Fluid Cooler Inlet and Outlet Pipe Replacement (LTG)** and/or **Transmission Fluid Cooler Inlet and Outlet Pipe Replacement (LTG With HP9)**
11. Plug the open fluid ports to prevent fluid loss and contamination.
12. **Transmission Converter Cover Replacement (Right Side, All Wheel Drive)**Â» Remove
13. Remove the transmission close out plug (1).

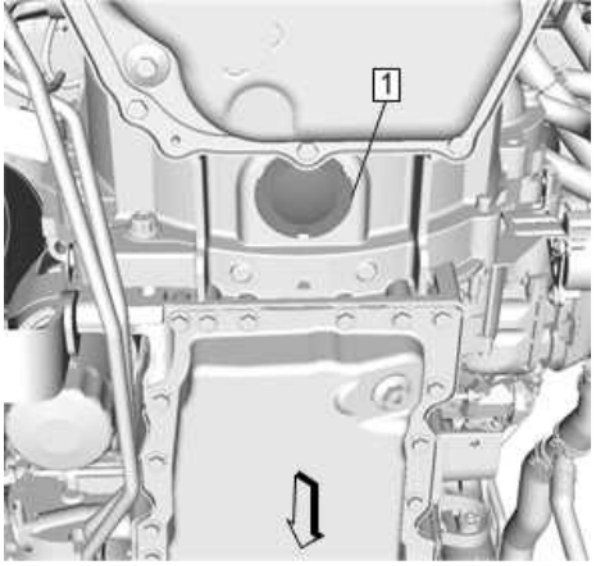

Fig. 107: Transmission Close Out Plug
Courtesy of GENERAL MOTORS COMPANY

14. Mark the torque converter to flexplate orientation to ensure proper realignment.
15. Repeat the following steps for all torque converter bolts (1):

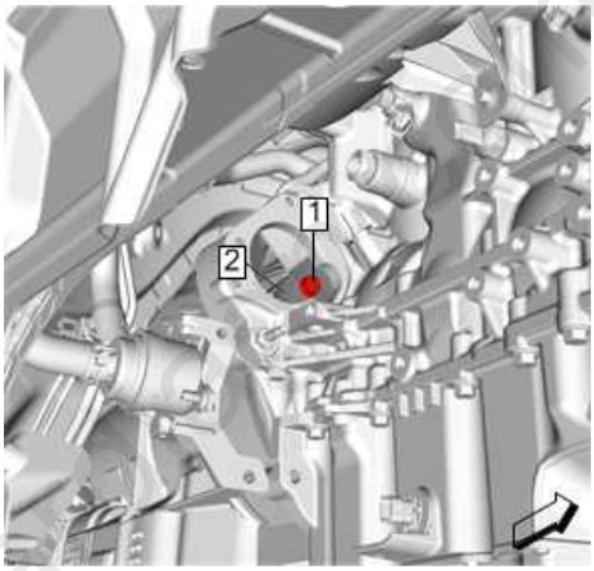

Fig. 108: Torque Converter Bolts
Courtesy of GENERAL MOTORS COMPANY

    1. Rotate the harmonic balancer center bolt clockwise ONLY, in order to align the torque converter bolt with the starter opening.
    2. Remove and DISCARD the torque converter bolt.
16. Remove the catalytic converter bracket (2) from the transmission.

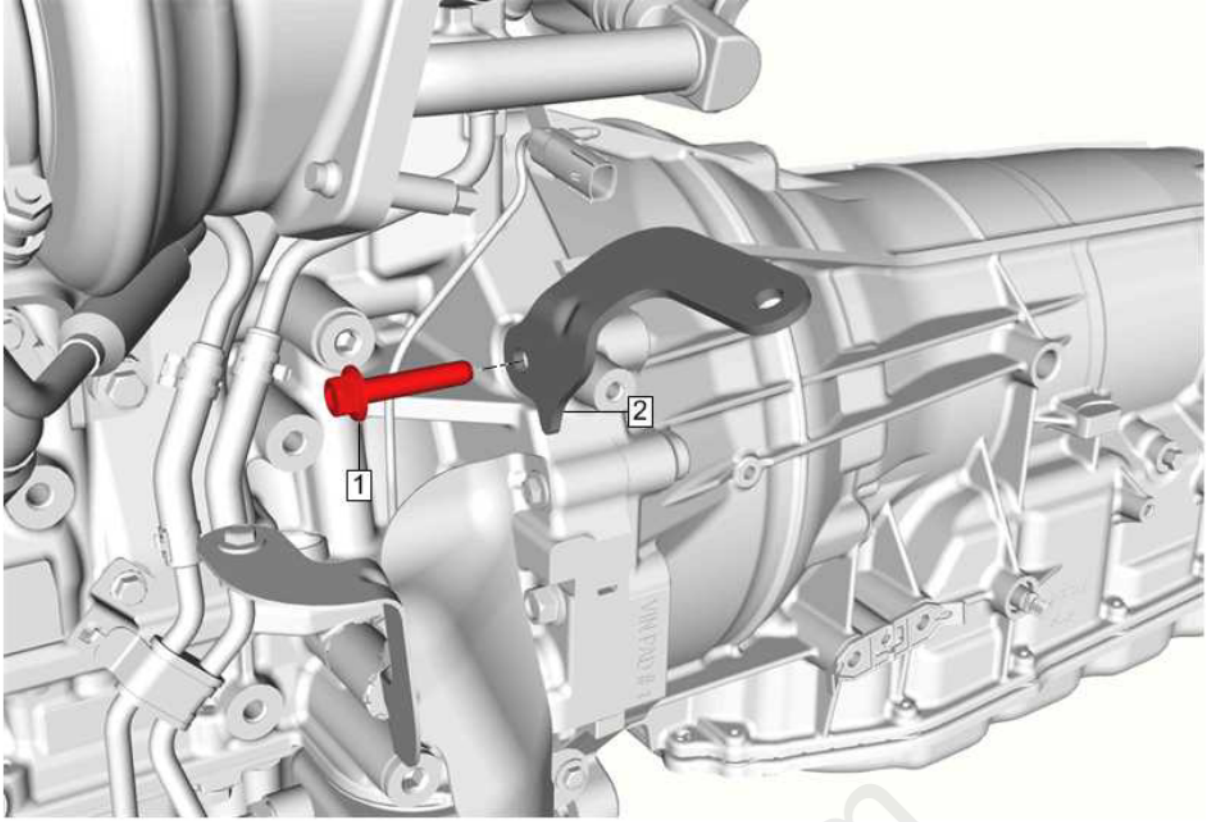

Fig. 109: Catalytic Converter Brace Bracket
Courtesy of GENERAL MOTORS COMPANY

17. Remove the oil pump control valve heat shield from the engine assembly. Refer to **Oil Pump Flow Control Valve Heat Shield Replacement**

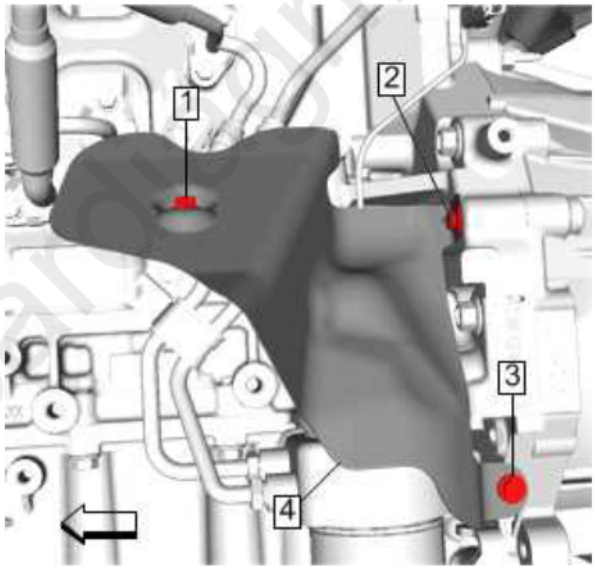

Fig. 110: Catalytic Converter Shield
Courtesy of GENERAL MOTORS COMPANY

18. Disconnect the electrical wiring harness retainers from the transmission to engine fasteners and from the transmission case.
19. Support the transmission with a suitable transmission jack.
20. Remove the lower right transmission to engine bolt (1).

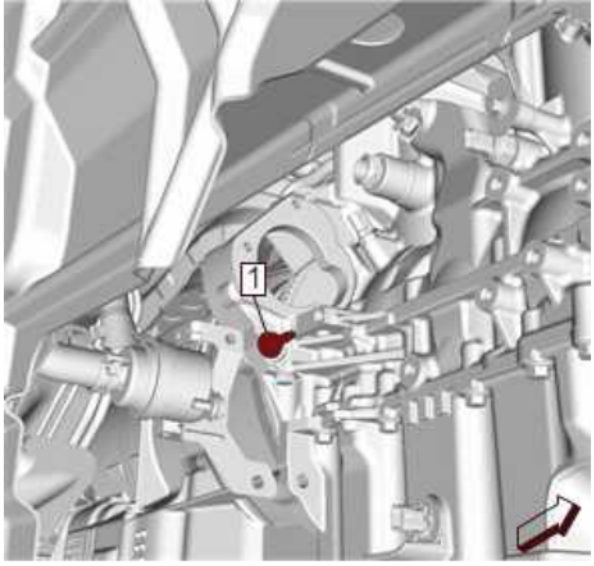

Fig. 111: Lower Right Transmission Bolt
Courtesy of GENERAL MOTORS COMPANY

21. Remove the lower left transmission to engine bolts (1, 2).

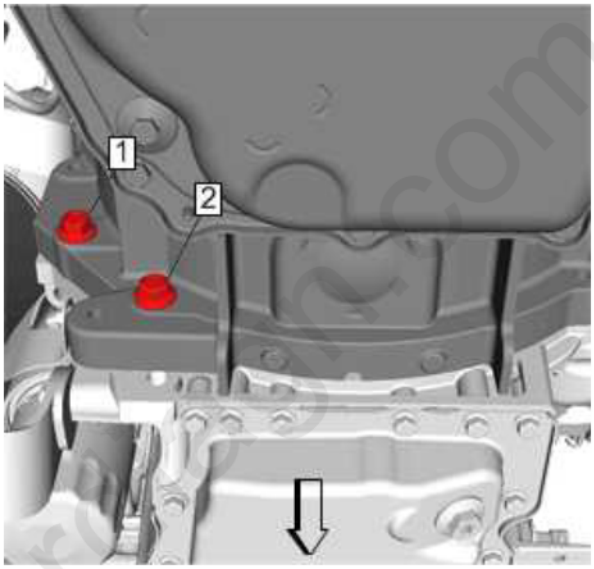

Fig. 112: Lower Left Transmission Bolts
Courtesy of GENERAL MOTORS COMPANY

22. Remove the left upper transmission to engine bolt (2).

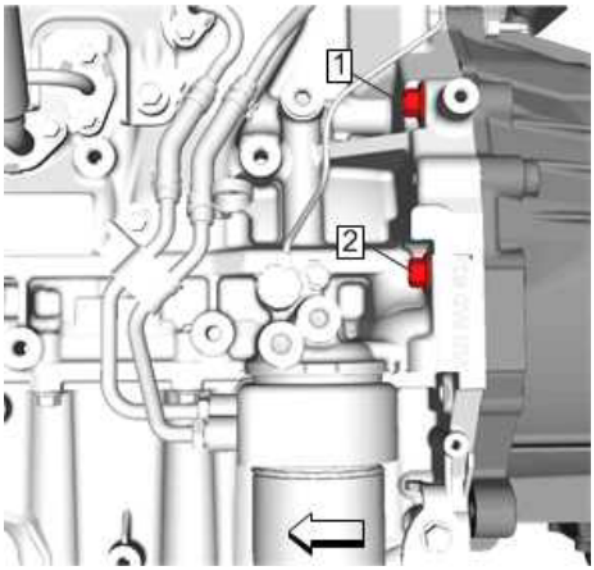

Fig. 113: Left Upper Transmission Bolts
Courtesy of GENERAL MOTORS COMPANY

23. Support the transmission with a suitable transmission jack.
24. **Transmission Support Crossmember Replacement (LTG)** Â» Remove
25. Tilt the transmission downward just enough to gain access to the upper transmission fasteners.
26. Disconnect the transmission vent hose (2) and retainer (1) from the transmission, then position aside.

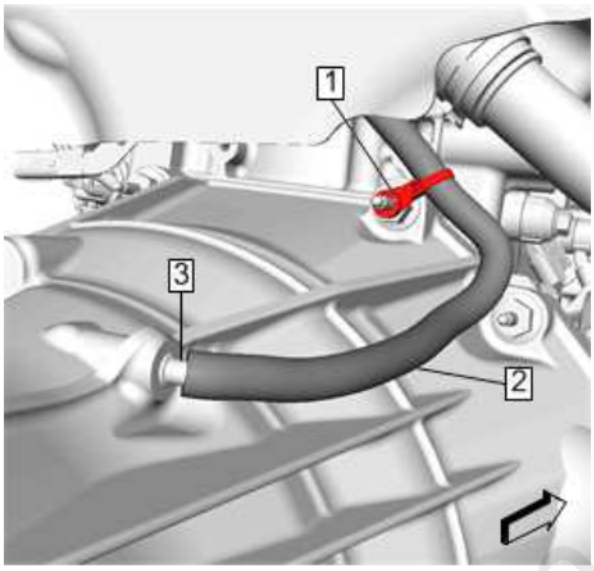

Fig. 114: Transmission Vent Hose And Retainer
Courtesy of GENERAL MOTORS COMPANY

27. Remove the transmission to engine bolts (1, 2, 3).

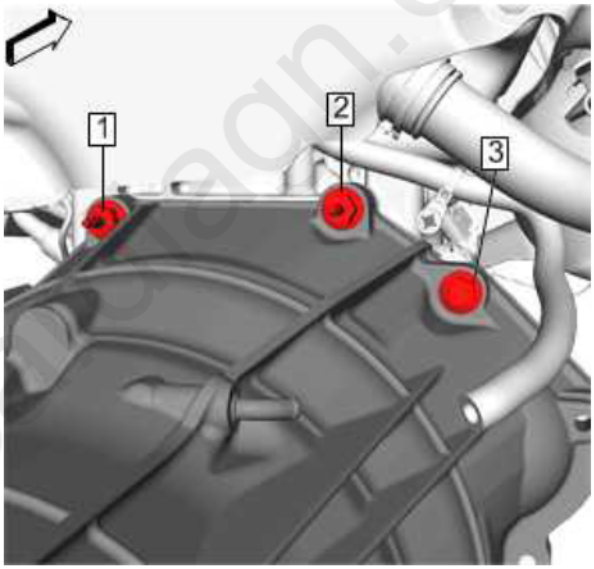

Fig. 115: Transmission Bolts
Courtesy of GENERAL MOTORS COMPANY

28. Pull the transmission straight back.
29. Install the **J-21366** strap onto the transmission bell housing to retain the torque converter.
30. Remove the transmission from the vehicle.
31. Transfer components as necessary.
32. Flush and flow test the transmission cooler and transmission pipes. Refer to **Transmission Fluid Cooler Flow Test and Flushing (8L90)** and/or **Transmission Fluid Cooler Flow Test and Flushing (4EL70)**

Installation Procedure

1. Remove the **J-21366** strap from the transmission bell housing.
2. Install the transmission to the vehicle.
3. Install the transmission to engine bolts (1, 2, 3) and tighten to 58 N.m (43 lb ft).

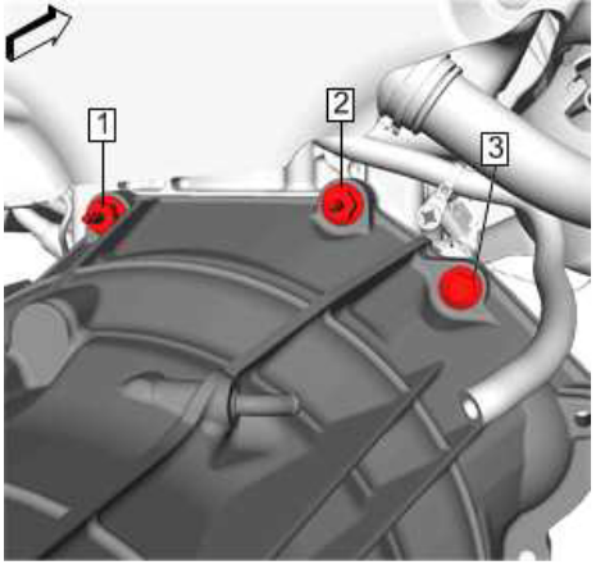

Fig. 116: Transmission Bolts
Courtesy of GENERAL MOTORS COMPANY

CAUTION: **Refer to Fastener Caution .**

4. Connect the transmission vent hose (2) and retainer (1).

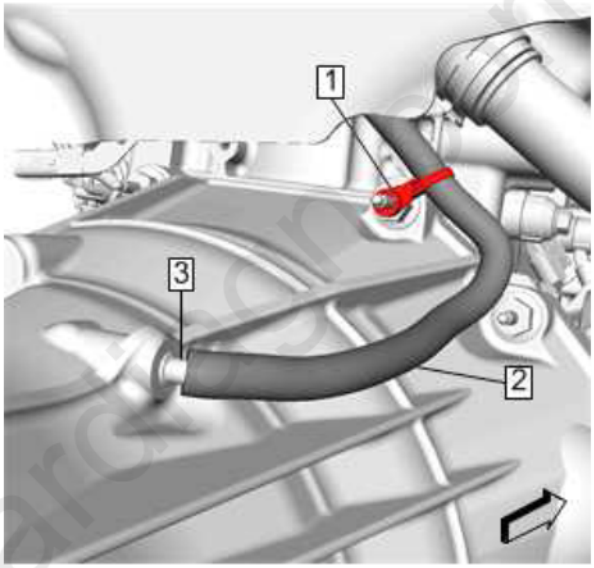

Fig. 117: Transmission Vent Hose And Retainer
Courtesy of GENERAL MOTORS COMPANY

5. Install the left upper transmission to engine bolts (1, 2) and tighten to 58 N.m (43 lb ft).

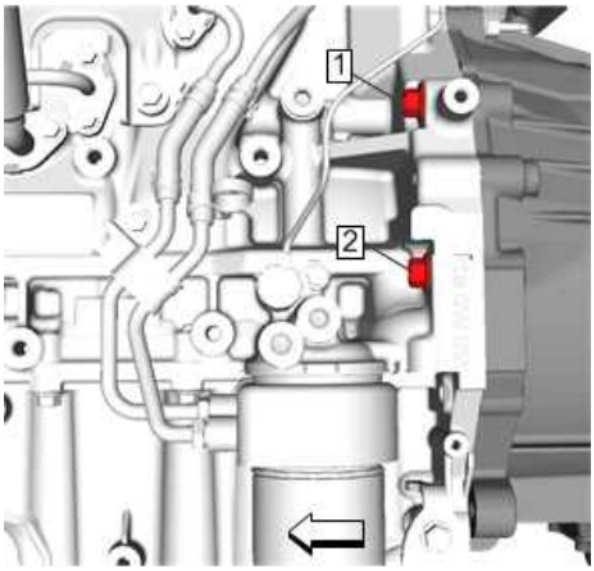

Fig. 118: Left Upper Transmission Bolts
Courtesy of GENERAL MOTORS COMPANY

6. Install the lower right transmission to engine bolt (1) and tighten to 58 N.m (43 lb ft).

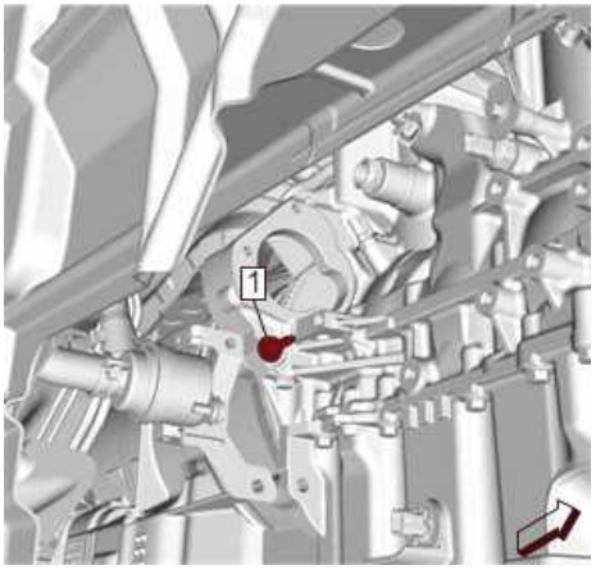

Fig. 119: Lower Right Transmission Bolt
Courtesy of GENERAL MOTORS COMPANY

7. Install the auxiliary heater pump bracket (3) to the transmission and tighten the fastener (1) to 10 N.m (89 lb in).

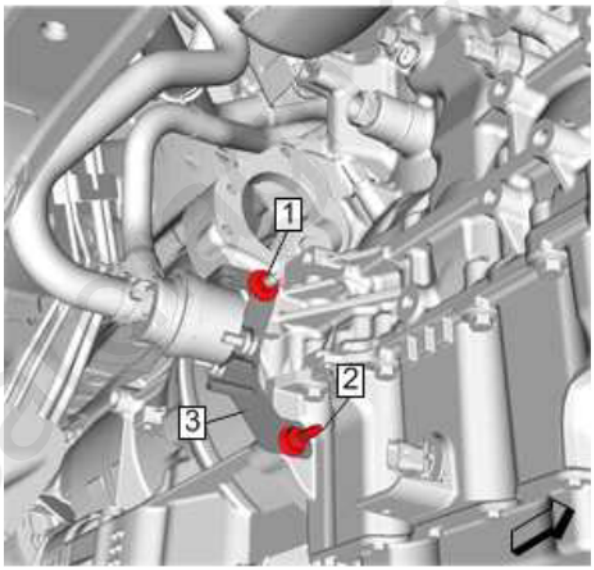

Fig. 120: Auxiliary Heater Pump Bracket
Courtesy of GENERAL MOTORS COMPANY

8. Install the lower right transmission to engine bolt (2) and tighten to 58 N.m (43 lb ft).
9. Install the lower left transmission to engine bolts (1, 2) and tighten to 58 N.m (43 lb ft).

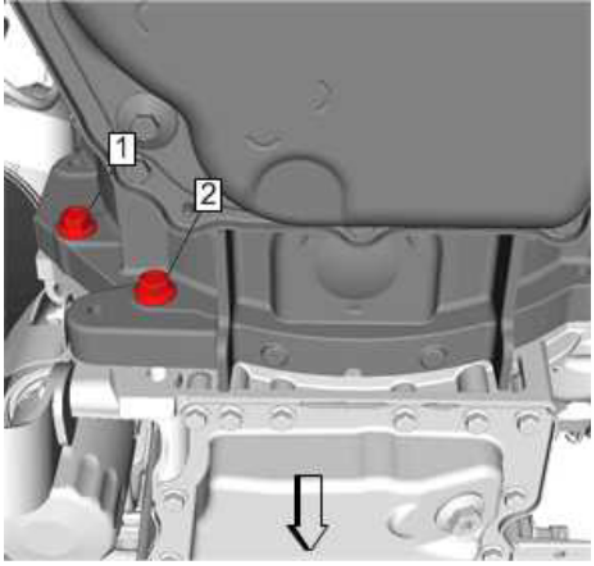

Fig. 121: Lower Left Transmission Bolts
Courtesy of GENERAL MOTORS COMPANY

10. Connect the electrical wiring harness retainers to the transmission to engine fasteners and to the transmission case.
11. Install the transmission support. Refer to **Transmission Support Crossmember Replacement (LTG)**
12. Remove the transmission jack from under the vehicle.
13. Align the torque converter to flexplate orientation marks made during the removal procedure.
14. Complete the following steps for all torque converter bolts (1):

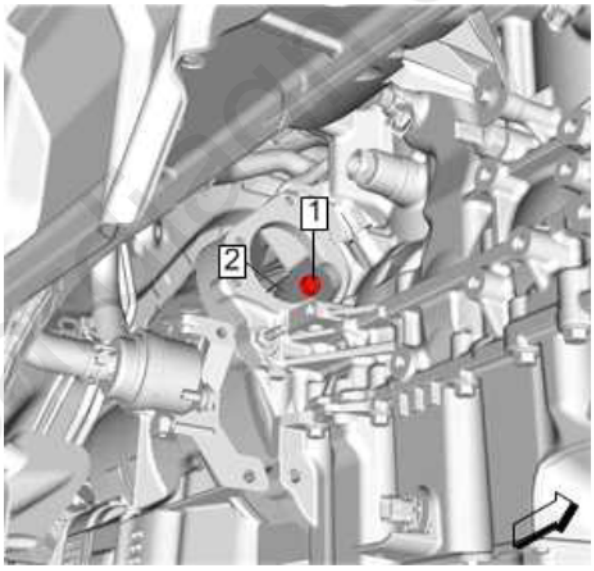

Fig. 122: Torque Converter Bolts
Courtesy of GENERAL MOTORS COMPANY

NOTE: **Torque converter bolts are self-locking and must be replaced with NEW torque converter bolts every time the bolts are removed.**

1. Rotate the harmonic balancer center bolt clockwise ONLY, in order to align the torque converter bolt holes in the flexplate with the starter opening in the engine block.
2. Install all NEW torque converter bolts (1) and tighten to 63 N.m (46 lb ft).

15. Install the transmission close out plug (1).

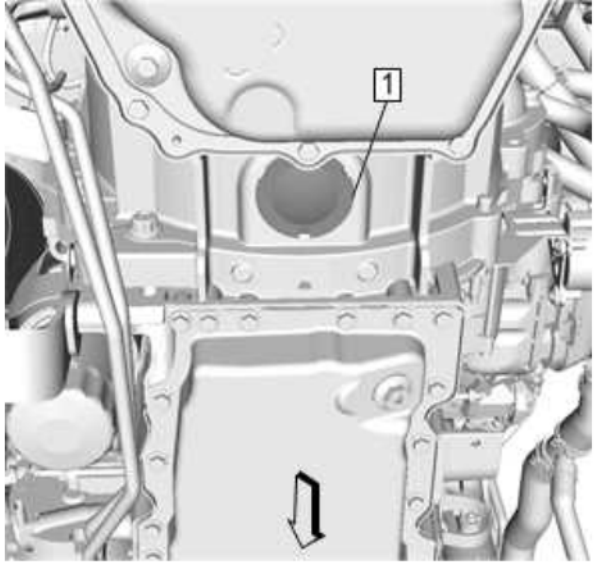

Fig. 123: Transmission Close Out Plug
Courtesy of GENERAL MOTORS COMPANY

16. Install the catalytic converter shield (4) to the engine assembly and tighten the fasteners (1, 2, 3) to 10 N.m (89 lb in).

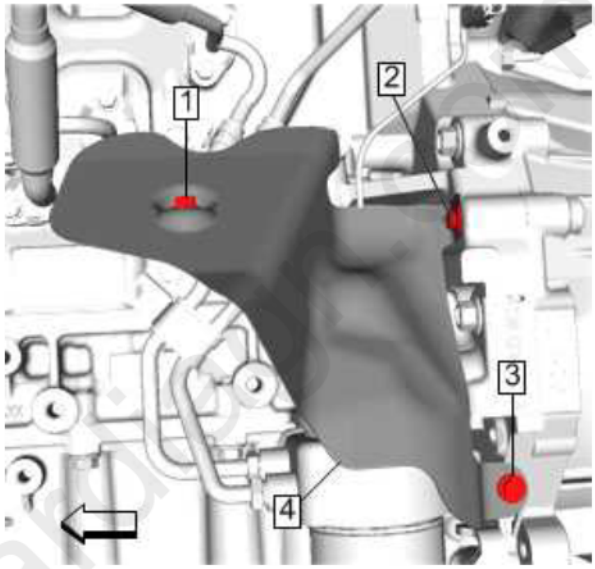

Fig. 124: Catalytic Converter Shield
Courtesy of GENERAL MOTORS COMPANY

17. **Warm Up Three-Way Catalytic Converter Replacement (LTG)** Â» Install
18. Install the catalytic converter bracket (2) to the transmission.

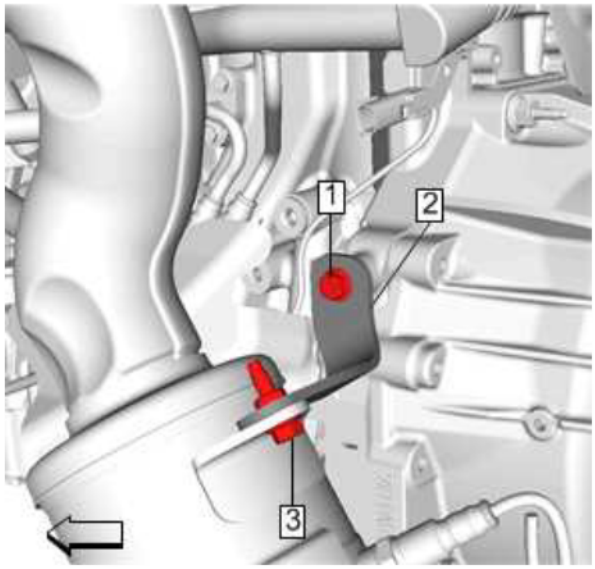

Fig. 125: Catalytic Converter Bracket
Courtesy of GENERAL MOTORS COMPANY

19. Install the fasteners (1, 3) and tighten to 22 N.m (16 lb ft).
20. Install the transmission fluid cooler inlet and outlet pipe to the transmission. Refer to **Transmission Fluid Cooler Inlet and Outlet Pipe Replacement (LTG)** and/or **Transmission Fluid Cooler Inlet and Outlet Pipe Replacement (LTG With HP9)**
21. Connect the wiring harness retainers and connectors to the transmission.
22. Install the cable in the bracket, then slide the retainer (4) rearward to lock the transmission range selector lever cable in the bracket.

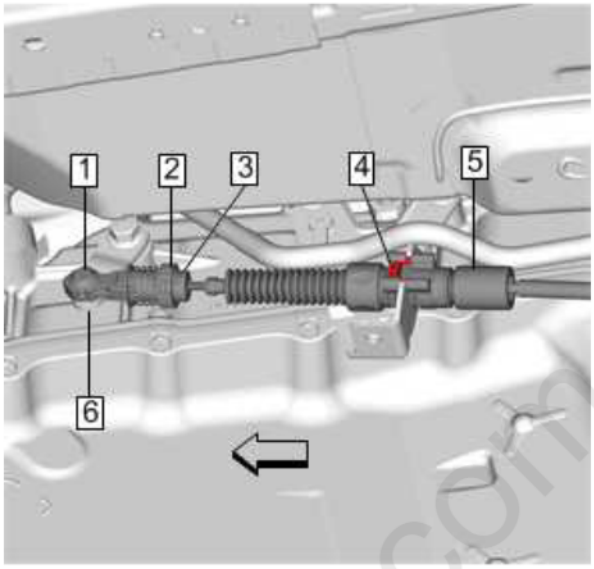

Fig. 126: Transmission Range Selector Lever Cable
Courtesy of GENERAL MOTORS COMPANY

23. Connect the transmission range selector lever cable terminal (1) to the transmission manual shift lever pin (2).
24. Adjust the cable. Refer to **Range Selector Lever Cable Adjustment**
25. **Propeller Shaft Replacement** Â» Install
26. {If equipped} **Front Axle Propeller Shaft Replacement (LGX, LGW)** Â» Install
27. **Starter Replacement (LTG)** Â» Install
28. Connect the charge air cooler outlet air tube to the throttle body. Refer to **Charge Air Cooler Outlet Air Tube Replacement**
29. Check the transmission fluid level and fill if necessary. Refer to **Transmission Fluid Level and Condition Check**
30. Lower the vehicle.
31. Perform the solenoid valve characterization. Refer to **Solenoid Valve Characterization Reprogramming**
32. Perform the service fast learn procedure. Refer to **Transmission Service Fast Learn Procedure**

NOTE: **The Service Fast Learn procedure must be performed when one of the following repairs have been made to the vehicle. Failure to perform the procedure after one of the following repairs may result in poor transmission performance, as well as transmission DTCs being set:**

The service fast learn procedure must be performed when any of the following repairs has been made to the transmission.

- **Pressure regulating solenoid replacement**
- **Valve body repair or replacement**
- **Any service/repair in response to a shift quality concern**

- **Any internal transmission service, repair, overhaul or replacement**
- **Torque converter replacement**
- **TCM replacement**
- **Transmission assembly replacement**

TRANSMISSION REPLACEMENT (LGX ENGINE)

Special Tools

J-21366 Torque Converter Holding Strap

For equivalent regional tools, refer to **Special Tools** .

Removal Procedure

1. **Propeller Shaft Replacement** Â» Remove
2. **Front Axle Propeller Shaft Replacement (LGX, LGW)** Â» Remove
3. Disconnect the transmission range selector lever cable terminal (1) from the transmission manual shift lever pin (6).

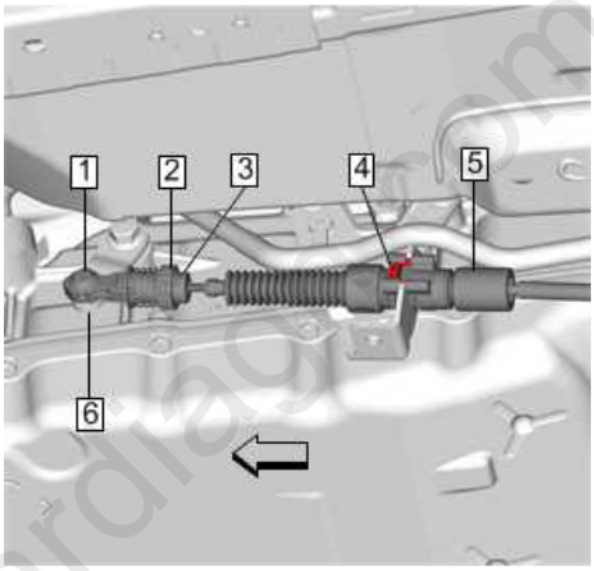

Fig. 127: Transmission Range Selector Lever Cable
Courtesy of GENERAL MOTORS COMPANY

4. Slide the retainer (4) forward to release the transmission range selector lever cable (5) from the bracket.
5. Place an oil drain pan under the transmission fluid cooler pipes.
6. Remove the transmission fluid cooler inlet and outlet pipes from the transmission and position aside or remove from the vehicle as necessary. Refer to **Transmission Fluid Cooler Inlet and Outlet Pipe Replacement (LTG)** , **Transmission Fluid Cooler Inlet and Outlet Pipe Replacement (LTG With HP9)** and/or **Transmission Fluid Cooler Inlet and Outlet Pipe Replacement (LGW)** .
7. Plug the open fluid ports to prevent fluid loss and contamination.
8. Remove the catalytic converter brace bracket (2) from the transmission.

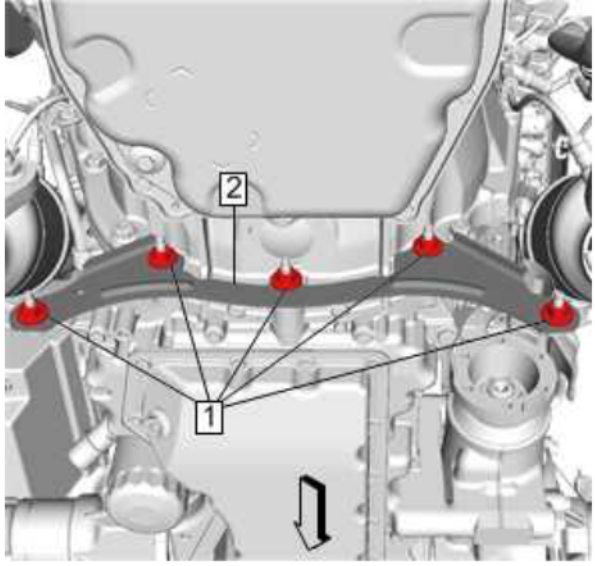

Fig. 128: Catalytic Converter Brace Bracket
Courtesy of GENERAL MOTORS COMPANY

9. Remove the lower transmission to engine bolts (1, 2, 3, 4, 5, 6).

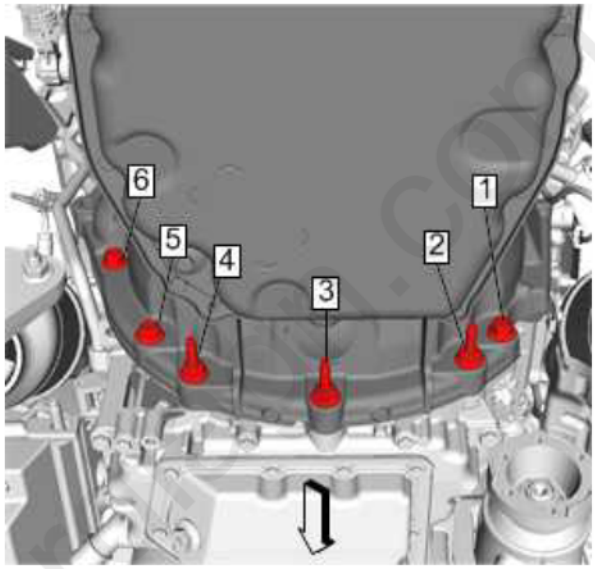

Fig. 129: Lower Transmission Bolts
Courtesy of GENERAL MOTORS COMPANY

10. Remove the right side transmission to engine bolt (1).

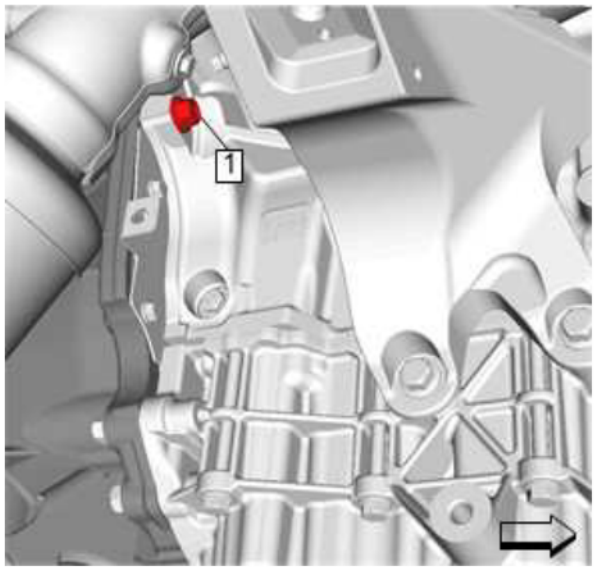

Fig. 130: Right Side Transmission And Engine Bolt
Courtesy of GENERAL MOTORS COMPANY

11. Remove the engine and transmission from the vehicle. Refer to **Engine Replacement (LGX)**
12. **Starter Replacement (LGX)** Â» Remove
13. **Transmission Converter Cover Replacement (Right Side, All Wheel Drive)**Â» Remove
14. Remove the transmission close out plug (1).

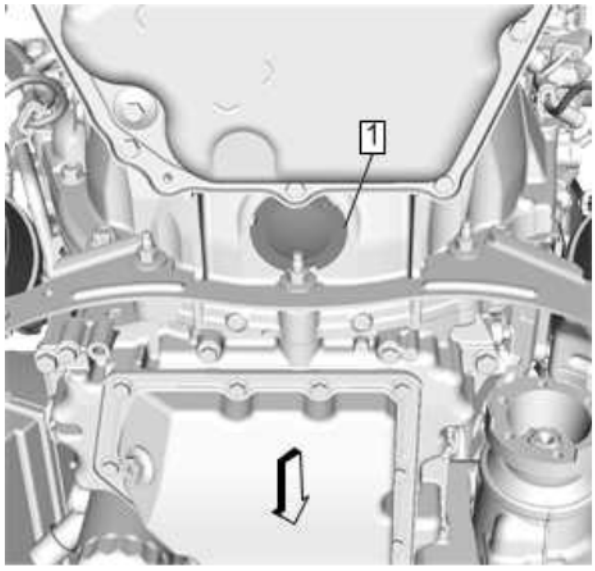

Fig. 131: Transmission Close Out Plug
Courtesy of GENERAL MOTORS COMPANY

15. Mark the torque converter to flexplate orientation to ensure proper realignment.
16. Repeat the following steps for all torque converter bolts (1):

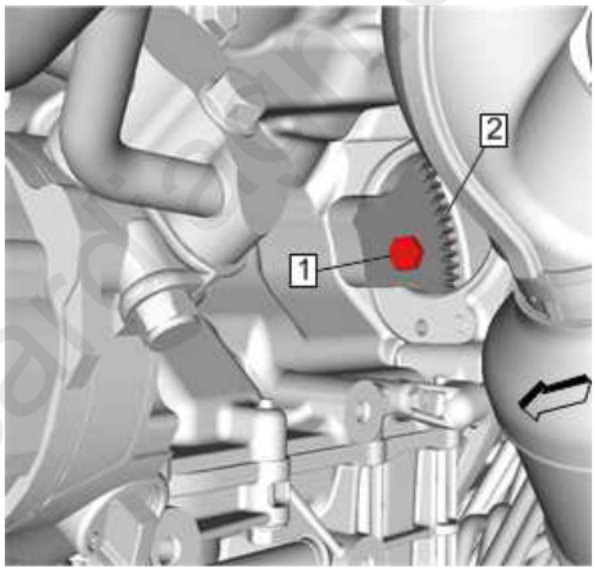

Fig. 132: Torque Converter Bolts
Courtesy of GENERAL MOTORS COMPANY

    1. Rotate the harmonic balancer center bolt clockwise ONLY, in order to align the torque converter bolt with the starter opening.
    2. Remove and DISCARD the torque converter bolt.
17. Disconnect the transmission vent hose retainers (1).

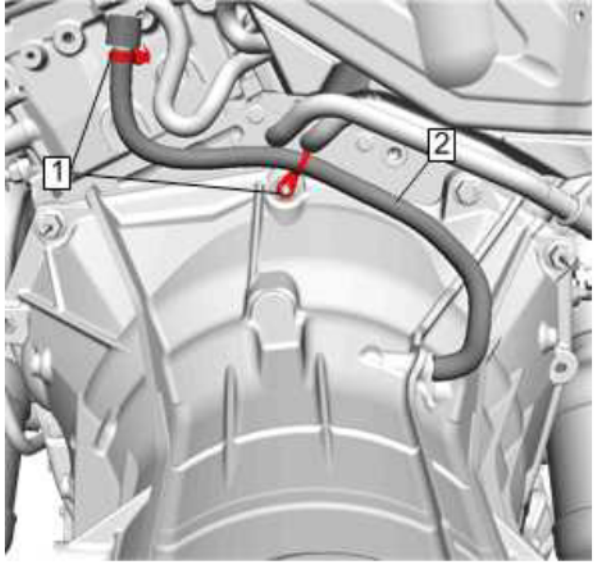

Fig. 133: Transmission Vent Hose Retainers
Courtesy of GENERAL MOTORS COMPANY

18. Disconnect the electrical wiring harness retainers from the transmission to engine fasteners and from the transmission case.
19. Remove the transmission to engine bolts (1, 2, 3, 4, 5).

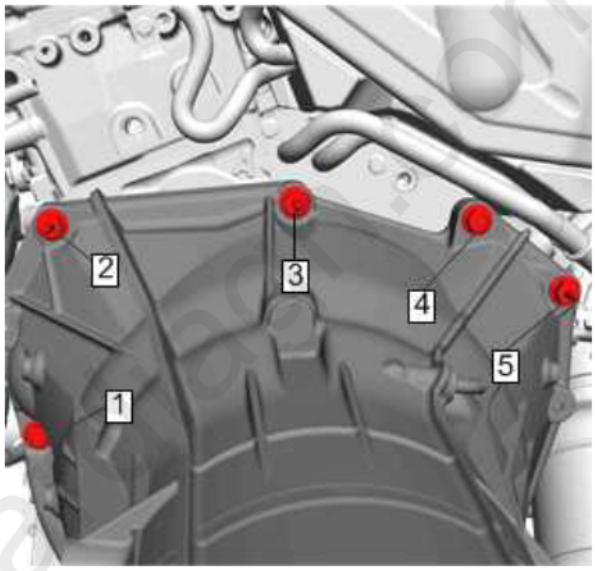

Fig. 134: Transmission Bolts
Courtesy of GENERAL MOTORS COMPANY

20. Pull the transmission straight back.
21. Install the **J-21366** strap onto the transmission bell housing to retain the torque converter.
22. Remove the transmission from the engine.
23. Transfer components as necessary.
24. Flush and flow test the transmission cooler and transmission pipes. Refer to **Transmission Fluid Cooler Flow Test and Flushing (8L90)** and/or **Transmission Fluid Cooler Flow Test and Flushing (4EL70)**

Installation Procedure

1. Remove the **J-21366** strap from the transmission bell housing.
2. Install the transmission to the engine.
3. Install the six transmission to engine bolts (1, 2, 3, 4, 5) and tighten to 58 N.m (43 lb ft).

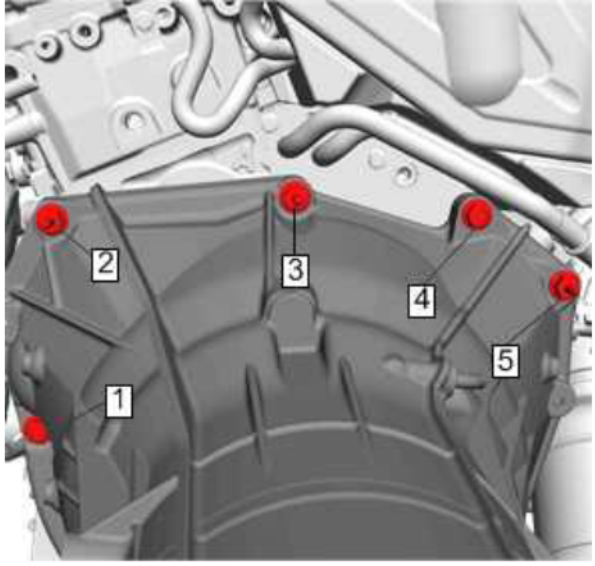

Fig. 135: Transmission Bolts
Courtesy of GENERAL MOTORS COMPANY

CAUTION: **Refer to Fastener Caution .**

4. Connect the transmission vent hose retainers (1).

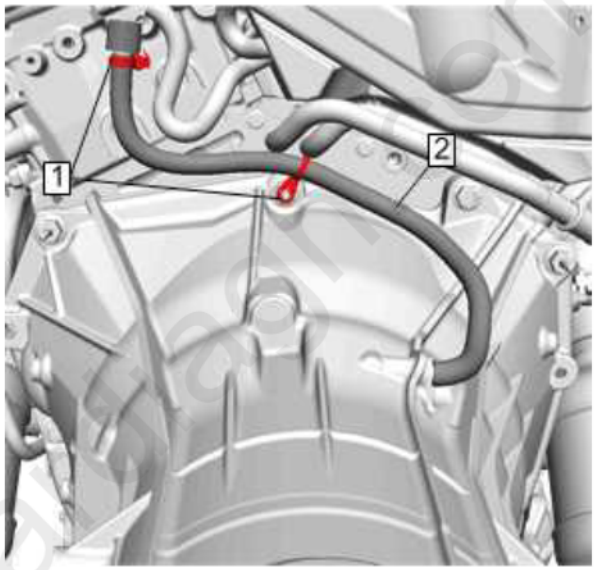

Fig. 136: Transmission Vent Hose Retainers
Courtesy of GENERAL MOTORS COMPANY

5. Align the torque converter to flexplate orientation marks made during the removal procedure.
6. Complete the following steps for all torque converter bolts (1):

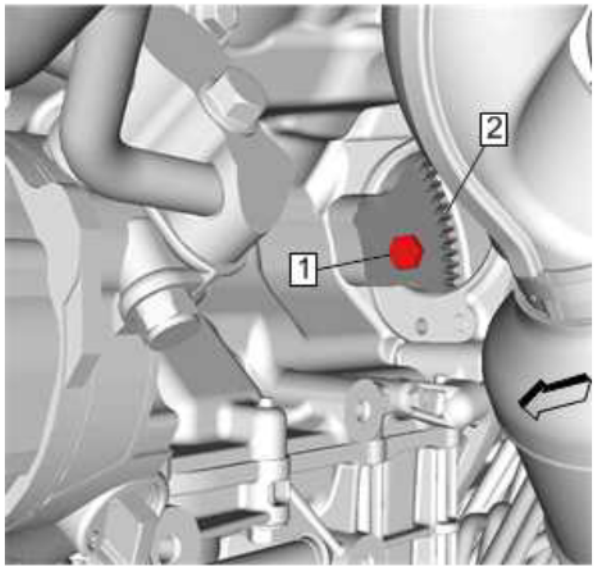

Fig. 137: Torque Converter Bolts
Courtesy of GENERAL MOTORS COMPANY

NOTE: **Torque converter bolts are self-locking and must be replaced with NEW torque converter bolts every time the bolts are removed.**

1. Rotate the harmonic balancer center bolt clockwise ONLY, in order to align the torque converter bolt holes in the flexplate with the starter opening in the engine block.
2. Install all NEW torque converter bolts (1) and tighten to 63 N.m (46 lb ft).

7. Install the starter motor. Refer to **Starter Replacement (LGX)** .
8. Install the engine and transmission to the vehicle. Refer to **Engine Replacement (LGX)**
9. Install the transmission close out plug (1).

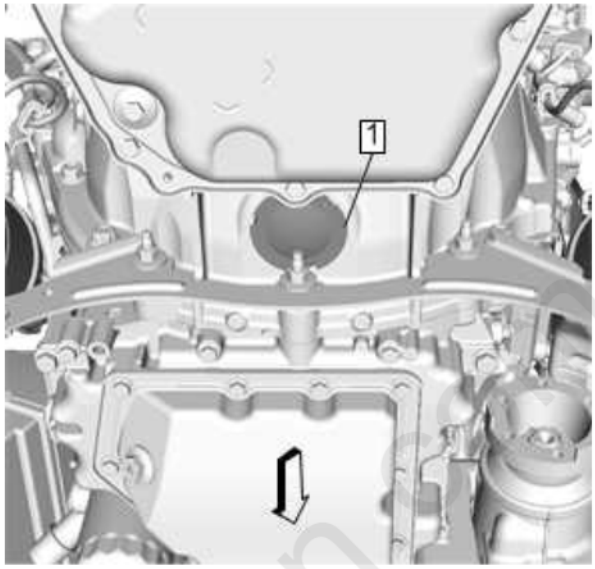

Fig. 138: Transmission Close Out Plug
Courtesy of GENERAL MOTORS COMPANY

10. **Transmission Converter Cover Replacement (Right Side, All Wheel Drive)**Â» Install
11. Install the lower transmission to engine bolts (1, 2, 3, 4, 5, 6) and tighten to 58 N.m (43 lb ft).

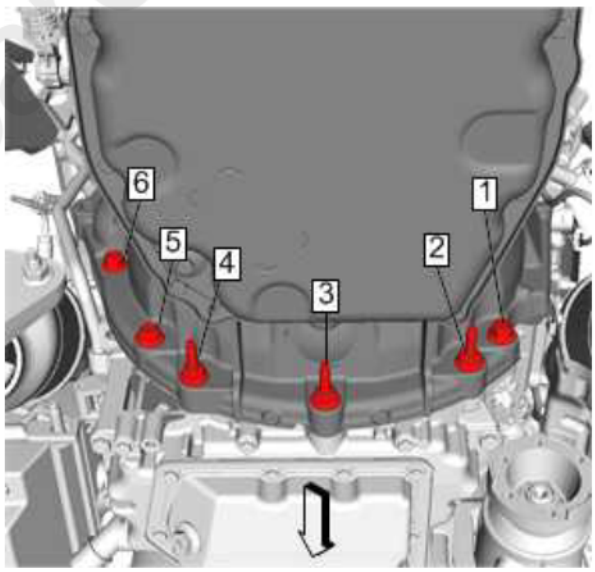

Fig. 139: Lower Transmission Bolts
Courtesy of GENERAL MOTORS COMPANY

12. Install the right side transmission to engine bolt (1) and tighten to 58 N.m (43 lb ft).

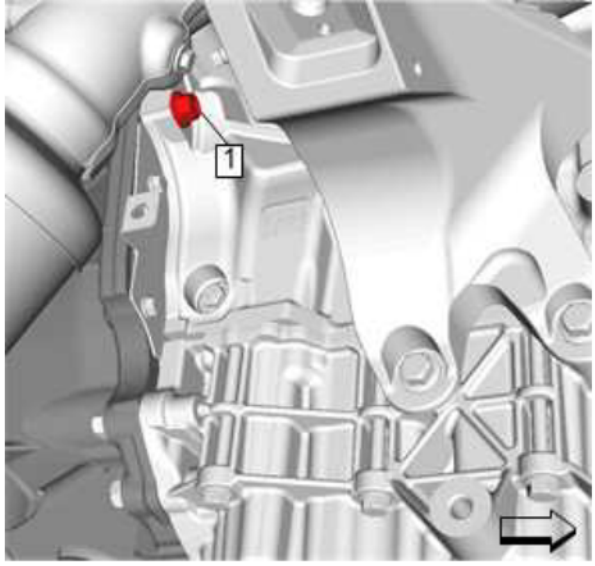

Fig. 140: Right Side Transmission And Engine Bolt
Courtesy of GENERAL MOTORS COMPANY

13. Install the catalytic converter brace bracket (2) to the transmission.

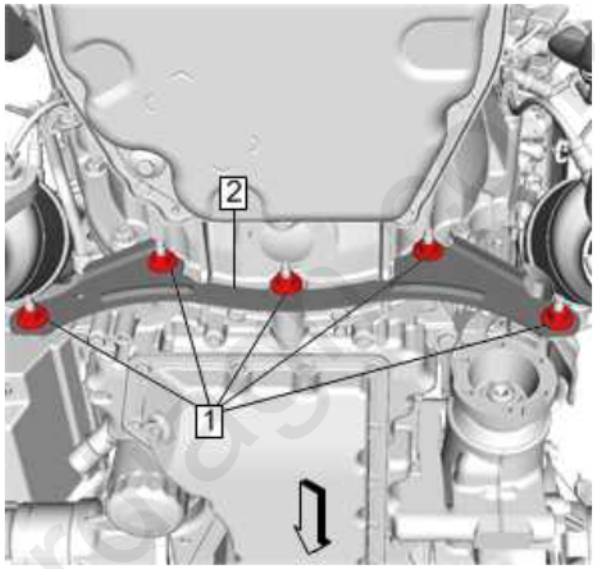

Fig. 141: Catalytic Converter Brace Bracket
Courtesy of GENERAL MOTORS COMPANY

14. Install the five retaining nuts (1) and tighten to 22 N.m (16 lb ft).
15. Install the transmission fluid cooler inlet and outlet pipe to the transmission. Refer to **Transmission Fluid Cooler Inlet and Outlet Pipe Replacement (LTG)** , **Transmission Fluid Cooler Inlet and Outlet Pipe Replacement (LTG With HP9)** and/or **Transmission Fluid Cooler Inlet and Outlet Pipe Replacement (LGW)** .
16. Connect the electrical wiring harness retainers to the transmission to engine fasteners and to the transmission case.
17. Install the cable in the bracket, then slide the retainer (4) rearward to lock the transmission range selector lever cable in the bracket.

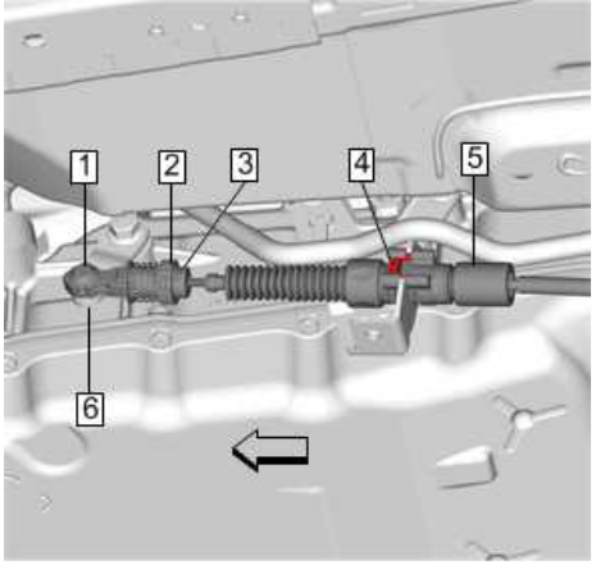

Fig. 142: Transmission Range Selector Lever Cable
Courtesy of GENERAL MOTORS COMPANY

18. Connect the transmission range selector lever cable terminal (1) to the transmission manual shift lever pin (2).
19. Adjust the cable. Refer to **Range Selector Lever Cable Adjustment**.
20. **Propeller Shaft Replacement** Â» Install
21. **Front Axle Propeller Shaft Replacement (LGX, LGW)** Â» Install
22. Check the transmission fluid level and fill if necessary. Refer to **Transmission Fluid Level and Condition Check** .
23. Lower the vehicle.
24. Perform the solenoid valve characterization. Refer to **Solenoid Valve Characterization Reprogramming** .
25. Perform the service fast learn procedure. Refer to **Transmission Service Fast Learn Procedure** .

NOTE: **The Service Fast Learn procedure must be performed when one of the following repairs have been made to the vehicle. Failure to perform the procedure after one of the following repairs may result in poor transmission performance, as well as transmission DTCs being set:**

The service fast learn procedure must be performed when any of the following repairs has been made to the transmission.

- **Pressure regulating solenoid replacement**
- **Valve body repair or replacement**
- **Any service/repair in response to a shift quality concern**
- **Any internal transmission service, repair, overhaul or replacement**
- **Torque converter replacement**
- **TCM replacement**
- **Transmission assembly replacement**

carmanuals.com

Back To Article

Automatic Transmission - 8L45 (M5N) or 8L90 (M5X) - Schematic Wiring Diagrams - Automatic Transmission Controls Schematics - CT6

SCHEMATIC WIRING DIAGRAMS

AUTOMATIC TRANSMISSION CONTROLS WIRING SCHEMATICS

Power, Ground, Serial Data, MIL and Fluid Temperature

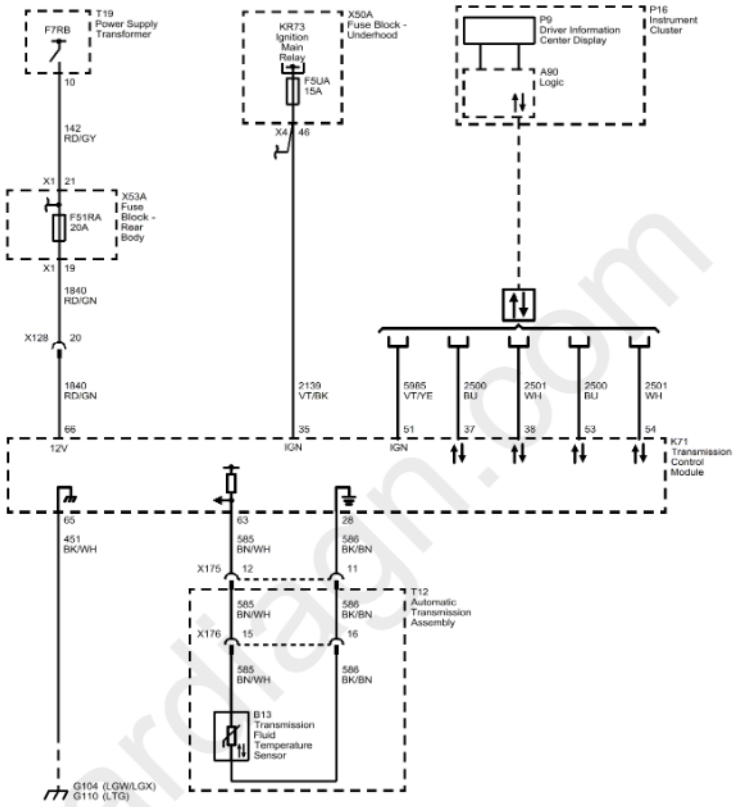

Fig. 1: Power, Ground, Serial Data, MIL and Fluid Temperature
Courtesy of GENERAL MOTORS COMPANY

Pressure and Shift Controls

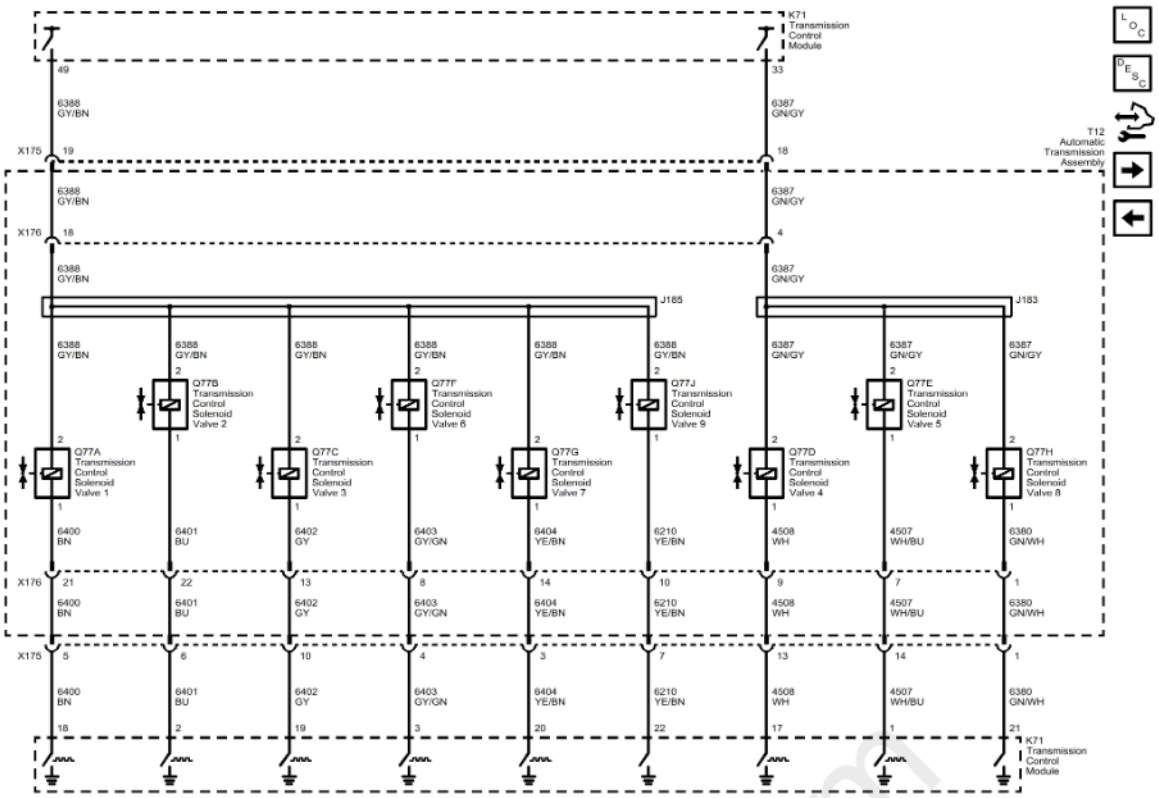

Fig. 2: Pressure and Shift Controls
Courtesy of GENERAL MOTORS COMPANY

Speed Sensors and Internal Mode Switch

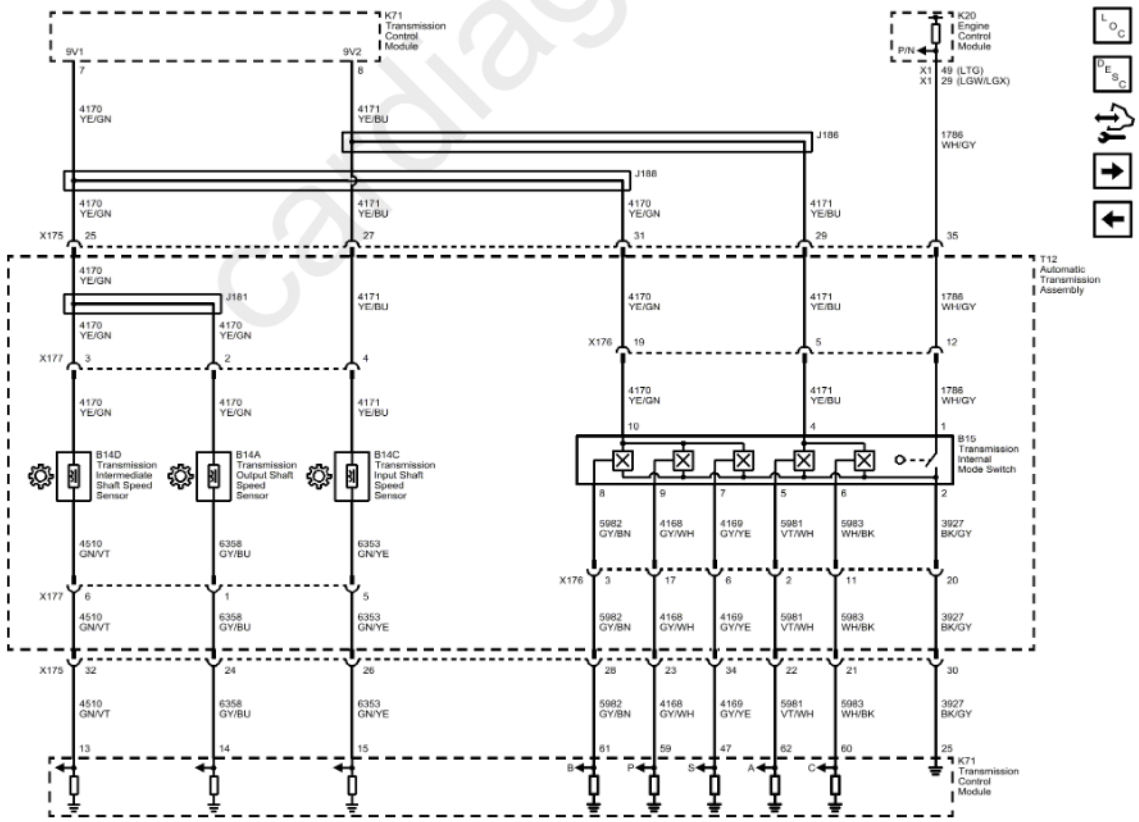

Fig. 3: Speed Sensors and Internal Mode Switch
Courtesy of GENERAL MOTORS COMPANY

Tap Up/Tap Down Switches and Transmission Fluid Accumulator

cardiagn.com

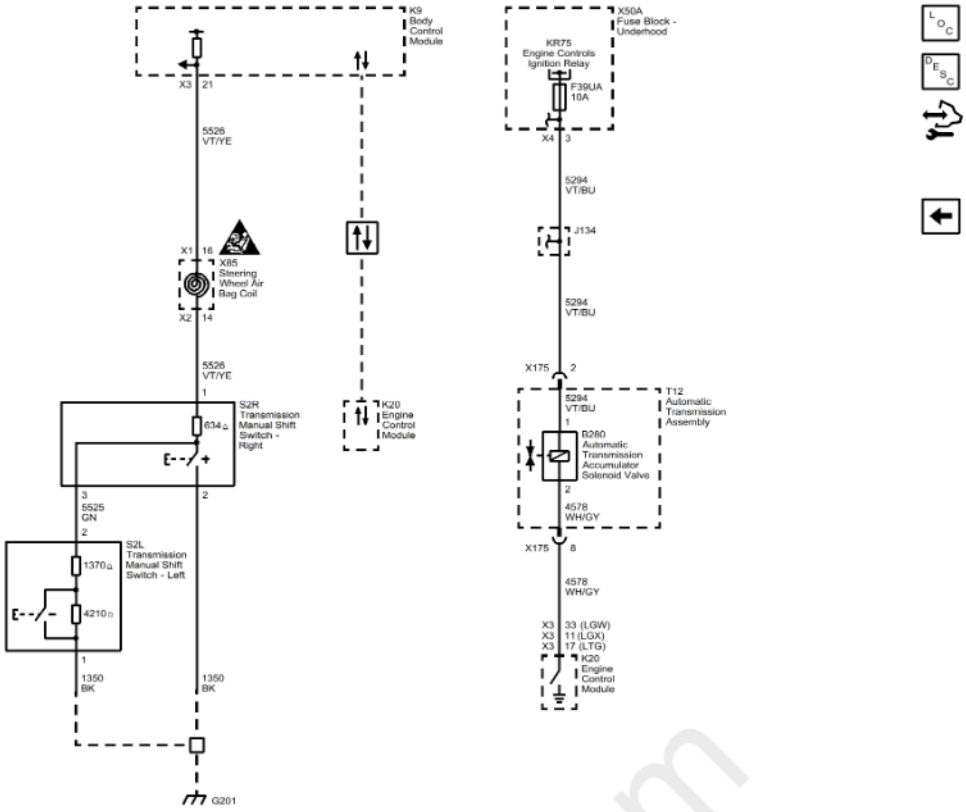

Fig. 4: Tap Up/Tap Down Switches and Transmission Fluid Accumulator
Courtesy of GENERAL MOTORS COMPANY

cardiagn.com

SPECIAL TOOLS AND EQUIPMENT

SPECIAL TOOLS

Illustration	Tool Number/Description
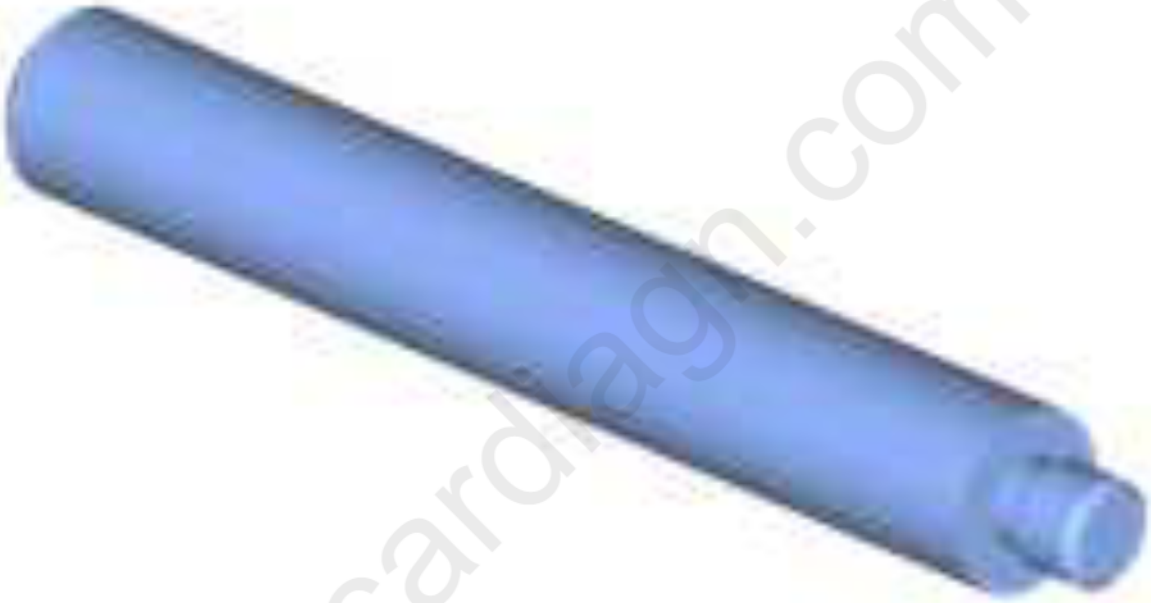	DT-8092 GE-8092 J-8092 Driver Handle

cardiagn.com

Illustration	Tool Number/Description
	DT-03289-20 J-3289-20 Holding Fixture (Base)

cardiagn.com

Illustration	Tool Number/Description
	DT-21366 J-21366 Converter Holding Strap

cardiagn.com

Illustration	Tool Number/Description
	DT-22828 J-22828 Input and Countershaft Race Installer

cardiagn.com

Illustration	Tool Number/Description
	DT-26941 J-26941 Bushing and Bearing Remover

cardiagn.com

Illustration	Tool Number/Description
	DT-35512 J-35512 Bearing Installer

cardiagn.com

Illustration	Tool Number/Description
	DT-37212 J-37212 Front Output Shaft Seal Installer

cardiagn.com

Illustration	Tool Number/Description
	DT-38734 J-38734 Intermediate Spring Compressor Adapter

cardiagn.com

Illustration	Tool Number/Description
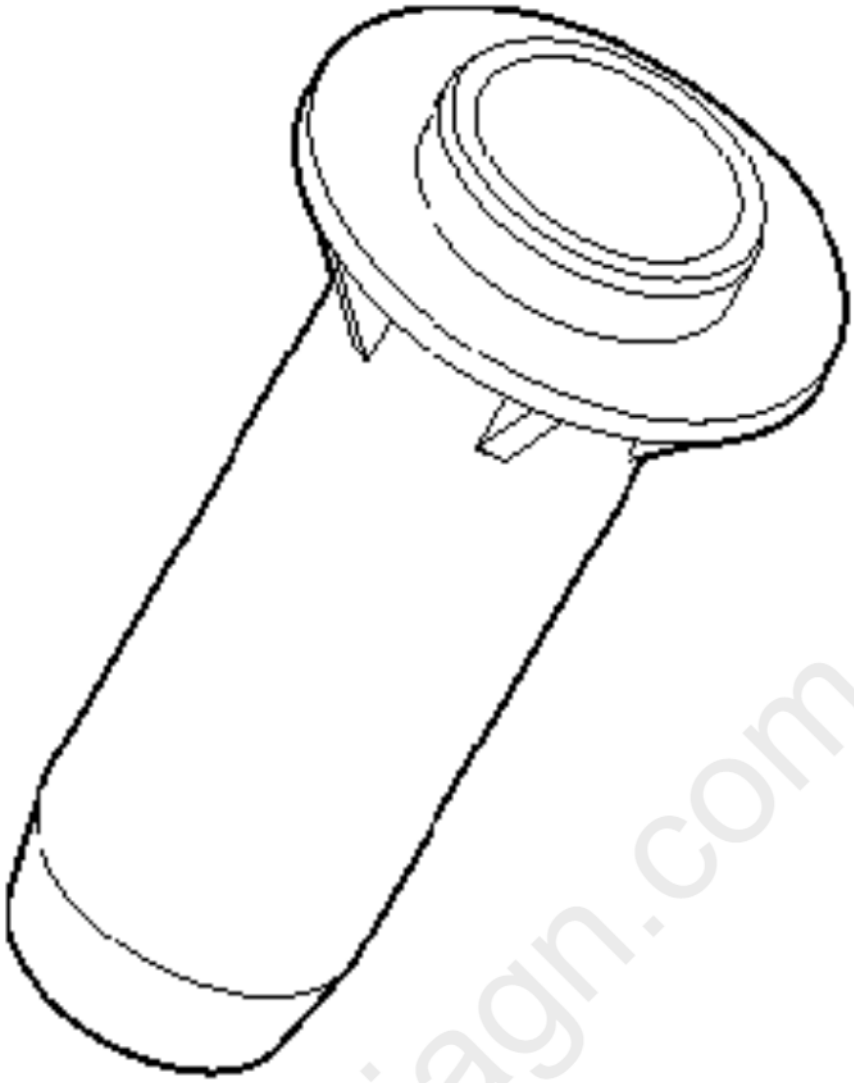	DT-43772 J-43772 Torque Converter Seal Installer

cardiagn.com

Illustration	Tool Number/Description
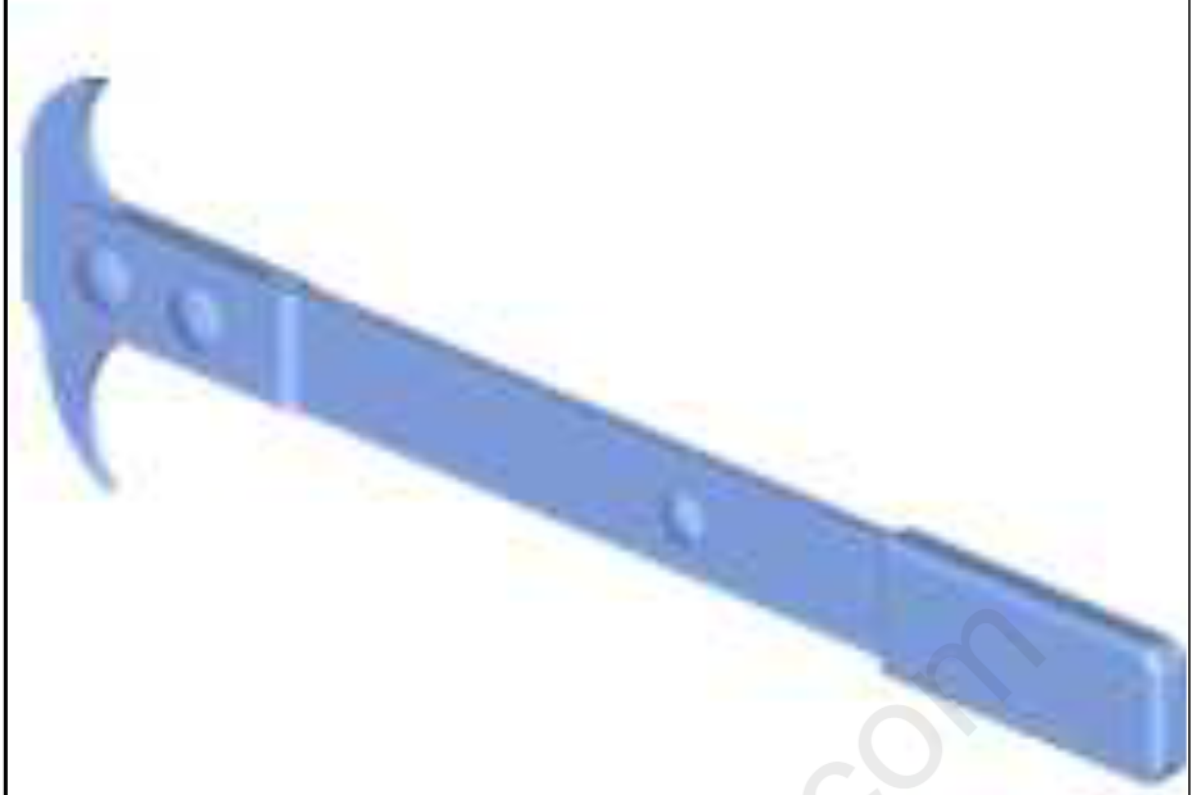	DT-45000 J-45000 Seal Remover

cardiagn.com

Illustration	Tool Number/Description
	DT-45012 J-45012 Holding Fixture
	DT-45096 J-45096 Transmission Oil Cooling System Flush and Flow Test Tool

cardiagn.com

Illustration	Tool Number/Description

cardiag.com

Illustration	Tool Number/Description
	DT-45096-30 J-45096-30 Transmission Cooler Flusher Adapters

cardiagn.com

Illustration	Tool Number/Description
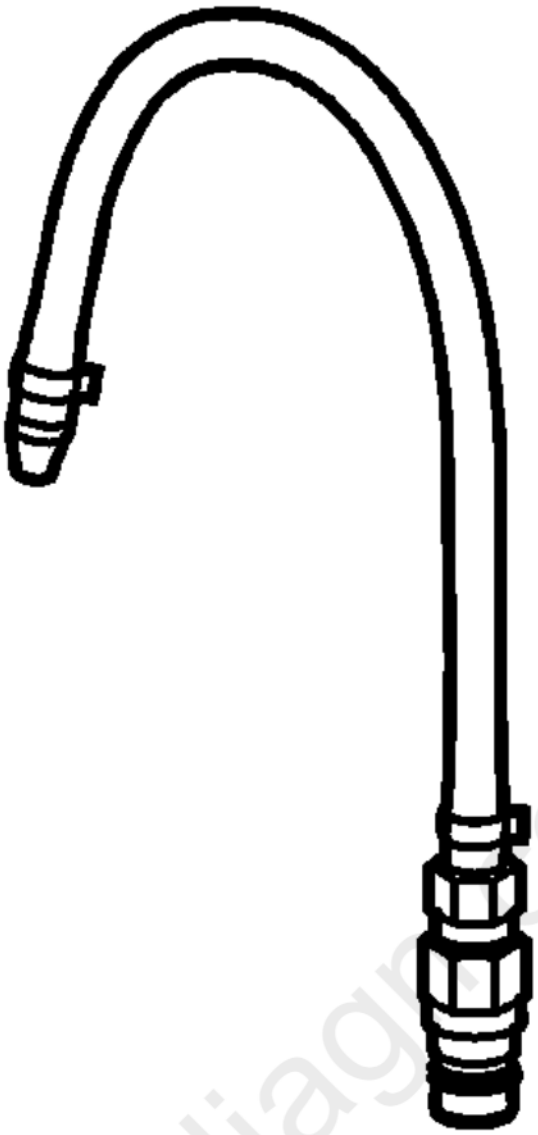	DT-45096-40 J-45096-40 Transflow Oil Fill Adapter

cardiagn.com

Illustration	Tool Number/Description
	DT-45124 J-45124 Removal Bridge

cardiagn.com

Illustration	Tool Number/Description
	DT-45124-9 J-45124-9 Puller Leg

cardiagn.com

Illustration	Tool Number/Description
	DT-45201 J-45201 Cooler Line Seal Remover

cardiagn.com

Illustration	Tool Number/Description
	DT-47693-2 Compressor

cardiagn.com

Illustration	Tool Number/Description
	DT-47770 Seal Installer

cardiagn.com

Illustration	Tool Number/Description
	DT-47865 Bearing Remover

cardiagn.com

Illustration	Tool Number/Description
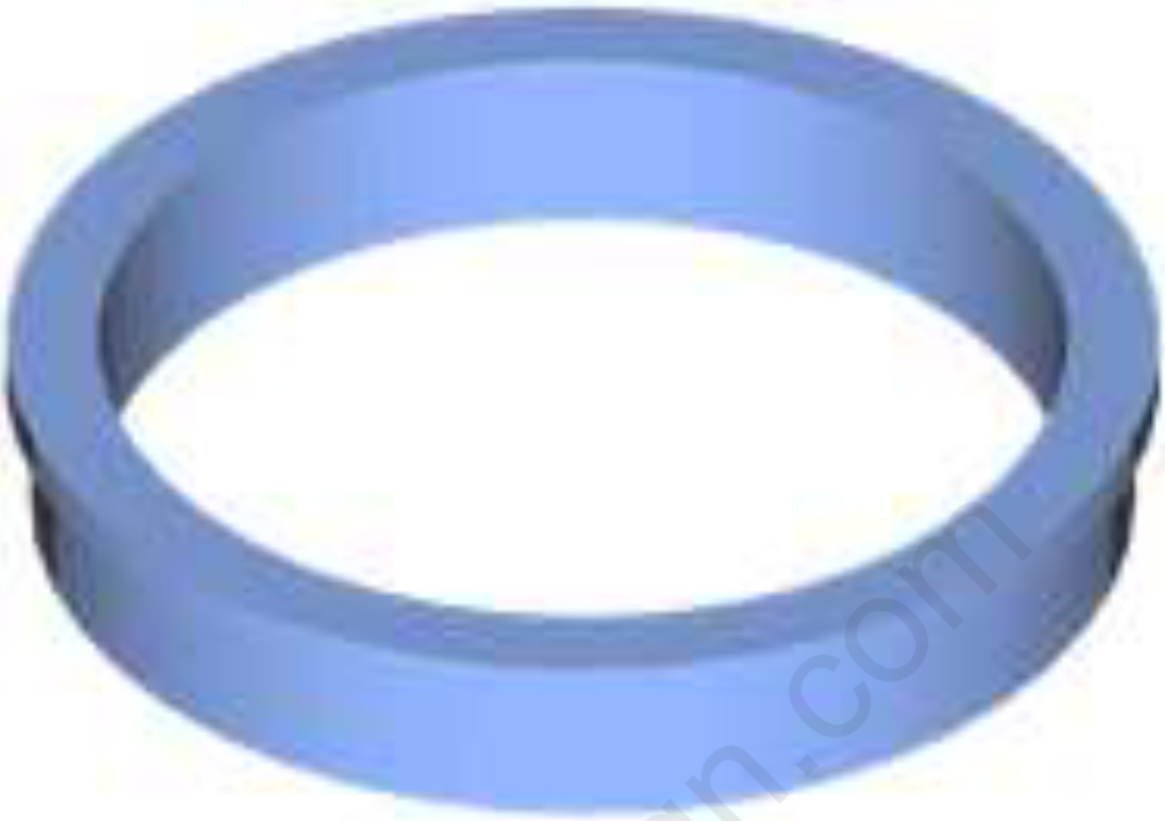	DT-47868-4 Clutch Travel Weight Adapter

cardiagn.com

Illustration	Tool Number/Description
	DT-48056 Spring Compressor Bridge

cardiagn.com

Illustration	Tool Number/Description
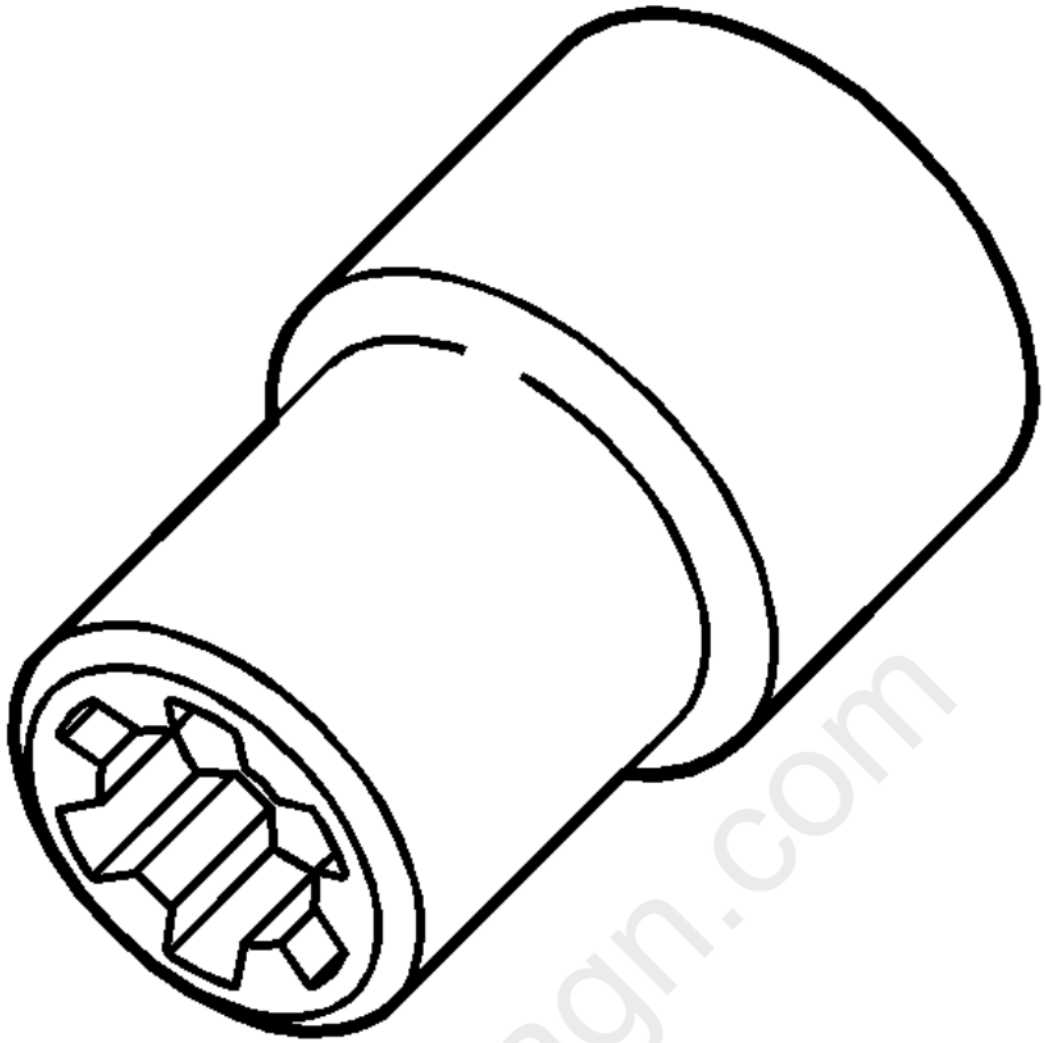	DT-48285 Valve Body Torx Plus Socket

cardiagn.com

Illustration	Tool Number/Description
	DT-48989 Holding Fixture

cardiagn.com

Illustration	Tool Number/Description
	DT-50648 Case Seal Installer

cardiagn.com

Illustration	Tool Number/Description
	DT-50896 Seal Installer

cardiagn.com

Illustration	Tool Number/Description
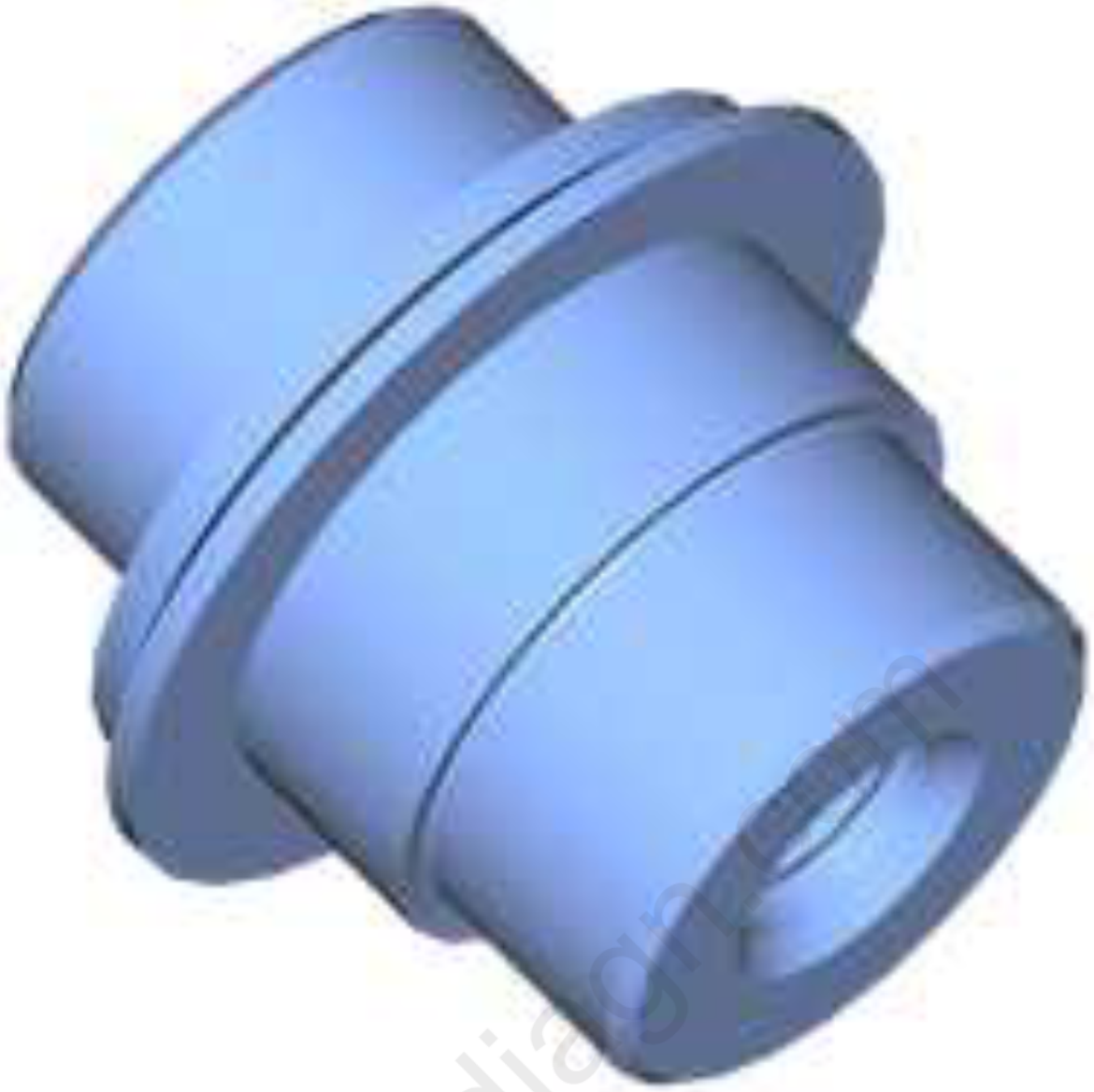	DT-50897 Bearing Installer

cardiagn.com

Illustration	Tool Number/Description
	DT-50900 Clutch Travel Support Fixture

cardiagn.com

Illustration	Tool Number/Description
	DT-50902 Adjustable Clutch Spring Compressor

cardiagn.com

Illustration	Tool Number/Description
	DT-50903 Clutch Travel Load Gauge

cardiagn.com

Illustration	Tool Number/Description
	DT-50905 Clutch Air Travel Adapter

cardiagn.com

Illustration	Tool Number/Description
	DT-50906 Bearing Installer

cardiagn.com

Illustration	Tool Number/Description
	DT-50910 Seal Installer

cardiagn.com

Illustration	Tool Number/Description
	DT-50911 Seal Installer

cardiagn.com

Illustration	Tool Number/Description
	DT-50912 Seal Installer

cardiagn.com

Illustration	Tool Number/Description
	DT-50914 Solenoid Valve Retainer Remover/Installer

cardiagn.com

Illustration	Tool Number/Description
	DT-50921 Output Carrier/Shaft Lifting Tool

cardiagn.com

Illustration	Tool Number/Description
	DT-51087 Bearing Installer

cardiagn.com

Illustration	Tool Number/Description
	DT-51088 Seal Installer

cardiagn.com

Illustration	Tool Number/Description
	DT-51089 Bearing Installer

cardiagn.com

Illustration	Tool Number/Description
	DT-51190 Fluid Fill Pan Adapter

cardiagn.com

Illustration	Tool Number/Description
	DT-51196 Seal Installer

cardiagn.com

Illustration	Tool Number/Description
	DT-51328 Clutch Compressor and Air Travel Check Rod Extension

cardiagn.com

Illustration	Tool Number/Description
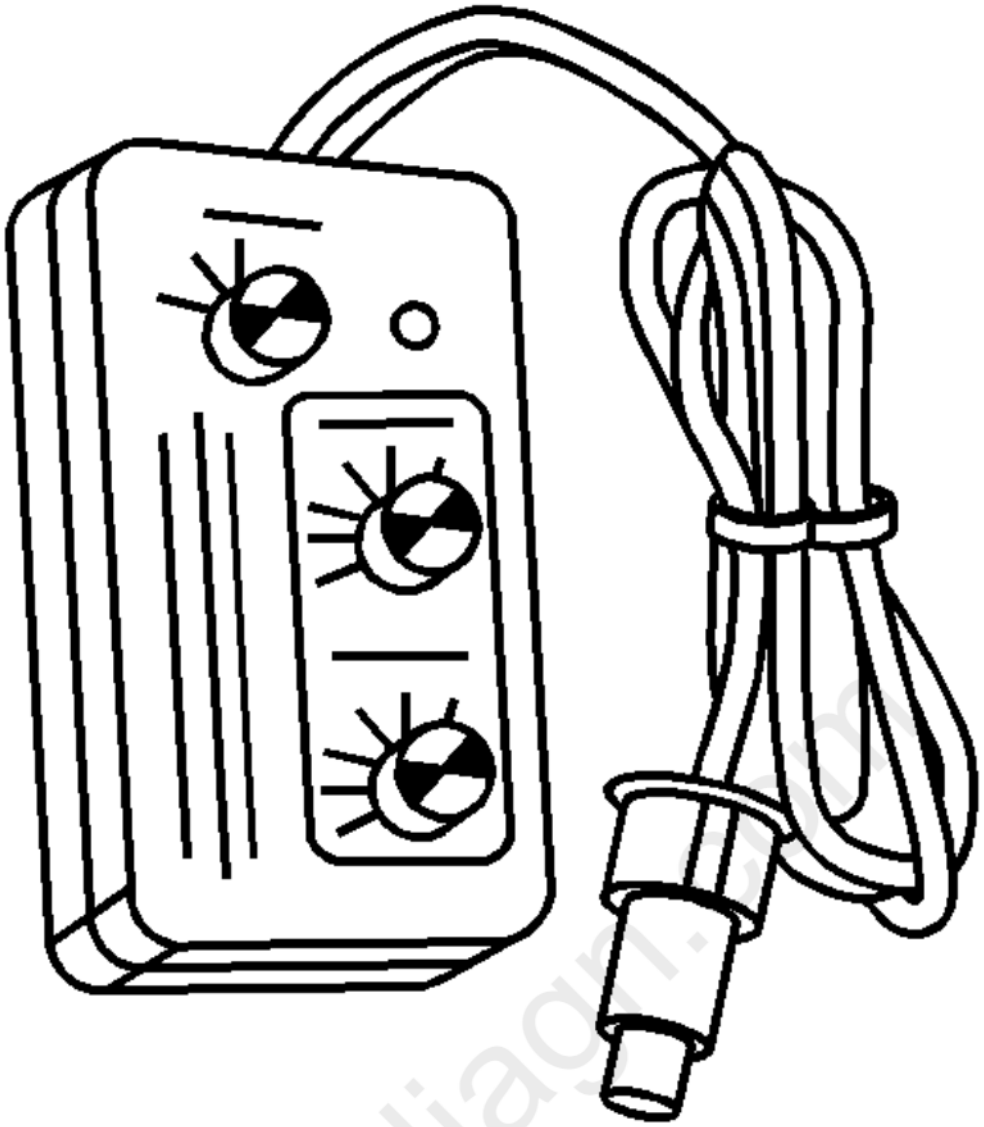	EL-38522 J-38522 Variable Signal Generator

cardiagn.com

Illustration	Tool Number/Description
	EN-38416-B J-38416-B Harmonic Balancer Remover

cardiagn.com

Illustration	Tool Number/Description
	GE-6125-B J-6125-B Slide Hammer with Adapters

cardiagn.com

Illustration	Tool Number/Description
	GE-8001 J-8001 Dial Indicator Set

cardiagn.com

Illustration	Tool Number/Description
	GE-8433 J-8433 Puller Bar

cardiagn.com

Illustration	Tool Number/Description
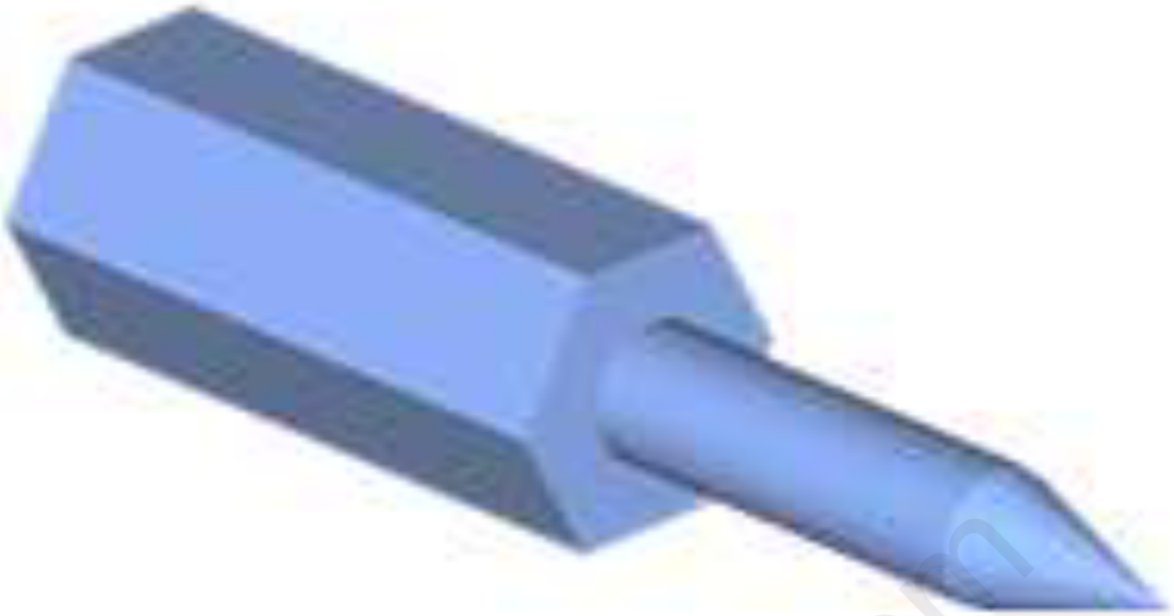	GE-36825-A J-36825-A Output Shaft Oil Seal Remover

cardiagn.com

Illustration	Tool Number/Description
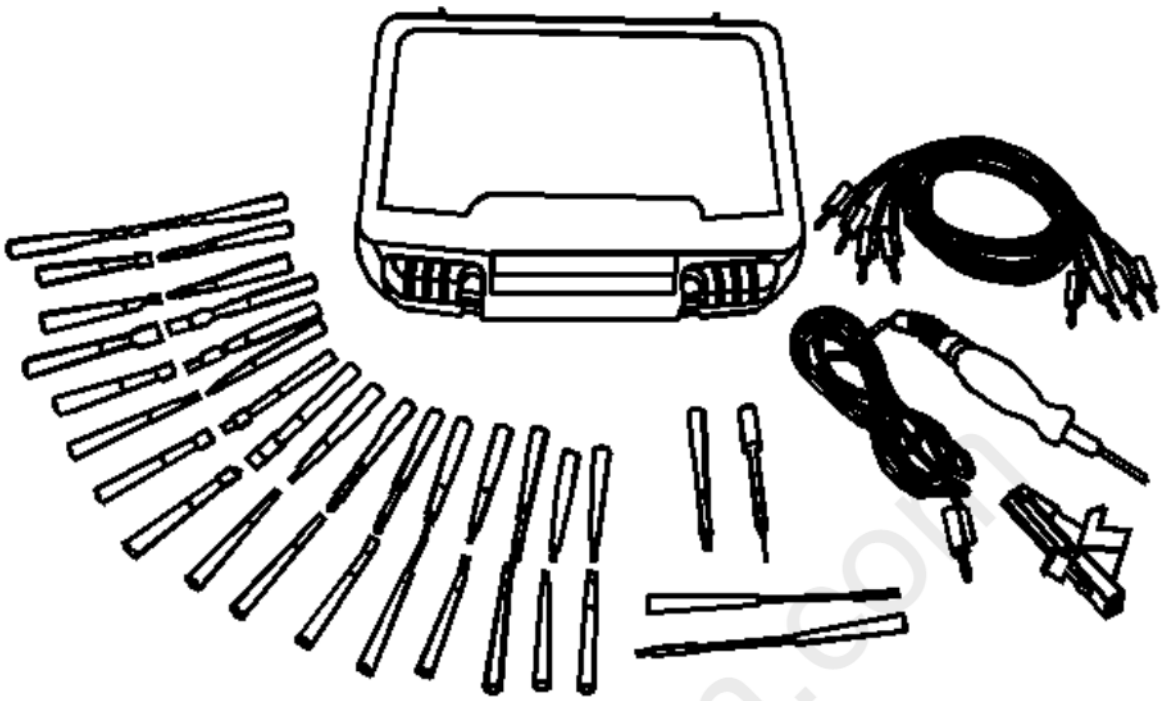	J-35616 GM-Approved Terminal Test Kit
	J-42055 Drivetrain Support Fixture

cardiagn.com

Illustration	Tool Number/Description
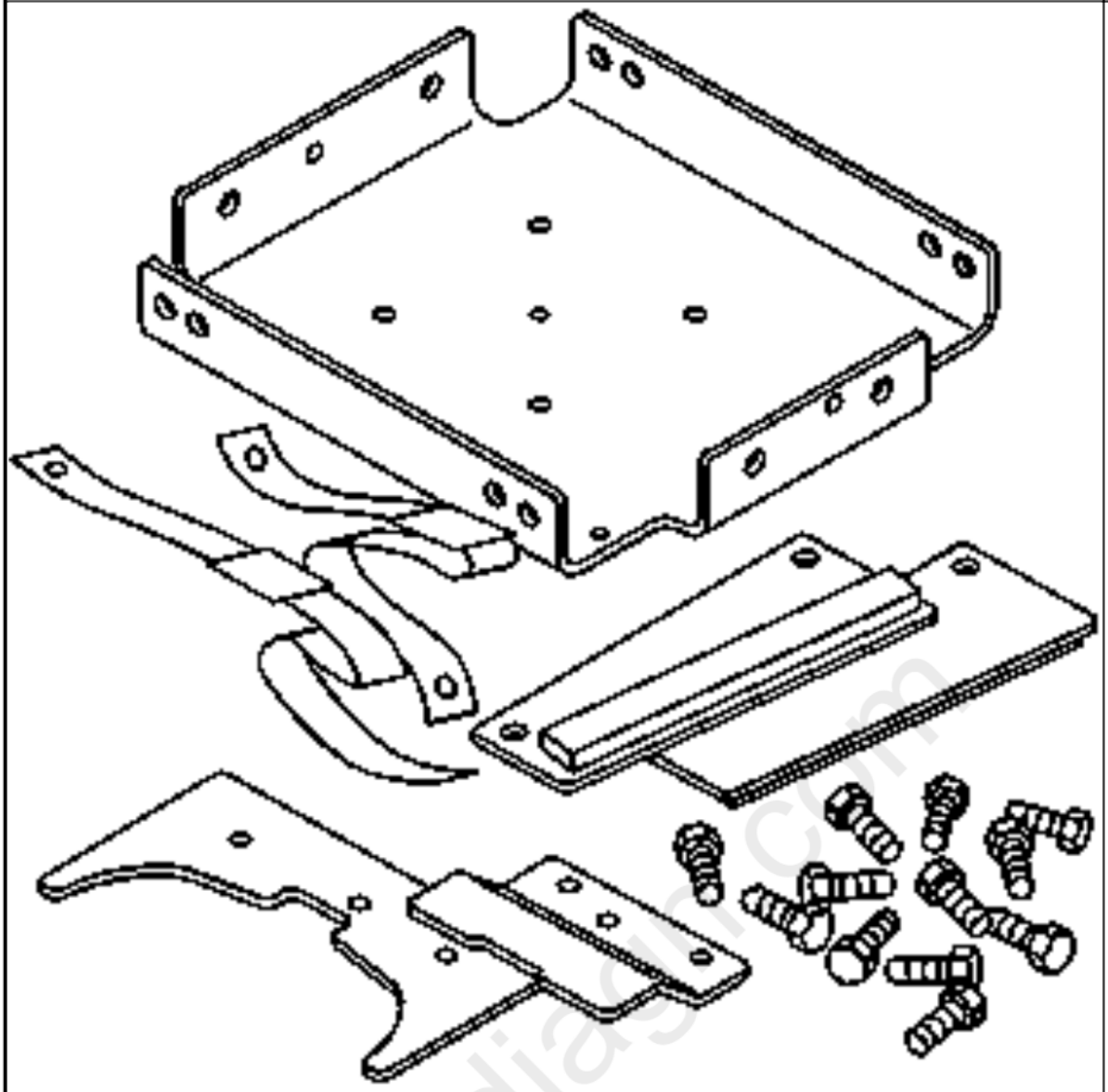	

cardiagn.com

Back To Article

SPECIFICATIONS

FASTENER SPECIFICATIONS (ON VEHICLE)

Single Use Non-Threaded Fasteners/Components

NOTE:
All fasteners/components listed in this table MUST BE DISCARDED and replaced with NEW after removal.

Application
Manual Shaft Shift Pin
Manual Shift Shaft Seal
Torque Converter Fluid Seal

Single Use Threaded Fastener/Component Tightening Specifications

NOTE:
All fasteners/components listed in this table MUST BE DISCARDED and replaced with NEW after removal.

Application	Specification Metric (English)
Input Speed Sensor Wiring Harness Bolt	
• First Pass:	4 N.m (35 lb in)
• Final Pass:	45 Degrees
Output Speed Sensor Wiring Harness Bolt	
• First Pass:	4 N.m (35 lb in)
• Final Pass:	45 Degrees
Torque Converter Bolts	63 N.m (46 lb ft)
Transmission Fluid Baffle Bolts	
• First Pass:	4 N.m (35 lb in)
• Final Pass:	45 Degrees

Reusable Threaded Fastener Tightening Specifications

NOTE:
All fasteners listed in this table can be reused after removal.

Application	Specification Metric (English)

cardiagn.com

NOTE:

All fasteners listed in this table can be reused after removal.

Application	Specification Metric (English)
Automatic Transmission Auxiliary Fluid Accumulator Bolt	8 N.m (71 lb in)
Automatic Transmission Control Indicator Screws	2.5 N.m (22 lb in)
Automatic Transmission Range Selector Lever	25 N.m (18 lb ft)
Auxiliary Heater Pump Bracket to the Transmission	10 N.m (89 lb in)
Flywheel Inspection Cover/Converter Cover Fasteners	10 N.m (89 lb in)
Oil Pressure Test Plug	11 N.m (97 lb in)
Propeller Shaft Transmission Flange Nut	105 N.m (77 lb ft)
Range Selector Lever Cable Bracket	22 N.m (16 lb ft)
Transmission Control Fasteners	9 N.m (80 lb in)
Transmission Fluid Pan Fasteners	10 N.m (89 lb in)
Transmission Heat Shield Fasteners	9 N.m (80 lb in)
Transmission to Engine Bolts	58 N.m (43 lb ft)
Valve Body Assembly Bolts (1, 2) (1 - M6 x 68) and Bolts (2 - M6 x 45)	9 N.m (80 lb in)

FASTENER SPECIFICATIONS (OFF VEHICLE)

Single Use Non-Threaded Fasteners/Components

NOTE:

All fasteners/components listed in this table MUST BE DISCARDED and replaced with NEW after removal.

Application
1-2-3-4-5-Reverse Clutch Piston Dam Inner Seal
1-2-3-4-5-Reverse Clutch Piston Dam Retaining Ring
1-2-3-4-5-Reverse Clutch Piston Dam Seal
1-2-3-4-5-Reverse Clutch Piston Inner Seal
1-2-3-4-5-Reverse Clutch Piston O-Ring Seal
1-2-3-4-5-Reverse Clutch Piston Outer Seal
1-3-5-6-7 Clutch Piston Dam Retaining Ring
2-3-4-6-8 Clutch Piston Dam Retaining Ring
4-5-6-7-8-Reverse Clutch Piston Dam Retaining Ring
Automatic Transmission Control Wiring Harness Clip
Automatic Transmission Fluid Pump Gasket
Automatic Transmission Fluid Pump Seal
Automatic Transmission Case Front Cover Seal
Automatic Transmission Front Support Cover Gasket
Clutch Housing Fluid Passage Seal
Control Valve Body Spacer Plate
Control Valve Body Spacer Plate Retainer
Control Valve Channel Plate Spacer Plate
Input Sun Gear Retaining Ring
Propeller Shaft Transmission Flange Fluid Seal
Turbine Shaft Fluid Seal Ring [7x]
Turbine Shaft Fluid Seal Ring
Turbine Shaft Retaining Ring
Wiring Harness Clip

Single Use Threaded Fastener/Component Tightening Specifications

NOTE:

All fasteners/components listed in this table MUST BE DISCARDED and replaced with NEW after removal.

Application	Ref No.*	Quantity	Size	Specification Metric (English)
Automatic Transmission Fluid Pump Cover Bolt				
First Pass:	3	11	M6 x 30	6.5 N.m (58 lb in)
Final Pass:				45 degrees
Automatic Transmission Fluid Baffle Bolt				
• First Pass:	12	2	M6 x 25	4 N.m (35 lb in)
• Final Pass:				45 degrees
Output Speed Sensor Wiring Harness Bolt				
• First Pass:	38	3	M6 x 25	4 N.m (35 lb in)
• Final Pass:				45 degrees
Park Pawl Actuator Bracket Bolt	606	2	M8 x 35	31 N.m (23 lb ft)
Propeller Shaft Transmission Flange Nut	25	1	-	105 N.m (77 lb ft)
*Reference number refers to the component callout number in Disassembled Views				

Reusable Threaded Fastener Tightening Specifications

NOTE:

All fasteners listed in this table can be reused after removal.

Application	Ref No.*	Quantity	Size	Specification Metric (English)
Automatic Transmission Auxiliary Fluid Accumulator Bleeder Valve	399	1	-	11 N.m (97 lb in)
Automatic Transmission Auxiliary Fluid Accumulator Bolt	321	3	M5 x 45	8 N.m (71 lb in)
Automatic Transmission Auxiliary Fluid Accumulator Bolt	398	2	M4 x 15	3 N.m (27 lb in)
Automatic Transmission Case Extension Bolt				
• First Pass:	23	6	M10 x 40	20 N.m (15 lb ft)
• Final Pass:				55 degrees
Automatic Transmission Case Extension Hole Plug	407	2	-	11 N.m (97 lb in)
Automatic Transmission Case Extension Stud	412	2	-	15 N.m (11 lb ft)
Automatic Transmission Fluid Pan Bolt	51	15	M6 x 20	10 N.m (89 lb in)

cardiagn.com

NOTE:

All fasteners listed in this table can be reused after removal.

Application	Ref No.*	Quantity	Size	Specification Metric (English)
Automatic Transmission Fluid Pump Bolt	300	5	M6 x 28	9 N.m (80 lb in)
Control Valve Channel Plate Bolt	314	19	M5 x 55	8 N.m (71 lb in)
Control Valve Solenoid Body Bolt	44	4	M6 x 45	9 N.m (80 lb in)
Control Valve Solenoid Body Bolt	43	7	M6 x 68	9 N.m (80 lb in)
Control Valve Solenoid Body Bolt	321	8	M5 x 45	8 N.m (71 lb in)
Manual Shift Detent Spring Bolt	42	1	M6 x 25	12 N.m (106 lb in)
Stator Shaft Support Bolt	17	9	M8 x 33	35 N.m (26 lb ft)
Transmission Oil Level Check Plug Seal	50	1	-	9 N.m (80 lb in)
*Reference number refers to the component callout number in Disassembled Views				

TRANSMISSION GENERAL SPECIFICATIONS

Name	8L45	8L90
RPO Codes	M5N, M5T	M5U, M5X
Production Location	Toledo, OH (USA) Silao (Mexico)	Toledo, OH (USA)
Transmission Drive	Rear Wheel Drive	Rear Wheel Drive
1st Gear Ratio	4.62	4.560
2nd Gear Ratio	3.04	2.971
3rd Gear Ratio	2.07	2.075
4th Gear Ratio	1.66	1.688
5th Gear Ratio	1.26	1.270
6th Gear Ratio	1.000	1.000
7th Gear Ratio	0.85	0.845
8th Gear Ratio	0.66	0.652
Reverse	3.93	3.818
Torque Converter Size - Diameter of Torque Converter Turbine	238 mm	258 mm
Pressure Taps	Line Pressure	Line Pressure
Transmission Fluid Type	DEXRONÂ® HP	DEXRONÂ® HP
Transmission Type: 8	Eight Forward Gears	Eight Forward Gears
Transmission Type: L	Longitude Mount	Longitude Mount
Transmission Type: 45/90	Product Series	Product Series
Position Quadrant	P, R, N, D, M	P, R, N, D, M
Case Material	Die Cast Aluminum	Die Cast Aluminum
Transmission Net Weight (Approximate)	80 kg (176 lb)	95 kg (210 lb)
Maximum Trailer Towing Capacity	Refer to applicable owner's manual	Refer to applicable owner's manual

ADHESIVES, FLUIDS, LUBRICANTS AND SEALERS

Application	Type of Material	GM Part Number

cardiagn.com

Application	Type of Material	GM Part Number	
		United States	Canada
Automatic Transmission Fluid	DEXRONÂ®HP	19353429	19353430
Propeller Shaft Transmission Flange	Adhesive	89021297	10953488
Propeller Shaft Transmission Flange Nut	Adhesive	89021297	10953488

APPROXIMATE FLUID CAPACITIES

Application	Specification	
	Metric	English
8L45 or 8L90		
Pan Removal and Filter Replacement-Approximate Capacity	7.0 liters	7.4 quarts
Overhaul - Approximate Capacity (Transmission Volume Only)	10.3 liters	10.88 quarts
Complete Trans System - Approximate Capacity (Including Cooler Volume)	10.8 liters	11.41 quarts

CLUTCH BACKING PLATE RETAINING RING SPECIFICATIONS (8L90)

2-3-4-6-8 Clutch Backing Plate Retaining Ring

Clutch Pack Travel Specification - 1.54-2.20 mm (0.061-0.087 in)		
Retaining Ring Thickness		
Metric	English	Ring Identification Color
NOTE: **After measuring clutch pack travel, determine if the measurement is within the specification. If the measurement is not within the specification, measure the thickness of the existing retaining ring and then choose a thicker or thinner retaining ring that will bring the measurement within specification.**		
1.75-1.85 mm	0.069-0.073 in	Light Green
2.11-2.21 mm	0.083-0.087 in	No Color
2.46-2.56 mm	0.097-0.101 in	Yellow
2.82-2.92 mm	0.111-0.115 in	Light Blue
3.18-3.28 mm	0.125-0.129 in	Orange
3.54-3.64 mm	0.139-0.143 in	Dark Green
3.89-3.99 mm	0.153-0.157 in	Silver

4-5-6-7-8 Reverse Clutch Backing Plate Retaining Ring

Clutch Pack Travel Specification - 1.24-1.90 mm (0.049-0.075 in)		
Retaining Ring Thickness		
Metric	English	Ring Identification Color
NOTE: **After measuring clutch pack travel, determine if the measurement is within the specification. If the measurement is not within the specification, measure the thickness of the existing retaining ring and then choose a thicker or thinner retaining ring that will bring the measurement within specification.**		
1.75-1.85 mm	0.069-0.073 in	Light Green
2.11-2.21 mm	0.083-0.087 in	No Color
2.46-2.56 mm	0.097-0.101 in	Yellow
2.82-2.92 mm	0.111-0.115 in	Light Blue
3.18-3.28 mm	0.125-0.129 in	Orange

Clutch Pack Travel Specification - 1.24-1.90 mm (0.049-0.075 in)		
Retaining Ring Thickness		Ring Identification Color
Metric	English	
3.54-3.64 mm	0.139-0.143 in	Dark Green
3.89-3.99 mm	0.153-0.157 in	Silver

1-3-5-6-7 Clutch Backing Plate Retaining Ring

Clutch Pack Travel Specification - 4 Plates - 1.82-2.30 mm (0.072-0.091 in) Clutch Pack Travel Specification - 5 Plates - 1.50-2.10 mm (0.059-0.083 in)		
Retaining Ring Thickness		Ring Identification Color
Metric	English	
NOTE: **After measuring clutch pack travel, determine if the measurement is within the specification. If the measurement is not within the specification, measure the thickness of the existing retaining ring and then choose a thicker or thinner retaining ring that will bring the measurement within specification.**		
2.45-2.55 mm	0.096-0.100 in	Light Green
2.79-2.89 mm	0.110-0.114 in	Silver
3.13-3.23 mm	0.123-0.127 in	Yellow
3.47-3.57 mm	0.137-0.141 in	Light Blue
3.81-3.91 mm	0.150-0.154 in	Orange

1-2-3-4-5 Reverse Clutch Backing Plate Retaining Ring

Clutch Pack Travel Specification - 0.93-1.82 mm (0.037-0.072 in)		
Retaining Ring Thickness		Ring Identification Color
Metric	English	
NOTE: **After measuring clutch pack travel, determine if the measurement is within the specification. If the measurement is not within the specification, measure the thickness of the existing retaining ring and then choose a thicker or thinner retaining ring that will bring the measurement within specification.**		
1.91-2.01 mm	0.075-0.079 in	Light Blue
2.25-3.35 mm	0.089-0.132 in	Orange
2.59-2.69 mm	0.102-0.106 in	Dark Green
2.92-3.02 mm	0.115-0.119 in	Yellow
3.26-3.36 mm	0.128-0.132 in	Purple

CLUTCH BACKING PLATE RETAINING RING SPECIFICATIONS (8L45)

2-3-4-6-8 Clutch Backing Plate Retaining Ring

Clutch Pack Travel Specification - 1.24-1.86 mm (0.049-0.073 in)		
Retaining Ring Thickness		Ring Identification Color
Metric	English	
NOTE: **After measuring clutch pack travel, determine if the measurement is within the specification. If the measurement is not within the specification, measure the thickness of the existing retaining ring and then choose a thicker or thinner retaining ring that will bring the measurement within specification.**		
1.88-1.98 mm	0.074-0.078 in	Light Green
2.20-2.30 mm	0.087-0.090 in	Yellow
2.53-2.63 mm	0.100-0.104 in	Light Blue
2.85-2.95 mm	0.112-0.116 in	No Color

cardiagn.com

Clutch Pack Travel Specification - 1.24-1.86 mm (0.049-0.073 in)		
Retaining Ring Thickness		Ring Identification Color
Metric	English	
3.17-3.27 mm	0.125-0.129 in	Orange
3.49-3.59 mm	0.137-0.141 in	Dark Green
3.82-3.92 mm	0.150-0.154 in	White

4-5-6-7-8 Reverse Clutch Backing Plate Retaining Ring

Clutch Pack Travel Specification - 1.24-1.86 mm (0.049-0.073 in)		
Retaining Ring Thickness		Ring Identification Color
Metric	English	
NOTE: **After measuring clutch pack travel, determine if the measurement is within the specification. If the measurement is not within the specification, measure the thickness of the existing retaining ring and then choose a thicker or thinner retaining ring that will bring the measurement within specification.**		
1.88-1.98 mm	0.074-0.078 in	Light Green
2.20-2.30 mm	0.087-0.090 in	Yellow
2.53-2.63 mm	0.100-0.104 in	Light Blue
2.85-2.95 mm	0.112-0.116 in	No Color
3.17-3.27 mm	0.125-0.129 in	Orange
3.49-3.59 mm	0.137-0.141 in	Dark Green
3.82-3.92 mm	0.150-0.154 in	White

1-3-5-6-7 Clutch Backing Plate Retaining Ring

Clutch Pack Travel Specification - 1.50-2.10 mm (0.059-0.083 in)		
Retaining Ring Thickness		Ring Identification Color
Metric	English	
NOTE: **After measuring clutch pack travel, determine if the measurement is within the specification. If the measurement is not within the specification, measure the thickness of the existing retaining ring and then choose a thicker or thinner retaining ring that will bring the measurement within specification.**		
2.42-2.52 mm	0.095-0.099 in	Light Green
2.76-2.86 mm	0.109-0.113 in	Silver
3.10-3.20 mm	0.122-0.126 in	Yellow
3.44-3.54 mm	0.135-0.139 in	Light Blue
3.78-3.88 mm	0.149-0.153 in	Orange

1-2-3-4-5 Reverse Clutch Backing Plate Retaining Ring

Clutch Pack Travel Specification - 0.93-1.80 mm (0.037-0.071 in)		
Retaining Ring Thickness		Ring Identification Color
Metric	English	
NOTE: **After measuring clutch pack travel, determine if the measurement is within the specification. If the measurement is not within the specification, measure the thickness of the existing retaining ring and then choose a thicker or thinner retaining ring that will bring the measurement within specification.**		
3.06-3.16 mm	0.120-0.124 in	Light Blue
3.39-3.49 mm	0.133-0.137 in	Orange
3.71-2.81 mm	0.146-0.111 in	Dark Green
4.04-4.14 mm	0.159-0.163 in	Yellow

cardiagn.com

Clutch Pack Travel Specification - 0.93-1.80 mm (0.037-0.071 in)		
Retaining Ring Thickness		Ring Identification Color
Metric	English	
4.36-4.46 mm	0.172-0.176 in	Purple

1-3-5-6-7 CLUTCH THRUST BEARING WASHER SPECIFICATIONS

Transmission End Play Specification - 0.20-0.79 mm (0.008-0.031 in)		
1-3-5-6-7 Clutch Thrust Bearing Washer Thickness		Ring Identification Color
Metric	English	
NOTE: **After measuring end play travel, determine if the measurement is within the specification. If the measurement is not within the specification, measure the thickness of the existing washer and then choose a thicker or thinner washer that will bring the measurement within specification.**		
2.277-2.377 mm	0.090-0.094 in	Brown
2.463-2.563 mm	0.097-0.101 in	Purple
2.649-2.749 mm	0.104-1.108 in	Black
2.835-2.935 mm	0.112-0.116 in	Pink
3.021-3.121 mm	0.119-0.123 in	Plain
3.207-3.307 mm	0.127-0.130 in	Dark Blue
3.393-3.493 mm	0.134-0.138 in	Light Green
3.579-3.679 mm	0.141-0.145 in	White
3.769-3.865 mm	0.148-0.152 in	Light Blue

RANGE REFERENCE

Range Reference Table

Range	Gear	1-3-5-6-7 Clutch	4-5-6-7-8 Reverse Clutch	2-3-4-6-8 Clutch	1-2-7-8 Reverse Clutch	1-2-3-4-5 Reverse Clutch
Park	P	-	-	-	Applied*	Applied*
Reverse	R	-	Applied	-	Applied	Applied
Neutral	N	-	-	-	Applied*	Applied*
D	1st	Applied	-	-	Applied	Applied
	2nd	-	-	Applied	Applied	Applied
	3rd	Applied	-	Applied	-	Applied
	4th	-	Applied	Applied	-	Applied
	5th	Applied	Applied	-	-	Applied
	6th	Applied	Applied	Applied	-	-
	7th	Applied	Applied	-	Applied	-
	8th	-	Applied	Applied	Applied	-
*Applied with no load.						

SHIFT SOLENOID VALVE STATE AND GEAR RATIO

Range Reference Table

Range	Gear	4-5-6-7-8 Reverse S5 N.H.	1-2-7-8 Reverse S1 N.H.	1-2-3-4-5 Reverse S2 N.L.	1-3-5-6-7 S3 N.L.	2-3-4-6-8 S4 N.H.	1-2-3-4-5 Rev BST S9	Default Control S8
Park	P	No Pressure	Pressure	Pressure	No Pressure	No Pressure	Off	Off
Reverse	R	Pressure	Pressure	Pressure	No Pressure	No Pressure	Off	Off

cardiagn.com

Range	Gear	4-5-6-7-8 Reverse S5 N.H.	1-2-7-8 Reverse S1 N.H.	1-2-3-4-5 Reverse S2 N.L.	1-3-5-6-7 S3 N.L.	2-3-4-6-8 S4 N.H.	1-2-3-4-5 Rev BST S9	Default Control S8
Neutral	N	No Pressure	Pressure	Pressure	No Pressure	No Pressure	Off	Off
D	1st	No Pressure	Pressure	Pressure	Pressure	No Pressure	Off	Off/On
	2nd	No Pressure	Pressure	Pressure	No Pressure	Pressure	Off	Off/On
	3rd	No Pressure	No Pressure	Pressure	Pressure	Pressure	Off	Off*
	4th	Pressure	No Pressure	Pressure	No Pressure	Pressure	Off	Off*
	5th	Pressure	No Pressure	Pressure	Pressure	No Pressure	Off	Off*
	6th	Pressure	No Pressure	No Pressure	Pressure	Pressure	On	Off*
	7th	Pressure	Pressure	No Pressure	Pressure	No Pressure	On	Off*
	8th	Pressure	Pressure	No Pressure	No Pressure	Pressure	On	Off*

NOTE:

For solenoids S8 and S9, "On" = Solenoid energized (pressurized), "Off" = Solenoid De-energized (no pressure).

*Default valve is hydraulically latched in the stroked position in this state. Default solenoid can be commanded ON for lube override.

TRANSMISSION INTERNAL MODE SWITCH VOLTAGE

NOTE: **Verify the voltages with a scan tool.**

Shift Lever Position	Internal Mode Switch A Circuit	Internal Mode Switch B Circuit	Internal Mode Switch C Circuit	Internal Mode Switch P Circuit	Internal Mode Switch S Circuit
Park	1.68-2.38 V	0.70-0.96 V	1.68-2.38 V	0.70-0.96 V	0.70-0.96 V
Reverse	0.70-0.96 V	1.68-2.38 V	1.68-2.38 V	0.70-0.96 V	1.68-2.38 V
Neutral	0.70-0.96 V	1.68-2.38 V	0.70-0.96 V	1.68-2.38 V	0.70-0.96 V
Drive	1.68-2.38 V	0.70-0.96 V	0.70-0.96 V	1.68-2.38 V	1.68-2.38 V
Manual Mode	1.68-2.38 V	0.70-0.96-V	0.70-0.96 V	1.68-2.38 V	0.70-0.96 V

TRANSMISSION PARTS KIT SPECIFICATIONS

Clutch Plate Package

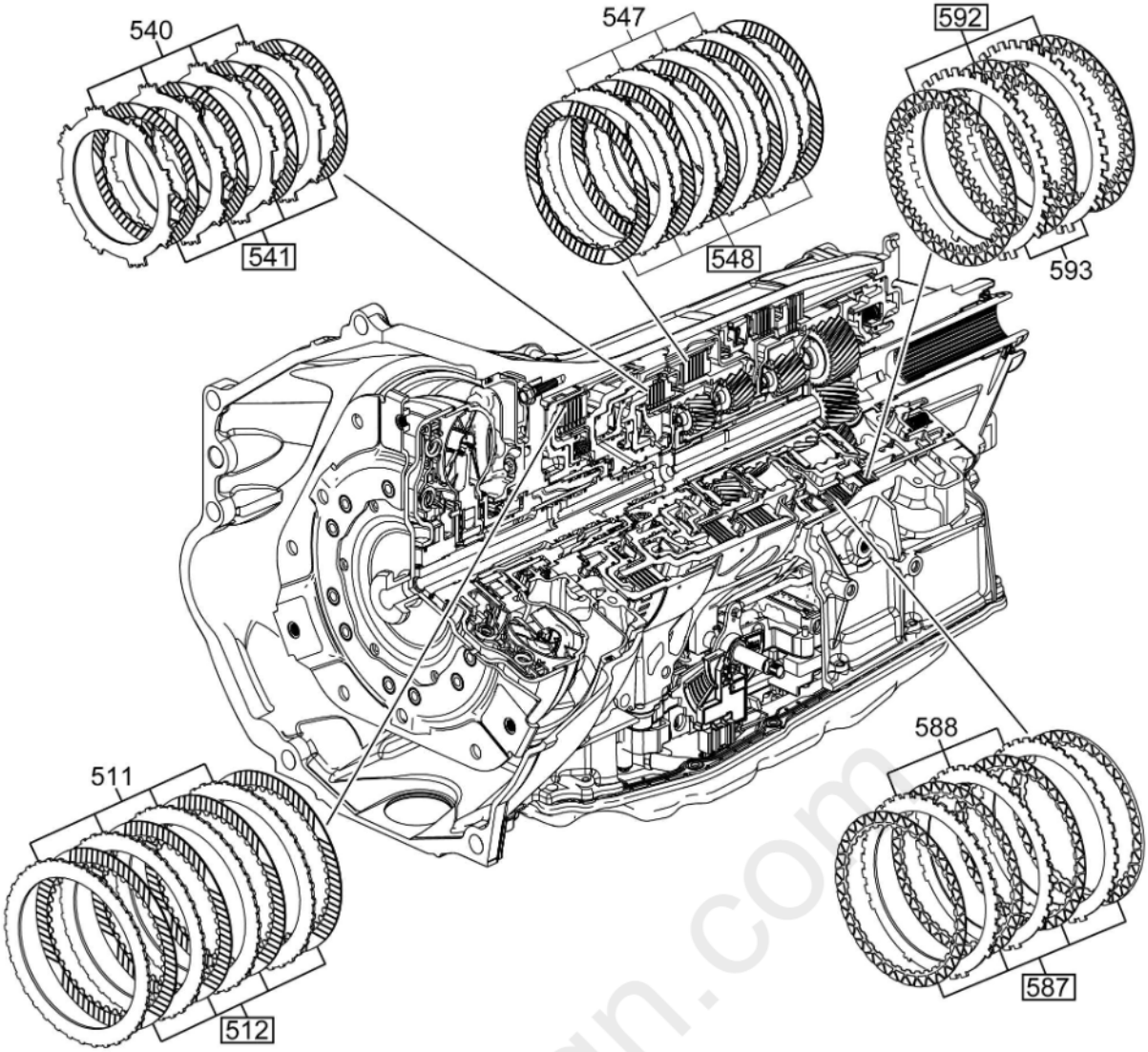

Fig. 1: Clutch Plate Package
Courtesy of GENERAL MOTORS COMPANY

Clutch Plate Package

Callout	Quantity	Component Name
512	4	1-3-5-6-7 Clutch Plate Assembly
541	4	4-5-6-7-8 Reverse Clutch Plate Assembly
548	5	2-3-4-6-8 Clutch Plate Assembly
587	4	1-2-7-8 Reverse Clutch Plate Assembly
592	3	1-2-3-4-5 Reverse Clutch Plate Assembly

1-3-5-6-7 Clutch Plate Assembly

cardiagn.com

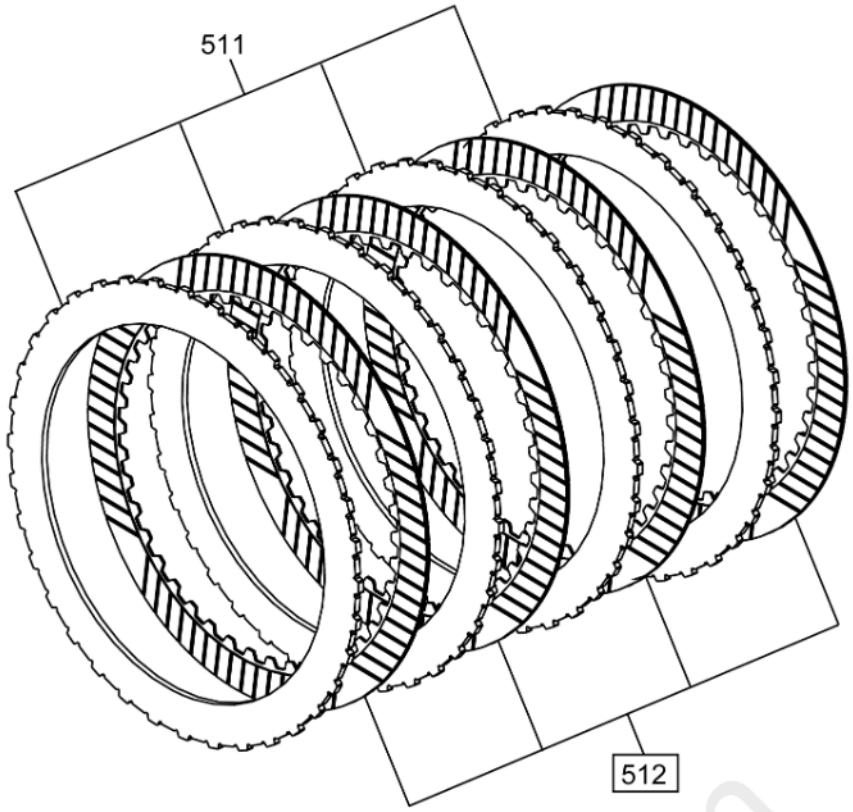

Fig. 2: 1-3-5-6-7 Clutch Plate Assembly
Courtesy of GENERAL MOTORS COMPANY

1-3-5-6-7 Clutch Plate Assembly

Callout	Quantity	Component Name
512	4	1-3-5-6-7 Clutch Plate Assembly

4-5-6-7-8 Clutch Plate Assembly

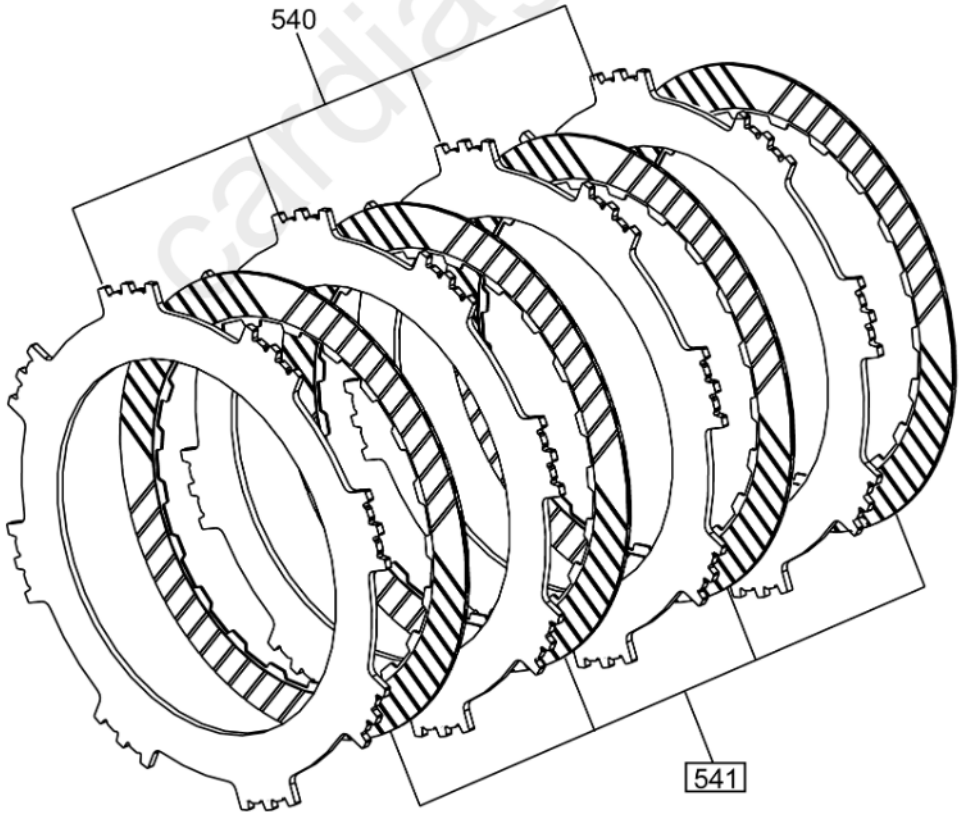

Fig. 3: 4-5-6-7-8 Clutch Plate Assembly
Courtesy of GENERAL MOTORS COMPANY

4-5-6-7-8 Clutch Plate Assembly

Callout	Quantity	Component Name

Callout	Quantity	Component Name
541	4	4-5-6-7-8 Reverse Clutch Plate Assembly

2-3-4-6-8 Clutch Plate Assembly

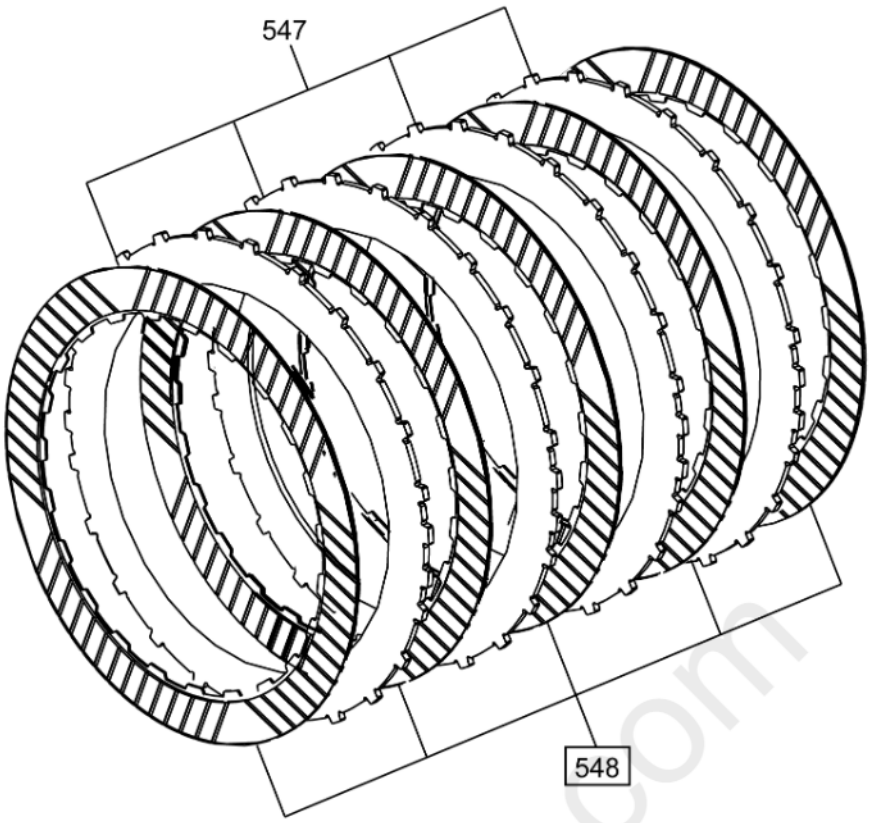

Fig. 4: 2-3-4-6-8 Clutch Plate Assembly
Courtesy of GENERAL MOTORS COMPANY

2-3-4-6-8 Clutch Plate Assembly

Callout	Quantity	Component Name
548	5	2-3-4-6-8 Clutch Plate Assembly

1-2-7-8 Reverse Clutch Plate Assembly

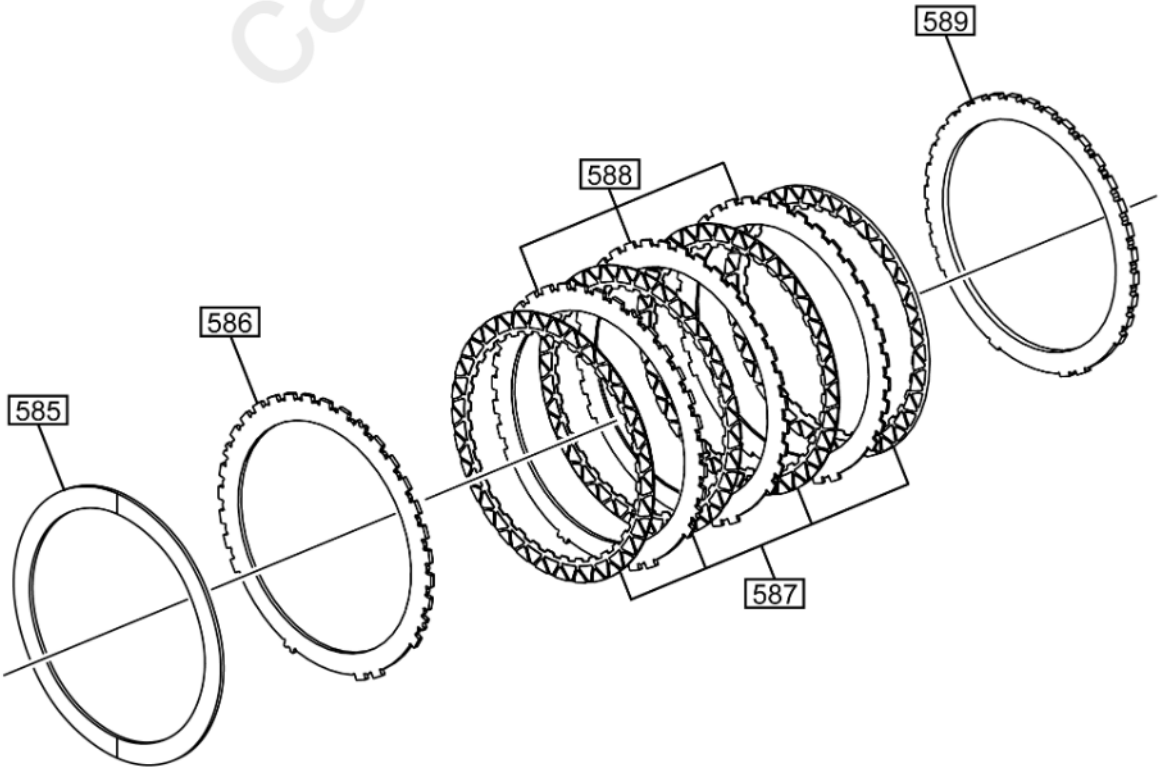

cardiagn.com

Fig. 5: 1-2-7-8 Reverse Clutch Plate Assembly
Courtesy of GENERAL MOTORS COMPANY

1-2-7-8 Reverse Clutch Plate Assembly

Callout	Quantity	Component Name
587	4	1-2-7-8 Reverse Clutch Plate Assembly

1-2-3-4-5 Reverse Clutch Plate Assembly

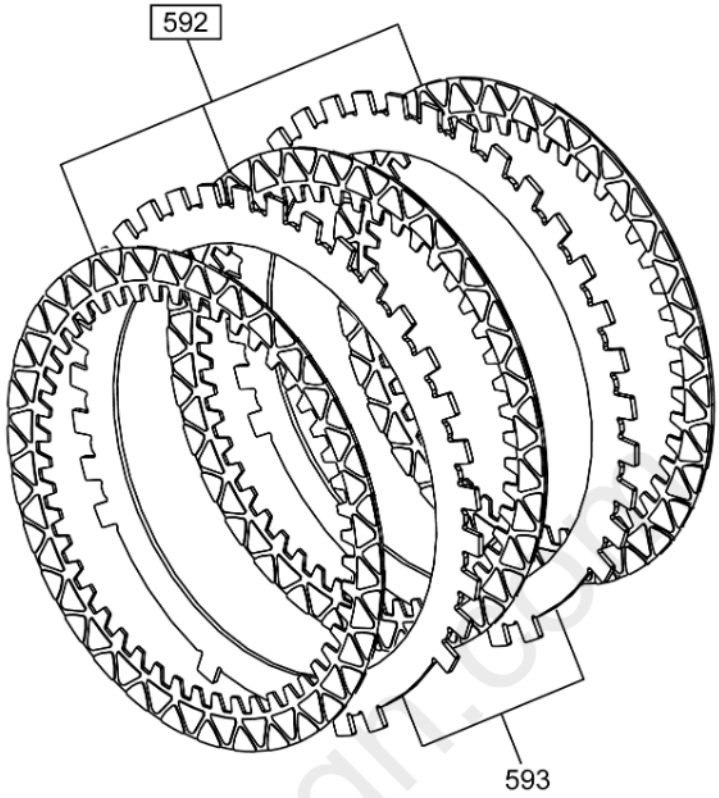

Fig. 6: 1-2-3-4-5 Reverse Clutch Plate Assembly
Courtesy of GENERAL MOTORS COMPANY

1-2-3-4-5 Reverse Clutch Plate Assembly

Callout	Quantity	Component Name
592	3	1-2-3-4-5 Reverse Clutch Plate Assembly

Automatic Transmission Seal Kit

carmgr.com

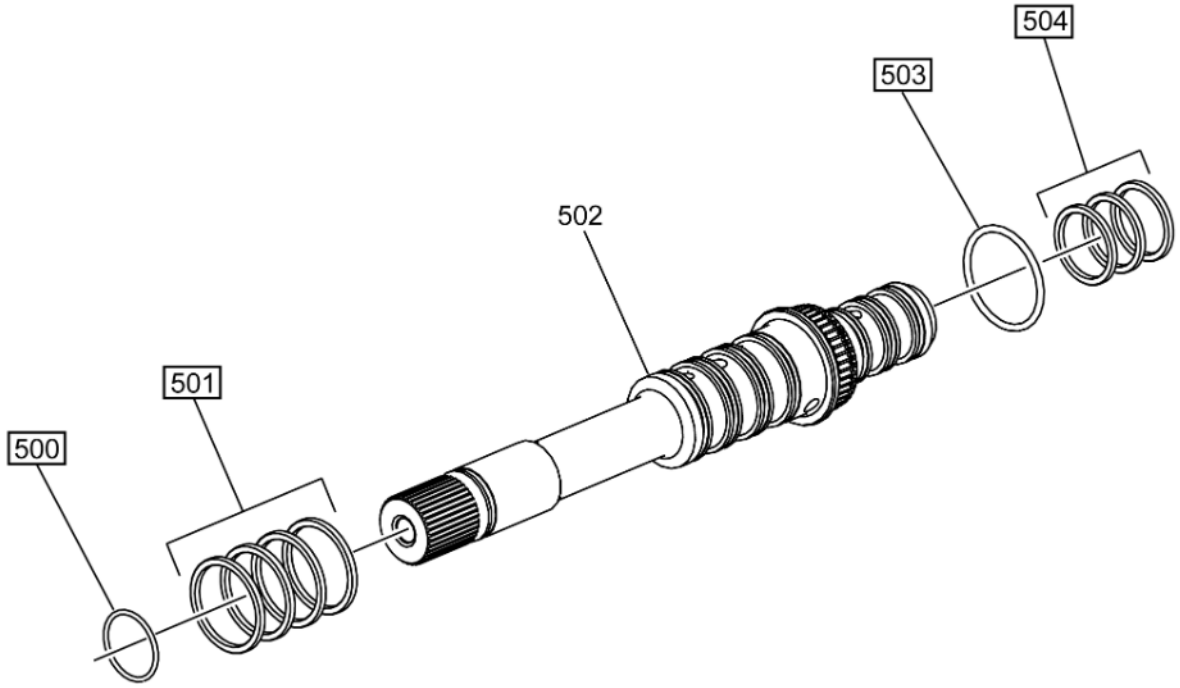

Fig. 7: Automatic Transmission Seal Kit
Courtesy of GENERAL MOTORS COMPANY

NOTE: **Callouts with boxes around them indicate part is included in the service kit. Callouts without boxes are shown for relationship purposes only.**

Automatic Transmission Seal Kit

Callout	Quantity	Component Name
500	1	Turbine Shaft O-ring Seal
501	4	Turbine Shaft Fluid Seal Ring
503	1	Turbine Shaft O-ring Seal
504	3	Turbine Shaft Fluid Seal Ring

Automatic Transmission Seal Kit

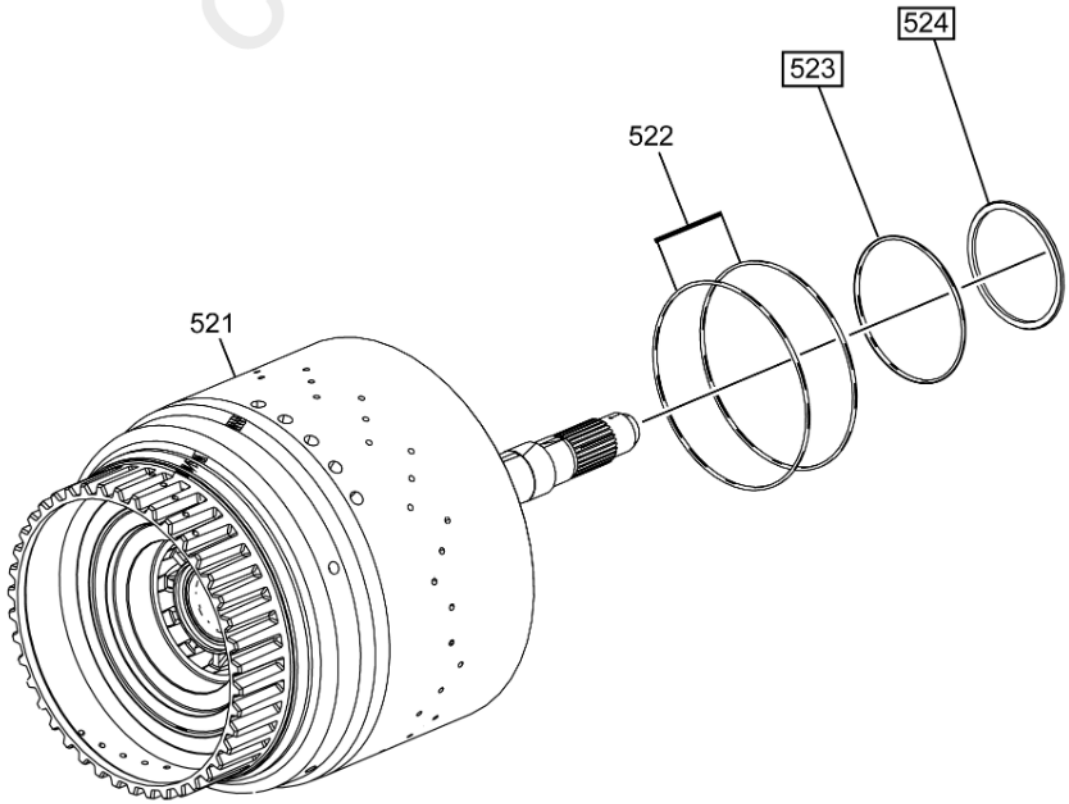

Fig. 8: Automatic Transmission Seal Kit
Courtesy of GENERAL MOTORS COMPANY

NOTE: **Callouts with boxes around them indicate part is included in the service kit. Callouts without boxes are shown for relationship purposes only.**

Automatic Transmission Seal Kit

Callout	Quantity	Component Name
523	1	4-5-6-7-8 Reverse Clutch Piston Stop O-ring Seal
524	1	4-5-6-7-8 Reverse Clutch Piston Seal

Automatic Transmission Seal Kit

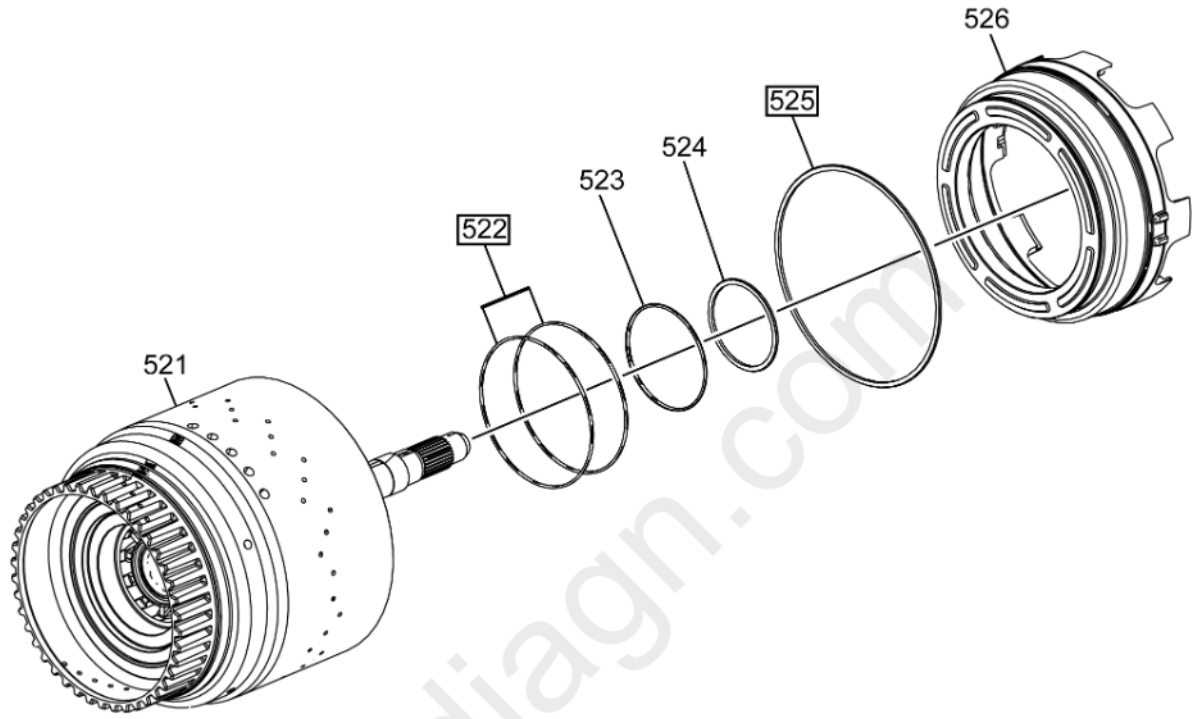

Fig. 9: Automatic Transmission Seal Kit
Courtesy of GENERAL MOTORS COMPANY

NOTE: **Callouts with boxes around them indicate part is included in the service kit. Callouts without boxes are shown for relationship purposes only.**

Automatic Transmission Seal Kit

Callout	Quantity	Component Name
522	2	2-3-4-6-8 Clutch Piston Dam Seal
525	1	2-3-4-6-8 Clutch Piston Seal

Automatic Transmission Seal Kit

cardiagn.com

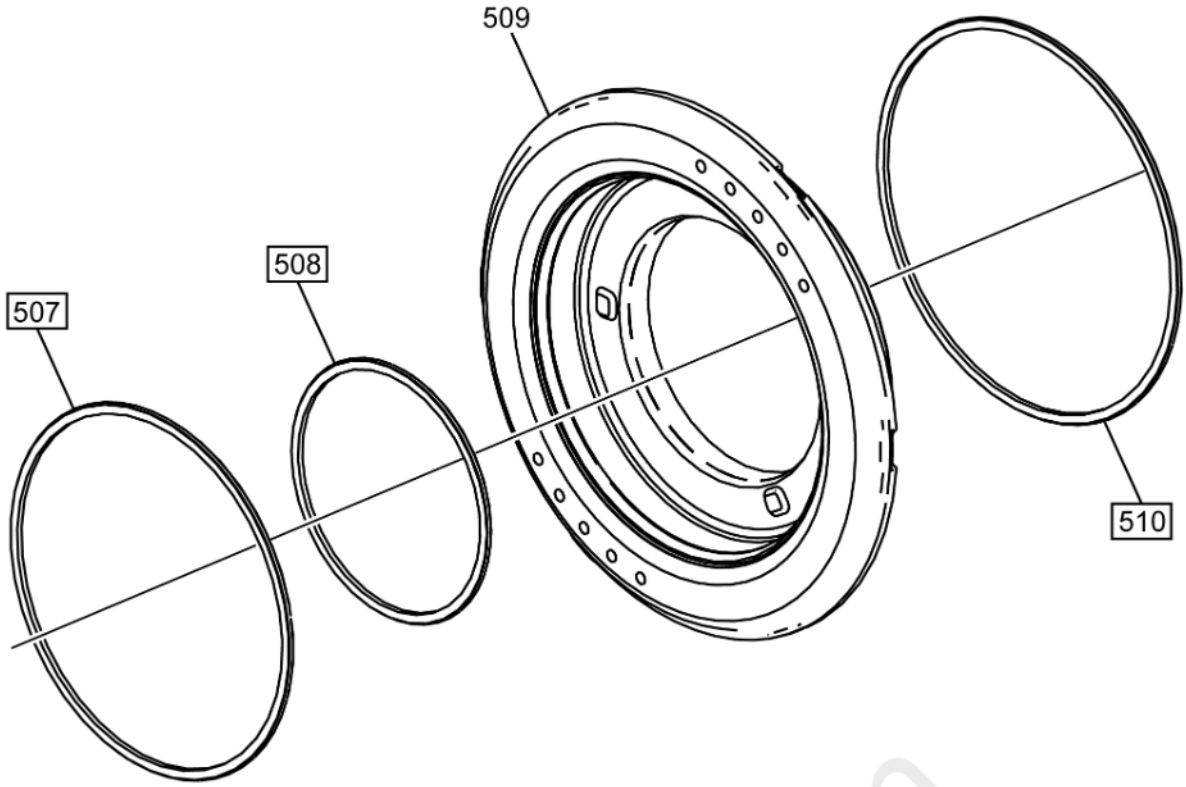

Fig. 10: Automatic Transmission Seal Kit
Courtesy of GENERAL MOTORS COMPANY

NOTE: **Callouts with boxes around them indicate part is included in the service kit. Callouts without boxes are shown for relationship purposes only.**

Automatic Transmission Seal Kit

Callout	Quantity	Component Name
507	1	1-3-5-6-7 Clutch Piston Seal-Outer
508	1	1-3-5-6-7 Clutch Piston Seal-Inner
510	1	1-3-5-6-7 Clutch Piston Dam Seal

Automatic Transmission Seal Kit

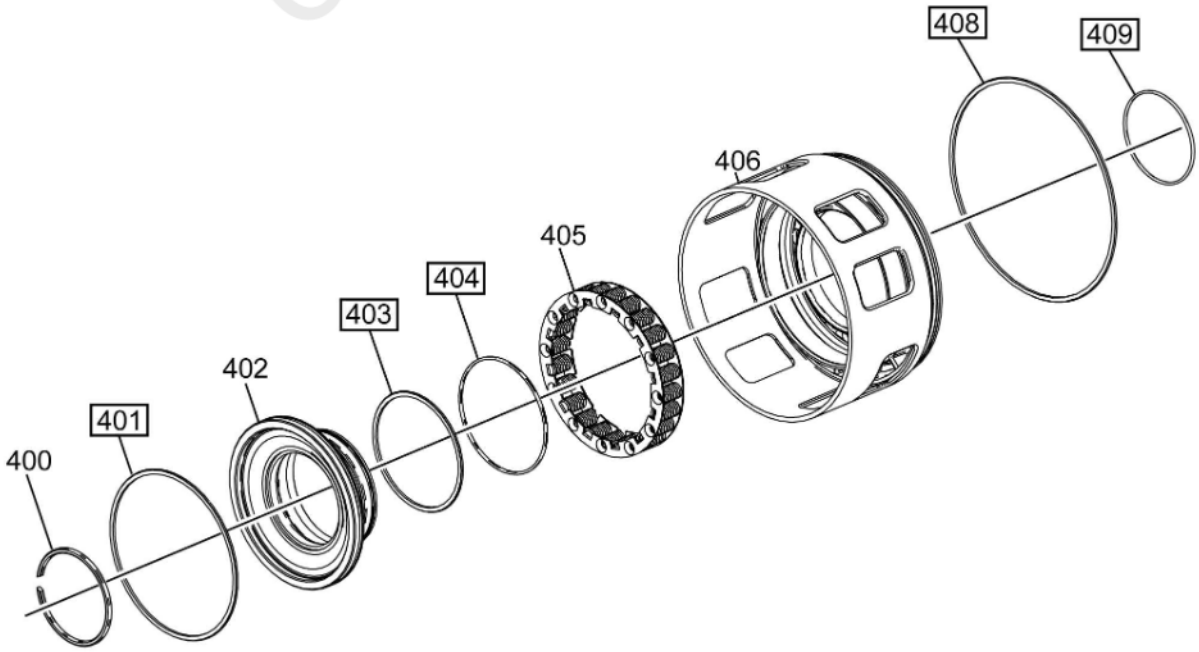

Fig. 11: Automatic Transmission Seal Kit
Courtesy of GENERAL MOTORS COMPANY

NOTE: **Callouts with boxes around them indicate part is included in the service kit. Callouts without boxes are shown for relationship purposes only.**

Automatic Transmission Seal Kit

Callout	Quantity	Component Name
401	1	1-2-3-4-5-Reverse Clutch Piston Dam Seal
403	1	1-2-3-4-5-Reverse Clutch Piston Inner Seal
404	1	1-2-3-4-5-Reverse Clutch Piston O-ring Seal
408	1	1-2-3-4-5- Reverse Clutch Piston Outer Seal
409	1	1-2-3-4-5-Reverse Clutch Piston Dam Inner O-ring Seal

Automatic Transmission Seal Kit (1 of 2)

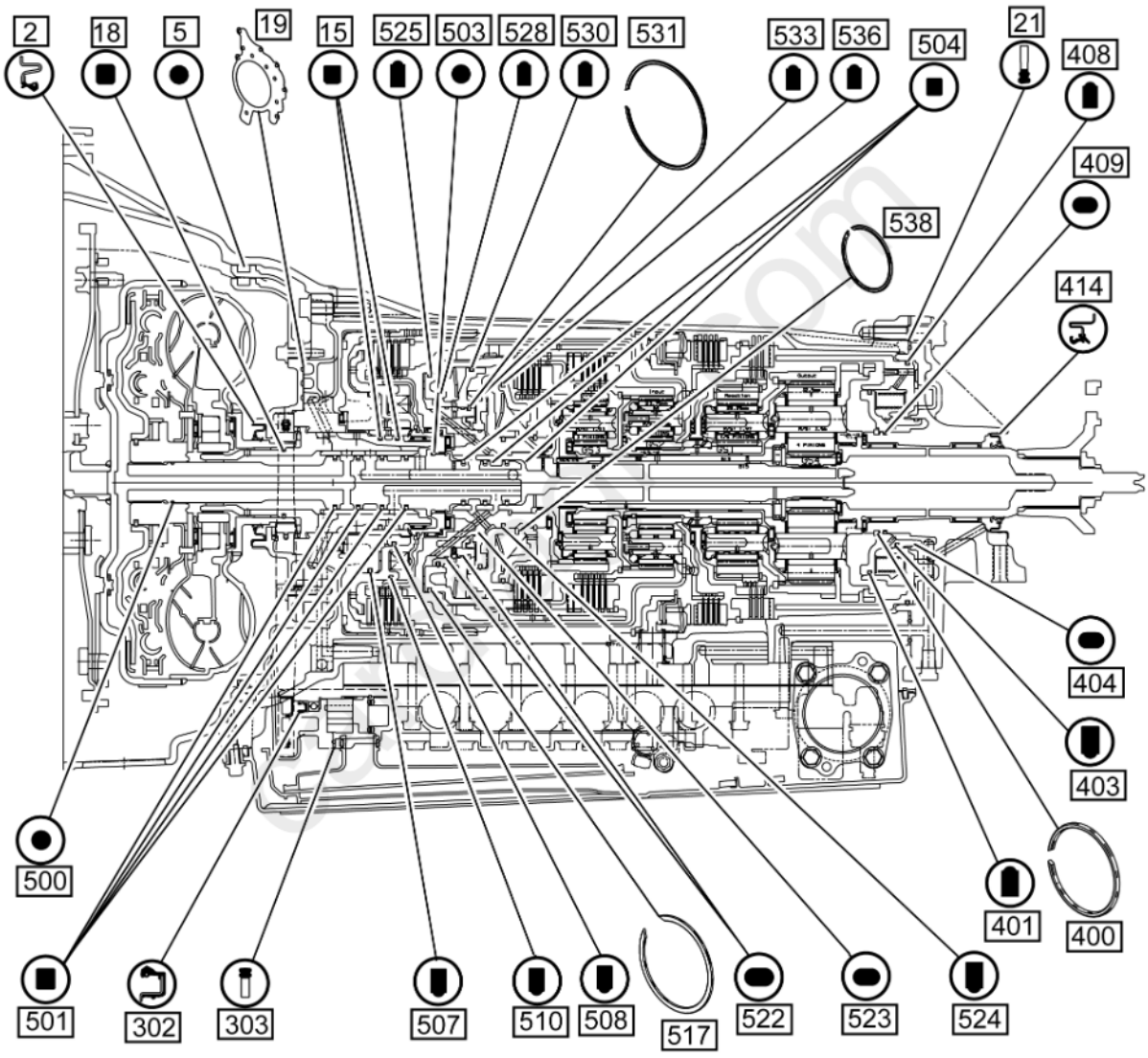

Fig. 12: Automatic Transmission Seal Kit (1 of 2)
Courtesy of GENERAL MOTORS COMPANY

NOTE: **Callouts with boxes around them indicate part is included in the service kit. Callouts without boxes are shown for relationship purposes only.**

Automatic Transmission Seal Kit (1 of 2)

Callout	Quantity	Component Name
2	1	Torque Converter Fluid Seal
5	1	Automatic Transmission Case Front Cover Seal
15	2	1-3-5-6-7 Clutch Fluid Seal Ring
18	1	Torque Converter Fluid Seal

Callout	Quantity	Component Name
19	1	Automatic Transmission Front Support Cover Gasket
21	1	Automatic Transmission Case Extension Seal
302	1	Automatic Transmission Fluid Pump Seal
303	1	Automatic Transmission Fluid Pump Seal
400	1	1-2-3-4-5-Reverse Clutch Piston Dam Retaining Ring
401	1	1-2-3-4-5-Reverse Clutch Piston Dam Seal
402	1	1-2-3-4-5-Reverse Clutch Piston Dam
403	1	1-2-3-4-5-Reverse Clutch Piston Inner Seal
404	1	1-2-3-4-5-Reverse Clutch Piston O-ring Seal
408	1	1-2-3-4-5- Reverse Clutch Piston Outer Seal
409	1	1-2-3-4-5-Reverse Clutch Piston Dam Inner O-ring Seal
414	1	Propeller Shaft Transmission Flange Fluid Seal (Outer)
500	1	Turbine Shaft O-ring Seal
501	4	Turbine Shaft Fluid Seal Ring
503	1	Turbine Shaft O-ring Seal
504	3	Turbine Shaft Fluid Seal Ring
507	1	1-3-5-6-7 Clutch Piston Seal - Outer
508	1	1-3-5-6-7 Clutch Piston Seal - Inner
510	1	1-3-5-6-7 Clutch Piston Dam Seal
517	1	1-3-5-6-7 Clutch Piston Dam Retaining Ring
522	2	2-3-4-6-8 Clutch Piston Dam Seal
523	1	4-5-6-7-8 Reverse Clutch Piston Stop O-ring Seal
524	1	4-5-6-7-8 Reverse Clutch Piston Seal
525	1	2-3-4-6-8 Clutch Piston Seal
528	1	2-3-4-6-8 Clutch Piston Dam Seal - Inner
530	1	2-3-4-6-8 Clutch Piston Dam Seal - Outer
531	1	2-3-4-6-8 Clutch Piston Dam Retaining Ring
533	1	4-5-6-7-8 Reverse Clutch Piston Seal
536	1	4-5-6-7-8 Reverse Clutch Piston Dam Seal
538	1	4-5-6-7-8 Reverse Clutch Piston Dam Retaining Ring

Automatic Transmission Seal Kit (2 of 2)

cardiagn.com

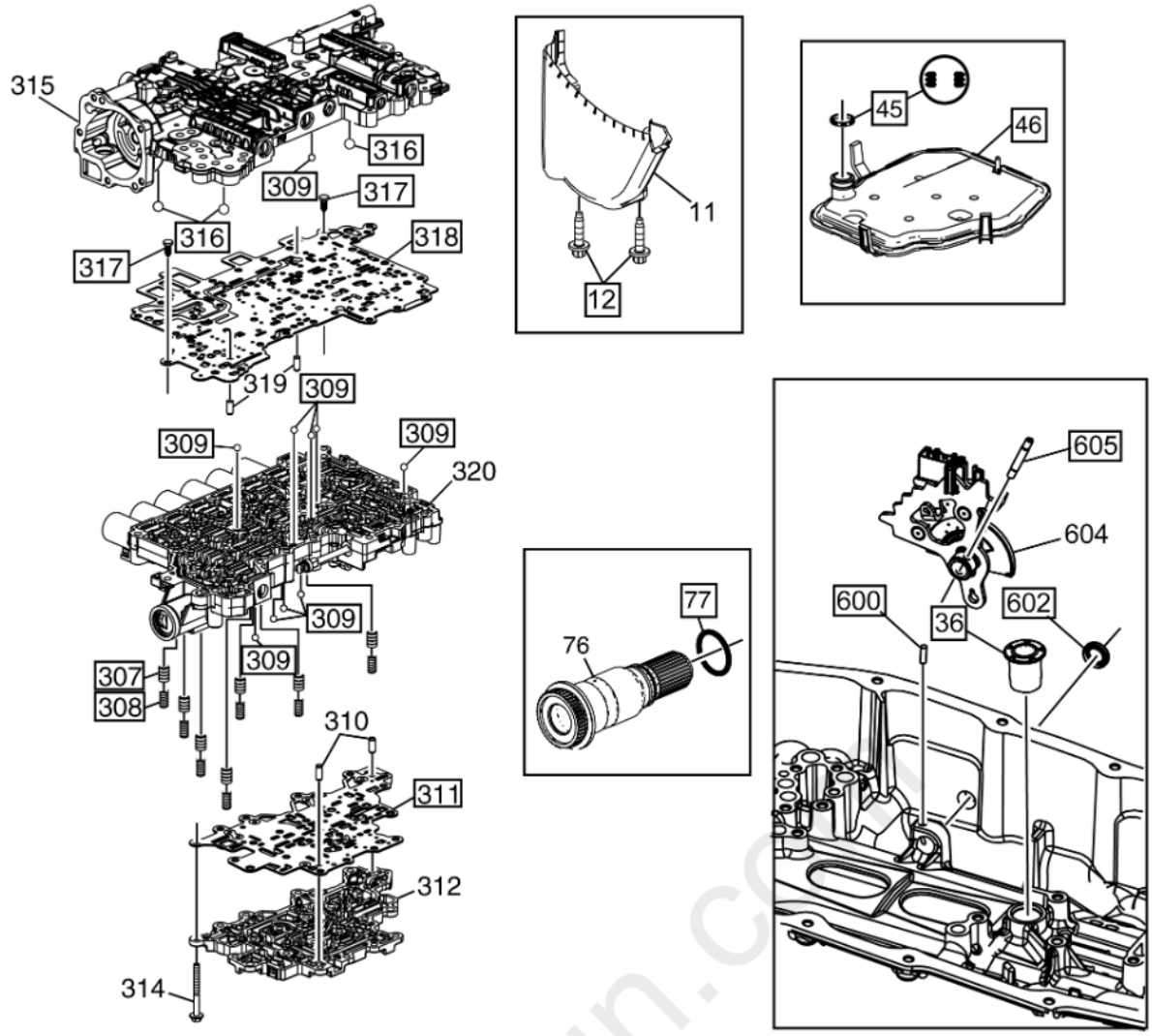

Fig. 13: Automatic Transmission Seal Kit (2 of 2)
Courtesy of GENERAL MOTORS COMPANY

NOTE: **Callouts with boxes around them indicate part is included in the service kit. Callouts without boxes are shown for relationship purposes only.**

Automatic Transmission Seal Kit (2 of 2)

Callout	Quantity	Component Name
12	2	Automatic Transmission Fluid Baffle Bolt
36	1	Clutch Housing Fluid Passage Seal
46	1	Automatic Transmission Fluid Filter
77	1	Output Shaft Seal
309	9	Cooler Flow Blowoff Ball Valve
311	1	Control Valve Channel Plate Spacer Plate Assembly
316	3	Control Valve Body Ball Check Valve
317	2	Control Valve Body Spacer Plate Retainer
318	1	Control Valve Body Spacer Plate
600	1	Manual Shift Shaft Pin
602	1	Manual Shift Shaft Seal
605	1	Manual Shift Shaft Detent Lever Hub Pin

Automatic Transmission Fluid Pump Seal Kit

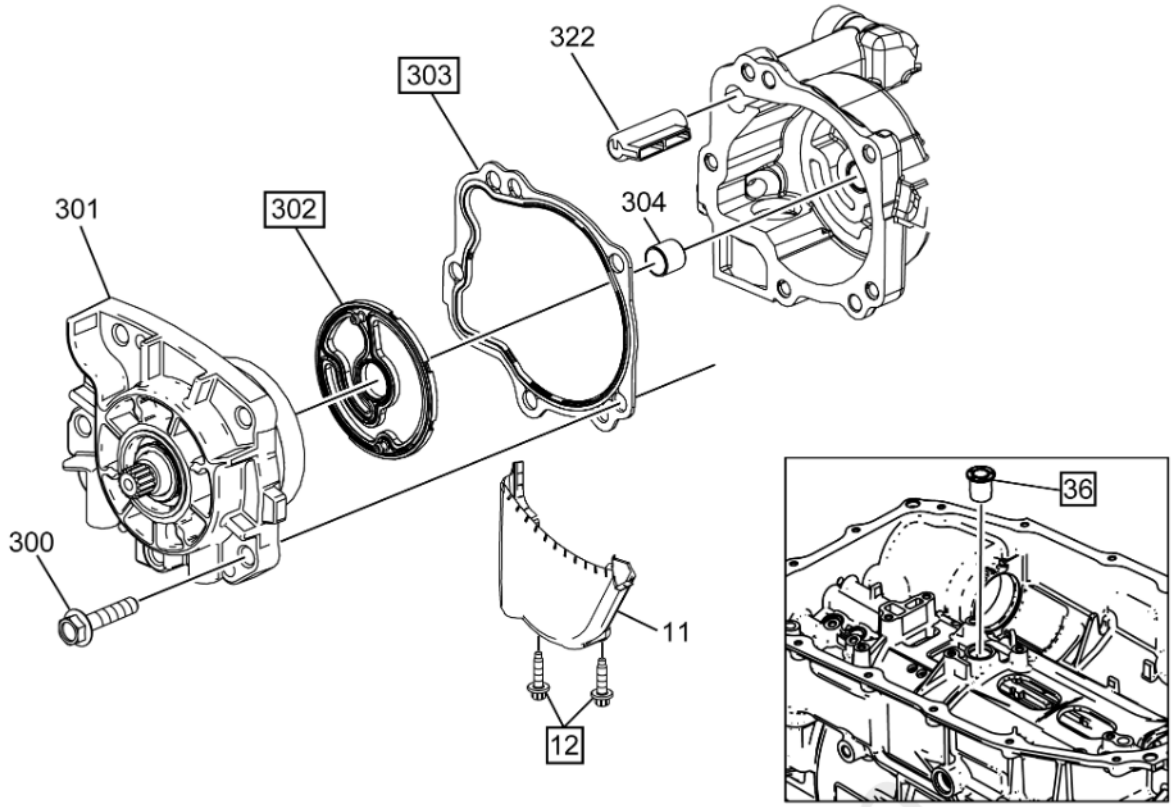

Fig. 14: Automatic Transmission Fluid Pump Seal Kit
Courtesy of GENERAL MOTORS COMPANY

NOTE: **Callouts with boxes around them indicate part is included in the service kit. Callouts without boxes are shown for relationship purposes only.**

Automatic Transmission Fluid Pump Seal Kit

Callout	Quantity	Component Name
12	2	Automatic Transmission Fluid Baffle Bolt
36	1	Clutch Housing Fluid Passage Seal
302	1	Automatic Transmission Fluid Pump Seal
303	1	Automatic Transmission Fluid Pump Seal

Automatic Transmission Fluid Pump Kit

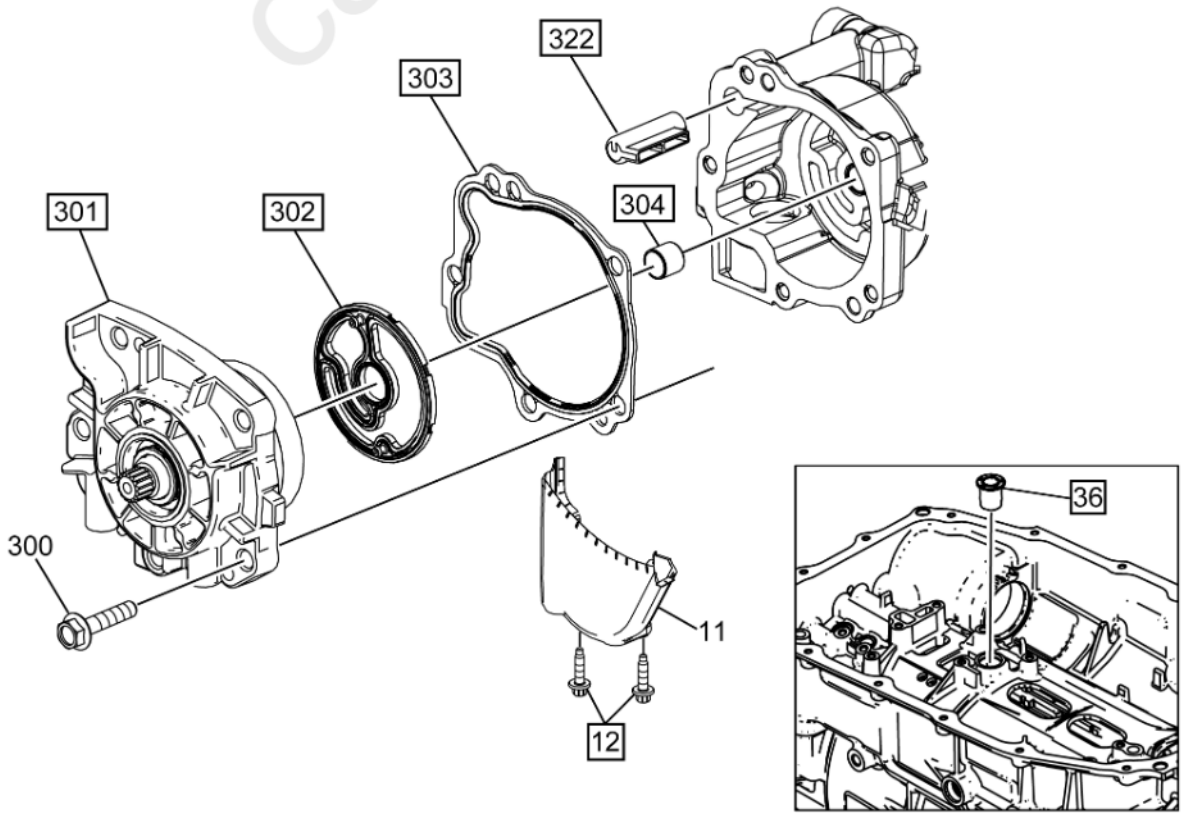

Fig. 15: Automatic Transmission Fluid Pump Kit
Courtesy of GENERAL MOTORS COMPANY

NOTE: **Callouts with boxes around them indicate part is included in the service kit. Callouts without boxes are shown for relationship purposes only.**

Automatic Transmission Fluid Pump Kit

Callout	Quantity	Component Name
12	2	Automatic Transmission Fluid Baffle Bolt
36	1	Clutch Housing Fluid Passage Seal
301	1	Automatic Transmission Fluid Pump
302	1	Automatic Transmission Fluid Pump Seal
303	1	Automatic Transmission Fluid Pump Seal
304	1	Automatic Transmission Fluid Pump Drive Shaft Bushing
322	1	Automatic Transmission Fluid Passage Sleeve

Automatic Transmission Retaining Ring Package

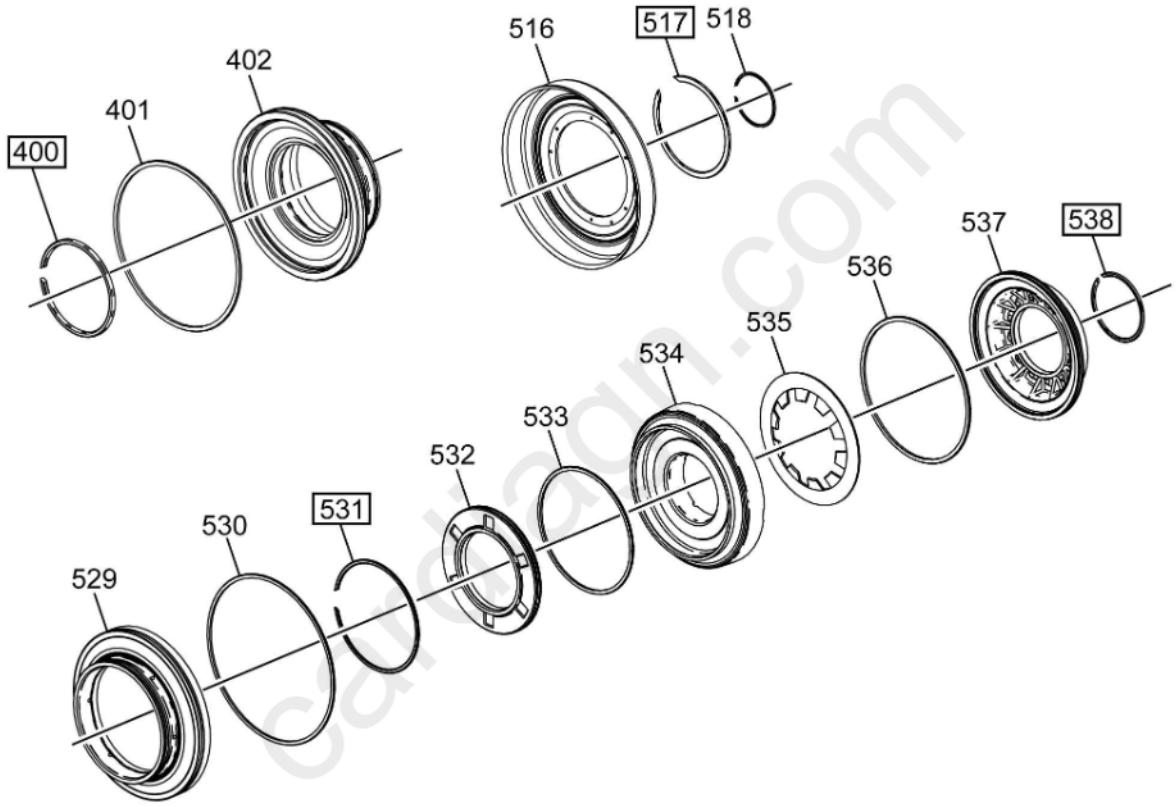

Fig. 16: Automatic Transmission Retaining Ring Package
Courtesy of GENERAL MOTORS COMPANY

NOTE: **Callouts with boxes around them indicate part is included in the service kit. Callouts without boxes are shown for relationship purposes only.**

Automatic Transmission Retaining Ring Package

Callout	Quantity	Component Name
400	1	1-2-3-4-5-Reverse Clutch Piston Dam Retaining Ring
517	1	1-3-5-6-7 Clutch Piston Dam Retaining Ring
531	1	2-3-4-6-8 Clutch Piston Dam Retaining Ring
538	1	4-5-6-7-8 Reverse Clutch Piston Dam Retaining Ring

Accumulator Piston Signal

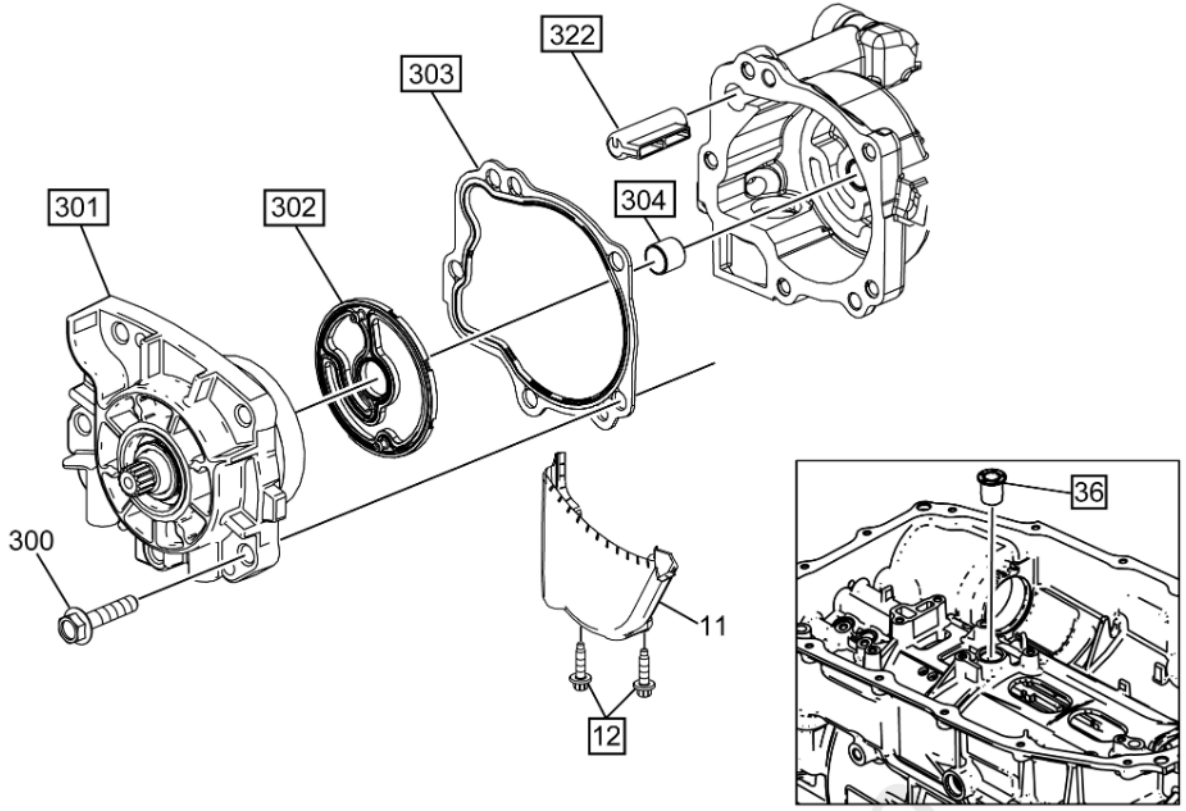

Fig. 17: Accumulator Piston Signal
Courtesy of GENERAL MOTORS COMPANY

NOTE: **Callouts with boxes around them indicate part is included in the service kit. Callouts without boxes are shown for relationship purposes only.**

Accumulator Piston Signal

Callout	Quantity	Component Name
12	2	Automatic Transmission Fluid Baffle Bolt
36	1	Clutch Housing Fluid Passage Seal
307	7	Signal Accumulator Piston
308	7	Signal Accumulator Piston Spring
309	9	Cooler Flow Blowoff Ball Valve
316	3	Control Valve Body Ball Check Valve
318	1	Control Valve Body Spacer Plate

Drive & Driven Sprocket (W/LINK) Package

cardiagn.com

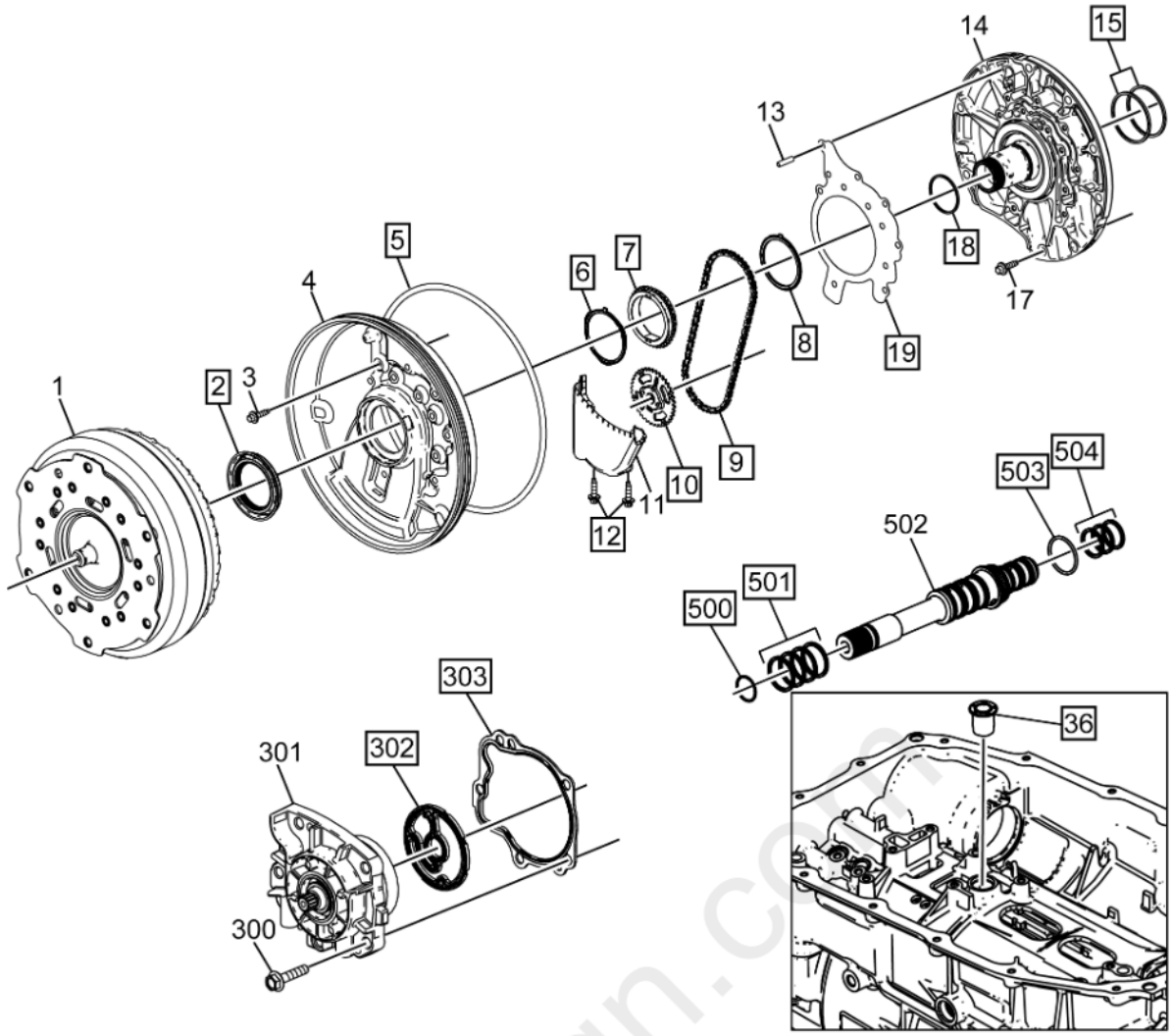

Fig. 18: Drive & Driven Sprocket (W/ LINK) Package
Courtesy of GENERAL MOTORS COMPANY

NOTE: **Callouts with boxes around them indicate part is included in the service kit. Callouts without boxes are shown for relationship purposes only.**

Drive & Driven Sprocket (W/LINK) Package

Callout	Quantity	Component Name
2	1	Torque Converter Fluid Seal
5	1	Automatic Transmission Case Front Cover Seal
6	1	Drive Sprocket Thrust Washer- Front
7	1	Drive Sprocket
8	1	Drive Sprocket Thrust Washer- Rear
9	1	Drive Link
10	1	Driven Sprocket
12	2	Automatic Transmission Fluid Baffle Bolt
15	2	1-3-5-6-7 Clutch Fluid Seal Ring
18	1	Torque Converter Fluid Seal
19	1	Automatic Transmission Front Support Cover Gasket
36	1	Clutch Housing Fluid Passage Seal
302	1	Automatic Transmission Fluid Pump Seal
303	1	Automatic Transmission Fluid Pump Seal
500	1	Turbine Shaft O-ring Seal
501	4	Turbine Shaft Fluid Seal Ring
503	1	Turbine Shaft O-ring Seal
504	3	Turbine Shaft Fluid Seal Ring

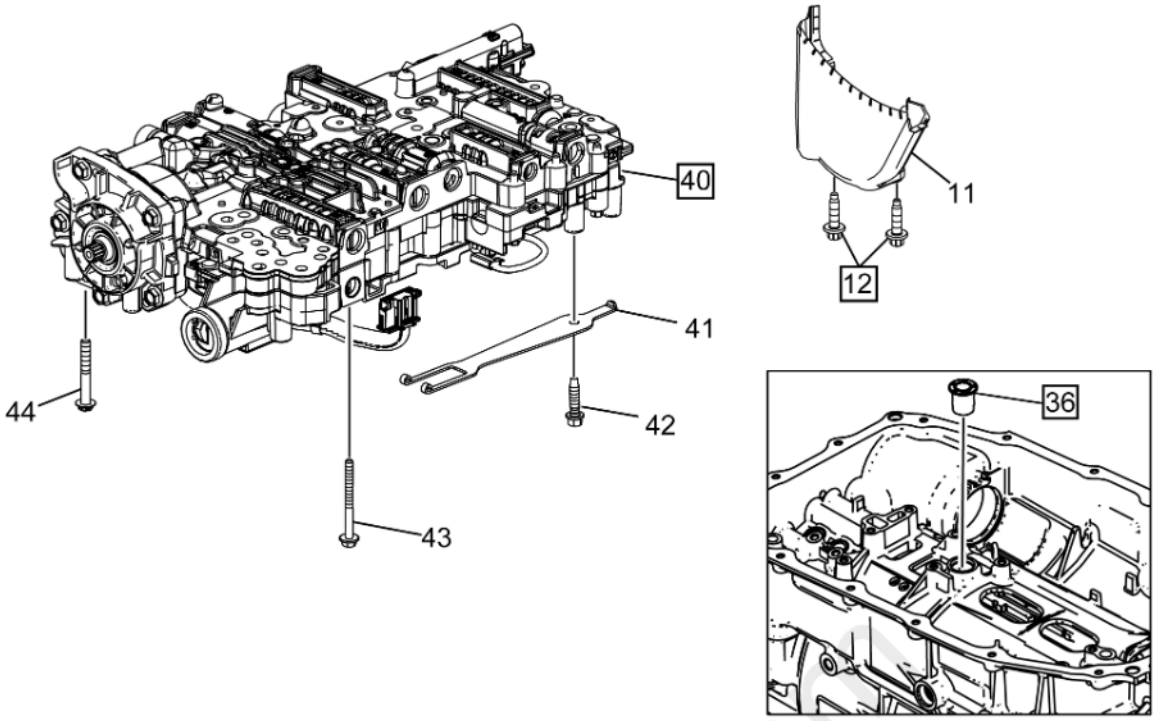

Fig. 19: Control Valve (w/ Body & Valve)
Courtesy of GENERAL MOTORS COMPANY

NOTE: **Callouts with boxes around them indicate part is included in the service kit. Callouts without boxes are shown for relationship purposes only.**

Control Valve (w/ Body & Valve)

Callout	Quantity	Component Name
12	2	Automatic Transmission Fluid Baffle Bolt
36	1	Clutch Housing Fluid Passage Seal
40	1	Control (with Body and Valve) Valve Assembly

carmagr.com