Fastener Tightening Specifications

Application	Specification	
	Metric	English
Brake Caliper Bleeder Valve	10 N·m	89 lb in
Brake Caliper Bracket Bolt - Front	185 N·m	136 lb ft
Brake Caliper Bracket Bolt - Rear	120 N·m	89 lb ft
Brake Caliper Guide Pin Bolt - Front	27 N·m	20 lb ft
Brake Caliper Guide Pin Bolt - Rear	27 N·m	20 lb ft
Brake Hose Fitting Bolt - Front	52 N·m	38 lb ft
Brake Hose Fitting Bolt - Rear	52 N·m	38 lb ft
Brake Rotor Screw	10 N·m	89 lb in

cardiagn.com

Disc Brake Component Specifications

Application	Specification	
	Metric	English
Front Brakes		
Brake Pad Lining Minimum Thickness	2.0 mm	0.080 in
Brake Rotor Diameter	296.00 mm	11.654 in
Brake Rotor Discard Thickness*	27.4 mm	1.079 in
Maximum Allowable Lateral Runout	0.06 mm	0.002 in
Maximum Allowable Scoring	1.50 mm	0.059 in
Maximum Allowable Thickness Variation	0.025 mm	0.001 in
Rear Brakes		
Brake Pad Lining Minimum Thickness	2.0 mm	0.080 in
Brake Rotor Diameter	191 mm	7.520 in
Rotor Discard Thickness *	18.4 mm	0.724 in
Maximum Allowable Lateral Runout	0.06 mm	0.002 in
Maximum Allowable Scoring	1.50 mm	0.059 in
Maximum Allowable Thickness Variation	0.025 mm	0.001 in
* All brake rotors have a discard dimension cast into them. Replace any rotor that does not meet this specification. After refinishing the rotor, replace any rotor that does not meet the minimum thickness specifications.		

cardiagn.com

Front Disc Brake Pads Replacement

Removal Procedure

Warning: Refer to Brake Dust Warning in the Preface section.

Caution: Support the brake caliper with heavy mechanic wire, or equivalent, whenever it is separated from its mount and the hydraulic flexible brake hose is still connected. Failure to support the caliper in this manner will cause the flexible brake hose to bear the weight of the caliper, which may cause damage to the brake hose and in turn may cause a brake fluid leak.

1. Inspect the fluid level in the brake master cylinder reservoir.
2. If the brake fluid level is midway between the maximum-full point and the minimum allowable level, no brake fluid needs to be removed before proceeding.
3. If the brake fluid level is higher than midway between the maximum-full point and the minimum allowable level, remove brake fluid to the midway point before proceeding.
4. Raise and support the vehicle. Refer to Lifting and Jacking the Vehicle.
5. Remove the tire and wheel assembly. Refer to Tire and Wheel Removal and Installation.

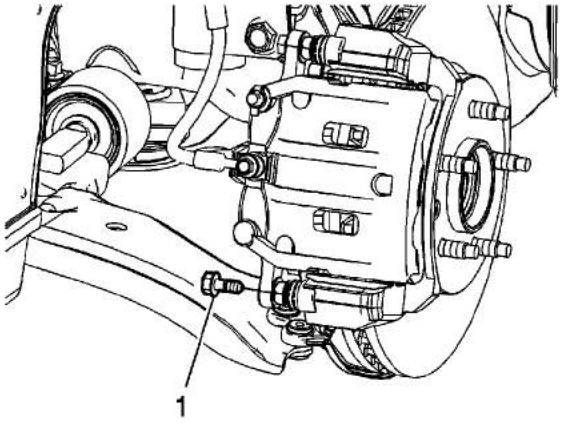

Note:

- DO NOT use any air tools to remove or install the guide pin bolts. Use hand tools ONLY.
- Install an open end wrench to hold the caliper guide pin in line with the brake caliper while removing or installing the caliper guide pin bolt. DO NOT allow the open end wrench to come in contact with the brake caliper. Allowing the open end wrench to come in contact with the brake caliper will cause a pulsation when the brakes are applied.

6. Remove the lower brake caliper guide pin bolt (1).

cardiagn.com

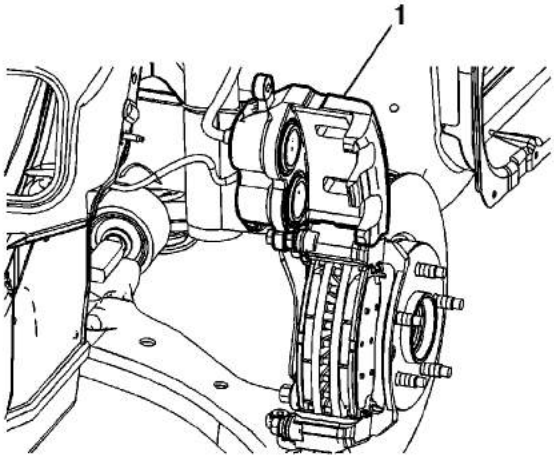

7. Pivot the brake caliper (1) upward and support with heavy mechanics wire or equivalent.
8. Place a block of wood or an old brake pad against the brake caliper pistons.
9. Using a brake pad spreader tool or equivalent, fully seat the caliper pistons in the caliper bores.

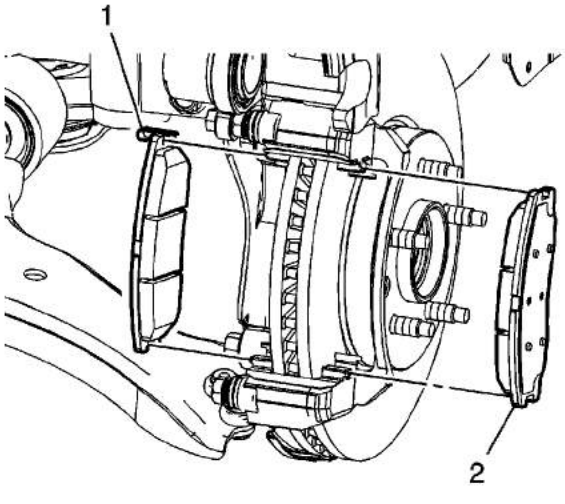

10. Remove the inner brake pad (1) and the outer brake pad (2).

    Note the location of the brake pad wear sensor for correct installation.

cardiagn.com

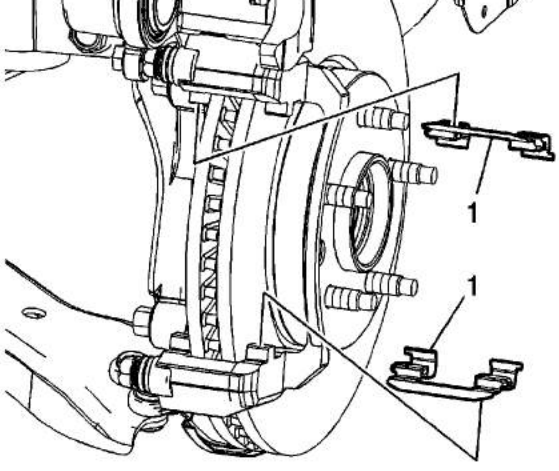

11. Remove the upper and lower brake pad shims (1).
12. If installing new brake pads, discard the shims.

Installation Procedure

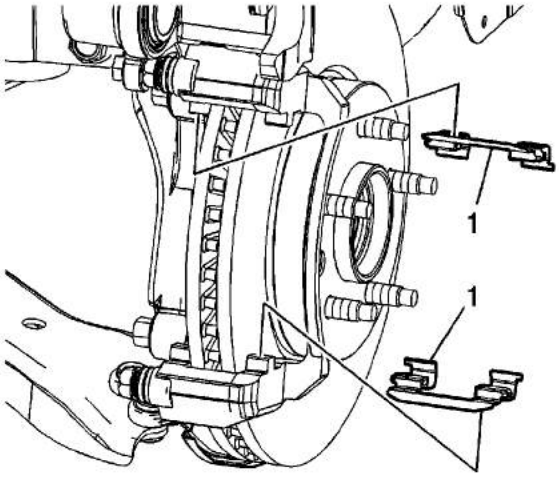

1. Install the upper and lower brake pad shims (1).

   If installing new brake pads, install new shims.

cardiagn.com

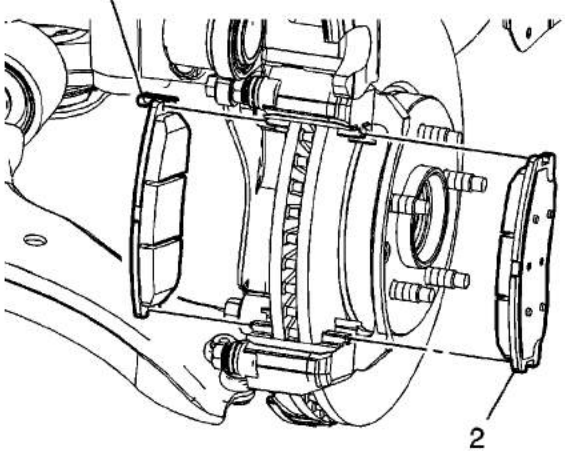

2. Install the inner brake pad (1) and the outer brake pad (2).

   Note the location of the brake pad wear sensor for correct installation.

   Caution: Refer to Fastener Caution in the Preface section.

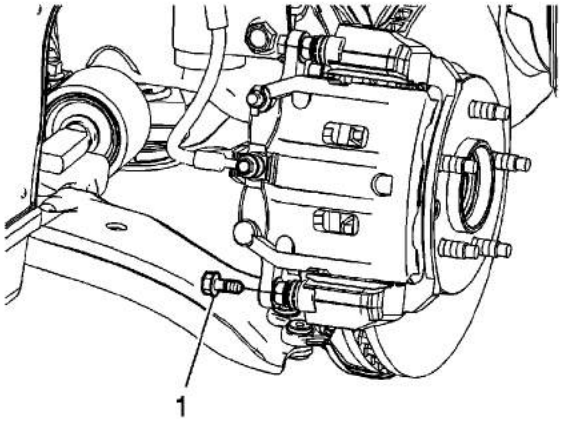

Note:

- DO NOT use any air tools to remove or install the guide pin bolts. Use hand tools ONLY.
- Install an open end wrench to hold the caliper guide pin in line with the brake caliper while removing or installing the caliper guide pin bolt. DO NOT allow the open end

cardiagn.com

applied.

3. Pivot the brake caliper into position and install the lower brake caliper guide pin bolt (1).

   Hold the brake caliper guide pin stationary when installing the guide pin bolt. Tighten the bolt to **27 N·m (20 lb ft)**.

4. Install the tire and wheel assembly. Refer to Tire and Wheel Removal and Installation.
5. Lower the vehicle.
6. With the engine OFF, gradually apply the brake pedal to approximately 2/3 of its travel distance.
7. Slowly release the brake pedal.
8. Wait 15 seconds, then repeat steps 6-7 until a firm brake pedal is obtained. This will properly seat the brake caliper pistons and brake pads.
9. Fill the master cylinder reservoir to the proper level. Refer to Master Cylinder Reservoir Filling.
10. Burnish the pads and rotors. Refer to Brake Pad and Rotor Burnishing.

cardiagn.com

Rear Disc Brake Pads Replacement

Removal Procedure

Warning: Refer to Brake Dust Warning in the Preface section.

Caution: Support the brake caliper with heavy mechanic wire, or equivalent, whenever it is separated from its mount and the hydraulic flexible brake hose is still connected. Failure to support the caliper in this manner will cause the flexible brake hose to bear the weight of the caliper, which may cause damage to the brake hose and in turn may cause a brake fluid leak.

1. Inspect the fluid level in the brake master cylinder reservoir.
2. If the brake fluid level is midway between the maximum-full point and the minimum allowable level, no brake fluid needs to be removed before proceeding.
3. If the brake fluid level is higher than midway between the maximum-full point and the minimum allowable level, remove brake fluid to the midway point before proceeding.
4. Raise and support the vehicle. Refer to Lifting and Jacking the Vehicle.
5. Remove the tire and wheel assembly. Refer to Tire and Wheel Removal and Installation.

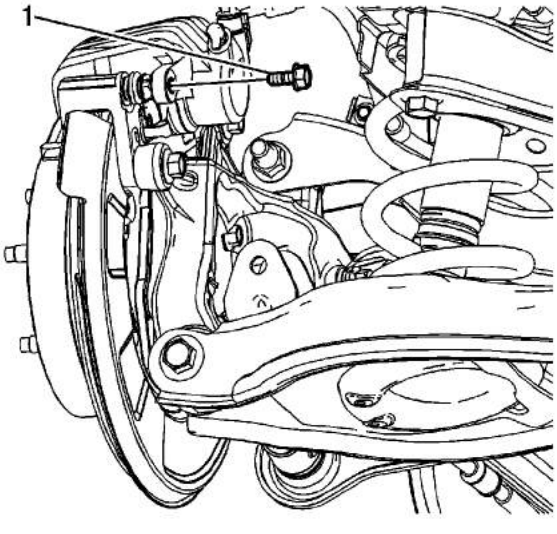

Note:

- DO NOT use any air tools to remove or install the guide pin bolts. Use hand tools ONLY.
- Install an open end wrench to hold the caliper guide pin in line with the brake caliper while removing or installing the caliper guide pin bolt. DO NOT allow the open end wrench to come in contact with the brake caliper. Allowing the open end wrench to come in contact with the brake caliper will cause a pulsation when the brakes are applied.

6. Remove the lower brake caliper guide pin bolt (1).

cardiagn.com

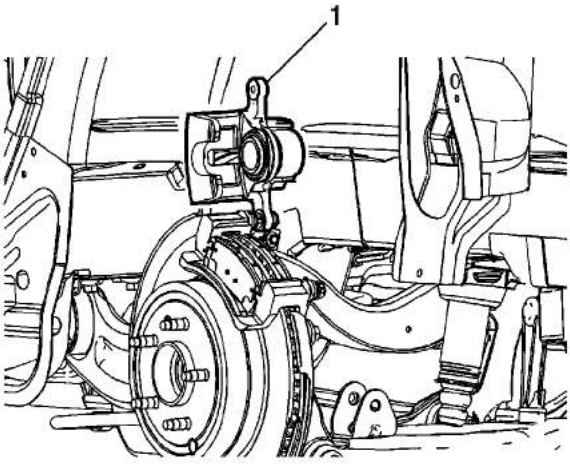

7. Pivot the brake caliper (1) upward and support with heavy mechanics wire or equivalent.
8. Place a block of wood or an old brake pad against the brake caliper pistons.
9. Using a brake pad spreader tool or equivalent, fully seat the caliper piston in the caliper bore.

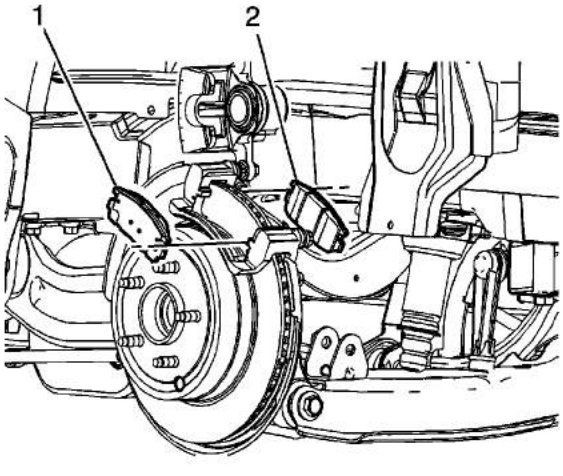

10. Remove the outer brake pad (1) and the inner brake pad (2).

    Note the location of the brake pad wear sensor for correct installation.

cardiagn.com

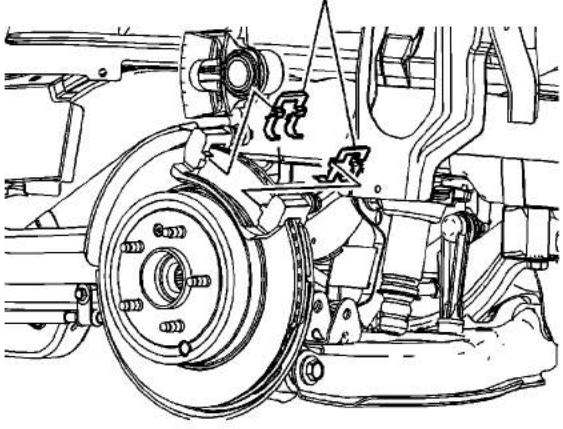

11. Remove the upper and lower brake pad shims (1).
12. If installing new brake pads, discard the shims.

Installation Procedure

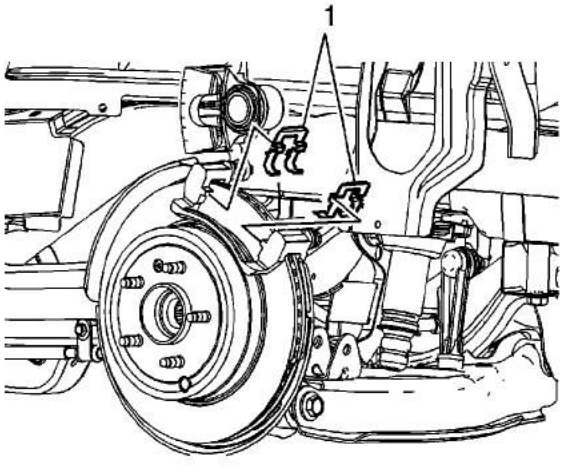

1. Install the upper and lower brake pad shims (1).

   If installing new brake pads, install new shims.

cardiagn.com

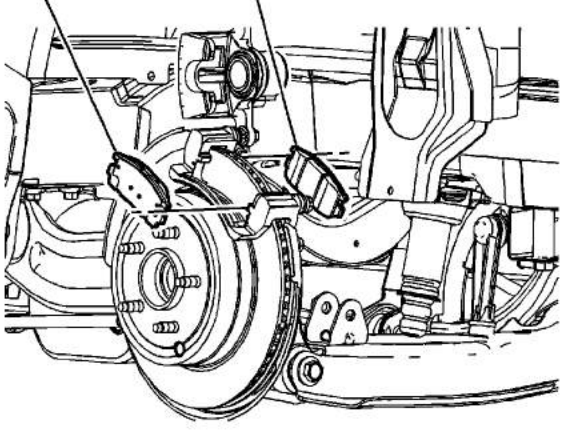

2. Install the outer brake pad (1) and the inner brake pad (2).

   Note the location of the brake pad wear sensor for correct installation.

   Caution: Refer to Fastener Caution in the Preface section.

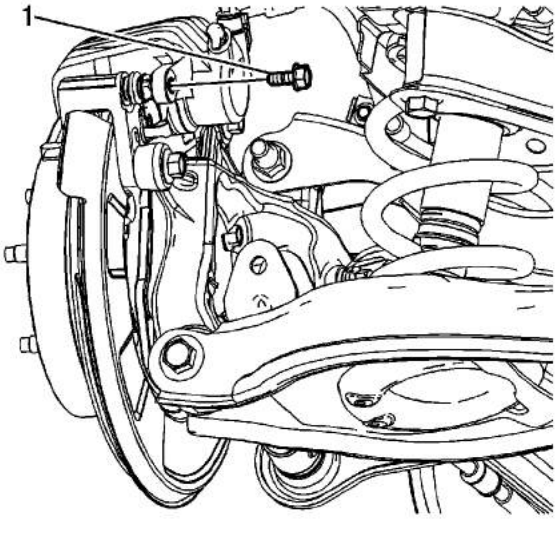

Note:

- DO NOT use any air tools to remove or install the guide pin bolts. Use hand tools ONLY.
- Install an open end wrench to hold the caliper guide pin in line with the brake caliper while removing or installing the caliper guide pin bolt. DO NOT allow the open end

cardiagn.com

applied.

3. Pivot the brake caliper into position and install the lower brake caliper guide pin bolt (1).

   Hold the brake caliper guide pin stationary when installing the guide pin bolt. Tighten the bolt to **27 N·m (20 lb ft)**.

4. Install the tire and wheel assembly. Refer to Tire and Wheel Removal and Installation.
5. Lower the vehicle.
6. With the engine OFF, gradually apply the brake pedal to approximately 2/3 of its travel distance.
7. Slowly release the brake pedal.
8. Wait 15 seconds, then repeat steps 6-7 until a firm brake pedal is obtained. This will properly seat the brake caliper pistons and brake pads.
9. Fill the master cylinder reservoir to the proper level. Refer to Master Cylinder Reservoir Filling.
10. Burnish the pads and rotors. Refer to Brake Pad and Rotor Burnishing.

cardiagn.com

Brake Pad and Rotor Burnishing

Warning: Road test a vehicle under safe conditions and while obeying all traffic laws. Do not attempt any maneuvers that could jeopardize vehicle control. Failure to adhere to these precautions could lead to serious personal injury and vehicle damage.

Burnishing the brake pads and brake rotors is necessary in order to ensure that the braking surfaces are properly prepared after service has been performed on the disc brake system.

This procedure should be performed whenever the disc brake rotors have been refinished or replaced, and/or whenever the disc brake pads have been replaced.

1. Select a smooth road with little or no traffic.
2. Accelerate the vehicle to 48 km/h (30 mph).

   Note: Use care to avoid overheating the brakes while performing this step.

3. Using moderate to firm pressure, apply the brakes to bring the vehicle to a stop. Do not allow the brakes to lock.
4. Repeat steps 2 and 3 until approximately 20 stops have been completed. Allow sufficient cooling periods between stops in order to properly burnish the brake pads and rotors.

cardiagn.com

Front Brake Caliper Replacement

Removal Procedure

Warning: Refer to Brake Dust Warning in the Preface section.

Warning: Refer to Brake Fluid Irritant Warning in the Preface section.

1. Raise and support the vehicle. Refer to Lifting and Jacking the Vehicle.
2. Remove the tire and wheel assembly. Refer to Tire and Wheel Removal and Installation.

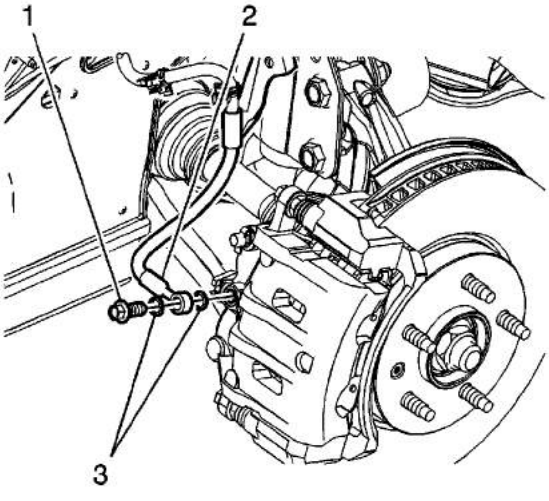

3. Remove the brake hose fitting bolt (1).
4. Remove the brake hose fitting (2) from the brake caliper.

   Note: Do not reuse the brake hose fitting gaskets.

5. Remove and discard the brake hose fitting gaskets (3).
6. Cap the brake hose fitting to prevent brake fluid loss and contamination.

cardiagn.com

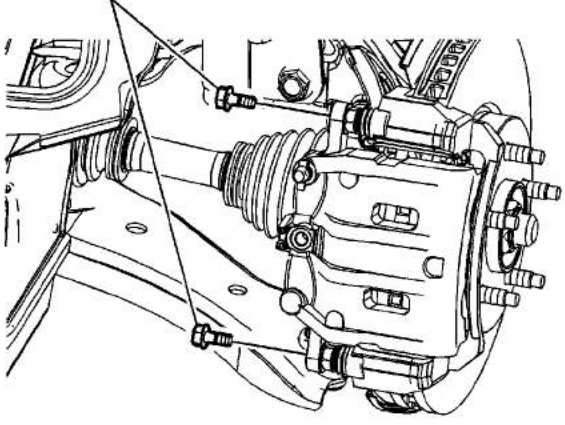

Note:

- DO NOT use any air tools to remove or install the guide pin bolts. Use hand tools ONLY.
- Install an open end wrench to hold the caliper guide pin in line with the brake caliper while removing or installing the caliper guide pin bolt. DO NOT allow the open end wrench to come in contact with the brake caliper. Allowing the open end wrench to come in contact with the brake caliper will cause a pulsation when the brakes are applied.

7. Remove the brake caliper guide pin bolts (1).

   Hold the brake caliper guide pins stationary when removing the guide pin bolts.

8. Remove the brake caliper.

Installation Procedure

cardiagn.com

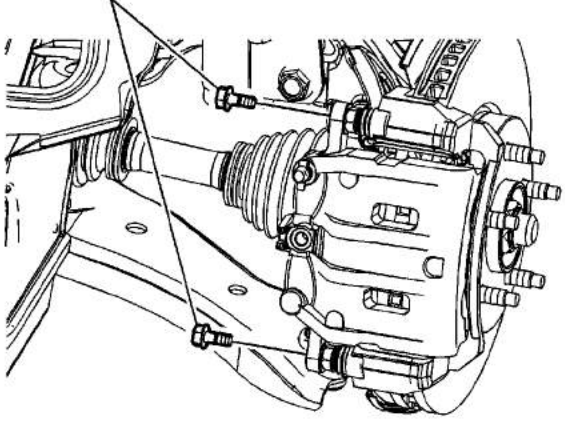

Note:

- DO NOT use any air tools to remove or install the guide pin bolts. Use hand tools ONLY.
- Install an open end wrench to hold the caliper guide pin in line with the brake caliper while removing or installing the caliper guide pin bolt. DO NOT allow the open end wrench to come in contact with the brake caliper. Allowing the open end wrench to come in contact with the brake caliper will cause a pulsation when the brakes are applied.

1. Install the brake caliper.

   Caution: Refer to Fastener Caution in the Preface section.

2. Install the brake caliper guide pin bolts (1).

   Hold the brake caliper guide pins stationary when installing the guide pin bolts.

   Tighten
   Tighten the bolts to 27 N·m (20 lb ft).

cardiagn.com

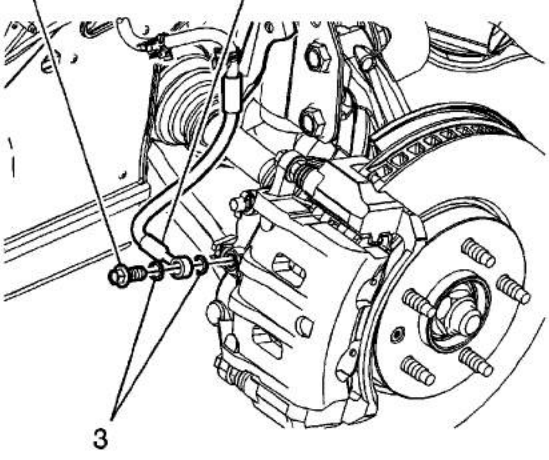

Note: Install new brake hose fitting gaskets.

3. Install new brake hose fitting gaskets (3) to the brake hose fitting.
4. Install the brake hose fitting (2) to the brake caliper.
5. Install the brake hose fitting bolt (1).

   Tighten
   Tighten the bolt to 52 N·m (38 lb ft).

6. Bleed the hydraulic brake system. Refer to Hydraulic Brake System Bleeding.
7. Install the tire and wheel assembly. Refer to Tire and Wheel Removal and Installation.
8. Lower the vehicle.

cardiagn.com

Rear Brake Caliper Replacement

Removal Procedure

Warning: Refer to Brake Dust Warning in the Preface section.

Warning: Refer to Brake Fluid Irritant Warning in the Preface section.

1. Raise and support the vehicle. Refer to Lifting and Jacking the Vehicle.
2. Remove the tire and wheel assembly. Refer to Tire and Wheel Removal and Installation.

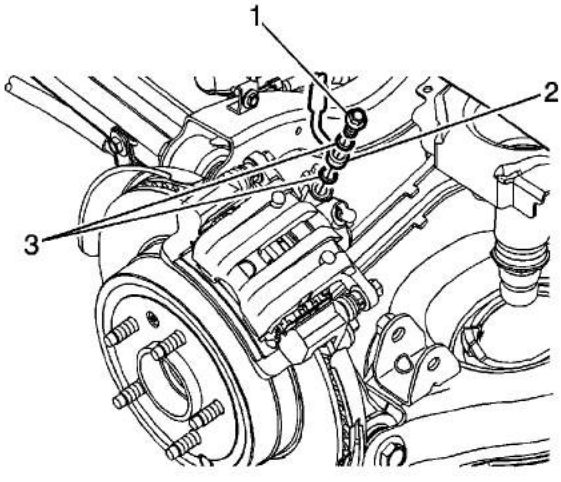

3. Remove the brake hose fitting bolt (1).
4. Remove the brake hose fitting (2) from the brake caliper.

   Note: Do not reuse the brake hose fitting gaskets.

5. Remove and discard the brake hose fitting gaskets (3).
6. Cap the brake hose fitting to prevent brake fluid loss and contamination.

cardiagn.com

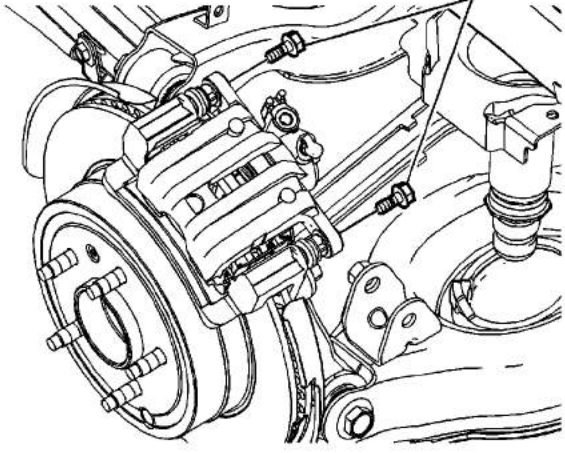

Note:

- DO NOT use any air tools to remove or install the guide pin bolts. Use hand tools ONLY.
- Install an open end wrench to hold the caliper guide pin in line with the brake caliper while removing or installing the caliper guide pin bolt. DO NOT allow the open end wrench to come in contact with the brake caliper. Allowing the open end wrench to come in contact with the brake caliper will cause a pulsation when the brakes are applied.

7. Remove the brake caliper guide pin bolts (1).

   Hold the brake caliper guide pins stationary when removing the guide pin bolts.

8. Remove the brake caliper.

Installation Procedure

cardiagn.com

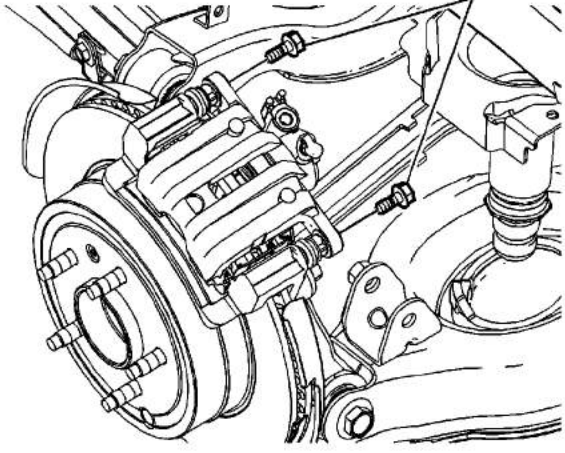

Note:

- DO NOT use any air tools to remove or install the guide pin bolts. Use hand tools ONLY.
- Install an open end wrench to hold the caliper guide pin in line with the brake caliper while removing or installing the caliper guide pin bolt. DO NOT allow the open end wrench to come in contact with the brake caliper. Allowing the open end wrench to come in contact with the brake caliper will cause a pulsation when the brakes are applied.

1. Install the brake caliper.

   Caution: Refer to Fastener Caution in the Preface section.

2. Install the brake caliper guide pin bolts (1).

   Hold the brake caliper guide pins stationary when installing the guide pin bolts.

   Tighten
   Tighten the bolts to 27 N·m (20 lb ft).

cardiagn.com

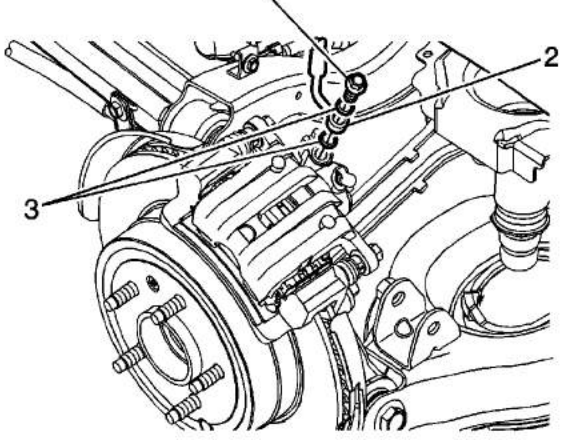

Note: Install new brake hose fitting gaskets.

3. Install new brake hose fitting gaskets (3) to the brake hose fitting.
4. Install the brake hose fitting (2) to the brake caliper.
5. Install the brake hose fitting bolt (1).

   Tighten
   Tighten the bolt to 52 N·m (38 lb ft).

6. Bleed the hydraulic brake system. Refer to Hydraulic Brake System Bleeding.
7. Install the tire and wheel assembly. Refer to Tire and Wheel Removal and Installation.
8. Lower the vehicle.

cardiagn.com

Front Disc Brake Hardware Replacement

Removal Procedure

Warning: Refer to Brake Dust Warning in the Preface section.

Caution: Support the brake caliper with heavy mechanic wire, or equivalent, whenever it is separated from its mount and the hydraulic flexible brake hose is still connected. Failure to support the caliper in this manner will cause the flexible brake hose to bear the weight of the caliper, which may cause damage to the brake hose and in turn may cause a brake fluid leak.

1. Raise and support the vehicle. Refer to Lifting and Jacking the Vehicle.
2. Remove the tire and wheel assembly. Refer to Tire and Wheel Removal and Installation.

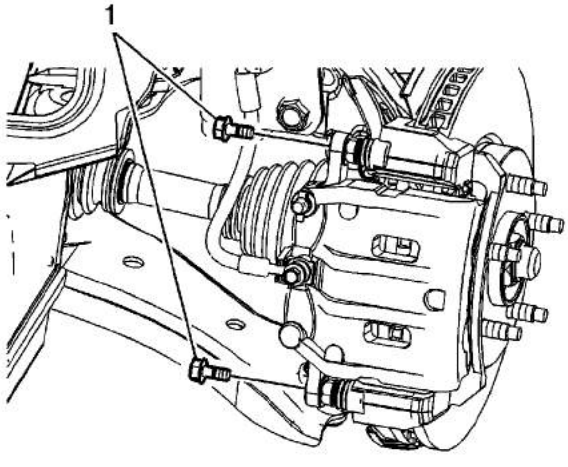

Note:

- DO NOT use any air tools to remove or install the guide pin bolts. Use hand tools ONLY.
- Install an open end wrench to hold the caliper guide pin in line with the brake caliper while removing or installing the caliper guide pin bolt. DO NOT allow the open end wrench to come in contact with the brake caliper. Allowing the open end wrench to come in contact with the brake caliper will cause a pulsation when the brakes are applied.

3. Remove the brake caliper guide pin bolts (1).

   Hold the brake caliper guide pins stationary when removing the guide pin bolts.

4. Without disconnecting the brake caliper hose, remove the brake caliper and support with heavy mechanics wire or equivalent.

cardiagn.com

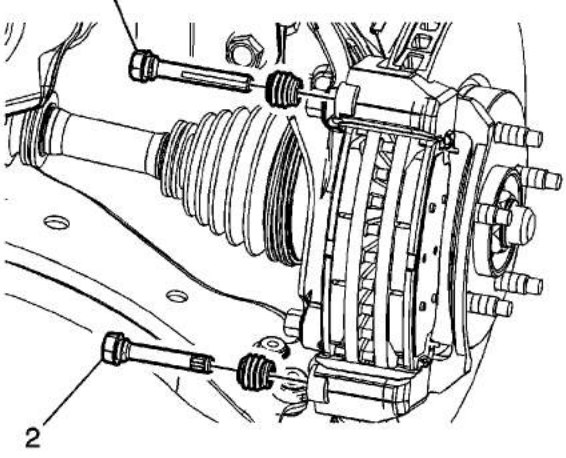

Note: The guide pins are not interchangeable. Note the location of the guide pins.

5. Remove the upper guide pin (1) and seal.
6. Remove the lower guide pin (2) and seal.

Installation Procedure

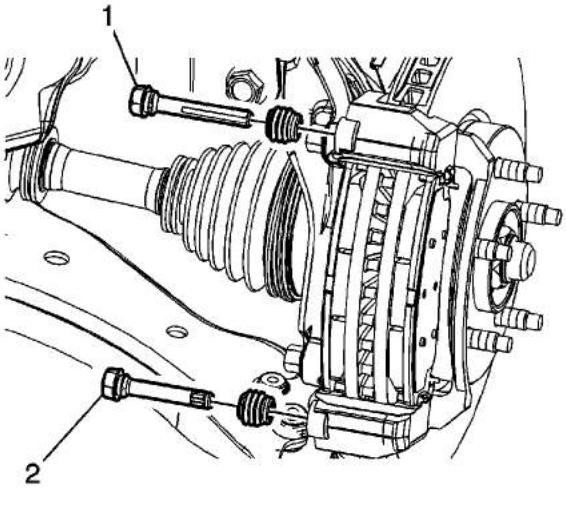

Note: The guide pins are not interchangeable. Note the location of the guide pins.

cardiagn.com

3. Install the upper guide pin (1).

   Ensure the lip of the seal is fully seated in the groove of the brake caliper guide pin.

4. Install the lower guide pin (2).

   Ensure the lip of the seal is fully seated in the groove of the brake caliper guide pin.

   Caution: Refer to Fastener Caution in the Preface section.

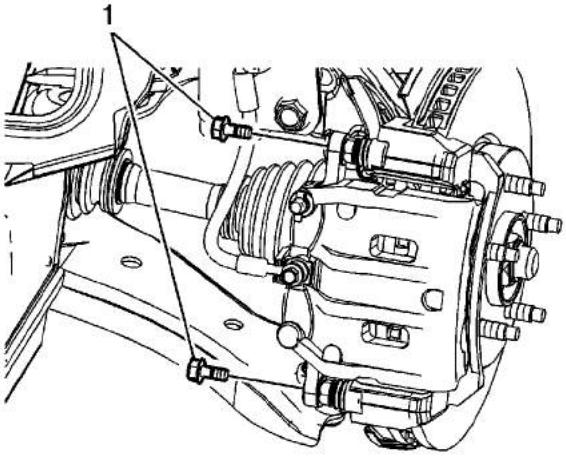

Note:

- DO NOT use any air tools to remove or install the guide pin bolts. Use hand tools ONLY.
- Install an open end wrench to hold the caliper guide pin in line with the brake caliper while removing or installing the caliper guide pin bolt. DO NOT allow the open end wrench to come in contact with the brake caliper. Allowing the open end wrench to come in contact with the brake caliper will cause a pulsation when the brakes are applied.

5. Position the brake caliper to the bracket.
6. Install the brake caliper guide pin bolts (1).

   Hold the brake caliper guide pins stationary when installing the guide pin bolts.

   Tighten
   Tighten the bolts to 27 N·m (20 lb ft).

7. Install the tire and wheel assembly. Refer to Tire and Wheel Removal and Installation.
8. Lower the vehicle.

cardiagn.com

Rear Disc Brake Hardware Replacement

Removal Procedure

Warning: Refer to Brake Dust Warning in the Preface section.

Caution: Support the brake caliper with heavy mechanic wire, or equivalent, whenever it is separated from its mount and the hydraulic flexible brake hose is still connected. Failure to support the caliper in this manner will cause the flexible brake hose to bear the weight of the caliper, which may cause damage to the brake hose and in turn may cause a brake fluid leak.

1. Raise and support the vehicle. Refer to Lifting and Jacking the Vehicle.
2. Remove the tire and wheel assembly. Refer to Tire and Wheel Removal and Installation.

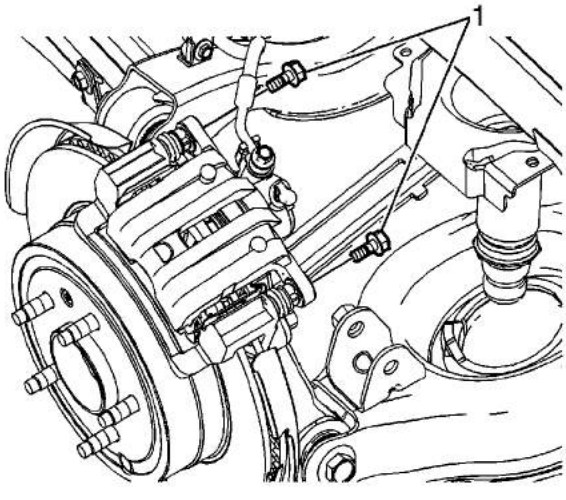

Note:

- DO NOT use any air tools to remove or install the guide pin bolts. Use hand tools ONLY.
- Install an open end wrench to hold the caliper guide pin in line with the brake caliper while removing or installing the caliper guide pin bolt. DO NOT allow the open end wrench to come in contact with the brake caliper. Allowing the open end wrench to come in contact with the brake caliper will cause a pulsation when the brakes are applied.

3. Remove the brake caliper guide pin bolts (1).

   Hold the brake caliper guide pins stationary when removing the guide pin bolts.

4. Without disconnecting the brake caliper hose, remove the brake caliper and support with heavy mechanics wire or equivalent.

cardiagn.com

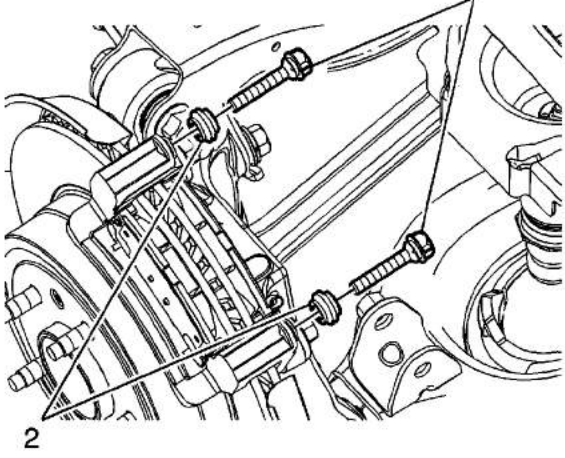

5. Remove the upper and lower guide pins (1).
6. Remove the upper and lower guide pin seals (2).

Installation Procedure

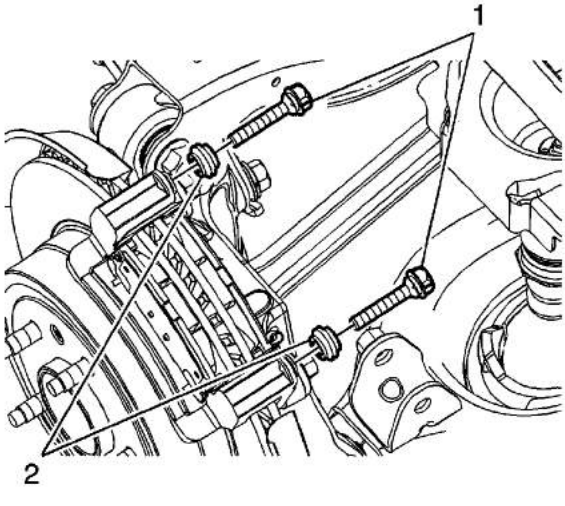

1. Install the guide pin seals (2) to the caliper bracket.
2. Apply a light coat of high temperature silicone brake lubricant to the brake caliper guide pins.
3. Install the upper and lower guide pins (1).

   Ensure the lip of the seals are fully seated in the groove of the brake caliper guide pins.

cardiagn.com

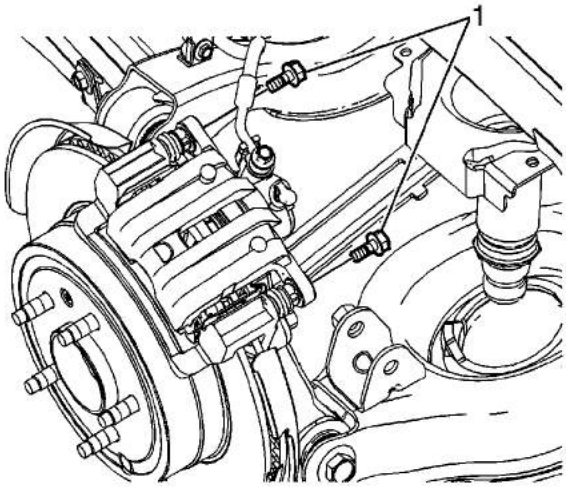

Note:

- DO NOT use any air tools to remove or install the guide pin bolts. Use hand tools ONLY.
- Install an open end wrench to hold the caliper guide pin in line with the brake caliper while removing or installing the caliper guide pin bolt. DO NOT allow the open end wrench to come in contact with the brake caliper. Allowing the open end wrench to come in contact with the brake caliper will cause a pulsation when the brakes are applied.

4. Position the brake caliper to the bracket.
5. Install the brake caliper guide pin bolts (1).

   Hold the brake caliper guide pins stationary when installing the guide pin bolts.

   Tighten
   Tighten the bolts to 27 N·m (20 lb ft).

6. Install the tire and wheel assembly. Refer to Tire and Wheel Removal and Installation.
7. Lower the vehicle.

cardiagn.com

Front Brake Caliper Bracket Replacement

Removal Procedure

Warning: Refer to Brake Dust Warning in the Preface section.

Caution: Support the brake caliper with heavy mechanic wire, or equivalent, whenever it is separated from its mount and the hydraulic flexible brake hose is still connected. Failure to support the caliper in this manner will cause the flexible brake hose to bear the weight of the caliper, which may cause damage to the brake hose and in turn may cause a brake fluid leak.

1. Raise and support the vehicle. Refer to Lifting and Jacking the Vehicle.
2. Remove the tire and wheel assembly. Refer to Tire and Wheel Removal and Installation.

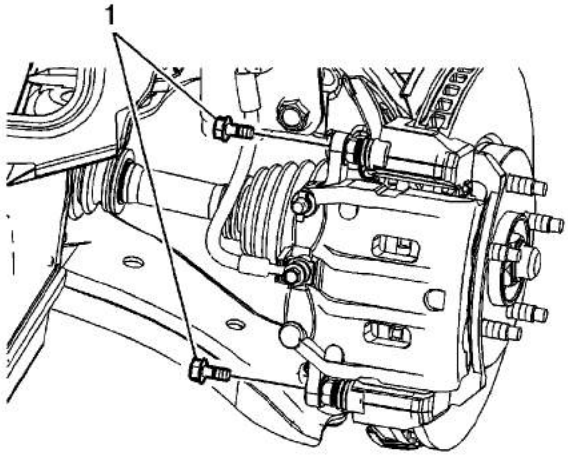

Note:

- DO NOT use any air tools to remove or install the guide pin bolts. Use hand tools ONLY.
- Install an open end wrench to hold the caliper guide pin in line with the brake caliper while removing or installing the caliper guide pin bolt. DO NOT allow the open end wrench to come in contact with the brake caliper. Allowing the open end wrench to come in contact with the brake caliper will cause a pulsation when the brakes are applied.

3. Remove the brake caliper guide pin bolts (1).

   Hold the brake caliper guide pins stationary when removing the guide pin bolts.

4. Without disconnecting the brake caliper hose, remove the brake caliper and support with heavy mechanics wire or equivalent.

cardiagn.com

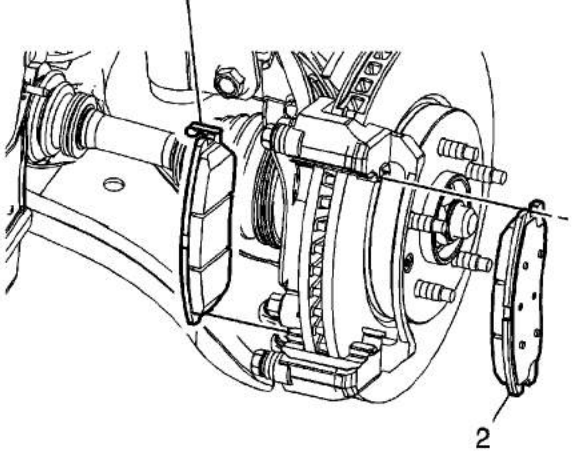

5. Remove the inner brake pad (1).

   Note the location of the wear sensor for correct installation.

6. Remove the outer brake pad (2).

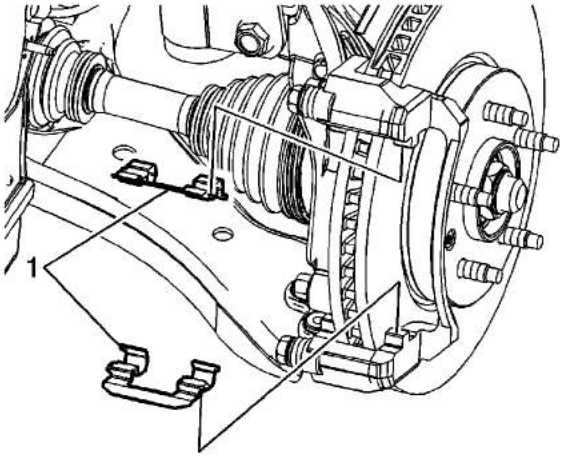

7. Remove the brake pad shims (1).

cardiagn.com

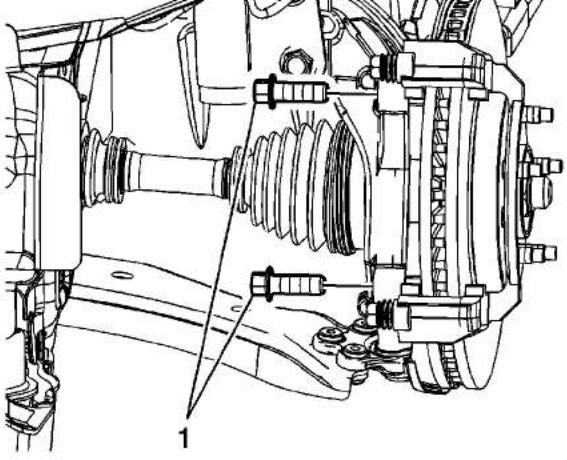

8. Remove the brake caliper bracket bolts (1).

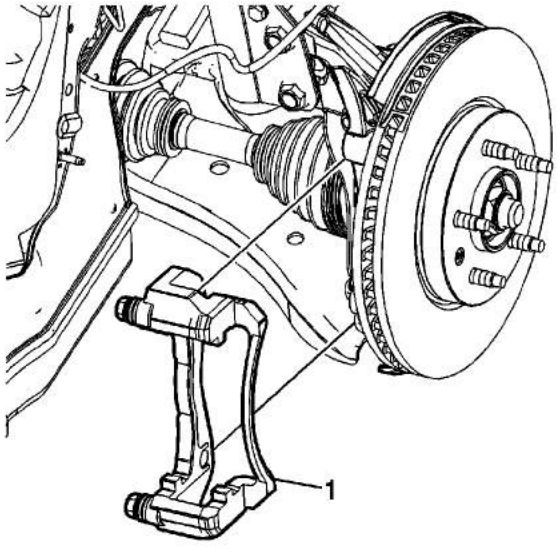

9. Remove the brake caliper bracket (1).

Installation Procedure

cardiagn.com

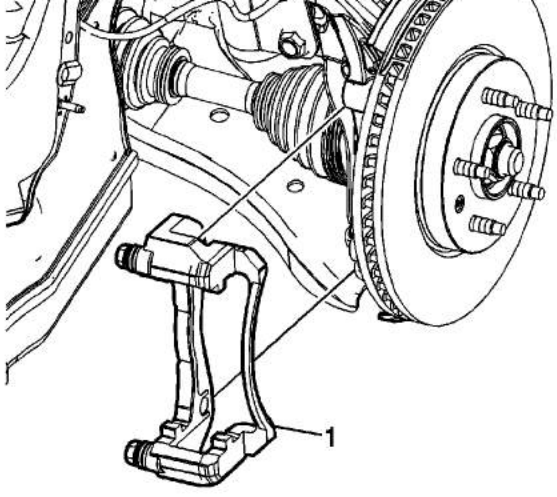

1. Install the brake caliper bracket (1).

   Caution: Refer to Fastener Caution in the Preface section.

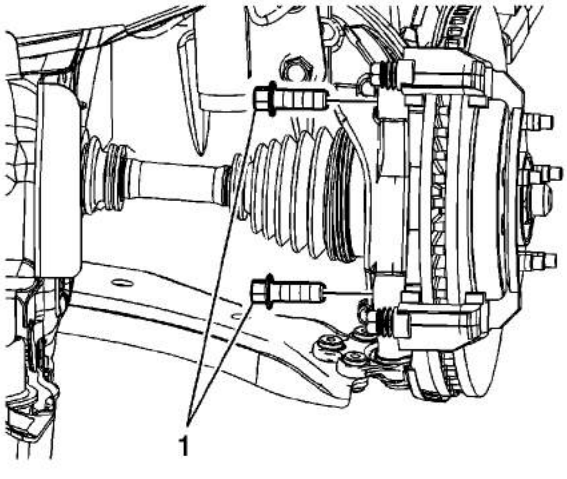

2. Install the brake caliper bracket bolts (1).

   Tighten
   Tighten the bolts to 185 N·m (136 lb ft).

cardiagn.com

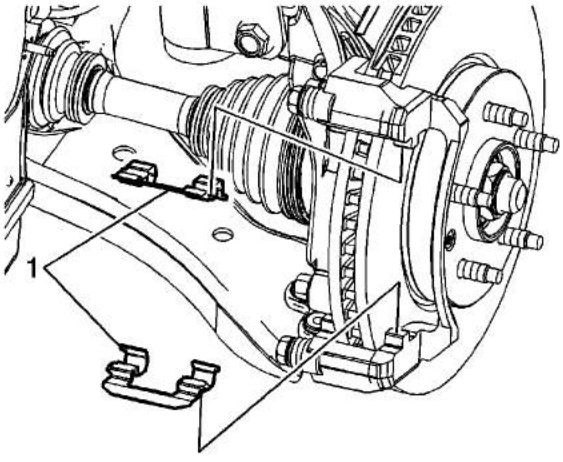

3. Install the brake pad shims (1).

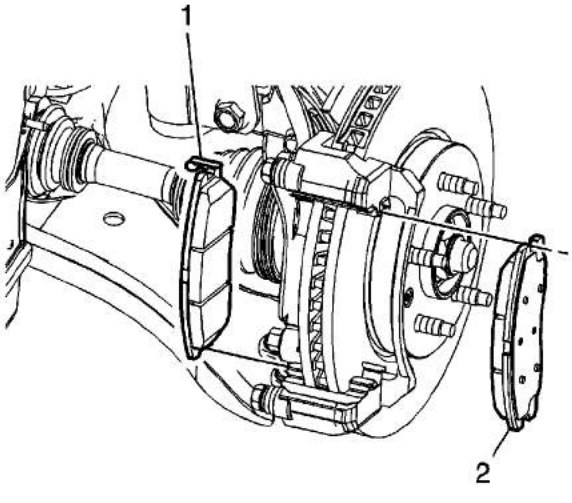

4. Install the inner brake pad (1).

   Note the location of the wear sensor for correct installation.

5. Install the outer brake pad (2).

cardiagn.com

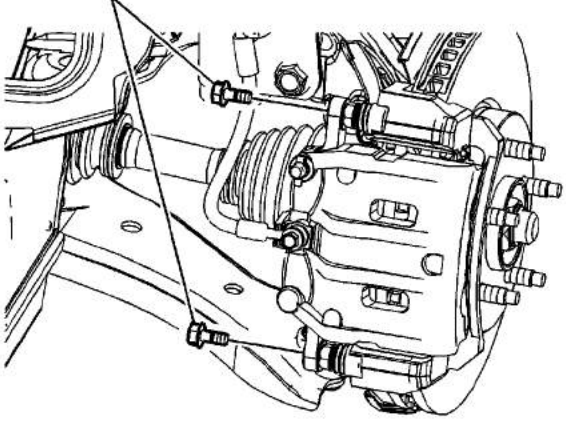

Note:

- DO NOT use any air tools to remove or install the guide pin bolts. Use hand tools ONLY.
- Install an open end wrench to hold the caliper guide pin in line with the brake caliper while removing or installing the caliper guide pin bolt. DO NOT allow the open end wrench to come in contact with the brake caliper. Allowing the open end wrench to come in contact with the brake caliper will cause a pulsation when the brakes are applied.

6. Position the brake caliper to the bracket.
7. Install the brake caliper guide pin bolts (1).

   Hold the brake caliper guide pins stationary when installing the guide pin bolts.

   Tighten
   Tighten the bolts to 27 N·m (20 lb ft).

8. Install the tire and wheel assembly. Refer to Tire and Wheel Removal and Installation.
9. Lower the vehicle.

cardiagn.com

Rear Brake Caliper Bracket Replacement

Removal Procedure

Warning: Refer to Brake Dust Warning in the Preface section.

Caution: Support the brake caliper with heavy mechanic wire, or equivalent, whenever it is separated from its mount and the hydraulic flexible brake hose is still connected. Failure to support the caliper in this manner will cause the flexible brake hose to bear the weight of the caliper, which may cause damage to the brake hose and in turn may cause a brake fluid leak.

1. Raise and support the vehicle. Refer to Lifting and Jacking the Vehicle.
2. Remove the tire and wheel assembly. Refer to Tire and Wheel Removal and Installation.

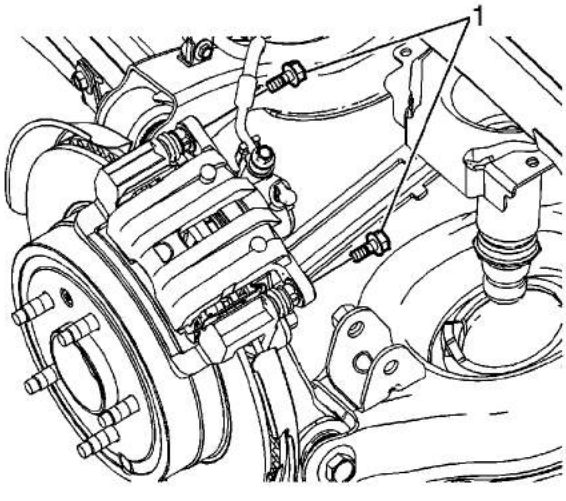

Note:

- DO NOT use any air tools to remove or install the guide pin bolts. Use hand tools ONLY.
- Install an open end wrench to hold the caliper guide pin in line with the brake caliper while removing or installing the caliper guide pin bolt. DO NOT allow the open end wrench to come in contact with the brake caliper. Allowing the open end wrench to come in contact with the brake caliper will cause a pulsation when the brakes are applied.

3. Remove the brake caliper guide pin bolts (1).

   Hold the brake caliper guide pins stationary when removing the guide pin bolts.

4. Without disconnecting the brake caliper hose, remove the brake caliper and support with heavy mechanics wire or equivalent.

cardiagn.com

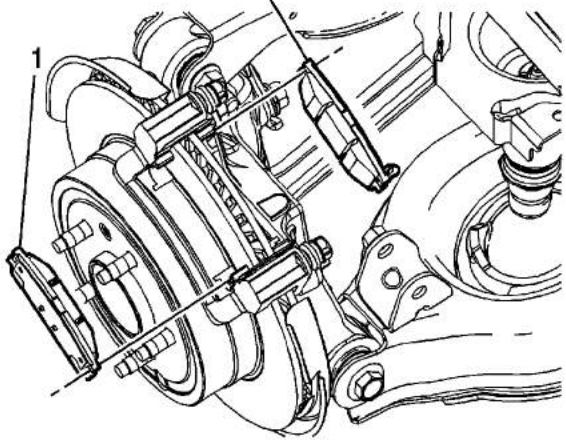

5. Remove the outer brake pad (1).
6. Remove the inner brake pad (2).

   Note the location of the wear sensor for correct installation.

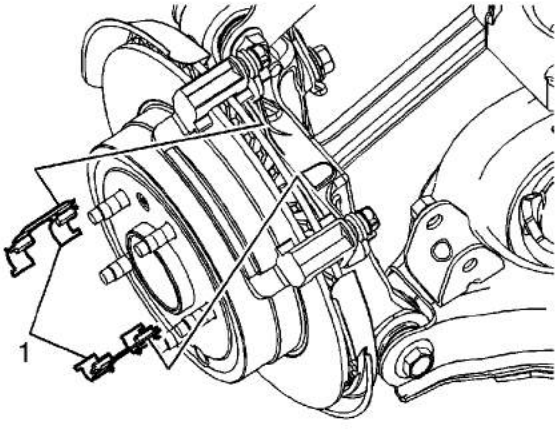

7. Remove the brake pad shims (1).

cardiagn.com

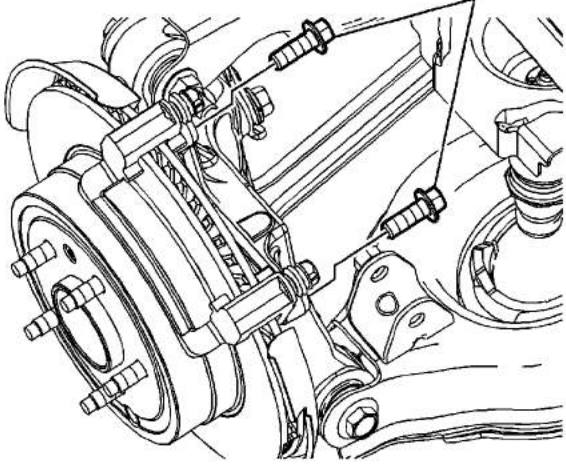

8. Remove the brake caliper bracket bolts (1).

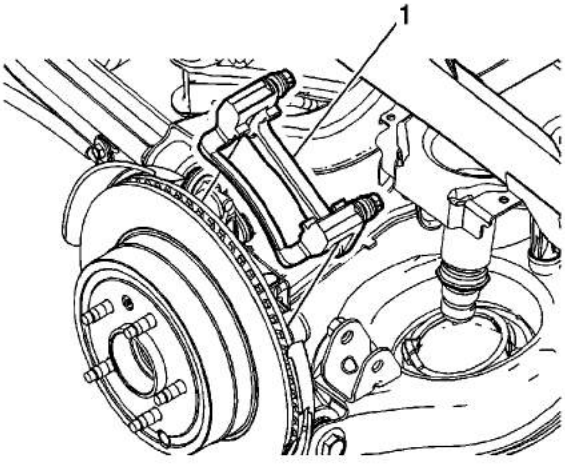

9. Remove the brake caliper bracket (1).

Installation Procedure

cardiagn.com

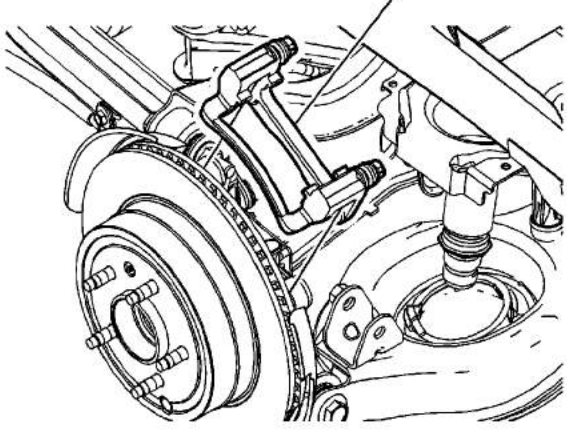

1. Install the brake caliper bracket (1).

   Caution: Refer to Fastener Caution in the Preface section.

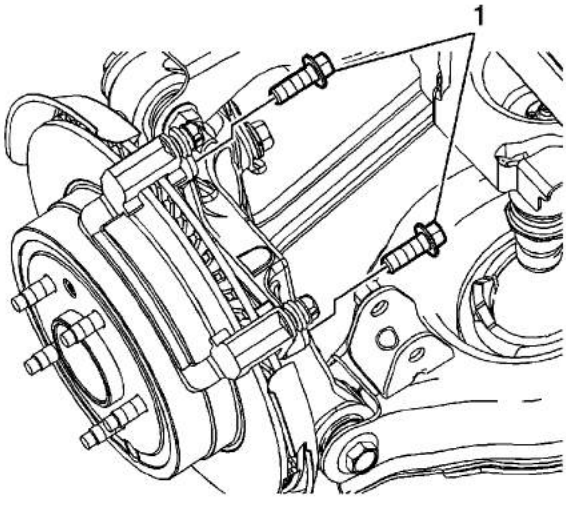

2. Install the brake caliper bracket bolts (1).

   Tighten
   Tighten the bolts to 120 N·m (89 lb ft).

cardiagn.com

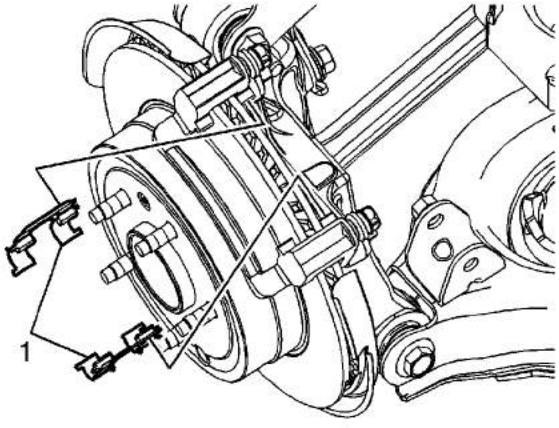

3. Install the brake pad shims (1).

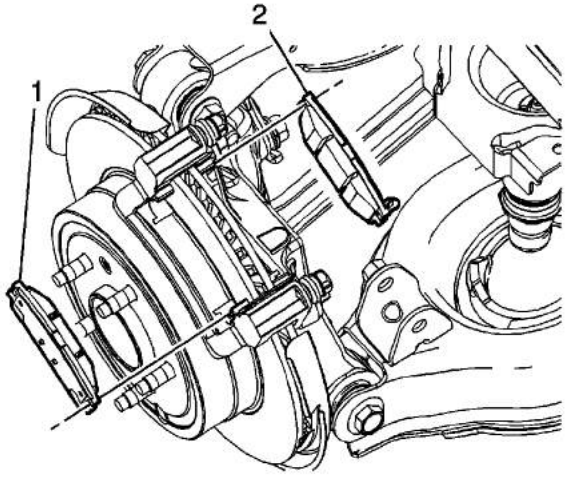

4. Install the outer brake pad (1).
5. Install the inner brake pad (2).

   Note the location of the wear sensor for correct installation.

cardiagn.com

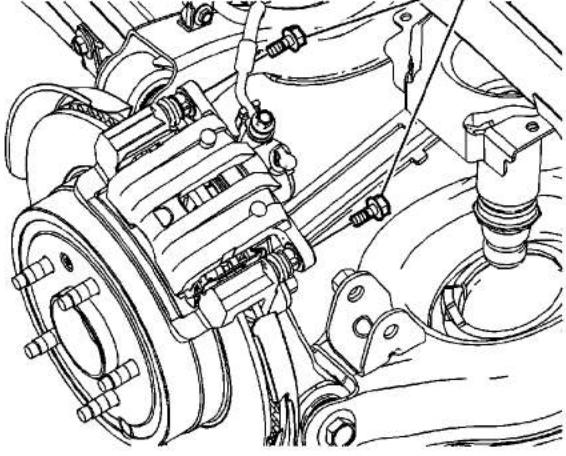

Note:

- DO NOT use any air tools to remove or install the guide pin bolts. Use hand tools ONLY.
- Install an open end wrench to hold the caliper guide pin in line with the brake caliper while removing or installing the caliper guide pin bolt. DO NOT allow the open end wrench to come in contact with the brake caliper. Allowing the open end wrench to come in contact with the brake caliper will cause a pulsation when the brakes are applied.

6. Position the brake caliper to the bracket.
7. Install the brake caliper guide pin bolts (1).

   Hold the brake caliper guide pins stationary when installing the guide pin bolts.

   Tighten
   Tighten the bolts to 27 N·m (20 lb ft).

8. Install the tire and wheel assembly. Refer to Tire and Wheel Removal and Installation.
9. Lower the vehicle.

cardiagn.com

Front Brake Rotor Replacement

Special Tools

- J 41013 Rotor Resurfacing Kit
- J 42450-A Wheel Hub Resurfacing Kit

Removal Procedure

Warning: Refer to Brake Dust Warning in the Preface section.

Caution: Support the brake caliper with heavy mechanic wire, or equivalent, whenever it is separated from its mount and the hydraulic flexible brake hose is still connected. Failure to support the caliper in this manner will cause the flexible brake hose to bear the weight of the caliper, which may cause damage to the brake hose and in turn may cause a brake fluid leak.

1. Raise and support the vehicle. Refer to Lifting and Jacking the Vehicle.
2. Remove the tire and wheel assembly. Refer to Tire and Wheel Removal and Installation.

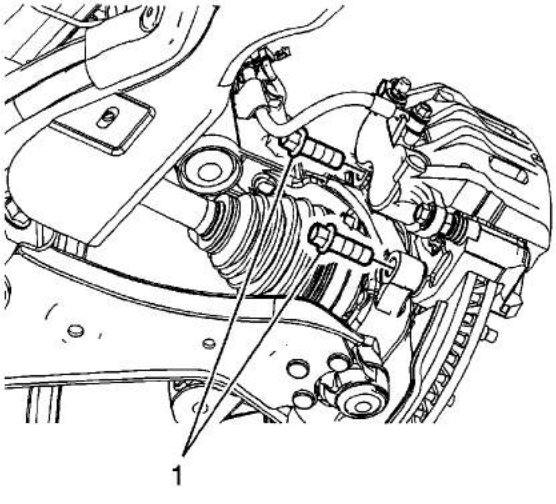

3. Remove the brake caliper bracket bolts (1).
4. Without disconnecting the brake caliper hose, remove the brake caliper and bracket assembly and support with heavy mechanics wire or equivalent.
5. If installing the original brake rotor, mark the relationship of the rotor to the wheel hub.

cardiagn.com

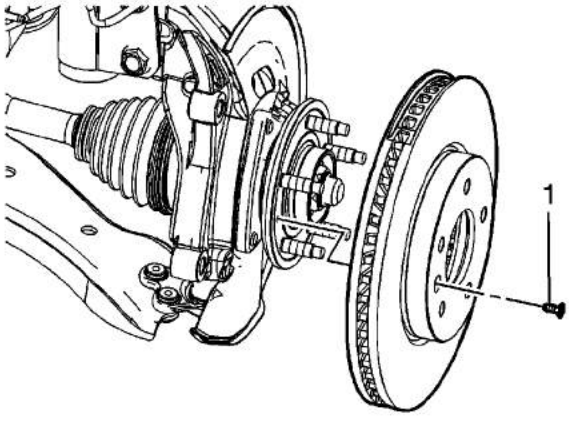

6. Remove the brake rotor screw (1) and the brake rotor.
7. If the brake rotor is to be machined, check the thickness variation measurement. Refer to Brake Rotor Thickness Variation Measurement.

Installation Procedure

1. If installing a new brake rotor, clean the friction surfaces of the brake rotor with denatured alcohol.
2. Using the J 42450-A , thoroughly clean any rust or corrosion from the mating surface of the hub/axle flange.
3. Using the J 41013 , thoroughly clean any rust or corrosion from the mating surface of the rotor to the hub/axle flange.

   Caution: Refer to Fastener Caution in the Preface section.

cardiagn.com

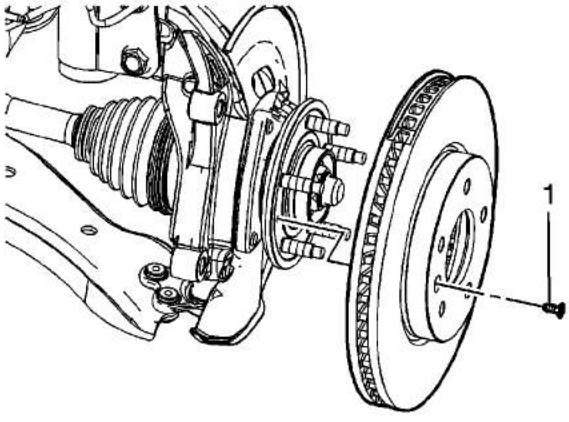

4. Install the brake rotor.

   If installing the original brake rotor, align the rotor to the wheel hub as noted during removal.

5. Install the brake rotor screw (1).

   Tighten
   Tighten the screw to 10 N·m (89 lb in).

6. After installing the brake rotor, measure the assembled lateral runout (LRO) of the brake rotor. Refer to Brake Rotor Assembled Lateral Runout Measurement.
7. If the brake rotor assembled LRO measurement exceeds specification, bring the LRO to within specification. Refer to Brake Rotor Assembled Lateral Runout Correction.

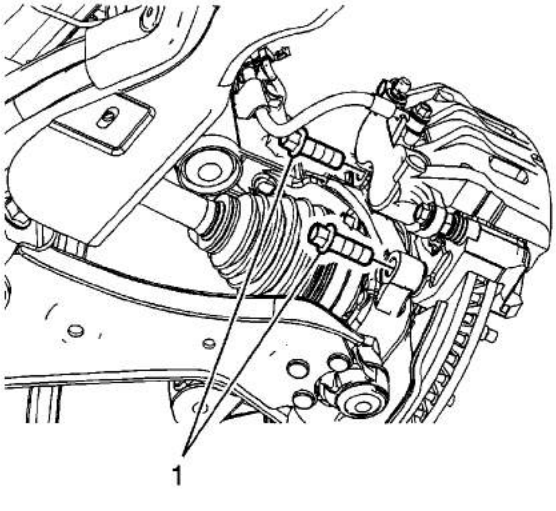

cardiagn.com

8. Position the brake caliper and bracket assembly to the vehicle.
9. Install the brake caliper bracket bolts (1).

   Tighten
   Tighten the bolts to 185 N·m (136 lb ft).

10. Install the tire and wheel assembly. Refer to Tire and Wheel Removal and Installation.
11. Lower the vehicle.

cardiagn.com

Rear Brake Rotor Replacement

Special Tools

- J 41013 Rotor Resurfacing Kit
- J 42450-A Wheel Hub Resurfacing Kit

Removal Procedure

Warning: Refer to Brake Dust Warning in the Preface section.

Caution: Support the brake caliper with heavy mechanic wire, or equivalent, whenever it is separated from its mount and the hydraulic flexible brake hose is still connected. Failure to support the caliper in this manner will cause the flexible brake hose to bear the weight of the caliper, which may cause damage to the brake hose and in turn may cause a brake fluid leak.

1. Raise and support the vehicle. Refer to Lifting and Jacking the Vehicle.
2. Remove the tire and wheel assembly. Refer to Tire and Wheel Removal and Installation.

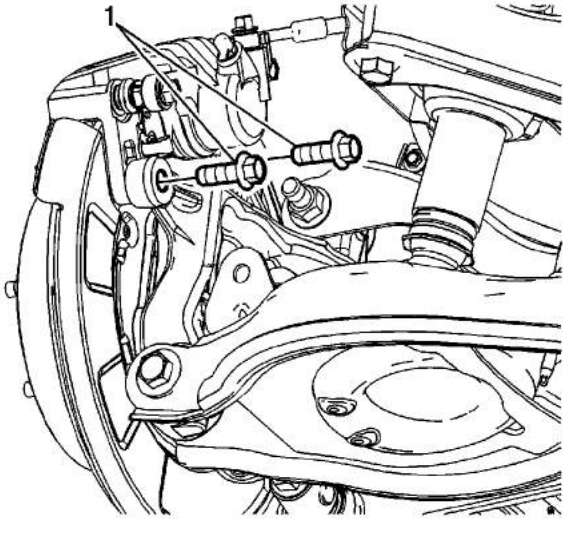

3. Remove the brake caliper bracket bolts (1).
4. Without disconnecting the brake caliper hose, remove the brake caliper and bracket assembly and support with heavy mechanics wire or equivalent.
5. If installing the original brake rotor, mark the relationship of the rotor to the wheel hub.

cardiagn.com

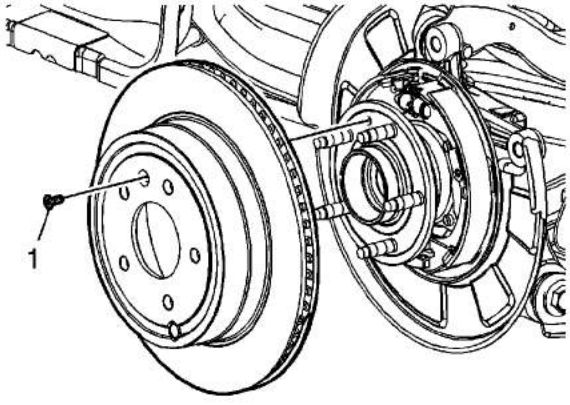

6. Remove the brake rotor screw (1) and the brake rotor.
7. If the brake rotor is difficult to remove, remove the park brake shoe adjuster access plug on the face of the brake rotor to gain access to the park brake adjuster.

   Loosen the park brake shoe adjuster.

8. If the brake rotor is to be machined, check the thickness variation measurement. Refer to Brake Rotor Thickness Variation Measurement.

Installation Procedure

1. If installing a new brake rotor, clean the friction surfaces of the brake rotor with denatured alcohol.
2. Using the J 42450-A , thoroughly clean any rust or corrosion from the mating surface of the hub/axle flange.
3. Using the J 41013 , thoroughly clean any rust or corrosion from the mating surface of the rotor to the hub/axle flange.

   Caution: Refer to Fastener Caution in the Preface section.

cardiagn.com

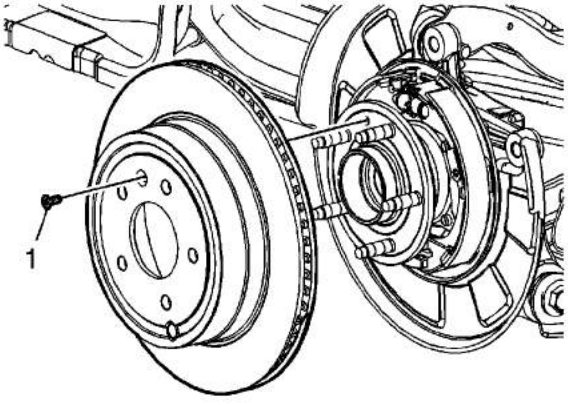

4. Install the brake rotor.

   If installing the original brake rotor, align the rotor to the wheel hub as noted during removal.

5. Install the brake rotor screw (1).

   Tighten
   Tighten the screw to 10 N·m (89 lb in).

6. After installing the brake rotor, measure the assembled lateral runout (LRO) of the brake rotor. Refer to Brake Rotor Assembled Lateral Runout Measurement.
7. If the brake rotor assembled LRO measurement exceeds specification, bring the LRO to within specification. Refer to Brake Rotor Assembled Lateral Runout Correction.

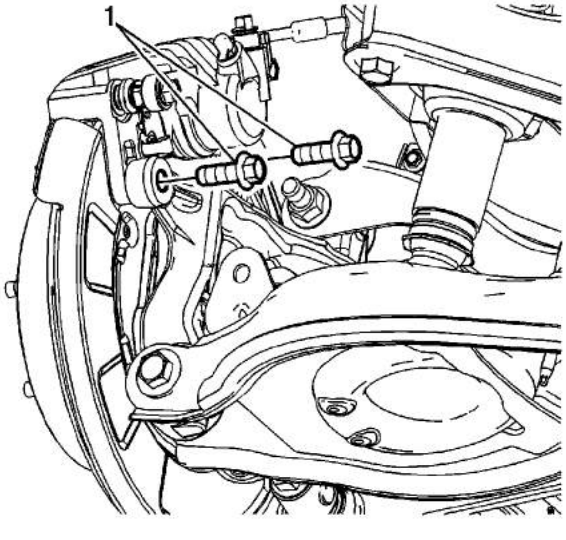

cardiagn.com

8. Position the brake caliper and bracket assembly to the vehicle.
9. Install the brake caliper bracket bolts (1).

   Tighten
   Tighten the bolts to 120 N·m (89 lb ft).

10. If necessary, adjust the park brake. Refer to Parking Brake Adjustment.
11. Install the tire and wheel assembly. Refer to Tire and Wheel Removal and Installation.
12. Lower the vehicle.

cardiagn.com

Front Brake Shield Replacement

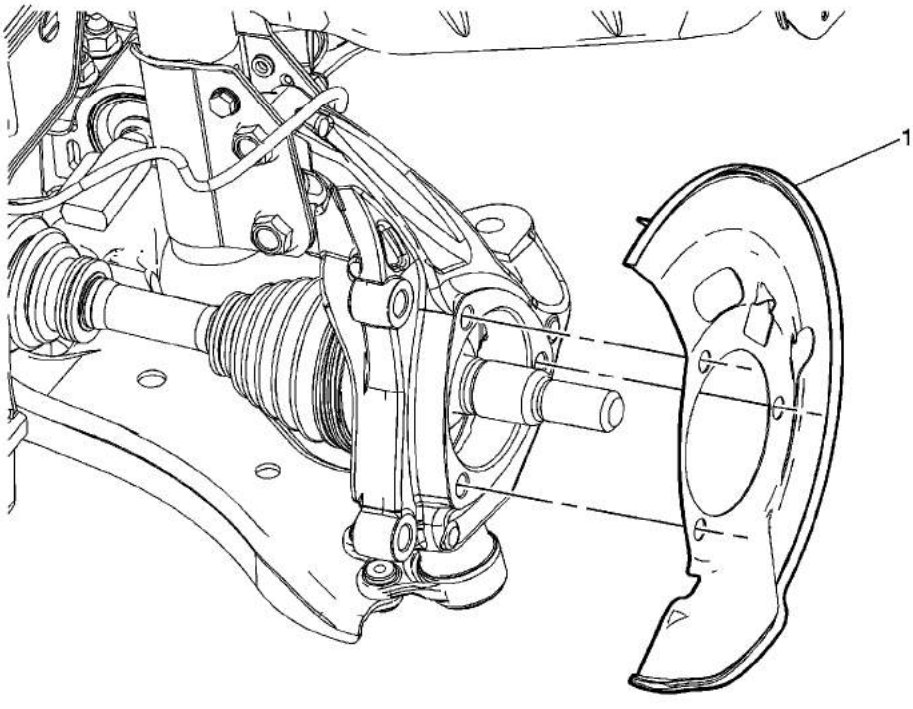

Callout	Component Name
Warning: Refer to Brake Dust Warning in the Preface section. **Preliminary Procedures** 1. Raise and support the vehicle. Refer to Lifting and Jacking the Vehicle. 2. Remove the tire and wheel assembly. Refer to Tire and Wheel Removal and Installation. 3. Remove the brake rotor. Refer to Front Brake Rotor Replacement. 4. Remove the wheel bearing and hub assembly. Refer to Front Wheel Bearing and Hub Replacement.	
1	Front Brake Shield

cardiagn.com

Rear Brake Shield Replacement

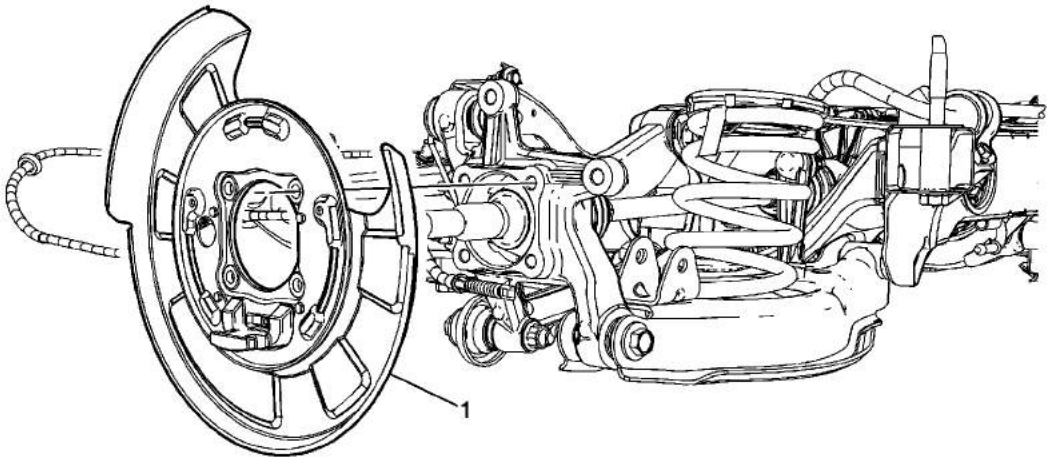

Callout	Component Name
Warning: Refer to Brake Dust Warning in the Preface section. **Preliminary Procedures** 1. Raise and support the vehicle. Refer to Lifting and Jacking the Vehicle. 2. Remove the tire and wheel. Refer to Tire and Wheel Removal and Installation. 3. Remove the park brake shoes. Refer to Parking Brake Shoe Replacement. 4. Remove the wheel speed sensor. Refer to Rear Wheel Speed Sensor Replacement. 5. Disconnect the park brake cable from the actuator and mounting bracket. Refer to Parking Brake Rear Cable Replacement. 6. Remove the wheel bearing/hub assembly. Refer to Rear Wheel Bearing and Hub Replacement.	
1	Disc Brake Backing Plate

cardiagn.com

Brake Rotor Assembled Lateral Runout Correction

Note:

- Brake rotor thickness variation MUST be checked BEFORE checking for assembled lateral runout (LRO). Thickness variation exceeding the maximum acceptable level can cause brake pulsation. Refer to Brake Rotor Thickness Variation Measurement.
- Brake rotor assembled lateral runout (LRO) exceeding the maximum allowable specification can cause thickness variation to develop in the brake rotor over time, usually between 4 800-11 300 km (3,000-7,000 mi). Refer to Brake Rotor Assembled Lateral Runout Measurement.

Review the following acceptable methods for bringing the brake rotor assembled LRO to within specifications. Determine which method to use for the specific vehicle being repaired.

- The indexing method of correcting assembled LRO is most effective when the LRO specification is only exceeded by a relatively small amount: 0.025-0.127 mm (0.001-0.005 in). Indexing is used to achieve the best possible match of high spots to low spots between related components. Refer to Brake Rotor Assembled Lateral Runout Correction - Indexing.
- The correction plate method of correcting assembled LRO involves the addition of a tapered plate between the brake rotor and the hub/axle flange. The correction plate method can be used to correct LRO that exceeds the specification by up to 0.23 mm (0.009 in). Refer to Brake Rotor Assembled Lateral Runout Correction - Correction Plates.
- The on-vehicle brake lathe method is used to bring the LRO to within specifications through compensating for LRO while refinishing the brake rotor. Refer to Brake Rotor Assembled Lateral Runout Correction - On Vehicle Lathe.

If the assembled LRO cannot be corrected using these methods, then other components must be suspected as causing and/or contributing to the LRO concern.

cardiagn.com

Brake Rotor Assembled Lateral Runout Correction - Indexing

Special Tools

- *J-39544-KIT* Torque-Limiting Socket Set , or equivalent
- *J-45101-100* Conical Brake Rotor Washers

Warning: Refer to Brake Dust Warning in the Preface section.

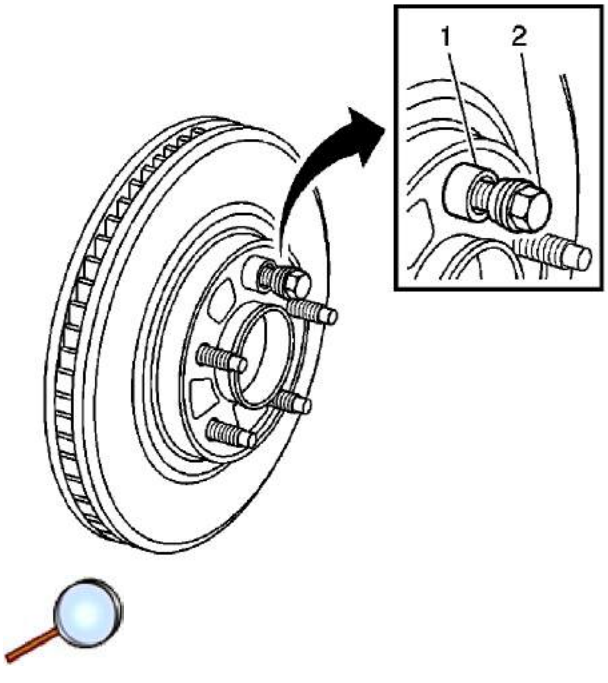

Note:

- Brake rotor thickness variation MUST be checked BEFORE checking for assembled lateral runout (LRO). Thickness variation exceeding the maximum acceptable level can cause brake pulsation. Refer to Brake Rotor Thickness Variation Measurement.
- Brake rotor assembled LRO exceeding the maximum allowable specification can cause thickness variation to develop in the brake rotor over time, usually between 4,800-11, 300 km (3,000-7,000 mi). Refer to Brake Rotor Assembled Lateral Runout Measurement.

1. Remove the *J-45101-100* washers and the lug nuts that were installed during the assembled LRO measurement procedure.
2. Inspect the mating surface of the hub/axle flange and the brake rotor to ensure that there are no foreign particles or debris remaining.
3. Index the brake rotor in a different orientation to the hub/axle flange.
4. Hold the rotor firmly in place against the hub/axle flange and install one of the *J-45101-100* washers (1) and one lug nut (2) onto the upper-most wheel stud.

cardiagn.com

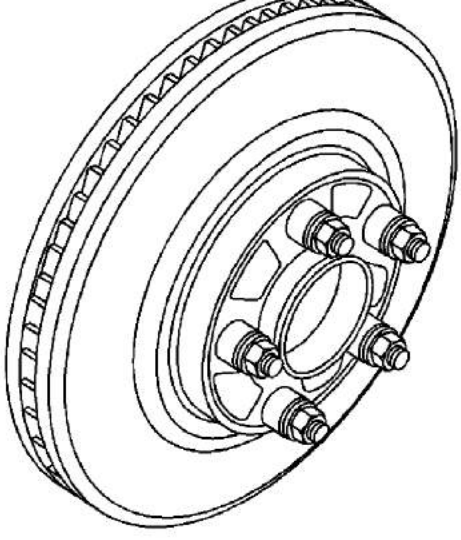

6. Install the remaining *J-45101-100* washers and lug nuts onto the wheel studs and tighten the nuts firmly by hand in a star-pattern.
7. Using the *J-39544-KIT* set , or equivalent, tighten the lug nuts in a star-pattern to specification, in order to properly secure the rotor. Refer to Tire and Wheel Removal and Installation.
8. Measure the assembled LRO of the brake rotor. Refer to Brake Rotor Assembled Lateral Runout Measurement.
9. Compare the amount of change between this measurement and the original measurement.
10. If this measurement is within specifications, proceed to step 14.
11. If this measurement still exceeds specifications, repeat steps 1-9 until the best assembled LRO measurement is obtained.
12. Matchmark the final location of the rotor to the wheel studs if the orientation is different than it was originally.
13. If the brake rotor assembled LRO measurement still exceeds the maximum allowable specification, refer to Brake Rotor Assembled Lateral Runout Correction.
14. If the brake rotor assembled LRO is within specification, install the brake caliper and depress the brake pedal several times to secure the rotor in place before removing the *J-45101-100* washers and the lug nuts.

cardiagn.com

Brake Rotor Assembled Lateral Runout Correction - Correction Plates

Special Tools

- *J-39544-KIT* Torque-Limiting Socket Set , or equivalent
- *J-45101-100* Conical Brake Rotor Washers

Warning: Refer to Brake Dust Warning in the Preface section.

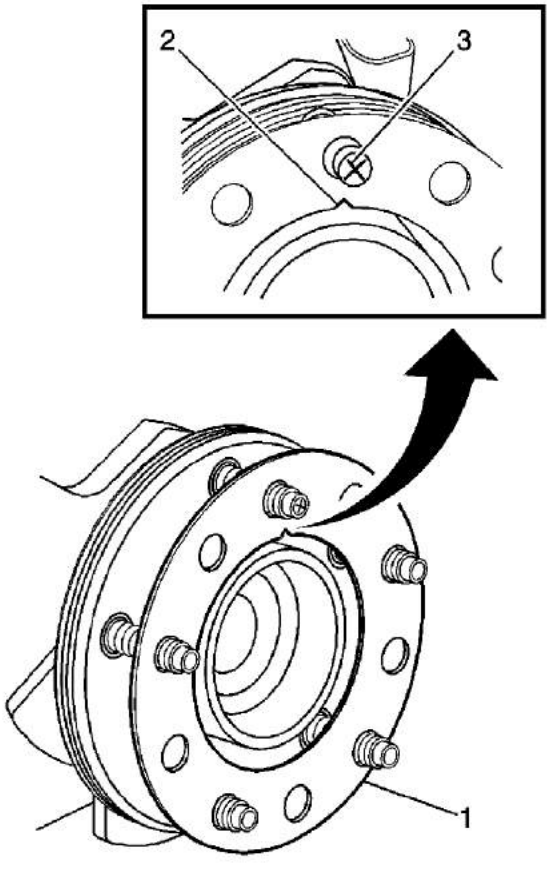

Note:

- Brake rotor thickness variation MUST be checked BEFORE checking for assembled lateral runout (LRO). Thickness variation exceeding the maximum acceptable level can cause brake pulsation. Refer to Brake Rotor Thickness Variation Measurement.
- Brake rotor assembled LRO exceeding the maximum allowable specification can cause thickness variation to develop in the brake rotor over time, usually between 4,800-

cardiagn.com

1. Rotate the brake rotor to position the high spot, identified and marked during the brake rotor assembled LRO measurement procedure, to face upward.
2. Remove the *J-45101-100* washers and the lug nuts that were installed during the assembled LRO measurement procedure and/or the indexing correction procedure.
3. Inspect the mounting surface of the hub/axle flange and the brake rotor to ensure that there are no foreign particles or debris remaining.
4. Select the correction plate, following the manufacturer's instructions, which has a specification closest to the assembled LRO measurement.

   For example: If the assembled LRO measurement was 0.076 mm (0.003 in), the 0.076 mm (0.003 in) correction plate would be used. If the measurement was 0.127 mm (0.005 in), the 0.152 mm (0.006 in) correction plate would be used.

5. Determine the positioning for the correction plate (1) using the high spot mark (3) made during the brake rotor assembled LRO measurement procedure.

   Note:
   - Do NOT install used correction plates in an attempt to correct brake rotor assembled LRO.
   - Do NOT stack up, or install more than one correction plate onto one hub/axle flange location, in an attempt to correct brake rotor assembled LRO.

6. Install the correction plate (1) onto the hub/axle flange, with the V-shaped notch (2) orientated to align with the high spot mark (3), that was positioned to face upward.

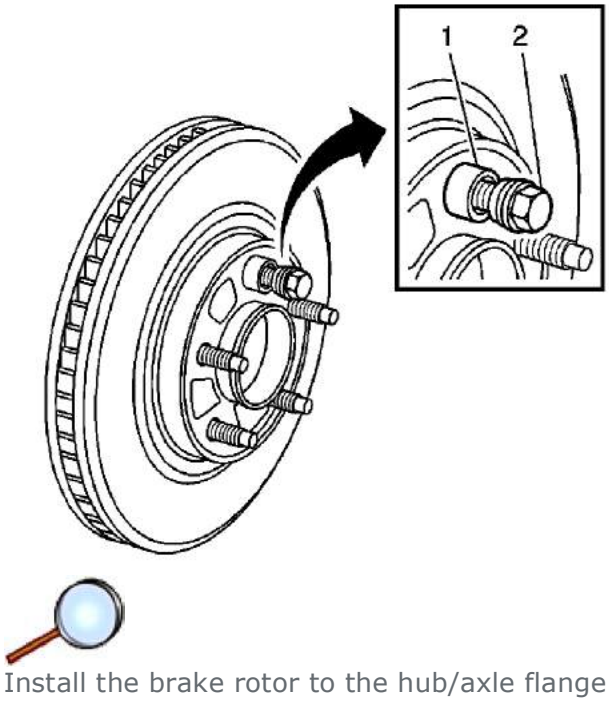

7. Install the brake rotor to the hub/axle flange. Use the matchmark made prior to removal for proper orientation to the flange.
8. Hold the rotor firmly in place against the hub/axle flange and install one of the *J-45101-100* washers (1) and one lug nut (2) onto the upper-most wheel stud.
9. Continue to hold the rotor secure and tighten the lug nut firmly by hand.

cardiagn.com

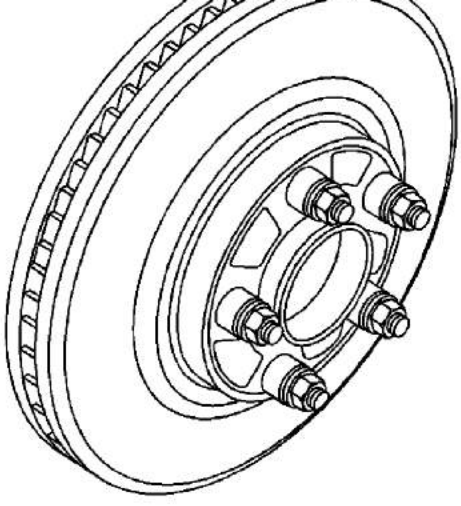

10. Install the remaining *J-45101-100* washers and lug nuts onto the wheel studs and tighten the nuts firmly by hand in a star-pattern.
11. Using the *J-39544-KIT* set , or equivalent, tighten the lug nuts in a star-pattern to specification, in order to properly secure the rotor. Refer to Tire and Wheel Removal and Installation.
12. Measure the assembled LRO of the brake rotor. Refer to Brake Rotor Assembled Lateral Runout Measurement.
13. If the brake rotor assembled LRO measurement still exceeds the maximum allowable specification, refer to Brake Rotor Assembled Lateral Runout Correction.
14. If the brake rotor assembled LRO measurement is within specification, install the brake caliper and depress the brake pedal several times to secure the rotor in place before removing the *J-45101-100* washers and the lug nuts.

cardiagn.com

Brake Rotor Assembled Lateral Runout Correction - On Vehicle Lathe

Special Tools

J-45101-100 Conical Brake Rotor Washers

Warning: Refer to Brake Dust Warning in the Preface section.

Note:

- Brake rotor thickness variation MUST be checked BEFORE checking for assembled lateral runout (LRO). Thickness variation exceeding the maximum acceptable level can cause brake pulsation. Refer to Brake Rotor Thickness Variation Measurement.
- Brake rotor assembled LRO exceeding the maximum allowable specification can cause thickness variation to develop in the brake rotor over time, usually between 4 800-11 300 km (3,000-7,000 mi). Refer to Brake Rotor Assembled Lateral Runout Measurement.

1. Ensure that the caliper and caliper bracket that are already being supported, are clear from contacting any rotating components, such as the brake rotor.
2. Remove the *J-45101-100* washers and the lug nuts that were installed during the assembled LRO measurement procedure and/or the indexing correction procedure.
3. Inspect the mounting surface of the hub/axle flange and the brake rotor to ensure that there are no foreign particles or debris remaining.
4. Set up the lathe, following the manufacturer's instructions.
5. Refinish the brake rotor, following the brake lathe manufacturer's instructions.
6. After each successive cut, inspect the brake rotor thickness. Refer to Brake Rotor Thickness Measurement.
7. If at any time the brake rotor exceeds the minimum allowable thickness after refinish specification, the brake rotor must be replaced. After replacing the rotor, proceed to step 10.
8. After refinishing the brake rotor, use the following procedure in order to obtain the desired non-directional finish:
   8.1. Follow the brake lathe manufacturer's recommended speed setting for applying a non-directional finish.
   8.2. Using moderate pressure, apply the non-directional finish:
      - If the lathe is equipped with a non-directional finishing tool, apply the finish with 120-grit aluminum oxide sandpaper.
      - If the lathe is not equipped with a non-directional finishing tool, apply the finish with a sanding block and 150-grit aluminum oxide sandpaper.
   8.3. After applying a non-directional finish, clean each friction surface of the brake rotor with denatured alcohol, or an equivalent approved brake cleaner.
9. Remove the lathe from the vehicle.
10. Measure the assembled LRO of the brake rotor. Refer to Brake Rotor Assembled Lateral Runout Measurement.
11. If the brake rotor assembled LRO measurement still exceeds the maximum allowable specification, refer to Brake Rotor Assembled Lateral Runout Correction.
12. If the brake rotor assembled LRO is within specification, install the brake caliper and depress the brake pedal several times to secure the rotor in place before removing the *J-45101-100*

cardiagn.com

cardiagn.com

Brake Rotor Refinishing

Special Tools

- *J-41013* Rotor Resurfacing Kit
- *J-42450-A* Wheel Hub Resurfacing Kit

Warning: Refer to Brake Dust Warning in the Preface section.

Note:

- The disc brake rotors do not require refinishing as part of routine brake system service. New disc brake rotors do not require refinishing.

  Do not refinish disc brake rotors in an attempt to correct the following conditions:

  - Brake system noise - squeal, growl, groan
  - Uneven and/or premature disc brake pad wear
  - Superficial or cosmetic corrosion/rust of the disc brake rotor friction surface
  - Scoring of the disc brake rotor friction surface less than the maximum allowable specification
- Before refinishing a brake rotor, the rotor MUST first be checked for adequate thickness to allow the rotor to be refinished and remain above the minimum allowable thickness after refinish specification. Refer to Brake Rotor Thickness Measurement.

  Disc brake rotors should only be refinished if they have adequate thickness to be refinished and if one or more of the following conditions exist:

  - Thickness variation in excess of the maximum allowable specification
  - Excessive corrosion/rust and/or pitting
  - Cracks and/or heat spots
  - Excessive blueing discoloration
  - Scoring of the disc brake rotor surface in excess of the maximum allowable specification
- Disc brake rotors may need to be refinished as part of the process for correcting brake rotor assembled lateral runout (LRO) that exceeds the maximum allowable specification.

Note: If the vehicle is equipped with cross-drilled rotors, use a lathe with positive rake tooling. This setup requires less cutting pressure, which will result in less vibration, and a better surface finish. Also, use a vibration dampener when cutting. Otherwise, refinish according to the following instructions.

> **Note:** Whenever the brake rotor has been separated from the hub/axle flange, clean any rust or contaminants from the hub/axle flange and the brake rotor mating surfaces. Failure to do this may result in increased assembled lateral runout (LRO) of the brake rotor, which could lead to brake pulsation.

1. Using the *J-42450-A* kit , thoroughly clean any rust or corrosion from the mating surface of the hub/axle flange.
2. Using the *J-41013* kit , thoroughly clean any rust or corrosion from the mating surface and mounting surface of the brake rotor.

cardiagn.com

4. Mount the brake rotor to the brake lathe according to the lathe manufacturer's instructions, ensuring that all mounting attachments and adapters are clean and free of debris.
5. Ensure that any vibration dampening attachments are securely in place.
6. With the brake lathe running, slowly bring in the cutting tools until they just contact the brake rotor friction surfaces.
7. Observe the witness mark on the brake rotor. If the witness mark extends approximately three-quarters or more of the way around the brake rotor friction surface on each side, the brake rotor is properly mounted to the lathe.
8. If the witness mark does not extend three-quarters or more of the way around the brake rotor, re-mount the rotor to the lathe.
9. Following the brake lathe manufacturer's instructions, refinish the brake rotor.
10. After each successive cut, inspect the brake rotor thickness. Refer to Brake Rotor Thickness Measurement.
11. If at any time the brake rotor exceeds the minimum allowable thickness after refinish specification, the brake rotor must be replaced.
12. After refinishing the brake rotor, use the following procedure in order to obtain the desired non-directional finish:
    12.1. Follow the brake lathe manufacturer's recommended speed setting for applying a non-directional finish.
    12.2. Using moderate pressure, apply the non-directional finish:
    - If the lathe is equipped with a non-directional finishing tool, apply the finish with 120-grit aluminum oxide sandpaper.
    - If the lathe is not equipped with a non-directional finishing tool, apply the finish with a sanding block and 150-grit aluminum oxide sandpaper.

    12.3. After applying a non-directional finish, clean each friction surface of the brake rotor with denatured alcohol, or an equivalent approved brake cleaner and wipe each friction surface using a clean shop towel to remove metal particles remaining from machining. Repeat the cleaning process if necessary to remove all metal particles.
13. Remove the brake rotor from the brake lathe.
14. Measure the assembled LRO of the brake rotor to ensure optimum performance of the disc brakes. Refer to Brake Rotor Assembled Lateral Runout Measurement.
15. If the brake rotor assembled LRO measurement exceeds the specification, bring the LRO to within specifications. Refer to Brake Rotor Assembled Lateral Runout Correction.

cardiagn.com