2004 BRAKES

Vehicle Stability Assist System - TSX

COMPONENT LOCATION INDEX

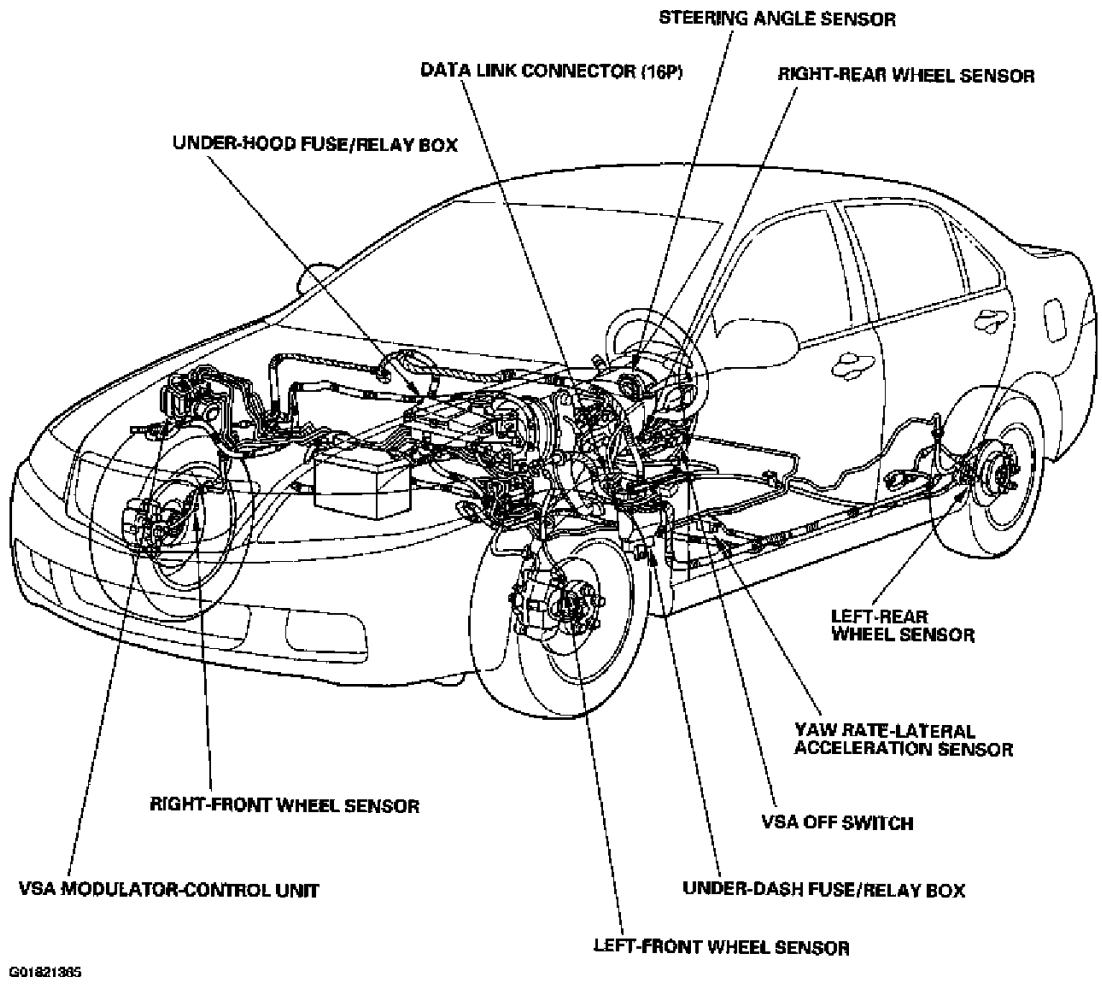

Fig. 1: Locating Vehicle Stability Assist System Components

GENERAL TROUBLESHOOTING INFORMATION

SYSTEM INDICATOR

This system has four indicators: ABS indicator (A), VSA indicator (B), VSA activation indicator (C) and brake system indicator (D). When the system detects a problem, it illuminates the appropriate indicators. Depending on the failure, the control unit determines which indicators are turned on.

When ABS Function Is Lost:

cardiagn.com

- ABS indicator, VSA indicator and VSA activation indicator turn on.

When VSA Function Is Lost:

- VSA indicator and VSA activation indicator turn on.

When All Functions Are Lost:

- All four indicators turn on.

When The Gauge Assembly Detects F-CAN Circuit Problem:

- ABS indicator, VSA indicator and brake system indicator turn on.

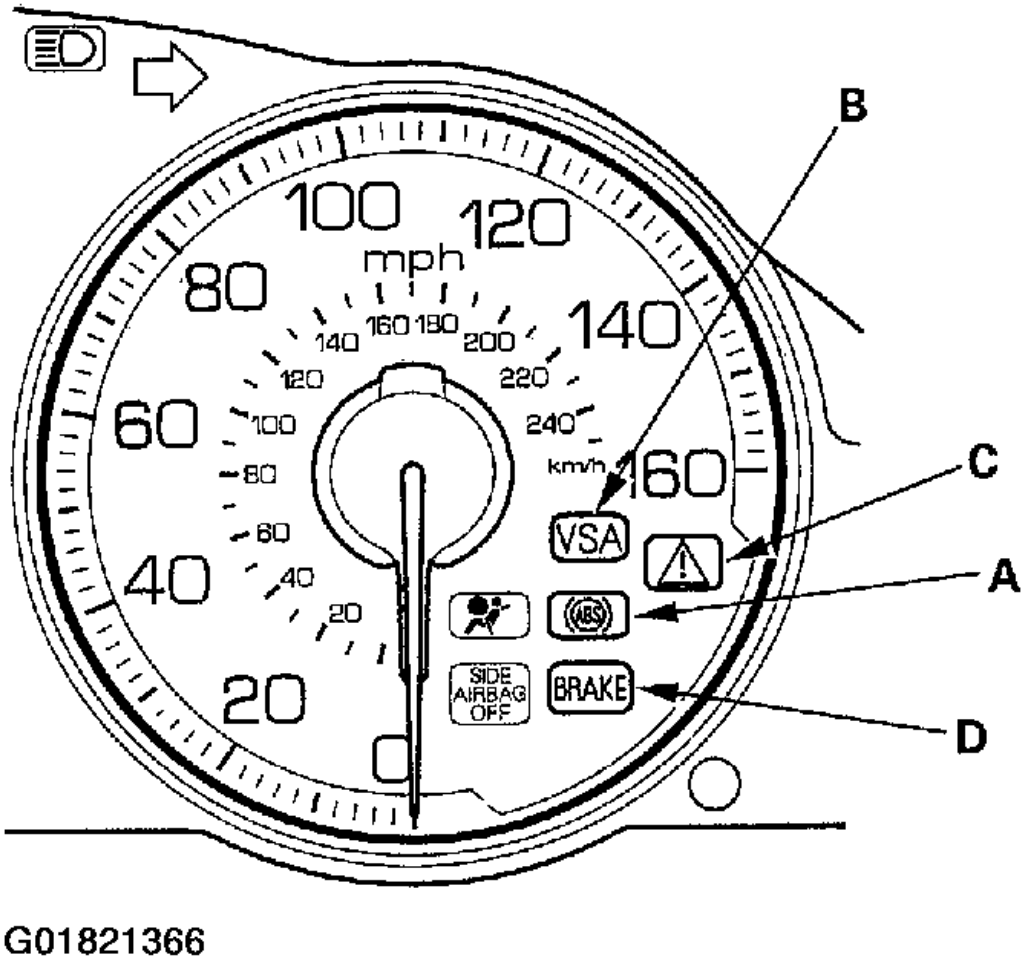

Fig. 2: Identifying Vehicle Stability Assist System Indicators

ABS/VSA INDICATOR

If the system is OK, the ABS and VSA indicators go off 2 seconds after turning the ignition switch ON (II).

cardiagn.com

The ABS and VSA indicators come on when the control unit detects a problem in the system. However, even though the system is operating properly, the indicator may come on under these conditions:

- Only the drive wheel rotates
- One drive wheel is stuck
- The vehicle goes into a spin
- The ABS or VSA continues to operate for a long time
- The vehicle is subjected to an electrical signal disturbance

To determine the actual cause of the problem, question the customer about the problem, taking the above conditions into consideration.

When a problem is detected and the ABS indicator comes on, but not the VSA indicator, there are cases when the indicator stays on until the ignition switch is turned OFF, and cases when the indicator goes off automatically when the system returns to normal:

DTC 61 Or 62:
- The ABS and VSA indicators go off automatically when the system returns to normal.

DTC 11, 13, 15, 17, 31, 32, 33, 34, 35, 36, 37, 38, 53, 54, 71, 81, 112, 121, 122, 123 Or 124:
- The ABS and VSA indicators stay on until the ignition switch is turned OFF whether or not the system returns to normal.

DTC 12, 14, 16, 18, 21, 22, 23, 24, 41, 42, 43, 44, 51 Or 52:
- The ABS and VSA indicators stay on until the system returns to normal after the vehicle is driven.

DTC 64, 65, 66, 68, 83, 84 Or 86:
- The VSA indicator stays on until the ignition switch is turned OFF whether or not the system returns to normal.

DIAGNOSTIC TROUBLE CODE (DTC)

The memory can hold any number of DTCs. However, when the same DTC is detected more than once, the more recent DTC is written over the earlier one. Therefore, when the same problem is detected repeatedly, it is memorized as a single DTC.

The DTCs are indicated in ascending number order, not in the order they occur.

The DTCs are memorized in the EEPROM (non-volatile memory). Therefore, the memorized DTCs cannot be canceled by disconnecting the battery. Do the specified procedures to clear the DTCs (see **HOW TO CLEAR DTCS**).

SELF-DIAGNOSIS

Self-diagnosis can be classified into two categories:

- **Initial Diagnosis:** Done right after the ignition switch turned ON (II) and until the ABS or VSA

cardiagn.com

indicators go off.

- **Regular Diagnosis:** Done right after the initial diagnosis until the ignition switch is turned OFF.

When the system detects a problem, the VSA control unit shifts to fail-safe mode.

KICKBACK

The pump motor operates when the ABS or VSA is functioning, and the fluid in the reservoir is forced out to the master cylinder, causing kickback at the brake pedal.

PUMP MOTOR

The pump motor operates when the ABS or VSA is functioning.

The VSA control unit checks the pump motor operating during initial diagnosis when the vehicle is driven over 10 mph (15 km/h) the first time after the ignition switch is turned ON (II). You may hear the motor operate at this time, but it is normal.

BRAKE FLUID REPLACEMENT/AIR BLEEDING

Brake fluid replacement and air bleeding procedures are identical to the procedures used on vehicles not equipped with VSA. To ease bleeding, start with the front wheels.

HOW TO TROUBLESHOOT DTCS

The troubleshooting flowchart procedures assume that the cause of the problem is still present and the ABS and/or VSA indicator is still on. Following the flowchart when the ABS and/or VSA indicator does not come on can result in incorrect diagnosis.

The connector illustrations show the female terminal connectors with a single outline and the male terminal connectors with a double outline.

1. Question the customer about the conditions when the problem occurred, and try to reproduce the same conditions for troubleshooting. Find out when the ABS and/or VSA indicator came on, such as during ABS control, after ABS control, when the vehicle was travelling at a certain speed, etc.
2. When the ABS or VSA indicator does not come on during the test drive, but troubleshooting is done based on the DTC, check for loose connectors, poor contact of the terminals, etc. before you start troubleshooting.
3. After troubleshooting, or repairs are done, clear the DTCs, and test-drive the vehicle. Make sure the ABS and VSA indicators do not come on.

HOW TO RETRIEVE DTCS

1. With the ignition switch OFF, connect the HDS to the 16P Data Link Connector (DLC) (A) under the left side of the dashboard.

cardiagn.com

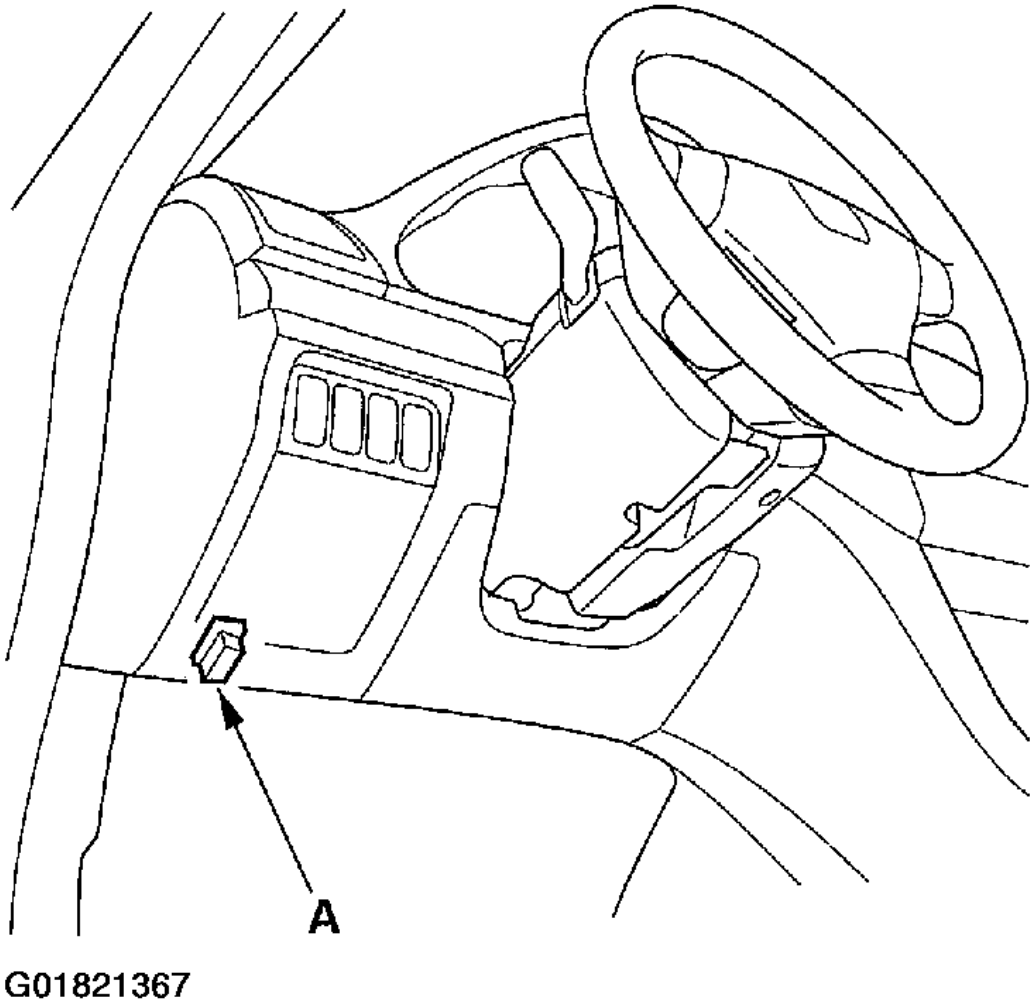

Fig. 3: Connecting The HDS To The 16P Data Link Connector (DLC) Under The Left Side Of The Dashboard

2. Turn the ignition switch ON (II), and follow the prompts on the HDS to display the DTC(s) on the screen. After determining the DTC, refer to the DTC Troubleshooting Index.

NOTE: See the HDS help menu for specific instructions.

HOW TO CLEAR DTCS

NOTE: You cannot clear the DTCs manually.

1. With the ignition switch OFF, connect the HDS to the 16P Data Link Connector (DLC) (A) under the left

cardiagn.com

side of the dashboard.

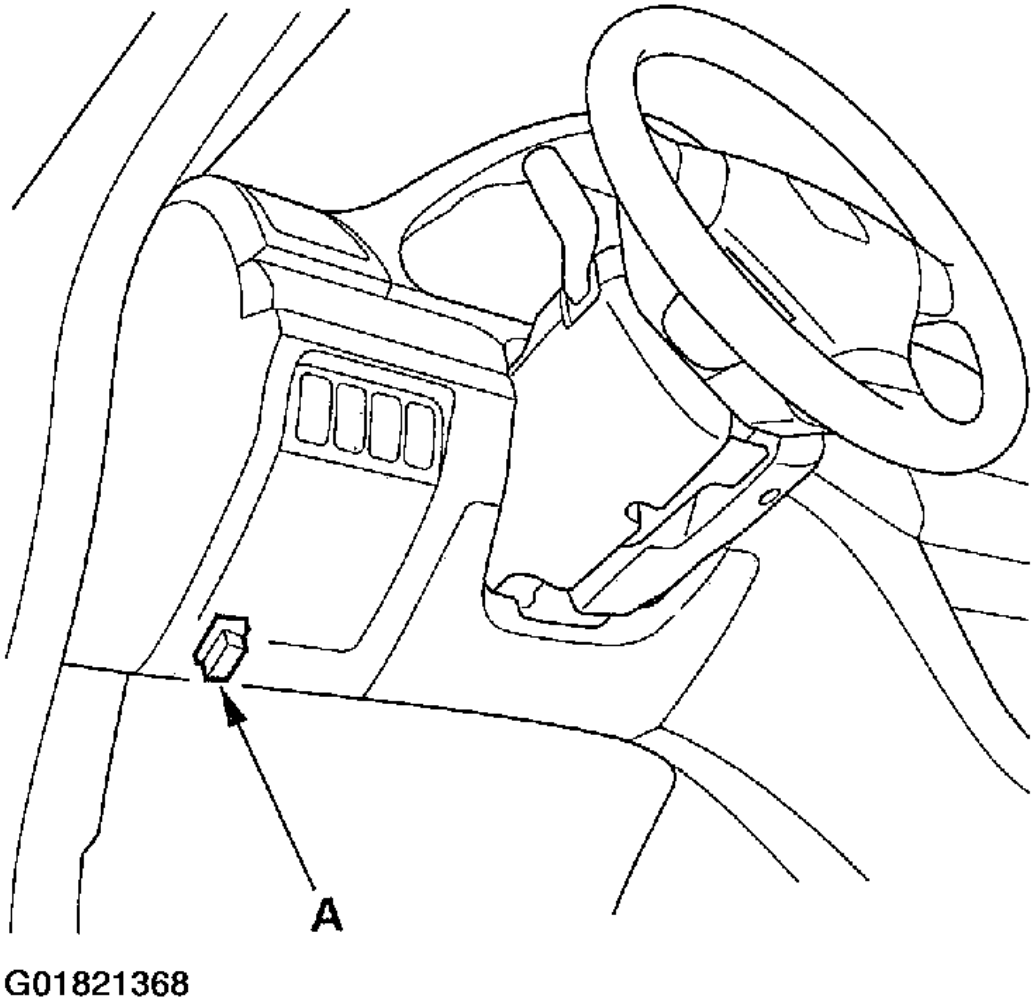

Fig. 4: Connecting The HDS To The 16P Data Link Connector (DLC) Under The Left Side Of The Dashboard

2. Turn the ignition switch ON (II), and clear the DTC(s) by following the screen prompts on the HDS.

NOTE: See the HDS help menu for specific instructions.

3. Do the VSA sensor neutral position memorization (see **VSA SENSOR NEUTRAL POSITION MEMORIZATION**).

DTC TROUBLESHOOTING INDEX

cardiagn.com

DTC TROUBLESHOOTING INDEX

DTC	Description
11, 13, 15, 17	Wheel Sensor (Open/Short To Body Ground/Short To Power)
12, 14, 16, 18	Wheel Sensor (Electrical Noise/Intermittent Interruption)
21, 22, 23, 24	Magnetic Encoder
25	Yaw Rate Sensor
26	Lateral Acceleration Sensor
27	Steering Angle Sensor
31, 32, 33, 34, 35, 36, 37, 38	ABS Solenoid
41, 42, 43, 44	Wheel Lock
51	Motor Lock
52	Motor Stuck OFF
53	Motor Stuck ON
54	Fail-Safe Relay
61, 62	High/Low Voltage
64	Sensor Power Voltage
65	Brake Fluid Level
66	VSA Pressure Sensor (Inside Of VSA Modulator-Control Unit)
68	Brake Pedal Position Switch
71	Different Diameter Tire
81	Central Processing Unit (CPU)
83	ECM/PCM
84	VSA Sensor Neutral Position
86	F-CAN Communication
107	TCS Operation
108	VSA Operation
112	Internal Power Source Stuck OFF
121, 122, 123, 124	VSA Solenoid

SYMPTOM TROUBLESHOOTING INDEX

cardiagn.com

Symptom	Diagnostic procedure
ABS indicator does not come on	ABS Indicator Circuit Troubleshooting
ABS indicator does not go off, and no DTCs are stored	ABS Indicator Circuit Troubleshooting
Brake system indicator does not come on (check bulb operation with parking brake)	Brake System Indicator Circuit Troubleshooting
Brake system indicator does not go off	Brake System Indicator Circuit Troubleshooting
VSA indicator does not come on	VSA Indicator Circuit Troubleshooting
VSA indicator does not go off, and no DTCs are stored	VSA Indicator Circuit Troubleshooting
VSA activation indicator does not come on	VSA Activation Indicator Circuit Troubleshooting
VSA activation indicator does not go off, and no DTCs are stored	VSA Activation Indicator Circuit Troubleshooting

G01821370

Fig. 5: Symptom Troubleshooting Index

SYSTEM DESCRIPTION

VSA CONTROL UNIT INPUTS & OUTPUTS FOR 47P CONNECTOR

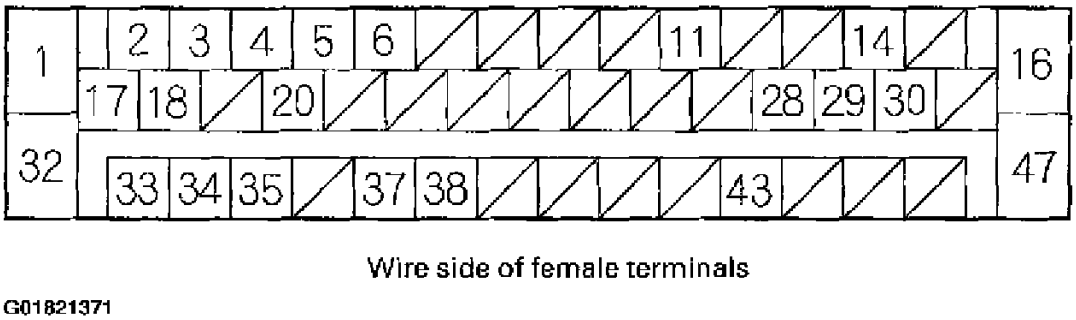

G01821371

Fig. 6: Identifying VSA Control Unit 47P Connector Terminals

cardiagn.com

Terminal number	Wire color	Terminal sign	Description	Measurement (VSA control unit 47P connector connected)		
				Terminal	Conditions	Voltage
1	WHT	+B-FSR	Power source for the fail-safe relay	1—GND	At all times	Battery voltage
2	YEL/RED	RL+B	Detects left-rear wheel sensor signal	2—3	Ignition switch ON (II)	About 12 V
3	RED	RL—GND				
4	BLU/WHT	FL+B	Detects left-front wheel sensor signal	4—20		
5	GRN/YEL	RR+B	Detects right-rear wheel sensor signal	5—6		
6	BLU/YEL	RR—GND				
11	BLU	DIAG-K	Communications with HDS	11—GND	Ignition switch ON (II)	Battery voltage
14	WHT	CAN-H	F-CAN communication circuit	14—GND	Ignition switch ON (II)	About 2.5 V
16	WHT/RED	+B-MR	Power souce for the motor relay	16—GND	At all times	Battery votage

G01821372

Fig. 7: VSA Control Unit Pin Voltage Chart (1 Of 3)

Terminal number	Wire color	Terminal sign	Description	Measurement (VSA control unit 47P connector connected)		
				Terminal	Conditions	Voltage
17	PNK	FR—GND	Detects right-front wheel sensor signal	17—18	Ignition switch ON (II)	About 12 V
18	GRN/BLK	FR+B				
20	BRN/WHT	FL—GND	Detects left-front wheel sensor signal	4—20		
28	BLU	STR-A	Detects steering angle sensor signal	28—GND	Ignition switch ON (II)	1 V—5 V alternately
29	BLU/GRN	STR-D	Detects steering angle sensor signal	29—GND	Ignition switch ON (II) Steering wheel in straight ahead position, then turned off of center	1 V on center 4 V off center
30	RED	CAN-L	F-CAN communication circuit	30—GND	Ignition switch ON (II)	2.3 V

G01821373

Fig. 8: VSA Control Unit Pin Voltage Chart (2 Of 3)

cardiagn.com

Terminal number	Wire color	Terminal sign	Description	Measurement (VSA control unit 47P connector connected)		
				Terminal	Conditions	Voltage
32	BLK	GND	Ground for the VSA modulator-control unit	32 – GND	Under all conditions	0 V
33	BRN	SGND	Ground for the sensors	33 – GND	Ignition switch ON (II)	0 V
34	LT GRN	YAW	Detects YAW rate sensor signal	34 – GND	Ignition switch ON (II)	2.5 V
35	ORN	SVCC	Power source for the sensors	35 – GND	Ignition switch ON (II)	5 V
37	GRN	GLAT	Detects lateral acceleration sensor signal	37 – GND	Ignition switch ON (II)	2.5 V
38	BLK/ RED	IG1	Power source for activating the system	38 – GND	Ignition switch ON (II)	Battery voltage
43	BUL/ YEL	STR-B	Detects steering angle sensor signal	43 – GND	Ignition switch ON (II) Turn steering wheel very slowly	1 – 4 V
47	BLK	MR-GND	Ground for the pump motor	47 – GND	Under all conditions	0 V

G01821374

Fig. 9: VSA Control Unit Pin Voltage Chart (3 Of 3)

ABS FEATURES

When the brake pedal is pressed while driving, the wheels can lock before the vehicle comes to a stop. In such an event, the maneuverability of the vehicle is reduced if the front wheels are locked, and the stability of the vehicle is reduced if the rear wheels are locked, creating an extremely unstable condition. The ABS precisely controls the slip rate of the wheels to ensure maximum grip force from the tires, and it thereby ensures maneuverability and stability of the vehicle.

The ABS calculates the slip rate of the wheels based on the vehicle speed and the wheel speed, then it controls the brake fluid pressure to reach the target slip rate.

cardiagn.com

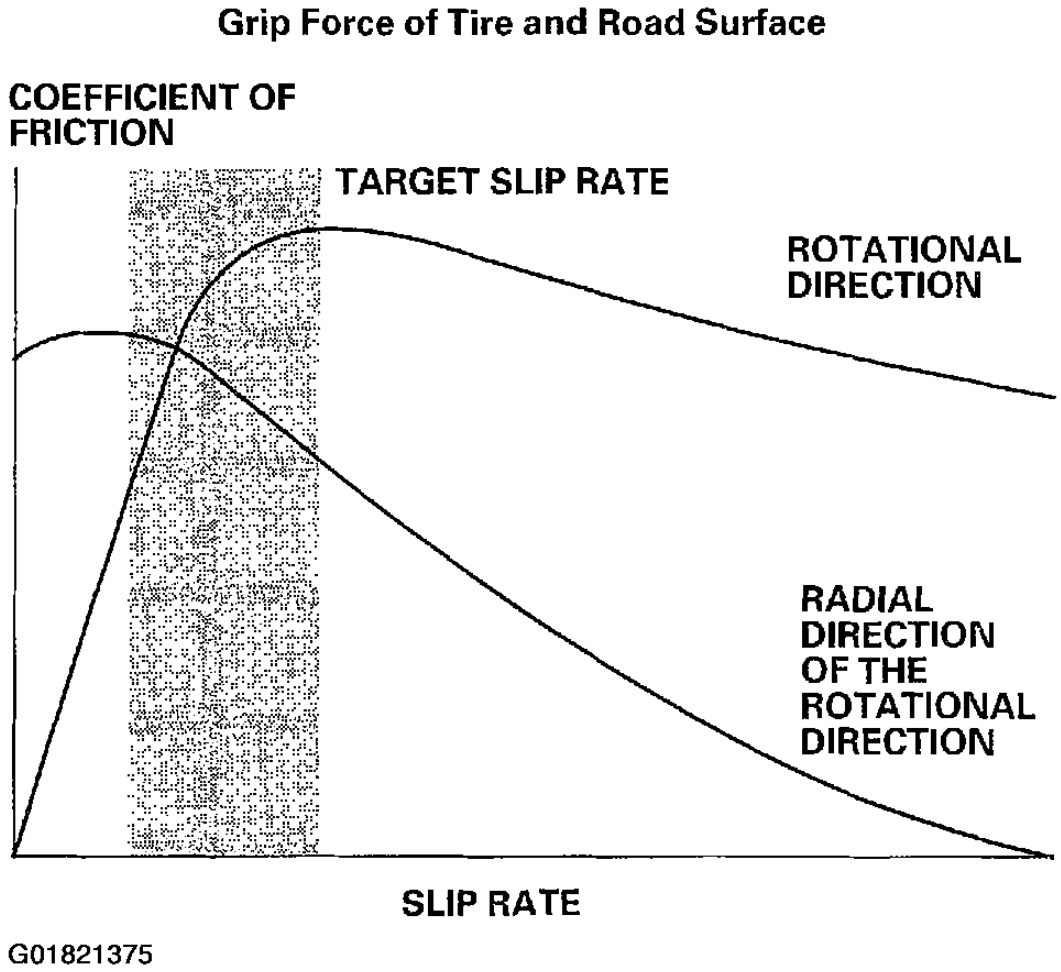

Fig. 10: Grip Force Of Tire & Road Surface

TCS FEATURES

The TCS provides low-speed traction. When a drive wheel loses traction on a slippery road surface and starts to spin, the VSA modulator-control unit applies brake pressure to slow the spinning wheel. At that time, the VSA control unit sends a traction control signal to the ECM/PCM to reduce engine power.

cardiagn.com

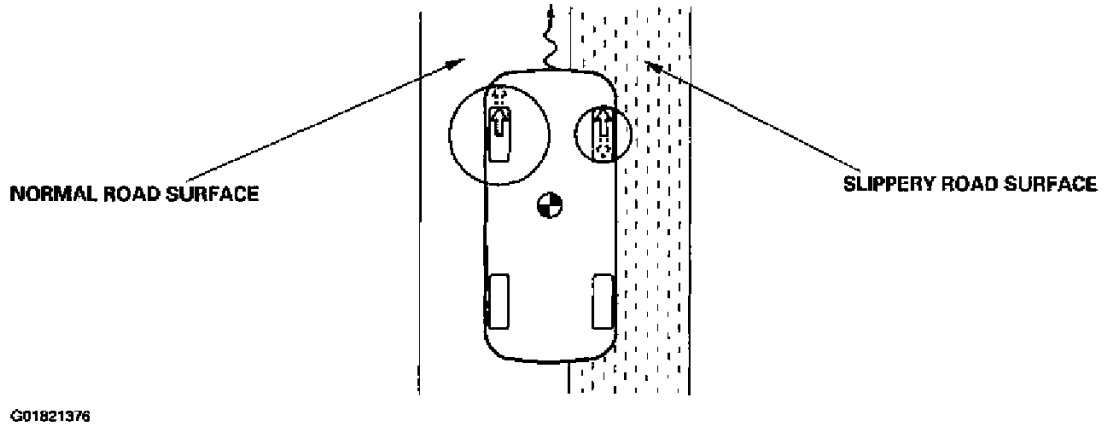

Fig. 11: TCS Operation

VSA SYSTEM FEATURES

Oversteer Control

- Applies the brake to the front and rear outside wheels

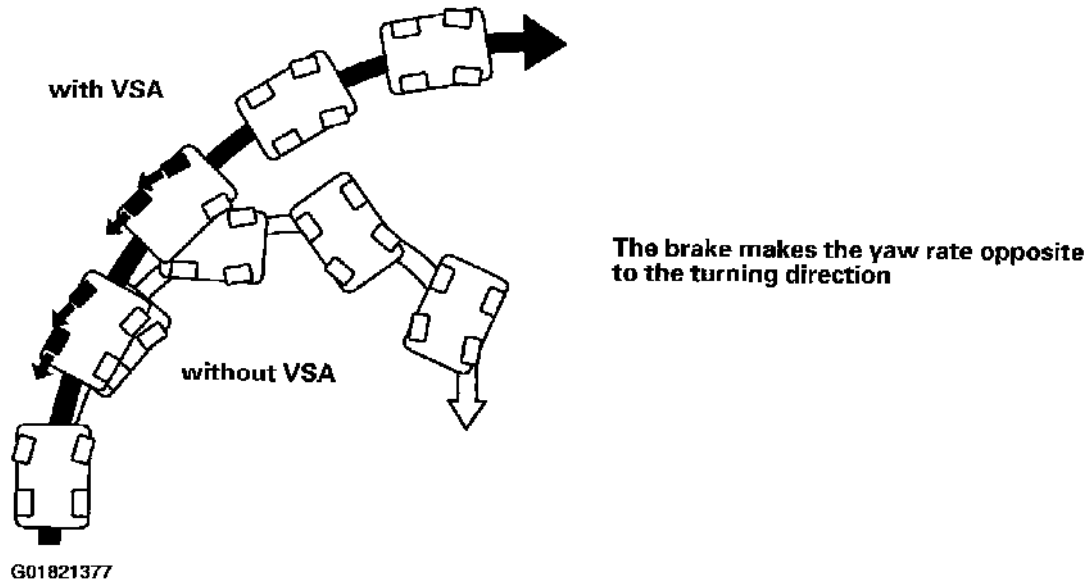

Fig. 12: VSA Oversteer Control

Understeer Control (In Acceleration)

- Applies the brake to the front and rear inside wheels
- Cuts the engine torque by controlling the sub throttle

cardiagn.com

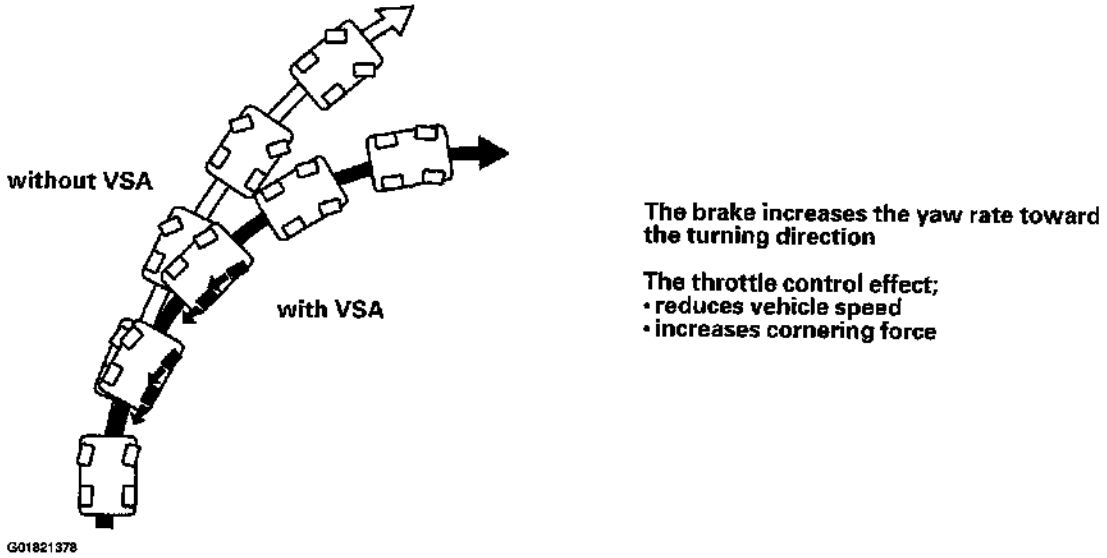

Fig. 13: VSA Understeer Control (In Acceleration)

MODULATOR UNIT

The modulator unit consists of the inlet solenoid valve, outlet solenoid valve, VSA normally open (NO) solenoid valve, VSA normally closed (NC) solenoid valve, reservoir, pump, pump motor, and the damping chamber.

The modulator controls the caliper fluid pressure directly. It is a circulating-type modulator because the brake fluid circulates through the caliper, the reservoir, and the master cylinder.

The hydraulic control has three modes: pressure intensifying, pressure retaining, and pressure reducing.

The hydraulic circuit is an independent four channel type, one channel for each wheel.

ABS Control

Pressure Intensifying Mode

VSA NO valve open, VSA NC valve closed, inlet valve open, outlet valve closed. Master cylinder fluid is pumped out to the caliper.

Pump Motor

When starting the pressure reducing mode, the pump motor is ON. When stopping ABS operation, the pump motor is OFF. The reservoir fluid is pumped out by the pump, through the damping chamber, to the master cylinder.

cardiagn.com

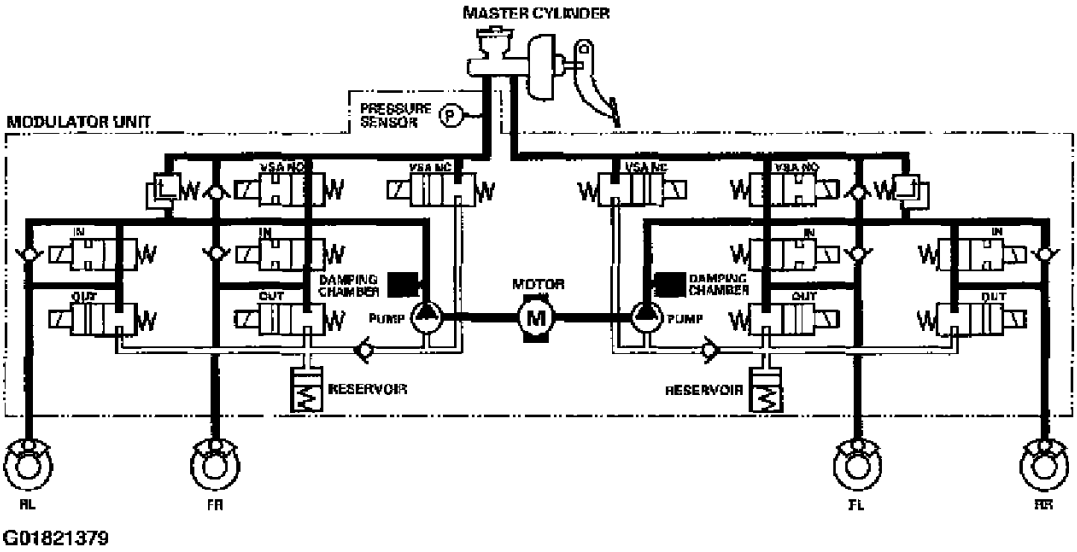

Fig. 14: ABS Control Pump Motor Schematic

Pressure Retaining Mode

VSA NO valve open, VSA NC valve closed, inlet valve closed, outlet valve closed. Caliper fluid is retained by the inlet valve and outlet valve.

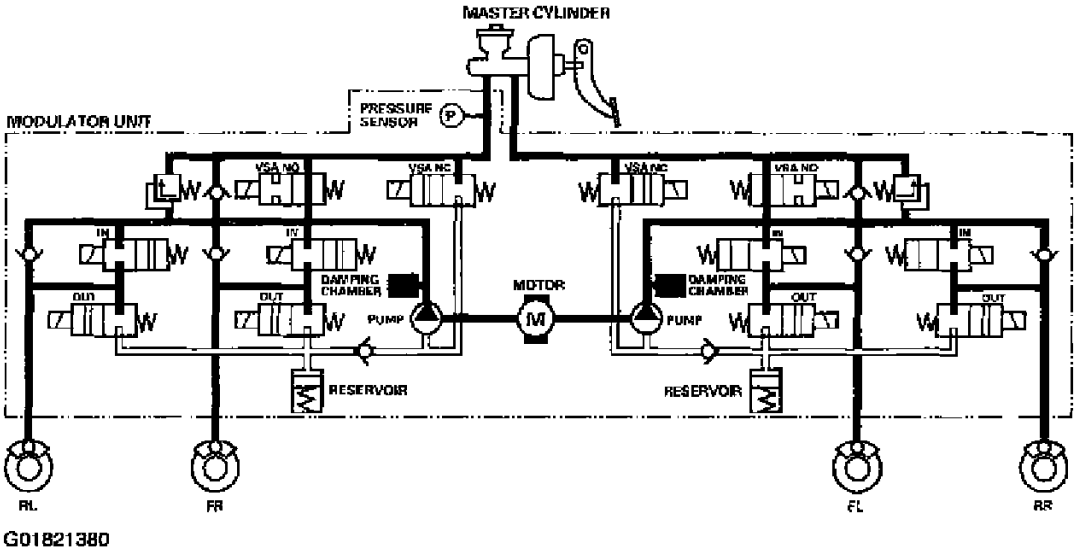

Fig. 15: ABS Control Pressure Retaining Mode Schematic

Pressure Reducing Mode

cardiagn.com

VSA NO valve open, VSA NC valve closed, inlet valve closed, outlet valve open. Caliper fluid flows through the outlet valve to the reservoir.

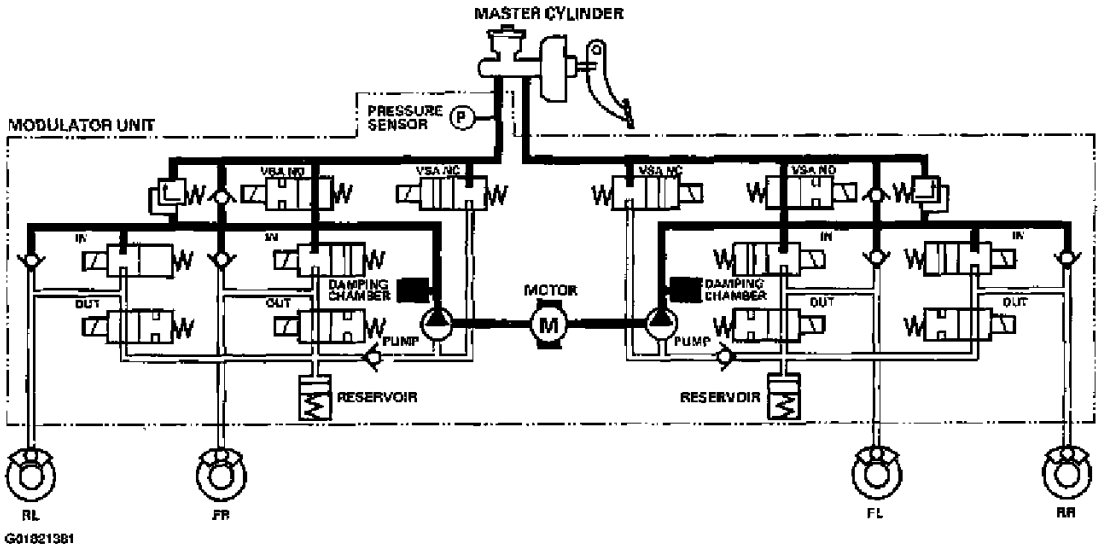

Fig. 16: ABS Control Pressure Reducing Mode Schematic

TCS Control

Pressure Intensifying Mode

VSA NO valve closed, VSA NC valve open, inlet valve open, outlet valve closed, pump motor ON. The reservoir and master cylinder fluid is pumped out by the pump, through the damping chamber, to the front caliper.

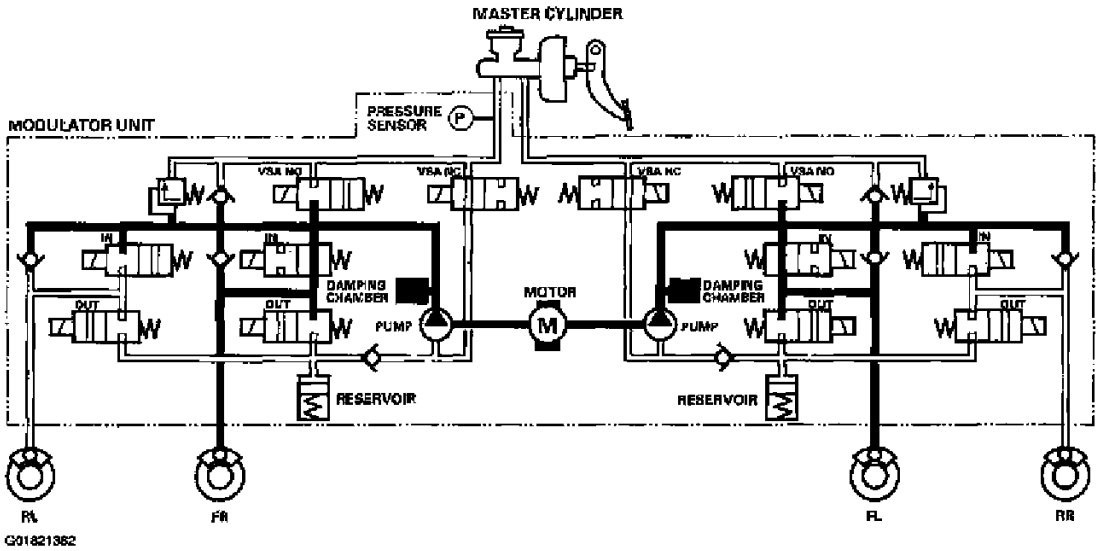

cardiagn.com

Fig. 17: TCS Control Pressure Intensifying Mode Schematic

Pressure Retaining Mode

VSA NO valve closed, VSA NC valve open, inlet valve closed, outlet valve closed, pump motor ON. Front caliper fluid is retained by the inlet valve and outlet valve.

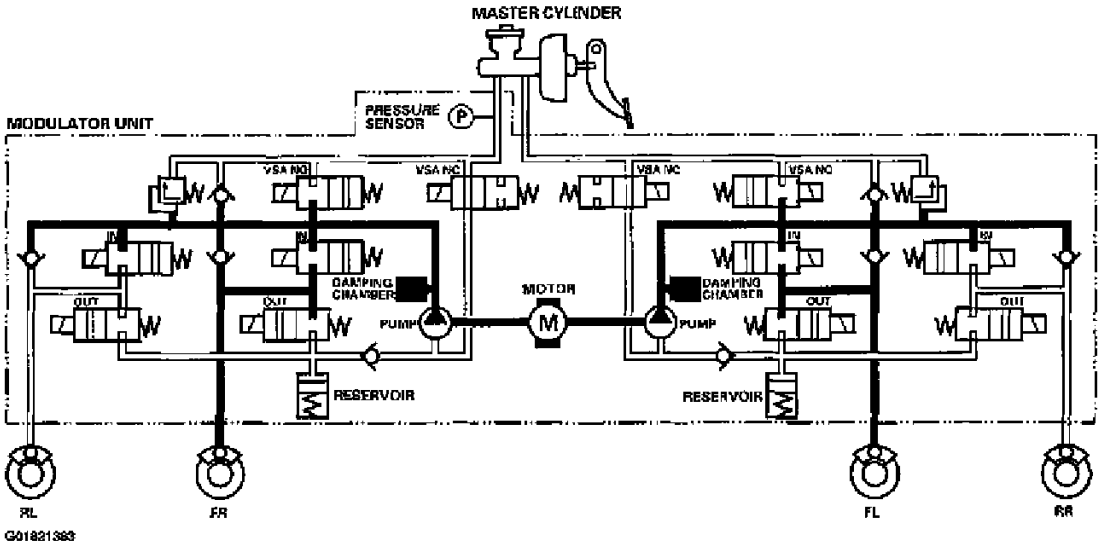

Fig. 18: TCS Control Pressure Retaining Mode Schematic

Pressure Reducing Mode

VSA NO valve closed, VSA NC valve open, inlet valve closed, front outlet valve open, pump motor ON. Caliper fluid flows through the outlet valve to the reservoir.

cardiagn.com

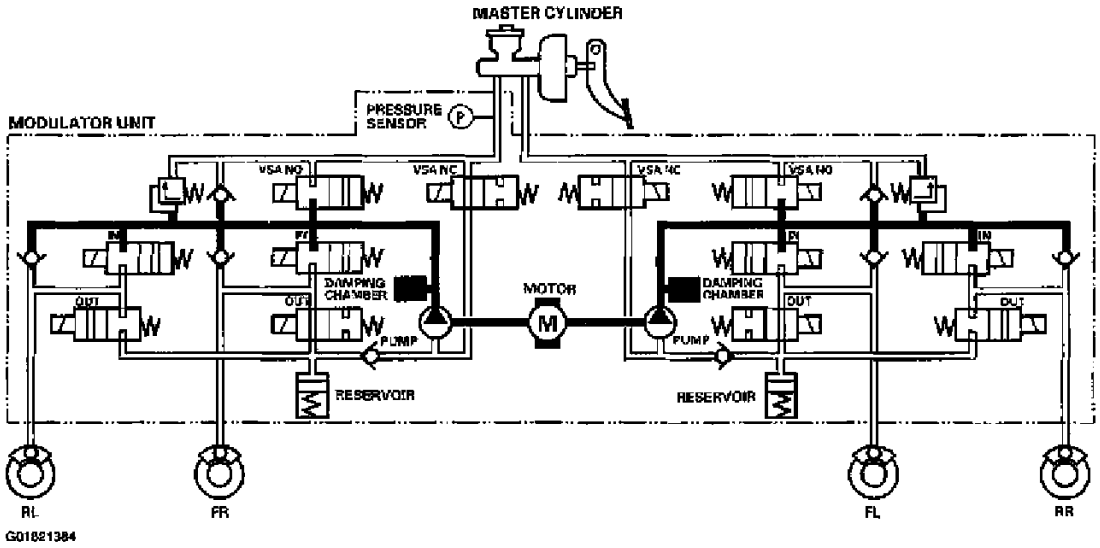

Fig. 19: TCS Control Pressure Reducing Mode Schematic

VSA Control

Pressure Intensifying Mode

VSA NO valve closed, VSA NC valve open, inlet valve open, outlet valve closed, pump motor ON. The reservoir and master cylinder fluid is pumped out by the pump, through the damping chamber, to the front and rear calipers.

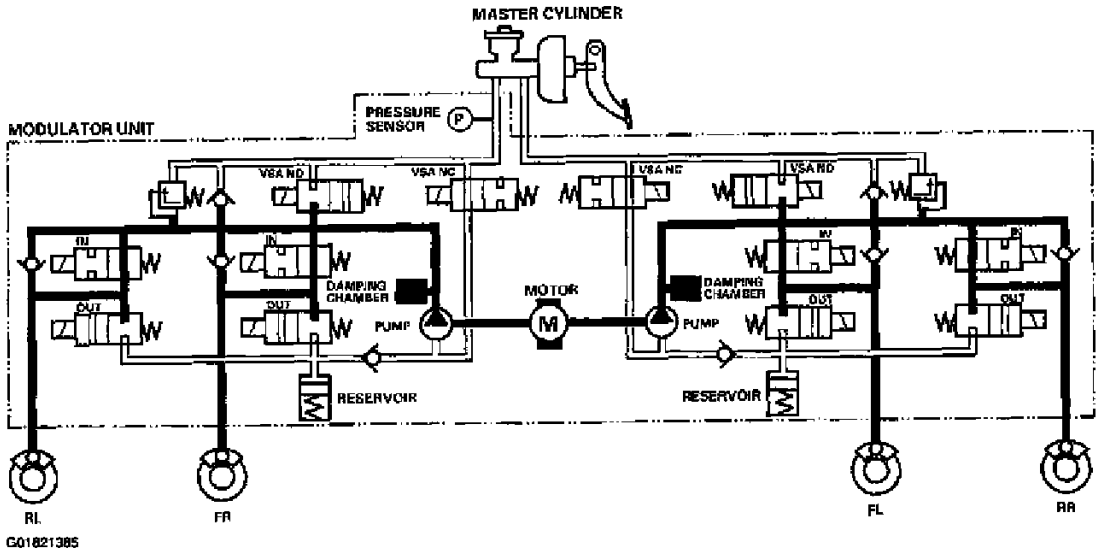

Fig. 20: VSA Control Pressure Intensifying Mode Schematic

Pressure Retaining Mode

cardiagn.com

VSA NO valve closed, VSA NC valve open, inlet valve closed, outlet valve closed, pump motor ON. Front and rear caliper fluid is retained by the inlet valve and outlet valve.

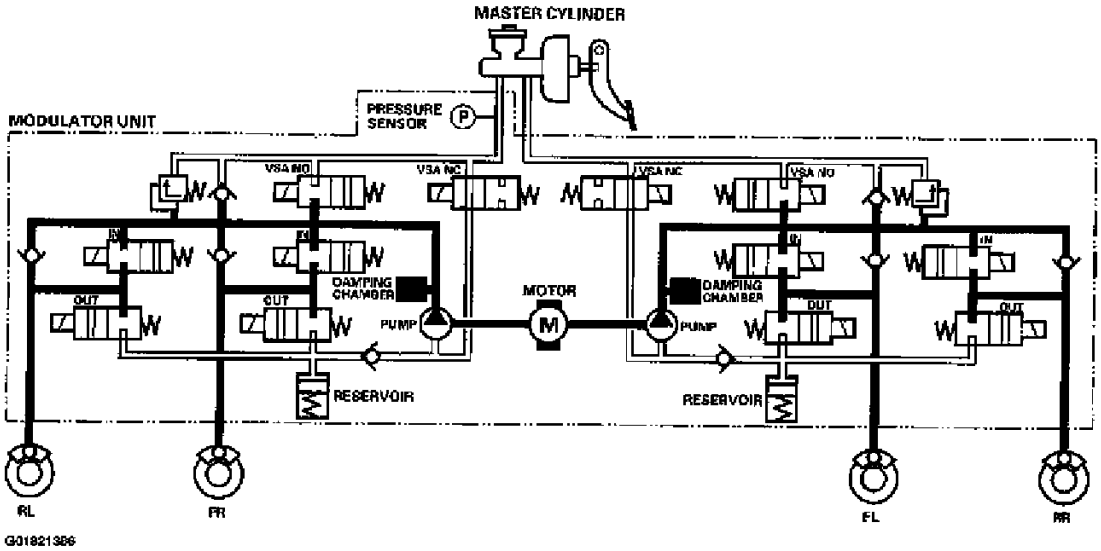

Fig. 21: VSA Control Pressure Retaining Mode Schematic

Pressure Reducing Mode

VSA NO valve closed, VSA NC valve open, inlet valve closed, outlet valve open, pump motor ON. Caliper fluid flows through the outlet valve to the reservoir.

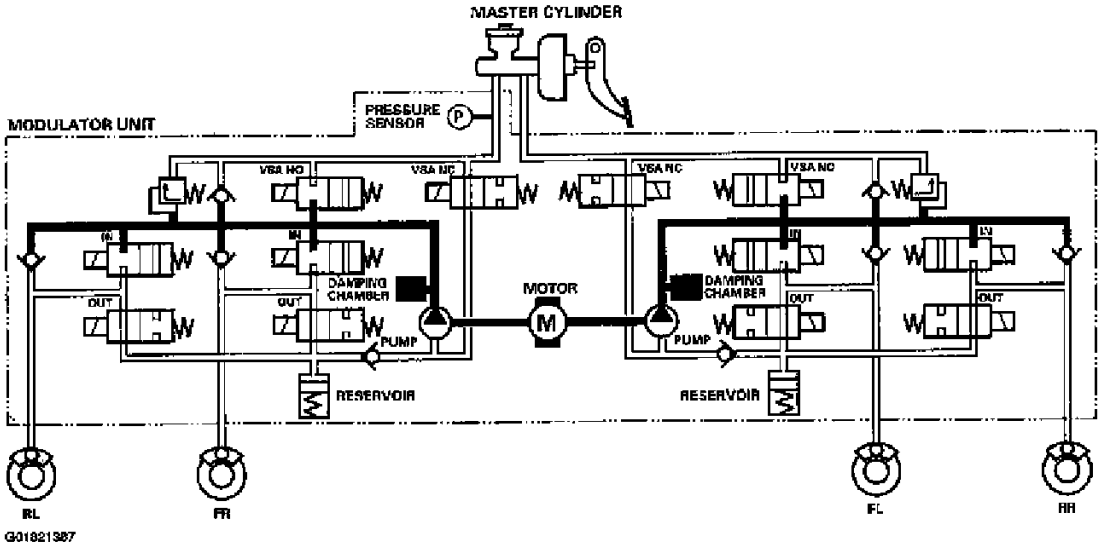

Fig. 22: VSA Control Pressure Reducing Mode Schematic

CIRCUIT DIAGRAM

cardiagn.com

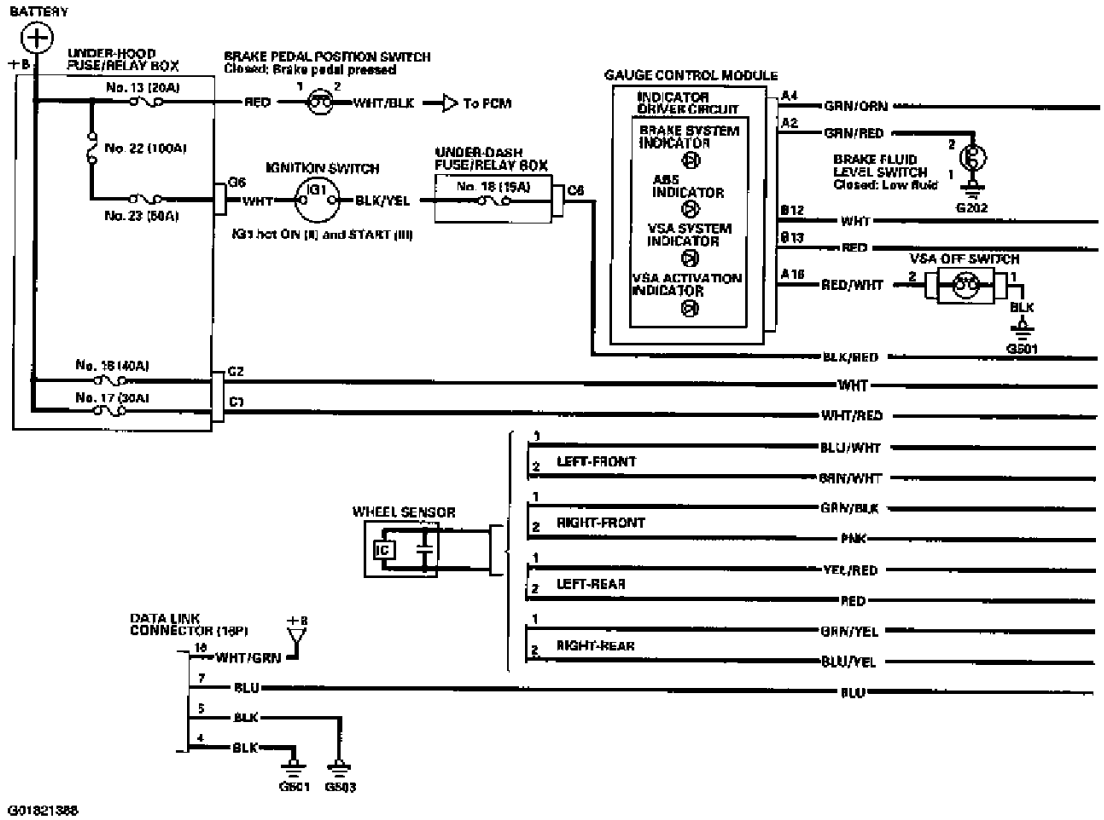

Fig. 23: Vehicle Stability Assist System Wiring Diagram (1 Of 2)

cardiagn.com

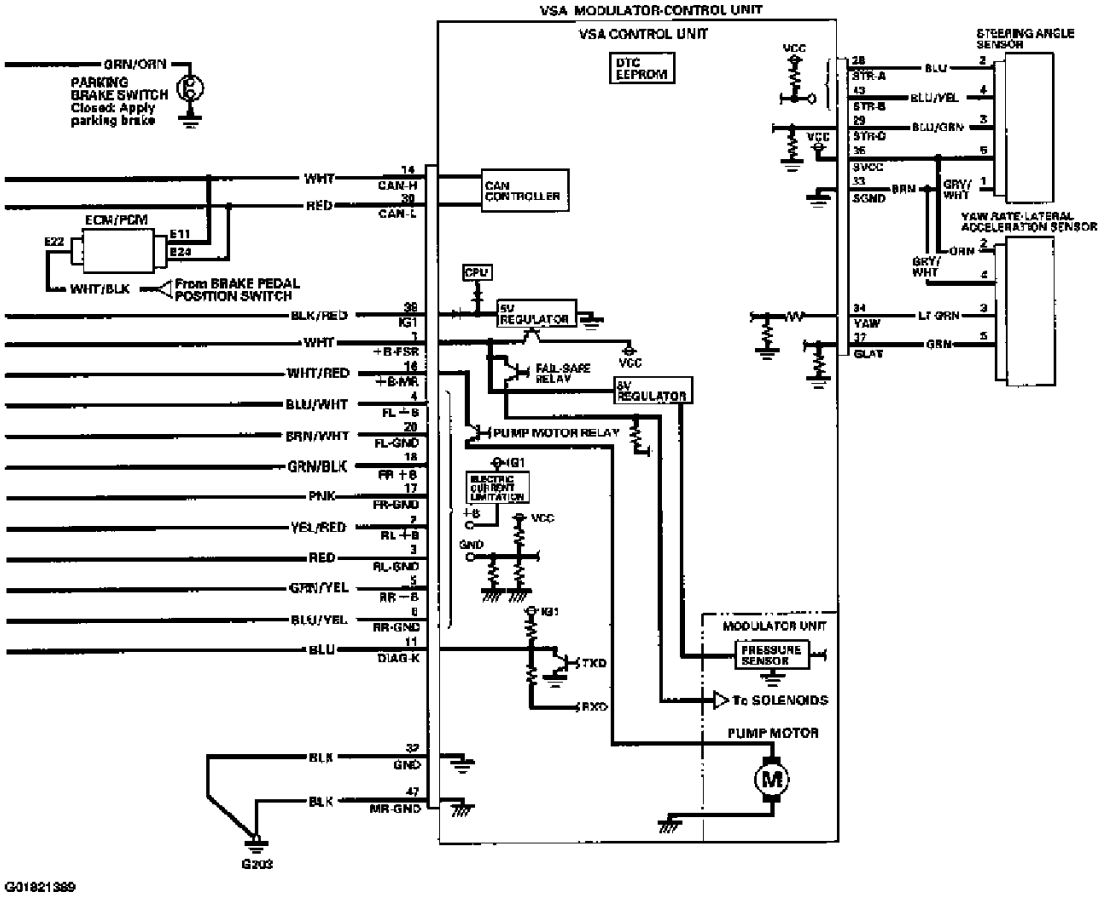

Fig. 24: Vehicle Stability Assist System Wiring Diagram (2 Of 2)

cardiagn.com

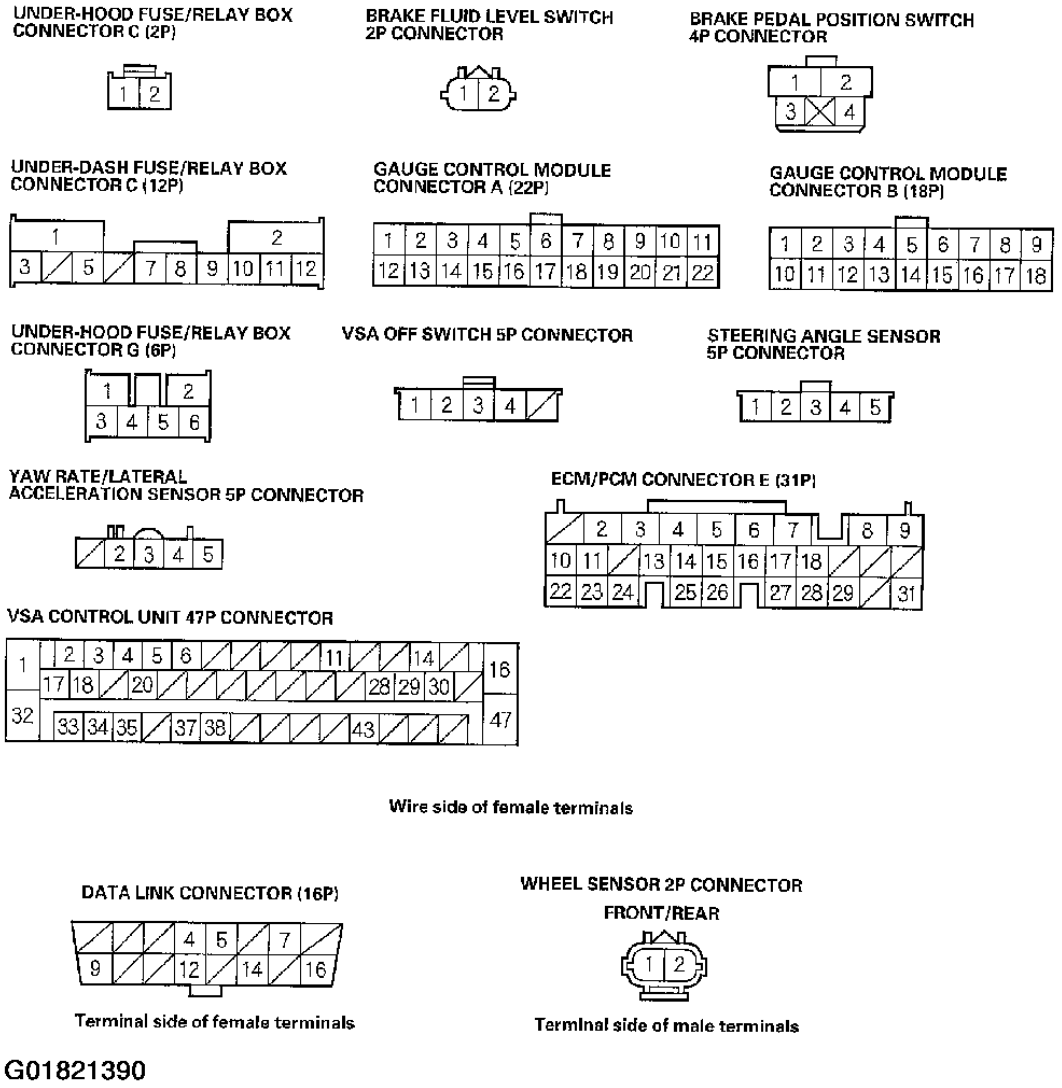

Fig. 25: Identifying Vehicle Stability Assist System Connector Terminals

DTC TROUBLESHOOTING

DTC 11, 13, 15, 17: WHEEL SENSOR (OPEN/SHORT TO BODY GROUND/SHORT TO POWER)

1. Disconnect the VSA control unit 47P connector.
2. Start the engine.
3. Measure the voltage between body ground and the appropriate wheel sensor + B and GND terminals of the VSA control unit 47P connector individually (see **Fig. 26** and **Fig. 27**).

Is there 1 V or more?

YES: Repair short to power in the wire between the VSA modulator-control unit and the

cardiagn.com

appropriate wheel sensor.
NO: Go to step 4.

DTC	Appropriate Terminal	
	+B	GND
11 (Right-front)	FR +B: No. 18	FR −GND: No. 17
13 (Left-front)	FL +B: No. 4	FL −GND No. 20
15 (Right-rear)	RR +B: No. 5	RR −GND: No. 6
17 (Left-rear)	RL +B: No. 2	RL −GND: No. 3

G01821391

Fig. 26: Wheel Sensor DTC Table

cardiagn.com

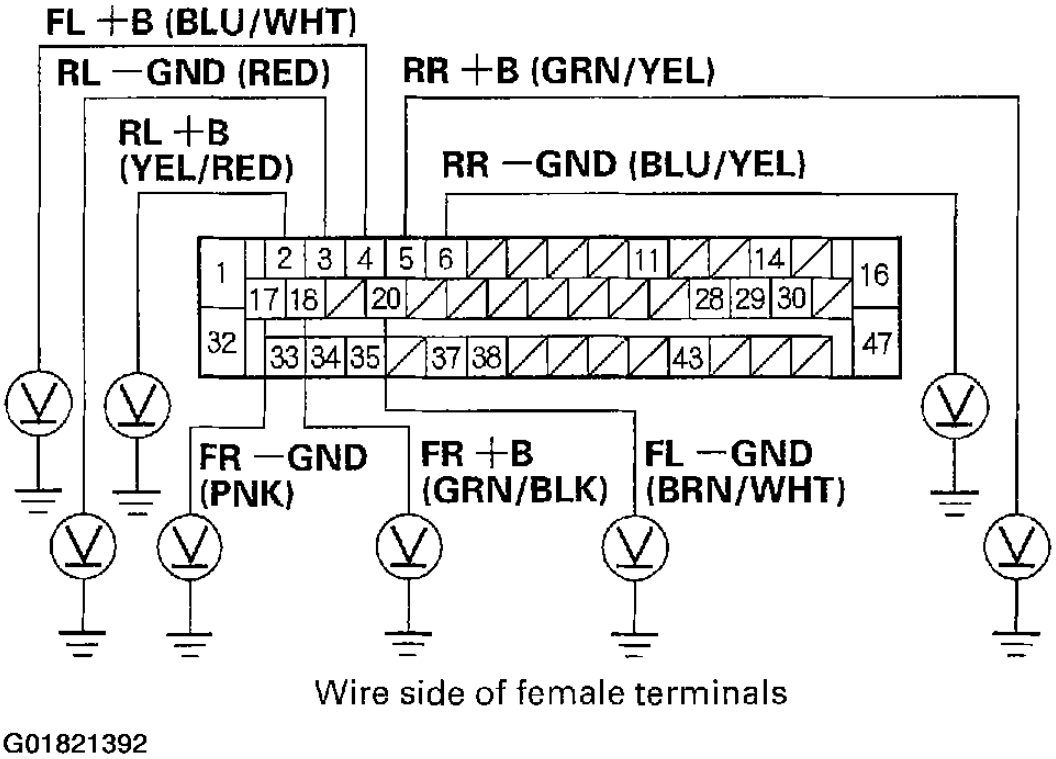

Fig. 27: Measuring The Voltage Between Body Ground & The Appropriate Wheel Sensor + B & Gnd Terminals Of The VSA Control Unit 47P Connector

4. Turn the ignition switch OFF.
5. Check for continuity between body ground and the appropriate wheel sensor + B and GND terminals of the VSA control unit 47P connector individually (see **Fig. 28** and **Fig. 29**).

Is there continuity?

YES: Go to step 6.

NO: Go to step 8 .

cardiagn.com

DTC	Appropriate Terminal	
	+B	GND
11 (Right-front)	FR +B: No. 18	FR−GND: No. 17
13 (Left-front)	FL +B: No. 4	FL−GND: No. 20
15 (Right-rear)	RR +B: No. 5	RR−GND: No. 6
17 (Left-rear)	RL +B: No. 2	RL−GND: No. 3

G01821393

Fig. 28: Wheel Sensor DTC Table

cardiagn.com

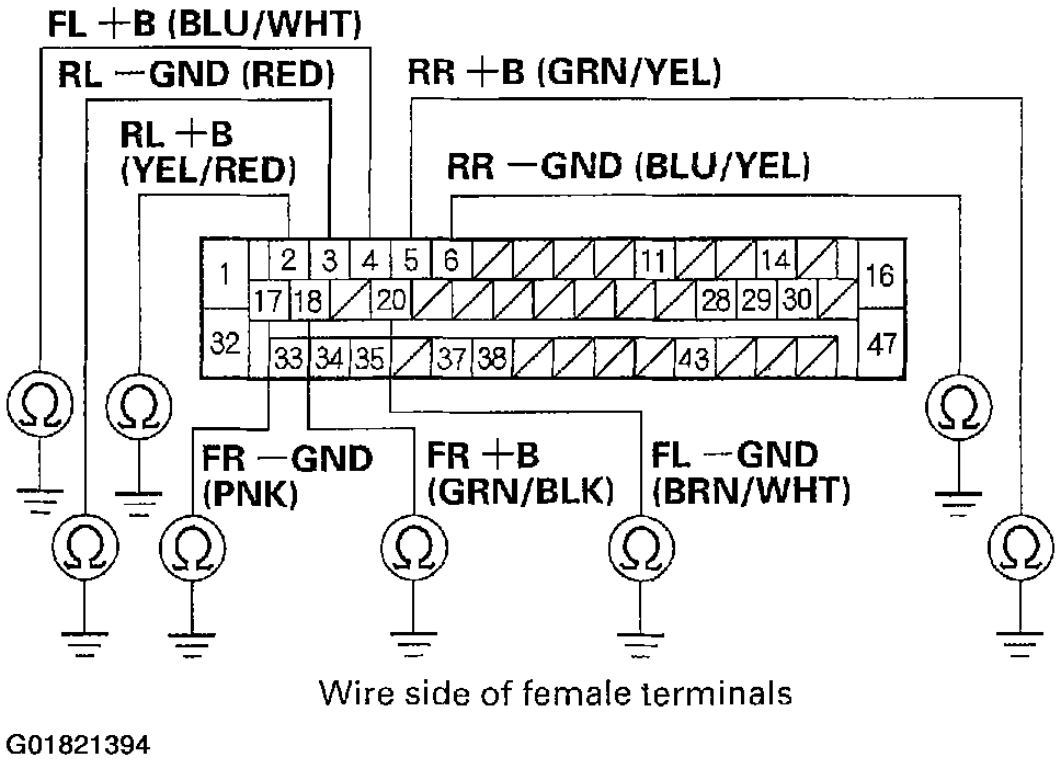

Fig. 29: Checking For Continuity Between Body Ground & The Appropriate Wheel Sensor + B & Gnd Terminals Of The VSA Control Unit 47P Connector

6. Disconnect the appropriate wheel sensor 2P connector.
7. Check for continuity between body ground and the appropriate wheel sensor + B and GND terminals of the VSA control unit 47P connector individually (see **Fig. 30** and **Fig. 31**).

Is there continuity?

YES: Repair short to body ground in the wire between the VSA modulator-control unit and the wheel sensor.

NO: Replace the appropriate wheel sensor (see **WHEEL SENSOR REPLACEMENT**).

cardiagn.com

DTC	Appropriate Terminal	
	+B	GND
11 (Right-front)	FR +B: No. 18	FR−GND: No. 17
13 (Left-front)	FL +B: No. 4	FL−GND: No. 20
15 (Right-rear)	RR +B: No. 5	RR−GND: No. 6
17 (Left-rear)	RL +B: No. 2	RL−GND: No. 3

G01821395

Fig. 30: Wheel Sensor DTC Table

cardiagn.com

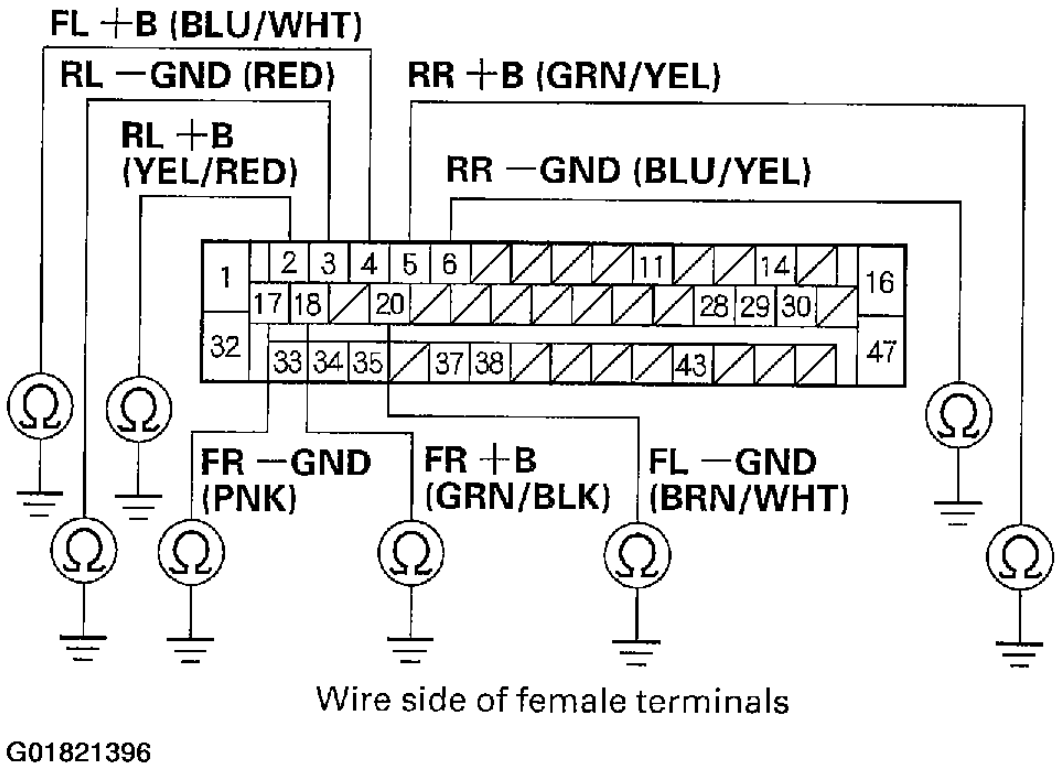

Fig. 31: Checking For Continuity Between Body Ground & The Appropriate Wheel Sensor + B & Gnd Terminals Of The VSA Control Unit 47P Connector

8. Disconnect the appropriate wheel sensor 2P connector.
9. Check for continuity between the appropriate wheel sensor + B and GND terminals of the VSA control unit 47P connector (see **Fig. 32** and **Fig. 33**).

   Is there continuity?

   YES: Repair short in the wires between the VSA control unit and the wheel sensor.

   NO: Go to step 10.

cardiagn.com

DTC	Appropriate Terminal	
	+B	GND
11 (Right-front)	FR +B: No. 18	FR−GND: No. 17
13 (Left-front)	FL +B: No. 4	FL−GND: No. 20
15 (Right-rear)	RR +B: No. 5	RR−GND: No. 6
17 (Left-rear)	RL +B: No. 2	RL−GND: No. 3

G01821397

Fig. 32: Wheel Sensor DTC Table

cardiagn.com

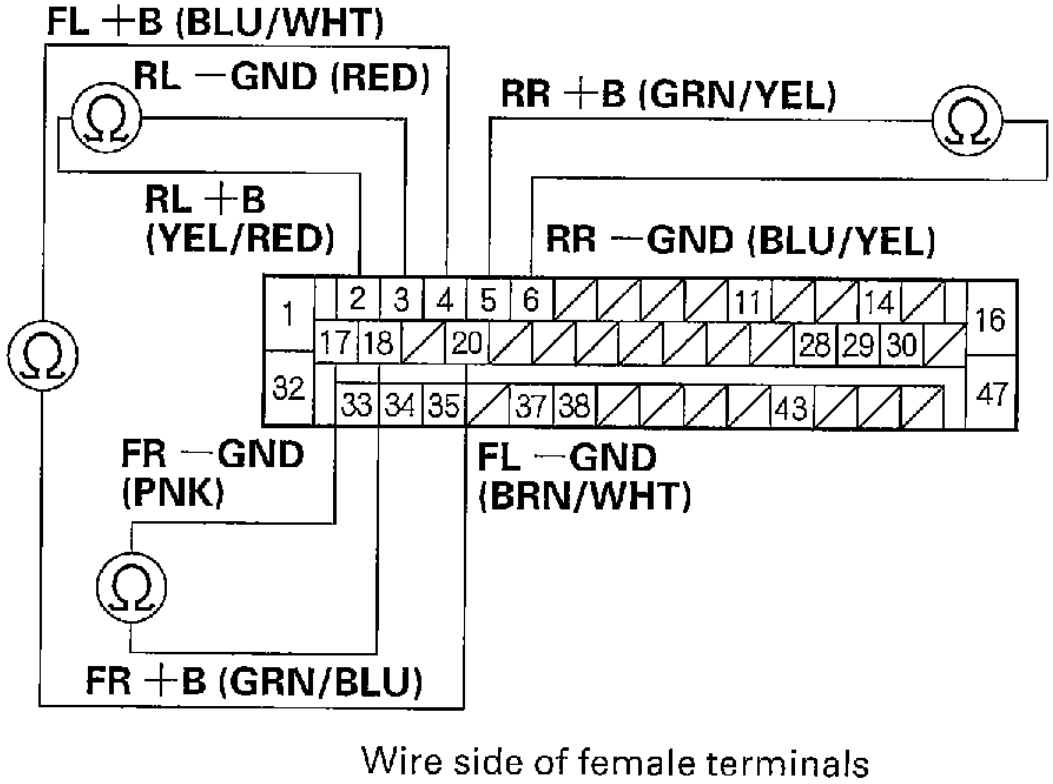

G01821398

Fig. 33: Checking For Continuity Between The Appropriate Wheel Sensor + B & Gnd Terminals Of The VSA Control Unit 47P Connector

10. Substitute a known-good wheel sensor for the appropriate wheel sensor (see **Fig. 34**).

DTC	Appropriate Wheel Sensor
11	Right-front
13	Left-front
15	Right-rear
17	Left-rear

G01821399

cardiagn.com

Fig. 34: Wheel Sensor DTC Table

11. Clear the DTCs using the HDS (see **HOW TO CLEAR DTCS**).
12. Disconnect the HDS from the 16P DLC.
13. Turn the ignition switch OFF, then turn it ON (II) again. Test-drive the vehicle at speeds above 19 mph (30 km/h).

    Does the ABS indicator come on?

    YES: Check for a loose VSA control unit 47P connector. If necessary, substitute a known-good VSA modulator-control unit, and recheck.

    NO: Replace the original wheel sensor (see **WHEEL SENSOR REPLACEMENT**).

DTC 12, 14, 16, 18: WHEEL SENSOR (ELECTRICAL NOISE/INTERMITTENT INTERRUPTION)

NOTE: **If the ABS indicator comes on because of electrical noise, the indicator goes off when you test-drive the vehicle at 19 mph (30 km/h).**

1. Check the appropriate wheel sensor and magnetic encoder (see **Fig. 35**) (see **WHEEL SENSOR INSPECTION**).

   Are they OK?

   YES: Go to step 2.

   NO: Clean and reinstall or replace the appropriate wheel sensor or magnetic encoder.

DTC	Appropriate Wheel Sensor
12	Right-front
14	Left-front
16	Right-rear
18	Left-rear

G01821400

Fig. 35: Wheel Sensor DTC Table

2. Disconnect the VSA control unit 47P connector.
3. Check for continuity between the appropriate wheel sensor + B terminal and other wheel sensor + B terminals (see **Fig. 36** and **Fig. 37**).

   Is there continuity?

   YES: Repair short in the wire between the appropriate wheel sensor and the other wheel sensor.

cardiagn.com

NO: Clear the DTC using the HDS (see **HOW TO CLEAR DTCS**). Disconnect the HDS from the 16P DLC. Turn the ignition switch OFF, then turn it ON (II) again. Test-drive the vehicle. If the ABS indicator comes on and the same DTC is indicated, replace the appropriate wheel sensor. If after clearing the DTC and test driving the vehicle, the ABS indicator comes on and the same DTC is indicated, replace the VSA modulator-control unit (see **VSA MODULATOR-CONTROL UNIT REMOVAL & INSTALLATION**).

NOTE: Disconnect the HDS from the 16P DLC while driving.

DTC	Appropriate Terminal	Other Terminals		
12	FR +B: No. 18	No. 4	No. 5	No. 2
14	FL +B: No. 4	No. 18	No. 5	No. 2
16	RR +B: No. 5	No. 18	No. 4	No. 2
18	RL +B: No. 2	No. 18	No. 4	No. 5

G01821401

Fig. 36: Wheel Sensor DTC Table

cardiagn.com

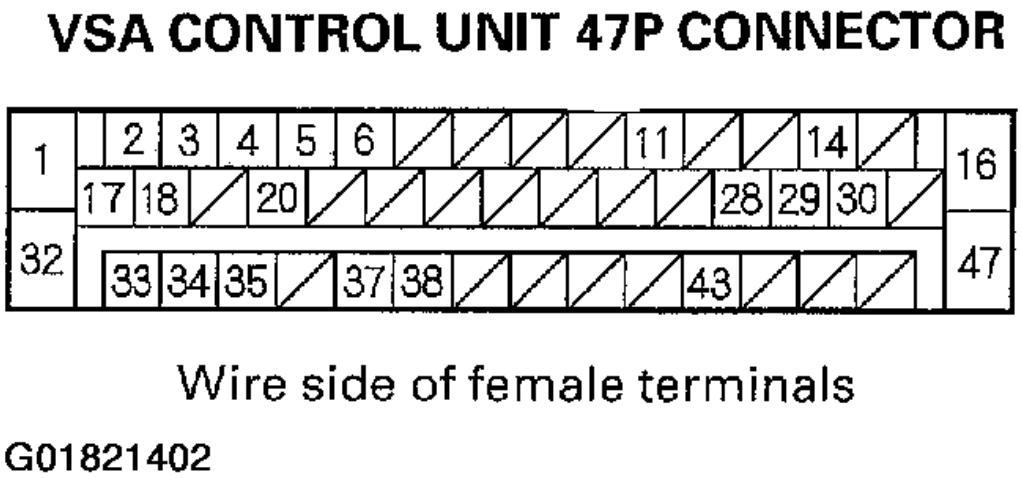

Fig. 37: Checking For Continuity Between The Appropriate Wheel Sensor + B Terminal & Other Wheel Sensor + B Terminals

DTC 21, 22, 23, 24: MAGNETIC ENCODER

1. Clear the DTC using the HDS (see **HOW TO CLEAR DTCS**).
2. Disconnect the HDS from the 16P DLC.
3. Test-drive the vehicle at 19 mph (30 km/h) or more.

   Does the ABS indicator come on, and are DTCs 21, 22, 23 and/or 24 indicated?

   YES: Go to step 3.

   NO: The system is OK at this time.
4. Check the appropriate wheel sensor/encoder (see **Fig. 38**) (see **WHEEL SENSOR INSPECTION**).

   Are the sensor and encoder OK?

   YES: Check for loose terminals in the VSA control unit 47P connector. If necessary, substitute a known-good VSA modulator-control unit, and recheck.

   NO: Clean and reinstall or replace the magnetic encoder.

cardiagn.com

DTC	Appropriate Wheel Sensor
21	Right-front
22	Left-front
23	Right-rear
24	Left-rear

G01821403

Fig. 38: Wheel Sensor DTC Table

DTC 25: YAW RATE SENSOR

1. Clear the DTC using the HDS (see **HOW TO CLEAR DTCS**).
2. Disconnect the HDS from the 16P DLC.
3. Turn the ignition switch OFF, then turn it ON (II) again.
4. Test-drive the vehicle around a number of corners.
5. Verify the DTC.

   Is DTC 27 or 64 indicated?

   YES: Do the appropriate troubleshooting for the DTC.

   NO: Go to step 6.
6. Turn the ignition switch OFF.
7. Disconnect the VSA control unit 47P connector, steering angle sensor 5P connector and yaw rate-lateral acceleration sensor 5P connector.
8. Turn the ignition switch ON (II).
9. Measure the voltage between body ground and the VSA control unit 47P connector terminals No. 33, No. 34 and No. 35 individually.

   Is there 1 V or more?

   YES: Repair short to power in the wire between the VSA control unit and the yaw rate-lateral acceleration sensor.

   NO: Go to step 10.

cardiagn.com

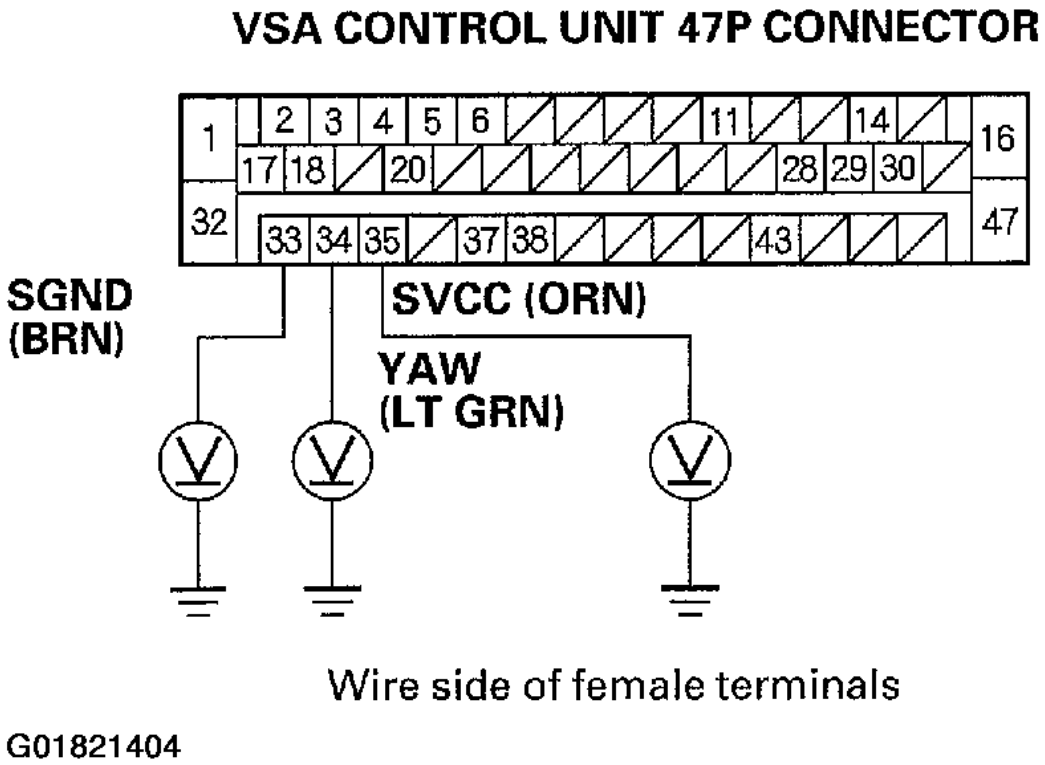

Fig. 39: Measuring The Voltage Between Body Ground & The VSA Control Unit 47P Connector Terminals No. 33, No. 34 & No. 35

10. Turn the ignition switch OFF.
11. Check for continuity between body ground and the VSA control unit 47P connector terminals No. 33, No. 34 and No. 35 individually.

    Is there continuity?

    YES: Repair short to body ground in the wire between the VSA control unit and the yaw rate-lateral acceleration sensor.

    NO: Go to step 12.

cardiagn.com

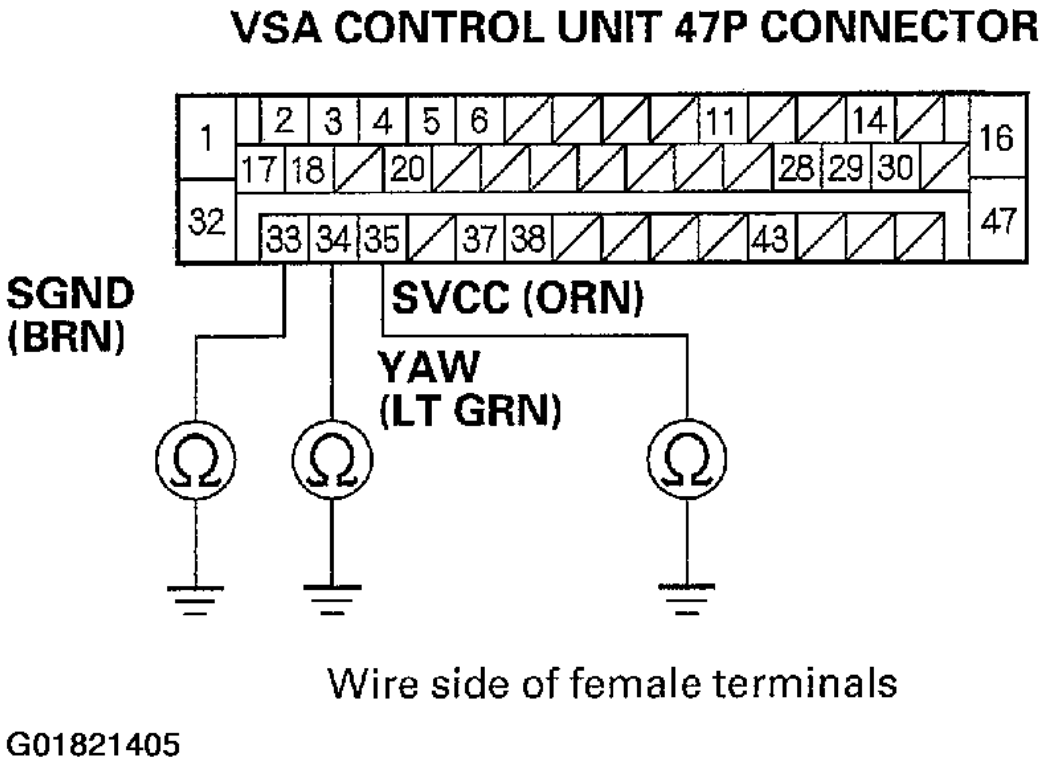

Fig. 40: Checking For Continuity Between Body Ground & The VSA Control Unit 47P Connector Terminals No. 33, No. 34 & No. 35

12. Check for continuity between the VSA control unit 47P connector terminal No. 35 and yaw rate-lateral acceleration sensor 5P connector terminal No. 2.

    Is there continuity?

    YES: Go to step 13.

    NO: Repair open in the wire between the VSA control unit and the yaw rate-lateral acceleration sensor.

cardiagn.com

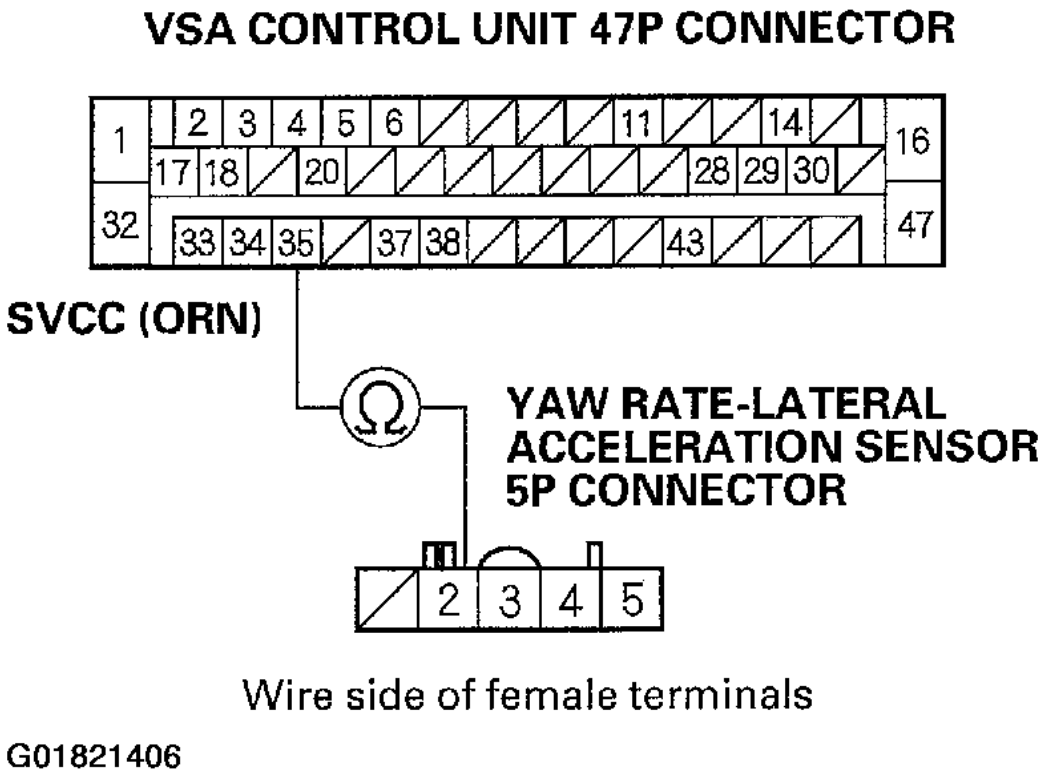

Fig. 41: Checking For Continuity Between The VSA Control Unit 47P Connector & Yaw Rate-Lateral Acceleration Sensor 5P Connector

13. Check for continuity between the VSA control unit 47P connector terminal No. 33 and yaw rate-lateral acceleration sensor 5P connector terminal No. 4.

    Is there continuity?

    YES: Go to step 14.

    NO: Repair open in the wire between the VSA control unit and the yaw rate-lateral acceleration sensor.

cardiagn.com

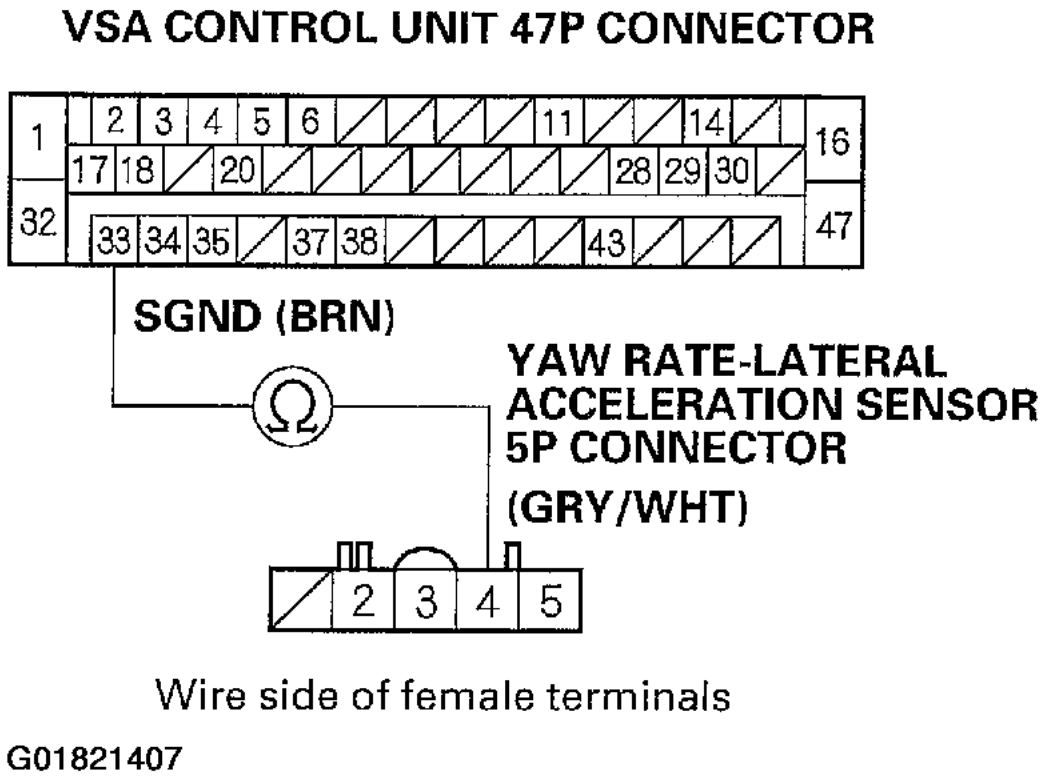

Fig. 42: Checking For Continuity Between The VSA Control Unit 47P Connector & Yaw Rate-Lateral Acceleration Sensor 5P Connector

14. Check for continuity between the VSA control unit 47P connector terminal No. 34 and yaw rate-lateral acceleration sensor 5P connector terminal No. 3.

    Is there continuity?

    YES: Go to step 15.

    NO: Repair open in the wire between the VSA control unit and the yaw rate-lateral acceleration sensor.

cardiagn.com

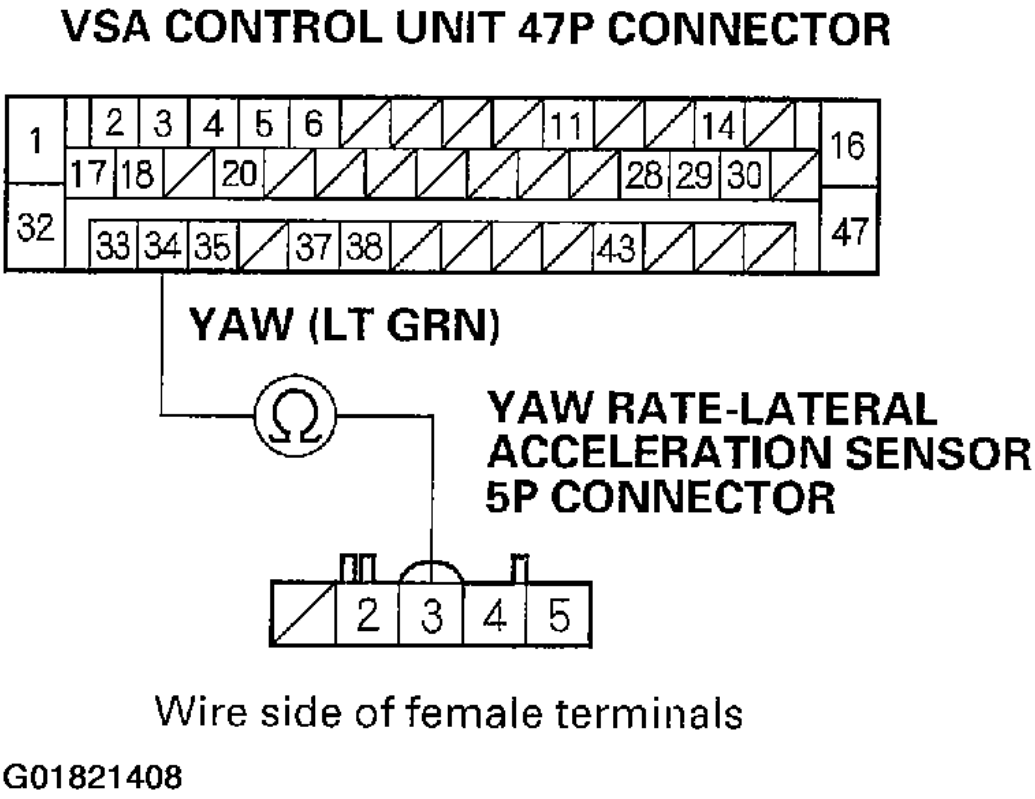

Fig. 43: Checking For Continuity Between The VSA Control Unit 47P Connector & Yaw Rate-Lateral Acceleration Sensor 5P Connector

15. Substitute a known-good yaw rate-lateral acceleration sensor.
16. Reconnect all of the disconnected connectors.
17. Clear the DTC using the HDS (see **HOW TO CLEAR DTCS**).
18. Disconnect the HDS from the 16P DLC.
19. Turn the ignition switch OFF, then turn it ON (II) again.
20. Test-drive the vehicle around a number of corners.
21. Verify the DTC.

Is DTC 25 indicated?

YES: Replace the VSA modulator-control unit (see **VSA MODULATOR-CONTROL UNIT REMOVAL & INSTALLATION**).

NO: Replace the original yaw rate-lateral acceleration sensor (see **YAW RATE-LATERAL ACCELERATION SENSOR REPLACEMENT**).

DTC 26: LATERAL ACCELERATION SENSOR

cardiagn.com

1. Clear the DTC using the HDS (see **HOW TO CLEAR DTCS**).
2. Disconnect the HDS from the 16P DLC.
3. Turn the ignition switch OFF, then turn it ON (II) again.
4. Test-drive the vehicle around a number of corners.
5. Verify the DTC.

   Is DTC 64 indicated?

   YES: Do the appropriate troubleshooting for the DTC.

   NO: Go to step 6.
6. Turn the ignition switch OFF.
7. Disconnect the VSA control unit 47P connector, steering angle sensor 5P connector and yaw rate-lateral acceleration sensor 5P connector.
8. Turn the ignition switch ON (II).
9. Measure the voltage between body ground and the VSA control unit 47P connector terminals No. 33, No. 35 and No. 37 individually.

   Is there 1 V or more?

   YES: Repair short to power in the wire between the VSA control unit and the yaw rate-lateral acceleration sensor.

   NO: Go to step 10.

cardiagn.com

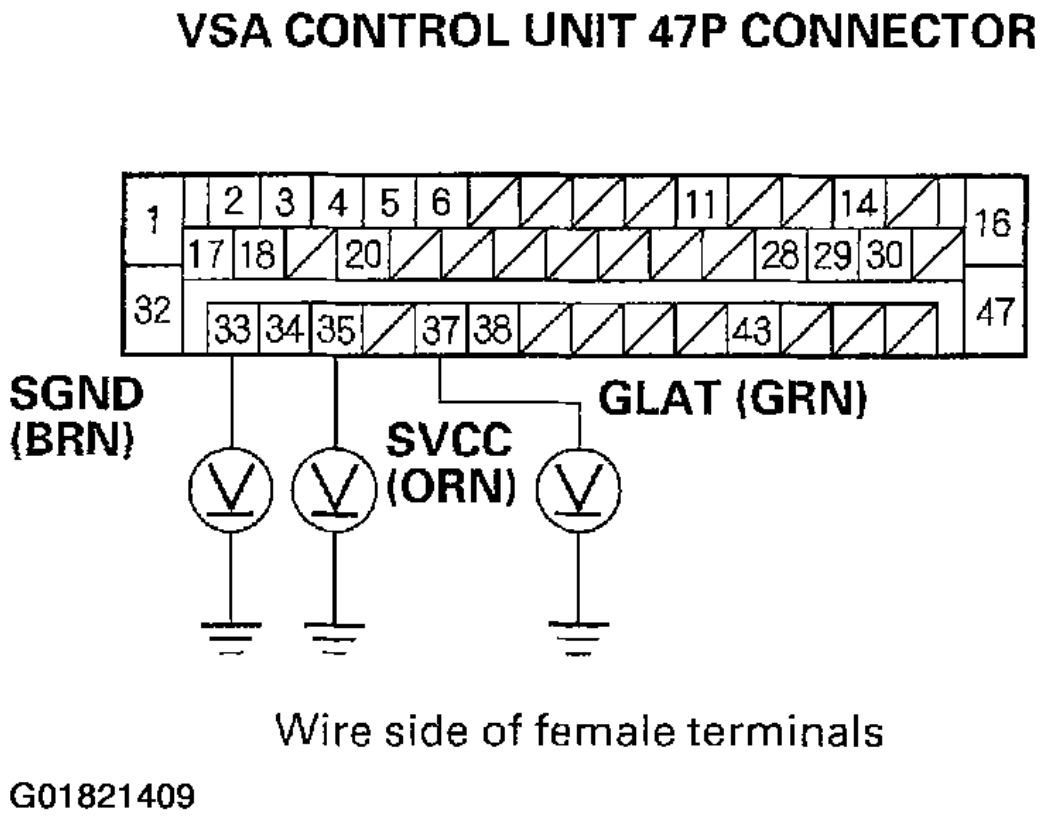

Fig. 44: Measuring The Voltage Between Body Ground & The VSA Control Unit 47P Connector Terminals No. 33, No. 35 & No. 37

10. Turn the ignition switch OFF.
11. Check for continuity between body ground and the VSA control unit 47P connector terminals No. 33, No. 35 and No. 37 individually.

    Is there continuity?

    YES: Repair short to body ground in the wire between the VSA control unit and the yaw rate-lateral acceleration sensor.

    NO: Go to step 12.

cardiagn.com

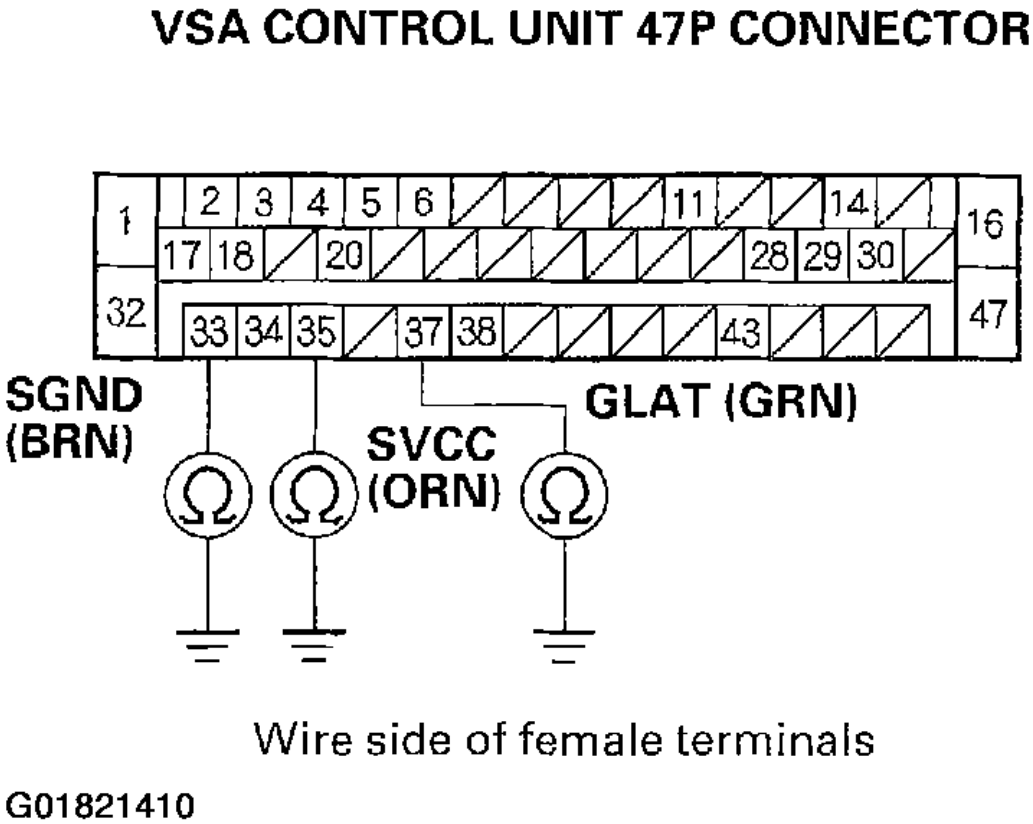

Fig. 45: Checking For Continuity Between Body Ground & The VSA Control Unit 47P Connector Terminals No. 33, No. 35 & No. 37

12. Check for continuity between the VSA control unit 47P connector terminal No. 35 and yaw rate-lateral acceleration sensor 5P connector terminal No. 2.

    Is there continuity?

    YES: Go to step 13.

    NO: Repair open in the wire between the VSA control unit and the yaw rate-lateral acceleration sensor.

cardiagn.com

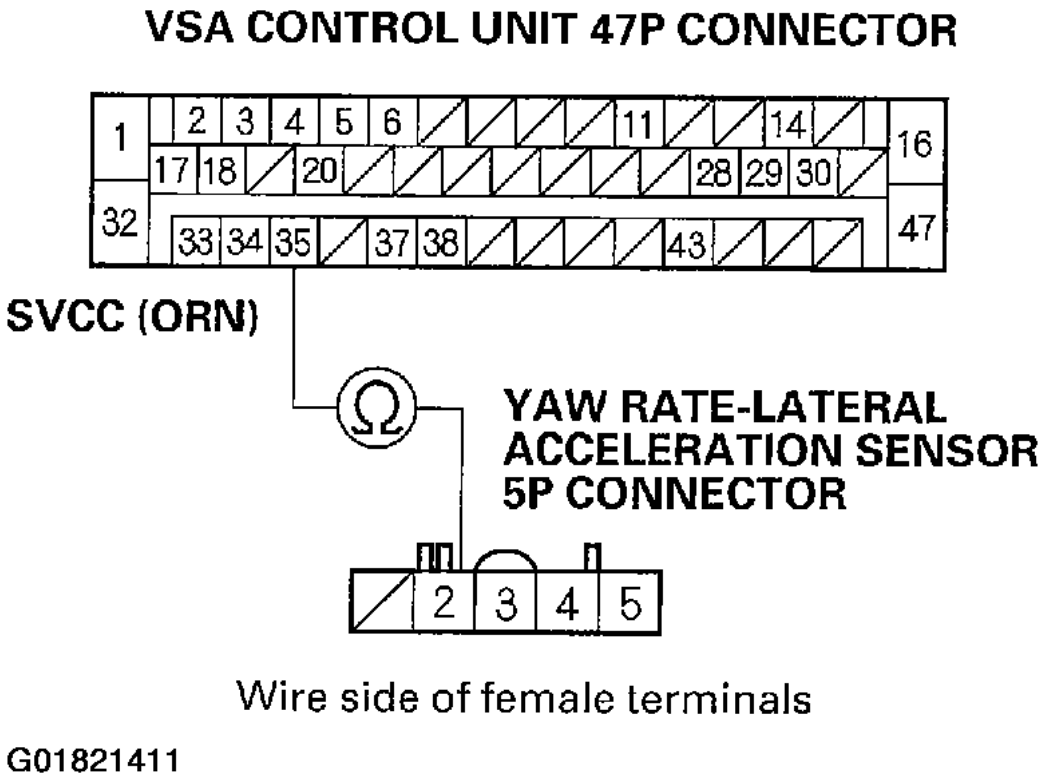

Fig. 46: Checking For Continuity Between The VSA Control Unit 47P Connector & Yaw Rate-Lateral Acceleration Sensor 5P Connector

13. Check for continuity between the VSA control unit 47P connector terminal No. 33 and yaw rate-lateral acceleration sensor 5P connector terminal No. 4.

    Is there continuity?

    YES: Go to step 14.

    NO: Repair open in the wire between the VSA control unit and the yaw rate-lateral acceleration sensor.

cardiagn.com

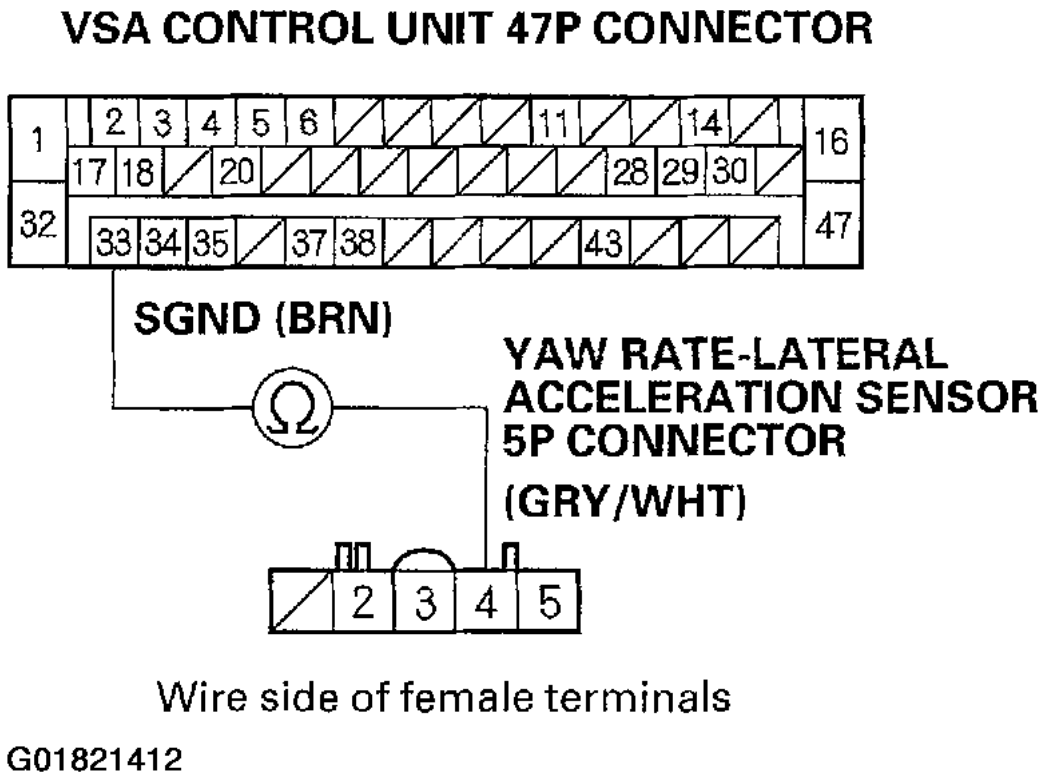

Fig. 47: Checking For Continuity Between The VSA Control Unit 47P Connector & Yaw Rate-Lateral Acceleration Sensor 5P Connector

14. Check for continuity between the VSA control unit 47P connector terminal No. 37 and yaw rate-lateral acceleration sensor 5P connector terminal No. 5.

    Is there continuity?

    YES: Go to step 15.

    NO: Repair open in the wire between the VSA control unit and the yaw rate-lateral acceleration sensor.

cardiagn.com

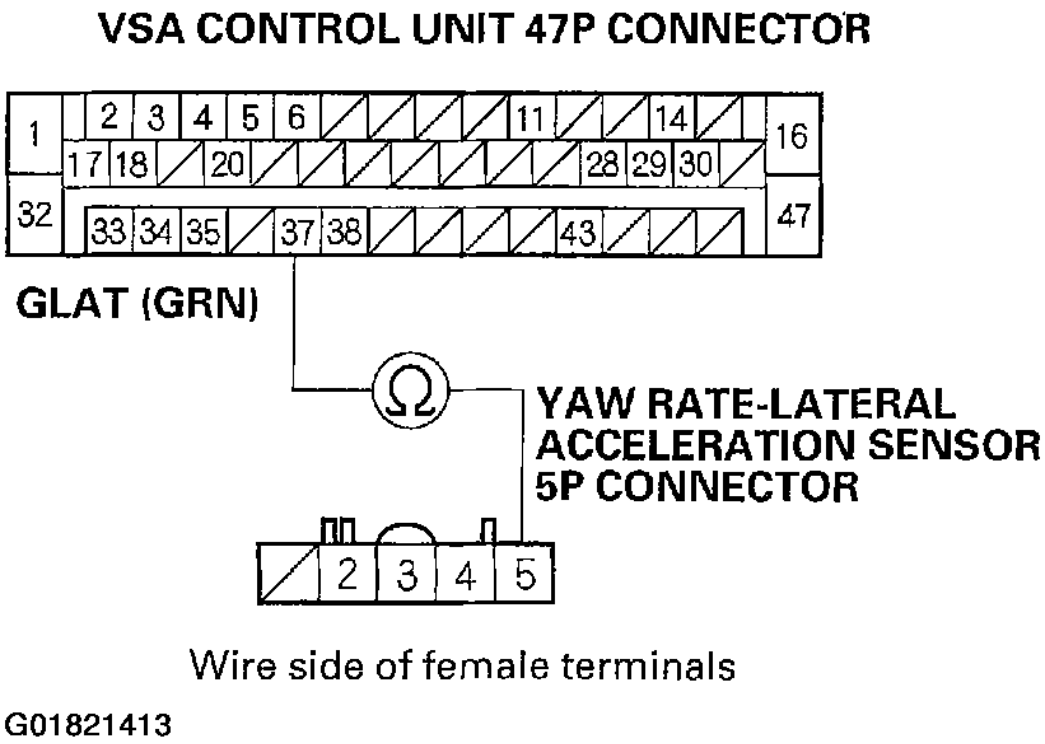

Fig. 48: Checking For Continuity Between The VSA Control Unit 47P Connector & Yaw Rate-Lateral Acceleration Sensor 5P Connector

15. Substitute a known-good yaw rate-lateral acceleration sensor.
16. Reconnect all of the disconnected connectors.
17. Clear the DTC using the HDS (see **HOW TO CLEAR DTCS**).
18. Disconnect the HDS from the 16P DLC.
19. Turn the ignition switch OFF, then turn it ON (II) again.
20. Test-drive the vehicle around a number of corners.
21. Verify the DTC.

    Is DTC 25 indicated?

    YES: Replace the VSA modulator-control unit (see **VSA MODULATOR-CONTROL UNIT REMOVAL & INSTALLATION**).

    NO: Replace the original yaw rate-lateral acceleration sensor (see **YAW RATE-LATERAL ACCELERATION SENSOR REPLACEMENT**).

DTC 27: STEERING ANGLE SENSOR

1. Clear the DTC using the HDS (see **HOW TO CLEAR DTCS**).

cardiagn.com

2. Disconnect the HDS from the 16P DLC.
3. Turn the ignition switch OFF, then turn it ON (II) again.
4. Test-drive the vehicle around a number of corners.
5. Verify the DTC.

   Is DTC 64 indicated?

   YES: Do the appropriate troubleshooting for the DTC.

   NO: Go to step 6.
6. Turn the ignition switch OFF.
7. Disconnect the VSA control unit 47P connector, steering angle sensor 5P connector and yaw rate-lateral acceleration sensor 5P connector.
8. Turn the ignition switch ON (II).
9. Measure the voltage between body ground and the VSA control unit 47P connector terminals No. 33 and No. 35 individually.

   Is there 1 V or more?

   YES: Repair short to power in the wire between the VSA control unit and the steering angle sensor.

   NO: Go to step 10.

cardiagn.com

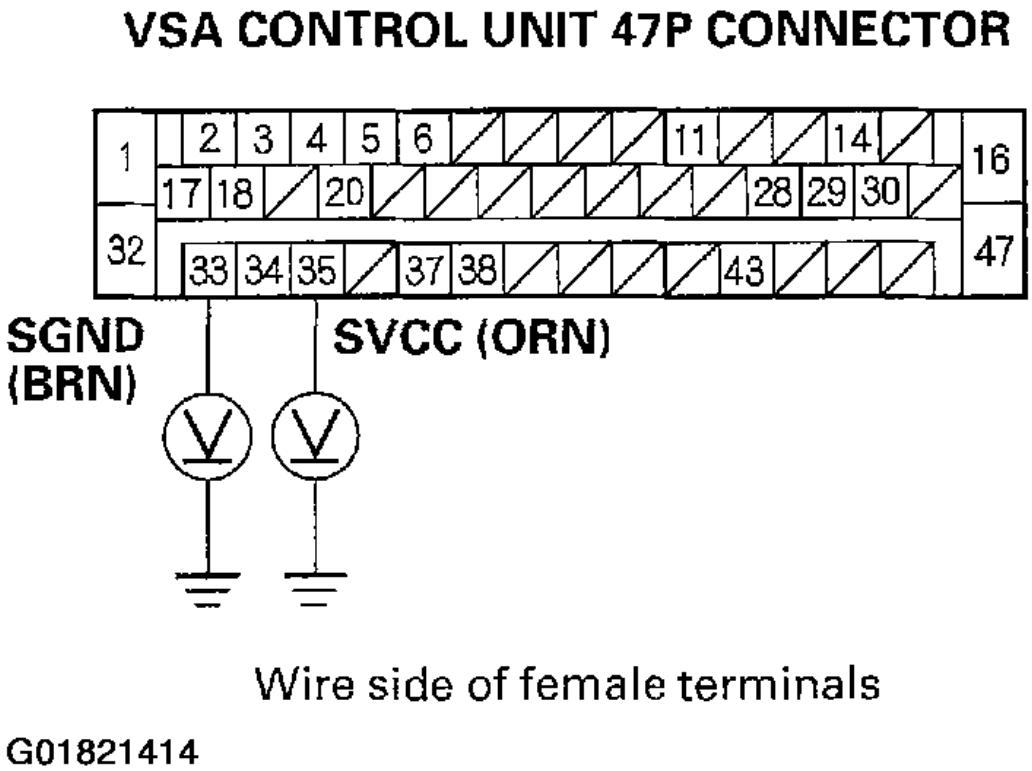

Fig. 49: Measuring The Voltage Between Body Ground & The VSA Control Unit 47P Connector Terminals No. 33 & No. 35

10. Measure the voltage between body ground and the VSA control unit 47P connector terminals No. 28, No. 29 and No. 43 individually.

    Is there 1 V or more?

    YES: Repair short to power in the wire between the VSA control unit and the steering angle sensor.

    NO: Go to step 11.

cardiagn.com

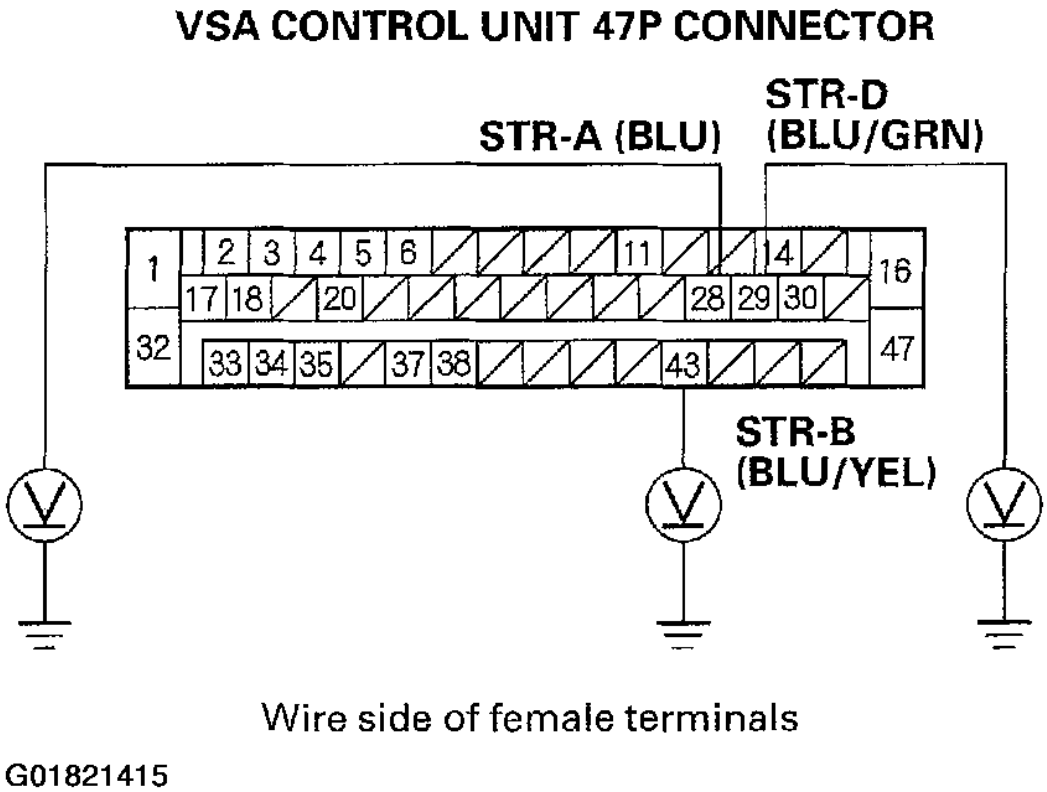

Fig. 50: Measuring The Voltage Between Body Ground & The VSA Control Unit 47P Connector Terminals No. 28, No. 29 & No. 43

11. Turn the ignition switch OFF.
12. Check for continuity between body ground and the VSA control unit 47P connector terminals No. 33 and No. 35 individually.

    Is there continuity?

    YES: Repair short to body ground in the wire between the VSA control unit and the steering angle sensor.

    NO: Go to step 13.

cardiagn.com

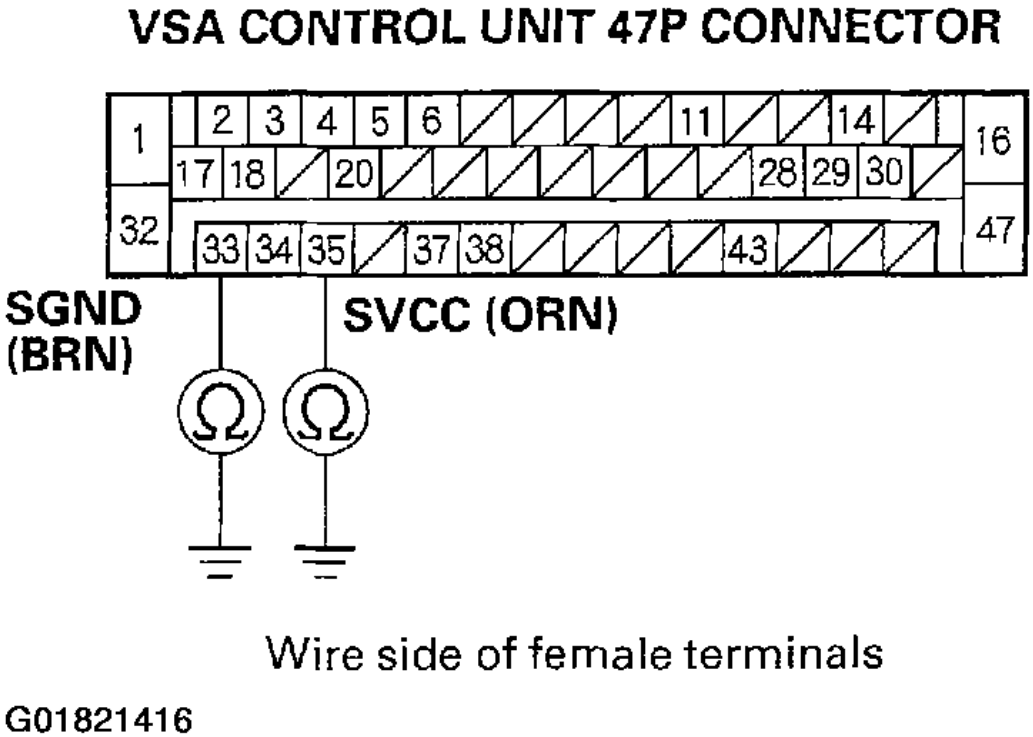

Fig. 51: Checking For Continuity Between Body Ground & The VSA Control Unit 47P Connector Terminals No. 33 & No. 35

13. Check for continuity between body ground and the VSA control unit 47P connector terminals No. 28, No. 29 and No. 43 individually.

    Is there continuity?

    YES: Repair short to body ground in the wire between the VSA control unit and the steering angle sensor.

    NO: Go to step 14.

cardiagn.com

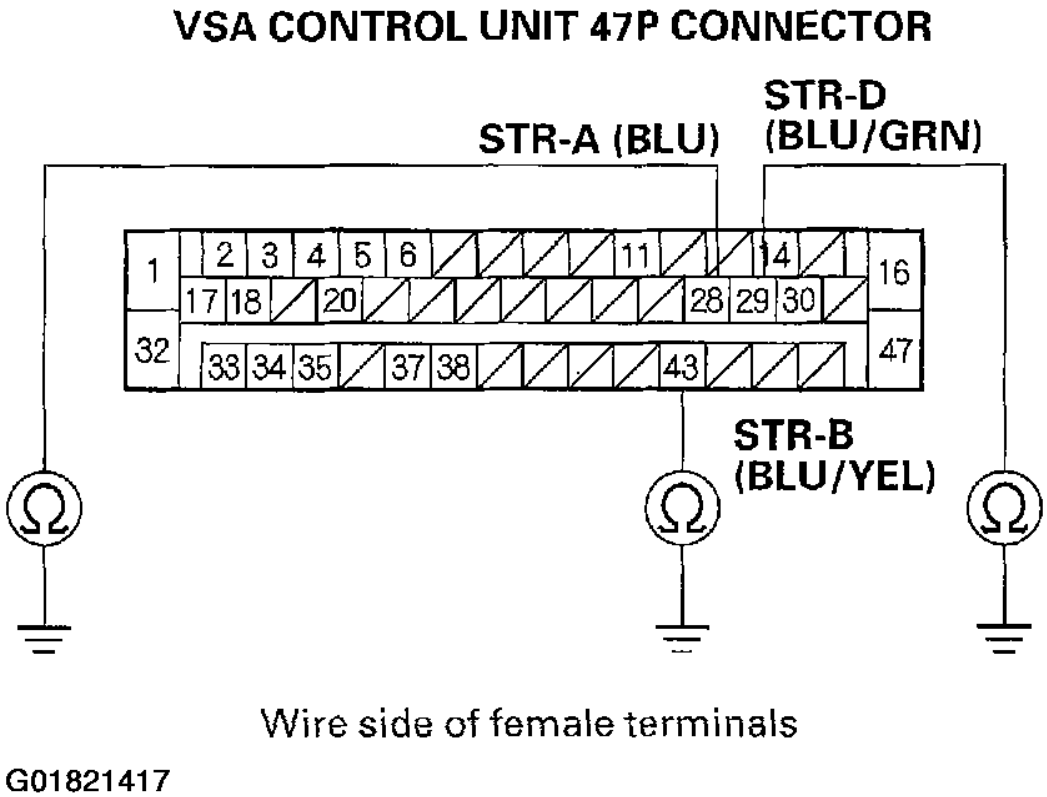

Fig. 52: Checking For Continuity Between Body Ground & The VSA Control Unit 47P Connector Terminals No. 28, No. 29 & No. 43

14. Check for continuity between the VSA control unit 47P connector terminals No. 33 and No. 35 and steering angle sensor 5P connector terminals No. 1 and No. 5 individually.

    Is there continuity?

    YES: Go to step 15.

    NO: Repair open in the wire between the VSA control unit and the steering angle sensor.

cardiagn.com

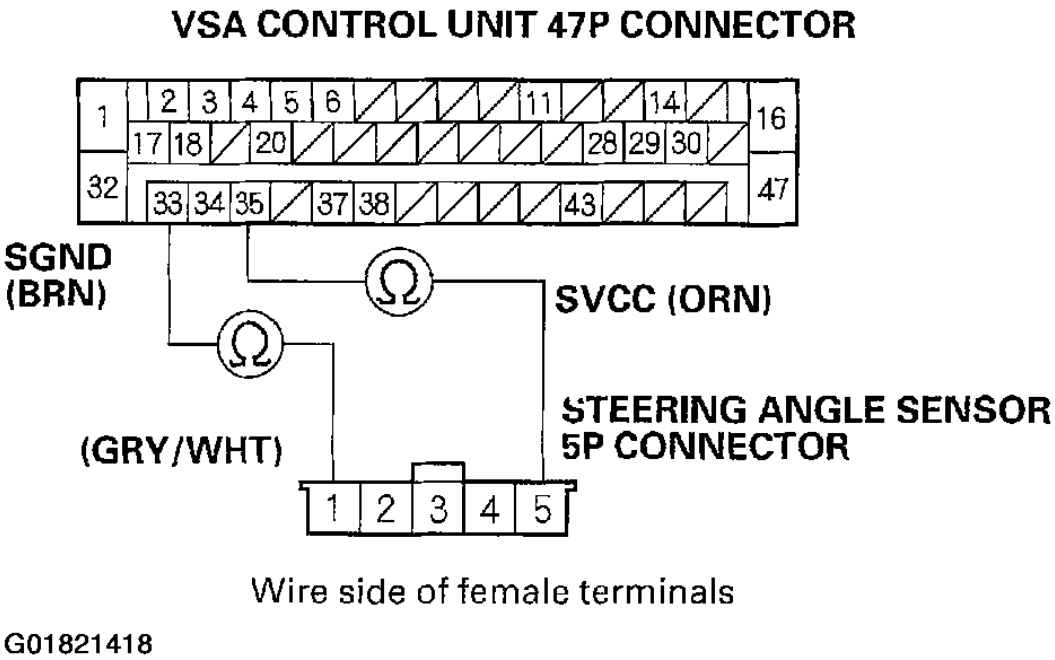

Fig. 53: Checking For Continuity Between The VSA Control Unit 47P Connector & Steering Angle Sensor 5P Connector

15. Check for continuity between the VSA control unit 47P connector terminals No. 28, No. 29, No. 43 and steering angle sensor 5P connector terminals No. 2, No. 3 and No. 4 individually.

    Is there continuity?

    YES: Go to step 16.

    NO: Repair open in the wire between the VSA control unit and the steering angle sensor.

cardiagn.com

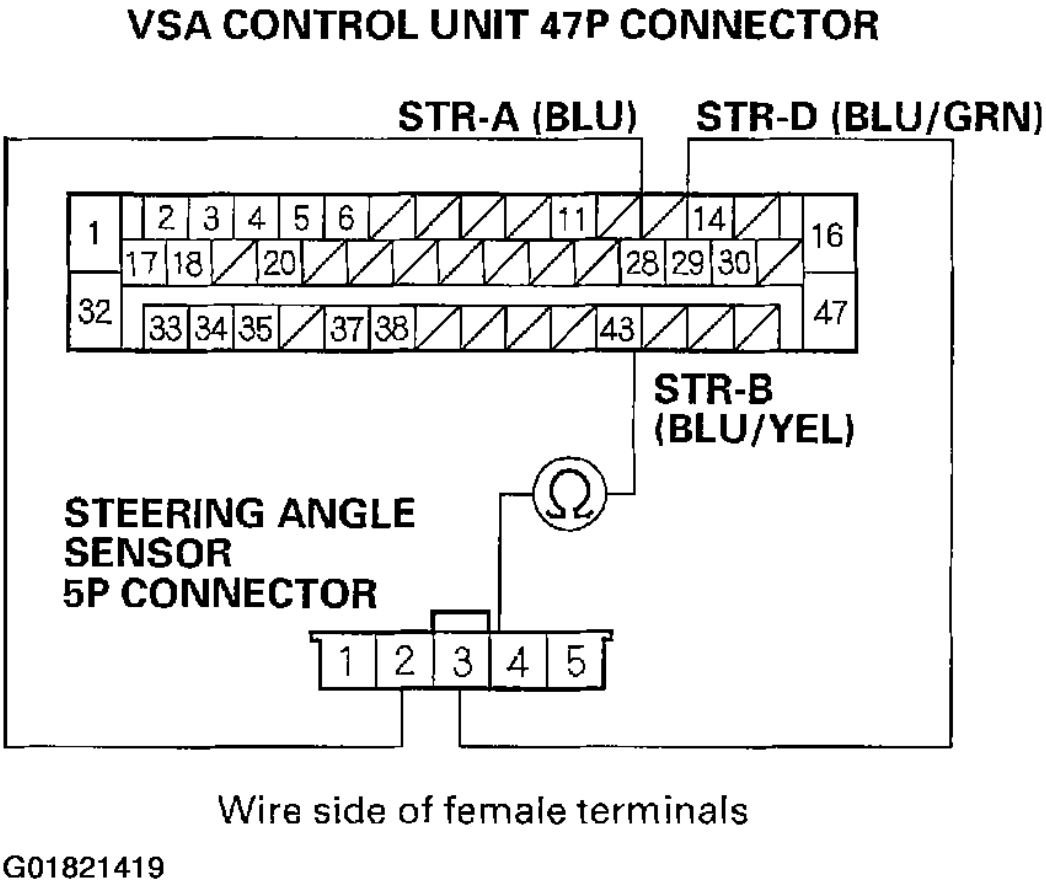

Fig. 54: Checking For Continuity Between The VSA Control Unit 47P Connector & Steering Angle Sensor 5P Connector

16. Substitute a known-good steering angle sensor.
17. Reconnect all of the disconnected connectors.
18. Clear the DTC using the HDS (see **HOW TO CLEAR DTCS**).
19. Disconnect the HDS from the 16P DLC.
20. Turn the ignition switch OFF, then turn it ON (II) again.
21. Test-drive the vehicle around a number of corners.
22. Verify the DTC.

Is DTC 27 indicated?

YES: Replace the VSA modulator-control unit (see **VSA MODULATOR-CONTROL UNIT REMOVAL & INSTALLATION**).

NO: Replace the original steering angle sensor (see **STEERING ANGLE SENSOR REPLACEMENT**).

cardiagn.com

DTC 31, 32, 33, 34, 35, 36, 37, 38: ABS SOLENOID

1. Clear the DTC using the HDS (see **HOW TO CLEAR DTCS**).
2. Turn the ignition switch ON (II).
3. Verify the DTC.

   Does the ABS indicator come on, and are DTCs 31, 32, 33, 34, 35, 36, 37, and/or 38 indicated?

   YES: Check for loose terminals in the VSA control unit 47P connector. If necessary, substitute a known-good VSA modulator-control unit, and recheck.

   NO: The system is OK at this time.

DTC 41, 42, 43, 44: WHEEL LOCK

1. Test-drive the vehicle, and check for brake drag by duplicating city driving at speeds over 30 mph (50 km/h). Use the brakes often.

   Do the brakes drag?

   YES: Repair the brake drag.

   NO: Go to step 2.
2. Check the installation of the appropriate wheel sensor (see **Fig. 55**) (see **WHEEL SENSOR INSPECTION**).

   Is it correct?

   YES: If the DTC does not reappear, the most probable cause for the DTC is that the vehicle might have lost traction in poor weather and spun around.

   NO: Reinstall or replace the wheel sensor (see **WHEEL SENSOR REPLACEMENT**).

DTC	Appropriate Wheel Sensor
41	Right-front
42	Left-front
43	Right-rear
44	Left-rear

G01821420

Fig. 55: Wheel Sensor DTC Table

DTC 51: MOTOR LOCK; DTC 52: MOTOR STUCK OFF

1. Check the No. 17 (30A) fuse in the under-hood fuse/relay box.

   Is the fuse OK?

cardiagn.com

YES: Reinstall the fuse, and go to step 2.

NO: Replace the fuse, and recheck.

2. Disconnect the VSA control unit 47P connector.
3. Measure the voltage between the VSA control unit 47P connector terminal No. 16 and body ground.

Is there battery voltage?

YES: Go to step 4.

NO: Repair open in the wire between the No. 17 (30A) fuse and the VSA modulator-control unit.

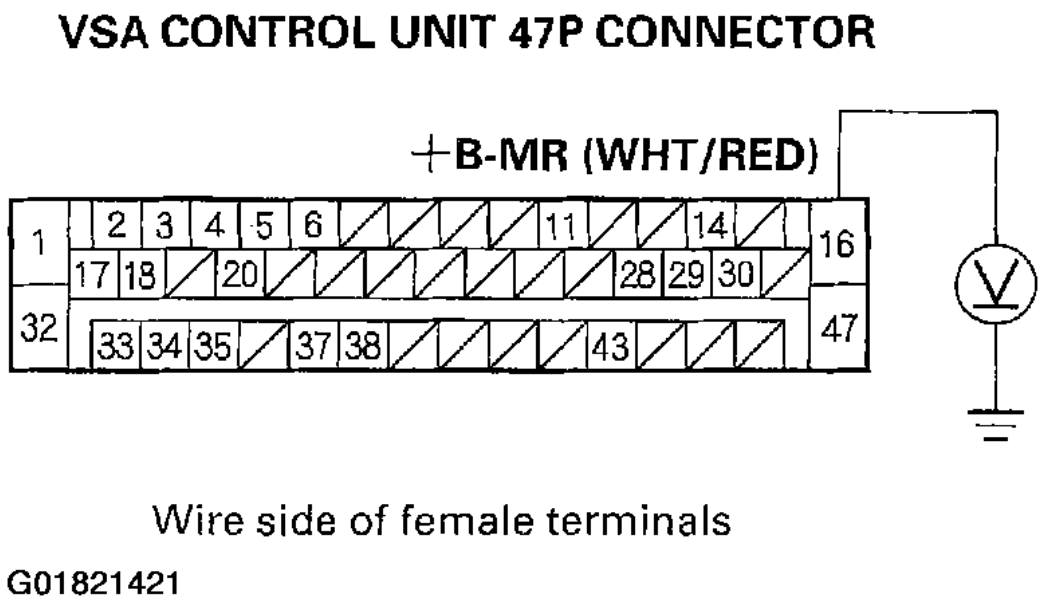

Fig. 56: Measuring The Voltage Between The VSA Control Unit 47P Connector Terminal No. 16 & Body Ground

4. Measure resistance between the VSA control unit 47P connector terminal No. 47 and body ground.

Is there less than 1 ohm ?

YES: Go to step 5.

NO: Repair open or high resistance in the wire between the VSA modulator-control unit and body ground (G203).

cardiagn.com

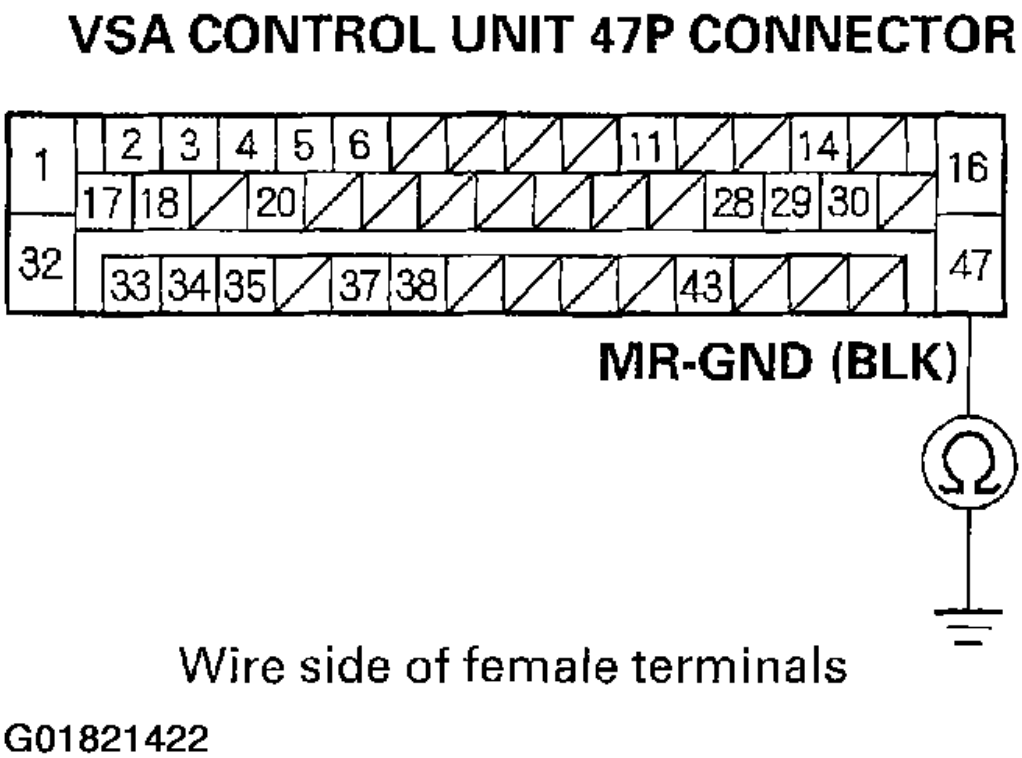

Fig. 57: Measuring Resistance Between The VSA Control Unit 47P Connector Terminal No. 47 & Body Ground

5. Reconnect the VSA control unit 47P connector.
6. Clear the DTC using the DTC (see **HOW TO CLEAR DTCS**).
7. Disconnect the HDS from the 16P DLC.
8. Turn the ignition switch OFF, then turn it ON again.
9. Test-drive the vehicle at 10 mph (15 km/h) or more.

Does the ABS indicator come on, and is DTC 51 or 52 indicated?

YES: Replace the VSA modulator-control unit (see **VSA MODULATOR-CONTROL UNIT REMOVAL & INSTALLATION**).

NO: The system is OK at this time.

DTC 53: MOTOR STUCK ON

1. Disconnect the VSA control unit 47P connector.
2. Measure resistance between the VSA control unit 47P connector terminal No. 47 and body ground.

Is there less than 1 ohm ?

cardiagn.com

YES: Go to step 3.

NO: Repair open or high resistance in the wire between the VSA modulator-control unit and body ground (G203).

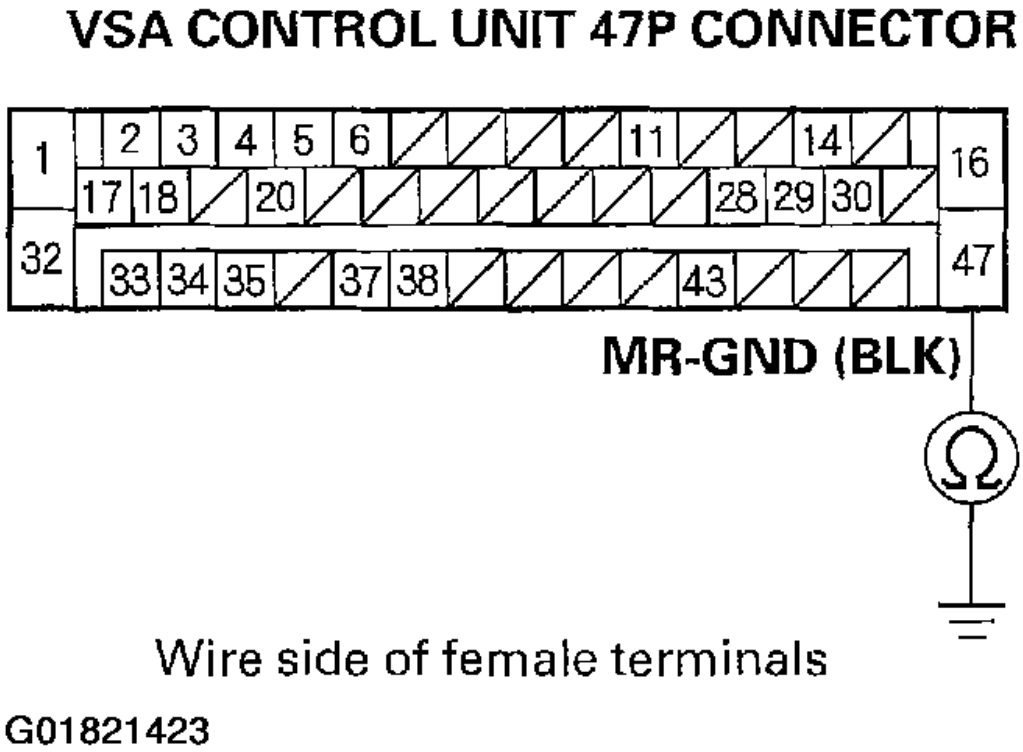

Fig. 58: Measuring Resistance Between The VSA Control Unit 47P Connector Terminal No. 47 & Body Ground

3. Reconnect the VSA control unit 47P connector.
4. Clear the DTC using the HDS (see **HOW TO CLEAR DTCS**).
5. Disconnect the HDS from the 16P DLC.
6. Turn the ignition switch OFF, then turn it ON again.
7. Test-drive the vehicle.

Does the ABS indicator come on, and is DTC 53 indicated?

YES: Replace the VSA modulator-control unit (see **VSA MODULATOR-CONTROL UNIT REMOVAL & INSTALLATION**).

NO: The system is OK at this time.

DTC 54: FAIL-SAFE RELAY

cardiagn.com

1. Disconnect the VSA control unit 47P connector.
2. Measure resistance between the VSA control unit 47P connector terminal No. 47 and body ground.

   Is there less than 1 ohm ?

   YES: Go to step 3.

   NO: Repair open or high resistance in the wire between the VSA modulator-control unit and body ground (G203).

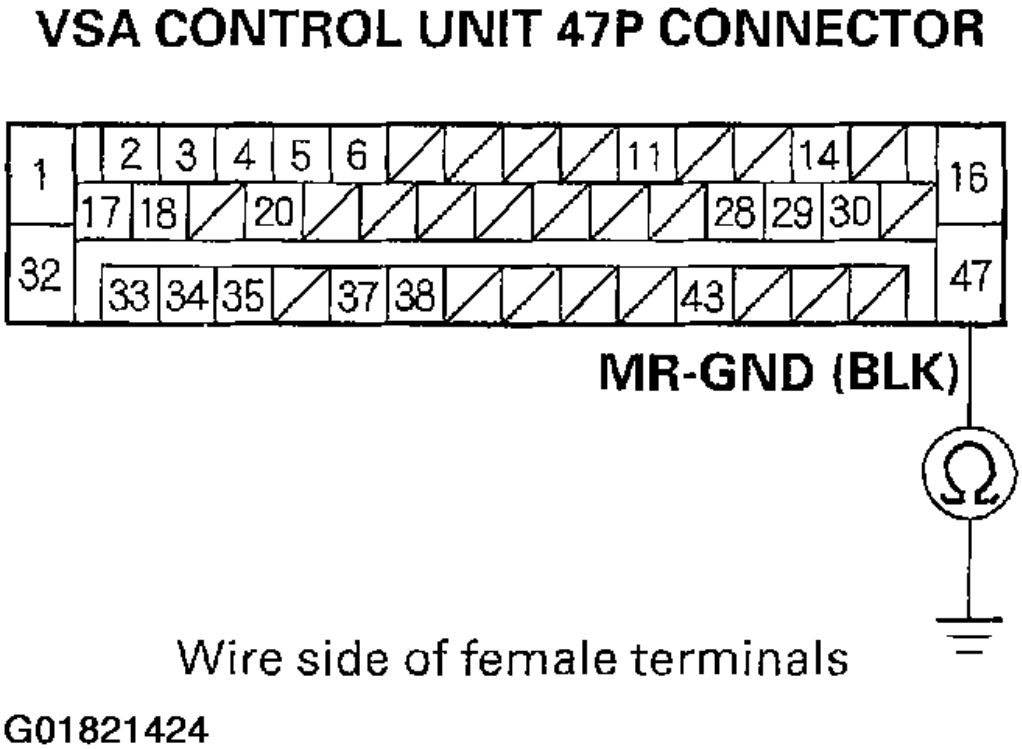

Fig. 59: Measuring Resistance Between The VSA Control Unit 47P Connector Terminal No. 47 & Body Ground

3. Reconnect the VSA control unit 47P connector.
4. Clear the DTC using the HDS (see **HOW TO CLEAR DTCS**).
5. Disconnect the HDS from the 16P DLC.
6. Turn the ignition switch OFF, then turn it ON again.
7. Test-drive the vehicle.

   Does the ABS indicator come on, and is DTC 54 indicated?

   YES: Replace the VSA modulator-control unit (see **VSA MODULATOR-CONTROL**

cardiagn.com

UNIT REMOVAL & INSTALLATION).

NO: The system is OK at this time.

DTC 61, 62: HIGH/LOW VOLTAGE

1. Clear the DTC using the HDS (see **HOW TO CLEAR DTCS**).
2. Turn the ignition switch ON (II).

   Does the ABS indicator come on?

   YES: Go to step 3.

   NO: The system is OK at this time.
3. Verify the DTC.

   Is DTC 61 or 62 indicated?

   YES: Check the battery and the charging system. See **GENERATORS & REGULATORS** .

   NO: Do the appropriate troubleshooting for the DTC indicated.

DTC 64: SENSOR POWER VOLTAGE

1. Disconnect the VSA control unit 47P connector.
2. Start the engine.
3. Measure the voltage between the VSA control unit 47P connector terminal No. 35 and body ground.

   Is there 1 V or more?

   YES: Repair short to power in the wire between the VSA modulator-control unit and yaw rate-lateral acceleration sensor and steering angle sensor.

   NO: Go to step 4.

cardiagn.com

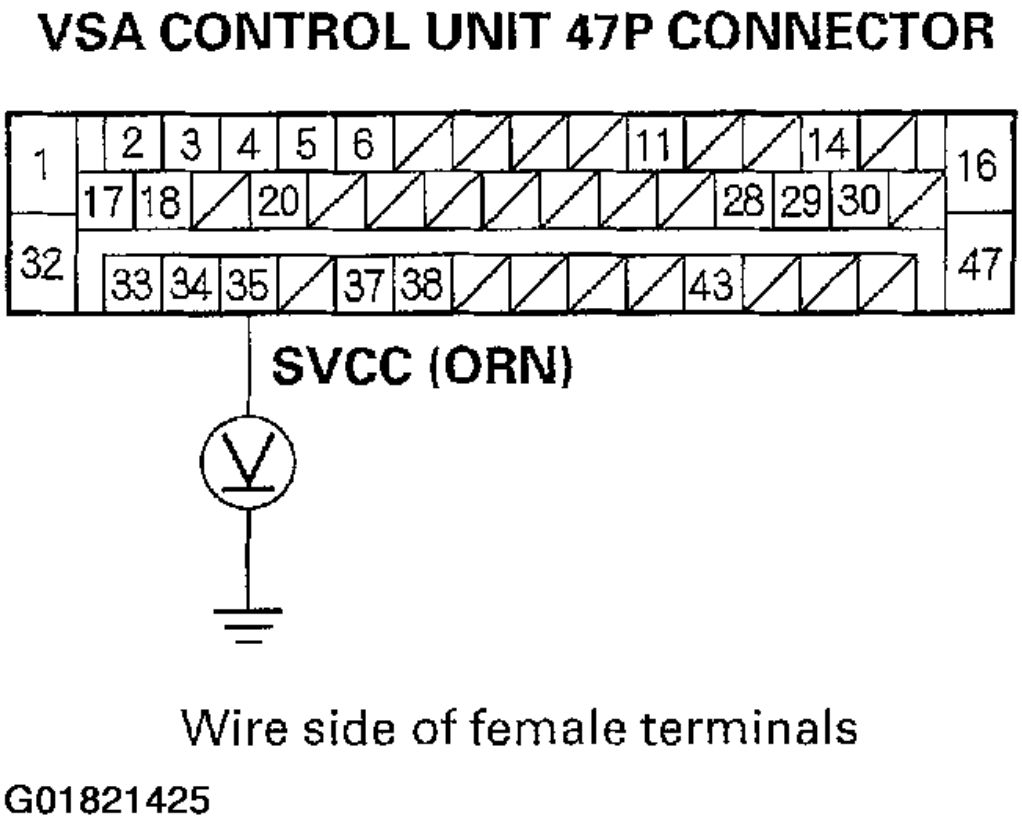

Fig. 60: Measuring The Voltage Between The VSA Control Unit 47P Connector Terminal No. 35 & Body Ground

4. Check for continuity between the VSA control unit 47P connector terminal No. 35 and body ground.

   Is there continuity?

   YES: Repair short to ground in the wire between the VSA modulator-control unit and yaw rate-lateral acceleration sensor and steering angle sensor.

   NO: Go to step 5.

cardiagn.com

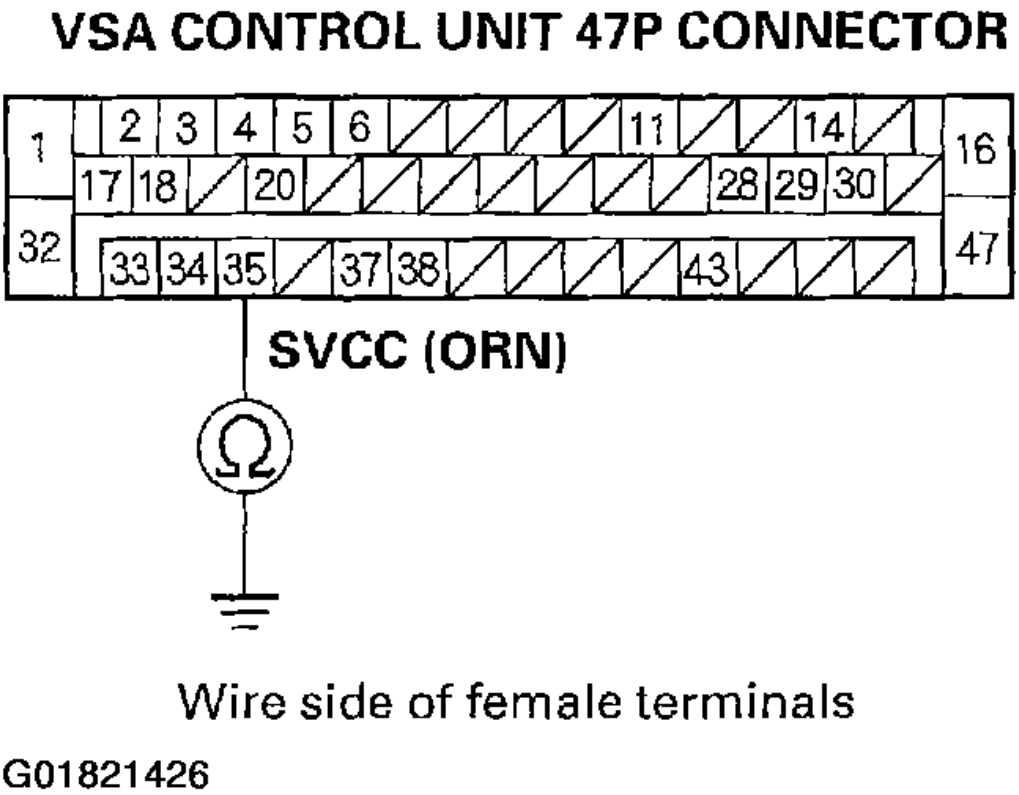

Fig. 61: Checking For Continuity Between The VSA Control Unit 47P Connector Terminal No. 35 & Body Ground

5. Clear the DTC using the HDS (see **HOW TO CLEAR DTCS**).
6. Disconnect the HDS from the 16P DLC.
7. Turn the ignition switch OFF, then turn it ON again.
8. Test-drive the vehicle.

Does the ABS indicator come on, and is DTC 64 indicated?

YES: Replace the VSA modulator-control unit (see **VSA MODULATOR-CONTROL UNIT REMOVAL & INSTALLATION**).

NO: Intermittent failure, the system is OK at this time. Check connections at the VSA control unit 47P connector and G203.

DTC 65: BRAKE FLUID LEVEL

1. Check the brake fluid level.

Is the level correct?

cardiagn.com

YES: Go to step 2.

NO: Refill the brake fluid, and recheck.

2. Check for short in the GRN/RED wire between the gauge control module and the brake fluid level switch. If OK, check the brake fluid level switch.

Is the switch OK?

YES: Do the troubleshooting for the gauge control module (see **SELF-DIAGNOSTIC PROCEDURE**).

NO: Replace the brake fluid level switch.

DTC 66: VSA PRESSURE SENSOR (INSIDE OF VSA MODULATOR-CONTROL UNIT)

1. Clear the DTC using the HDS (see **HOW TO CLEAR DTCS**).
2. Disconnect the HDS from the 16P DLC.
3. Turn the ignition switch OFF, then turn it ON (II) again.
4. Test-drive the vehicle.

Does the ABS indicator come on, and is DTC 66 indicated?

YES: Go to step 5.

NO: The system is OK at this time.

5. Do the VSA sensor neutral position memorization (see **VSA SENSOR NEUTRAL POSITION MEMORIZATION**).
6. Clear the DTC using the HDS (see **HOW TO CLEAR DTCS**).
7. Disconnect the HDS from the 16P DLC.
8. Turn the ignition switch OFF, then turn it ON (II) again.
9. Test-drive the vehicle.

Does the ABS indicator come on, and is DTC 66 indicated?

YES: Replace the VSA modulator-control unit (see **VSA MODULATOR-CONTROL UNIT REMOVAL & INSTALLATION**).

NO: The system is OK at this time.

DTC 68: BRAKE PEDAL POSITION SWITCH

1. Check for other DTCs.

Is another DTC indicated?

YES: Do the appropriate troubleshooting for the DTC.

NO: Go to step 2.

2. Check the brake pedal position switch.

Is the switch OK?

YES: Go to step 3.

NO: Replace the brake pedal position switch (see **BRAKE PEDAL**).

3. Clear the DTC using the HDS (see **HOW TO CLEAR DTCS**).

cardiagn.com

4. Disconnect the HDS from the 16P DLC.
5. Turn the ignition switch OFF, then turn it ON (II) again.
6. Test-drive the vehicle.

   Does the ABS indicator come on, and is DTC 68 indicated?

   YES: Go to step 7.

   NO: The system is OK at this time.
7. Troubleshoot the brake pedal position switch circuit (see **CRUISE CONTROL INPUT TEST**).

   Is the brake pedal position switch circuit OK?

   YES: Substitute a known-good ECM/PCM, and recheck.

   - If the problem is gone, replace the original ECM/PCM.
   - If the problem continues, replace the VSA modulator-control unit (see **VSA MODULATOR-CONTROL UNIT REMOVAL & INSTALLATION**).

   NO: Repair the brake pedal position switch circuit.

DTC 71: DIFFERENT DIAMETER TIRE

1. Clear the DTC using the HDS (see **HOW TO CLEAR DTCS**).
2. Disconnect the HDS from the 16P DLC.
3. Turn the ignition switch OFF, then turn it ON (II) again.
4. Test-drive the vehicle.

   Does the ABS indicator come on, and is DTC 71 indicated?

   YES: Go to step 5.

   NO: Intermittent failure; confirm that tire inflation is set to spec. The vehicle is OK at this time.
5. Check that all four tires are the specified size and are inflated to the proper specification.

   Are all four tires the correct size and properly inflated?

   YES: Go to step 6.

   NO: Install the correct tires or set the tires to the correct inflation, and retest.
6. With the vehicle on level ground, mark each tire with a small spot of grease. Roll the vehicle until each of the tires makes two grease spots on the floor.
7. Measure and record the distance between the two grease spots.

   Is the distance between the shortest and the longest measurement more than 10 %?

   YES: Replace the tire/tires that is smaller or larger than the others.

   NO: Replace the VSA modulator-control unit (see **VSA MODULATOR-CONTROL UNIT REMOVAL & INSTALLATION**).

DTC 81: CENTRAL PROCESSING UNIT (CPU)

1. Check for other DTCs.

   Is another DTC indicated?

cardiagn.com

YES: Do the appropriate troubleshooting for the DTC.

NO: Go to step 2

2. Clear the DTC using the HDS (see **HOW TO CLEAR DTCS**).
3. Disconnect the HDS from the 16P DLC.
4. Turn the ignition switch OFF, then turn it ON again.
5. Test-drive the vehicle.

Does the ABS indicator come on, and is DTC 81 indicated?

YES: Go to step 6.

NO: Intermittent failure; the vehicle is OK at this time.

6. Disconnect the VSA control unit 47P connector.
7. Start the engine.
8. Measure the voltage between the VSA control unit 47P connector terminal No. 35 and body ground.

Is there 1 V or more?

YES: Repair short to power in the wire between the VSA modulator-control unit, the yaw rate-lateral acceleration sensor, and the steering angle sensor.

NO: Go to step 9.

cardiagn.com

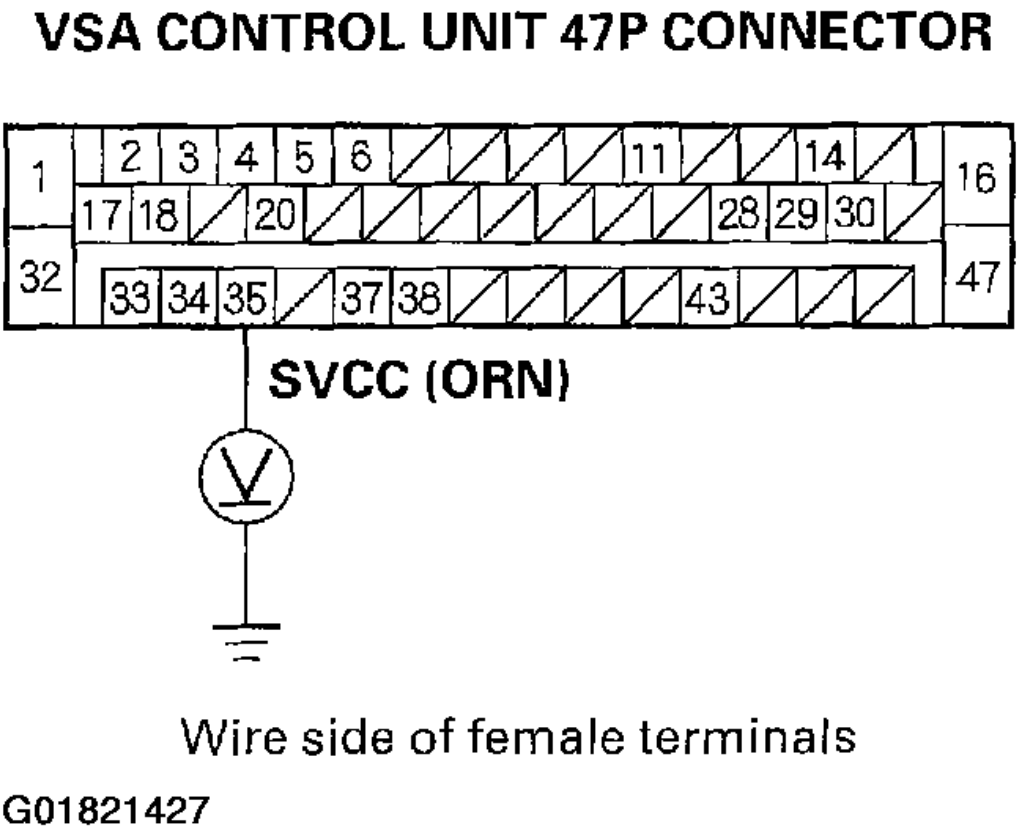

Fig. 62: Measuring The Voltage Between The VSA Control Unit 47P Connector Terminal No. 35 & Body Ground

9. Check for continuity between the VSA control unit 47P connector terminal No. 35 and body ground.

   Is there continuity?

   YES: Repair short to body ground in the wire between the VSA modulator-control unit, the yaw rate-lateral acceleration sensor, and the steering angle sensor.

   NO: Check for loose terminals in the VSA control unit 47P connector. If necessary, substitute a known-good VSA modulator-control unit, and recheck (see **VSA MODULATOR-CONTROL UNIT REMOVAL & INSTALLATION**).

cardiagn.com

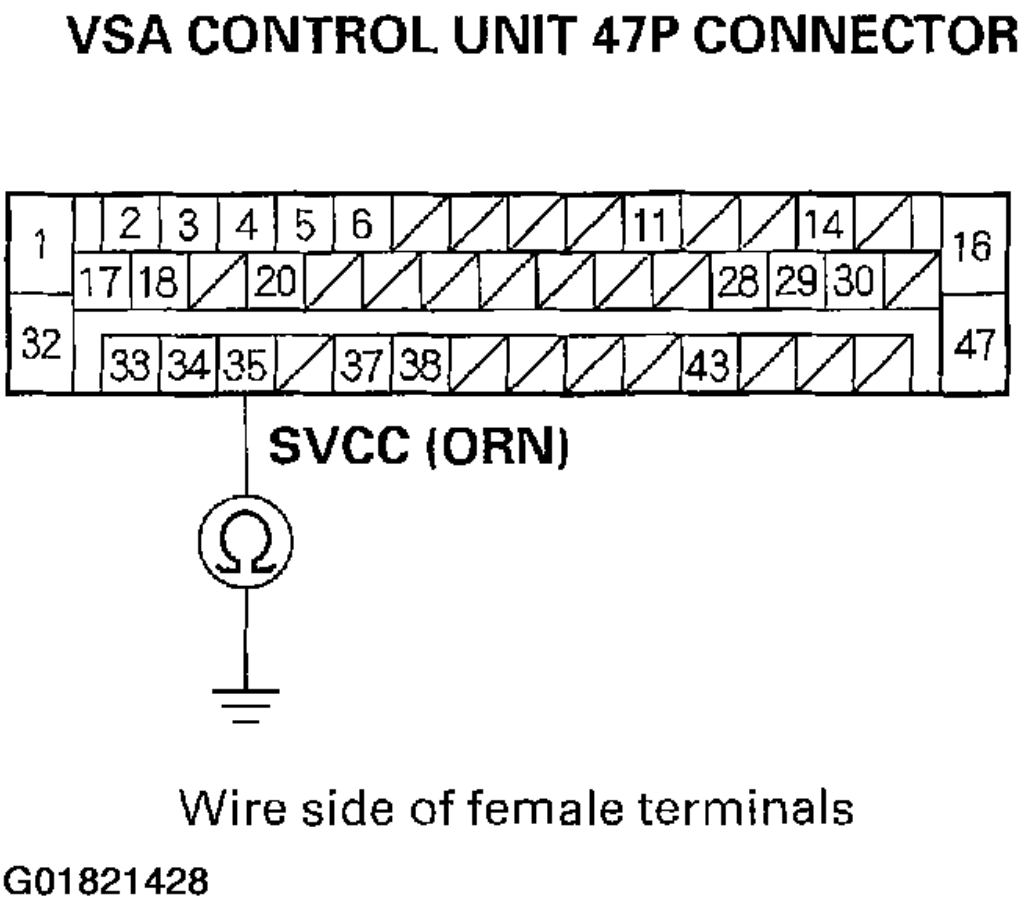

Fig. 63: Checking For Continuity Between The VSA Control Unit 47P Connector Terminal No. 35 & Body Ground

DTC 83: ECM/PCM

1. Check the DTC.

   Is DTC 86 indicated?

   YES: Do the troubleshooting for DTC 86.

   NO: Go to step 2.
2. Clear the DTC using the HDS (see **HOW TO CLEAR DTCS**).
3. Disconnect the HDS from the 16P DLC.
4. Turn the ignition switch OFF, then turn it ON (II) again.
5. Test-drive the vehicle.

   Do the VSA and VSA activation indicators come on, and is DTC 83 indicated?

cardiagn.com

YES: Go to step 6.

NO: The system is OK at this time.

6. Check the PGM-FI system.

   Does the MIL indicator come on or is the ECM/PCM's DTC indicated?

   YES: Do the applicable troubleshooting for the ECM/PCM.

   NO: Go to step 7.

7. Check the gear position.

   Does the D4 indicator come on while neutral position (N) is selected or is the ECM/PCM's DTC indicated?

   YES: Do the applicable troubleshooting for the ECM/PCM.

   NO: Check for loose terminals at the ECM/PCM connectors, and go to step 8.

8. Clear the DTC using the HDS (see **HOW TO CLEAR DTCS**).
9. Disconnect the HDS from the 16P DLC.
10. Turn the ignition switch OFF, then turn it ON again.
11. Test-drive the vehicle.

    Is DTC 83 indicated and no ECM/PCM's DTC?

    YES: Replace the VSA modulator-control unit (see **VSA MODULATOR-CONTROL UNIT REMOVAL & INSTALLATION**).

    NO: The system is OK at this time.

DTC 84: VSA SENSOR NEUTRAL POSITION

1. Clear the DTC using the HDS (see **HOW TO CLEAR DTCS**).
2. Disconnect the HDS from the 16P DLC.
3. Turn the ignition switch OFF, then turn it ON (II) again.
4. Test-drive the vehicle.

   Does the VSA indicator come on, and is DTC 84 indicated?

   YES: Go to step 5.

   NO: The system is OK at this time.

5. Do the VSA sensor neutral position memorization (see **VSA SENSOR NEUTRAL POSITION MEMORIZATION**).
6. Clear the DTC using the HDS (see **HOW TO CLEAR DTCS**).
7. Disconnect the HDS from the 16P DLC.
8. Turn the ignition switch OFF, then turn it ON (II) again.
9. Test-drive the vehicle.

   Does the VSA indicator come on, and is DTC 84 indicated?

   YES: Replace the VSA modulator-control unit (see **VSA MODULATOR-CONTROL UNIT REMOVAL & INSTALLATION**).

   NO: The system is OK at this time.

cardiagn.com

DTC 86: F-CAN COMMUNICATION

1. Clear the DTC using the HDS (see **HOW TO CLEAR DTCS**).
2. Start and run the engine for at least 5 seconds then turn the engine off.
3. Check for DTCs using the HDS.

   Is DTC 86 indicated?

   YES: Go to step 4.

   NO: Intermittent failure, the F-CAN communication line is OK at this time.
4. Check for DTCs in the ECM/PCM.

   Are any DTCs indicated?

   YES: Troubleshoot the ECM/PCM DTCs.

   NO: Replace the VSA modulator-control unit (see **VSA MODULATOR-CONTROL UNIT REMOVAL & INSTALLATION**).

DTC 107: TCS OPERATION; DTC 108: VSA OPERATION

NOTE: The ABS/VSA indicators do not come on by memorizing the DTC 107 or 108.

1. Clear the DTC using the HDS (see **HOW TO CLEAR DTCS**).
2. Disconnect the HDS from the 16P DLC.
3. Turn the ignition switch OFF, then turn it ON (II) again.
4. Test-drive the vehicle.

   Is DTC 107 or DTC 108 indicated?

   YES: Check for loose terminals in the VSA control unit 47P connector. If necessary, substitute a known-good VSA modulator-control unit (see **VSA MODULATOR-CONTROL UNIT REMOVAL & INSTALLATION**), and recheck.

   NO: Intermittent failure; the system is OK at this time.

DTC 112: INTERNAL POWER SOURCE STUCK OFF

NOTE: If the battery cable was disconnected three times with the ignition switch ON (II), this DTC may be stored.

1. Check for other DTCs.

   Is another DTC indicated?

   YES: Do the appropriate troubleshooting for the DTC.

   NO: Go to step 2.
2. Clear the DTC using the HDS (see **HOW TO CLEAR DTCS**).
3. Disconnect the HDS from the 16P DLC.
4. Turn the ignition switch OFF, then turn it ON (II) again.
5. Test-drive the vehicle.

cardiagn.com

Does the ABS indicator come on, and is DTC 112 indicated?

YES: Go to step 6.

NO: Intermittent failure; the vehicle is OK at this time.

6. Inspect G203 for a clean and tight connection.

Is G203 clean and properly connected?

YES: Go to step 7.

NO: Repair the connection at G203.

7. Disconnect the VSA control unit 47P connector.
8. Check for continuity between body ground and VSA control unit 47P connector terminals No. 32 and No. 47 individually.

Is there continuity?

YES: Check for loose terminals in the VSA control unit 47P connector. If necessary, substitute a known-good VSA modulator-control unit (see **VSA MODULATOR-CONTROL UNIT REMOVAL & INSTALLATION**), and recheck.

NO: Repair open in the wire between the VSA modulator-control unit and G203.

cardiagn.com

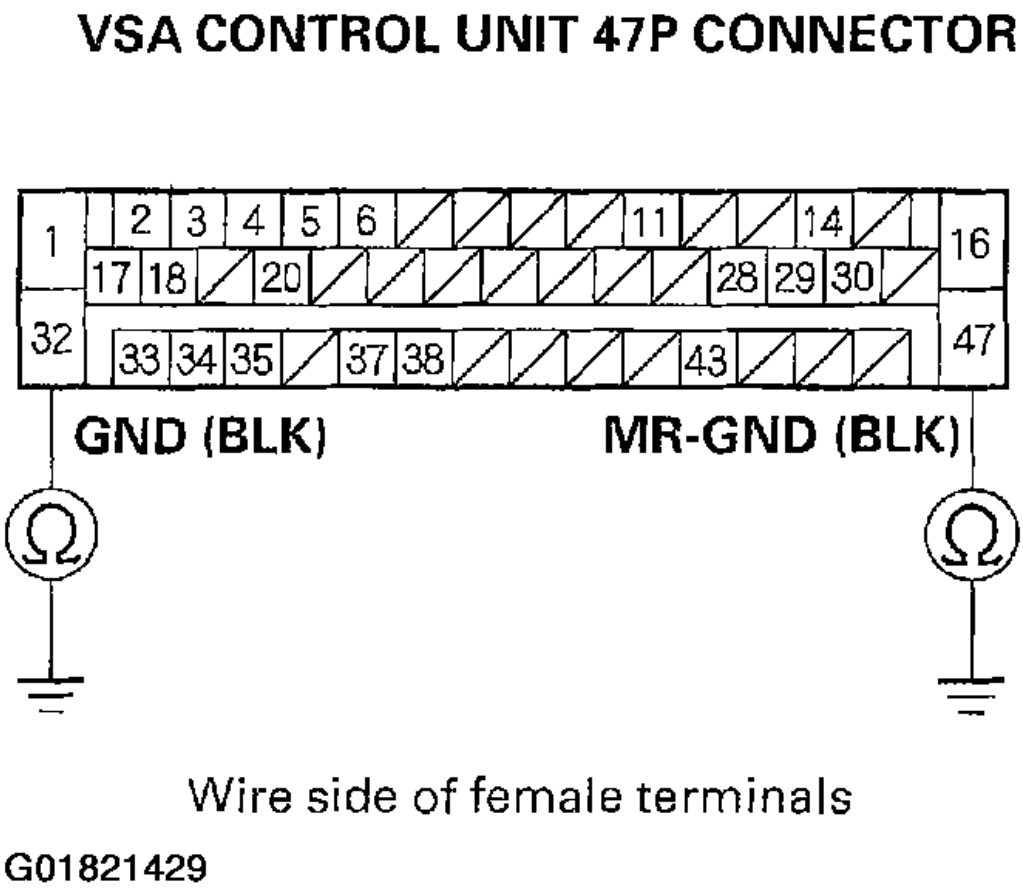

Fig. 64: Checking For Continuity Between Body Ground And VSA Control Unit 47P Connector Terminals No. 32 & No. 47

DTC 121, 122, 123, 124: VSA SOLENOID

1. Clear the DTC using the HDS (see **HOW TO CLEAR DTCS**).
2. Disconnect the HDS from the 16P DLC.
3. Turn the ignition switch OFF, then turn it ON (II) again.
4. Test-drive the vehicle.

Does the VSA indicator come on, and is DTC 121, 122, 123 or 124 indicated?

YES: Check for loose terminals in the VSA control unit 47P connector. If necessary, substitute a known-good VSA modulator-control unit (see **VSA MODULATOR-CONTROL UNIT REMOVAL & INSTALLATION**), and recheck.

NO: Intermittent failure; the system is OK at this time.

cardiagn.com

ABS INDICATOR CIRCUIT TROUBLESHOOTING

ABS INDICATOR DOES NOT COME ON

1. Turn the ignition switch ON (II), and watch the ABS indicator.

   Does the ABS indicator come on for several seconds?

   YES: The system is OK at this time.

   NO: Go to step 2.
2. Apply the parking brake.

   Does the brake system indicator come?

   YES: Go to step 3.

   NO: Repair open in the indicator power source circuit.
3. Turn the ignition switch OFF.
4. Substitute a known-good VSA modulator-control unit (see **VSA MODULATOR-CONTROL UNIT REMOVAL & INSTALLATION**).
5. Turn the ignition switch ON (II).

   Does ABS indicator come on?

   YES: Replace the VSA modulator-control unit (see **VSA MODULATOR-CONTROL UNIT REMOVAL & INSTALLATION**).

   NO: Do the troubleshooting for the gauge control module (see **SELF-DIAGNOSTIC PROCEDURE**).

ABS INDICATOR DOES NOT GO OFF & NO DTCS ARE STORED

1. Check the No. 18 (40A) fuse in the under-hood fuse/relay box.

   Is the fuse OK?

   YES: Reinstall the fuse, and go to step 2.

   NO: Replace the fuse, and recheck. If the fuse is blown, check for a short to body ground in this fuse circuit. If the circuit is OK, replace the VSA modulator-control unit (see **VSA MODULATOR-CONTROL UNIT REMOVAL & INSTALLATION**).
2. Check the No. 18 (15A) fuse in the under-dash fuse/relay box.

   Is the fuse OK?

   YES: Reinstall the fuse, and go to step 3.

   NO: Replace the fuse, and recheck. If the fuse is blown, check for a short to body ground in this fuse circuit. If the circuit is OK, replace the VSA modulator-control unit (see **VSA MODULATOR-CONTROL UNIT REMOVAL & INSTALLATION**).
3. Turn the ignition switch OFF.
4. Disconnect the VSA control unit 47P connector.
5. Measure the voltage between the VSA control unit 47P connector terminal No. 1 and body ground.

   Is there battery voltage?

   YES: Go to step 6.

cardiagn.com

NO: Repair open in the wire between the No. 18 (40A) fuse and the VSA control unit.

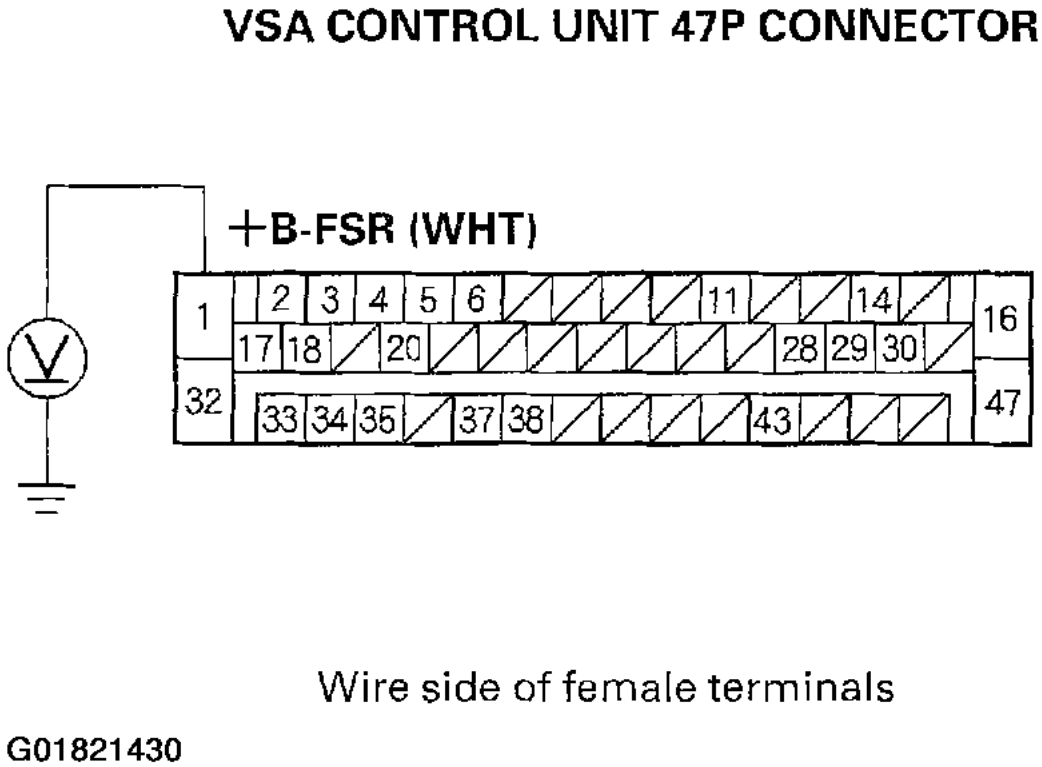

Fig. 65: Measuring The Voltage Between The VSA Control Unit 47P Connector Terminal No. 1 & Body Ground

6. Turn the ignition switch ON (II).
7. Measure the voltage between the VSA control unit 47P connector terminal No. 38 and body ground.

   Is there battery voltage?

   YES: Go to step 8.

   NO: Repair open in the wire between the No. 18 (15A) fuse and the VSA control unit.

cardiagn.com

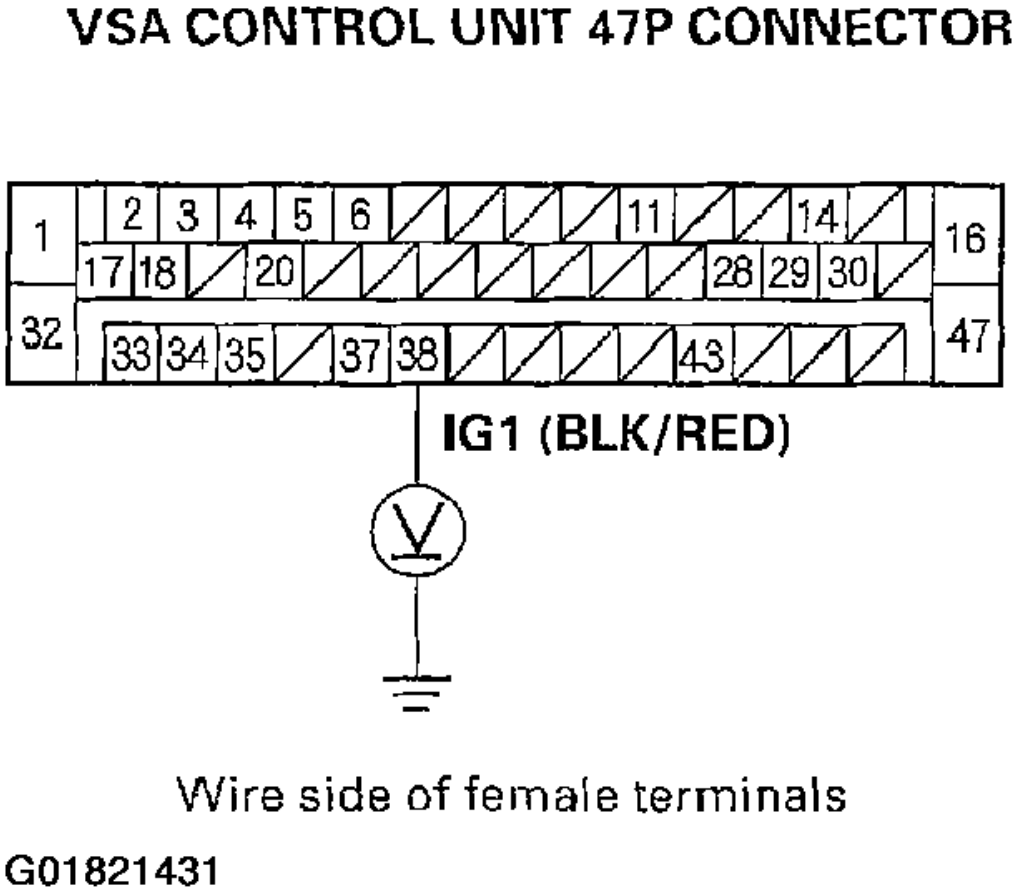

Fig. 66: Measuring The Voltage Between The VSA Control Unit 47P Connector Terminal No. 38 & Body Ground

8. Turn the ignition switch OFF.
9. Check for continuity between the VSA control unit 47P connector terminal No. 32 and body ground.

   Is there continuity?

   YES: Check for loose terminals in the VSA control unit 47P connector. If necessary, substitute a known-good VSA modulator-control unit (see **VSA MODULATOR-CONTROL UNIT REMOVAL & INSTALLATION**), and recheck.

   NO: Repair open in the wire between the VSA control unit and body ground (G203).

cardiagn.com

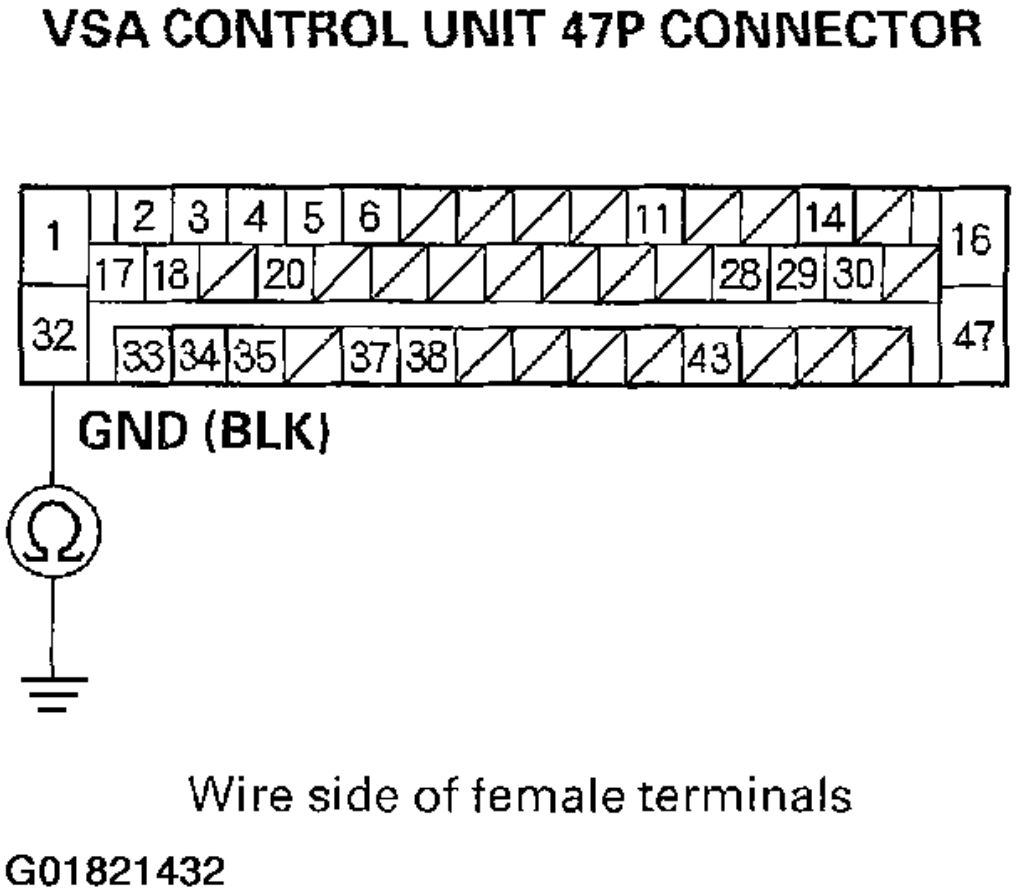

Fig. 67: Checking For Continuity Between The VSA Control Unit 47P Connector Terminal No. 32 & Body Ground

BRAKE SYSTEM INDICATOR CIRCUIT TROUBLESHOOTING

BRAKE SYSTEM INDICATOR DOES NOT COME ON

1. With the parking brake applied, turn the ignition switch ON (II), and watch the brake system indicator.

   Does the brake system indicator come on?

   YES: Go to step 3 .

   NO: Go to step 2.

2. Turn the ignition switch OFF then ON (II) again.

   Does the ABS indicator come on for several seconds?

   YES: Replace the gauge control module (see page **GAUGE CONTROL MODULE**

cardiagn.com

REPLACEMENT).

NO: Repair open in the indicator power source circuit, if necessary, substitute a known-good gauge control module, and recheck.

3. Turn the ignition switch OFF.
4. Release the parking brake.
5. Turn the ignition switch ON (II).

Does the brake system indicator come on for several seconds?

YES: Go to step 6.

NO: Check for loose terminals in the gauge control module connectors. If necessary, substitute a known-good gauge control module, and recheck.

6. Apply the parking brake.

Does the brake system indicator come on?

YES: The system is OK at this time.

NO: Go to step 7.

7. Turn the ignition switch OFF.
8. Disconnect the parking brake switch connector (see **PARKING BRAKE SWITCH**).
9. Turn the ignition switch ON (II).
10. Measure the voltage between the parking brake switch connector terminal and body ground.

Is there battery voltage?

YES: Replace the parking brake switch (see **PARKING BRAKE SWITCH**).

NO: Go to step 11.

11. Turn the ignition switch OFF.
12. Remove the gauge control module (see page **GAUGE CONTROL MODULE REPLACEMENT**).
13. Connect gauge control module connector A (22P) terminal No. 4 and body ground with a jumper wire.

cardiagn.com

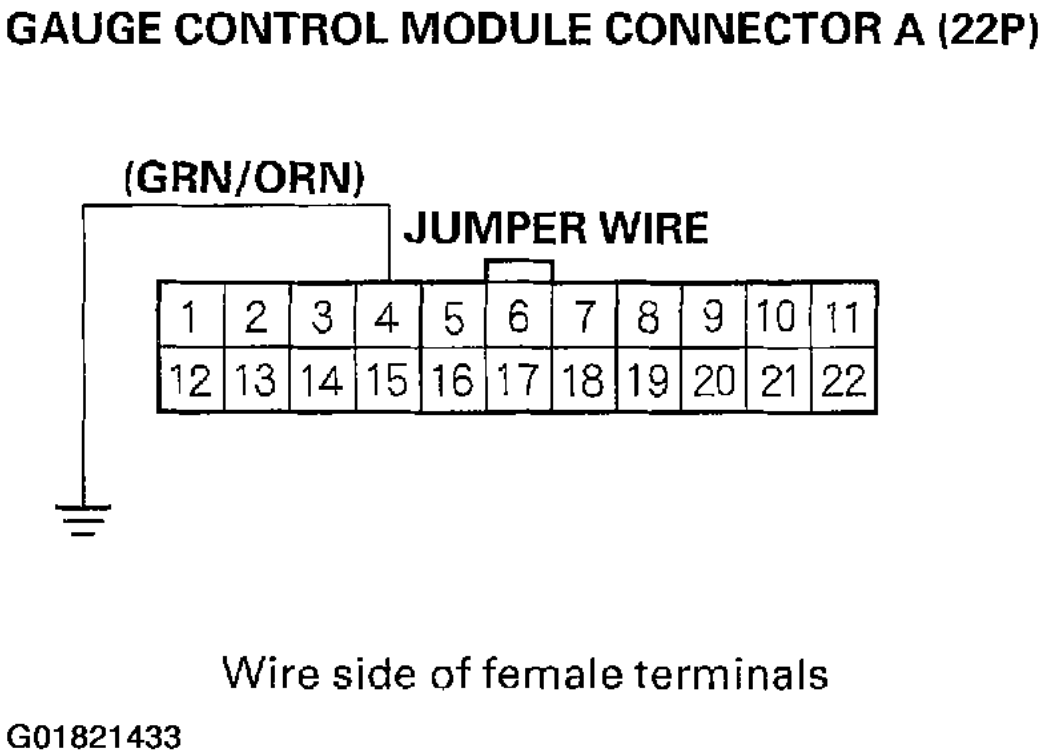

Fig. 68: Connecting Gauge Control Module Connector A (22P) Terminal No. 4 & Body Ground With A Jumper Wire

14. Turn the ignition switch ON (II).

    Does the brake system indicator come on and stay on?

    YES: Repair open in the wire between the gauge control module, and the parking brake switch.

    NO: Replace the gauge control module (see page **GAUGE CONTROL MODULE REPLACEMENT**).

BRAKE SYSTEM INDICATOR DOES NOT GO OFF

1. Turn the ignition switch ON (II).
2. Release the parking brake.

   Does the brake system indicator go off after several seconds?

   YES: The system is OK at this time.

   NO: Go to step 3.
3. Check the brake fluid level (see **BLEEDING BRAKE SYSTEM**).

   Is the level OK?

cardiagn.com

YES: Go to step 4.

NO: Refill the brake fluid, and recheck.

4. Check the ABS indicator.

Does the ABS indicator stay on?

YES: Read the DTC (see **General Troubleshooting Information**), and do the applicable troubleshooting for the DTC.

NO: Check the brake system indicator circuit:

- Short to body ground between the gauge control module and the parking brake switch.
- Short to body ground between the gauge control module and the brake fluid level switch.
- Parking brake switch stuck ON.
- Brake fluid level switch stuck ON.
- Faulty gauge control module.

VSA INDICATOR CIRCUIT TROUBLESHOOTING

VSA INDICATOR DOES NOT COME ON

1. Turn the ignition switch ON (II), and watch the VSA indicator.

Does the VSA indicator come on for several seconds?

YES: The system is OK at this time.

NO: Go to step 2.

2. Apply the parking brake.

Does the brake system indicator come on?

YES: Go to step 3.

NO: Repair open in the indicator power source circuit.

3. Turn the ignition switch OFF.
4. Substitute a known-good VSA modulator-control unit (see **VSA MODULATOR-CONTROL UNIT REMOVAL & INSTALLATION**).
5. Turn the ignition switch ON (II).

Does the VSA indicator come on?

YES: Replace the VSA modulator-control unit (see **VSA MODULATOR-CONTROL UNIT REMOVAL & INSTALLATION**).

NO: Do the troubleshooting for the gauge control module (see **SELF-DIAGNOSTIC PROCEDURE**).

VSA INDICATOR DOES NOT GO OFF & NO DTCS ARE STORED

1. Check the No. 18 (40A) fuse in the under-hood fuse/relay box.

Is the fuse OK?

cardiagn.com

YES: Reinstall the fuse, and go to step 2.

NO: Replace the fuse, and recheck. If the fuse is blown, check for a short to body ground in this fuse circuit. If the circuit is OK, replace the VSA modulator-control unit (see **VSA MODULATOR-CONTROL UNIT REMOVAL & INSTALLATION**).

2. Check the No. 18 (15A) fuse in the under-dash fuse/relay box.

Is the fuse OK?

YES: Reinstall the fuse, and go to step 3.

NO: Replace the fuse, and recheck. If the fuse is blown, check for a short to body ground in this fuse circuit. If the circuit is OK, replace the VSA modulator-control unit (see **VSA MODULATOR-CONTROL UNIT REMOVAL & INSTALLATION**).

3. Turn the ignition switch OFF.
4. Disconnect the VSA control unit 47P connector.
5. Measure the voltage between the VSA control unit 47P connector terminal No. 1 and body ground.

Is there battery voltage?

YES: Go to step 6.

NO: Repair open in the wire between the No. 18 (40A) fuse and the VSA control unit.

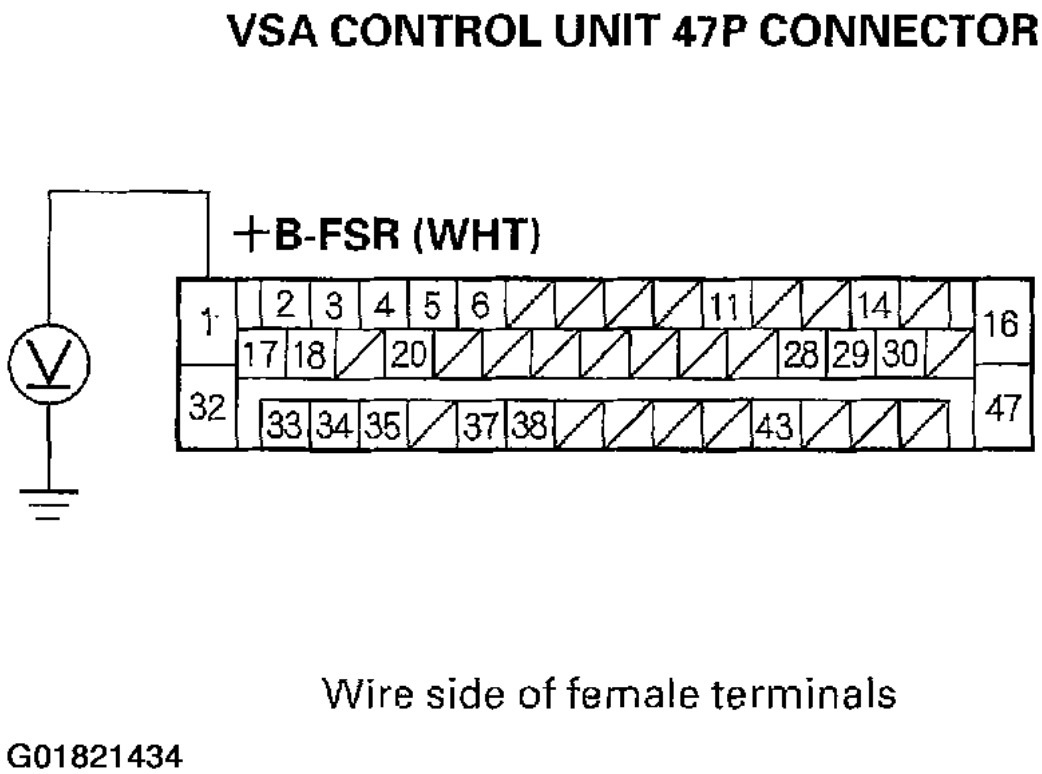

Fig. 69: Measuring The Voltage Between The VSA Control Unit 47P Connector Terminal No.

cardiagn.com

1 & Body Ground

6. Turn the ignition switch ON (II).
7. Measure the voltage between the VSA control unit 47P connector terminal No. 38 and body ground.

   Is there battery voltage?

   YES: Go to step 8.

   NO: Repair open in the wire between the No. 18 (15A) fuse and the VSA control unit.

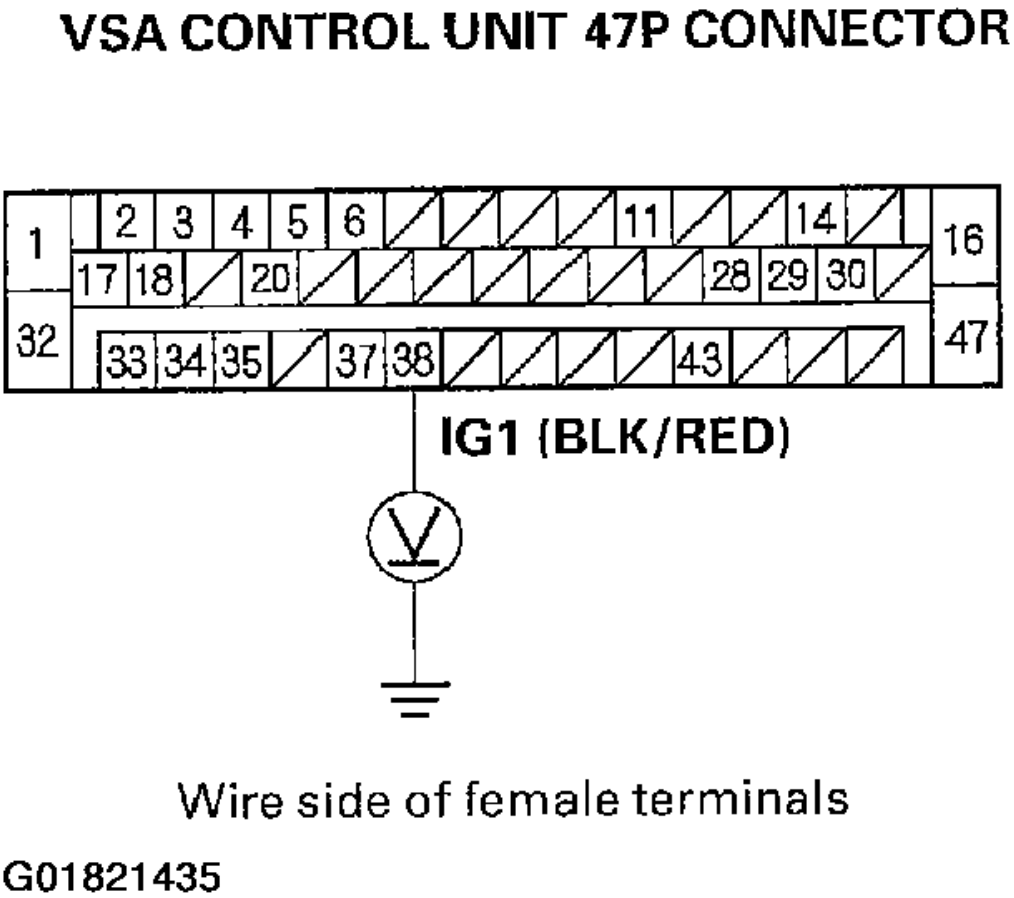

Fig. 70: Measuring The Voltage Between The VSA Control Unit 47P Connector Terminal No. 38 & Body Ground

8. Turn the ignition switch OFF.
9. Check for continuity between the VSA control unit 47P connector terminal No. 32 and body ground.

   Is there continuity?

cardiagn.com

YES: Check for loose terminals in the VSA control unit 47P connector. If necessary, substitute a known-good VSA modulator-control unit and recheck.

NO: Repair open in the wire between the VSA control unit and body ground (G203).

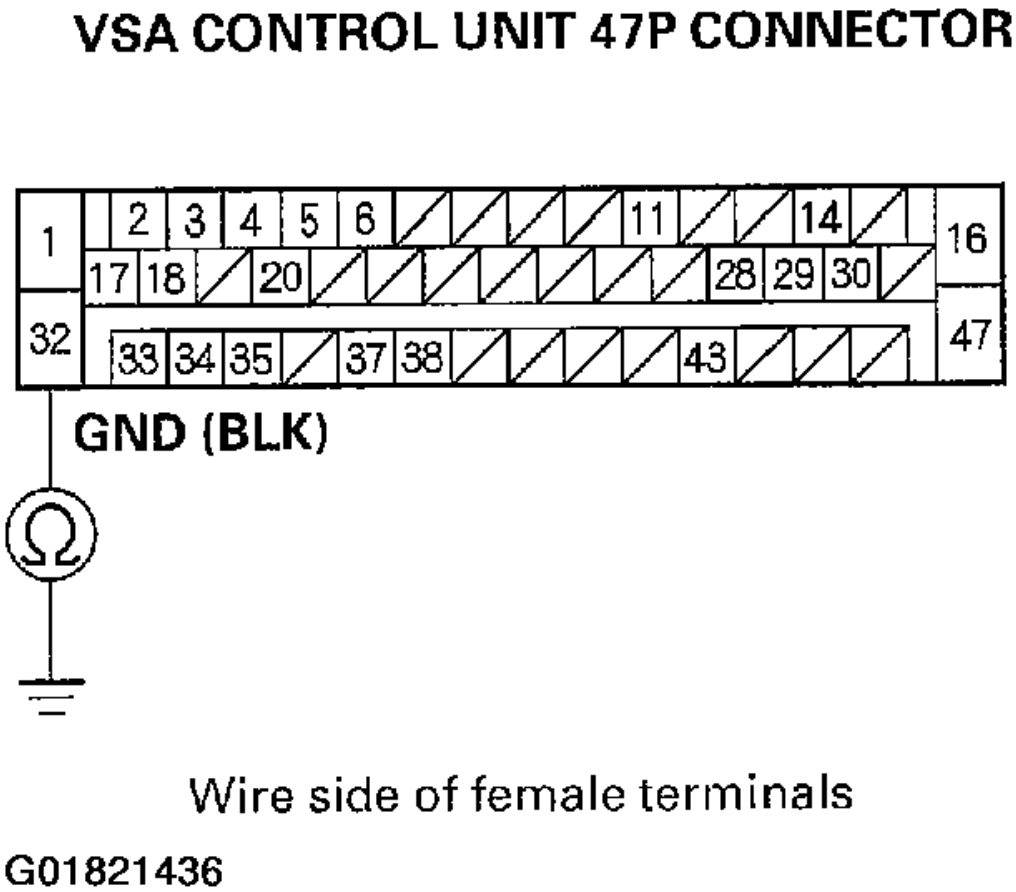

Fig. 71: Checking For Continuity Between The VSA Control Unit 47P Connector Terminal No. 32 & Body Ground

VSA ACTIVATION INDICATOR CIRCUIT TROUBLESHOOTING

VSA ACTIVATION INDICATOR DOES NOT COME ON

1. Turn the ignition switch ON (II), and watch the VSA activation indicator.

   Does the VSA activation indicator come on for several seconds?

   YES: The system is OK at this time.

cardiagn.com

NO: Go to step 2.

2. Apply the parking brake.

   Does the brake system indicator come on?

   YES: Go to step 3.

   NO: Repair open in the indicator power source circuit.

3. Turn the ignition switch OFF.
4. Substitute a known-good VSA modulator-control unit (see **VSA MODULATOR-CONTROL UNIT REMOVAL & INSTALLATION**).
5. Turn the ignition switch ON (II).

   Does the VSA activation indicator come on?

   YES: Replace the VSA modulator-control unit (see **VSA MODULATOR-CONTROL UNIT REMOVAL & INSTALLATION**).

   NO: Do the troubleshooting for the gauge control module (see **SELF-DIAGNOSTIC PROCEDURE**).

VSA ACTIVATION INDICATOR DOES NOT GO OFF & NO DTCS ARE STORED

1. Turn the ignition switch ON (II), and watch the VSA indicator.

   Does the VSA indicator go off?

   YES: Go to step 2.

   NO: Do the appropriate troubleshooting for the VSA indicator.

2. Turn the ignition switch OFF.
3. Check the VSA OFF switch (see **VSA OFF SWITCH TEST**).

   Is the switch OK?

   YES: Go to step 4.

   NO: Replace the VSA OFF switch (see **VSA OFF SWITCH TEST**).

4. Clear the DTC using the HDS (see **HOW TO CLEAR DTCS**).

   Does the VSA activation indicator go off?

   YES: The system is OK at this time.

   NO: Go to step 5.

5. Do the VSA sensor neutral memorization (see **VSA SENSOR NEUTRAL POSITION MEMORIZATION**).
6. Clear the DTC using the HDS (see **HOW TO CLEAR DTCS**).

   Does the VSA activation indicator go off?

   YES: The system is OK at this time.

   NO: Go to step 7.

7. Remove the gauge control module (see page **GAUGE CONTROL MODULE REPLACEMENT**).
8. Check for continuity between the VSA OFF switch 5P connector terminal No. 2 and body ground.

   Is there continuity?

cardiagn.com

YES: Repair short to body ground in the wire between the gauge control module and the VSA OFF switch.

NO: Go to step 9.

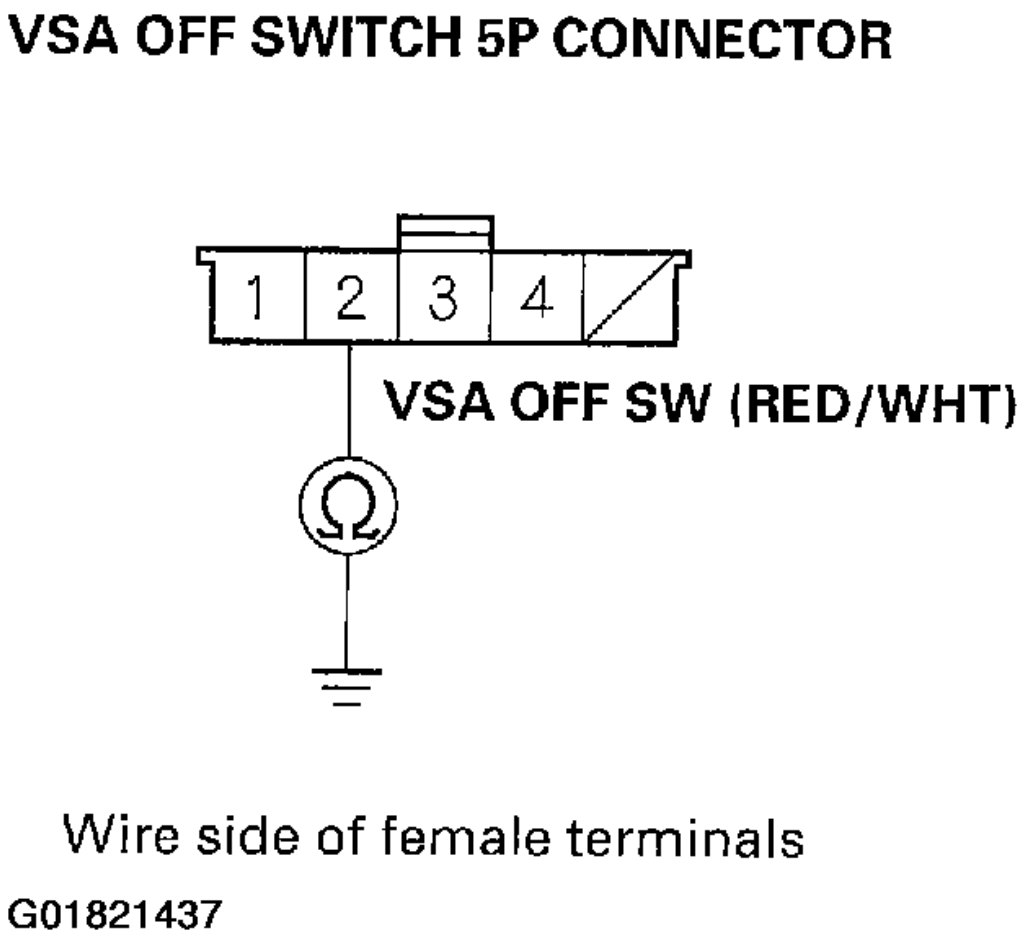

Fig. 72: Checking For Continuity Between The VSA OFF Switch 5P Connector Terminal No. 2 & Body Ground

9. Check for continuity between the VSA OFF switch 5P connector terminal No. 1 and body ground.

Is there continuity?

YES: Go to step 10.

NO: Repair open in the wire between the VSA OFF switch and body ground (G501).

cardiagn.com

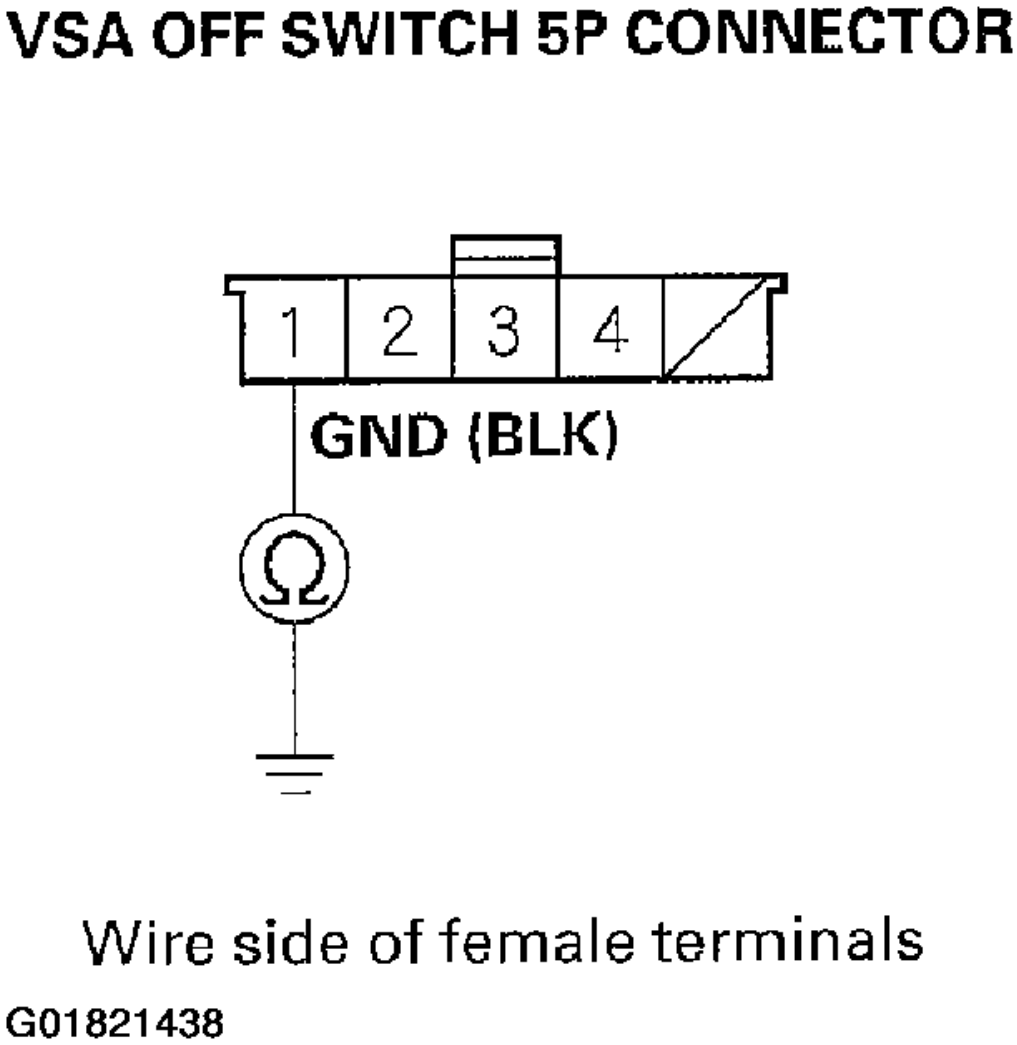

Fig. 73: Checking For Continuity Between The VSA OFF Switch 5P Connector Terminal No. 1 & Body Ground

10. Substitute a known-good VSA modulator-control unit (see **VSA MODULATOR-CONTROL UNIT REMOVAL & INSTALLATION**).
11. Reconnect all of the disconnected connectors.
12. Clear the DTC using the HDS (see **HOW TO CLEAR DTCS**).
13. Disconnect the HDS from the 16P DLC.
14. Turn the ignition switch OFF, then turn it ON (II) again.
15. Test-drive the vehicle.

cardiagn.com

Does the VSA activation indicator go off?

YES: Replace the VSA modulator-control unit (see **VSA MODULATOR-CONTROL UNIT REMOVAL & INSTALLATION**).

NO: Check for loose terminals in the gauge control module connectors. If necessary, substitute a known-good gauge control module, and recheck.

STEERING ANGLE SENSOR REPLACEMENT

NOTE: Do not damage or drop the combination switch as the steering angle sensor is sensitive to shock and vibration.

1. Remove the steering wheel (see **STEERING WHEEL REMOVAL**), and steering column cover (see **STEERING COLUMN REMOVAL AND INSTALLATION**).
2. Remove the combination switch assembly (see **STEERING COLUMN REMOVAL AND INSTALLATION**).
3. Remove the combination light switch (A) and the wiper/washer switch (B).

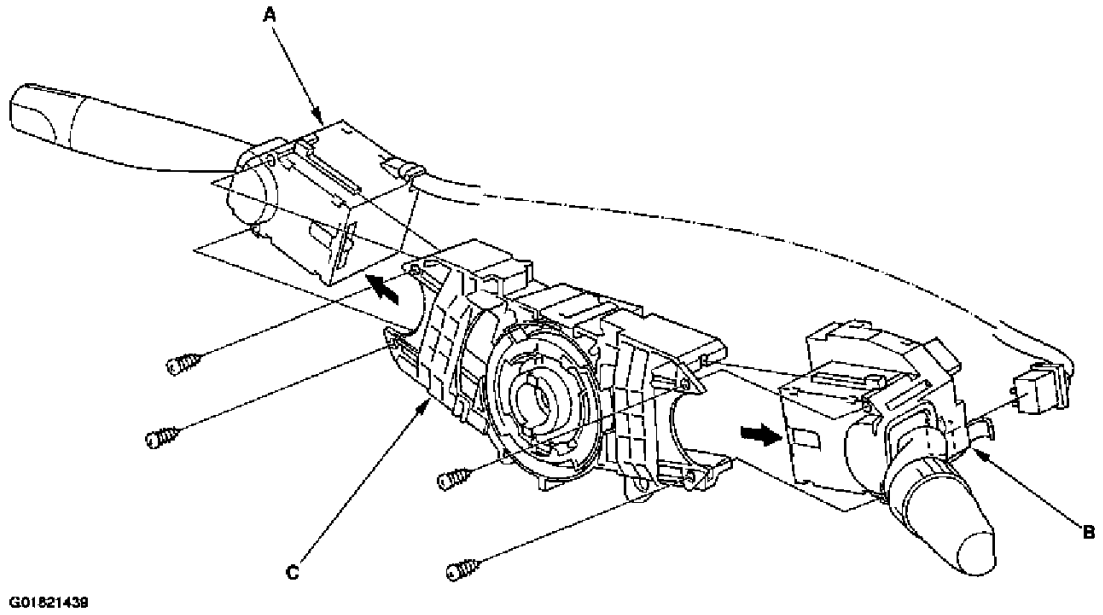

Fig. 74: Removing The Combination Light Switch & The Wiper/Washer Switch

4. Replace the combination switch body complete (C).
5. Install the combination switch in the reverse order of removal.

NOTE: Do not remove the steering angle sensor from the combination switch body.

cardiagn.com

6. Do the VSA sensor neutral position memorization (see **VSA SENSOR NEUTRAL POSITION MEMORIZATION**).

YAW RATE-LATERAL ACCELERATION SENSOR REPLACEMENT

NOTE:

- **Do not damage or drop the sensor as it is sensitive.**
- **Do not use an impact wrench.**

1. Remove the driver's seat (see **FRONT SEAT REMOVAL/INSTALLATION**).
2. Lift up the floor carpet (A).

cardiagn.com

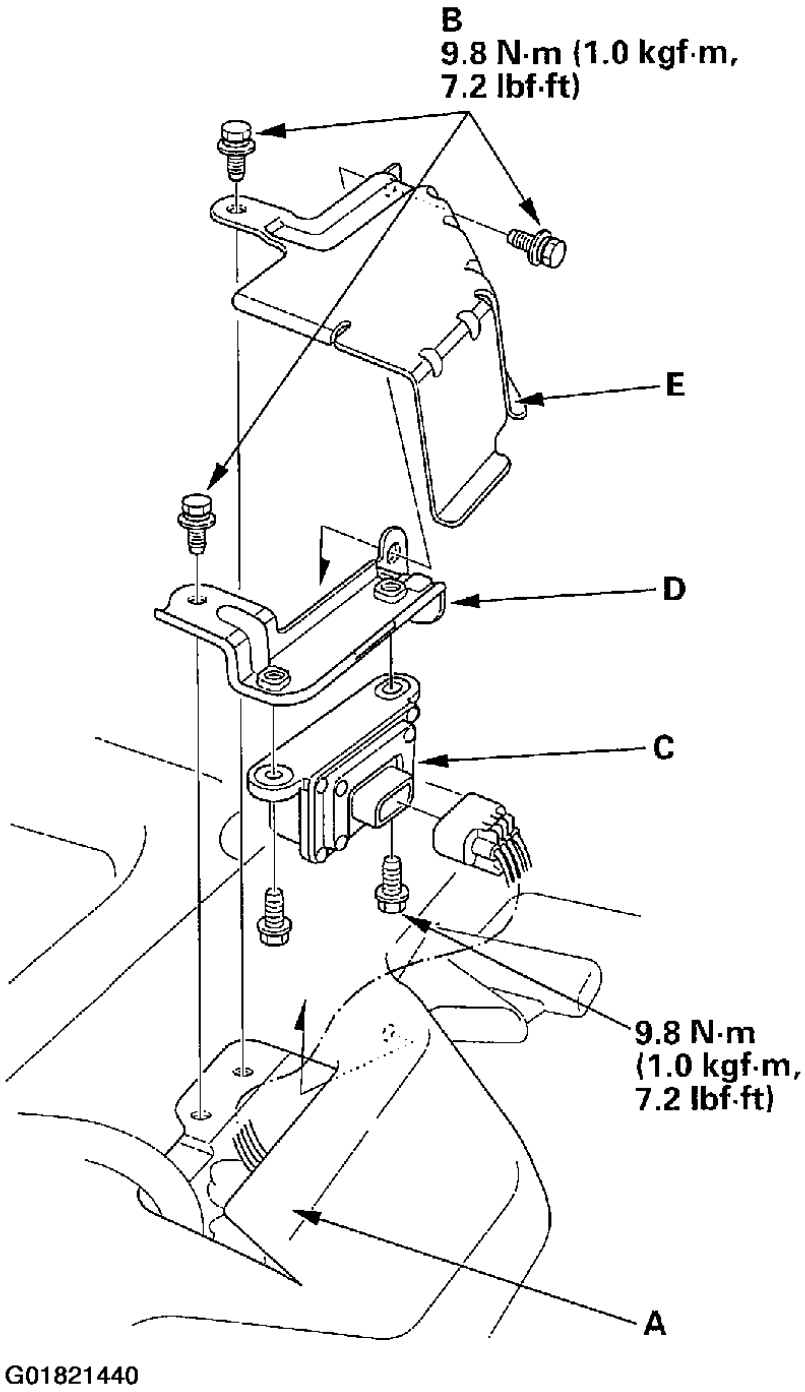

Fig. 75: Removing The Yaw Rate-Lateral Acceleration Sensor

3. Remove the sensor cover mounting bolts (B).
4. Remove the sensor cover (E).

cardiagn.com

5. Remove the yaw rate-lateral acceleration sensor (C) with the bracket (D).
6. Remove the bracket.
7. Install the sensor in the reverse order of removal.

VSA SENSOR NEUTRAL POSITION MEMORIZATION

NOTE: Do not press the brake pedal during this procedure.

1. Park the vehicle on a flat and level surface.
2. With the ignition switch OFF, connect the HDS to the 16P date link connector (DLC) (A) under the driver's side of the dashboard.

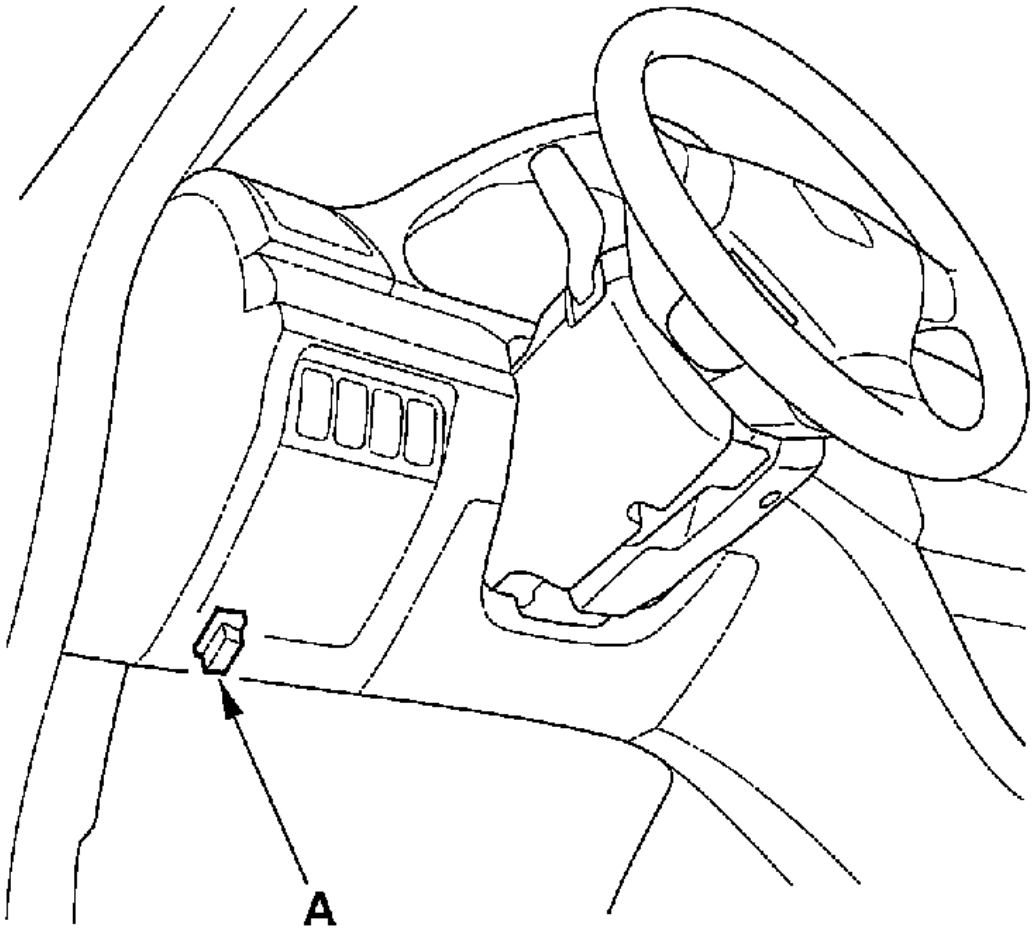

G01821441

cardiagn.com

Fig. 76: Connecting The HDS To The 16P Data Link Connector (DLC) Under The Left Side Of The Dashboard

3. Short the SCS circuit to body ground using the HDS.
4. Turn the ignition switch ON (II) with the brake pedal position switch released.
5. The ABS indicator comes on for 2 seconds and goes off.
6. After the ABS indicator goes off, press and release the VSA OFF switch once within 0.5 seconds.
7. After the ABS indicator comes on, press and release the VSA OFF switch once within 0.5 seconds.
8. The VSA activation indicator blinks two times and goes off in one second, then the system completes the VSA sensor neutral position memorization.
9. When the ABS indicator, VSA indicator and VSA activation indicator go off, the memorizing is done. If the indicators do not go off, retry these steps.
10. Turn the ignition switch OFF, and disconnect the HDS from the 16P DLC.

VSA OFF SWITCH TEST

1. Remove the VSA OFF switch (A) from the switch panel.

cardiagn.com

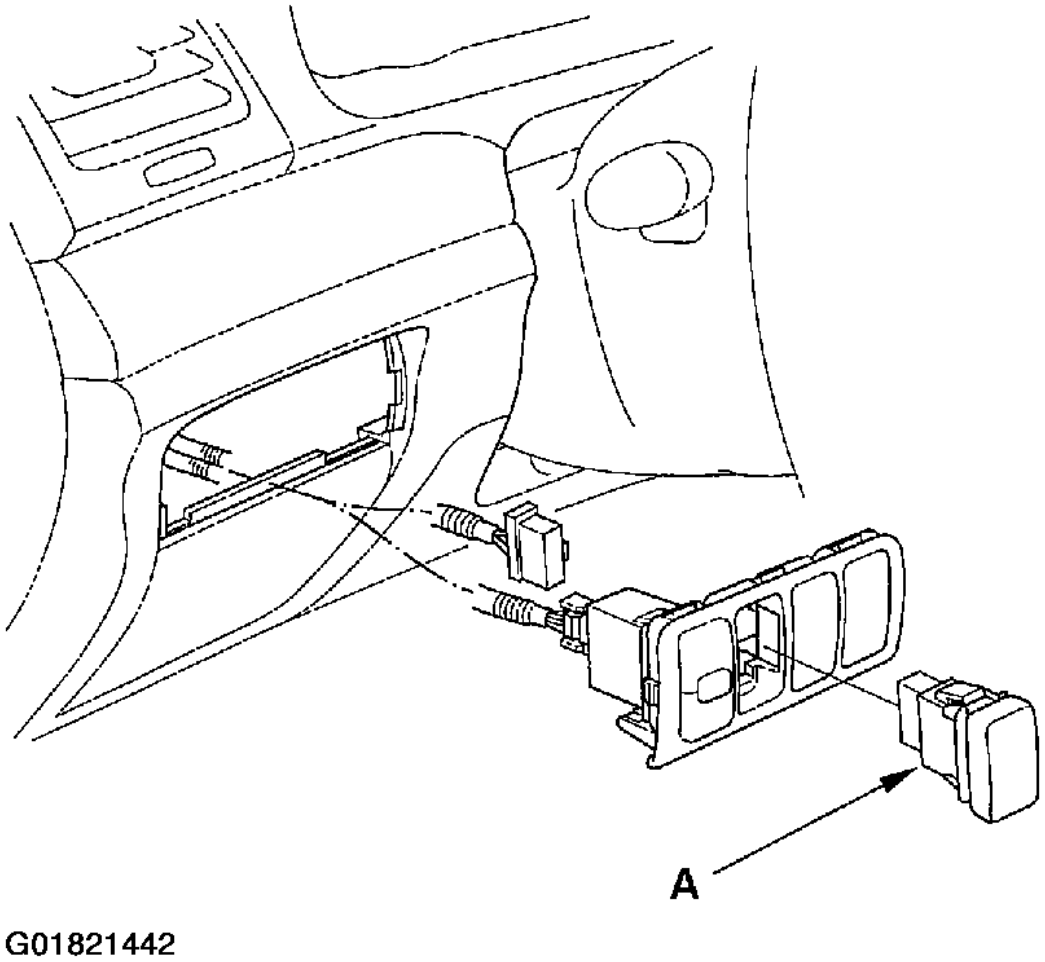

Fig. 77: Removing The VSA OFF Switch

2. Disconnect the VSA OFF switch 5P connector.
3. Check for continuity between the VSA OFF switch connector terminal No. 1 and No. 2. There should be continuity when the switch is pressed, and no continuity when the switch is released.

cardiagn.com

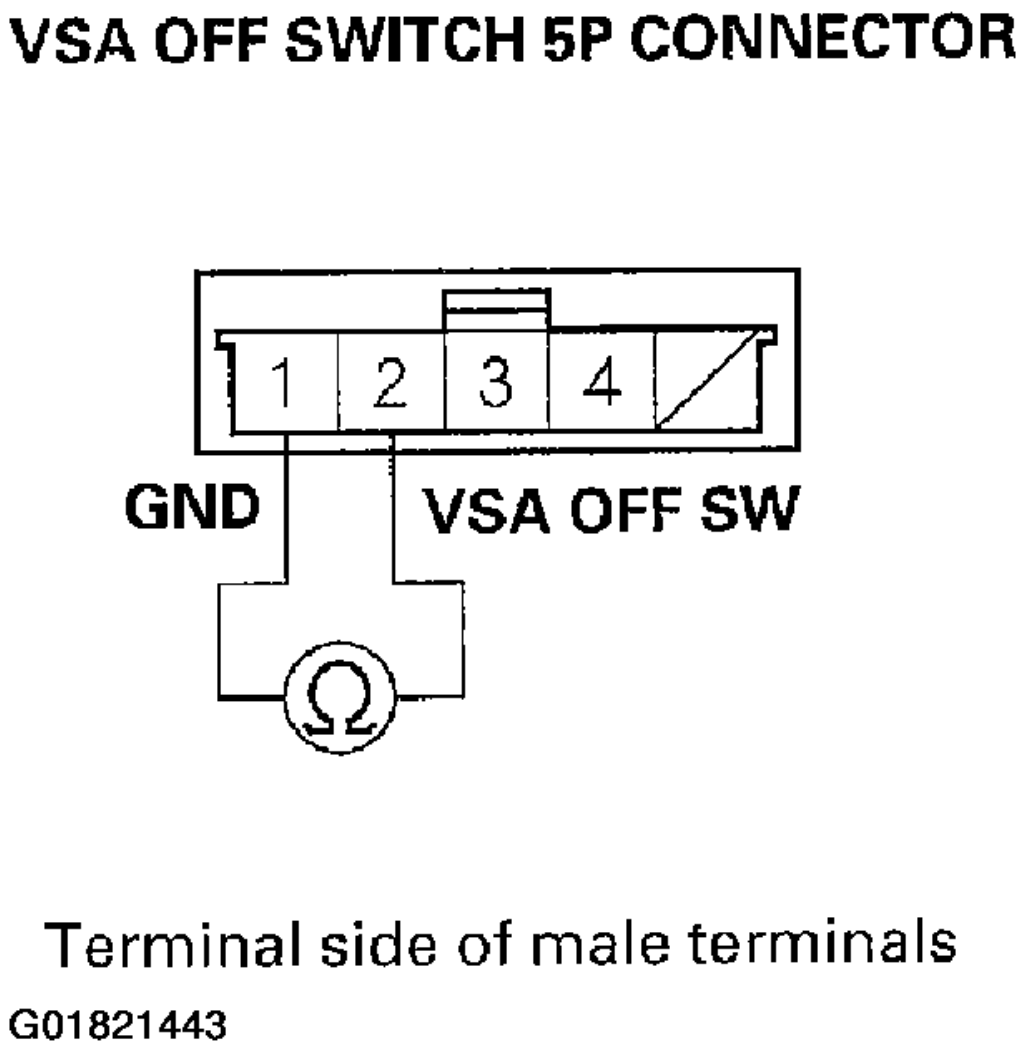

Fig. 78: Checking For Continuity Between The VSA OFF Switch Connector Terminals No. 1 & No. 2

4. Check for continuity between the VSA OFF switch connector terminal No. 3 and No. 4. There should be continuity at all times.

cardiagn.com

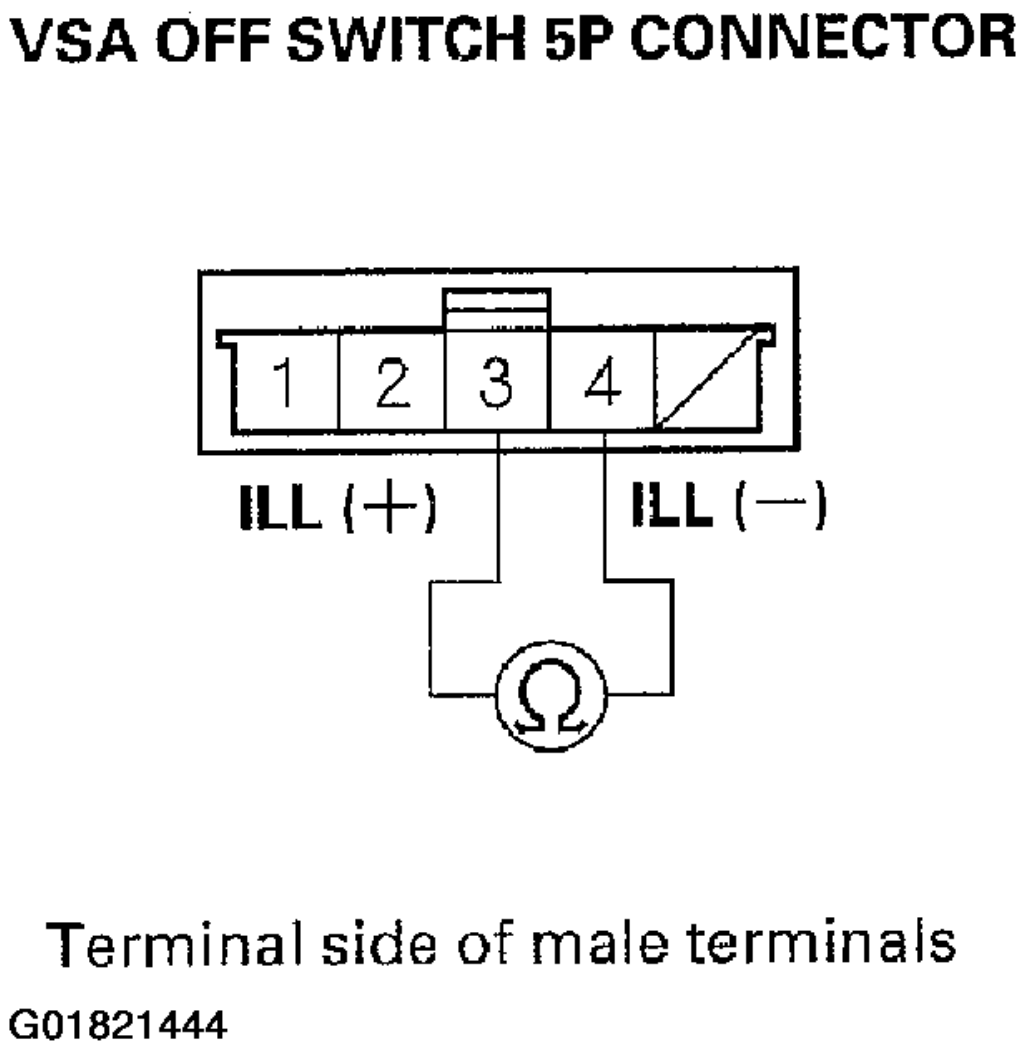

Fig. 79: Checking For Continuity Between The VSA OFF Switch Connector Terminals No. 3 & No. 4

VSA MODULATOR-CONTROL UNIT REMOVAL & INSTALLATION

NOTE:

- **Do not spill brake fluid on the vehicle; it may damage the paint; if brake fluid gets on the paint, wash it off immediately with water.**
- **Be careful not to damage or deform the brake lines during removal and installation.**
- **To prevent the brake fluid from flowing, plug and cover the hose ends and**

cardiagn.com

joints with a shop towel or equivalent material.

REMOVAL

1. Pull up the lock (A) of the VSA control unit 47P connector (B), and the connector disconnects itself.

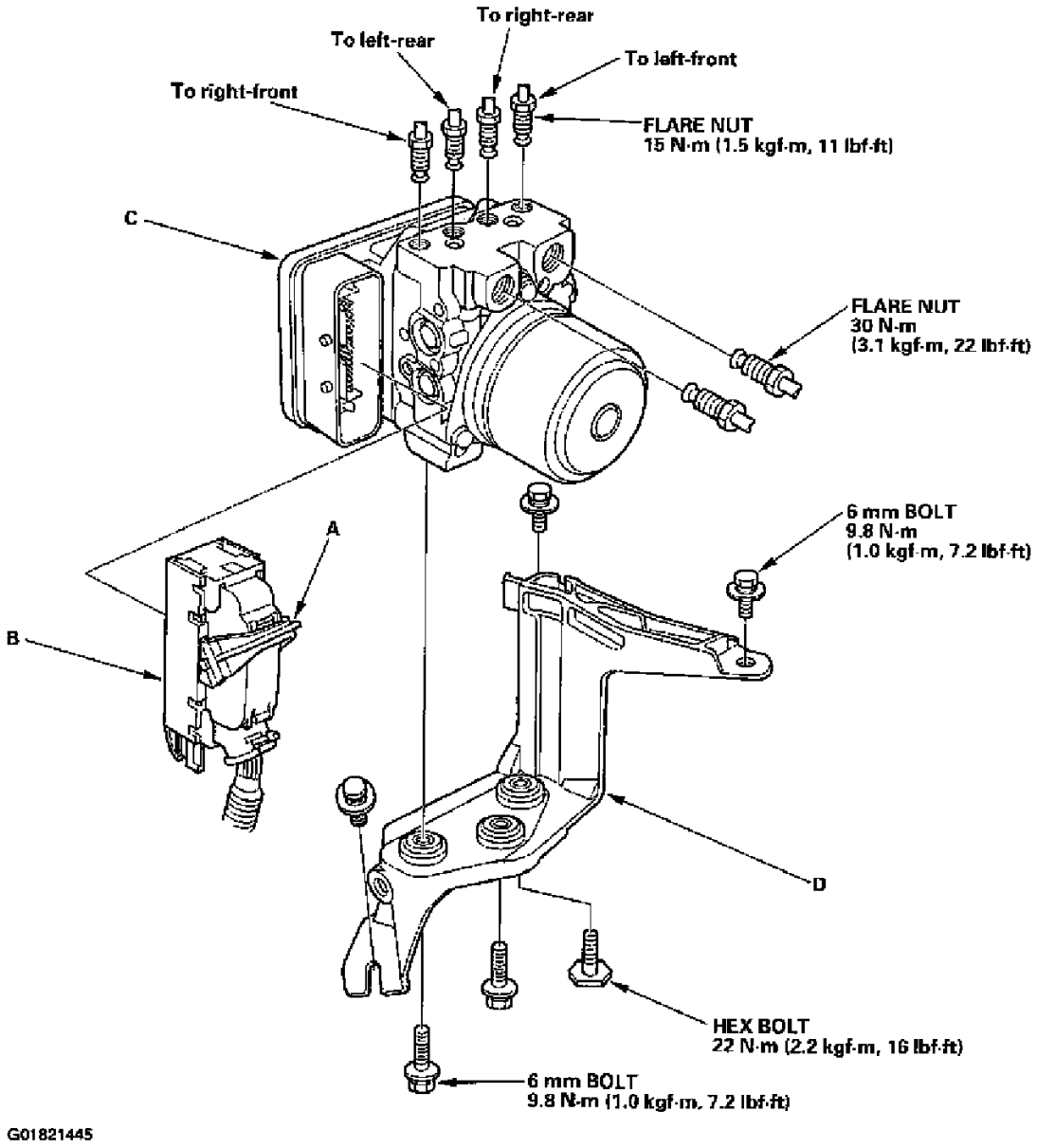

Fig. 80: Removing VSA Modulator-Control Unit

2. Disconnect the six brake lines.
3. Remove the three 6 mm bolts, then remove the VSA modulator-control unit/bracket (C/D) from the body.

cardiagn.com

4. Remove the two 6 mm bolts and the hex bolt, then remove the VSA modulator-control unit from the bracket.

INSTALLATION

1. Install the VSA modulator-control unit on the bracket, then tighten the two 6 mm bolts and the hex bolt.
2. Install the VSA modulator-control unit/bracket on the body, then tighten the three 6 mm bolts.
3. Reconnect the six brake lines, then tighten the nuts.
4. Align the connecting surface of the VSA control unit 47P connector.
5. Carefully push in the lock of the VSA control unit 47P connector until you hear it click into place, then confirm the connector is fully seated.
6. Bleed the brake system, starting with the front wheels (see **BLEEDING BRAKE SYSTEM**).
7. Start the engine, and check that the ABS and VSA indicators go off.
8. Test-drive the vehicle, and check that the ABS and VSA indicators do not come on.

WHEEL SENSOR INSPECTION

1. Clean the encoder, and make sure no metal is stuck to the encoder surface.
2. Check the magnetic encoder (A) for damage. If cracked or damaged, replace the encoder.

cardiagn.com

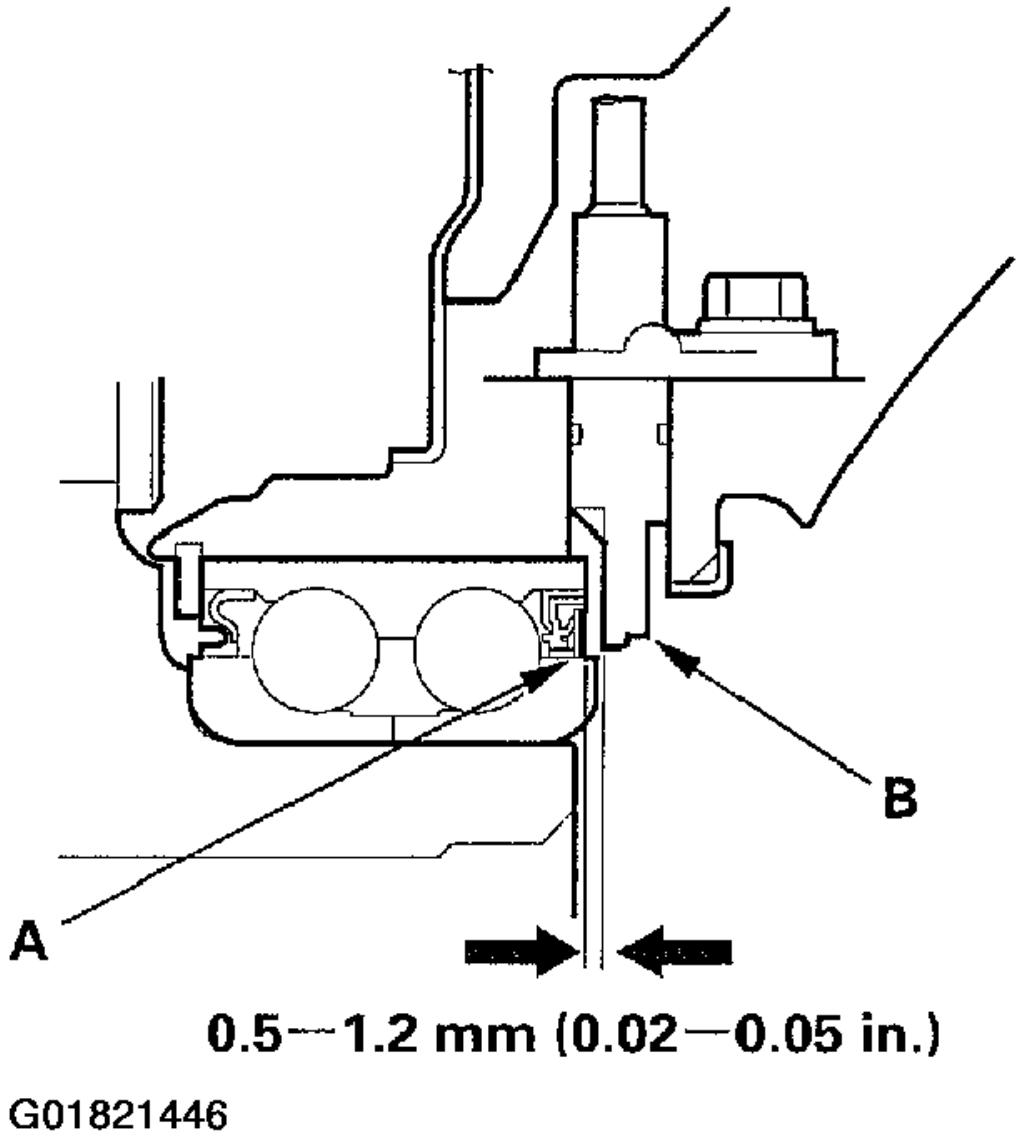

Fig. 81: Measuring The Air Gap Between The Wheel Sensor & The Magnetic Encoder (Front)

cardiagn.com

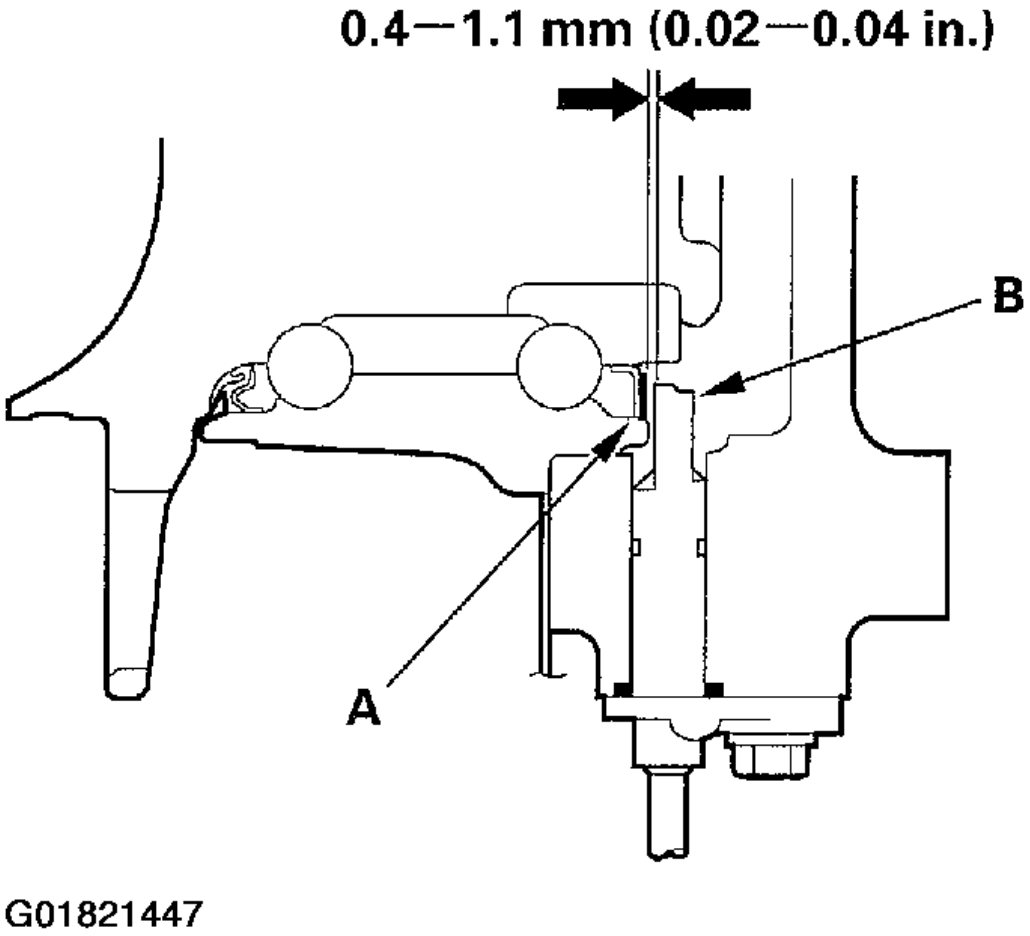

Fig. 82: Measuring The Air Gap Between The Wheel Sensor & The Magnetic Encoder (Rear)

3. Measure the air gap between the wheel sensor (B) and the magnetic encoder all the way around while rotating the encoder.

   Standard:

   Front: 0.5-1.2 mm (0.02-0.05 in.)

   Rear: 0.4-1.1 mm (0.02-0.04 in.)

WHEEL SENSOR REPLACEMENT

NOTE: Install the sensor carefully to avoid twisting the wires.

cardiagn.com

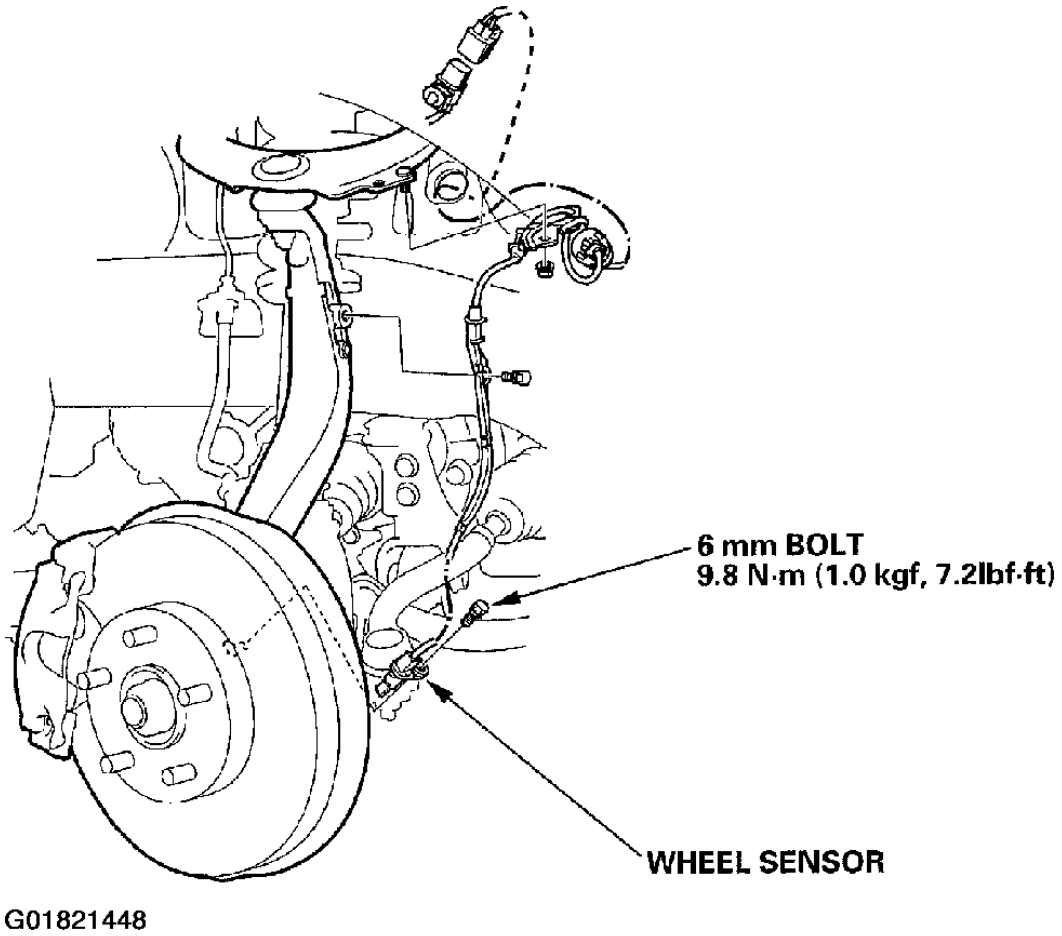

Fig. 83: Replacing Wheel Sensor (Front)

cardiagn.com

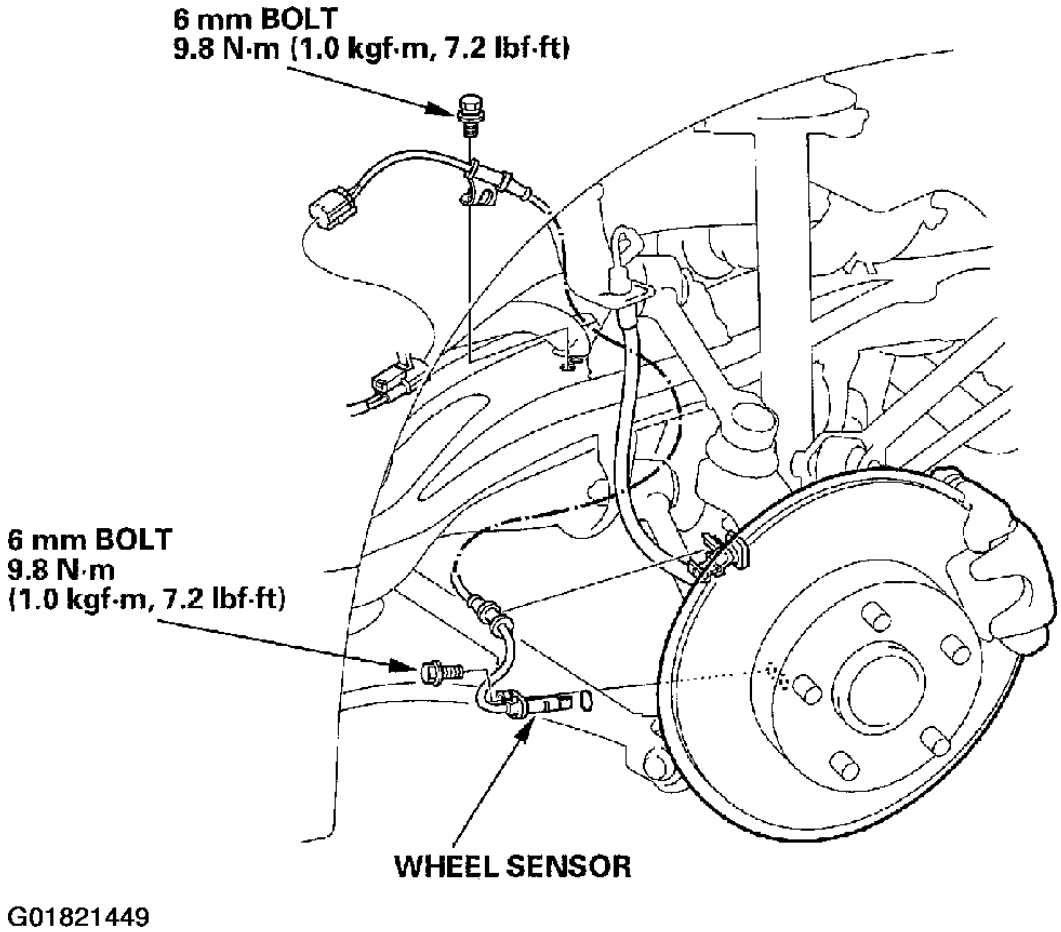

Fig. 84: Replacing Wheel Sensor (Rear)

cardiagn.com