Fastener Tightening Specifications

Application	Specification	
	Metric	English
Side Door Lock and Side Window Switch Screws - Front	3 N·m	27 lb in
Side Door Lock and Side Window Switch Screws - Rear	3 N·m	27 lb in
Side Door Window Belt Outer Sealing Strip Screws - Front	1.5 N·m	13 lb in
Side Door Window Belt Outer Sealing Strip Screws - Rear	1.5 N·m	13 lb in
Side Door Window Guide Bolts - Front	10 N·m	89 lb in
Side Door Window Guide Bolts - Rear	10 N·m	89 lb in
Side Door Window Regulator Motor Screws - Front	8 N·m	71 lb in
Side Door Window Regulator Motor Screws - Rear	8 N·m	71 lb in
Side Door Window Regulator Nuts - Front	8 N·m	71 lb in
Side Door Window Regulator Nuts - Rear	8 N·m	71 lb in
Side Door Window Weatherstrip Channel Retainer Bolts - Front	10 N·m	89 lb in
Side Door Window Weatherstrip Channel Retainer Bolts - Rear	10 N·m	89 lb in

cardiagn.com

Moveable Window Schematics

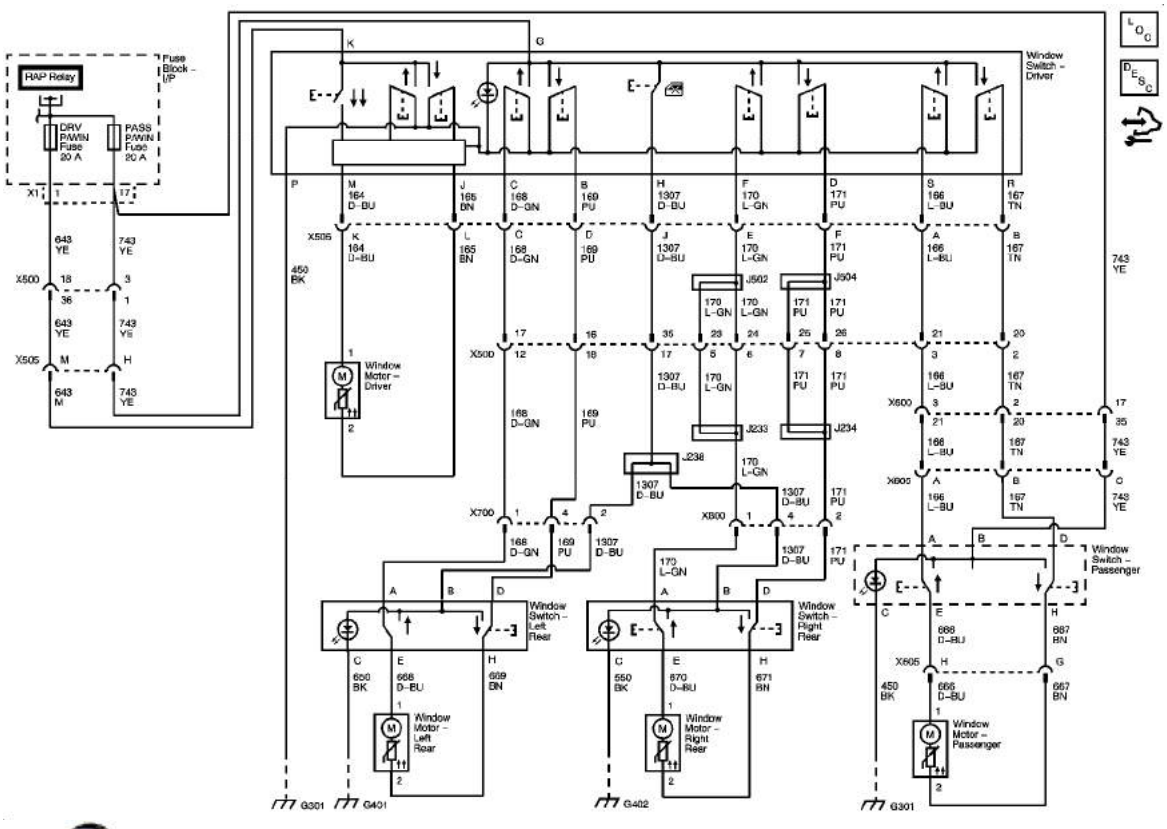

cardiagn.com

Defogger Schematics

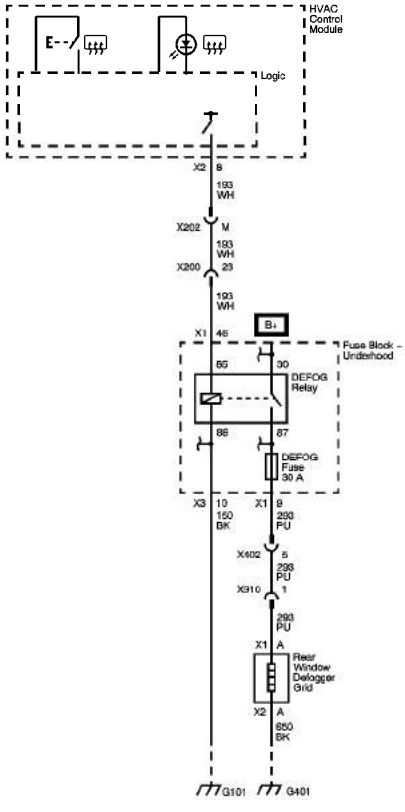

cardiagn.com

Windshield Replacement

Special Tools

- J 24402-A Glass Sealant Cold Knife Remover
- J 39032 Stationary Glass Removal Tool
- Use a urethane adhesive systems which meet GM Specification GM 3651G

Removal Procedure

Note: Before cutting out a stationary window, apply a double layer of masking tape around the perimeter of the painted surfaces and the interior trim.

1. Open the hood.
2. Remove the windshield wiper arms and blades. Refer to Windshield Wiper Arm Replacement.
3. Remove the air inlet grille. Refer to Air Inlet Grille Panel Replacement.
4. Remove the interior windshield pillar garnish moldings. Refer to Windshield Pillar Garnish Molding Replacement.
5. Remove the rearview mirror. Refer to Inside Rearview Mirror Replacement.

   Warning: Refer to Defroster Outlet Warning in the Preface section.

6. Cover the following parts to protect from broken glass:
   - Upper dash pad
   - Defroster outlets and A/C outlets
   - Seats and carpeting

   Warning: Refer to Glass and Sheet Metal Handling Warning in the Preface section.

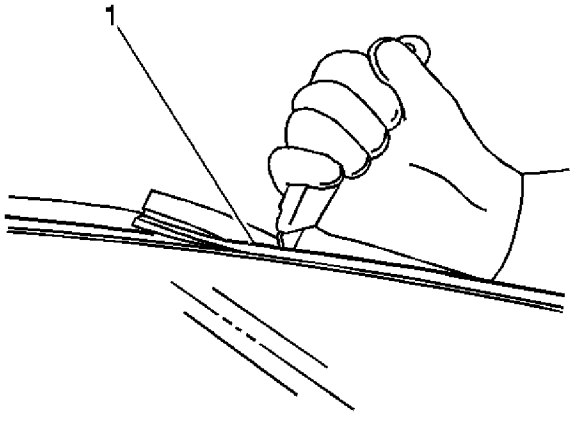

[redacted]

cardiagn.com

7. Using a utility knife, carefully cut the lace (1) from the sides and the top edge of the window to access the urethane adhesive bead, if equipped.

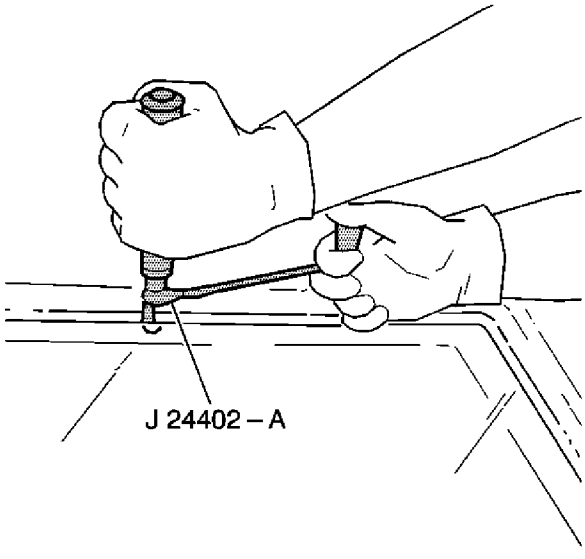

Note: Keep the cutting edge of the tool against the window.

8. Remove the window from the urethane adhesive.
   - Leave a base of urethane approximately 2 mm (0.078 in) on the pinch-weld flange.
   - The only suitable lubrication is clear water.
   - Use J 24402-A , J 39032 , or equivalent to remove the window.

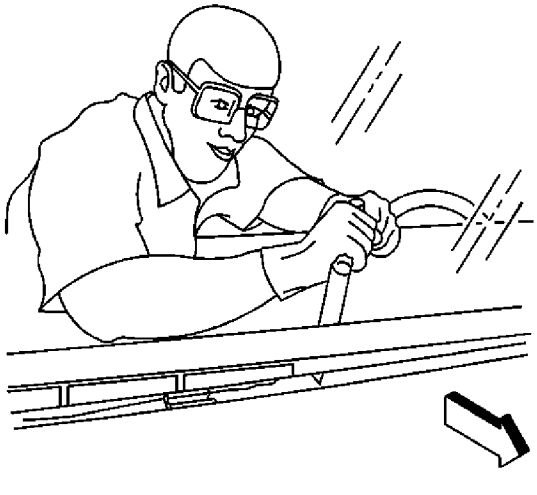

cardiagn.com

Note: Keep the cutting edge of the knife/tool against the window. Do this from inside the vehicle.

9. If necessary, use a long utility knife or similar tool to remove the bottom corners of the windshield from the urethane adhesive.

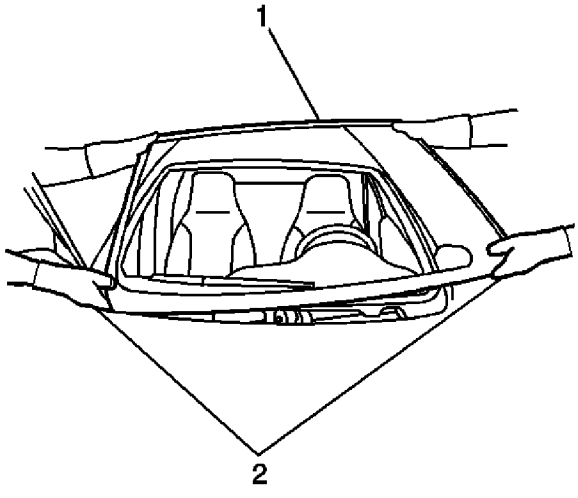

10. With the aid of an assistant (2), remove the windshield (1) from the vehicle.

Installation Procedure

1. Install the windshield into the opening. Refer to Adhesive Installation of Windshields.
2. Install the rearview mirror. Refer to Inside Rearview Mirror Replacement.
3. Install the interior windshield pillar garnish moldings. Refer to Windshield Pillar Garnish Molding Replacement.
4. Install the air inlet grille. Refer to Air Inlet Grille Panel Replacement.
5. Install the windshield wipers arms and blades. Refer to Windshield Wiper Arm Replacement.
6. Remove the double layer of masking tape around the perimeter of the painted surfaces and the interior trim.
7. Close the hood.

cardiagn.com

Front Side Door Window Replacement

Removal Procedure

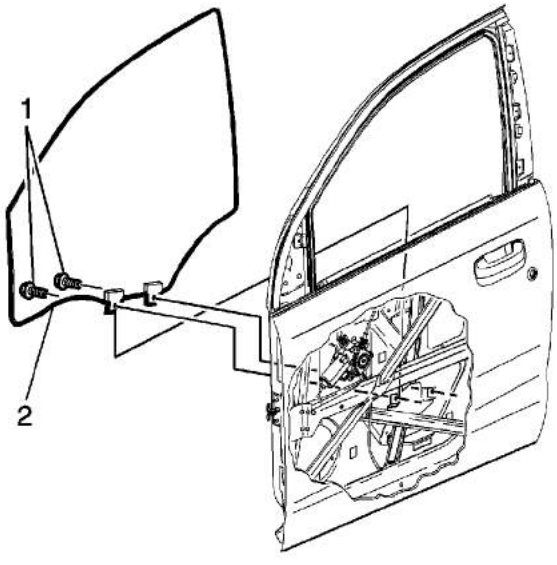

1. Place the front door window in the full down position.
2. Remove the inner front door trim panel. Refer to Front Side Door Trim Panel Replacement.
3. Remove the front door water deflector.
4. Lower the window (2) to the center of the inner door panel, align the bolts with the access.
5. Remove the window guide bolts (1) from the window regulator.
6. Slide the window (2) down and out of the primary glass channels.
7. Remove the window by tilting outboard and pulling the window out of the door through the door belt opening.

Installation Procedure

cardiagn.com

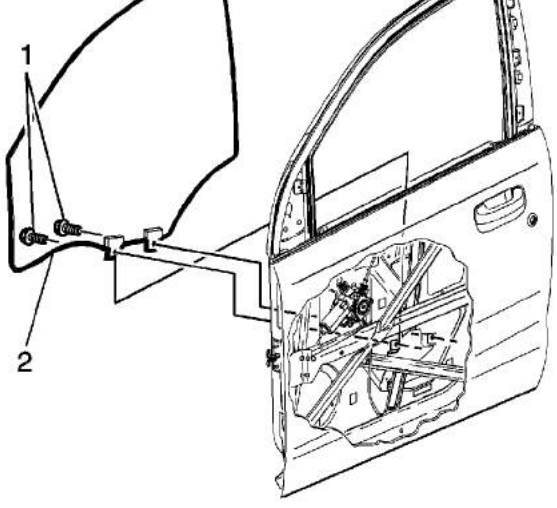

1. Install the window (2) by sliding the window into the door through the outside door belt opening.
2. Install the window into the primary glass channels and rest the window on the regulator guide plate.

   Caution: Refer to Fastener Caution in the Preface section.

3. Install the window guide bolts (1) to the regulator. Tighten the bolts to **10 N·m (89 lb in).**
4. Install the front door water deflector.
5. Install the front inner door trim panel. Refer to Front Side Door Trim Panel Replacement.
6. Inspect the window for proper operation.

cardiagn.com

Rear Side Door Window Replacement

Removal Procedure

1. Place the front door window in the full down position.
2. Remove the door trim panel. Refer to Rear Side Door Trim Panel Replacement.
3. Remove the water deflector.

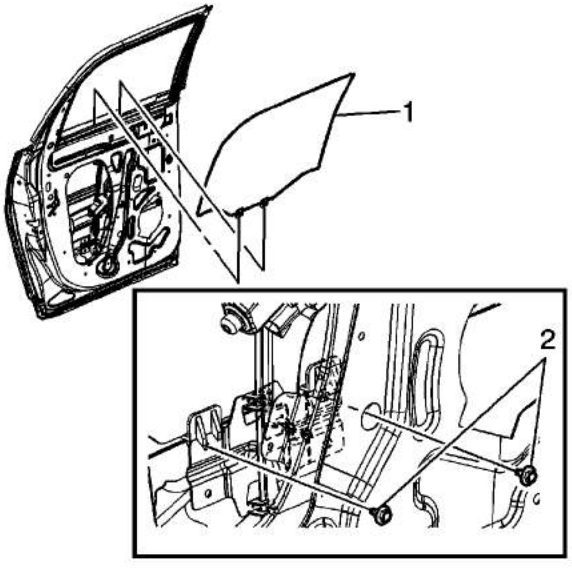

4. Lower the window (1) to align the bolts with the access holes in the inner door panel.
5. Remove the window guide bolts (2).
6. Remove the front part of the rear door window channel weatherstrip this will allow the window to slide forward. Refer to Front Side Door Window Channel Replacement.
7. Remove the rear door front applique. Refer to Rear Door Frame Applique Replacement.

   Warning: Refer to Glass and Sheet Metal Handling Warning in the Preface section.

8. In order to remove the window out of the frame, carefully grasp and tilt the window as you guide the window up and forward.
9. Remove the window from the door.

Installation Procedure

cardiagn.com

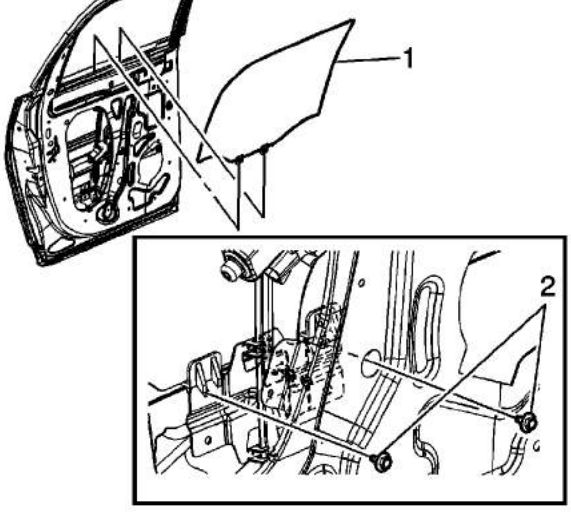

1. With the regulator in the remove/load position, install the window (1) to the door.
2. Tilt the window forward and carefully guide the window into the rear channel.
3. Position the window to an upright position.
4. Install the rear door front applique. Refer to Rear Door Frame Applique Replacement.

   Note: Ensure that the window is fully seated into the channels.

5. Install the front part of the rear door window channel weatherstrip. Refer to Front Side Door Window Channel Replacement.
6. Loosely tighten the window guide bolts (2).

   Note: Do not operate the regulator motor without supporting the window. Ensure that the window remains in the channels when operating the regulator motor.

7. Carefully move the regulator upward for short slow intervals, while ensuring that the window remains in the channels.
8. Lower the window to the full down position.

   Caution: Refer to Fastener Caution in the Preface section.

9. Tighten the 2 window guide bolts (2). Tighten the bolts to **10 N·m (89 lb in).**
10. Install the water deflector.
11. Install the door trim panel. Refer to Rear Side Door Trim Panel Replacement.
12. Inspect the window for proper operation.

cardiagn.com

Quarter Window Replacement

Special Tools

- J 24402-A Glass Sealant (Cold Knife) Remover
- J 39032 Stationary Glass Removal Tool
- Use a urethane adhesive systems which meet GM Specification GM 3651G

Removal Procedure

Warning: Refer to Cracked Window Warning in the Preface section.

Note: Before cutting out a quarter window, apply a double layer of masking tape around the perimeter of the painted surfaces and the interior trim.

1. Open the liftgate.
2. Remove the rear quarter panel trim. Refer to Quarter Upper Trim Panel Replacement.
3. Disconnect the electrical connectors from the antenna, if equipped.

Warning: Refer to Defroster Outlet Warning in the Preface section.

4. Cover the following parts to protect from broken glass:
   - Upper dash pad
   - Defroster outlets and A/C outlets
   - Seats and carpeting

Warning: Refer to Glass and Sheet Metal Handling Warning in the Preface section.

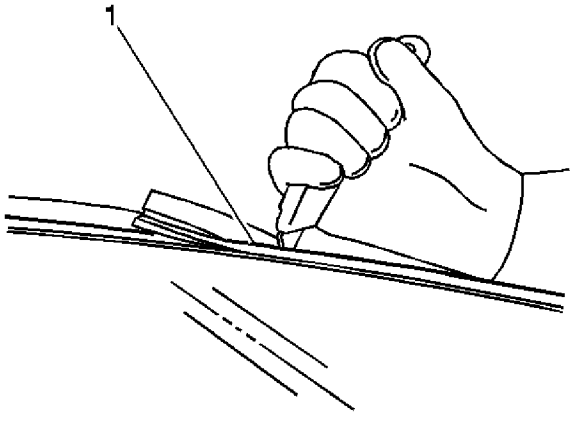

[redacted]

cardiagn.com

5. Using a utility knife, carefully cut the lace (1) from the sides and the top edge of the window to access the urethane adhesive bead, if equipped.

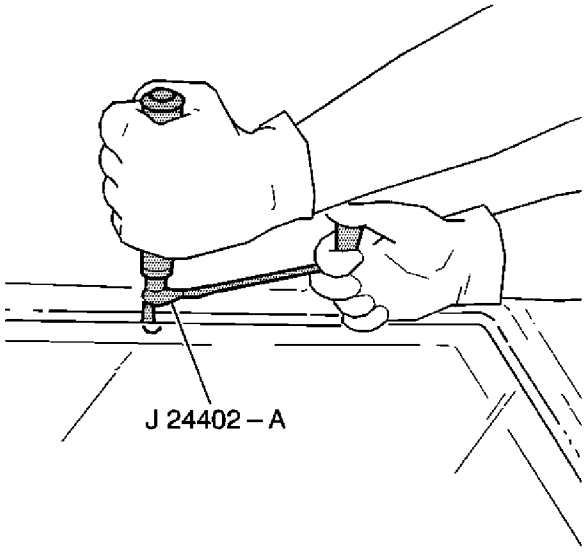

Note: Keep the cutting edge of the tool against the window.

6. Remove the window from the urethane adhesive.
   - Leave a base of urethane approximately 2 mm (0.078 in) on the pinch-weld flange.
   - The only suitable lubrication is clear water.
   - Use J 24402-A , J 39032 , or equivalent to remove the window.

Note: Keep the cutting edge of the knife/tool against the window. Do this from inside the vehicle.

7. If necessary, use a long utility knife or similar tool to remove the bottom corners of the window from the urethane adhesive.
8. Remove the fasteners located on inside of the quarter window.

cardiagn.com

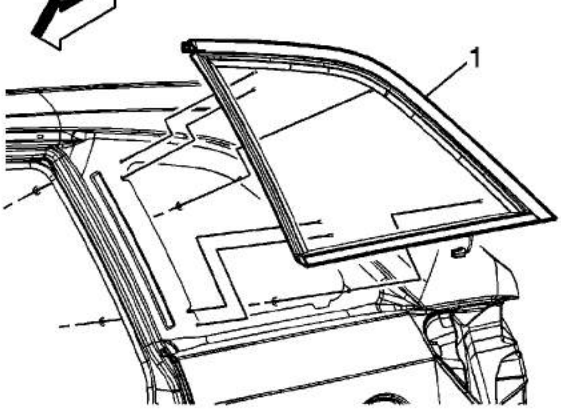

9. Remove the window (1) from the vehicle.

Installation Procedure

1. Install the quarter window into the opening. Refer to Adhesive Installation of Encapsulated Stationary Windows.
2. Install the fasteners located on inside of the quarter window.

   Tighten
   Tighten the fasteners to 10 N·m (88 lb in).

3. Connect the electrical connectors to the antenna, if equipped.
4. Install the rear quarter upper trim panel. Refer to Quarter Upper Trim Panel Replacement.
5. Remove the double layer of masking tape around the perimeter of the painted surfaces and the interior trim.
6. Close the liftgate.

cardiagn.com

Liftgate Window Replacement

Special Tools

- J 24402-A Glass Sealant (Cold Knife) Remover
- J 39032 Stationary Glass Removal Tool
- Use a urethane adhesive systems which meet GM Specification GM 3651G

Removal Procedure

Warning: Refer to Cracked Window Warning in the Preface section.

Note: Before cutting out a stationary window, apply a double layer of masking tape around the perimeter of the painted surfaces and the interior trim.

1. Open the liftgate.
2. Remove the liftgate trim. Refer to Liftgate Trim Panel Replacement.
3. Disconnect the electrical connectors from the liftgate window defogger bus bar.
4. Remove the rear window wiper arm. Refer to Rear Window Wiper Arm Replacement.
5. Remove the rear spoiler. Refer to Rear Spoiler Replacement.

   Warning: Refer to Defroster Outlet Warning in the Preface section.

6. Cover the following parts to protect from broken glass:
   - Upper dash pad
   - Defroster outlets and A/C outlets
   - Seats and carpeting

   Warning: Refer to Glass and Sheet Metal Handling Warning in the Preface section.

cardiagn.com

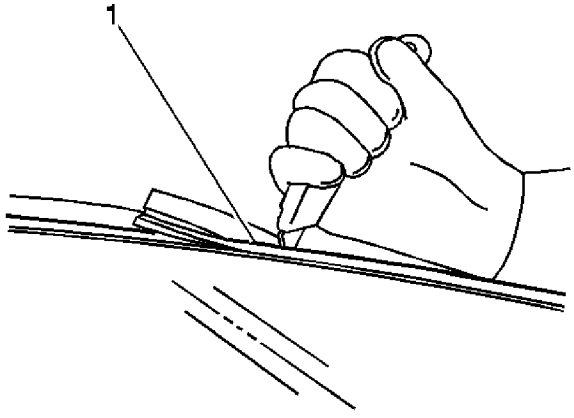

7. Using a utility knife, carefully cut the lace (1) from the sides and the top edge of the window to access the urethane adhesive bead, if equipped.

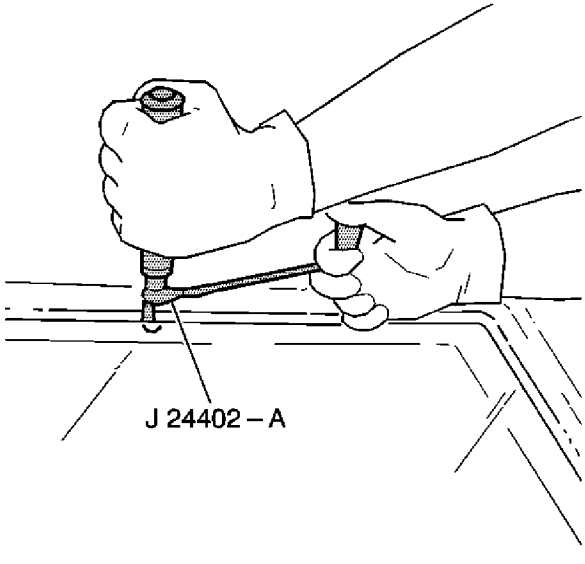

Note: Keep the cutting edge of the tool against the window.

8. Remove the window from the urethane adhesive.
   - Leave a base of urethane approximately 2 mm (0.078 in) on the pinch-weld flange.
   - The only suitable lubrication is clear water.
   - Use J 24402-A , J 39032 or equivalent in order to remove the window.

Note: Keep the cutting edge of the knife/tool against the window. Do this from inside the vehicle.

cardiagn.com

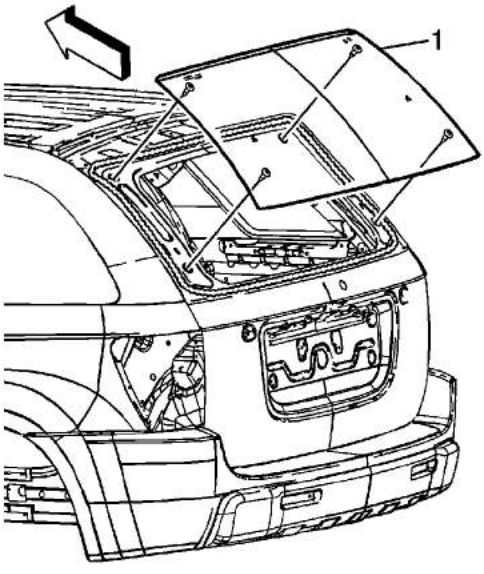

10. With the aid of an assistant, remove the window (1) from the vehicle.

Installation Procedure

1. Install the liftgate window into the opening. Refer to Adhesive Installation of Liftgate Windows.
2. Install the rear spoiler. Refer to Rear Spoiler Replacement.
3. Install the rear window wiper arm. Refer to Rear Window Wiper Arm Replacement.
4. Connect the liftgate window defogger electrical connectors to the bus bar.
5. Install the liftgate trim. Refer to Liftgate Trim Panel Replacement.
6. Remove the double layer of masking tape around the perimeter of the painted surfaces and the interior trim.
7. Close the liftgate.

cardiagn.com

Front Side Door Window Channel Replacement

Removal Procedure

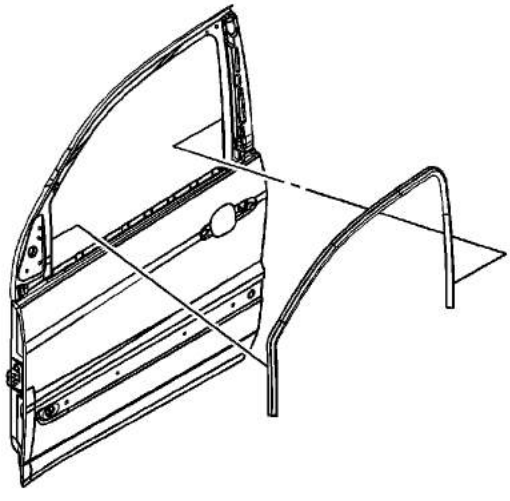

1. Place the front door window in the full down position.
2. Remove the front door trim panel. Refer to Front Side Door Trim Panel Replacement .
3. Remove the water deflector.

   Important: The weatherstrip is seated in the front and rear lower weatherstrip retainers.

4. Starting at one end, carefully pull the window weatherstrip channel from the door frame.

Installation Procedure

cardiagn.com

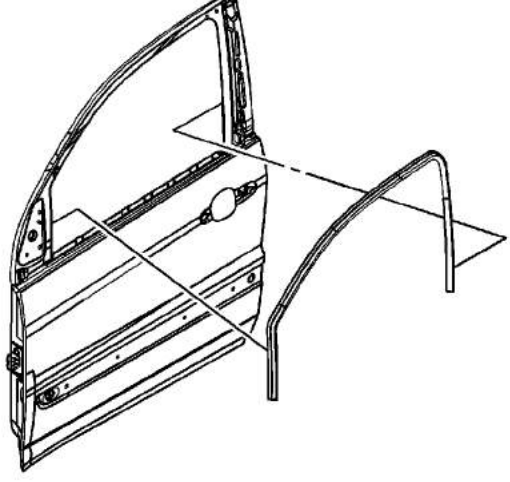

1. Install the window weatherstrip channel.
   1.1. Starting at the lower rear corner of the window opening, press the weatherstrip channel onto the door flange.
   1.2. Ensure that the weatherstrip is fully secured into the channel upper corners and sides of the door frame.
2. Install the water deflector.
3. Install the front door trim panel. Refer to Front Side Door Trim Panel Replacement .
4. Inspect the window for proper operation.

cardiagn.com

Rear Side Door Window Channel Replacement

Removal Procedure

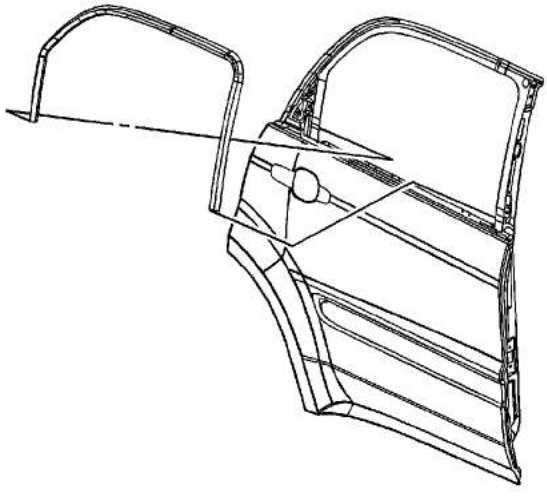

1. Place the front door window in the full down position.
2. Remove the rear door trim panel. Refer to Rear Side Door Trim Panel Replacement .
3. Remove the water deflector.
4. Starting at one end, carefully pull the window weatherstrip channel from the door frame.

Installation Procedure

cardiagn.com

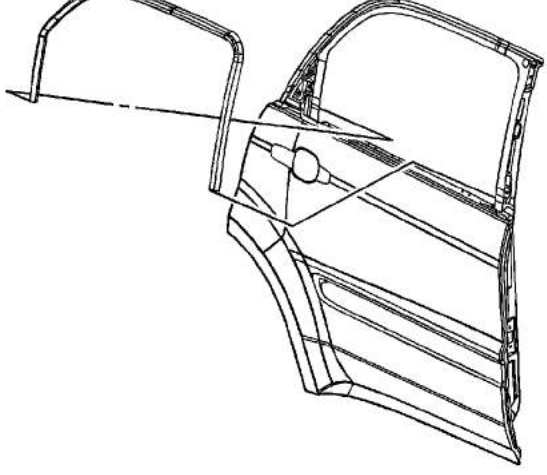

1. Align the notch in the window weatherstrip seal to the fixed window post and press the weatherstrip onto the window flange.
   1.1. Press the weatherstrip channel onto the door flange.
   1.2. Ensure that the weatherstrip is fully secured into the channel upper corners and sides of the door frame.
2. Install the water deflector.
3. Install the rear door trim panel. Refer Rear Side Door Trim Panel Replacement .
4. Inspect the window for proper operation.

cardiagn.com

Front Side Door Window Switch Replacement

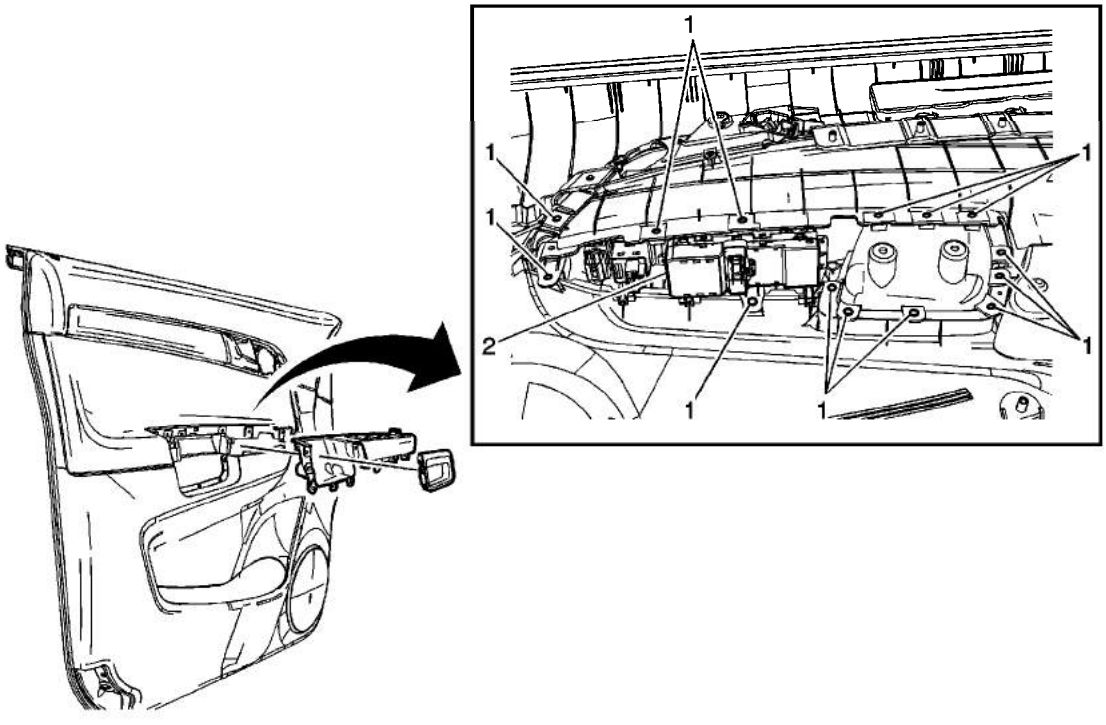

Callout	Component Name
Preliminary Procedure Remove Front side door trim panel. Refer to Front Side Door Trim Panel Replacement.	
1	Front Side Door Lock and Side Window Switch Screw (Qty: 14) **Caution:** Refer to Fastener Caution in the Preface section. **Tighten** 3 N·m (27 lb in)
2	Front Side Door Lock and Side Window Switch Assembly **Procedure** Disconnect the electrical connectors

cardiagn.com

Rear Side Door Window Switch Replacement

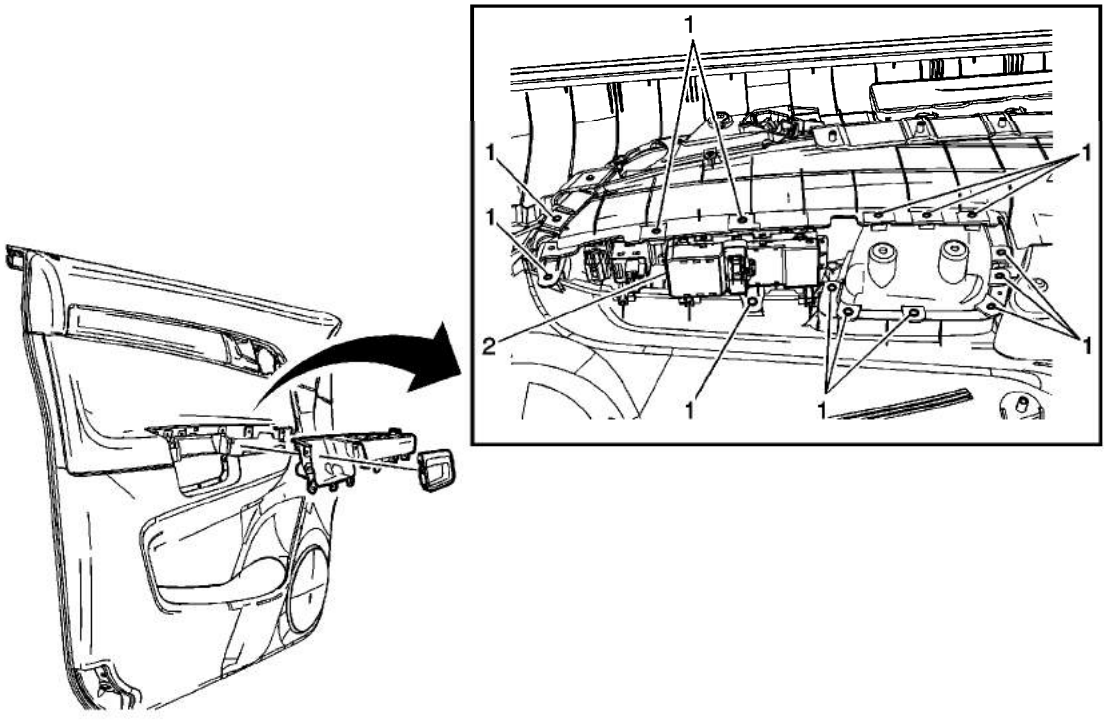

Callout	Component Name
Preliminary Procedure Remove the rear side door trim panel. Refer to Rear Side Door Trim Panel Replacement.	
1	Rear Side Door Lock and Side Window Switch Screw (Qty: 14) **Caution:** Refer to Fastener Caution in the Preface section. **Tighten** 3 N·m (27 lb in)
2	Rear Side Door Lock and Side Window Switch Assembly **Procedure** Disconnect the electrical connectors

cardiagn.com

Front Side Door Window Regulator Replacement

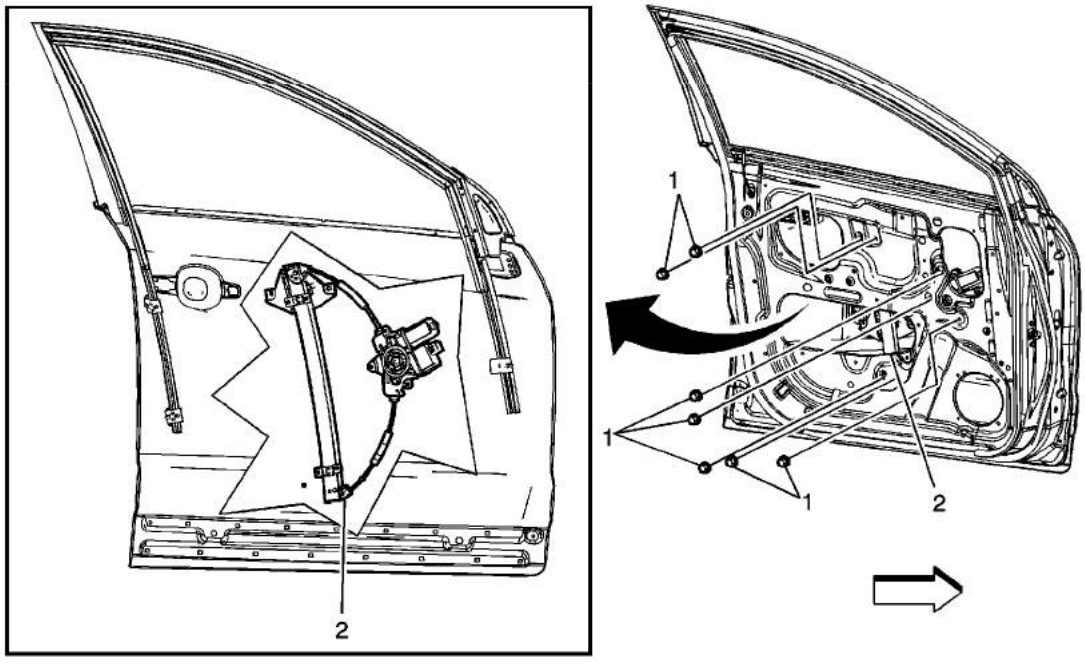

Callout	Component Name
Preliminary Procedure Remove the front side door trim panel. Refer to Front Side Door Trim Panel Replacement.	
1	Front Side Door Window Regulator Nut (Qty: 7) **Caution:** Refer to Fastener Caution in the Preface section. **Procedure** Remove water deflector. **Tighten** 8 N·m (71 lb in)
2	Front Side Door Window Regulator **Procedure** 1. Disconnect the electrical connector from the window regulator motor.

© 2010 General Motors Corporation. All rights reserved.

cardiagn.com

	Tip The window regulator motor is not serviced separately.

cardiagn.com

Front Side Door Window Regulator Motor Replacement

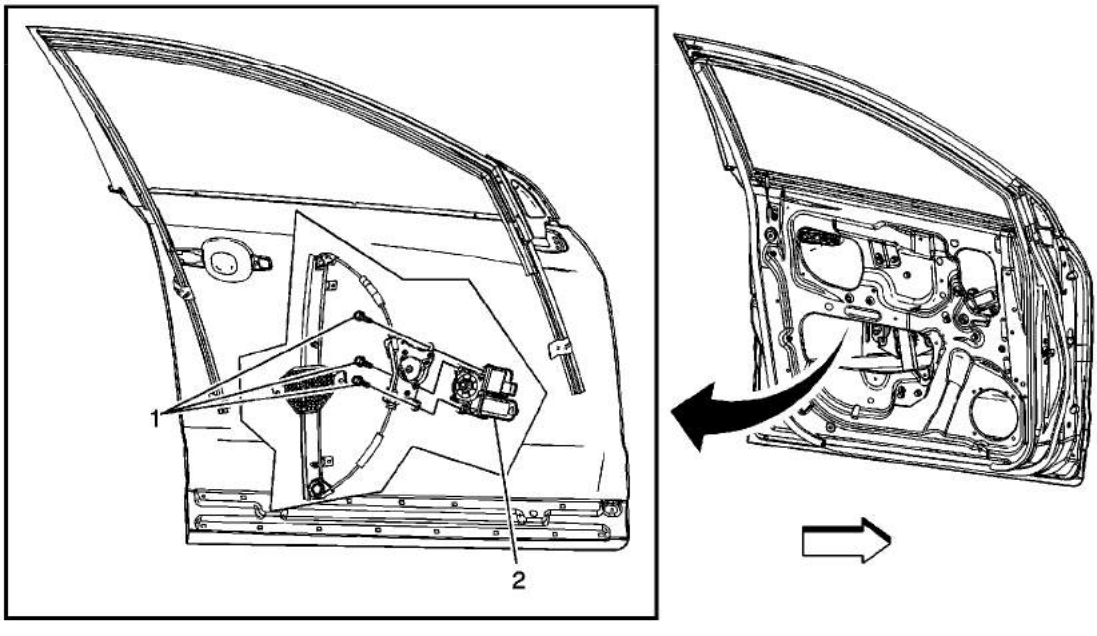

Callout	Component Name
Preliminary Procedure Remove the front side door window regulator. Refer to Front Side Door Window Regulator Replacement	
1	Front Side Door Window Regulator Motor Screws (Qty: 3) **Caution:** Refer to Fastener Caution in the Preface section. **Tighten** 8 N·m (71 lb in)
2	Front Side Door Window Regulator Motor

cardiagn.com

Rear Side Door Window Regulator Replacement

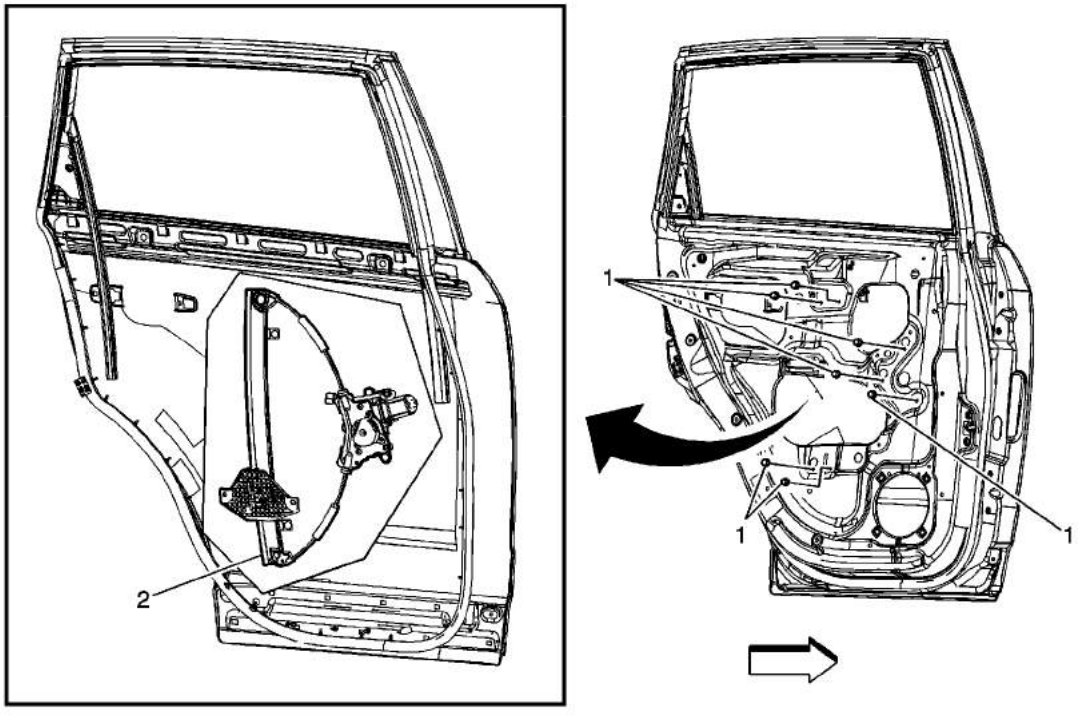

Callout	Component Name
Preliminary Procedure Remove the rear side door trim panel. Refer to Rear Side Door Trim Panel Replacement.	
1	Rear Side Door Window Regulator Nut (Qty: 7) **Caution:** Refer to Fastener Caution in the Preface section. **Procedure** Remove water deflector **Tighten** 8 N·m (71 lb in)
2	Rear Side Door Window Regulator **Procedure** 1. Disconnect the electrical connector from the window regulator motor.

© 2010 General Motors Corporation. All rights reserved.

cardiagn.com

	Tip The window regulator motor is not serviced separately.

cardiagn.com

Rear Side Door Window Regulator Motor Replacement

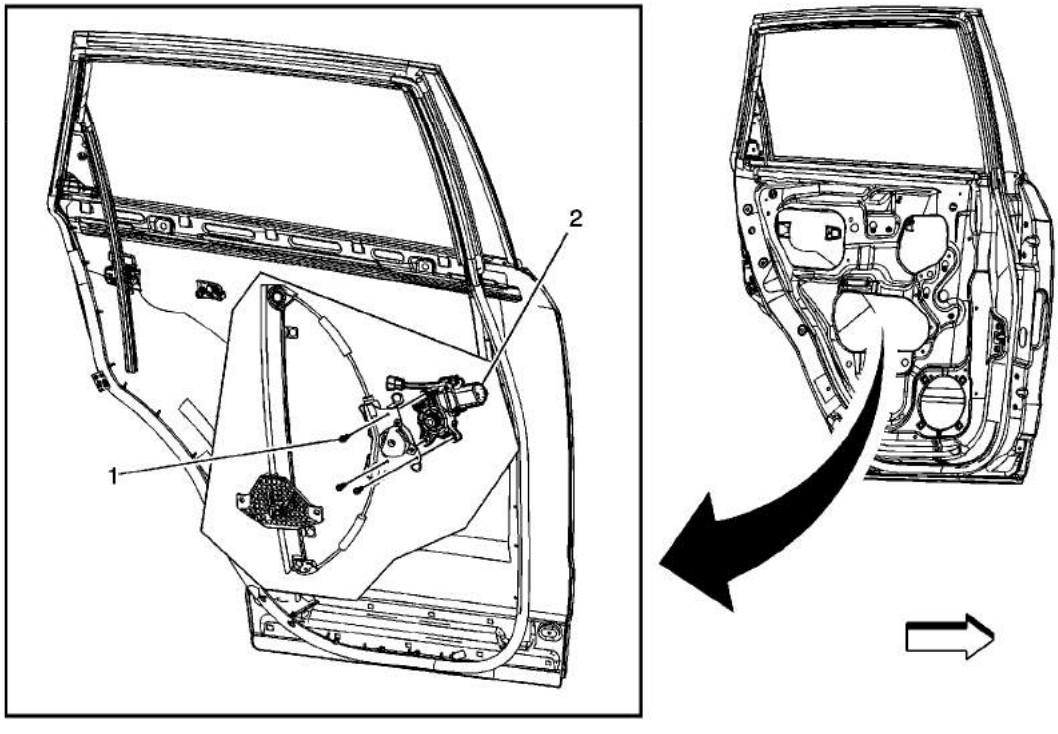

Callout	Component Name
Preliminary Procedures Remove the rear side door window regulator. Rear Side Door Window Regulator Replacement.	
1	Rear Side Door Window Regulator Motor Screws (Qty: 3). **Caution:** Refer to Fastener Caution in the Preface section. **Tighten** 8 N·m (71 lb in)
2	Rear Side Door Window Regulator Motor

cardiagn.com

Front Side Door Window Channel Retainer Replacement

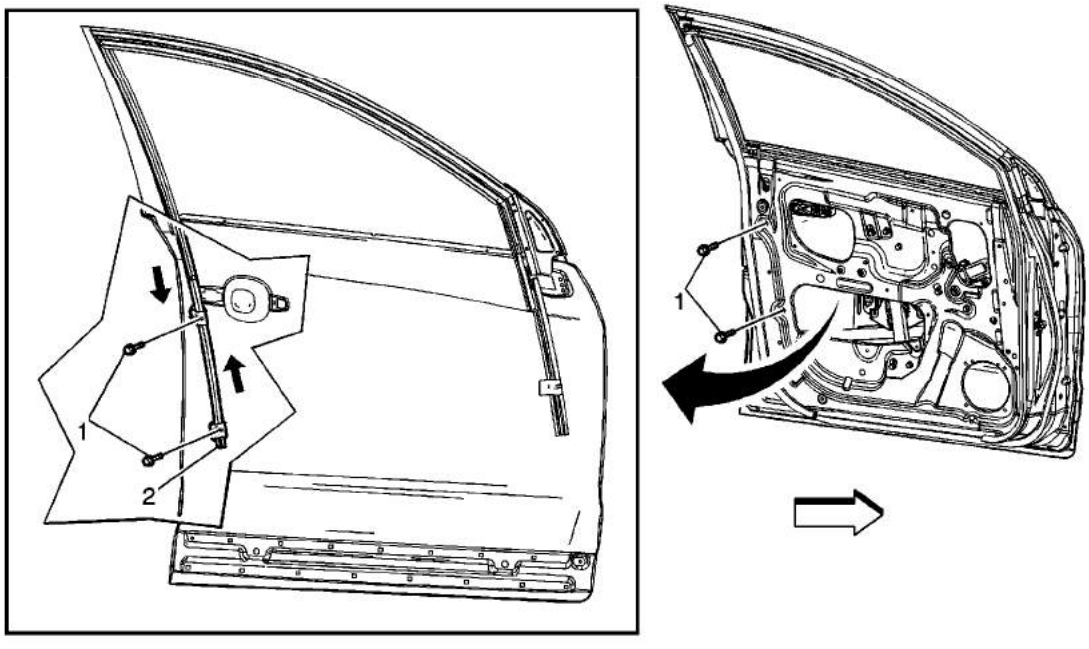

Callout	Component Name
Preliminary Procedures Remove the front side door window. Refer to Front Side Door Window Replacement.	
1	Front Side Door Window Weatherstrip Channel Retainer Bolts (Qty: 2) **Caution:** Refer to Fastener Caution in the Preface section. **Tighten** 10 N·m (89 lb in)
2	Front Side Door Window Weatherstrip Channel Retainer **Tip** Pull the weatherstrip out of the channel, remove the channel retainer from the door.

cardiagn.com

Rear Side Door Window Channel Retainer Replacement

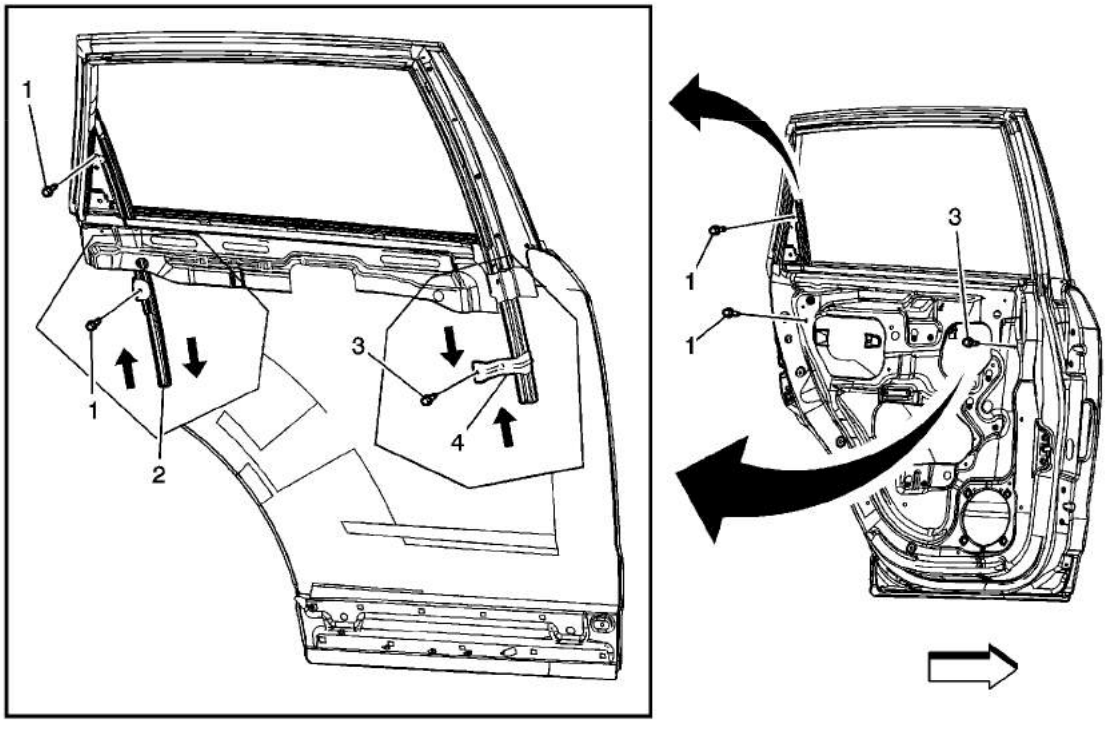

Callout	Component Name
Preliminary Procedures Remove the rear side door trim panel. Refer to Rear Side Door Trim Panel Replacement.	
1	Rear Side Door Rear Window Weatherstrip Channel Retainer Bolts (Qty: 2) **Caution:** Refer to Fastener Caution in the Preface section. **Tighten** 10 N·m (89 lb in)
2	Rear Side Door Rear Window Weatherstrip Channel Retainer **Tip** Pull the weatherstrip out of the channel, remove the channel retainer from the door.
3	Rear Side Door Front Window Weatherstrip Channel Retainer Bolts **Tighten** 10 N·m (89 lb in)
	Rear Side Door Front Window Weatherstrip Channel Retainer

© 2010 General Motors Corporation. All rights reserved.

cardiagn.com

cardiagn.com

Front Side Door Window Belt Outer Sealing Strip Replacement

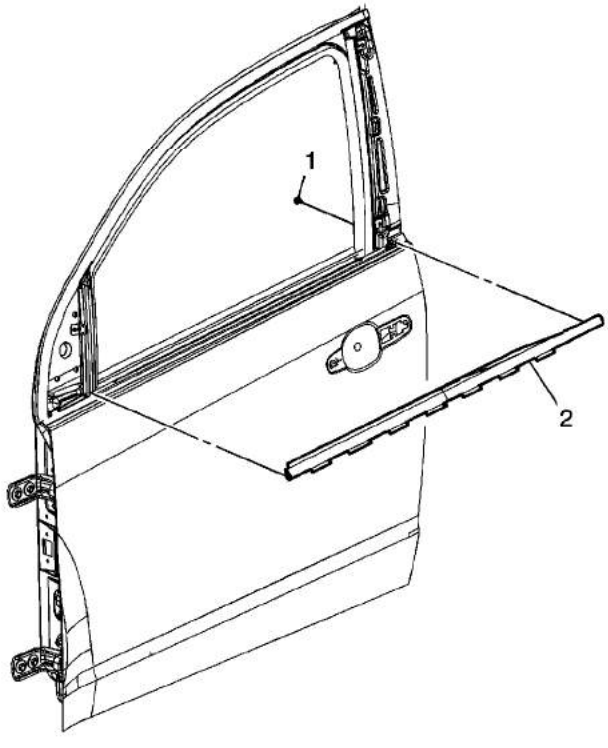

Callout	Component Name
Preliminary Procedure **Remove the front side door applique. Refer to Front Door Frame Applique Replacement**	
1	Front Side Door Outer Sealing Strip Screw (Qty: 2) **Caution:** Refer to Fastener Caution in the Preface section. **Procedure** One screw is located at each end of the outer sealing strip. **Tighten** 1.5 N·m (13 lb in)
	Front Side Door Outer Sealing Strip **Procedure** [redacted]

cardiagn.com

2	structure and outer panel retaining tabs.

cardiagn.com

Rear Side Door Window Outer Sealing Strip Replacement

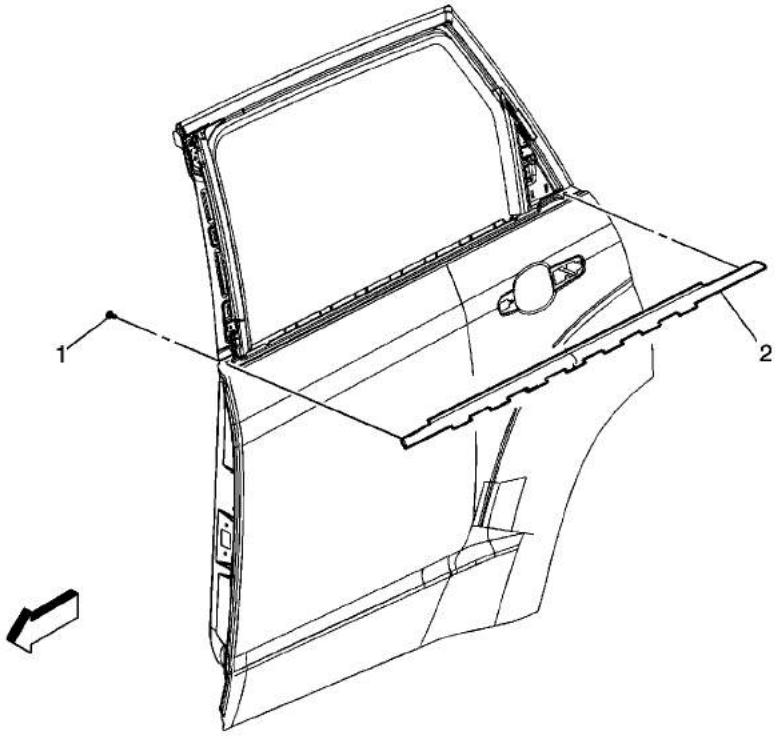

Callout	Component Name
1	Rear Side Door Outer Sealing Strip Screw **Caution:** Refer to Fastener Caution in the Preface section. **Tip** One screw is located at each end of the outer sealing strip. **Tighten** 1.5 N·m (13 lb in)
2	Rear Side Door Outer Sealing Strip **Procedure** 1. Remove by lifting up on seal starting at the rear and working forward. 2. When re-installing, align outer seal fastener location with hole in door structure and outer panel retaining tabs. 3. Start at rear of belt seal, push down onto flange until fully seated.

cardiagn.com

Adhesive Installation of Windshields

Warning: Refer to Glass and Sheet Metal Handling Warning in the Preface section.

1. Use a urethane adhesive systems which meet GM Specification GM 3651G
2. Remove all mounds or loose pieces of urethane adhesive from the pinchweld area.
3. If the original window is being reused, remove all but approximately 2 mm (3/64 in) of the existing bead of urethane adhesive from the pinchweld flange by using a clean utility knife or razor blade scraper.
4. Inspect for any of the following problems in order to help prevent future breakage of the window:
   - The flange of the window opening
   - High weld
   - Solder spots
   - Hardened sealer
   - Any other obstruction or irregularity in the pinchweld flange

   Note: If corrosion of the pinch-weld flange is present or if sheet metal repairs or replacements are required, the pinch-weld flange must be refinished in order to restore the bonding area strength. If paint repairs are required, mask the flange bonding area prior to applying the color coat in order to provide a clean primer only surface. Materials such as BASF DE15®, DuPont 2610®, Sherwin-Williams PSE 4600 and NP70® and Martin-Semour 5120 and 5130® PPG DP90LF SPIES/ HECKER 3688/8590 - 3688/5150 - 4070/5090 STANDOX 11158/13320 - 14653/14980 products are approved for this application.

5. After repairing the opening as indicated, perform the following steps:
   5.1. Remove all traces of broken glass from the outer cowl panel, seats, floor and defroster ducts.
   5.2. Clean around the edge of the inside surface of the window with a 50/50 mixture of isopropyl alcohol and water by volume on a dampened lint free cloth.

   Warning: When replacing stationary windows, use Urethane Adhesive Kit GM P/N 12346392 (Canadian P/N 10952983), or a urethane adhesive system meeting GM Specification GM3651G, to maintain original installation integrity. Failure to use the urethane adhesive kit will result in poor retention of the window which may allow unrestrained occupants to be ejected from the vehicle resulting in personal injury.

6. Verify all primers and urethane adhesive are within expiration dates.

cardiagn.com

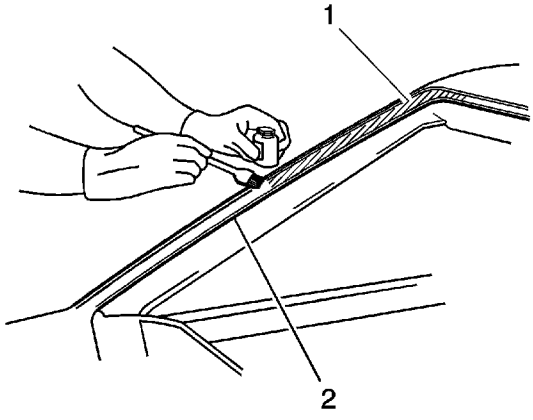

Warning: Failure to prep the area prior to the application of primer may cause insufficient bonding of urethane adhesive. Insufficient bonding of urethane adhesive may allow unrestrained occupants to be ejected from the vehicle resulting in personal injury.

Note: Do not apply the black #3 primer to the existing bead (1) of the urethane adhesive on the pinch-weld flange. Apply the primer only to nicks, scratches or the primed surfaces.

7. Shake the pinch-weld primer black #3 for at least 1 minute.
8. Use a new dauber in order to apply the primer to the surface of the pinch-weld flange (1).
9. Allow the pinch-weld primer to dry for approximately 10 minutes.

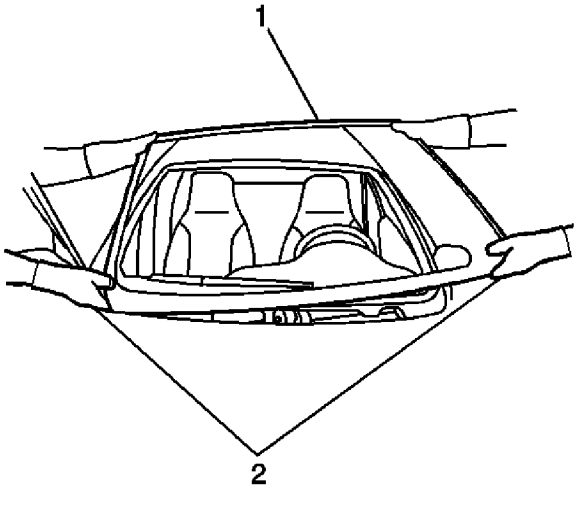

10. With the aid of an assistant, dry fit the window (1) to the opening in order to determine the correct position.

cardiagn.com

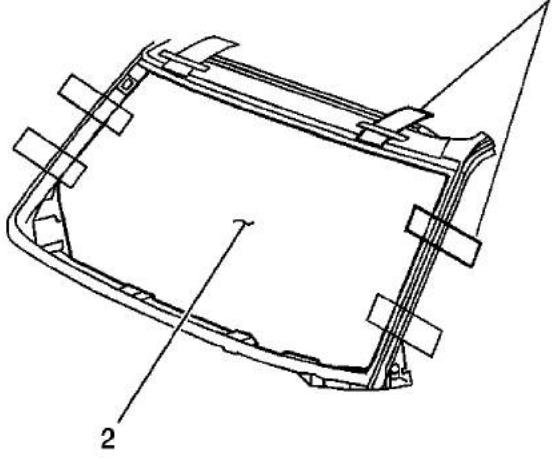

11. Use masking tape in order to mark the locations (1) of the window (2) in the opening.
12. Cut the masking tape in the center and remove the window from the opening.

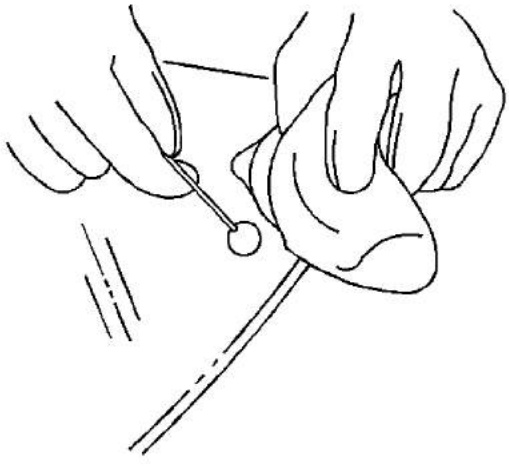

Note: Use care when applying glass prep clear #1 on the window. This primer dries almost instantly, and may stain the viewing area of the window if not applied evenly.

13. Use a new dauber in order to apply glass prep clear #1 to the area approximately 10-16 mm (3/8-5/8 in) around the entire perimeter of the window inner surface.

    Immediately wipe the glass primed area using a clean, lint-free cloth.

cardiagn.com

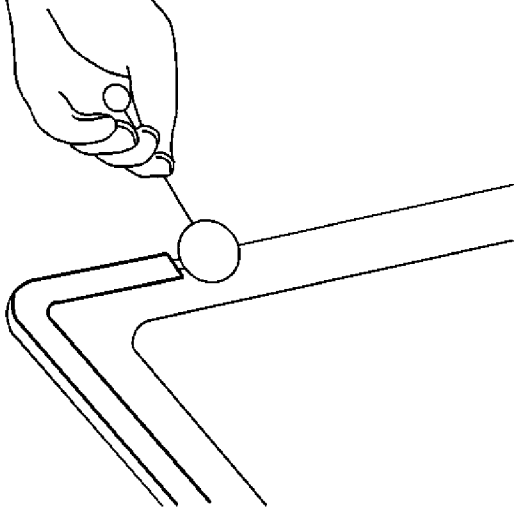

14. Apply a second coat of the glass prep clear #1 to the same area of the glass.

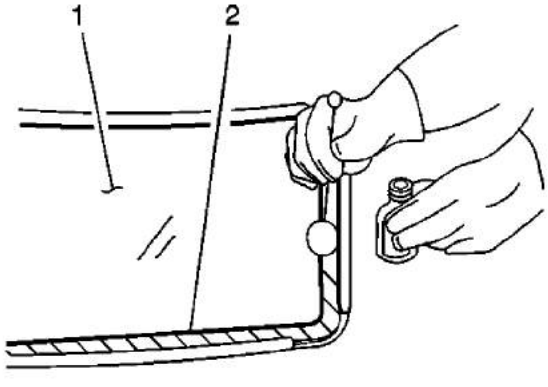

Note: The glass primer black #2 is effective up to 8 hours after applying it to the glass. The primed surface of the glass must be kept clean.

15. Shake the glass primer black #2 for at least 1 minute.
16. Use a new dauber in order to apply the glass primer black #2 to the same areas (2) that glass prep clear #1 was applied.
17. Allow the glass primer to dry for approximately 10 minutes.

cardiagn.com

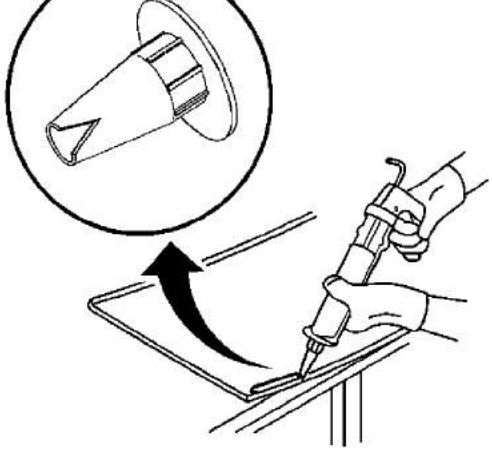

18. Cut the applicator nozzle in order to provide a bead of 12.7 mm (1/2 in) wide and 12.7 mm (1/2 in) high.

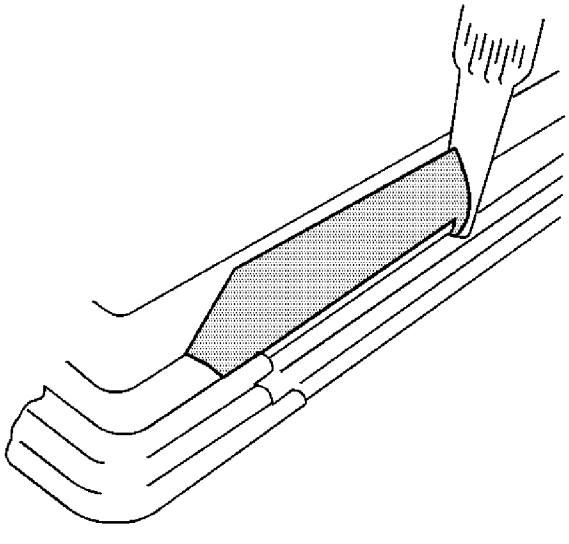

19. Use a cartridge-type caulking gun in order to apply a smooth, continuous bead of urethane adhesive.

cardiagn.com

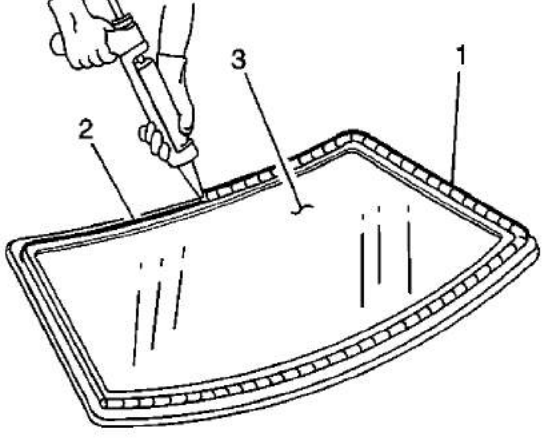

20. Use the edge of the window as a guide for the nozzle in order to apply the urethane adhesive (1) to the inner surface of the window (3).

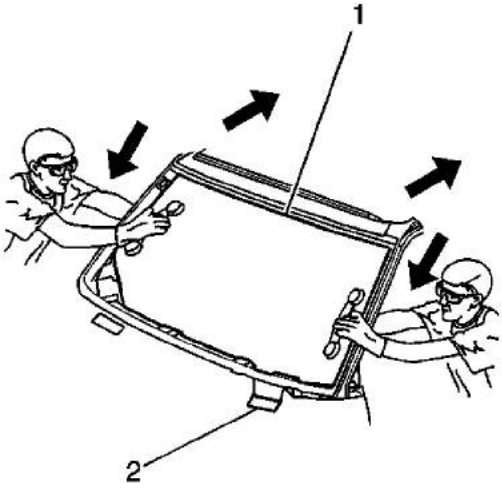

21. With the aid of an assistant, place the window in the opening. If installing a windshield, place the windshield on the lower supports (2), if equipped.

cardiagn.com

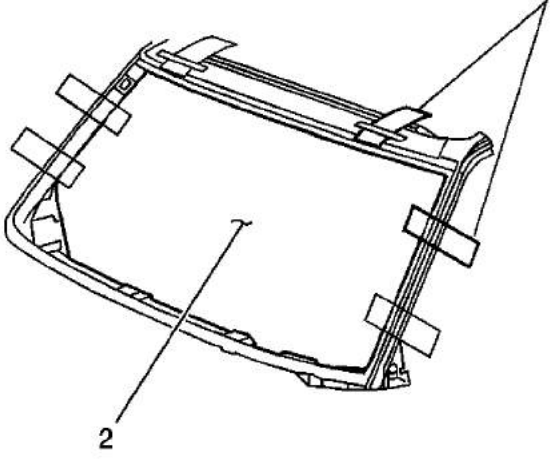

22. Align the masking tape (1) lines on the window (2) and the body.

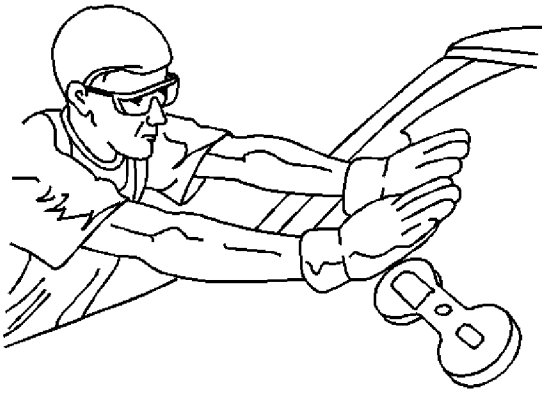

23. Press the window firmly into place.
24. Tape the window to the body in order to minimize movement until the urethane adhesive cures.

cardiagn.com

25. Clean any excess urethane adhesive from the body.

Object Number: 95572 Size: SH

Note: Do not direct a hard stream of high pressure water to the freshly applied urethane adhesive.

26. Use a soft spray of warm water in order to immediately water test the window.
27. Inspect the window for leaks.
28. If any leaks are found, use a plastic paddle in order to apply extra urethane adhesive at the leak point.
29. Retest the window for leaks.

Warning: Insufficient curing of urethane adhesive may allow unrestrained occupants to be ejected from the vehicle resulting in personal injury.

cardiagn.com

for the complete curing of the urethane adhesive.

- For the chemical-curing type of urethane adhesive, allow a minimum of 1 hour .

Do NOT physically disturb the repair area until after these minimum times have elapsed.

30. Maintain the following conditions in order to properly cure the urethane adhesive:
    - Partially lower a door window in order to prevent pressure buildups when closing doors before the urethane adhesive cures.
    - Do not drive the vehicle until the urethane adhesive is cured. Refer to the above curing times.
    - Do not use compressed air in order to dry the urethane adhesive.
31. Complete the window installation.

cardiagn.com

Adhesive Installation of Encapsulated Stationary Windows

Warning: Refer to Glass and Sheet Metal Handling Warning in the Preface section.

1. Use a urethane adhesive systems which meet GM Specification GM 3651G
2. Remove all mounds or loose pieces of urethane adhesive from the pinchweld area.
3. If the original window is being reused, remove all but approximately 2 mm (3/64 in) of the existing bead of urethane adhesive from the pinchweld flange by using a clean utility knife or razor blade scraper.
4. Inspect for any of the following problems in order to help prevent future breakage of the window:
   - The flange of the window opening
   - High weld
   - Solder spots
   - Hardened sealer
   - Any other obstruction or irregularity in the pinchweld flange

Note: If corrosion of the pinch-weld flange is present or if sheet metal repairs or replacements are required, the pinch-weld flange must be refinished in order to restore the bonding area strength. If paint repairs are required, mask the flange bonding area prior to applying the color coat in order to provide a clean primer only surface. Materials such as BASF DE15®, DuPont 2610®, Sherwin-Williams PSE 4600 and NP70® and Martin-Semour 5120 and 5130® PPG DP90LF SPIES/HECKER 3688/8590 - 3688/5150 - 4070/5090 STANDOX 11158/13320 -- 14653/14980 products are approved for this application.

5. After repairing the opening as indicated, perform the following steps:
6. Use an abrasive pad if necessary to remove mold release buildup from the encapsulated window. Use a dampened lint free cloth to remove any debris remaining on the window.

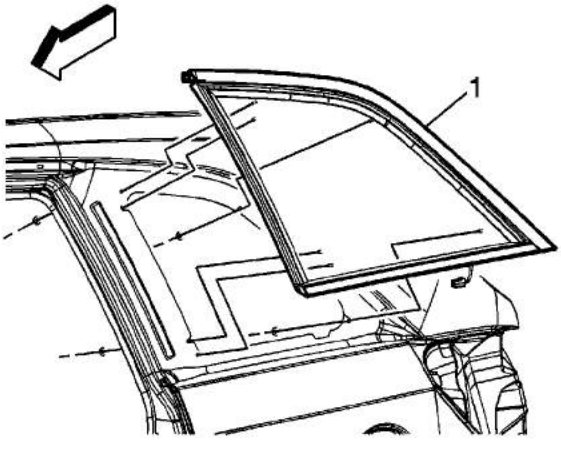

cardiagn.com

9. Use masking tape to mark the locations of the window in the opening.
10. Cut the masking in the center and remove the window from the opening.

Warning: When replacing stationary windows, use Urethane Adhesive Kit GM P/N 12346392 (Canadian P/N 10952983), or a urethane adhesive system meeting GM Specification GM3651G, to maintain original installation integrity. Failure to use the urethane adhesive kit will result in poor retention of the window which may allow unrestrained occupants to be ejected from the vehicle resulting in personal injury.

11. Verify all primers and urethane adhesive are within expiration dates.

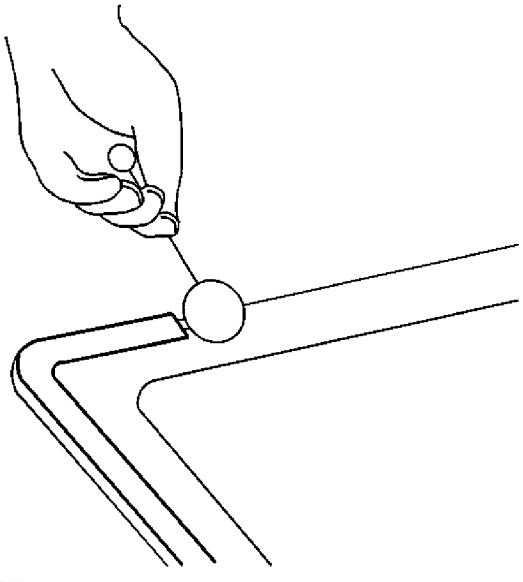

Warning: Failure to prep the area prior to the application of primer may cause insufficient bonding of urethane adhesive. Insufficient bonding of urethane adhesive may allow unrestrained occupants to be ejected from the vehicle resulting in personal injury.

Note: Do not apply the black #3 primer to the existing bead of the urethane adhesive on the pinch-weld flange. Apply the primer only to nicks, scratches or the primed surfaces.

12. Shake the primer clear #4 for at least 1 minute.
13. Use a new dauber in order to apply the primer to the surface of the encapsulated window.
14. Allow the primer to dry for approximately 6 minutes.

cardiagn.com

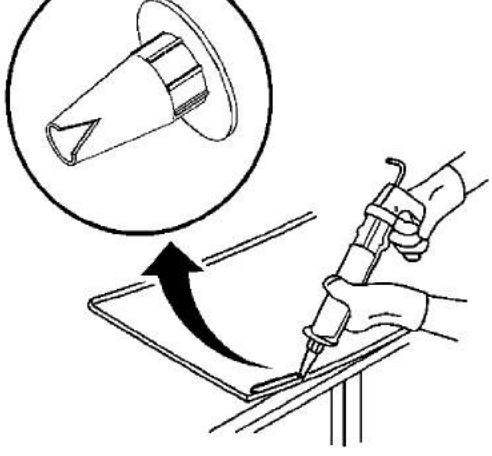

15. Cut the applicator nozzle in order to provide a bead of 8 mm (0.31 in) wide, 12 mm (0.50 in) high.

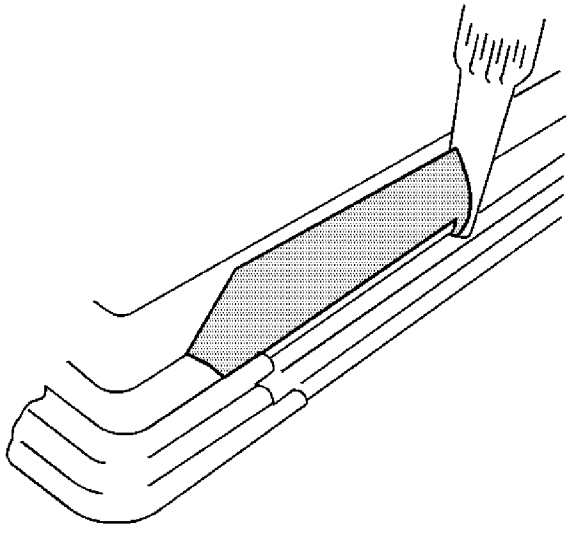

16. Use a cartridge-type caulking gun in order to apply a smooth, continuous bead of urethane adhesive.
17. Use the edge of the inside encapsulated window track as a guide for the nozzle in order to apply the urethane adhesive.
18. Place the window in the opening.
19. Align the masking tape lines on the window and the body.
20. Press firmly around the entire periphery of the window in order to wet-out the urethane bead.
21. Tape the window to the body in order to minimize movement until the urethane adhesive cures.
22. Clean any excess urethane adhesive from the body.

cardiagn.com

23. Use a soft spray of warm water in order to immediately water test the window.
24. Inspect the window for leaks.
25. If any leaks are found, use a plastic paddle in order to apply extra urethane adhesive at the leak point.
26. Retest the window for leaks.

Warning: Insufficient curing of urethane adhesive may allow unrestrained occupants to be ejected from the vehicle resulting in personal injury.

- For the moisture-curing type of urethane adhesive, allow a minimum of 6 hours at 21°C (70°F) or greater and with at least 30 percent relative humidity. Allow at least 24 hours for the complete curing of the urethane adhesive.
- For the chemical-curing type of urethane adhesive, allow a minimum of 1 hour .

Do NOT physically disturb the repair area until after these minimum times have elapsed.

27. Maintain the following conditions in order to properly cure the urethane adhesive:
    - Partially lower a door window in order to prevent pressure buildups when closing doors before the urethane adhesive cures.
    - Do not drive the vehicle until the urethane adhesive is cured. Refer to the above curing times.
    - Do not use compressed air in order to dry the urethane adhesive.
28. Complete the window installation.

cardiagn.com

Adhesive Installation of Liftgate Windows

Warning: Refer to Glass and Sheet Metal Handling Warning in the Preface section.

1. Use a urethane adhesive systems which meet GM Specification GM 3651G
2. Remove all mounds or loose pieces of urethane adhesive from the pinchweld area.
3. If the original window is being reused, remove all but approximately 2 mm (3/64 in) of the existing bead of urethane adhesive from the pinchweld flange by using a clean utility knife or razor blade scraper.
4. Inspect for any of the following problems in order to help prevent future breakage of the window:
   - The flange of the window opening
   - High weld
   - Solder spots
   - Hardened sealer
   - Any other obstruction or irregularity in the pinchweld flange

   Note: If corrosion of the pinch-weld flange is present or if sheet metal repairs or replacements are required, the pinch-weld flange must be refinished in order to restore the bonding area strength. If paint repairs are required, mask the flange bonding area prior to applying the color coat in order to provide a clean primer only surface. Materials such as BASF DE15®, DuPont 2610®, Sherwin-Williams PSE 4600 and NP70® and Martin-Semour 5120 and 5130® PPG DP90LF SPIES/HECKER 3688/8590 - 3688/5150 - 4070/5090 STANDOX 11158/13320 -- 14653/14980 products are approved for this application.

5. After repairing the opening as indicated, perform the following steps:
   5.1. Remove all traces of broken glass from the outer cowl panel, seats, floor and defroster ducts.
   5.2. Clean around the edge of the inside surface of the window with a 50/50 mixture of isopropyl alcohol and water by volume on a dampened lint free cloth.

   Warning: When replacing stationary windows, use Urethane Adhesive Kit GM P/N 12346392 (Canadian P/N 10952983), or a urethane adhesive system meeting GM Specification GM3651G, to maintain original installation integrity. Failure to use the urethane adhesive kit will result in poor retention of the window which may allow unrestrained occupants to be ejected from the vehicle resulting in personal injury.

6. Verify all primers and urethane adhesive are within expiration dates.

   Warning: Failure to prep the area prior to the application of primer may cause insufficient bonding of urethane adhesive. Insufficient bonding of urethane adhesive may allow unrestrained occupants to be ejected from the vehicle resulting in personal injury.

   Note: Do not apply the black #3 primer to the existing bead (1) of the urethane adhesive on the pinch-weld flange. Apply the primer only to nicks, scratches or the primed surfaces.

7. Shake the pinch-weld primer black #3 for at least 1 minute.
8. Use a new dauber in order to apply the primer to the surface of the pinch-weld flange (1).
9. Allow the pinch-weld [redacted]

cardiagn.com

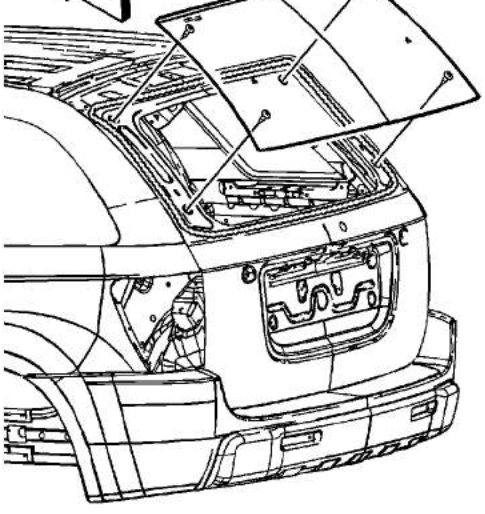

10. With the aid of an assistant, dry fit the window (1) to the opening in order to determine the correct position.
11. Ensure the window locator pins are positioned into the locator slots in the pinch-weld flange.
12. Use masking tape to mark the locations of the window in the opening.
13. Cut the masking in the center and remove the window from the opening.

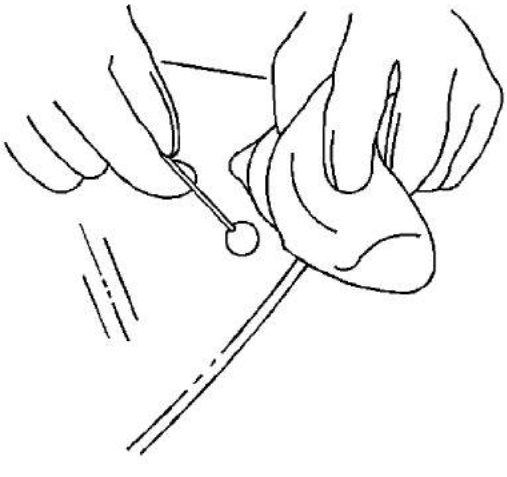

Note: Use care when applying glass prep clear #1 on the window. This primer dries almost instantly, and may stain the viewing area of the window if not applied evenly.

14. Use a new dauber in order to apply glass prep clear #1 to the area approximately 18 mm (0.71 in) around the entire perimeter of the window inner surface.

    Immediately wipe the glass primed area using a clean, lint-free cloth.

cardiagn.com

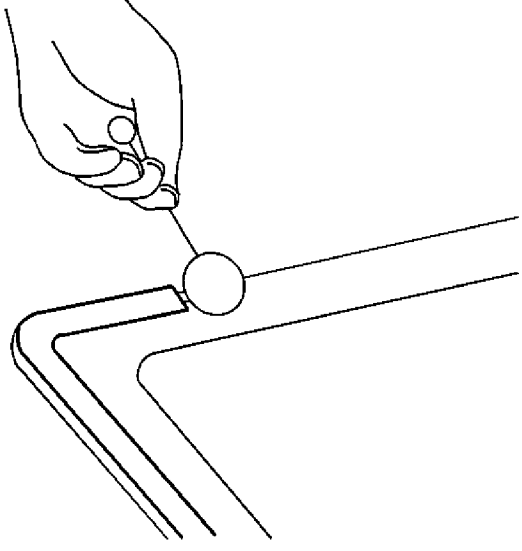

15. Apply a second coat of the glass prep clear #1 to the same area of the glass.

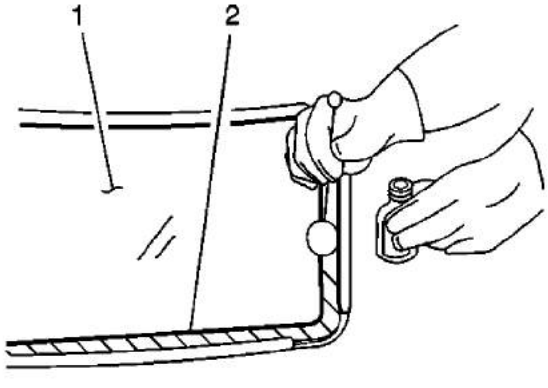

Note: The glass primer black #2 is effective up to 8 hours after applying it to the glass. The primed surface of the glass must be kept clean.

16. Shake the glass primer black #2 for at least 1 minute.
17. Use a new dauber in order to apply the glass primer black #2 to the same areas (2) that glass prep clear #1 was applied.
18. Allow the glass primer to dry for approximately 10 minutes.

cardiagn.com

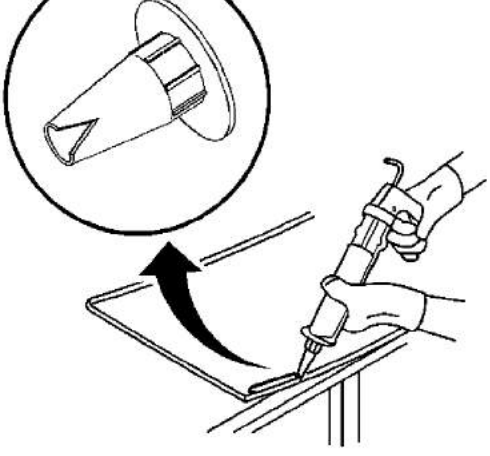

19. Cut the applicator nozzle in order to provide a bead of 12.7 mm (1/2 in) wide and 12.7 mm (1/2 in) high.

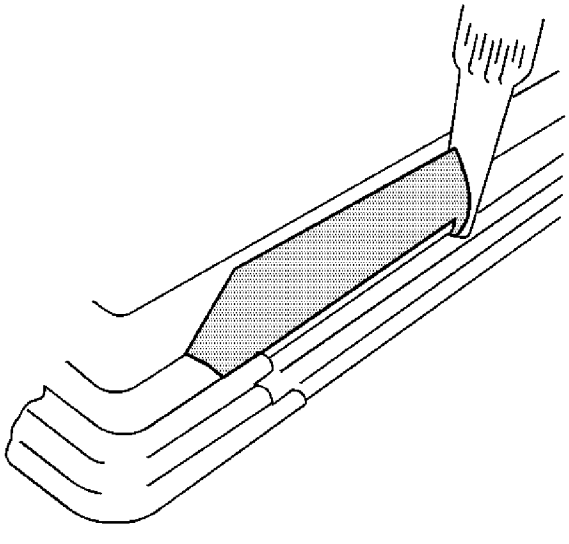

20. Use a cartridge-type caulking gun in order to apply a smooth, continuous bead of urethane adhesive.

cardiagn.com

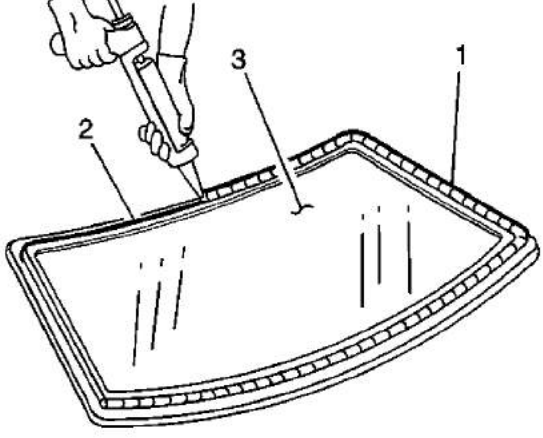

21. Use the edge of the window as a guide for the nozzle in order to apply the urethane adhesive (1) to the inner surface of the window (3).

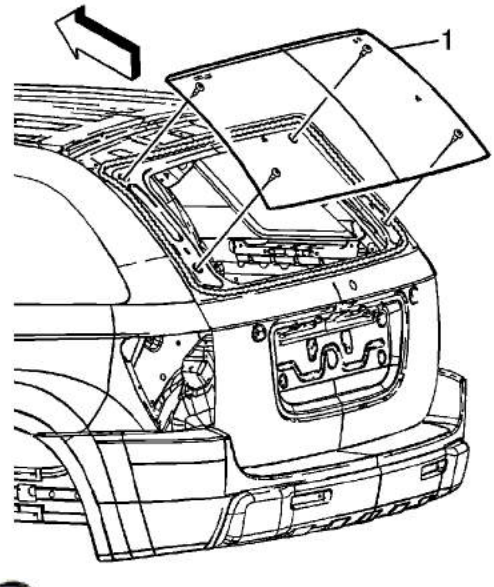

22. With the aid of an assistant, place the window (1) in the opening.
23. Align the masking tape lines on the window and the body.

cardiagn.com

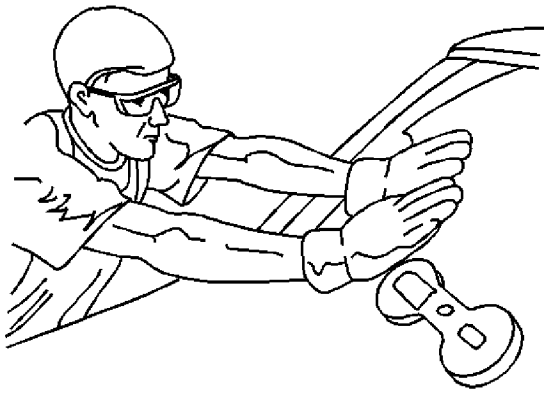

Note: To prevent damage to the window due to objects impacting an exposed edge, upon installation, the window must rest 1 mm (0.040 in) below the surface of the sheet metal.

24. Press firmly around the entire periphery of the window in order to wet-out the urethane bead.
25. Tape the window to the body in order to minimize movement until the urethane adhesive cures.

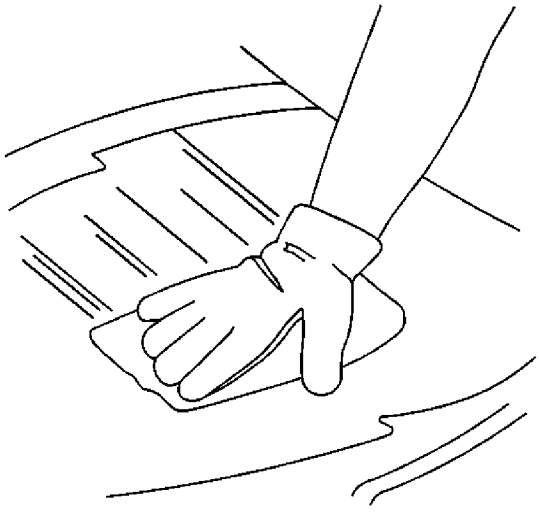

26. Clean any excess urethane adhesive from the body.

cardiagn.com

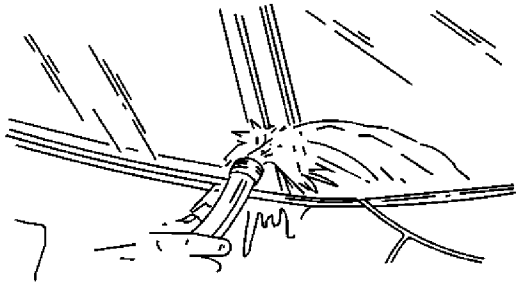

Note: Do not direct a hard stream of high pressure water to the freshly applied urethane adhesive.

27. Use a soft spray of warm water in order to immediately water test the window.
28. Inspect the window for leaks.
29. If any leaks are found, use a plastic paddle in order to apply extra urethane adhesive at the leak point.
30. Retest the window for leaks.

Warning: Insufficient curing of urethane adhesive may allow unrestrained occupants to be ejected from the vehicle resulting in personal injury.

- For the moisture-curing type of urethane adhesive, allow a minimum of 6 hours at 21°C (70°F) or greater and with at least 30 percent relative humidity. Allow at least 24 hours for the complete curing of the urethane adhesive.
- For the chemical-curing type of urethane adhesive, allow a minimum of 1 hour .

Do NOT physically disturb the repair area until after these minimum times have elapsed.

31. Maintain the following conditions in order to properly cure the urethane adhesive:
    - Partially lower a door window in order to prevent pressure buildups when closing doors before the urethane adhesive cures.
    - Do not drive the vehicle until the urethane adhesive is cured. Refer to the above curing times.
    - Do not use compressed air in order to dry the urethane adhesive.
32. Complete the window installation.

cardiagn.com