Body (Interior and Exterior)

GENERAL

EXTERIOR
- HOOD
- TAIL GATE
- FRONT DOOR
- REAR DOOR
- BODY SIDE MOLDINGS
- SUN ROOF
- MIRROR

INTERIOR
- CONSOLE
- CRASH PAD
- ROOF TRIM
- INTERIOR TRIM
- WINDSHIELD GLASS

BUMPER
- FRONT BUMPER
- REAR BUMPER

SEAT
- FRONT SEAT
- REAR SEAT
- SEAT BELT

GENERAL

SPECIFICATIONS EA377AB9

HOOD	Type	Rear hinged, gas lifter type
FRONT DOOR	Construction	Front hinged, full door construction
	Regulator system	Wire-drum type
	Locking system	Pin-fork system
REAR DOOR	Construction	Front hinged, full door construction
	Regulator system	Wire-drum type
	Locking system	Pin-fork system
TRUNK LID	Type	Inner hinged, gas lifter type
GLASS THICKNESS	Front door glass	3.5mm
	Rear door glass	3.5mm
SEAT BELTS	Front	3 point type with Emergency Locking Retractor (E.L.R)
	Rear	3 point type with Emergency Locking Retractor (E.L.R)

TIGHTENING TORQUE EE62FFD8

Items		N.m	Kgf.m	lbf.ft
Front and rear doors	Door hinge to body	21.6~26.5	2.2~2.7	15.9~19.5
	Door hinge to door	21.6~26.5	2.2~2.7	15.9~19.5
Tail gate	Tail gate hing to body	21.6~26.5	2.2~2.7	15.9~19.5
	Tail gate hing tail gate	21.6~26.5	2.2~2.7	15.9~19.5
Hood	Hood hinge to body	21.6~26.5	2.2~2.7	15.9~19.5
	Hood hinge to hood	21.6~26.5	2.2~2.7	15.9~19.5
	Hood latch to body	6.9~10.8	0.7~0.1	5.1~8.0
Seat	Front seat mounting bolts	43.1~64.7	4.4~6.6	31.8~47.7
	Front seat mounting nut	43.1~64.7	4.4~6.6	31.8~47.7
	Rear seat mounting bolts	43.1~64.7	4.4~6.6	31.8~47.7
Seat belt	Front seat belt height adjuster	39.2~53.9	4.0~5.5	28.9~39.8
	Front seat belt buckle mounting bolt	39.2~53.9	4.0~5.5	28.9~39.8
	Front seat belt anchor mounting bolt	39.2~53.9	4.0~5.5	28.9~39.8
	Front seat belt lower anchor	39.2~53.9	4.0~5.5	28.9~39.8
	Front seat belt upper anchor	39.2~53.9	4.0~5.5	28.9~39.8
	Rear seat belt anchor attaching bolt	39.2~53.9	4.0~5.5	28.9~39.8
	Rear seat belt retractor mounting bolt	39.2~53.9	4.0~5.5	28.9~39.8

SPECIAL TOOLS E1FF88E2

Tool (Number and name)	Illustration	Use
09793-21000 Door hinge adjusting wrench	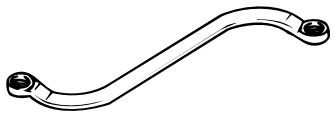 KSRE010A	Adjustment, removal and installation of the door hinge
09800-21000 Ornament remover	 KSRE010B	Trim removal
09853-31000 Headliner clip remover	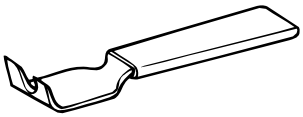 KSRE010C	Removal of the headliner clips
09861-31100 Sealant cut-out tool	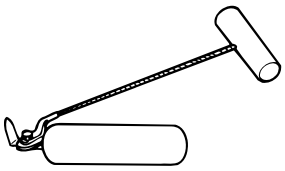 KSRE010D	Cutting the sealant of the windshield (use with 09861-31200)
09861-31200 Sealant cutting blade	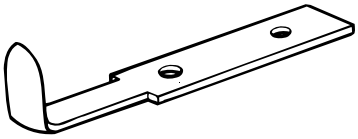 KSRE010E	Cutting the sealant of the windshield (use with 09861-31100)
09861-31300 Sealant gun	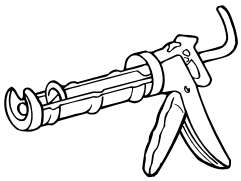 KSRE010F	Application of the sealant to the windshield

Tool (Number and name)	Illustration	Use
09861-31400 Glass holder	 KSRE010G	Removal and installation of the windshield
09861-31000 Windshield moulding remover	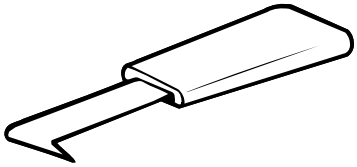 KSRE010H	Removal of the windshield moulding
09880-4F000 Hogring clip installer	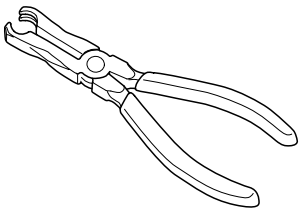 KSRE010I	Installation of the hogring clip

TROUBLESHOOTING EFFCCF9B

Symptom	Suspect Area	Remedy
Water leaks from sunroof	Dirt accumulated in drain tube	Clear dirt inside of drain
	Clogged drain tube	Blow air into drain to remove dirt
	Broken or dislocated drain tube, defective or cracked clip	Check tube installation and flange contact
	Deteriorated roof lid weatherstrip	Replace
	Excessive roof lid-to-body clearance and improperly fitted weatherstrip	Adjust
Wind noise around sunroof	Loosen or deformed deflector, gaps in body work	Retighten adjust or replace
Sunroof lid makes a noise when move	Foreign particles lodged in guide rail	Check drive cable and guide rails for foreign particles
	Loosen guide rails and lid	Retighten
Motor runs but sunroof does not move or moves only partially	Foreign particles lodged in guide rail	Check drive cable and guide rails for foreign particles
	Incorrect engagement of motor pinion with drive cable	Check for loosen motor installation and damaged pinion
	Decrease in motor‘s clutch slipping force	Adjust
	Increased sunroof sliding resistance or interference of sunroof with drive cables, weatherstrip, etc. due to mal adjustment of sunroof	Adjust or replace
Noise in motor (clutch slipping noise from motor when sunroof is fully opened or closed is not an unusual noise	Incorrect engagement of motor pinion With drive cable	Check pinion installation and Retighten motor
	Worn out or damaged motor pinion bearing	Replace motor assembly
	Worn out or deformed drive cable	Replace
Door glass fails to operate up and down	Incorrect window glass installation	Adjust position
	Damaged or faulty regulator arm or regulator	Correct or replace
Door does not open or close completely	Incorrect door installation	Adjust position
	Defective door check assembly	Correct or replace
	Door hinge requires grease	Apply grease
Hood does not open or close completely	Striker and latch not properly aligned	Adjust
	Incorrectly installed hood	Adjust
	Incorrect hood bumper height	Adjust
Water leak through windshield end rear window	Defective seal	Fill with sealant
	Defective flange	Correct

EXTERIOR

HOOD

REPLACEMENTS EA65142C

HOOD ASSEMBLY REPLACEMENT

NOTE

- *When removing and installing the hood, an assistant is necessary.*
- *Take care not to damaged the hood and body.*
- *When removing the clips, use a clip remover.*

1. Using a screwdriver (A), lift up slightly the socket clips (B) of both ends on the lifter (D), and then remove the lifter from the bracket (C).
2. After loosen the hood hinge (E) mounting bolts, remove the hood (F).
3. Installation is the reverse of removal.

NOTE

- *Make sure the hood opens properly and locks securely.*
- *Adjust the hood alignment. (See page BD- 13)*

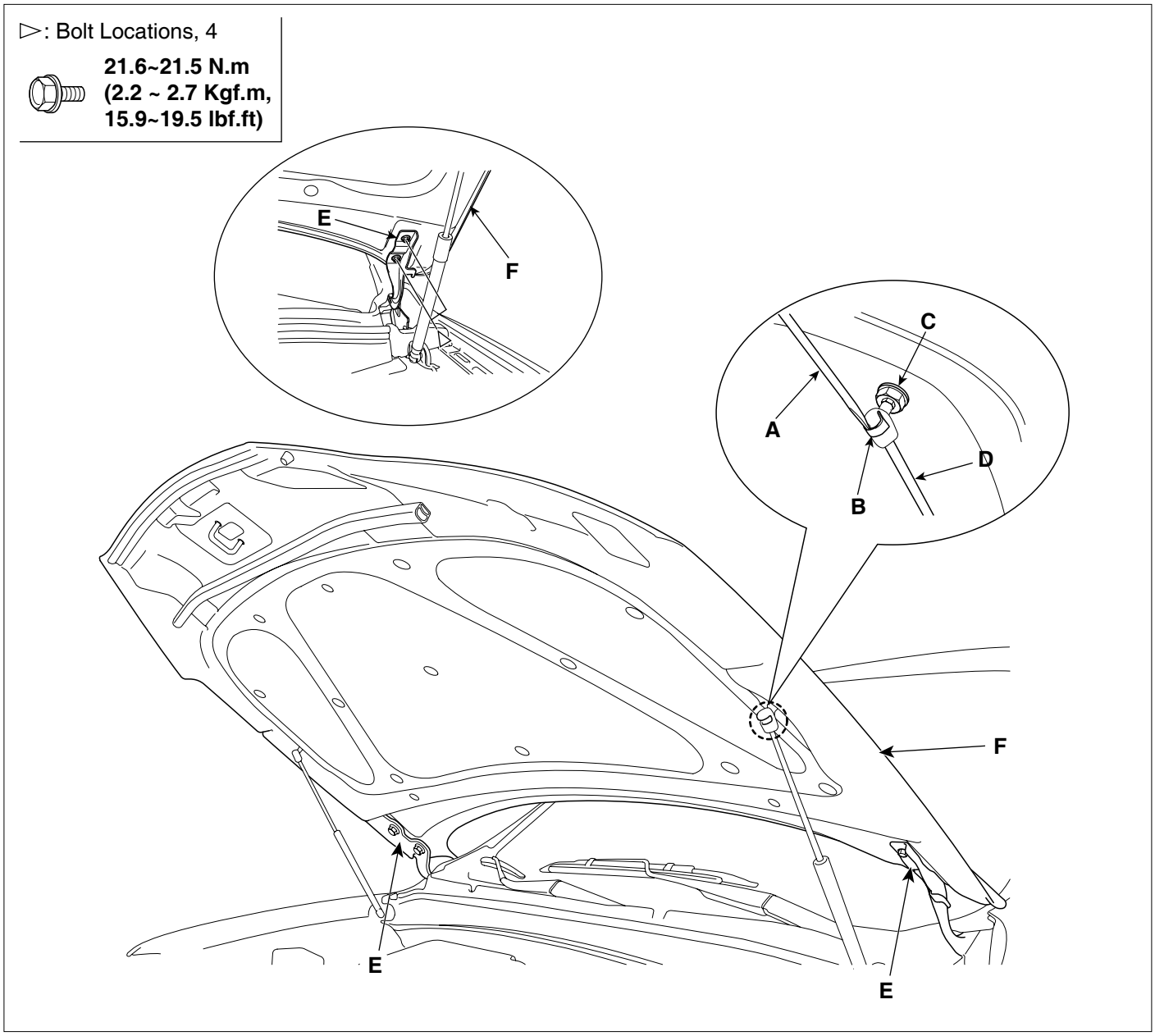

SCMBD6001L

HOOD INSULATOR REPLACEMENT

1. After loosening the mounting bolts, then remove the inter cooler duct (A).

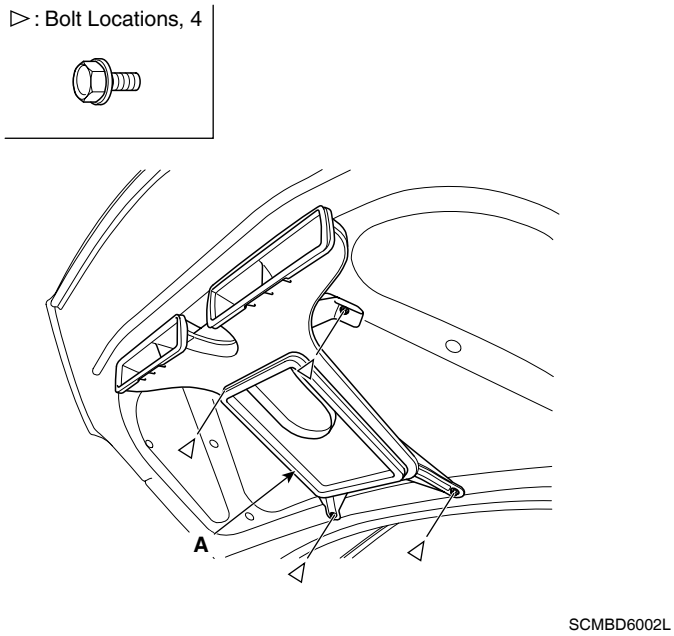

2. Using a clip remover, detach the clips, and remove the hood insulator (A).

NOTE

- *Take care not to scratch the hood panel.*

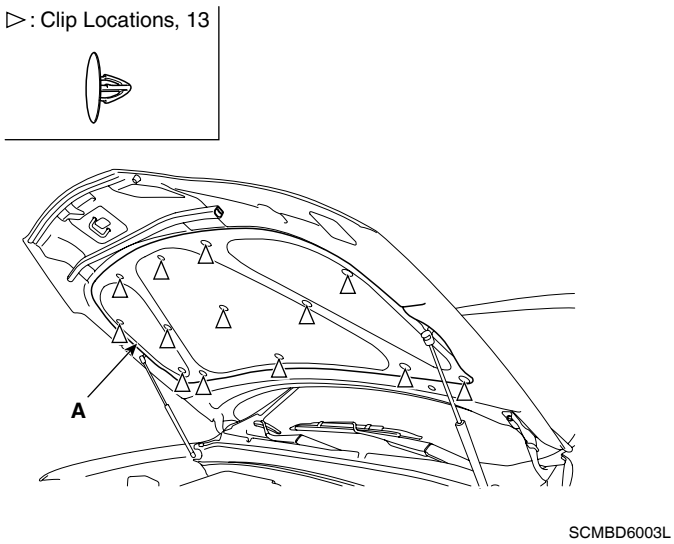

3. Installation is the reverse of removal.

NOTE

- *Replace any damaged clips.*

HOOD SEAL WEATHERSTRIP REPLACEMENT

1. Detach the clips, then remove the hood weather-strip(A).

NOTE

- *Take care not to scratch the hood.*

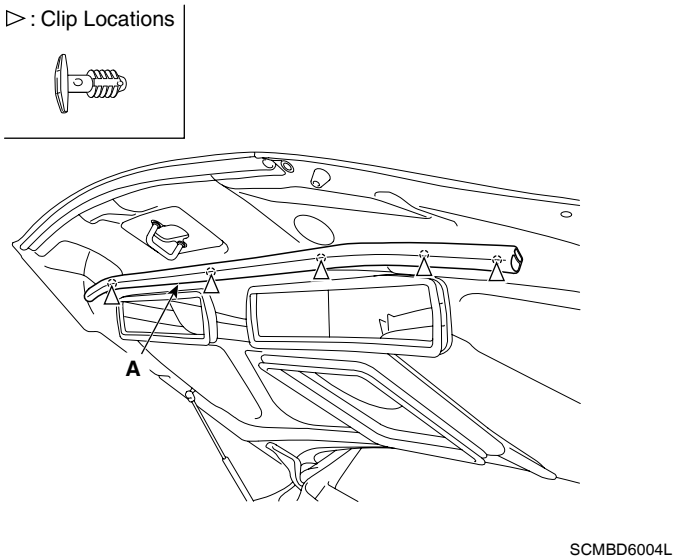

2. Installation is the reverse of removal.

NOTE

- *Replace any damaged clips.*

HOOD LIFT REPLACEMENT

1. Using a screwdriver (A), lift up slightly the socket clips (B) of both ends on the lifter (D), and then remove the lifter from the bracket (C).

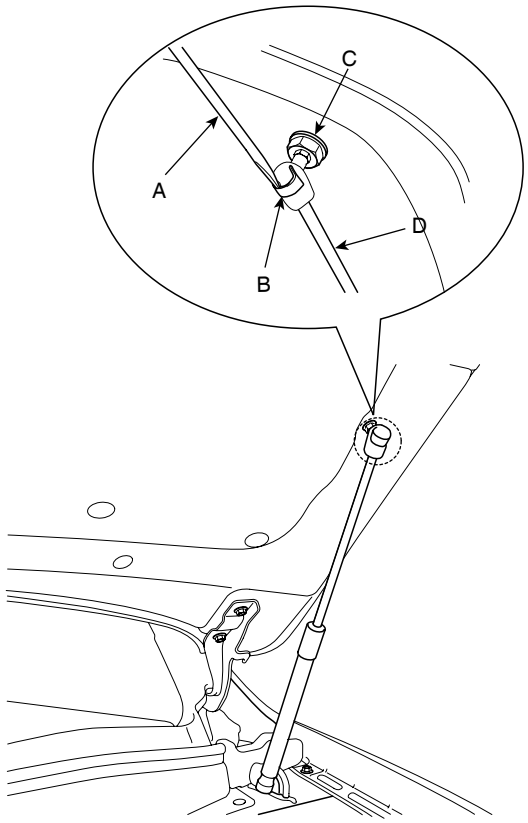

SCMBD6005D

2. Installation is the reverse of removal.

HOOD RELEASE HANDLE REPLACEMENT

1. After loosening the mounting screw, then remove the hood release handle (A).

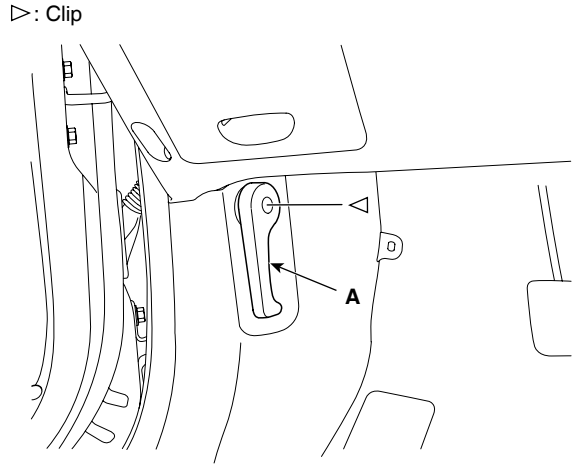

SCMBD6006L

2. Installation is the reverse of removal.

NOTE

- *Make sure the hood latch cable is connected properly.*
- *Make sure the hood locks securely.*

HOOD LATCH REPLACEMENT

1. Remove the front bumper cover. (See page BD- 90)
2. Detach the clips, then remove the duct (A).

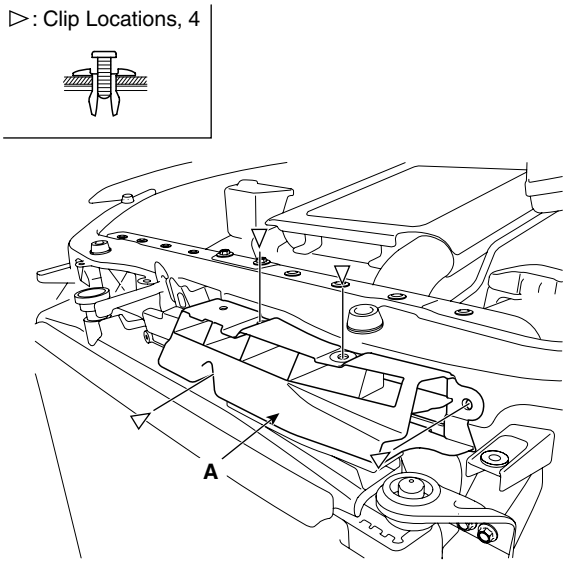

SCMBD6007L

3. Pull the radiator cover(A).

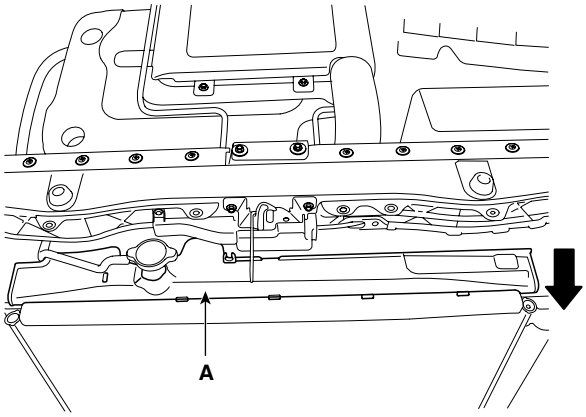

SCMBD6008D

4. Detach the clips, then remove the hood latch cover (A).

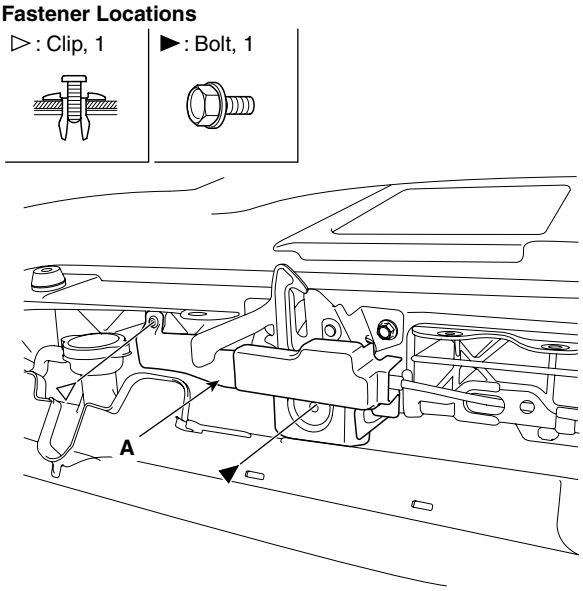

SCMBD6009L

5. After loosening the mounting bolts, then remove the hood latch (B).

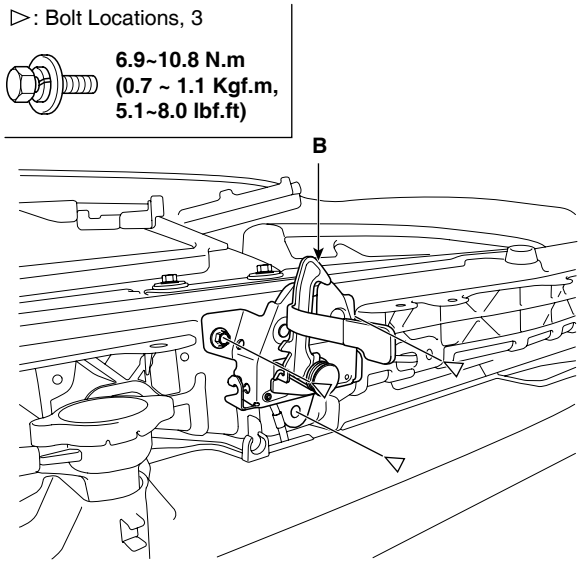

SCMBD6010L

6. Disconnect the connector (C).

7. Remove the release cable (A).

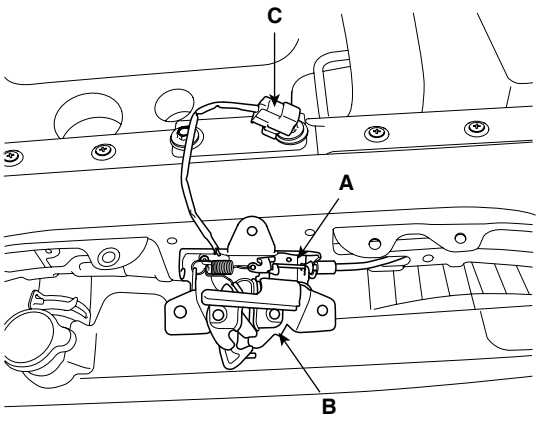

SCMBD6011D

8. Installation is the reverse of removal.

NOTE

- *Make sure the hood latch cable is connected properly.*
- *Make sure the hood locks securely.*

HOOD LATCH CABLE REPLACEMENT

1. Remove the following items.
   - Hood latch. (See page BD- 10)
   - Hood release handle. (See page BD- 9)
   - Wheel guard. (See page BD- 43)

NOTE

- *Take care not to bend the cable.*

2. Disconnect the hood latch cable (A) and release cable (B).

3. Remove the hood latch cable (C).

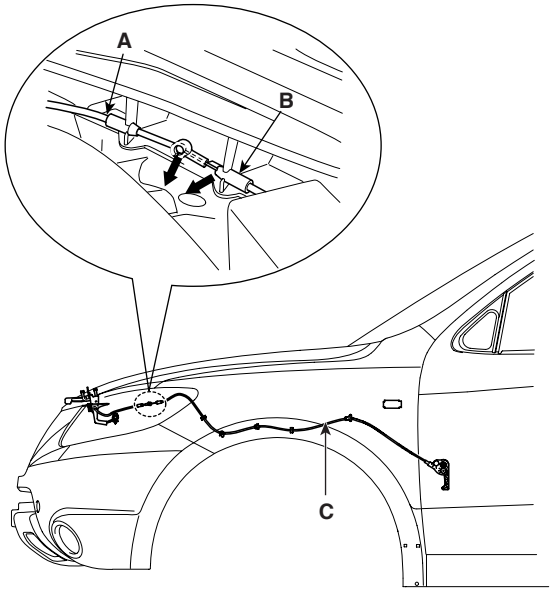

SCMBD6054D

4. Installation is the reverse of removal.

NOTE

- *Make sure the hood latch is connected properly.*
- *Replace any damaged clips.*

COWL TOP COVER REPLACEMENT

1. Remove the wiper (A).

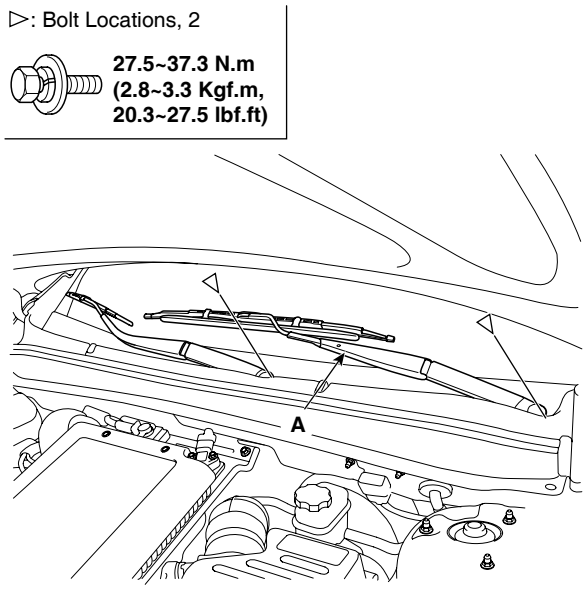

SCMBD6012L

2. Remove the hood seal weatherstrip.

3. Detach the clips, then remove the cowl top cover (A).

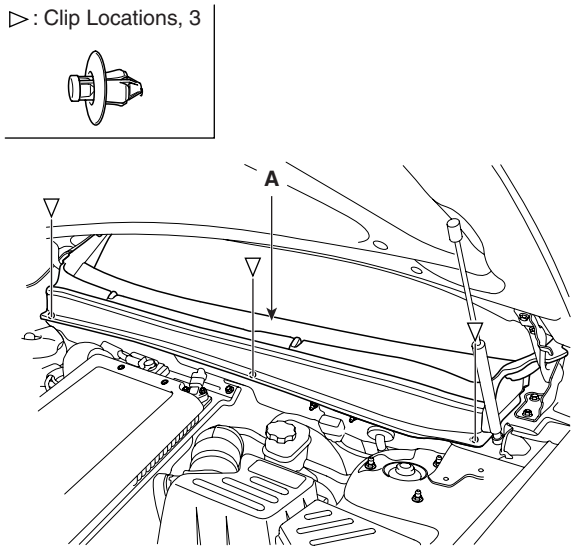

SCMBD6013L

4. Installation is the reverse of removal.

ADJUSTMENT E0D47449

1. After loosening the hinge (A) mounting bolt, adjust the hood (B) by moving it up or down, or right or left.
2. Adjust the hood height by turning the hood overslam bumpers (C).
3. After loosening the hood latch (C) mounting bolts, adjust the latch by moving it up or down, or right or left.

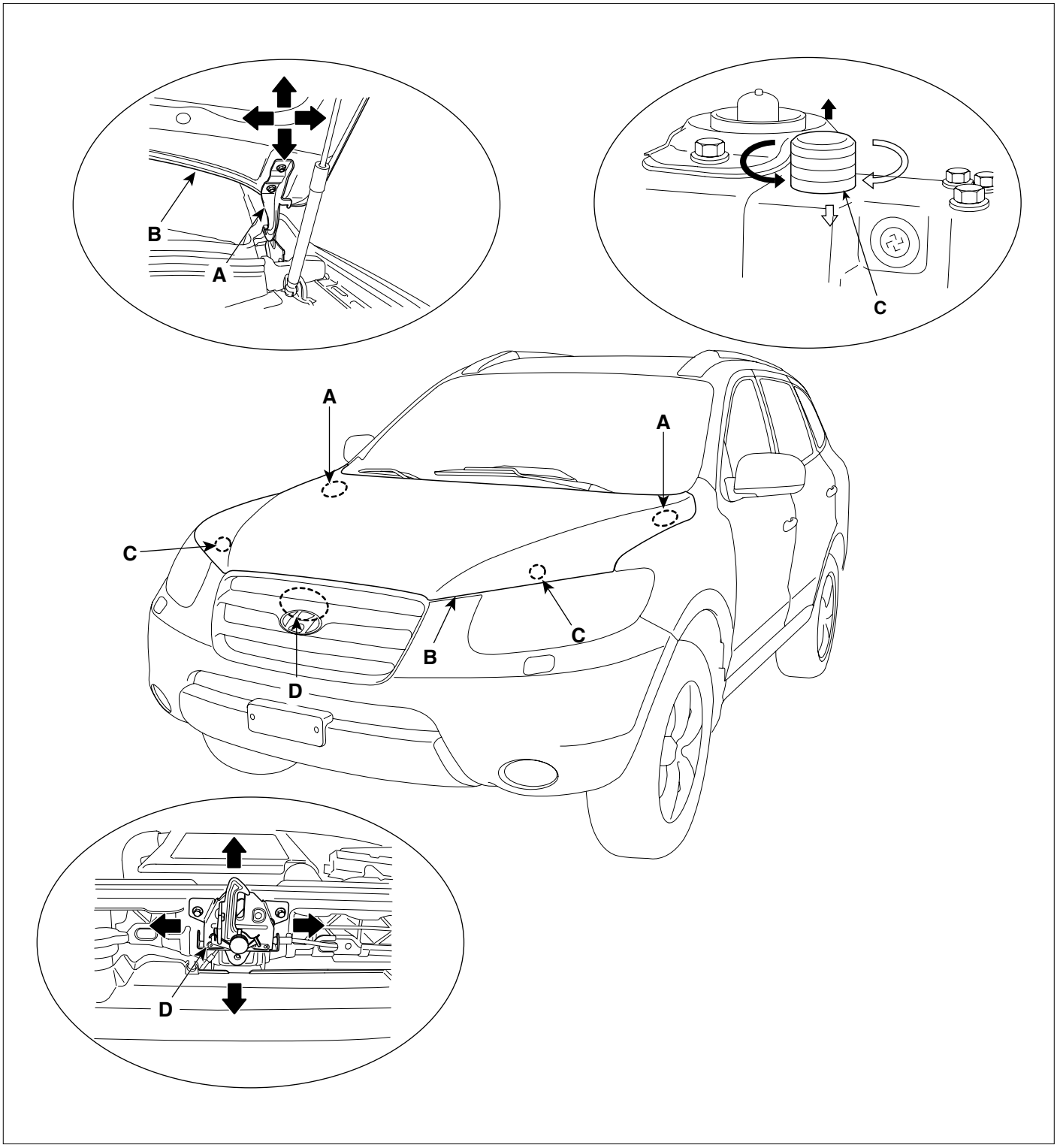

SCMBD6014D

TAIL GATE

REPLACEMENT E40E3DD5

TAILGATE TRIM REPLACEMENT

NOTE

- *When prying with a flat-tipped screwdriver, wrap it with protective tape, and apply protective tape around the related parts, to prevent damage.*
- *Put on gloves to protect your hands.*

1. After loosening the screws the remove the tailgate trim (A).
2. Remove the upper trim (B) and side trim (C).
3. Installation is the reverse of removal.

NOTE

- *Replace and damaged clips.*

Fastener Locations

► : Clip	▷ : Clip	⦿ : Screw	1► : Bolt

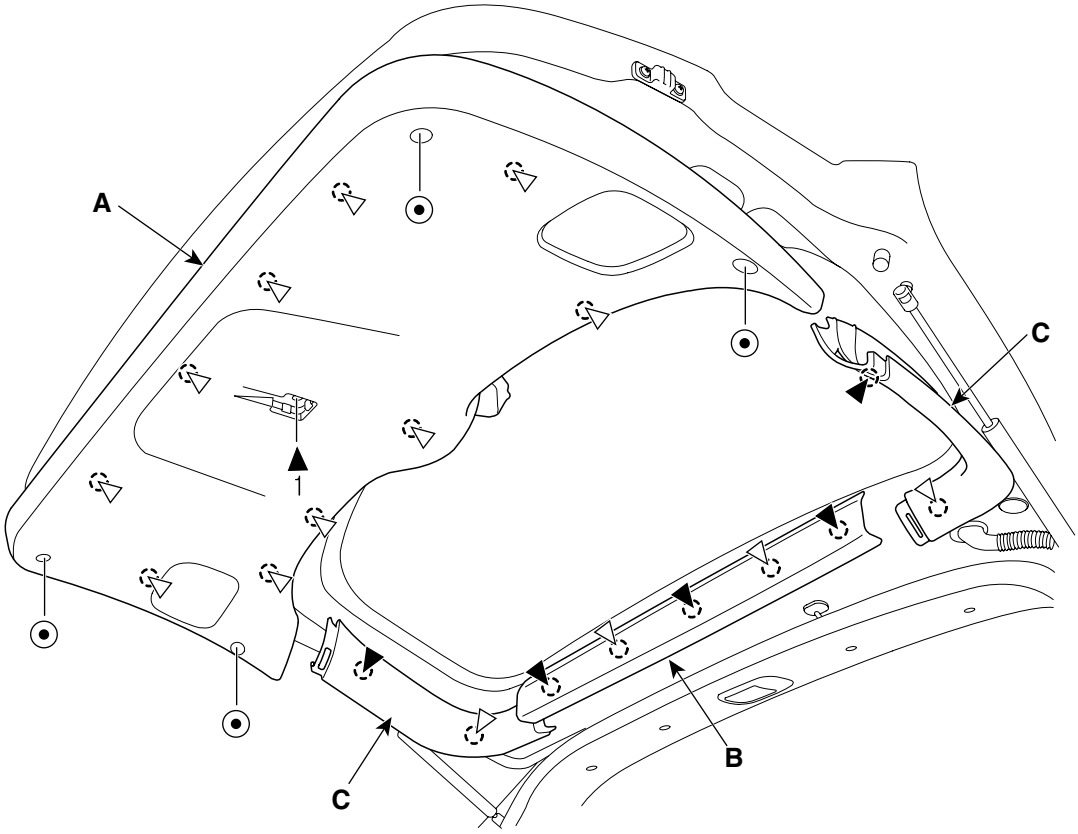

SCMBD6015L

LATCH ASSEMBLY REPLACEMENT

1. Remove the tailgate trim. (See page BD- 14)
2. Disconnect the outside handle rod (A), actuator rod (B).

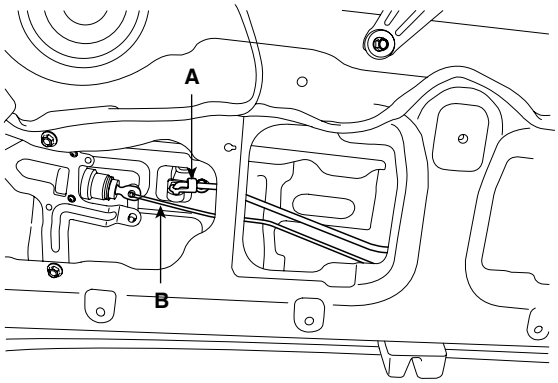

SCMBD6016D

3. After loosening the mounting screws, then remove the latch assembly (A).
4. Disconnect the connector (B).

▷: Bolt Locations, 3

6.9~10.8 N.m (0.7~1.1 Kgf.m, 5.1~8.0 lbf.ft)

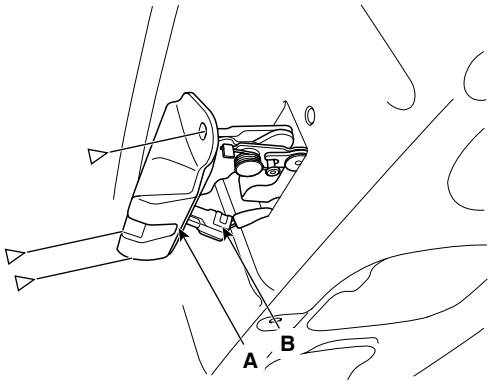

SCMBD6017L

5. Installation is the reverse of removal.

NOTE

- *Make sure the connector is connected properly and the connecting rod is connected properly.*
- *Make sure the tailgate opens properly and locks securely.*

ACTUATOR ASSEMBLY REPLACEMENT

1. Remove the tailgate trim. (See page BD- 14)
2. Disconnect the outside handle rod (A).
3. After loosening the mounting bolt and nuts, then remove the actuator assembly (C).

▷: Nut Locations, 2

3.9~5.9 N.m (0.4~0.6 Kgf.m, 2.9~4.3 lbf.ft)

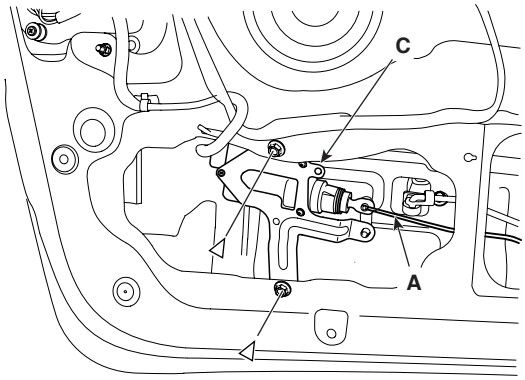

SCMBD6018L

4. Installation is the reverse of removal.

NOTE

- *Make sure the connector is connected properly and the connecting rod is connected properly.*
- *Make sure the tailgate opens properly and locks securely.*

OUTSIDE HANDLE REPLACEMENT

1. Remove the tailgate trim. (See page BD- 14)
2. Remove the actuator assembly. (See page BD- 15)
3. Disconnect the outside handle rod (A).
4. Loosen the outside handle mounting nuts.

▷: Nut Locations, 2

3.9~5.9 N.m (0.4~0.6 Kgf.m, 2.9~4.3 lbf.ft)

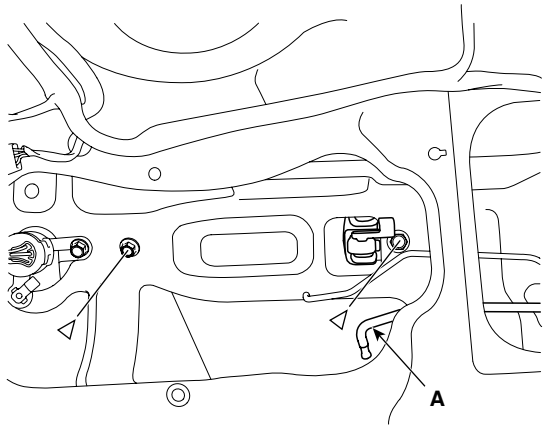

SCMBD6019L

5. Remove the outside handle (A).

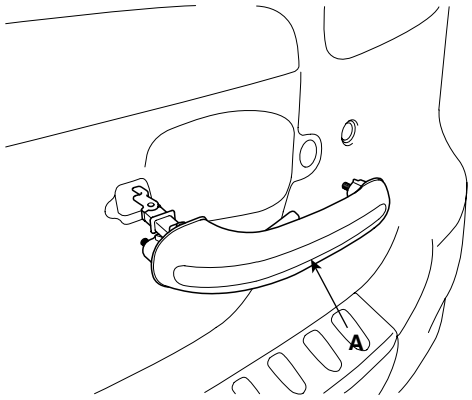

SCMBD6020D

6. Installation is the reverse of removal.

NOTE

- *Make sure the tailgate opens properly and locks securely.*

LIFTER REPLACEMENT

1. Using a screwdriver (A), lift up slightly the socket clips (B) of both ends on the lifer (D), and then remove the lifter from the bracket (C).

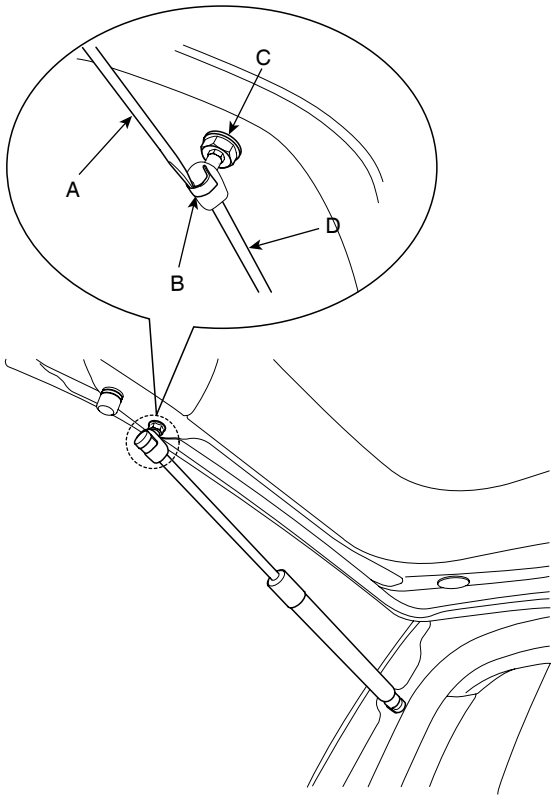

SCMBD6021D

2. Push the socket of the lifter into the bracket for installation.

SPEAKER REPLACEMENT

1. Remove the tailgate trim. (See page BD- 14)
2. Disconnect the connector (A).
3. After loosening the mounting bolts, then remove the speaker (B).

▷: Bolt Locations, 2

3.9~5.9 N.m (0.4~0.6 Kgf.m, 2.9~4.3 lbf.ft)

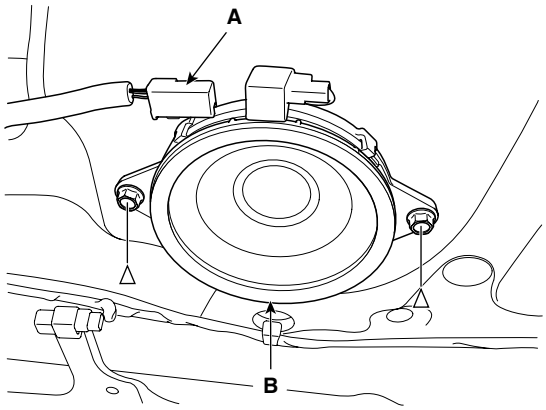

SCMBD6023L

4. Installation is the reverse of removal.

TAILGATE WEATHERSTRIP REPLACEMENT

NOTE

- *Do net apply sealant to the body.*

1. Remove the tailgate weather strip (A).

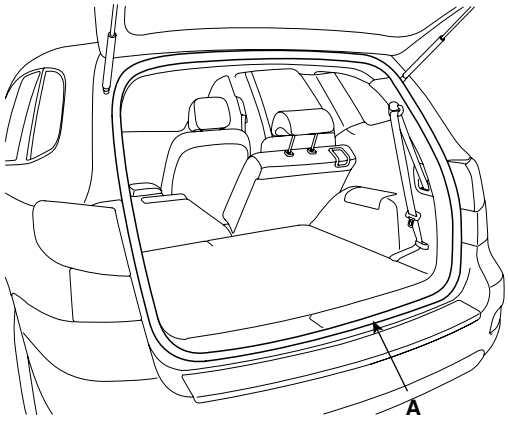

SCMBD6025D

2. Installation is the reverse of removal.

FUEL FILL DOOR REPLACEMENT

1. After loosening the mounting bolts, then remove the fuel fill door (A).
2. Check that the fuel fill door (A) fits flush against the body. If necessary, adjust it.

▷: Bolt Locations, 2

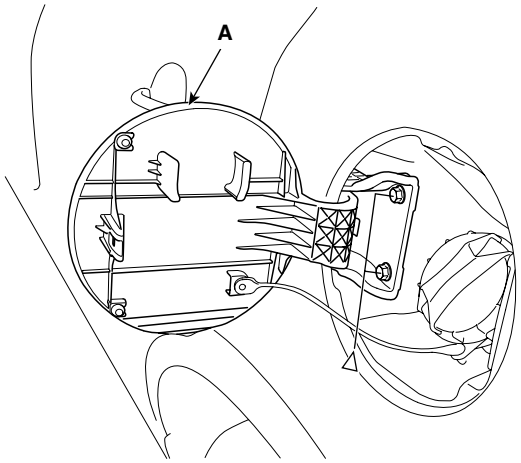

SCMBD6024L

3. Installation is the reverse of removal.

NOTE

- *Make sure the fuel fill door opens properly and locks securely.*

ADJUSTMENT EEC12B6D

1. After loosening the tailgate hinge (A) mounting bolt, adjust the tailgate by moving it up or down, or right or left.

2. Adjust the tailgate fit by turning the tailgate over slam bumper and side bumper (B).

3. Adjust the striker (C) by moving it up or down, or right or left.

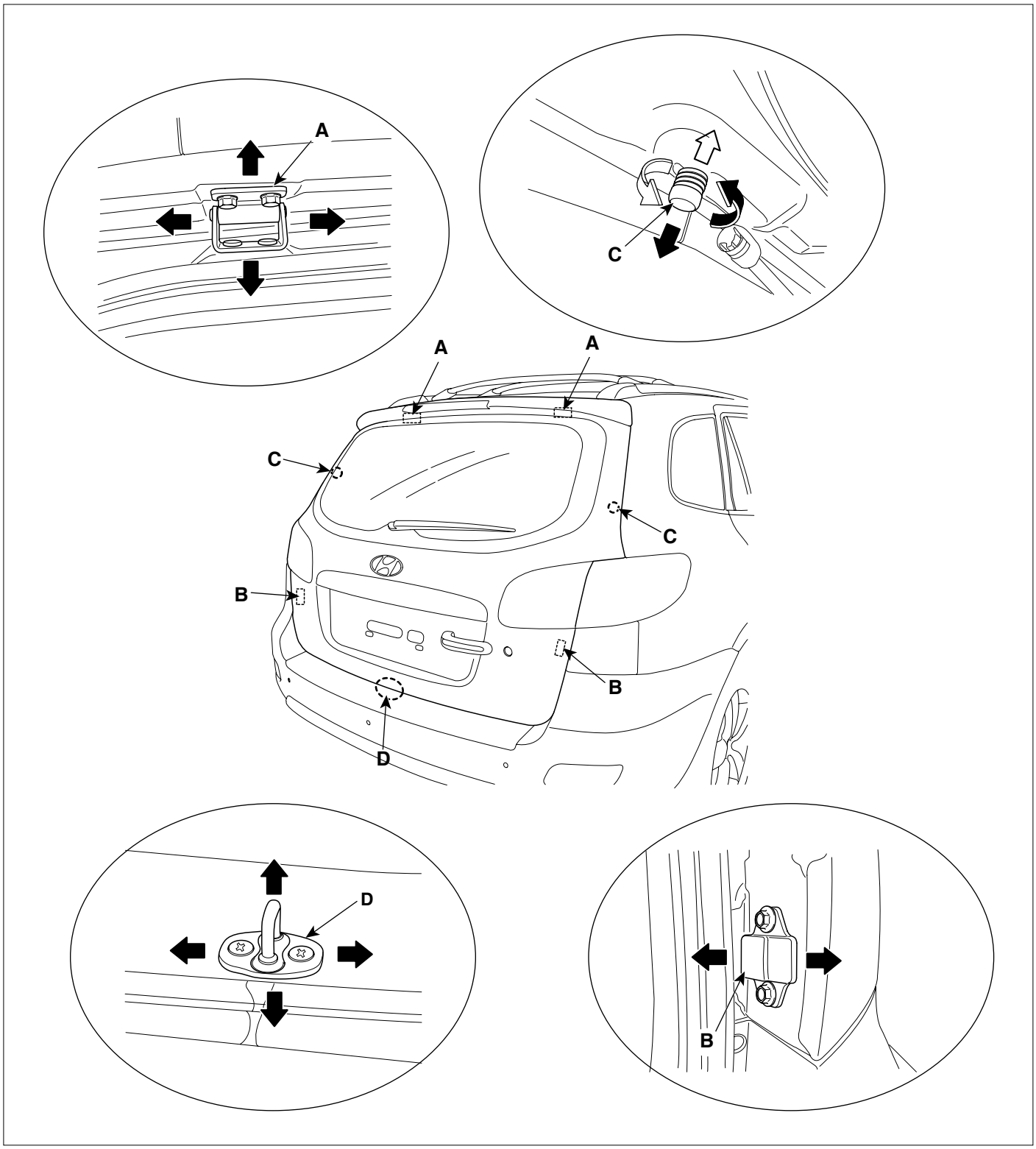

SCMBD6026D

FRONT DOOR

COMPONENTS ED79DACE

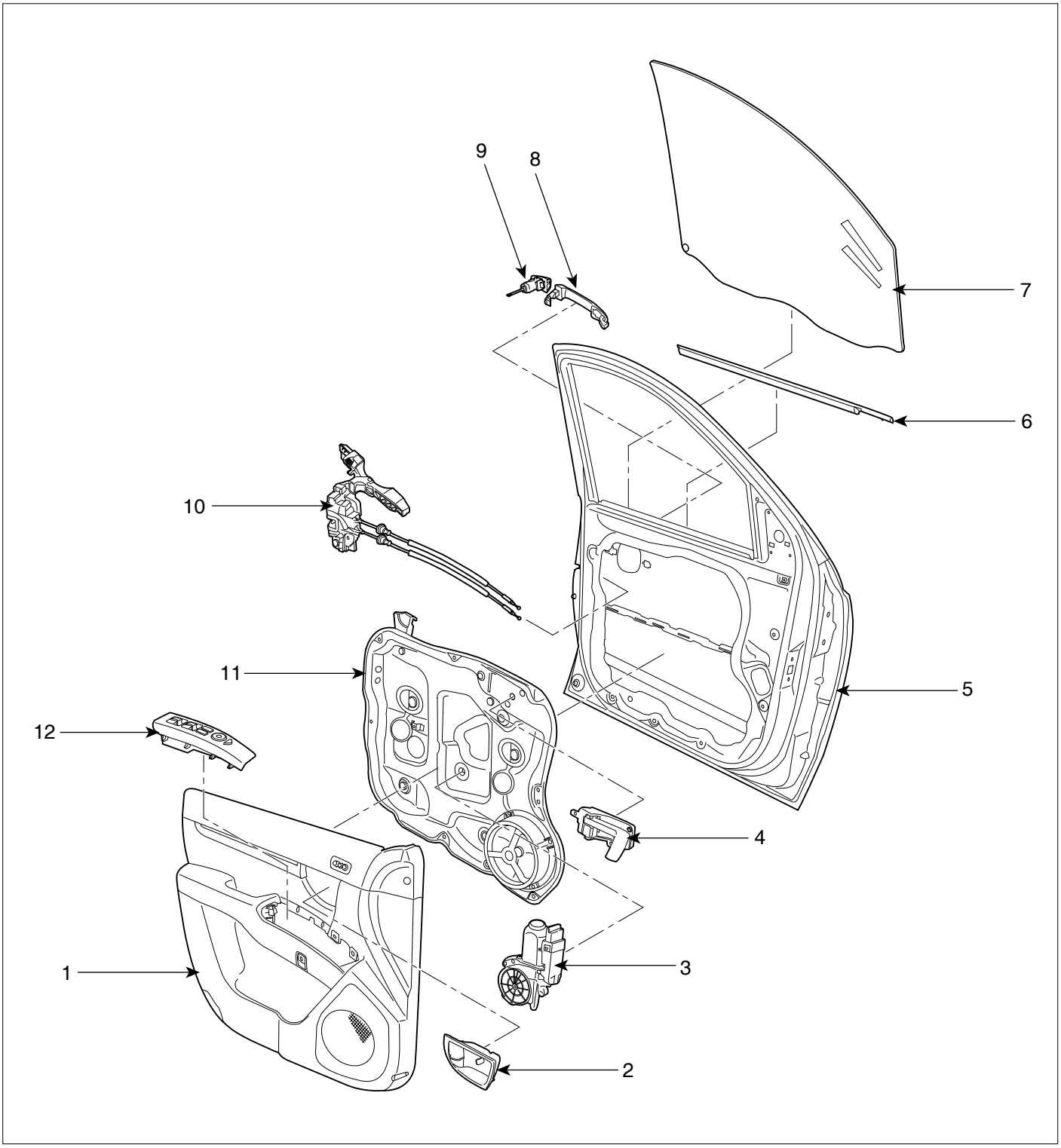

1. Front door trim
2. Inside handle cover
3. Power window motor
4. Inside handle
5. Front door frame
6. Door belt weatherstrip
7. Window glass
8. Outside handle
9. Key cylinder
10. Door latch assembly
11. Door module
12. Power window switch

SCMBD6167L

REPLACEMENT EFA76ADD

FRONT DOOR TRIM REPLACEMENT

NOTE

- *Take care not to scratch the door trim and other parts.*
- *Put on gloves to protect your hands.*

1. Remove the quadrant inner cover (A).

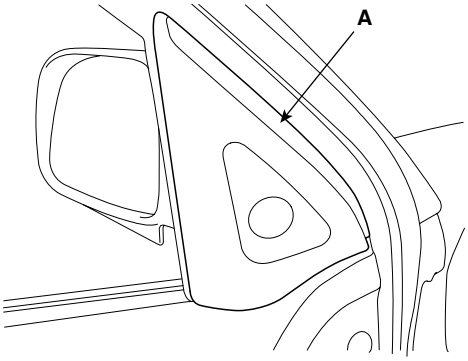

SCMBD6027D

2. Remove the inside handle cover (A).

▷: Screw Locations, 1

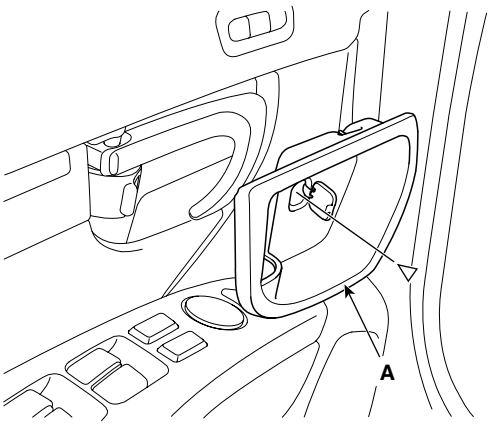

SCMBD6028L

3. Loosen the door trim (D) mounting screws. Release the clips that hold the door trim, then remove the door trim by pulling it upward. Disconnect the power window switch connector (A), power mirror connector (B), and door courtesy lamp connector (C).

Fastener Locations

▷: Clip	►: Screw	1►: Screw

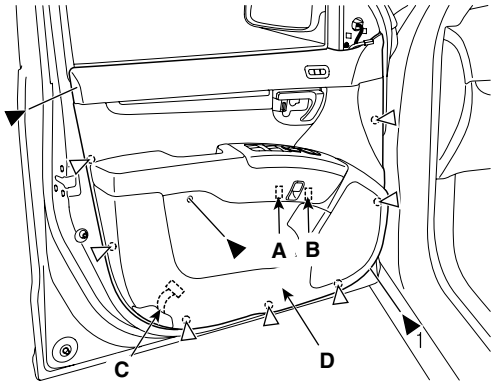

SCMBD6029L

4. Installation is the reverse of removal.

NOTE

- *Make sure of connectors is plugged in properly and each rod is connected securely.*
- *Make sure the door lock and opens properly.*

GLASS REPLACEMENT

1. Remove the front door trim. (See page BD- 21)

2. Carefully move the glass (A) until you can see the bolts, then loosen them. Separate the glass from the glass run and carefully pull the glass out through the window slot.

▷: Bolt Locations, 2

8.8~11.8 N.m (0.9~1.2 Kgf.m, 6.5~8.7 lbf.ft)

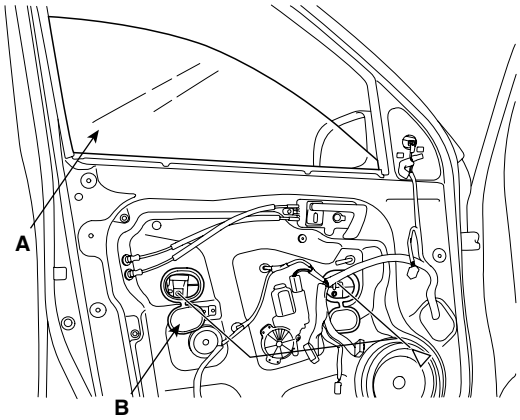

SCMBD6030L

3. Installation is the reverse of removal.

NOTE

- *Roll the glass up down to see if it move freely without binding.*
- *Adjust the position of the glass as necessary.*

INSIDE HANDLE REPLACEMENT

1. Remove the front door trim. (See page BD- 21)

2. Loosen the inside handle (A) mounting screw.

▷: Screw Locations, 3

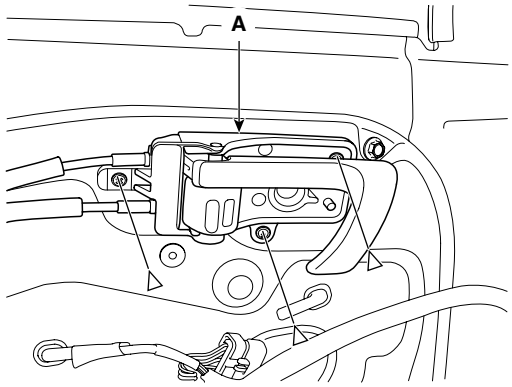

SCMBD6031L

3. Disconnect the lock cable (A) and inside handle cable (B).

4. Remove the inside handle(C).

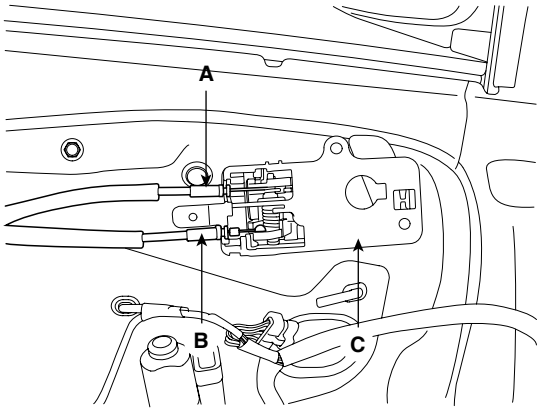

SCMBD6032D

5. Installation is the reverse of removal.

NOTE

- *Make sure the door locks and open properly.*

SPEAKER REPLACEMENT

1. Remove the front door trim. (See page BD- 21)
2. After disconnecting the connector (A), remove the power window motor (B).

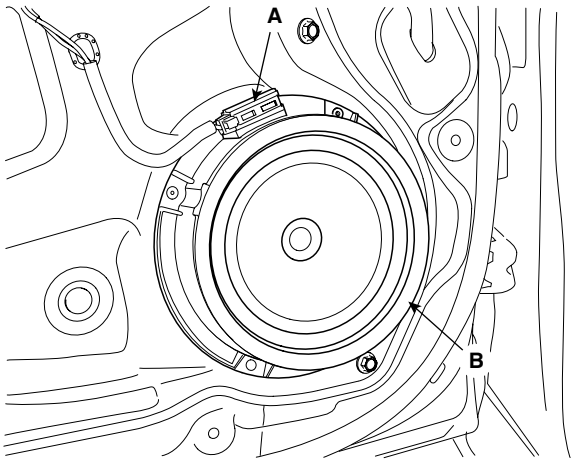

SCMBD6033D

3. Installation is the reverse of removal.

POWER WINDOW MOTOR REPLACEMENT

1. Remove the door trim. (See page BD- 21)
2. After disconnecting the connector (A), remove the power window motor (B).

Fastener Locations

▷: Screw, 2	▶: Screw, 1

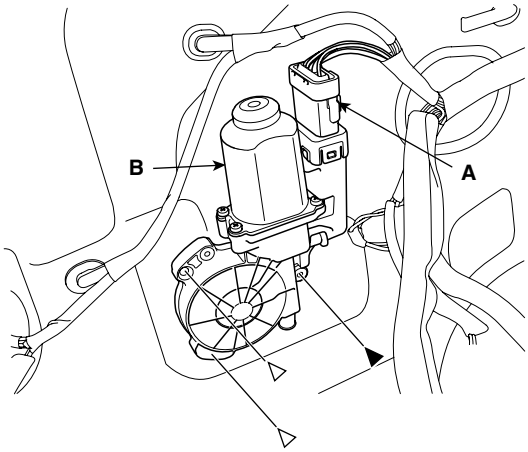

SCMBD6034L

3. Installation is the reverse of removal.

NOTE

- *Roll the glass up down to see if it move freely without binding.*

FRONT DOOR MODULE ASSEMBLY REPLACEMENT

1. Remove the following parts.
   - Front door trim. (See page BD- 21)
   - Window glass. (See page BD- 22)
   - Outside handle. (See page BD- 25)

2. Loosen the outside handle base mounting screw (A).

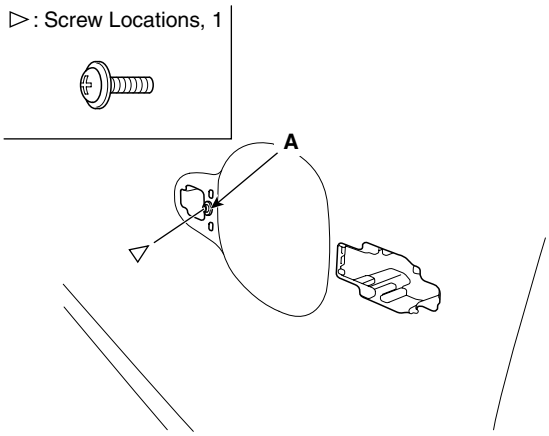

SCMBD6035L

3. Loosen the module (A) mounting bolts and latch mounting screws.

Fastener Locations

►: Screw, 3	▷: Bolt, 8
6.9~10.8 N.m (0.7~1.1 Kgf.m, 5.1~8.0 lbf.ft)	**7.8~11.8 N.m (0.8~1.2 Kgf.m, 5.1~8.7 lbf.ft)**

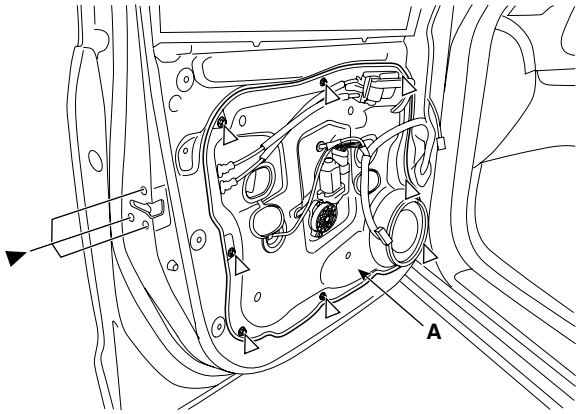

SCMBD6036L

4. Disconnect the door module wiring harness (A), then remove the module assembly (B).

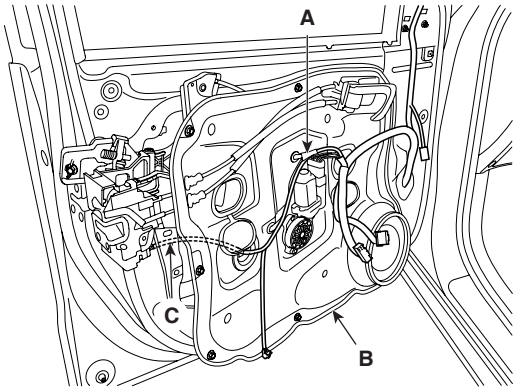

SCMBD6037D

5. Installation is the reverse of removal.

NOTE

- *Make sure the connector are plugged in properly and each rod is connected securely.*
- *Make sure the door locks and opens properly.*

LATCH ASSEMBLY REPLACEMENT

1. Remove the following parts.
   - Front door trim. (See page BD- 21)
   - Window glass. (See page BD- 22)
   - Inside handle. (See page BD- 8)
   - Door module. (See page BD- 24)

2. Remove the latch assembly (A).

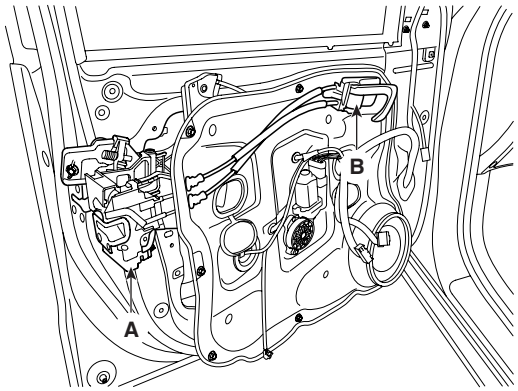

SCMBD6505D

3. Installation is the reverse the removal.

NOTE

- *Make sure the door locks and opens properly.*

OUTSIDE HANDLE REPLACEMENT

1. Loosen the mounting bolt, then remove the key holder (A).

▷: Bolt Locations

6.9~10.8 N.m (0.7~1.1 Kgf.m, 5.1~8.0 lbf.ft)

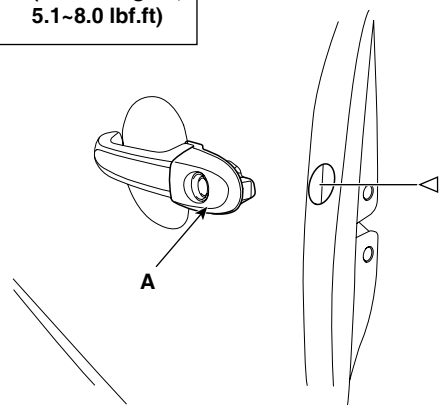

SCMBD6038L

2. Remove the outside handle (A).

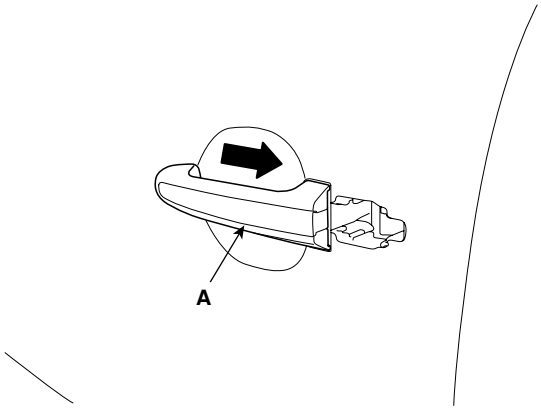

SCMBD6039D

3. Installation is the reverse of removal.

DOOR CHECKER REPLACEMENT

1. Remove the front door trim. (See page BD- 21)
2. Remove the door module. (See page BD- 24)
3. Loosen the mounting bolt, then remove the rear checker (A).

Fastener Locations

▷: Bolt, 2	▶: Bolt, 1
6.9~10.8N.m (0.7 ~ 1.1Kgf.m, 5.1~8.0lbf.ft)	**16.7~21.6N.m (1.7 ~ 2.2Kgf.m, 12.3~15.9lbf.ft)**

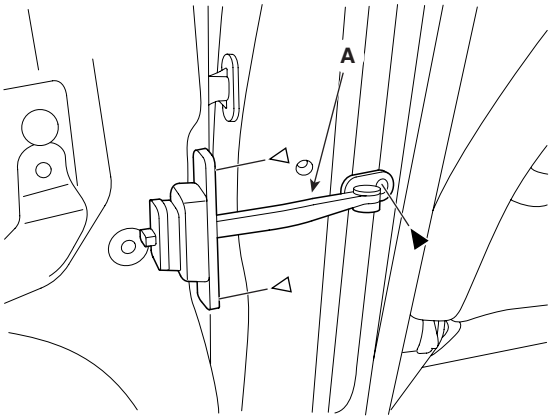

LSLG006O

4. Installation is the reverse the removal.

DOOR BELT WEATHERSTRIP REPLACEMENT

1. Loosen the mounting screw, then remove the door belt weatherstrip (A).

▷ : Screw Locations, 1

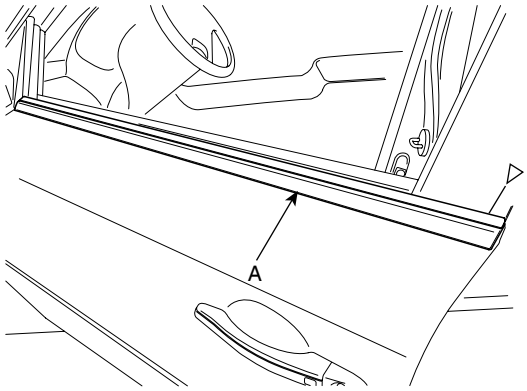

LSLG140N

2. Installation is the reverse of removal.

DOOR WEATHERSTRIP REPLACEMENT

1. Loosen the checker mounting bolts.
2. Detach the clips, then remove the weatherstrip(A).

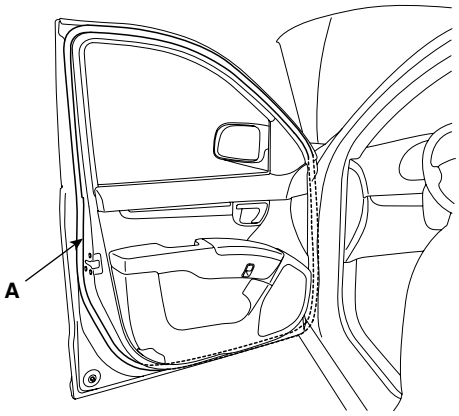

SCMBD6040D

3. Installation is the reverse of removal.

POWER WINDOW SWITCH REPLACEMENT

NOTE

- *When prying with a flat-tipped screwdriver, wrap it with protective tape, and apply protective tape around the related parts, to prevent damaged.*

1. Remove the front door trim. (See page BD- 21)
2. Remove the power window switch (A).

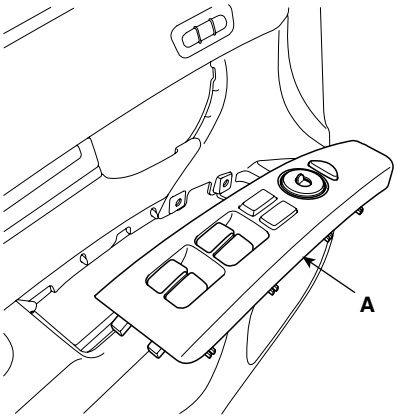

SCMBD6041D

3. Installation is the reverse the removal.

ADJUSTMENT EDDDB1BD

GLASS ADJUSTMENT

NOTE

- *Check the glass run channel for damaged or deterioration, and replace them necessary.*

1. Remove the door trim. (See page BD- 21)

2. Carefully move the glass (A) until you can see the glass mounting bolts (B), then loosen them.

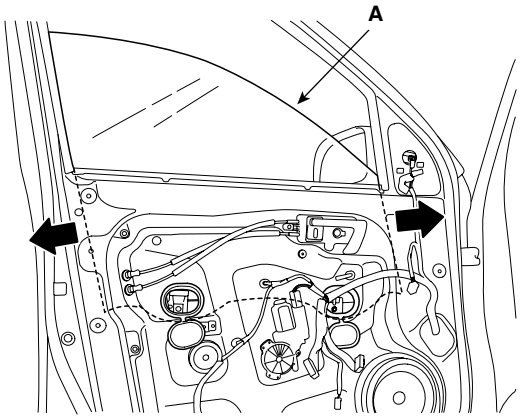

SCMBD6506D

3. Check that the glass moves smoothly.

4. Raise the glass fully, and check for gaps.
   Check that the glass contacts the glass run channel evenly.

5. Check for water leaks. Run water over the roof and on the sealing area as shown, and note these items:
   - Use a 12mm (1/2 in.) diameter hose (A).
   - Adjust the rate of water flow as shown (B).
   - Do not use a nozzle.
   - Hold the hose about 300mm(12in.) away from the door (C).

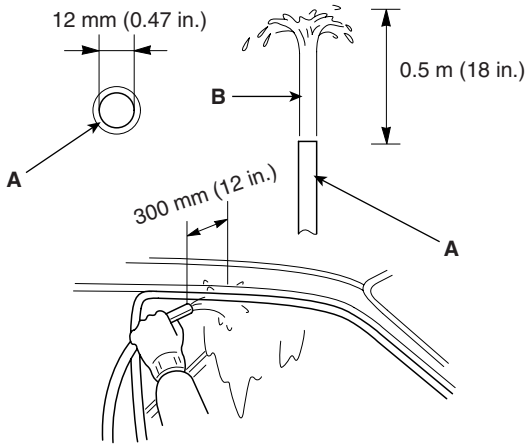

ESKE003L

DOOR POSITION ADJUSTMENT

NOTE

- *After installing the door, check for a flush fit with the Body, then check for equal gaps between the front, Rear, and bottom, door edges and the body. CheckThat the door and body edges are parallel. Before Adjusting, replace the mounting bolts.*

1. Place the vehicle on a firm, level surface when adjusting the doors.

2. Adjust at the hinges (A):
   - Loosen the door mounting bolts (B) slightly, and move the door IN or OUT until it aligns flush with the body.
   - Loosen the hinge mounting bolts (C) slightly, and move the door BACKWARD or FORWARD, UP or DOWN as necessary to equalize the gaps.
   - Place a shop towel on the jack to prevent damaged to the door when adjusting the door.

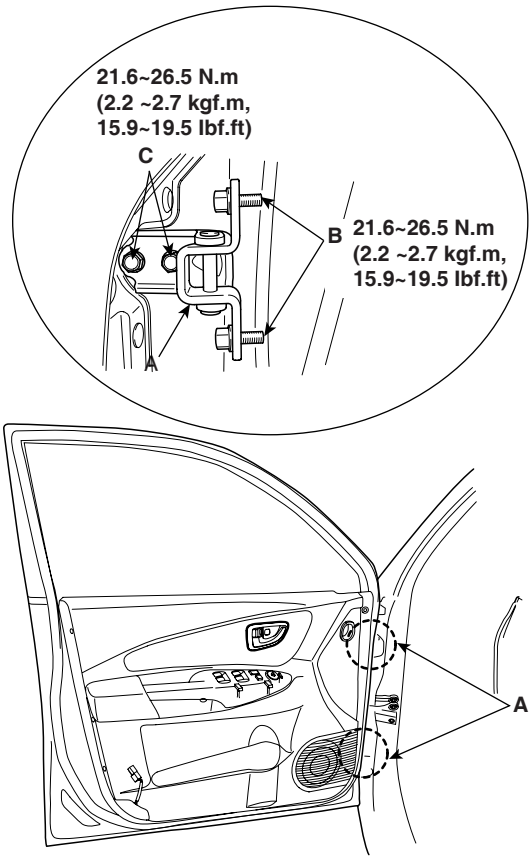

SCMBD6513L

3. Check that the door and body edges are parallel.

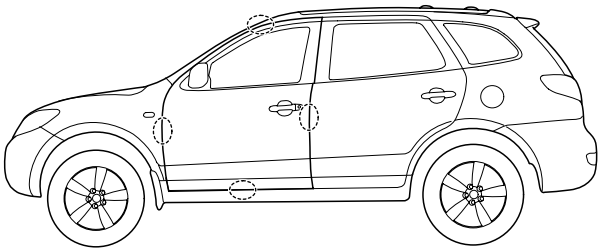

SCMBD6500D

4. Grease the pivot portions of the hinges indicated by the arrows.

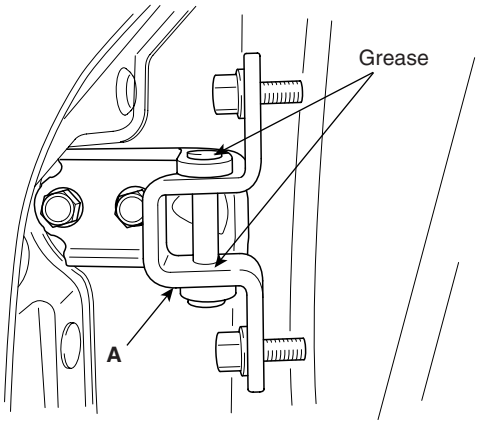

ESBF152A

5. Check for water leaks.

DOOR STRIKER ADJUSTMENT

Make sure the door latches securely without slamming it. If necessary, adjust the striker (A): The striker nuts are fixed. The striker can be fine adjusted up or down, and in or out.

1. Loosen the screws (B), then insert a shop towel between the body and striker.

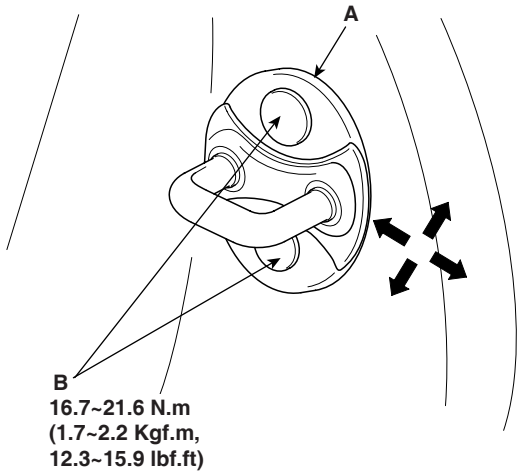

SCMBD6515L

2. Lightly tighten the screws.
3. Wrap the striker with a shop towel, then adjust the striker by tapping it with a plastic hammer. Do not tap the striker too hard.
4. Loosen the screws and remove the shop towel.
5. Lightly tighten the screws.
6. Hold the outer handle out, and push the door against the body to be sure the striker allows a flush fit. If the door latches properly, tighten the screws and recheck.

REAR DOOR

COMPONENTS EABD728F

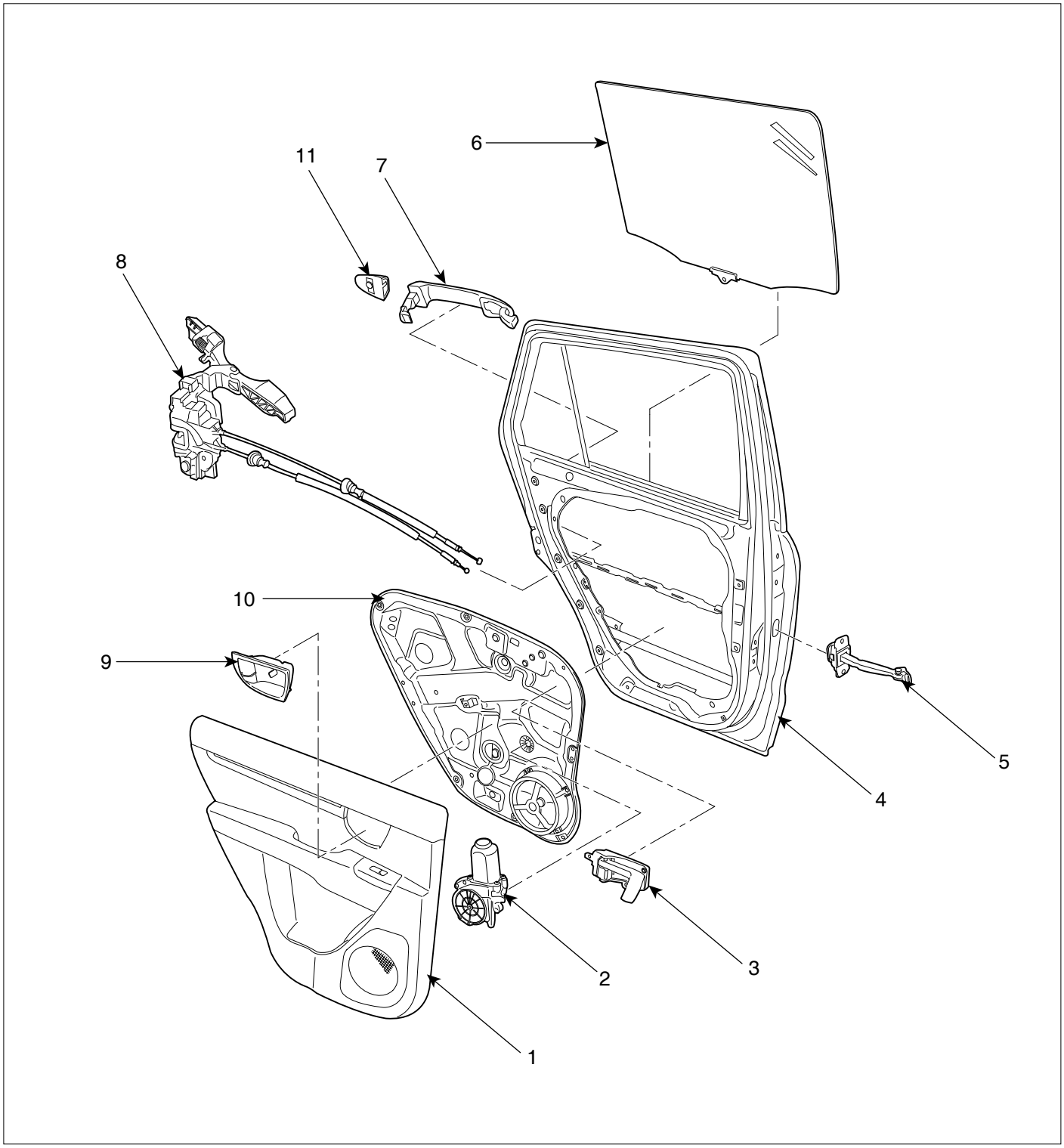

1. Rear door trim
2. Power window motor
3. Inside handle
4. Rear door frame
5. Door checker
6. Window glass
7. Outside handle
8. Door latch assembly
9. Inside handle cover
10. Rear door module
11. Outside handle cover

SCMBD6168L

REPLACEMENT EB658B42

REAR DOOR TRIM REPLACEMENT

NOTE

- *Take care not to scratch the door trim and other parts.*
- *Put on gloves to protect your hands.*

1. Remove the inside handle cover (A).

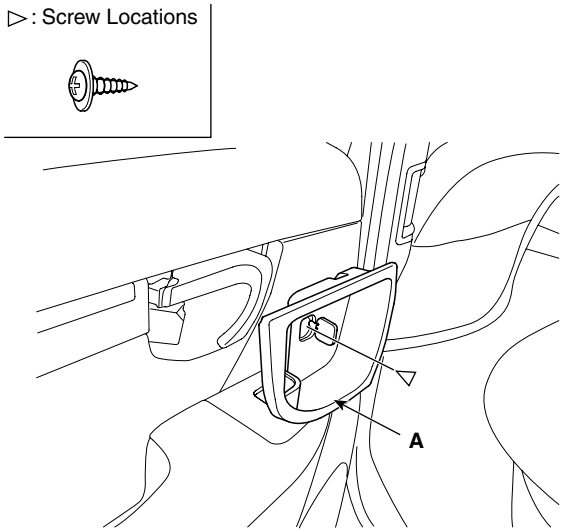

SCMBD6043L

2. Loosen the door trim (B) mounting screws. Release the clips that hold the door trim, then remove the door trim by pulling it upward. Disconnect the power window switch connector (A).

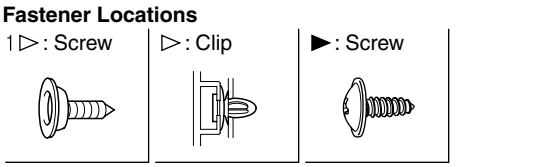

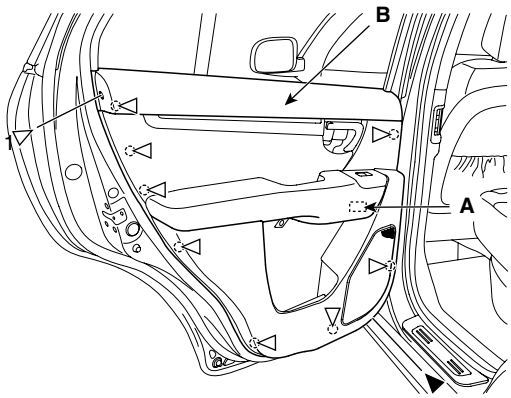

SCMBD6044L

3. Installation is the reverse of removal.

NOTE

- *Make sure of connectors is plugged in properly and each rod is connected securely.*
- *Make sure the door locks and opens properly.*

REAR DOOR MODULE ASSEMBLY REPLACEMENT

1. Remove the following parts.
   - Rear door trim. (See page BD- 32)
   - Window glass. (See page BD- 34)
   - Outside handle. (See page BD- 35)

2. Loosen the outside handle base mounting screw (A).

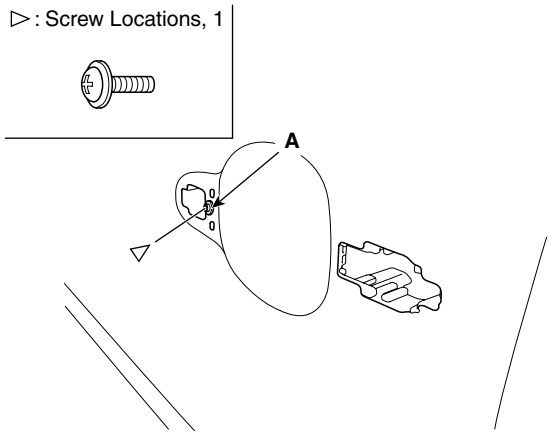

SCMBD6035L

3. Loosen the module (A) mounting bolts and latch mounting screws.

Fastener Locations

▷: Bolt, 8	▶: Screw, 3
7.8~11.8 N.m (0.8~1.2 Kgf.m, 5.8~8.7 lbf.ft)	**6.9~10.8 N.m (0.7~1.1 Kgf.m, 5.1~8.0 lbf.ft)**

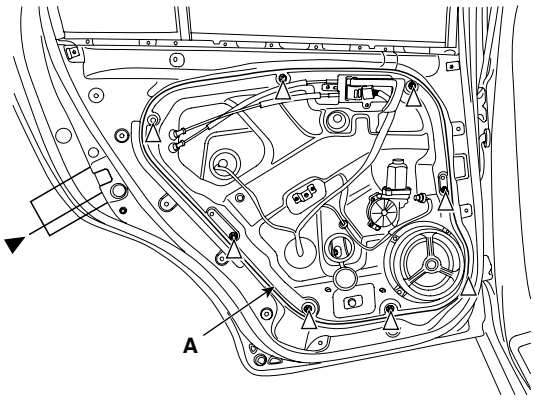

SCMBD6045L

4. Disconnect the door module wiring harness (A), then remove the module assembly (B).

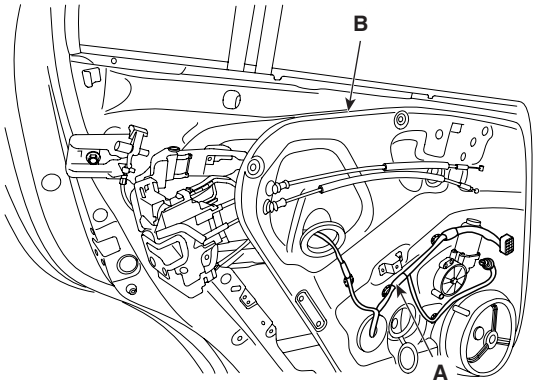

SCMBD6046D

5. Installation is the reverse of removal.

NOTE

- *Make sure the connector are plugged in properly and each rod is connected securely.*
- *Make sure the door locks and opens properly.*

GLASS REPLACEMENT

NOTE

- *Put on gloves to protect your hands.*

1. Remove the rear door trim. (See page BD- 32)
2. Loosen the screws and bolt, then remove the quarter glass (A).

Fastener Locations

▶: Screw	▷: Bolt
	6.9~10.8 N.m (0.7~1.1 Kgf.m, 5.1~8.0 lbf.ft)

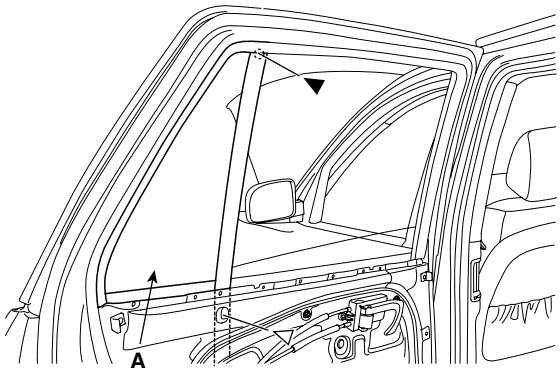

SCMBD6047L

CAUTION

- ***Take care not to drop to glass and scratch the glass surface.***

3. Carefully move the glass (A) until you can see the bolts, then loosen them. Separate the glass from the glass run and carefully pull the glass out through the window slot.

▷: Screw Locations, **3.9~5.9 N.m (0.4~0.6 Kgf.m, 2.9~4.3 lbf.ft)**

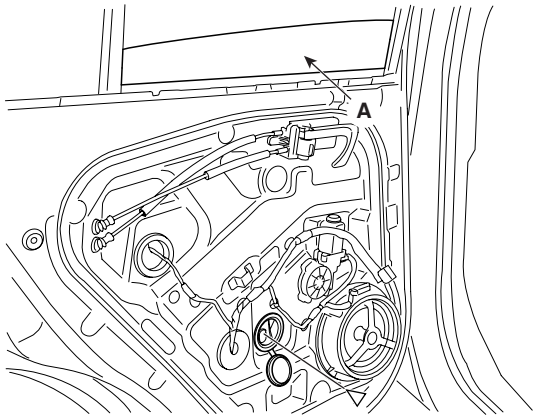

SCMBD6220L

4. Installation is the reverse of removal.

NOTE

- *Roll the glass up down to see if it move freely without binding.*
- *Adjust the position of the glass as necessary.*

POWER WINDOW MOTOR REPLACEMENT

1. Remove the rear door trim. (See page BD- 32)
2. After disconnecting the connector (A), remove the power window motor (B).

Fastener Locations

1 ▶ : Screw, 2	▶ : Screw, 1

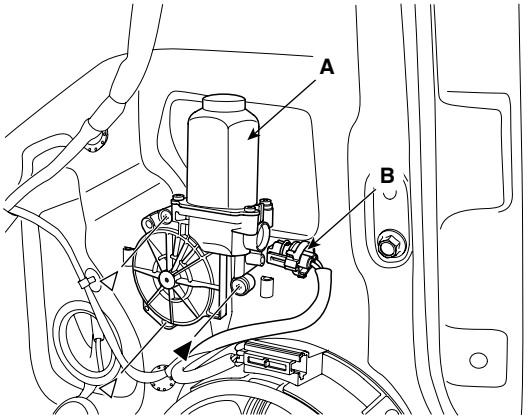

SCMBD6048L

3. Installation is the reverse of removal.

> **NOTE**
> - *Roll the glass up down to see if it move freely without binding.*

OUTSIDE HANDLE REPLACEMENT

1. Remove the door trim. (See page BD- 32)
2. Loosen the mounting bolt, then remove the handle cover (A).

▷ : Bolt Locations, 2

6.9~10.8 N.m (0.7~1.1 Kgf.m, 5.1~8.0 lbf.ft)

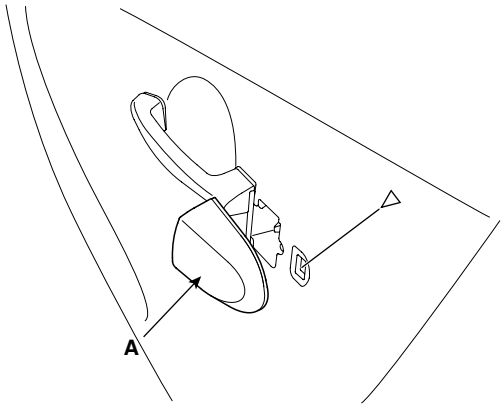

SCMBD6049L

3. Remove the outside handle (A).

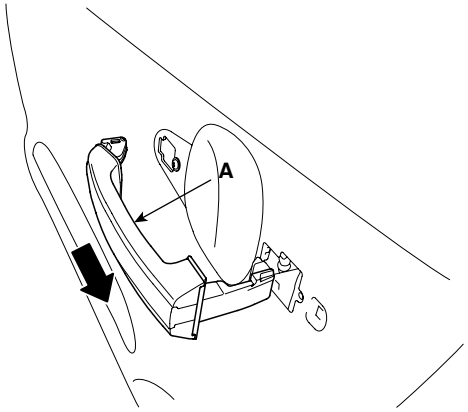

SCMBD6050D

4. Installation is the reverse of removal.

LATCH ASSEMBLY REPLACEMENT

1. Remove the following parts.
   - Front door trim. (See page BD- 32)
   - Window glass. (See page BD- 34)
   - Inside handle. (See page BD- 36)
   - Outside handle. (See page BD- 35)
2. Remove the module assembly. (See page BD- 33)
3. Remove the latch assembly (B).

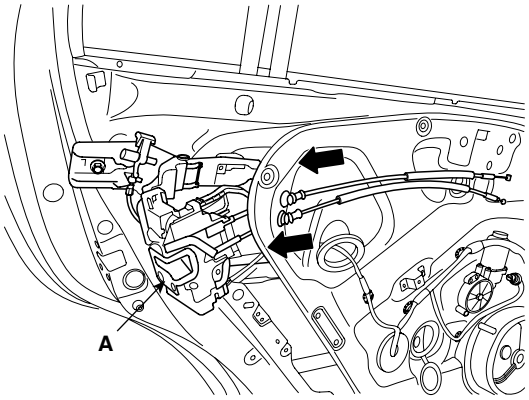

SCMBD6051D

4. Installation is the reverse the removal.

NOTE

- *Make sure the door locks and opens properly.*

INSIDE HANDLE REPLACEMENT

1. Remove the front door trim. (See page BD- 32)
2. Loosen the inside handle (A) mounting screw. Push the inside handle rearward to disconnect.

▷ : Screw Locations, 3

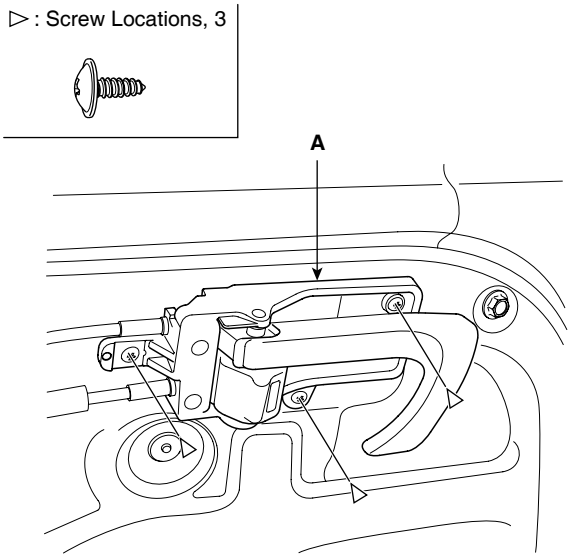

SCMBD6052L

3. Disconnect the lock cable (A) and inside connect cable (B).

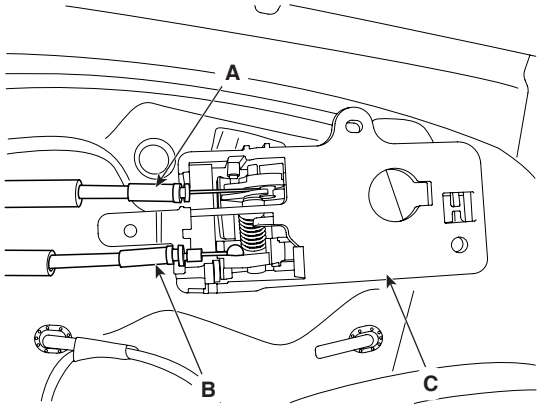

SCMBD6053D

4. Installation is the reverse of removal.

NOTE

- *Make sure the door locks and opens properly.*

DOOR BELT WEATHERSTRIP REPLACEMENT

1. Loosen the mounting screw, then remove the door belt weatherstrip (A).

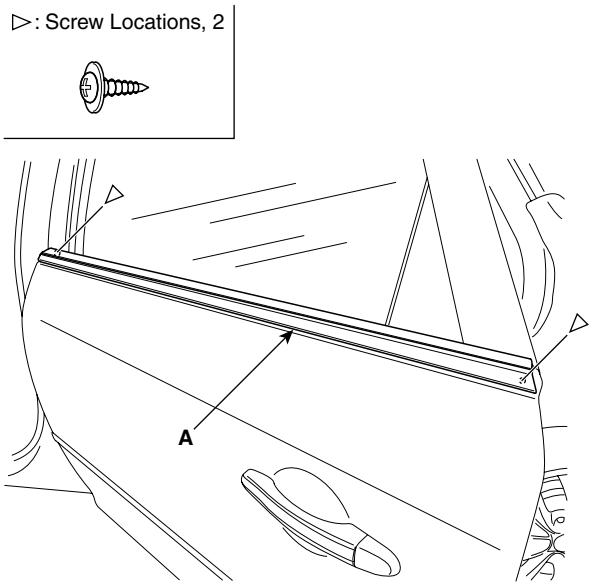

ESBF150N

2. Installation is the reverse of removal.

DOOR WEATHHERSTRIP REPLACEMENT

1. Loosen the checker mounting bolts.
2. Detach the clips, then remove the weatherstrip(A).

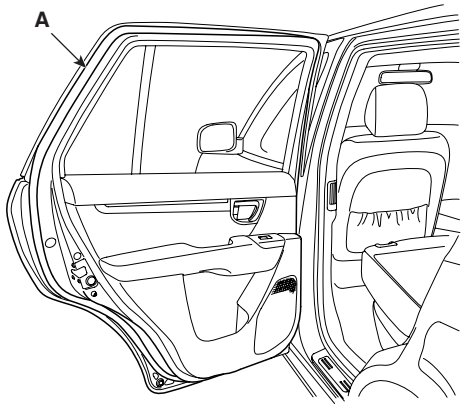

SCMBD6055D

3. Installation is the reverse the removal.

SPEAKER REPLACEMENT

1. Remove the rear door trim. (See page BD- 32)

2. After disconnecting the connector (A), remove the power window motor (B).

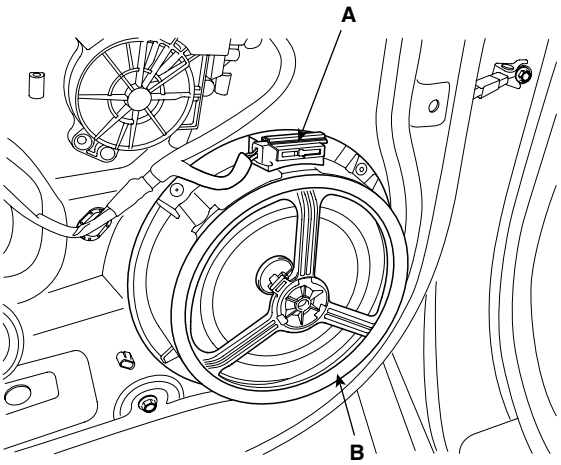

SCMBD6056D

3. Installation is the reverse of removal.

ADJUSTMENT E66E60F0

GLASS ADJUSTMENT

NOTE

- *Check the glass run channel for damaged or deterioration, and replace them necessary.*

1. Remove the following parts.
   - Quadrant cover.
   - Door trim.

2. Carefully move the glass (A) until you can see the glass mounting bolts, then loosen them.

▷: Screw Locations, **3.9~5.9 N.m (0.4~0.6 Kgf.m, 2.9~4.3 lbf.ft)**

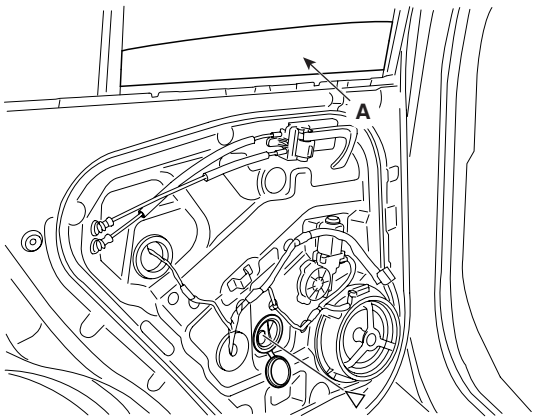

SCMBD6220L

3. Check that the glass moves smoothly.

4. Raise the glass fully, and check for gaps.
   Check that the glass contacts the glass run channel evenly.

5. Check for water leaks. Run water over the roof and on the sealing area as shown, and note these items:
   - Use a 12mm (1/2 in.) diameter hose (A).
   - Adjust the rate of water flow as shown (B).
   - Do not use a nozzle.
   - Hold the hose about 300mm(12in.) away from the door (C).

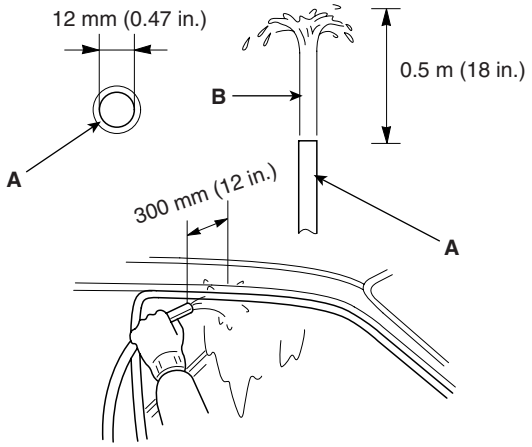

ESKE003L

DOOR POSITION ADJUSTMENT

NOTE

- *After installing the door, check for a flush fit with the Body, then check for equal gaps between the front, Rear, and bottom, door edges and the body. CheckThat the door and body edges are parallel. Before Adjusting, replace the mounting bolts.*

1. Place the vehicle on a firm, level surface when adjusting the doors.
2. Adjust at the hinges (A):
   - Loosen the door mounting bolts (B) slightly, and move the door IN or OUT until it aligns flush with the body.
   - Loosen the hinge mounting bolts (C) slightly, and move the door BACKWARD or FORWARD, UP or DOWN as necessary to equalize the gaps.
   - Place a shop towel on the jack to prevent damaged to the door when adjusting the door.

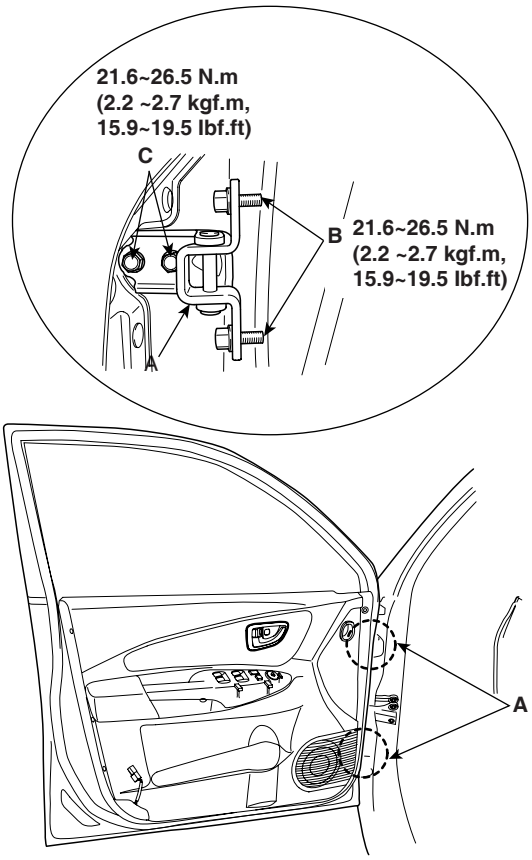

SCMBD6513L

3. Check that the door and body edges are parallel.

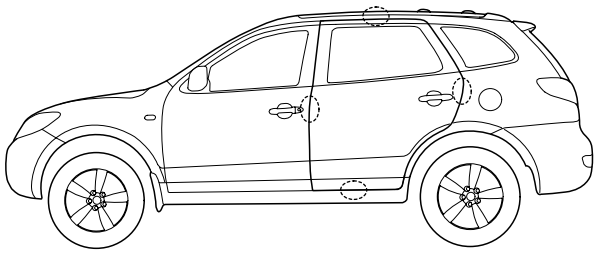

SCMBD6042D

4. Grease the pivot portions of the hinges indicated by the arrows.

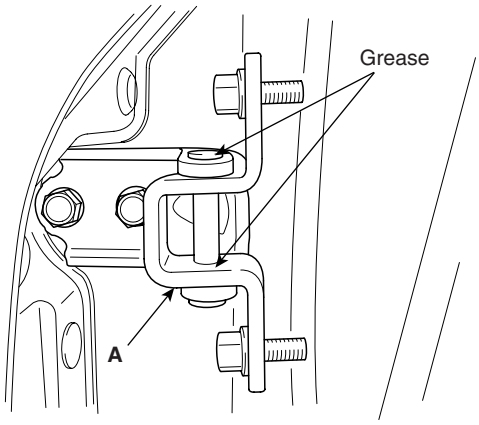

ESBF152A

5. Check for water leaks.

DOOR STRIKER ADJUSTMENT

Make sure the door latches securely without slamming it. If necessary, adjust the striker (A): The striker nuts are fixed. The striker can be fine adjusted up or down, and in or out.

1. Loosen the screws (B), then insert a shop towel between the body and striker.

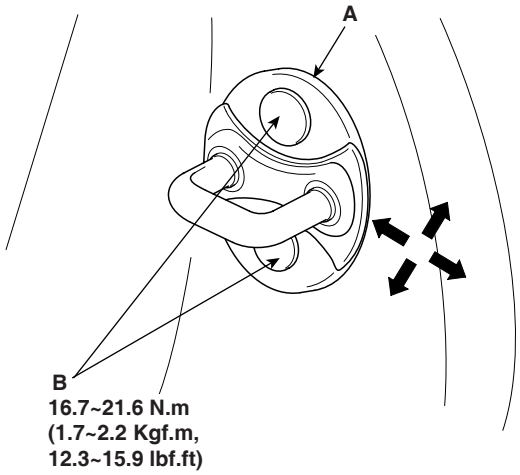

SCMBD6515L

2. Lightly tighten the screws.
3. Wrap the striker with a shop towel, then adjust the striker by tapping it with a plastic hammer. Do not tap the striker too hard.
4. Loosen the screws and remove the shop towel.
5. Lightly tighten the screws.
6. Hold the outer handle out, and push the door against the body to be sure the striker allows a flush fit. If the door latches properly, tighten the screws and recheck.

BODY SIDE MOLDINGS

REPLACEMENT EFFD4D9F

ROOF RACK REPLACEMENT

NOTE

- *When prying with a flat-tipped screwdriver, wrap it with protective tape, and apply protective tape around the related parts, to prevent damaged.*
- *Put on gloves to protect your hands.*
- *Take care not to scratch the body surface.*

1. Remove the roof trim. (See page BD- 79)
2. Remove the roof rack cover (A).
3. After loosening the mounting nuts, then remove the roof rack (B).
4. Installation is the reverse of removal.

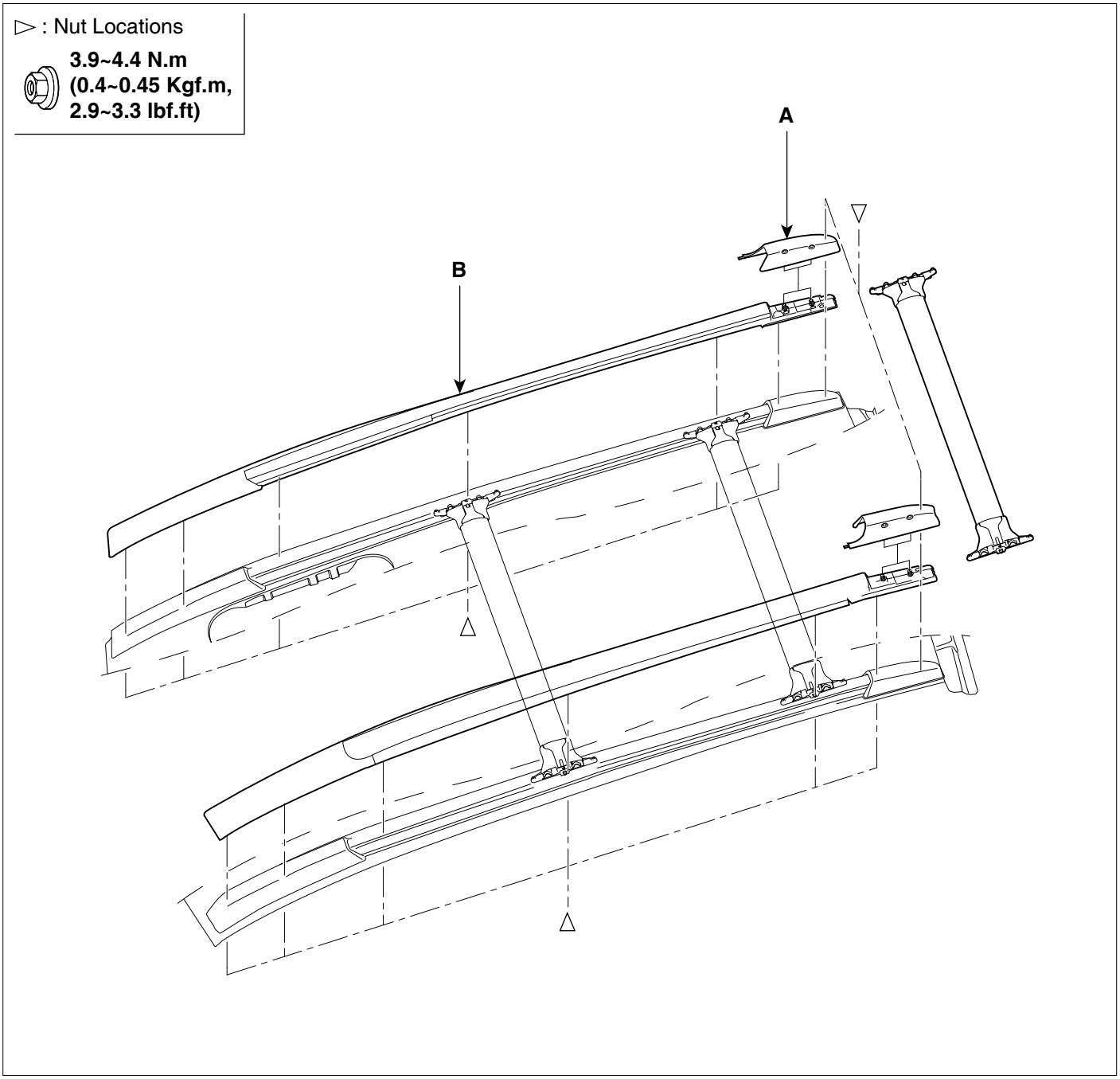

SCMBD6169L

MUD GUARD AND WHEEL GUARD REPLACEMENT

NOTE

- *When prying with a flat-tipped screwdriver, wrap it with protective tape, and apply protective tape around the related parts, to prevent damaged.*
- *Put on gloves to protect your hands.*
- *Take care not to scratch the body surface.*

1. Remove the mud guard and wheel guard.
2. Installation is the reverse of removal.

Fastener Locations

► : Screw	▷ : Clip	1► : Nut

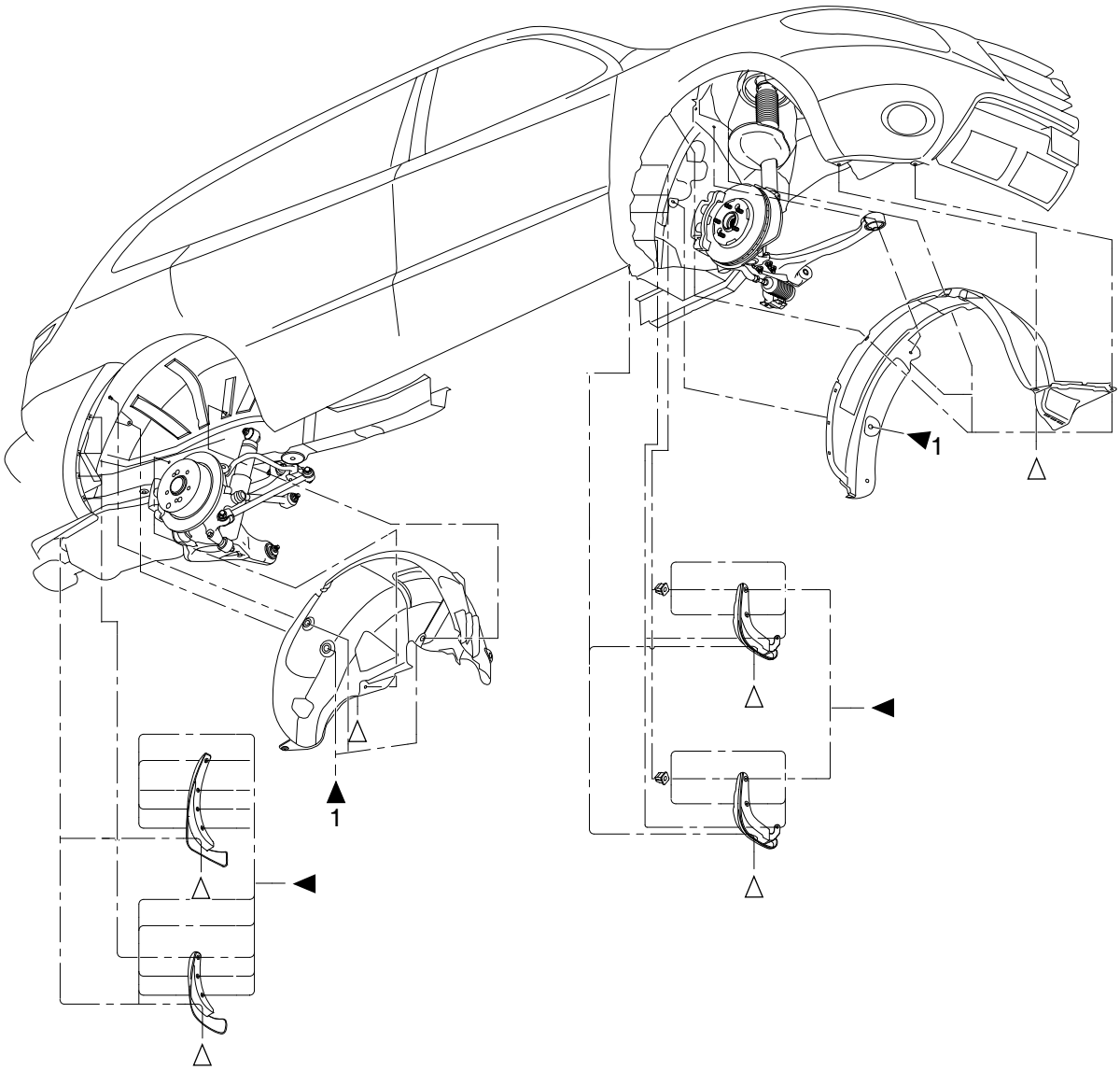

SCMBD6170L

SIDE GARNISH AND SIDE SILL REPLACEMENT

NOTE

- *When prying with a flat-tipped screwdriver, wrap it with protective tape, and apply protective tape around the related parts, to prevent damaged.*
- *Put on gloves to protect your hands.*
- *Take care not to scratch the body surface.*

1. Remove the side garnish.

Fastener Locations

▷ : Clip ► : Screw

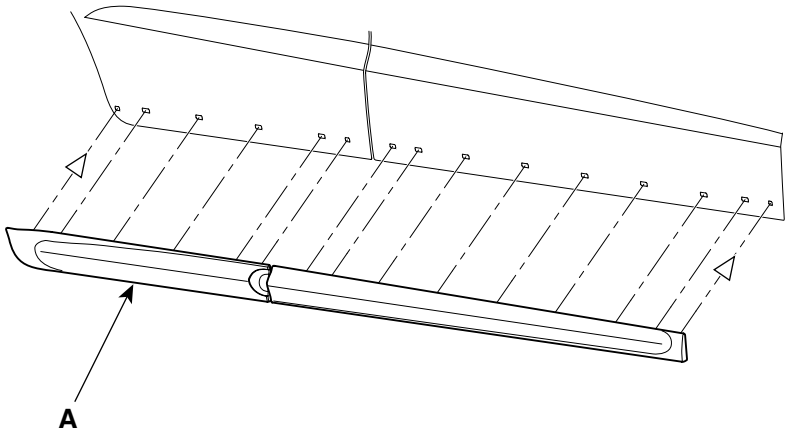

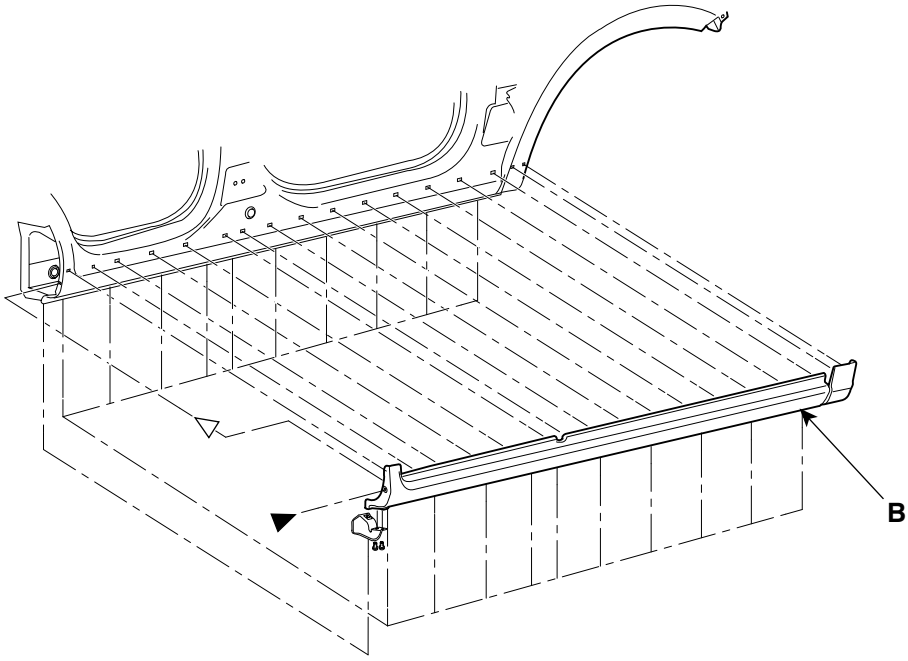

SCMBD6171L

REAR GARNISH REPLACEMENT

1. Remove the tailgate trim. (See page BD- 14)
2. Remove the speaker. (See page BD- 17)
3. Disconnect the connector (A).
4. Loosen the rear garnish mounting nuts.

▷ : Nut Locations, 4

3.9~4.4 N.m (0.4~0.45 Kgf.m, 2.9~3.3 lbf.ft)

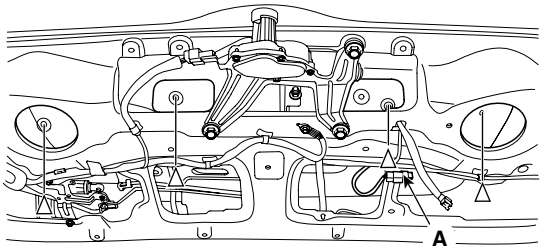

SCMBD6057L

5. Remove the rear garnish (A).

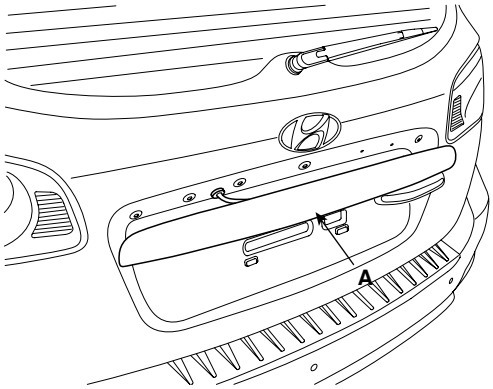

SCMBD6058D

6. Installation is the reverse of removal.

SPOLER REPLACEMENT

1. Remove the tailgate upper trim. (See page BD- 14)
2. Disconnect the connector (A).
3. Loosen the mounting nuts.

▷ : Nut Locations, 4

5.9~6.4 N.m (0.6~0.65 Kgf.m, 4.3~4.7 lbf.ft)

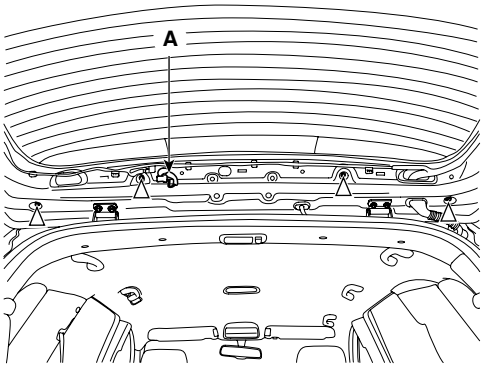

SCMBD6059L

4. Remove the spoler(B).

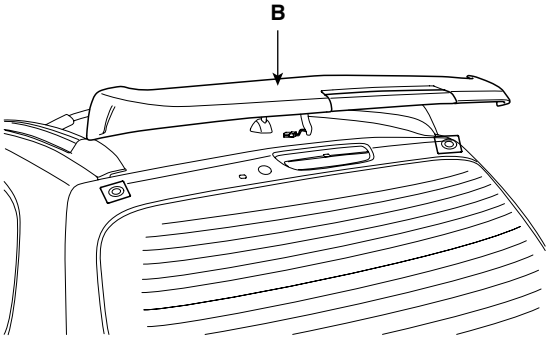

SCMBD6060L

5. Installation is the reverse of removal.

SUN ROOF

COMPONENTS E86F9EFC

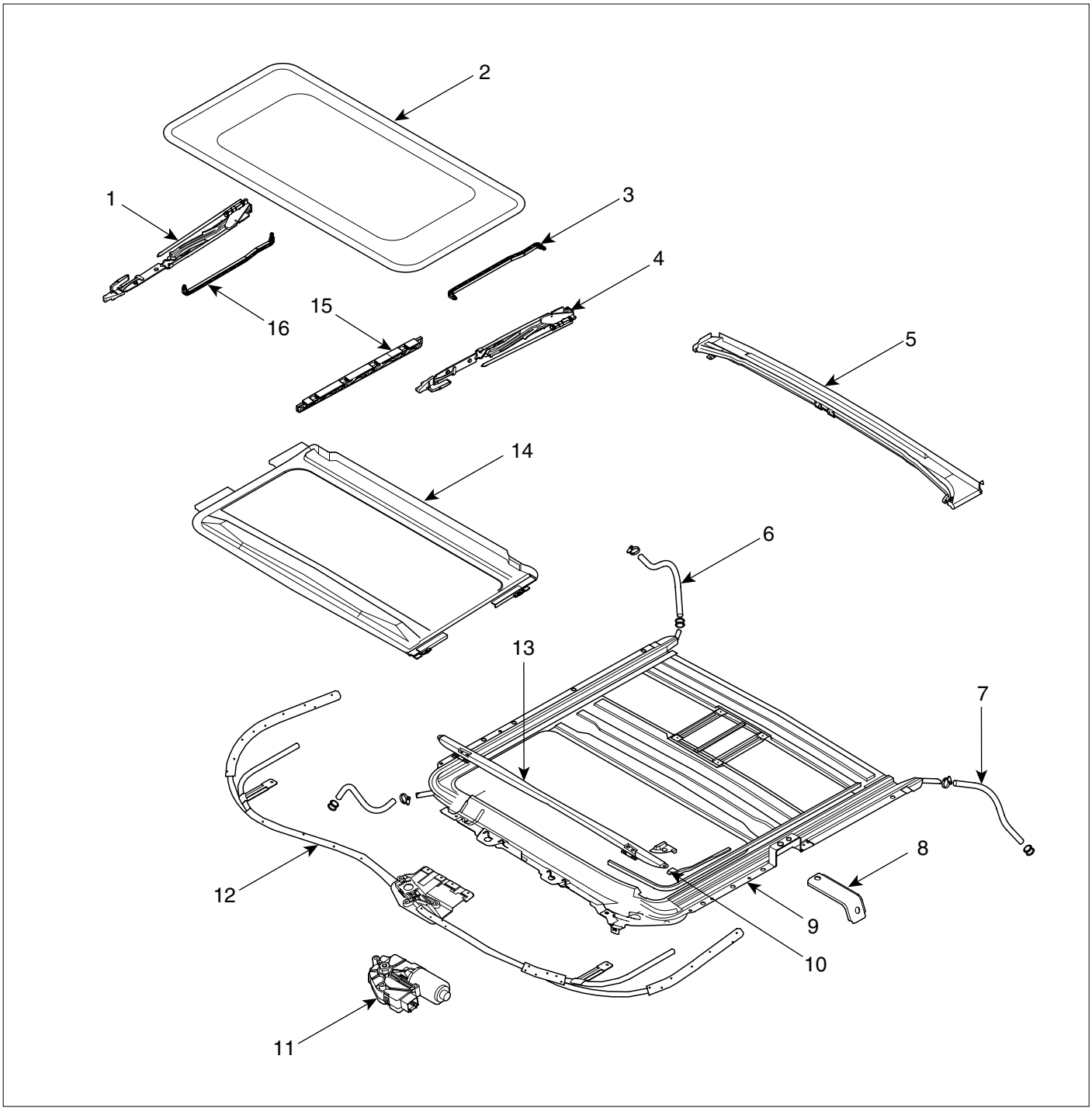

1. Guide assembly
2. Glass
3. Drip link
4. Guide assembly
5. Drip rail
6. Drain tube
7. Drain tube
8. Set bracket
9. Frame
10. Defector link
11. Motor
12. Drive unit
13. Defector
14. Sunshade
15. Decoration cover

ESBF170A

REPLACEMENT EF144FFE

GLASS REPLACEMENT

NOTE

- *Put on glove to protect your hands.*

1. Remove both decoration cover (A).

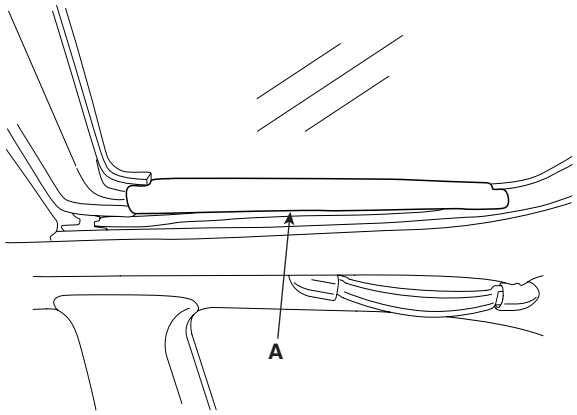

KSBF170E

2. Remove the glass (A) by lifting it up.

NOTE

- *Do not damaged the roof panel.*

►: Screw Locations, 6

2.0~3.9 N.m (0.2~0.4 Kgf.m, 1.4~2.9 lbf.ft)

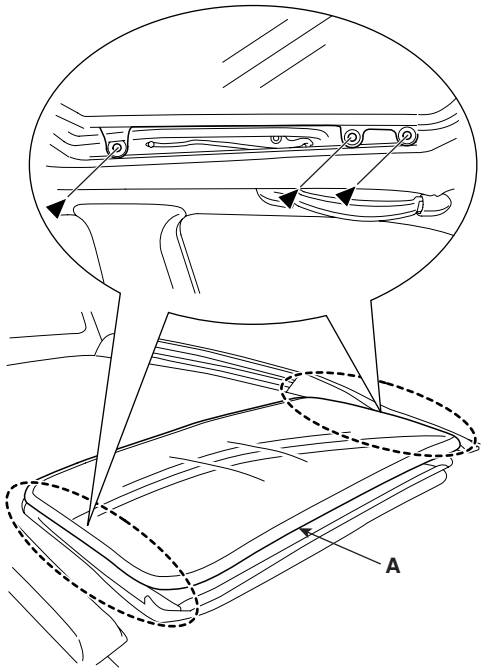

SCMBD6517L

3. Installation is the reverse of removal.

MOTOR REPLACEMENT

1. Remove the over head console. (See page BD- 76)

NOTE

- *Confirm the position of guide whether it is closed or not when you remove the motor.*

2. Disconnect the motor connector (A), remove the screws and then remove the motor (B).

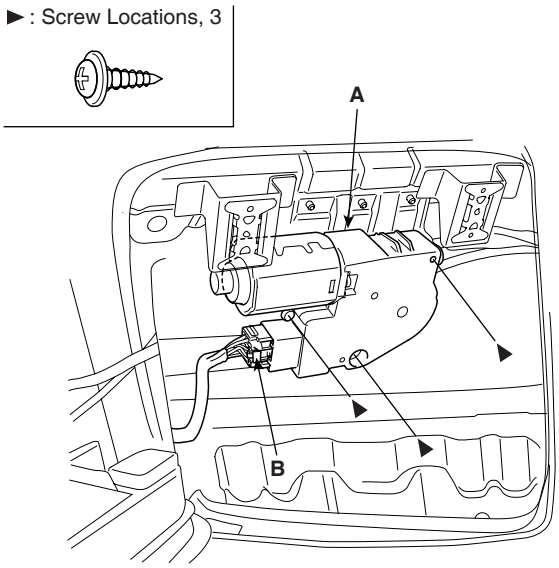

SCMBD6507L

3. Installation is the reverse of removal.

NOTE

- *Make sure to initialize the motor.*

DEFLECTOR REPLACEMENT

1. Open the glass fully.

2. Disconnect the deflector link (A) from the frame (B), and then remove the deflector (C).

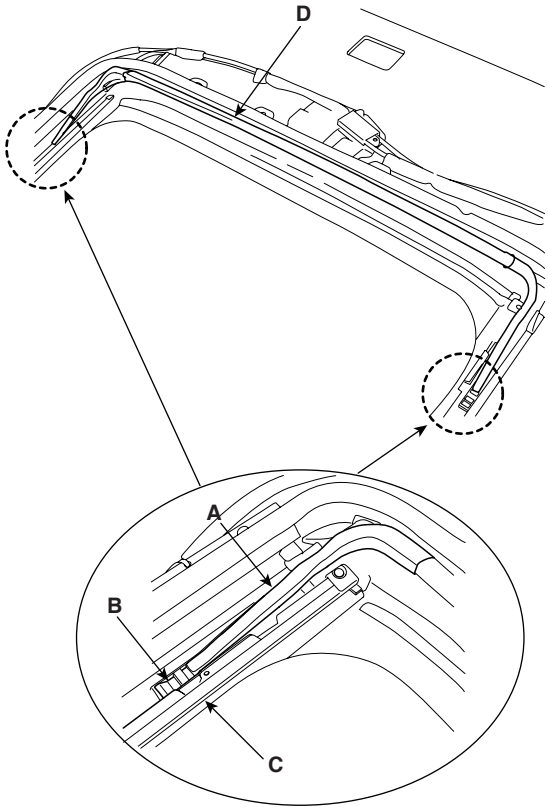

KSBF170M

3. Installation is the reverse of removal.

SUNROOF ASSEMBLY REPLACEMENT

1. Remove the follows parts.
   - Front and rear door scuff trim. (See page BD- 81)
   - Front pillar trim. (See page BD- 81)
   - Center and rear pillar trim. (See page BD- 82)
   - Headliner. (See page BD- 79)
   - Sunroof glass. (See page BD- 47)
2. Disconnect the drain tubes (A).
3. Remove the bracket (C).
4. After loosening the mounting bolts and nuts, remove the sunroof assembly (B).

   NOTE

   - *Take care not to scratch the interior trims and other parts.*
5. Installation is the reverse of removal.

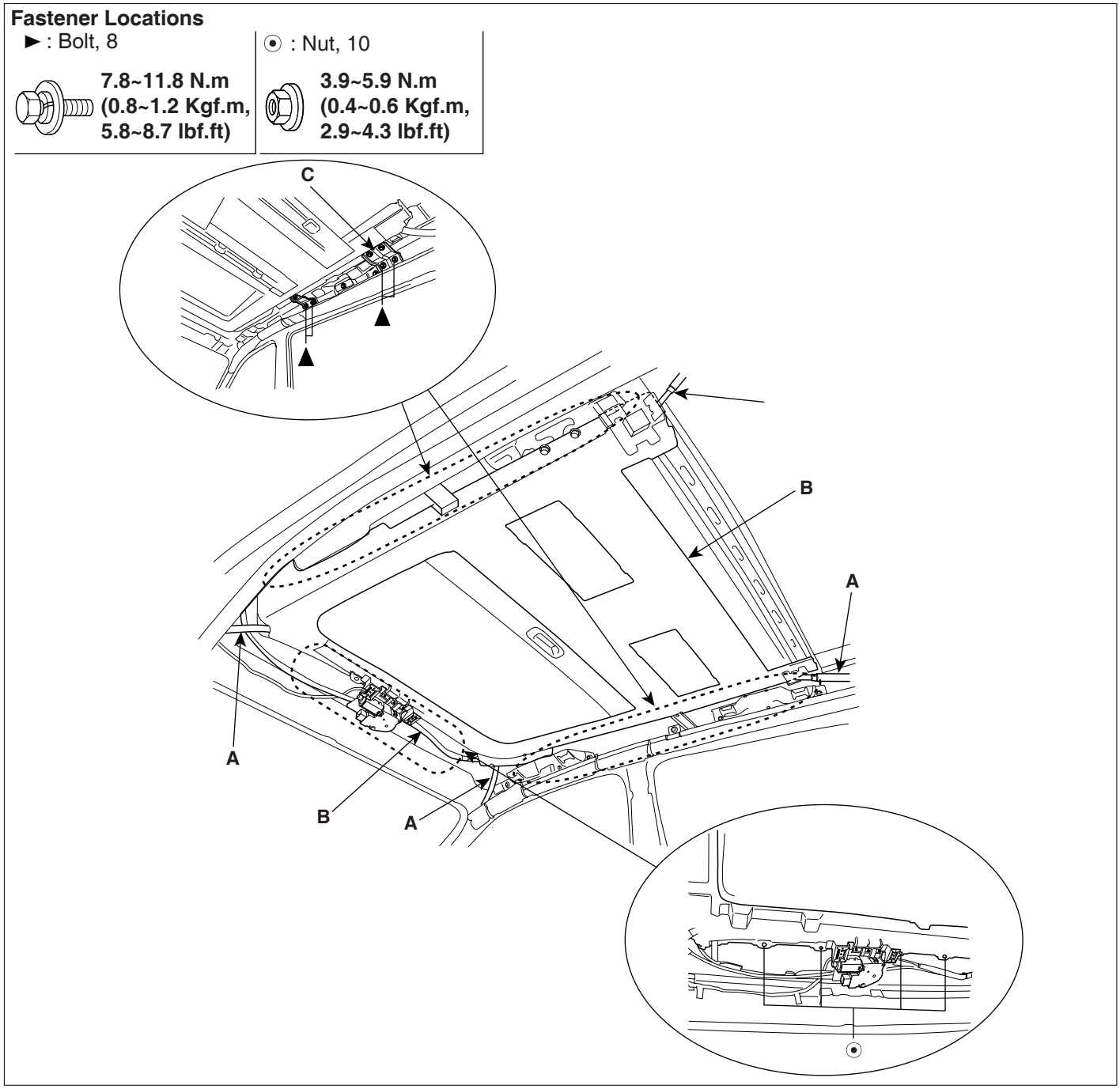

SCMBD6508L

GUIDE ASSEMBLY REPLACEMENT

1. Remove the sunroof assembly. (See page BD- 49)
2. Remove a guide assembly (A) after lowering a guide thoroughly by pushing a slide (B) to rear.

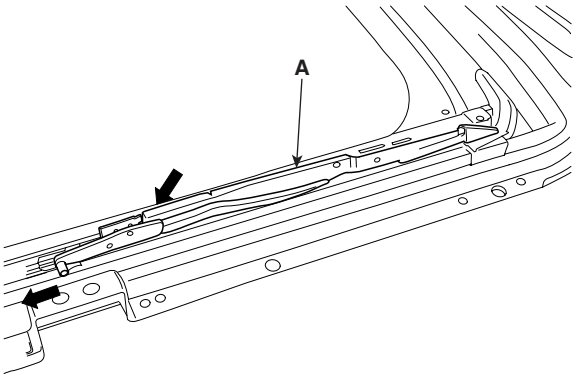

KSBF171E

3. Remove the guide (A) and slide (B).

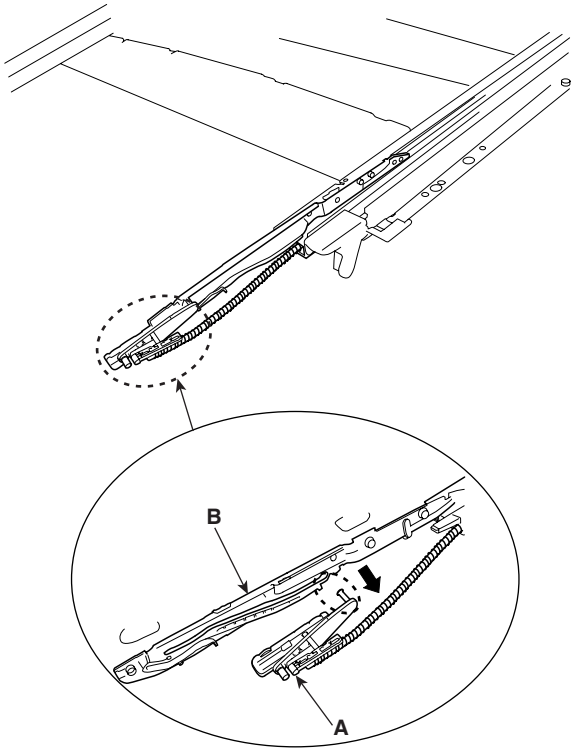

KSBF171H

4. Installation is the reverse of removal.

NOTE

- *Make sure to align the slide with the center of "A" and "B"*
- *Make sure to initialize the motor.*

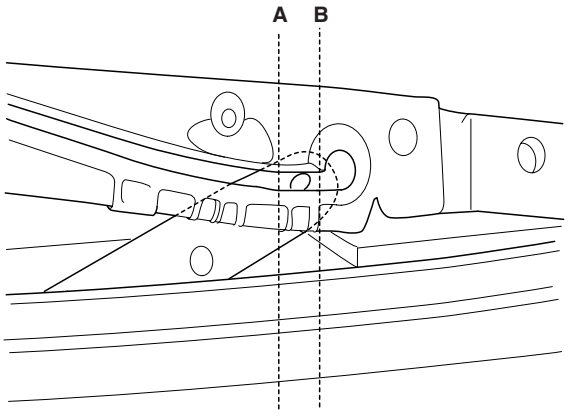

KSBF171I

SUNSHADE AND DRIP RAIL REPLACEMENT

1. Remove the sunroof assembly. (See page BD- 49)
2. Remove the drip link (A) and sunshade stopper (B).
3. Remove the sunshade (C) and drip rail (D).

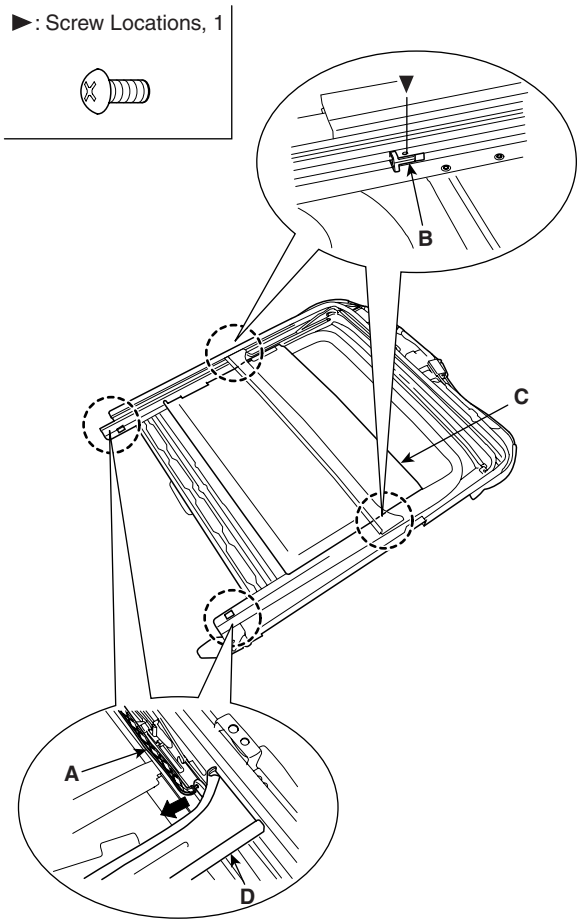

ESBF171D

4. Installation is the reverse of removal.

ADJUSTMENT EC9DFFD3

ON-VEHICLE INSPECTION

INSPECT SUNROOF GLASS ALIGNMENT

1. Start the engine and check the operating time of the sunroof (A).

Operating time: Approx. 5 secs.

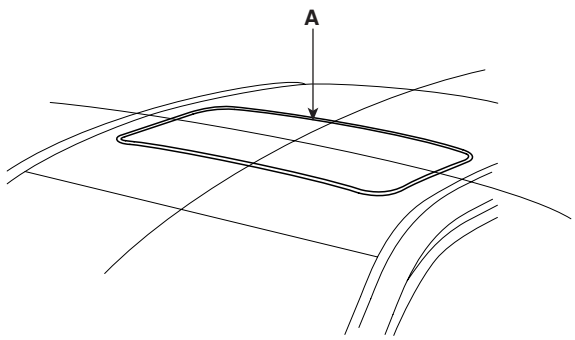

ESKE007B

2. Check for abnormal noise or bending during operation.

3. With the sunroof fully closed, check for water leakage.

4. The roof panel (A) should be even with the glass (B) weatherstrip (C), to within the standard value "E" all the way around. If not, make the following adjustment.

Standard value "E" Front edge : 0 ~ 1.4mm Rear edge : 0 ~ 1.4mm

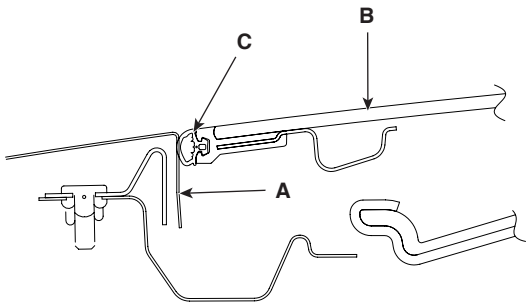

SCMBD6190L

5. If the position is not as specified, lightly loosen the glass adjusting screw (A) to adjust the glass height and tighten it.

Tightening torque : 2.0 ~ 3.9N.m (0.2 ~ 0.4kgf.m, 1.4 ~ 2.9 lbf.ft)

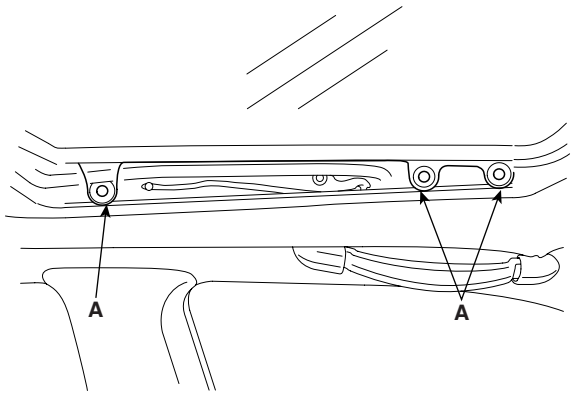

KSBF170C

6. Check for overlap between the sunroof weatherstrip (A) and the roof panel (B).

Standard value: 0.3mm

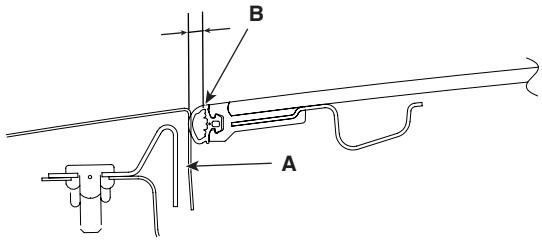

SCMBD6518L

HOW TO INITIALIZE MOTOR

1. Check that the glass has been installed.
   - Finished height adjustment.

2. Push the up switch. (Keep on pushing the switch)
   - the slide moved 5mm forward after 15 seconds.

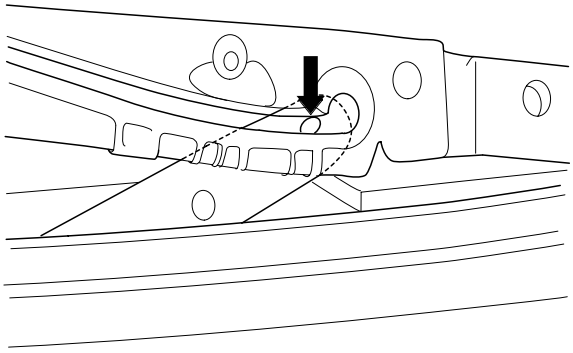

- Before moving the slide -

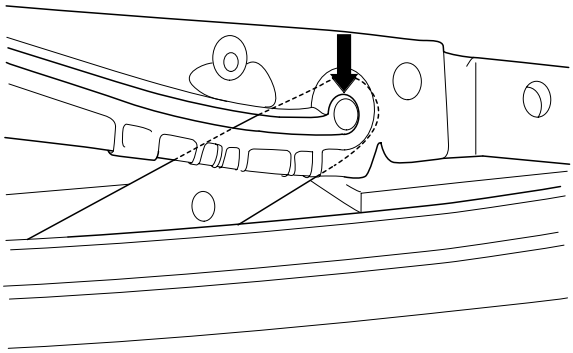

- After moving the slide -

ESBF171M

3. After moving the slide 5mm forward, turn OFF the switch and push the UP switch (Keeping on pushing the switch with continuous operation)
   - If the operation above is normal condition, the sunroof once and closes.

4. When the sunroof is closed completely, turn OFF the UP switch initialize the motor completely.

WHEN TO INITIALIZE THE MOTOR

1. First operation the vehicle after manufacture it.

2. Initial value is erased or damaged because of short power electric discharge during operation.

3. After using the manual handle.

OPERATING THE SUNROOF EMERGENCY HANDLE

1. Use the sunroof emergency handle to close and open the sunroof manually for the following case only.
   - To close the sunroof before driving a vehicle in a rainy day or on the highway if the sunroof cannot be closed due to failure of the sunroof motor or controller.

2. Operating method
   - Remove the overhead console
   - Push the emergency handle up into the hexagonal drive (A) of the sunroof motor. You must push hard enough to disengage the motor clutch; otherwise the emergency handle will slip due to incomplete fit in the motor.
   - Carefully turn the emergency handle clockwise to close the sunroof.
   - After closing the sunroof, wiggle the handle back and forth as you remove the tool from the motor, to ensure the motor clutch reengages.
   - A 5mm hex socket may be used in place of the emergency handle, with a" Speeder" type handle.

CAUTION

Do not use power tools to operate the sunroof. Damaged to the components may occur.

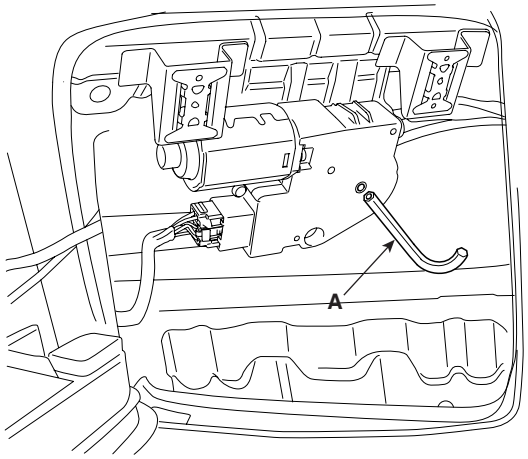

KSBF171N

MIRROR

REPLACEMENT E9EDEB42

OUTSIDE REAR VIEW MIRROR REPLACEMENT

NOTE

- *When prying with a flat-tipped screwdriver, wrap it with protective tape, and apply protective tape around the related parts, to prevent damaged.*
- *Put on gloves to protect your hands.*

1. Remove the quadrant inner cover (A).

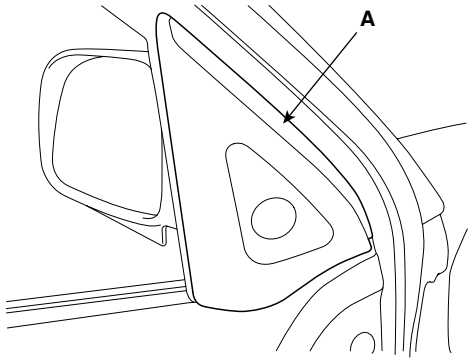

SCMBD6027D

2. After disconnecting the connector (A), remove the outside rear view mirror (B).

▷ : Nut Locations, 3

6.4~10.8 N.m (0.7~1.1 Kgf.m, 4.7~8.0 lbf.ft)

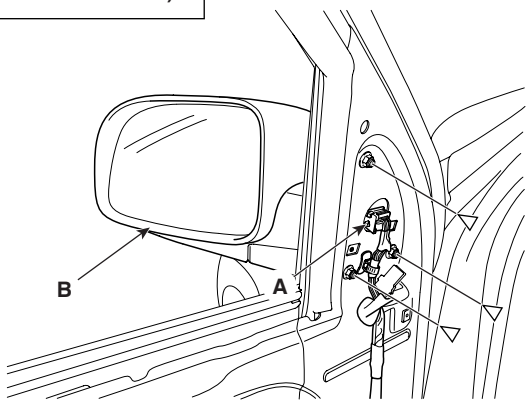

SCMBD6095L

3. Installation is the reverse of removal.

INSIDE REAR VIEW MIRROR REPLACEMENT

1. Push the inside rear view mirror base (A) down to remove to inside rear view mirror assembly (B).

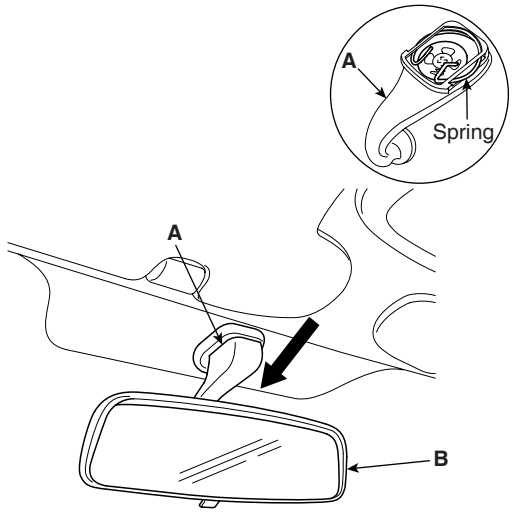

LSIE080D

2. Installation is the reverse of removal.

ECM MIRROR REPLACEMENT

1. Remove the ECM mirror cover (A).

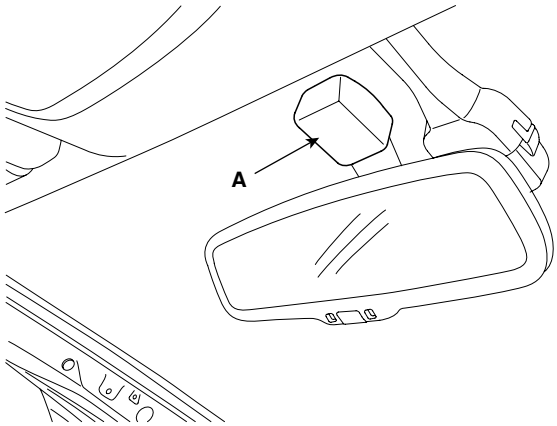

SCMBD6096D

2. Remove the cover and connector (A).
3. Push the ECM mirror base down to remove the ECM mirror assembly (B).

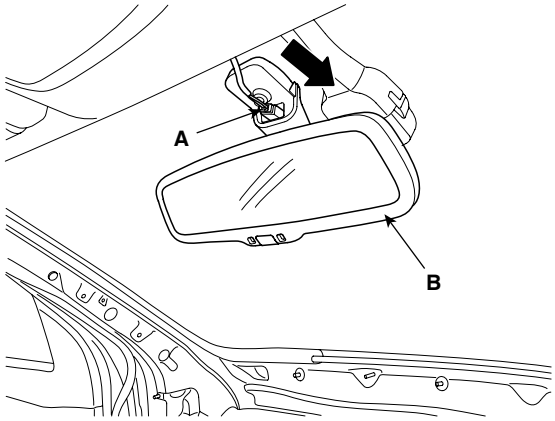

SCMBD6097L

4. Installation is the reverse of removal.

INTERIOR

CONSOLE

COMPONENTS EC25E0BD

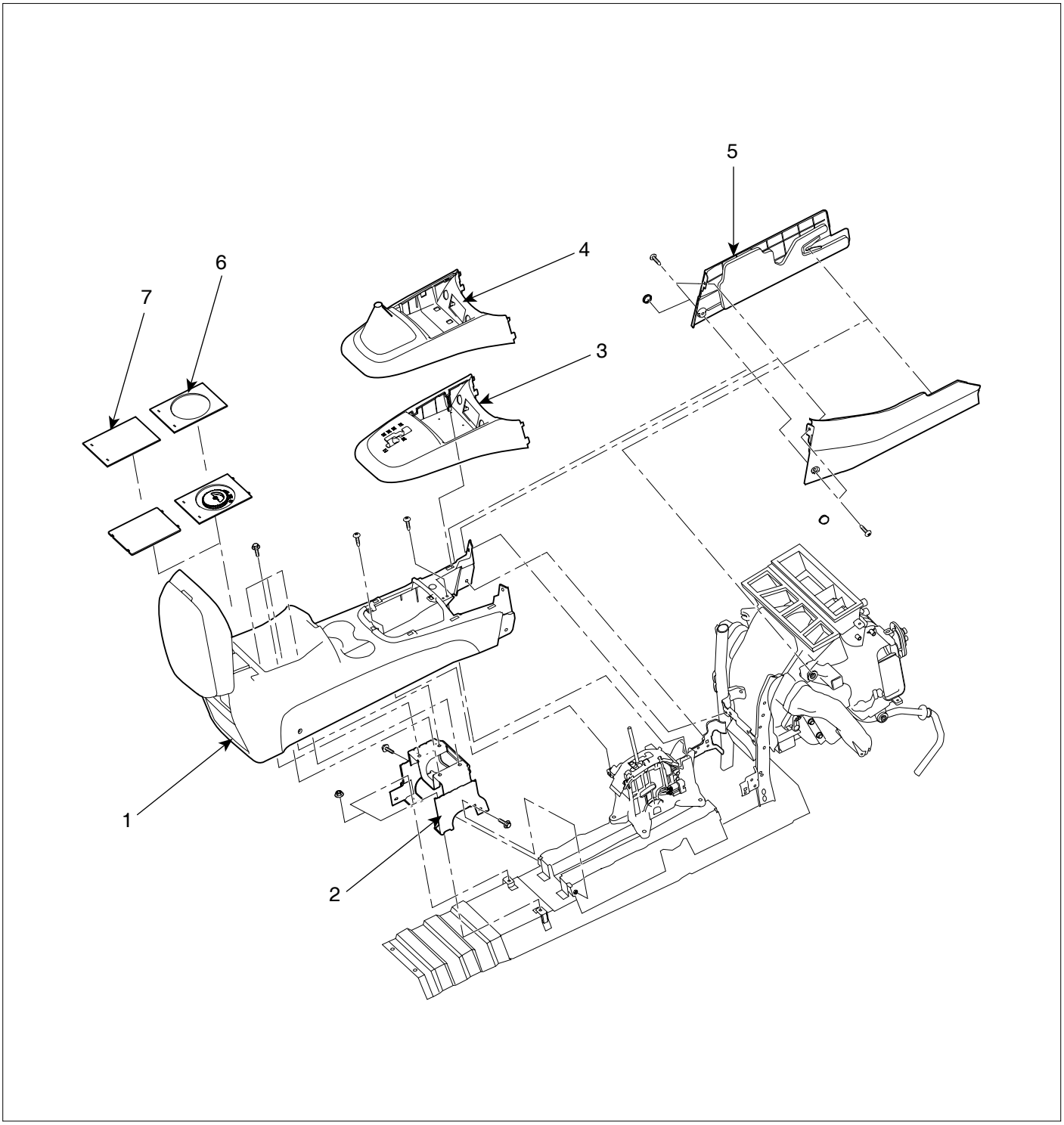

1. Console assembly
2. Console mounting bracket
3. Console under cover (AT)
4. Console upper cover (MT)
5. Console side cover
6. Armrest lower met
7. Strage box cover
8. Armrest

SCMBD6172L

REPLACEMENT EB0946E4

FLOOR CONSOLE REPLACEMENT

NOTE

- *When prying with a flat-tipped screwdriver, wrap it with protective tape, and apply protective tape around the related parts, to prevent damaged.*
- *Put on gloves to protect your hands.*

[AT]

1. Remove the knob(A).

[LHD]

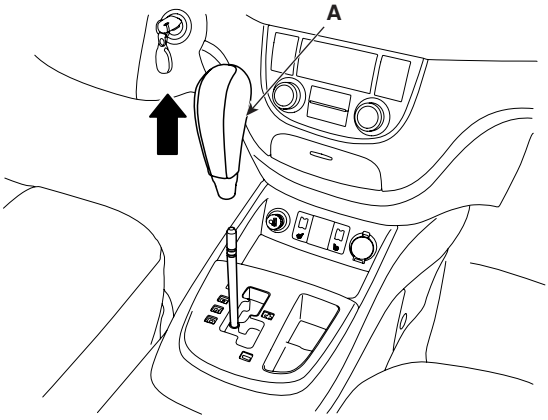

SCMBD6302D

[RHD]

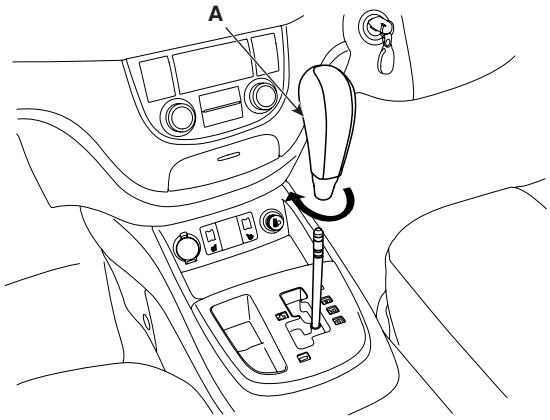

SCMBD6302R

2. Remove the consol under cover(A).
3. Disconnect the connector.

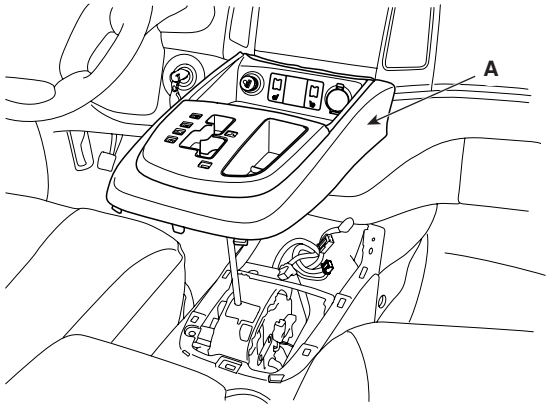

SCMBD6300D

4. After loosening the console mounting screw, remove the floor console side cover (A).

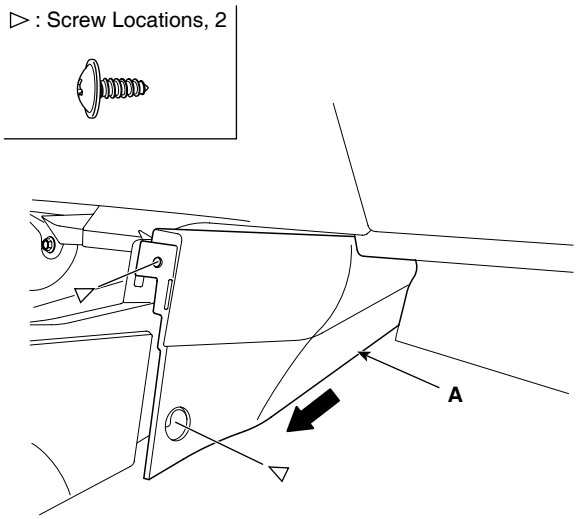

SCMBD6062L

5. Remove the console rear cover (A).

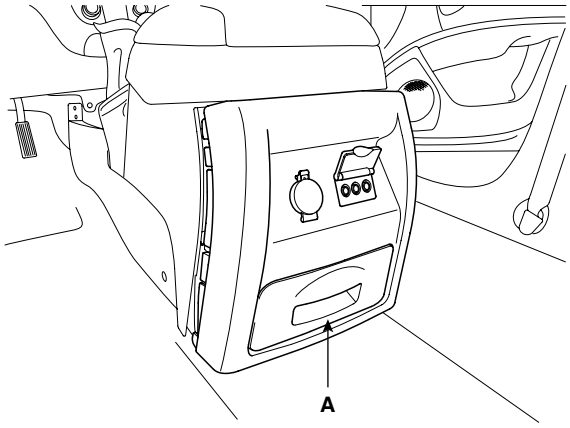

SCMBD6063D

6. Disconnect the connector (A).

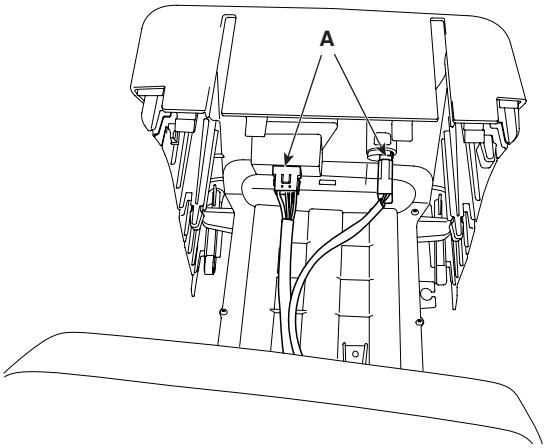

SCMBD6064D

7. Remove the armrest lower met (A).

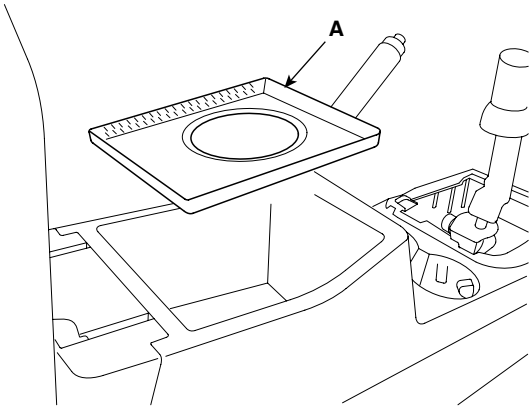

SCMBD6065D

8. Remove the stroage box console cover (A).

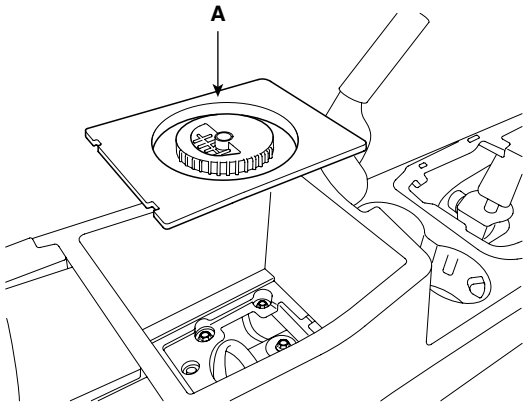

SCMBD6066D

9. Disconnect the connectors(A).

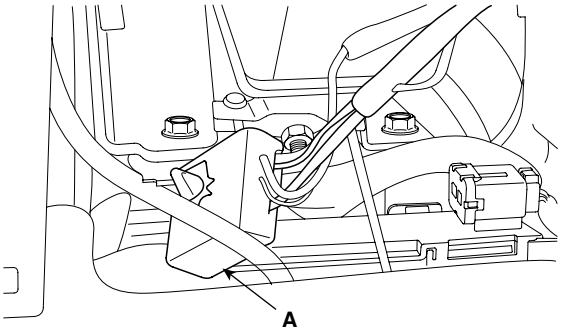

SCMBD6067D

10. After loosening the console mounting bolts and screws remove the floor console assembly (A).

[LHD]

Fastener Locations

▷: Bolt, 4	▷: Screw, 6

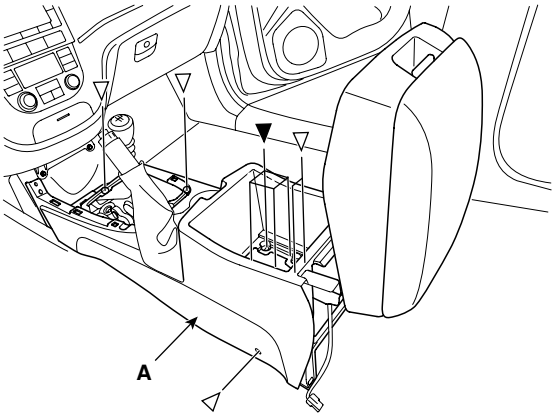

SCMBD6068L

[RHD]

Fastener Locations

▷: Bolt, 4	▷: Screw, 6

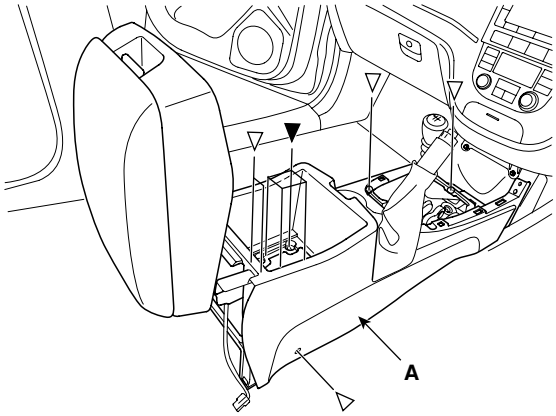

SCMBD6068R

11. Installation is the reverse of removal.

[MT]

1. Remove the console upper cover (A).
2. Disconnect the connector.

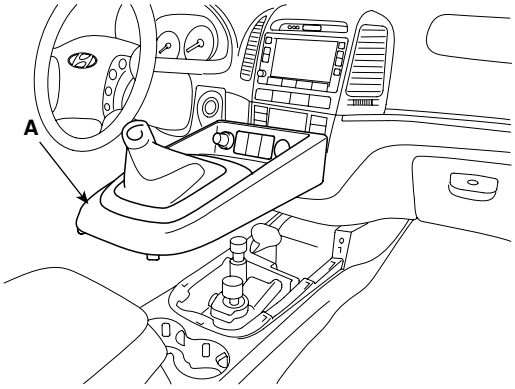

SCMBD6061D

3. After loosening the console mounting screw, remove the floor console side cover (A).

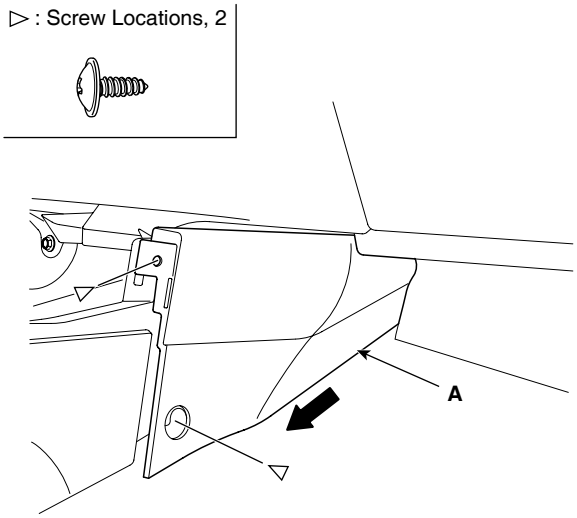

SCMBD6062L

4. Remove the console rear cover (A).

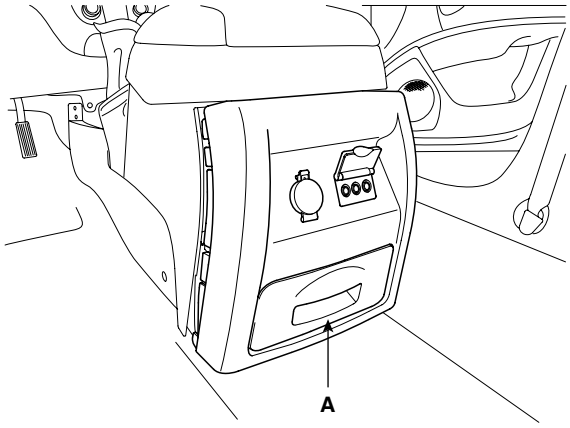

SCMBD6063D

5. Disconnect the connector (A).

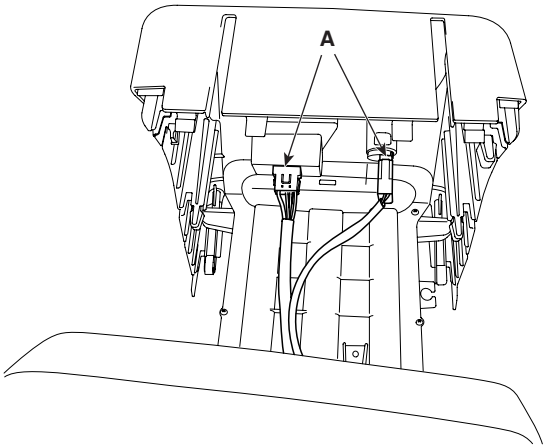

SCMBD6064D

6. Remove the armrest lower met (A).

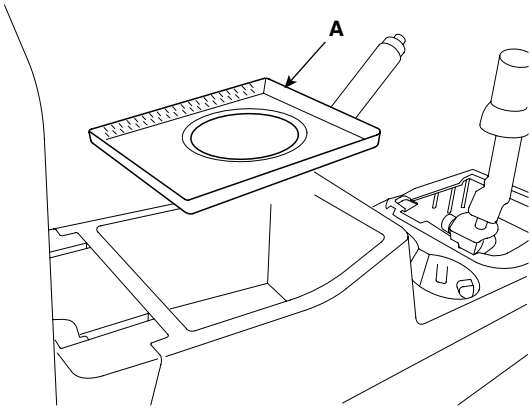

SCMBD6065D

7. Remove the stroage box console cover (A).

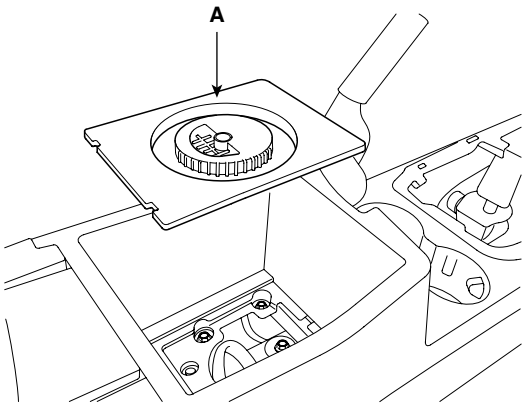

SCMBD6066D

8. Disconnect the connectors(A).

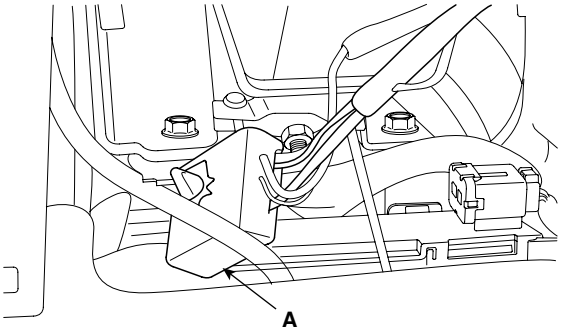

SCMBD6067D

9. After loosening the console mounting bolts and screws remove the floor console assembly (A).

[LHD]

Fastener Locations

▷: Bolt, 4	▷: Screw, 6

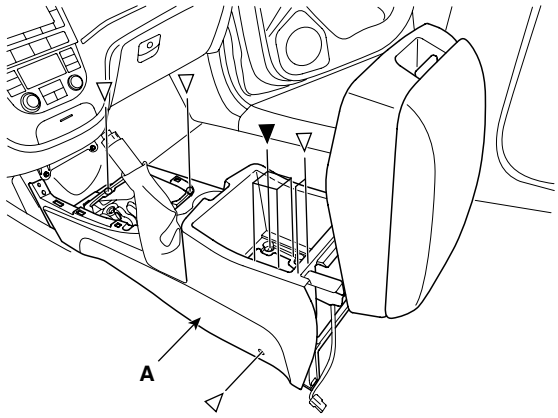

SCMBD6520L

[RHD]

Fastener Locations

▷: Bolt, 4	▷: Screw, 6

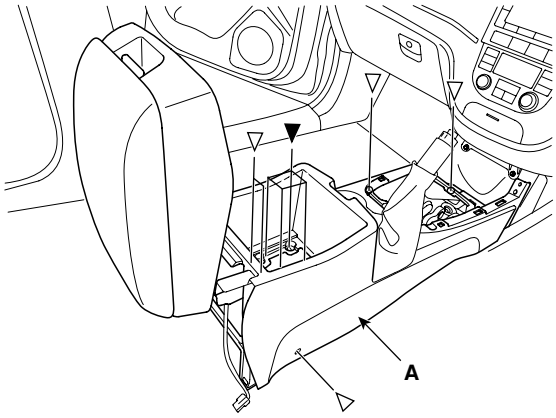

SCMBD6520R

10. Installation is the reverse of removal.

ARMREST REPLACEMENT

1. After remove the rear console cover (A).

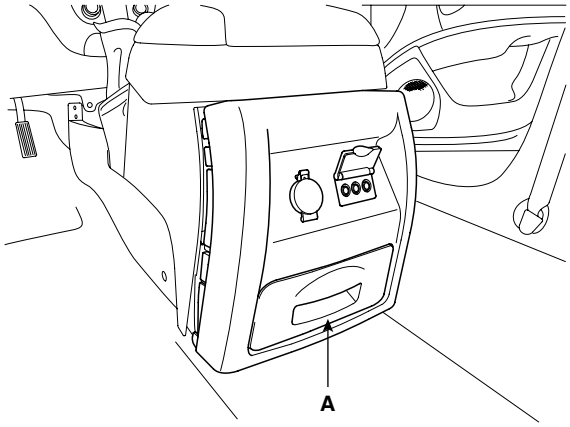

SCMBD6063D

2. Disconnect the connector (A).

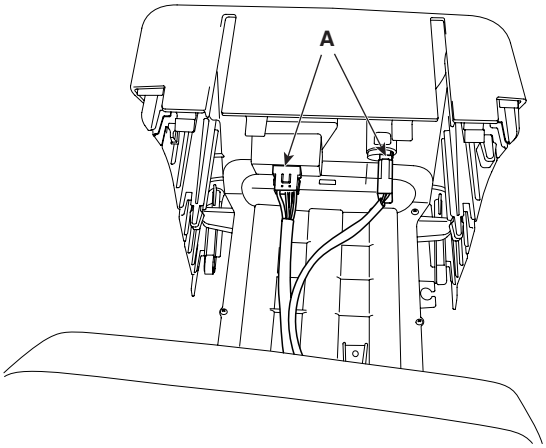

SCMBD6064D

3. After loosening the armrest mounting nuts, remove the armrest (A).

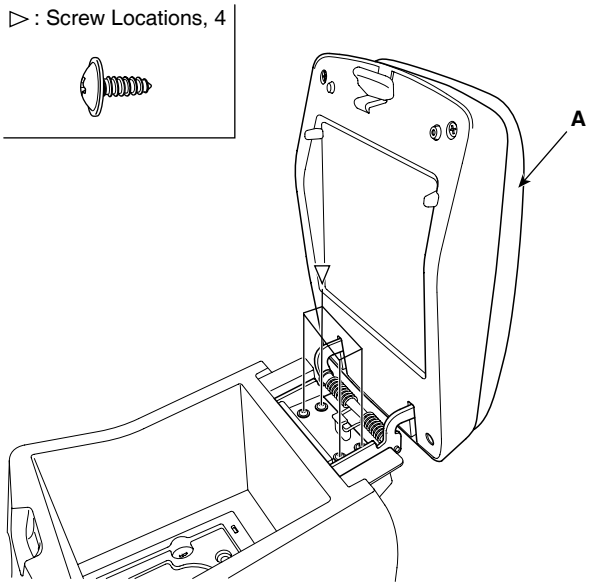

SCMBD6069L

4. Installation is the reverse of removal.

CRASH PAD

CONPONENTS E269893C

[LHD]

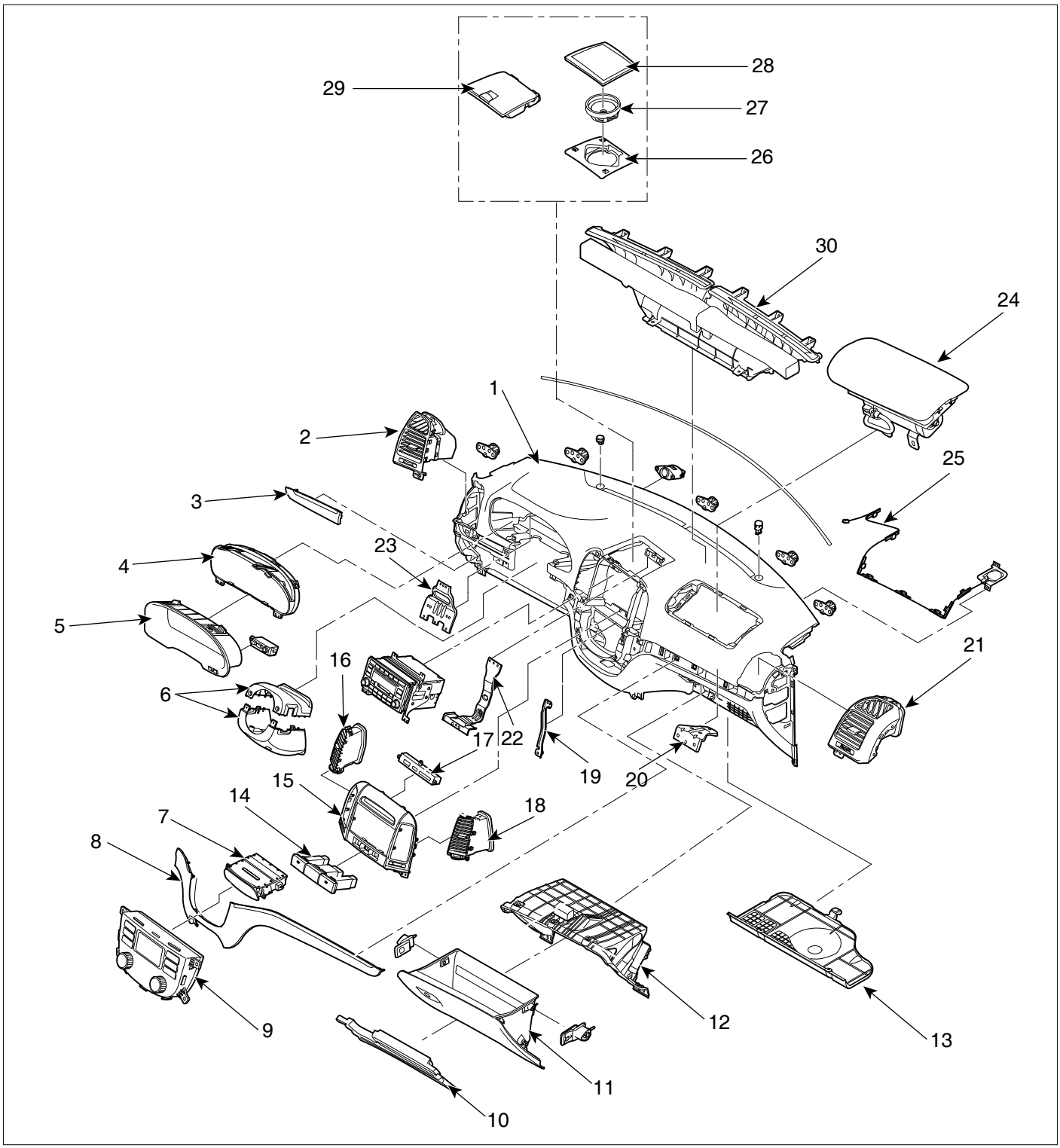

1. Main crash pad
2. Side air vent
3. Side garnish
4. Cluster
5. Cluster facia panel
6. Shroud assembly
7. Ash tray
8.Center garnish
9. Heater control unit
10. Knee bolster
11. Glove box
12. Glove box housing
13. Glove box under cover
14. Switch assembly
15. Center facia upper panel
16. Center air vent (LH)
17. Digital clock
18. Center air vent (RH)
19. Crash pad center bracket
20. Airbag bracket
21. Side air vent
22. Audio bracket
23. Crash pad drive bracket
24. Passenger airbag module
25. GPS antenna unit
26. Speaker plate
27. Speaker
28. Speaker grill
29. Center facia upper tray
30. Defroster nozzle

SCMBD6173L

[RHD]

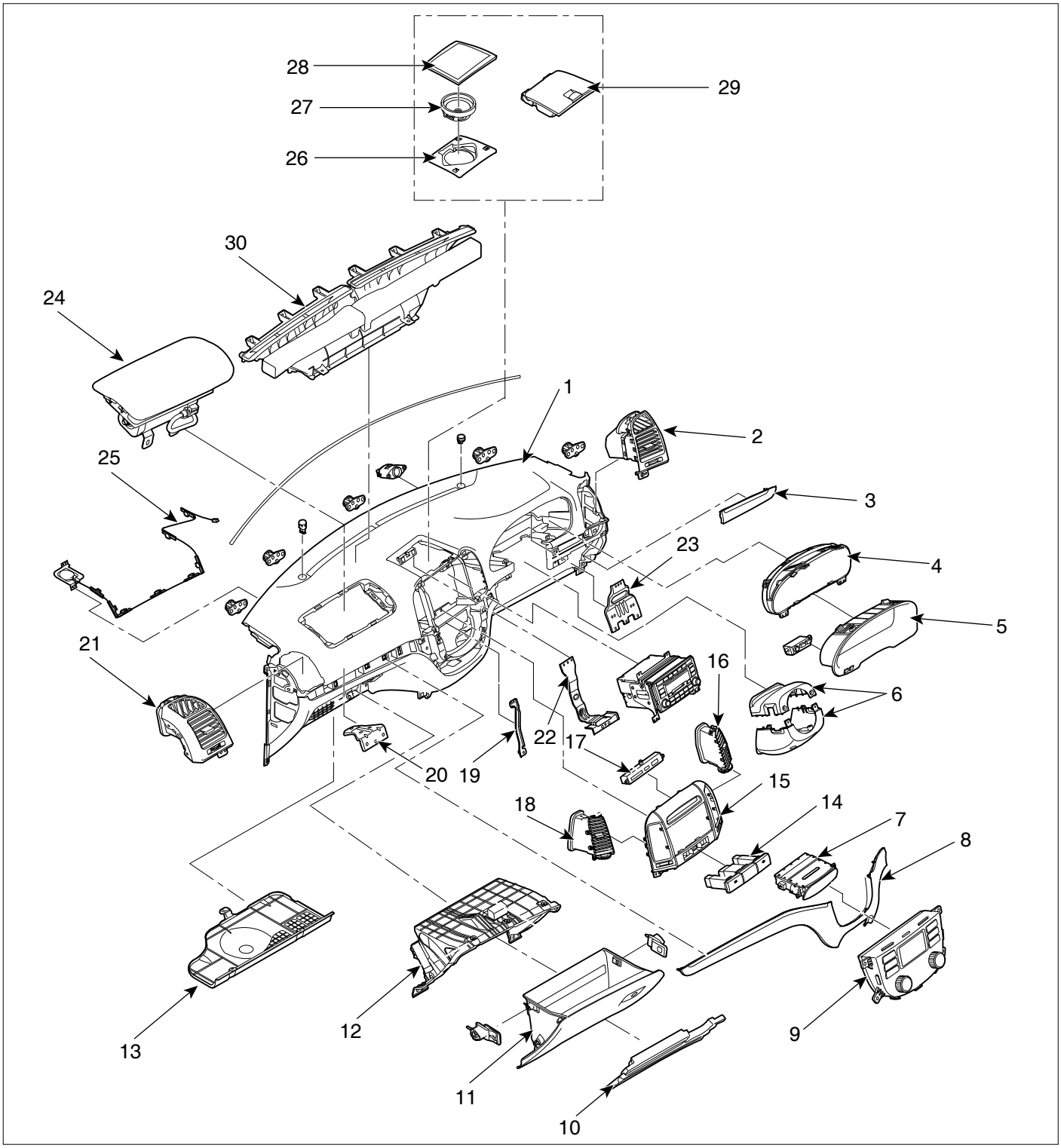

1. Main crash pad
2. Side air vent
3. Side garnish
4. Cluster
5. Cluster facia panel
6. Shroud assembly
7. Ash tray
8.Center garnish
9. Heater control unit
10. Knee bolster
11. Glove box
12. Glove box housing
13. Glove box under cover
14. Switch assembly
15. Center facia upper panel
16. Center air vent (LH)
17. Digital clock
18. Center air vent (RH)
19. Crash pad center bracket
20. Airbag bracket
21. Side air vent
22. Audio bracket
23. Crash pad drive bracket
24. Passenger airbag module
25. GPS antenna unit
26. Speaker plate
27. Speaker
28. Speaker grill
29. Center facia upper tray
30. Defroster nozzle

SCMBD6173R

REPLACEMENT E0FDDE2F

CLUSTER REPLACEMENT

NOTE

- *When prying with a flat-tipped screwdriver, wrap it with protective tape, and apply protective tape around the related parts, to prevent damaged.*
- *Put on gloves to protect your hands.*

1. Tilt the steering column down.
2. After disconnecting the trip sensor connector (A), remove the cluster facia panel (B).

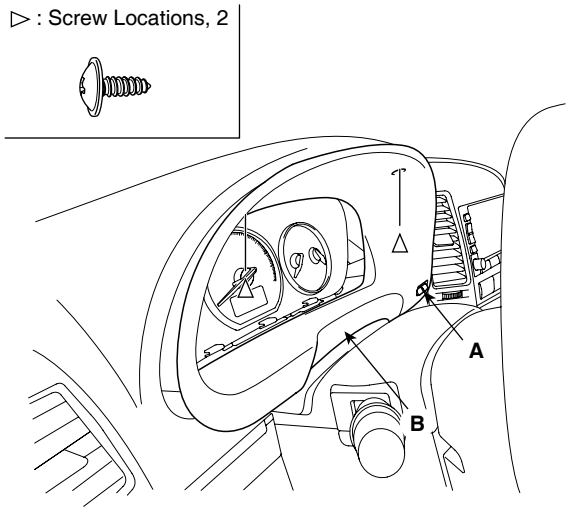

SCMBD6070L

3. Installation is the reverse the removal.
4. Loosen the screws.
5. Remove the cluster (A).

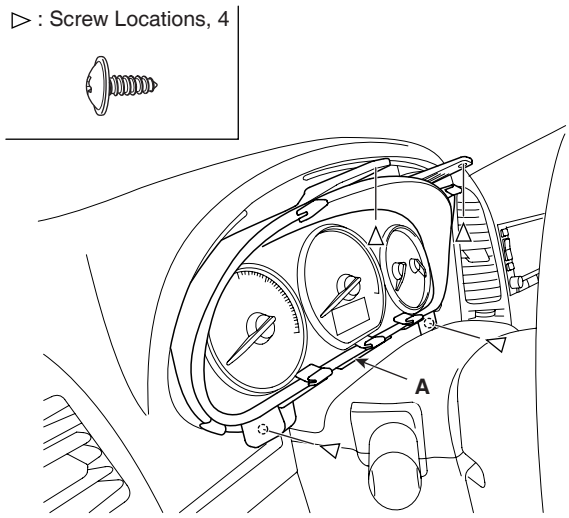

SCMBD6071L

6. Disconnect the cluster connector (A), then remove the cluster (B).

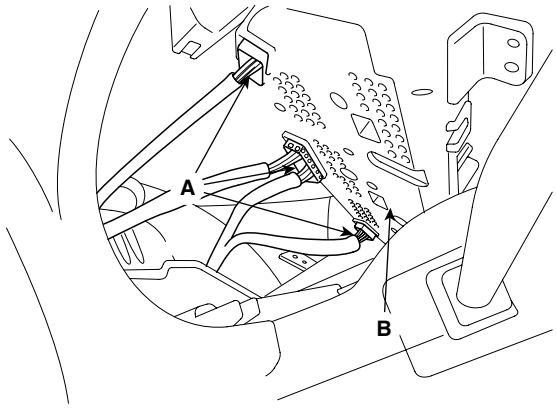

SCMBD6072L

7. Installation is the reverse of removal.

NOTE

- *Make sure the connector are plugged in properly.*

CENTER FACIA PANEL REPLACEMENT

NOTE

- *When prying with a flat-tipped screwdriver, wrap it with protective tape, and apply protective tape around the related parts, to prevent damaged.*
- *Put on gloves to protect your hands.*

1. Remove the crash pad lower panel. (See page BD-68)

2. Remove the center lower garnish (A).

[LHD]

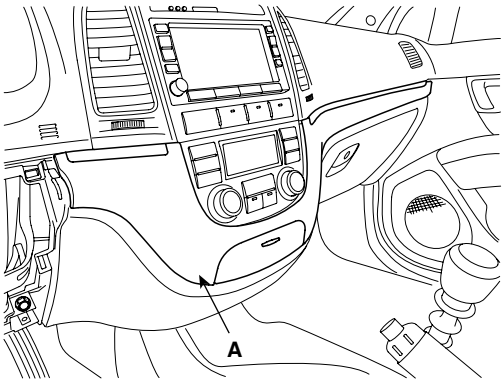

SCMBD6073D

[RHD]

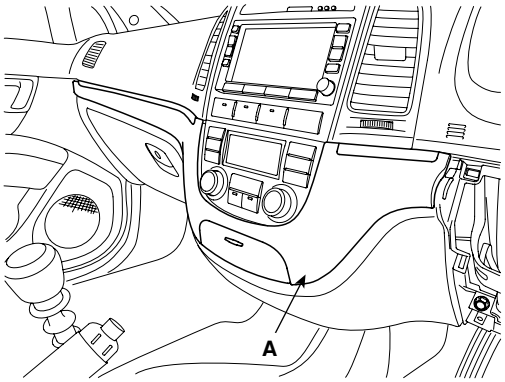

SCMBD6073R

3. Remove the speaker grill (A).

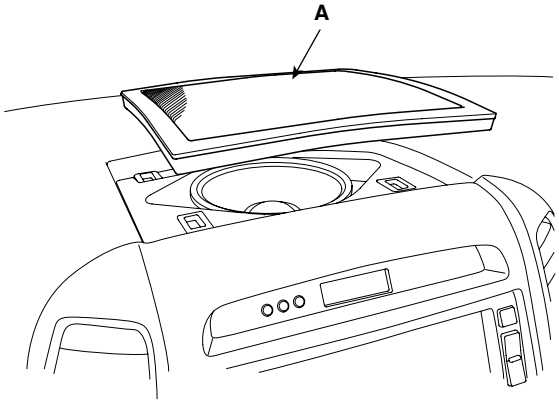

SCMBD6074D

4. Loosen the mounting screw, remove the speaker grill (A).

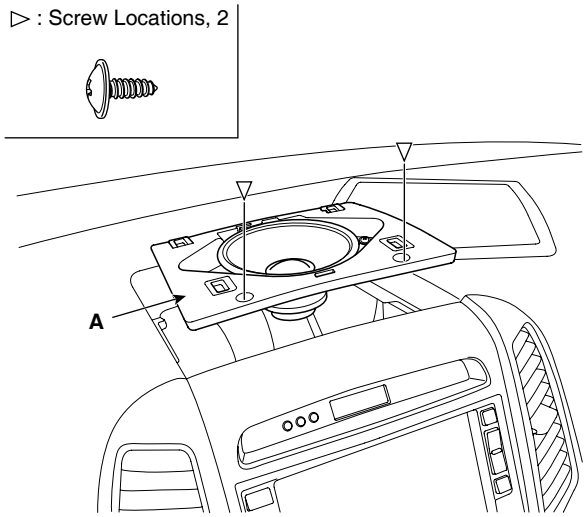

SCMBD6075L

5. Disconnect the connector (A).

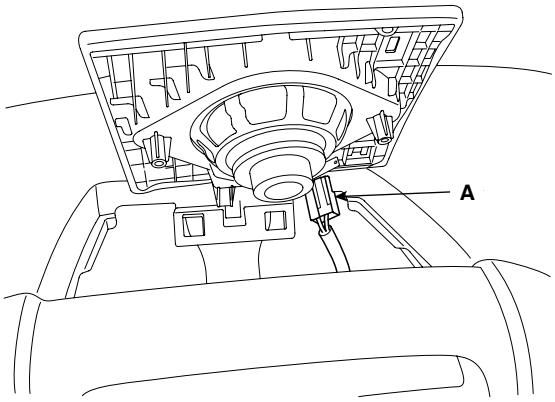

SCMBD6076D

6. After loosening the mounting screw, remove the center facia panel (A).

▷ : Screw Locations, 2

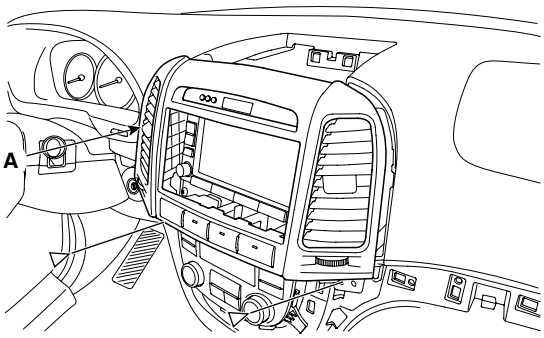

SCMBD6077L

7. Installation is the reverse of removal.

NOTE

- *Make sure the connector are plugged in properly.*

LOWER PANEL REPLACEMENT

1. Remove the crash pad side cover. (See page BD- 69)
2. Remove the switch assembly (A).

[LHD]

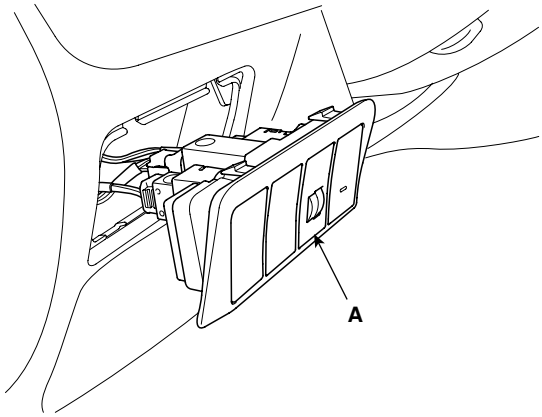

SCMBD6079D

[RHD]

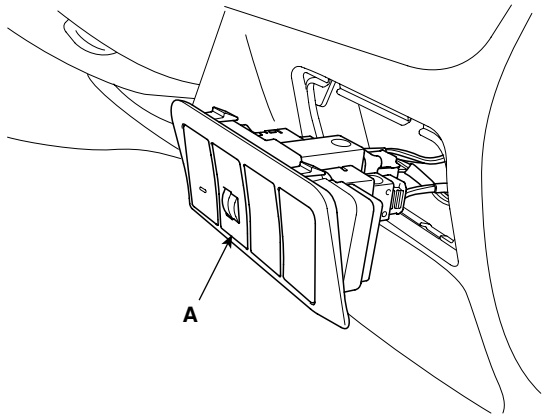

SCMBD6079R

3. Loosen the mounting screw, remove the lower panel (B).

4. Disconnect the connector (A).

[LHD]

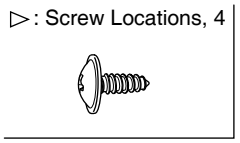

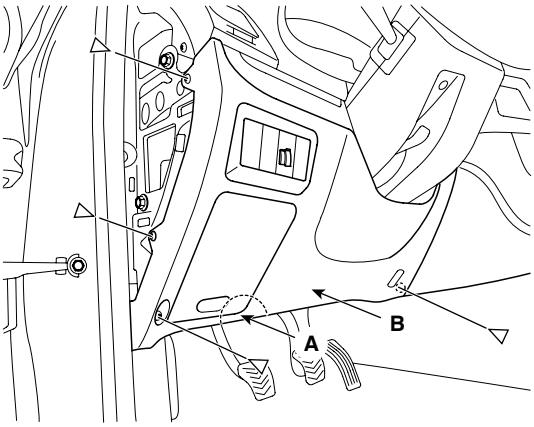

SCMBD6080L

[RHD]

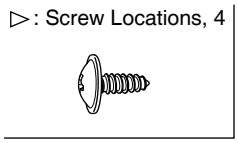

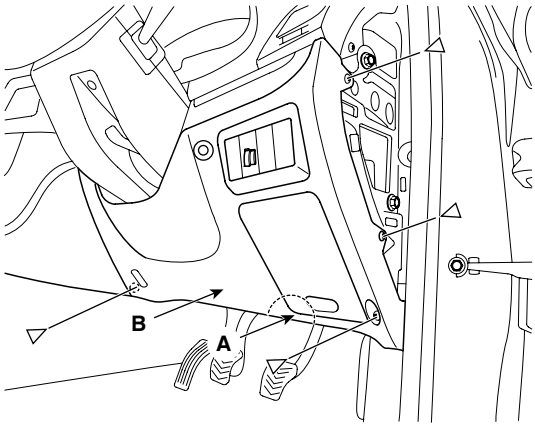

SCMBD6080R

5. Remove the reinforcing panal(A).

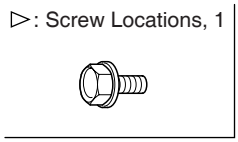

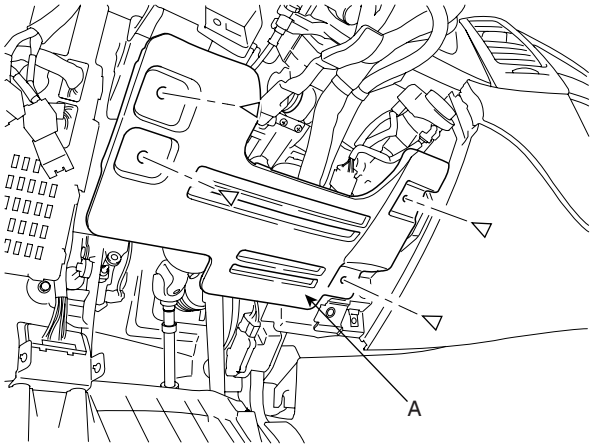

SCMBD6521L

6. Installation is the reverse of removal.

HEATER CONTROL UNIT REPLACEMENT

1. Remove the center pacia panel. (See page BD- 67)
2. After loosening the heater control mounting screw, remove the heater control unit (A).

▷ : Screw Locations, 4

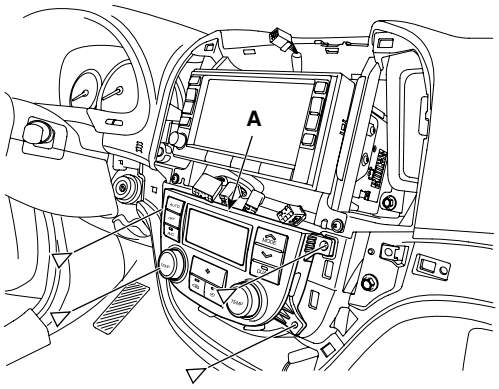

SCMBD6081L

3. Disconnect the connector (A).

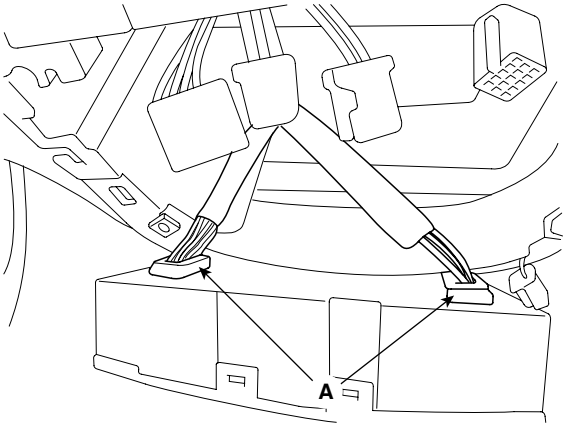

SCMBD6082D

4. Installation is the reverse of removal.

NOTE

- *Make sure the connector is plugged in properly.*

AUDIO ASSENBLY REPLACEMENT

1. Remove the center facia panel. (See page BD- 67)
2. Loosen the screws.
3. Disconnect the audio connector and antenna cable, then remove the audio assembly (A).

▷ : Screw Locations, 4

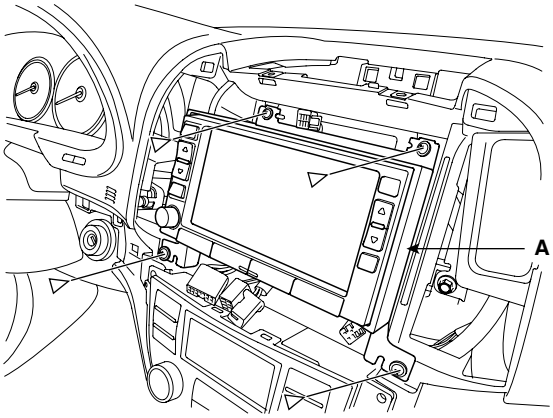

SCMBD6083L

4. Installation is the reverse of removal.

NOTE

- *Make sure the connector are plugged in properly.*

GLOVE BOX REPLACEMENT

1. Disconnect the damper (B) from the glove box (A).

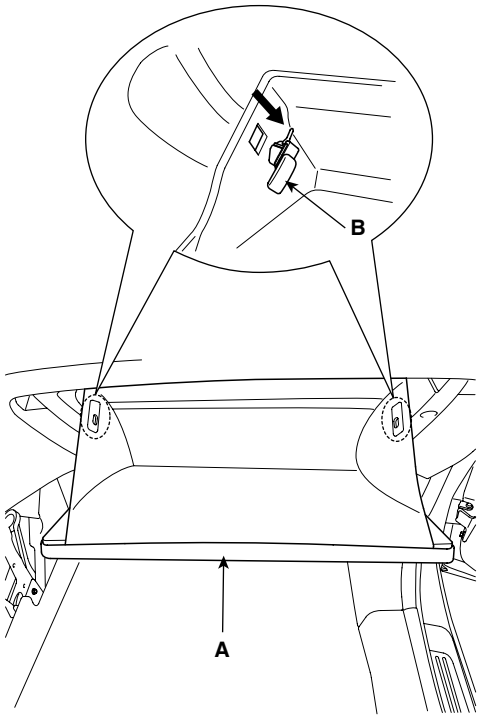

SCMBD6084D

2. Remove the glove box (A) from the lift (B).

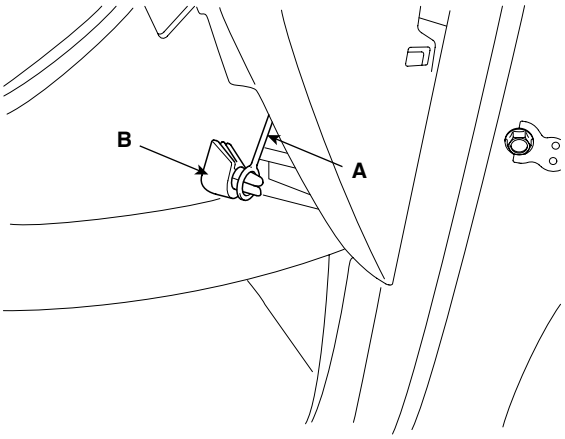

SCMBD6085D

3. Disconnect the pine (A), then remove the glove box (B).

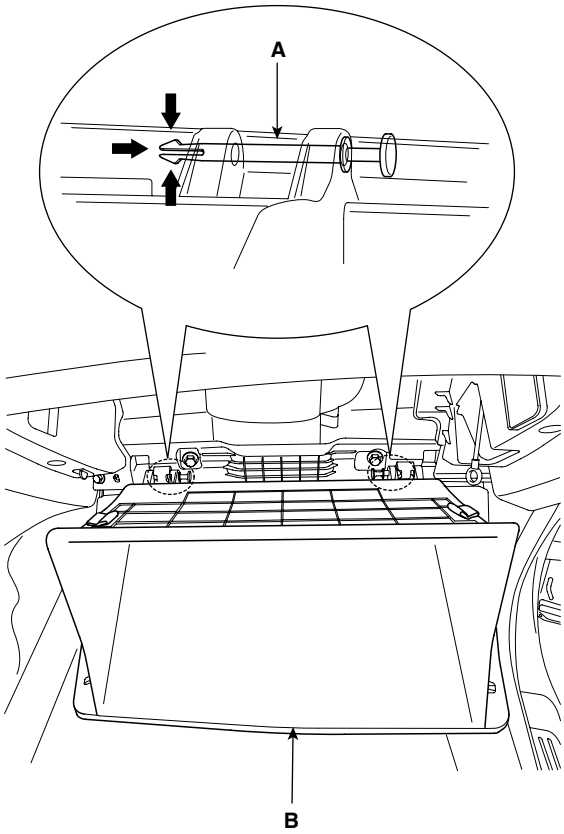

SCMBD6086D

4. Remove the glove box housing (A).

Fastener Locations

▷ : Screw, 2	▶ : Bolt, 2

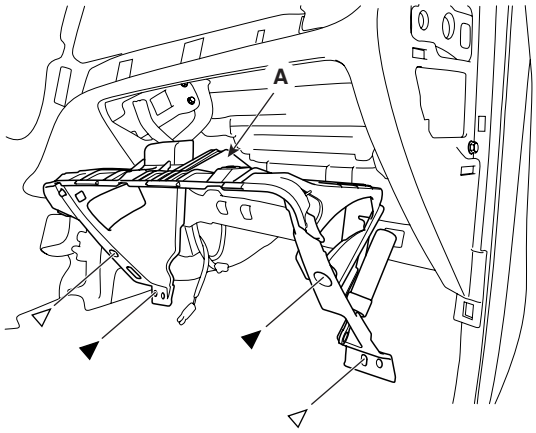

SCMBD6253L

5. Installation is the reverse of removal.

AIR VENT REPLANCMENT

DRIVER'S

1. Remove the crash pad side cover. (See page BD- 72)
2. Remove the center garnish (A).

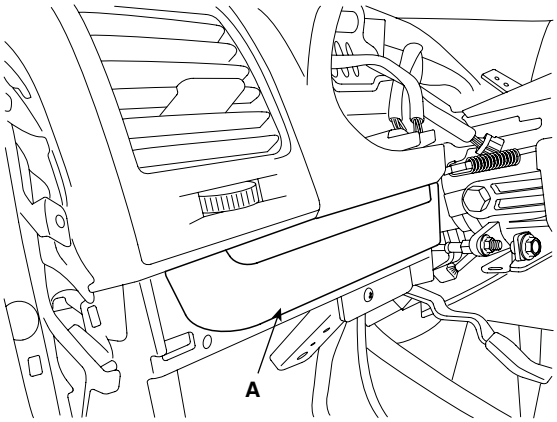

SCMBD6087D

3. After loosening the mounting screw, then remove the air vent (A).

▷ : Screw Locations, 3

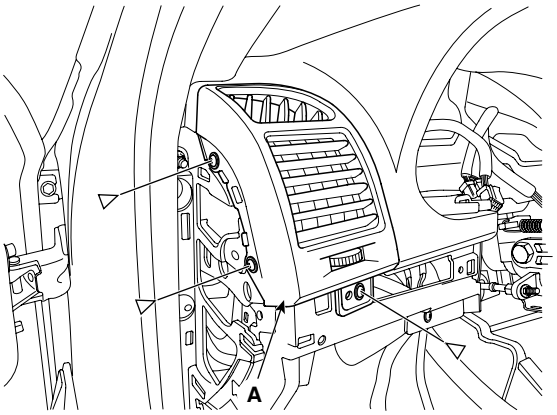

SCMBD6088L

4. Installation is the reverse of removal.

PASSENGER'S

1. Remove the crash pad side cover. (See page BD- 72)
2. Remove the crash pad center lower garnish. (See page BD- 66)
3. After loosening the mounting screw, then remove the air vent (A).

▷ : Screw Locations, 3

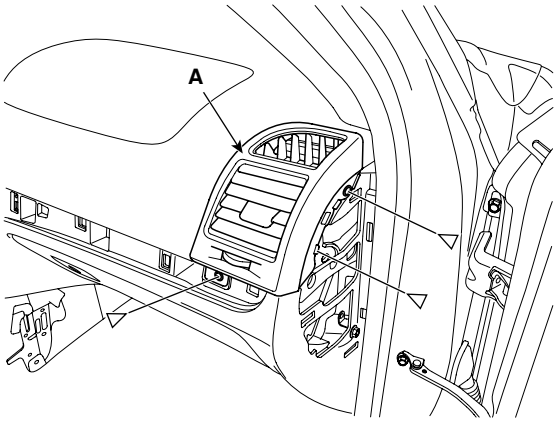

SCMBD6089L

4. Installation is the reverse of removal.

COVER REPLACEMENT

NOTE

- *When prying with a flat-tipped screwdriver, wrap it with protective tape, and apply protective tape around the related parts, to prevent damaged.*
- *Put on gloves to protect your hands.*

1. Remove the crash pad side cover(A).

[DRIVER'S]

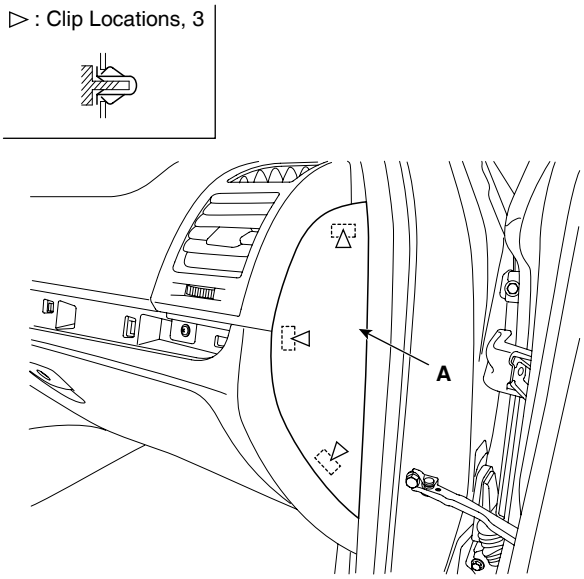

SCMBD6091L

[PASSENGER'S]

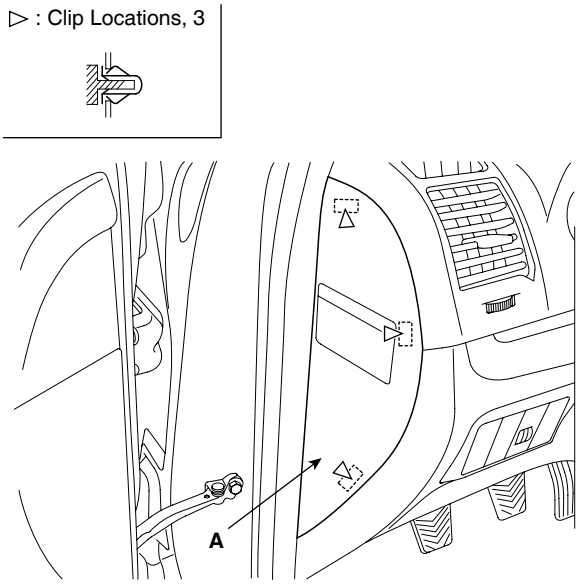

SCMBD6092L

2. Installation is the reverse of removal.

SHROUD REPLACEMENT

1. Loosen the screws, then remove the shroud assembly (A).

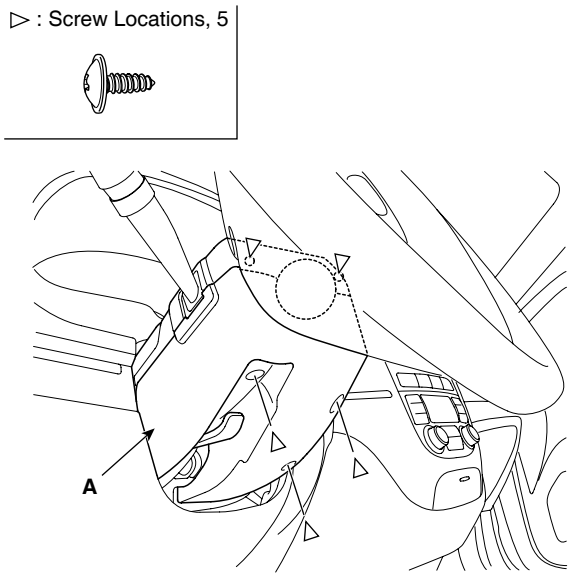

SCMBD6090L

2. Installation is the reverse of removal.

GLOVE BOX UNDER COVER REPLACEMENT

1. Loosen the screws, then remove the glove box under cover (A).

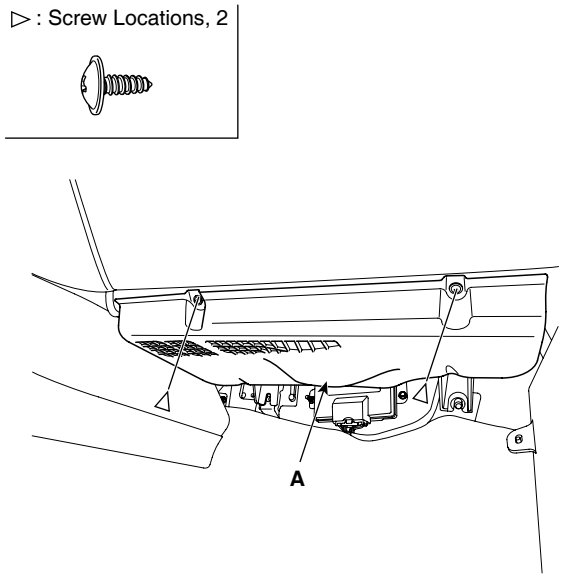

SCMBD6093L

2. Installation is the reverse of removal.

CRASH PAD REPLACEMENT

NOTE

- *When prying with a flat-tipped screwdriver, wrap it with protective tape, and apply protective tape around the related parts, to prevent damaged.*
- *Put on gloves to protect your hands.*

1. Remove the following items.
   - Front seat. (See page BD- 94)
   - Cluster facia panel and cluster. (See page BD- 65)
   - Audio assembly. (See page BD- 69)
   - Glove box. (See page BD- 70)
   - Side cover, center under cover. (See page BD- 72)
   - Front pillar trim. (See page BD- 81)
2. Remove the photo sensor (E)
3. Disconnect the passenger's air bag connector (A), loosen the bolt and nut, then remove the crash pad (B).
4. Installation is the reverse of removal.

NOTE

- *Make sure the crash pad fits onto the guide pins correctly.*
- *Before tightening the bolts, make sure the crash pad wire harnesses are not pinched.*
- *Make sure the connectors are plugged in properly, and the antenna lead is connected properly,*
- *Enter the anti- theft code for the radio, then enter the customer's radio station presets.*

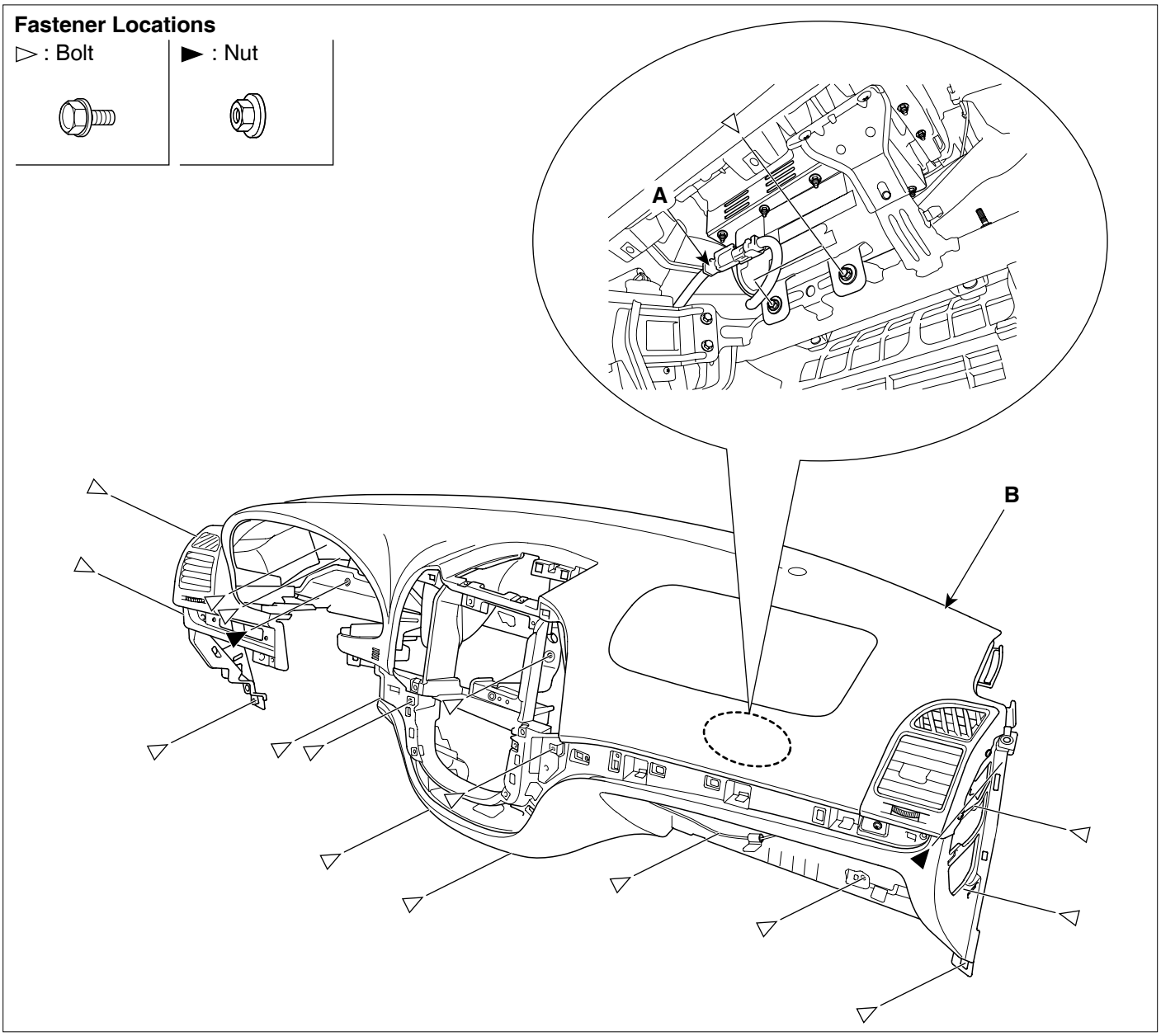

SCMBD6094L

ROOF TRIM

COMPONENTS E3D164BD

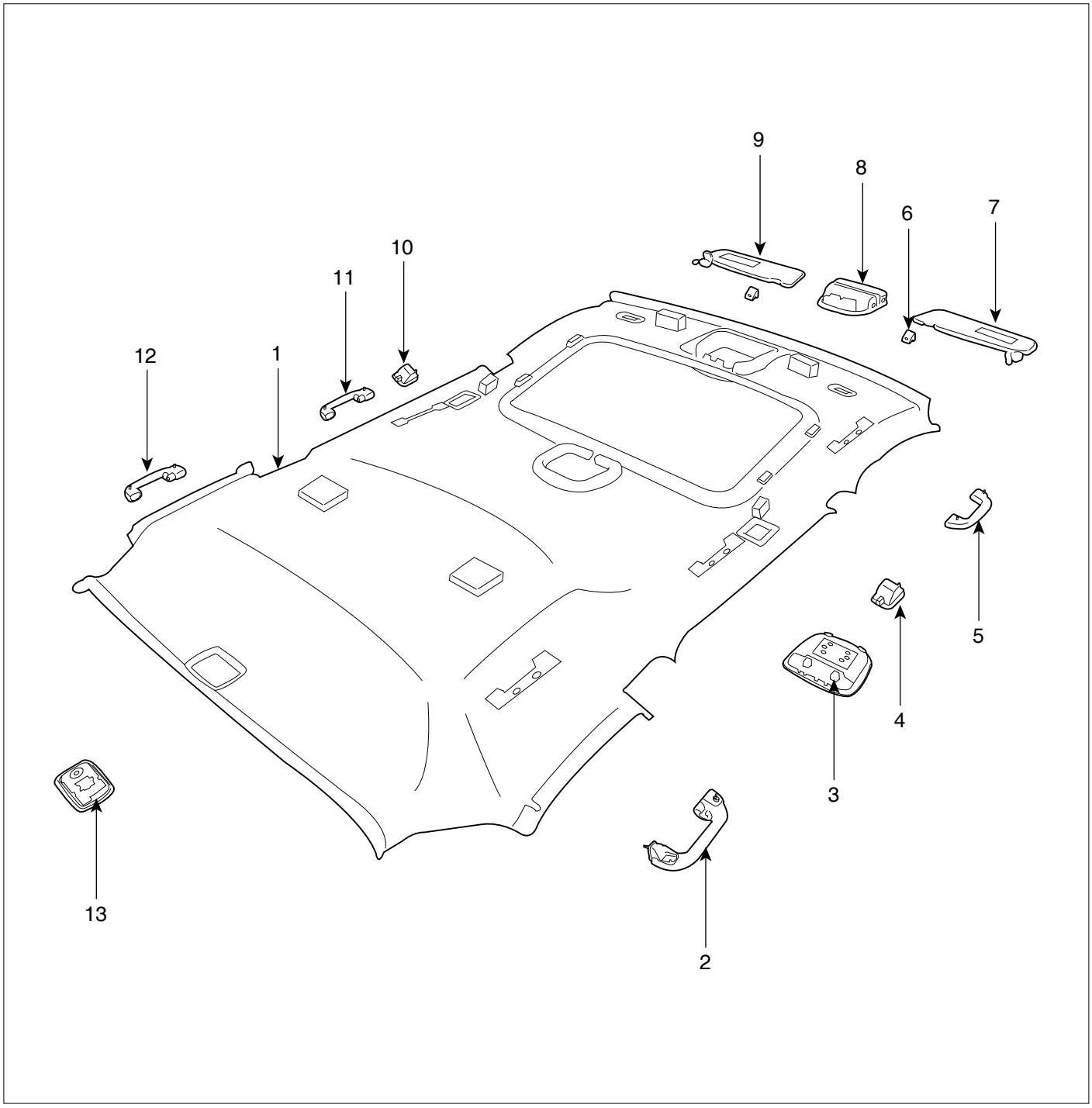

1. Package tray
2. Assist handle
3. Room lamp
4. Lamp
5. Assist handle
6. Holder
7. Sunvisor
8. Overhead console
9. Sunvisor
10. Lamp
11. Assist handle
12. Assist handle
13. Rear room ramp

SCMBD6175L

REPLACEMENT EF131CCF

SUNVISOR REPLACEMENT

NOTE

- *When prying with a flat-tipped screwdriver, wrap it with protective tape to prevent damaged.*
- *Put on gloves to protect your hands.*

1. Remove the sunvisor (A) and holder (B) from each side.
2. Disconnected the connector (C).

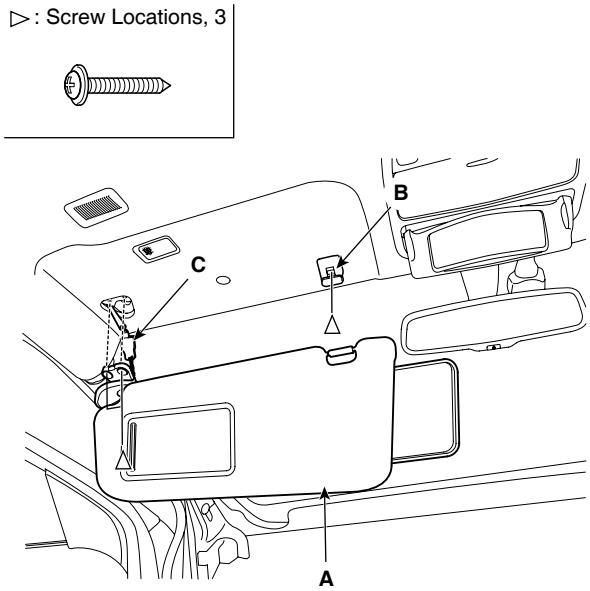

SCMBD6105L

3. Installation is the reverse of removal.

OVERHEAD CONSOLE LAMP REPLACEMENT

NOTE

- *When prying with a flat-tipped screwdriver, wrap it with protective tape to prevent damaged.*
- *Put on gloves to protect your hands.*

1. Remove the overhead console.
   - Remove the screw.
   - Disconnect the connector (B).

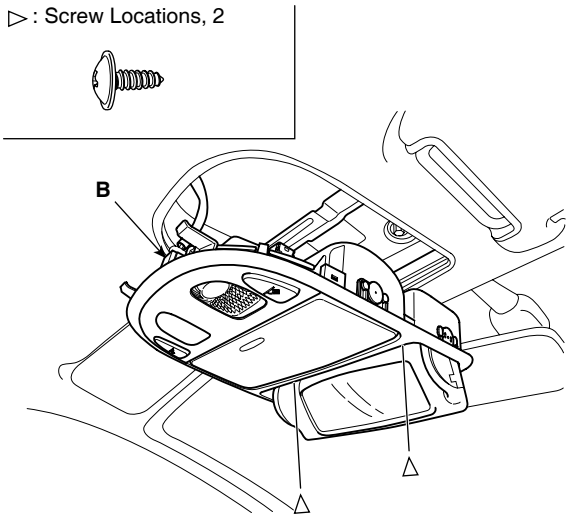

SCMBD6107L

2. Installation is the reverse of removal.

ROOM LAMP AND REPLACEMENT

NOTE

- *When prying with a flat-tipped screwdriver, wrap it with protective tape to prevent damaged.*
- *Put on gloves to protect your hands.*

1. Remove the room lamp.
   - Remove the lens (A).
   - Remove the screws.
   - Pull out the room lamp (B).
   - Disconnect the connector (C).

[FRONT]

▷ : Screw Locations, 2

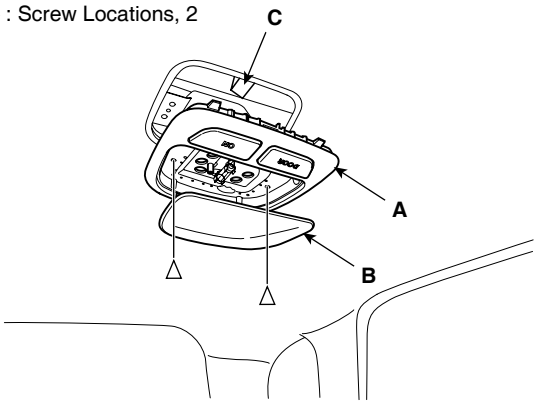

SCMBD6108L

[REAR]

▷ : Screw Locations, 2

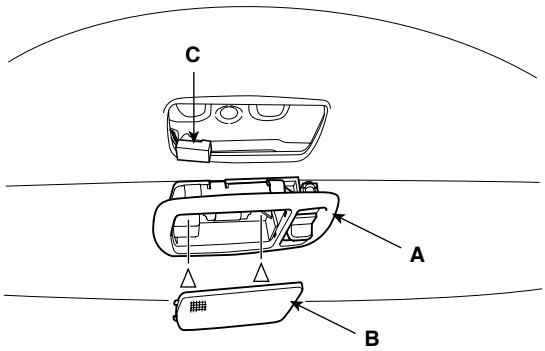

SCMBD6109L

2. Installation is the reverse of removal.

PERSONAL LAMP REPLACEMENT

1. Remove the lamp (A).
2. Disconnect the connector (B).

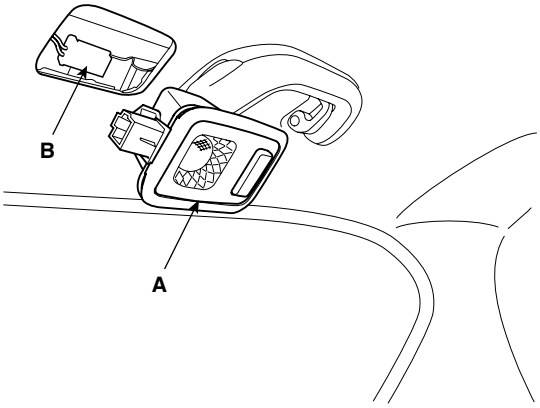

SCMBD6110D

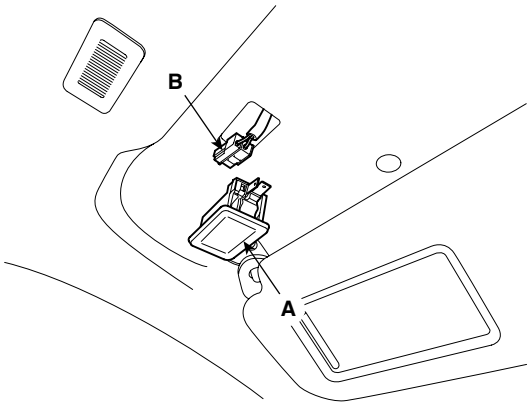

SCMBD6112D

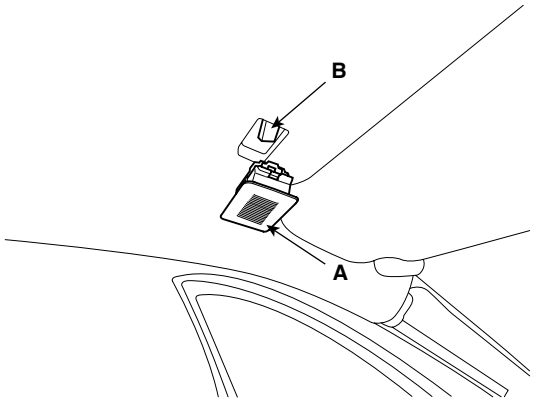

SCMBD6111D

3. Installation is the reverse of removal.

ASSIST HANDLE REPLACEMENT

NOTE

- *When prying with a flat-tipped screwdriver, wrap it with protective tape to prevent damaged.*
- *Put on gloves to protect your hands.*

1. Remove the covers, and remove the screws, then remove the assist handle (A).

▷ : Screw Locations

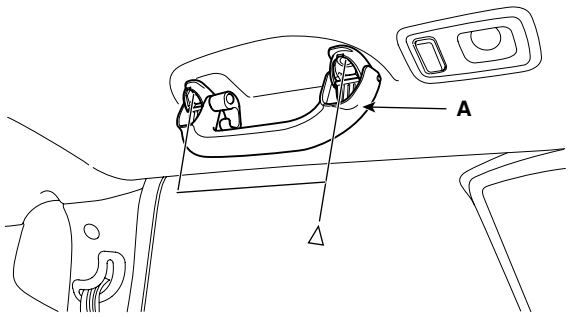

SCMBD6106L

2. Installation is the reverse of removal.

ROOF TRIM REPLACEMENT

NOTE

- *Put on gloves to protect your hands.*
- *When prying with a flat-tipped screwdriver, wrap it with protective tape to prevent damaged.*
- *Take care not to bend or scratch the trim and panels.*

1. Remove the following items.
   - Front seat, rear seat assembly. (See page BD-94)
   - Front, rear door scuff trim. (See page BD- 81)
   - Front pillar trim. (See page BD- 81)
   - Center lower, upper pillar trim. (See page BD-82)
   - Rear lower, upper pillar trim. (See page BD- 83)
   - Overhead console. (See page BD- 76)
   - Room ramp. (See page BD- 77)
   - Sunvisor, assist handle. (See page BD- 76)
   - Vanity lamp and hands free mic. (See page BD-77)
2. Remove the connector (B).
3. Remove the roof trim (A).
4. Installation is the reverse of removal.

NOTE

- *Replace any damaged clips.*

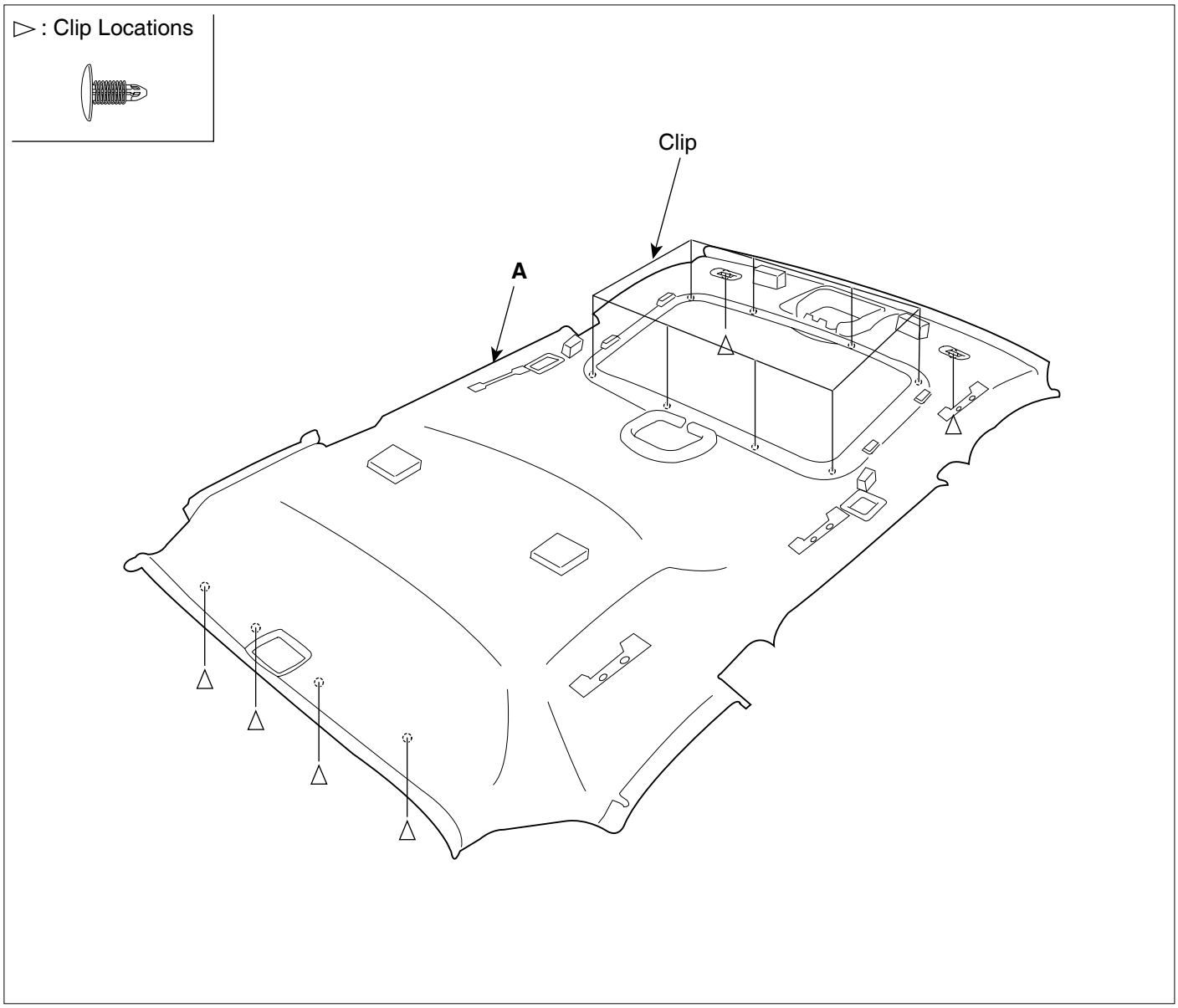

SCMBD6250L

INTERIOR TRIM

COMPONENTS EC53C6A4

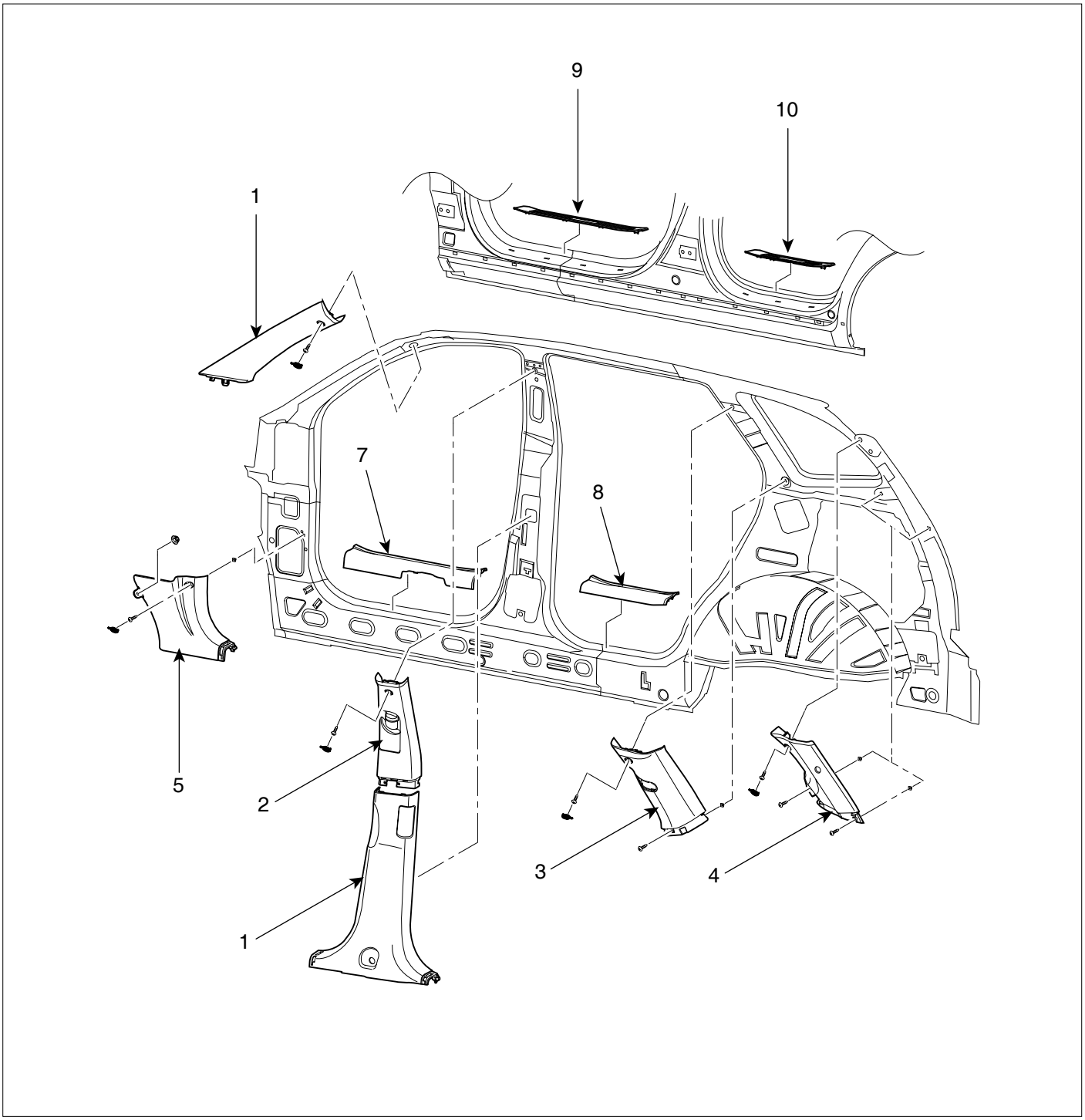

1. Center lower pillar trim
2. Center upper trim
3. Rear pillar trim
4. Gate pillar trim
5. Cowl side trim
6. Front pillar trim
7. Front door scuff trim
8. Rear door scuff trim (RH)
9. Front door side step
10. Rear door side step

SCMBD6224L

REPLACEMENT EEE14F2C

FRONT DOOR AND REAR DOOR SCUFF TRIM REPLACEMENT

NOTE

- *Put on gloves to protect your hands.*
- *When prying with a flat-tipped screwdriver, wrap it with protective tape to prevent damaged.*
- *Take care not to bend or scratch the trim and panels.*

1. Remove the front door scuff trim (A).
2. Remove the rear door scuff trim (B).

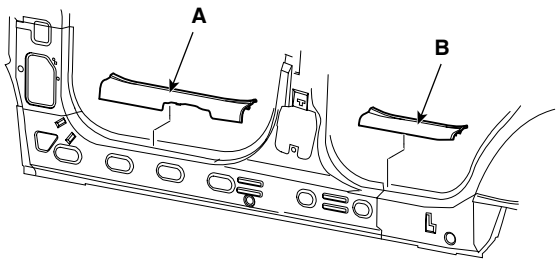

SCMBD6098D

3. Installation is the reverse of removal.

NOTE

- *Replace any damaged clips.*

FRONT PILLAR TRIM REPLACEMENT

NOTE

- *Put on gloves to protect your hands.*
- *When prying with a flat-tipped screwdriver, wrap it with protective tape to prevent damaged.*
- *Take care not to bend or scratch the trim and panels.*

1. Remove the front pillar trim (A).

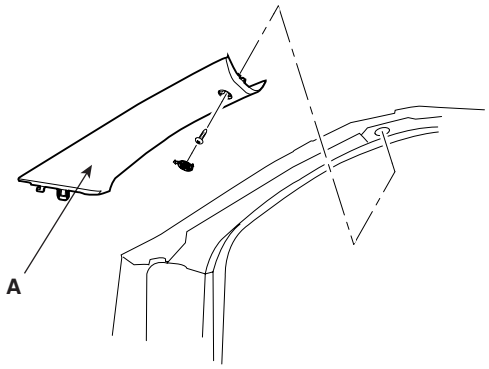

SCMBD6509D

2. Installation is the reverse of removal.

NOTE

- *Replace any damaged clips.*

COWL SIDE TRIM REPLACEMENT

NOTE

- *Put on gloves to protect your hands.*
- *When prying with a flat-tipped screwdriver, wrap it with protective tape to prevent damaged.*
- *Take care not to bend or scratch the trim and panels.*

1. Remove the front door scuff trim. (See page BD- 81)
2. Remove the cowl side trim (A).

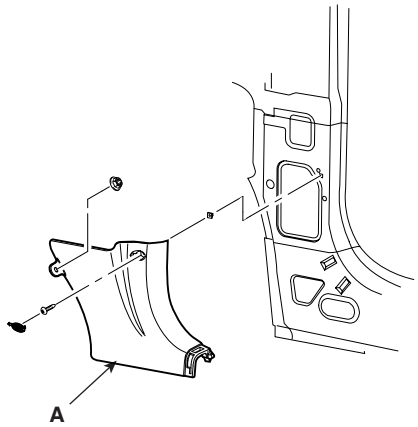

SCMBD6100D

3. Installation is the reverse of removal.

NOTE

- *Replace any damaged clips.*

CENTER LOWER AND UPPER PILLAR TRIM REPLACEMENT

NOTE

- *Put on gloves to protect your hands.*
- *When prying with a flat-tipped screwdriver, wrap it with protective tape to prevent damaged.*
- *Take care not to bend or scratch the trim and panels.*

1. Remove the front and rear door trim. (See page BD-81)
2. Remove the center lower pillar trim(A).
3. Remove the center upper pillar trim (B).

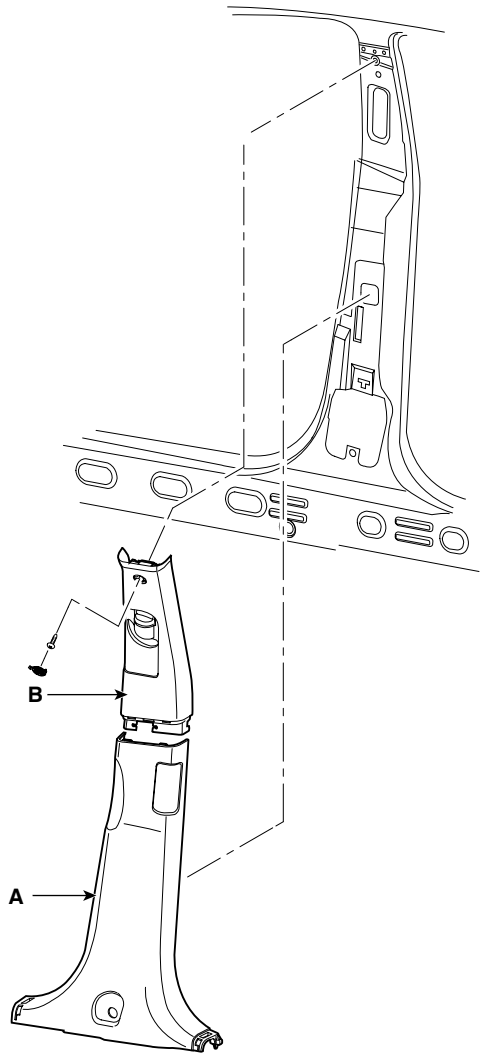

SCMBD6101L

4. Installation is the reverse of removal.

NOTE

- *Replace any damaged clips.*

REAR PILLAR TRIM REPLACEMENT

NOTE

- *Put on gloves to protect your hands.*
- *When prying with a flat-tipped screwdriver, wrap it with protective tape to prevent damaged.*
- *Take care not to bend or scratch the trim and panels.*

1. Remove the luggage side trim. (See page BD- 84)

2. Remove the rear pillar trim (A).

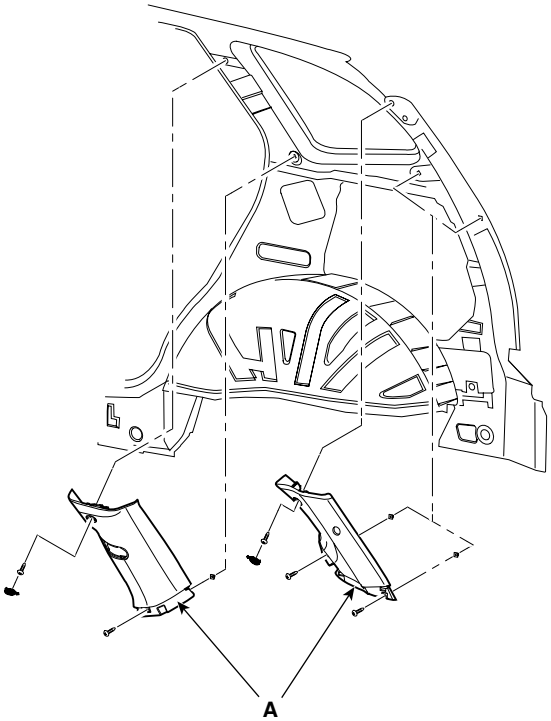

SCMBD6103D

3. Installation is the reverse of removal.

NOTE

- *Replace any damaged clips.*

LUGGAGE SIDE TRIM REPLACEMEN

NOTE

- *Put on gloves to protect your hands.*
- *When prying with a flat-tipped screwdriver, wrap it with protective tape to prevent damaged.*
- *Take care not to bend or scratch the trim and panels.*

1. Remove the rear seat. (See page BD- 102)
2. Remove the rear seat belt lower anchor. (See page BD- 119)
3. After loosening the mounting screws, then remove the luggage side trim.
4. Installation is the reverse of removal.

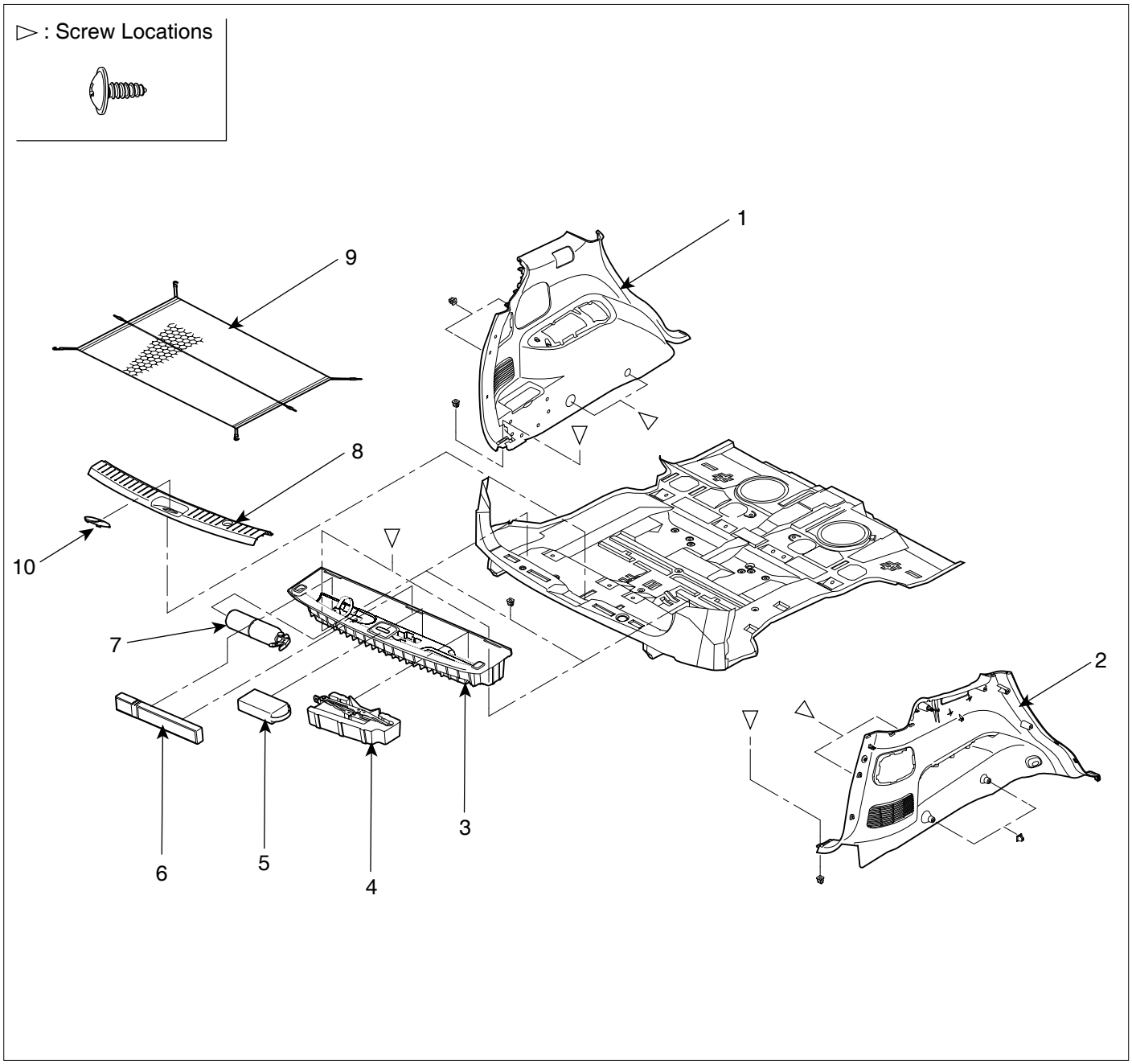

1. Luggage side trim (LH)
2. Luggage side trim (RH)
3. Luggage flower box trim
4. Jack
5. First AIP kit
6. Trianlge ssy car warning
7. Fire extinguisher
8. Transverse
9. Luggage net
10. Striker cover

SCMBD6174L

WINDSHIELD GLASS

COMPONENTS EB4D977E

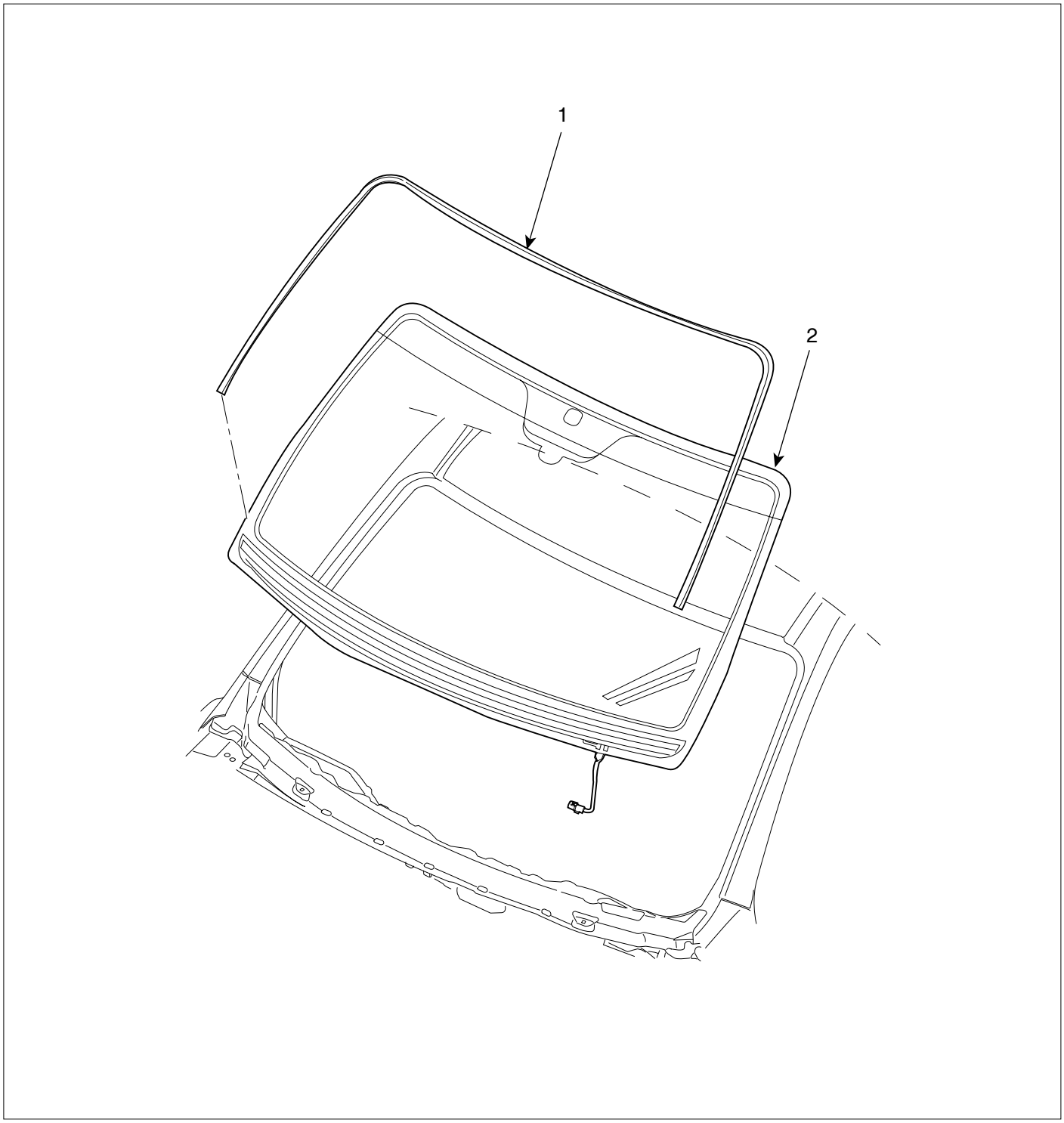

1. Windshield upper molding
2. Windshield glass

SCMBD6176L

REPLACEMENT EEB750D4

REMOVAL

NOTE

- *Put on gloves to protect your hands.*
- *Use seat covers to avoid damaging any surfaces.*

1. Remove the following items.
   - Outside rear view mirror. (See page BD- 54)
   - Front pillar trim, both sides. (See page BD- 81)
   - Windshield wiper arms and cowl cover. (See page BE-“ Windshield wiper”)
   - Sunvisore and holders, both sides, overhead console, Grab handles, both sides. (See page BD- 76)

2. Remove the molding (A) from the edge of the windshield (B). If necessary, cut the molding with a utility knife.

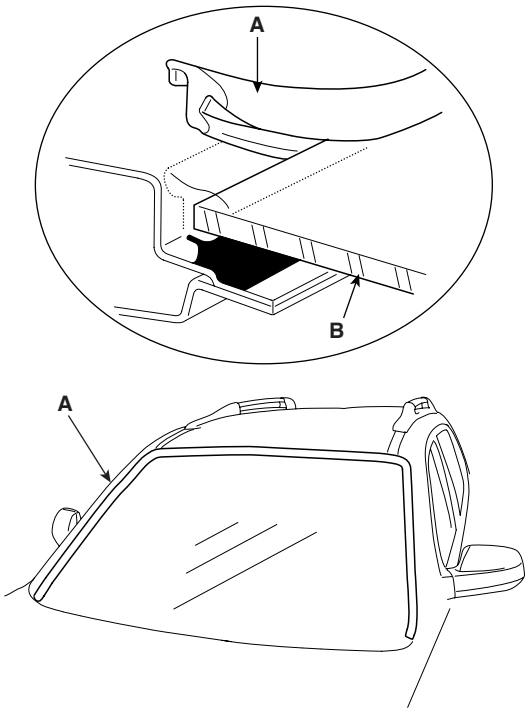

SCMBD6516L

3. Pull down the front portion of the headliner. Take care not to bend the headliner excessively, or you may crease or break it.

4. Cut out the sealant using the sealant cutting tool (A) (09861-31100).

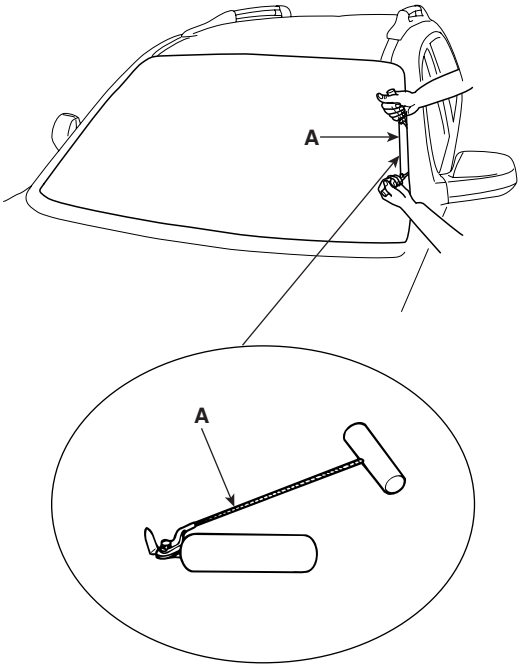

ASIE070C

5. Remove the windshield (A) carefully using the glass holder (B)(09861-31100).

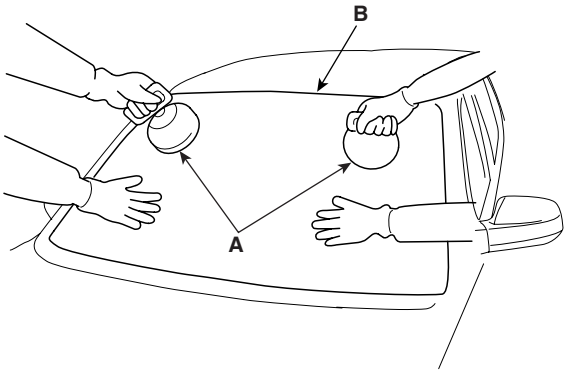

ASIE070D

INSTALLTION

1. With a knife, scrape the old adhesive smooth to a thickness of about 2mm (0.08 in.) on the bonding surface around the entire windshield opening flange:
   - Do not scrape down to the painted surface of the body; damaged paint will interfere with proper bonding.
   - Remove the rubber dam and fasteners from the body.
   - Mask off surrounding surfaces before painting.

2. Clean the bonding surface with a sponge dampened in alcohol. After cleaning, keep oil, grease and water from getting on the clean surface.

3. Apply the glass primer (A) to the side of the windshield glass edge and stick the both-sided adhesive tape (B) on the inside of molding (C).

4. When attaching the molding, make it in line (D) with the windshield glass and attach the windshield glass pad (E)to the designated place.

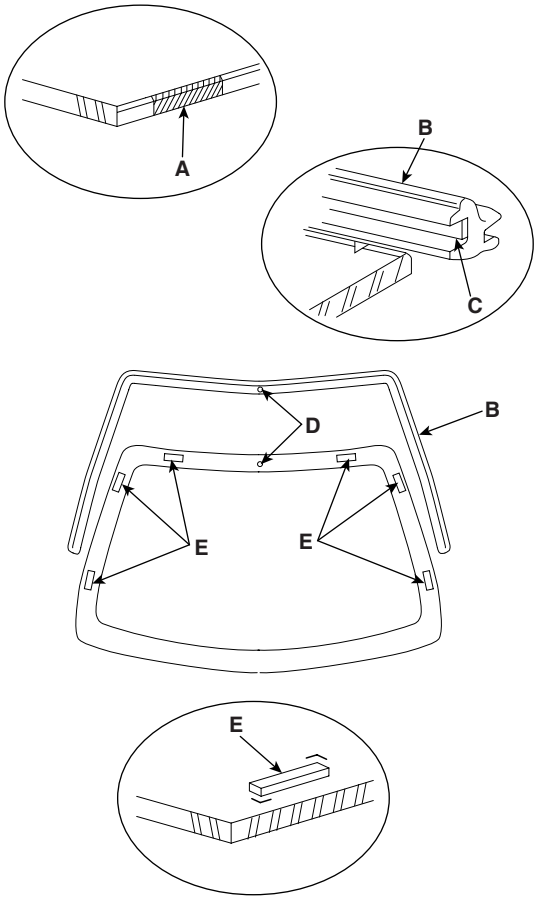

ASIE070E

5. Install the spacer (A) install the windshield glass (B) temporarily with making sure to position them on the center, and then place the alignment mark (C).

6. Remove the windshield.

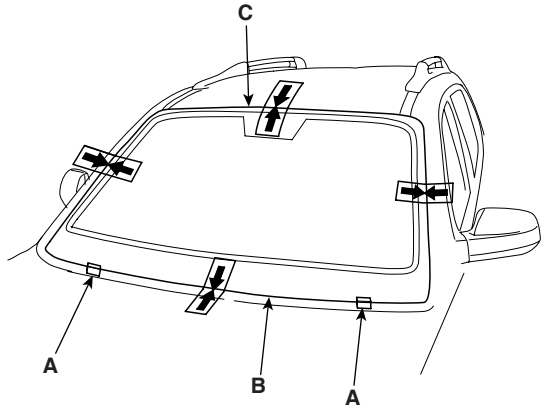

ASIE070F

7. With a sponge, apply a light coat of body primer to the original adhesive remaining around the windshield opening flange. Let the body primer dry for at least 10 minutes.
   - Do not apply glass primer to the body, and be careful not to mix up glass and body primer sponges.
   - Never touch the primed surfaces with your hands.
   - Mask off the dashboard before painting the flange.

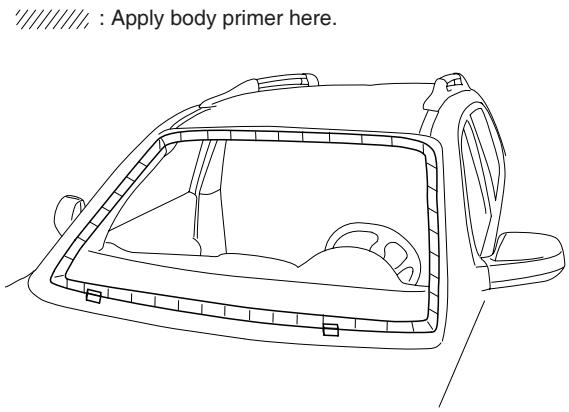

LSIE070H

8. Apply a light coat of glass primer to the outside of the fasteners.

NOTE

- *Never touch the primed surface with your hand. If you do, the adhesive may not bond to the glass Properly, causing a leak after the windshield glass is installed.*
- *Do not apply body primer to the glass.*
- *Keep water, dust, and abrasive materials away from the primer.*

: Apply glass primer here.

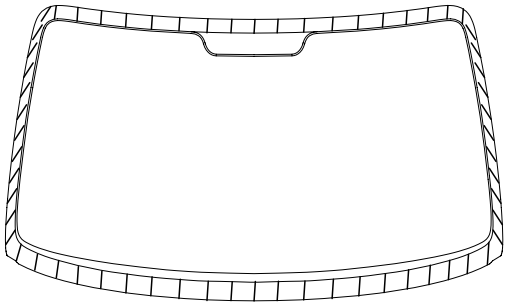

LSIE070G

9. Pack adhesive into the cartridge without air pockets to ensure continuous delivery. Put the cartridge in a caulking gun, and run a bead of adhesive (A) around the edge of the windshield (B) between the fastener (C) and molding (D) as shown.
Apply the adhesive within 30 minutes after applying the glass primer.
Make a slightly thicker bead at each corner.

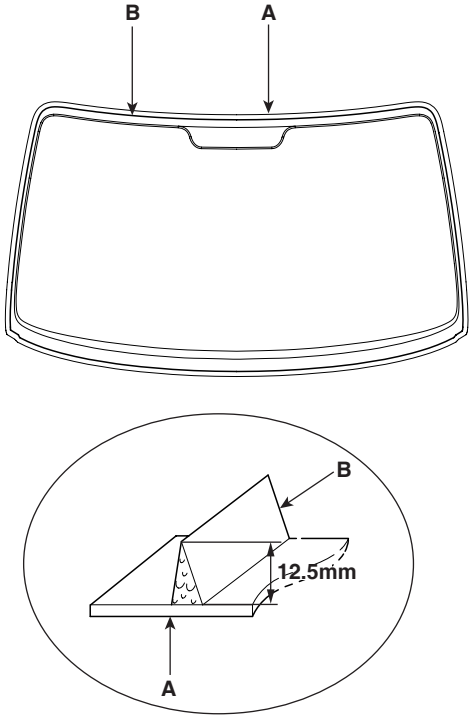

ASIE070I

10. Use suction cups (A) to hold the windshield over the opening, align it with the alignment marks (B) made in step 15, and set it down on the adhesive. Lightly push on the windshield until its edges are fully seated on the adhesive all the way around. Do not open or close the doors until the adhesive is dry.

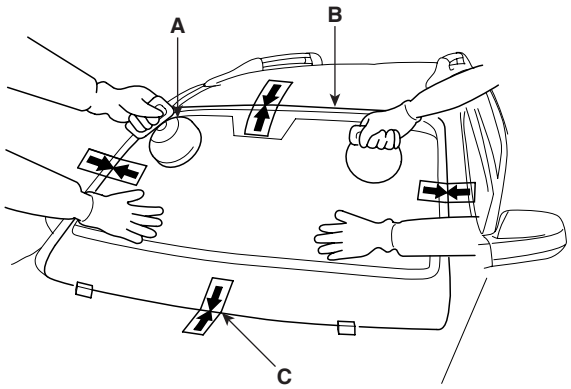

ASIE070J

11. Scrape or wipe the excess adhesive off with a putty knife or towel. To remove adhesive from a painted surface or the windshield, wipe with a soft shop towel dampened with alcohol.

12. Let the adhesive dry for at least one hour, then spray water over the windshield and check for leaks. Make leaking areas, and let the windshield dry, then seal with sealant:
    - Let the vehicle stand for at least four hours after windshield installation. If the vehicle has to be used within the first four, it must be driven slowly.
    - Keep the windshield dry for the first hour after installation.

13. Reinstall all remaining removed parts. Install the rearview mirror after the adhesive has dried thoroughly. Advise the customer not to do the following things for two the three days:
    - Slam the door with all the windows rolled up.
    - Twist the body excessively (such as when going in and out of driveways at an angle or driving over rough, uneven roads).

BUMPER

FRONT BUMPER

REPLACEMENT E464C9DA

1. Widen the chink between the cover (B) and bumper where the finger can enter sufficiently.

   CAUTION

   - ***Be careful not to damage the surface of bumper by a sharp edge.***

2. Hold the nozzle with fingers under the cover and then pull it as described below picture(B).
3. Pull the cover (A) and set it apart, then remove the cover(B).
4. Remove the front bumper cover.

   NOTE

   - *Put on gloves to protect your hands.*
   - *When prying with a flat-tipped screwdriver, wrap it with protective tape to prevent damaged.*
   - *Take care not bend or scratch the cover and other parts.*

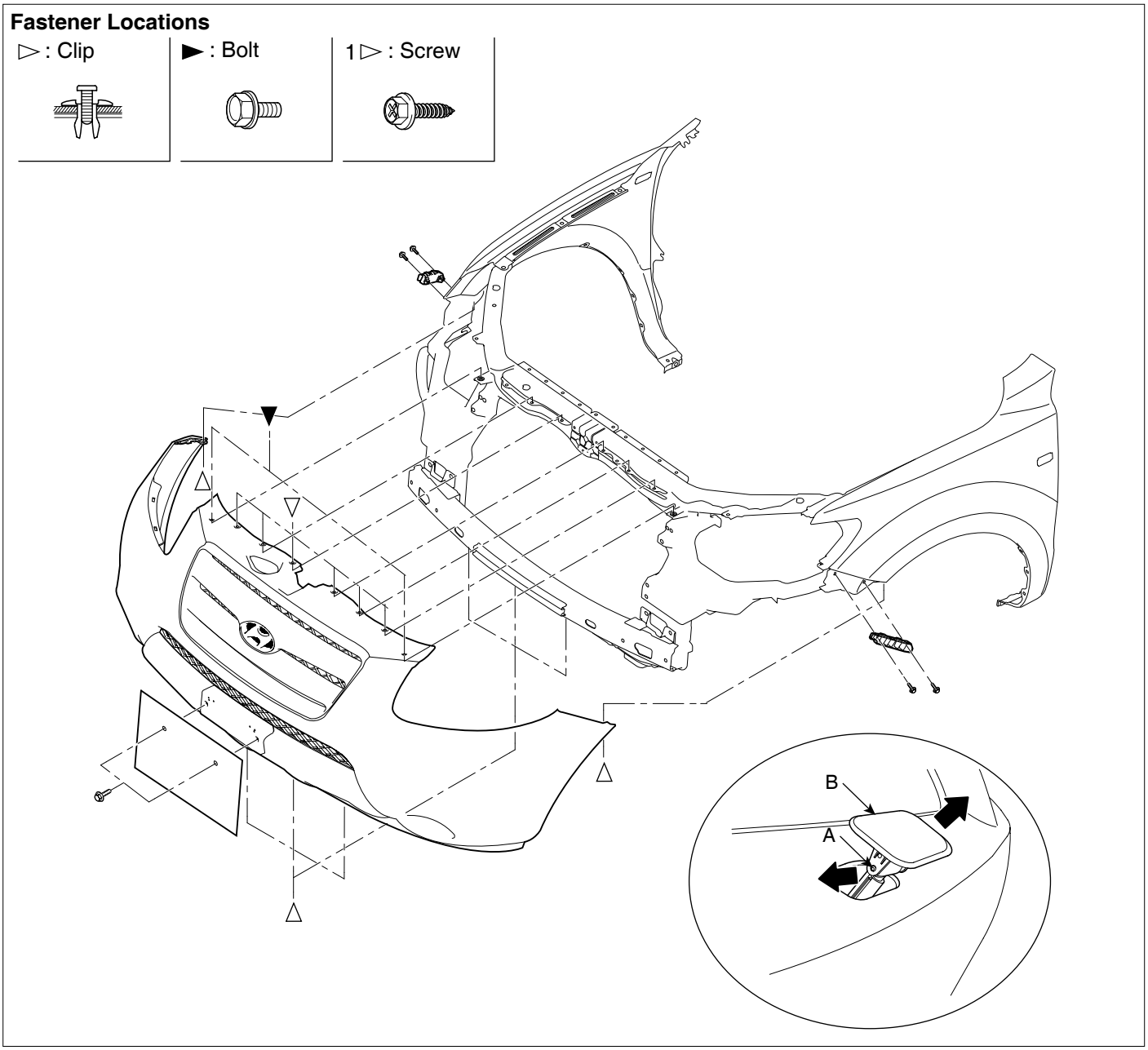

SCMBD6177L

REAR BUMPER

REPLACEMENT E9F085BC

NOTE

- *After remove the rear combination lamp.*
- *When prying with a flat-tipped screwdriver, wrap it with protective tape, and apply protective tape around the related parts your hands.*
- *Put on gloves to protect your hands.*
- *Take care not bend or scratch the cover and other parts.*
- *Replace any damaged clips.*

Fastener Locations

▷ : Screw	► : Bolt	1 ► : Screw	1 ▷ : Clip

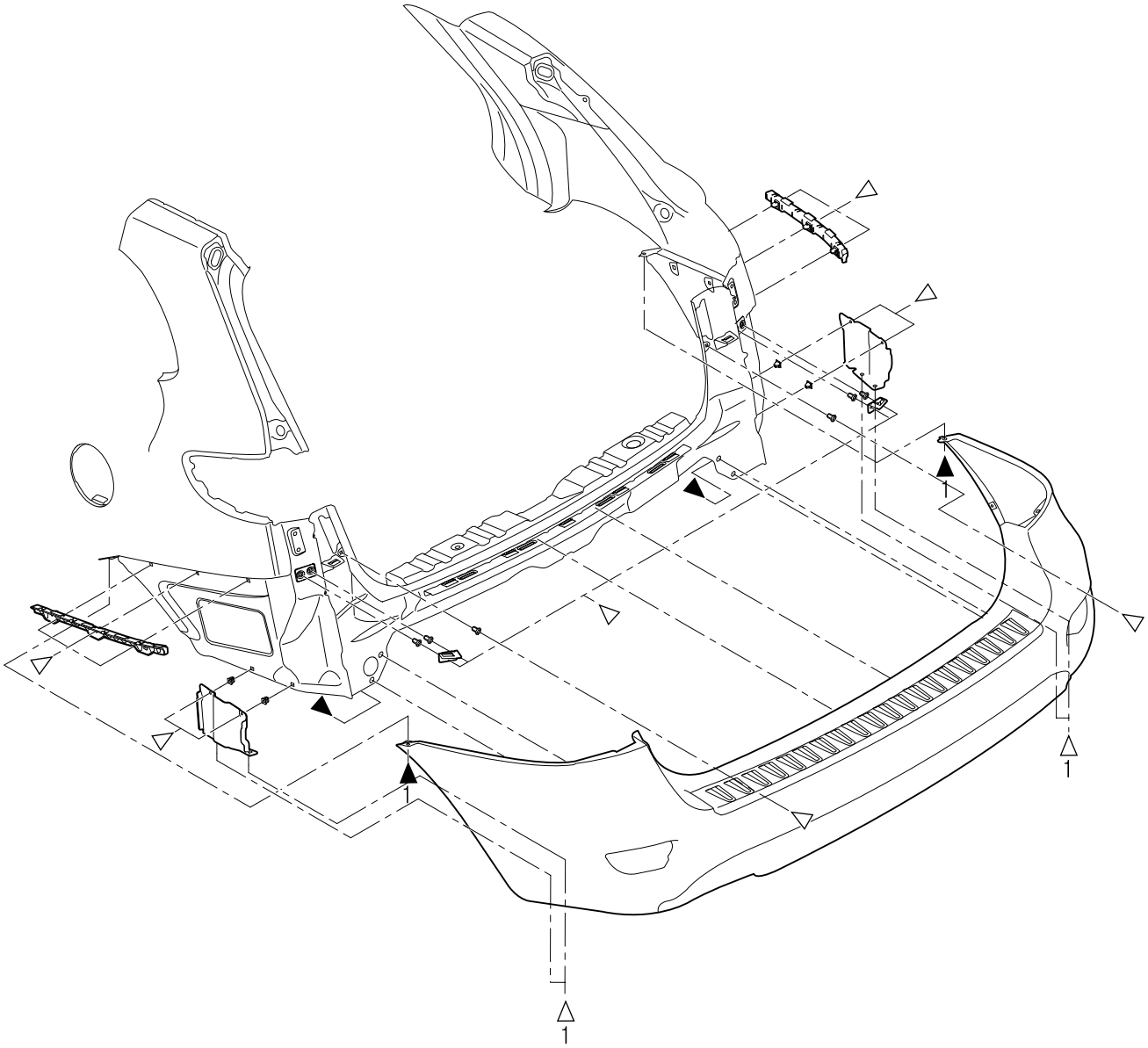

SCMBD6178L

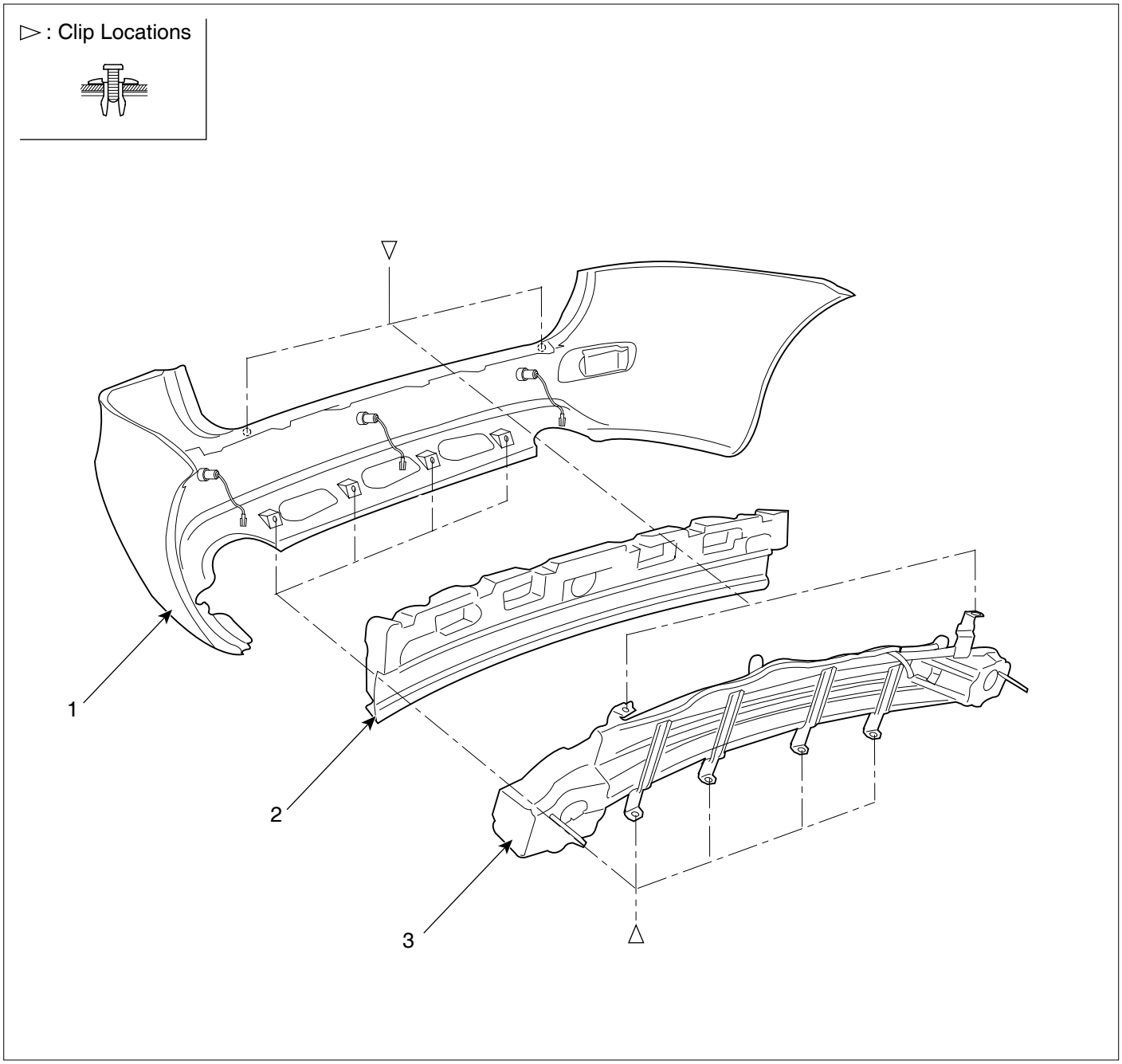

1. Rear bumper cover
2. Energy absorber
3. Rear bumper rail

SCMBD6179L

SEAT

FRONT SEAT

COMPONENTS E088B74F

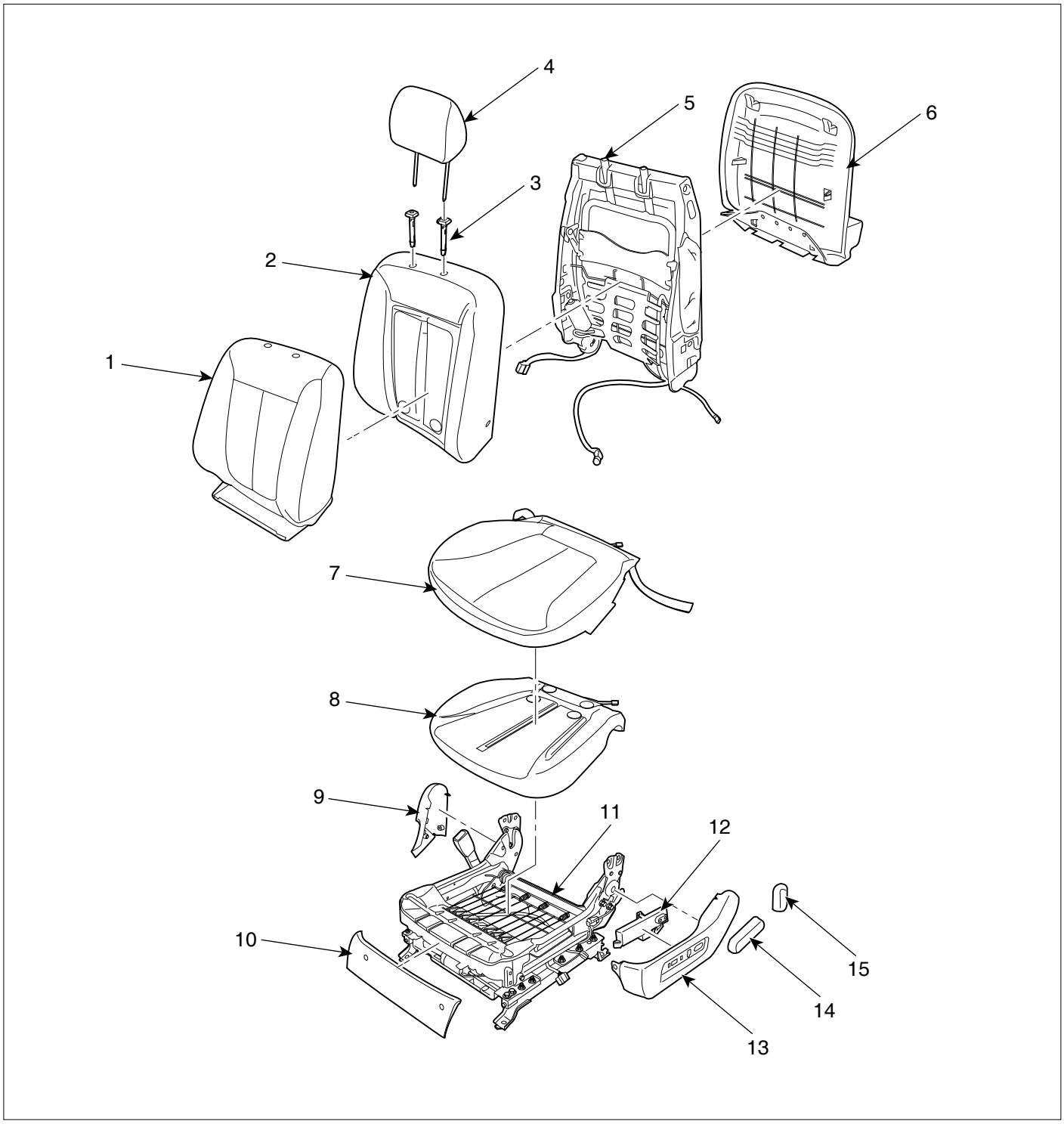

1. Seat back cover
2. Seat back pad
3. Headrest guide
4. Headrest
5. Seat back frame
6. Seat back panel
7. Seat cushion cover
8. Seat cushion pad
9. Side cover
10. Front cover
11. Seat cushion frame
12. Switch assembly
13. Recliner cover
14. Reber
15. Recliner reber

SCMBD6180L

REPLACCEMENT EEDFEB65

SEAT ASSEMBLY REPLACEMENT

1. Remove the seat assembly mounting cover (A).
2. After loosening the seat assembly mounting bolts and nuts, remove the seat assembly (C).

▷ : Bolt Locations, 4

43.1~64.7 N.m (4.4~6.6 Kgf.m, 31.8~47.7 lbf.ft)

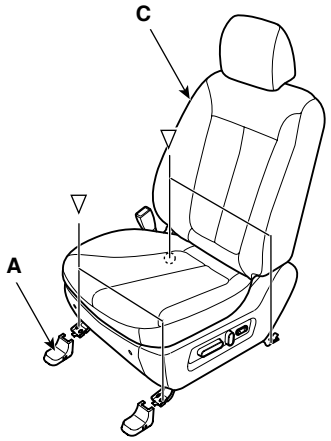

SCMBD6113L

3. Installation is the reverse of removal.

CAUTION

SEAT MOUNTING BOLT INSTALLATION PROCEDURE

- ***Set the into the most rearward position. Check then each slide is locked, and then tighten the front mounting bolt temporarily.***

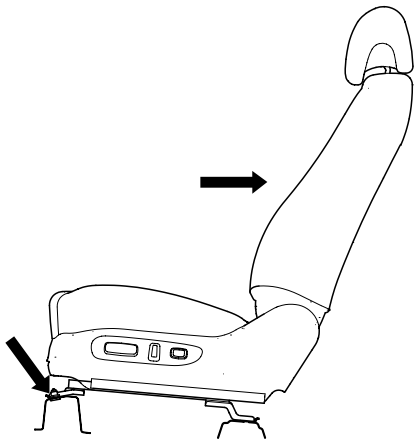

ESBF304A

- ***Set the seat into most forward position. Check that each slide is locked, and then tighten the rear mounting bolt completely.***

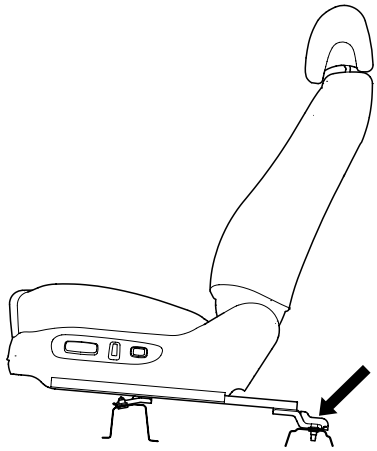

ESBF305A

- ***Set the seat into the most rearward position. Check the front mounting bolt completely.***

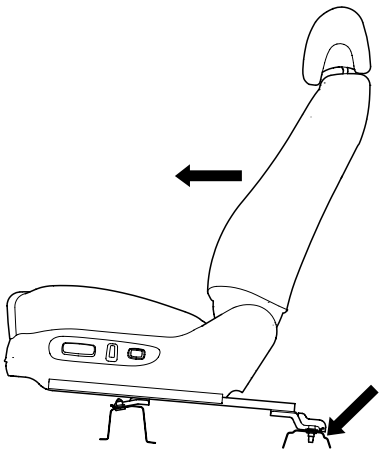

ESBF306A

- ***Check that the seat operates to and fro smoothy and the locking portion locks properly.***

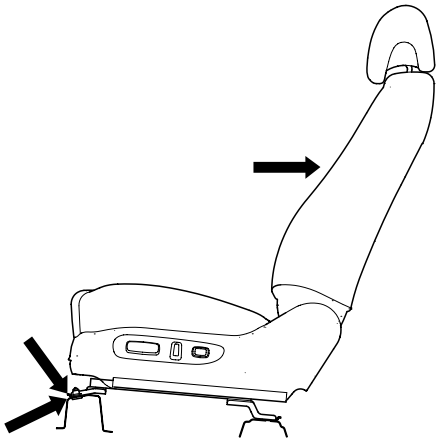

ESBF307A

RECLINER COVER REPLACEMENT

1. Remove the front cover (A).

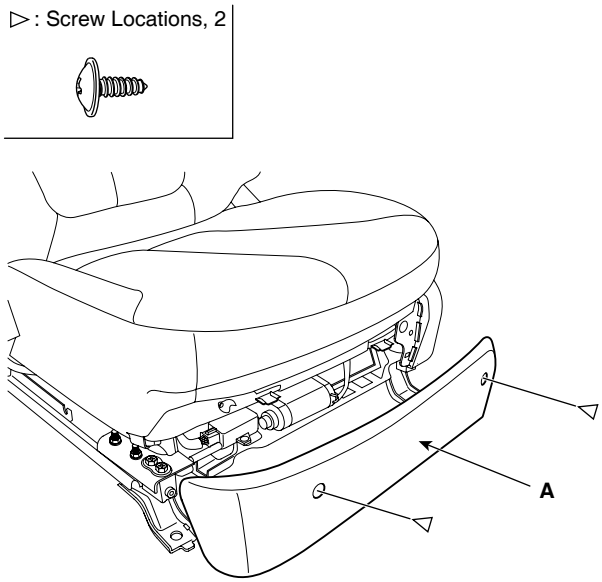

SCMBD6114L

2. Remove the recliner rever (A) and sliding rever (B).
3. Loosen the recliner mounting screw and clip, then remove the recliner cover (C).

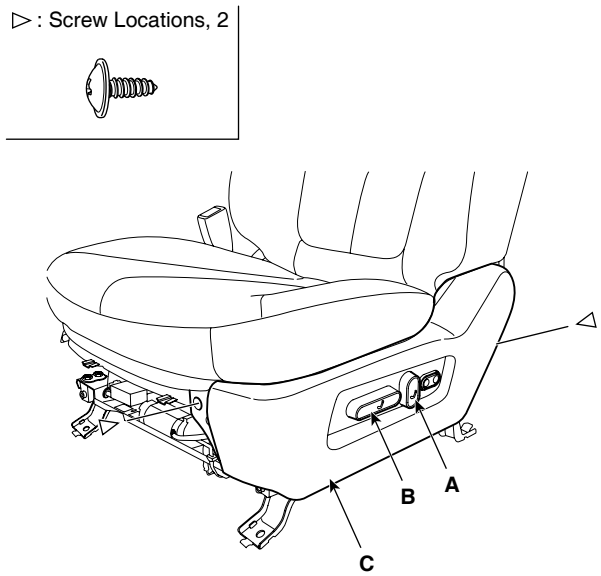

SCMBD6115L

4. Installation is the reverse of removal.

SEAT BACK COVER REPLACEMENT

1. Remove front seat assembly. (See page BD- 94)
2. Remove the recliner cover. (See page BD- 95)
3. After disconnecting the scuff band (A), remove the seat back panel (B).

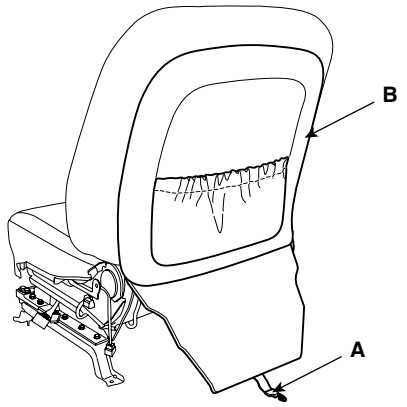

SCMBD6116D

4. Remove the headrest and headrest guide.
5. Disconnect the protector (A) from the back frame.

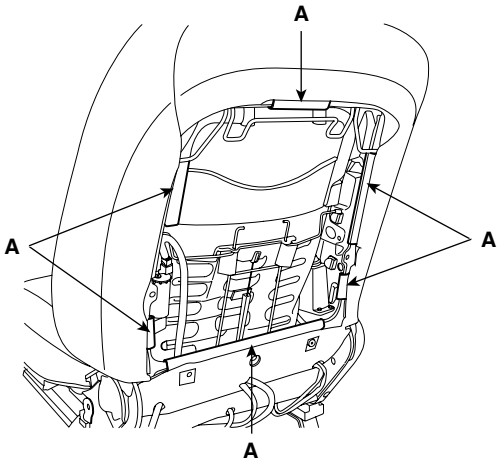

SCMBD6117D

6. Disconnect the connector (A).

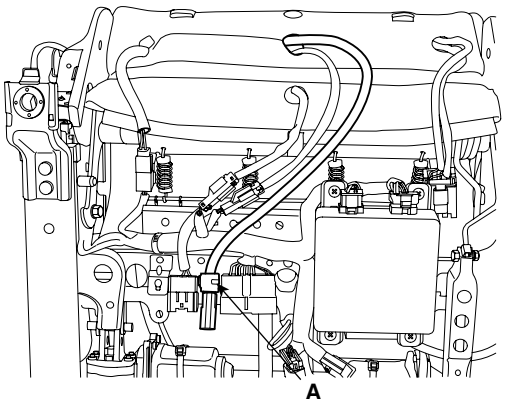

SCMBD6118D

7. Remove the seat back(A).

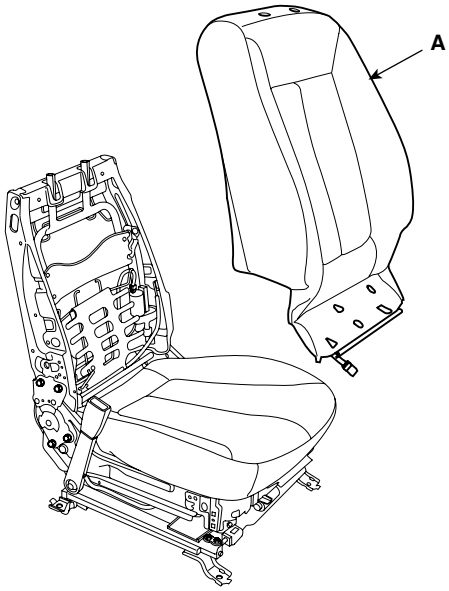

SCMBD6119D

8. Remove the seat back cover (A).

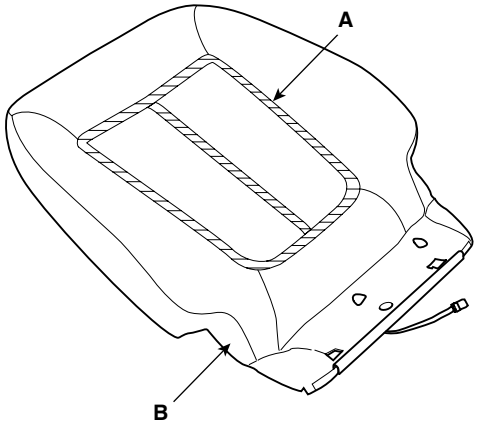

SCMBD6120D

9. Installation is the reverse of removal.

SEAT BACK HEATER REPLACEMENT

1. Remove the seat back cover. (See page BD- 96)
2. Seat back pad replacement (A).

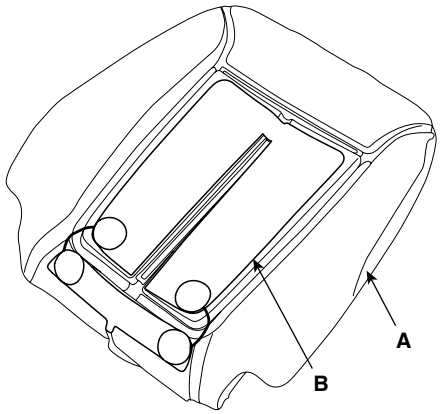

SCMBD6126D

SEAT CUSHION HEATER REPLACEMENT

1. Remove the seat back cover. (See page BD- 98)
2. Seat cushion pad replacement (A).

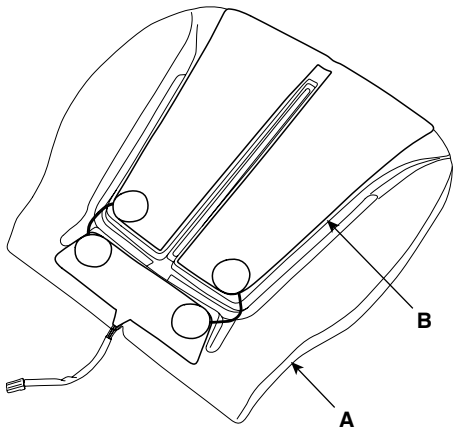

SCMBD6127D

SEAT CUSHION COVER REPLACEMENT

1. Remove front seat assembly. (See page BD- 94)
2. Remove the recliner cover. (See page BD- 95)
3. Disconnect the protector (A).

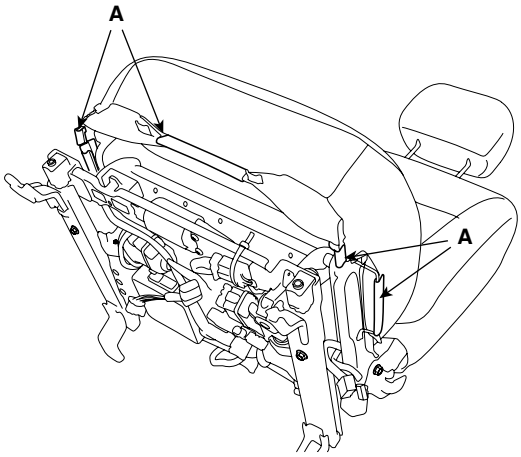

SCMBD6121D

4. Disconnect the connector (A).

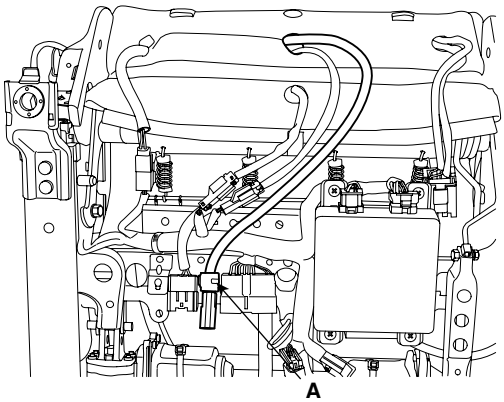

SCMBD6118D

5. After removing the hog-ring clip (A) on the front of seat cushion and remove the seat cushion cover (B).

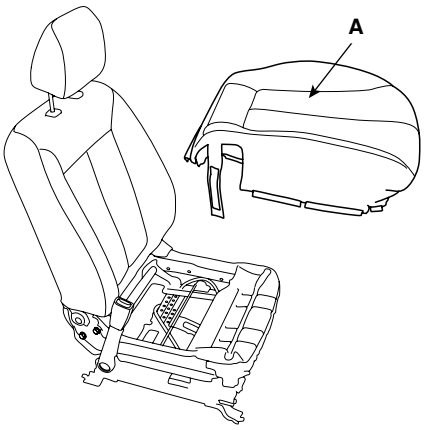

SCMBD6122D

6. Disconnect the adhesives (A) on the front of seat cushion, remove the cushion cover (B).

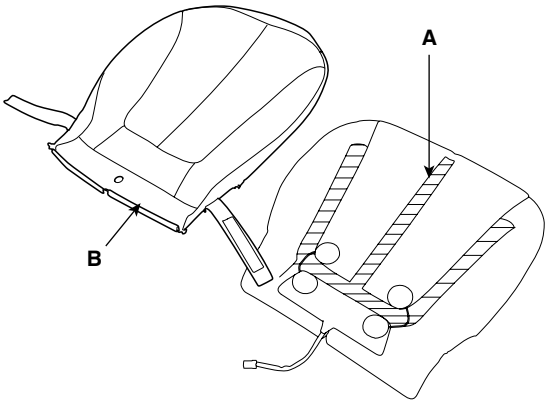

SCMBD6123D

7. Installation is the reverse of removal.

SEAT FRAME REPLACEMENT

1. Remove the following items.
   - Recliner cover. (See page BD- 95)
   - Seat back panel. (See page BD- 96)
   - Headrest guide. (See page BD- 96)
   - Seat back cover. (See page BD- 96)
   - Seat cushion cover. (See page BD- 98)

2. Remove the clip.

3. Remove the shift (A).

   NOTE
   - *Remove the side air bag for replacing side air bag installation seat.*
   - *Be fore service, be fully aware of precautions and service procedure relevant to air bag. (See page RT-Airbag)*

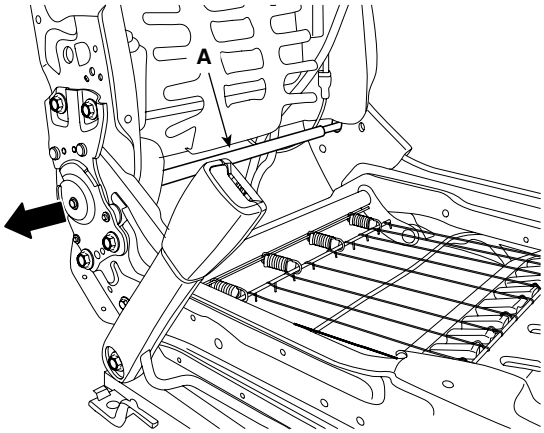

SCMBD6124D

4. After loosening the mounting bolts, then disconnect the seat back frame (A) and seat cushion frame (B).

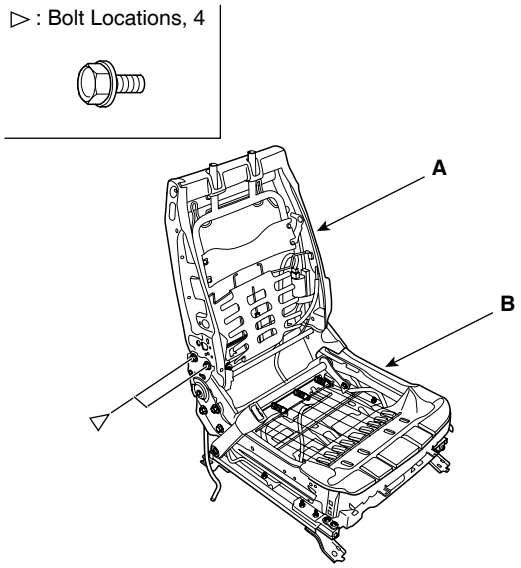

SCMBD6125L

5. Installation is the reverse of removal.

REAR SEAT

COMPONENTS E7C22FC0

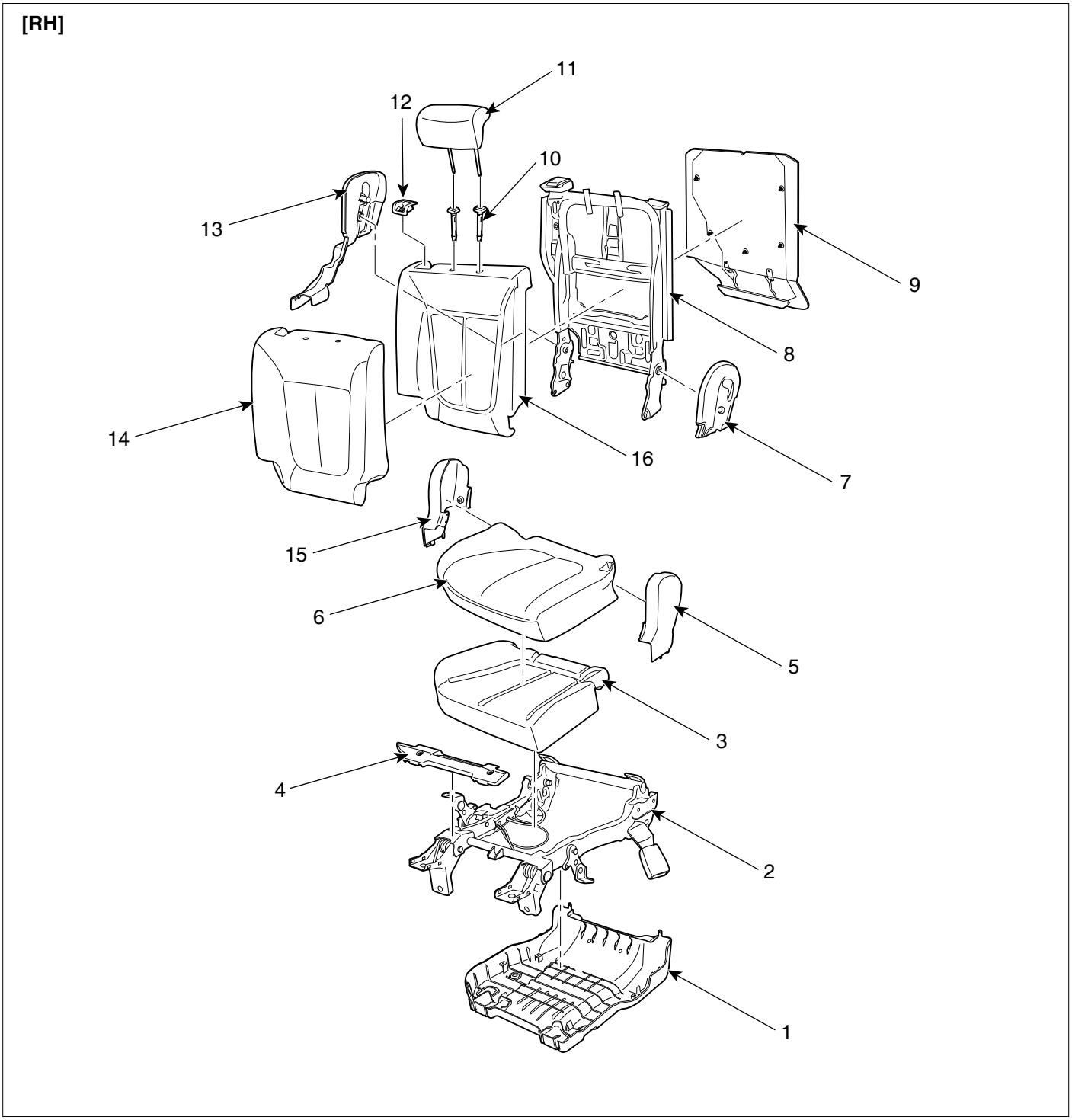

1. Leg cover
2. Seat cushion cover
3. Seat cushion pad
4. Cover
5. Recliner cover
6. Seat cushion cover
7. cover
8. Seat back frame
9. Seat back panel
10. Headrest guide
11. Headrest
12. Recliner lever cover

SCMBD6181L

[LH]

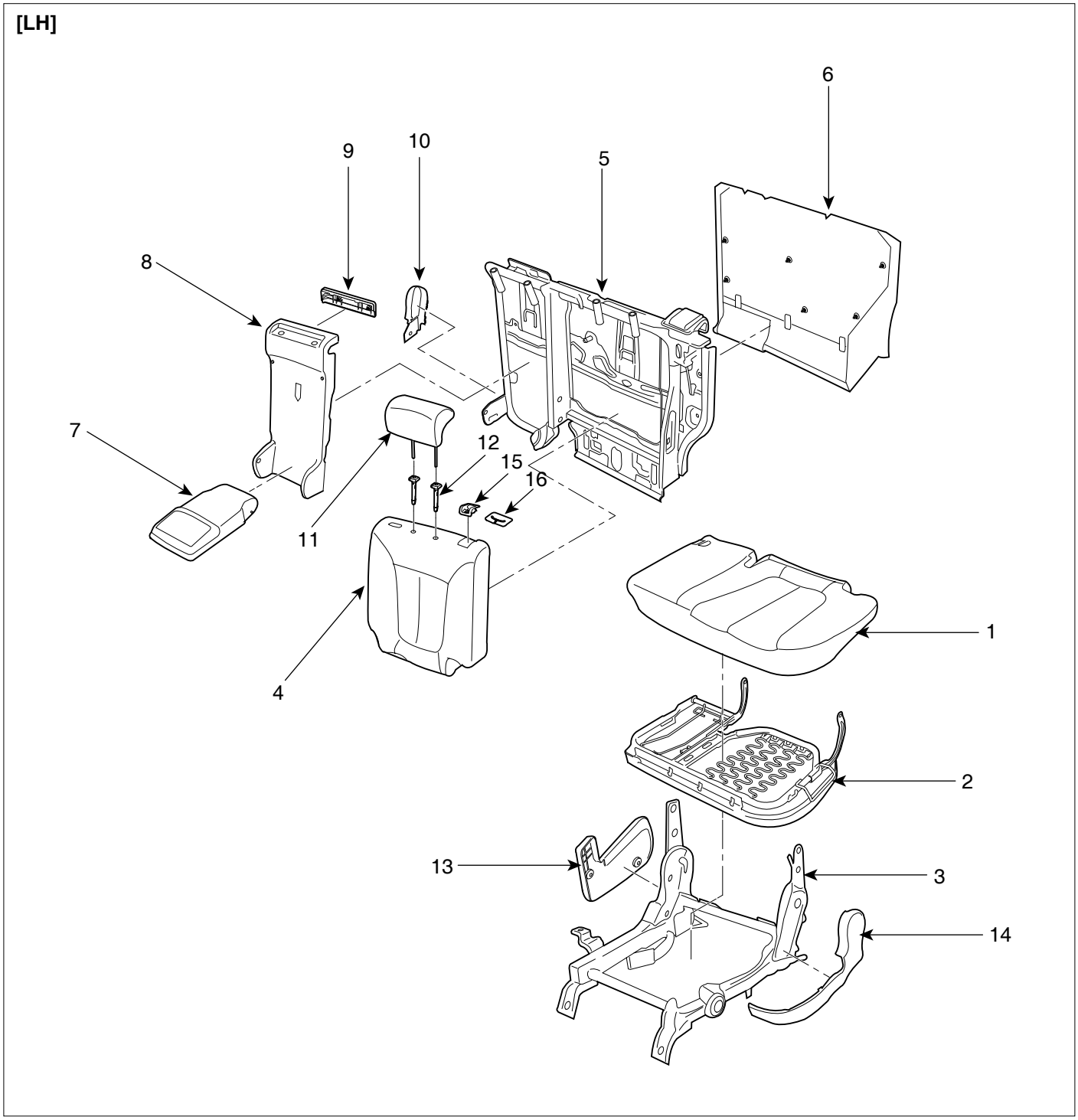

1. Seat cushion cover
2. Seat cushion frame
3. Leg assembly
4. Seat back cover
5. Seat back frame
6. Seat back panel
7. Armrest
8. Armrest cover
9. cover
10. Recliner cover
11. Headrest
12. Headrest guide
13. Recliner cover
14. Recliner cover
15. Recliner lever cover
16. Seat belt guide

SCMBD6221L

REPLACEMENT EE371E54

SECONDARY SEAT

SEAT ASSEMBLY REPLACEMENT(RH)

1. Loosen the mounting bolt, then remove the rear seat assembly (A).

▷: Bolt Locations, 2

43.1~64.7 N.m (4.4~6.6 Kgf.m, 31.8~47.7 lbf.ft)

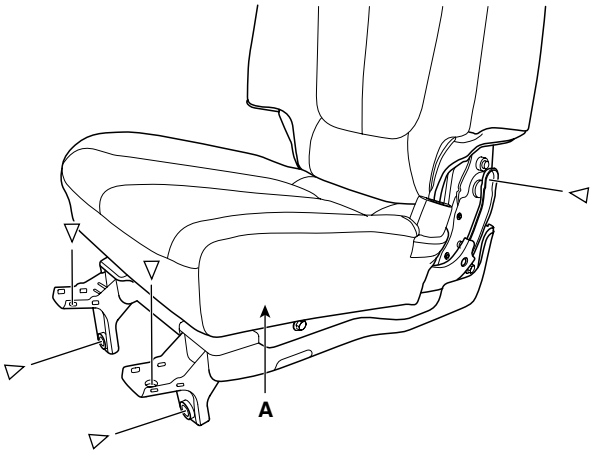

SCMBD6519L

2. Installation is the reverse of removal.

SEAT BACK COVER REPLACEMENT

1. Remove the recliner cover (A).

▷: Screw Locations, 1

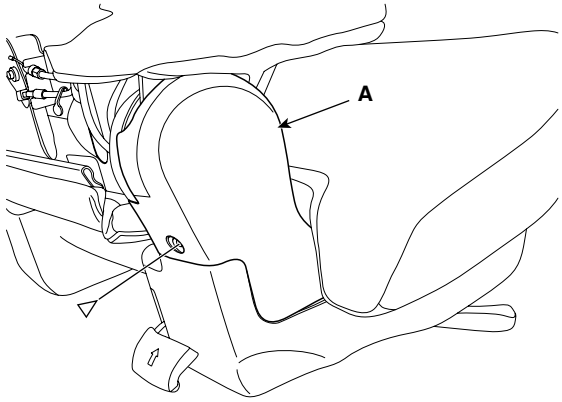

SCMBD6128L

2. Remove the back panel (A).

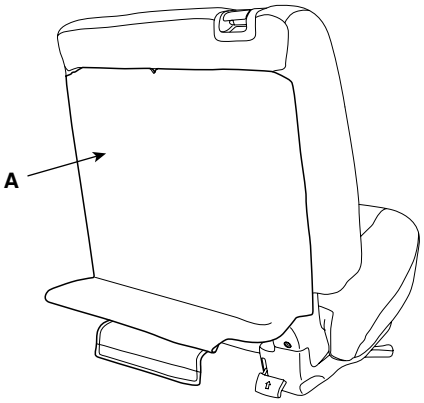

SCMBD6129D

3. Remove the recliner lever cover (A).

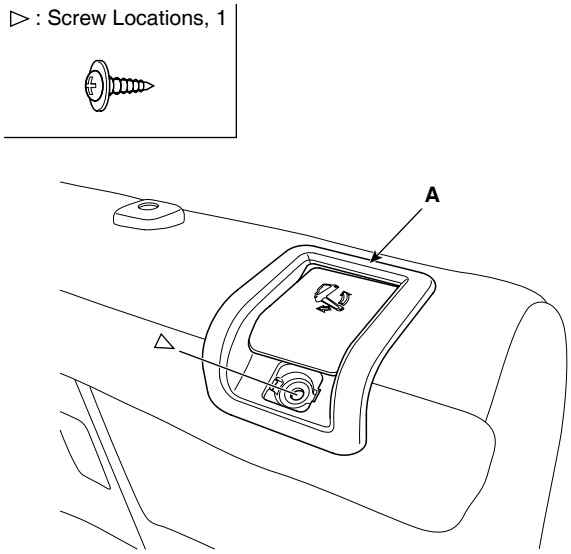

SCMBD6130L

4. Disconnect the protector (A).

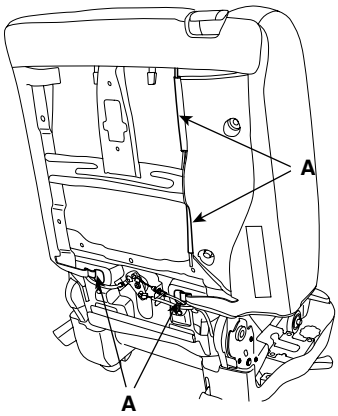

SCMBD6131D

5. Remove the headrest and headrest guide (A).

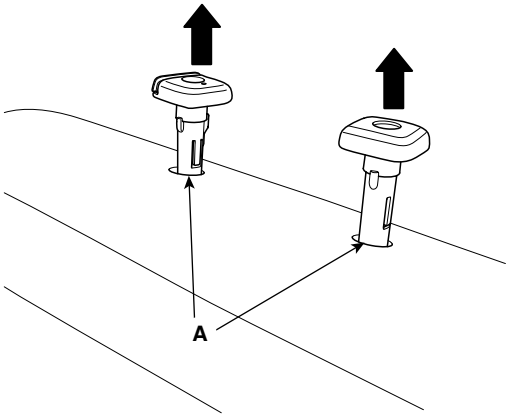

SCMBD6132D

6. Remove the seat back (A).

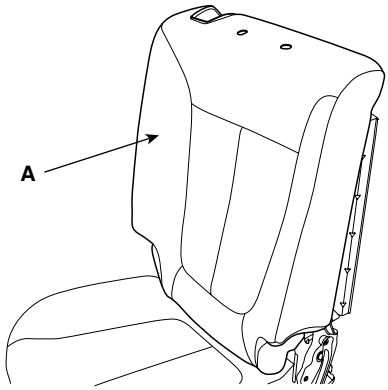

SCMBD6133D

7. Remove the seat back cover (B).

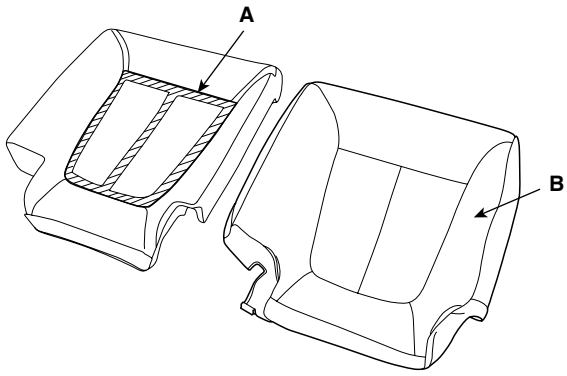

SCMBD6134D

8. Installation is the reverse of removal.

SEAT CUSHION COVER REPLACEMENT

1. Remove the cover (A).

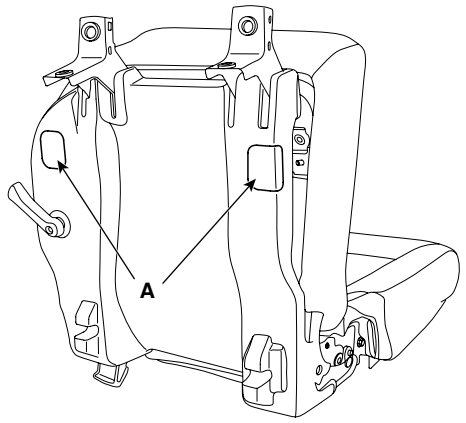

SCMBD6135D

2. Loosen the seat cushion (A) mounting bolts.

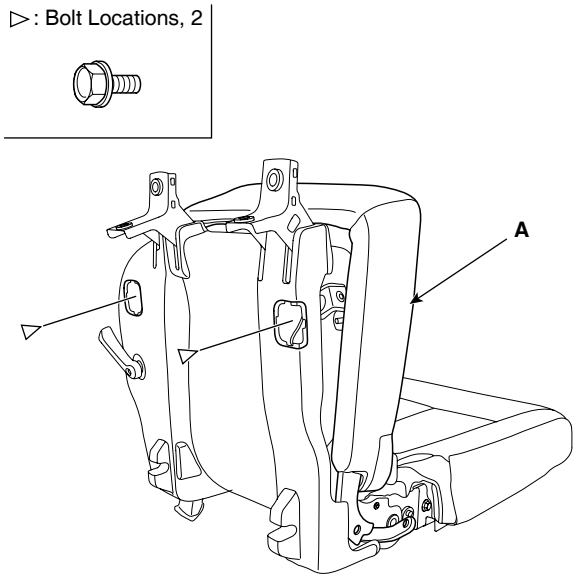

SCMBD6136L

3. After loosening the mounting bolts, then remove the seat cushion (A).

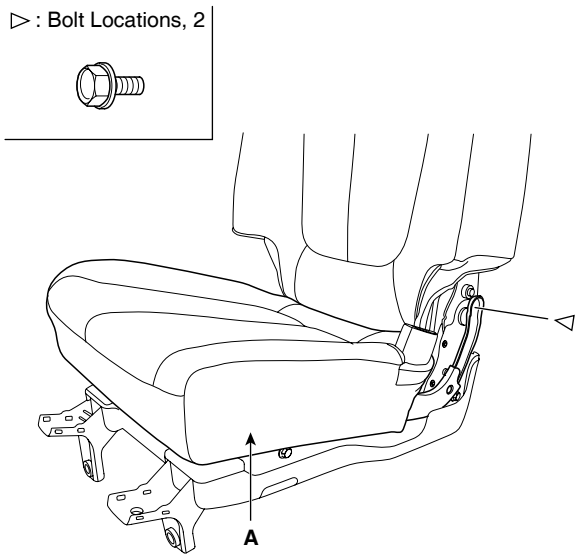

SCMBD6137L

4. Disconnect the scuff bend (A).

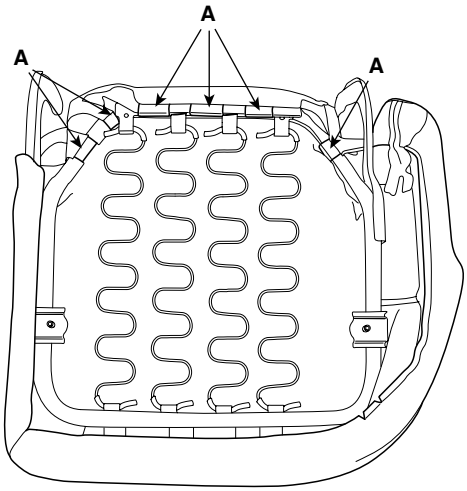

SCMBD6138D

5. Remove the seat cushion (A).

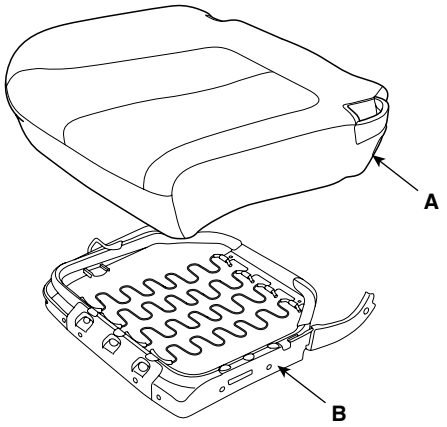

SCMBD6139D

6. Disconnect the adhesives (A) on the front of seat cushion, remove the seat cushion cover (B).

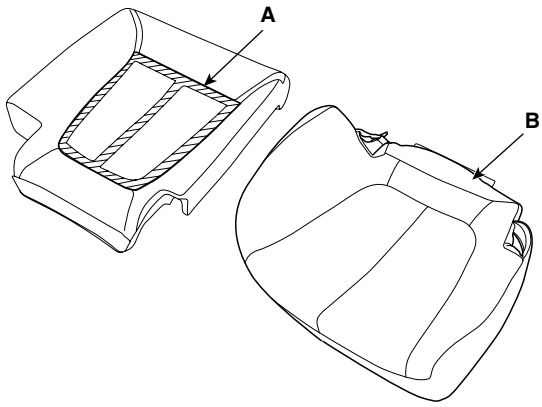

SCMBD6140D

7. Installation is the reverse of removal.

SEAT FRAME REPLACEMENT

1. Remove the recliner cover. (See page BD- 102)
2. Remove the headrest and headrest guide. (See page BD- 103)
3. Remove the seat back cover. (See page BD- 102)
4. Remove the seat cushion cover. (See page BD- 104)
5. Remove the cover (A).

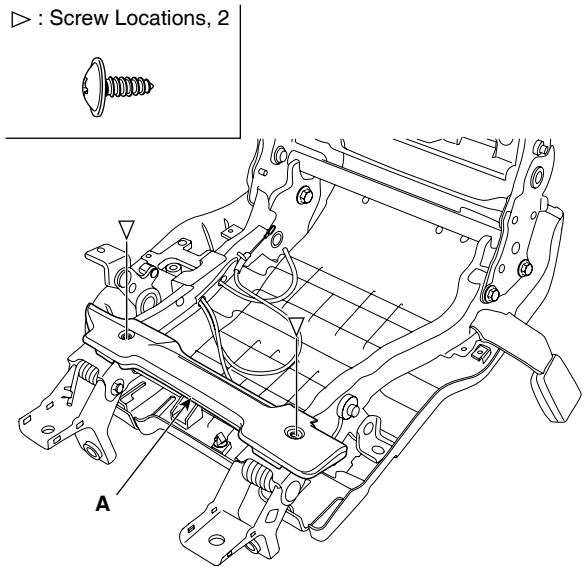

SCMBD6141L

6. Remove the recliner lever (A).

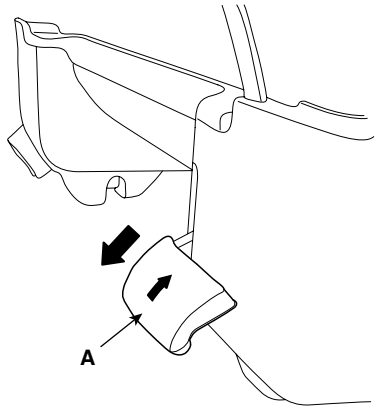

SCMBD6142D

7. After loosening the mounting screw, then remove the recliner cover (A).

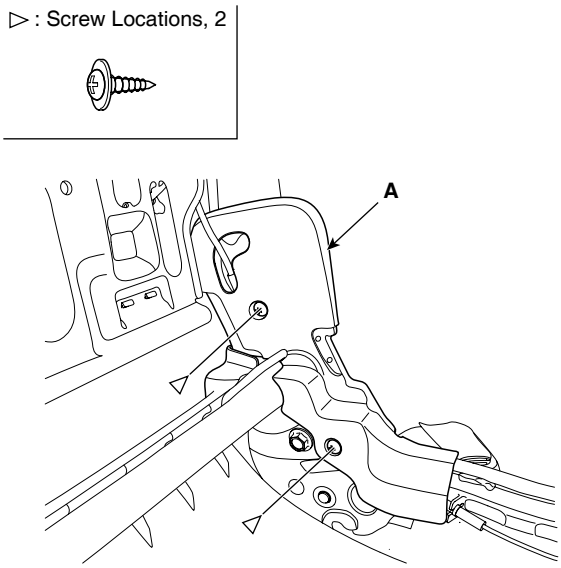

SCMBD6143L

8. Remove the recliner cable (A).

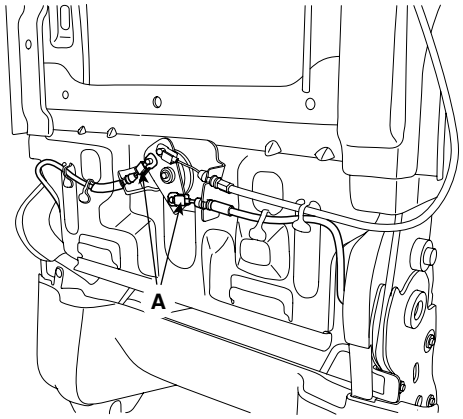

SCMBD6144D

9. Remove the cover (A).

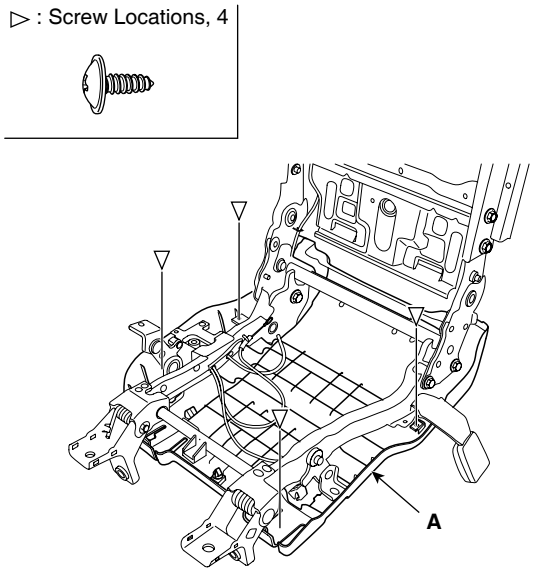

SCMBD6145L

10. After loosening the mounting bolts, then disconnect the seat back frame (A) and seat cushion frame (B).

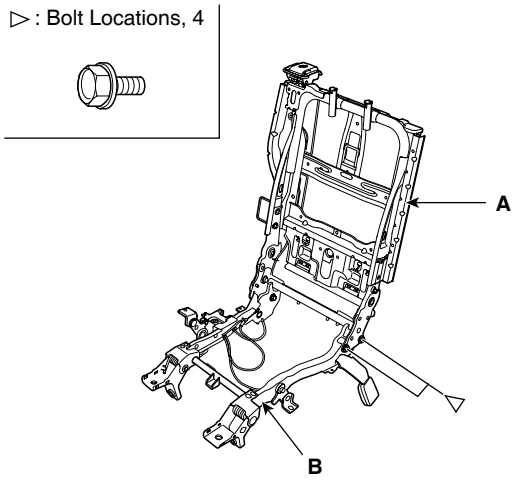

SCMBD6146L

11. Installation is the reverse of removal.

SEAT ASSEMBLY REPLACEMENT(LH)

1. After loosening the mounting bolts, then remove the seat assembly (A).

▷ : Bolt Locations, 4

43.1~64.7 N.m (4.4~6.6 Kgf.m, 31.8~47.7 lbf.ft)

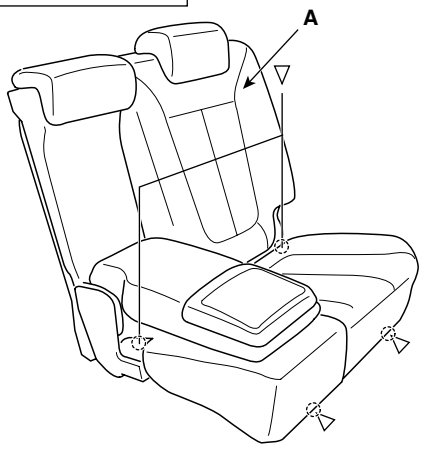

SCMBD6192L

2. Installation is the reverse of removal.

ARMREST ASSEMBLY REPLACEMENT

1. Remove the recliner cover (A).

▷ : Screw Locations, 2

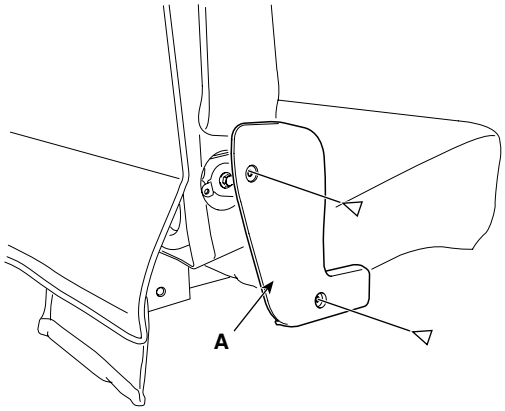

SCMBD6193L

2. After loosening the mounting bolt, then remove the assembly (A) armrest.

▷ : Bolt Locations, 1

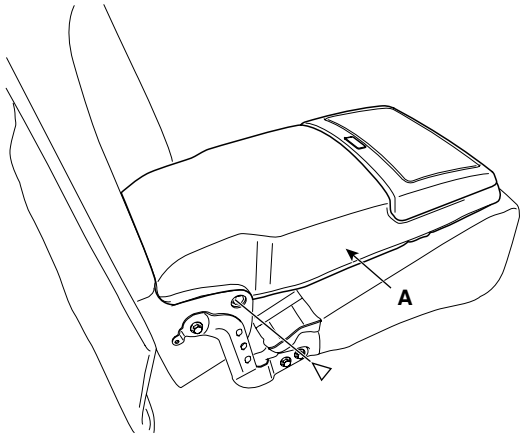

SCMBD6194L

3. Installation is the reverse of removal.

SEAT BACK COVER REPLACEMENT

1. Remove the recliner cover (A).

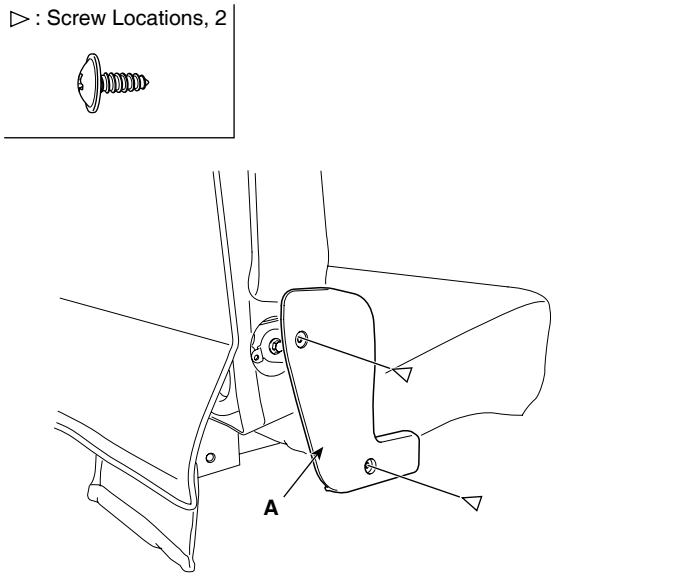

SCMBD6193L

2. Remove the armrest assembly. (See page BD- 107)
3. Remove the recliner mounting bracket (A).

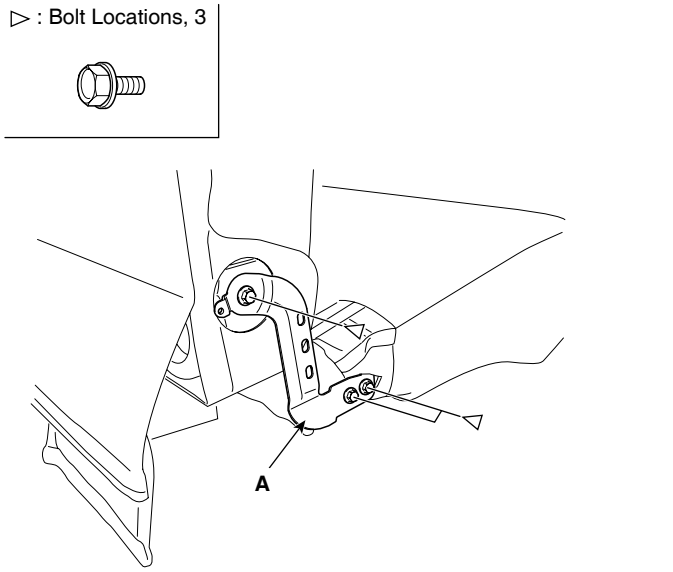

SCMBD6195L

4. Disconnect the scuff band (A).
5. Remove the seat back panel (B).

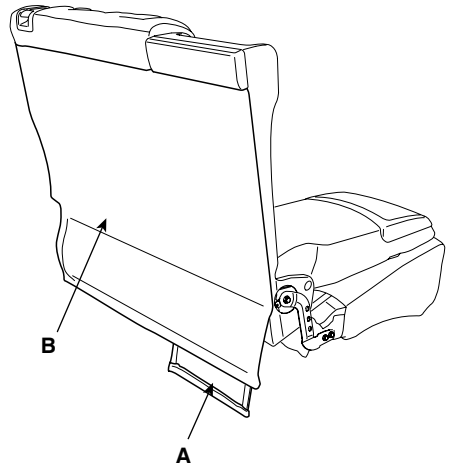

SCMBD6196D

6. Remove the recliner cover (A).

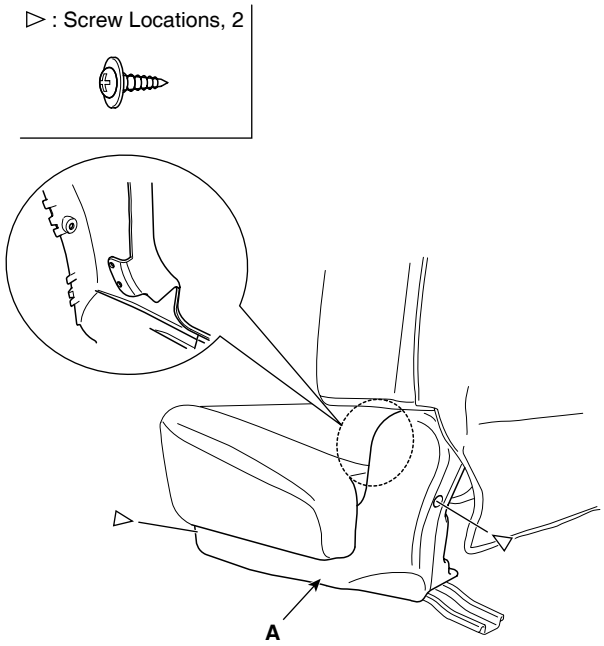

SCMBD6197L

7. Remove the headrest and headrest guide (A).

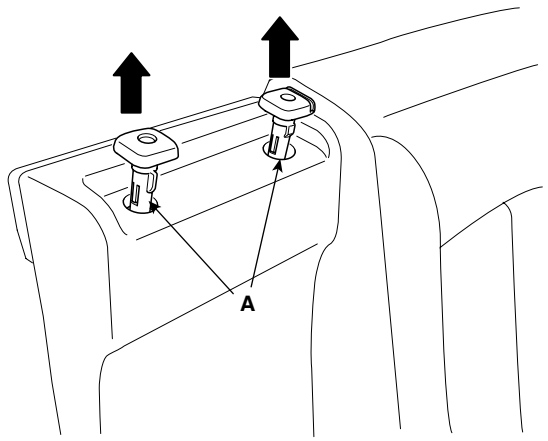

SCMBD6198D

8. Remove the cover (A).

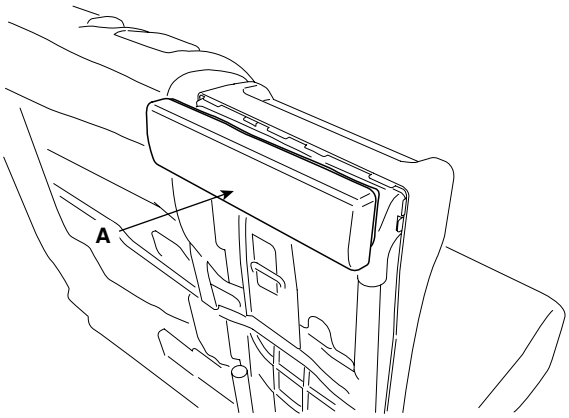

SCMBD6199D

9. After loosening the mounting screw, then remove the armrest cover (A).

Fastener Locations

▶ : Clip, 2	▷ : Screw, 2
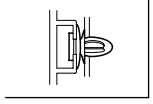	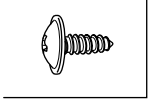

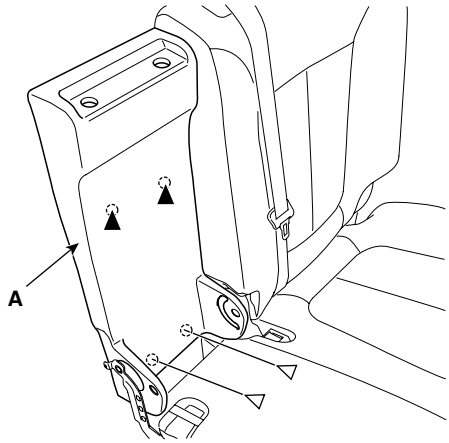

SCMBD6200L

10. Remove the seat belt lower anchor (A).

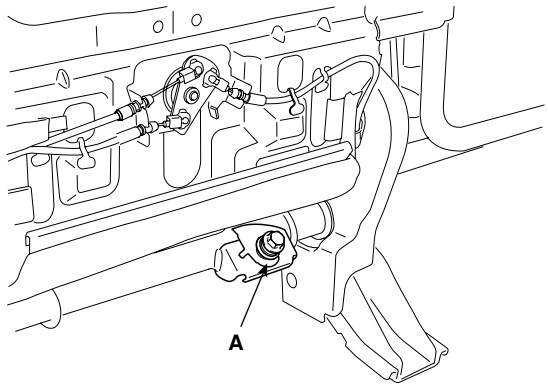

SCMBD6201D

11. After loosening the mount screw, then remove the recliner lever cover (A).

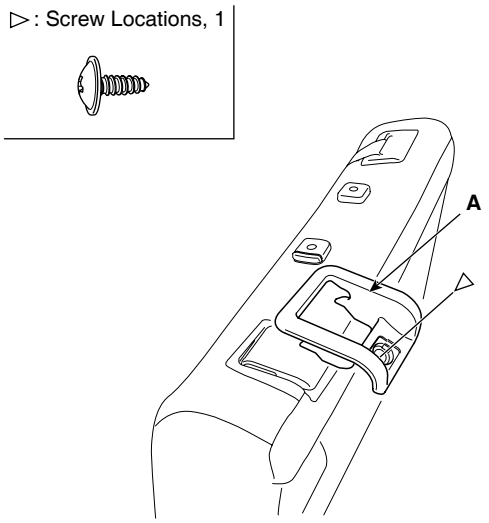

SCMBD6202L

12. Remove the headrest and headrest guide (A).

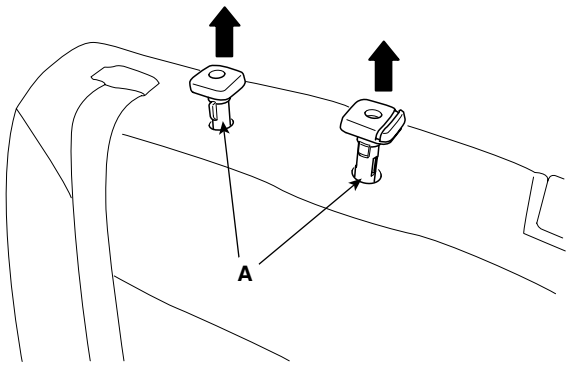

SCMBD6504D

13. Disconnect the protector (A).

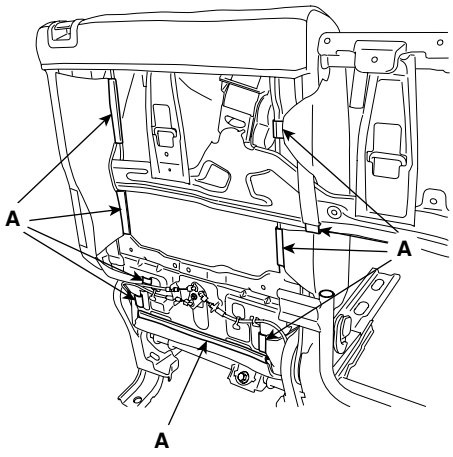

SCMBD6203D

14. Remove the seat back (A).

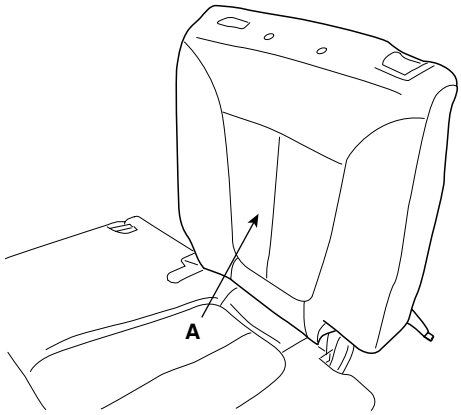

SCMBD6204D

15. Remove the seat back cover (A).

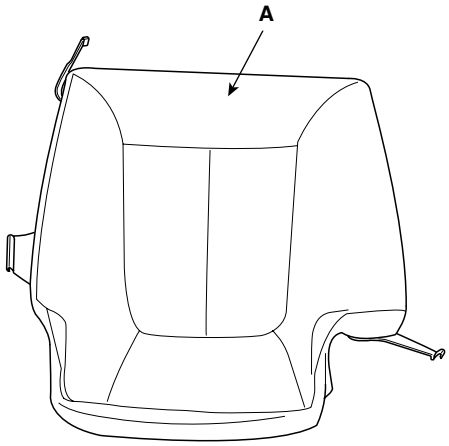

SCMBD6205D

16. Installation is the reverse of removal.

SEAT CHUSION COVER REPLACEMENT

1. Disconnect the protector (A).

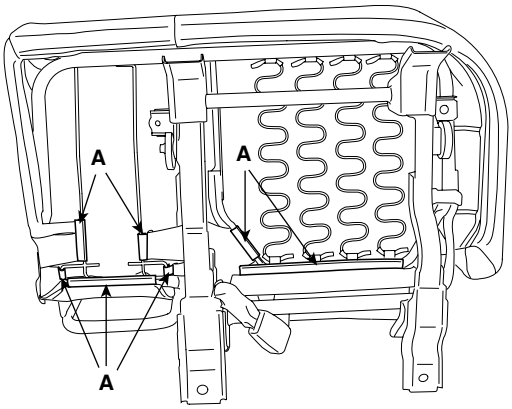

SCMBD6206D

2. After loosening the mounting screw, then remove the recliner cover (A).

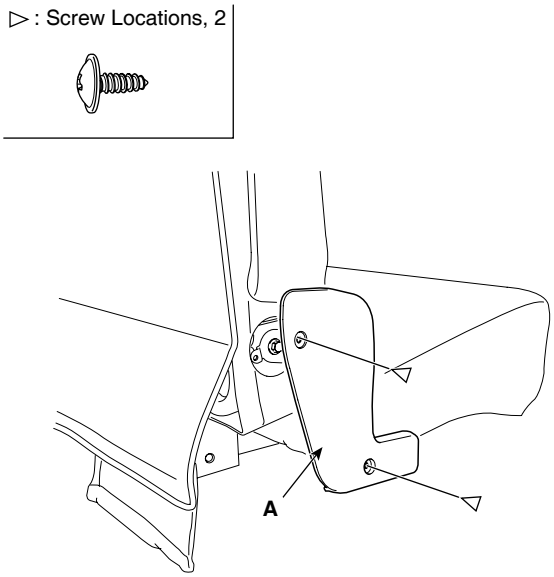

SCMBD6193L

3. Remove the bracket (A).

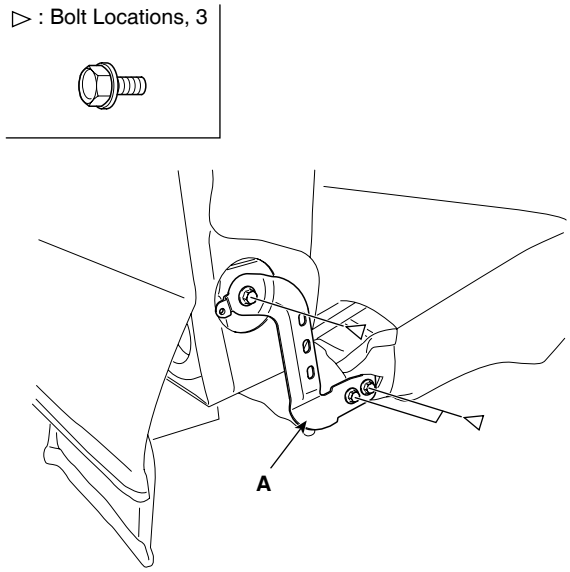

SCMBD6195L

4. Remove the seat cushion (A).

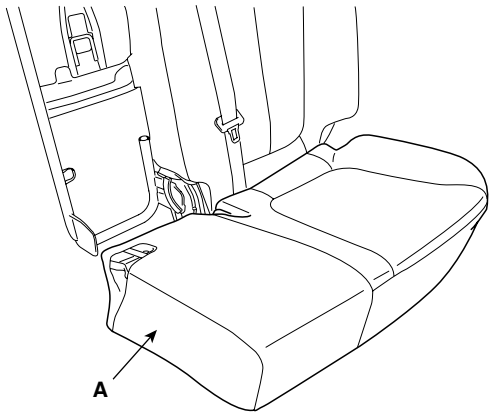

SCMBD6207D

5. Remove the seat cushion cover (A).

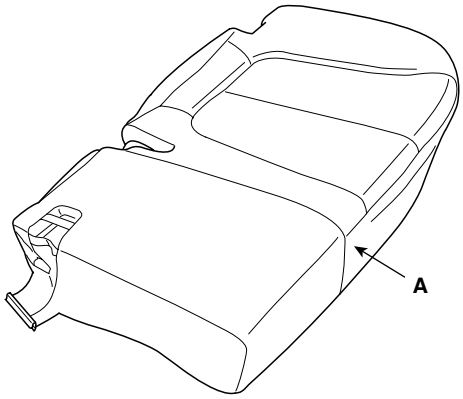

SCMBD6208D

6. Installation is the reverse of removal.

SEAT FRAME REPLACEMENT

1. Remove the seat back cover. (See page BD- 108)
2. Remove the seat cushion cover. (See page BD- 111)
3. Remove the recliner cable (A).

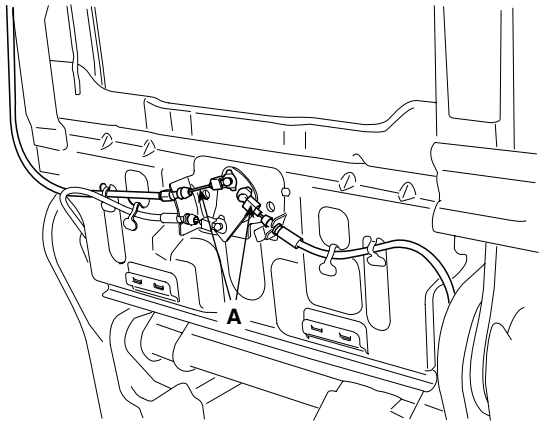

SCMBD6209D

4. After loosening the mounting bolts, then remove the seat back frame (A).

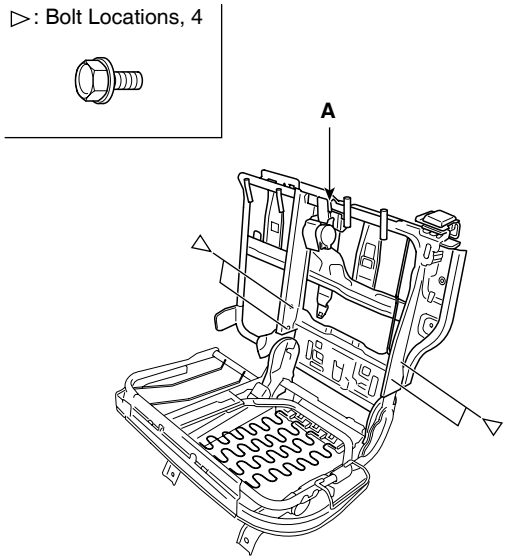

SCMBD6210L

5. After loosening the mounting screw, then remove the recliner cover (A).

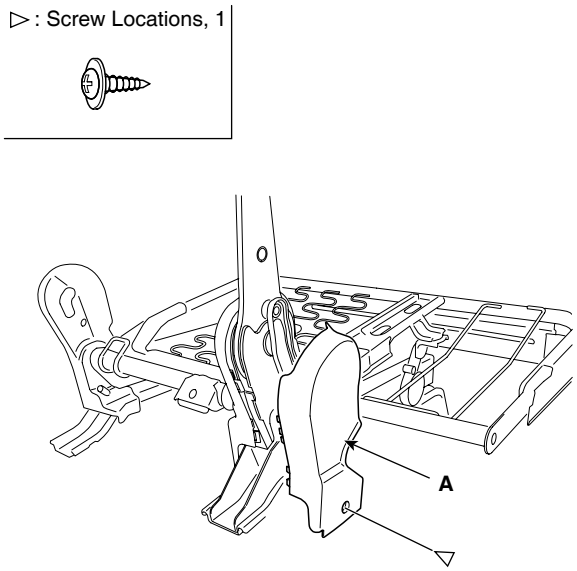

SCMBD6211L

6. Loosen the mounting bolts.

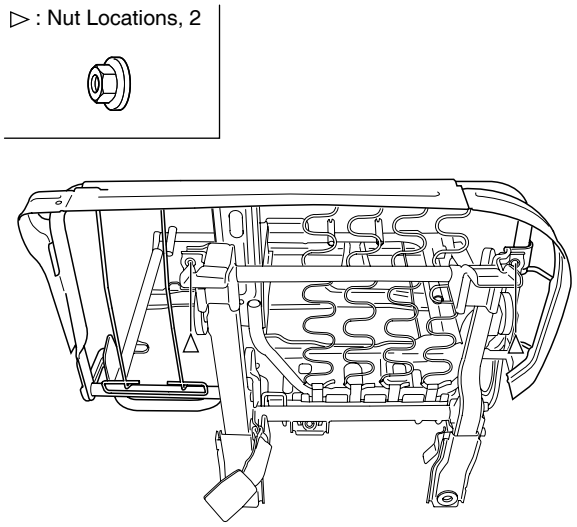

SCMBD6212L

7. After loosening the mounting bolts, then remove the seat cushion frame (A).

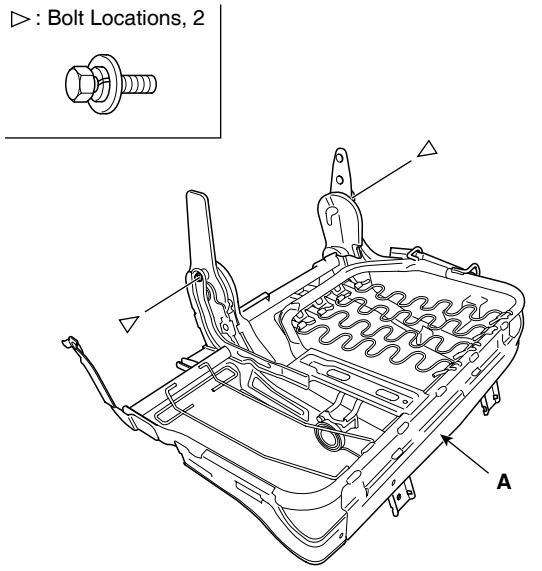

SCMBD6213L

8. Installation is the reverse of removal.

THIRD SEAT

SEAT ASSEMBLY REPLACEMENT

1. Loosen the mounting bolts.

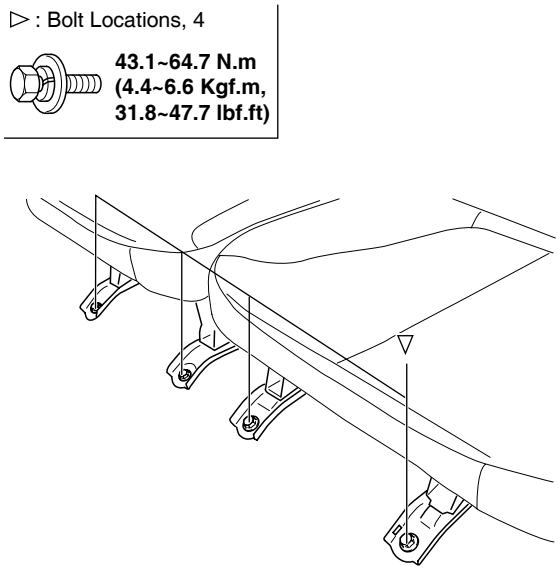

SCMBD6214L

2. Remove the extinguisher and tool (A).

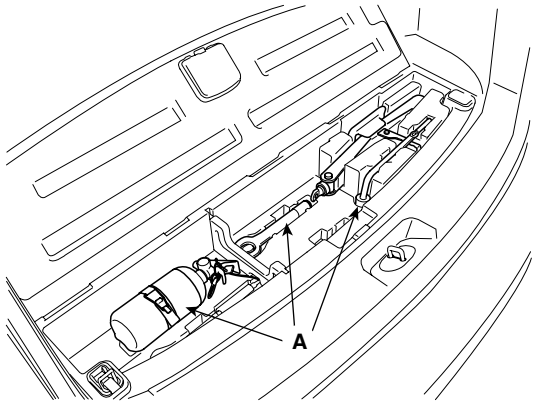

SCMBD6219D

3. After loosening the mounting screw, then remove the luggage flower box (A).

▷ : Screw Locations, 3

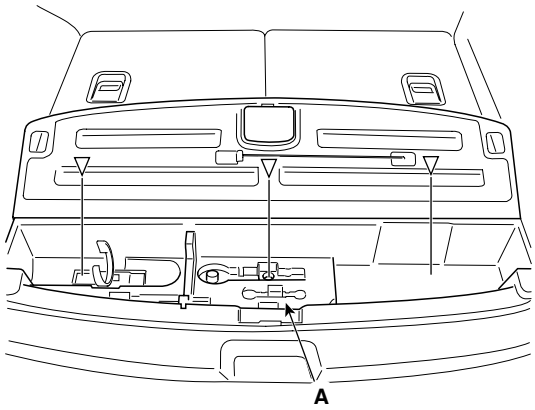

SCMBD6215L

4. Loosen the mounting bolts.

▷ : Bolt Locations, 4

43.1~64.7 N.m (4.4~6.6 Kgf.m, 31.8~47.7 lbf.ft)

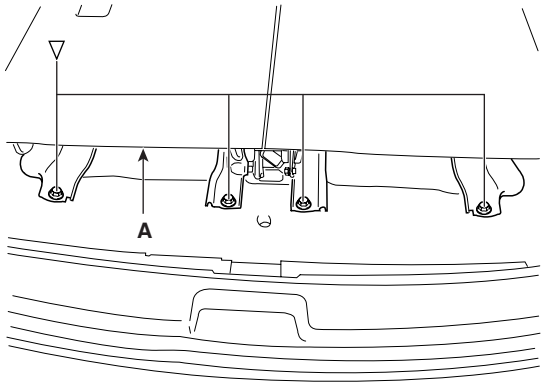

SCMBD6216L

5. Installation is the reverse of removal.

SEAT BACK COVER REPLACEMENT

1. Remove the third seat assembly. (See page BD- 113)

2. After loosening the mounting screw, then remove the recliner lever cover (A).

▷ : Screw Locations, 1

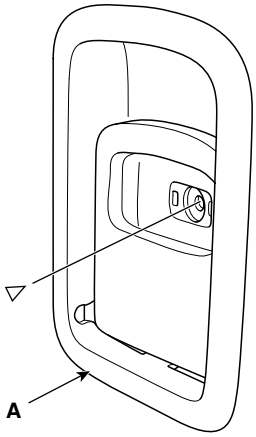

SCMBD6147L

3. Remove the hook (A).

▷ : Screw Locations, 1

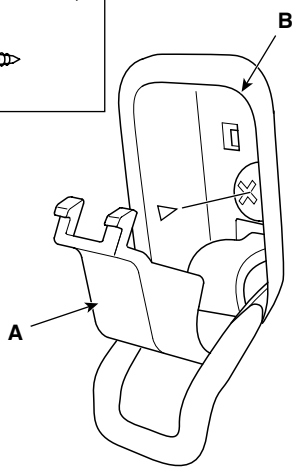

SCMBD6148L

4. Remove the seat back panel (A).

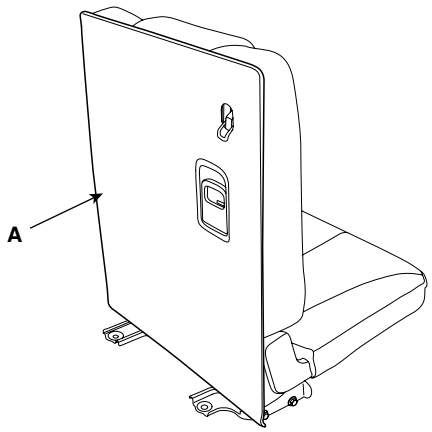

SCMBD6149D

5. Disconnect the scuff band (A).

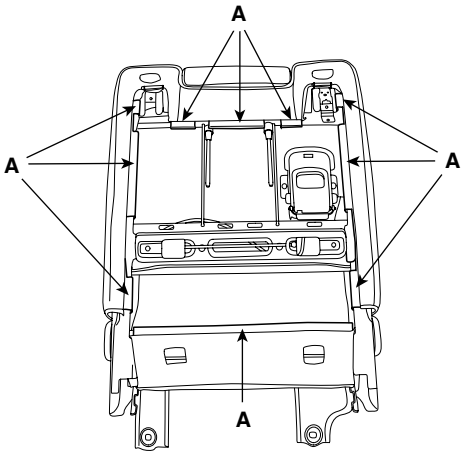

SCMBD6150D

6. Remove the headrest and headrest guide (A).

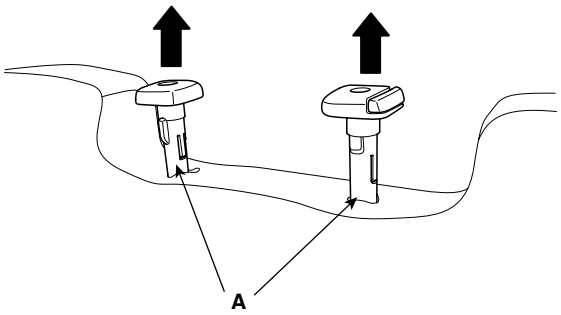

SCMBD6151D

7. Remove the seat back (A).

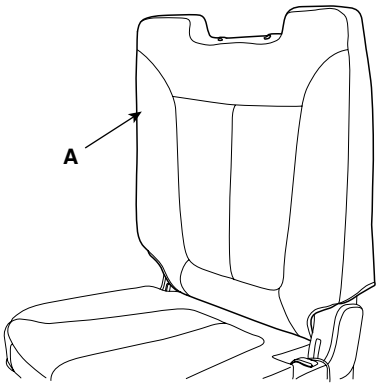

SCMBD6152D

8. Disconnect the adhesives (A) on the front of seat back, remove the seat back cover (B).

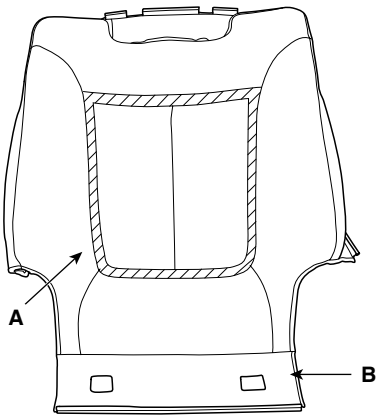

SCMBD6153D

9. Installation is the reverse of removal.

SEAT CUSHION COVER REPLACEMENT

1. Remove the third seat assembly. (See page BD- 113)

2. Disconnect the scuff band (A).

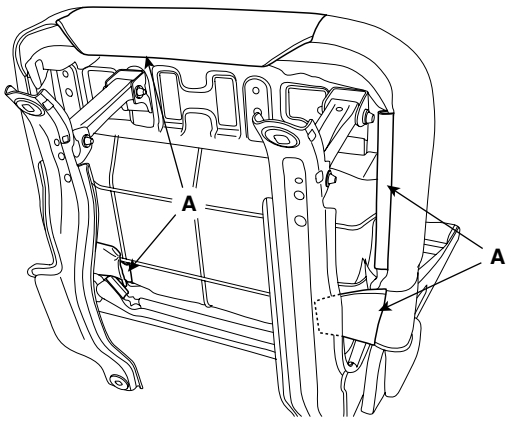

SCMBD6154D

3. Remove the seat cushion (A).

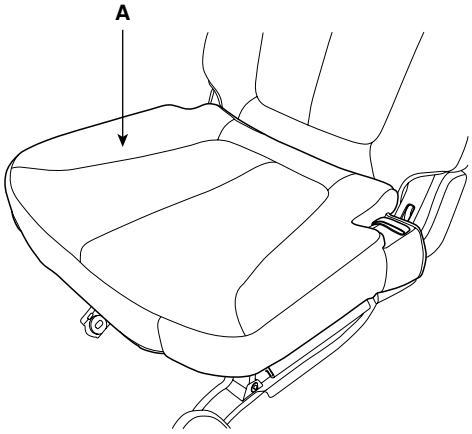

SCMBD6155D

4. Disconnect the adhesives (A) on the front of seat cushion, remove the seat cushion cover (B).

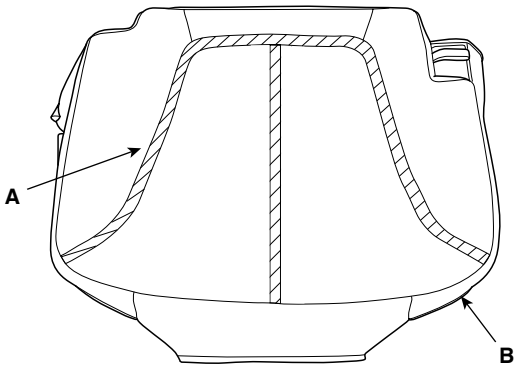

SCMBD6156D

5. Installation is the reverse of removal.

SEAT FRAME REPLACEMENT

1. Remove the seat back cover. (See page BD- 113)
2. Remove the seat cushion cover. (See page BD- 116)
3. After loosening the mounting bolts, then disconnect the seat back frame (A) and seat cushion frame (B).

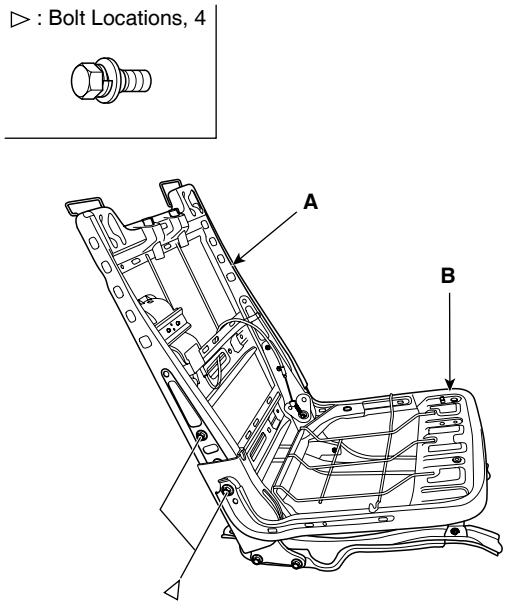

SCMBD6157L

4. Installation is the reverse of removal.

SEAT BELT

REPLACEMENT E7AFB1F3

FRONT SEAT BELT REPLACEMENT

CAUTION

- ***When installing the belt, make sure not to damaged the pretensioner.***

1. Remove the following items first.
   - Front seat assembly. (See page BD- 94)
   - Front and rear door scuff trim. (See page BD- 81)

2. After raise the lower anchor cover (A), loosen the lower anchor mounting bolt (B).

▷: Bolt, **39.2~53.9N.m (4.0 ~ 5.5Kgf.m, 28.9~39.8lbf.ft)**

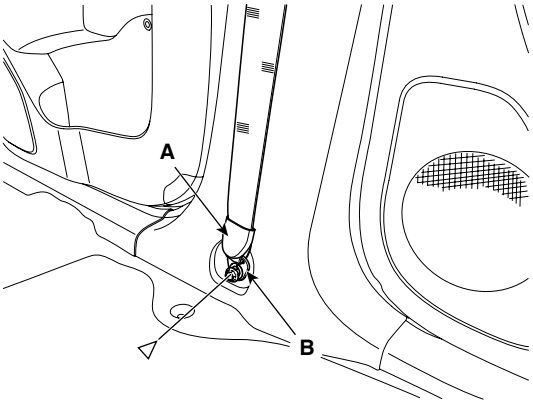

SCMBD6158L

3. Remove the center pillar lower trim. (See page BD-82)

4. Remove the center pillar upper trim. (See page BD-82)

5. Remove the upper anchor (A).

6. After disconnecting the pretensioner connector lock pin, remove the connector (B), Loosen the mounting bolt, then remove the pretensioner (C).

▷: Bolt, **39.2~53.9N.m (4.0 ~ 5.5Kgf.m, 28.9~39.8lbf.ft)**

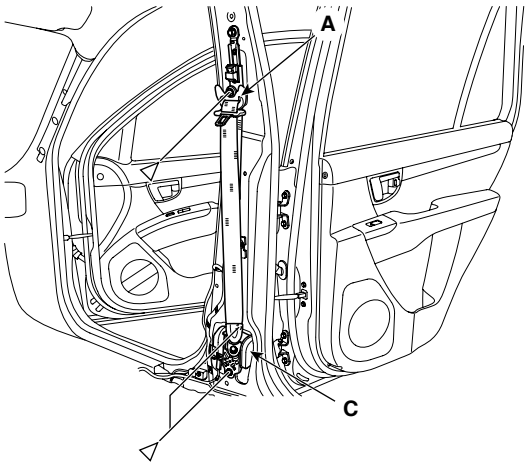

SCMBD6159L

7. Installation is the reverse of removal.

SECONDARY SEAT BELT RELACEMENT

CAUTION

- ***When installing the belt, make sure not to damaged the pretensioner.***

1. Remove the following items first.
   - Rear seat assembly. (See page BD- 113)
   - Rear door scuff trim. (See page BD- 81)

2. Remove the lower anchor (A).

▷: Bolt, **39.2~53.9N.m (4.0 ~ 5.5Kgf.m, 28.9~39.8lbf.ft)**

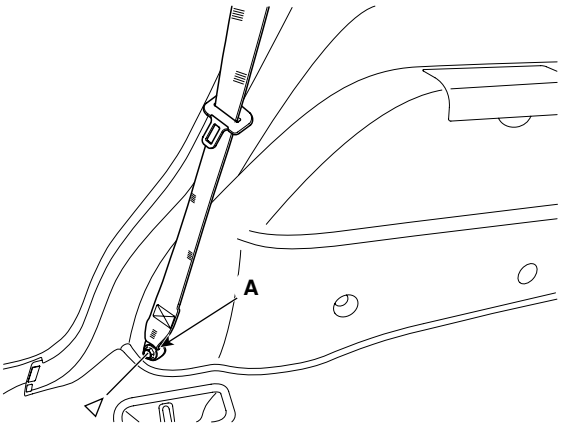

SCMBD6160L

3. Remove the third seat lower anchor and lower anchor. (See page BD- 120)

4. Remove the luggage side trim. (See page BD- 84)

5. Remove the gate pillar trim. (See page BD- 83)

6. Remove the upper anchor (A).

7. After loosening the retractor (B) mounting bolt, remove the rear seat belt (C).

▷: Bolt, **39.2~53.9N.m (4.0 ~ 5.5Kgf.m, 28.9~39.8lbf.ft)**

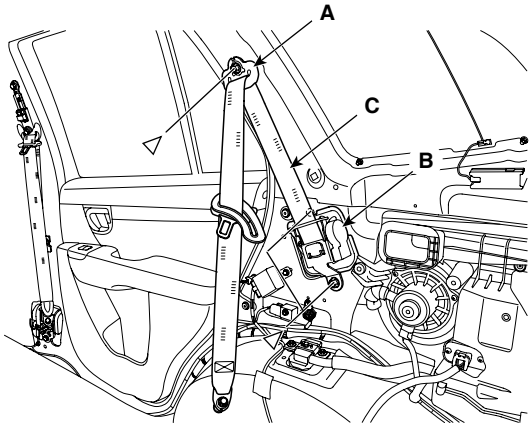

SCMBD6161L

8. Installation is the reverse of removal.

SECONDARY CENTER SEAT BELT REPLACEMENT

1. Remove the secondary seat assembly. (See page BD- 107)
2. Remove the seat back cover. (See page BD- 108)
3. After loosening the mounting bolts, then remove the seat belt (A).

▷ : Nut Locations, 1

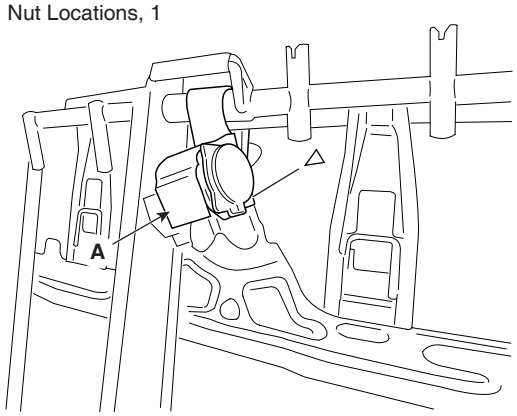

SCMBD6217L

4. Installation is the reverse of removal.

THIRD SEAT BELT RELACEMENT

CAUTION

- ***When installing the belt, make sure not to damaged the pretensioner.***

1. Remove the following items first.
   - Rear seat assembly. (See page BD- 102, 113)
   - Rear door scuff trim. (See page BD- 81)
   - Tranverse trim. (See page BD- 84)
2. Remove the upper anchor (B).
3. Remove the lower anchor (A).

▷: Bolt, **39.2~53.9N.m (4.0 ~ 5.5Kgf.m, 28.9~39.8lbf.ft)**

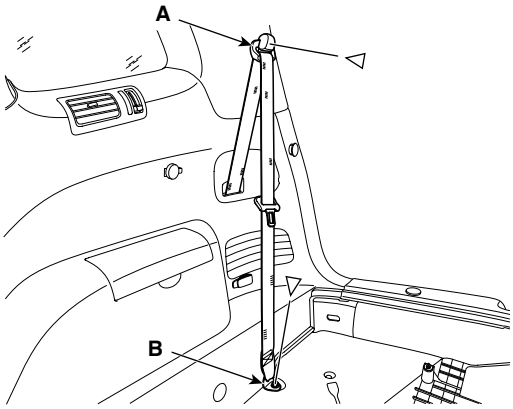

SCMBD6162L

4. Remove the secondary seat lower anchor. (See page BD- 119)
5. Remove the luggage side trim. (See page BD- 84)
6. After loosening the retractor (B) mounting bolt, remove the rear seat belt.

▷: Bolt, **39.2~53.9N.m (4.0 ~ 5.5Kgf.m, 28.9~39.8lbf.ft)**

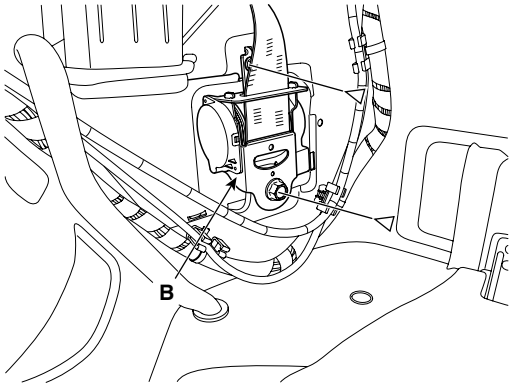

SCMBD6163L

7. Installation is the reverse of removal.

FRONT SEAT BELT BUCKLE REPLACEMENT

1. Remove the front seat assembly. (See page BD- 94)
2. Remove the wire harness of buckle from seat(B).
3. Remove the seat belt buckle (A).

▷: Bolt, **39.2~53.9N.m (4.0 ~ 5.5Kgf.m, 28.9~39.8lbf.ft)**

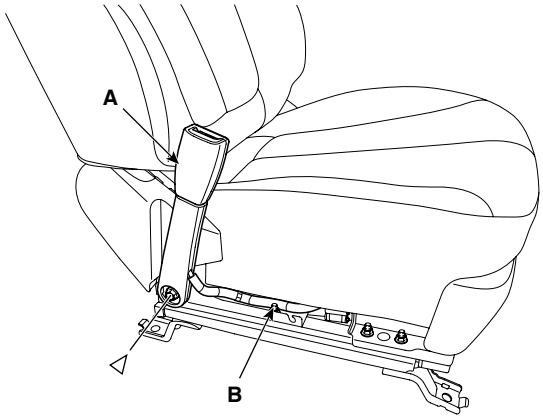

SCMBD6164L

4. Installation is the reverse of removal.

SECONDARY SEAT BELT BUCKLE REPLACEMENT

1. Remove the secondary seat assembly. (See page BD- 102)
2. Remove the secondary seat cushion. (See page BD- 111)
3. Remove the seat belt buckle (A).

▷: Bolt, **39.2~53.9N.m (4.0 ~ 5.5Kgf.m, 28.9~39.8lbf.ft)**

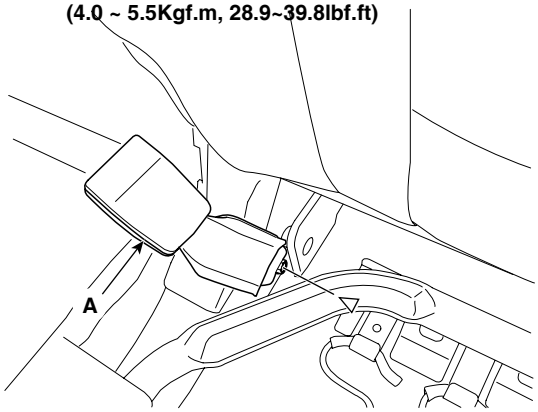

SCMBD6218L

4. Installation is the reverse of removal.

THIRD SEAT BELT BUCKLE REPLACEMENT

1. Remove the third seat assembly. (See page BD- 113)
2. Remove the seat belt buckle (A).

▷: Bolt, **39.2~53.9N.m (4.0 ~ 5.5Kgf.m, 28.9~39.8lbf.ft)**

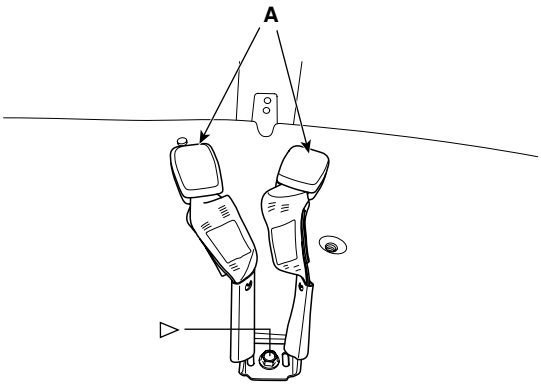

SCMBD6165L

3. Installation is the reverse of removal.

HEIGHT ADJUSTER REPLACEMENT

1. Remove the following items first.
   - Front assembly. (See page BD- 94)
   - Front and rear door scuff trim. (See page BD- 81)
   - Front seat belt upper and lower anchor. (See page BD- 120)
   - Center pillar lower and upper trim. (See page BD- 82)
2. Loosen the mounting bolts, then remove the height adjuster (A).

▷: Bolt, **39.2~53.9N.m (4.0 ~ 5.5Kgf.m, 28.9~39.8lbf.ft)**

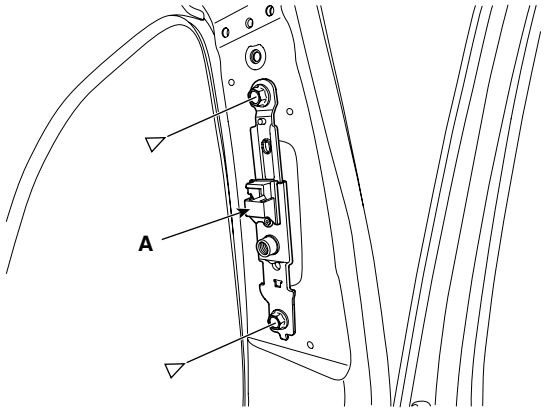

SCMBD6166L

3. Installation is the reverse of removal.