eLEARN

GESTIONE ELETTRONICA MOTORI DIESEL

191 - Giulietta

cardiagn.com

DIESEL ENGINE ELECTRONIC MANAGEMENT - DESCRIPTION

An electronic control system supervises and governs all engine parameters to optimise performance and fuel consumption by means of a real-time response to different operation conditions.

Diesel engines are equipped with a COMMON RAIL type injection system.

This features the use of an electronically controlled high injection pressure. The supply of fuel, known as the pilot injection, is optimised by the electronic control unit by means of the injector, rather than being managed by the pump.

In this 4 valve per cylinder version, the common rail injection system uses MultiJet technology: i.e. during each engine stroke, it carries out more than the two injections normally used: it performs two pre-injections (before the piston is at top dead centre), one main and two post-injections.

This solution improves fuel consumption, emissions, noise levels and performance because it allows better control of temperature in the combustion chamber by lowering the maximum value and extending the optimum combustion area.

The throttle body is also controlled electronically by the control unit: the throttle opening is calculated in accordance with a specific logic inside the engine management control unit.

Depending on the signals received from numerous sensors, the control unit manages the injectors connected to it, handling the following systems:

- fuel supply;

- air supply;

- heater plugs;

- accelerator pedal;

- engine cooling;

- emission control (Lambda sensor and particulate filter);

- EGR control.

To respect the latest emission control regulations, the most recent electronic on-board management version is used, comprising new components (injectors, pressure regulator and high pressure pump, digital flow meter) and the adoption of a Lambda sensor.

This improves the air/fuel mixture in the combustion chamber: regulating the flow of air: with the throttle open the power supply is at a maximum; closing the throttle gradually reduces the load, the engine rpm and also the emissions.

In addition, the new EGR module fitted on this engine makes it possible to choose whether to cool the exhaust gases or exclude the cooling process by means of a by-pass.

This operation, managed entirely by the engine management control unit, makes it possible to ensure optimum operation of the EGR in terms of nitrogen oxide reduction without adversely affecting hydrocarbon (HC) and carbon monoxide (CO) emissions.

Emissions are further reduced by adopting a swirl solenoid valve which optimises air/fuel mixing in the combustion chamber by adjusting the air flow: with the throttle open the power supply is at a maximum; closing the throttle gradually reduces the load, the engine rpm and also the emissions.

In addition to the oxygen sensor a DPF (Diesel Particulate Filter) is also used: it is a mechanical filter, inserted in the exhaust pipes, which traps the carbon particles present in the Diesel engine exhaust gases. The filter makes it possible to almost totally eliminate the emission of carbon particles in line with current legislation.

See E5070 PARTICLE FILTER SYSTEM

For more details,

See descriptions 1060 DIESEL INJECTION FUEL SYSTEM

The system is also controlled by dedicated relays in the engine compartment junction unit.Lines supplying the control unit and various system components (sensors and actuators) are protected by dedicated fuses that are also located in the junction unit.

cardiagn.com

DIESEL ENGINE ELECTRONIC MANAGEMENT - FUNCTIONAL DESCRIPTION

Engine management control unit M010 controls and governs the entire electronic ignition and injection system.

The ignition-operated supply comes from the line protected by fuse F16 of the engine compartment control unit B001 to pin 28 of connector A of M010.

The pins 2, 4 and 6 of connector A of M010 are earthed.

The main injection relay switch T9 of B001 controls the entire system: this is protected by a line protected by fuse F18 of the engine compartment junction unit B1 and is energised by a control signal (earth) from pin 72 of connector A of the control unit M010 and thus sends power supply:

- to pin 1 of connector A of the control unit, through the line from fuse F17 of B001;

- to pin 5 of connector A of the control unit, through the line from fuse F22 of B001;

- to the solenoid valves L036, N075, L064 and L103; to the control unit M015, to the flow meter K041 and to the oxygen sensor K040 through the line from fuse F11 of B001.

The fuel pump relay switch T10 is energised by a control signal (earth) coming from pin 20 of connector A of the control unit M010 and provides power supply, through the line for fuse F21 of B001, for the fuel pump N040.

The control unit M015, which manages the preheating of the glow plugs A040 receives power supply, connector A pin 5, directly from the battery through the line protected by MAXIFUSE F81 of B001.

It is supplied - pin 4 - by the line for fuse F11 of B001, receiving - pin 3 - a reference earth from pin 16 of connector A of M010 and exchanges command and control signals - pins 1 and 2 - with pins 52 and 93 of connector A of M010 which controls the timing. The connector B is connected to the glow plugs A040.

The engine management control unit M010 receives signals from the various sensors, thereby keeping all the engine operating parameters under control.

The rpm sensor K046 sends a reference earth from pin 12 of connector B of the control unit M010 and sends a signal about the engine speed to pin 27 of the connector B of M010.

The timing sensor K047 is supplied from pin 11 of connector B of M010. It receives a reference earth from pin 20 of connector B of control unit M010 and this in turn generates a frequency signal corresponding to the phase at pin 50 of connector B.

The engine temperature sensor K036 receives a reference earth from pin 41 of connector B of the control unit M010 and sends a signal proportional to the engine coolant temperature to pin 58 of connector B.

The air flow meter K041 - "ignition-operated" by line protected by fuse F11 of B001 - receives a reference earth from pin 44 of connector B of M010 and sends a signal proportional to the air flow rate to pin 42 of connector B and pin 49 of connector A of M010.

An air temperature sensor inside K041 also sends an air temperature signal to pin 37 of connector B of M010.

Accelerator pedal K055 contains two built-in potentiometers (a main one and a safety one).

The former receives power and earth signals from pins 30 and 45 of connector A of M010 and sends a corresponding signal to pin 9.

The latter receives power and earth signals respectively from pins 46 and 8 of connector A of M010 and sends a signal to pin 31.

The fuel temperature sensor, incorporated in the diesel filter K101, detects the temperature of the incoming diesel fuel. It receives a reference earth from pin 10 of connector A of M010 and sends a fuel temperature signal to pin 11.

The supercharging sensor K044 measures the pressure and the temperature in the intake chamber, downstream of the turbocharger. It is supplied by pin 13 of connector B of M010 and receives a reference earth from pin 23 of connector B.

The signal corresponding to the pressure value is sent to pin 40 of control unit connector B. An air temperature sensor, housed in K044, sends a signal to pin 53 of connector B of M010.

The turbine temperature sensor K219 receives a reference earth from pin 76 of connector A of the control unit M010 and supplies a signal proportional to the temperature measured at pin 66 of connector A of the control unit M010.

Fuel pressure sensor K083 supplies the injection control unit with a feedback signal to modulate injection pressure and duration.

It receives power and a reference earth respectively from pins 28 and 8 of connector B of M010; it then sends a pressure signal to pin 43.

The oxygen sensor K040 sends signals to pins 64, 65 and 87 of connector A of M010 while pin 86 supplies a reference earth. Sensor K040 is heated by a resistance to ensure it works efficiently even when cold. The resistance is supplied by the line for fuse F11 of B001 and receives an earth signal from pin 51 of connector A of control unit M010.

The fuel pressure regulator on the pump N077 controls the high pressure produced by the pump itself; the two control signals come from pins 19 and 49 of connector B of control unit M010.

The turbine variable geometry solenoid valve L036 regulates the turbine operation according to the engine load: it is supplied by the line for fuse F011 of B1 and is controlled by a signal from pin 7 of connector A of M010.

The turbine variable geometry control solenoid is also controlled by a feedback signal coming from a dedicated sensor K206 which sends the control unit a signal relating to the effective position of the turbine vanes governed by the actual valve.

The sensor K206 receives power supply from pin 29 and receives a reference earth from pin 22 of connector B of M010 and sends a signal relating to the geometry of the turbine to pin 89 of connector A of M010.

The EGR solenoid valve L030 is controlled by two signals (positive and negative) for pins 30 and 60 of connector B of M010; the built-in position sensor receives a power supply and earth from pins 26 and 51 and sends a position signal to pin 57 of connector B of M010.

The adjustment of the EGR takes place through the heat exchanger water supply actuator control solenoid valve for the EGR L103: it is supplied by the line for fuse F11 of B001 and is controlled by a signal from pin 88 of connector A of M010.

The throttle body solenoid valve N075 controls the opening of the throttle by means of a stepper motor; the motor receives a power supply from the line for fuse F11 of B001 and is controlled by a signal for pin 59 of connector B of M010; the control signals for the solenoid valve start from pins 39 and 52 of connector B of M010.

The swirl solenoid valve L064 ensures the optimum air fuel mixture; it is supplied by the line for fuse F11 of B001 and is operated by a signal for pin 45 of connector B of M010; the solenoid valve control signals come out from pins 6 and 35 of connector B of M010.

The engine management control unit sends the command to the injectors N070 from pins 16-47, 2-31, 1-46, 17-33 of connector B of M010 for cylinders 1, 2, 3 and 4 respectively.

Cardiagn.com

The pin 17 of connector A of M010 receives a signal from brake light switch I030 - NO contact - provided with an "ignition-operated" power supply from fuse F37 of Body Computer M001. Through the CAN, it receives a signal - NC contact - from brake light switch I30, supplied with an "ignition-operated" supply from fuse F51 of M001.

Pins 62 and 63 of connector A of M010 receive the signals from the clutch switch I031, with an "ignition-operated" supply from the fuse F51 of the Body Computer M001.

The pin 57 of connector A of M010 receives the signal from the reversing switch I020, with an "ignition-operated" supply from the fuse F51 of the Body Computer M001.

The water in diesel filter sensor, integrated in the diesel filter K101, receives an "ignition-operated" supply from fuse F51 of the Body Computer M001 and sends the corresponding signal to pin 74 of connector A of M010.

The control unit M010 is then connected through the CAN - pins 83-84 of connector A of M010 - to the Body Computer M001 and to the other network nodes: information on the following is sent through this connection:

- self-diagnosis of the system that also produces a signal for the EOBD warning light, located on the instrument panel E050 and that is connected to the connector R010;

- engine coolant temperature, which is sent to the instrument panel E050 which manages the gauge and the warning light;

- engine rpm, which is sent to the instrument panel E050 rev counter;

- minimum engine oil pressure, which is sent to the instrument panel E050 which manages the warning light and signals;

- heater plugs pre-heating, which is sent to instrument panel E050 that controls the warning light;

- water in the diesel filter, sent to instrument panel E050, which controls the indication on the display;

It receives the speedometer signal, via the CAN, produced by the ABS control unit M050.

cardiagn.com

DIESEL ENGINE ELECTRONIC MANAGEMENT - WIRING DIAGRAM

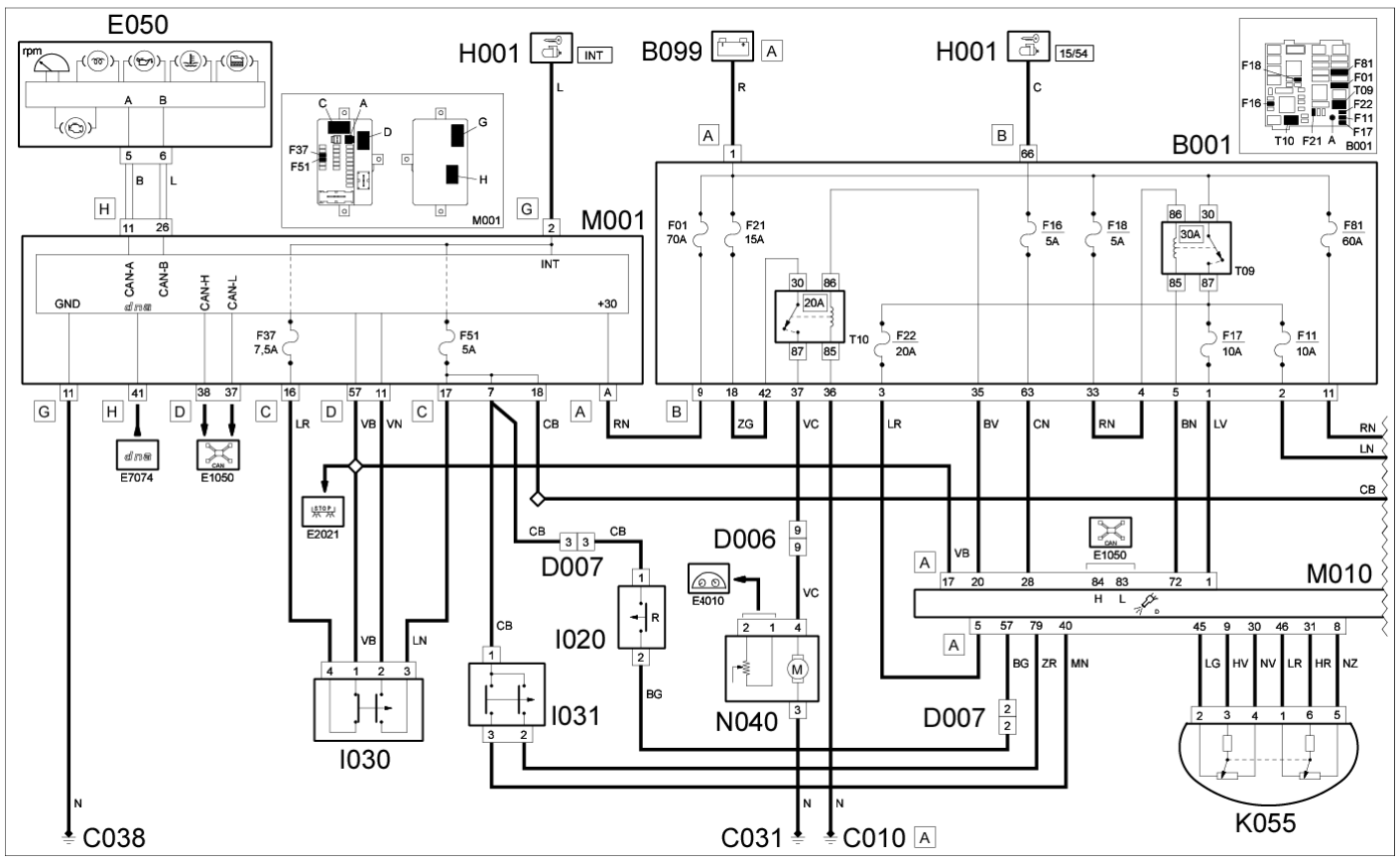

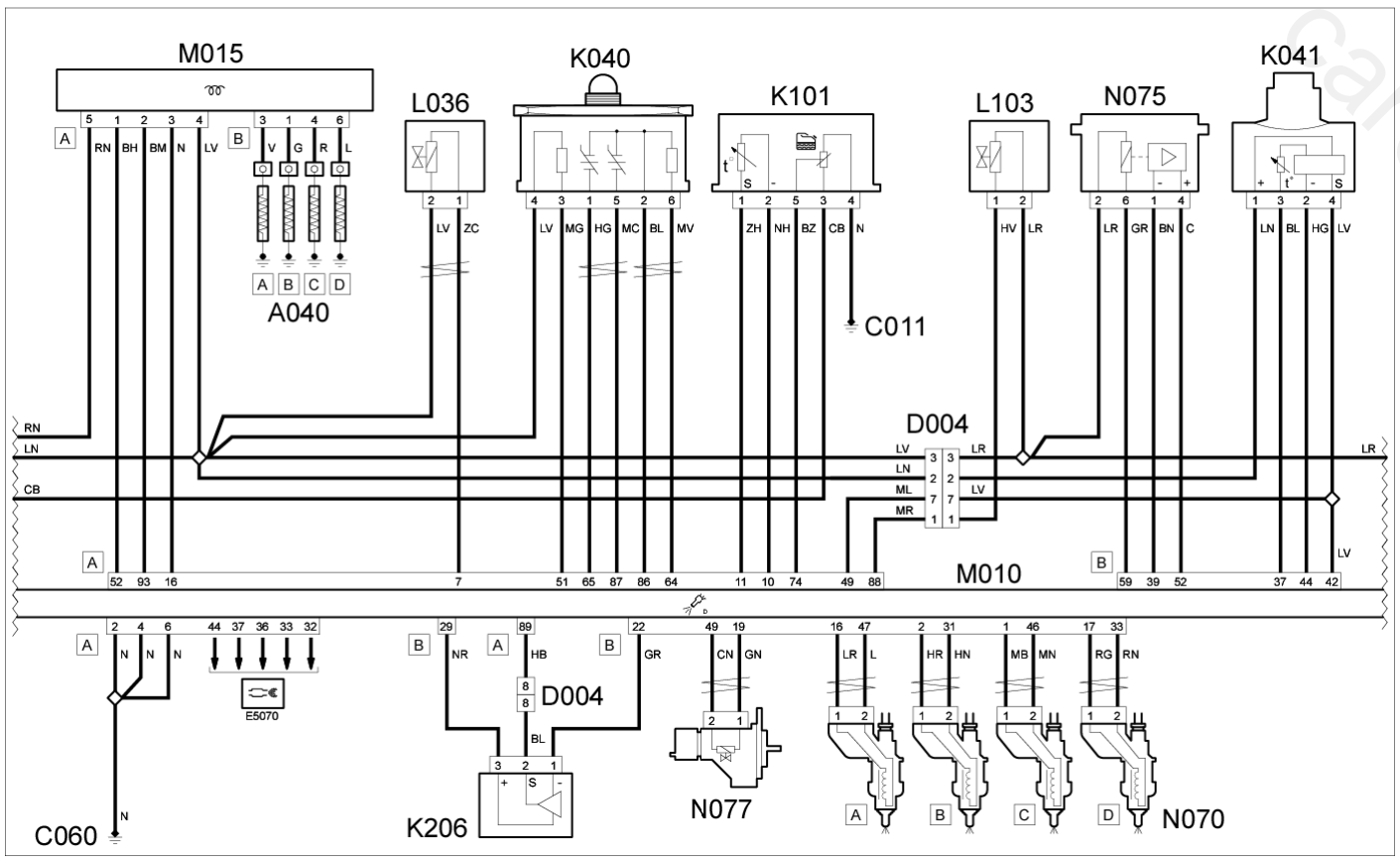

Cardiagn.com

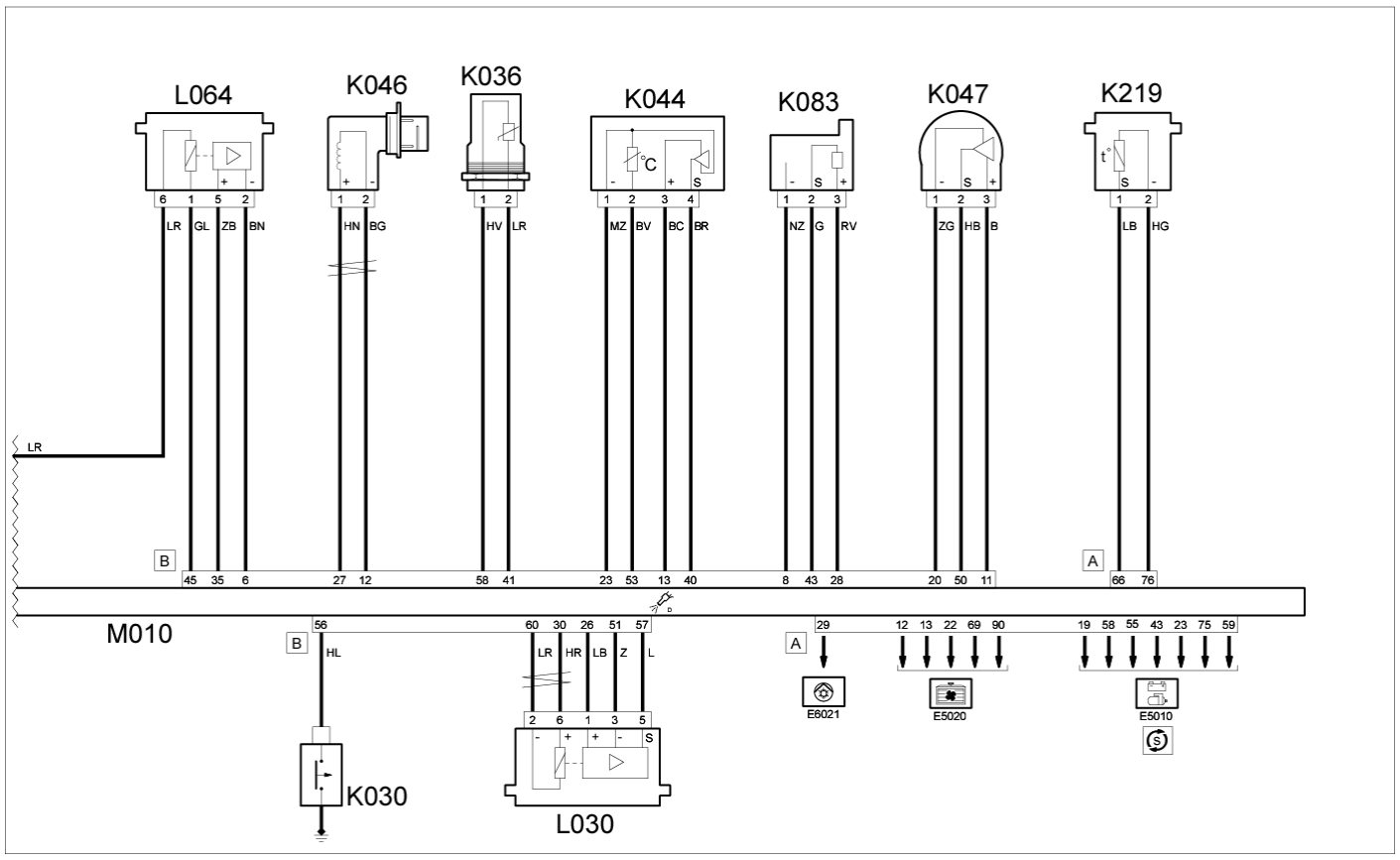

Component Code	Description	Reference to the operation
A040	HEATER PLUGS	Op. 5520C10 HEATER PLUGS - R+R
A040	HEATER PLUGS	Op. 5590A02 HEATER PLUG CONNECTOR - R.R.
B001	JUNCTION UNIT	Op. 5505A28 CONTAINER FOR ADDITIONAL JUNCTION UNIT IN ENGINE COMPARTMENT - R.R.
B099	MAXI FUSE BOX ON BATTERY	Op. 5530B40 SUPPLY BOX ON BATTERY (LINK BATTERY AND FUSE BOX) - R R
C010	LEFT FRONT EARTH	-
C011	RIGHT FRONT EARTH	-
C031	RIGHT REAR EARTH	-
C038	EARTH ON CENTRE TUNNEL	-
C060	INJECTION CONTROL UNIT EARTH	-
D004	FRONT/ENGINE COUPLING	
D006	FRONT/REAR COUPLING	-
E050	INSTRUMENT PANEL	Op. 5560B10 CONTROL PANEL - R+R
H001	IGNITION SWITCH	Op. 5520A18 IGNITION SWITCH CONTACT CARRIER LOCK BARREL - R.R.
I020	REVERSING LIGHTS SWITCH	Op. 5550D22 REVERSING LIGHT SWITCH - R+R
I030	BRAKE PEDAL SWITCH	Op. 1060G38 BRAKE PEDAL SWITCH - R.R
I031	CLUTCH PEDAL SWITCH	Op. 1060G42 CLUTCH PEDAL SWITCH - R.R.
K030	ENGINE OIL PRESSURE SENSOR (SWITCH)	Op. 1084A42 ENGINE OIL PRESSURE WARNING LIGHT SWITCH - R.R.
K030	ENGINE OIL PRESSURE SENSOR (SWITCH)	Op. 5590A03 ENGINE OIL PRESSURE SENSOR CONNECTOR - R.R.
K036	ENGINE COOLANT TEMPERATURE SENSOR/SENDER UNIT	Op. 1060G14 ENGINE COOLANT TEMPERATURE SENSOR - R.R.
K036	ENGINE COOLANT TEMPERATURE SENSOR/SENDER UNIT	Op. 5590A06 ENGINE COOLANT TEMPERATURE SENSOR/SENDER UNIT CONNECTOR - R.R.
K040	LAMBDA SENSOR	Op. 1080B90 LAMBDA SENSOR - R.R.
K041	AIR FLOW METER	Op. 1060G10 AIR FLOW METER - R.R.
K041	AIR FLOW METER	Op. 5590A08 AIR FLOW METER CONNECTOR - R.R.
K044	AIR TEMPERATURE/PRESSURE SENSOR	Op. 1060G16 EXCESS PRESSURE SENSOR - R.R.
K044	AIR TEMPERATURE/PRESSURE SENSOR	Op. 5590A09 AIR TEMPERATURE/PRESSURE SENSOR CONNECTOR - R.R.
K046	RPM SENSOR	Op. 1060G20 ENGINE RPM SENSOR - R.R.
K046	RPM SENSOR	Op. 5590A10 RPM SENSOR CONNECTOR - R.R.
K047	TIMING SENSOR	Op. 1060G22 CAM ANGLE SENSOR - R.R
K047	TIMING SENSOR	Op. 5590A11 PHASE SENSOR CONNECTOR - R.R.
K055	ACCELERATOR PEDAL POTENTIOMETER	Op. 1068A20 ACCELERATOR PEDAL WITH BUILT-IN POTENTIOMETER - R.R
K083	FUEL PRESSURE SENSOR	Op. 1060G28 FUEL PRESSURE SENSOR ON FUEL MANIFOLD TO INJECTORS - R.R
K083	FUEL PRESSURE SENSOR	Op. 5590A13 FUEL PRESSURE SENSOR CONNECTOR - R.R.
K101	FUEL TEMPERATURE AND WATER IN FUEL FILTER SENSOR	Op. 1060G30 WATER PRESENCE SENSOR IN FUEL FILTER - R.R.
K206	VARIABLE GEOMETRY TURBINE POSITION SENSOR	Op. 1064A10 TURBO CHARGER - R + R
K206	VARIABLE GEOMETRY TURBINE POSITION SENSOR	Op. 5590A31 TURBINE VARIABLE GEOMETRY POSITION SENSOR CONNECTOR - R.R.
K219	TURBINE INLET EXHAUST GAS TEMPERATURE SENSOR	Op. 1064B22 TURBOCHARGER INLET EXHAUST GAS TEMPERATURE SENSOR - R.R.
L030	EGR SOLENOID	Op. 1080C24 E.G.R. SYSTEM SOLENOID - R + R
L030	EGR SOLENOID	Op. 5590A21 EGR SOLENOID VALVE CONNECTOR - R.R.
L036	TURBINE VARIABLE GEOMETRY CONTROL SOLENOID VALVE	Op. 1064B42 SOLENOID CONTROLLING TURBOCHARGER VANE POSITION ACTUATOR - R.R
L064	FLOW MODIFYING SOLENOID VALVE	Op. 1072B50 AIR CHAMBER - R.R.
L064	FLOW MODIFYING SOLENOID VALVE	Op. 5590A25 FLOW MODIFYING SOLENOID VALVE CONNECTOR - R.R.
L103	SOLENOID CONTROLLING ACTUATOR DELIVERING WATER TO EGR HEAT EXCHANGER	Op. 1080C39 E.G.R. HEAT EXCHANGER WATER SUPPLY CONTROL ACTUATOR SOLENOID VALVE - R.R.
L103	SOLENOID CONTROLLING ACTUATOR DELIVERING WATER TO EGR HEAT EXCHANGER	Op. 5590A32 EGR HEAT EXCHANGER WATER SUPPLY ACTUATOR CONTROL SOLENOID CONNECTOR - R.R.
M001	BODY COMPUTER	Op. 5505A35 MAIN BODY COMPUTER/JUNCTION UNIT - R.R.
M010	ENGINE MANAGEMENT CONTROL UNIT	Op. 1060G80 DIESEL ELECTRONIC INJECTION CONTROL UNIT - R.R
M015	HEATER PLUGS CONTROL UNIT	Op. 5520C20 HEATER PLUGS CONTROL UNIT - R.R
M015	HEATER PLUGS CONTROL UNIT	Op. 5590A26 GLOW PLUG CONTROL UNIT CONNECTOR - R.R.
N040	FUEL PUMP AND LEVEL GAUGE	Op. 1040A70 SUBMERGED PUMP ASSEMBLY COMPLETE WITH LEVEL GAUGE CONTROL - R + R

cardiagn.com

N070	INJECTOR	Op. 1060F10 INJECTORS - R.R.
N070	INJECTOR	Op. 5590A27 INJECTOR CONNECTOR - R.R.
N075	INTEGRATED THROTTLE BODY ACTUATOR	Op. 1060G50 THROTTLE BODY - R.R
N075	INTEGRATED THROTTLE BODY ACTUATOR	Op. 5590A28 INTEGRATED THROTTLE BODY ACTUATOR CONNECTOR - R.R.
N077	FUEL PRESSURE REGULATOR	Op. 1060E10 PRESSURE PUMP FOR DIESEL INJECTION - R.R.
N077	FUEL PRESSURE REGULATOR	Op. 5590A29 FUEL PRESSURE REGULATOR CONNECTOR - R.R.

cardiagn.com

DIESEL ENGINE ELECTRONIC MANAGEMENT - COMPONENT LOCATION

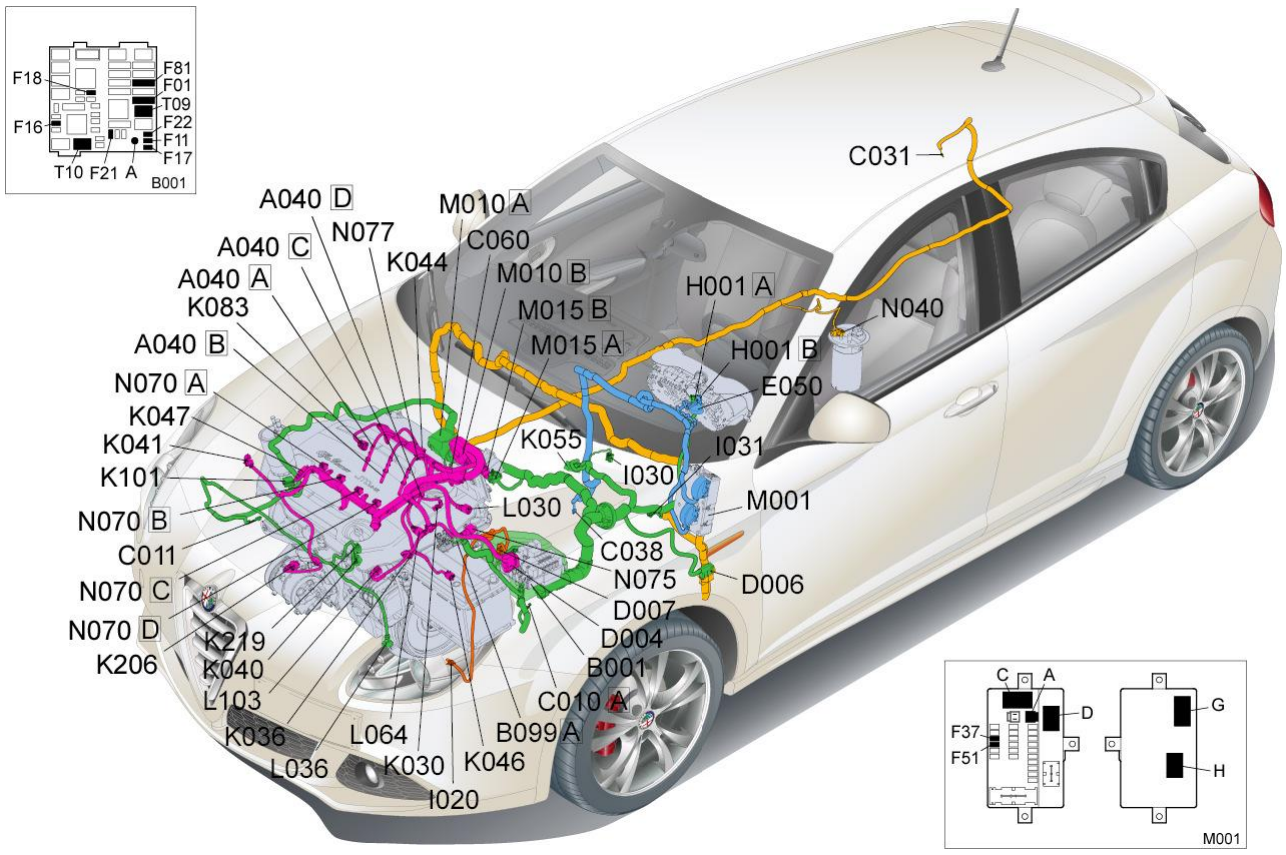

Component Code	Description	Reference to the operation
A040	HEATER PLUGS	Op. 5520C10 HEATER PLUGS - R+R
A040	HEATER PLUGS	Op. 5590A02 HEATER PLUG CONNECTOR - R.R.
B001	JUNCTION UNIT	Op. 5505A28 CONTAINER FOR ADDITIONAL JUNCTION UNIT IN ENGINE COMPARTMENT - R.R.
B099	MAXI FUSE BOX ON BATTERY	Op. 5530B40 SUPPLY BOX ON BATTERY (LINK BATTERY AND FUSE BOX) - R R
C010	LEFT FRONT EARTH	-
C011	RIGHT FRONT EARTH	-
C031	RIGHT REAR EARTH	-
C038	EARTH ON CENTRE TUNNEL	-
C060	INJECTION CONTROL UNIT EARTH	-
D004	FRONT/ENGINE COUPLING	
D006	FRONT/REAR COUPLING	-
E050	INSTRUMENT PANEL	Op. 5560B10 CONTROL PANEL - R+R
H001	IGNITION SWITCH	Op. 5520A18 IGNITION SWITCH CONTACT CARRIER LOCK BARREL - R.R.
I020	REVERSING LIGHTS SWITCH	Op. 5550D22 REVERSING LIGHT SWITCH - R+R
I030	BRAKE PEDAL SWITCH	Op. 1060G38 BRAKE PEDAL SWITCH - R.R
I031	CLUTCH PEDAL SWITCH	Op. 1060G42 CLUTCH PEDAL SWITCH - R.R.
K030	ENGINE OIL PRESSURE SENSOR (SWITCH)	Op. 1084A42 ENGINE OIL PRESSURE WARNING LIGHT SWITCH - R.R.
K030	ENGINE OIL PRESSURE SENSOR (SWITCH)	Op. 5590A03 ENGINE OIL PRESSURE SENSOR CONNECTOR - R.R.
K036	ENGINE COOLANT TEMPERATURE SENSOR/SENDER UNIT	Op. 1060G14 ENGINE COOLANT TEMPERATURE SENSOR - R.R.
K036	ENGINE COOLANT TEMPERATURE SENSOR/SENDER UNIT	Op. 5590A06 ENGINE COOLANT TEMPERATURE SENSOR/SENDER UNIT CONNECTOR - R.R.
K040	LAMBDA SENSOR	Op. 1080B90 LAMBDA SENSOR - R.R.
K041	AIR FLOW METER	Op. 1060G10 AIR FLOW METER - R.R.
K041	AIR FLOW METER	Op. 5590A08 AIR FLOW METER CONNECTOR - R.R.
K044	AIR TEMPERATURE/PRESSURE SENSOR	Op. 1060G16 EXCESS PRESSURE SENSOR - R.R.
K044	AIR TEMPERATURE/PRESSURE SENSOR	Op. 5590A09 AIR TEMPERATURE/PRESSURE SENSOR CONNECTOR - R.R.
K046	RPM SENSOR	Op. 1060G20 ENGINE RPM SENSOR - R.R.
K046	RPM SENSOR	Op. 5590A10 RPM SENSOR CONNECTOR - R.R.
K047	TIMING SENSOR	Op. 1060G22 CAM ANGLE SENSOR - R.R
K047	TIMING SENSOR	Op. 5590A11 PHASE SENSOR CONNECTOR - R.R.
K055	ACCELERATOR PEDAL POTENTIOMETER	Op. 1068A20 ACCELERATOR PEDAL WITH BUILT-IN POTENTIOMETER - R.R
K083	FUEL PRESSURE SENSOR	Op. 1060G28 FUEL PRESSURE SENSOR ON FUEL MANIFOLD TO INJECTORS - R.R
K083	FUEL PRESSURE SENSOR	Op. 5590A13 FUEL PRESSURE SENSOR CONNECTOR - R.R.
K101	FUEL TEMPERATURE AND WATER IN FUEL FILTER SENSOR	Op. 1060G30 WATER PRESENCE SENSOR IN FUEL FILTER - R.R.
K206	VARIABLE GEOMETRY TURBINE POSITION SENSOR	Op. 1064A10 TURBO CHARGER - R + R
K206	VARIABLE GEOMETRY TURBINE POSITION SENSOR	Op. 5590A31 TURBINE VARIABLE GEOMETRY POSITION SENSOR CONNECTOR - R.R.
K219	TURBINE INLET EXHAUST GAS TEMPERATURE SENSOR	Op. 1064B22 TURBOCHARGER INLET EXHAUST GAS TEMPERATURE SENSOR - R.R.
L030	EGR SOLENOID	Op. 1080C24 E.G.R. SYSTEM SOLENOID - R + R
L030	EGR SOLENOID	Op. 5590A21 EGR SOLENOID VALVE CONNECTOR - R.R.
L036	TURBINE VARIABLE GEOMETRY CONTROL SOLENOID VALVE	Op. 1064B42 SOLENOID CONTROLLING TURBOCHARGER VANE POSITION ACTUATOR - R.R
L064	FLOW MODIFYING SOLENOID VALVE	Op. 1072B50 AIR CHAMBER - R.R.
L064	FLOW MODIFYING SOLENOID VALVE	Op. 5590A25 FLOW MODIFYING SOLENOID VALVE CONNECTOR - R.R.
L103	SOLENOID CONTROLLING ACTUATOR DELIVERING WATER TO EGR HEAT EXCHANGER	Op. 1080C39 E.G.R. HEAT EXCHANGER WATER SUPPLY CONTROL ACTUATOR SOLENOID VALVE - R.R.
L103	SOLENOID CONTROLLING ACTUATOR DELIVERING WATER TO EGR HEAT EXCHANGER	Op. 5590A32 EGR HEAT EXCHANGER WATER SUPPLY ACTUATOR CONTROL SOLENOID CONNECTOR - R.R.
M001	BODY COMPUTER	Op. 5505A35 MAIN BODY COMPUTER/JUNCTION UNIT - R.R.
M010	ENGINE MANAGEMENT CONTROL UNIT	Op. 1060G80 DIESEL ELECTRONIC INJECTION CONTROL UNIT - R.R

cardiagn.com

M015	HEATER PLUGS CONTROL UNIT	Op. 5520C20 HEATER PLUGS CONTROL UNIT - R.R
M015	HEATER PLUGS CONTROL UNIT	Op. 5590A26 GLOW PLUG CONTROL UNIT CONNECTOR - R.R.
N040	FUEL PUMP AND LEVEL GAUGE	Op. 1040A70 SUBMERGED PUMP ASSEMBLY COMPLETE WITH LEVEL GAUGE CONTROL - R + R
N070	INJECTOR	Op. 1060F10 INJECTORS - R.R.
N070	INJECTOR	Op. 5590A27 INJECTOR CONNECTOR - R.R.
N075	INTEGRATED THROTTLE BODY ACTUATOR	Op. 1060G50 THROTTLE BODY - R.R
N075	INTEGRATED THROTTLE BODY ACTUATOR	Op. 5590A28 INTEGRATED THROTTLE BODY ACTUATOR CONNECTOR - R.R.
N077	FUEL PRESSURE REGULATOR	Op. 1060E10 PRESSURE PUMP FOR DIESEL INJECTION - R.R.
N077	FUEL PRESSURE REGULATOR	Op. 5590A29 FUEL PRESSURE REGULATOR CONNECTOR - R.R.

cardiagn.com