247

Service.

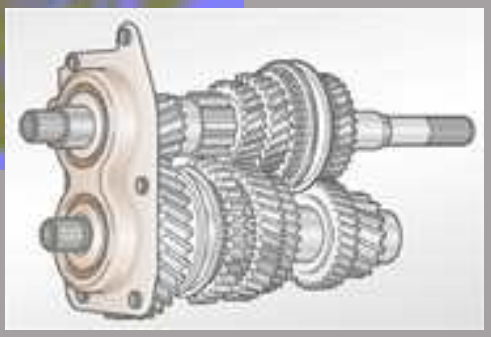

AUDI A2 - Engine and Gearbox

Design and Function

Self-study programme 247

For internal use only.

Contents

Page

Overview

Engine 4
1.4 l - TDI (55 kW) AMF 4
1.4 l - 16 V (55 kW) AUA 5
Gearbox 6

Engine

Design and function of the 1.4 l - 16 V engine 7
System overview 16
Lambda control of the Euro-On-Board Diagnosis 21
Functional overview 24

Gearbox

Overview 26
Housing 28
Gearbox design 30
Double synchronisation 35
Gear shifting 39
Actuators and sensors 42

The self-study programme will provide you with information on design and functions.

It is not intended as a workshop manual!

For maintenance and repairs please refer to the current technical literature.

New

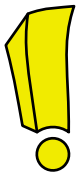

Attention Note

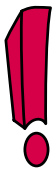

Overview

Engine

1.4 l - TDI (55 kW) AMF

SSP247_071

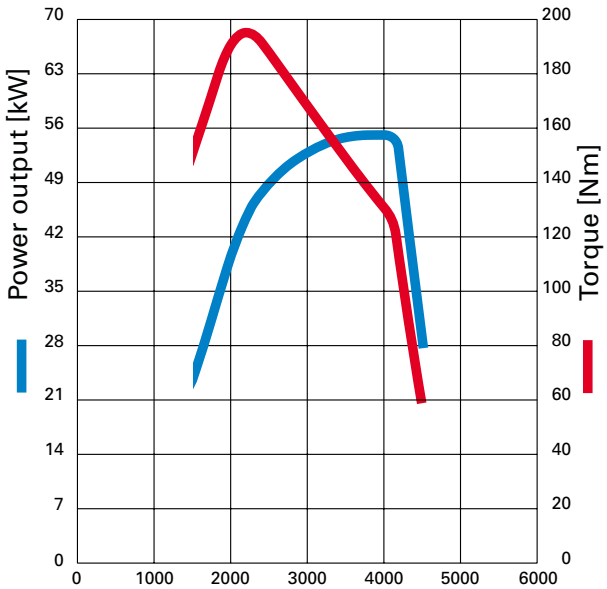

SSP247_072

Technical data

Engine code:	AMF
Design:	Turbocharged three-cylinder in-line engine
Capacity:	1422 cm^3
Power output:	55 kW (75 PS) at 4000 rpm
Torque:	195 Nm at 2200 rpm
Bore:	79.5 mm
Stroke:	95.5 mm
Compression:	19.5 : 1
Weight:	130 kg

Firing order:	1 - 2 - 3
Mixture induction:	Direct injection with pump-nozzle unit
Turbocharger:	Garrett GT 12 turbocharger with wastegate
Exhaust emissions control:	Oxidising catalytic converter and exhaust gas recirculation
Exhaust emissions standard:	EU 3
Fuel:	Diesel, cetane rating at least 49 CN, RME

Please refer to SSP 223 for the design and function of the 1.4 l TDI pump-nozzle engine.

The engine code and engine number are located on the front engine/gearbox flange.

SSP247_026

1.4 l - 16 V (55 kW) AUA

SSP247_001

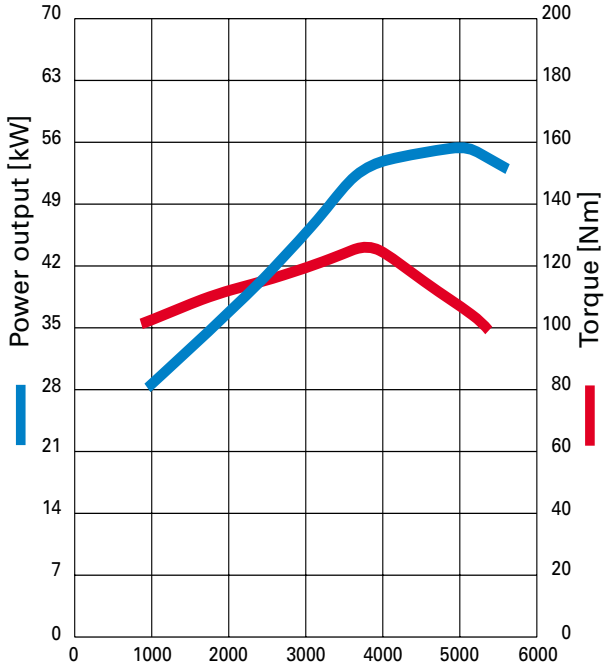

SSP247_002

Technical data

Engine code:	AUA
Design:	Four cylinder in-line engine Petrol engine
Capacity:	1390 cm^3
Power output:	55 kW (75 PS) at 5000 rpm
Torque:	126 Nm at 3800 rpm
Bore:	76.5 mm
Stroke:	75.6 mm
Compression:	10.5 : 1
Weight:	90 kg

Firing order:	1 - 3 - 4 - 2
Mixture induction:	Electronic, sequential multipoint injection, adaptive idlecontrol, deceleration fuel cut-off
Ignition system:	Distributorless ignition system with static high-voltage distribution, long-life spark plugs
Exhaust emissions control:	3-way catalytic converter, 2 heated lambda probes, activated charcoal filter
Exhaust emissions standard:	EU 4
Fuel:	Petrol, unleaded, 95 RON

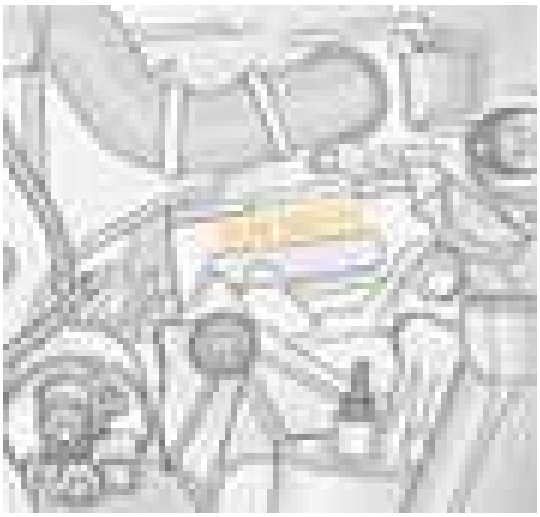

SSP247_069

- Lambda control with probes upstream and downstream of the catalytic converter
- Electric exhaust gas recirculation valve
- Valve actuation via rocker arms

Gearbox

02T gearbox

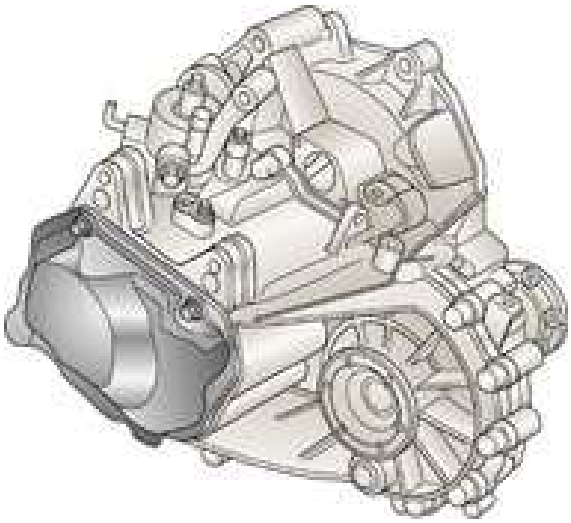

SSP247_073

The 02T gearbox is an extremely lightweight two-shaft gearbox. The parts of the housing are made of magnesium.

It is designed to transmit torque values of up to 200 Nm.

02J gearbox

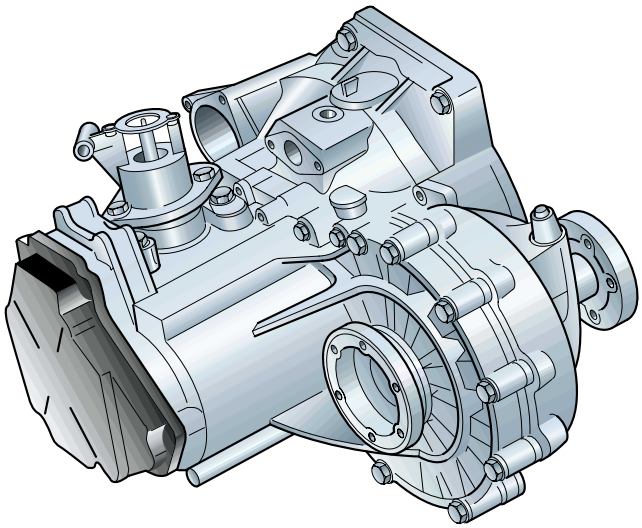

SSP247_074

The familiar 02J gearbox is used in the A2 1.4 l TDI, for torques up to 250 Nm.

Both gearboxes are actuated via gear selector cables and gate selector cables.

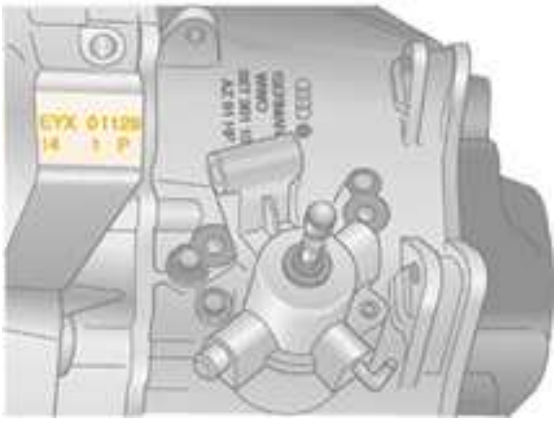

SSP247_075

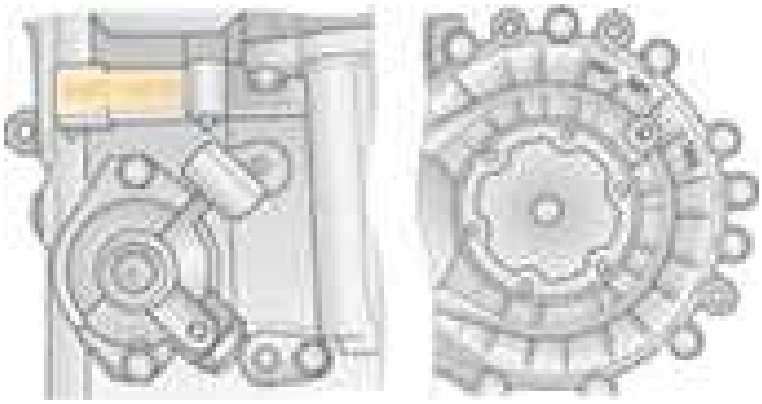

SSP247_076

Design and function of the 1.4 l - 16 V engine

The cylinder block

is made of die-cast aluminium.

The required stiffness is achieved by pronounced ribbing, and is further reinforced by the crankshaft bearing blocks.

The cylinder liners are made of cast iron. They are cast into the crankcase and can be reworked.

The webs with the cast cylinder liners have a thickness of 5.5 mm.

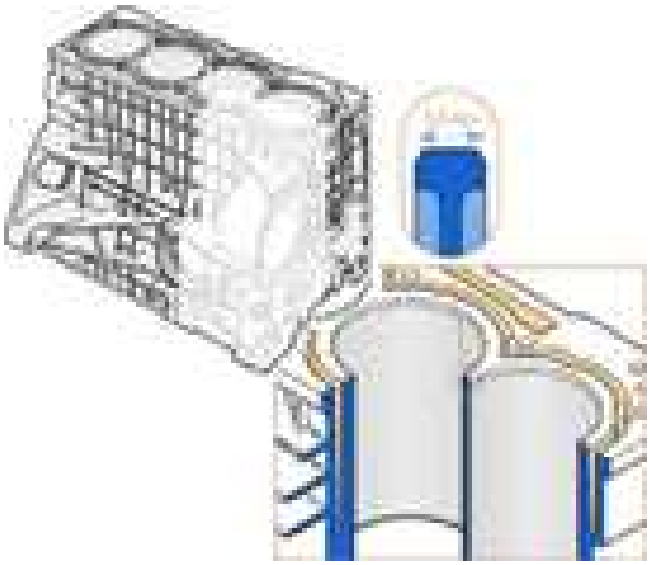

SSP247_003

G12 is the only approved coolant additive.
As well as preventing frost damage on the aluminium housing, it prevents the formation of lime deposits and damage due to corrosion in the coolant channels.

The crankshaft

is made of cast iron and is equipped with four balancer weights. Despite this weight saving, the crankshaft has the same running characteristics as crankshafts with eight balancer weights.

The bearing blocks support the internal stiffness of the aluminium cylinder block.

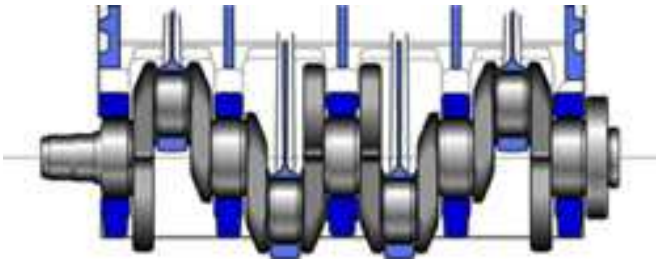

SSP247_004

The crankshaft must not be loosened or removed.
If the bearing cap bolts are released then the internal structure of the bearing blocks in the cylinder blocks slackens and causes them to warp.
The bearing clearance is then reduced.

If the bearing cap bolts are released then the complete crankcase with crankshaft needs to be replaced.
It is not possible to measure the bearing clearance of the crankshaft using standard workshop equipment.

Camshaft drive

The two camshafts are driven by two toothed belts.

Due to the narrow width of the cylinder head, the toothed belt drive is divided into a main drive and a coupled drive.

Main drive

The main toothed belt drive transmits the drive from the crankshaft to the coolant pump and the intake camshaft. An automatic tensioning roller and two idler rollers prevent the toothed belt from vibrating.

Coupled drive

The toothed belt of the coupled drive is located directly behind the toothed belt of the main drive, outside the camshaft housing.

The coupled drive transmits the drive from the intake camshaft via the toothed belt to the exhaust camshaft.

Here again an automatic tensioning roller prevents the toothed belt from vibrating.

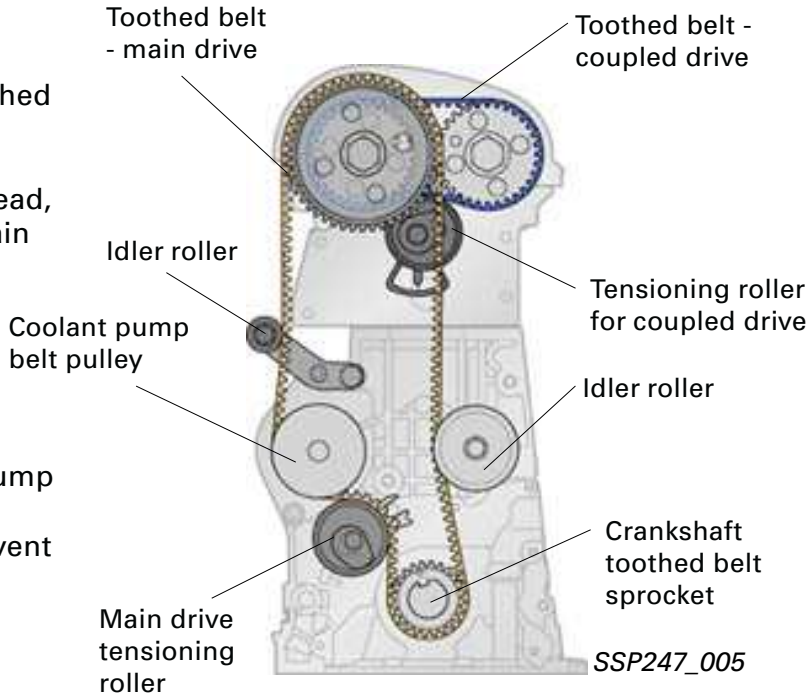

SSP247_005

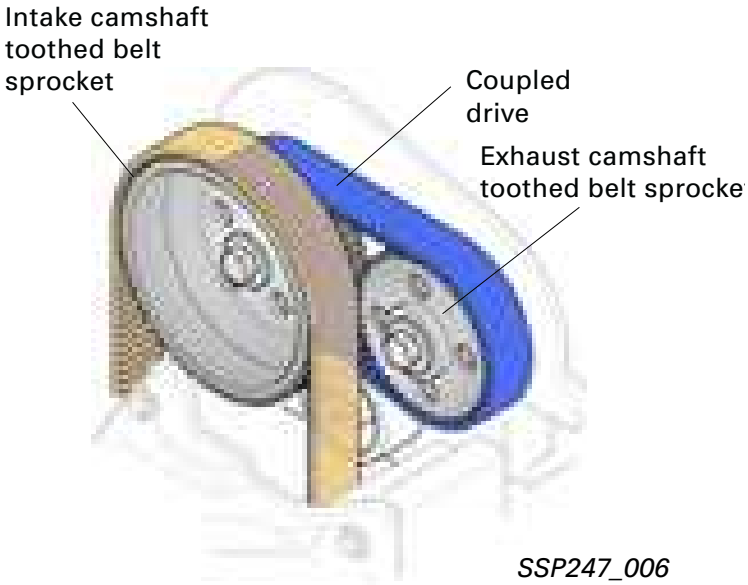

SSP247_006

Guide holes are provided in the camshaft housing and at the camshaft toothed belt sprockets for assembly and for adjusting the valve timing. The two toothed belt sprockets are secured with a special tool.
Please refer to the repair manual for more details.

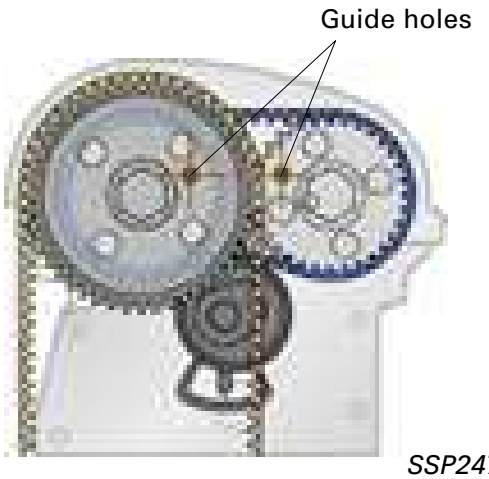

SSP247_007

Valve gear

The intake camshaft and the exhaust camshaft run on bearings in the camshaft housing.

At the same time the camshaft housing also acts as the cylinder head cover.

The camshafts run on 3 bearings and are pushed into the camshaft housing.
The axial clearance is limited by the camshaft housing and the blanking plugs.

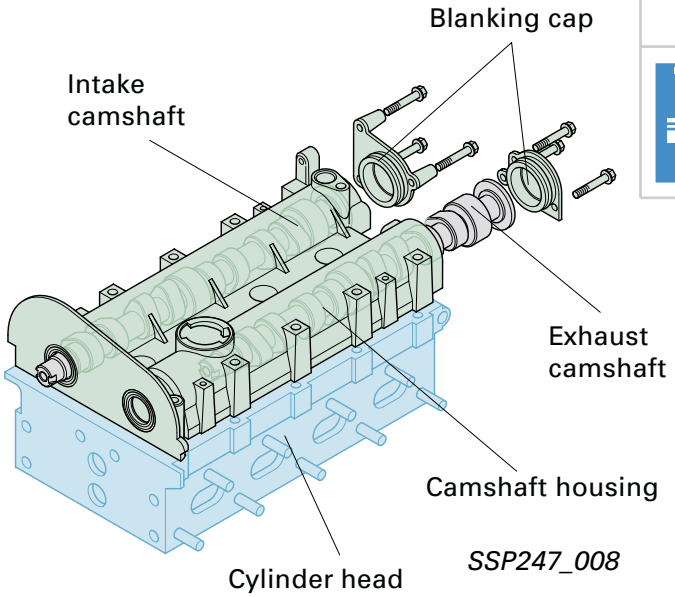

SSP247_008

The liquid sealer must not be applied too liberally, as excess material can enter the oil bores and cause engine damage.

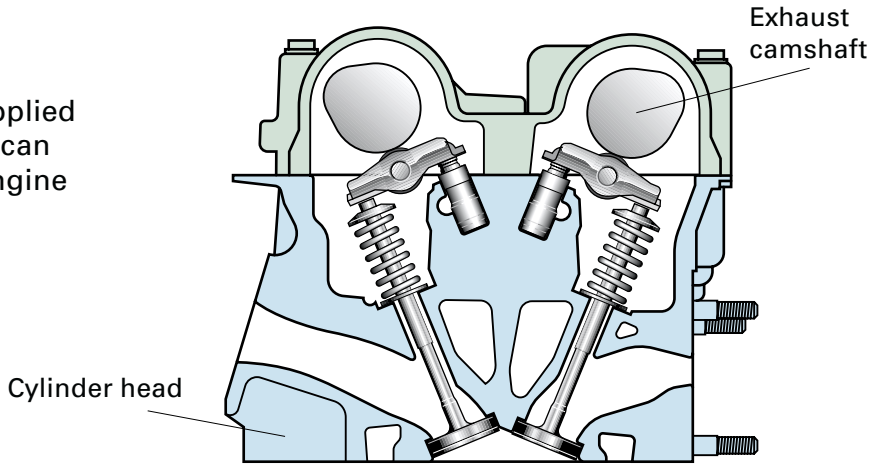

SSP247_009

Valve actuation

In this generation of engines, the valve actuation and the valve clearance compensation are provided by means of a rocker arm with a hydraulic support element.

Advantages

- reduced friction
- less weight to move

Design

The rocker arm consists of a pressed metal lever and a cam roller with roller bearing.
It is clipped in at the support element and laid onto the valve.

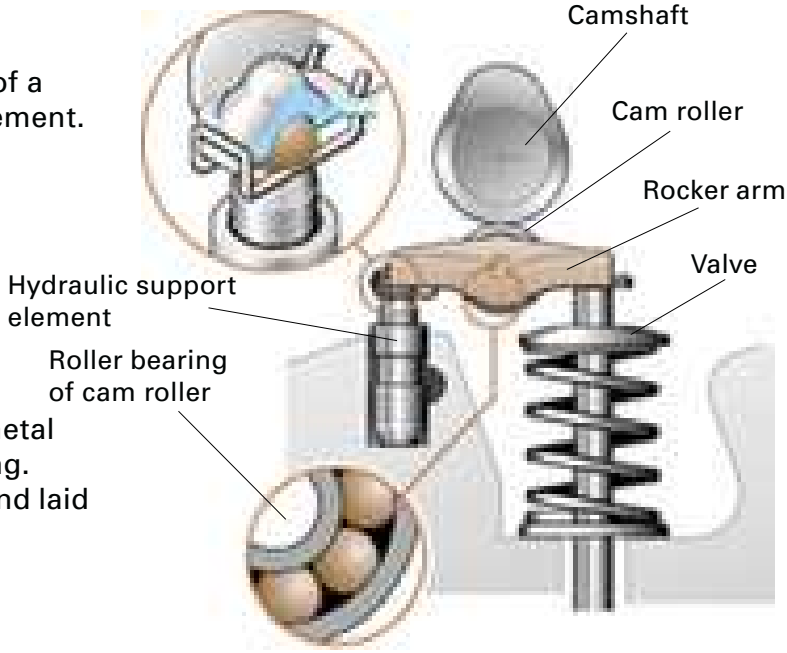

SSP247_010

Hydraulic support element

Design

The support element consists of:

- a piston
- a cylinder and
- a piston spring

It is connected to the engine oil circuit. A small ball with a spring forms a one-way valve in the lower oil chamber.

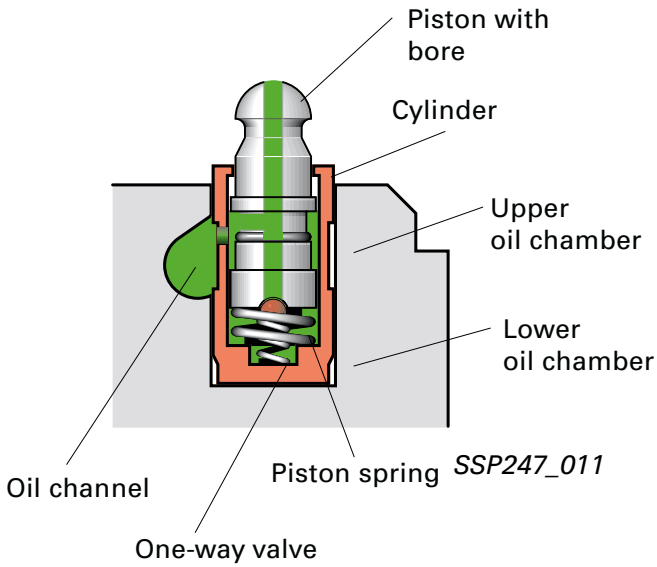

SSP247_011

Function during valve clearance compensation

In the event of excessive valve clearance the piston is pushed out of the cylinder by the piston spring until the cam roller lies up against the cam. While it is being pushed out the oil pressure in the lower chamber reduces.

The one-way valve opens and oil flows in.

Once the pressure difference between the lower and upper oil chamber has been equalised the one-way valve closes.

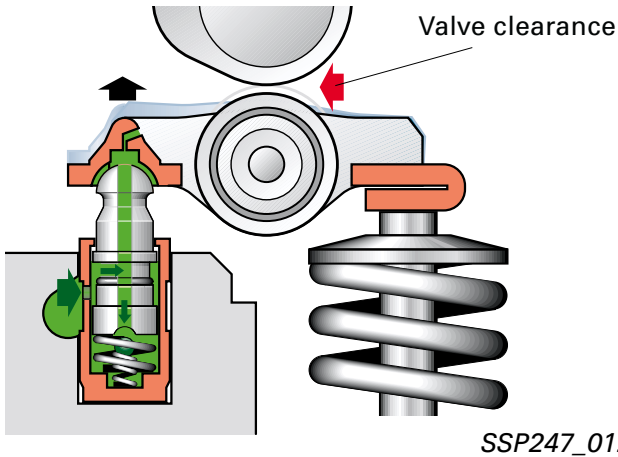

SSP247_012

Valve lift

When the cam runs onto the cam roller the pressure in the lower oil chamber increases. The trapped oil cannot be compressed, which means that the piston cannot be pushed any further into the cylinder.

The support element becomes a rigid element which acts as a support for the rocker arm.

The corresponding valve opens.

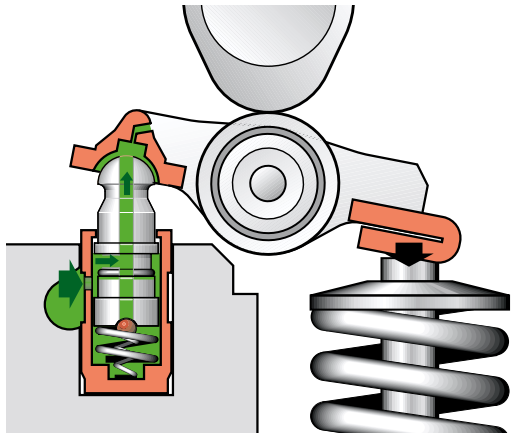

SSP247_013

Lubrication

is provided via the hydraulic support element. The rocker arm has a bore through which oil is sprayed onto the cam roller.

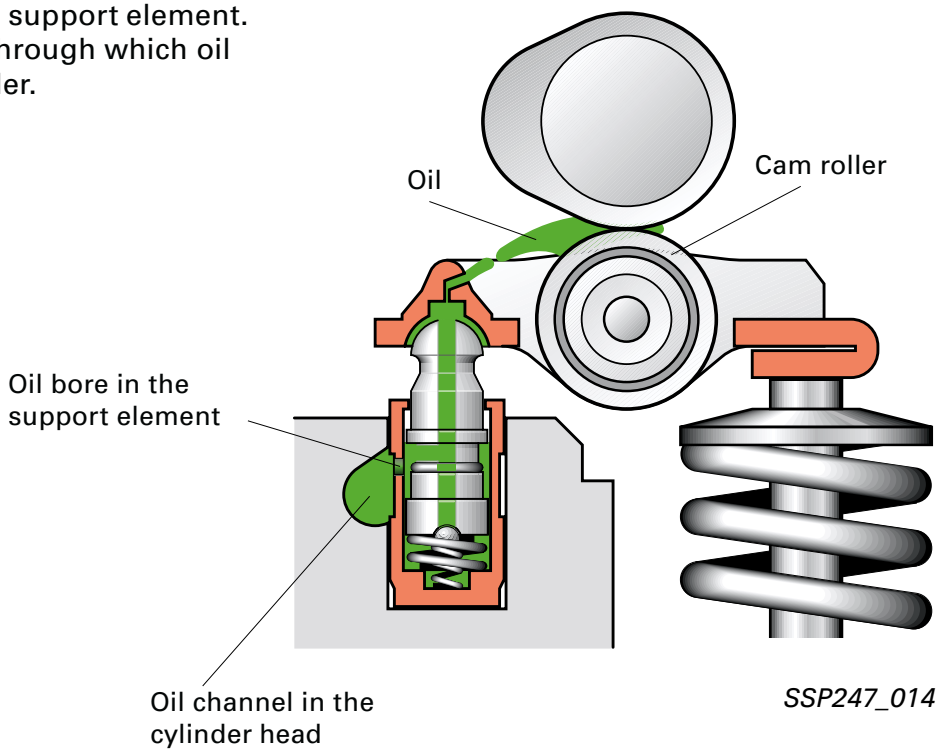

SSP247_014

Function during valve actuation

The support element acts as a pivoting point for the motion of the rocker arm. The cam runs on the cam roller and presses the rocker arm downwards. The valve is then actuated via the rocker arm.

The lever arm between the cam roller and the support element is shorter than between the valve and the support element. This means that a relatively small cam can achieve a large valve lift.

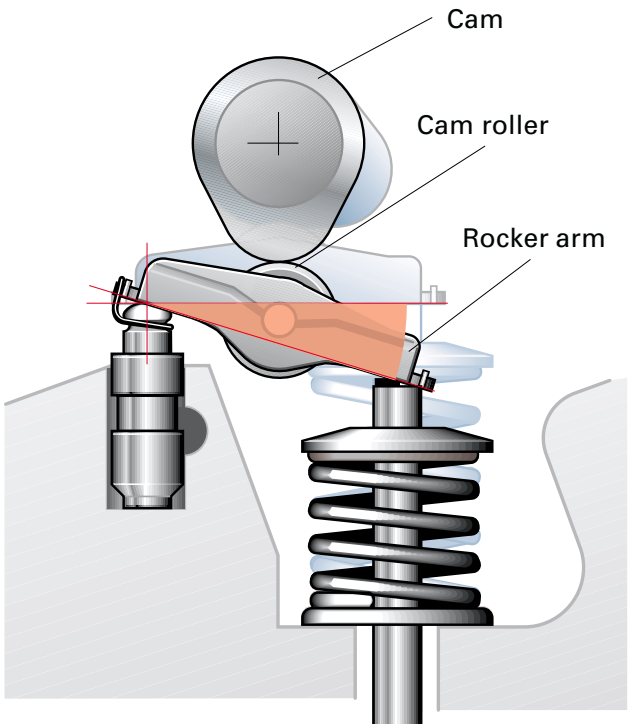

SSP247_015

The hydraulic support elements cannot be checked.

Electric exhaust gas recirculation valve

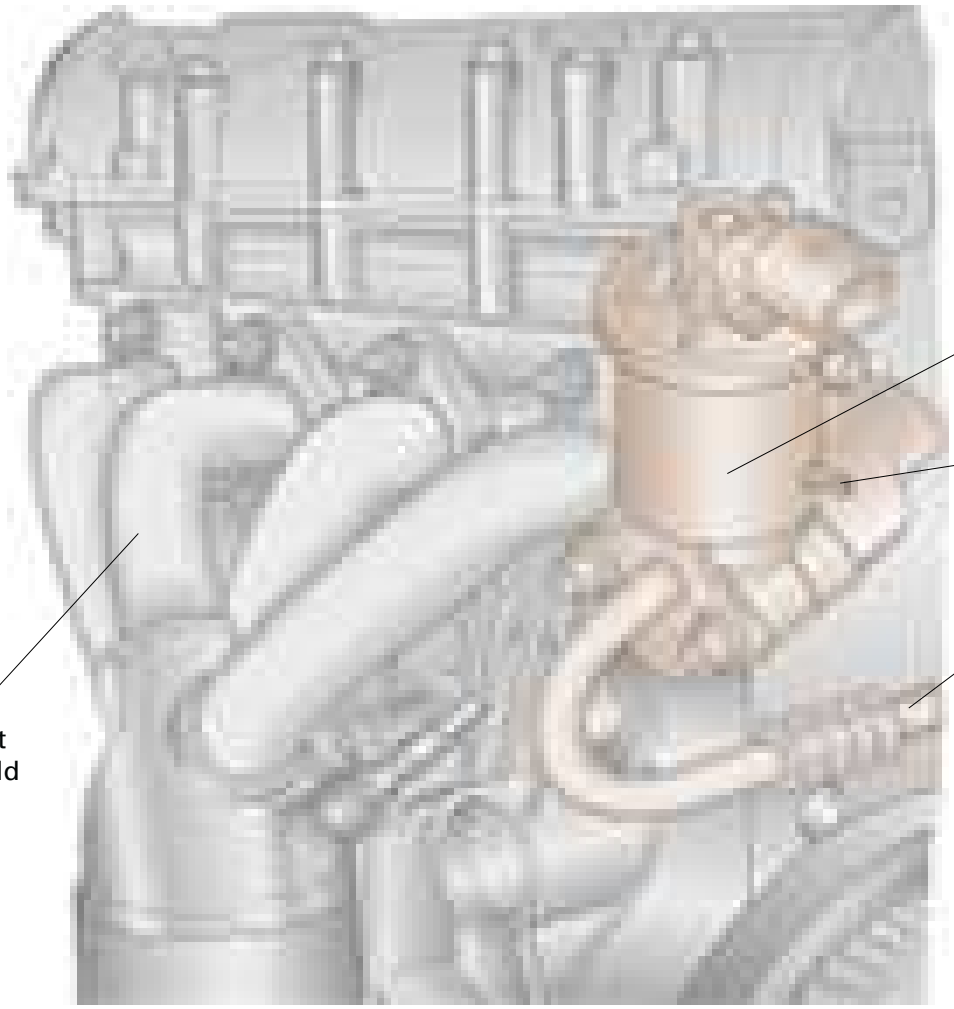

SSP247_016

EGR valve N121 is electrically controlled and actuated directly by engine control unit J537.

The valve is flanged directly onto the cylinder head and directly connected to the exhaust duct of cylinder no. 4 by means of a channel in the cylinder head.

A stainless steel pipe connects the valve with the intake manifold.

The high temperatures caused by the exhaust gases are transferred to the cylinder head and cooled by the coolant flowing through.

Functional diagram

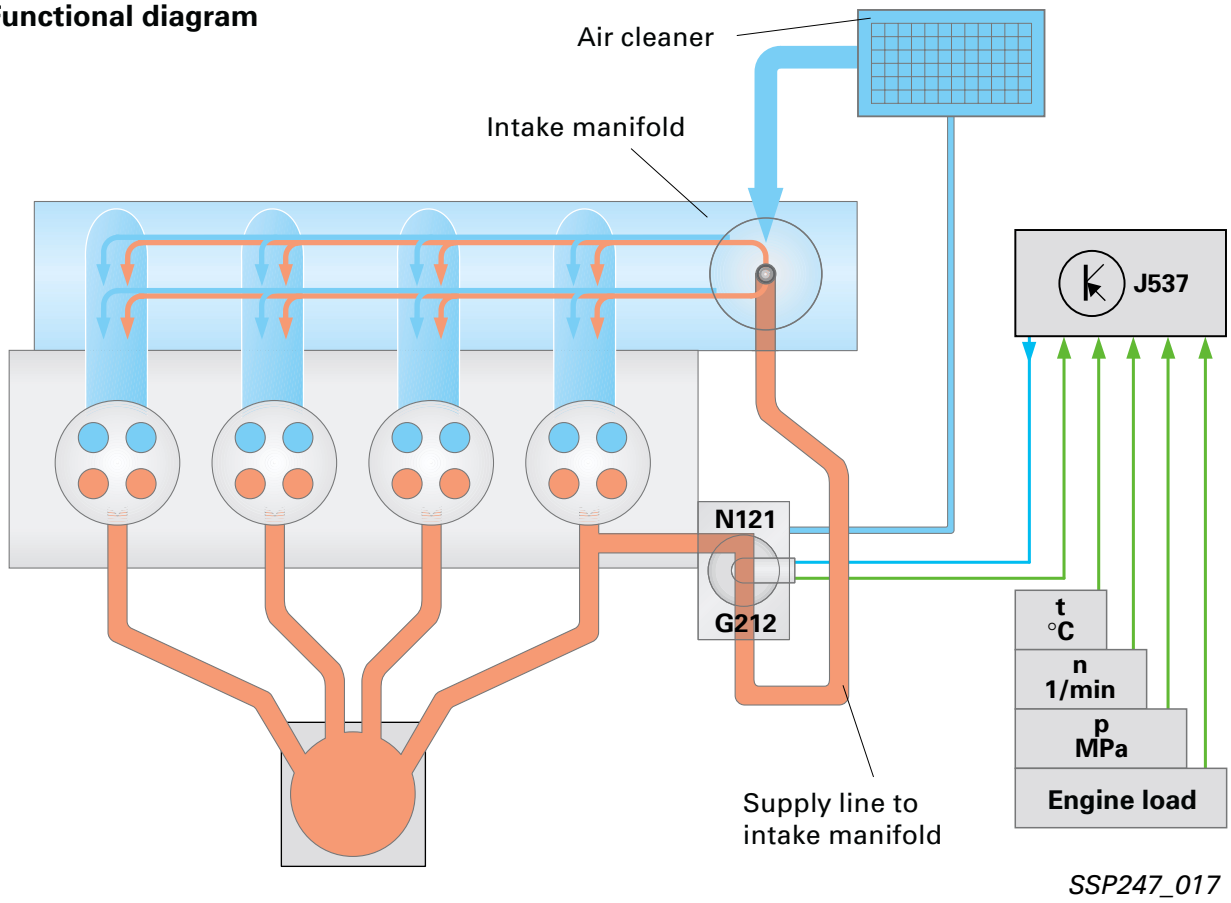

Even in normal operation of the engine a certain amount of residual gas leaks from the combustion chamber into the intake manifold when the valves are rocking.. In the subsequent induction process a proportion of the residual gas is then drawn in with the fresh mixture (internal exhaust gas recirculation).

Up to a certain degree the residual gas (exhaust gas) can have a positive effect on reducing the amount of nitrogen oxides in the exhaust, and it can help to convert energy more efficiently (reduced fuel consumption).

The additional exhaust gas recirculation helps to reduce NO_x emissions (nitrogen oxides) further and to lower fuel consumption.

To do this, a certain amount of exhaust gas is taken and fed back to the intake air via EGR valve N121. This is called “external” exhaust gas recirculation.

In order to optimise the distribution of recirculated exhaust gas and induced fresh air, the exhaust gas emerges into the fresh air flow directly under the middle of the throttle valve, at two holes positioned at right angles to the intake air flow.

EGR valve N121 is actuated by engine control unit J537 according to a defined map. It takes information such as engine speed, engine load, air pressure and coolant temperature into account.

EGR potentiometer G212 informs the engine control unit of the cross-section of the opening.

With the exhaust gas recirculation active the amount of gas that can be recirculated is limited to 18 % of the intake air quantity. There is no exhaust gas recirculation in idle, in overrun or during engine warm-up up to 35 °C

Function

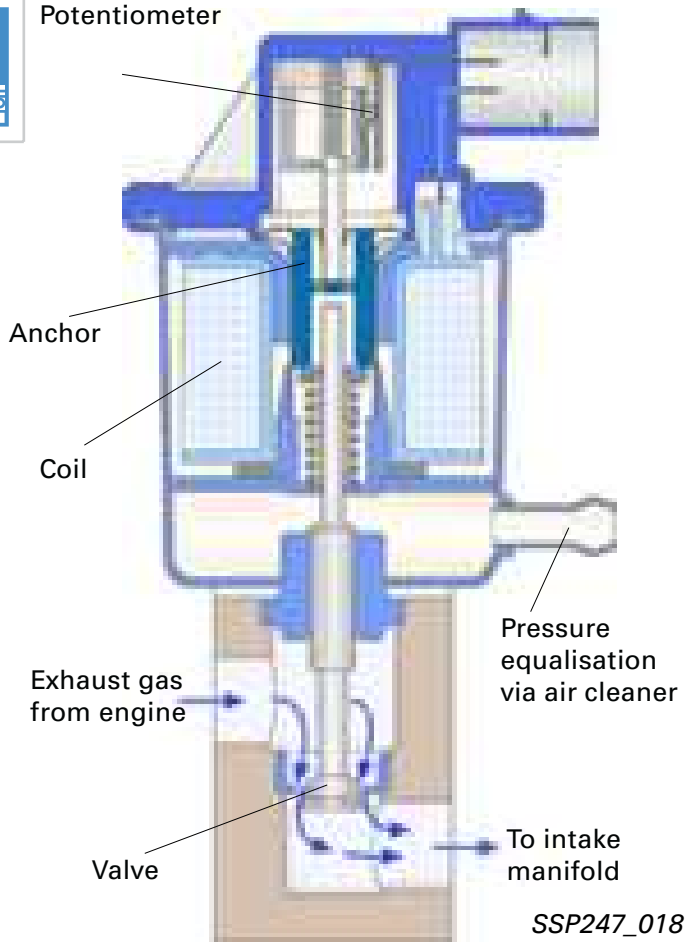

SSP247_018

The EGR valve terminates (zero-current process) the recirculation of exhaust gases to the intake manifold. It is switched on from a coolant temperature of 35 °C.
When it is actuated, the valve is opened with a defined duty cycle.

The input information includes

- information about the engine speed
- information about the load status of the engine
- coolant temperature
- air pressure

A potentiometer is located in the valve head.

This potentiometer detects the opening cross-section of the valve, which is passed back as a return message to the engine control unit. The opening cross-section is then used to control the voltage of the coil in the valve according to the map.

A direct connection to ambient air pressure is provided via the air cleaner to allow for pressure equalisation in the valve during the different control phases.

Electrical circuit

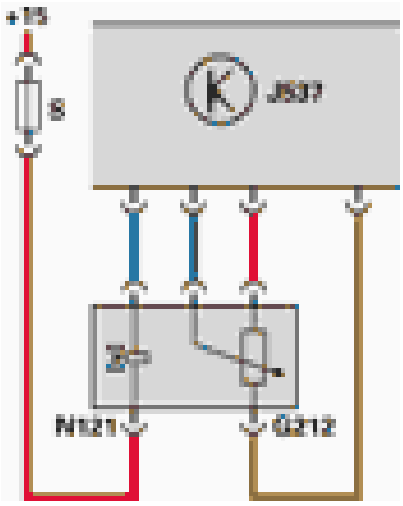

SSP247_019

Diagnostics

The valve has diagnostic capabilities.

The following are stored in the fault memory:

- Zero point shift
- Maximum opening
- Maximum path

It is also detected if a valve is sticking.

G212	EGR potentiometer
J537	Control unit for 4LV
N121	Frequency valve for exhaust gas recirculation

The fuel pump located inside the fuel tank pumps fuel through the fuel filter to the injectors.

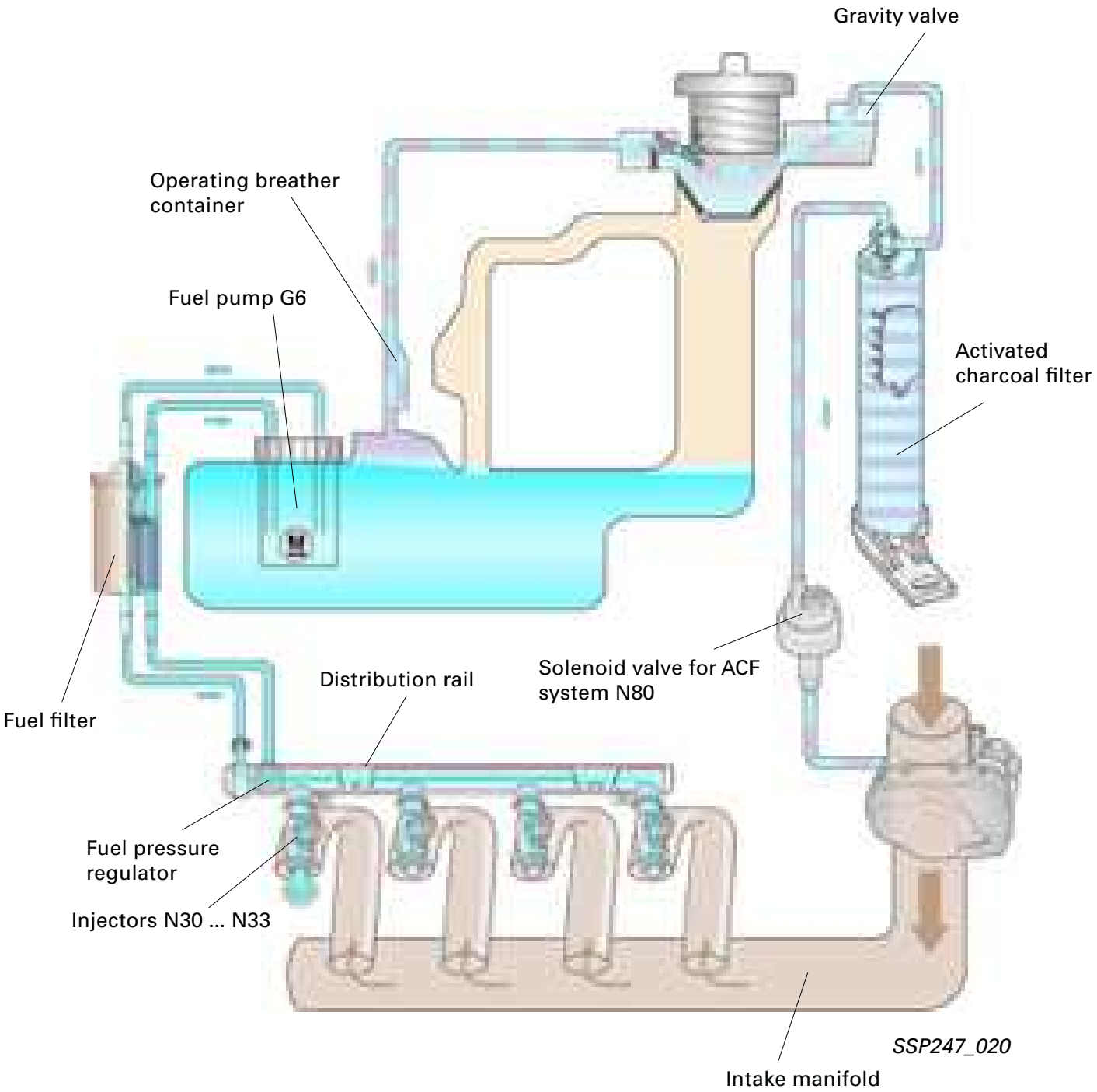

The A2 is equipped with a safety fuel shut-off system for the event of a crash, as described in SSP 207.

Overview of system

Intake manifold pressure sender G71
with
Intake air temperature sender G42

Engine speed sender G28
Versions I and II

Hall sender G40

Knock sensor I G61

Lambda probe upstream of catalytic converter G39 with
Heater for lambda probe Z19
Lambda probe downstream of catalytic converter G130 with
Heater for lambda probe Z29

Coolant temperature sender G2/G62

Throttle valve control part J338 with
Throttle valve drive G186 (electric throttle operation)
Angle sender 1/2 for throttle valve drive G187/G188

Accelerator pedal module with accelerator pedal position sender G79/G185

Brake light switch F/F47

Auxiliary input signals
A/C compressor
Air conditioner (engine speed increase)
Tank fill level*; crash signal; CCS switch; DF signal; vehicle speed signal from combi-processor J218

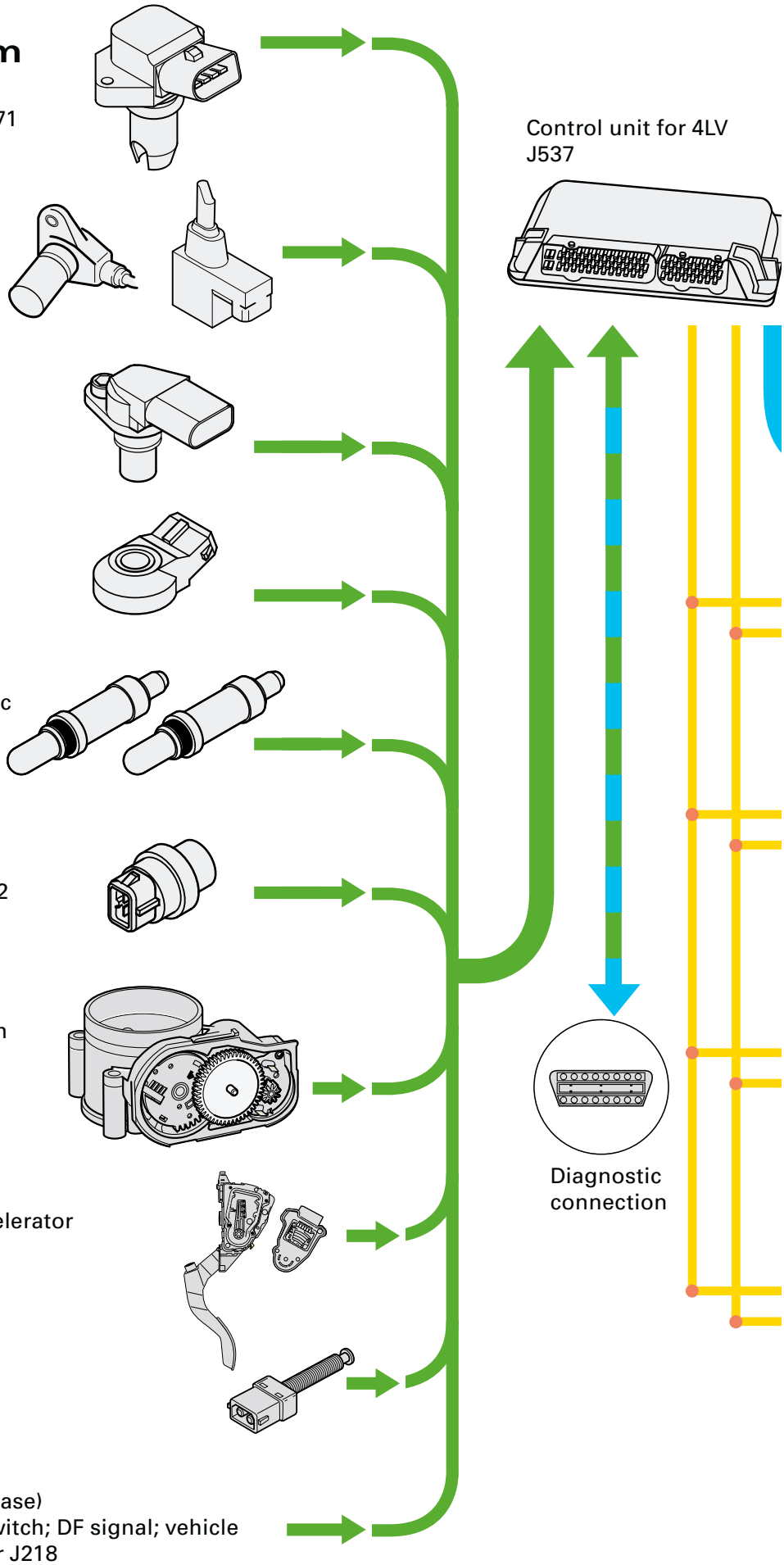

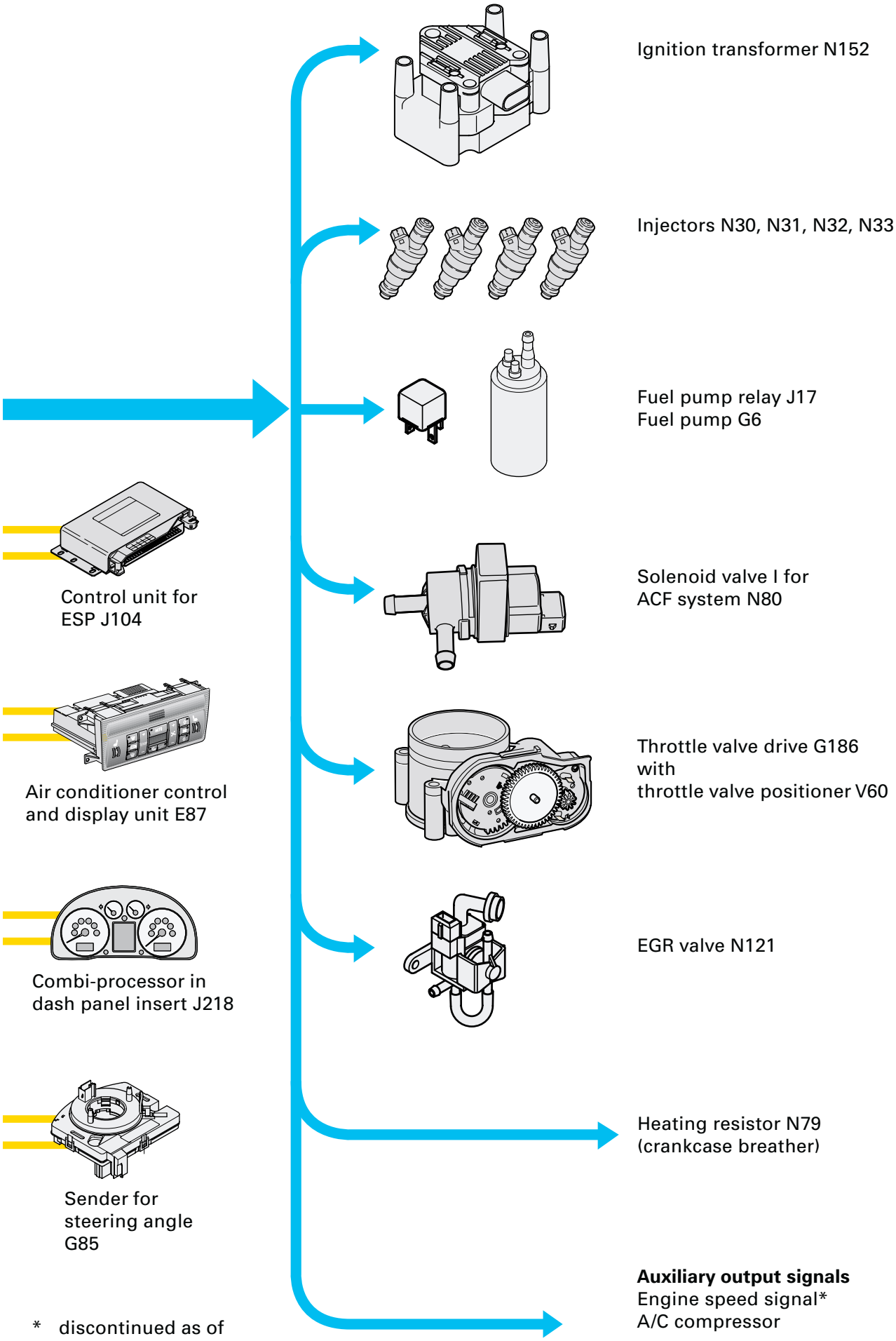

* discontinued as of CAN compatible combi-processor J218

SSP247_021

Engine speed sender G28

The sender is a combined speed sender and reference mark sender.

Two different sealing flange systems and sender versions are in use.

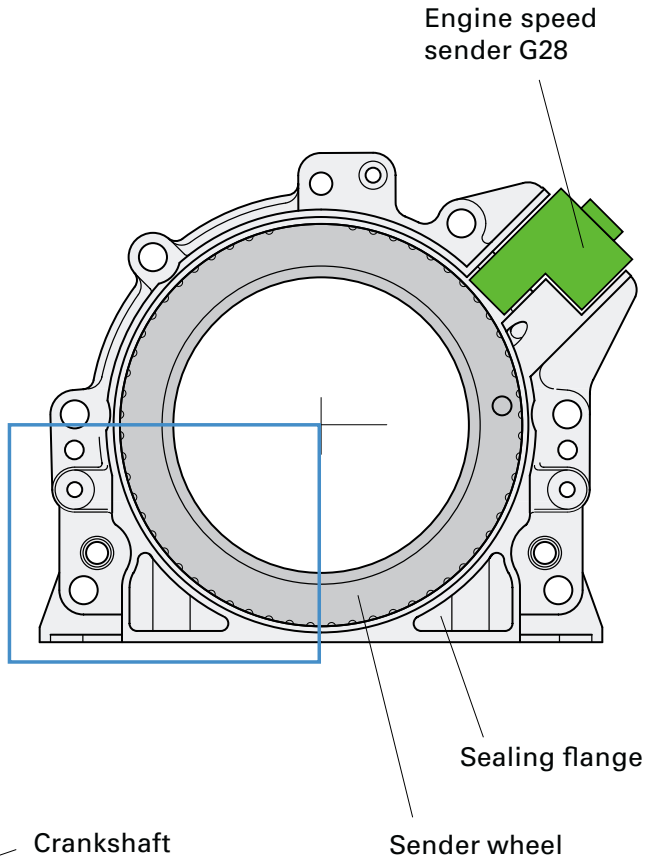

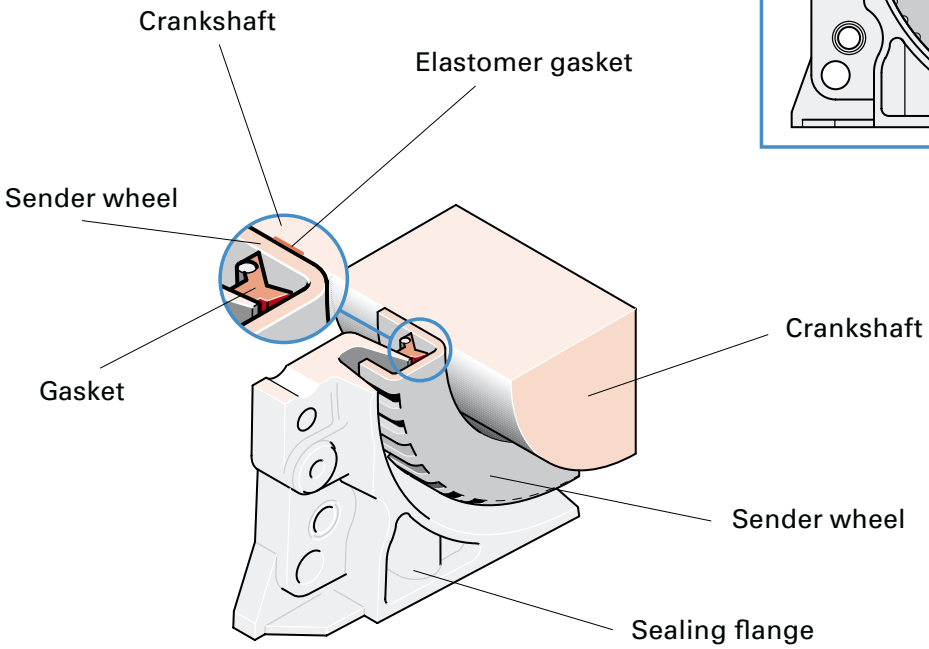

SSP247_078

Sealing is provided at the crankshaft.

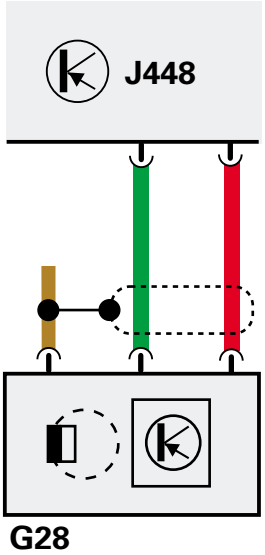

SSP247_080

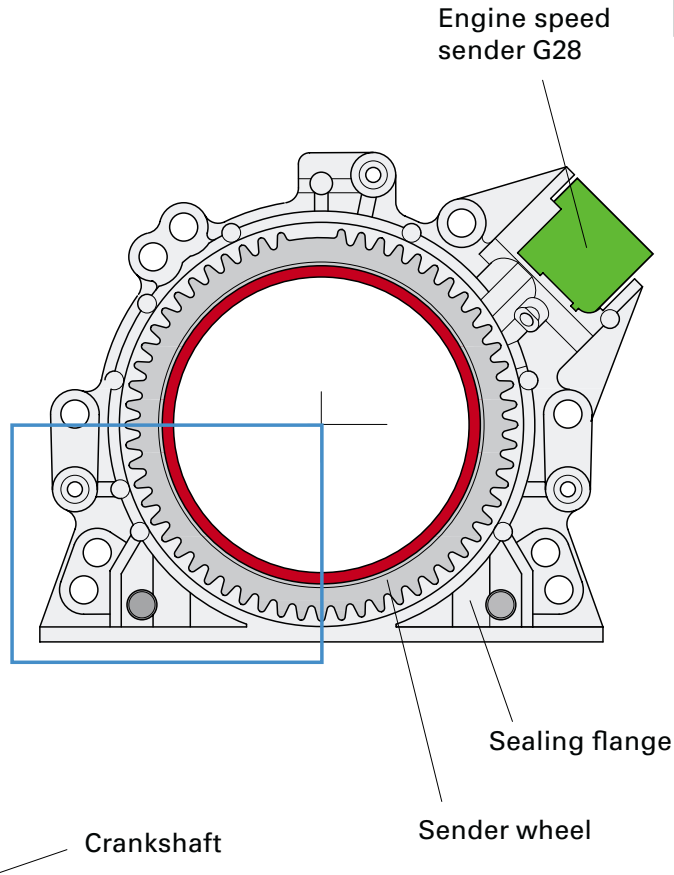

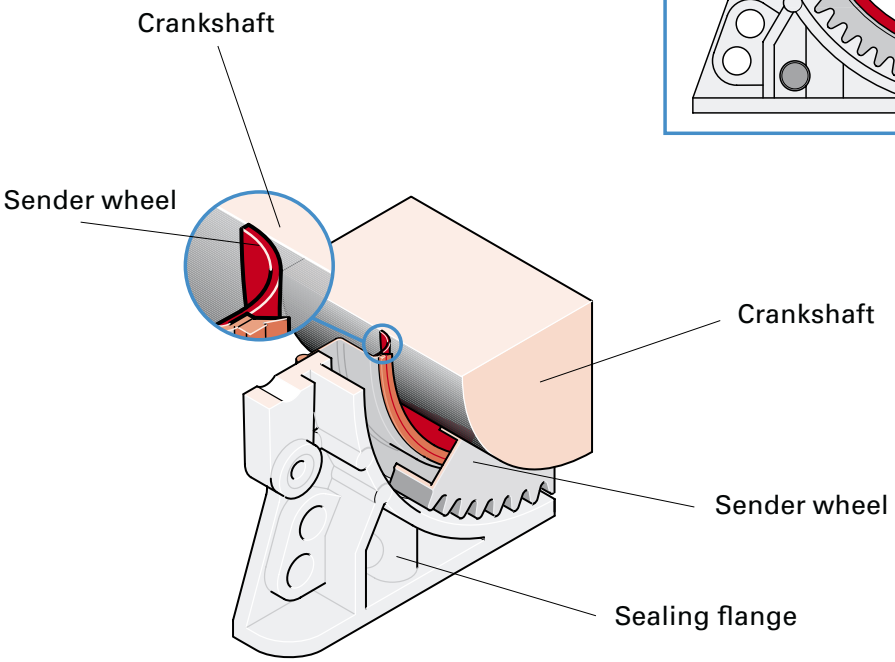

SSP247_079

Application of the signal

The signal from the engine speed sender is used to detect the engine speed and the exact position of the crankshaft. The engine control unit uses this information to determine the timing of injection and ignition.

The effect of a signal failure

The engine control unit switches to emergency running mode if the engine speed sensor fails. The control unit then calculates the engine speed and camshaft position from information provided by camshaft position sender G163.

The maximum engine speed is lowered in order to protect the engine. It is still possible to restart the engine.

The Hall sender G40

is located at the camshaft housing above the intake camshaft.
Three teeth are cast onto the intake camshaft, where they are scanned by the Hall sender.

Application of the signal

The signal is used together with the signal from the engine speed sender to detect ignition TDC on cylinder no. 1. This information is required for the cylinder-selective knock control and the sequential fuel injection.

The effect of a signal failure

In the event of sender failure the engine continues to run and can also be restarted. The engine control unit goes into emergency running mode. The fuel injection then switches from sequential to parallel mode.

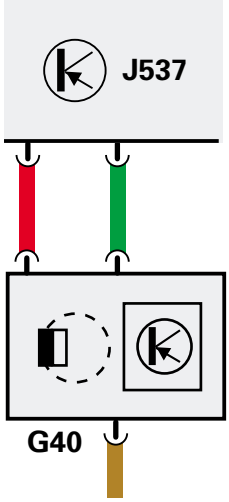

SSP247_029

SSP247_030

Lambda control of the Euro-On-Board-Diagnosis

The new broadband lambda probe is used as a pre-cat probe in conjunction with the EOBD.

An almost linear current increase is used for the output of the lambda value. As a result the lambda value can be measured over the entire engine speed range.

Function

With the broadband lambda probe, the lambda value is calculated from a change in current rather than a change in voltage. However, the physical processes are the same.

Broadband lambda probe

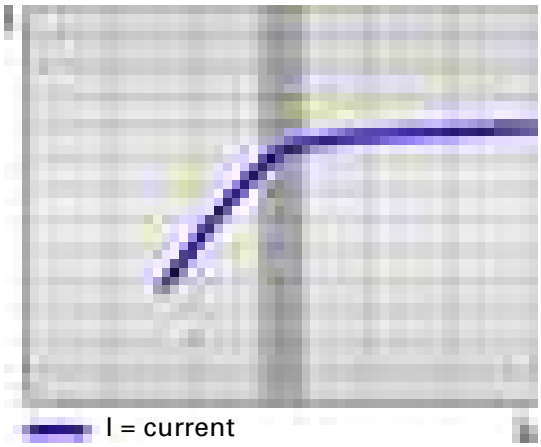

SSP247_022

Planar lambda probe

The familiar planar lambda probe is used as the post-cat probe.

The measuring range fluctuates erratically around the value lambda = 1 and is sufficient for monitoring purposes.

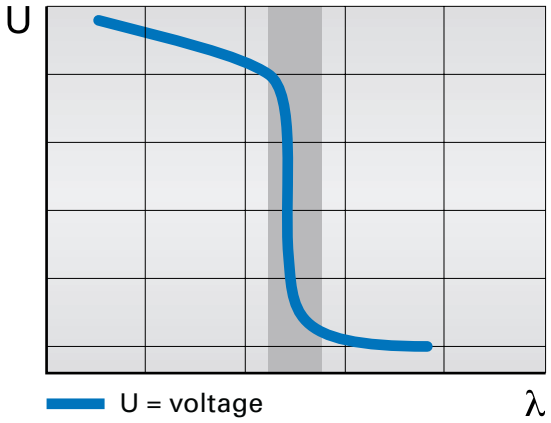

SSP247_023

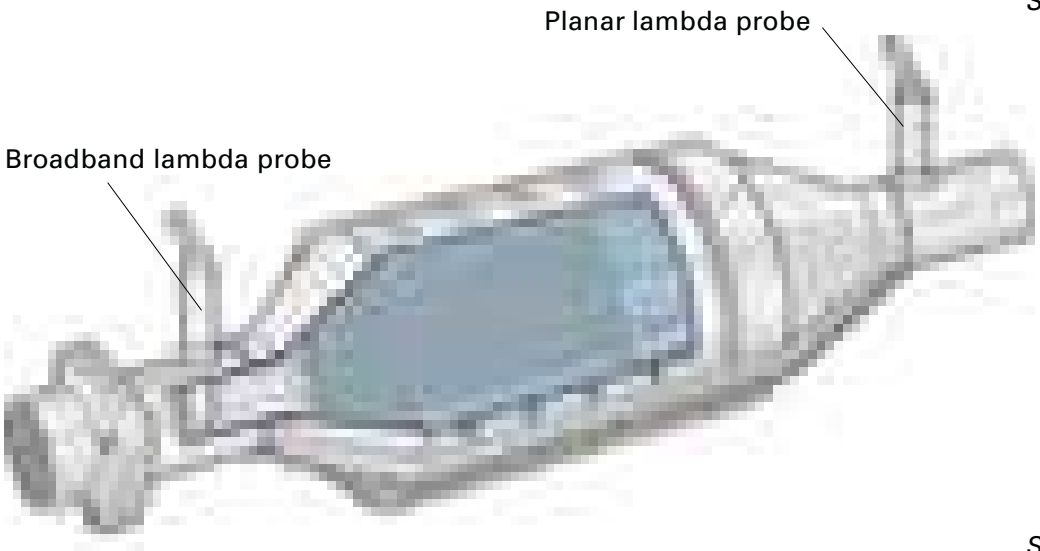

SSP247_083

Broadband lambda probe

This probe uses two electrodes to generate a voltage relating to the varying oxygen content of the exhaust gas.

The voltage at the electrodes is kept constant.

This process is achieved by means of a miniature pump (pump cell), which supplies the electrode on the exhaust side with enough oxygen to keep the voltage between the two electrodes at a constant value of 450 mV. The engine control unit converts the current consumption of the pump into a lambda value.

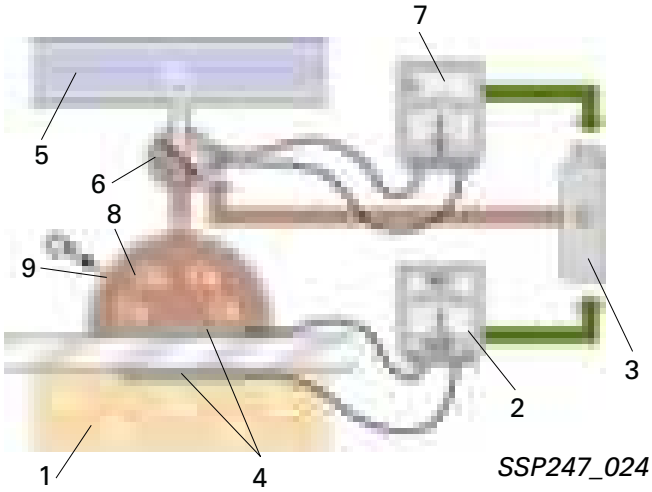

1	Fresh air
2	Probe voltage
3	Engine control unit
4	Electrodes
5	Exhaust gas
6	Miniature pump (pump cell)
7	Pump current
8	Measuring range
9	Diffusion channel

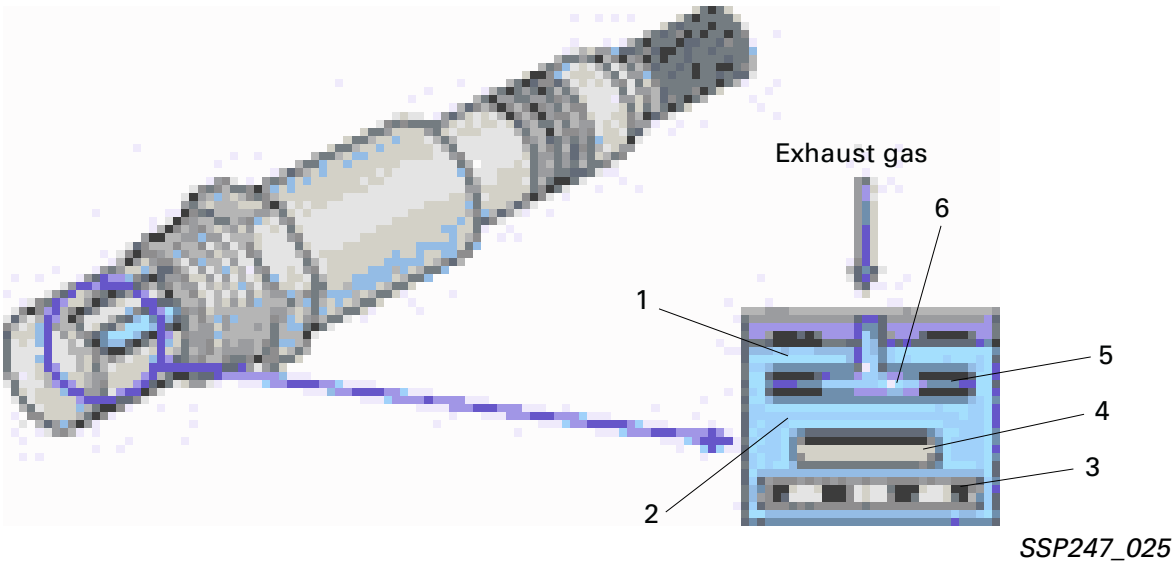

1	Oxygen pump cell
2	Nernst cell (two-point probe)
3	Probe heater
4	Fresh air (reference air)
5	Measuring range
6	Diffusion channel

If the fuel/air mixture becomes too rich then the oxygen content of the exhaust gas drops. The pump cell pumps less oxygen into the measuring area and the voltage rises at the electrodes.

In this case more oxygen escapes through the diffusion channel than is pumped by the pump cell.

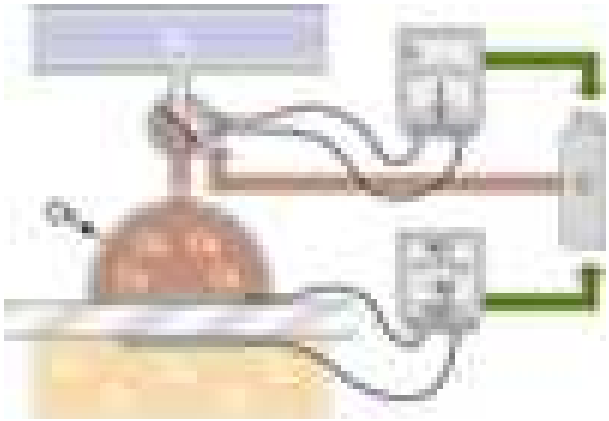

SSP247_027

The pump cell has to increase its pumping rate to make the oxygen content in the outer air chamber rise. This regulates the electrode voltage back to the value of 450 mV, and the engine control unit then converts the current consumption of the pump into a lambda value.

If the air/fuel mixture is too lean then this function is reversed.

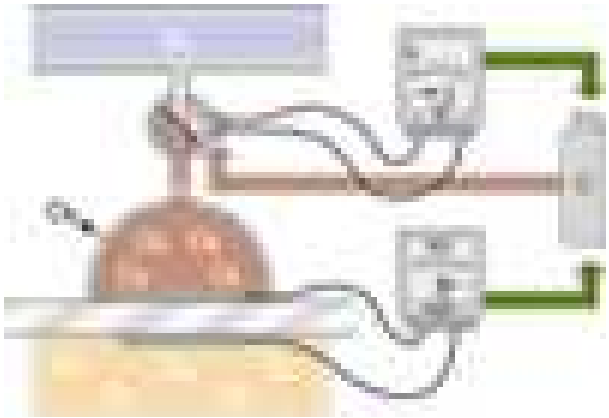

SSP247_028

The pumping effect of the pump cell is a purely physical process. A positive voltage at the pump cell attracts negative oxygen ions through the ceramic, which is permeable to oxygen.

The linear lambda probe and the engine control unit form a system together. The lambda probe must match the engine control unit.

Functional diagram

Key

1.4 l - 16 V (55 kW) AUA

Components

E45	CCS switch
E227	Button for cruise control system
F	Brake light switch
F36	Clutch pedal switch
F47	Brake pedal switch
G6	Fuel pump
G28	Engine speed sender
G39	Lambda probe upstream of catalytic converter
G40	Hall sender
G42	Intake air temperature sender
G61	Knock sensor I
G62	Coolant temperature sender
G71	Intake manifold pressure sender
G79	Accelerator pedal position sender
G130	Lambda probe downstream of catalytic converter
G185	Accelerator pedal position sender 2
G186	Throttle valve drive (electric throttle operation)
G187	Angle sender 1 for throttle valve drive (electric throttle operation)
G188	Angle sender 2 for throttle valve drive (electric throttle operation)
G212	EGR potentiometer
J17	Fuel pump relay
J218	Combi-processor in dash panel insert
J338	Throttle valve control part
J537	Control unit for 4LV
M9/10	Bulb for left/right brake light
N30 ... 33	Injectors, cylinders 1 ... 4
N79	Heating resistor (crankcase breather)
N80	Solenoid valve for ACF system
N121	Frequency valve for exhaust gas recirculation
N152	Ignition transformer
P	Spark plug connector
Q	Spark plugs
Z19	Heater for lambda probe
Z29	Heater for lambda probe 1, downstream of catalytic converter

Colour coding

= input signal

= output signal

= battery positive

= earth

= CAN-BUS

= bi-directional

= diagnostic connection

Auxiliary signals

1 Crash signal, airbag control unit

2 Terminal 50 signal, ignition starter switch

3 Alternator terminal DF

4 Vehicle speed signal (from combi-processor J218)

5 A/C compressor (engine speed increase)

6 Tank fill level*

7 TD signal*

8 A/C compressor

CAN-BUS H =
CAN-BUS L = } Databus drive

x Connection within the functional diagram

* discontinued for CAN compatible combi-processor J218

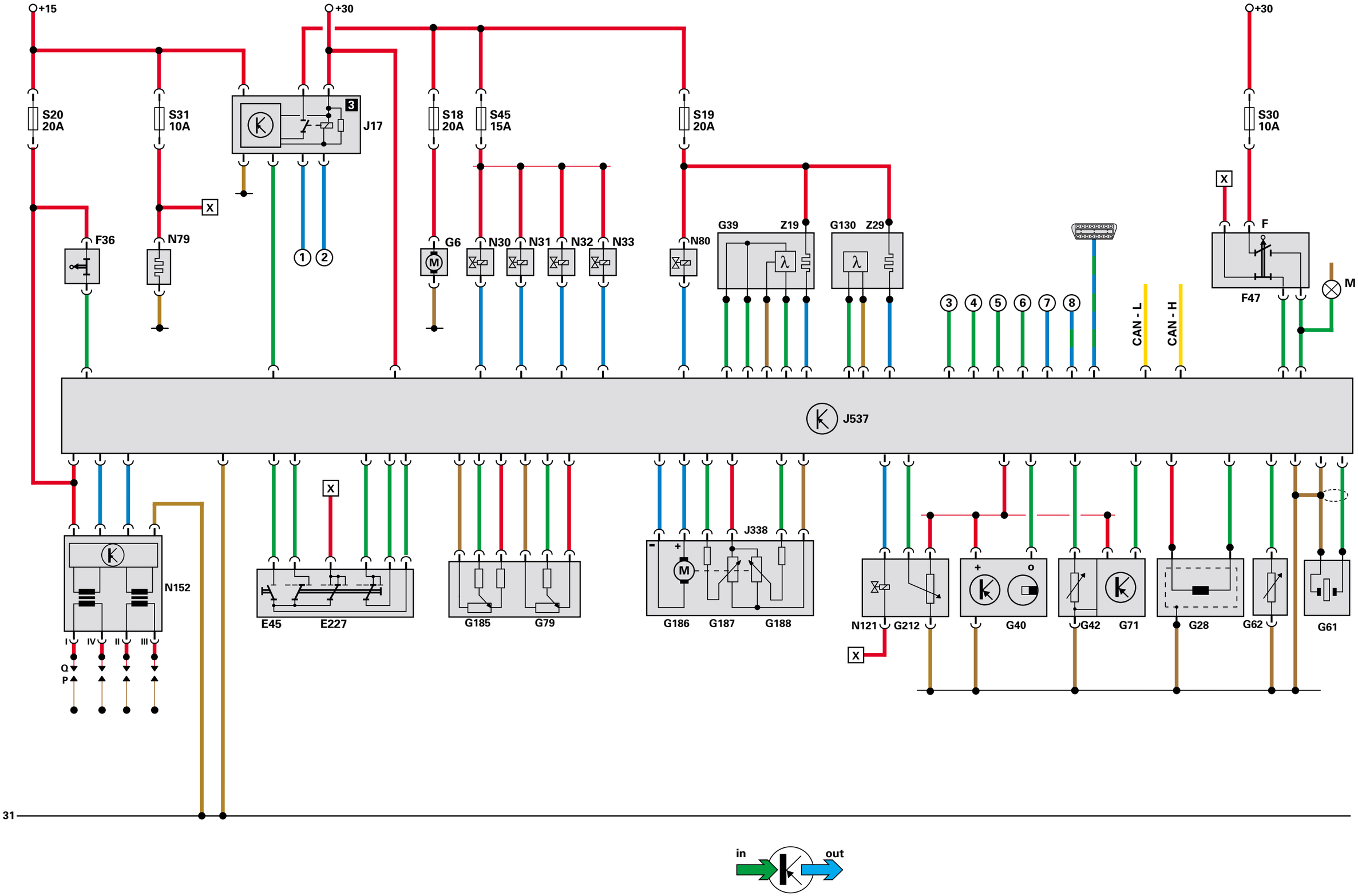
+15
+30
+30
S20
20A
S31
10A
J17
3
S18
20A
S45
15A
S19
20A
S30
10A
X
F36
N79
1
2
G6
N30
N31
N32
N33
N80
G39
Z19
G130
Z29
3
4
5
6
7
8
CAN - L
CAN - H
F
F47
M
J537
N152
I
IV
II
III
Q
P
E45
E227
G185
G79
J338
G186
G187
G188
N121
G212
G40
G42
G71
G28
G62
G61
31
in
out

Overview

The 5-speed manual gearbox 02T

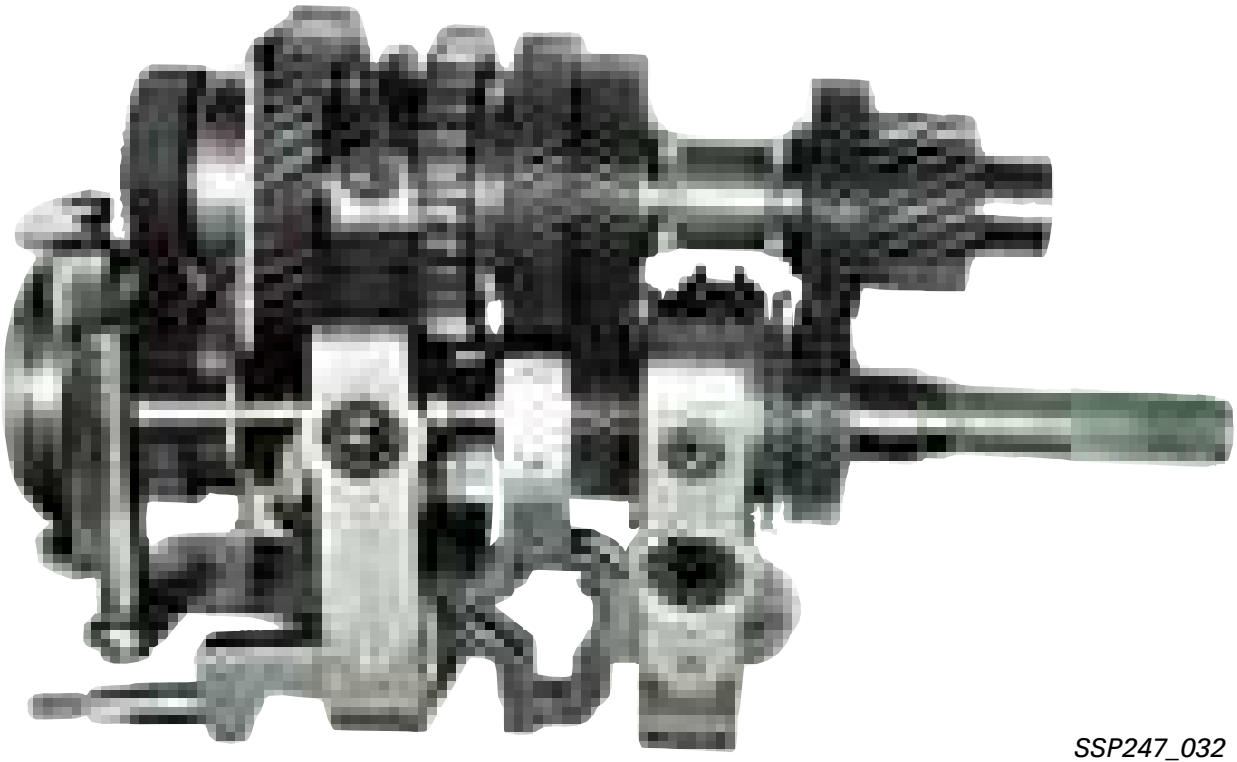

SSP247_032

The 02T gearbox is an extremely lightweight two-shaft gearbox. The parts of the housing are made of magnesium. The gearbox can transmit torques of up to 200 Nm.

This gearbox is used across the range in conjunction with numerous engines. Therefore it was important to design the gear wheel transmission ratios and the final drive ratio as flexibly as possible.

Engine/gearbox combinations

Manual 5-speed gearbox	Ratio i =		No. of teeth on driven wheel z_2 No. of teeth on driving wheel z_1			
Gearbox code	EYX			EWO		
Engine allocation	1.4 l/55 kW			1.4 l/55 kW		
	z_2	z_1	i	z_2	z_1	i
Final drive	66	17	3.882	61	18	3.389
1st gear	38	11	3.455	34	09	3.778
2nd gear	44	21	2.095	36	17	2.118
3rd gear	43	31	1.387	34	25	1.360
4th gear	40	39	1.026	34	35	0.971
5th gear	39	48	0.813	34	45	0.756
Reverse gear	35 24	24 11	3.182	36 18	20 09	3.600
Speedometer	electronic					
Gear oil fill capacity	1.9 litres					
Gear oil specification	G50 SAE 75 W 90 (synthetic oil)					
Gear oil change	Filled for service life					
Clutch mechanism	hydraulic					

The code letters of the gearbox are also given on the vehicle data plates.

Housing

The gearbox housing consists of 2 magnesium parts (gearbox housing, clutch housing).

A cover closes off the gearbox housing to the outside.

The parts of the gearbox housing are made of magnesium in support of its lightweight design principles. This measure alone has led to a weight reduction of 2.5 kg compared to the conventional aluminium design..

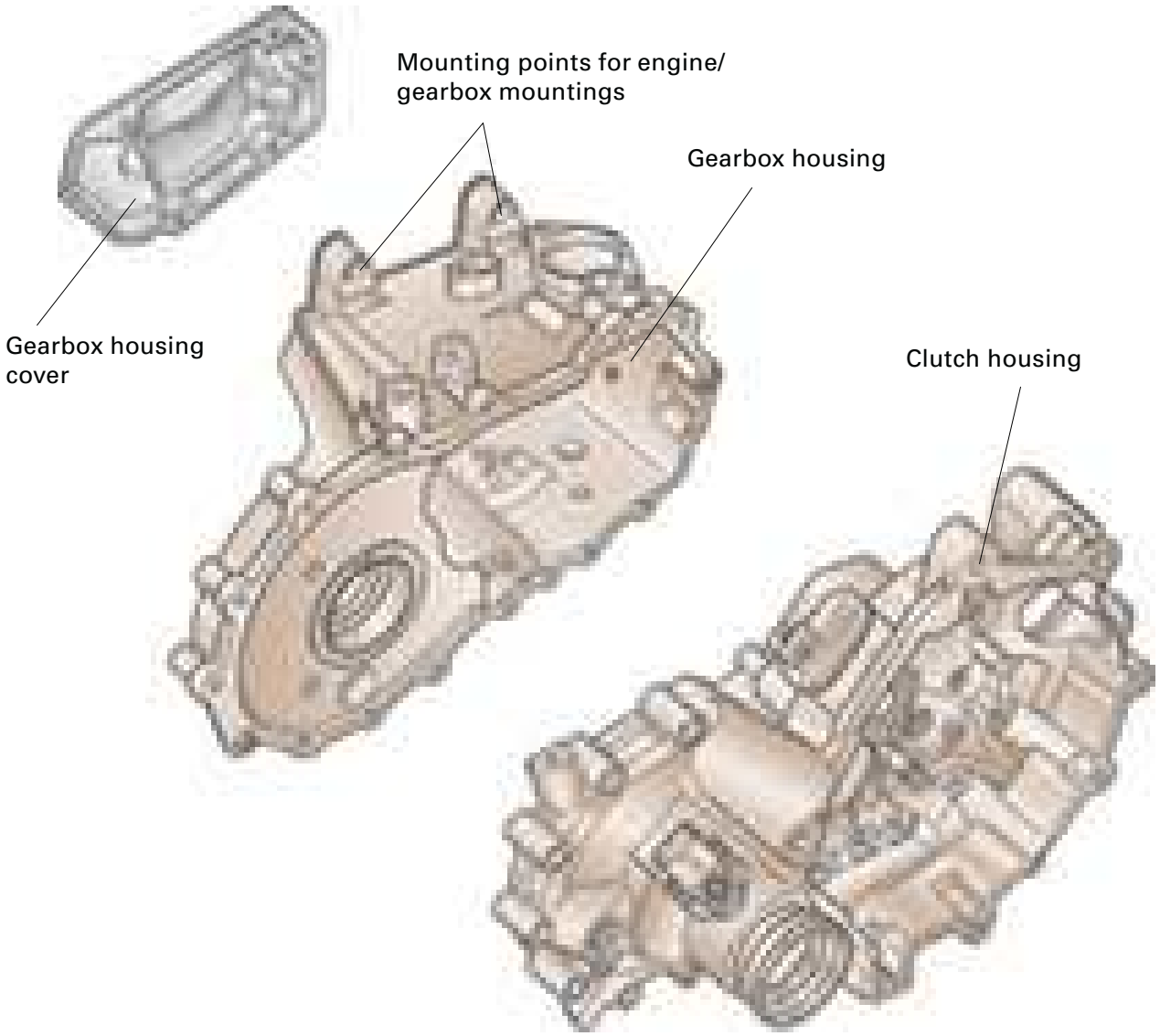

SSP247_033

The gearbox has a modular design concept.

Key assemblies:

Clutch release lever

This module contains the release lever, the release bearing and the guide sleeve.

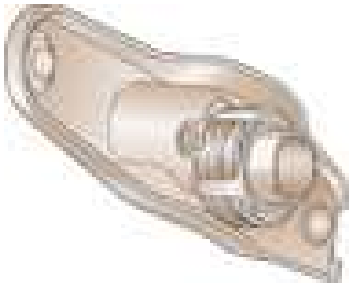

SSP247_034

Selector shaft with selector mechanism cover

This module contains all of the locking elements, spring elements and guide elements of the gearshift mechanism.

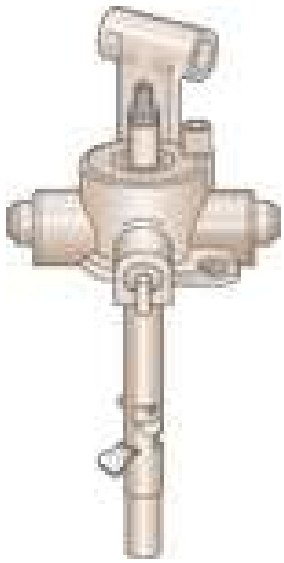

SSP247_035

Internal selector mechanism (shift mechanism)

with the selector forks and the selector plates.

SSP247_036

Bearing support

with the two grooved ball bearings and the pre-assembled input and output shafts.

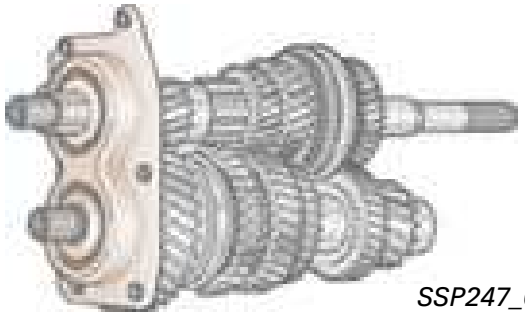

SSP247_056

Gearbox design

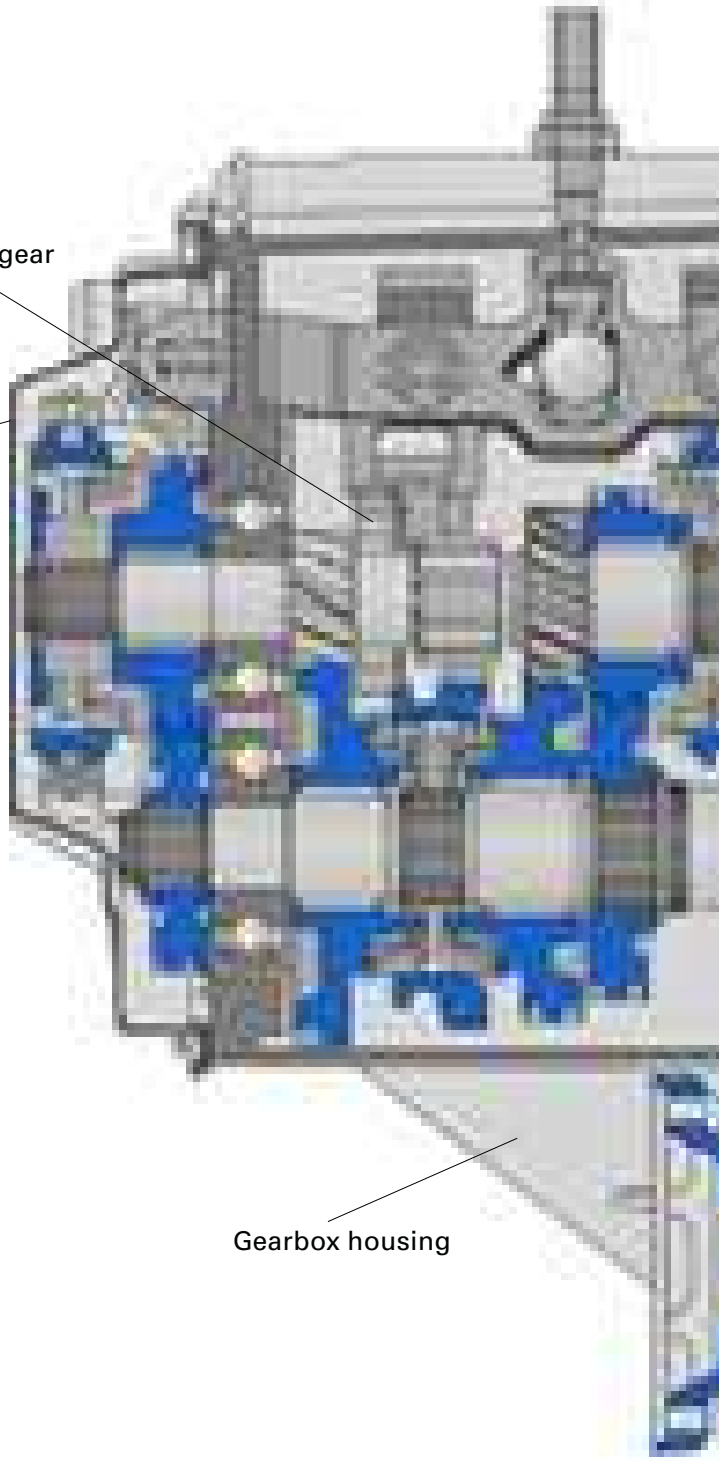

1st/2nd gear are double-synchronised. All the other forward gears are single-synchronised.

The teeth of the sliding gears and the gear wheels are helical-cut and constantly meshed.

All of the sliding gears run on needle roller bearings.

The sliding gears are distributed between the input shaft and the output shaft

1st and 2nd gear is selected on the output shaft, 3rd, 4th and 5th gears on the input shaft.

The reverse gear is a straight-cut gear.

The reversal of the direction of rotation on the output shaft is effected with a reverse idler gear, which sits on a separate shaft in the gearbox housing and is shifted between the input shaft and the output shaft.

Torque is transmitted to the differential via the output gear wheel on the output shaft to the final drive gear wheel.

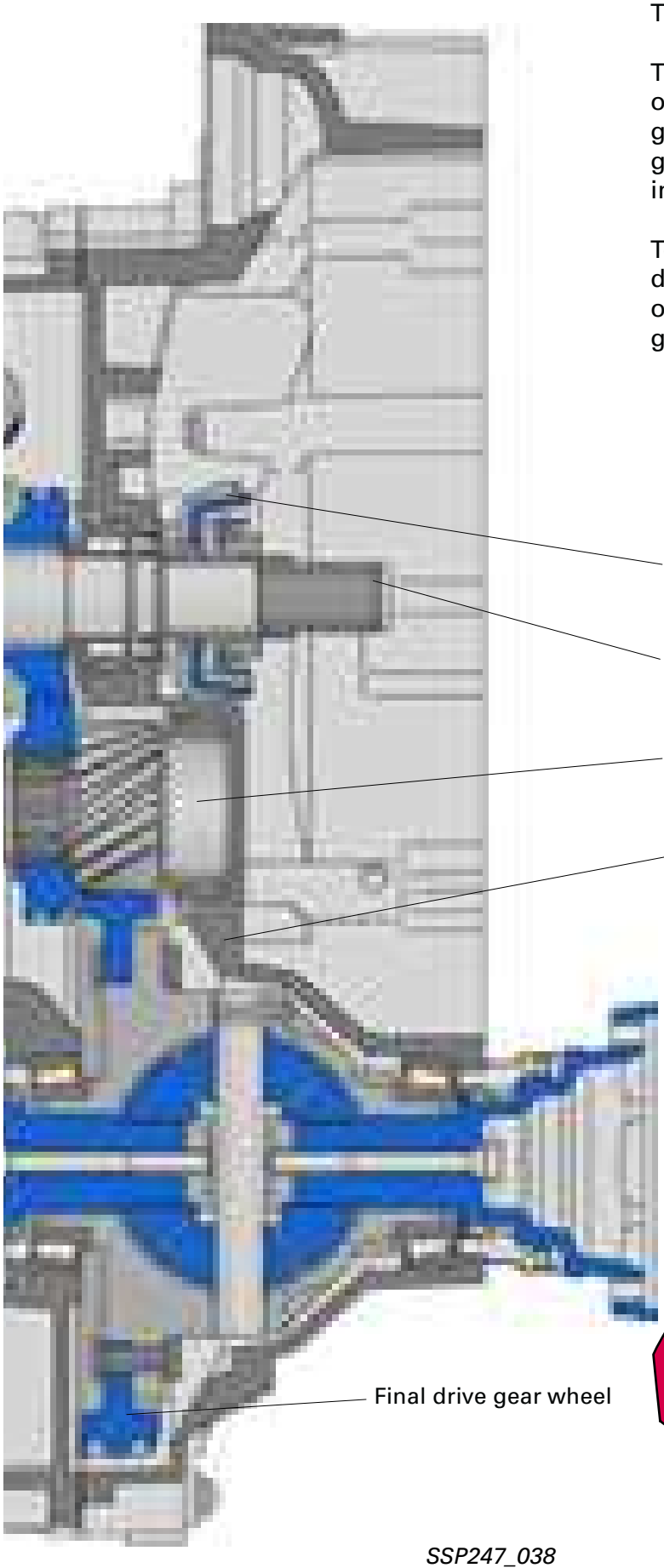

SSP247_038

A wide range of special tools is available for all repair work involving the removal and installation of bearings, bushes, oil seals etc.
Please refer to the notes in the repair manual.

Input shaft

The input shaft is designed in the classic fixed/loose mounting style.

It runs on
- a cylindrical roller bearing (loose) in the clutch housing and
- a grooved ball bearing (fixed) which is seated in a bearing unit

in the gearbox housing.

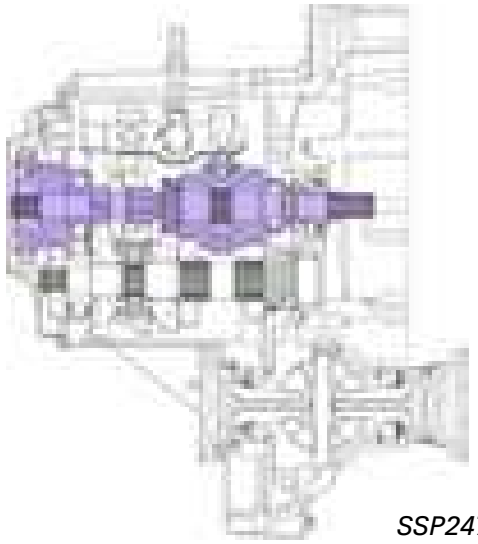

SSP247_039

The input shaft has a deep-drilled hole in order to save weight.

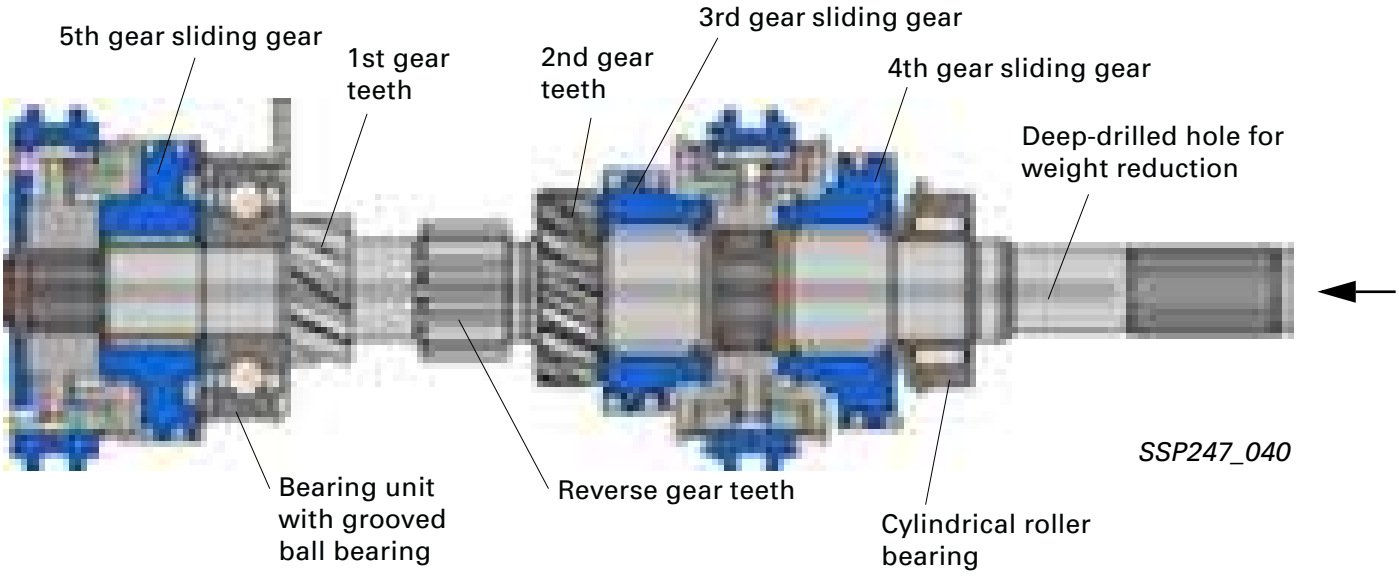

SSP247_040

The teeth for 1st gear, 2nd gear and reverse gear are permanently connected to the input shaft.

The needle roller bearing for the 5th gear runs on a sleeve on the shaft side. The needle roller bearings of the 3rd and 4th gears run directly on the input shaft.

The synchro-hubs for the 3rd/4th gear and the 5th gear are attached via fine teeth.

Circlips keep them in position.

The deep-drilled hole and the hollow bore in the output shaft have resulted in a weight reduction of approx. 1 kg.

Output shaft

The output shaft is also designed in the classic
fixed/loose mounting style.

Just like the input shaft it runs on
- a cylindrical roller bearing (loose) in the clutch housing and
- a grooved ball bearing (fixed) which sits together with the input shaft in the bearing unit

in the gearbox housing.

The output shaft has a hollow bore to reduce weight.

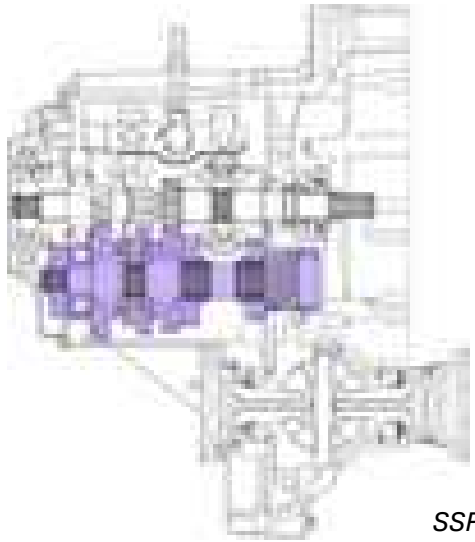

SSP247_041

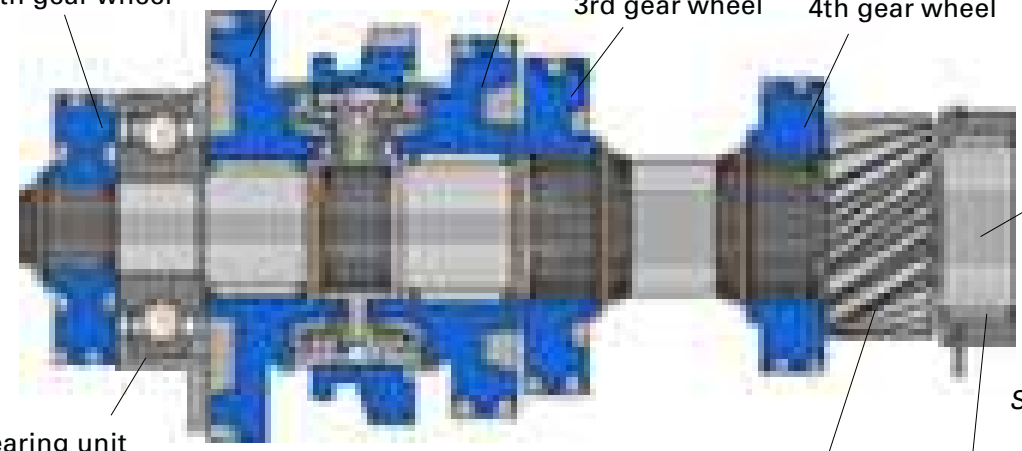

SSP247_042

The gear wheels for the 3rd, 4th and 5th gears and the 1st/2nd gear synchro-hub are attached via fine teeth.

Circlips keep them in position.

The sliding gears of the 1st and 2nd gears run on needle roller bearings on the output shaft.

The grooved ball bearings for the input and the output shafts should only be replaced as a joint bearing assembly.

Differential

The differential (with flange shafts for the final drive) forms an assembly with the manual gearbox.

It runs on two frictionally optimised taper roller bearings in the gearbox and the clutch housing.

Sealing rings (different sizes for the left and right hand sides) seal the housing to the outside.

The final drive crown wheel is riveted to the differential housing and paired with the output shaft (to lower transmission noise).

The sender wheel for the speedometer is an integral part of the differential housing.

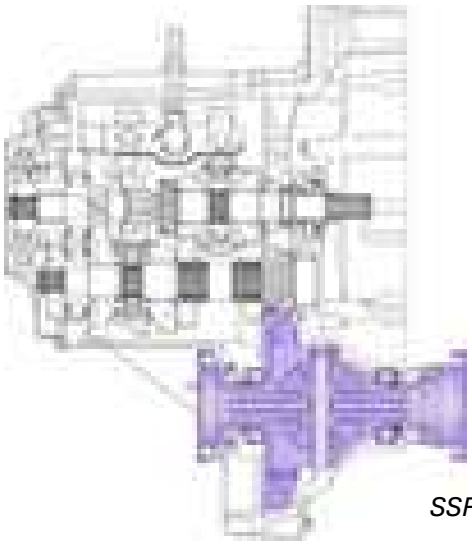

SSP247_043

The differential needs to be adjusted if any components are replaced that affect the play of the taper roller bearings. This is done with a shim in the clutch housing. Please refer to the repair manual for further details.

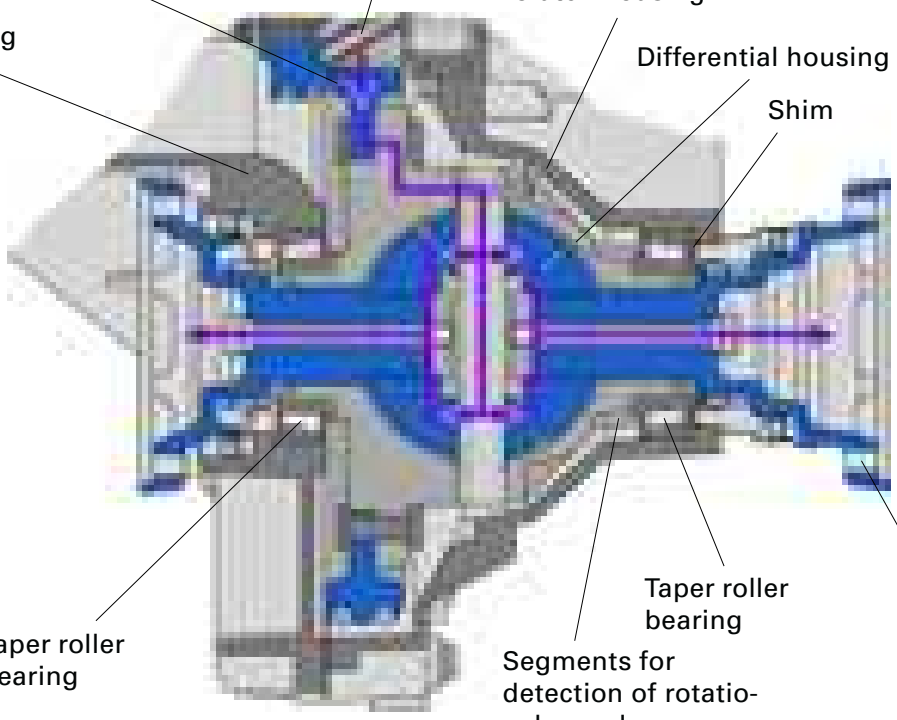

SSP247_044

Double synchronisation

1st and 2nd gear are double-synchronised. A second synchroniser ring (inner) is used with an outer ring for this double synchronisation.

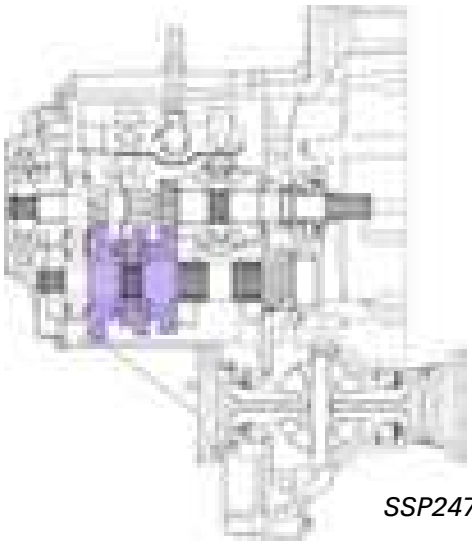

SSP247_045

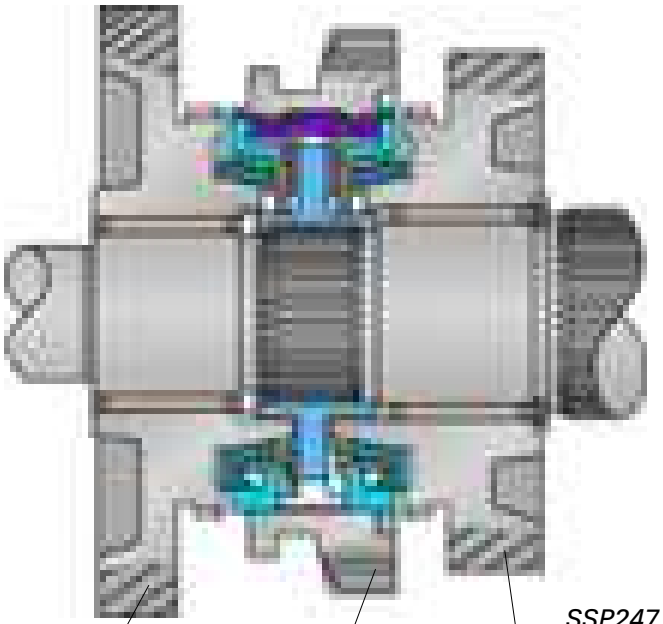

SSP247_046

The double synchronisation improves the smoothness of the gear change from 3rd gear down to 2nd
and from 2nd gear down to 1st.

Thanks to the almost doubling in size of the tapered frictional surface area, the effectiveness of the synchronisation is improved by approx. 50%, and the gear change effort is reduced by roughly a half.

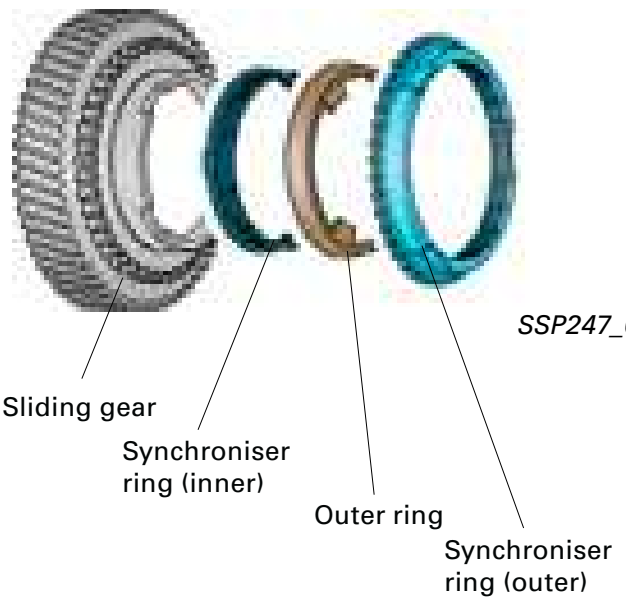

SSP247_047

The double synchronisation consists of:

- a synchroniser ring (inner)
- an outer ring
- a synchroniser ring (outer).

Synchronisation takes place via the two synchroniser rings and the outer ring.

Power flow

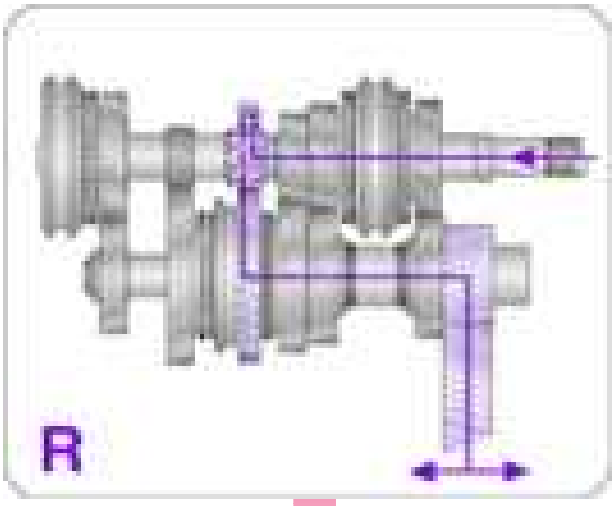

SSP247_048

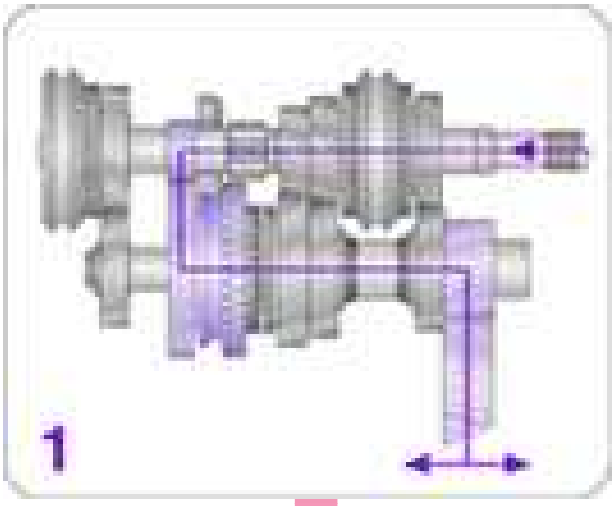

SSP247_049

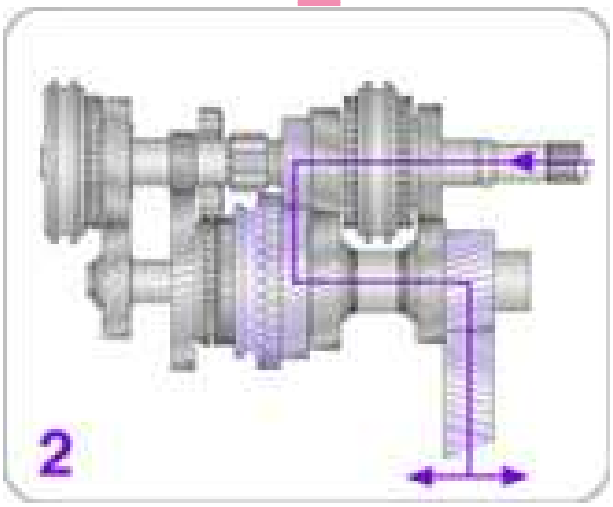

SSP247_051

SSP247_050

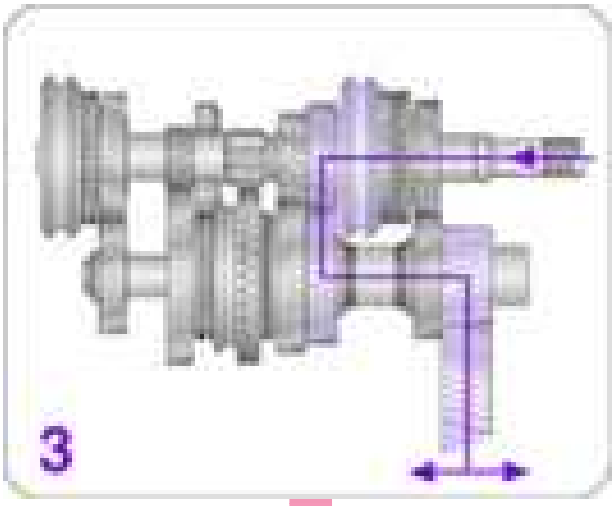

SSP247_052

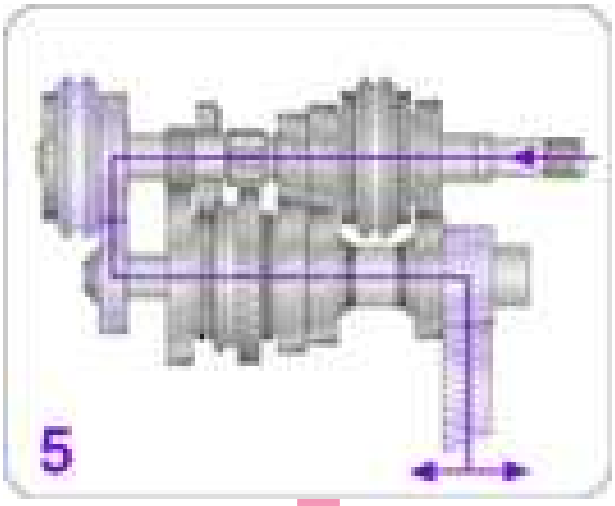

SSP247_053

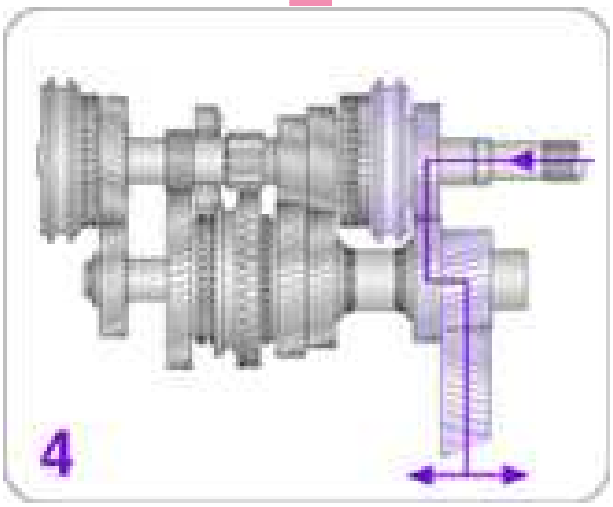

SSP247_054

Power flow in the gearbox

The engine torque is transmitted to the gearbox via the input shaft.

Depending on the selected gear, the torque is then transmitted to the appropriate pair of gears on the output shaft, and from here to the final drive gear wheel and the differential.

The torque and rotational speed then act on the drive wheels according to the settings of the gearshift mechanism.

Bearing support

The grooved roller bearings are not mounted directly onto the gearbox housing, and instead sit in a separate bearing support.

SSP247_055

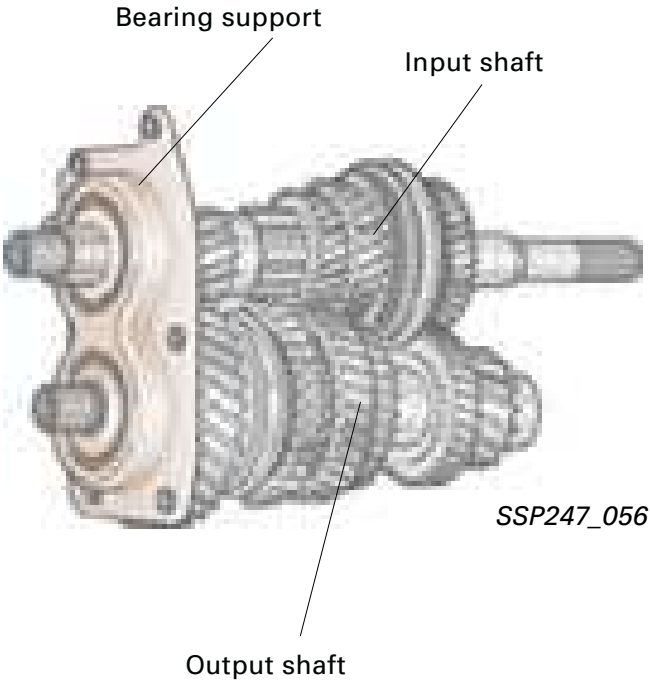

SSP247_056

The complete package of shafts and gear wheels for the input shaft and the output shaft is pre-assembled outside the gearbox housing in the bearing support, and can then be easily inserted into the gearbox housing.

A disc shape is used to secure the grooved roller bearings in installation position. The disc shape is welded to the bearing support.

The grooved roller bearings have their own radial oil seals on both sides that keep any abraded particles suspended in the gear oil away from the bearings.

The bearing support is pressed into the gearbox housing with its collar in the shape of a pair of glasses, and is then attached to the gearbox housing with six bolts.

The bearing support is replaced as a complete unit with the two grooved roller bearings after repairs.
This is done every time the unit is dismantled.
Please also refer to the notes in the repair manual.

Gear selection

Internal shift mechanism

The gear selection movements come into the gearbox from above.

The selector shaft is guided in the selector mechanism cover.
For gate selection movements it is moved in an axial direction.

Two spring-loaded balls prevent the selector shaft from twisting out of the selected gear position.

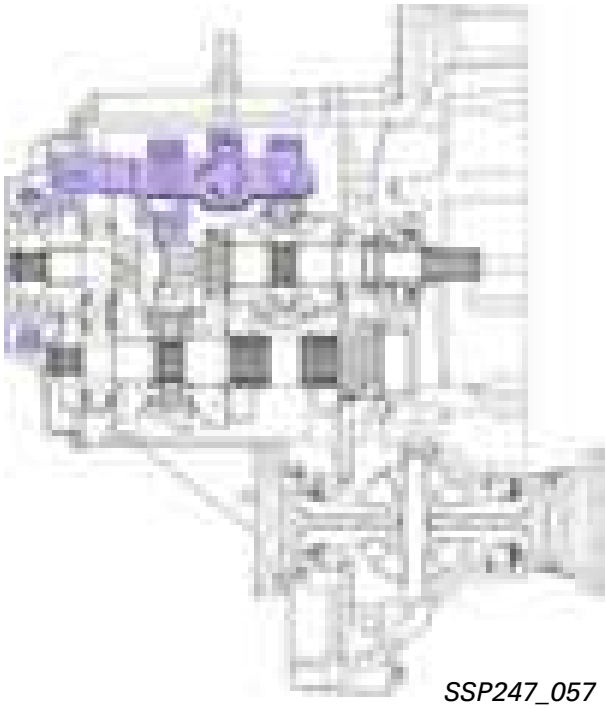

SSP247_057

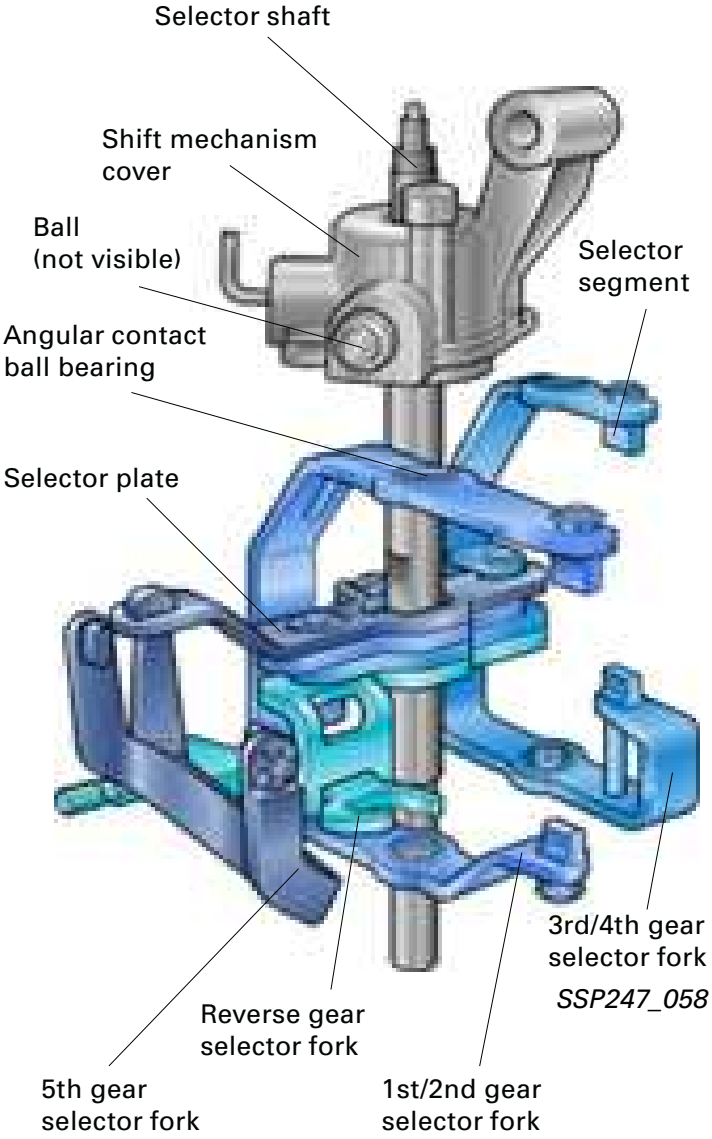

SSP247_058

The bearings for the selector forks for 1st/2nd gear and
3rd/4th gear are angular contact ball bearings. They help to improve the smoothness of gear changes.
The selector fork for the 5th gear has a friction bearing.

The selector forks and selector plates are loosely
coupled to each other.

When a gear is selected the selector shaft moves the selector plate with its fixed selector finger, and the selector plate in turn moves the selector fork.

The selector segments of the selector forks sit in the locking collar of the corresponding pair of gear wheels.

Adjusting the selector cables

Both the gearshift mechanism housing and the gearshift mechanism cover have been fitted with auxiliary devices that make adjustments to the selector cables a lot easier.

No measuring operations or templates for marking positions are required.

The adjustment always begins with the gearbox in
neutral:

– **Loosen the cables:**

  The securing mechanism on the gear selector cable and the gate selector cable is pulled forwards as far as its stop and then twisted to the left to lock it. The length of the cables can now be adjusted, which is performed automatically when the selector shaft and selector lever are positioned as follows.

– **Lock the selector shaft:**

  A bracket is attached to the gearshift mechanism cover which can be used to secure the selector shaft in a pre-defined position.
  To do this, press the selector shaft downwards by hand into the 1st/2nd gear gate, and while pressing down turn the adjusting bracket in the direction of the arrow and press it against the selector shaft. It engages and locks the selector shaft in this position.

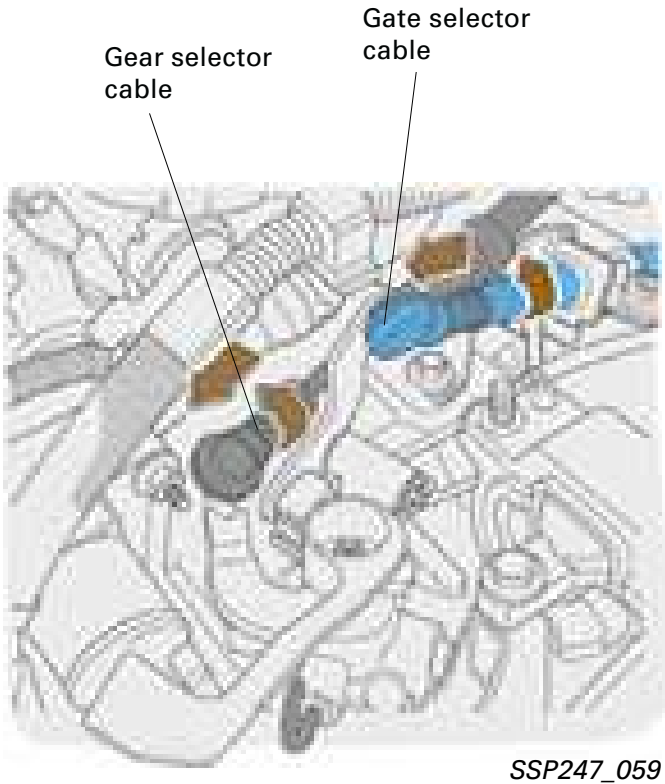

SSP247_059

SSP247_060

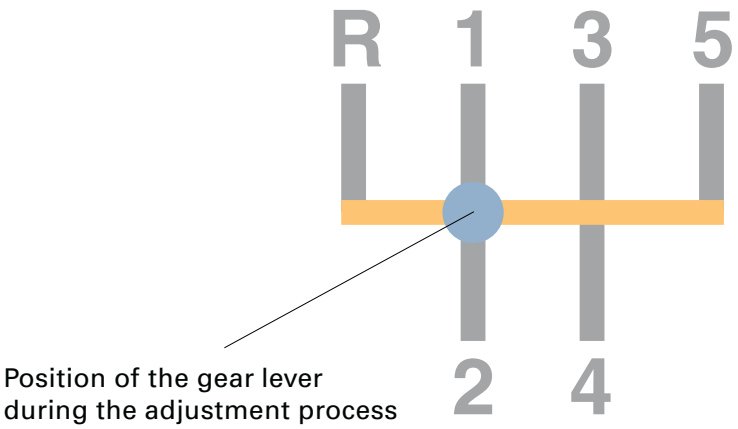

SSP247_061

– **Lock the gear lever:**

The gear lever is moved into in the 1st/2nd gear gate with the gearbox in neutral.
The gear lever has a fixed locating lug.
Guide pin T10027 is inserted through the hole in the lug into the bore in the gearshift mechanism housing which lies underneath.

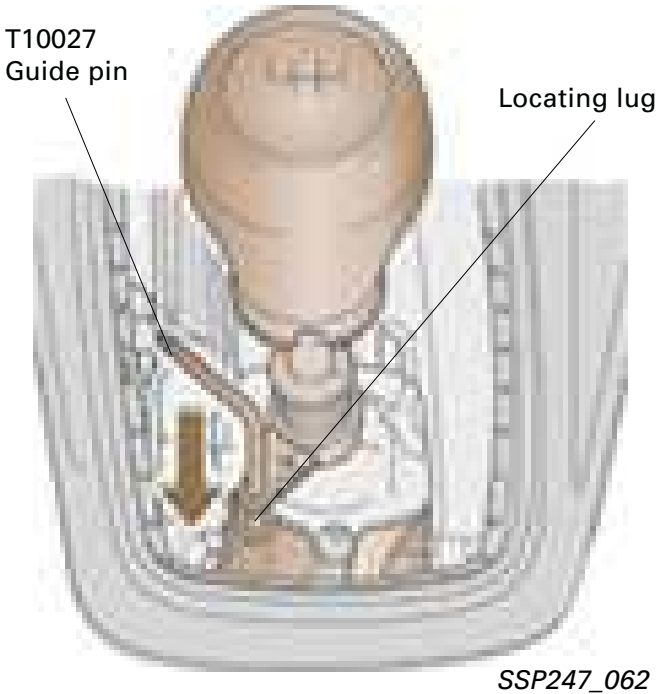

SSP247_062

– **Securing the cables:**

Now the securing mechanism on the gate selector cable and the gear selector cable can be twisted back to the right.
The spring presses the securing mechanism into the selected position and secures it.
Now release the bracket again and take out the guide pin.
The gear lever should now be in the 3rd/4th gear gate when the gearbox is in neutral.

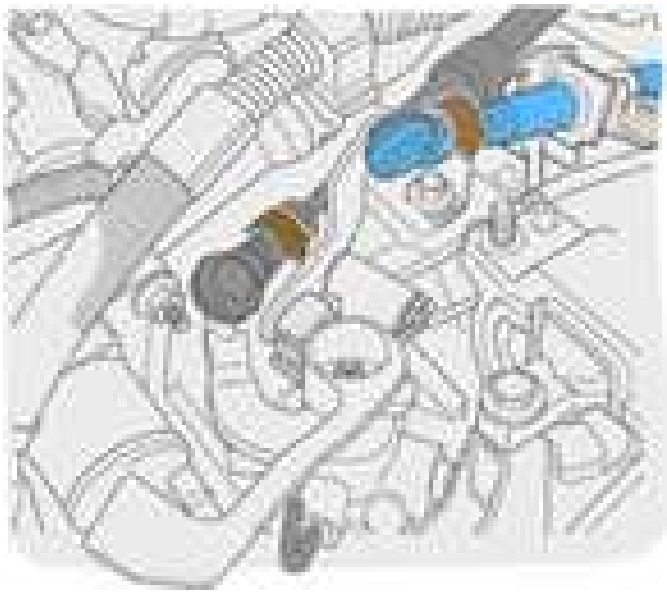

SSP247_063

Sensors and actuators

Vehicle speed display

The speedometer is driven without any mechanical intermediate stages.

The information required for the vehicle speed is taken as a rotational speed directly from the differential housing by vehicle speed sender G22.

The differential housing has reference markings for this purpose, 7 raised segments and 7 indentations.

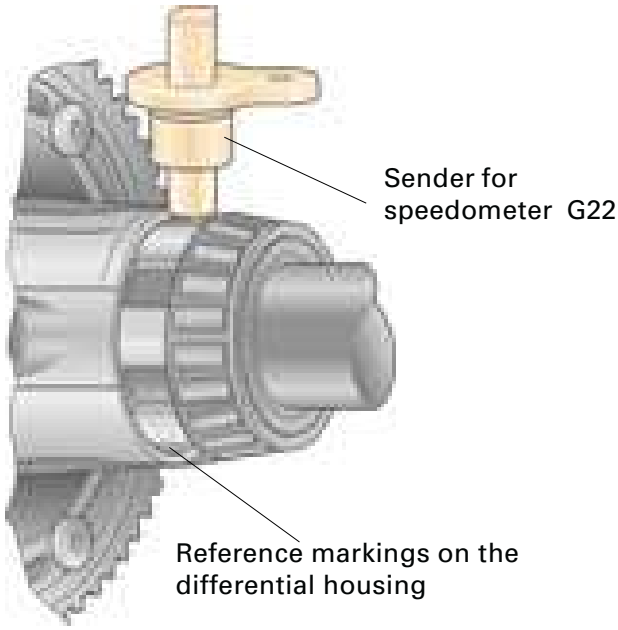

SSP247_064

The sender operates in accordance with the Hall sender principle. The PWM signal (**p**ulse **w**idth **m**odulated) is sent to the combi-processor in dash panel insert J218.

SSP247_065

Electrical circuit

D +15	Ignition starter switch, terminal 15
G21	Speedometer
G22	Vehicle speed sender
J218	Combi-processor in the dash panel insert

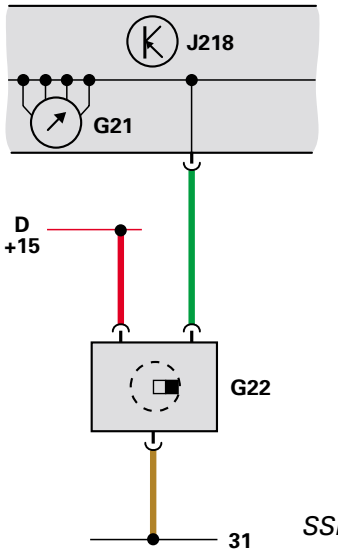

SSP247_066

Reversing light switch F4

The reversing light switch is bolted to the side of the gearbox housing.

When reverse gear is engaged a ramp with a defined slope on the reverse gear selector plate actuates the switch.

The electrical circuit to the reversing lights is made.

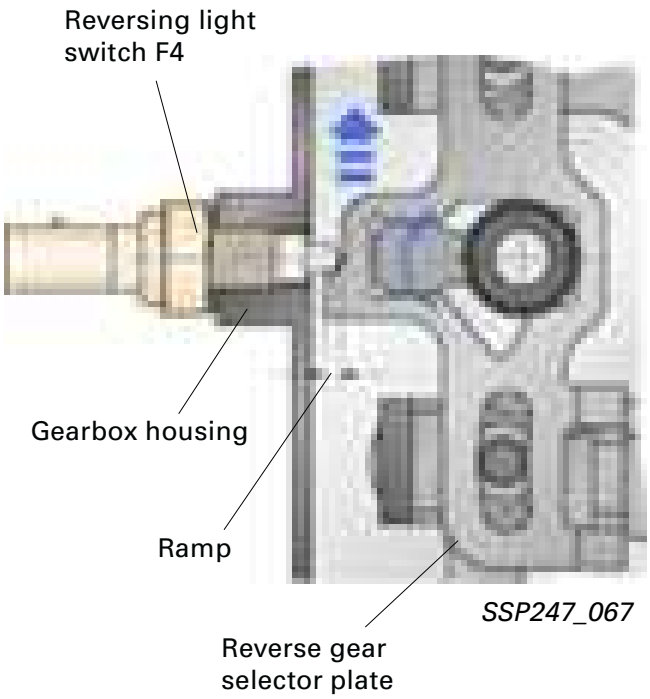

SSP247_067

Electrical circuit

D +15	Ignition starter switch, terminal 15
F4	Reversing light switch
M16	Left reversing light bulb
M17	Right reversing light bulb

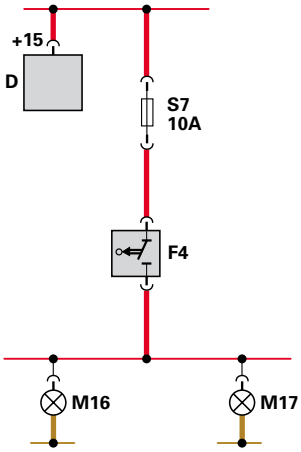

SSP247_068

All rights reserved, including the
right to make technical changes.
AUDI AG
Dept. I/VK-5
D-85045 Ingolstadt
Fax 0841/89-36367
040.2810.66.20
Technical status 03/00
Printed in Germany