GROUP 22B

MANUAL TRANSAXLE OVERHAUL <F5M42>

CONTENTS

GENERAL DESCRIPTION. 22B-2

SPECIAL TOOLS. 22B-3

TRANSAXLE 22B-6
- DISASSEMBLY AND ASSEMBLY 22B-6
- INSPECTION 22B-15

INPUT SHAFT 22B-16
- DISASSEMBLY AND ASSEMBLY 22B-16
- INSPECTION 22B-22

OUTPUT SHAFT 22B-24
- DISASSEMBLY AND ASSEMBLY 22B-24
- INSPECTION 22B-32

REVERSE IDLER GEAR 22B-35
- DISASSEMBLY AND ASSEMBLY 22B-35

VEHICLE SPEED SENSOR. 22B-36
- DISASSEMBLY AND ASSEMBLY 22B-36

SELECT LEVER 22B-37
- DISASSEMBLY AND ASSEMBLY 22B-37

CONTROL HOUSING 22B-39
- DISASSEMBLY AND ASSEMBLY 22B-39

CLUTCH HOUSING 22B-42
- DISASSEMBLY AND ASSEMBLY 22B-42

TRANSMISSION CASE 22B-46
- DISASSEMBLY AND ASSEMBLY 22B-46

DIFFERENTIAL. 22B-48
- DISASSEMBLY AND ASSEMBLY 22B-48

SPECIFICATIONS 22B-51
- FASTENER TIGHTENING SPECIFICATIONS. 22B-51
- GENERAL SPECIFICATIONS 22B-51
- SERVICE SPECIFICATIONS 22B-52
- SEALANTS AND ADHESIVES 22B-52
- LUBRICANTS 22B-52
- SNAP RINGS, SPACERS AND THRUST PLATE FOR ADJUSTMENT 22B-53

cardiagn.com

GENERAL DESCRIPTION

M1222000100283

SECTIONAL VIEW

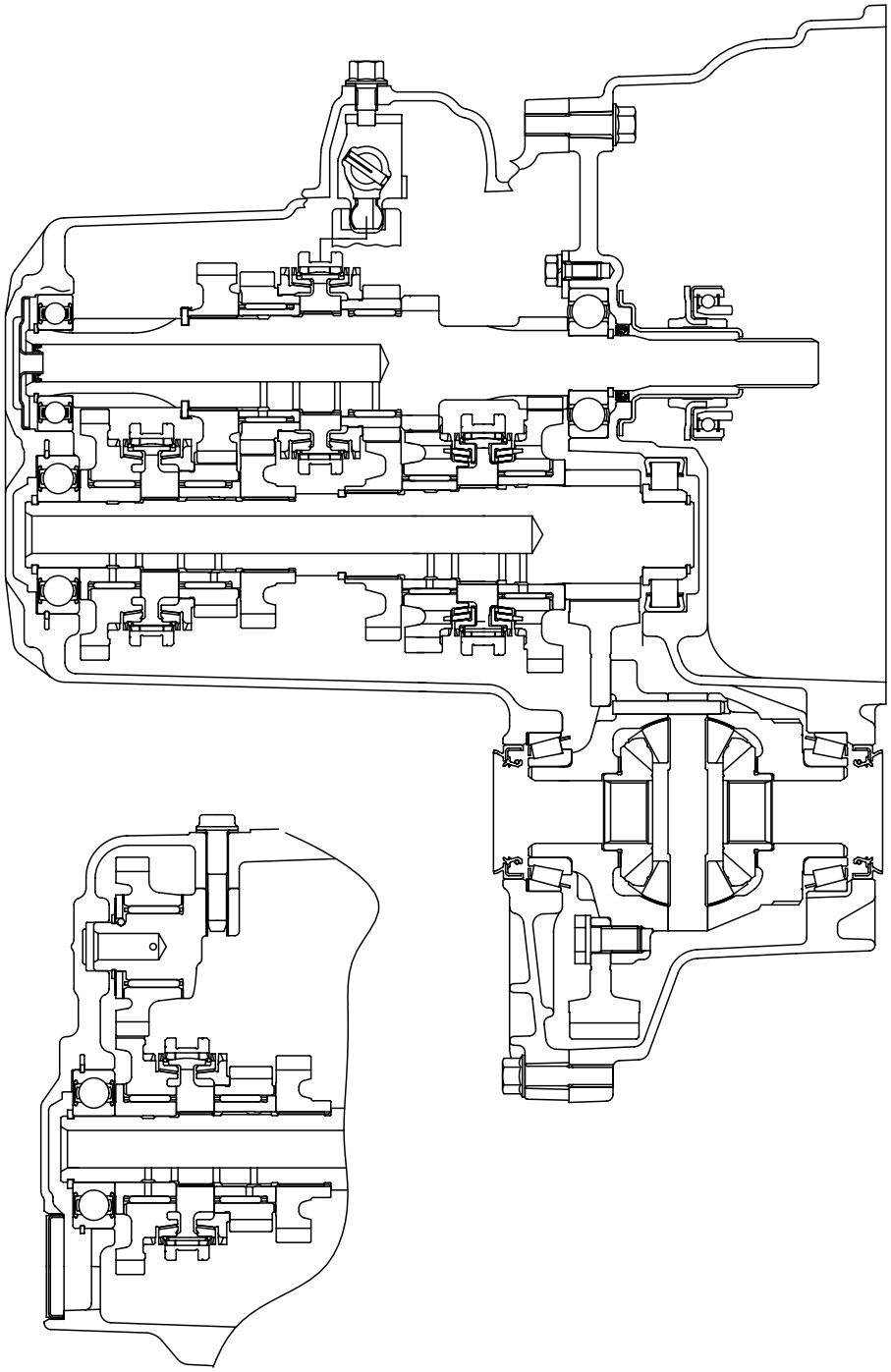

AK302357

cardiagn.com

SPECIAL TOOLS

M1222000600307

TOOL	TOOL NUMBER AND NAME	SUPERSESSION	APPLICATION
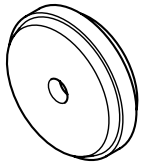	MB990935 Installer adapter	MB990935-01 or General service tool	Installation of differential case taper roller bearing outer race
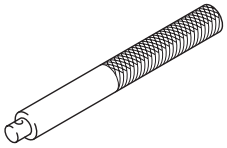	MB990938 Handle	MB990938-01	Use with Installer adapter
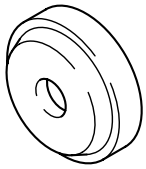	MB990927 Installer adapter	MB990927-01 or General service tool	Installation of sealing cap
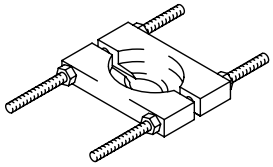	MD998801 Bearing remover	MD998348-01 or General service tool	Installation and removal of gears, bearings and sleeves
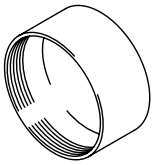	MD998812 Installer cap	General service tool	Use with Installer and Installer adapter
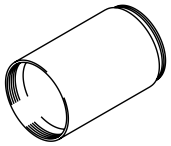	MD998813 Installer-100	General service tool	Use with Installer cap and Installer adapter
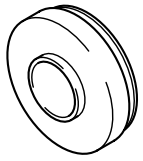	MD998816 Installer adapter (30)	General service tool	Installation of input shaft front bearing
	MD998825 Installer adapter (52)	General service tool	Installation of 1st-2nd speed synchronizer hub, 3rd-4th speed synchronizer hub and 1st speed gear sleeve

cardiagn.com

TOOL	TOOL NUMBER AND NAME	SUPERSESSION	APPLICATION
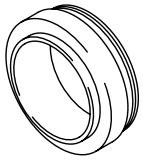	MD998824 Installer adapter (50)	MD998824-01	Installation of 4th speed gear sleeve and 5th speed gear
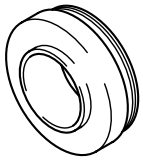	MD998818 Installer adapter (38)	MD998818 or General service tool	Installation of input shaft rear bearing, roller bearing inner race, reverse gear sleeve and output shaft rear ball bearing
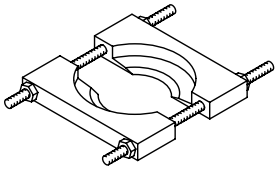	MD998917 Bearing remover	General service tool	Installation and removal of gears, bearing and sleeves
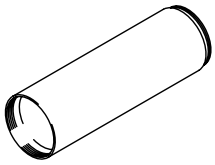	MD998814 Installer-200	MIT304180-A	Use with Installer cap and Installer adapter
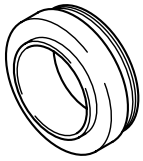	MD998822 Installer adapter (46)	MD998822-01	Installation of 2nd speed gear sleeve and 3rd speed gear
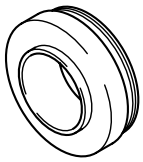	MD998819 Installer adapter (40)	General service tool	Installation of 5th-reverse speed synchronizer hub, differential case bearing, 4th speed gear and 5th speed gear sleeve
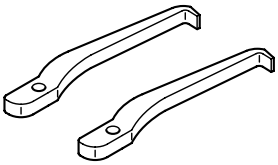	MD999566 Claw	General service tool	Removal of taper roller bearing outer race
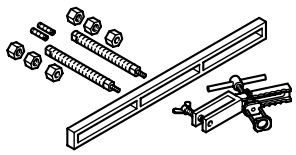	MD998772 Valve spring compressor	General service tool	Removal of output shaft front roller bearing outer race

cardiagn.com

TOOL	TOOL NUMBER AND NAME	SUPERSESSION	APPLICATION
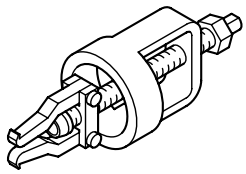	MD998346 Bearing outer race remover	MD998346-01 or General service tool	Removal of output shaft front roller bearing outer race
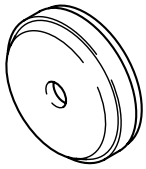	MB990934 Installer adapter	MB990934-01 or General service tool	Installation of output shaft front roller bearing outer race
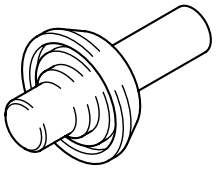	MD998325 Differential oil seal installer	MD998325-01	Installation of differential oil seal
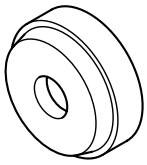	MB990926 Installer adapter	MB990926-01 or General service tool	Installation of clutch housing input shaft oil seal

cardiagn.com

TRANSAXLE

DISASSEMBLY AND ASSEMBLY

M1222001000397

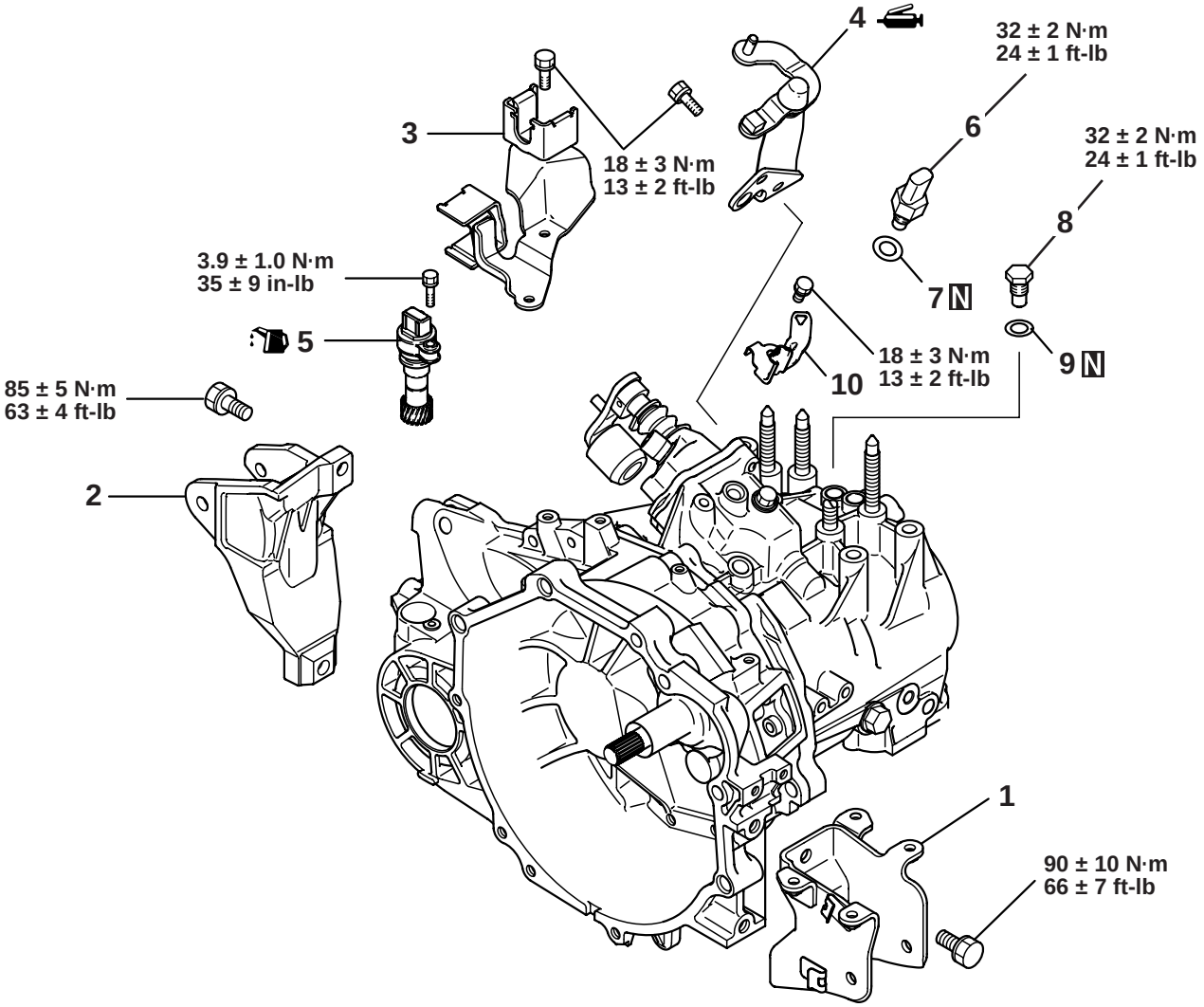

AK403237AB

DISASSEMBLY STEPS

1. ROLL STOPPER BRACKET, FRONT
2. ROLL STOPPER BRACKET, REAR
3. SHIFT CABLE BRACKET

>>**J**<< 4. SELECT LEVER

DISASSEMBLY STEPS

>>**I**<< 5. VEHICLE SPEED SENSOR
6. BACKUP LIGHT SWITCH
7. GASKET
8. POPPET SPRING
9. GASKET
10. HARNESS BRACKET

cardiagn.com

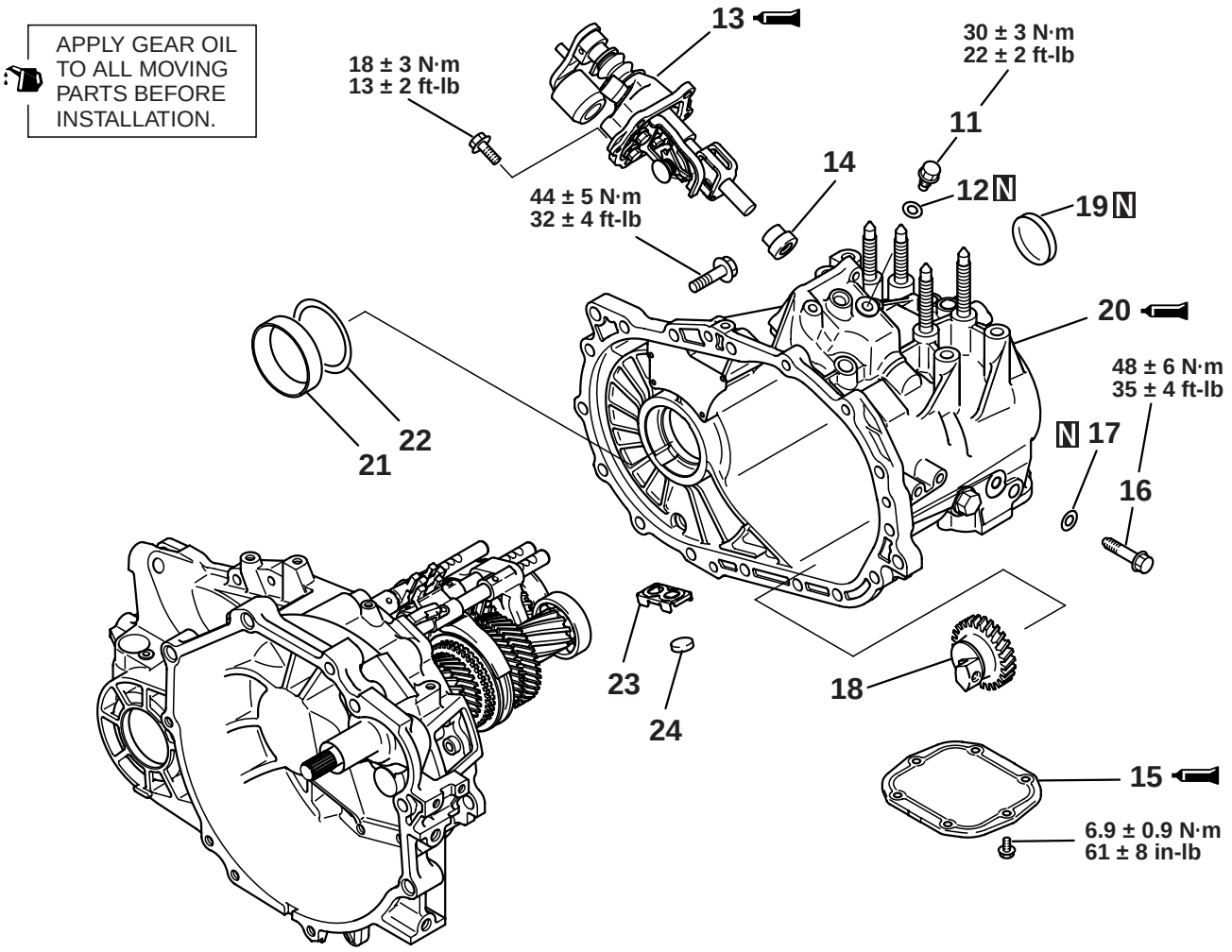

AK403238AB

DISASSEMBLY STEPS

11. INTERLOCK PLATE BOLT
12. GASKET
>>**H**<< 13. CONTROL HOUSING
14. NEUTRAL RETURN SPRING
>>**G**<< 15. UNDER COVER
16. REVERSE IDLER GEAR SHAFT BOLT
17. GASKET

DISASSEMBLY STEPS

18. REVERSE IDLER GEAR ASSEMBLY
<<**A**>> >>**F**<< 19. SEALING CAP
<<**B**>> >>**E**<< 20. TRANSAXLE CASE
>>**D**<< 21. OUTER RACE
>>**D**<< 22. SPACER
23. MAGNET HOLDER
24. MAGNET

cardiagn.com

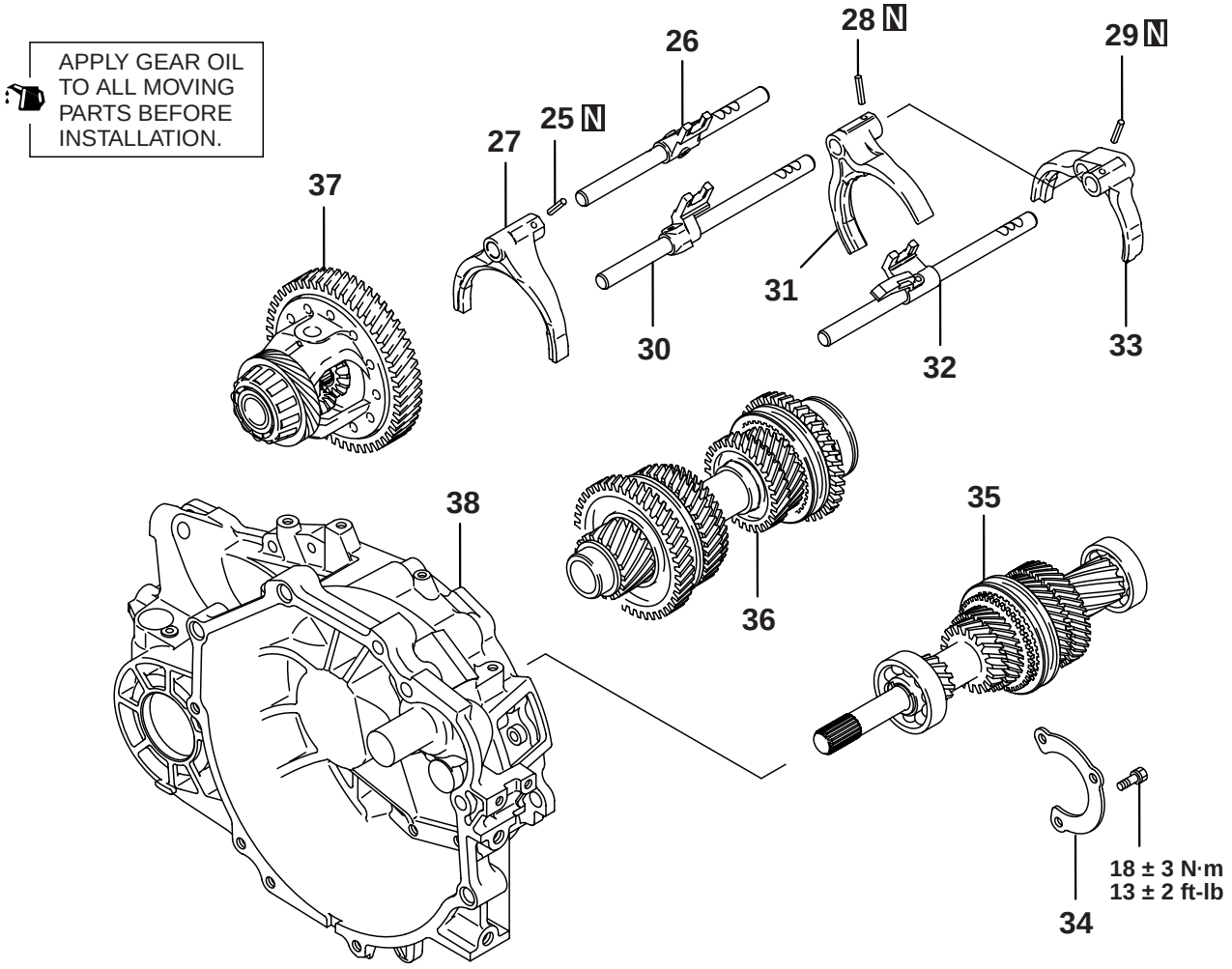

AK402413AB

			DISASSEMBLY STEPS
	>>**C**<<	25.	SPRING PIN
		26.	1ST-2ND SPEED SHIFT RAIL
		27.	1ST-2ND SPEED SHIFT FORK
	>>**C**<<	28.	SPRING PIN
	>>**C**<<	29.	SPRING PIN
<<**C**>>	>>**B**<<	30.	3RD-4TH SPEED SHIFT RAIL
<<**C**>>	>>**B**<<	31.	3RD-4TH SPEED SHIFT FORK
<<**C**>>	>>**B**<<	32.	5TH SPEED-REVERSE SHIFT RAIL

			DISASSEMBLY STEPS
<<**C**>>	>>**B**<<	33.	5TH SPEED-REVERSE SHIFT FORK
		34.	FRONT BEARING RETAINER
<<**D**>>	>>**A**<<	35.	INPUT SHAFT
<<**D**>>	>>**A**<<	36.	OUTPUT SHAFT
		37.	DIFFERENTIAL
		38.	CLUTCH HOUSING

Required Special Tools:

- MB990927: Installer Adapter
- MB990935: Installer Adapter
- MB990938: Handle

cardiagn.com

DISASSEMBLY SERVICE POINTS

<<A>> SEALING CAP REMOVAL

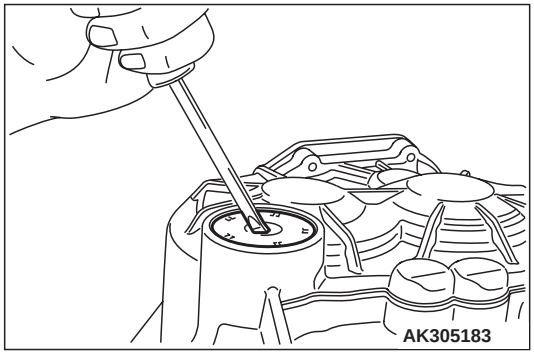

1. Drive a screwdriver into the center of the sealing cap.
2. Use the screwdriver back to pry off the sealing cap.

<<B>> TRANSAXLE CASE REMOVAL

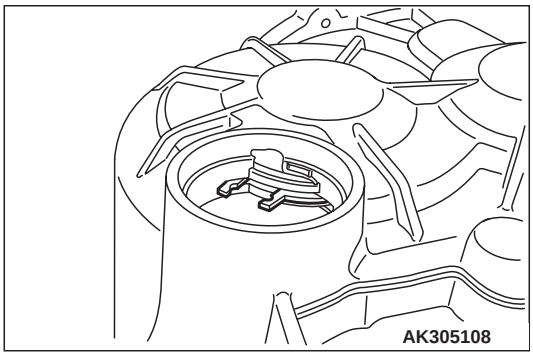

1. Remove all sixteen bolts securing the transaxle case to the clutch housing.
2. Use snap ring pliers to expand the indicated snap ring. The snap ring will release the grooved ball bearing, and the output shaft assembly will fall under its own weight.

⚠ CAUTION

Do not use a scraper or chisel to remove the transaxle case.

3. Remove the transaxle case from the clutch housing by gently prying on opposite sides at the same time.

<<C>> 3RD-4TH SPEED SHIFT RAIL/3RD-4TH SPEED SHIFT FORK/5TH SPEED-REVERSE SHIFT RAIL/5TH SPEED-REVERSE SHIFT FORK REMOVAL

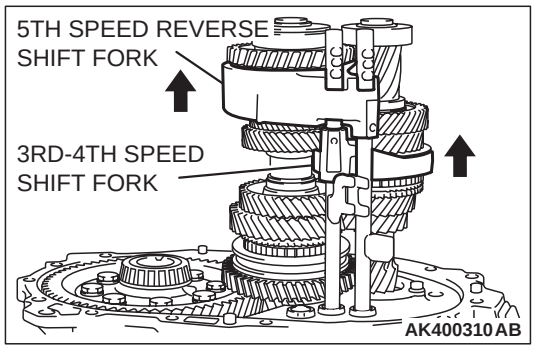

1. Shift the 3rd-4th speed shift fork and 5th speed-reverse shift fork in the direction shown.

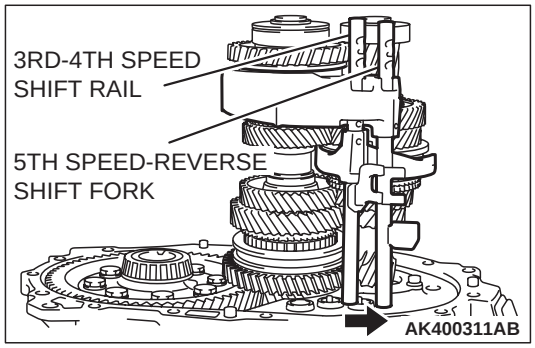

2. Pull up on the 3rd-4th speed shift rail and 5th speed-reverse shift rail and take them out of the hole in the clutch housing.
3. Slide the 3rd-4th speed shift rail and 5th speed-reverse shift rail in the direction shown and remove them together with the shift forks.

cardiagn.com

<<D>> INPUT SHAFT AND OUTPUT SHAFT REMOVAL

Remove the input and output shafts together.

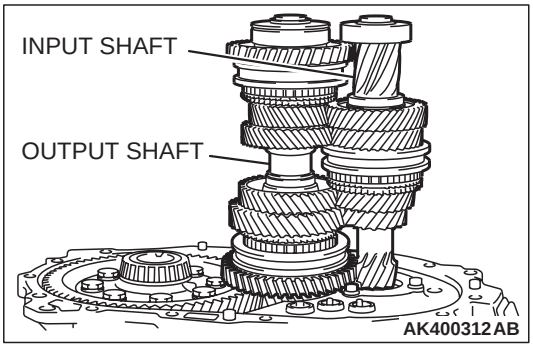

ADJUSTMENT BEFORE ASSEMBLY

SPACER SELECTION FOR DIFFERENTIAL CASE PRE-LOAD ADJUSTMENT

<Measurement using a Solder>

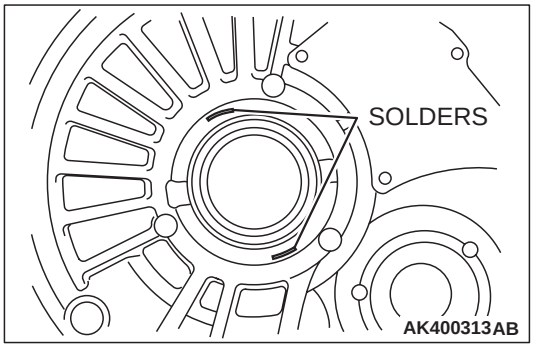

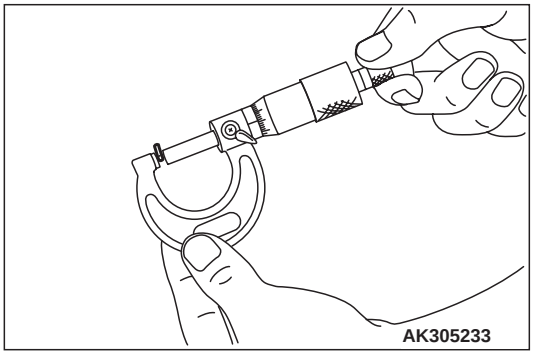

1. Put solders [1.0 mm (0.039 inch) diameter, about 10 mm (0.39 inch) long] in the illustrated positions of the transaxle case.
2. Install the taper bearing outer race and differential assembly into the transaxle case.

   NOTE: If necessary, replace the differential case and taper bearing before carrying out these adjustments.
3. Install the clutch housing and tighten the bolts to the specified torque.

   Tightening torque: 44 ±5 N· m (32 ±4 ft-lb)
4. Remove the clutch housing, and then remove the differential assembly.
5. Remove the taper bearing outer race and take out crushed solders.
6. If the solders have not crushed, use thicker solders [1.6 mm (0.063 inch) diameter, about 10 mm (0.39 inch) long] and repeat steps 2 to 5.
7. Measure the thickness of the crushed solder with a micrometer and select a spacer that will provide the standard preload value.

   Standard value:
   0.05 – 0.11 mm (0.0020 – 0.0043 inch) preload

cardiagn.com

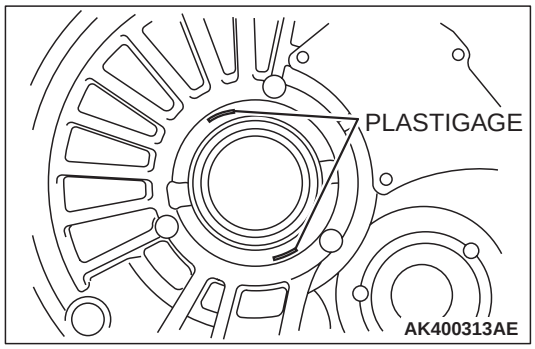

<Measurement using Plastigage>

1. Put plastigage [about 10 mm (0.39 inch) long] in the illustrated positions of the transaxle case.
2. Install the thinnest spacer.
3. Install the taper bearing outer race and differential assembly into the transaxle case.

   NOTE: If necessary, replace the differential case and taper bearing before carrying out these adjustments.
4. Install the clutch housing and tighten the bolts to the specified torque.

   Tightening torque: 44 ±5 N· m (32 ±4 ft-lb)
5. Remove the clutch housing, and then remove the differential assembly.
6. Remove taper bearing outer race and the spacer.
7. If the Plastigages have not crushed, replace the spacer with a thicker one and repeat steps 2 to 7.
8. Measure the width of the crushed Plastigage at its widest part using a scale printed on the Plastigage package.

   Standard value:
   0.05 –0.11 mm (0.0020 – 0.0043 inch) preload

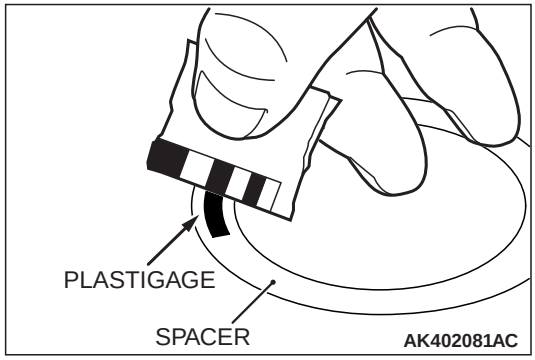

ASSEMBLY SERVICE POINTS

>>A<< OUTPUT SHAFT/INPUT SHAFT INSTALLATION

Install the input and output shafts together.

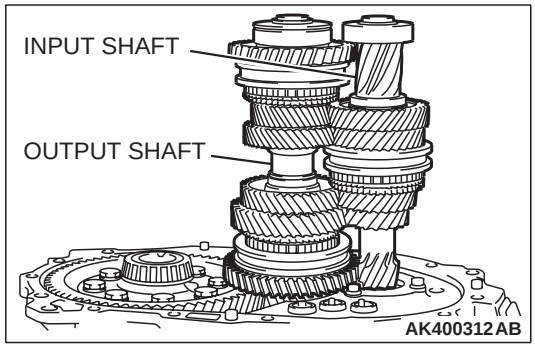

cardiagn.com

>>B<< 5TH SPEED-REVERSE SHIFT FORK/5TH SPEED-REVERSE SHIFT RAIL/3RD-4TH SPEED SHIFT FORK/3RD-4TH SPEED SHIFT RAIL INSTALLATION

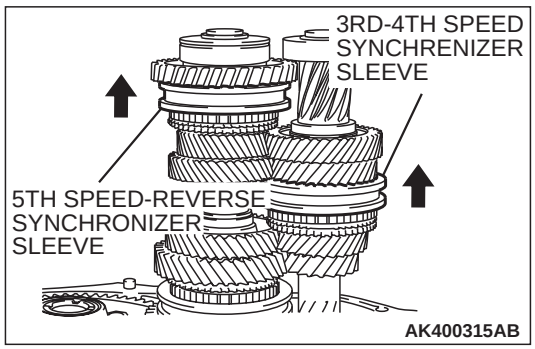

1. Shift the 3rd-4th speed synchronizer sleeve and 5th speed-reverse synchronizer sleeve in the direction shown.

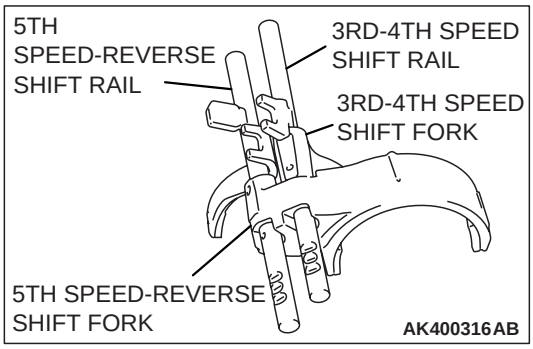

2. Assemble the 3rd-4th speed shift rail and fork, and the 5th speed-reverse shift rail and fork.

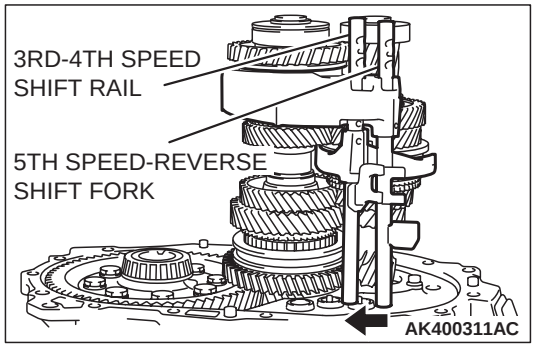

3. While fitting each shift fork in the groove of synchronizer sleeve, slide the shift rails in the direction shown and install.
4. Insert the 3rd-4th speed shift rail and 5th speed-reverse shift rail into the rail hole in the clutch housing.

>>C<< SPRING PIN INSTALLATION

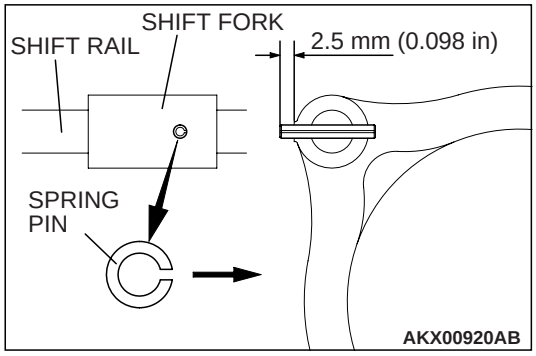

1. Align the pin holes in the shift rail and shift fork.
2. Insert the new spring pin. Push it in as shown so that the slit and center axis of the rail are aligned.

cardiagn.com

>>D<< SPACER AND OUTER RACE INSTALLATION

1. Install the spacer selected in the section "ADJUSTMENT BEFORE ASSEMBLY."
2. Using special tools MB990935 and MB990938, press the outer race into the transaxle case.

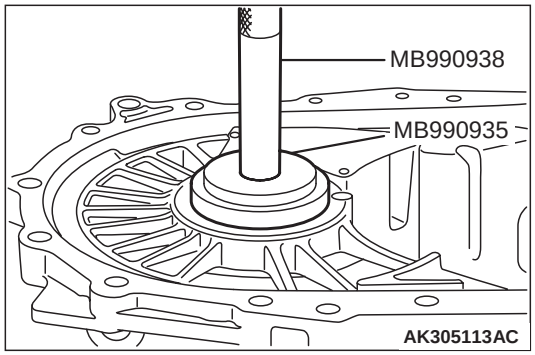

>>E<< TRANSAXLE CASE INSTALLATION

⚠ CAUTION

Squeeze sealant evenly onto the transaxle housing. Do not leave gaps or excess amounts, otherwise oil leaks are likely.

1. Apply a 1.5 mm (0.06 inch) diameter bead of sealant (Mitsubishi Part number MD997740 or equivalent) as illustrated onto the transaxle case.

   NOTE: Be sure to install the transaxle case onto the transaxle housing while the sealant is still wet (within 15 minutes).

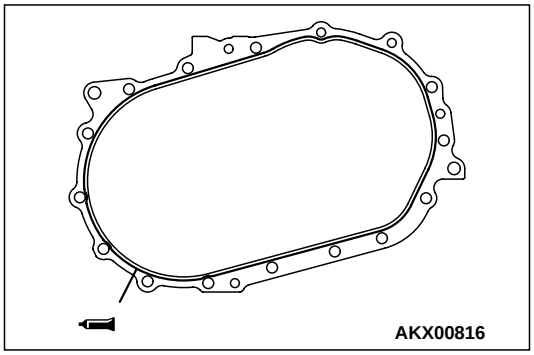

2. Align the transaxle case and expand the snap ring. After the case is on far enough for the snap ring to ride on the bearing, release the snap ring. Push down on the transaxle case, twisting it from side to side until the case contacts the housing.
3. Tighten the transaxle case mounting bolts to the specified torque.

   Tightening torque: 44 ±5 N· m (32 ±4 ft-lb)

4. Place the transaxle upside down and let the snap ring fit in the groove by the output shaft's own weight.

   NOTE: After installation, keep the sealed area away from oil for approximately one hour.

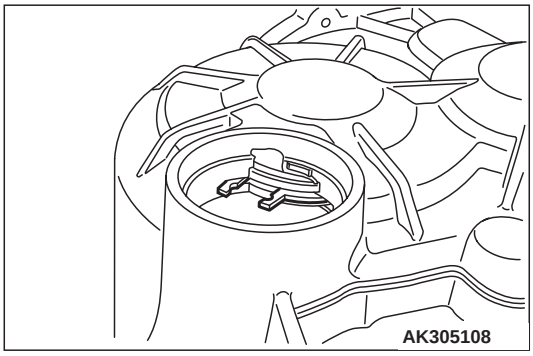

cardiagn.com

>>F<< SEALING CAP INSTALLATION

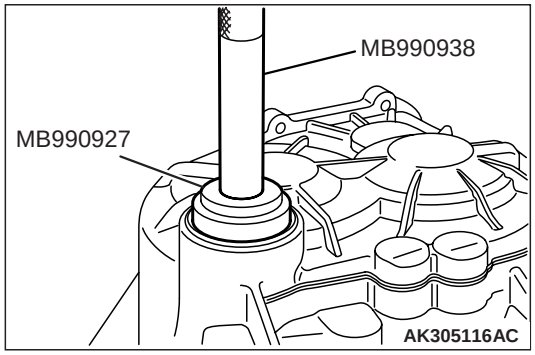

1. Using special tools MB990927 and MB990938, press install the sealing cap onto the case.

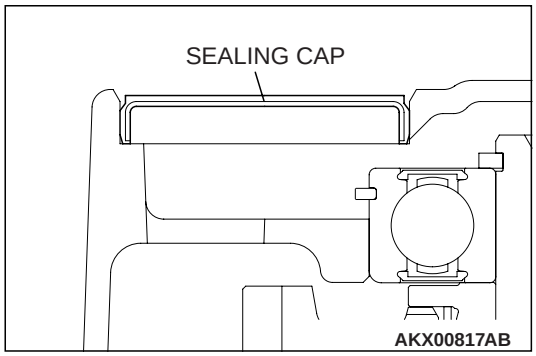

2. Evenly press the sealing cap so it is fully seated and not at an angle.

>>G<< UNDER COVER INSTALLATION

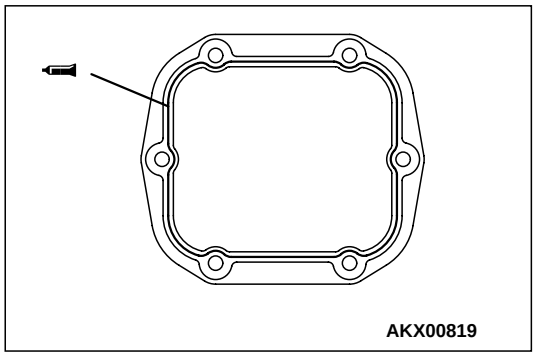

⚠ CAUTION

Squeeze sealant onto the case. Do not leave gaps or excess amounts, otherwise oil leaks are likely.

1. Apply a 1.5 mm (0.06 inch) diameter bead of sealant (Mitsubishi Part number MD997740 or equivalent) as illustrated onto the under cover.

   NOTE: Be sure to install the under cover to the case quickly while the sealant is still wet (within 15 minutes).

2. Install the under cover to the transaxle case and tighten the bolts to specified torque.

   Tightening torque: 6.9 ±0.9 N· m (61 ±8 in-lb)

   NOTE: After installation, keep the sealed area away from oil for approximately one hour.

>>H<< CONTROL HOUSING INSTALLATION

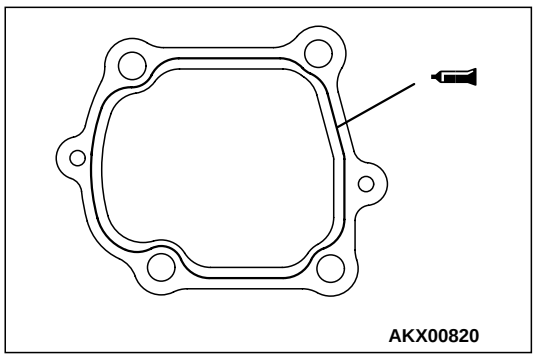

⚠ CAUTION

Squeeze sealant onto the case. Do not leave gaps or excess amounts, otherwise oil leaks are likely.

1. Apply a 1.5 mm (0.06 inch) diameter bead of sealant (Mitsubishi Part number MD997740 or equivalent) as illustrated onto the control housing.

   NOTE: Be sure to install the housing to the case quickly while the sealant is still wet (within 15 minutes).

2. Install the control housing to the transaxle case and tighten the bolts to specified torque.

   Tightening torque: 18 ±3 N· m (13 ±2 ft-lb)

cardiagn.com

NOTE: After installation, keep the sealed area away from the oil for approximately one hour.

>>I<< VEHICLE SPEED SENSOR INSTALLATION

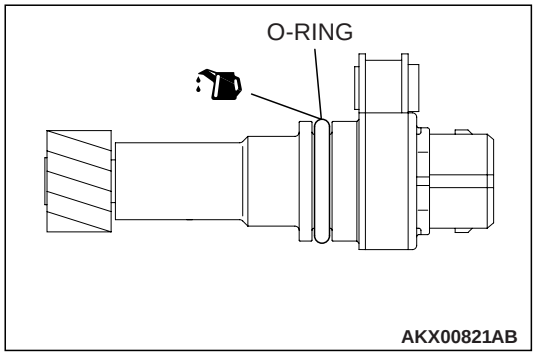

1. Apply gear oil (Hypoid gear oil SAE 75W-90 or 75W-85W conforming to API classification GL-4) to the O-ring of the vehicle speed sensor. Install into the transaxle housing.
2. Tighten the bolt to specified torque.

   Tightening torque: 3.9 ±1.0 N· m (35 ±9 in-lb)

>>J<< SELECT LEVER INSTALLATION

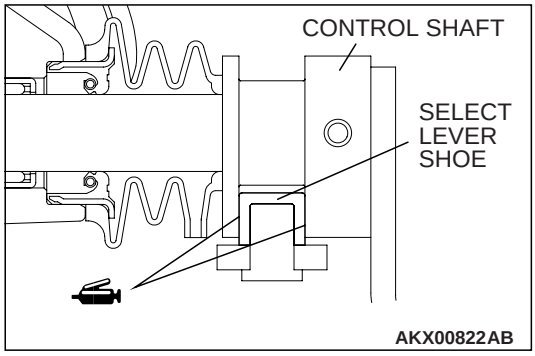

1. Apply grease (Mitsubishi Part number 0101011 or equivalent) to the control shaft sliding portion of the select lever shoe.
2. Install the select lever and tighten the bolts to specified torque.

   Tightening torque: 18 ±3 N· m (13 ±2 ft-lb)

INSPECTION

M1222001100220

BACKUP LIGHT SWITCH

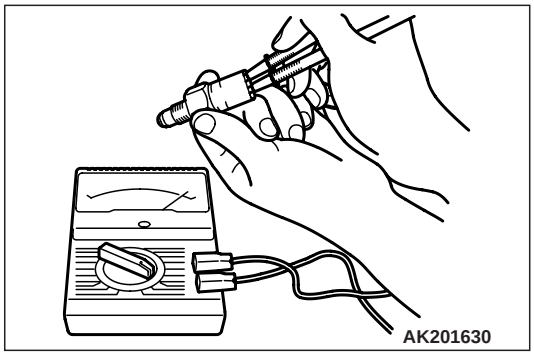

Check for continuity between terminals.

SWITCH CONDITION	CONTINUITY
Pressed	Open
Released	Conductive

cardiagn.com

INPUT SHAFT

DISASSEMBLY AND ASSEMBLY

M1222001600344

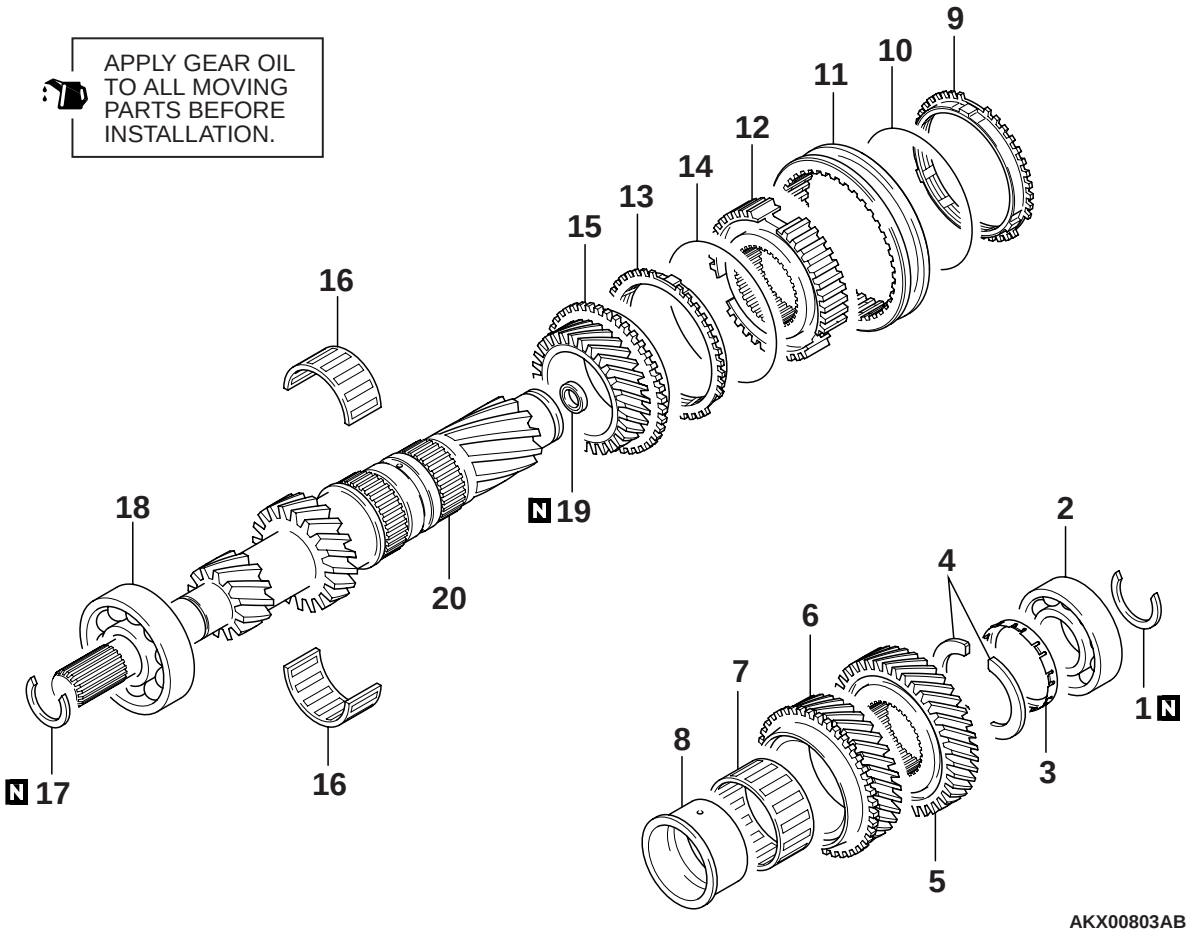

DISASSEMBLY STEPS

	>>**M**<<	1.	SNAP RING
<<**A**>>	>>**L**<<	2.	BALL BEARING
<<**B**>>	>>**K**<<	3.	THRUST PLATE STOPPER
	>>**J**<<	4.	THRUST PLATE
<<**C**>>	>>**I**<<	5.	5TH SPEED GEAR
		6.	4TH SPEED GEAR
		7.	NEEDLE ROLLER BEARING
<<**D**>>	>>**H**<<	8.	4TH SPEED GEAR SLEEVE
	>>**E**<<	9.	SYNCHRONIZER RING
	>>**D**<<	10.	SYNCHRONIZER SPRING
	>>**G**<<	11.	SYNCHRONIZER SLEEVE

DISASSEMBLY STEPS

	>>**F**<<	12.	3RD-4TH SPEED SYNCHRONIZER HUB
	>>**E**<<	13.	SYNCHRONIZER RING
	>>**D**<<	14.	SYNCHRONIZER SPRING
		15.	3RD SPEED GEAR
		16.	NEEDLE ROLLER BEARING
	>>**C**<<	17.	SNAP RING
<<**E**>>	>>**B**<<	18.	BALL BEARING
	>>**A**<<	19.	OIL SEAL
		20.	INPUT SHAFT

Required Special Tools:

- MD998801: Bearing Remover
- MD998812: Installer Cap
- MD998813: Installer-100
- MD998816: Installer Adapter (30)
- MD998818: Installer Adapter (38)
- MD998824: Installer Adapter (50)
- MD998825: Installer Adapter (52)

TSB Revision

cardiagn.com

DISASSEMBLY SERVICE POINTS

<<A>> BALL BEARING REMOVAL

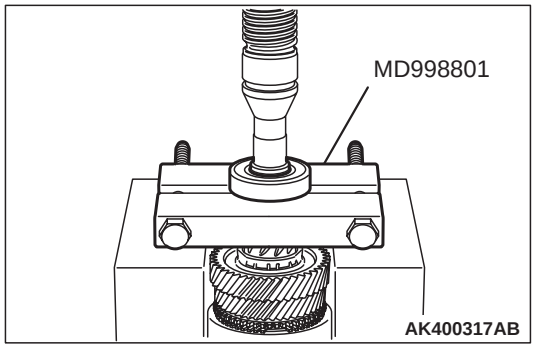

1. Using special tool MD998801, support the ball bearing, and then set them on the press.
2. Push down on the input shaft with the press and remove the ball bearing.

<<B>> THRUST PLATE STOPPER REMOVAL

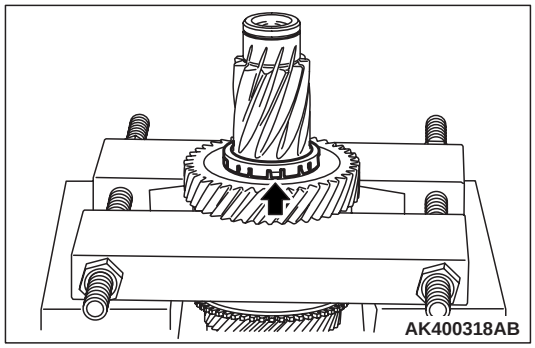

Using a screwdriver, pry up at the position shown in the illustration and remove the thrust plate stopper.

<<C>>5TH SPEED GEAR REMOVAL

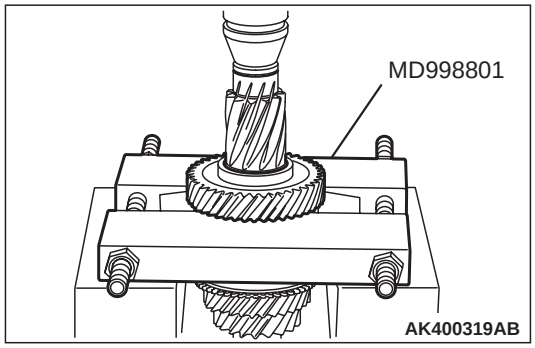

1. Using special tool MD998801, support the 5th speed gear, and then set them on the press.
2. Push down on the input shaft with the press and remove the 5th speed gear.

<<D>>4TH SPEED GEAR SLEEVE REMOVAL

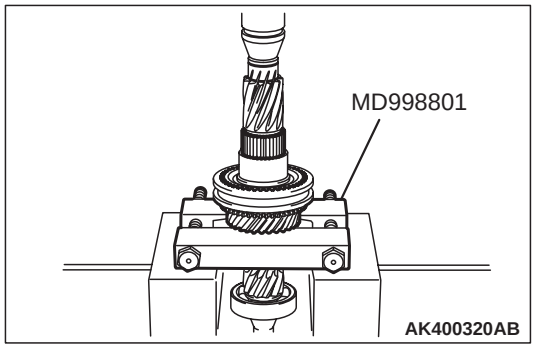

1. Using special tool MD998801, support the 3rd speed gear, and then set them on the press.
2. Push down on the input shaft with the press and remove the 4th speed gear sleeve.

cardiagn.com

<<E>> BALL BEARING REMOVAL

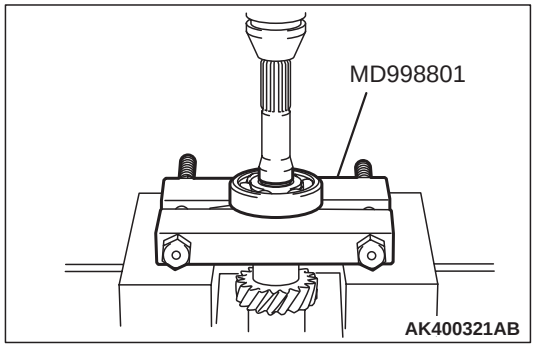

1. Using special tool MD998801, support the ball bearing, and then set them on the press.
2. Push down on the input shaft with the press and remove the ball bearing.

ASSEMBLY SERVICE POINTS

>>A<< OIL SEAL INSTALLATION

Install the oil seal into the end of the input shaft as shown.

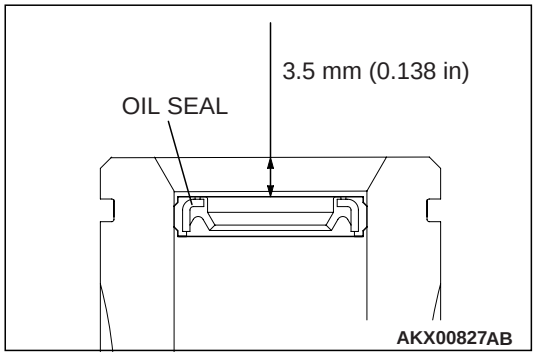

>>B<< BALL BEARING INSTALLATION

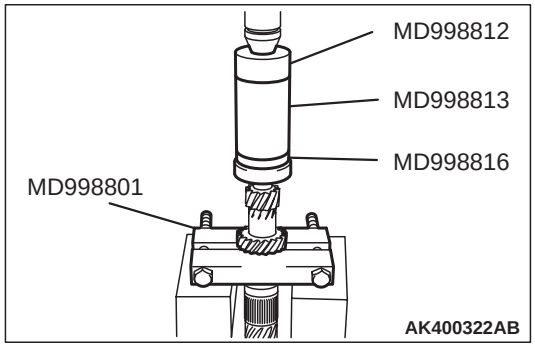

1. Using special tool MD998801, support the 2nd speed gear portion of the input shaft, and then set them on the press.
2. Using special tools MD998812, MD998813 and MD998816, press install the bearing with the press.

>>C<< SNAP RING INSTALLATION

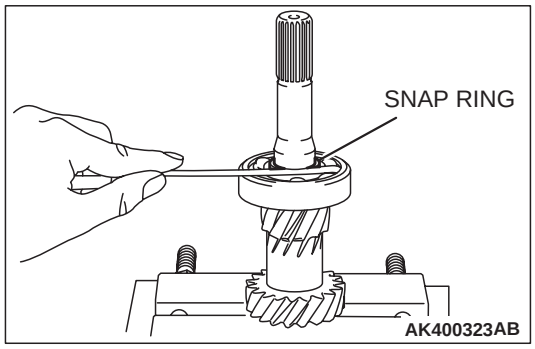

1. Install the thickest snap ring that can be fitted in the snap ring groove of input shaft.
2. Make sure that the ball bearing end play meets the standard value.

   Standard value: 0 –0.12 mm (0 –0.0047 inch)

cardiagn.com

>>D<< SYNCHRONIZER SPRING INSTALLATION

Install the synchronizer spring onto the synchronizer ring as shown.

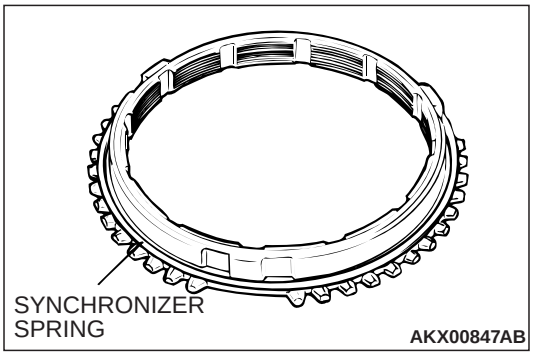

>>E<< SYNCHRONIZER RING INSTALLATION

⚠ CAUTION

There are 3rd speed and 4th speed synchronizer rings, if the wrong one is installed it will affect the shift feeling.

1. Determine whether or not there are identification notches on the synchronizer ring.

   Two notches: 3rd speed synchronizer ring

   No notches: 4th speed synchronizer ring

2. Install the synchronizer ring so that it completely fits over the machined cone of the gear.

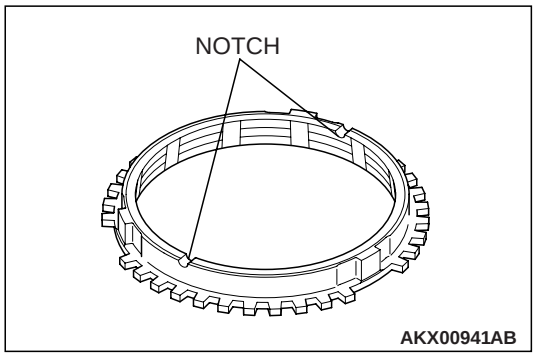

>>F<< 3RD-4TH SPEED SYNCHRONIZER HUB INSTALLATION

1. Using special tool MD998801, support the 2nd speed gear portion of the input shaft, and then set them on the press.
2. Make sure that the synchronizer ring has been perfectly matched to the 3rd speed gear cone.
3. Check the installation direction of the 3rd-4th speed synchronizer hub, and put it on the input shaft.

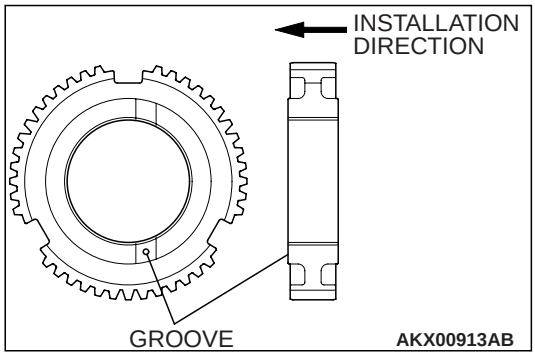

4. Using special tools MD998812, MD998813 and MD998825, press install the 3rd-4th speed synchronizer hub with the press.
5. Make sure that the synchronizer ring can rotate freely.

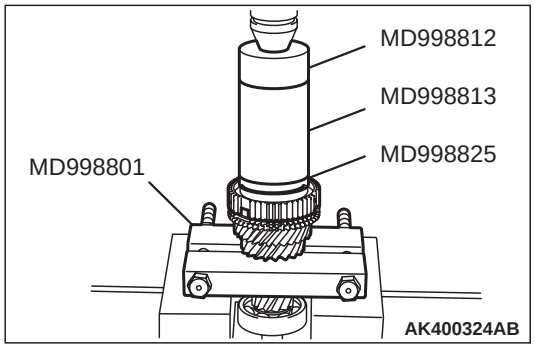

cardiagn.com

>>G<< SYNCHRONIZER SLEEVE INSTALLATION

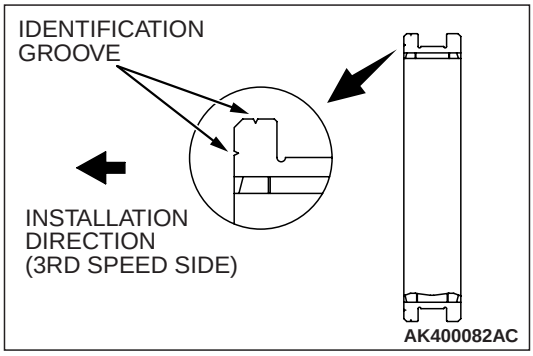

1. Check the installation direction of the synchronizer sleeve, and install it onto the 3rd-4th speed synchronizer hub.

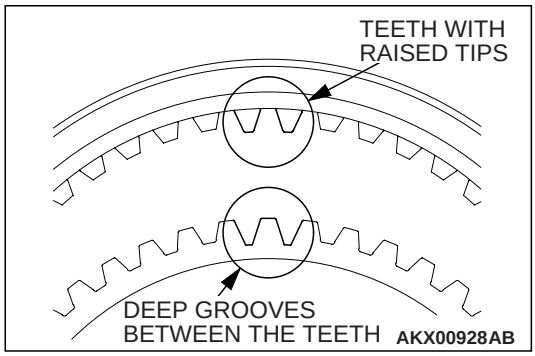

2. Install the synchronizer sleeve so that the areas with teeth that have raised tips (three areas total) are aligned with the areas on the synchronizer hub that have deep grooves between the teeth (three areas total).

>>H<< 4TH SPEED GEAR SLEEVE INSTALLATION

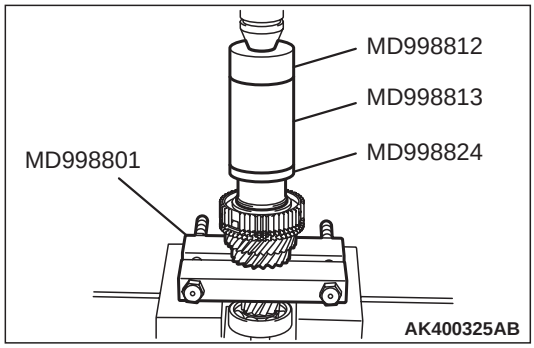

1. Using special tool MD998801, support the 2nd speed gear portion of the input shaft, and then set them on the press.
2. Using special tools MD998812, MD998813 and MD998824, install the 4th speed gear sleeve with the press.

>>I<< 5TH SPEED GEAR INSTALLATION

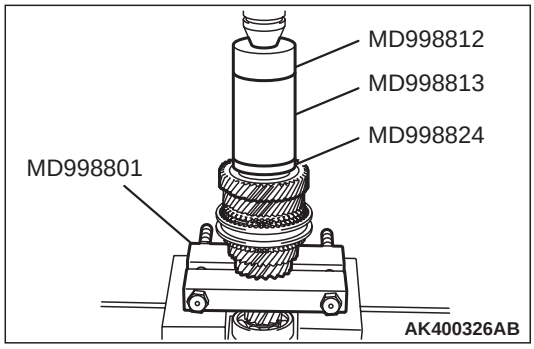

1. Using special tool MD998801, support the 2nd speed gear portion of the input shaft, and then set them on the press.
2. Using special tools MD998812, MD998813 and MD998824, install the 5th speed gear onto the input shaft with the press.

cardiagn.com

>>J<< THRUST PLATE INSTALLATION

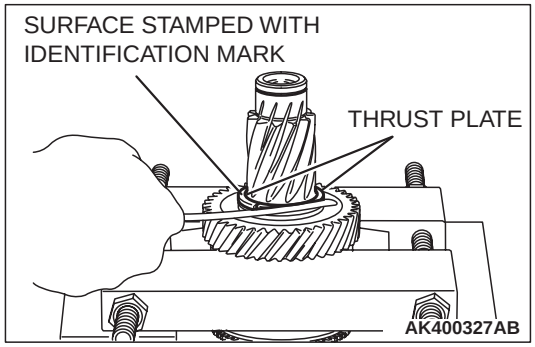

1. Install the thickest thrust plates that can be fitted in the groove of the input shaft. Install the thrust plate so the surface stamped with the identification mark is facing up.
2. Make sure that the 5th speed gear end play meets the standard value.

   Standard value: 0 –0.09 mm (0 –0.0035 inch)

>>K<< THRUST PLATE STOPPER INSTALLATION

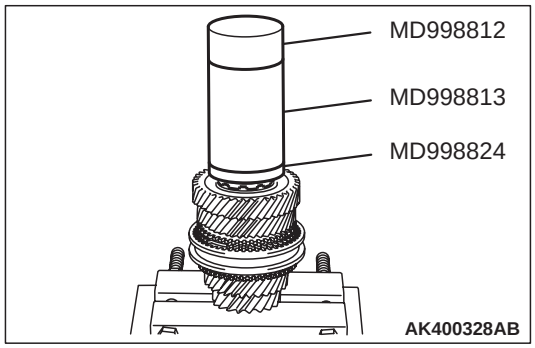

Install the thrust plate stopper by pressing special tools MD998812, MD998813 and MD998824 by hand. Make sure that it is not tilted.

>>L<< BALL BEARING INSTALLATION

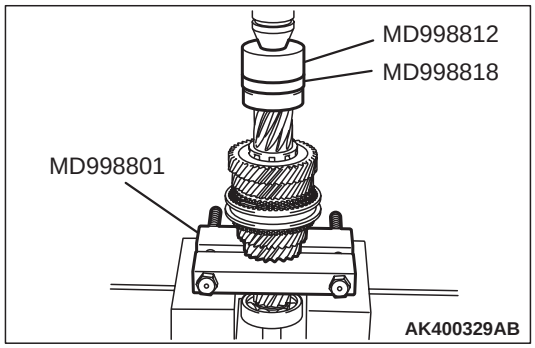

1. Using special tool MD998801, support the 2nd speed gear portion of the input shaft, and then set them on the press.
2. Using special tools MD998812 and MD998818, install the ball bearing onto the input shaft with the press.

>>M<< SNAP RING INSTALLATION

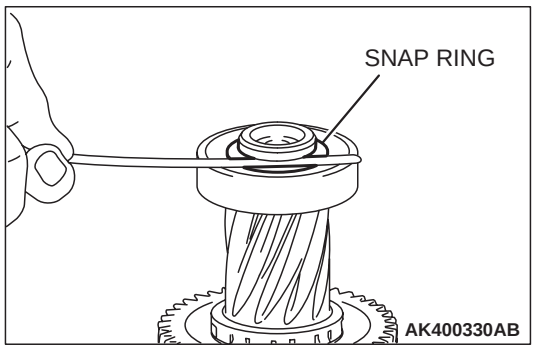

1. Install the thickest snap ring that can be fitted in the groove of the input shaft.
2. Make sure that the ball bearing end play meets the standard value.

   Standard value: 0 –0.12 mm (0 –0.0047 inch)

cardiagn.com

INSPECTION

M1222001700136

INPUT SHAFT

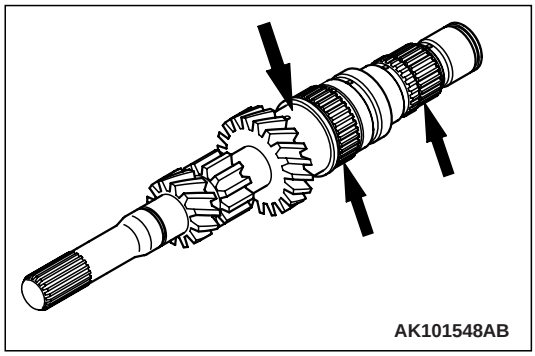

1. Check the outside diameter of the needle bearing mounting portion for damage, abnormal wear and seizure.
2. Check the splines for damage and wear.
3. Check that the helical gear teeth surfaces are not damaged or worn.

NEEDLE ROLLER BEARING

1. Combine the needle roller bearing with the input shaft or bearing sleeve and gear, and check that it rotates smoothly without noise or play.
2. Check the needle roller bearing cage for deformation.

SYNCHRONIZER RING

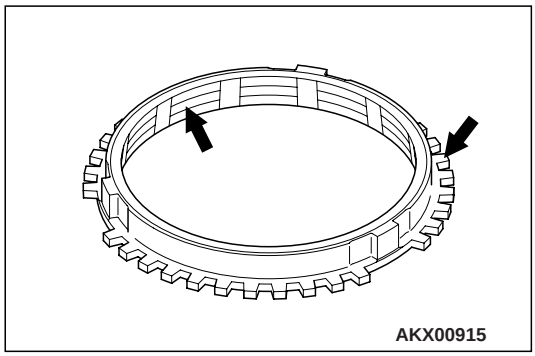

1. Check the clutch gear teeth for damage and broken.
2. Check internal surface for damage, wear and broken threads.

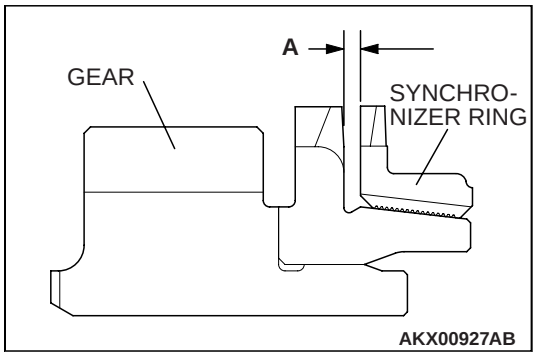

3. Force the synchronizer ring toward the clutch gear and check clearance "A." If "A" is less than the limit, replace the synchronizer ring.

   Minimum limit: 0.5 mm (0.020 inch)

cardiagn.com

SYNCHRONIZER SLEEVE AND HUB

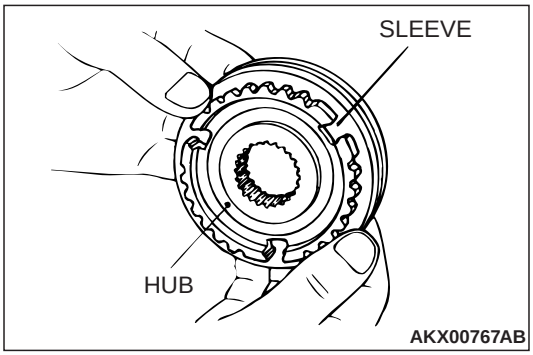

1. Combine the synchronizer sleeve and hub, and check that they slide smoothly.
2. Check that the sleeve is free from damage at its inside splines ends.

SYNCHRONIZER SPRING

Check that the spring is not sagging, deformed or broken.

SPEED GEARS

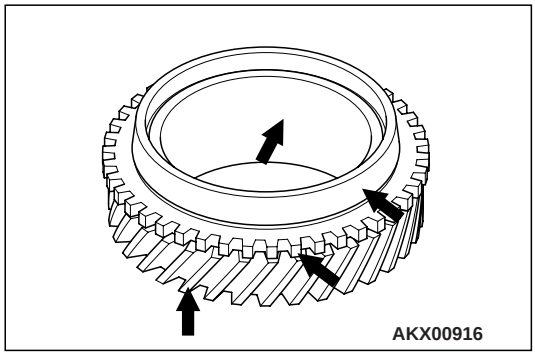

1. Check that the helical and clutch gear tooth surfaces are not damaged or worn.
2. Check that the synchronizer cone surfaces are not roughened, damaged or worn.
3. Check that the gear inside diameter and front and rear surfaces are not damaged and worn.

cardiagn.com

OUTPUT SHAFT

DISASSEMBLY AND ASSEMBLY

M1222002200316

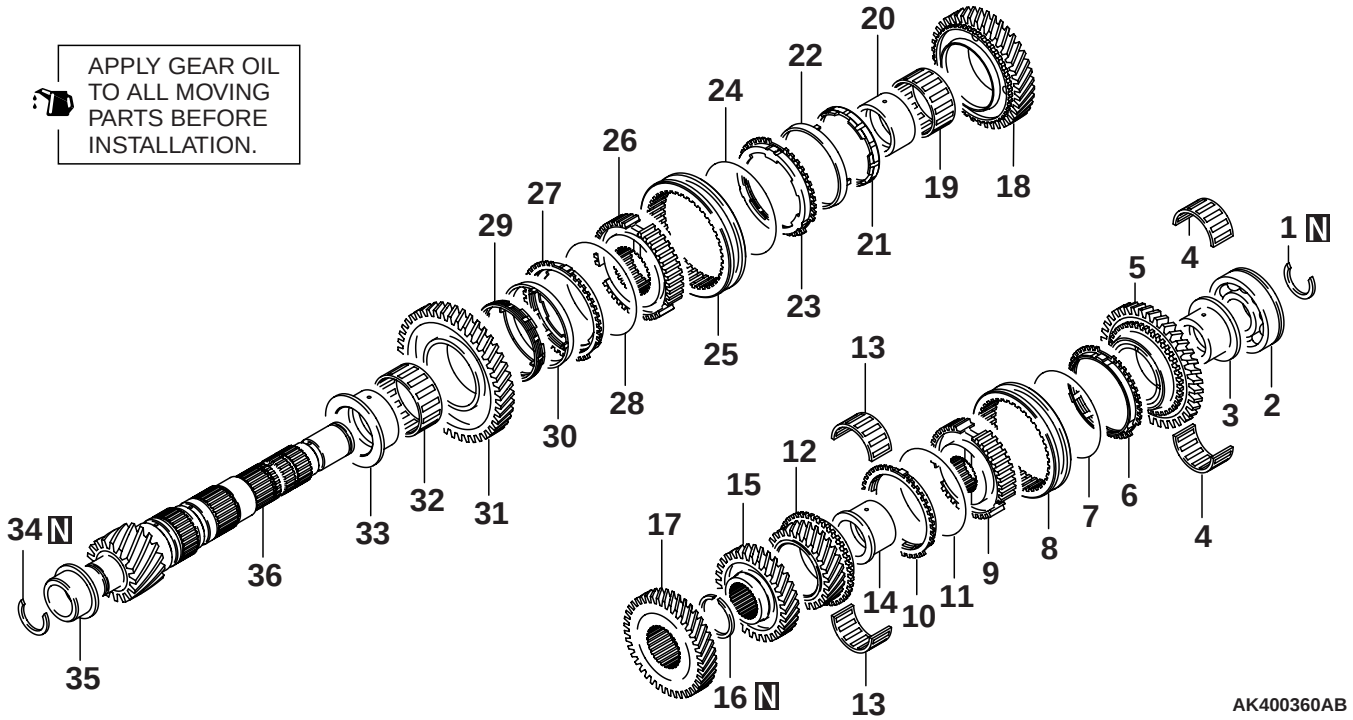

			DISASSEMBLY STEPS
	>>R<<	1.	SNAP RING
<<A>>	>>Q<<	2.	BALL BEARING
<<B>>	>>P<<	3.	REVERSE GEAR SLEEVE
		4.	NEEDLE ROLLER BEARING
		5.	REVERSE GEAR
	>>M<<	6.	SYNCHRONIZER RING
	>>L<<	7.	SYNCHRONIZER SPRING
	>>O<<	8.	SYNCHRONIZER SLEEVE
<<C>>	>>N<<	9.	5TH SPEED-REVERSE SYNCHRONIZER HUB
	>>M<<	10.	SYNCHRONIZER RING
	>>L<<	11.	SYNCHRONIZER SPRING
		12.	5TH SPEED GEAR
		13.	NEEDLE ROLLER BEARING
	>>K<<	14.	5TH SPEED GEAR SLEEVE
	>>J<<	15.	4TH SPEED GEAR
	>>I<<	16.	SNAP RING
<<D>>	>>H<<	17.	3RD SPEED GEAR
		18.	2ND SPEED GEAR

			DISASSEMBLY STEPS
		19.	NEEDLE ROLLER BEARING
<<E>>	>>G<<	20.	2ND SPEED GEAR SLEEVE
		21.	INNER SYNCHRONIZER RING
		22.	SYNCHRONIZER CONE
		23.	OUTER SYNCHRONIZER RING
	>>D<<	24.	SYNCHRONIZER SPRING
	>>F<<	25.	SYNCHRONIZER SLEEVE
	>>E<<	26.	1ST-2ND SPEED SYNCHRONIZER HUB
		27.	OUTER SYNCHRONIZER RING
	>>D<<	28.	SYNCHRONIZER SPRING
		29.	INNER SYNCHRONIZER RING
		30.	SYNCHRONIZER CONE
		31.	1ST SPEED GEAR
		32.	NEEDLE ROLLER BEARING
<<F>>	>>C<<	33.	1ST SPEED GEAR SLEEVE
	>>B<<	34.	SNAP RING
<<G>>	>>A<<	35.	ROLLER BEARING INNER RACE
		36.	OUTPUT SHAFT

Required Special Tools:

- MD998801: Bearing Remover
- MD998812: Installer Cap
- MD998813: Installer-100
- MD998814: Installer-200
- MD998818: Installer Adapter (38)
- MD998819: Installer Adapter (40)
- MD998822: Installer Adapter (46)
- MD998825: Installer Adapter (52)
- MD998917: Bearing Remover

cardiagn.com

DISASSEMBLY SERVICE POINTS

<<A>> BALL BEARING REMOVAL

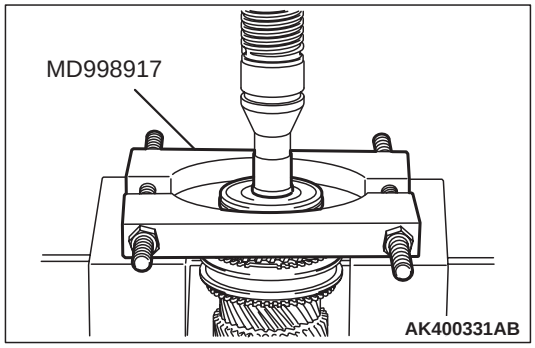

1. Using special tool MD998917, support the ball bearing, and then set them on the press.
2. Push down on the output shaft with the press, and remove the ball bearing.

<<B>> REVERSE GEAR BEARING SLEEVE REMOVAL

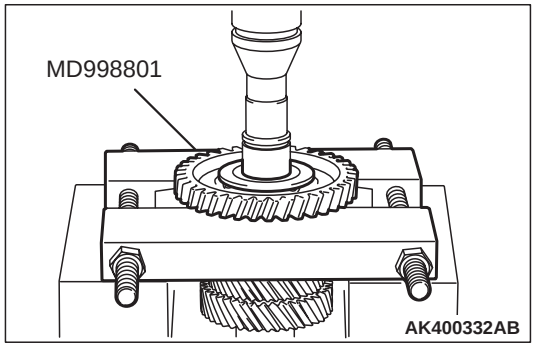

1. Using special tool MD998801, support the reverse gear, and then set them on the press.
2. Push down on the output shaft with the press and remove the reverse gear bearing sleeve.

<<C>> 5TH SPEED-REVERSE SYNCHRONIZER HUB REMOVAL

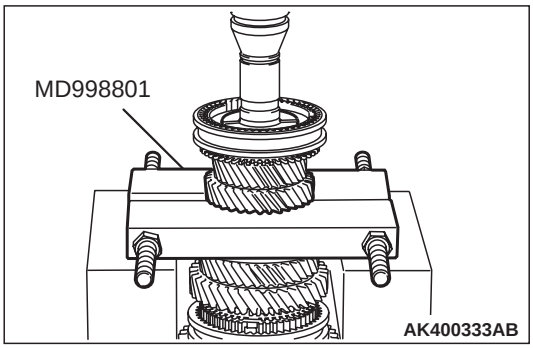

1. Using special tool MD998801, support the 4th speed gear, and then set them on the press.
2. Push down on the output shaft with the press and remove the 5th speed-reverse synchronizer hub.

<<D>> 3RD SPEED GEAR REMOVAL

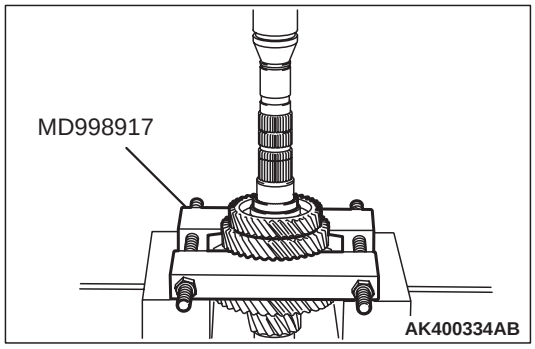

1. Using special tool MD998917, support the 2nd speed gear, and then set them on the press.
2. Push down on the output shaft with the press and remove the 3rd speed gear.

cardiagn.com

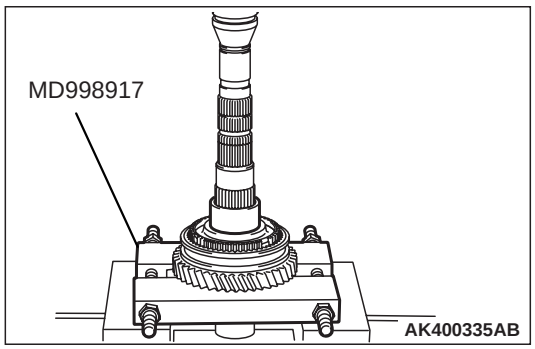

<<E>> 2ND SPEED GEAR SLEEVE REMOVAL

1. Using special tool MD998917, support the 1st speed gear, and then set them on the press.
2. Push down on the output shaft with the press and remove the 2nd speed gear sleeve.

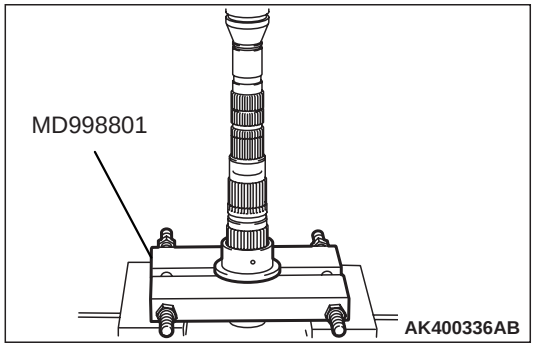

<<F>> 1ST SPEED GEAR SLEEVE REMOVAL

1. Using special tool MD998801, support the 1st speed gear sleeve, and then set them on the press.
2. Push down on the output shaft with the press and remove the 1st speed gear sleeve.

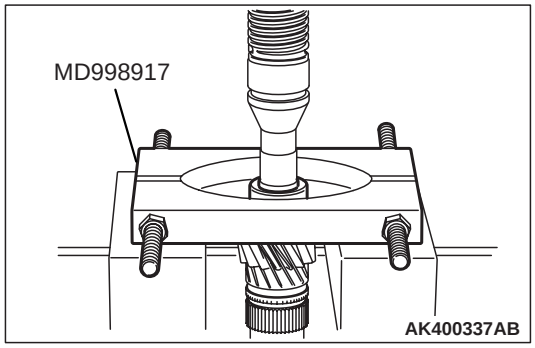

<<G>> ROLLER BEARING INNER RACE REMOVAL

1. Using special tool MD998917, support the roller bearing inner race, and then set them on the press.
2. Push down on the output shaft with the press and remove the roller bearing inner race.

cardiagn.com

ASSEMBLY SERVICE POINTS

>>A<< ROLLER BEARING INNER RACE INSTALLATION

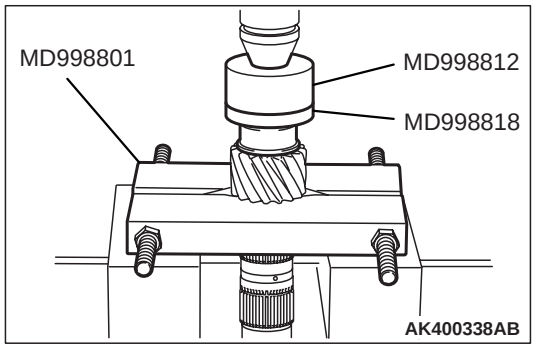

1. Using special tool MD998801, support the output shaft gear, and then set them on the press.
2. Using special tools MD998812 and MD998818, install the roller bearing inner race with the press.

>>B<< SNAP RING INSTALLATION

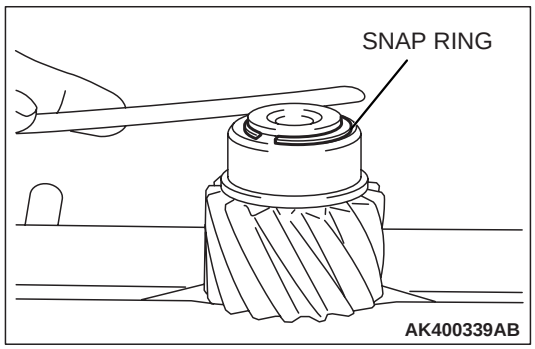

1. Install the thickest snap ring that can be fitted in the groove of output shaft.
2. Make sure that the roller bearing inner race end play meets the standard value.

   Standard value: 0 – 0.12 mm (0 – 0.0047 inch)

>>C<<1ST SPEED GEAR SLEEVE INSTALLATION

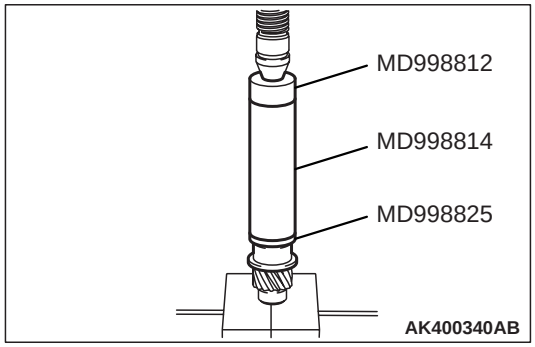

1. Set the output shaft on the press support stand.
2. Using special tools MD998812, MD998814 and MD998825, install the 1st speed gear sleeve with the press.

>>D<< SYNCHRONIZER SPRING INSTALLATION

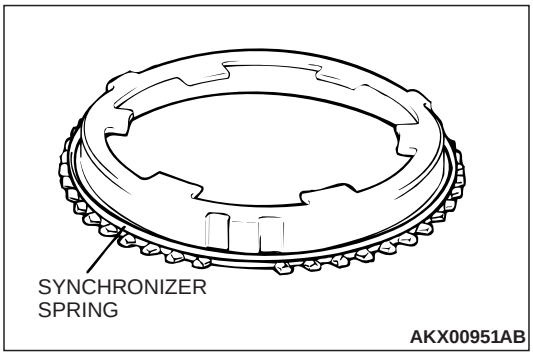

Install the synchronizer spring onto the outer synchronizer ring as shown.

cardiagn.com

>>E<< 1ST-2ND SPEED SYNCHRONIZER HUB INSTALLATION

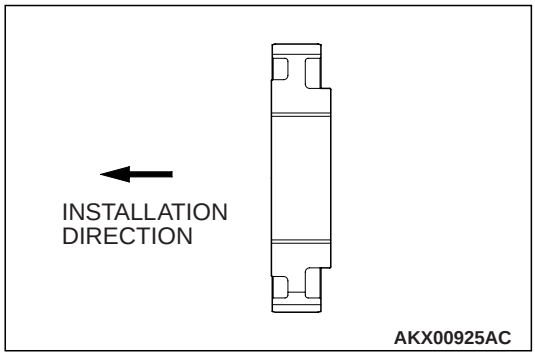

1. Set the output shaft on the press support stand.
2. Check that the 1st-2nd speed synchronizer hub is in the correct installation direction, and put it on the output shaft.
3. Using special tools MD998812, MD998814 and MD998825, install the 1st-2nd speed synchronizer hub with the press.
4. Make sure that the outer synchronizer ring on the 1st speed gear side can rotate freely.

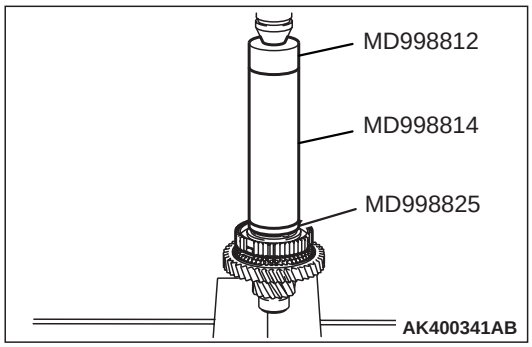

>>F<< SYNCHRONIZER SLEEVE INSTALLATION

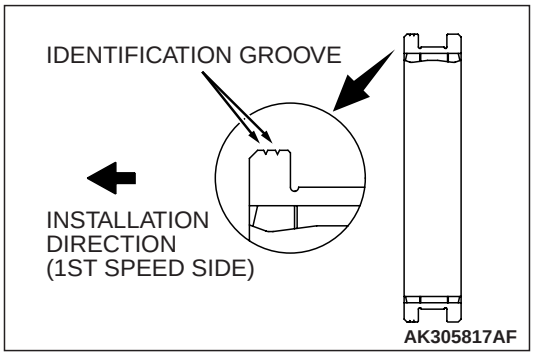

1. Check that the synchronizer sleeve is in the correct direction for installation, and install it on the 1st-2nd speed synchronizer hub.

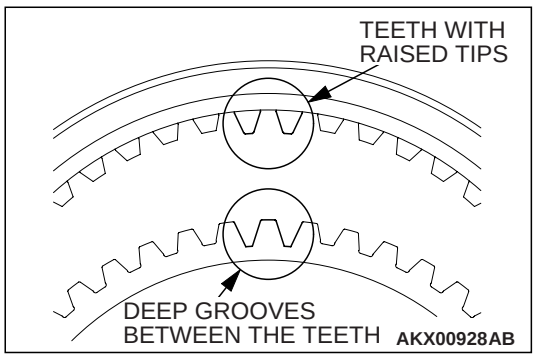

2. Install the synchronizer sleeve so that the areas with teeth that have raised tips (three areas total) are aligned with the areas on the synchronizer hub that have deep grooves between the teeth (three areas total).

cardiagn.com

>>G<< 2ND SPEED GEAR SLEEVE INSTALLATION

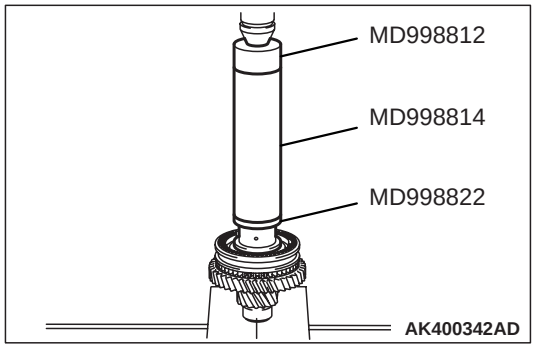

1. Set the output shaft on the press support stand.
2. Using special tools MD998812, MD998814 and MD998822, install the 2nd speed sleeve onto the output shaft with the press.

>>H<< 3RD SPEED GEAR INSTALLATION

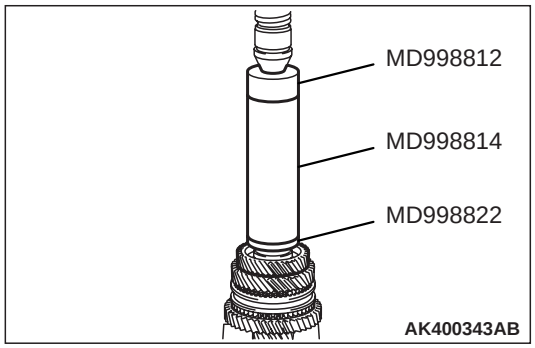

1. Check that the 2nd speed gear and the outer synchronizer ring have been properly installed. Also, make sure the claws on the synchronizer cone (four places) are correctly fitted into the holes in the 2nd speed gear (four places).
2. Using special tools MD998812, MD998814 and MD998822, install the 3rd speed gear onto the output shaft with the press.
3. Make sure that the 2nd speed gear and the outer synchronizer ring can rotate freely.

>>I<< SNAP RING INSTALLATION

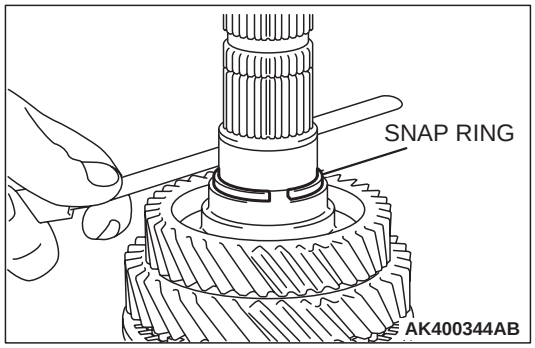

1. Install the thickest snap ring that can be fitted in the groove of output shaft.
2. Make sure that the 3rd speed gear end play meets the standard value.

   Standard value: 0 – 0.09 mm (0 – 0.0035 inch)

>>J<< 4TH SPEED GEAR INSTALLATION

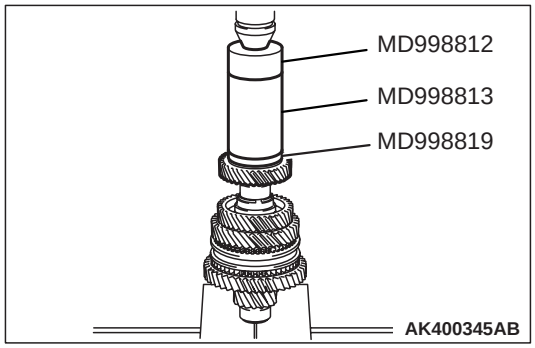

1. Set the output shaft on the press support stand.
2. Using special tools MD998812, MD998813 and MD998819, install the 4th speed gear onto the output shaft with the press.

cardiagn.com

>>K<< 5TH SPEED GEAR SLEEVE INSTALLATION

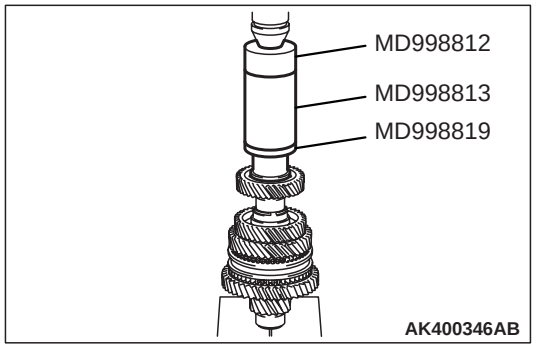

Using special tools MD998812, MD998813 and MD998819, install the 5th speed gear sleeve onto the output shaft with the press.

>>L<< SYNCHRONIZER SPRING INSTALLATION

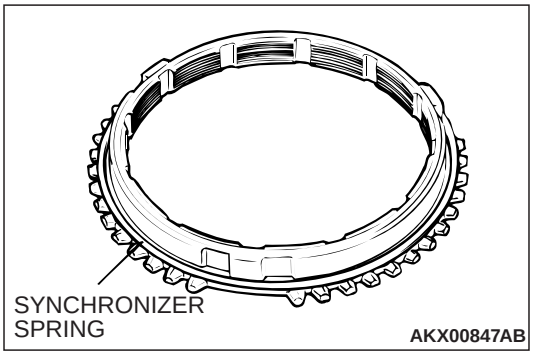

Install the synchronizer spring onto the synchronizer ring as shown.

>>M<< SYNCHRONIZER RING INSTALLATION

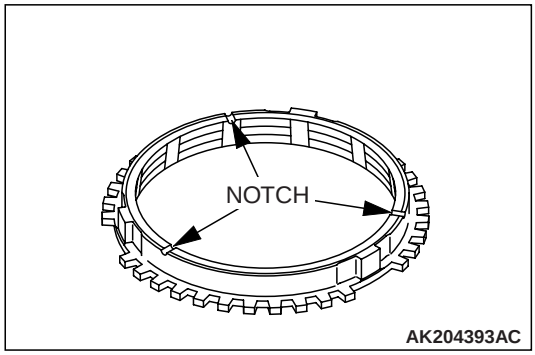

⚠ CAUTION

There is a 5th speed synchronizer ring and a reverse synchronizer ring. Be careful not to confuse the two when installing, as a mistake will affect the shift feeling.

1. Check for the presence of identification notches on the synchronizer ring.

   No notches: 5th speed synchronizer ring

   Three notches: Reverse synchronizer ring

2. Install the synchronizer ring so that it fits completely over the machined cone of the gear.

cardiagn.com

>>N<< 5TH SPEED-REVERSE SYNCHRONIZER HUB INSTALLATION

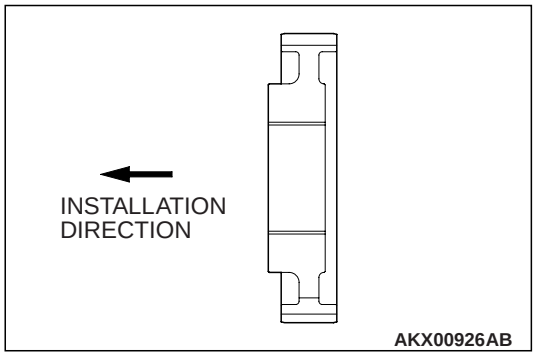

1. Set the output shaft on the press support stand.
2. Make sure that the synchronizer ring is fitted correctly on the cone of the 5th speed gear.
3. Check that the 5th speed-reverse synchronizer hub is oriented correctly for installation, and install it on the output shaft.

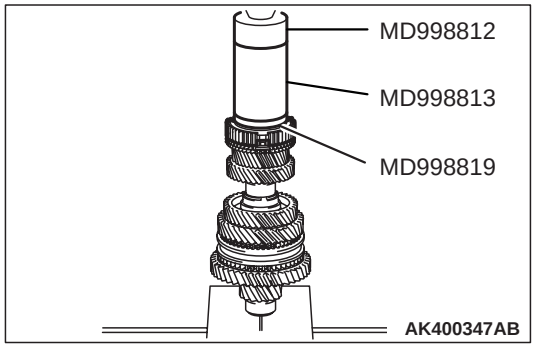

4. Using special tools MD98812, MD998813 and MD998819, press install the 5th speed-reverse synchronizer hub with the press.
5. Make sure that the synchronizer ring on the 5th speed gear side can rotate freely.

>>O<< SYNCHRONIZER SLEEVE INSTALLATION

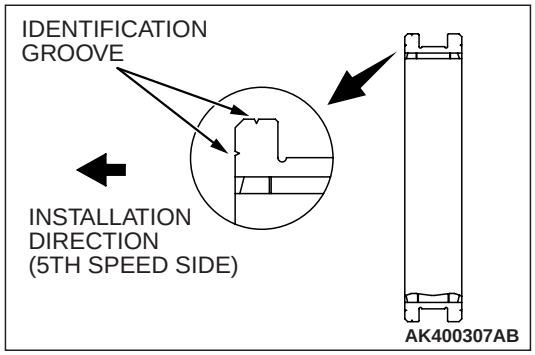

1. Check that the synchronizer sleeve is in the correct direction for installation, and install it on the 5th speed-Reverse synchronizer hub.

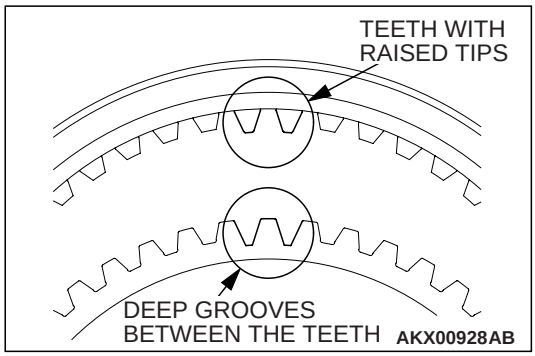

2. Install the synchronizer sleeve so that the areas with teeth that have raised tips (three areas total) are aligned with the areas on the synchronizer hub that have deep grooves between the teeth (three areas total).

cardiagn.com

>>P<< REVERSE GEAR SLEEVE INSTALLATION

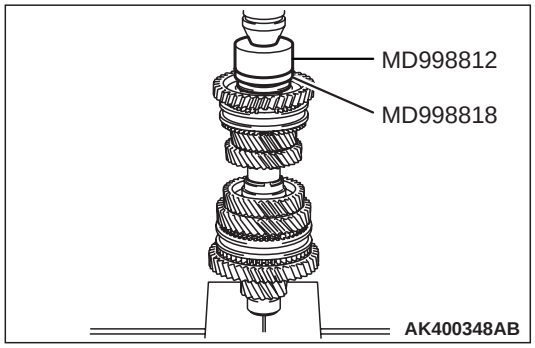

1. Make sure the synchronizer ring, reverse gear and needle roller bearing have been correctly installed.
2. Using special tools MD998812 and MD998818, press fit the reverse gear sleeve. Make sure that the reverse gear and the synchronizer ring can rotate freely during the pressing process.

>>Q<< BALL BEARING INSTALLATION

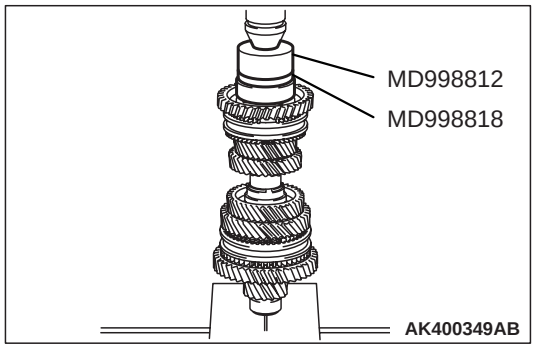

1. Check the installation direction of the ball bearing.
2. Using special tools MD998812 and MD998818, install the ball bearing with the press.

>>R<< SNAP RING INSTALLATION

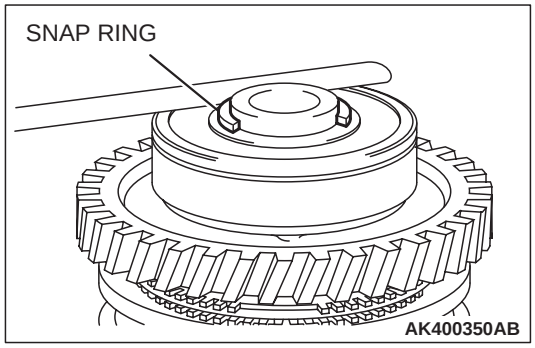

1. Install the thickest snap ring that can be fitted in the groove of output shaft.
2. Make sure that the ball bearing end play meets the standard value.

   Standard value: 0 –0.09 mm (0 –0.0035 inch)

INSPECTION

M1222002300186

OUTPUT SHAFT

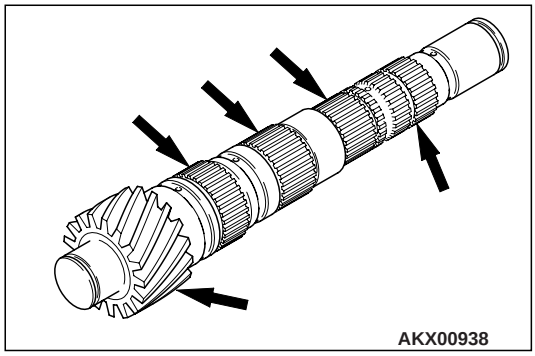

1. Check the splines for damage and wear.
2. Check that the helical gear teeth surfaces are not damaged or worn.

cardiagn.com

NEEDLE ROLLER BEARING

1. Combine the needle roller bearing with the bearing sleeve and gear, and check that it rotates smoothly without noise or play.
2. Check the needle roller bearing cage for deformation.

SYNCHRONIZER RING

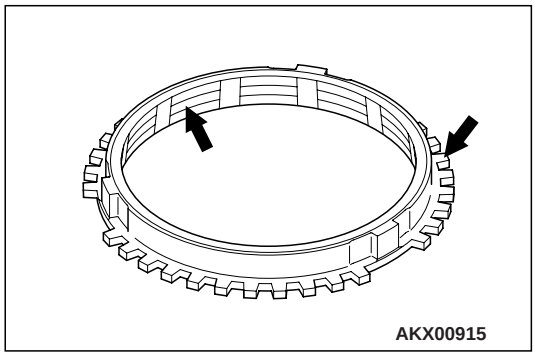

1. Check if the clutch gear teeth are damaged or broken.
2. Check internal surface for damage, wear and broken threads.

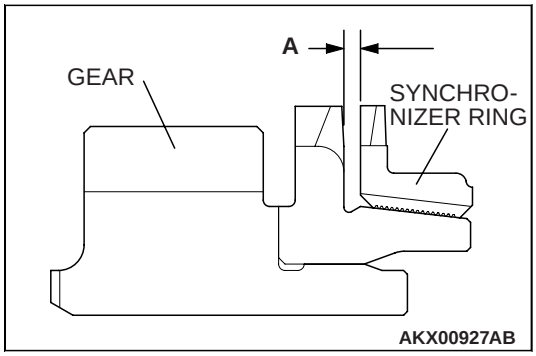

3. Force the synchronizer ring toward the clutch gear and check clearance "A." If "A" is less than the limit, replace the synchronizer ring.

   Minimum limit: 0.5 mm (0.020 inch)

OUTER SYNCHRONIZER RING/INNER SYNCHRONIZER RING/SYNCHRONIZER CONE

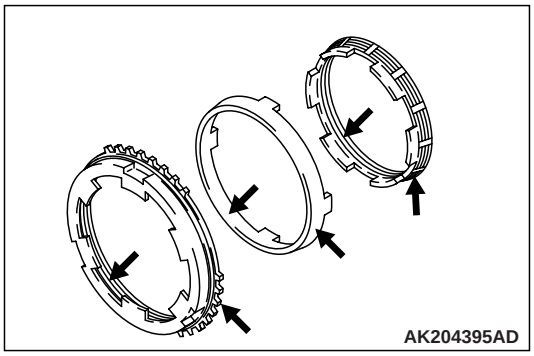

⚠ CAUTION

When replacing, replace the outer ring, inner ring and cone as a set.

1. Check that the clutch gear tooth surfaces and cone surfaces are not damaged or broken.

cardiagn.com

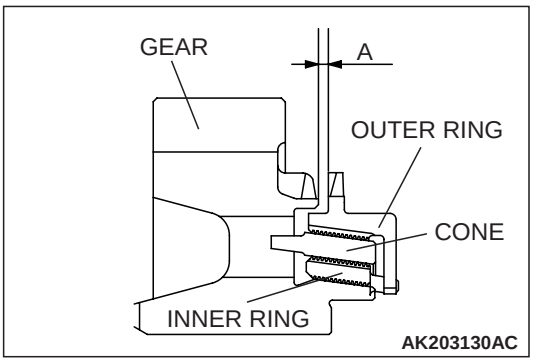

2. Install the outer ring, inner ring and cone, force them toward the gear, and check clearance "A." If "A" is less than the limit, replace them as a set.

   Minimum limit: 0.5 mm (0.020 inch)

SYNCHRONIZER SLEEVE AND HUB

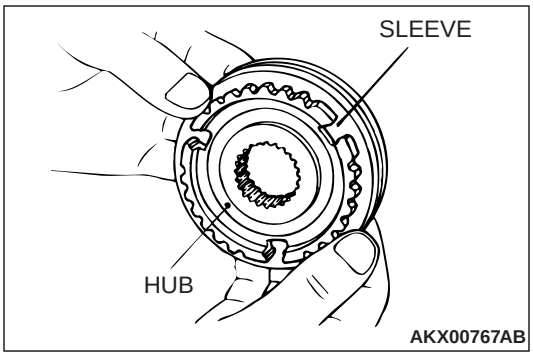

1. Combine the synchronizer sleeve and hub, and check that they slide smoothly.
2. Check that the sleeve is free from damage at its inside splines ends.

SYNCHRONIZER SPRING

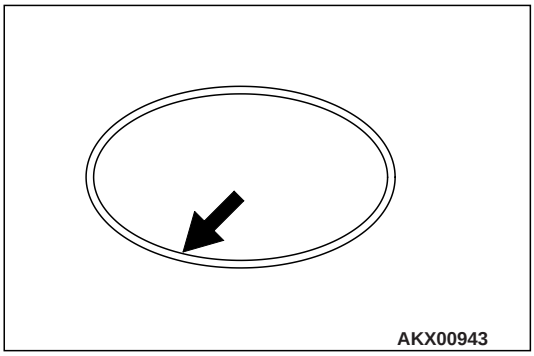

Check that the spring is not sagging, deformed or broken.

SPEED GEARS

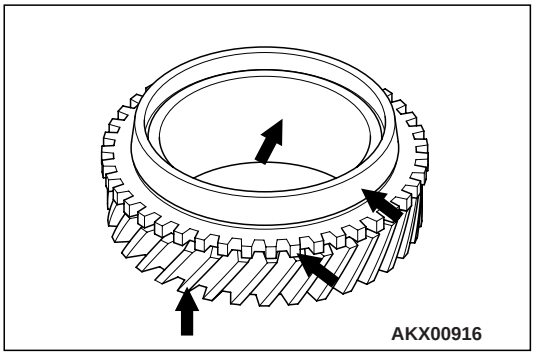

1. Check that the helical and clutch gear tooth surfaces are not damaged or worn.
2. Check that the synchronizer cone surfaces are not roughened, damaged or worn.
3. Check that the gear inside diameter and front and rear surfaces are not damaged and worn.

cardiagn.com

REVERSE IDLER GEAR

DISASSEMBLY AND ASSEMBLY

M1222012500211

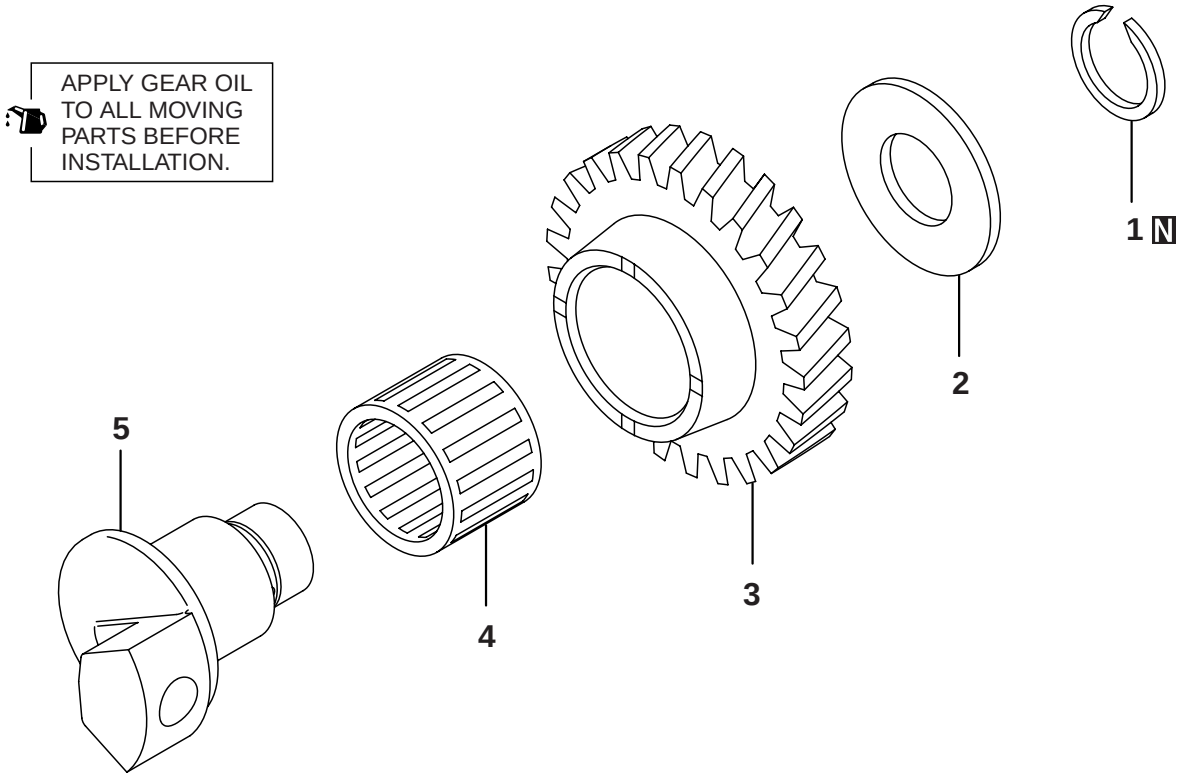

AK305225AC

DISASSEMBLY STEPS

1. SNAP RING
2. THRUST WASHER
3. REVERSE IDLER GEAR

DISASSEMBLY STEPS

4. NEEDLE ROLLER BEARING
5. REVERSE IDLER GEAR SHAFT

cardiagn.com

VEHICLE SPEED SENSOR

DISASSEMBLY AND ASSEMBLY

M1222007000027

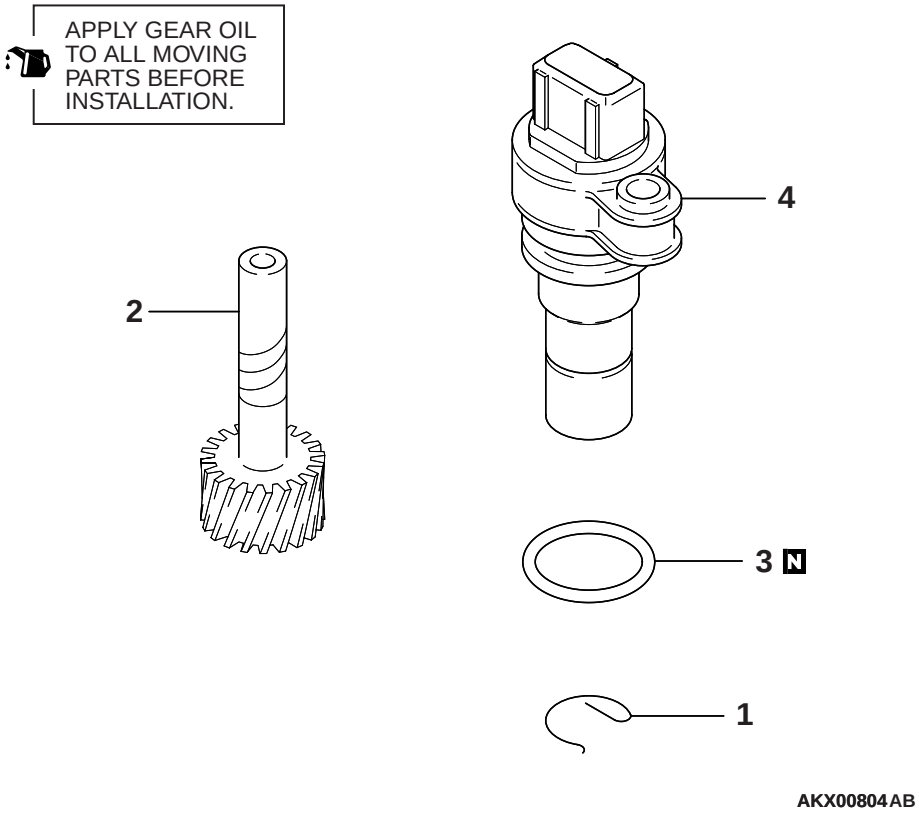

DISASSEMBLY STEPS

1. E-CLIP
2. SPEEDOMETER DRIVEN GEAR

DISASSEMBLY STEPS

3. O-RING
4. SLEEVE

cardiagn.com

SELECT LEVER

DISASSEMBLY AND ASSEMBLY

M1222012800160

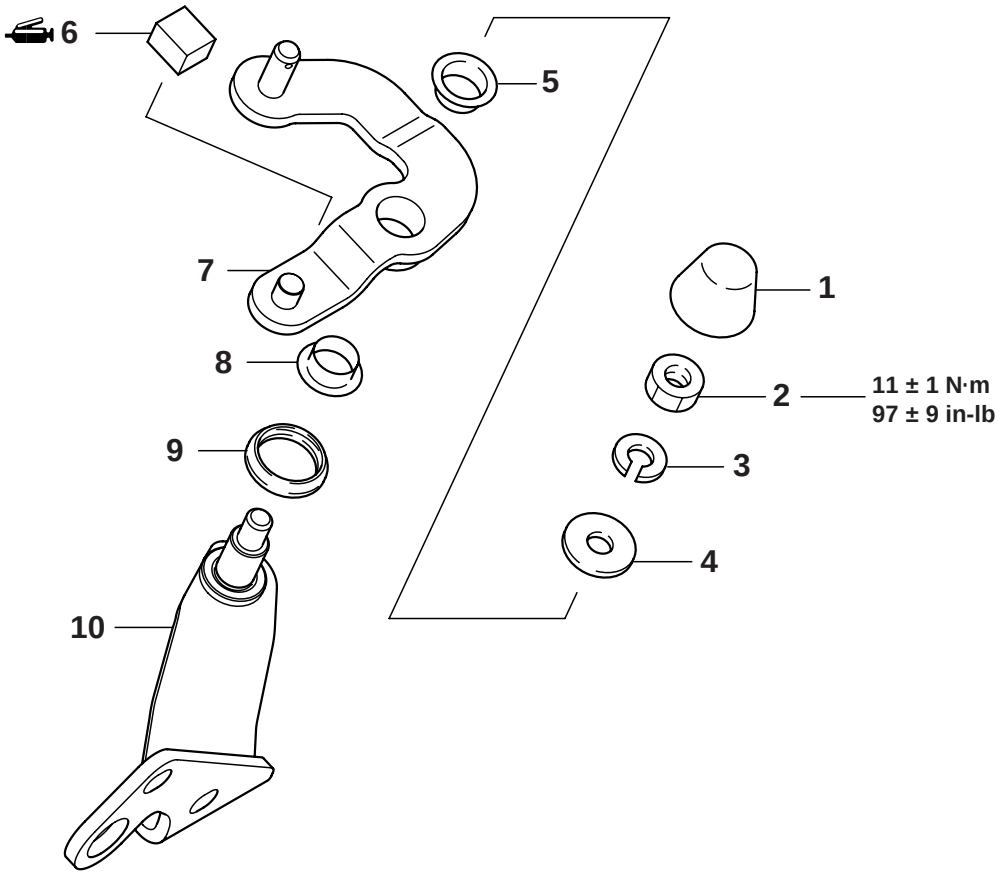

AK403239AB

DISASSEMBLY STEPS

1. DUST COVER
2. NUT
3. SPRING WASHER
4. WASHER
>>**A**<< 5. SELECT LEVER BUSHING

DISASSEMBLY STEPS

6. SELECT LEVER SHOE
7. SELECT LEVER
>>**A**<< 8. SELECT LEVER BUSHING
>>**A**<< 9. DUST COVER
10. SELECT LEVER SHAFT

cardiagn.com

ASSEMBLY SERVICE POINT

>>A<< DUST COVER AND SELECT LEVER BUSHING INSTALLATION

Make sure the dust cover and select lever bushing installation direction is correct, and the distinguished parts are correctly assembled as shown.

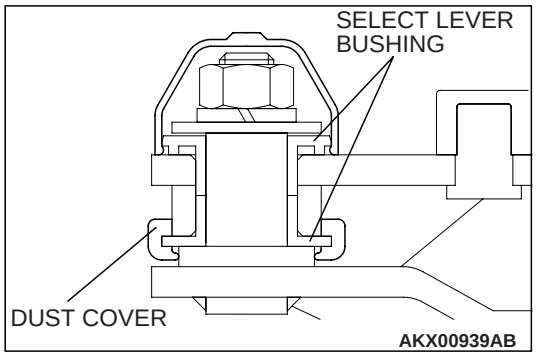

cardiagn.com

CONTROL HOUSING

DISASSEMBLY AND ASSEMBLY

M1222013100249

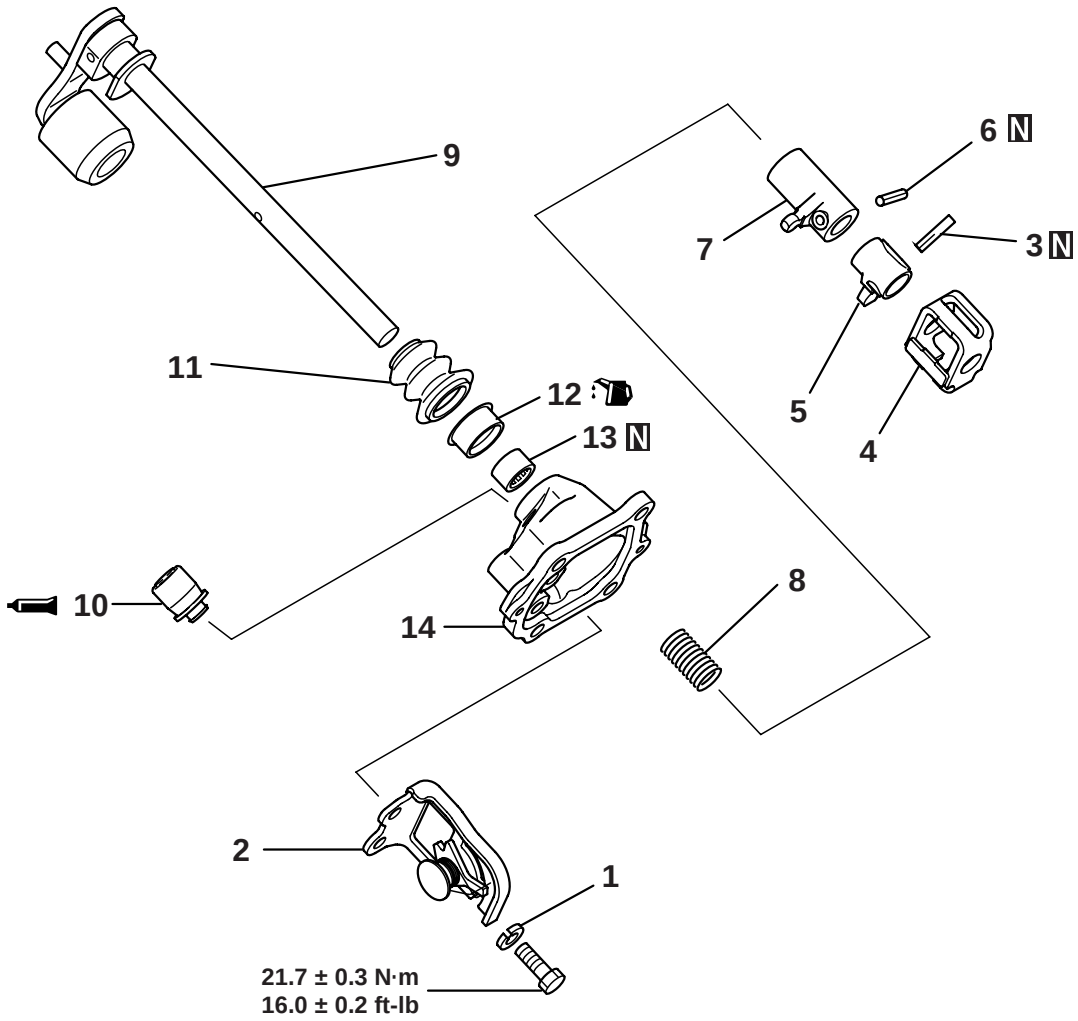

AK403240AB

DISASSEMBLY STEPS

		1.	SPRING WASHER
		2.	STOPPER BRACKET
<<**A**>>	>>**E**<<	3	LOCK PIN
		4.	INTERLOCK PLATE
		5.	CONTROL FINGER
	>>**D**<<	6.	SPRING PIN
		7.	STOPPER BODY

DISASSEMBLY STEPS

	8.	SPRING
	9.	CONTROL SHAFT
>>**C**<<	10.	AIR BREATHER
	11.	CONTROL SHAFT BOOT
>>**B**<<	12.	OIL SEAL
>>**A**<<	13.	NEEDLE BEARING
	14.	CONTROL HOUSING

cardiagn.com

DISASSEMBLY SERVICE POINT

<<A>> LOCK PIN REMOVAL

Drive out the lock pin from the direction shown.

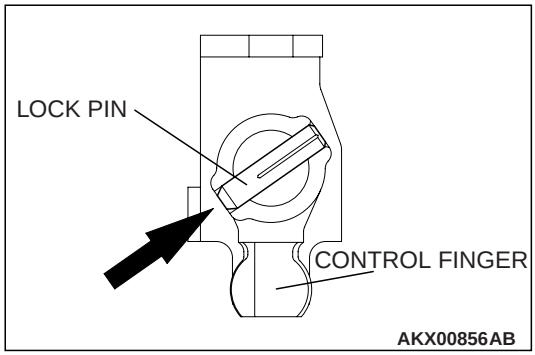

ASSEMBLY SERVICE POINTS

>>A<< NEEDLE BEARING INSTALLATION

Press fit the needle bearing into the control housing side as shown.
Make sure that the side with the model number stamped on it faces the end of the control housing as shown.

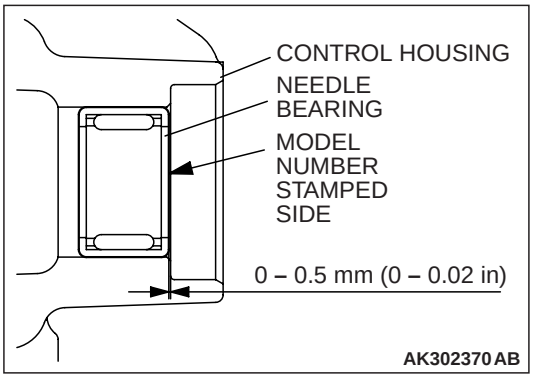

>>B<< OIL SEAL INSTALLATION

Apply gear oil (Hypoid gear oil SAE 75W-90 or 75W-85W conforming to API classification GL-4) to the oil seal lip area.

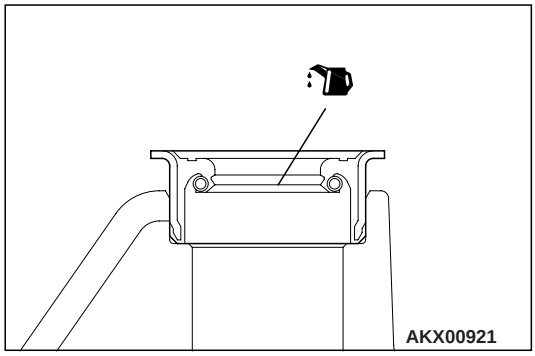

cardiagn.com

>>C<< AIR BREATHER INSTALLATION

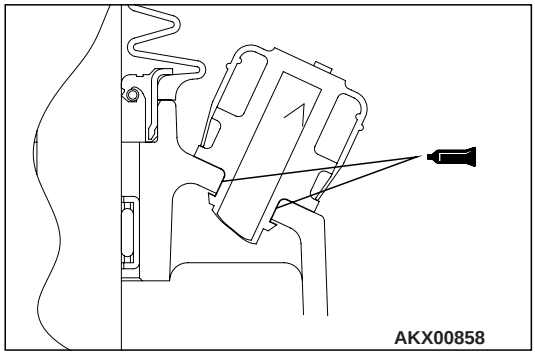

1. Apply sealant (3M™ AAD Part Number 8001 or equivalent) to the inserting portion of air breather.

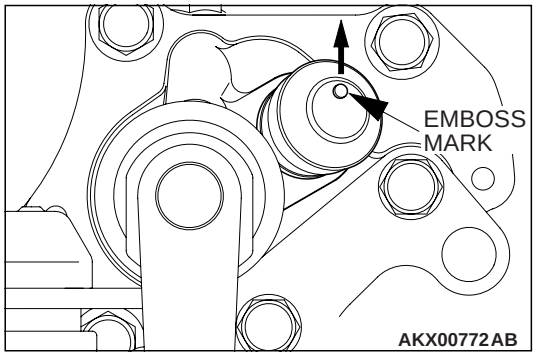

2. Install the air breather so that the embossed mark is in the direction shown in the illustration.

>>D<< SPRING PIN INSTALLATION

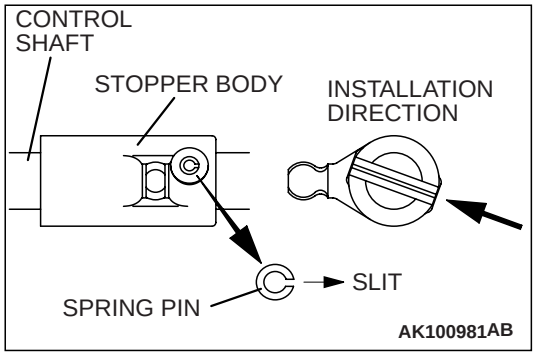

Drive in the spring pin so that the slit is in the direction shown in the illustration.

>>E<<LOCK PIN INSTALLATION

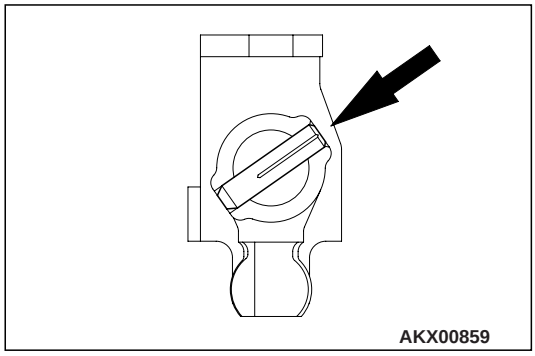

Drive the lock pin in from the direction shown in the illustration.

cardiagn.com

CLUTCH HOUSING

DISASSEMBLY AND ASSEMBLY

M1222003700273

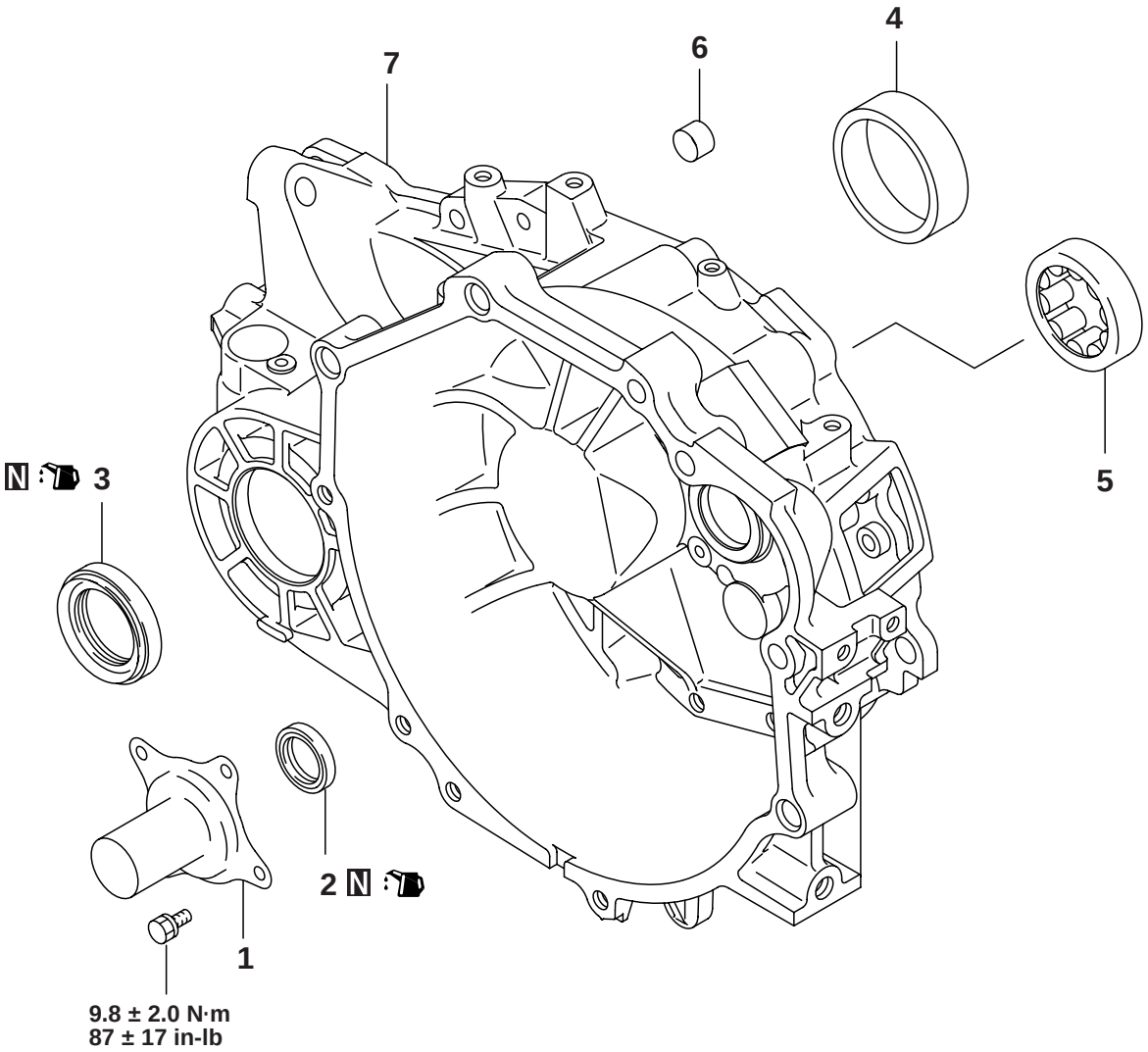

AK204400AF

		DISASSEMBLY STEPS
	1.	CLUTCH RELEASE BEARING RETAINER
>>**E**<<	2.	OIL SEAL
>>**D**<<	3	OIL SEAL

			DISASSEMBLY STEPS
<<**A**>>	>>**C**<<	4.	OUTER RACE
<<**B**>>	>>**B**<<	5.	ROLLER BEARING
	>>**A**<<	6.	BUSHING
		7.	CLUTCH HOUSING

Required Special Tools:

- MB990926: Installer Adapter
- MB990934: Installer Adapter
- MB990935: Installer Adapter
- MB990938: Handle
- MD998325: Differential Oil Seal Installer
- MD998346: Bearing Outer Race Remover
- MD998772: Valve Spring Compressor
- MD999566: Claw

cardiagn.com

DISASSEMBLY SERVICE POINT

<<A>> OUTER RACE REMOVAL

Using special tool MD999566, remove the outer race from the clutch housing.

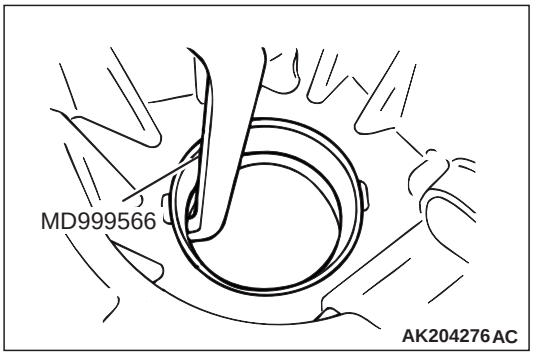

<<B>> ROLLER BEARING REMOVAL

1. Set special tools MD998772 and MD998346 as indicated in the illustration.
2. Turn the nut on special tool MD998346 to pull up on the tool and take out the outer race.

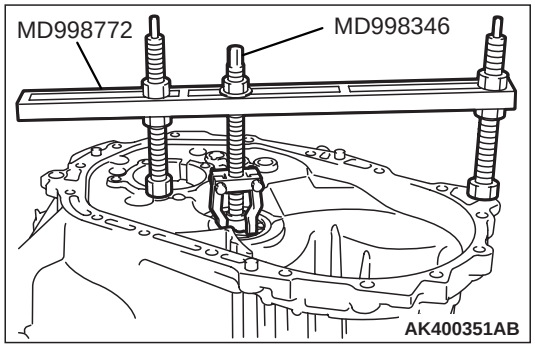

ASSEMBLY SERVICE POINTS

>>A<< BUSHING INSTALLATION

1. Press fit the bushing so the seam is away from the air vent.

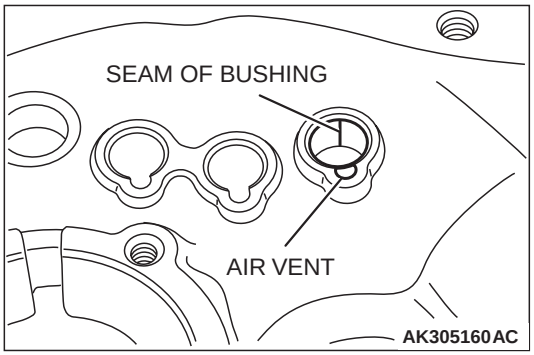

2. Be sure the bushing is fully seated as shown. It must be 1 mm (0.04 inch) below the housing surface.

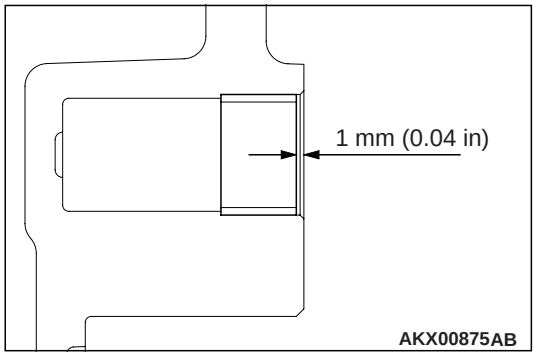

cardiagn.com

>>B<< ROLLER BEARING INSTALLATION

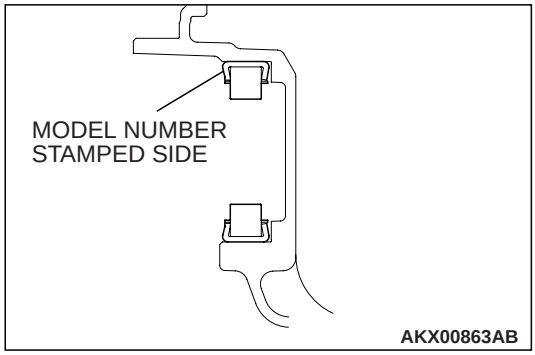

1. Check the installation direction of the outer race.
   Install the outer race so the side with the model number stamping can be seen.

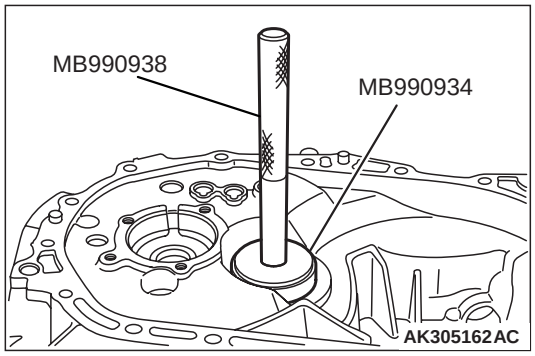

2. Using special tools MB990938 and MB990934, press fit the outer race into the clutch housing.

>>C<< OUTER RACE INSTALLATION

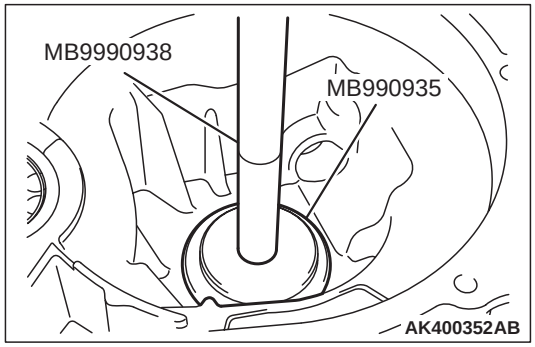

1. Check the installation direction of the outer race.
2. Using special tools MB990938 and MB990935, press fit the outer race into the clutch housing.

>>D<<OIL SEAL INSTALLATION

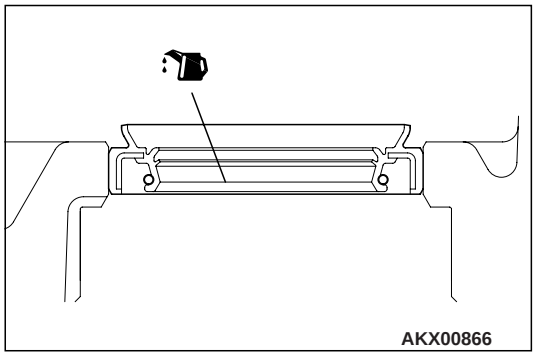

1. Apply gear oil (Hypoid gear oil SAE 75W-85W conforming to API classification GL-4) to the oil seal lip.

cardiagn.com

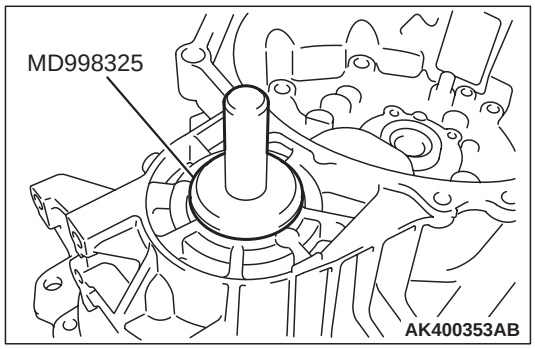

2. Using special tool MD998325, press fit the oil seal into the clutch housing.

>>E<< OIL SEAL INSTALLATION

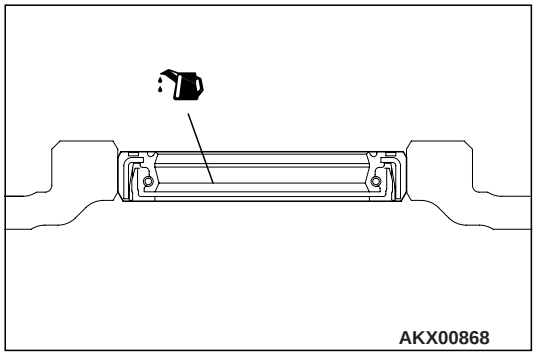

1. Apply transmission oil (Hypoid gear oil SAE 75W-85W conforming to API classification GL-4) to the oil seal lip.

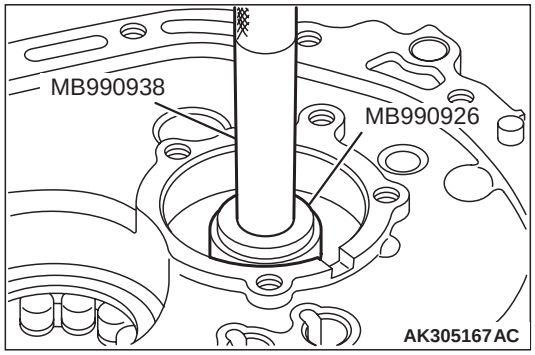

2. Using special tools MB990938 and MB990926, press fit the oil seal into the clutch housing.

cardiagn.com

TRANSMISSION CASE

DISASSEMBLY AND ASSEMBLY

M1222013400206

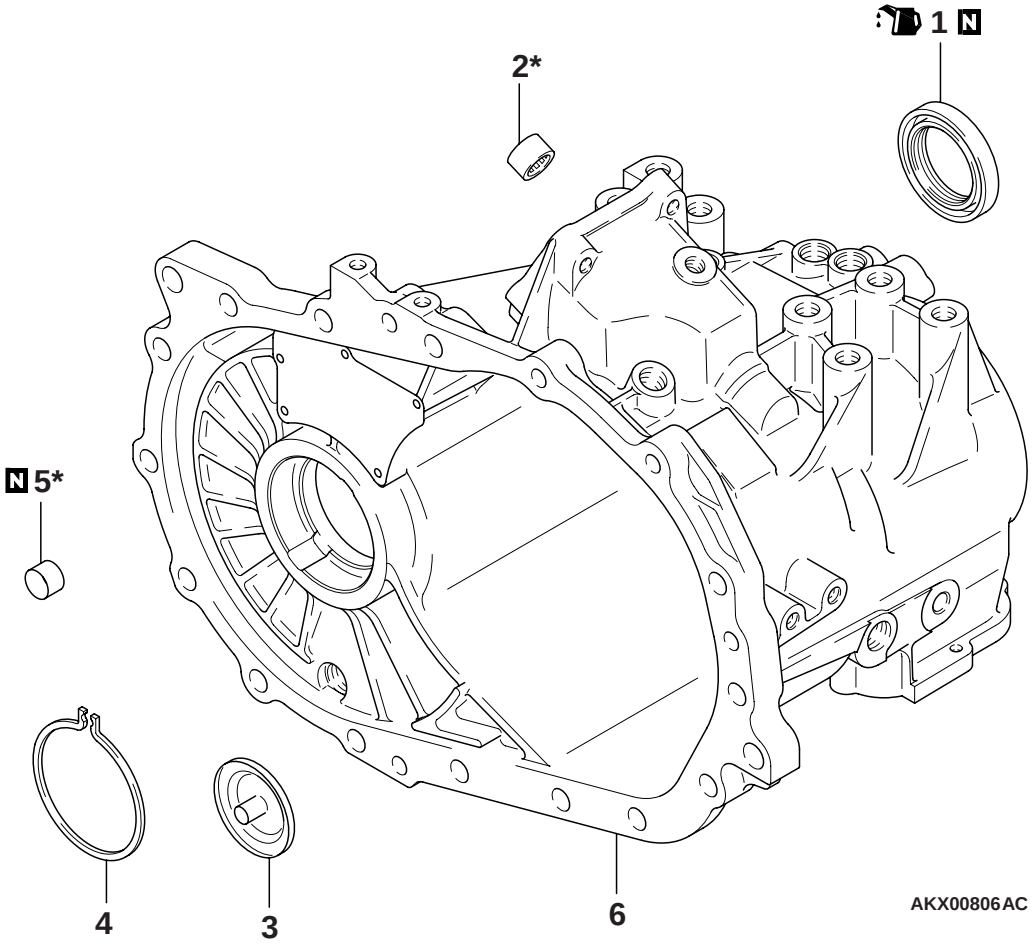

DISASSEMBLY STEPS

>>**C**<< 1. OIL SEAL
>>**B**<< 2. NEEDLE BEARING*
3. OIL GUIDE
4. SNAP RING

DISASSEMBLY STEPS (Continued)

>>**A**<< 5. BUSHING*
6. TRANSAXLE

*NOTE: *:Refer to the needle bearing and bushing installation procedures only when replacing the transaxle case.*

Required Special Tool:

- MD998325: Differential Oil Seal Installer

cardiagn.com

ASSEMBLY SERVICE POINTS

>>A<< BUSHING INSTALLATION

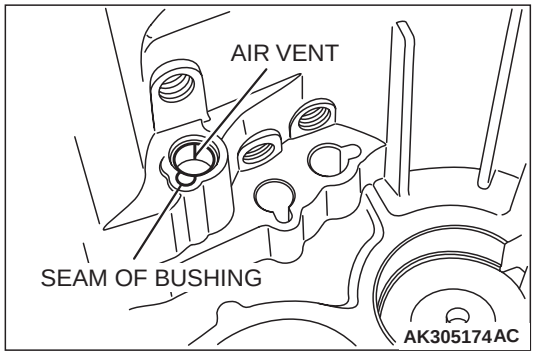

1. Press fit the bushing so the seam is away from the air vent.

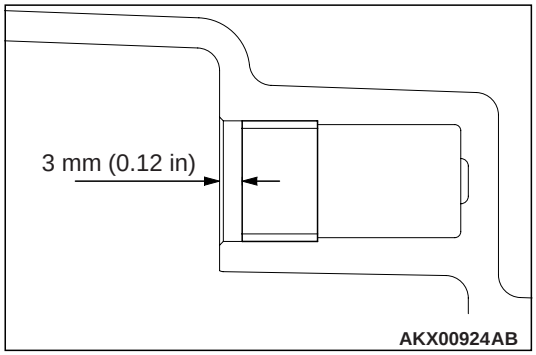

2. Be sure the bushing is fully seated as shown. It must be 3 mm(0.12 inch) below the housing surface.

>>B<< NEEDLE BEARING INSTALLATION

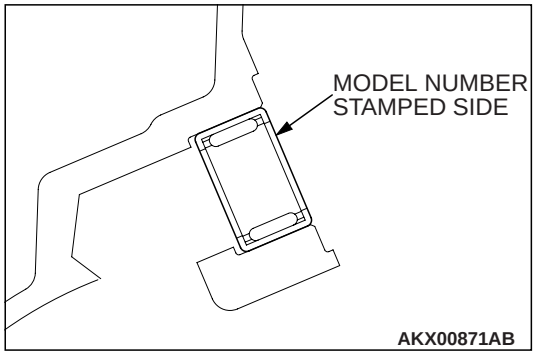

1. Check the installation direction of the needle bearing.
2. Press fit the needle bearing until it is flush with the case.

>>C<<OIL SEAL INSTALLATION

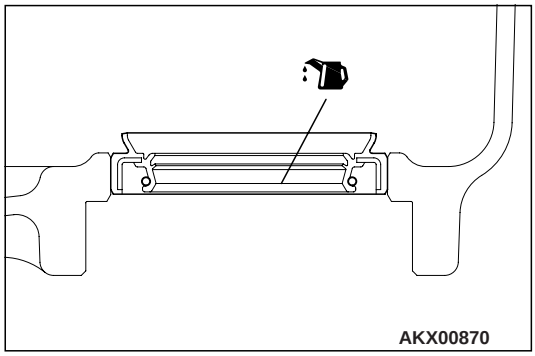

1. Apply gear oil (Hypoid gear oil SAE 75W-90 or 75W-85W conforming to API classification GL-4).

cardiagn.com

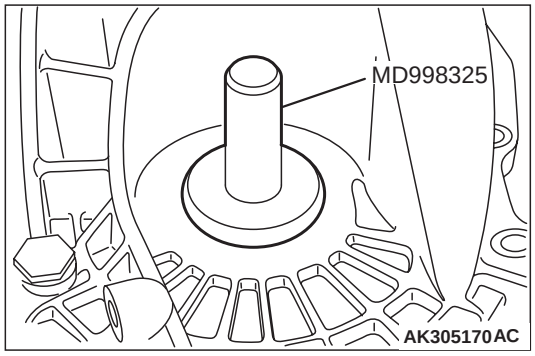

2. Using special tool MD998325, press fit the oil seal into the transaxle case.

DIFFERENTIAL

DISASSEMBLY AND ASSEMBLY

M1222002500209

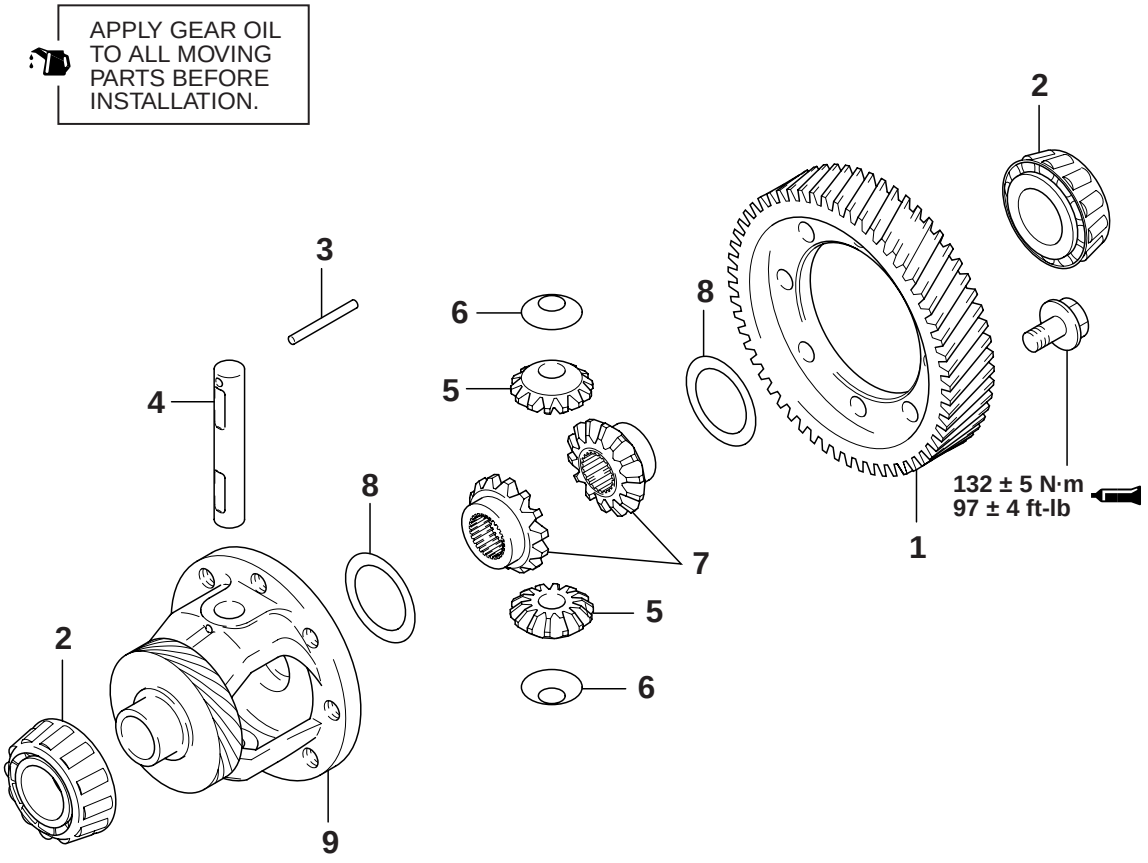

DISASSEMBLY STEPS

	>>**D**<<	1.	DIFFERENTIAL DRIVE GEAR
<<**A**>>	>>**C**<<	2.	TAPER ROLLER BEARING
	>>**B**<<	3.	LOCK PIN
	>>**A**<<	4.	PINION SHAFT
	>>**A**<<	5.	PINION

DISASSEMBLY STEPS

>>**A**<<	6.	WASHER
>>**A**<<	7.	SIDE GEAR
>>**A**<<	8.	SPACER
	9.	DIFFERENTIAL CASE

Required Special Tools:

- MD998801: Bearing Remover
- MD998812: Installer Cap
- MD998819: Installer Adapter (40)

TSB Revision

cardiagn.com

DISASSEMBLY SERVICE POINT

<<A>> TAPER ROLLER BEARING REMOVAL

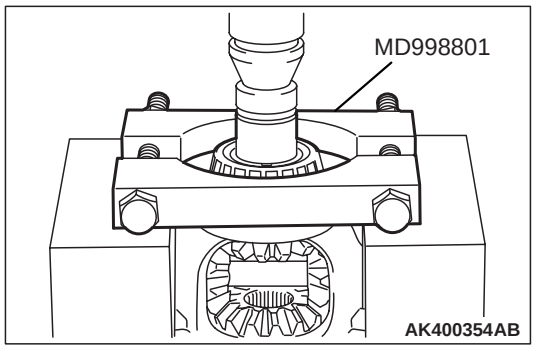

1. Using special tool MD998801, support the taper roller bearing, and then set them on the press.
2. Push down on the differential case with the press and remove the bearing.

ASSEMBLY SERVICE POINTS

>>A<< SPACER/SIDE GEAR/WASHER/PINION/PINION SHAFT INSTALLATION

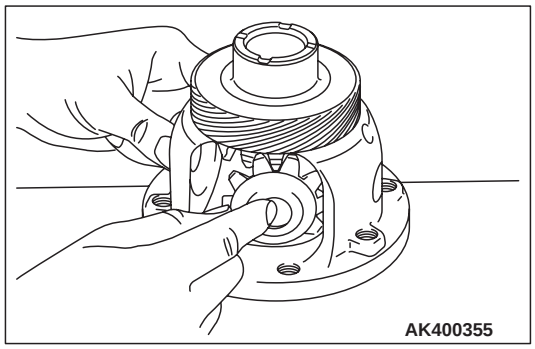

1. After a spacer has been mounted on the back surface of the side gear, install the side gear in the differential case.

   NOTE: When a new side gear is to be installed, mount a medium thickness spacer [0.93 –1.00 mm (0.0366 –0.0395 inch].
2. Set the washer on the back of each pinion, and put both pinions simultaneously in mesh with the side gears. While rotating them, install them in position.

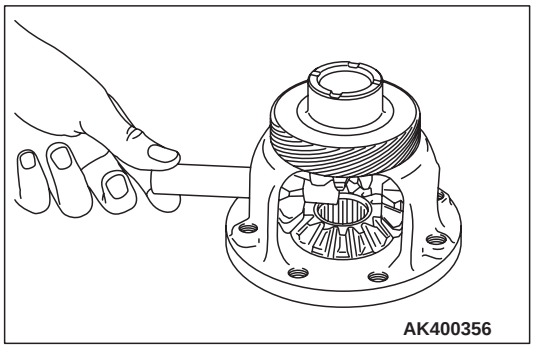

3. Insert the pinion shaft.

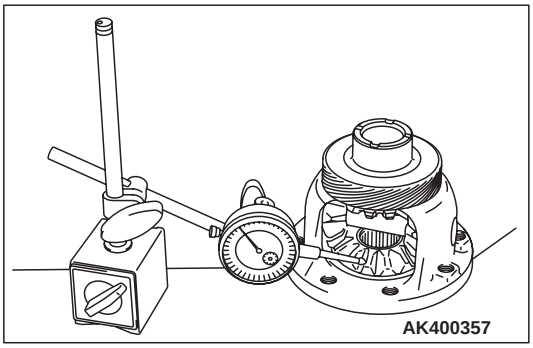

4. Measure the backlash between the side gear and pinion.

   Standard value:
   0 – 0.150 mm (0 – 0.0059 inch)
5. If the backlash is out of specification, select a spacer that should get the backlash within the standard value. then re-measure the backlash.

   NOTE: Repeat until the backlash on both sides are equal.

cardiagn.com

>>B<<LOCK PIN INSTALLATION

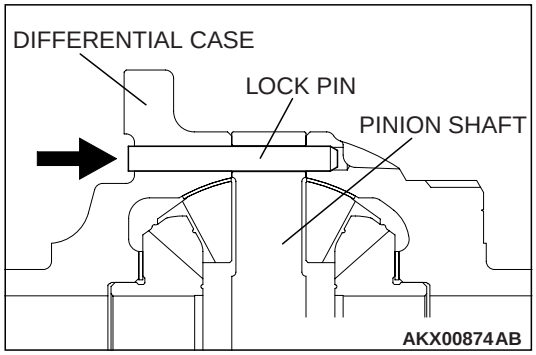

Install the lock pin so that it will be oriented in the direction shown.

>>C<< TAPER ROLLER BEARING INSTALLATION

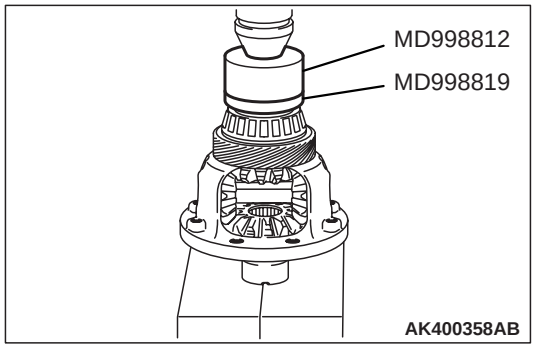

Using special tools MD998812 and MD998819, install the taper roller bearing with the press.

>>D<< DIFFERENTIAL DRIVE GEAR INSTALLATION

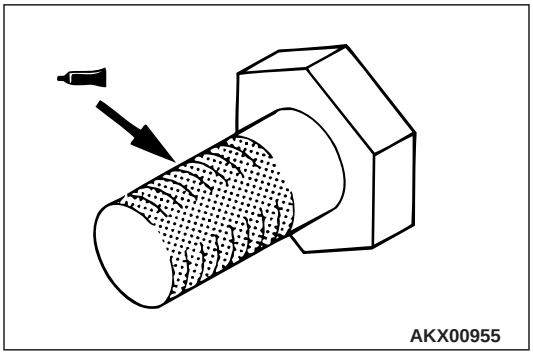

1. Apply sealant (3M™AAD Part Number 8730 or 8731 or equivalent) to the entire threaded portion of the bolt.

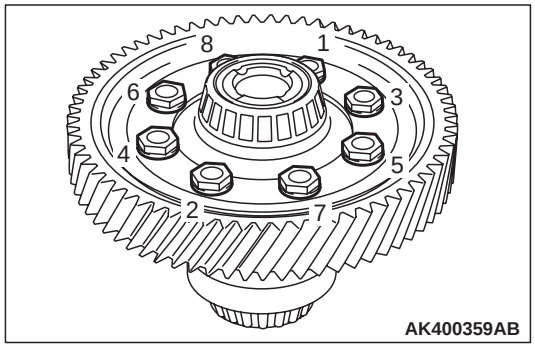

2. Tighten to the specified torque in the illustrated sequence.
   Tightening torque: 132 ±5 N· m (97 ±4 ft-lb)

cardiagn.com

SPECIFICATIONS

FASTENER TIGHTENING SPECIFICATIONS

M1222012100246

ITEM	SPECIFICATION
Front bearing retainer mounting bolt	18 ±3 N· m (13 ±2 ft-lb)
Clutch housing-transaxle case mounting bolt	44 ±5 N· m (32 ±4 ft-lb)
Reverse idler gear shaft mounting bolt	48 ±6 N· m (35 ±4 ft-lb)
Under cover mounting bolt	6.9 ±0.9 N· m (61 ±8 in-lb)
Control housing mounting bolt	18 ±3 N· m (13 ±2 ft-lb)
Interlock plate bolt	30 ±3 N· m (22 ±2 ft-lb)
Harness bracket bolt	18 ±3 N· m (13 ±2 ft-lb)
Poppet spring	32 ±2 N· m (24 ±1 ft-lb)
Backup light switch	32 ±2 N· m (24 ±1 ft-lb)
Vehicle speed sensor mounting bolt	3.9 ±1.0 N· m (35 ±9 in-lb)
Select lever mounting bolt	18 ±3 N· m (13 ±2 ft-lb)
Shift cable bracket mounting bolt	18 ±3 N· m (13 ±2 ft-lb)
Roll stopper bracket front, mounting bolt	90 ±10 N· m (66 ±7 ft-lb)
Roll stopper bracket rear, mounting bolt	85 ±5 N· m (63 ±4 ft-lb)
Select lever mounting nut	11 ±1 N· m (97 ±9 in-lb)
Stopper bracket mounting bolt	21.7 ±0.3 N· m (16.0 ±0.2 ft-lb)
Clutch release bearing retainer mounting bolt	9.8 ±2.0 N· m (87 ±17 in-lb)
Differential drive gear mounting bolt	132 ±5 N· m (97 ±4 ft-lb)

GENERAL SPECIFICATIONS

M1222000200387

ITEM		SPECIFICATION
Model		**F5M42-2-V5P**
Applicable engine		4G69 S4 MIVEC
Type		5-speed transaxle floor shift
Gear ratio	1st	3.583
	2nd	1.947
	3rd	1.379
	4th	1.030
	5th	0.767
	Reverse	3.363
Final reduction ratio		3.722
Speedometer gear ratio (driven/drive)		30/36

cardiagn.com

SERVICE SPECIFICATIONS

M1222000300276

ITEM	STANDARD VALUE	LIMIT
Input shaft front bearing end play mm (in)	0 – 0.12 (0 – 0.0047)	–
Input shaft rear bearing end play mm (in)	0 – 0.12 (0 – 0.0047)	–
Input shaft 5th speed gear end play mm (in)	0 – 0.09 (0 – 0.0035)	–
Output shaft roller bearing inner race end play mm (in)	0 – 0.12 (0 – 0.0047)	–
Output shaft 3rd speed gear end play mm (in)	0 – 0.09 (0 – 0.0035)	–
Output shaft ball bearing end play mm (in)	0 – 0.09 (0 – 0.0035)	–
Backlash between differential side gear and pinion mm (in)	0 – 0.150 (0 – 0.0059)	–
Differential case preload mm (in)	0.05 – 0.11 (0.0020 – 0.0043)	–
Synchronizer ring back surface to gear clearance mm (in)	–	0.5 (0.020)

SEALANTS AND ADHESIVES

M1222000500292

ITEM	SPECIFIED SEALANT
Clutch housing-transaxle case mating surface	Mitsubishi Part number MD997740 or equivalent
Control housing-transaxle case mating surface	
Under cover-transaxle case mating surface	
Air breather	3M™AAD Part No.8001 or equivalent
Differential drive gear bolt	3M™AAD Part No.8730 or 8731 or equivalent

LUBRICANTS

M1222000400239

TRANSAXLE

ITEM	SPECIFIED SEALANT
Driveshaft oil seal lip gear oil	Hypoid gear oil SAE 75W-90 or 75W-85W conforming to API classification GL-4
Input shaft oil seal lip gear oil	
Control shaft oil seal lip gear oil	
Select lever shoe	Mitsubishi Part number 0101011 or equivalent

cardiagn.com

SNAP RINGS, SPACERS AND THRUST PLATE FOR ADJUSTMENT

M1222012000272

Snap ring
(For adjustment of input shaft front bearing end play)

THICKNESS mm (in)	IDENTIFICATION SYMBOL	THICKNESS mm (in)	IDENTIFICATION SYMBOL
2.24 (0.0882)	None	2.38 (0.0937)	Brown
2.31 (0.0909)	Blue		

Snap ring
(For adjustment of input shaft rear bearing end play)
(For adjustment of output shaft front bearing end play)

THICKNESS mm (in)	IDENTIFICATION SYMBOL	THICKNESS mm (in)	IDENTIFICATION SYMBOL
1.43 (0.0563)	Green (2)	1.59 (0.0626)	Yellow (2)
1.51 (0.0594)	White (2)		

Thrust plate
(For adjustment of input shaft 5th speed gear end play)

THICKNESS mm (in)	IDENTIFICATION SYMBOL	THICKNESS mm (in)	IDENTIFICATION SYMBOL
2.82 (0.1110)	0	2.98 (0.1173)	6
2.86 (0.1126)	2	3.02 (0.1189)	7
2.90 (0.1142)	3	3.06 (0.1205)	8
2.94 (0.1157)	5	3.10 (0.1220)	9

Snap ring
(For adjustment of output shaft 3rd speed gear end play)

THICKNESS mm (in)	IDENTIFICATION SYMBOL	THICKNESS mm (in)	IDENTIFICATION SYMBOL
2.81 (0.1106)	Green	2.97 (0.1169)	Orange
2.85 (0.1122)	White	3.01 (0.1185)	Red
2.89 (0.1138)	Yellow	3.05 (0.1201)	Pink
2.93 (0.1154)	Black	3.09 (0.1217)	Blue

Snap ring
(For adjustment of output shaft rear bearing end play)

THICKNESS mm (in)	IDENTIFICATION SYMBOL	THICKNESS mm (in)	IDENTIFICATION SYMBOL
2.31 (0.0909)	Black (2)	2.55 (0.1004)	Yellow
2.35 (0.0925)	None	2.59 (0.1020)	Black
2.39 (0.0941)	Blue	2.63 (0.1035)	Orange
2.43 (0.0957)	Brown	2.67 (0.1051)	Blue
2.47 (0.0972)	Green	2.71 (0.1067)	Brown
2.51 (0.0988)	White		

cardiagn.com

Spacer
(For adjustment of differential case preload)

THICKNESS mm (in)	IDENTIFICATION SYMBOL	THICKNESS mm (in)	IDENTIFICATION SYMBOL
0.71 (0.0280)	71	1.01 (0.0398)	01
0.74 (0.0291)	74	1.04 (0.0409)	04
0.77 (0.0303)	77	1.07 (0.0421)	07
0.80 (0.0315)	80	1.10 (0.0433)	J
0.83 (0.0327)	83	1.13 (0.0445)	D
0.86 (0.0339)	86	1.16 (0.0457)	K
0.89 (0.0350)	89	1.19 (0.0469)	L
0.92 (0.0362)	92	1.22 (0.0480)	G
0.95 (0.0374)	95	1.25 (0.0492)	M
0.98 (0.0386)	98		

Spacer
(For adjustment of backlash between differential side gear and pinion)

THICKNESS mm (in)	IDENTIFICATION SYMBOL	THICKNESS mm (in)	IDENTIFICATION SYMBOL
0.76 –0.84 (0.0299 –0.0330)	–	1.06 – 1.14 (0.0417 – 0.0449)	–
0.81 –0.89 (0.0319 –0.0350)	–	1.11 – 1.19 (0.0437 – 0.0469)	–
0.86–0.94 (0.0339 –0.0370)	–	1.16 – 1.24 (0.0457 – 0.0488)	–
0.91 –0.99 (0.0358 –0.0390)	–	1.21 – 1.29 (0.0476 – 0.0508)	–
0.96 –1.04 (0.0378 –0.0409)	–	1.26 – 1.34 (0.0496 – 0.0528)	–
1.01 –1.09 (0.0398 –0.0429)	–		

cardiagn.com