Audi A4 1995 ➢

Automatic gearbox 01N									
Gearbox ID	CUW	CLF	DFG	DFH	DFK	DMU	DMV	DMX	EPT
	EPU	EPV							
Geartype	01N								

Edition 07.2002

Protected by copyright. Copying for private or commercial purposes, in part or in whole, is not permitted unless authorised by AUDI AG. AUDI AG does not guarantee or accept any liability with respect to the correctness of information in this document. Copyright by AUDI AG.

List of Workshop Manual Repair GroupsList of Workshop Manual Repair GroupsList of Workshop Manual Repair Groups

Audi A4 1995 ➢

Automatic gearbox 01N

Repair Group

00 - Technical data
32 - Torque converter
37 - Controls, Housing
38 - Gears, Hydraulic controls
39 - Final drive, Differential

Protected by copyright. Copying for private or commercial purposes, in part or in whole, is not permitted unless authorised by AUDI AG. AUDI AG does not guarantee or accept any liability with respect to the correctness of information in this document. Copyright by AUDI AG.

Technical information should always be available to the foremen and mechanics, because their careful and constant adherence to the instructions is essential to ensure vehicle road-worthiness and safety. In addition, the normal basic safety precautions for working on motor vehicles must, as a matter of course, be observed.

All rights reserved.
No reproduction without prior agreement from publisher.

Copyright © 2010 Audi AG, Ingolstadt

Contents

00 - Technical data 1
1 Identification of gearbox 1
1.1 Identification of gearbox 1
2 Information on "Automatic gearbox 01N" 2
2.1 Information on "Automatic gearbox 01N" 2
2.2 Two generations of gearbox 2
2.3 Self-diagnosis 2
3 Code letters, gearbox allocation, ratios, equipment 2
3.1 Code letters, gearbox allocation, ratios, equipment 2
4 Capacities 6
4.1 Capacities 6
5 Repair with an exchange component 6
5.1 Repair with an exchange component 6
5.2 Items included with exchange component 7
6 General repair instructions 14
6.1 General repair instructions 14
32 - Torque converter 16
1 Torque converter 16
1.1 Torque converter 16
1.2 Torque converter allocation 17
1.3 Identification of torque converter 17
1.4 Removing sleeve bearing from turbine shaft 18
1.5 Renewing the torque converter oil seal 20
1.6 Draining torque converter 21
1.7 Checking torque converter 22
1.8 Installing torque converter 22
37 - Controls, Housing 24
1 Servicing shift mechanism 24
1.1 Servicing shift mechanism 24
1.2 Dismantling and assembling shift mechanism 24
1.3 Removing and installing selector lever handle 30
1.4 Removing and installing selector lever lock solenoid -N110 and wiring for selector lever illumination 31
1.5 Removing and installing shift mechanism 31
1.6 Checking shift mechanism 34
1.7 Removing and installing selector lever cable 34
1.8 Checking and adjusting selector lever cable 36
1.9 Removing and installing locking cable 37
1.10 Checking ignition key interlock 42
2 Checking gearbox 43
2.1 Checking gearbox 43
2.2 Checking main pressure 43
3 Removing and installing gearbox 47
3.1 Removing and installing gearbox 47
3.2 Transporting automatic gearbox 59
3.3 Securing gearbox to repair stand 60
4 Checking and topping up ATF level 61
4.1 Checking and topping up ATF level 61
4.2 Checking ATF level 62
4.3 Changing ATF or filling up after repairs 67

Protected by copyright. Copying for private or commercial purposes, in part or in whole, is not permitted unless authorised by AUDI AG. AUDI AG does not guarantee or accept any liability with respect to the correctness of information in this document. Copyright by AUDI AG.

5 Gearbox with selector elements 69
5.1 Gearbox with selector elements 69
5.2 Position of coupling elements 70
6 Dismantling and assembling gearbox 71
6.1 Dismantling and assembling gearbox 71
6.2 Rules for cleanliness when working on the automatic gearbox 71
7 Removing and installing ATF pipes 71
7.1 Removing and installing ATF pipes 71
7.2 Petrol engine without air conditioner 72
7.3 Petrol engine with air conditioner, TDI engine 73
7.4 Cleaning ATF pipes and ATF cooler 74
8 Dismantling and assembling planetary gearbox 75
8.1 Dismantling and assembling planetary gearbox 75
8.2 Dismantling planetary gearbox - overview 75
8.3 Dismantling planetary gearbox 80
8.4 Assembling planet carrier - overview 86
8.5 I - Installing planet carrier 87
8.6 II - Installing components from reverse gear brake -B1- up to circlip for -B2- supporting tube 89
8.7 III - Installing components from large sun gear up to reverse gear clutch -K2- 92
8.8 IV - Installing components from supporting tube for -B2- up to ATF pump 97
8.9 Assembling planetary gearbox 101
8.10 Pressing clutch -K1- onto clutch -K3- 112
8.11 Planetary gearbox adjustments - overview 114
8.12 I - Adjusting planet carrier 115
8.13 II - Adjusting reverse gear brake -B1- - overview 121
8.14 III - Adjusting clutch play between -K1- and -K2- 126
8.15 IV - Adjusting 2nd and 4th gear brake -B2- 131

38 - Gears, Hydraulic controls 145
1 Dismantling and assembling ATF pump 145
1.1 Dismantling and assembling ATF pump 145
2 Dismantling and assembling free wheel with -B1- piston 149
2.1 Dismantling and assembling free wheel with -B1- piston 149
3 Dismantling and assembling 1st to 3rd gear clutch -K1- 152
3.1 Dismantling and assembling 1st to 3rd gear clutch -K1- 152
4 Dismantling and assembling reverse gear clutch -K2- 158
4.1 Dismantling and assembling reverse gear clutch -K2- 158
5 Dismantling and assembling 3rd and 4th gear clutch -K3- with turbine shaft 163
5.1 Dismantling and assembling 3rd and 4th gear clutch -K3- with turbine shaft 163
6 Removing and installing valve body 169
6.1 Removing and installing valve body 169
6.2 Removing and installing oil pan 175
6.3 Removing and installing ATF screen 176
6.4 Removing and installing valve body 177
6.5 Operating rod for manual selector valve 178
6.6 Removing and installing conductor strip with 10-pin connector 180
7 Dismantling and assembling parking lock 182
7.1 Dismantling and assembling parking lock 182
8 Removing and installing senders on gearbox housing 191
8.1 Removing and installing senders on gearbox housing 191
8.2 Removing and installing speedometer sender -G22 191
8.3 Removing and installing gearbox speed sender -G38 192
8.4 Removing and installing vehicle speed sender -G68 193

Protected by copyright. Copying for private or commercial purposes, in part or in whole, is not permitted unless authorised by AUDI AG. AUDI AG does not guarantee or accept any liability with respect to the correctness of information in this document. Copyright by AUDI AG.

39 - Final drive, Differential 195
1 Checking oil in final drive 195
1.1 Checking oil in final drive 195
2 Renewing flange shaft oil seals 196
2.1 Renewing flange shaft oil seals 196
2.2 Renewing left-hand flange shaft oil seal 196
2.3 Renewing right-hand drive flange oil seal 199
2.4 Removing and installing grooved ball bearing on output shaft for drive flange 203
3 Dismantling and assembling final drive 205
3.1 Dismantling and assembling final drive 205
3.2 Repair overview of final drive 205
3.3 Removing and installing input gear 206
3.4 Removing and installing drive pinion 214
3.5 Removing and installing differential 226
3.6 Dismantling and assembling differential 231
3.7 Removing and installing differential bevel gears 241
4 Adjusting final drive 242
4.1 Adjusting final drive 242
4.2 Overview of adjustments 243
4.3 Adjustment overview 245
4.4 Adjusting input gear 245
5 Adjusting drive pinion and crown wheel 247
5.1 Adjusting drive pinion and crown wheel 247
5.2 Adjusting and identification of gear sets 248
5.3 Recommended sequence for readjusting final drive set 249
5.4 Adjusting drive pinion 253
5.5 Adjusting crown wheel 260

Protected by copyright. Copying for private or commercial purposes, in part or in whole, is not permitted unless authorised by AUDI AG. AUDI AG does not guarantee or accept any liability with respect to the correctness of information in this document. Copyright by AUDI AG.

Protected by copyright. Copying for private or commercial purposes, in part or in whole, is not permitted unless authorised by AUDI AG. AUDI AG does not guarantee or accept any liability with respect to the correctness of information in this document. Copyright by AUDI AG.

00 - Technical data

1 - Identification of gearbox

1.1 - Identification of gearbox

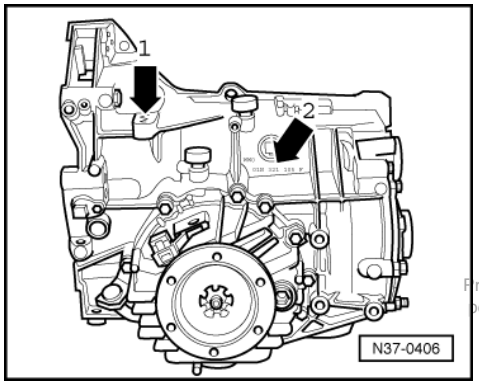

Protected by copyright. Copying for private or commercial purposes, in part or in whole, is not permitted unless authorised by AUDI AG. AUDI AG does not guarantee or accept any liability with respect to the correctness of information in this document. Copyright by AUDI AG.

The "4-speed automatic gearbox 01N" is installed in the Audi A4 1995>in combination with a 4-cylinder engine. Allocation=>Page 2 .

Location on gearbox

-> Code letters (arrow 1)

Automatic gearbox 01N (arrow 2)

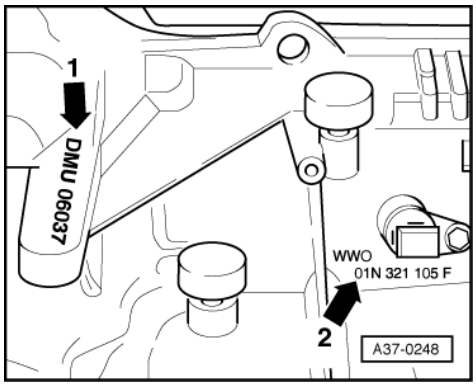

-> Code letters and date of manufacture (arrow 1) of automatic gearbox 01N (arrow 2)

Example:

DMU	06	03	7
I	I	I	I
Code letters	Day	Month	Year (1997) of manufacture

Additional data depends on manufacture.

Note:

The gearbox code letters are also included on the vehicle data stickers.

2 - Information on "Automatic gearbox 01N"

2.1 - Information on "Automatic gearbox 01N"

Comprehensive information on 4-speed automatic gearboxes is given in self study programme No. 172.

2.2 - Two generations of gearbox

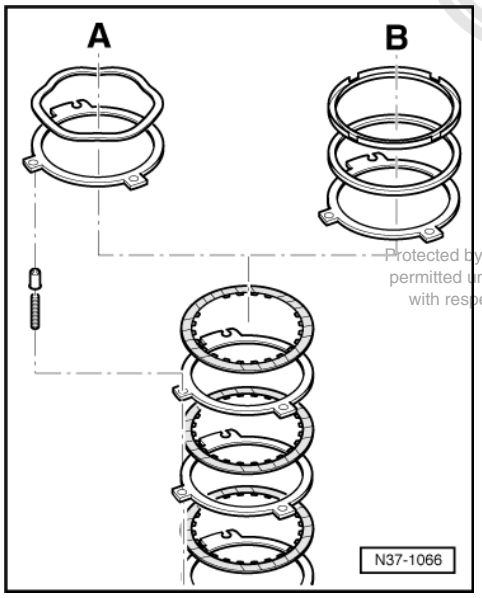

Protected by copyright. Copying for private or commercial purposes, in part or in whole, is not permitted unless authorised by AUDI AG. AUDI AG does not guarantee or accept any liability with respect to the correctness of information in this document. Copyright by AUDI AG.

-> There are two types of gearbox:

A - Gearboxes with corrugated spring washer on last outer plate fitted on brake -B2- (code letters=>from Page 2)
B - Gearboxes with shim and retaining ring fitted on brake -B2- (code letters=>from Page 2)

2.3 - Self-diagnosis

The self-diagnosis is described in a separate booklet

=> Automatic gearbox 01N, Self-diagnosis; Repair group 01

3 - Code letters, gearbox allocation, ratios, equipment

3.1 - Code letters, gearbox allocation, ratios, equipment

Automatic gearbox	01N

Gearbox	Code letters		CUW 1)		CLF 1)		DFG 1)	
	Manufactured	From To	01.95 12.95		03.95 12.95		12.95 12.96	
Torque converter	Code letters		LADB		LCDB		LADC	
Valve body	Code letters		LCA		LCA		LCA	
	Manufactured	From To	01.95 12.95		01.95 12.95		12.95 12.96	
Number of plates			Inner	Outer	Inner	Outer	Inner	Outer
	Clutch -K1-		5	5	5	5	5	5
	Clutch -K2-		5	5	5	5	5	5
	Clutch -K3-		5	4	6	5	5	4
	Brake -B1-		5	5	5	5	5	5
	Brake -B2-		6	7	6	7	6	7
Assignment	Type		Audi A4 1995 ä		Audi A4 1995 ä		Audi A4 1995 ä	
	Engine		1.6 ltr. - 74 kW 1.8 ltr. - 92 kW		1.9 ltr. TDI - 66 kW		1.6 ltr. - 74 kW 1.8 ltr. - 92 kW	

1) Brake -B2- with corrugated spring washer on last outer plate

Gearbox	Code letters		CUW	CLF	DFG
Ratios	1st gear		2.714	2.714	2.714
	2nd gear		1.551	1.441	1.551
	3rd gear		1.000	1.000	1.000
	4th gear		0.679	0.742	0.679
	Reverse gear		2.111	2.884	2.111
Intermediate drive	No. of teeth	Input gear	44	44	44
		Output gear	51	51	51
	Ratio		1.159	1.159	1.159
Final drive	No. of teeth	Drive pinion	9	11	9
		Crown wheel	40	35	40
	Ratio		4.444	3.182	4.444
Drive shaft	Flange dia. mm		130	130	130

Protected by copyright. Copying for private or commercial purposes, in part or in whole, is not permitted unless authorised by AUDI AG. AUDI AG does not guarantee or accept any liability with respect to the correctness of information in this document. Copyright by AUDI AG.

Automatic gearbox			01N					
Gearbox	Code letters		DFH 1)		DFK 1)		DMU 2)	
	Manufactured	From To	10.95 12.96		11.95 12.96		10.96	
Torque converter	Code letters		LCDC		LCDC		LADC	
Valve body	Code letters		LCA		LCA		LEA	
	Manufactured	From To	10.95 12.96		11.95 12.96		10.96	
Number of plates			Inner	Outer	Inner	Outer	Inner	Outer
	Clutch -K1-		5	5	5	5	5	5
	Clutch -K2-		5	5	5	5	4	4
	Clutch -K3-		6	5	6	5	5	4
	Brake -B1-		5	5	6	6	5	5
	Brake -B2-		6	7	6	7	4	5
Assignment	Type		Audi A4 1995 ä		Audi A4 1995 ä		Audi A4 1995 ä	

Engine	1.9 ltr. TDI - 66 kW	1.9 ltr. TDI - 81 kW	1.6 ltr. - 74 kW 1.8 ltr. - 92 kW

1) Brake -B2- with corrugated spring washer on last outer plate

2) Brake -B2- with shim and retaining ring

Gearbox	Code letters		DFH	DFK	DMU
Ratios	1st. gear		2.714	2.714	2.714
	2nd gear		1.441	1.441	1.551
	3rd gear		1.000	1.000	1.000
	4th gear		0.742	0.742	0.679
	Reverse gear		2.884	2.884	2.111
Intermediate drive	No. of teeth	Input gear	44	44	44
		Output gear	51	51	51
	Ratio		1.159	1.159	1.159
Final drive	No. of teeth	Drive pinion	11	13	9
		Crown wheel	35	38	40
	Ratio		3.182	2.923	4.444
Drive shaft	Flange dia. mm		130	130	130

Automatic gearbox			01N					
Gearbox	Code letters		DMV 1)		DMX 1)		EPT2)3)	
	Manufactured	From	01.97		10.96		12.99	
		To						
Torque converter	Code letters		LCDC		LCDC		LADD	
Valve body	Code letters		LEA		LEA		LFA	
	Manufactured	From	10.96		10.96		12.99	
		To	01.97					
Number of plates			Inner	Outer	Inner	Outer	Inner	Outer
	Clutch -K1-		5	5	5	5	5	5
	Clutch -K2-		5	5	5	5	4	4
	Clutch -K3-		6	5	6	5	5	4
	Brake -B1-		5	5	6	6	5	5
	Brake -B2-		5	6	5	6	4	5
Assignment	Type		Audi A4 1995 ä		Audi A4 1995 ä		Audi A4 1995 ä	
	Engine		1.9 ltr. TDI - 66 kW		1.9 ltr. TDI - 81 kW		1.6 ltr. - 74 kW 1.8 ltr. - 92 kW	

Protected by copyright. Copying for private or commercial purposes, in part or in whole, is not permitted unless authorised by AUDI AG. AUDI AG does not guarantee or accept any liability with respect to the correctness of information in this document. Copyright by AUDI AG.

1) Brake -B2- with corrugated spring washer on last outer plate

2) Brake -B2- with shim and retaining ring

3) Torque converter with integrated needle bearing

Gearbox	Code letters	DMV	DMX	EPT
Ratios	1st gear	2.714	2.714	2.714
	2nd gear	1.441	1.441	1.551
	3rd gear	1.000	1.000	1.000
	4th gear	0.742	0.742	0.679

	Reverse gear		2.884	2.884	2.111
Intermediate drive	No. of teeth	Input gear	44	44	44
		Output gear	51	51	51
	Ratio		1.159	1.159	1.159
Final drive	No. of teeth	Drive pinion	11	13	9
		Crown wheel	35	38	40
	Ratio		3.182	2.923	4.444
Drive shaft	Flange dia. mm		130	130	130

Automatic gearbox			**01N**					
Gearbox	Code letters		**EPU2)3)**		**EPV2)3)**			
	Manufactured	From	12.99		12.99			
		To						
Torque converter	Code letters		**LADD**		**LCED**			
Valve body	Code letters		**LFA**		**LFA**			
	Manufactured	From	12.99		12.99			
		To						
Number of plates			Inner	Outer	Inner	Outer	Inner	Outer
	Clutch -K1-		5	5	5	5		
	Clutch -K2-		5	5	5	5		
	Clutch -K3-		6	5	6	5		
	Brake -B1-		5	5	6	6		
	Brake -B2-		5	6	5	6		
Assignment	Type		Audi A4 1995 ä		Audi A4 1995 ä			
	Engine		1.9 ltr. TDI - 66 kW		1.9 ltr. TDI - 74kW 1.9 ltr. TDI - 81 kW			

2) Brake -B2- with shim and retaining ring

3) Torque converter with integrated needle bearing

Protected by copyright. Copying for private or commercial purposes, in part or in whole, is not permitted unless authorised by AUDI AG. AUDI AG does not guarantee or accept any liability with respect to the correctness of information in this document. Copyright by AUDI AG.

Gearbox	Code letters		**EPU**	**EPV**	
Ratios	1st gear		2.714	2.714	
	2nd gear		1.441	1.441	
	3rd gear		1.000	1.000	
	4th gear		0.742	0.742	
	Reverse gear		2.884	2.884	
Intermediate drive	No. of teeth	Input gear	44	44	
		Output gear	51	51	
	Ratio		1.159	1.159	
Final drive	No. of teeth	Drive pinion	11	13	
		Crown wheel	35	38	
	Ratio		3.182	2.923	
Drive shaft	Flange dia. mm		130	130	

4 - Capacities

4.1 - Capacities

Planetary gearbox

Capacities	Planetary gearbox	Automatic gearbox
Initial filling	5.5 ltr.	01N
Oil change	approx. 3.5 ltr.1)	
Lubricant	ATF	

1) Filled for life: changing only after repair work was performed; up to approx. 3.5 ltr. after removing the oil pan

ATF is obtainable as a replacement part (also sold as "VW ATF").

- 0.5 ltr. - Part No. G 052 162 A1
- 1.0 ltr. - Part No. G 052 162 A2
- 20 ltr. - Part No. G 052 162 A6

Note:

Only the ATF available as a replacement part can be used in the planetary gearbox of automatic gearbox 01N.

Checking ATF level and changing ATF => Page 62 .

Protected by copyright. Copying for private or commercial purposes, in part or in whole, is not permitted unless authorised by AUDI AG. AUDI AG does not guarantee or accept any liability with respect to the correctness of information in this document. Copyright by AUDI AG.

Final drive

Capacities	Final drive	Automatic gearbox
Initial filling	1.0 ltr.	01N
Oil change	Filled for life No change	
Lubricant	Gear oil SAE75 W90 (synthetic oil)	

Gear oil SAE 75 W 90 (synthetic oil) is available as a replacement part in the following container sizes:

- 0.5 ltr. - Part No. G 052 145 A1
- 1.0 ltr. - Part No. G 052 145 S2

Checking oil level in final drive => Page 195 .

5 - Repair with an exchange component

5.1 - Repair with an exchange component

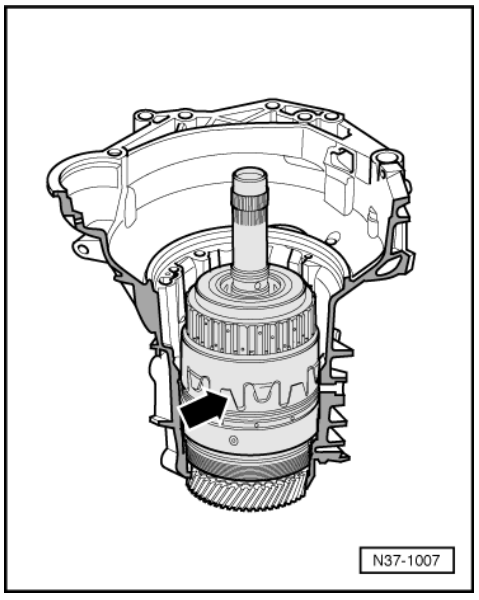

-> The exchange component -arrow- is an economical replacement part set. It contains all the clutches and brakes, the ATF pump, the planetary gears and the valve body of the respective gearbox.

The exchange component is allocated to the gearbox according to the gearbox code=>from Page 2 .

Items included with the exchange component=>from Page 8 .

Parts not included:

- O-rings for ATF cooler, ATF filler pipe, multi-function switch -F125, sender -G68 and -G38
- Oil pan gasket, gasket for intermediate drive cover
- Conductor strip of valve body

Removing

- Removing exchange component=>from Page 75 (Dismantling planetary gearbox).

Installing

- Installing exchange component=>from Page 86 (Assembling planetary gearbox).

Note:

Use all new parts of the exchange component when installing, do not install used parts.

5.2 - Items included with exchange component

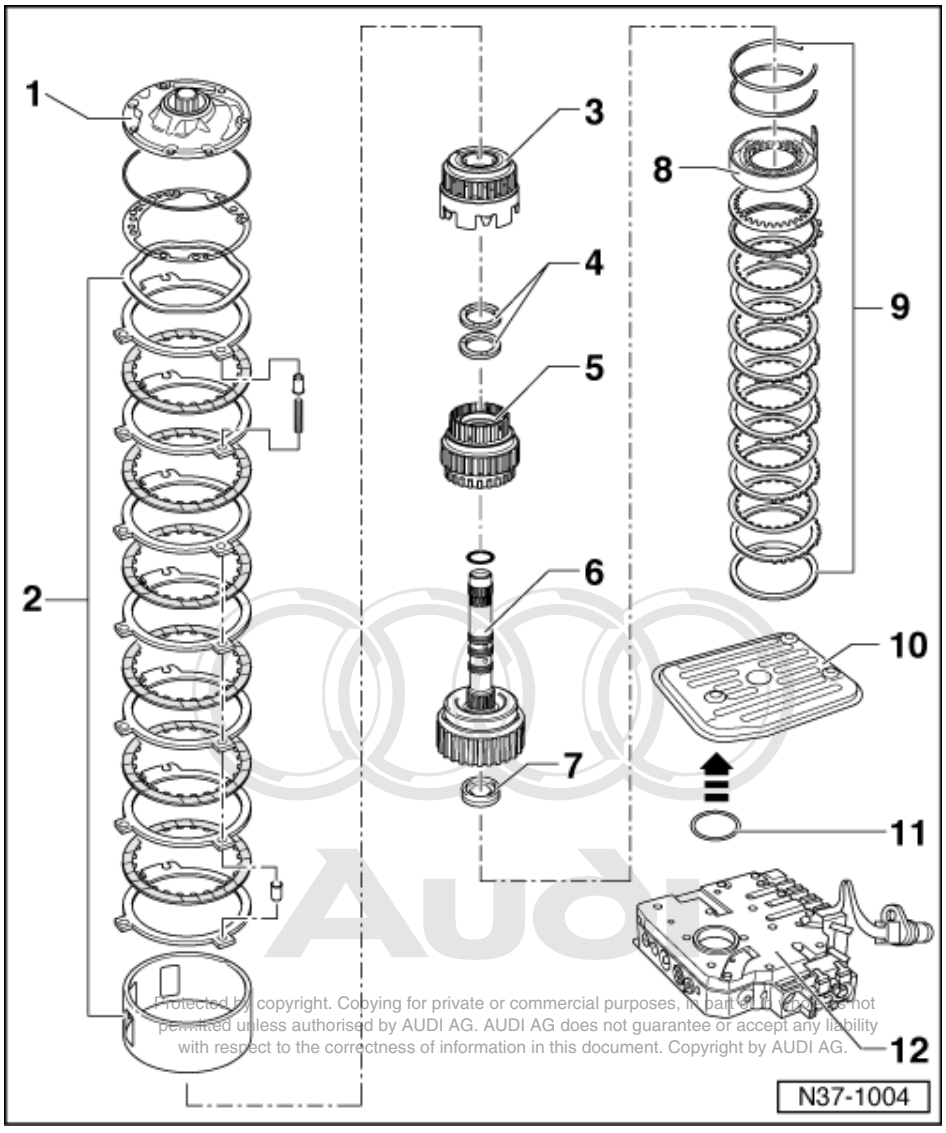

Protected by copyright. Copying for private or commercial purposes, in part or in whole, is not permitted unless authorised by AUDI AG. AUDI AG does not guarantee or accept any liability with respect to the correctness of information in this document. Copyright by AUDI AG.

1 ATF pump with -B2- piston
2 -B2- components
- =>Page 10

3 Reverse gear clutch -K2-
4 Shims for clutch play
- Shims of various colours and thicknesses

5 1st to 3rd gear clutch -K1-
- Clutches -K1- and -K3- may be pressed together

6 3rd and 4th gear clutch -K3- with turbine shaft
- Clutches -K1- and -K3- may be pressed together

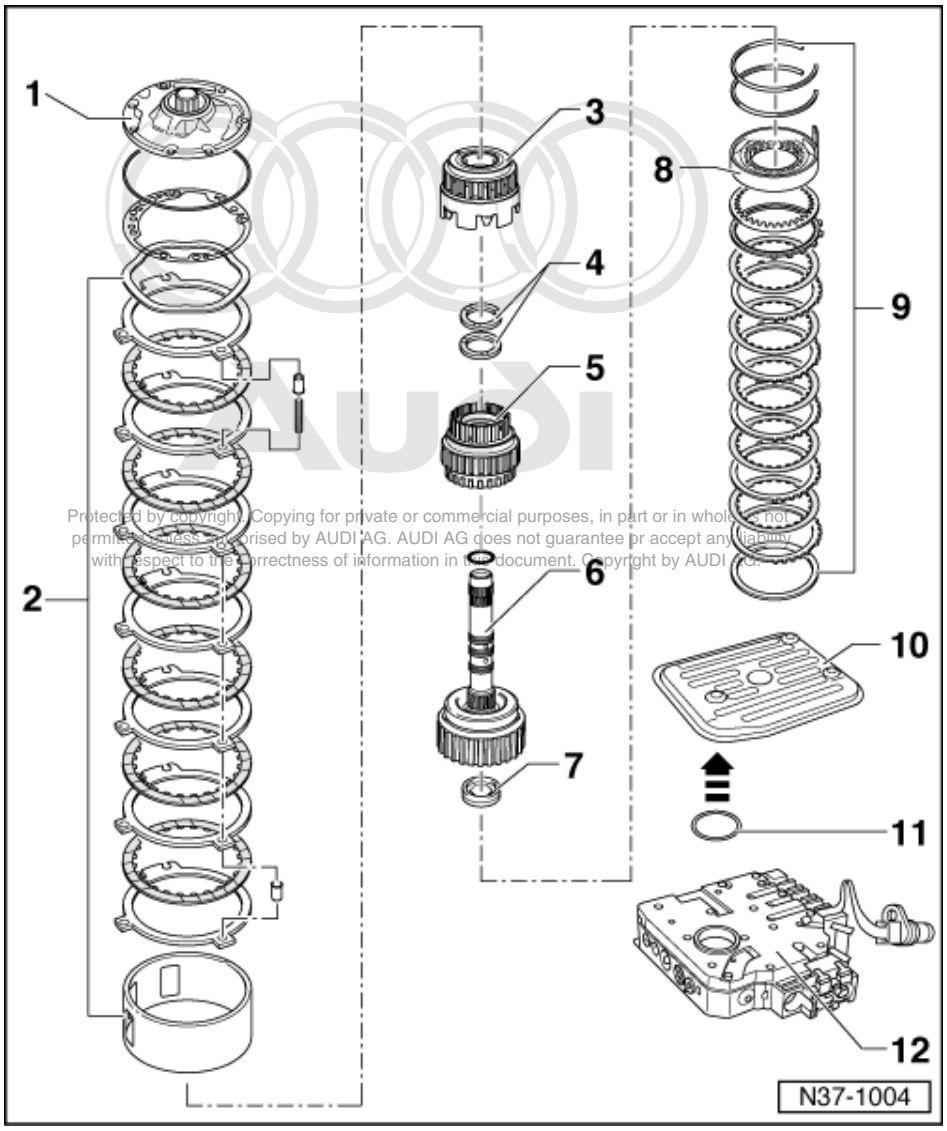

Protected by copyright. Copying for private or commercial purposes, in part or in whole, is not permitted unless authorised by AUDI AG. AUDI AG does not guarantee or accept any liability with respect to the correctness of information in this document. Copyright by AUDI AG.

7 Axial needle bearing with washer
8 Free wheel with -B1- piston
9 -B1- components
- =>Page 9

10 ATF screen
11 Gasket
- Press onto suction collar on ATF oil screen -arrow- by hand

12 Valve body

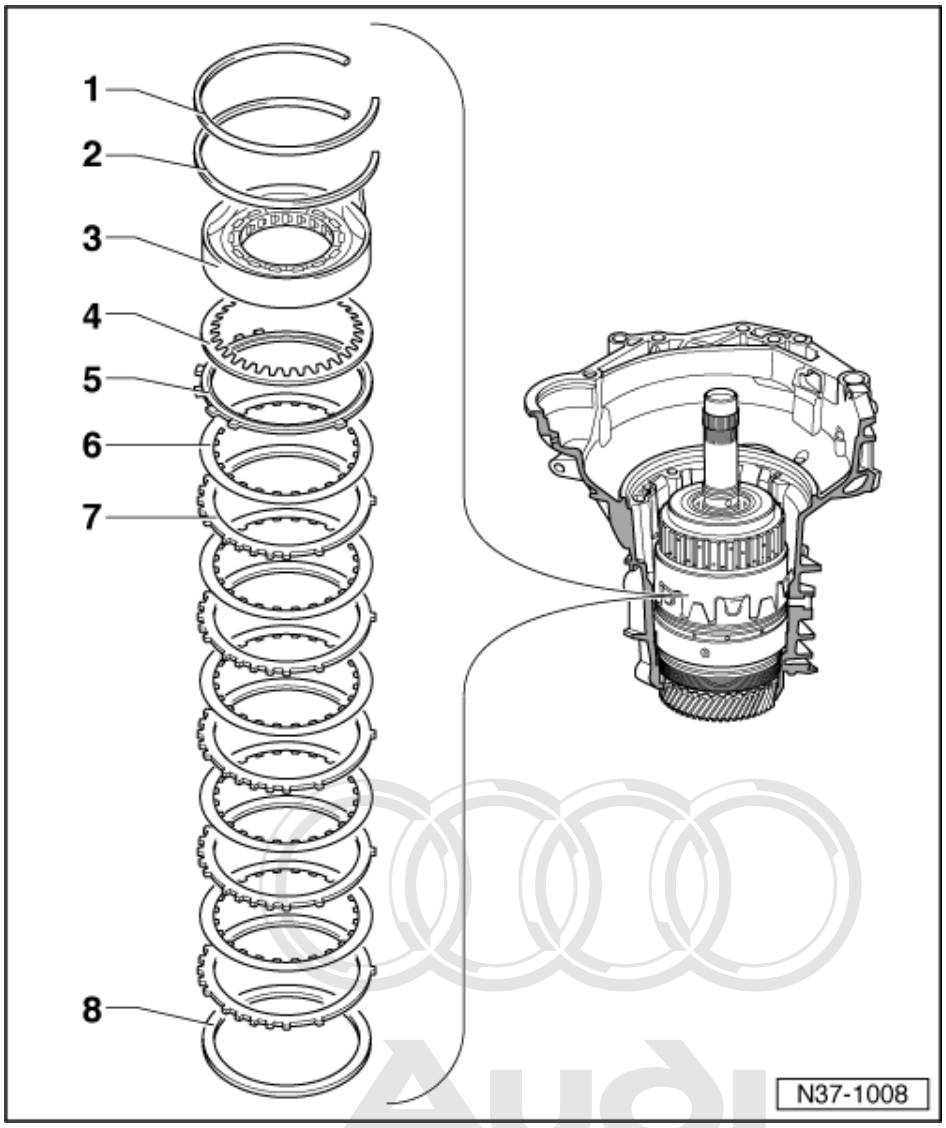

-B1- components

Protected by copyright. Copying for private or commercial purposes, in part or in whole, is not permitted unless authorised by AUDI AG. AUDI AG does not guarantee or accept any liability with respect to the correctness of information in this document. Copyright by AUDI AG.

1 Circlip
- For supporting tube -B2-

2 Circlip
- For freewheel

3 Free wheel with -B1- piston
4 Dished spring
5 Pressure plate -B1-
6 Inner plate -B1-
7 Outer plate -B1-
8 Shim

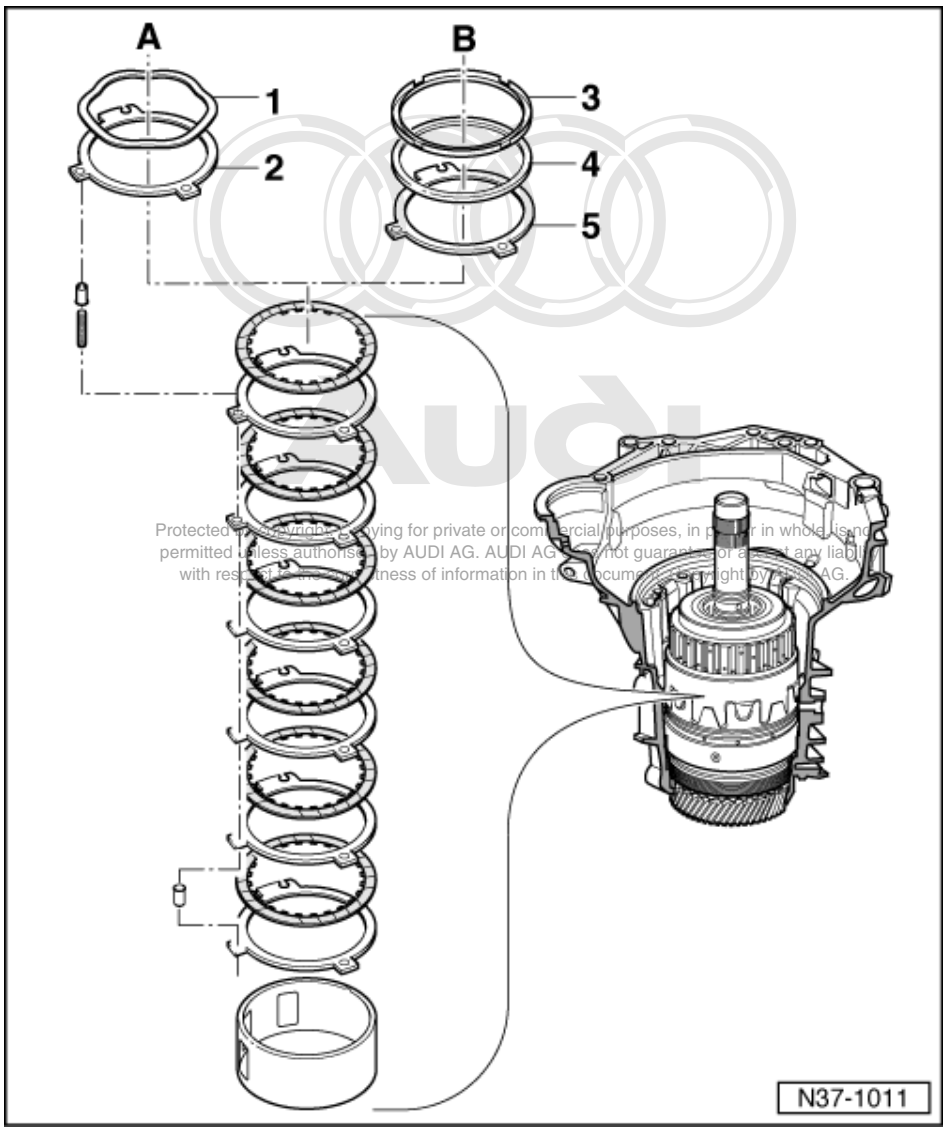

Protected by copyright. Copying for private or commercial purposes, in part or in whole, is not permitted unless authorised by AUDI AG. AUDI AG does not guarantee or accept any liability with respect to the correctness of information in this document. Copyright by AUDI AG.

-B2- components

There are two versions of this brake.

A - Brake -B2- withcorrugated spring washer

- Code letters=>from Page 2

1 Corrugated spring washer
2 Outer plate -B2-

or

B - Brake -B2- with retaining ring

- Code letters=>from Page 2

3 Retaining ring
4 Shim
5 Outer plate -B2-

- 3 mm thick

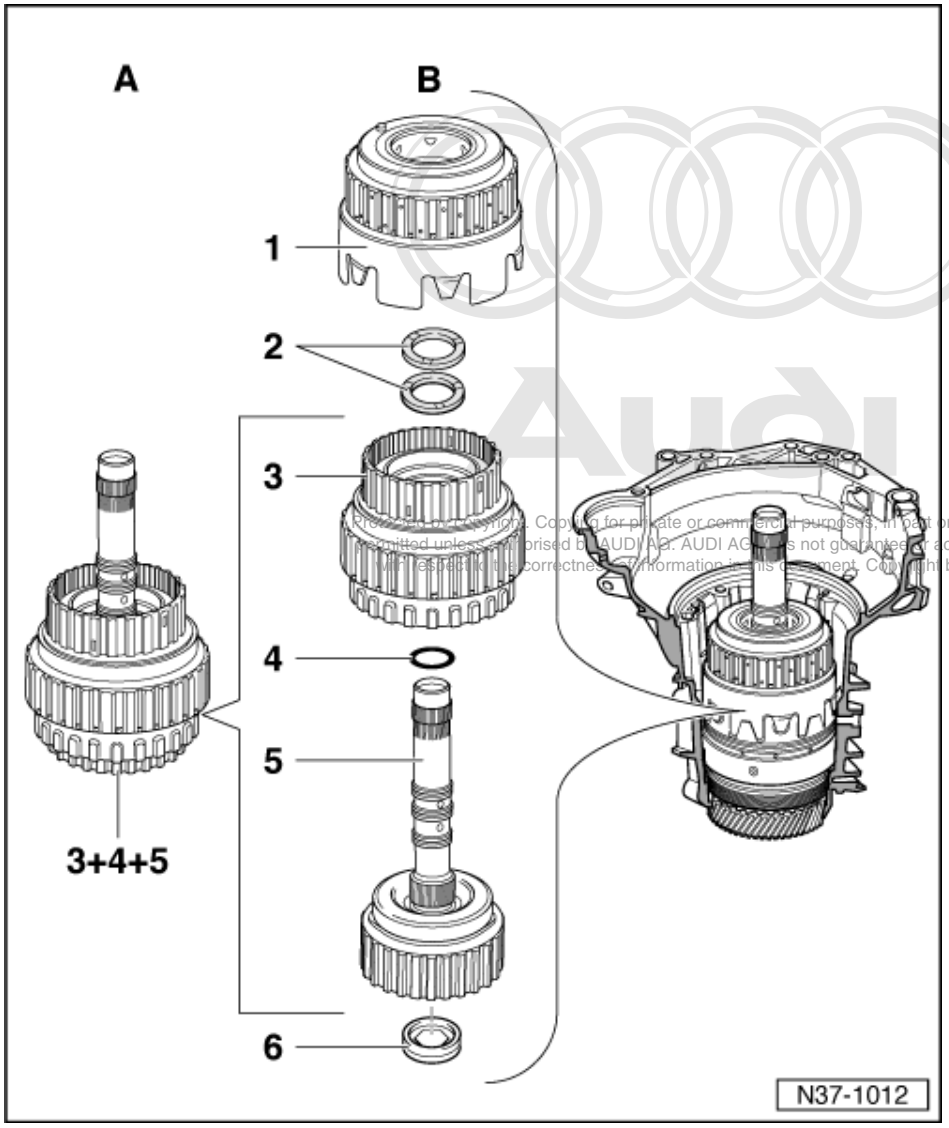

Protected by copyright. Copying for private or commercial purposes, in part or in whole, is not permitted unless authorised by AUDI AG. AUDI AG does not guarantee or accept any liability with respect to the correctness of information in this document. Copyright by AUDI AG.

Clutches

Note:

There are two versions of clutches -K1- and -K3-.

A - Clutches are pressed together -Item 3+4+5-
- Clutches do not have to be pressed apart

B - Clutches can be fitted together loosely

1 Reverse gear clutch -K2-

2 Shims for clutch play
- Up to 3 shims may be installed

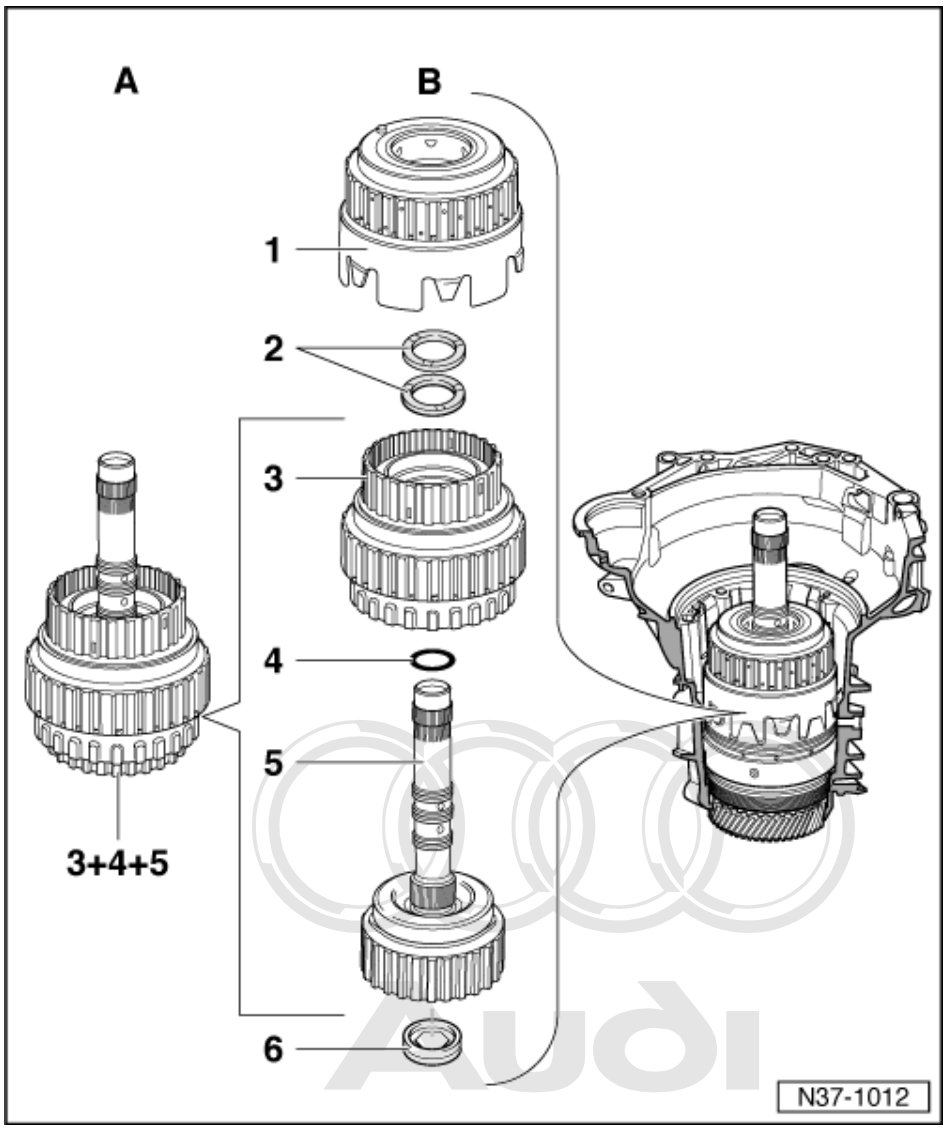

Protected by copyright. Copying for private or commercial purposes, in part or in whole, is not permitted unless authorised by AUDI AG. AUDI AG does not guarantee or accept any liability with respect to the correctness of information in this document. Copyright by AUDI AG.

3 1st to 3rd gear clutch -K1-
4 O-ring
5 3rd and 4th gear clutch -K3- with turbine shaft
6 Axial needle bearing with washer

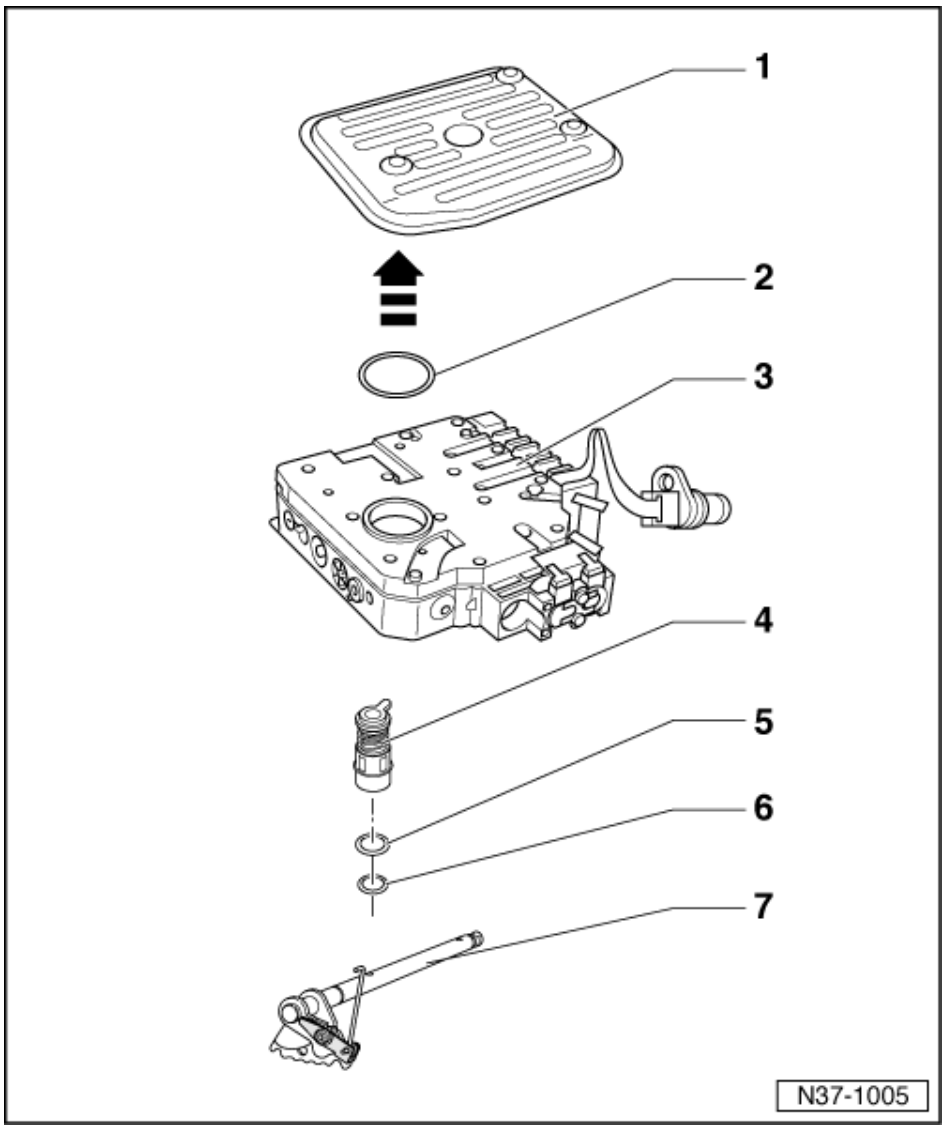

Valve body with ATF screen

1 ATF strainer
2 Gasket
- Press onto suction collar on ATF screen -arrow- by hand

3 Valve body
- Does not include conductor strip; this must be ordered separately if needed.

4 Freewheel sealing plug
- Must be ordered separately if needed.

5 O-ring
6 O-ring
7 Operating rod for manual selector valve
- With steel spring and bolt

Protected by copyright. Copying for private or commercial purposes, in part or in whole, is not permitted unless authorised by AUDI AG. AUDI AG does not guarantee or accept any liability with respect to the correctness of information in this document. Copyright by AUDI AG.

6 - General repair instructions

6.1 - General repair instructions

The maximum possible care and cleanliness and proper tools are essential to ensure satisfactory and successful gearbox repairs. The usual basic safety precautions also, naturally apply when carrying out vehicle repairs.

A number of generally applicable instructions for individual repair operations, which are otherwise mentioned at various points in the Workshop Manual, are summarized here. They apply to this Workshop Manual.

Special tools

For a complete list of special tools used in this Workshop Manual

=> Booklet; Special tools, Workshop equipment

Gearbox

- Observe rules for cleanliness when working on the automatic gearbox => Page 71 .
- Do not run the engine or tow the vehicle if the oil sump is removed or if the ATF has been drained from the gearbox.
- If the gearbox is removed from the vehicle, secure the torque converter to prevent it dropping out.

- Thoroughly clean all connections and the surrounding area before disconnecting.
- Before installing the gearbox, check the installed depth of the torque converter => Page 23 .
- When installing gearbox, ensure that the dowel sleeves are fitted correctly.
- Place removed parts on a clean surface and cover over. Use sheeting and paper. Do not use fluffing cloths!
- If repairs cannot be completed immediately and components are left open, cover the components carefully or fit plugs as required.
- Install only clean parts: do not remove replacement parts from their wrapping until you are ready to install them.
- When fitting a new automatic gearbox, check the following fluid levels and top up as required: ATF in planetary gearbox (=> Page 6 .

O-rings, seals, gaskets

- Always renew O-rings, seals and gaskets.
- After removing gaskets and seals, always inspect the contact surface on the housing or shaft for burrs resulting from removal or for other signs of damage.
- Thoroughly clean housing joint surfaces before assembling.
- The open side of the oil seals faces toward the side with fluid filling.
- Before installing, lightly lubricate outer circumference of seal and sealing lips with ATF or gear oil, depending on fitting location.
- Lightly lubricate O-rings with ATF before inserting to prevent them being trapped and damaged when assembling.
- Use only ATF in the parts of the gearbox where ATF is the specified lubricant; other lubricants will cause malfunctions in the gearbox hydraulics.
- When replacing oil seals, always vary the point at which the sealing lips make contact (use insertion depth tolerances).

- After installing, check fluid levels and top up as required: ATF in planetary gearbox (=> Page 6 .

Nuts, bolts

- Slacken the bolts in reverse sequence to the specified tightening sequence.
- Nuts and bolts which secure covers and housings should be slackened and tightened crosswise in stages if no tightening sequence is specified.
- Parts which are particularly sensitive to distortion (e.g. valve body) must be kept straight when removing and installing; loosen or tighten diagonally in stages.
- The tightening torques stated apply to non-oiled nuts and bolts.
- Renew self-locking bolts and nuts.
- The threads of bolts which are secured by a locking fluid should be cleaned with a wire brush. Then apply AMV 185 101 A1 when inserting.

Protected by copyright. Copying for private or commercial purposes, in part or in whole, is not permitted unless authorised by AUDI AG. AUDI AG does not guarantee or accept any liability with respect to the correctness of information in this document. Copyright by AUDI AG.

- Threaded holes into which self-locking bolts or bolts coated with locking fluid are screwed, must be cleaned (e.g. tap). Otherwise there is a danger of bolts shearing when subsequently being removed.

Locking elements

- Do not overstretch circlips.
- Always renew circlips which have been damaged or over-tensioned.
- Circlips must be properly seated in the base of the groove.

Bearings

- Install needle bearings with the lettering on the bearing (the side with thicker metal) facing towards the drift or other tool used for installing.
- Depending on fitting location, apply gear oil or ATF to bearings before installing.
- Do not interchange the outer or inner races of bearings of the same size.
- Always replace the taper roller bearings on one shaft together and use new bearings from a single manufacturer.
- Heat inner races of taper roller bearings to approx. 100 °C before installing. Press in onto stop when installing so there is no axial clearance.

Protected by copyright. Copying for private or commercial purposes, in part or in whole, is not permitted unless authorised by AUDI AG. AUDI AG does not guarantee or accept any liability with respect to the correctness of information in this document. Copyright by AUDI AG.

Shims

- Use a micrometer to measure the shims at several points. Different tolerances make it possible to obtain the exact shim thickness required.
- Check for burrs and damage.
- Only install perfect, undamaged shims.

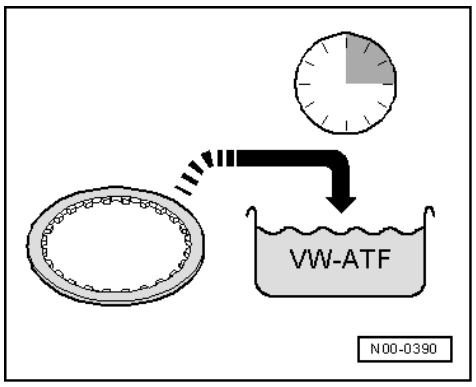

Inner plates

- -> Soak new inner plates in ATF for 15 minutes before installing.

Valve body

- Renew the valve body if any of the selector elements are scorched.

Clutches

- Clutches K1, K2 and K3 are to be disassembled only for cleaning; if individual parts are defective, renew entire clutch. Clutches are allocated according to gearbox code.

Self-diagnosis

- Before performing repairs to the automatic gearbox, determine the cause of the fault as precisely as possible using the Self-diagnosis.

=> Automatic gearbox 01N, Self-diagnosis; Repair group 01; Performing self-diagnosis. Performing self-diagnosis.

32 - Torque converter

1 - Torque converter

1.1 - Torque converter

Important
Before installing the gearbox, check the installed depth of the torque converter => Page 23 .

Protected by copyright. Copying for private or commercial purposes, in part or in whole, is not permitted unless authorised by AUDI AG. AUDI AG does not guarantee or accept any liability with respect to the correctness of information in this document. Copyright by AUDI AG.

Notes:

- Observe rules for cleanliness when working on the automatic gearbox => Page 71 .
- General repair instructions => Page 14 .
- Lubricate seals lightly with ATF. Other lubricants cause malfunctions in the gearbox hydraulics.
- There are two different versions of torque converters. Allocation=>Page 17 .
- If a new type of torque converter with integrated needle bearing is fitted in a gearbox with sleeve bearing in the turbine shaft, the sleeve bearing must be removed=>Page 18 .

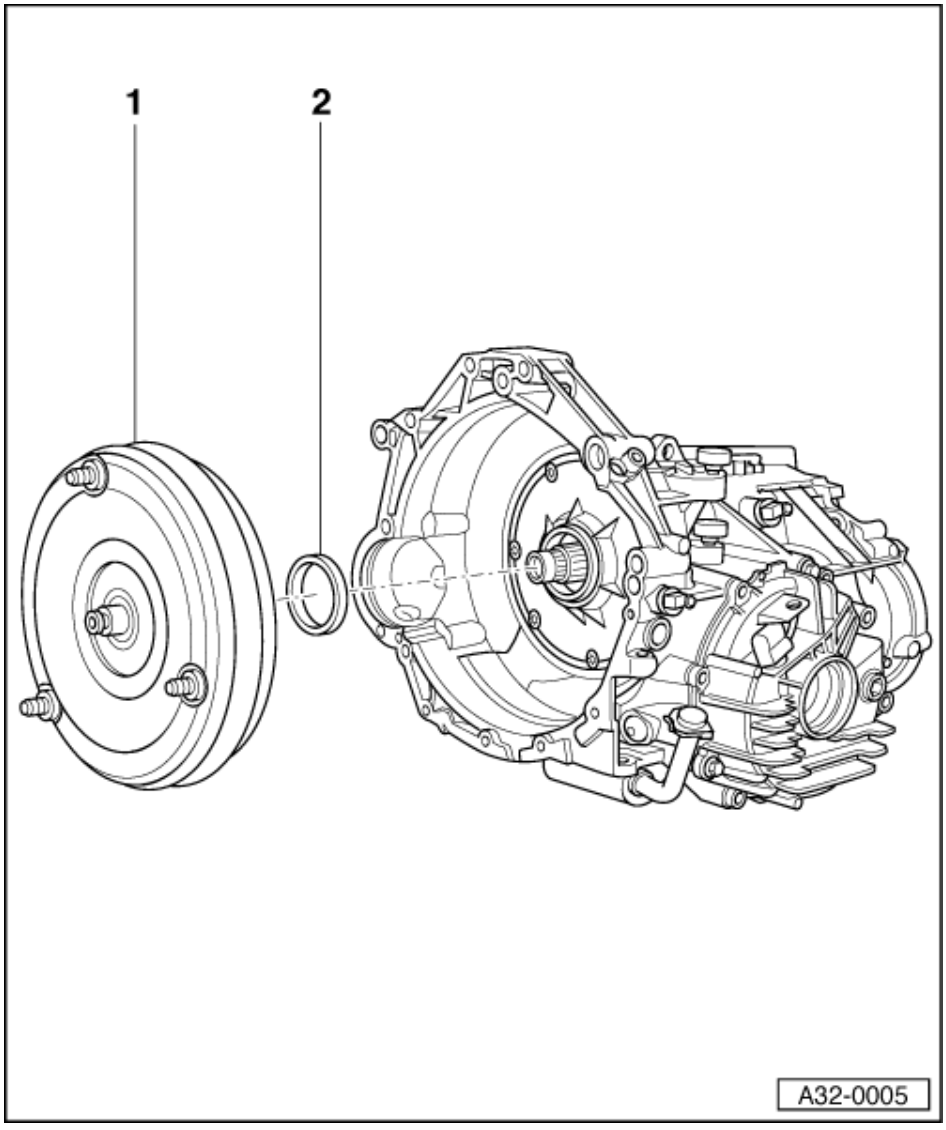

1 Torque converter
- Secure in place when gearbox is removed
- Code letters
  => from Page 2
- Allocation=>Page 17
- Checking =>Page 22
- Installing => Page 22
- Installed depth => Page 23

2 Oil seal
- Renewing => Page 20

1.2 - Torque converter allocation

There are two types of torque converter, which are allocated according to gearbox code letters=>Page 2 .

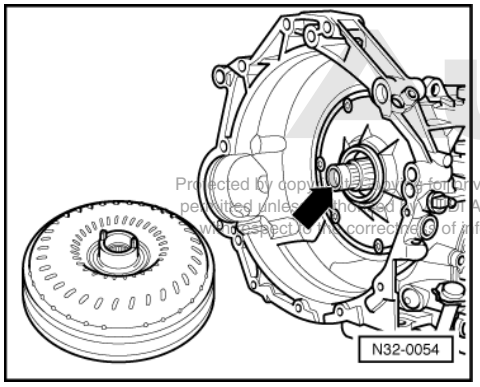

Protected by copyright. Copying for private or commercial purposes, in part or in whole, is not permitted unless authorised by AUDI AG. AUDI AG does not guarantee or accept any liability with respect to the correctness of information in this document. Copyright by AUDI AG.

-> Previously fitted torque converter:

- Withsleeve bearing -arrow- in the turbine shaftof the gearbox.

New type of torque converter:

- With integrated needle bearing. The new torque converter may only be fitted in the gearbox without a sleeve bearing -arrow- in the turbine shaft.

Note:

If a new torque converter with integrated needle bearing is fitted in a gearbox with sleeve bearing in the turbine shaft, the sleeve bearing must be removed=>Page 18 .

1.3 - Identification of torque converter

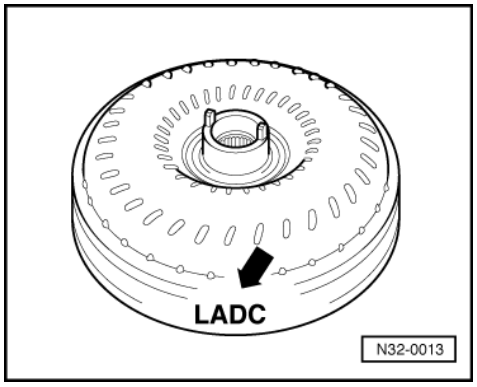

Identification is provided by the code letters.

-> Previously fitted torque converter:

A torque converter of the previous type may only be installed in the gearbox with a sleeve bearing in the turbine shaft.

- It can be identified by the fourth letter, which is a "B" or "C".

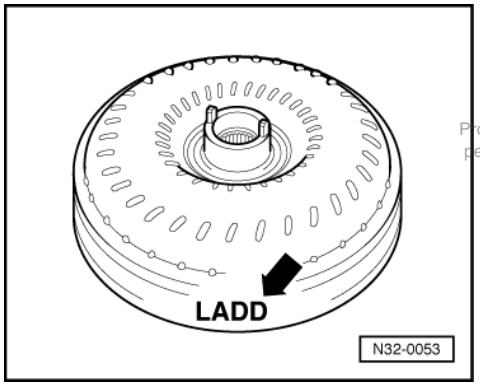

Protected by copyright. Copying for private or commercial purposes, in part or in whole, is not permitted unless authorised by AUDI AG. AUDI AG does not guarantee or accept any liability with respect to the correctness of information in this document. Copyright by AUDI AG.

-> New type of torque converter:

The torque converter of the new type may only be fitted in a gearbox without a sleeve bearing in the turbine shaft.

- It can be identified by the fourth letter, which is a "D".

Note:

If a new type of torque converter with integrated needle bearing is fitted in a gearbox with sleeve bearing in the turbine shaft, the sleeve bearing must be removed=>Page 18 .

1.4 - Removing sleeve bearing from turbine shaft

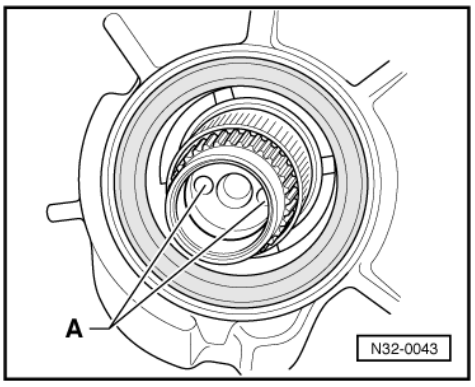

Note:

If a new torque converter with integrated needle bearing is fitted in a gearbox with sleeve bearing in the turbine shaft, the sleeve bearing must be removed.

Place gearbox in its installation position on gearbox oil pan.

- Remove torque converter.

- -> Position holes -A- of turbine shaft in horizontal position.

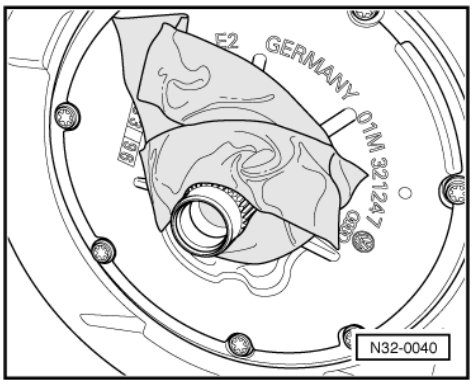

- -> Protect gearbox by carefully taping around turbine shaft and over holes.

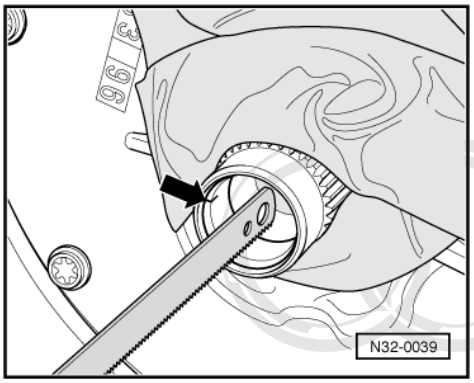

- -> Saw through the sleeve bearing using a saw blade. When doing this, do not saw at the thrust point of the sleeve bearing (arrow).
- Make sure that no filings enter the gearbox.

Audi
Copyright. Copying for private or commercial purposes, in part or in whole, is not authorised by AUDI AG. AUDI AG does not guarantee or accept any liability for the correctness of information in this document. Copyright by AUDI AG.

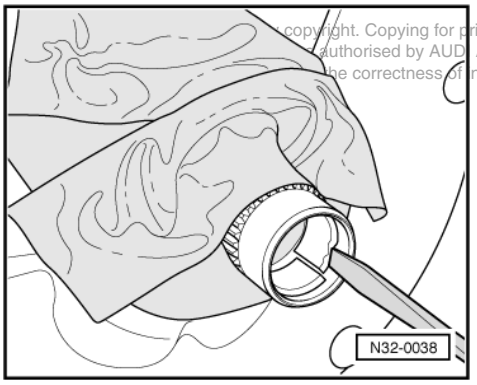

- -> Without damaging the turbine shaft, carefully lever off the split sleeve bearing using a screwdriver.
- Remove filings and sticky tape.
- Renew the oil seal for the torque converter=>Page 20 .

1.5 - Renewing the torque converter oil seal

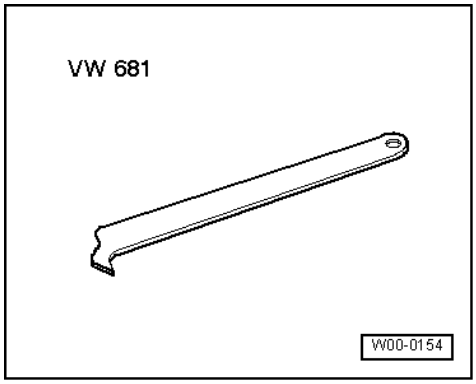

Special tools and workshop equipment required

- Extractor lever VW 681

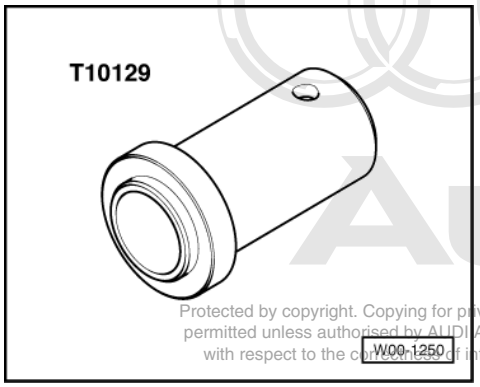

Protected by copyright. Copying for private or commercial purposes, in part or in whole, is not permitted unless authorised by AUDI AG. AUDI AG does not guarantee or accept any liability with respect to the correctness of information in this document. Copyright by AUDI AG.

- Drift sleeve T10129

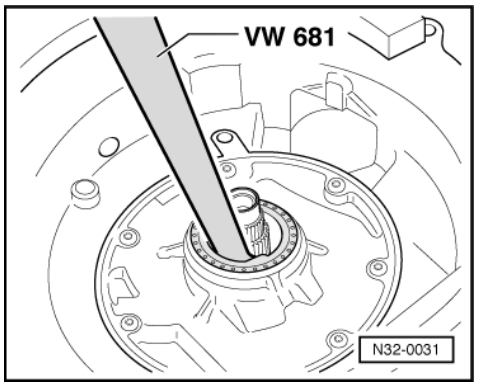

Removing

- Remove gearbox => page 47 .
- Remove torque converter.
- Mount gearbox on assembly stand => page 60 or place on a flat surface.
- -> Remove torque converter oil seal with oil seal extractor lever VW 681.

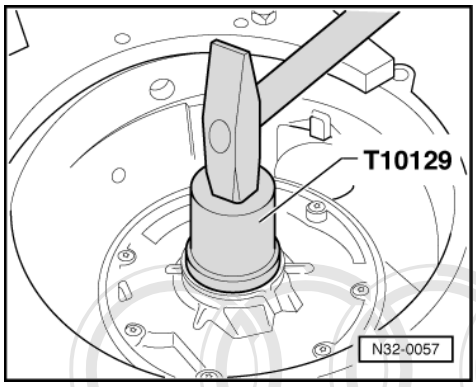

Installing

- Lubricate the outer circumference and the sealing lips of the new oil seal with ATF.
  - Installation position: open side of oil seal towards gearbox
- -> Drive in torque converter oil seal with drift sleeve T10129 until drift sleeve reaches stop.

1.6 - Draining torque converter

Protected by copyright. Copying for private or commercial purposes, in part or in whole, is not permitted unless authorised by AUDI AG. AUDI AG does not guarantee or accept any liability with respect to the correctness of information in this document. Copyright by AUDI AG.

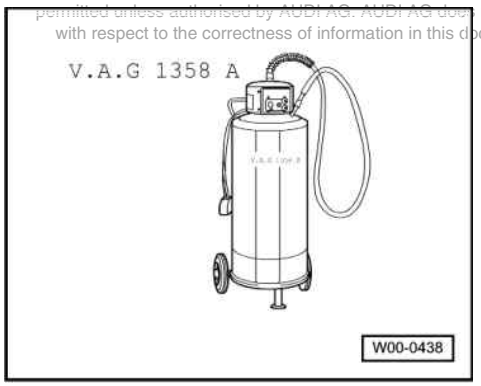

Special tools and workshop equipment required

- V.A.G 1358 A or V.A.G 1782

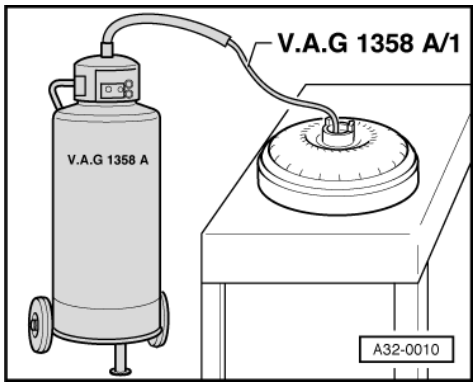

Work sequence

If the torque converter has become fouled by abrasion or when performing a major overhaul of the gearbox, drain the torque converter as follows:

- -> Extract ATF from torque converter using V.A.G 1358 A or V.A.G 1782.

1.7 - Checking torque converter

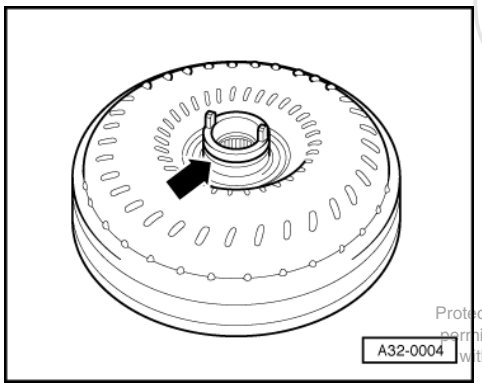

Protected by copyright. Copying for private or commercial purposes, in part or in whole, is not permitted unless authorised by AUDI AG. AUDI AG does not guarantee or accept any liability with respect to the correctness of information in this document. Copyright by AUDI AG.

- -> Check torque converter hub -arrow- for scoring.

Note:

The torque converter must be replaced as a complete unit if it is damaged or defective.

1.8 - Installing torque converter

Special tools and workshop equipment required

- Depth gauge

Work sequence

- Press torque converter hub through oil seal as far as first stop.
- Lightly press torque converter inwards and turn until slots on torque converter hub engage in drive lugs on ATF pump gear and torque converter slides in a noticeable distance.

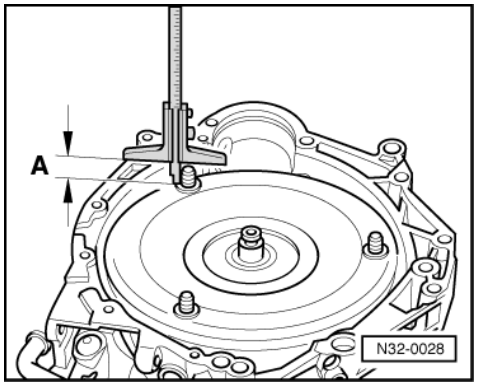

Installed depth

-> If the torque converter has been installed correctly, distance -A- between the joint surface on the torque converter bellhousing and the bottom contact surface on the torque converter studs should be approx 23 mm.

If the torque converter has not been installed properly, the distance will be about 13 mm.

Important!
If the torque converter is incorrectly inserted, the drive lugs on the torque converter or the ATF pump will be severely damaged when the gearbox is attached to the engine.

Protected by copyright. Copying for private or commercial purposes, in part or in whole, is not permitted unless authorised by AUDI AG. AUDI AG does not guarantee or accept any liability with respect to the correctness of information in this document. Copyright by AUDI AG.

37 - Controls, Housing

1 - Servicing shift mechanism

1.1 - Servicing shift mechanism

Warning!
Before working on engine when it is running, move selector lever into position "P" and apply handbrake.

1.2 - Dismantling and assembling shift mechanism

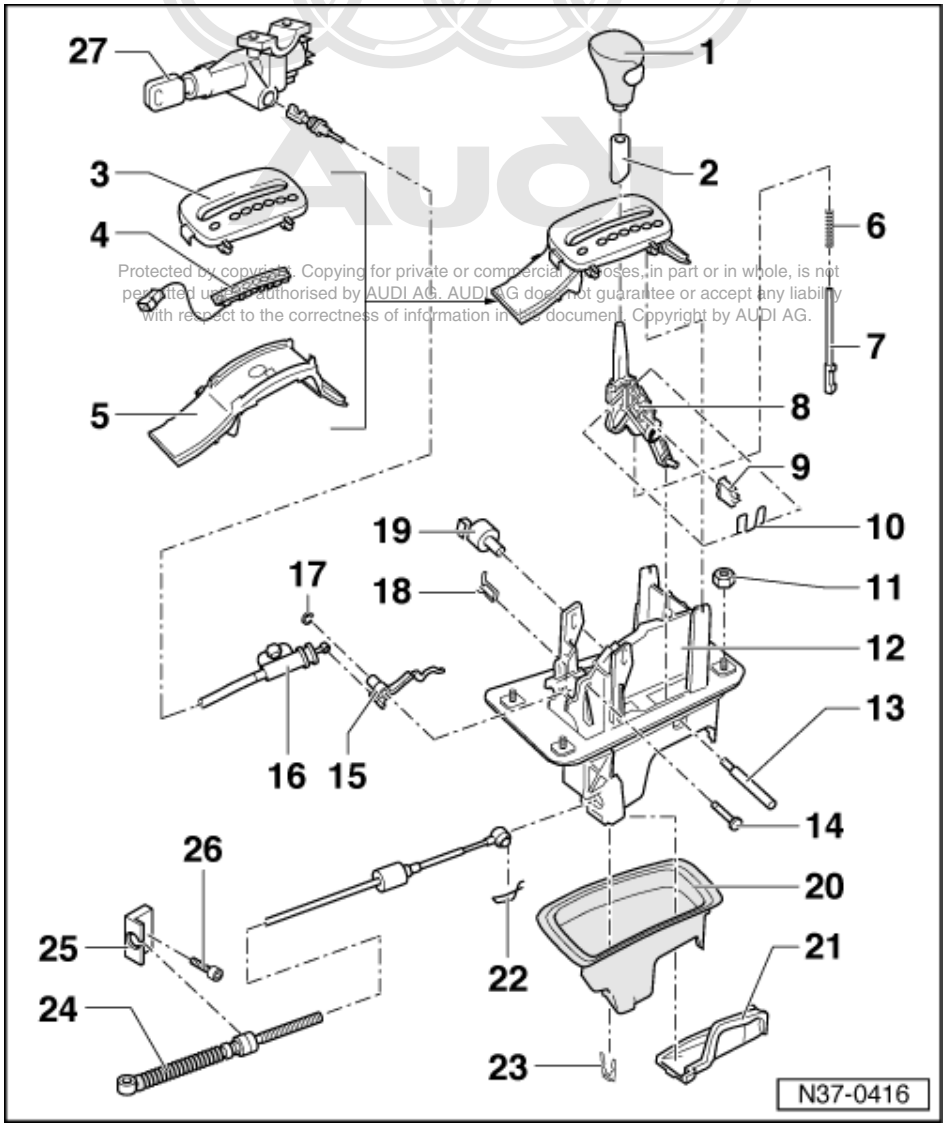

Protected by copyright. Copying for private or commercial purposes, in part or in whole, is not permitted unless authorised by AUDI AG. AUDI AG does not guarantee or accept any liability with respect to the correctness of information in this document. Copyright by AUDI AG.

Note:

Lubricate bearings and moving surfaces with polycarbamide grease, part No.G 052 142 A2.

1 Selector lever handle

- Removing and installing
  =>Page 30

2 Sleeve

- Installation position:
  Angled section faces to rear

3 Cover

- With selector indicator
- Lift up to remove
- To remove, disengage retainer catches from mounting bracket - 12 - using a screwdriver

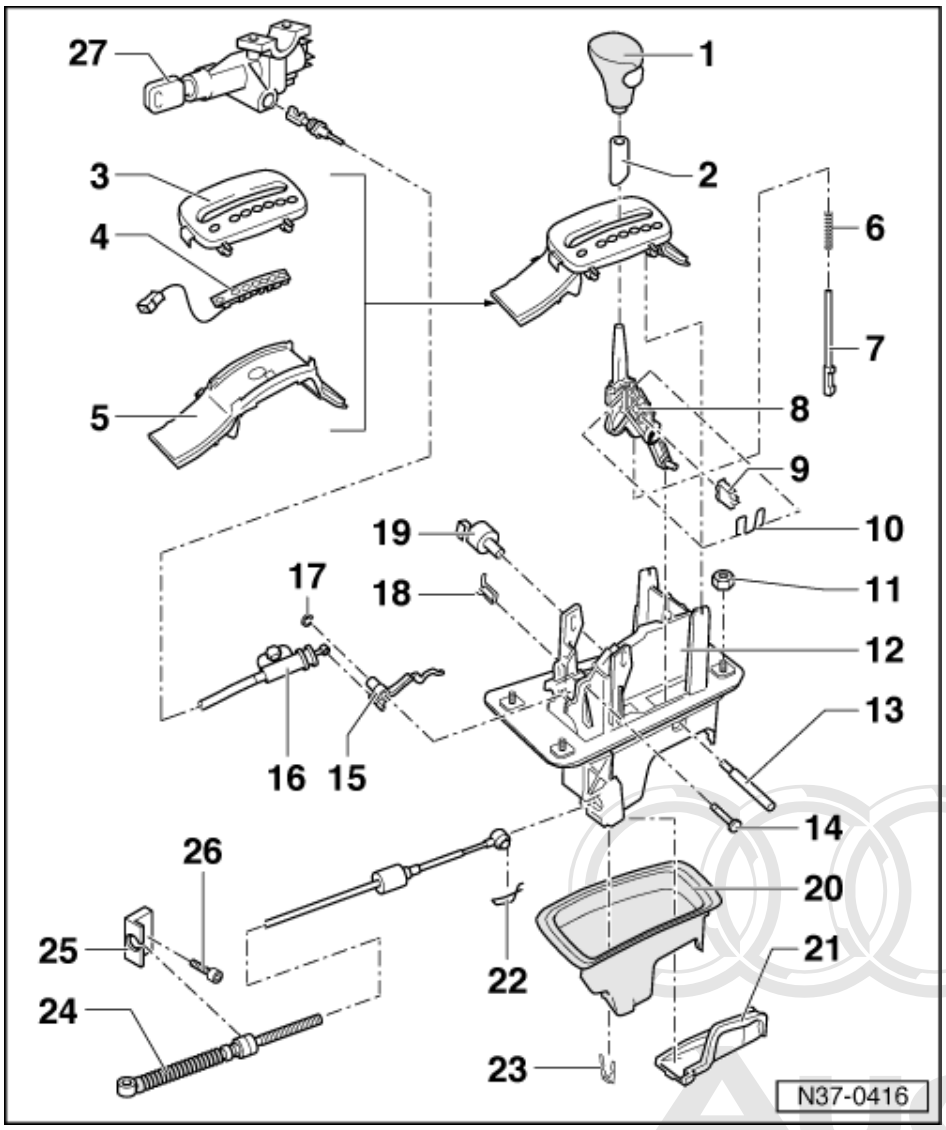

4 Light conductor

- With wiring and light emitting diodes (LED) for selector lever illumination
- Wiring routing
  => Page 31

Protected by copyright. Copying for private or commercial purposes, in part or in whole, is not permitted unless authorised by AUDI AG. AUDI AG does not guarantee or accept any liability with respect to the correctness of information in this document. Copyright by AUDI AG.

5 Guide

- With louvre and mirror for individual gear indication
- To remove, release four retaining lugs on inner side

6 Spring

- For pull rod

7 Pull rod

- Insert together with spring into selector lever

8 Selector lever

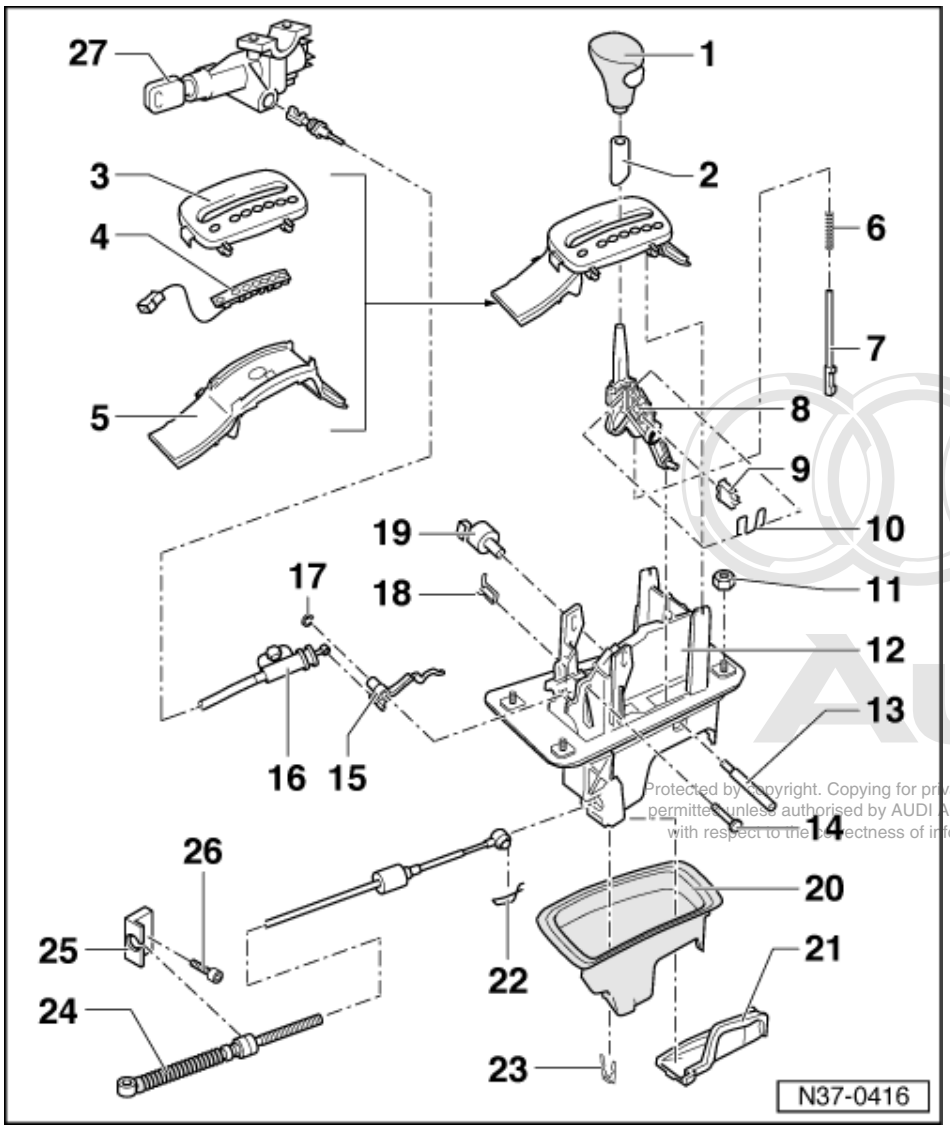

Protected by copyright. Copying for private or commercial purposes, in part or in whole, is not permitted unless authorised by AUDI AG. AUDI AG does not guarantee or accept any liability with respect to the correctness of information in this document. Copyright by AUDI AG.

9 Detent plate

- Insert together with spring clip -item 10 - into selector lever

10 Spring clip

- Insert both ends into selector lever

11 Nut - 10 Nm

12 Mounting bracket

- Removing and installing =>from Page 31

13 Fulcrum pin

- Lever out with a screwdriver

14 Pin

- For lever -item 15 - on mounting bracket

15 Lever

- For locking cable

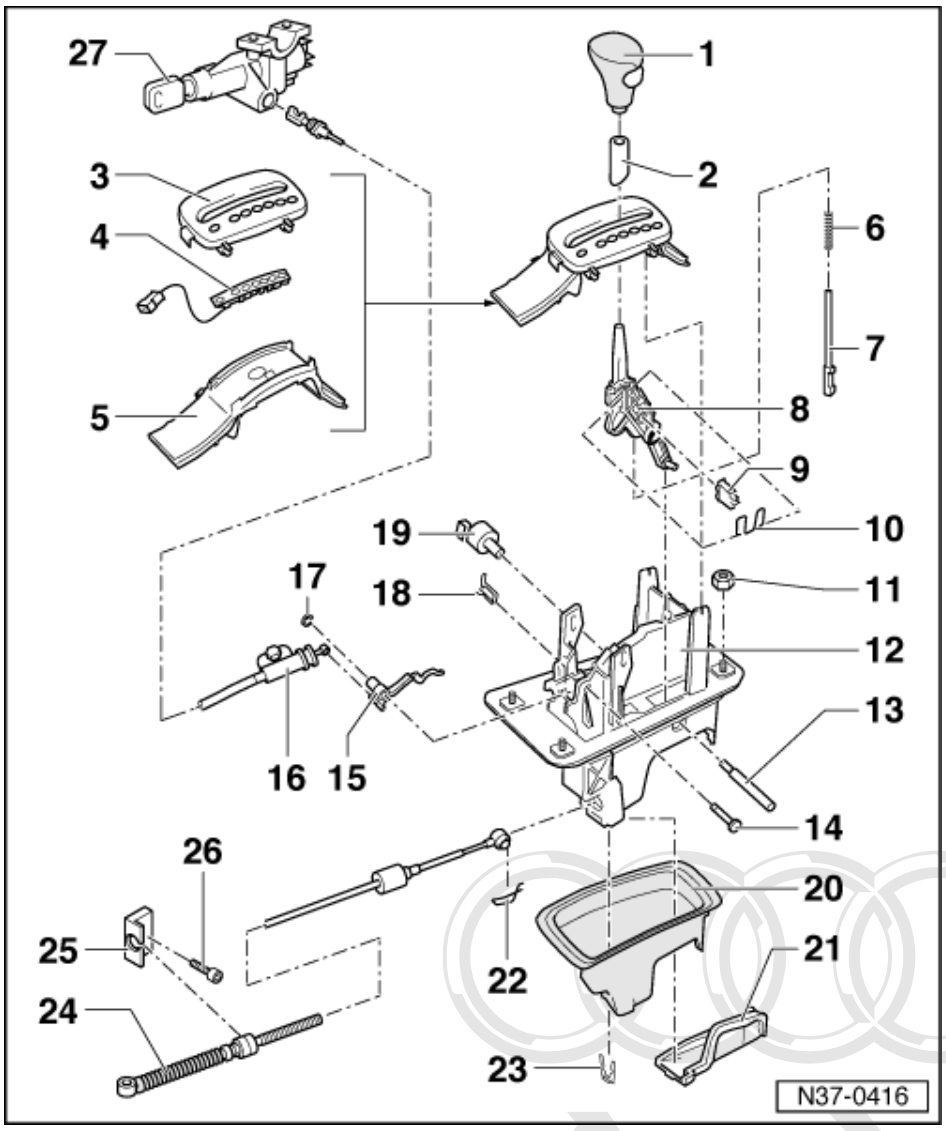

16 Locking cable

- For ignition key removal lock
- Must not be kinked
- Removing and installing => Page 37
- Adjusting => Page 41

Protected by copyright. Copying for private or commercial purposes, in part or in whole, is not permitted unless authorised by AUDI AG. AUDI AG does not guarantee or accept any liability with respect to the correctness of information in this document. Copyright by AUDI AG.

17 Circlip

18 Securing spring

- For locking cable
- Removing and installing =>Fig. 30

19 Selector lever lock solenoid -N110-

- Removing and installing => Page 31
- Can be checked in electrical test and in measured value block

=> Automatic gearbox 01N, Self-diagnosis; Repair group 01; Performing self-diagnosis; Read measured value block Performing self-diagnosis Read measured value block

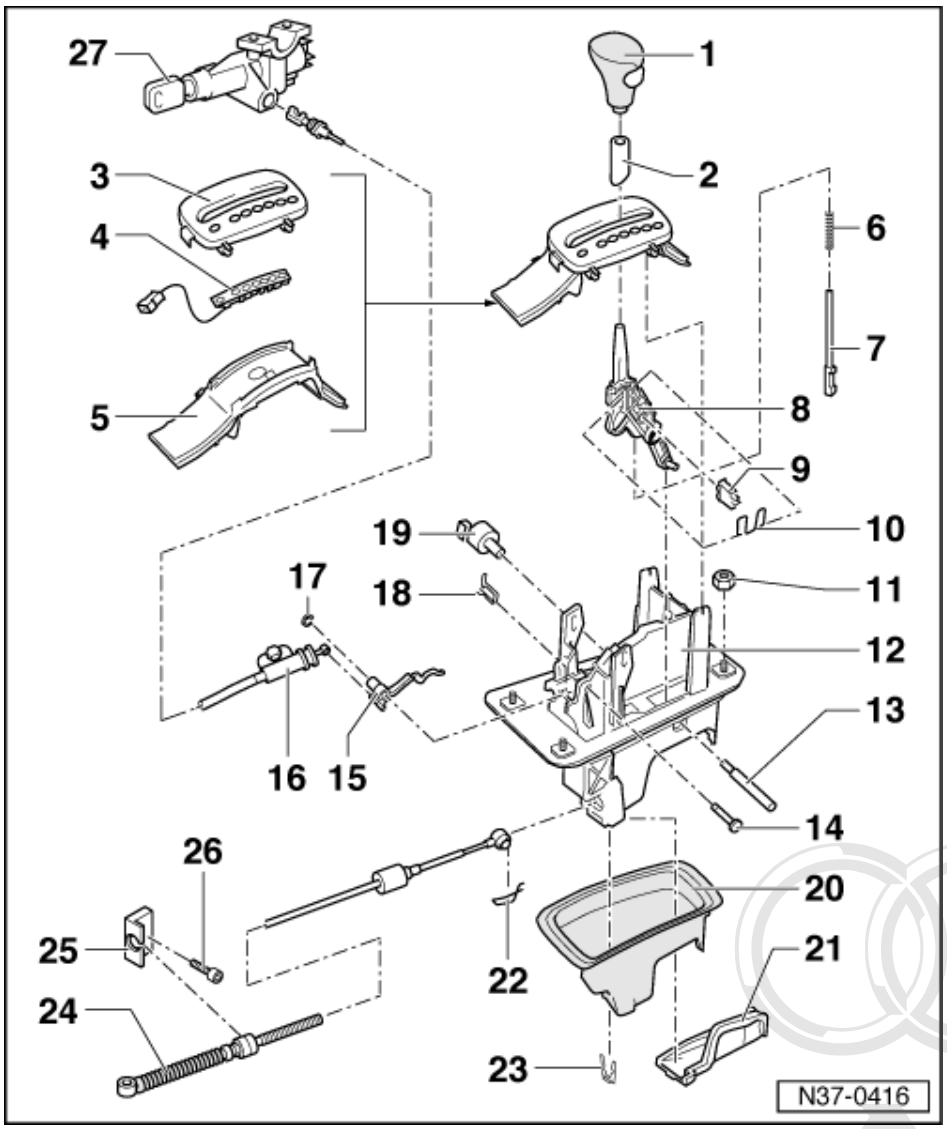

20 Rubber housing

- Must only be separated from mounting bracket -item 12 - if damaged and when dismantling selector lever

21 Cover

- For mounting bracket
- Removing and installing =>from Page 31

22 Securing clip

- For selector lever cable at selector lever

23 Locking plate

- For selector lever cable at mounting bracket
- Installation position => Page 32 , Fig. N37-0473, Item 6

Protected by copyright. Copying for private or commercial purposes, in part or in whole, is not permitted unless authorised by AUDI AG. AUDI AG does not guarantee or accept any liability with respect to the correctness of information in this document. Copyright by AUDI AG.

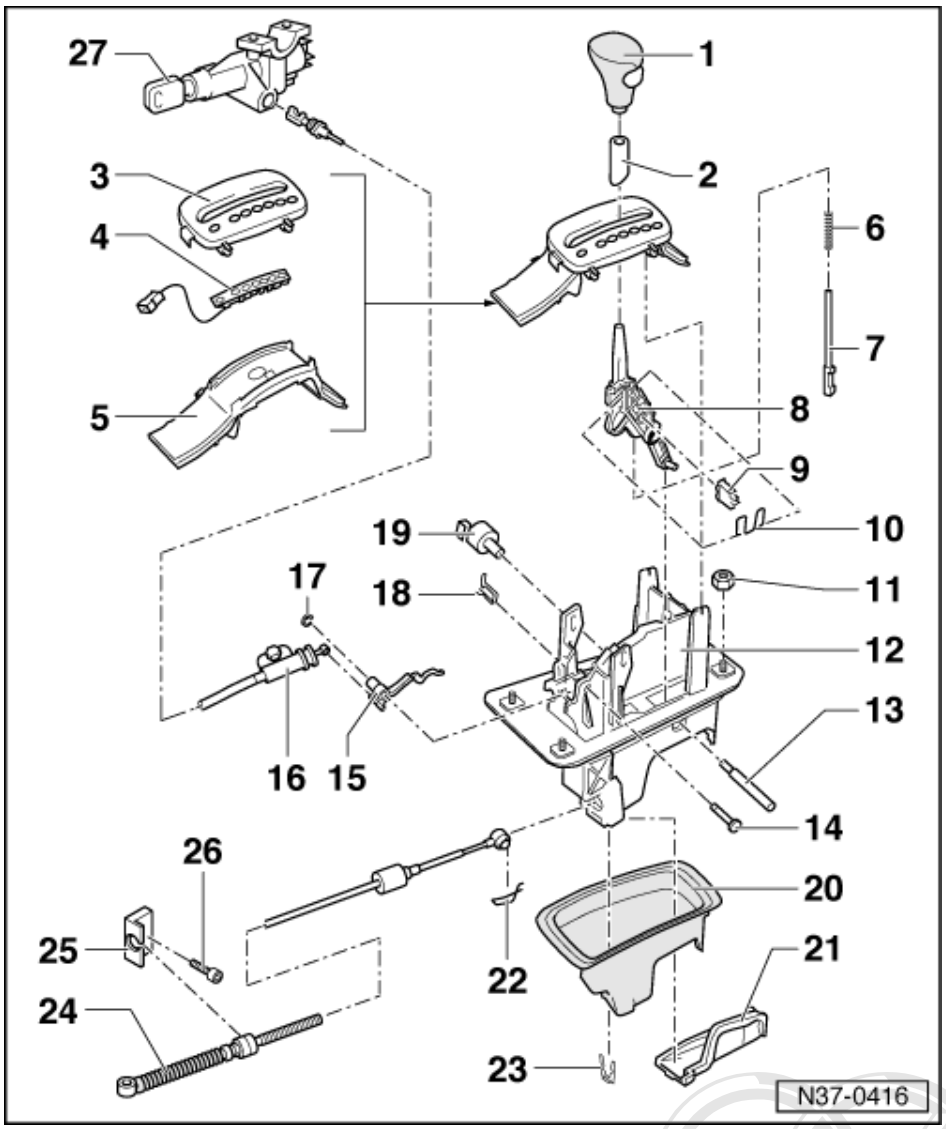

24 Selector lever cable

- Do not bend or kink, lightly grease cable eye and ball socket before installing.
- Rubber boot must not be damaged
- Removing and installing => Page 34
- Adjusting => Page 36

25 Support bracket

- For selector lever cable

26 Bolt - 23 Nm

27 Ignition/starter switch

Protected by copyright. Copying for private or commercial purposes, in part or in whole, is not permitted unless authorised by AUDI AG. AUDI AG does not guarantee or accept any liability with respect to the correctness of information in this document. Copyright by AUDI AG.

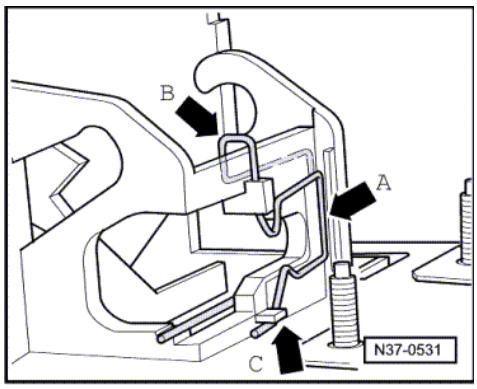

-> Fig.1 Removing and installing securing spring for locking cable

Removing

- To remove locking cable, lift spring slightly at the top -arrow B-.
- Disengage spring -arrow A- from retainer lug -arrow C- and lift out.

Installing

- Insert spring from above -arrow B- and engage under retainer lug -arrow C-.
- Align spring so that it lies level in groove -arrow A-.
- To install locking cable, lift spring slightly at the top -arrow B-.

1.3 - Removing and installing selector lever handle

Protected by copyright. Copying for private or commercial purposes, in part or in whole, is not permitted unless authorised by AUDI AG. AUDI AG does not guarantee or accept any liability with respect to the correctness of information in this document. Copyright by AUDI AG.

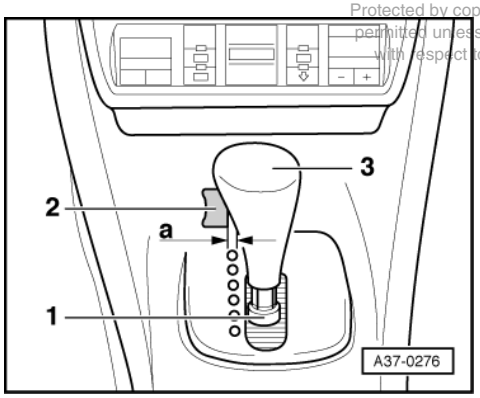

Removing

- Shift selector lever into position "3".
- -> Slide sleeve -1- down as far as it will go.
- Pull button -2- out of selector lever handle -3- until it clicks (distance -a-) and pull handle upwards.

Dimension -a- = 3 mm

Installing

- Shift selector lever into position "3".
- Carefully pull button -2- out of selector lever handle -3- to the position indicated by distance -a-.
- Then, with button -2- pointing towards front of vehicle, fit handle -3- onto selector lever and push down as far as possible.

- Turn handle -3- until button -2- points towards the driver's seat. The handle will engage in a vertical groove on the selector lever.

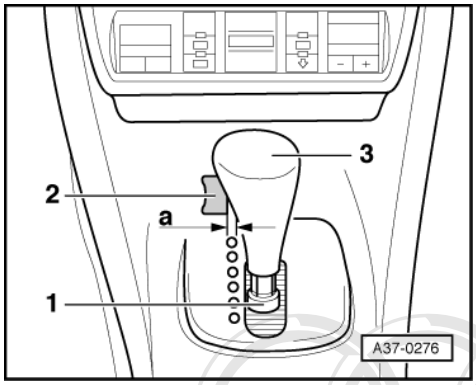

- -> Push handle -3- down fully so that it engages in the circular groove on the selector lever.
- Press button -2- into handle on selector lever -3-.
- Pull up sleeve -1- until it engages in selector lever handle -3-.

1.4 - Removing and installing selector lever lock solenoid -N110 and wiring for selector lever illumination

- Remove selector lever handle=>Page 30 .
- Remove central console.

=> General body repairs, Interior; Repair group 68; Trays, compartments and trim Trays, compartments and trim

Protected by copyright. Copying for private or commercial purposes, in part or in whole, is not permitted unless authorised by AUDI AG. AUDI AG does not guarantee or accept any liability with respect to the correctness of information in this document. Copyright by AUDI AG.

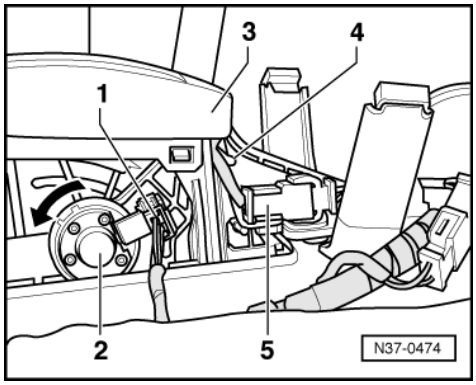

- -> Disconnect connector -1- (console wiring).
- Using a screwdriver, press in metal tab on underside of solenoid -2- and at same time turn solenoid about 90° in direction of arrow. Take out solenoid.
- Check selector mechanism after replacing solenoid=>Page 34 .
- Route cable for selector lever illumination under guide -3- and fix into notch -4- (left/right).
- Clip connector -5- into retainer on guide.
- Reconnect connector -1- (wiring console).

1.5 - Removing and installing shift mechanism

Removing

- Shift selector lever into "P" position.
- Obtain code on vehicles with coded radio/integrated radio and navigation system.
- With ignition switched off disconnect battery earth strap.

- Remove central console.

=> General body repairs, Interior; Repair group 68; Storage compartments, covers and trim parts Storage compartments, covers and trim parts

- Remove catalytic converter or front exhaust pipe and remove front heat shield.

=> Engine mechanics; Repair group 26

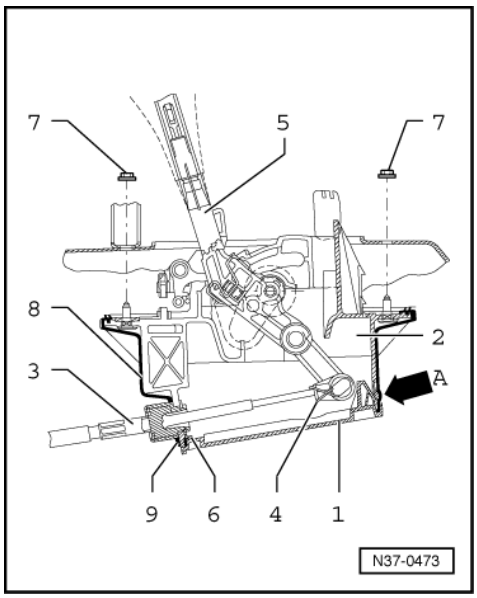

- -> Release cover -1- snap lock by pressing in direction of arrow -A-.
- Take cover off mounting bracket -2-.

Separate selector lever cable -3- from mounting bracket as follows:

Protected by copyright. Copying for private or commercial purposes, in part or in whole, is not permitted unless authorised by AUDI AG. AUDI AG does not guarantee or accept any liability with respect to the correctness of information in this document. Copyright by AUDI AG.

- Press ends of securing clip -4- together and remove.
- Pull selector lever cable off selector lever -5-.
- Pull locking plate -6- for selector lever cable on mounting bracket out downwards.
- Pull selector lever cable out from mounting bracket, when doing this do not kink cable.
- Remove selector lever handle =>Page 30 .
- Remove cover with guide => from Page 24 , Items 3 - 5 .
- Unclip locking cable from securing spring on mounting bracket, to do this lift securing spring lightly.
- Unclip connector for solenoid and selector lever illumination => Page 31 .
- Remove nuts -7- (Qty. 4).
- Take mounting bracket -2- out downwards.

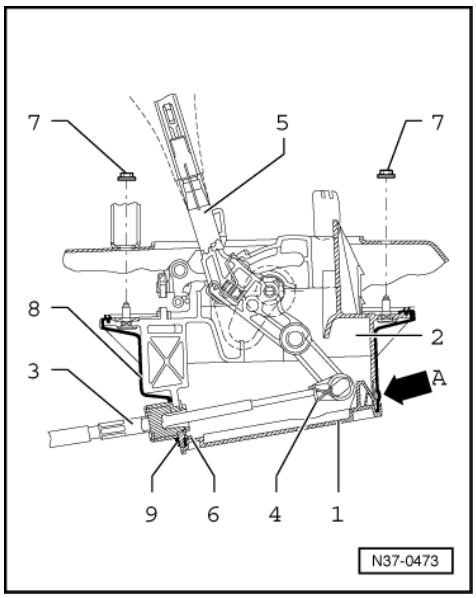

Installing

Install in reverse sequence; note the following points:

- Do not bend or kink the selector lever cable, lightly grease cable eye and cable ends before installing.
- -> When renewing mounting bracket, clip rubber housing -8- in before installing.
- Ensure there is a perfect seal between mounting bracket and body.
- Tighten nuts -7- (Qty. 4) to 10 Nm.
- Install locking cable and adjust => from Page 40 .
- Guide cover into groove -9- and then engage the snap lock. The cover must be heard to click into place.

Note:

Ensure the cover seats and seals perfectly.

- Installing exhaust system free of stress

=> Engine Mechanics; Repair group 26

- Shift selector lever into position "3".
- Install cover => from Page 24 .

- Install selector lever handle=>Page 30 .
- Check selector lever cable adjustment, adjust if necessary => Page 36 .
- Check ignition key withdrawal lock => Page 42 .
- Install centre console.

=> General body repairs, Interior; Repair group 68; Trays, compartments and trim Trays, compartments and trim

Notes:

- When the battery is reconnected, re-activate electrical equipment (radio, combined radio/navigation system, clock, electric windows) as described in the Owner's Manual.
- Further procedures after reconnecting the voltage supply:

=> Injection and ignition system; Repair group 24

Audi
Protected by copyright. Copying for private or commercial purposes, in part or in whole, is not permitted unless authorised by AUDI AG. AUDI AG does not guarantee or accept any liability with respect to the correctness of information in this document. Copyright by AUDI AG.

Tightening torques

Component	Nm
Shift mechanism to body	10 Nm
Support bracket/selector lever cable to gearbox	23 Nm

1.6 - Checking shift mechanism

Move selector lever to position "P" with ignition on:

- Brake pedal not depressed:
  - Selector lever is locked and cannot be shifted out of position "P". The selector lever lock solenoid blocks the selector lever.
- Brake pedal depressed:
  - The selector lever lock releases the selector lever. It must be possible to engage a gear. Shift selector lever smoothly from position "P" via "R, N, D, 3" to "2" and check if the selector lever position indicated on the dash panel insert coincides with the actual selector lever position.

Shift selector lever to position "N" with ignition on:

- Brake pedal not depressed:
  - Selector lever is locked and cannot be shifted out of position "N". The selector lever lock solenoid blocks the selector lever.
- Brake pedal depressed:
  - The selector lever lock solenoid releases the selector lever. It is possible to engage a gear.

Protected by copyright. Copying for private or commercial purposes, in part or in whole, is not permitted unless authorised by AUDI AG. AUDI AG does not guarantee or accept any liability with respect to the correctness of information in this document. Copyright by AUDI AG.

Notes:

- It is only possible to shift the selector lever out of position "N" to position "R" with selector lever handle pressed down and the brake pedal depressed.
- The starter must not operate in the selector lever positions "1", "2", "3", "D" and "R".
- On RHD vehicles, it should only be possible to operate starter in selector lever positions "P" and "N" when button on selector lever handle is not pressed.
- When travelling at speeds above 5 km/h and shifting into selector lever position "N", the selector lever lock solenoid must not engage and block the selector lever. The selector lever can be shifted into a driving gear.
- At speeds below 2 km/h (virtually stopped) and shifted to selector lever position "N", the selector lever lock solenoid should only engage after approx. 1 second. The selector lever lock cannot be shifted out of position "N" until brake pedal is pressed.

1.7 - Removing and installing selector lever cable

Removing

- Shift selector lever into "P" position.
- Unbolt front heat shield and slide forwards.

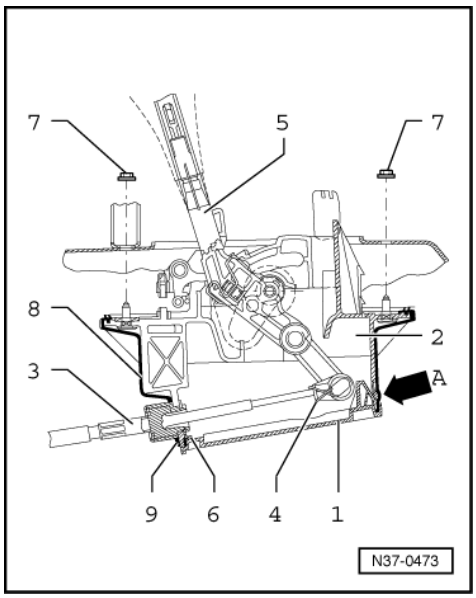

- -> Release cover -1- snap lock by pressing in direction of arrow -A-.
- Take cover off mounting bracket -2-.

Separate selector lever cable -3- from mounting bracket as follows:

- Press ends of securing clip -4- together and remove.
- Pull selector lever cable -3- off selector lever.
- Pull locking plate -6- for selector lever cable on mounting bracket out downwards.
- Do not kink selector lever cable.
- Remove heat shield for selector lever cable.

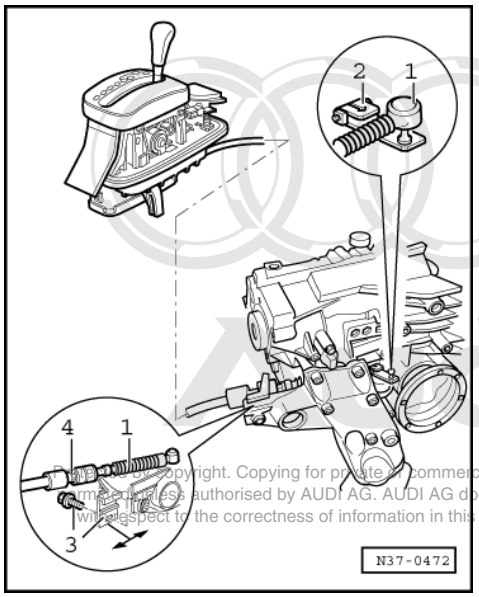

Copyright. Copying for private or commercial purposes, in part or in whole, is not permitted unless authorised by AUDI AG. AUDI AG does not guarantee or accept any liability with respect to the correctness of information in this document. Copyright by AUDI AG.

- -> Take selector lever cable -1- off selector shaft lever -2- on gearbox upwards.
- Remove support bracket -3- from right-hand gearbox support.
- Release selector lever cable using hexagon -4- from support bracket if necessary.

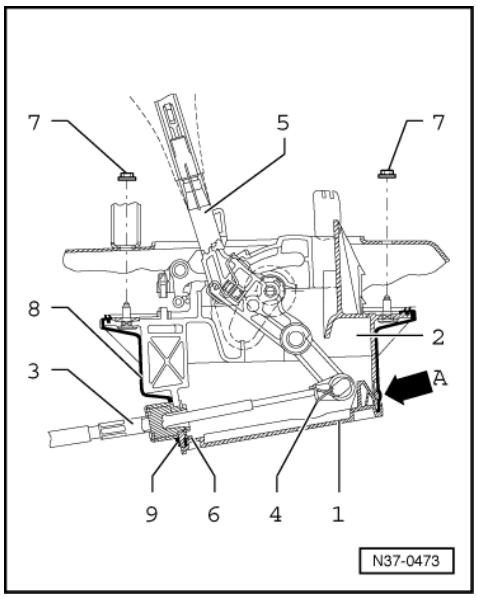

Installing

- Selector lever and selector shaft lever to position "P" (parking lock must engage).

Install in reverse sequence; note the following points:

- Do not bend or kink the selector lever cable, lightly grease cable eye and cable ends before installing.
- -> Reconnect selector lever cable to support bracket using hexagon -4- if necessary.
- Guide cover into groove -9- and then engage the snap lock. The cover must be heard to click into place.
- Check and adjust selector lever cable => Page 36 .

Tightening torques

Component	Nm
Support bracket for selector lever cable to gearbox	23
Selector lever cable to support bracket	12
Heat shield for selector lever cable to gearbox	10

Protected by copyright. Copying for private or commercial purposes, in part or in whole, is not permitted unless authorised by AUDI AG. AUDI AG does not guarantee or accept any liability with respect to the correctness of information in this document. Copyright by AUDI AG.

1.8 - Checking and adjusting selector lever cable

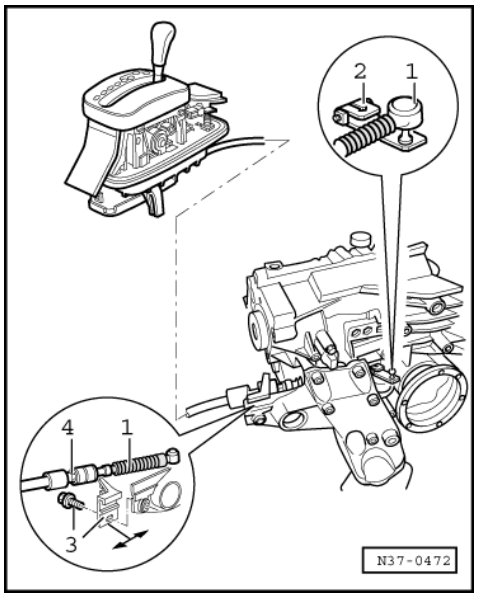

Checking

- Shift selector lever into "P" position.
- -> Take selector lever cable -1- off selector shaft lever -2- on gearbox upwards.
- Move selector lever from "P" to "1".

- Selector lever mechanism and selector lever cable must move freely. If necessary renew selector lever cable or service selector lever mechanism.

- Shift selector lever into "P" position.
- Shift selector shaft lever -2- to "P". The parking lock should engage and it should not be possible to turn the two front wheels in the same direction.

- It should be possible to push the selector lever cable onto the selector shaft lever. Adjust selector lever cable if necessary.

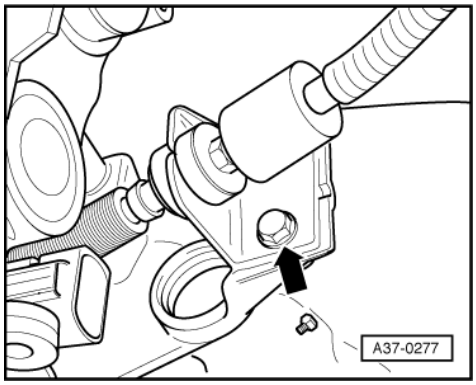

Adjusting

- Selector lever cable disconnected from selector shaft lever.

- Shift selector lever into "P" position.
- Shift selector shaft lever to "P". The parking lock should engage and it should not be possible to turn the two front wheels in the same direction.
- -> Loosen bolt -arrow- securing support bracket to gearbox.
- Press selector lever cable onto selector shaft lever.
- Check selector lever cable is free of stress, adjust so that it is free of stress.
- Tighten securing bolt for support bracket.
- Check shift mechanism => Page 34 .

Tightening torque

Component	Nm
Support bracket/selector lever cable to gearbox	23

Protected by copyright. Copying for private or commercial purposes, in part or in whole, is not permitted unless authorised by AUDI AG. AUDI AG does not guarantee or accept any liability with respect to the correctness of information in this document. Copyright by AUDI AG.

1.9 - Removing and installing locking cable

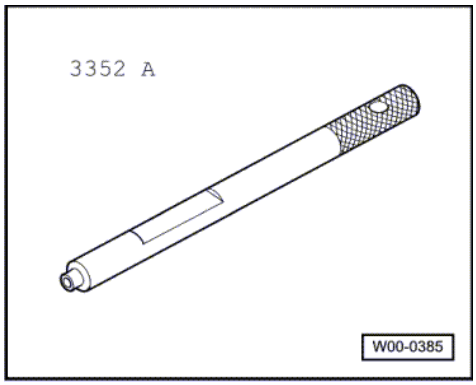

Special tools and workshop equipment required

- Adjustment gauge for locking cable 3352 A

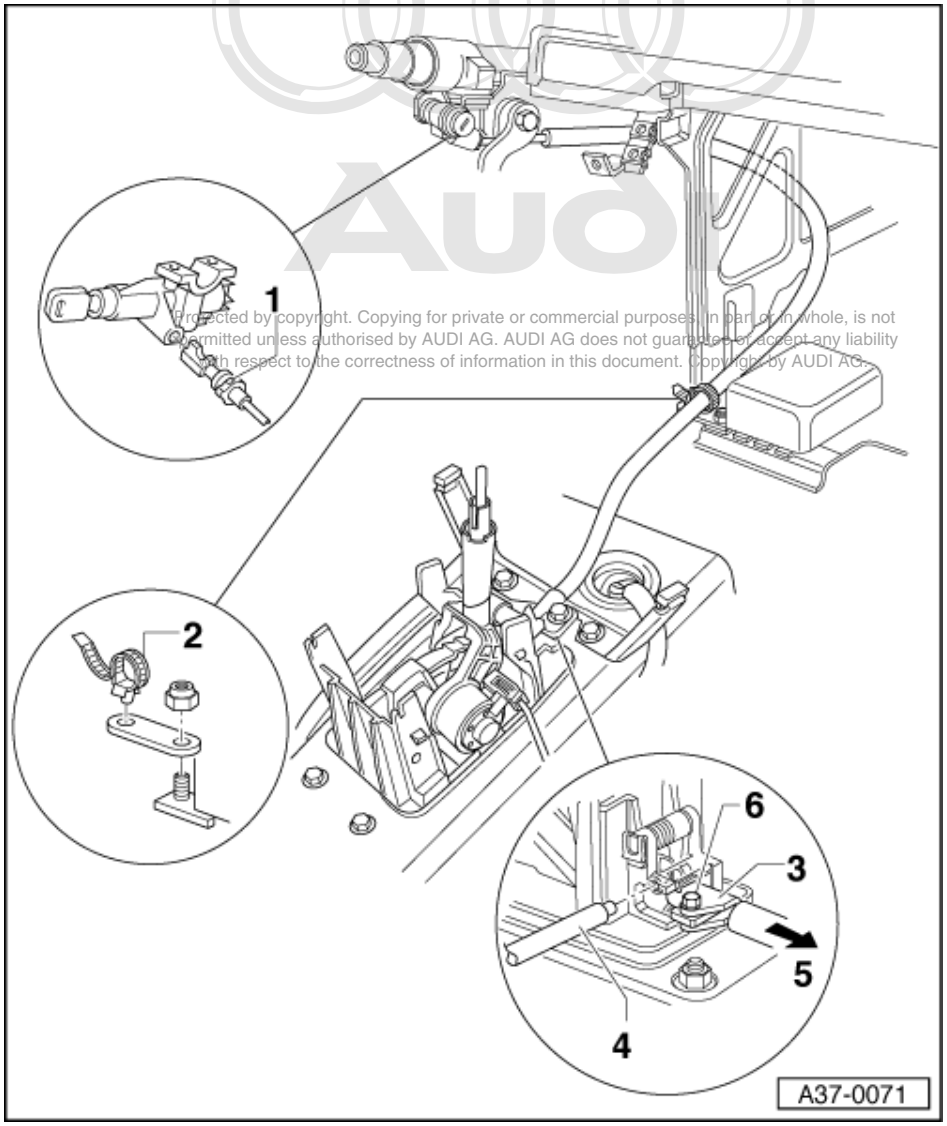

Protected by copyright. Copying for private or commercial purposes, in part or in whole, is not permitted unless authorised by AUDI AG. AUDI AG does not guarantee or accept any liability with respect to the correctness of information in this document. Copyright by AUDI AG.

Removing

- For vehicles equipped with a coded radio or a combined radio-navigation unit (RNS), obtain and observe the code.
- Disconnect earth strap at battery with ignition off.
- Remove selector lever handle=>Page 30 .
- Removing centre console.

=> General body repairs, Interior; Repair group 68; Trays, compartments and trim Trays, compartments and trim

- Remove steering wheel with airbag.

=> Running gear, Front-wheel drive and four-wheel drive; Repair group 48; Airbag unit Airbag unit

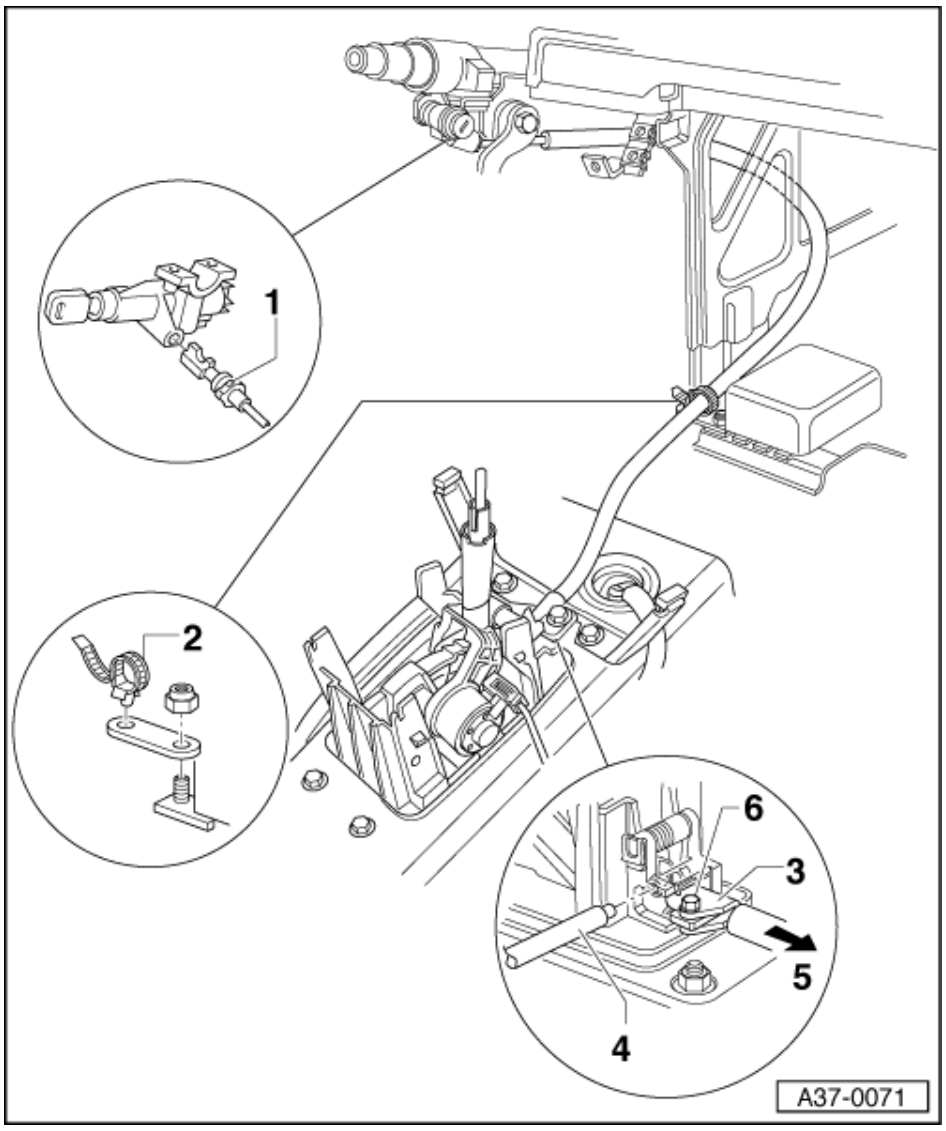

- Remove steering column trim

=> General body repairs, Interior; Repair group 68; Trays, compartments and trim Trays, compartments and trim

- Turn ignition key to "ignition on" position.
- Move selector lever to position "P".
- Lift locking clip on locking device -1- and pull locking cable out from ignition/starter switch.
- Remove cover with guide (selector lever mechanism) => Page 24 .
- Unclip locking cable from securing spring on mounting bracket, to do this lift securing spring slightly=>Fig. 30 .
- Release locking cable from cable tie -2- and take out.

Protected by copyright. Copying for private or commercial purposes, in part or in whole, is not permitted unless authorised by AUDI AG. AUDI AG does not guarantee or accept any liability with respect to the correctness of information in this document. Copyright by AUDI AG.

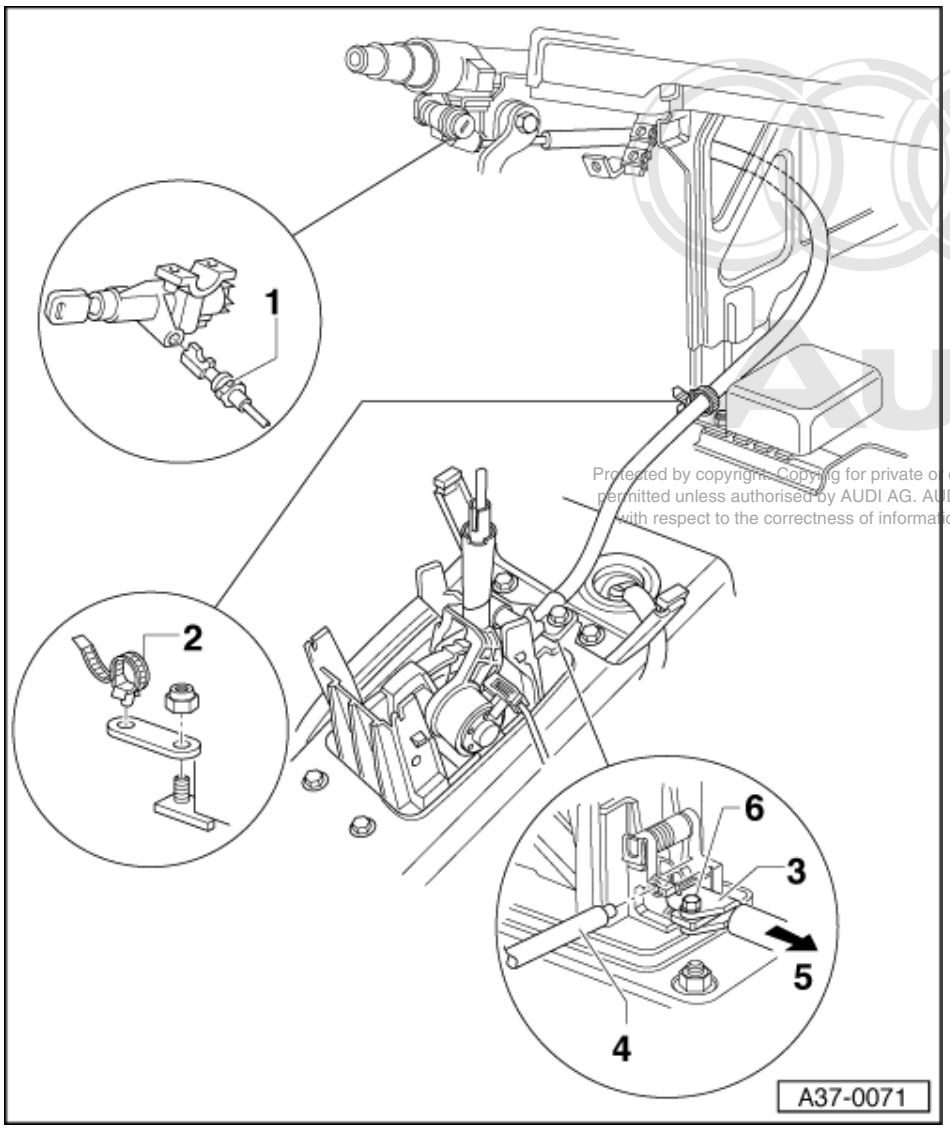

Protected by copyright. Copying for private or commercial purposes, in part or in whole, is not permitted unless authorised by AUDI AG. AUDI AG does not guarantee or accept any liability with respect to the correctness of information in this document. Copyright by AUDI AG.

Installing

- Route locking cable free of kinks.
- Turn ignition/starter switch to position "drive (on)".
- Fit locking cable to ignition/starter switch.
- Check that locking device -1- engages.
- Secure locking cable with cable tie -2-.
- Turn ignition/starter switch to locked position ("ignition off").
- Move selector lever to position "P".
- Clip locking cable into securing spring in mounting bracket=>Fig. 30 .
- Hook locking cable support bracket -3- into selector mechanism and locking cable eye into lever (for locking cable).

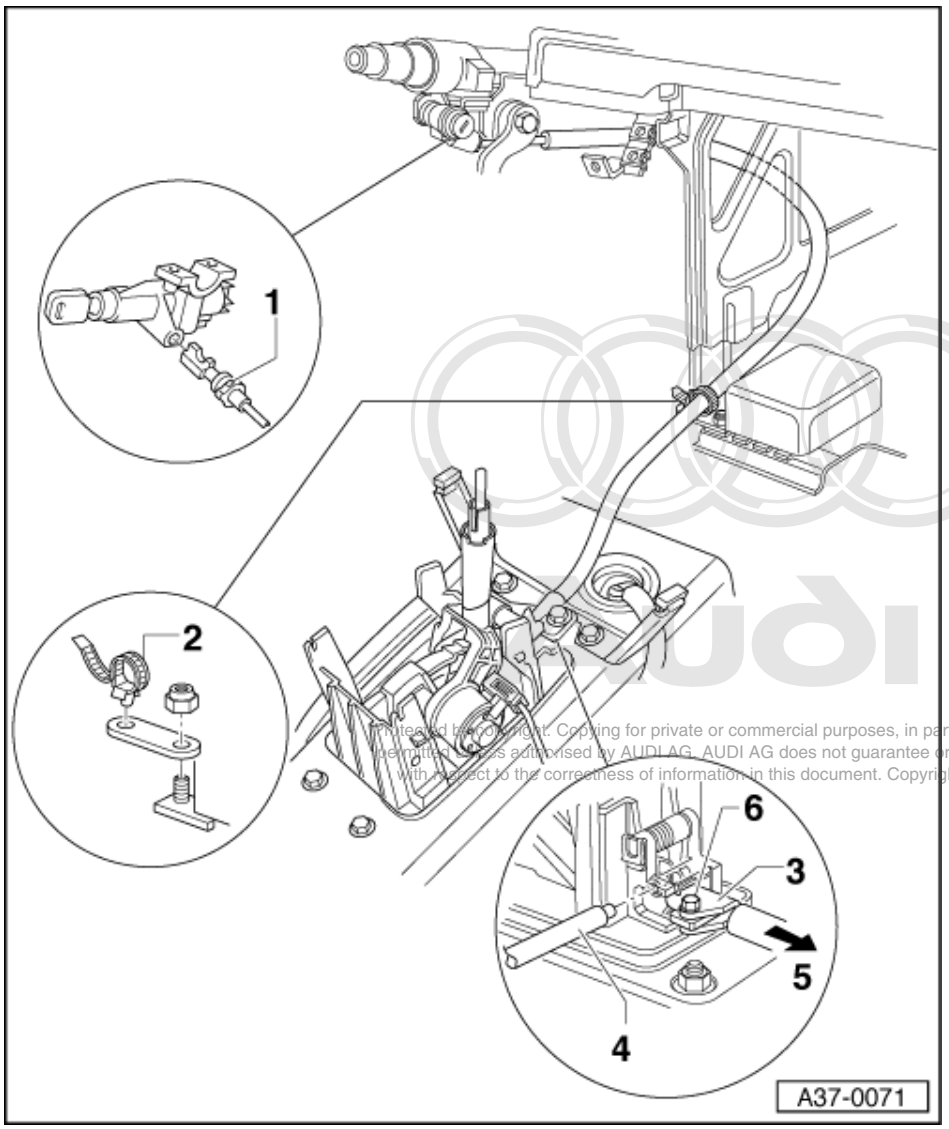

Protected by copyright. Copying for private or commercial purposes, in part or in whole, is not permitted unless authorised by AUDI AG. AUDI AG does not guarantee or accept any liability with respect to the correctness of information in this document. Copyright by AUDI AG.

Adjusting

- Loosen bolt -6-.
- Must be able to move support bracket -3- by hand in direction of arrow -5-.
- Move steering column down.
- Position setting bar 3352 A -item 4- between lever (for locking cable) and locking cable eye.
- Pull locking cable in direction of arrow -5- and tighten bolt -6- to 10 Nm.
- Remove setting bar.
- Check ignition key withdrawal lock after each adjustment of locking cable => Page 42 .
- Install steering column trim

=> General body repairs, Interior; Repair group 68; Trays, compartments and trim Trays, compartments and trim

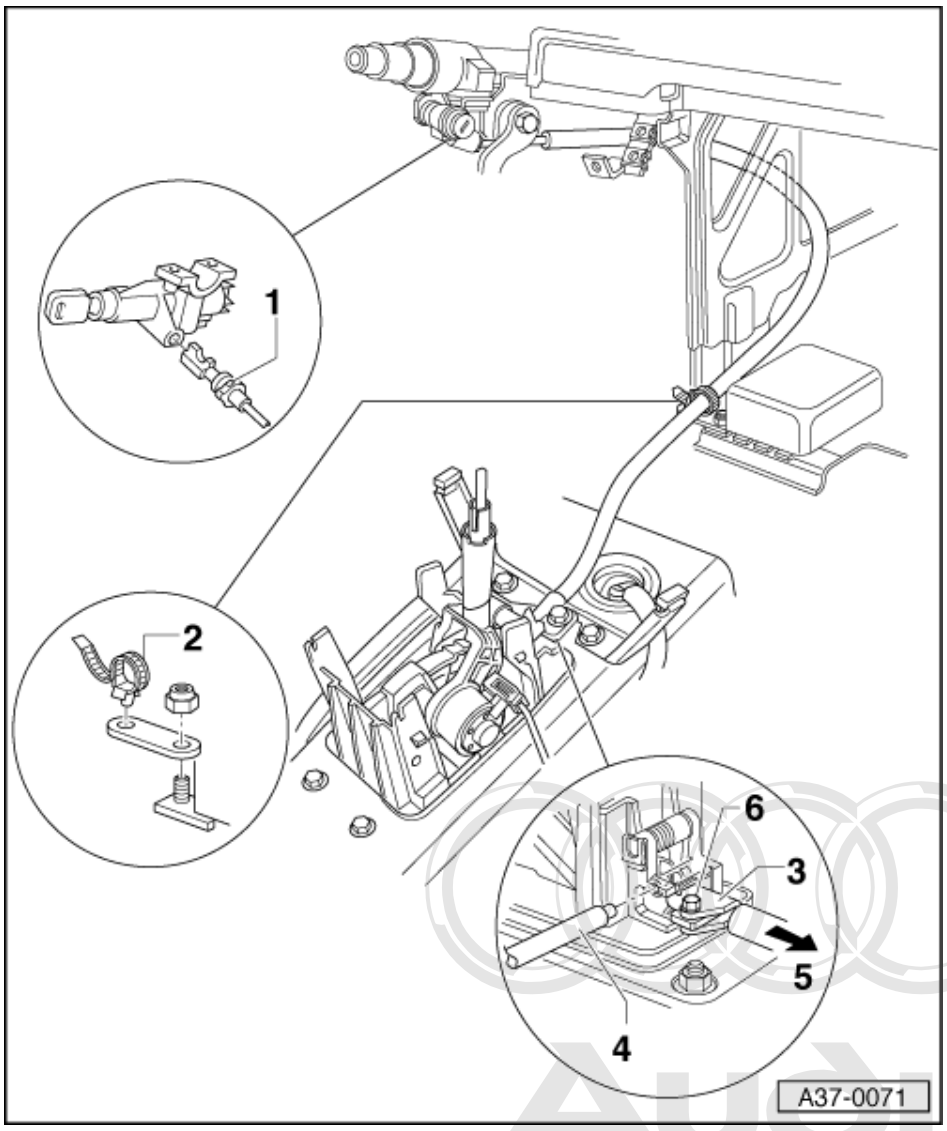

- Install steering wheel with airbag

=> Running gear, Front-wheel drive and four-wheel drive; Repair group 18; Airbag unit Airbag unit

Protected by copyright. Copying for private or commercial purposes, in part or in whole, is not permitted unless authorised by AUDI AG. AUDI AG does not guarantee or accept any liability with respect to the correctness of information in this document. Copyright by AUDI AG.

- Install centre console

=> General body repairs, Interior; Repair group 68; Trays, compartments and trim Trays, compartments and trim

- Install selector lever handle=>Page 30 .

Notes:

- Please remember to re-activate the electric equipment (radio/ combined radio-navigation unit, clock, window lifters) installed in the vehicle. Follow the instructions in the Owner's Manual.
- Additional steps required after reconnecting the power supply:

=> Injection and ignition system; Repair group 24

1.10 - Checking ignition key interlock

- Turn ignition key to "ignition on" position.

- Press and hold down brake pedal.

• With the interlock button pressed, it should be posssible to move the selector lever without resistance out of position "P".
• It should not be possible to withdraw the ignition key in any position other than "P".

- Move selector lever to "P" position.

• It should be possible to turn the ignition key without resistance to the position where it can be removed.

- Remove ignition key.

• With the interlock button pressed and the brake pedal pressed down, it should not be possible to move the selector lever out of position "P".

2 - Checking gearbox

2.1 - Checking gearbox

Always start by performing the self-diagnosis to trace the cause of the fault

=> Automatic gearbox 01N, Self-diagnosis; Repair group 01; Performing self-diagnosis Performing self-diagnosis

Then, if the fault cannot be traced and rectified via self-diagnosis, check the automatic gearbox as described in the "Fault-finding - Power transmission" binder.

2.2 - Checking main pressure

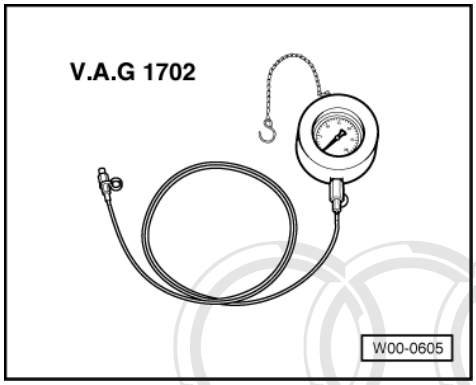

Special tools and workshop equipment required

◆ Pressure tester V.A.G 1702

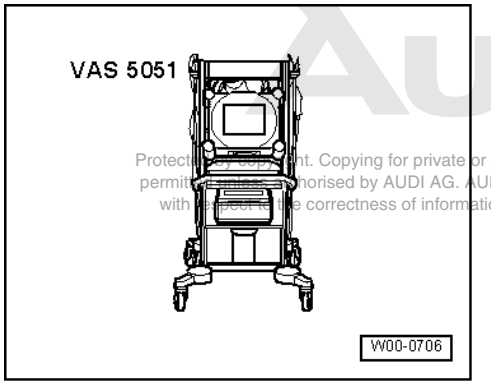

Protect... Copying for private or commercial purposes, in part or in whole, is not permit... authorised by AUDI AG. AUDI AG does not guarantee or accept any liability with ... correctness of information in this document. Copyright by AUDI AG.

- VAS 5051 with VAS 5051/1 and VAS 5051/2
- Drip tray

Main pressure should be tested on a rolling road whenever possible.

Requirement for test:

- Vehicle diagnostic, testing and information system VAS 5051 connected, vehicle self-diagnosis mode activated and vehicle system "02 - gearbox electronics" selected.

=> Automatic gearbox 01N, Self-diagnosis; Repair group 01; Performing self-diagnosis Performing self-diagnosis

- No faults stored in fault memory

=> Automatic gearbox 01N, Self-diagnosis; Repair group 01; Performing self-diagnosis Performing self-diagnosis

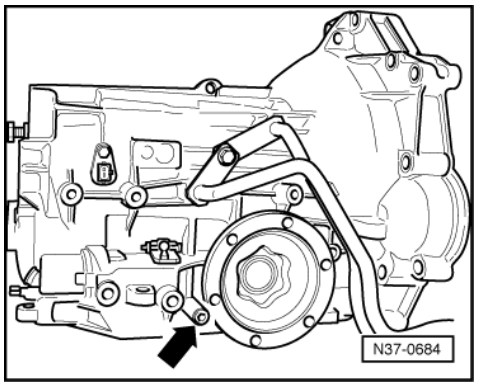

- -> Remove bolt -arrow- for main pressure drilling. Always renew bolt.
- Connect pressure tester V.A.G 1702 and tighten thumb screw.
- Start engine and run at idling speed.
- Bleed pressure tester V.A.G 1702. To do this, loosen thumb screw and tighten when bleeding is complete.

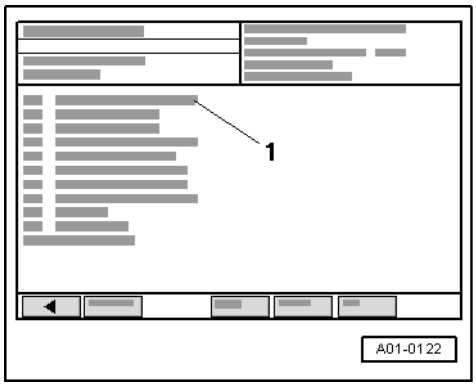

-> Display on VAS 5051:

- Select diagnosis function "08 - Read data block" from the menu -1-.

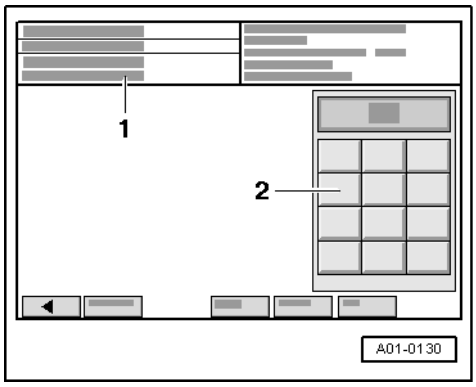

Protected by copyright. Copying for private or commercial purposes, in part or in whole, is not permitted unless authorised by AUDI AG. AUDI AG does not guarantee or accept any liability with respect to the correctness of information in this document. Copyright by AUDI AG.

-> Display on VAS 5051:

1 - Enter display group

- Using the keypad -2-, enter "005" to select Display group 005 and confirm entry with Q button.

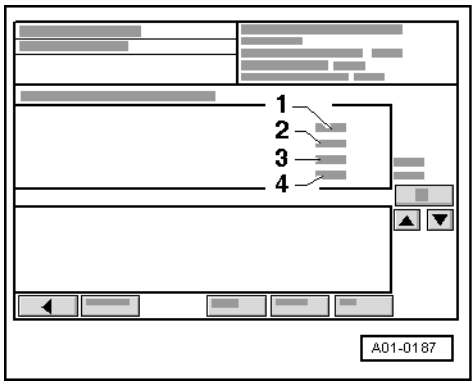

-> Display on VAS 5051:

- Check ATF temperature in display zone 1.
- Allow ATF temperature to rise to 60 °C.
- Press the ◂ button to exit from the function "08 - Read data block".

Main pressure specifications at idle

	Selector lever positions	
	D Idle	R Idle
Pressure in bar	3.4 ... 3.8	5 ... 6

If specification not attained or exceeded:

Possible causes	Remedy
Idling speed too high	Adjust engine
ATF pump defective	Check ATF pump and renew if necessary
Sticking valves in valve body	Renew valve body

- Switch off ignition.

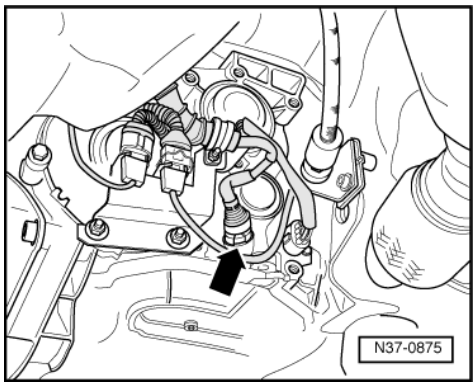

- -> Disconnect connector -arrow- for solenoid valves.
- Start the engine.

Protected by copyright. Copying for private or commercial purposes, in part or in whole, is not permitted unless authorised by AUDI AG. AUDI AG does not guarantee or accept any liability with respect to the correctness of information in this document. Copyright by AUDI AG.

Main pressure specifications at 2000 rpm

	Selector lever positions and test conditions	
	D Engine speed approx. 2000 rpm	R Engine speed approx. 2000 rpm
Pressure in bar	12.4 ... 13.2	23.0 ... 24.0

If specification not attained or exceeded:

Possible causes	Remedy
ATF pump defective	Check ATF pump and renew if necessary
Sticking valves in valve body	Renew valve body

After test:

- Disconnect pressure tester V.A.G 1702.
- Install new bolt for main pressure drilling and tighten to 12 Nm.

- Plug in electrical connector.
- Interrogate fault memory:

=> Automatic gearbox 01N, Self-diagnosis; Repair group 01; Performing self-diagnosis Performing self-diagnosis

Note:

Faults will have been recorded in the fault memory because the connector has been unplugged. Interrogate and, if necessary, erase fault memory after completing the test.

- Select diagnosis function "06 - End output".
- Switch off ignition and unplug the diagnostic connector.

Protected by copyright. Copying for private or commercial purposes, in part or in whole, is not permitted unless authorised by AUDI AG. AUDI AG does not guarantee or accept any liability with respect to the correctness of information in this document. Copyright by AUDI AG.

3 - Removing and installing gearbox

3.1 - Removing and installing gearbox

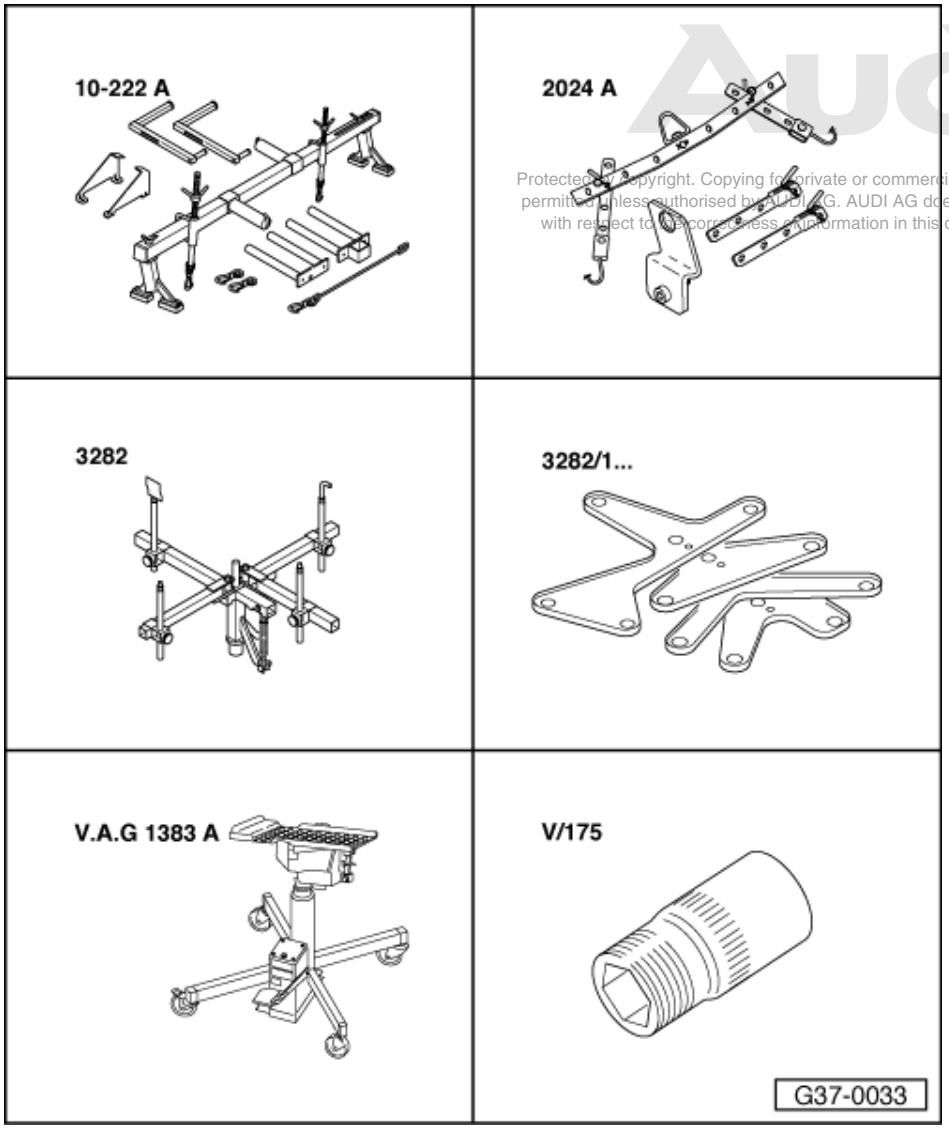

Protected by Copyright. Copying for private or commercial purposes, in part or in whole, is not permitted unless authorised by AUDI AG. AUDI AG does not guarantee or accept any liability with respect to the correctness of information in this document. Copyright by AUDI AG.

Special tools and workshop equipment required

- Engine support bracket 10-222A with supports 10-222A/1 and adapters 10-222 A/3
- Lifting tackle 2024 A
- Gearbox support 3282
- Alignment plate 3282/3
- Engine/gearbox jack
  V.A.G 1383 A
- 15 mm A/F socket: Matra V/175
- Waste fluid container

Removing

- Obtain code on vehicles with coded radio/integrated radio and navigation system.
- Shift selector lever into "P" position.
- With ignition switched off disconnect battery earth strap.

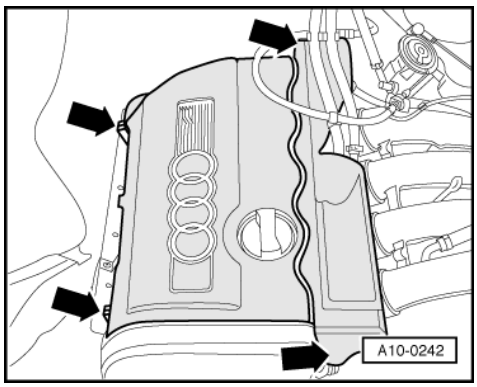

Vehicles with 1.8 ltr. petrol engine:

- -> Remove cover over injectors -arrows on right-.

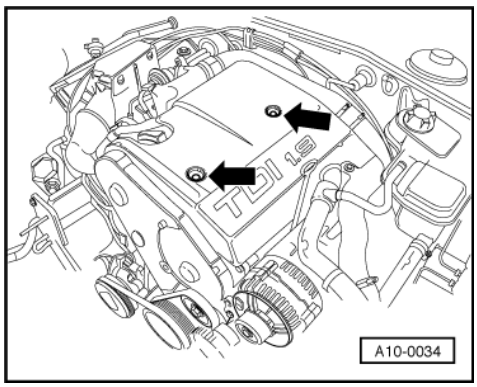

Vehicles with TDI engine:

- -> Remove engine cover -arrows-.
- Unbolt exhaust pipe from turbocharger.

=> Engine Mechanics; Repair group 26

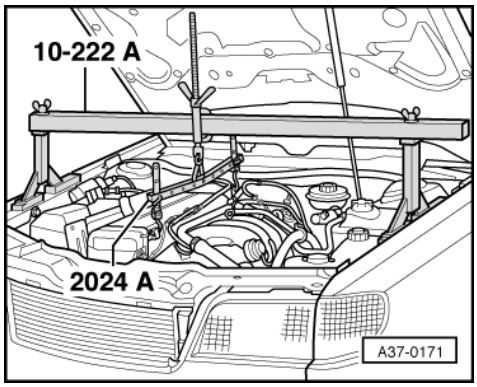

- -> Set up engine support bracket 10-222 A on bolted flanges of wing panels with spindle at front.

Protected by copyright. Copying for private or commercial purposes, in part or in whole, is not permitted unless authorised by AUDI AG. AUDI AG does not guarantee or accept any liability with respect to the correctness of information in this document. Copyright by AUDI AG.

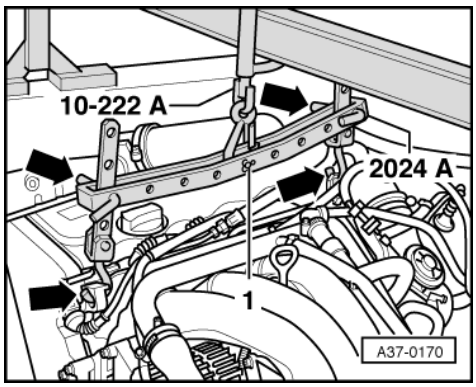

- -> Remove lifting eye from lifting appliance 2024 A. Insert pin -1- in centre hole of lifting appliance again and secure with a split pin.
- Engage pin of lifting appliance 2024 A onto spindle of engine support bracket 10-222 A.
- Engage lifting tackle 2024 A in lifting eyes at front and rear of engine.

Warning
The hook attachments and locating pins on the lifting tackle must be secured with locking pins (arrows in illustration).

- Take up weight of engine on spindle of engine support bracket 10-222 A.

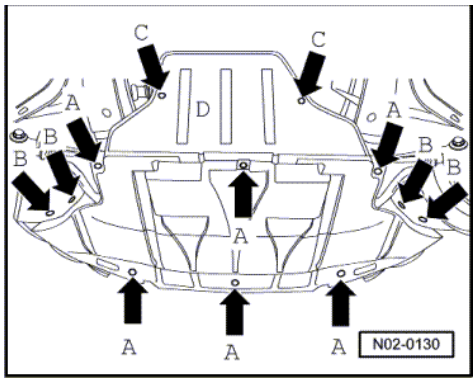

- Remove both front wheels.

Vehicles with petrol engine:

- -> Remove noise insulation -arrow A and B-.

Vehicles with TDI engine:

- In addition, remove rear noise insulation -D- -arrows C-.

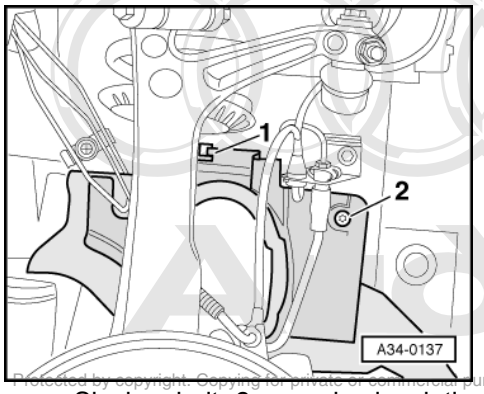

- -> Slacken bolt -2- on noise insulation cover above left-hand and right-hand drive shaft.

Protected by copyright. Copying for private or commercial purposes, in part or in whole, is not permitted unless authorised by AUDI AG. AUDI AG does not guarantee or accept any liability with respect to the correctness of information in this document. Copyright by AUDI AG.

- Disengage retainer -1- and remove noise insulation cover.

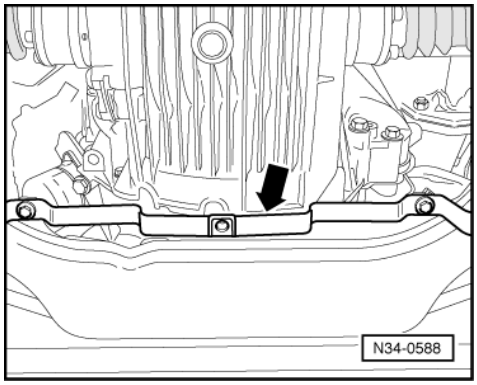

All models

- -> Unbolt bracket for noise insulation -arrow-.

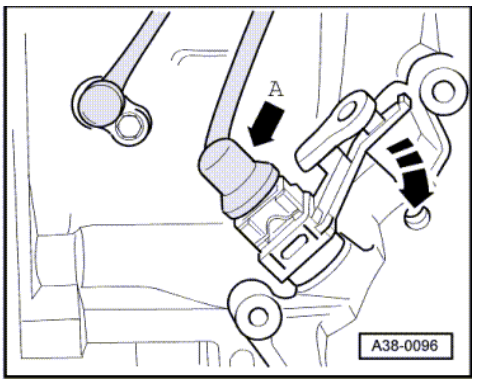

- -> Disconnect speedometer sender connector -arrow A- at gearbox.

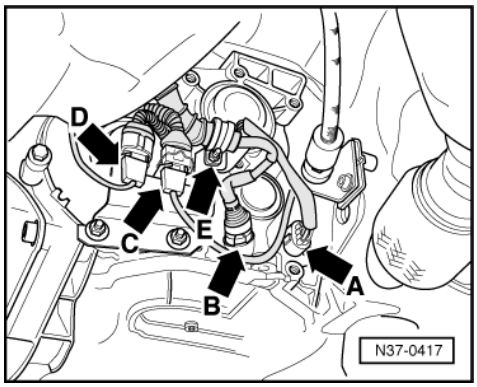

Protected by copyright. Copying for private or commercial purposes, in part or in whole, is not permitted unless authorised by AUDI AG. AUDI AG does not guarantee or accept any liability with respect to the correctness of information in this document. Copyright by AUDI AG.

- -> Mark connections -arrows C and D- to aid reinstallation.
- Remove electrical connections -arrows A to D- on gearbox.
- Unbolt cable clamp -arrow E-.
- Unbolt heat shield for selector lever cable.
- Remove front exhaust system with catalytic converter.

=> Engine Mechanics; Repair group 26

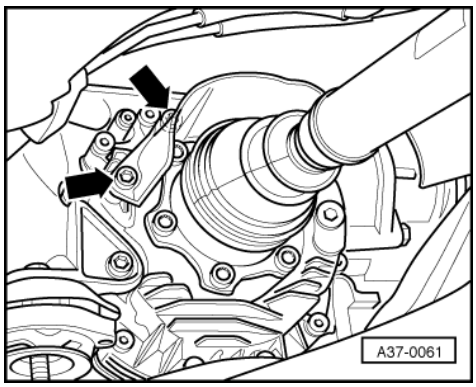

- -> Remove heat shield for right drive shaft -arrows-.
- Unbolt left and right-hand drive shafts from gearbox flange.

=> Running gear, Front and four-wheel drive; Repair group 40; Removing and installing drive shaft Removing and installing drive shaft

- Lift drive shafts up as high as possible and tie to body.
- Remove heat shield for bonded rubber bush at right-hand gearbox mounting.
- Place container under the gearbox.

Notes:

- When disconnecting ATF pipes, observe rules for cleanliness for automatic gearbox => Page 71 .
- Clean connections of ATF pipes before disconnecting.

Vehicles with petrol engine and without air conditioner

- Disconnect ATF pipes from engine/gearbox assembly and tie-up => Page 72 .

Protected by copyright. Copying for private or commercial purposes, in part or in whole, is not permitted unless authorised by AUDI AG. AUDI AG does not guarantee or accept any liability with respect to the correctness of information in this document. Copyright by AUDI AG.

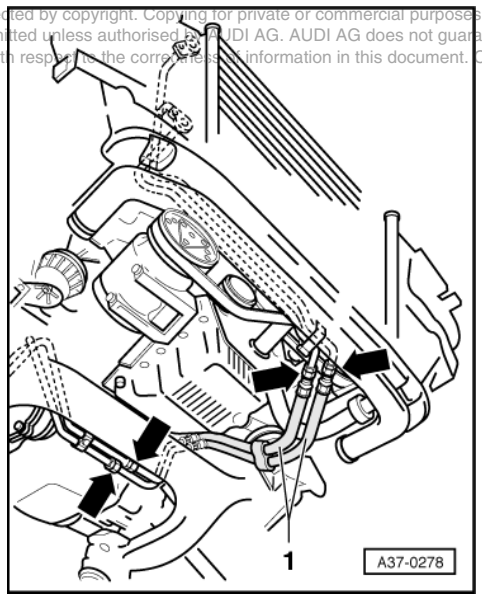

Vehicles with petrol engine and air conditioner and vehicles with TDI engine:

- -> Unscrew connections -arrows- and remove ATF pipes -1- completely.

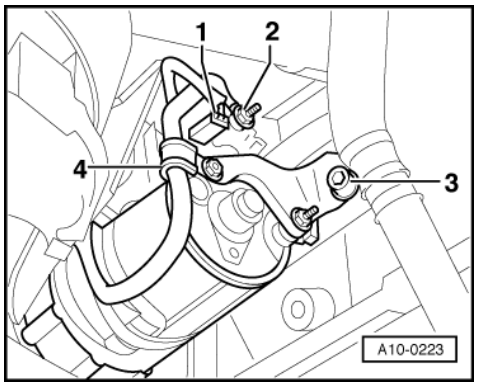

All models

- -> Detach wires -1- and -2- from starter; remove insulator from positive connection on starter.
- Unbolt cable clamp -4-.
- Unbolt bracket -3- from cylinder block.
- Unbolt starter from gearbox and remove.

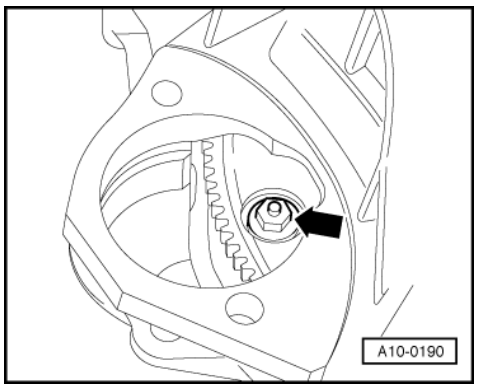

- -> After removal, unscrew 3 torque converter nuts through starter opening using socket attachment SW 15 Matra V/175 (turn crankshaft 1/3 turn each time).
- Unscrew engine/gearbox securing bolts accessible from below.

Copyright. Copying for private or commercial purposes, in part or in whole, is not permitted unless authorised by AUDI AG. AUDI AG does not guarantee or accept any liability with respect to the correctness of information in this document. Copyright by AUDI AG.

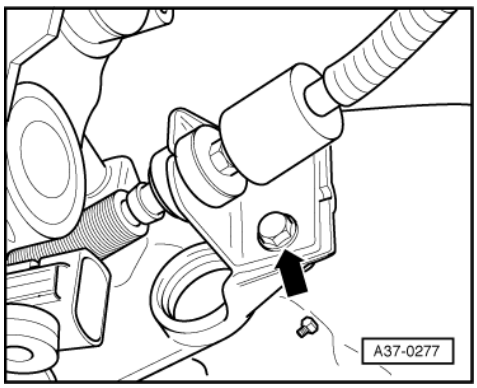

- Pull selector lever cable off selector shaft lever upwards.
- -> Unscrew bolt on selector lever cable support bracket -arrow- and remove selector lever cable.

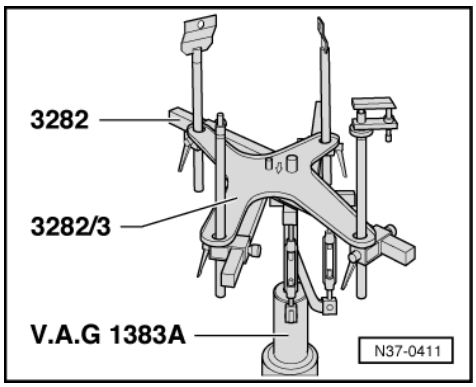

Vehicles with petrol engine and without air conditioner

- -> Set up gearbox support 3282.

The gearbox mount 3282 is set up with the adjusting plate 3282/2 for removing the automatic gearbox 01N.

The symbols on the adjusting plate indicate the mounts required, the arrow points forward.

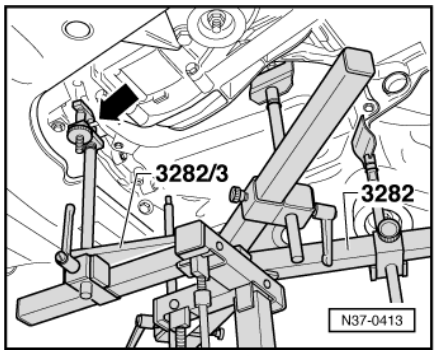

- -> Move jack V.A.G 1383 A with gearbox support 3282 under the gearbox and support gearbox.
- Align adjustment plate parallel to gearbox and lock safety support -arrow- on gearbox.

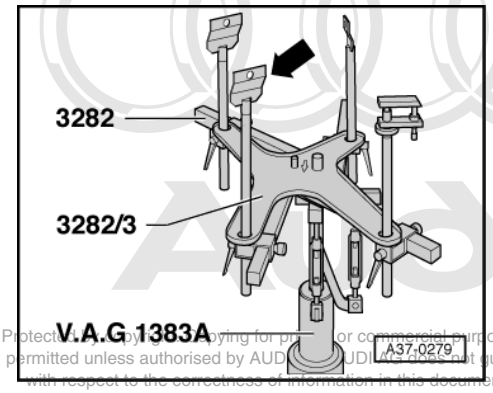

Protected by copyright. Copying for private or commercial purposes, in part or in whole, is not permitted unless authorised by AUDI AG. AUDI AG does not guarantee or accept any liability with respect to the correctness of information in this document. Copyright by AUDI AG.

Vehicles with petrol engine and air conditioner and vehicles with TDI engine

- -> Set up gearbox support 3282.

Attach a retainer plate -arrow- in place of the retainer pin (the set-up is not as indicated by the symbols on the adjustment plate).

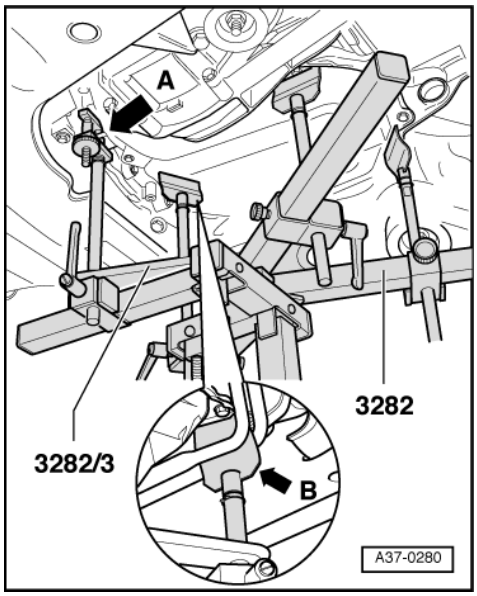

Protected by copyright. Copying for private or commercial purposes, in part or in whole, is not permitted unless authorised by AUDI AG. AUDI AG does not guarantee or accept any liability with respect to the correctness of information in this document. Copyright by AUDI AG.

- -> Move jack V.A.G 1383 A with gearbox support 3282 under the gearbox and support gearbox.
- Insert retainer plate -arrow B- between the oil pipes.
- Align adjustment plate parallel to gearbox and lock safety support -arrow A- on gearbox.

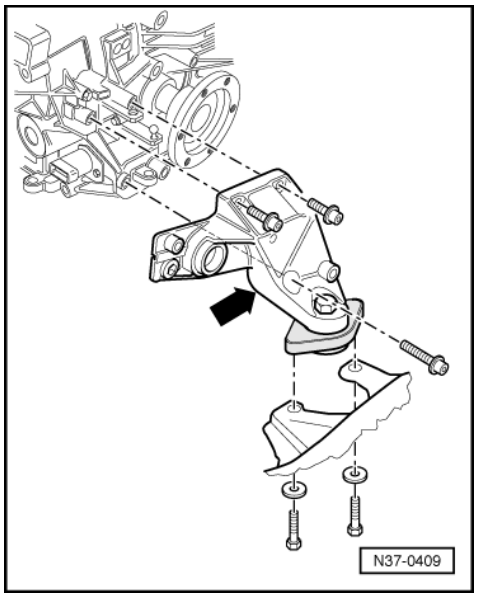

All models

- -> Remove right gearbox support -arrow- with bonded rubber mounting.
- Remove left gearbox support together with bonded rubber mounting.
- Lower rear of engine/gearbox assembly slightly with jack V.A.G 1383 A.

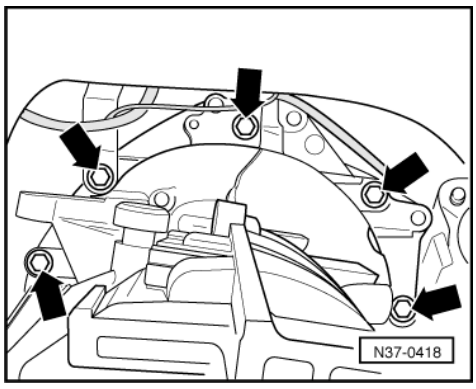

- -> Unscrew engine/gearbox securing bolts accessible from above.
- Press gearbox off engine; when doing this, press torque converter out of drive plate.
- Press torque converter against ATF pump.
- Lower gearbox.
- Secure the torque converter to prevent it from dropping out.

Installing

Install in reverse sequence; note the following points:

Notes:

- Before fitting a replacement gearbox, always blow through the ATF pipes and ATF cooler=>Page 74 .
- When performing repairs, renew self-locking nuts, bolts which have a specified tightening angle, seals and gaskets..
- If a new torque converter with integrated needle bearing is fitted in a gearbox with sleeve bearing in the turbine shaft, the sleeve bearing must be removed =>Page 18 .

- Before installing the gearbox, ensure that the torque converter has been fitted correctly in the gearbox => Page 22 .
- Before installing gearbox, make sure that dowel sleeves are correctly seated on cylinder block.
- Fit intermediate plate onto dowel sleeves.
- Align gearbox to engine.
- Make sure that no wiring or pipes are trapped when bringing engine and gearbox together.

Protected by copyright. Copying for private or commercial purposes, in part or in whole, is not permitted unless authorised by AUDI AG. AUDI AG does not guarantee or accept any liability with respect to the correctness of information in this document. Copyright by AUDI AG.

- Install upper engine/gearbox securing bolts.
- Raise rear engine/gearbox assembly slightly using jack V.A.G 1383 A.

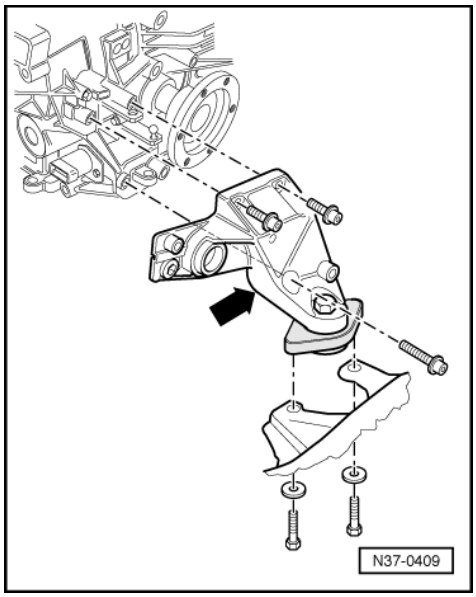

- -> Install right gearbox support -arrow- with bonded rubber mounting.
- Install left gearbox support with bonded rubber mounting.
- Install lower engine/gearbox connecting bolts.
- Secure gearbox to engine.

Notes:

- The tightening torques listed in this manual apply only to lightly greased, oiled, phosphated, or black-finished nuts and bolts.
- Additional lubricant such as engine or gearbox oil may be used, but do not use graphite lubricant.
- Do not use degreased parts.
- Tolerance for tightening torques is ±15%.

Protected by copyright. Copying for private or commercial purposes, in part or in whole, is not permitted unless authorised by AUDI AG. AUDI AG does not guarantee or accept any liability with respect to the correctness of information in this document. Copyright by AUDI AG.

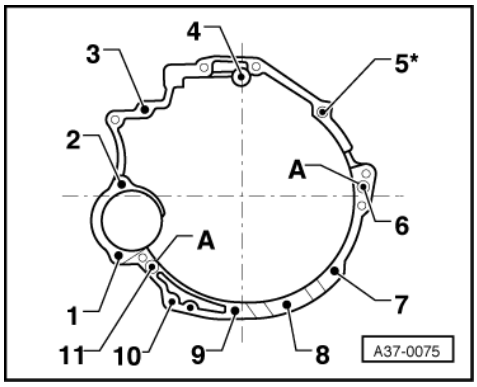

1.6 ltr. engine:

-> Engine/gearbox mountings

Item	Bolt	Nm
1 + 2	M12 x 67	65
3 + 4	M12 x 75	65
5 + 6	M12 x 90	65
7 ... 10	M10 x 45	45
11	M12 x 90	65

A: centering sleeves

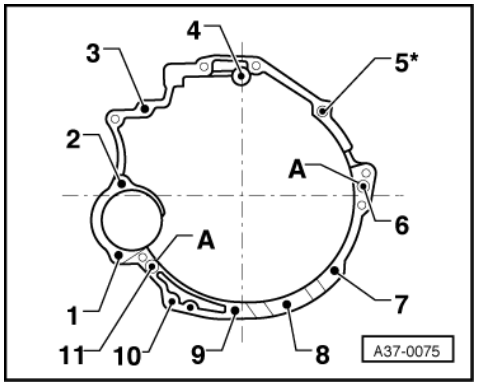

1.8 ltr. petrol engine, 1.9 ltr. TDI engine:

-> Engine/gearbox mountings

Item	Bolt	Nm
1, 2, 3, 4, 11	M12 x 67	65

Item	Bolt	Nm
5, 6	M12 x 90	65
7, 8, 9, 10	M10 x 45	45

A: centering sleeves

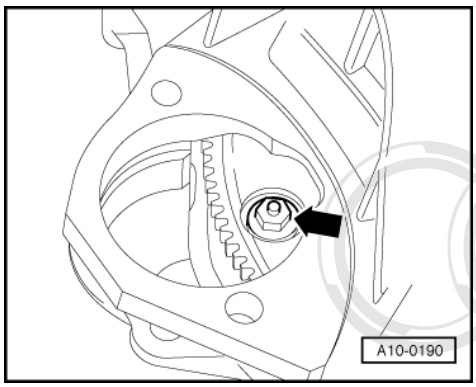

All models

- To secure the torque converter on the drive plate only use the correct nuts as specified in the parts catalogue.

=> Parts catalogue

Protected by copyright. Copying for private or commercial purposes, in part or in whole, is not permitted unless authorised by AUDI AG. AUDI AG does not guarantee or accept any liability with respect to the correctness of information in this document. Copyright by AUDI AG.

- -> Tighten torque converter nuts with socket attachment SW 15 Matra V/175.
- Install front exhaust system with catalytic converter.

=> Engine Mechanics; Repair group 26

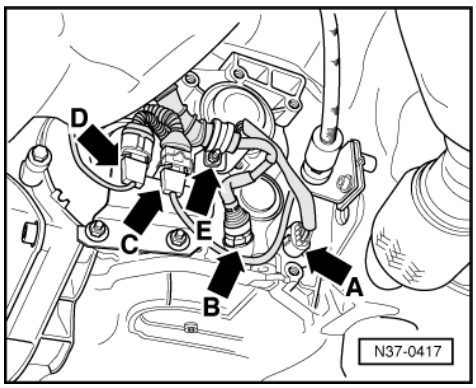

- Plug in electrical connectors.
- -> Do not interchange electrical connections -arrows C and D- . Connection -arrow C- to road speed sender -G 68 (on right of gearbox). Connection -arrow D- to gearbox speed sender -G38 (on left of gearbox).
- Bolt on cable clamp -arrow E-.
- Install starter.

=> Electrical system; Repair group 27; Removing and installing starter Removing and installing starter

- Fit drive shafts to gearbox.

=> Running gear, Front and four-wheel drive; Repair group 40; Removing and installing drive shaft Removing and installing drive shaft

- Install ATF pipes with new seals => Page 71 .

Notes:

- When the battery is reconnected, re-activate electrical equipment (radio, clock, electric windows) as described in the Owner's Manual.
- Further procedures after reconnecting the voltage supply:

=> Injection and ignition system; Repair group 24

- Move selector lever to position "P" and fit selector lever cable=>Page 34 .
- Check selector lever cable adjustment, adjust if necessary => Page 36 .
- Initiate basic setting:

=> Automatic gearbox 01N, Self-diagnosis; Repair group 01; Performing self-diagnosis; Initiating basic setting Performing self-diagnosis Initiating basic setting

- Check oil level in final drive of automatic gearbox => Page 195 .
- Check ATF level => Page 61 .

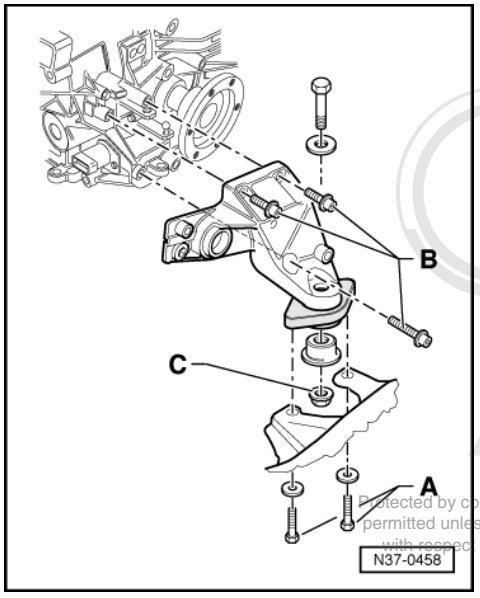

Protected by copyright. Copying for private or commercial purposes, in part or in whole, is not permitted unless authorised by AUDI AG. AUDI AG does not guarantee or accept any liability with respect to the correctness of information in this document. Copyright by AUDI AG.

Tightening torques

-> Rear right (illustration) and left assembly mountings tightened to same torque.

A = 23 Nm
B = 40 Nm
C = 40 Nm

Component	Nm
Drive plate to torque converter	85
Heat shield for drive shaft to gearbox	23
Heat shield for right bonded rubber mounting to gearbox	10
Bracket for noise insulation to body	25

3.2 - Transporting automatic gearbox

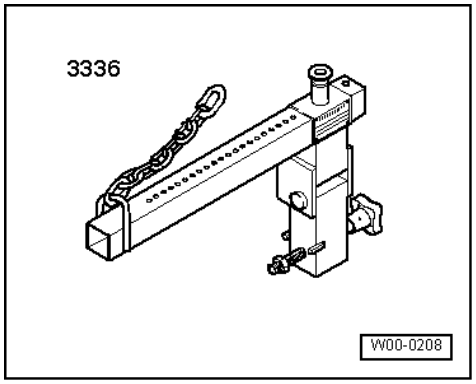

Special tools and workshop equipment required

- Gearbox attachment appliance 3336

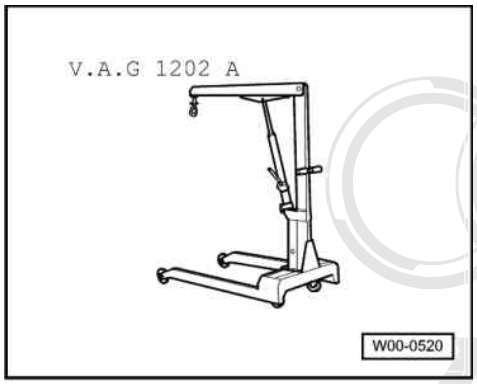

- Workshop crane V.A.G 1202 A

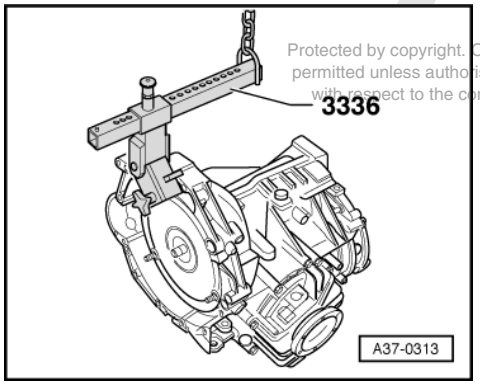

Protected by copyright. Copying for private or commercial purposes, in part or in whole, is not permitted unless authorised by AUDI AG. AUDI AG does not guarantee or accept any liability with respect to the correctness of information in this document. Copyright by AUDI AG.

Work sequence

Gearbox lifting tackle 3336 may be used for transporting the automatic gearbox as well as for setting up gearbox support 3282.

- -> Secure gearbox lifting tackle 3336 to gearbox housing flange.
- Fit locking pin so that 12 holes are visible in direction of chain.
- Support gearbox using workshop crane V.A.G 1202 A and gearbox lifting device 3336.

3.3 - Securing gearbox to repair stand

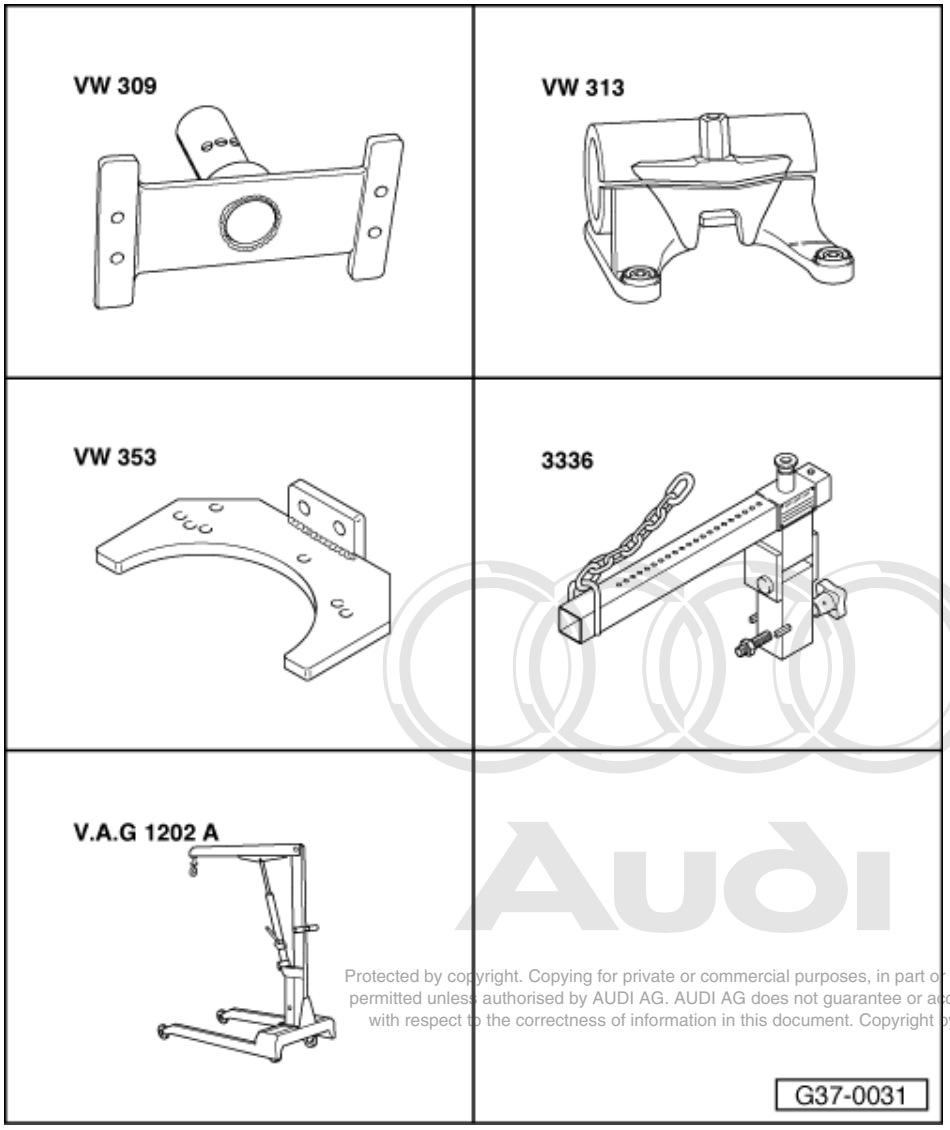

Protected by copyright. Copying for private or commercial purposes, in part or in whole, is not permitted unless authorised by AUDI AG. AUDI AG does not guarantee or accept any liability with respect to the correctness of information in this document. Copyright by AUDI AG.

Special tools and workshop equipment required

- Holding plate VW 309
- Support clamp VW 313
- Gearbox support VW 353
- Gearbox lifting tackle 3336
- Workshop crane V.A.G 1202 A

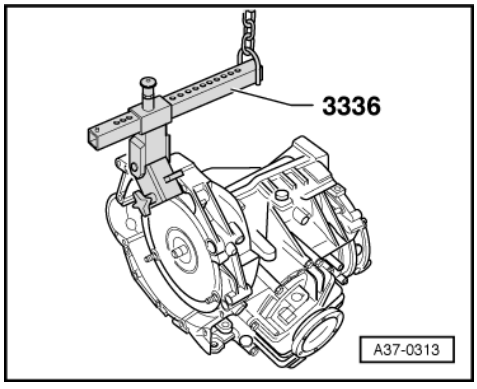

Work sequence

- Drain ATF=>Page 67 .
- Remove gearbox => Page 47 .
- Remove torque converter or secure it to prevent it dropping out.
- -> Secure gearbox lifting tackle 3336 to gearbox housing flange.
- Position pins so that 8 holes are visible in chain direction.
- Insert gearbox with holding plate VW 309 in support clamp VW 313 with the aid of workshop hoist V.A.G 1202 A.

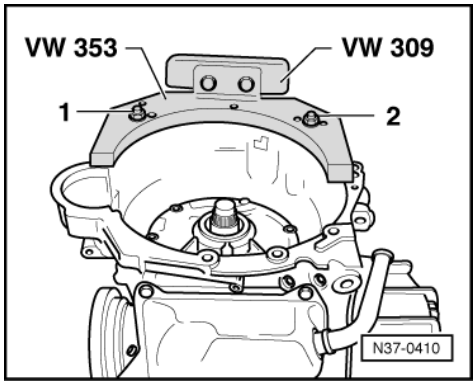

- -> Secure gearbox to assembly support with bolts -1- and -2-.

Warning
The centre of gravity of the gearbox is outside the pivot centre of the support clamp. A second fitter has to hold the gearbox housing when it is being turned to prevent it from swinging round.

4 - Checking and topping up ATF level

4.1 - Checking and topping up ATF level

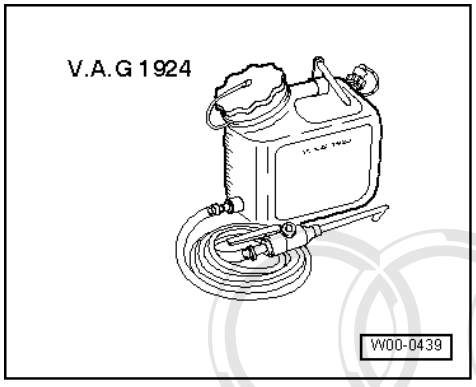

Special tools and workshop equipment required

- ATF filling system V.A.G 1924 and protective goggles

Protected by copyright. Copying for private or commercial purposes, in part or in whole, is not permitted unless authorised by AUDI AG. AUDI AG does not guarantee or accept any liability with respect to the correctness of information in this document. Copyright by AUDI AG.

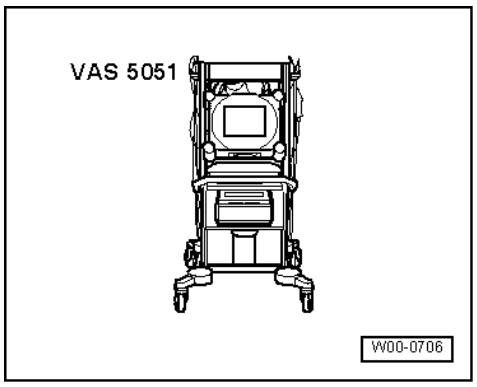

- VAS 5051 with VAS 5051/1 and VAS 5051/2
- Drip tray

4.2 - Checking ATF level

Requirements for test:

- Vehicle in horizontal position.
- Gearbox not in emergency running mode.
- The ATF temperature must not be higher than 35 °C at the start of the test.
- Selector lever at position "P", engine idling.
- Air conditioner and heating switched off.

Note:

Use only ATF G 052 162 A (transparent and slightly yellow) for topping up. Do not use any additives.

Container sizes:

- 0.5 ltr. - Part No. G 052 162 A1
- 1.0 ltr. - Part No. G 052 162 A2
- 20 ltr. - Part No. G 052 162 A6

Notes:

- The ATF level will vary according to the temperature of the ATF.
- If the ATF level is checked when the ATF temperature is too low, this will result in overfilling.
- If the ATF level is checked when the ATF temperature is too high, this will result in underfilling.
- Overfilling or underfilling will impair the function of the gearbox.
- The ATF temperature can be checked usingvehicle diagnostic, testing and information system VAS 5051.

Requirement for test:

- Vehicle diagnostic, testing and information system VAS 5051 connected, vehicle self-diagnosis mode activated and vehicle system "02 - gearbox electronics" selected.

Protected by copyright. Copying for private or commercial purposes, in part or in whole, is not
with respect to the correctness of information in this document. Copyright by AUDI AG.

=> Automatic gearbox 01N, Self-diagnosis, Repair group 01; Performing self-diagnosis Performing self-diagnosis

Test sequence

- Shift selector lever into "P" position and let engine idle.

-> Display on VAS 5051:

- Select diagnosis function "08 - Read data block" from the menu -1-.

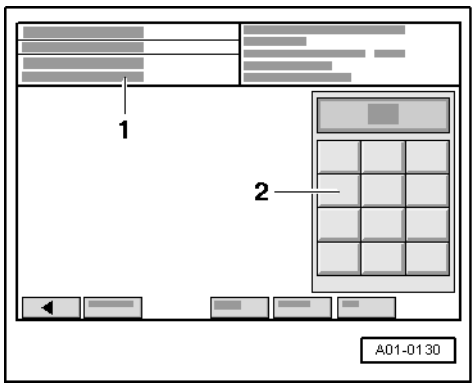

-> Display on VAS 5051:

1 - Enter display group

- Using the keypad -2-, enter "005" to select Display group 005 and confirm entry with Q button.

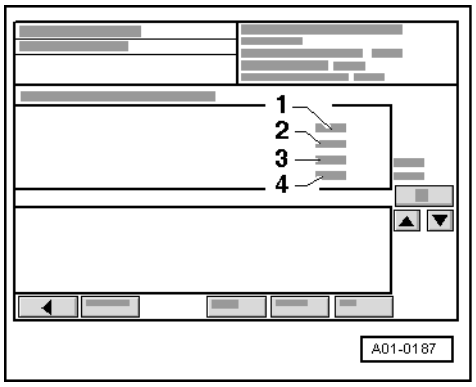

Protected by copyright. Copying for private or commercial purposes, in part or in whole, is not permitted unless authorised by AUDI AG. AUDI AG does not guarantee or accept any liability with respect to the correctness of information in this document. Copyright by AUDI AG.

-> Display on VAS 5051:

- Check ATF temperature in display zone 1.

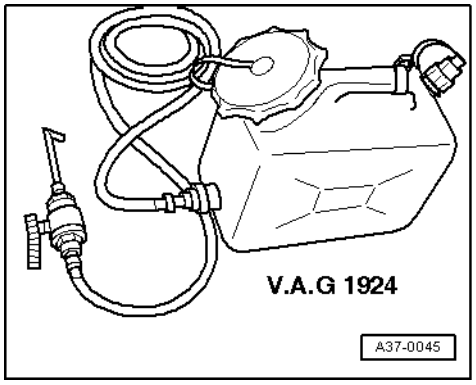

Notes:

- The ATF level is checked at the ATF inspection plug.
- If the ATF level is correct, a small amount of fluid will come out at the ATF inspection plug when ATF temperature is between 35°and 45°C1)(the fluid level will rise slightly as the temperature increases).

1)50°C for tropical countries

- -> Secure reservoir of ATF filling system V.A.G 1924 at the highest possible point on the vehicle.
- Raise vehicle.
- Place container under the gearbox.

Warning!
Wear eye protection

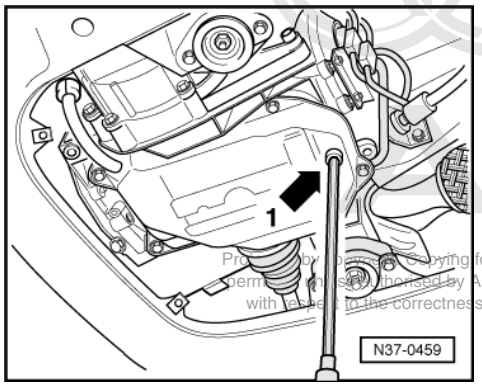

Protected by copyright. Copying for private or commercial purposes, in part or in whole, is not permitted unless authorised by AUDI AG. AUDI AG does not guarantee or accept any liability with respect to the correctness of information in this document. Copyright by AUDI AG.

- -> When the ATF has reached a temperature of 35°C, unscrew ATF inspection plug - arrow 1-.

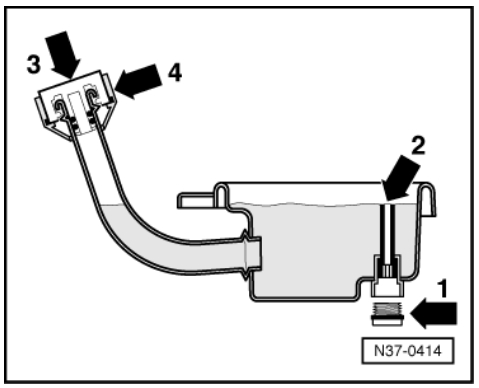

-> At first the ATF present in the overflow pipe -arrow 2- will run out.

Note:

There is always a small amount of ATF in the overflow pipe. This should not be confused with the small quantity of ATF which will come out if the ATF level is correct.

- Check that the overflow pipe is screwed in all the way (2 Nm; 5 mm hexagon socket).

- If ATF comes out at the inspection plug before the ATF has reached a temperature of 40°C, the ATF level is correct.

Note:

The ATF inspection plug must be screwed in again before the ATF reaches a temperature of 45°C1).

1)50°C for tropical countries

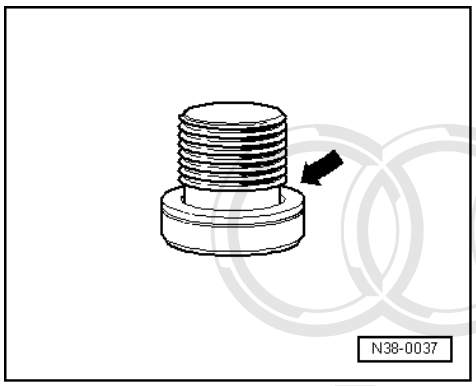

- -> Cut open seal -arrow- on plug using side-cutters. Fit new seal.
- Tighten plug to 15 Nm.

Protected copyright applying for private or commercial purposes, in part or in whole, is not permitted unless authorized by AUDI AG. AUDI AG does not guarantee or accept any liability with respect to the correctness of information in this document. Copyright by AUDI AG.

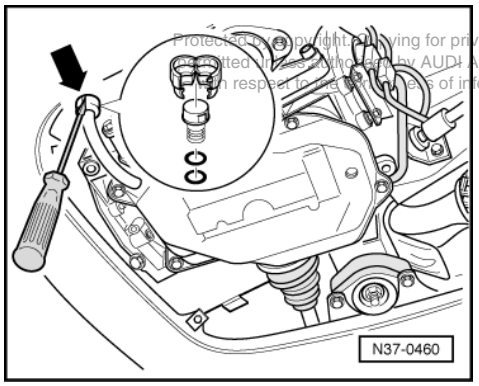

- If no ATF comes out at the inspection plug and the ATF has reached a temperature of 40°C, the ATF level is too low.

- -> Lever off plug securing cap -arrow- with a screwdriver. The cap locking device will be destroyed, when doing this therefore always renew cap.
- Pull plug out of filler pipe.

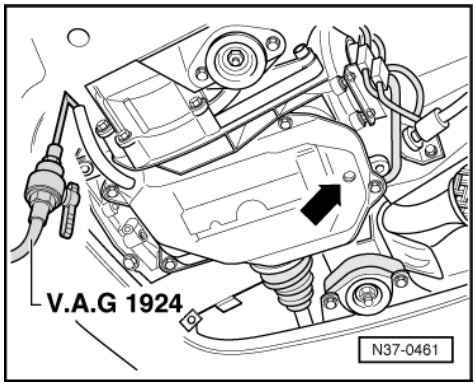

- -> Fill with ATF using V.A.G 1924, until ATF runs out of level hole -arrow-.

Warning!
If the ATF level is too high or too low it will adversely affect the operation of the gearbox.

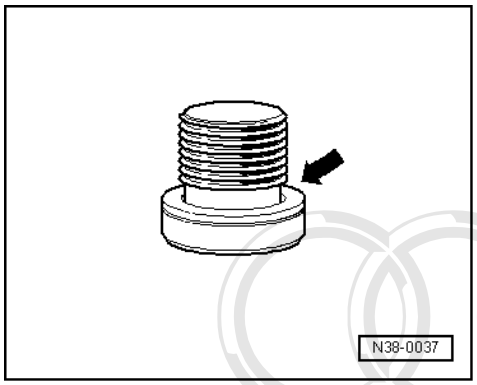

- -> Cut open seal -arrow- on plug with side-cutters. Fit new seal.

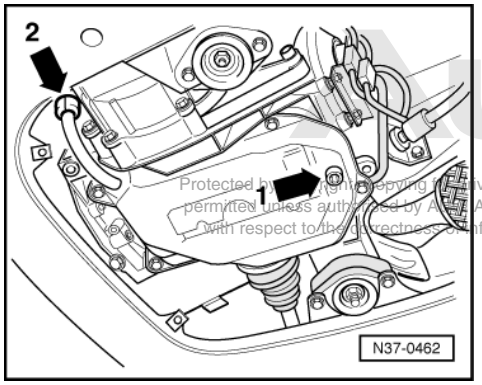

Protected by copyright. Copying for private or commercial purposes, in part or in whole, is not permitted unless authorised by AUDI AG. AUDI AG does not guarantee or accept any liability with respect to the correctness of information in this document. Copyright by AUDI AG.

- -> Tighten plug -arrow 1- to 15 Nm.
- Fit plug on filler pipe and secure with a new cap -arrow 2-.
- Lock cap.

Warning!
Always renew cap. The cap secures the plug.

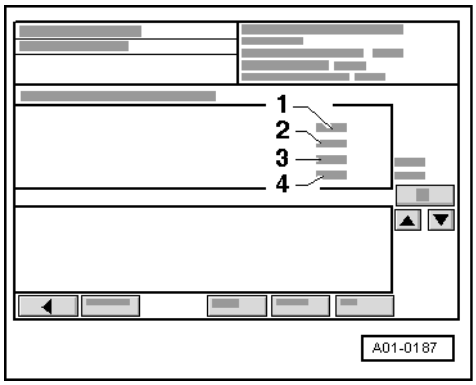

-> Display on VAS 5051:

- Press the ◂ button to exit from the function "08 - Read data block".
- Select diagnosis function "06 - End output".
- Switch off ignition and unplug the diagnostic connector.

4.3 - Changing ATF or filling up after repairs

Notes:

- Observe environmental requirements for disposal.
- The engine must not be started and the vehicle must not be towed if there is no ATF in the gearbox!

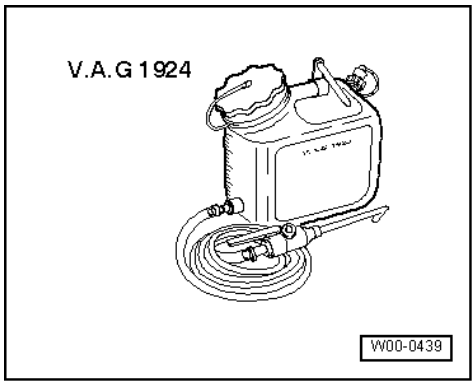

Special tools and workshop equipment required

- ATF filling system V.A.G 1924
- Drip tray

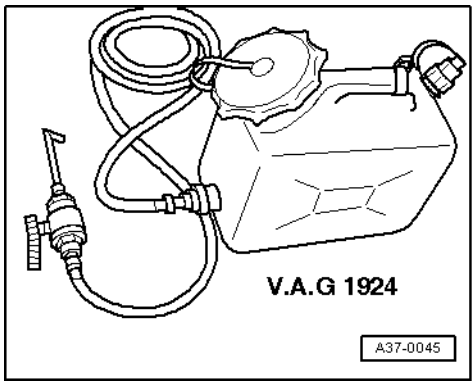

Work sequence

- Engine not running

- -> Secure reservoir of ATF filling system V.A.G 1924 at the highest possible point on the vehicle.
- Raise vehicle.

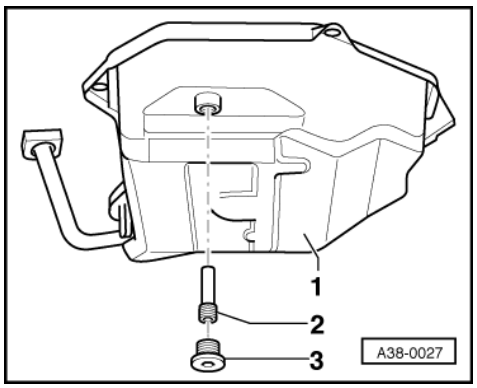

Protected by copyright. Copying for private or commercial purposes, in part or in whole, is not permitted unless authorised by AUDI AG. AUDI AG does not guarantee or accept any liability with respect to the correctness of information in this document. Copyright by AUDI AG.

- Place container under the gearbox.
- -> Remove ATF inspection plug -3- and overflow pipe -2- (5 mm hexagon socket).
- Drain ATF.
- Screw overflow pipe -2- in again onto stop (tightening torque: 2 Nm).

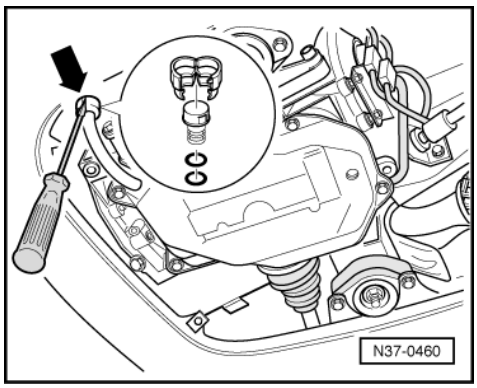

- -> Lever off plug securing cap -arrow- with a screwdriver. The cap locking device will be destroyed, when doing this therefore always renew cap.
- Pull plug out of filler pipe.

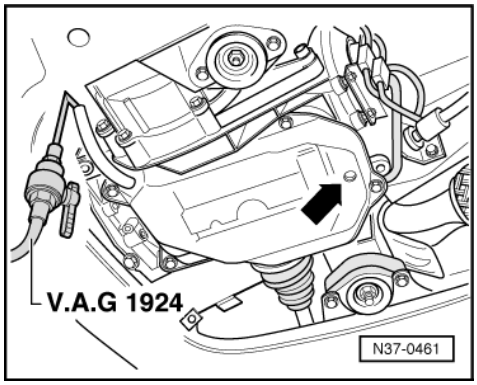

Filling up ATF

Note:

The ATF temperature must not be higher than 35 °C at the start of the filling procedure.

- -> Fill with ATF using V.A.G 1924, until ATF runs out of level hole -arrow-.
- Shift selector lever into "P" position.
- Start the engine.
- With engine running, continue adding ATF until ATF comes out at inspection hole.

Warning!
If the ATF level is too high or too low it will adversely affect the operation of the gearbox.

- With the engine idling, press the brake pedal and shift the selector lever through all the selector lever positions, leaving the selector lever 2 - 3 seconds in each position.
- Shift selector lever into "P" position.
- Check and top up ATF level =>from Page 62 .

Protected by copyright. Copying for private or commercial purposes, in part or in whole, is not permitted unless authorised by AUDI AG. AUDI AG does not guarantee or accept any liability with respect to the correctness of information in this document. Copyright by AUDI AG.

Note:

Observe all notes and test requirements as for "Checking ATF level".

5 - Gearbox with selector elements

5.1 - Gearbox with selector elements

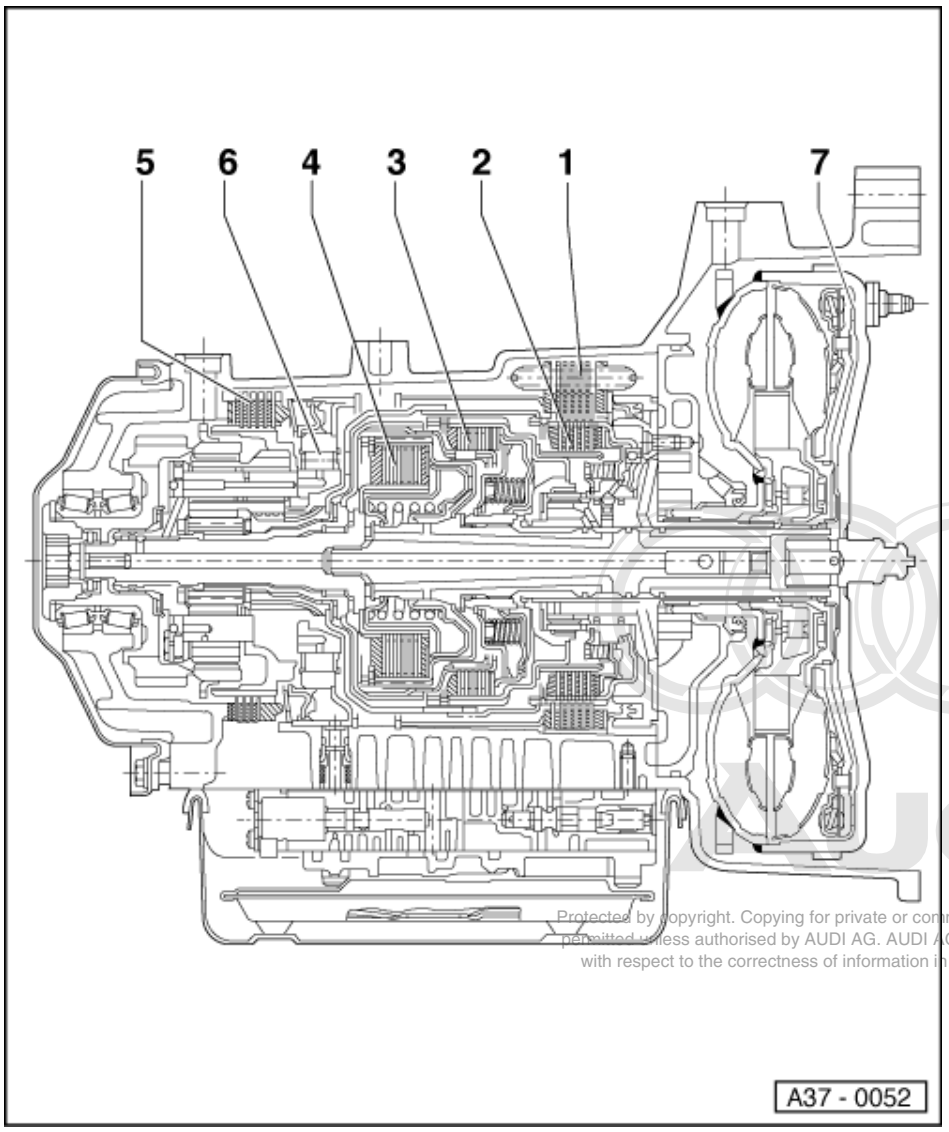

Protected by copyright. Copying for private or commercial purposes, in part or in whole, is not permitted unless authorised by AUDI AG. AUDI AG does not guarantee or accept any liability with respect to the correctness of information in this document. Copyright by AUDI AG.

Position of coupling elements

1 = 2nd and 4th gear brake -B2-

2 = Reverse gear clutch -K2-

3 = 1st to 3rd gear clutch -K1-

4 = 3rd and 4th gear clutch -K3-

5 = Reverse gear brake -B1-

6 = Free wheel clutch

7 = Torque converter lock-up clutch (Wk)

The following table shows which coupling elements are operated in the individual gears to help you deal with complaints regarding poor acceleration and speed performance or generally with drive train faults. The table makes it possible to determine which coupling elements are not operating properly.

5.2 - Position of coupling elements

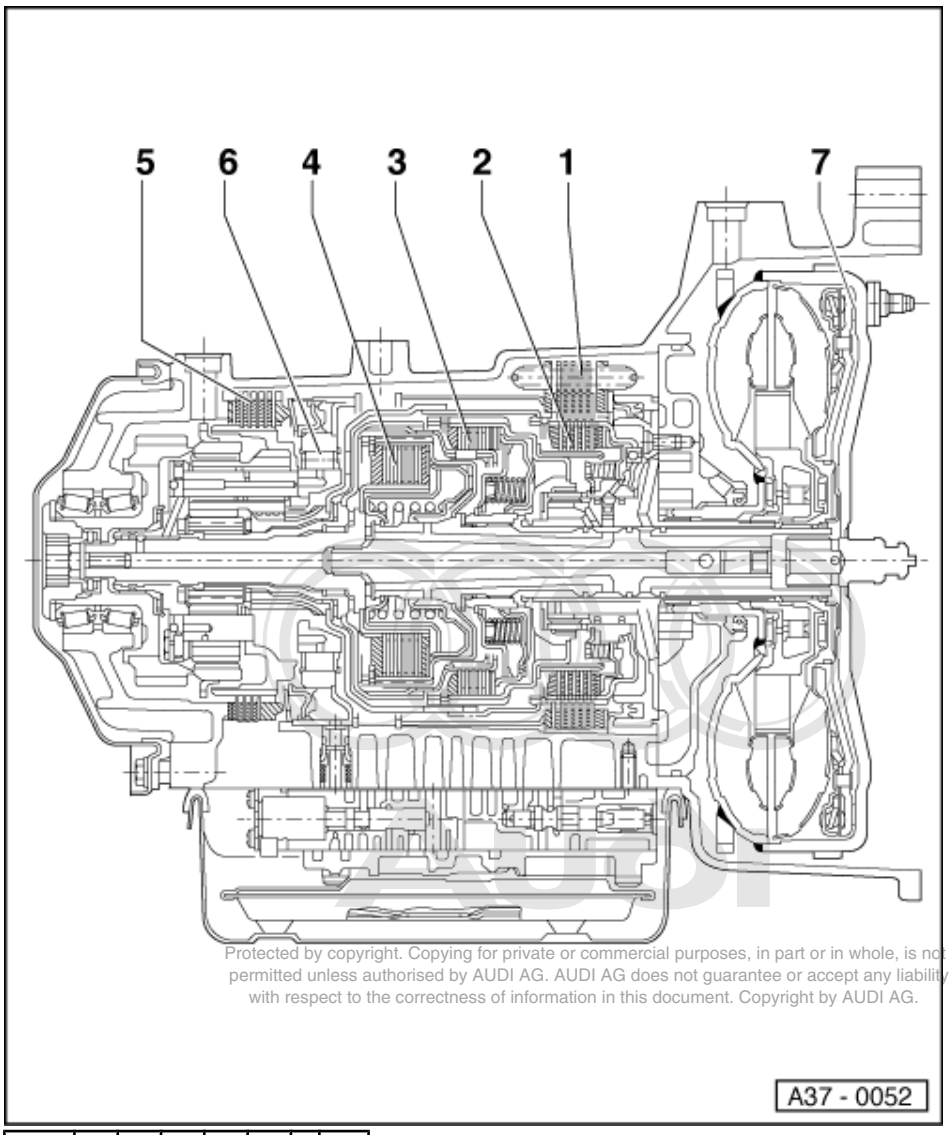

Protected by copyright. Copying for private or commercial purposes, in part or in whole, is not permitted unless authorised by AUDI AG. AUDI AG does not guarantee or accept any liability with respect to the correctness of information in this document. Copyright by AUDI AG.

Gear	B1	B2	K1	K2	K3	F	Wk
R	X			X			
1H			X			X	
1M			X			X	X
2H		X	X				
2M		X	X				X
3H			X		X		
3M			X		X		X
4H		X			X		
4M		X			X		X

X = clutches, brakes or free wheel engaged
H = hydraulic

X = clutches, brakes or free wheel engaged M = mechanical

Before starting repairs to the gearbox, first carry out the self-diagnosis.

=> Automatic gearbox 01N, Self-diagnosis; Repair group 01; Performing self-diagnosis Performing self-diagnosis

6 - Dismantling and assembling gearbox

6.1 - Dismantling and assembling gearbox

- Observe general repair instructions=> Page 14 .

6.2 - Rules for cleanliness when working on the automatic gearbox

- Thoroughly clean connections and the surrounding area before disconnecting.
- Place removed parts on a clean surface and cover over. Use plastic sheeting or paper. Do not use fluffing cloths.
- Carefully cover over or plug opened components if the repair cannot be completed immediately.
- Install only clean parts: do not remove replacement parts from their wrapping until just before installing.
- Always replace O-rings, seals and gaskets.
- Lightly lubricate O-rings with ATF before fitting to prevent the rings being trapped and damaged when components are installed.
- Do not use any other lubricants in or on components that are lubricated with ATF. Otherwise, problems may occur with the hydraulic actuation of the gearbox.
- After installing, check the gear oil level and ATF level. Top up if necessary.

Protected by copyright. Copying for private or commercial purposes, in part or in whole, is not permitted unless authorised by AUDI AG. AUDI AG does not guarantee or accept any liability with respect to the correctness of information in this document. Copyright by AUDI AG.

7 - Removing and installing ATF pipes

7.1 - Removing and installing ATF pipes

Notes:

- Observe rules for cleanliness when working on the automatic gearbox=> Page 71 .
- Thoroughly clean connections and immediate vicinity before loosening.
- Insert ATF pipes completely by hand onto stop in gearbox or cooler and then screw on.
- After renewing ATF pipes check ATF level
  => Checking ATF level and topping up, Page 61 .

7.2 - Petrol engine without air conditioner

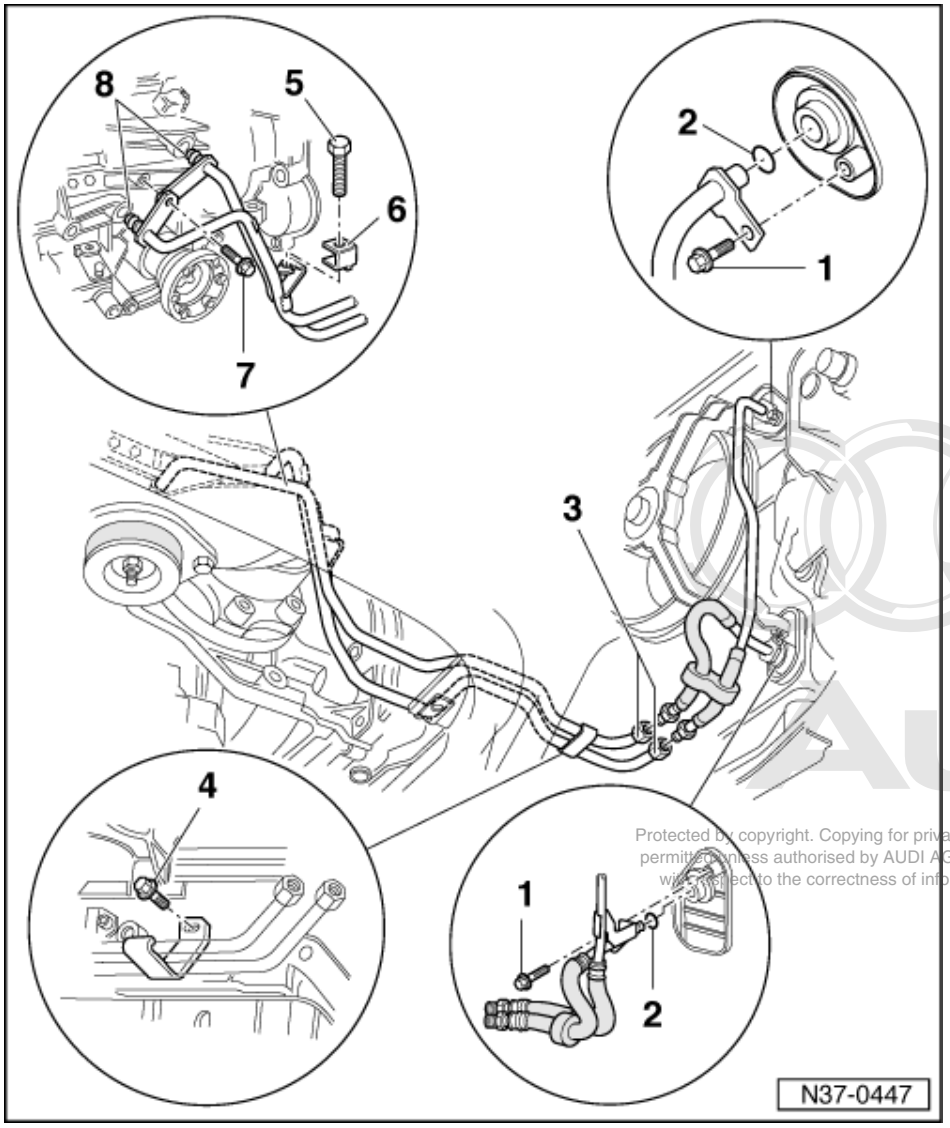

Protected by copyright. Copying for private or commercial purposes, in part or in whole, is not permitted unless authorised by AUDI AG. AUDI AG does not guarantee or accept any liability with respect to the correctness of information in this document. Copyright by AUDI AG.

1 **Bolt - 5 Nm**
- Insert pipes completely first and then tighten

2 **O-ring**
- Renew
- Lubricate with ATF

3 **Union nut, 30 Nm**

4 **Bolt - 25 Nm**

5 **Bolt - 10 Nm**

6 **Bracket**

7 **Bolt - 20 Nm**
- Insert pipes completely first and then tighten

8 **O-ring**
- Renew
- Lubricate with ATF

7.3 - Petrol engine with air conditioner, TDI engine

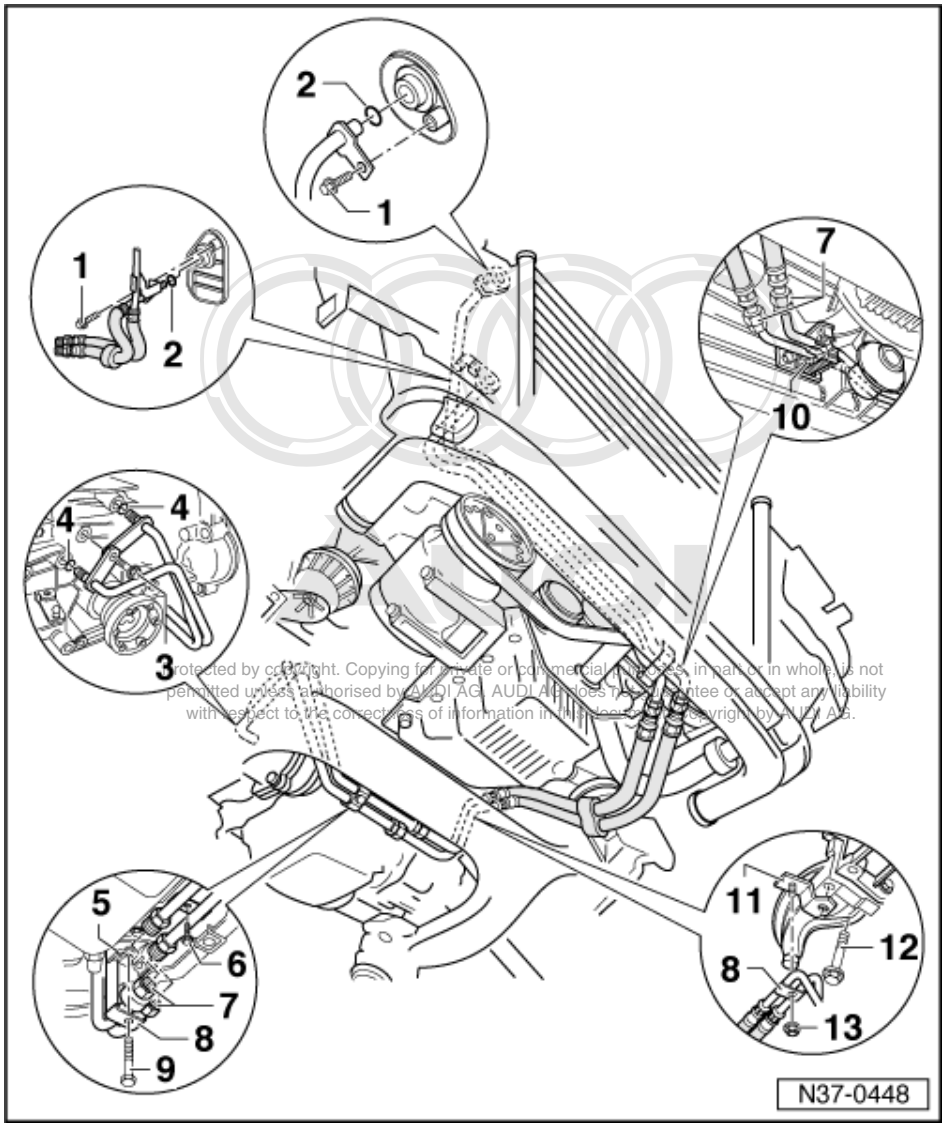

Protected by copyright. Copying for private or commercial purposes, in part or in whole, is not permitted unless authorised by AUDI AG. AUDI AG does not guarantee or accept any liability with respect to the correctness of information in this document. Copyright by AUDI AG.

1 **Bolt - 5 Nm**
- Insert pipes completely first and then tighten

2 **O-ring**
- Renew
- Lubricate with ATF

3 **Bolt - 20 Nm**
- Insert pipes completely first and then tighten

4 **O-ring**
- Renew
- Lubricate with ATF

5 **Bracket**
- Insert onto stop on gearbox

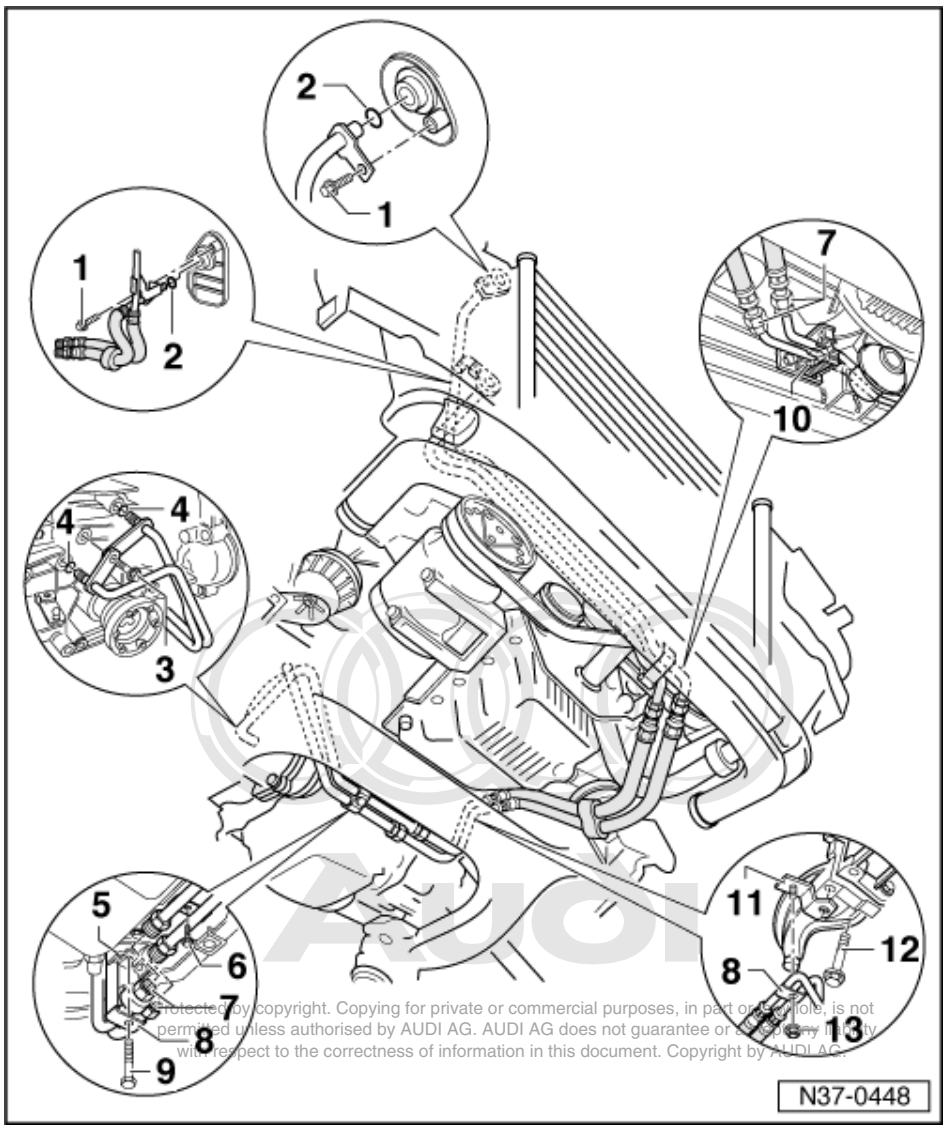

Protected by copyright. Copying for private or commercial purposes, in part or in whole, is not permitted unless authorised by AUDI AG. AUDI AG does not guarantee or assume any liability with respect to the correctness of information in this document. Copyright by AUDI AG.

6 Bolt - 10 Nm
7 Union nut, 30 Nm
8 Clip
9 Bolt - 5 Nm
10 Bracket
11 Bracket
- On engine/gearbox support

12 Bolt
13 Nut - 5 Nm

7.4 - Cleaning ATF pipes and ATF cooler

Special tools and workshop equipment required

- Compressed air gun (commercially available)
- Drip tray

Notes:

- Observe notes on "Removing and installing ATF pipes" => Page 71 .

- Before fitting a replacement gearbox, always blow through the ATF cooler and ATF pipes with compressed air (not more than 10 bar).
- To install, first insert ATF pipes into gearbox or cooler by hand as far as they will go, then bolt on.

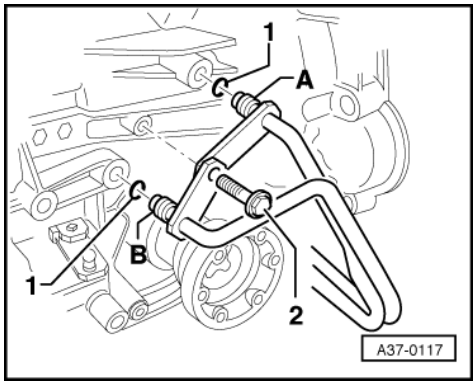

Protected by copyright. Copying for private or commercial purposes, in part or in whole, is not permitted unless authorised by AUDI AG. AUDI AG does not guarantee or accept any liability with respect to the correctness of information in this document. Copyright by AUDI AG.

Work sequence

- Place a drip tray underneath.
- Remove brackets for rigid ATF pipes on gearbox and engine =>from Page 73 .
- -> Unscrew bolt -2-.
- Pull ATF pipes off gearbox.
- Connect a hose to ATF pipe -A- and secure with a hose clamp. Hang other end of hose in a suitable container.

Warning!
Wear eye protection

- Blow through ATF pipe -B- with a compressed air gun.
- Change hose from ATF pipe -A- over to ATF pipe -B- and repeat sequence.
- Secure ATF pipes again.
- Check and top up ATF level =>Page 61 .

8 - Dismantling and assembling planetary gearbox

8.1 - Dismantling and assembling planetary gearbox

8.2 - Dismantling planetary gearbox - overview

Notes:

- An exchange component containing all the selector elements and the valve body is available for repair work on the automatic gearbox 01N=>Page 6 .
- The exchange component is assigned to the gearbox code letters => from Page 2 .
- Fitting instructions=>from Page 86 (assembling planetary gearbox).
- Order of removal: Item 2 , 19 , 18 , 23 , 8 , 7 , 6 , 5 , 22 , 21 , 20 , 4 , 3 , 1 , 9 , 10 , 11 , 12 , 13 , 14 , 15 , 16 .

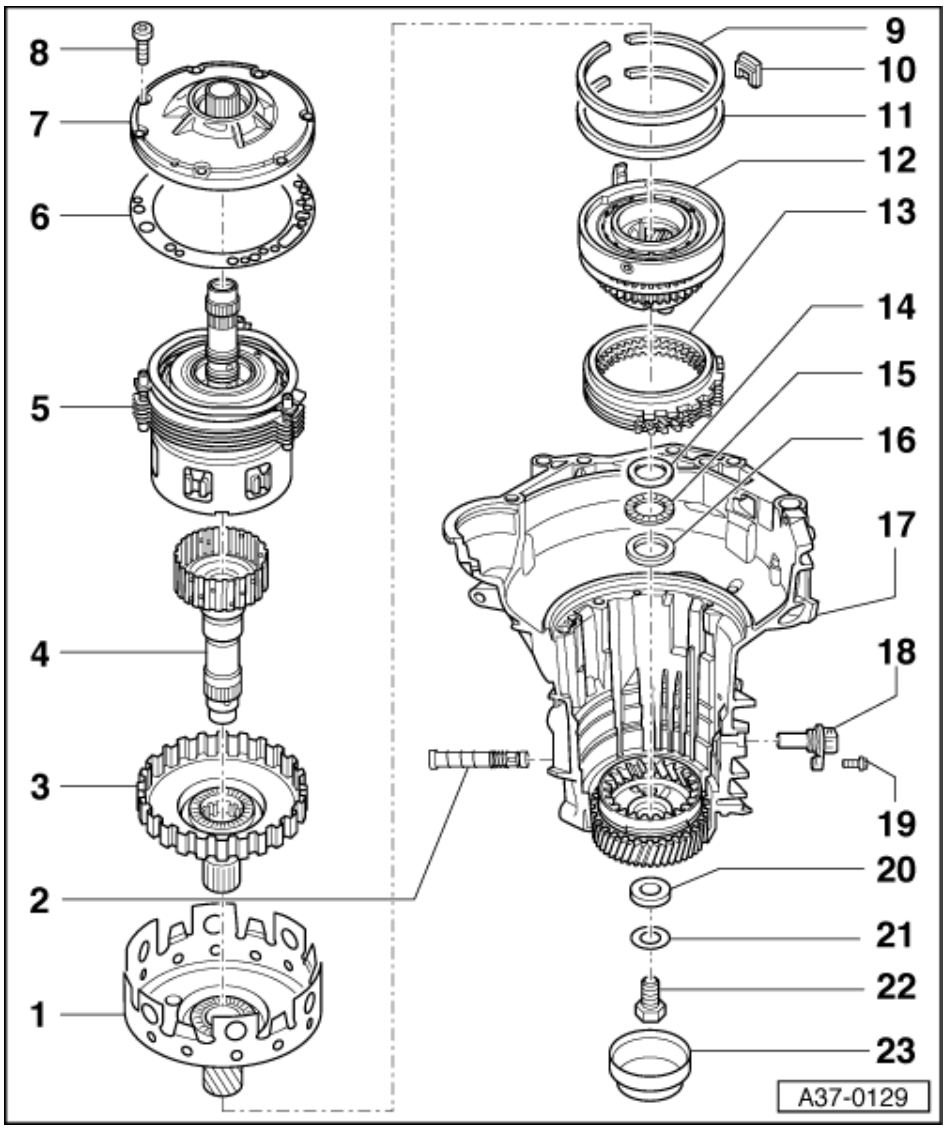

1 **Large sun gear**
- Pull up and out

2 **Sealing plug**
- Take out before removing the free wheel => Removing valve body, Page 177

3 **Large input shaft**
- Lift up and out

4 **Small input shaft**
- To remove, unscrew bolt -Item 22 -
- Pull up and out

Protected by copyright. Copying for private or commercial purposes, in part or in whole, is not permitted unless authorised by AUDI AG. AUDI AG does not guarantee or accept any liability with respect to the correctness of information in this document. Copyright by AUDI AG.

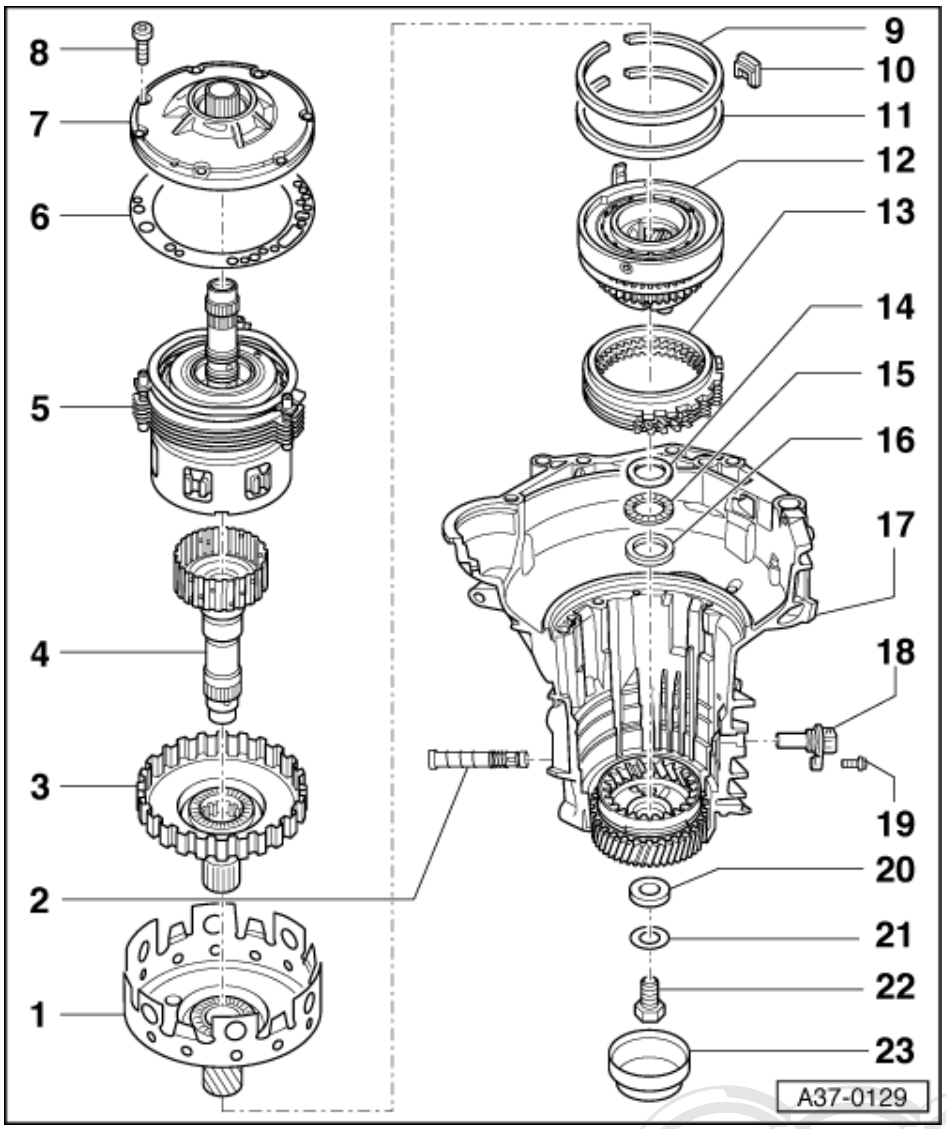

5 Assembly

- With 3rd and 4th gear clutch -K3- with turbine shaft
- With 1st to 3rd gear clutch -K1-
- On some gearboxes the clutches -K1- and -K3- may be pressed together
- Pressing -K1- off -K3- => Page 86
- With reverse gear clutch -K2-
- With 2nd and 4th gear brake -B2-
- With supporting tube for -B2-
- Lift up and out together at the turbine shaft

6 Gasket

- Take off

7 ATF pump

- To remove, unscrew all the bolts -Item 8 -
- To press off the pump, screw two M8 bolts evenly into the two threaded holes

Protected by copyright. Copying for private or commercial purposes, in part or in whole, is not permitted unless authorised by AUDI AG. AUDI AG does not guarantee or accept any liability with respect to the correctness of information in this document. Copyright by AUDI AG.

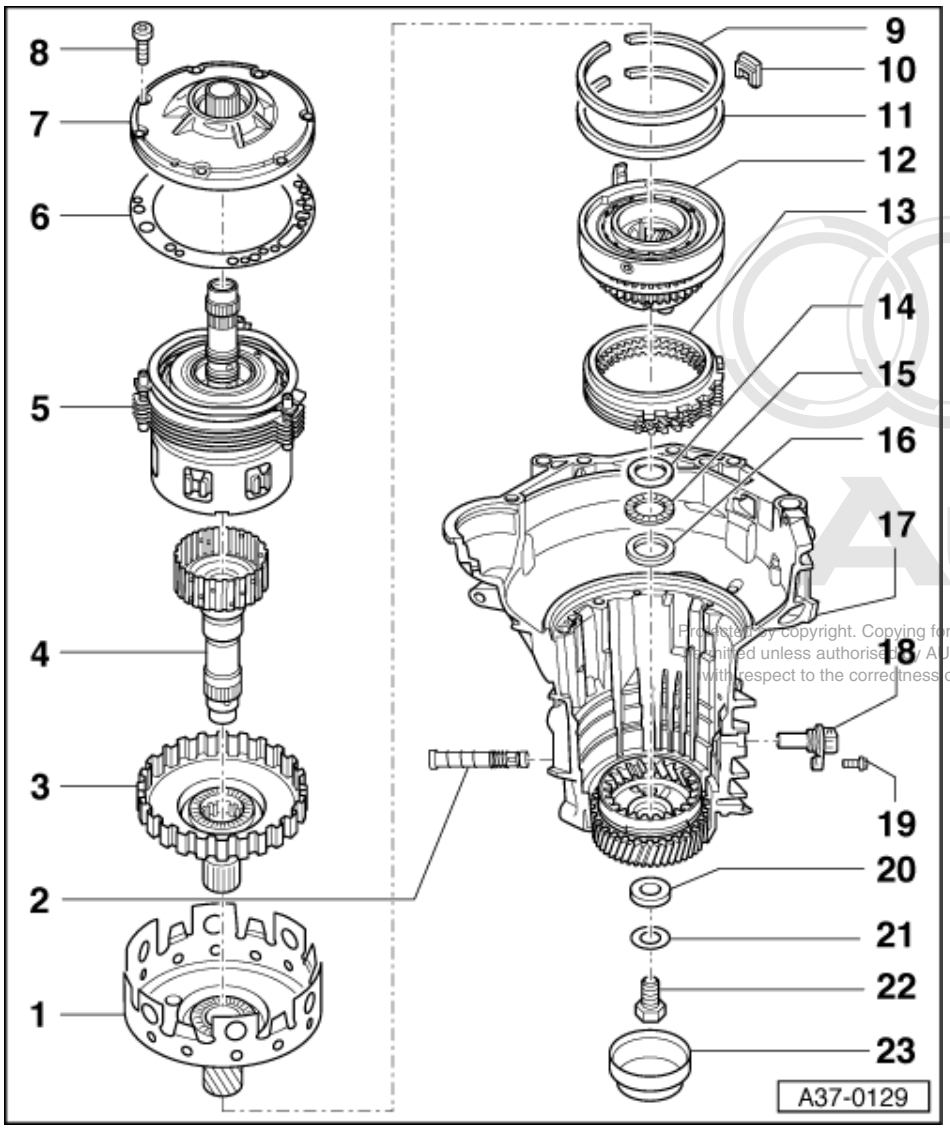

Protected by copyright. Copying for private or commercial purposes, in part or in whole, is not permitted unless authorised by AUDI AG. AUDI AG does not guarantee or accept any liability with respect to the correctness of information in this document. Copyright by AUDI AG.

8 Bolt

- For ATF pump

9 Circlip

- For supporting tube for -B2-
- Lift out

10 Baffle block

- Remove after lifting out circlip, -Item 9 -

11 Circlip

- For free wheel
- Lift out

12 Free wheel

- With planet carrier
- Before removing free wheel, remove valve body and sealing plug -Item 80 and remove gearbox speed sender -G38, -Item 18 -
- The small sun gear can only be taken out of the planet carrier on gearboxes with code lettersDMU, DMV, DMX, EPT, EPU, EPV.

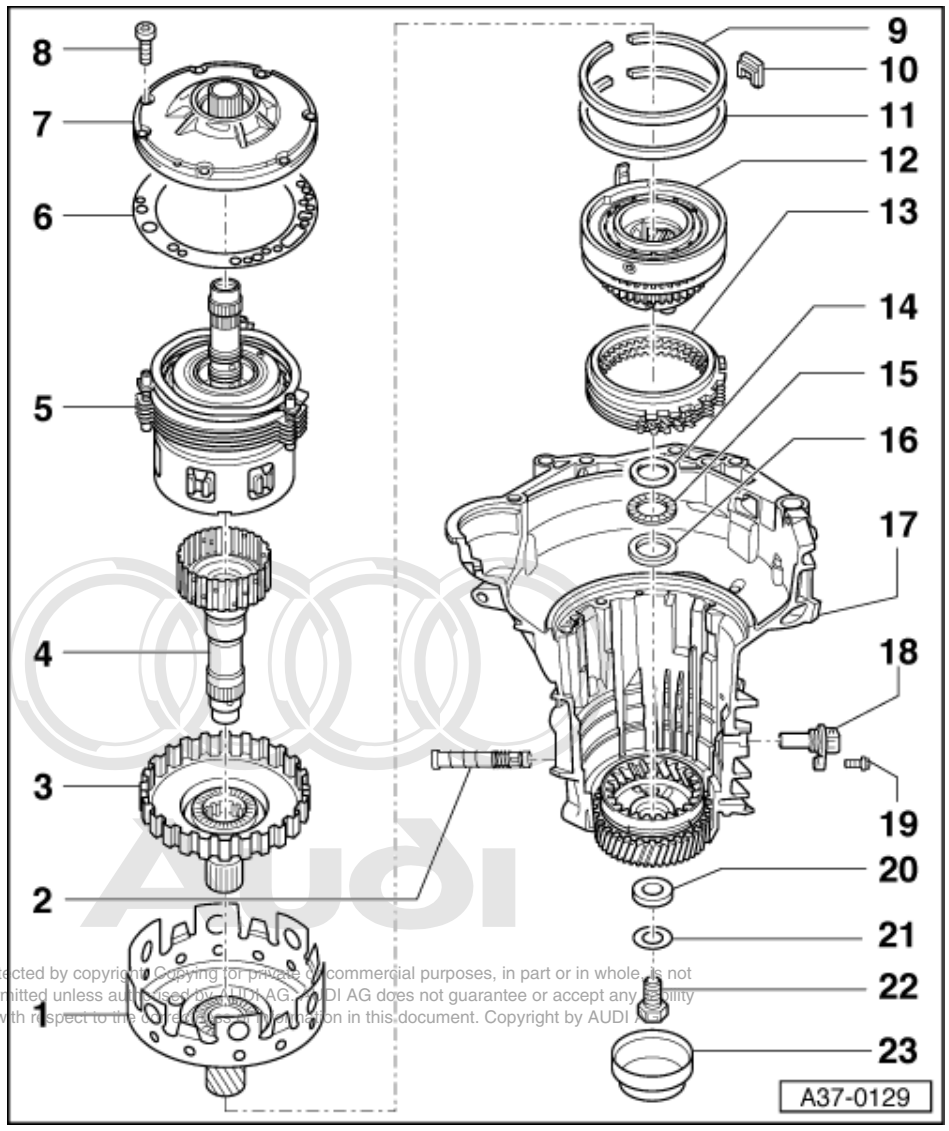

Protected by copyright. Copying for private or commercial purposes, in part or in whole, is not permitted unless authorised by AUDI AG. AUDI AG does not guarantee or accept any liability with respect to the correctness of information in this document. Copyright by AUDI AG.

13 Reverse gear brake -B1-

- Remove pressure plate together with plates and shim(s) from the top

14 Washer for axial needle bearing

- Take off

15 Axial needle bearing

- Take off

16 Washer for axial needle bearing

- Take off

17 Gearbox housing with input gear

- Input gear does not have to be removed when dismantling planetary gearbox
- Removing and installing input gear => Page 206

18 Gearbox speed sender -G38

- Take out before removing the free wheel

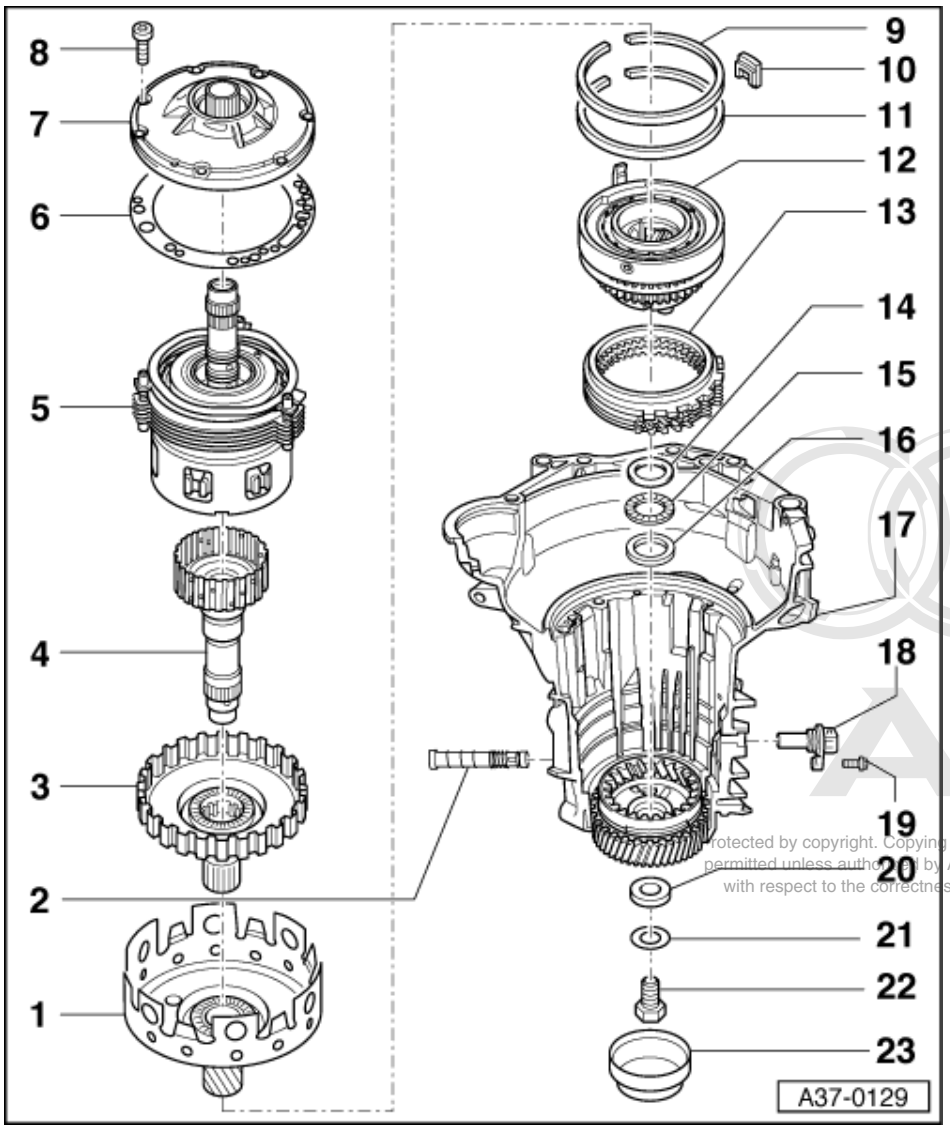

19 Screw

20 Shim for planet carrier

- Take off after slackening the bolt -Item 22 -

21 Washer

- Take off after slackening the bolt -Item 22 -

22 Bolt

- For small input shaft
- Unscrew to remove

23 Sealing cap

- Knock out with chisel
- Cannot be removed without being damaged

8.3 - Dismantling planetary gearbox

- Drain ATF=>Page 67 .
- Remove gearbox => Page 47 .
- Take out torque converter.
- Secure gearbox to repair stand=>Page 60

Protected by copyright. Copying for private or commercial purposes, in part or in whole, is not permitted unless authorised by AUDI AG. AUDI AG does not guarantee or accept any liability with respect to the correctness of information in this document. Copyright by AUDI AG.

- Remove valve body => Page 177 .

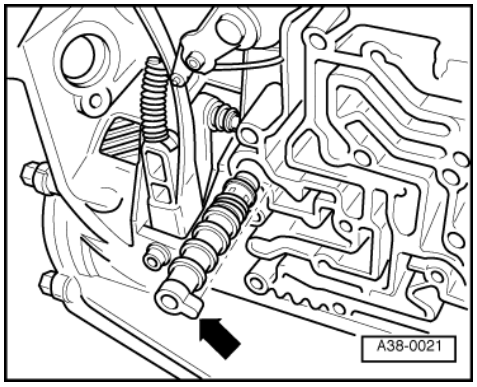

- -> Take out sealing plug -arrow-.
- Remove gearbox speed sender -G38=>Page 192 .

Note:

The sealing plug and gearbox speed sender must be removed to prevent them from being damaged.

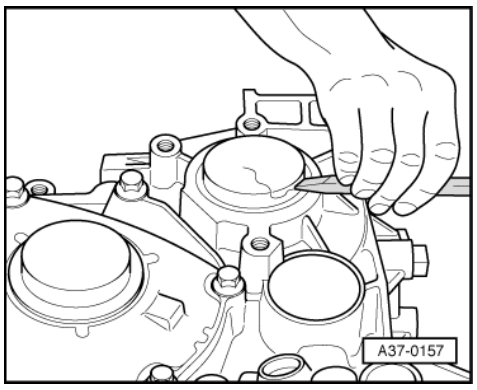

- -> Remove sealing cap.

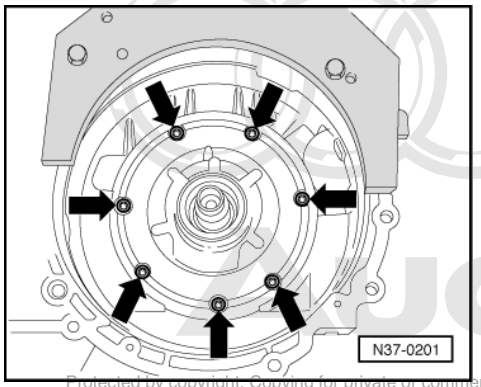

- -> Remove bolts -arrows- for ATF pump.

Protected by copyright. Copying for private or commercial purposes, in part or in whole, is not permitted unless authorised by AUDI AG. AUDI AG does not guarantee or accept any liability with respect to the correctness of information in this document. Copyright by AUDI AG.

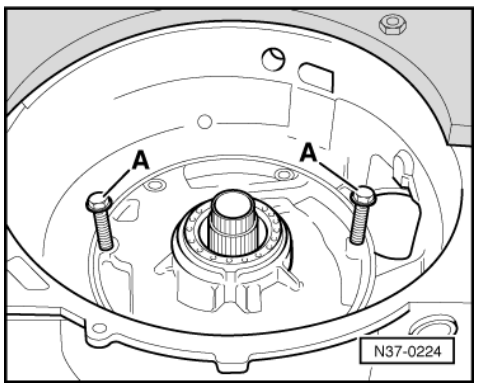

- -> To remove ATF pump screw in two M8 bolts -A- into the tapped holes of the ATF pump.
- Tighten the bolts -A- evenly to press ATF pump off gearbox housing and remove.
- Remove gasket, retaining ring and shim

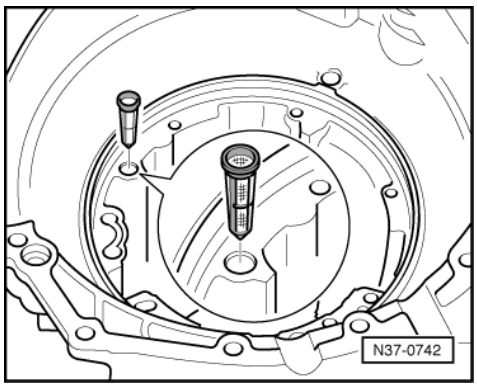

- -> Remove strainer if fitted.

Note:

The strainer is located in the return pipe of the ATF cooler. It cannot be retrofitted on earlier gearbox versions.

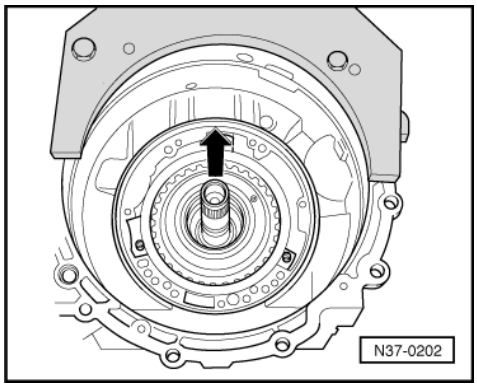

- -> Take hold of turbine shaft and pull out all the clutches together with supporting tube for -B2-, -B2- plates, springs and spring caps -arrow-.

Notes:

- On some gearboxes the clutches -K1- and -K3- may be pressed together.
- -K1- only has to be pressed off from -K3- if one of the clutches is being dismantled or renewed.
- Pressing -K1- off -K3- => Page 86 .

Protected by copyright. Copying for private or commercial purposes, in part or in whole, is not permitted unless authorised by AUDI AG. AUDI AG does not guarantee or accept any liability with respect to the correctness of information in this document. Copyright by AUDI AG.

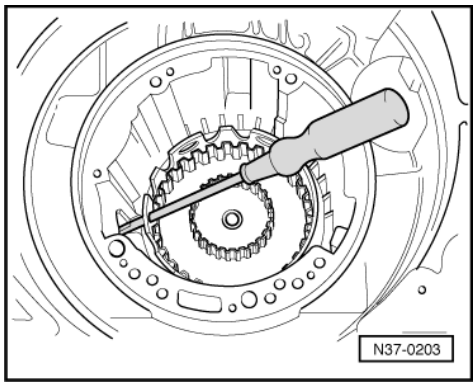

- Engage parking lock.
- -> To slacken the bolt for the small input shaft, insert a screwdriver through one of the holes of the large sun gear.

Note:

If it is not possible to engage the parking lock, use a second screwdriver to hold the large input shaft.

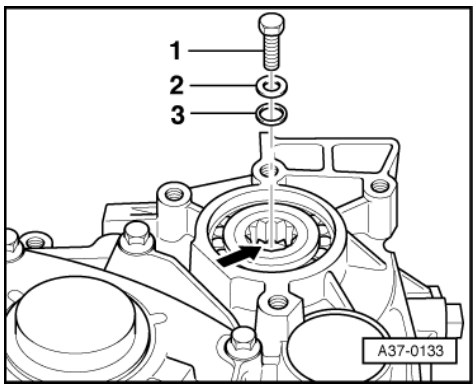

- -> Loosen bolt -1- for "small input shaft".
- Remove bolt with washer -2- and shim -3- for "small input shaft".
- Pull out small input shaft.

Note:

The axial needle bearing for the planet carrier remains in the gearbox/input gear.

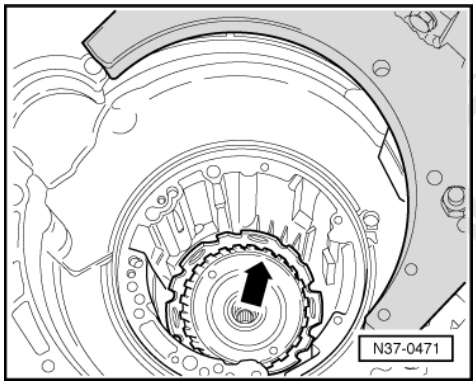

- -> Pull out large input shaft (arrow).

Protected by copyright. Copying for private or commercial purposes, in part or in whole, is not permitted unless authorised by AUDI AG. AUDI AG does not guarantee or accept any liability with respect to the correctness of information in this document. Copyright by AUDI AG.

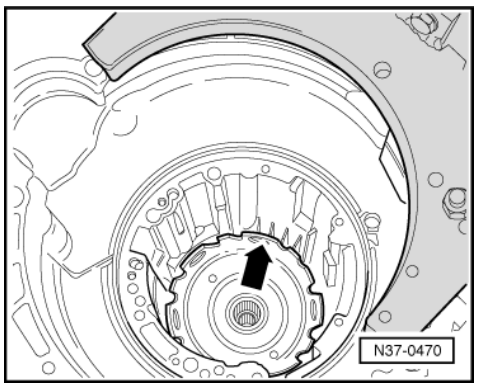

- -> Pull out large sun gear (arrow).

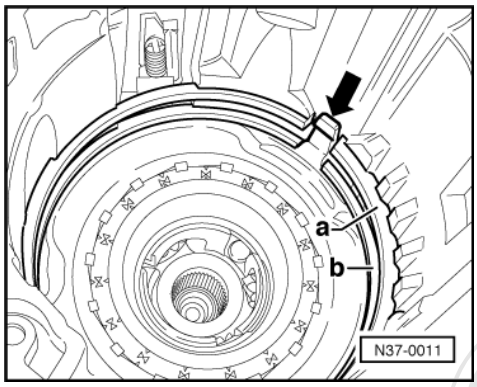

- -> Remove circlip -a- for supporting tube for -B2-.

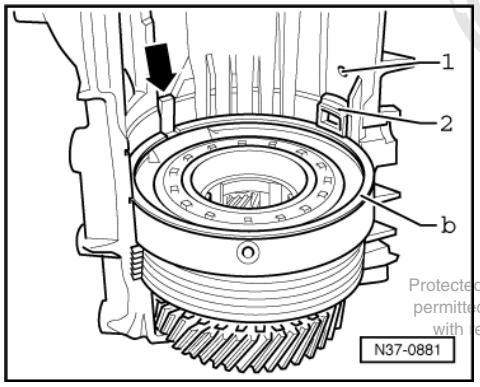

Protected by copyright. Copying for private or commercial purposes, in part or in whole, is not permitted unless authorised by AUDI AG. AUDI AG does not guarantee or accept any liability with respect to the correctness of information in this document. Copyright by AUDI AG.

- -> Pull off baffle block -2-.
- Remove free wheel circlip -b-.
- Take freewheel out of gearbox housing by pulling on freewheel retaining wedge -arrow- with pliers.

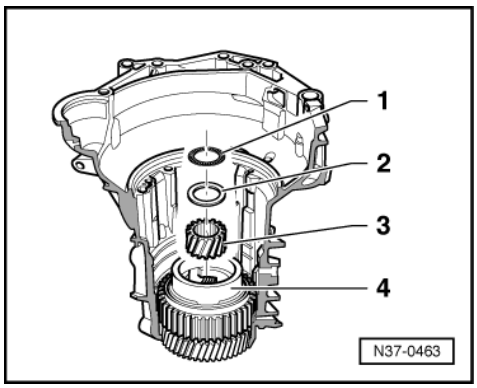

Gearboxes with code letters DMU,DMV,DMX, EPT, EPU, EPV:

- -> Take small sun gear with washer and axial needle bearing out of planet carrier.

1 - Axial needle bearing
2 - Washer for axial needle bearing
3 - Small sun gear
4 - Planet carrier

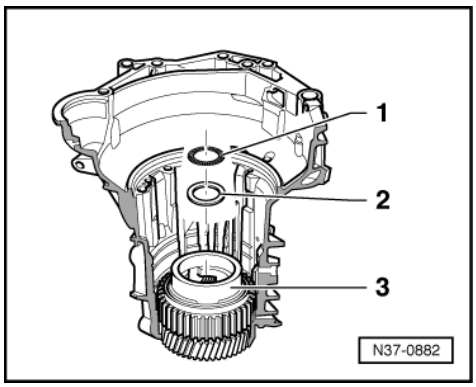

Gearboxes with other code letters:

- -> Remove axial bearing and washer from small sun gear of planet carrier.

1 - Axial needle bearing
2 - Washer for axial needle bearing
3 - Planet carrier (with integrated small sun gear)

All models

- Take hold of the inside of the planet carrier and pull it out together with free wheel and dished washer.
- Remove pressure plate, plates and shim(s) of the reverse gear brake -B1-.
- Take off axial bearing and washers.

Note:

Assembling planetary gearbox => Page 86 .

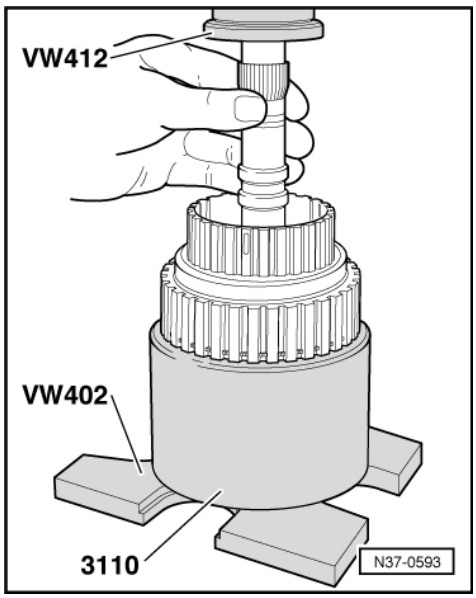

Protected by copyright. Copying for private or commercial purposes, in part or in whole, is not permitted unless authorised by AUDI AG. AUDI AG does not guarantee or accept any liability with respect to the correctness of information in this document. Copyright by AUDI AG.

Pressing clutch -K1- off -K3-

Notes:

- On some gearboxes the clutches -K1- and -K3- may be pressed together.
- -K1- only has to be pressed off from -K3- if one of the clutches is being dismantled or renewed.

- Ensure the tool press surface is flat and not damaged.
  - The stud in tube 3110 points towards thrust plate VW 402.
- -> Hold turbine shaft when pressing off.

Note:

Pressing -K1- onto -K3-=>Page 112 .

8.4 - Assembling planet carrier - overview

Notes:

- An exchange component containing all selector elements and the valve body is available for repair work on the automatic gearbox 01N =>Page 6 .
- The exchange component is assigned to the gearbox code letters => from Page 2 .

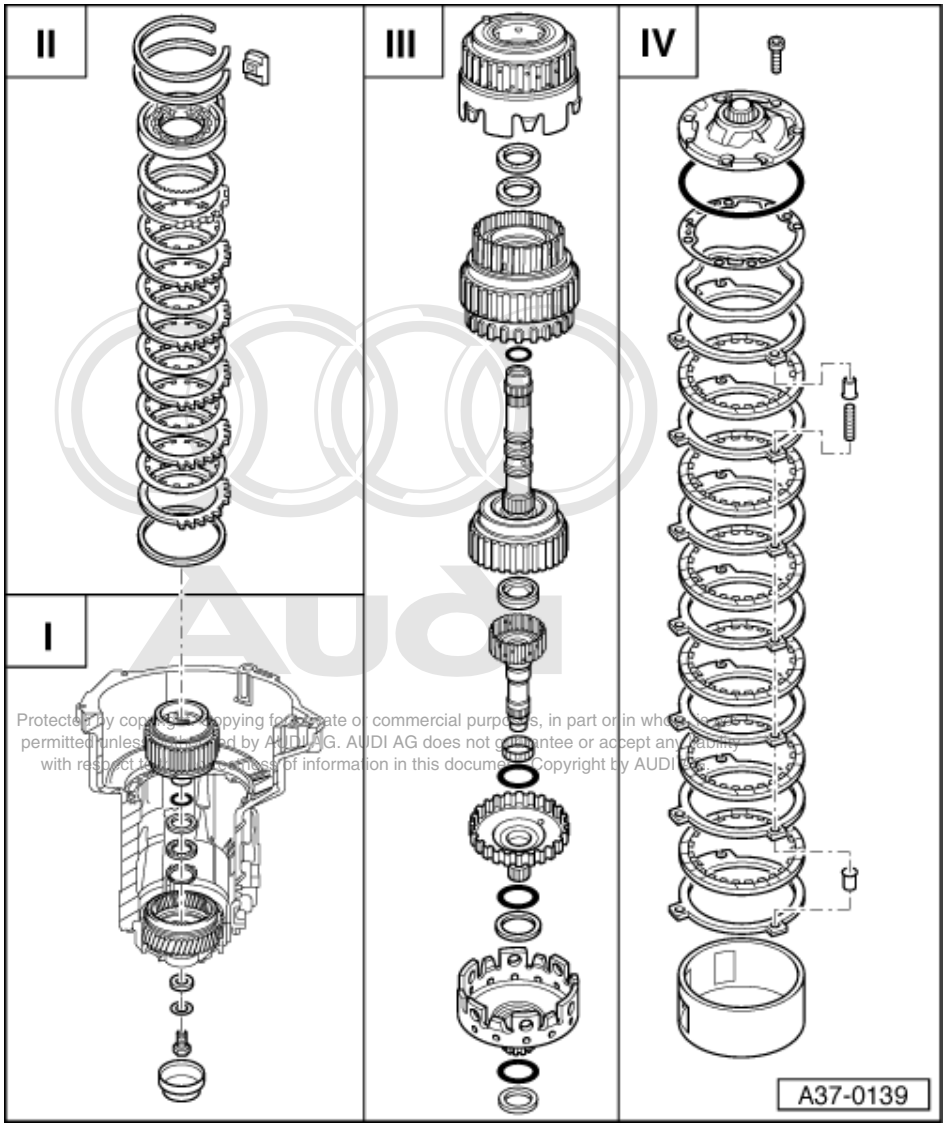

Protected by copyright. Copying for private or commercial purposes, in part or in whole, is not permitted unless authorised by AUDI AG. AUDI AG does not guarantee or accept any liability with respect to the correctness of information in this document. Copyright by AUDI AG.

I - Installing planet carrier=>Page 87
II - Installing components from reverse gear brake -B1- up to circlip for -B2- supporting tube=>Page 89
III - Installing components from large sun gear up to reverse gear clutch -K2- => Page 92
IV - Installing components from supporting tube for -B2- up to ATF pump=>Page 97

8.5 - I - Installing planet carrier

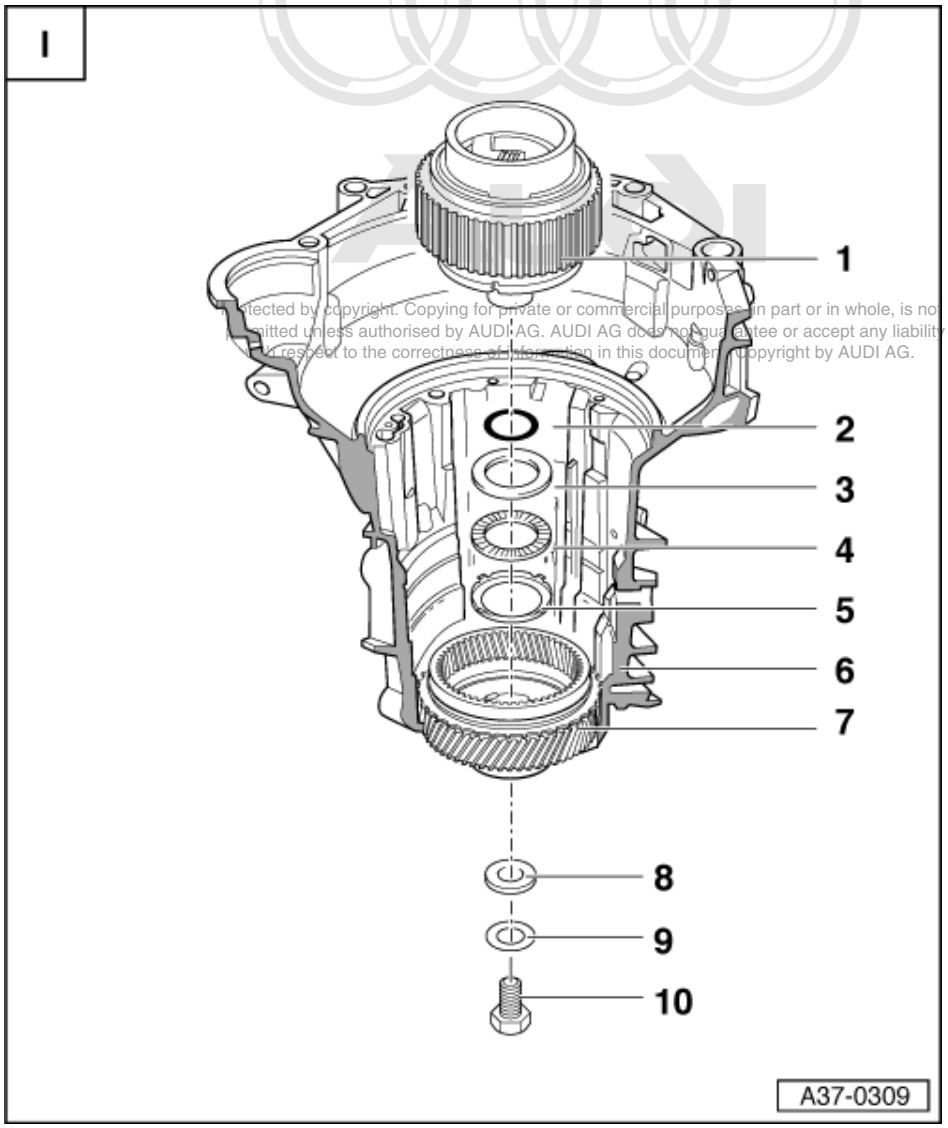

Protected by copyright. Copying for private or commercial purposes, in part or in whole, is not permitted unless authorised by AUDI AG. AUDI AG does not guarantee or accept any liability with respect to the correctness of information in this document. Copyright by AUDI AG.

=> Overview, Page 86

Note:

Assembling planetary gearbox

=> Page 101 .

1 Planet carrier

- Adjusting => Page 115
- The small sun gear can only be taken out of the planet carrier on gearboxes with code lettersDMU, DMV, DMX, EPT, EPU, EPV.

2 O-ring

- Renew
- Insert in planet carrier

3 Axial needle bearing washer

4 Axial needle bearing

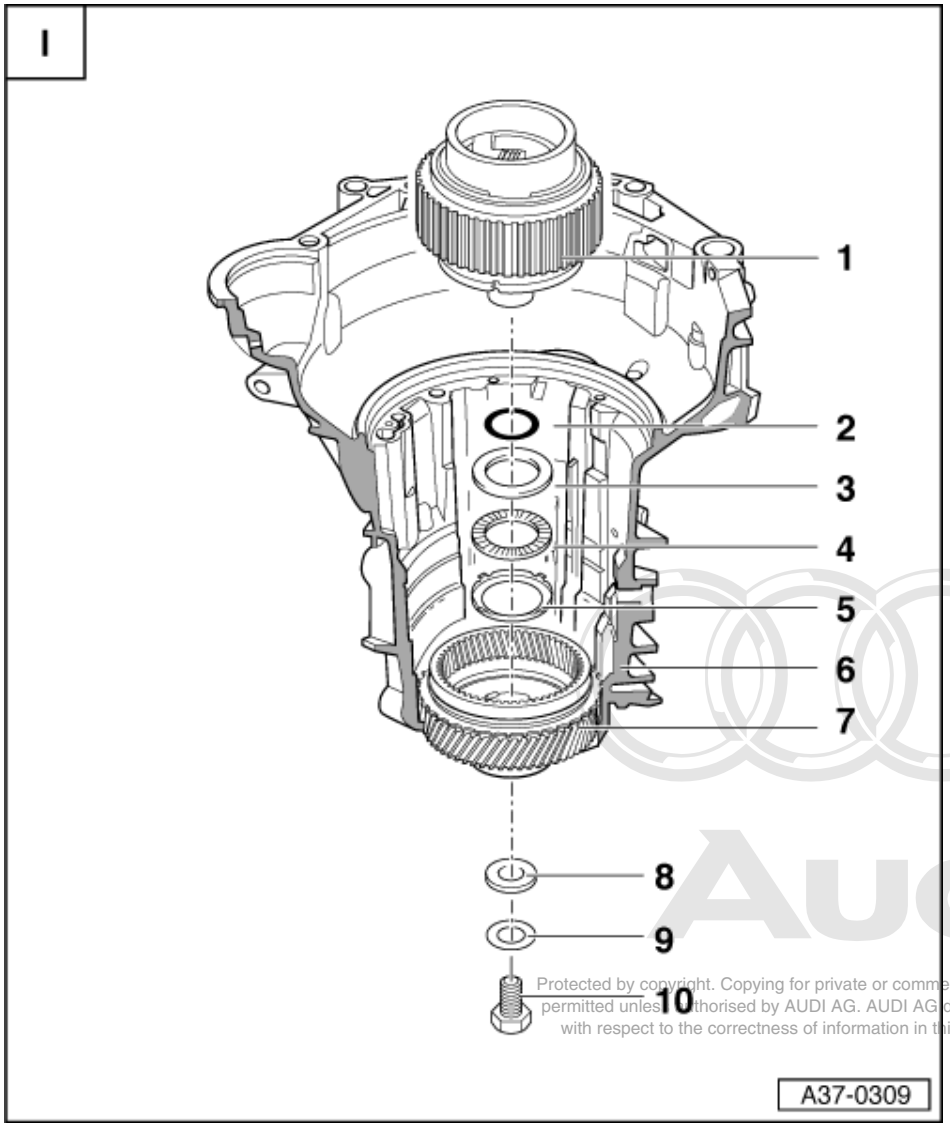

Protected by copyright. Copying for private or commercial purposes, in part or in whole, is not permitted unless authorised by AUDI AG. AUDI AG does not guarantee or accept any liability with respect to the correctness of information in this document. Copyright by AUDI AG.

5 Axial needle bearing washer

- Install with smooth side facing toward input gear

6 Gearbox housing with input gear installed

7 Input gear

- Do not remove to dismantle planetary gearbox
- Removing and installing input gear or axial needle bearing for planet carrier => Page 206

8 Planet carrier shim

- Determining thickness, => Adjusting planet carrier, Page 115

9 Washer

10 Bolt - 30 Nm

- For small input shaft

8.6 - II - Installing components from reverse gear brake -B1- up to circlip for -B2- supporting tube

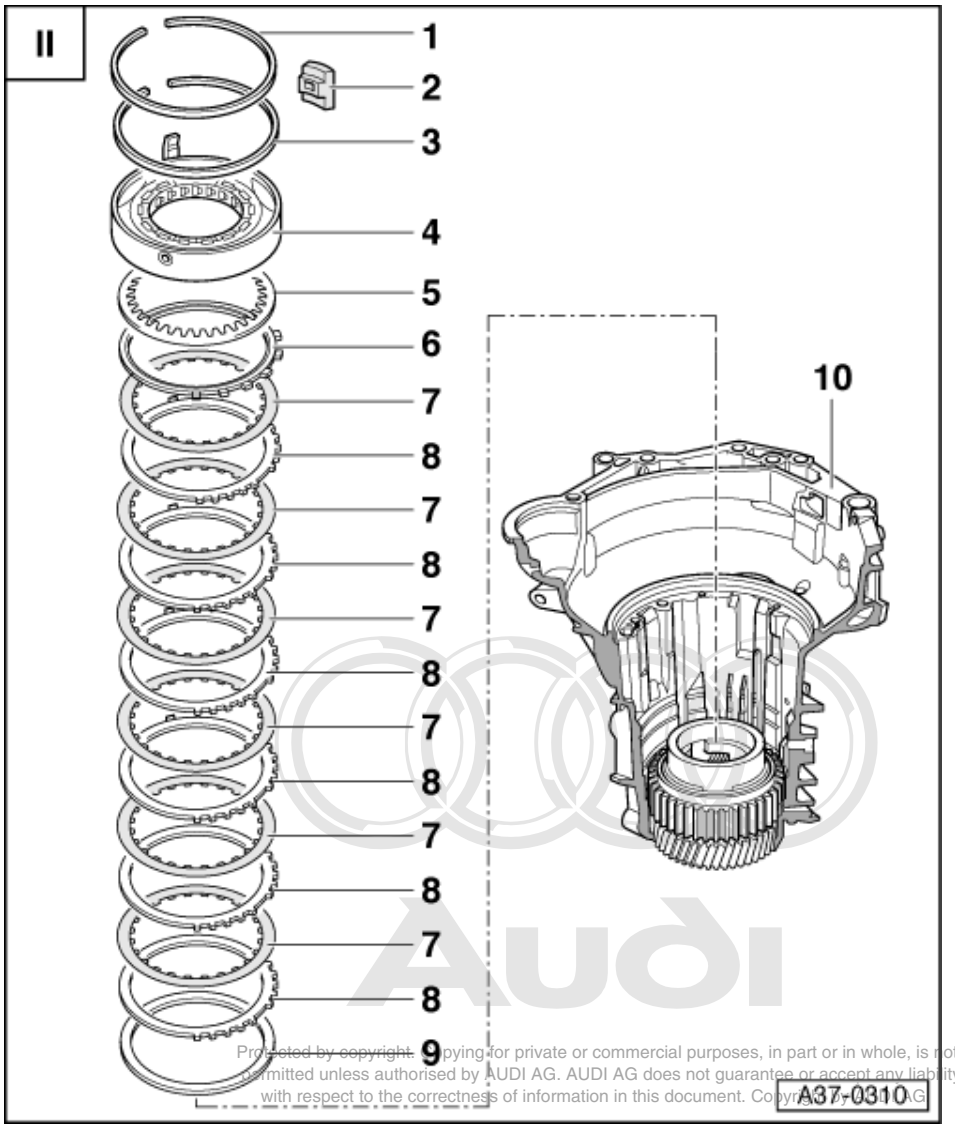

Protected by copyright. Copying for private or commercial purposes, in part or in whole, is not permitted unless authorised by AUDI AG. AUDI AG does not guarantee or accept any liability with respect to the correctness of information in this document. Copyright by AUDI AG.

=> Overview, Page 86

Note:

Assembling planetary gearbox

=> Page 101 .

1 Circlip

- For supporting tube -B2-
- Insert baffle block before fitting circlip
- Installation position: Circlip open ends faces free wheel retaining wedge

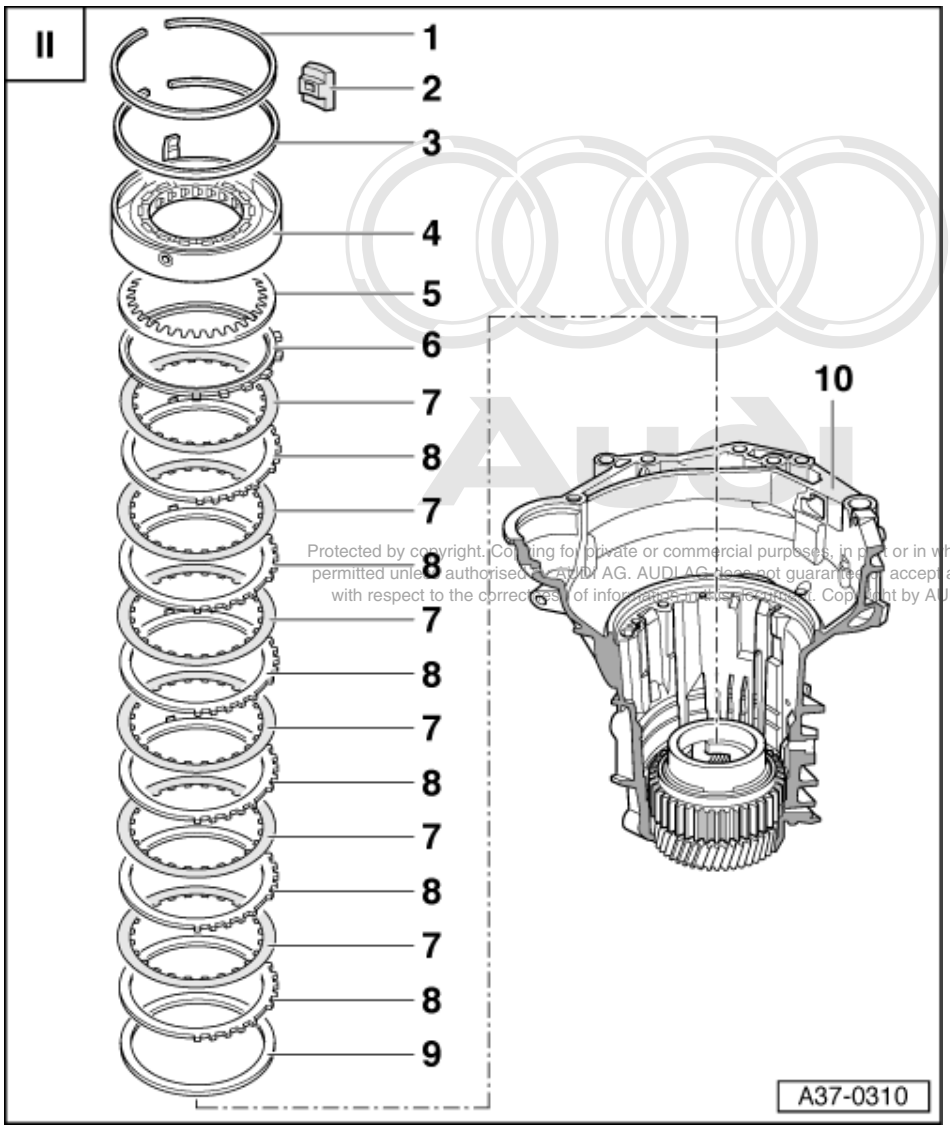

Protected by copyright. Copying for private or commercial purposes, in part or in whole, is not permitted unless authorised by AUDI AG. AUDI AG does not guarantee or accept any liability with respect to the correctness of information. Copyright by AUDI AG.

2 Baffle block

- Insert before inserting circlip (item1)

3 Circlip

- For freewheel
- Installation position: open ends of circlip face toward retaining wedge of free wheel

4 Free wheel with -B1- piston

- Before removing free-wheel, remove valve body and sealing plug => Page 169
- Dismantling and assembling => Page 149
- Use assembly ring 3267 for installing

5 Dished spring

- Install with convex side facing free wheel

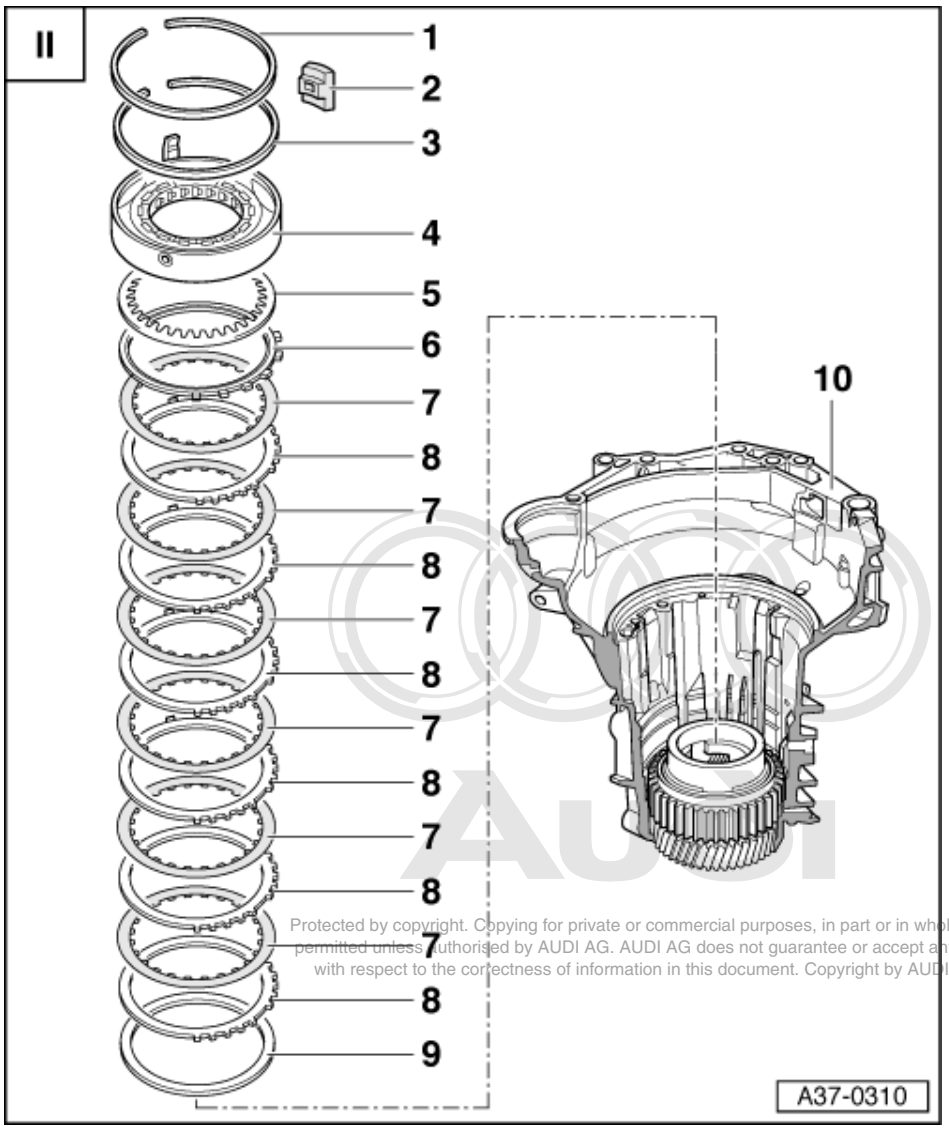

Protected by copyright. Copying for private or commercial purposes, in part or in whole, is not permitted unless authorised by AUDI AG. AUDI AG does not guarantee or accept any liability with respect to the correctness of information in this document. Copyright by AUDI AG.

6 Pressure plate -B1-

- Install with flat side facing toward plates
- Spare part is assigned gearbox code letters

7 Inner plate -B1-

- Quantity of inner plates -B1- =>from Page 2
- Soak new inner plates in ATF for 15 minutes before installing

8 Outer plate -B1-

- Quantity of outer plates -B1- =>from Page 2

9 Shim

- Determining thickness
  => Adjusting reverse gear brake -B1-, Page 121
- 1 or 2 shims can be installed

10 Gearbox housing with planet carrier installed

8.7 - III - Installing components from large sun gear up to reverse gear clutch -K2-

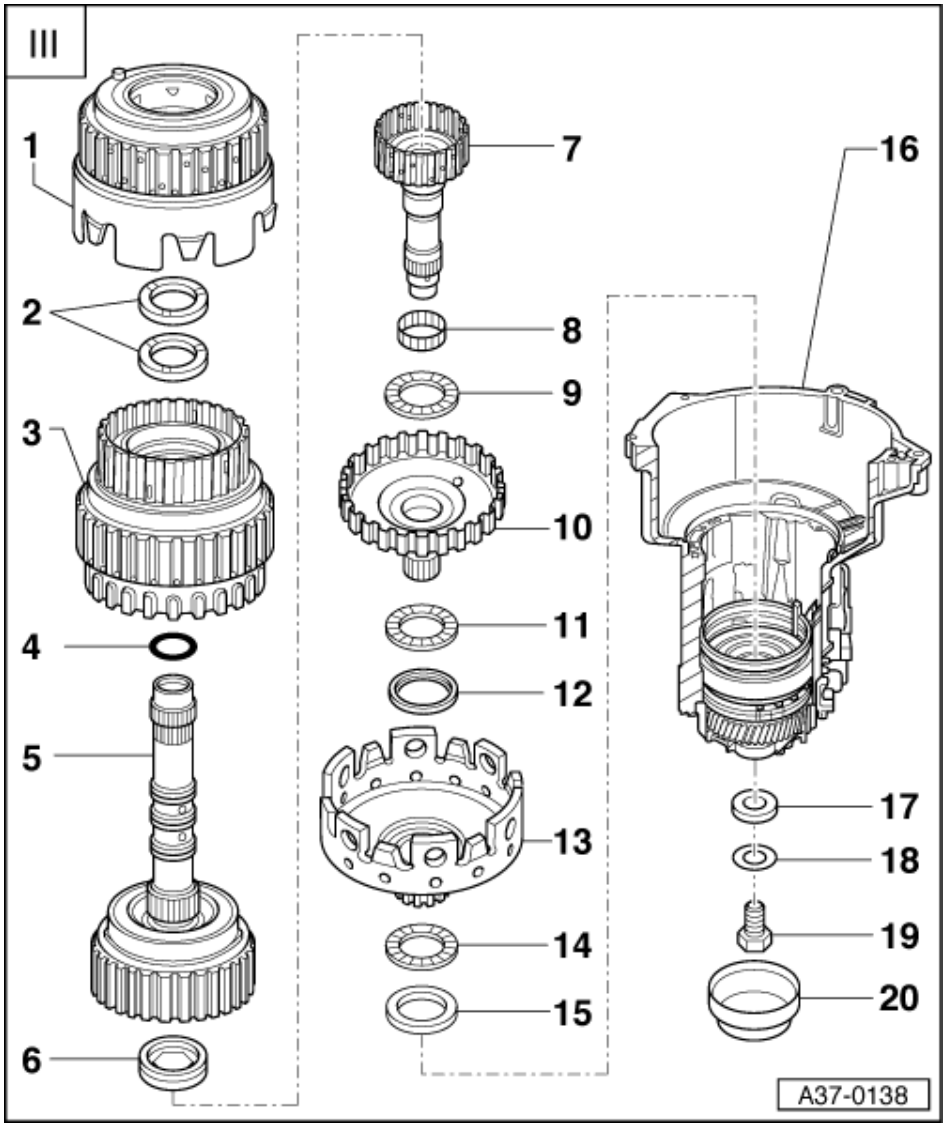

=> Overview, Page 86

Note:

Assembling planetary gearbox

=> Page 101 .

1 Reverse gear clutch -K2-

- When installing, rotate clutch until all the inner plates have meshed
- Dismantling and assembling
  =>Page 158

Protected by copyright. Copying for private or commercial purposes, in part or in whole, is not permitted unless authorised by AUDI AG. AUDI AG does not guarantee or accept any liability with respect to the correctness of information in this document. Copyright by AUDI AG.

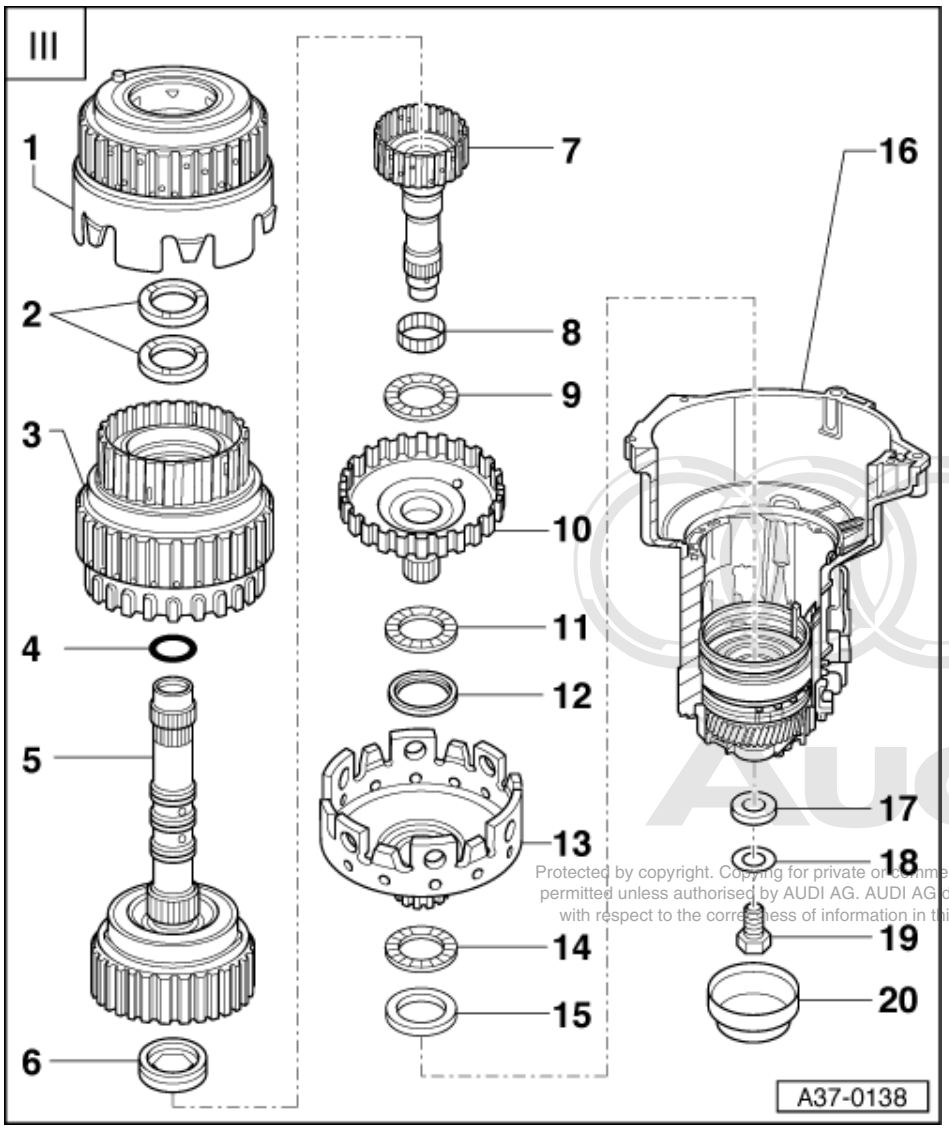

Protected by copyright. Copying for private or commercial purposes, in part or in whole, is not permitted unless authorised by AUDI AG. AUDI AG does not guarantee or accept any liability with respect to the correctness of information in this document. Copyright by AUDI AG.

2 Shim

- Determining thickness
  => Adjusting clutch play between -K1- and -K2-, Page 126
- Up to 3 shims may be installed

3 1st to 3rd gear clutch -K1-

- On some gearboxes the clutches -K1- and -K3- may be pressed together
- Pressing -K1- onto -K3- => Page 112
- Dismantling and assembling => Page 152

4 O-ring

- Renew

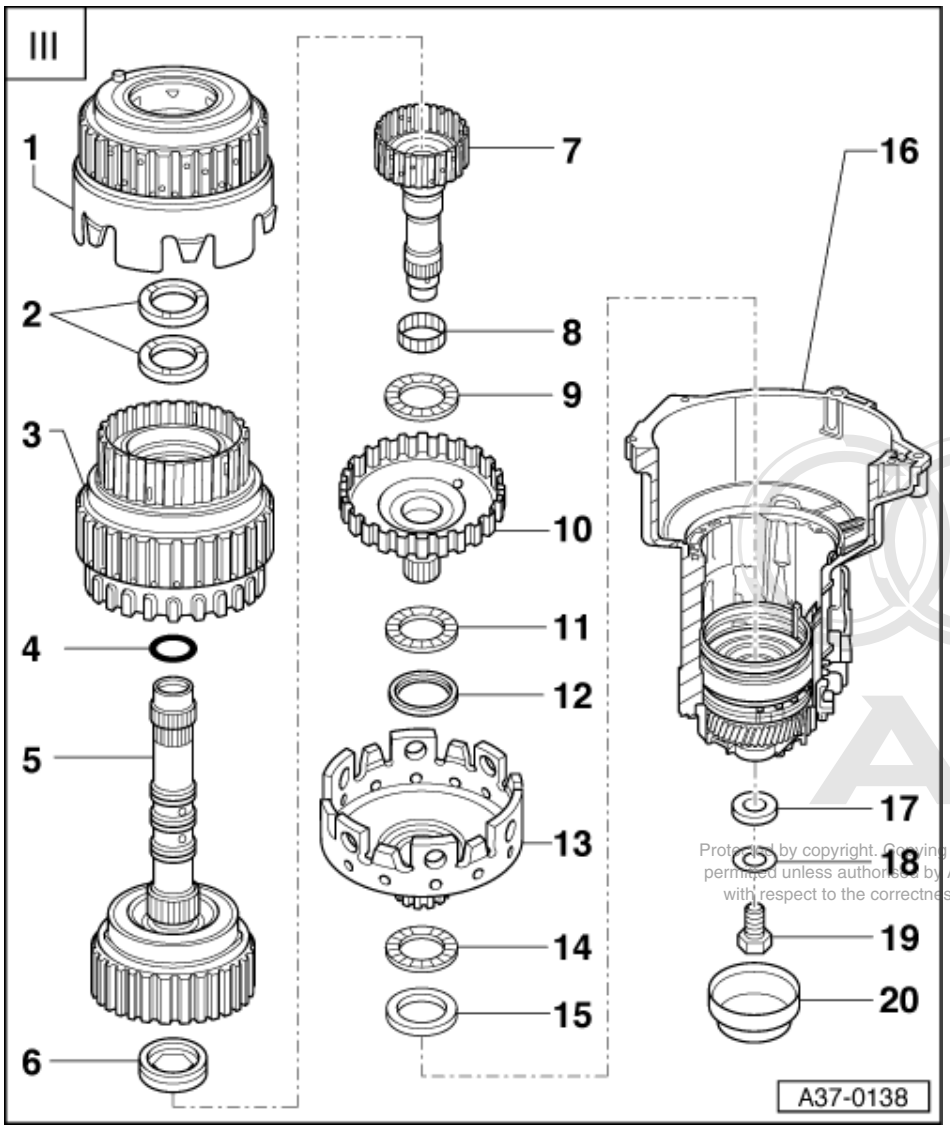

Protected by copyright. Copying for private or commercial purposes, in part or in whole, is not permitted unless authorised by AUDI AG. AUDI AG does not guarantee or accept any liability with respect to the correctness of information in this document. Copyright by AUDI AG.

5 3rd and 4th gear clutch -K3- with turbine shaft

- On some gearboxes the clutches -K1- and -K3- may be pressed together
- Pressing -K1- onto -K3- => Page 112
- When installing, rotate clutch until all the inner plates have meshed
- Dismantling and assembling => Page 163

6 Axial needle bearing with washer

- Lightly lubricate washer with ATF so that bearing sticks to 3rd and 4th gear clutch
- Install axial needle bearing facing toward small input shaft

7 Small input shaft

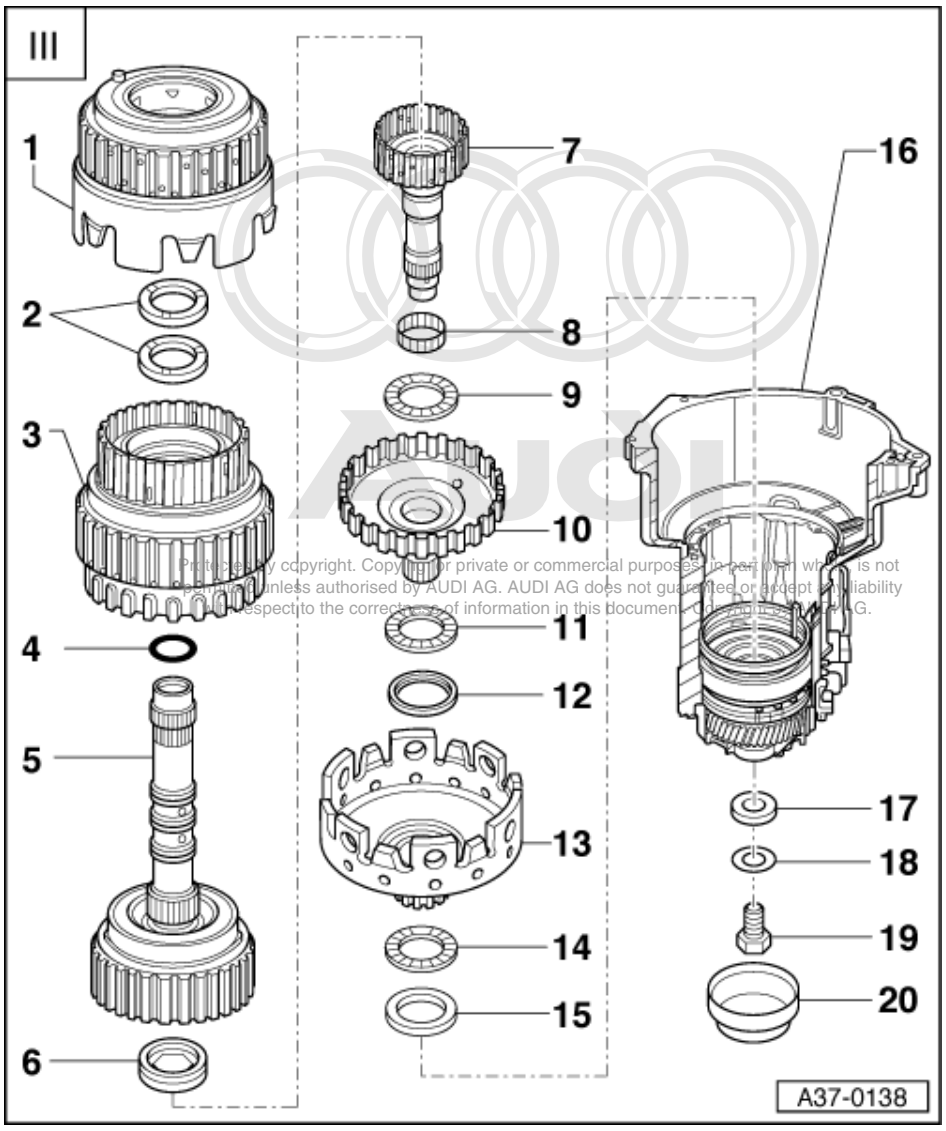

Protected by copyright. Copying for private or commercial purposes, in part or in whole, is not permitted unless authorised by AUDI AG. AUDI AG does not guarantee or accept any liability with respect to the correctness of information in this document. Copyright by AUDI AG.

8 Needle bearing
9 Axial needle bearing
10 Large input shaft
11 Axial needle bearing
12 Axial needle bearing washer
- With shoulder
- Installation position: Shoulder faces toward large sun gear

13 Large sun gear
14 Axial needle bearing
15 Axial needle bearing washer
16 Gearbox housing with free wheel and circlips installed

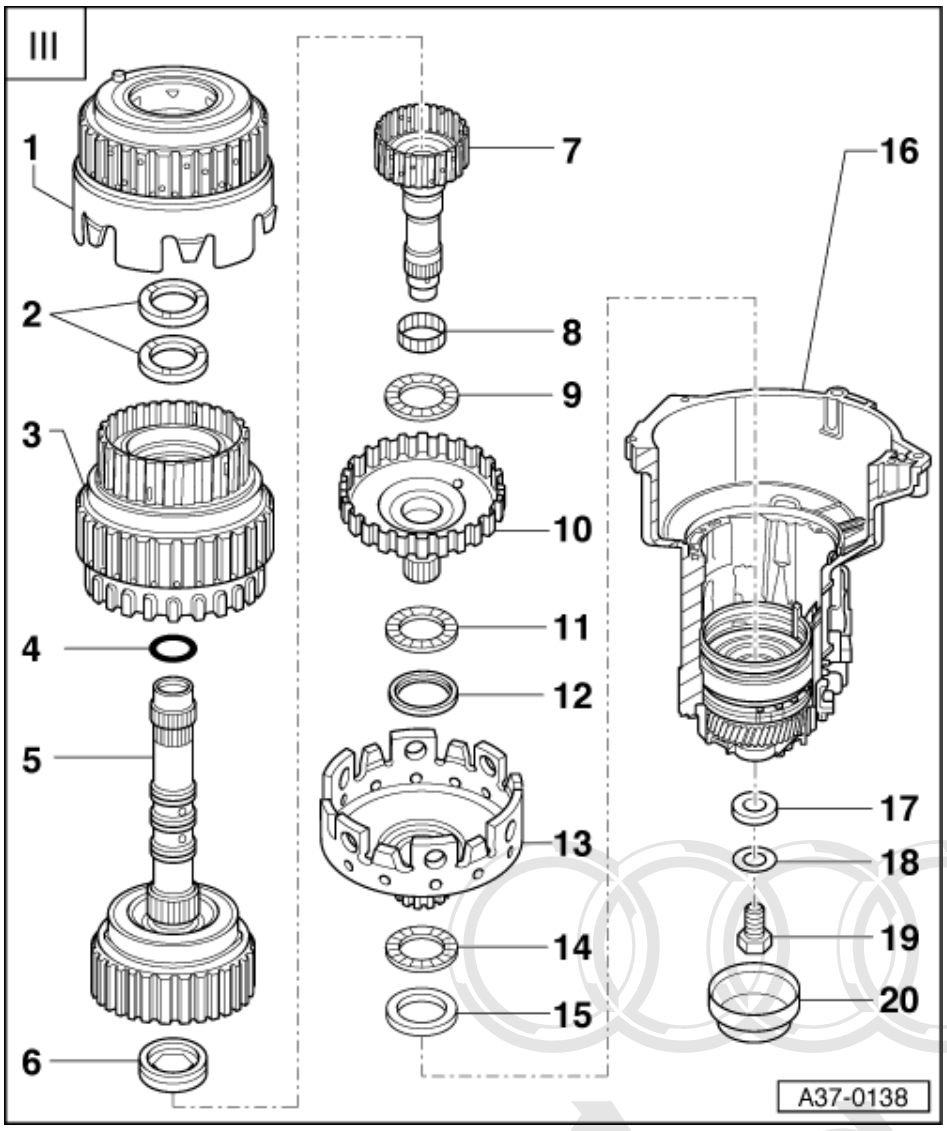

17 Planet carrier shim

- Determining thickness, => Adjusting planet carrier, Page 115

18 Washer

19 Bolt - 30 Nm

- For small input shaft

20 Sealing cap

- Drive in with fitting sleeve 40-20

Protected by copyright. Copying for private or commercial purposes, in part or in whole, is not permitted unless authorised by AUDI AG. AUDI AG does not guarantee or accept any liability with respect to the correctness of information in this document. Copyright by AUDI AG.

8.8 - IV - Installing components from supporting tube for -B2- up to ATF pump

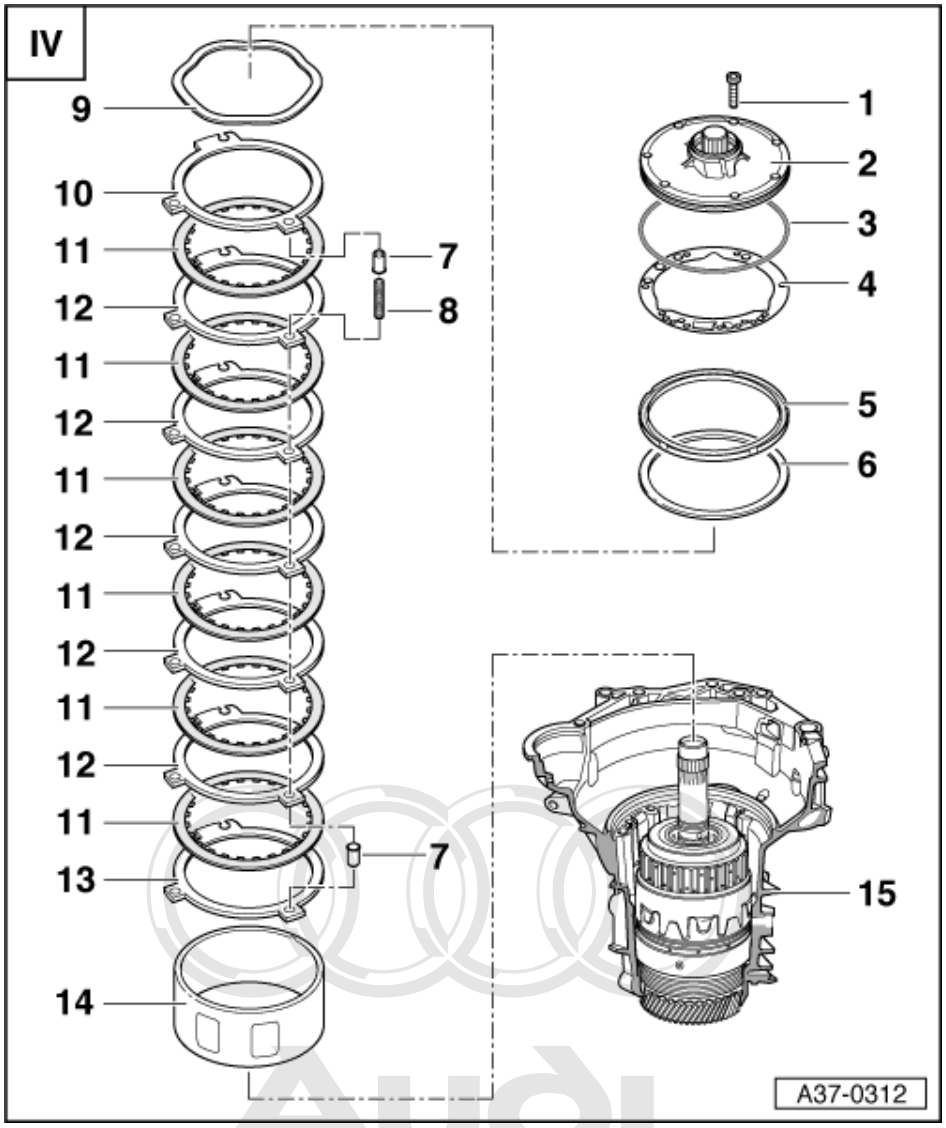

=> Overview, Page 86

Note: Protected by copyright. Copying for private or commercial purposes, in part or in whole, is not permitted unless authorised by AUDI AG. AUDI AG does not guarantee or accept any liability with respect to the correctness of information in this document. Copyright by AUDI AG.

Assembling planetary gearbox

=> Page 101 .

1 Bolt
- Qty. 7
- Tighten to 8 Nm and turn 90° further
- The turning further of 90° may be done in several stages

2 ATF pump with piston -B2-
- Dismantling and assembling => Page 145

3 O-ring
- Renew

4 Gasket

- Renew

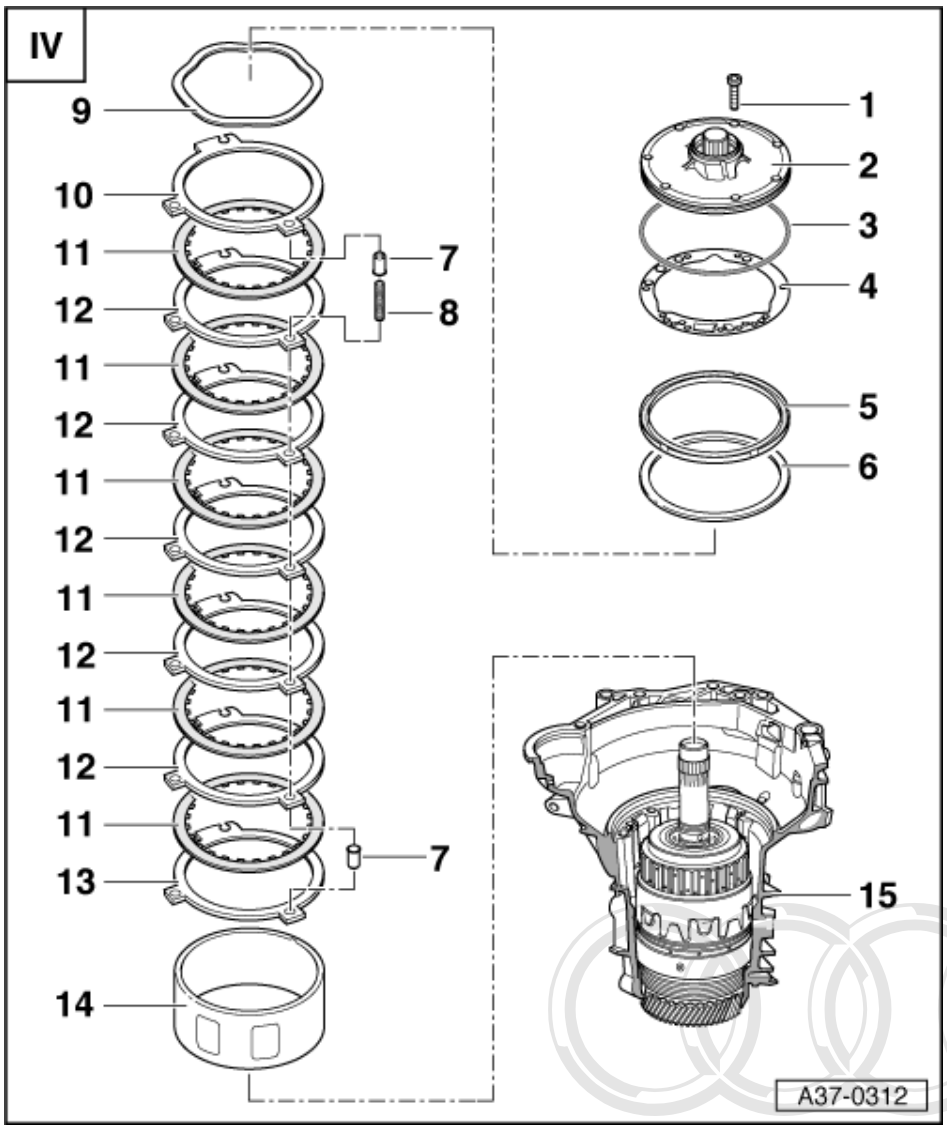

5 Retaining ring

- Not installed on gearboxes with a corrugated spring washer fitted on the last outer plate of brake -B2- (code letters => from Page 2)

6 Shim

- Not installed on gearboxes with a corrugated spring washer fitted on the last outer plate of brake -B2- (code letters => from Page 2)
- Determining thickness of shims => Adjusting 2nd and 4th gear brake -B2- , Page 131

Protected by copyright. Copying for private or commercial purposes, in part or in whole, is not permitted unless authorised by AUDI AG. AUDI AG does not guarantee or accept any liability with respect to the correctness of information in this document. Copyright by AUDI AG.

7 Spring cap

- Qty. 6
- Install 3 spring caps after installing first outer plate
- Install 3 spring caps before installing last outer plate

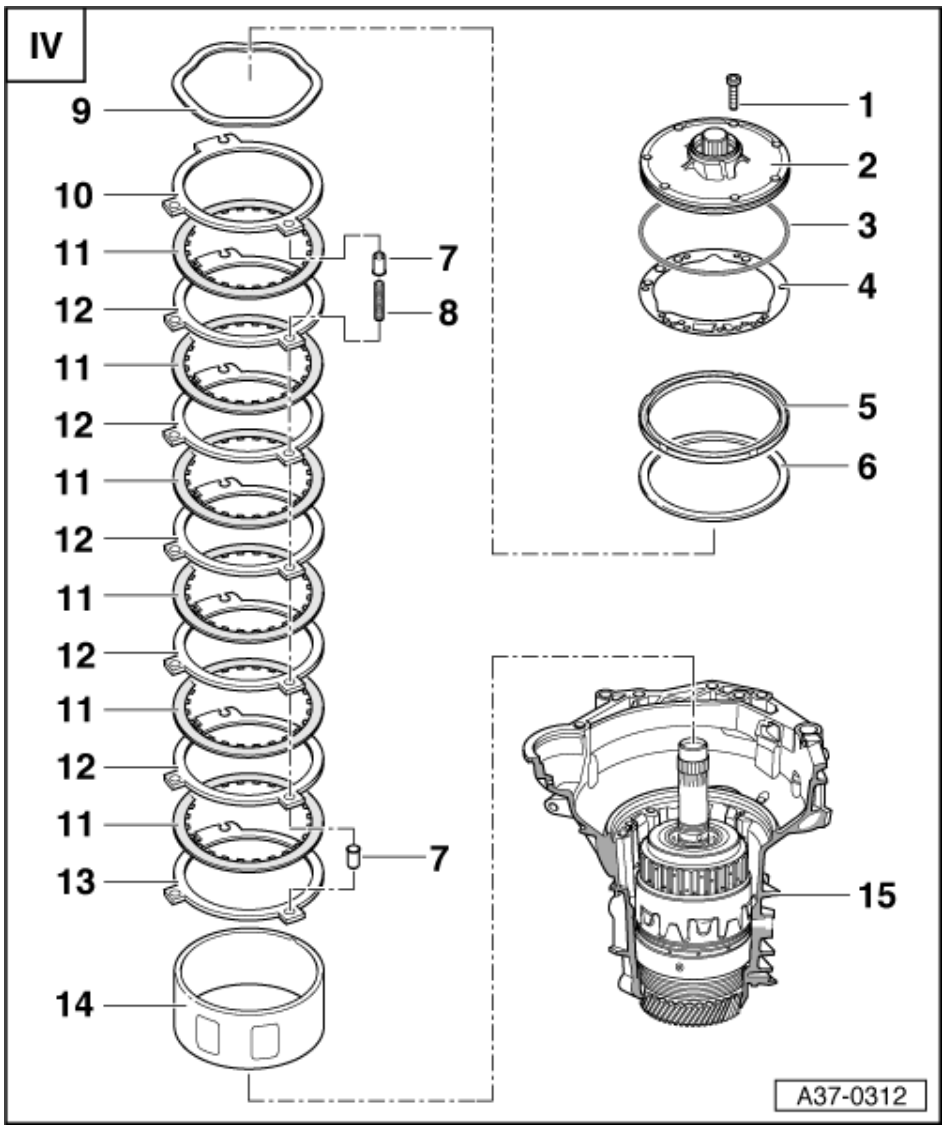

8 Spring
- Qty. 3

9 Corrugated spring washer
- Not installed on gearboxes with a shim and a retaining ring fitted in brake -B2 (code letters => from Page 2)

10 Outer plate -B2-
- Quantity => from Page 2
- Only applies to gearboxes with corrugated spring washer (Item 132

11 Inner plate -B2-
- Quantity => from Page 2
- Soak new inner plates in ATF for 15 minutes before installing

Protected by copyright. Copying for private or commercial purposes, in part or in whole, is not permitted unless authorised by AUDI AG. AUDI AG does not guarantee or accept any liability with respect to the correctness of information in this document. Copyright by AUDI AG.

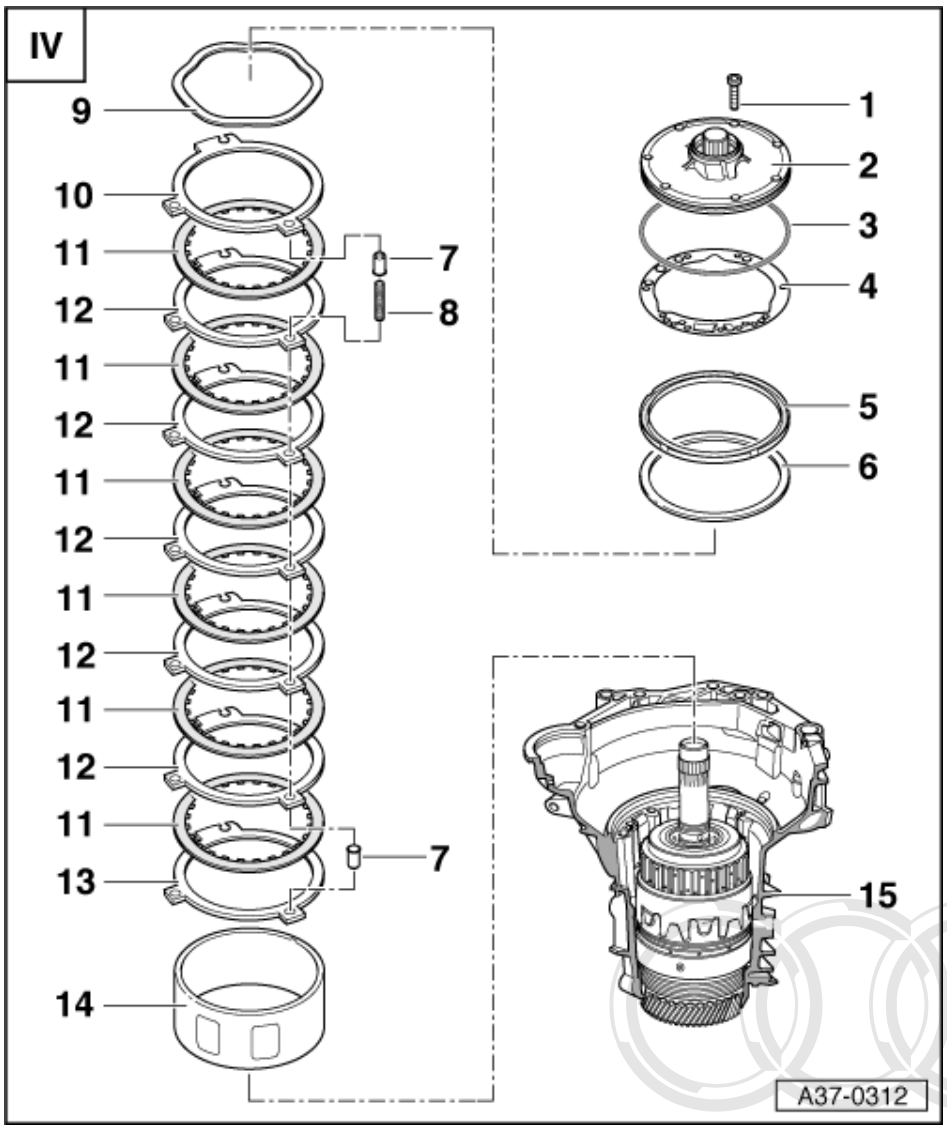

12 Outer plate -B2-

- Always install 2 mm thick outer plates
- Quantity => from Page 2

13 Outer plate -B2-

- Fit 3 mm thick outer plate to supporting tube -B2-

14 Supporting tube -B2-

- For the -B2- plate package
- Insert so that bottom groove engages on wedge of free wheel
- As a replacement part it is assigned to the gearbox code letters

15 Gearbox housing with clutches installed

Protected by copyright. Copying for private or commercial purposes, in part or in whole, is not permitted unless authorised by AUDI AG. AUDI AG does not guarantee or accept any liability with respect to the correctness of information in this document. Copyright by AUDI AG.

8.9 - Assembling planetary gearbox

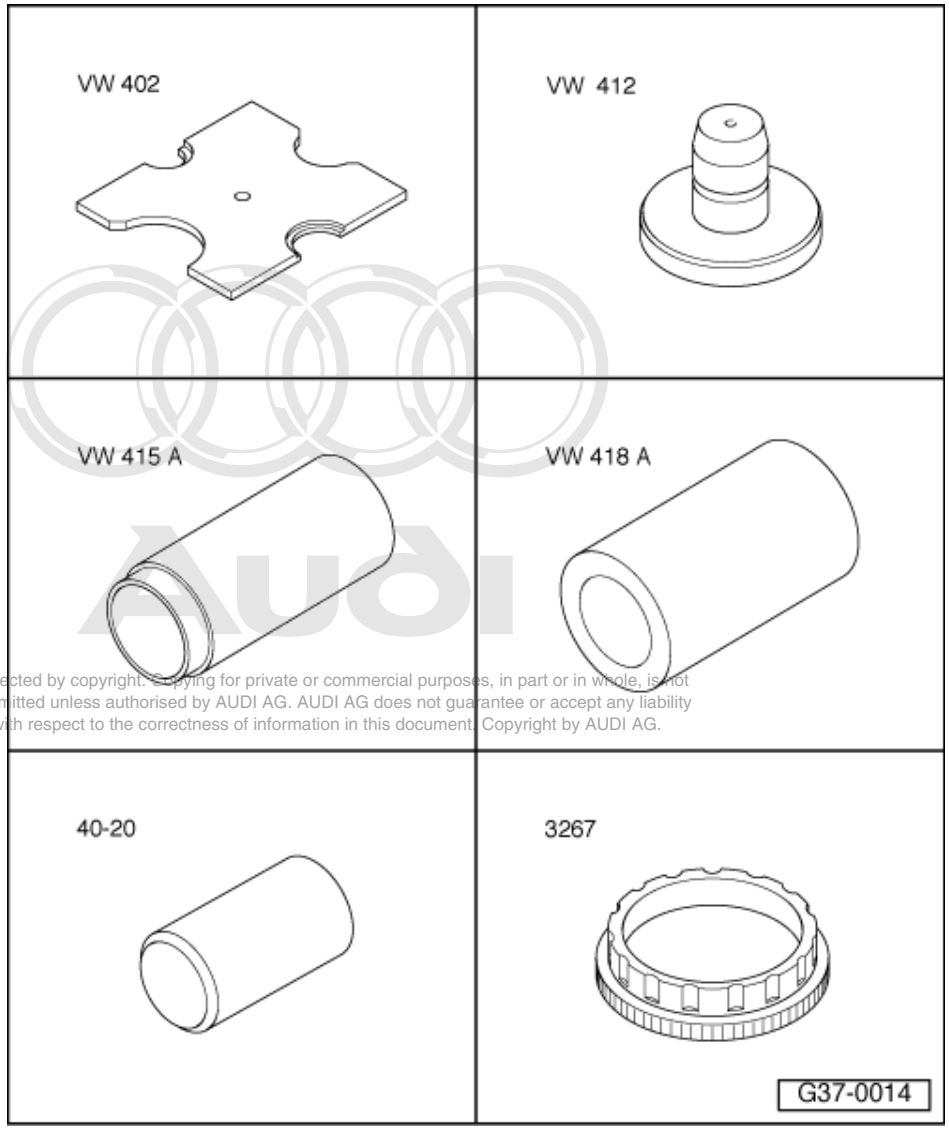

Protected by copyright. Copying for private or commercial purposes, in part or in whole, is not permitted unless authorised by AUDI AG. AUDI AG does not guarantee or accept any liability with respect to the correctness of information in this document. Copyright by AUDI AG.

Special tools and workshop equipment required

- Thrust plate VW 402
- Press tool VW 412
- Tube VW 415 A
- Tube VW 418 A
- Drive sleeve 40-20
- Assembly ring 3267

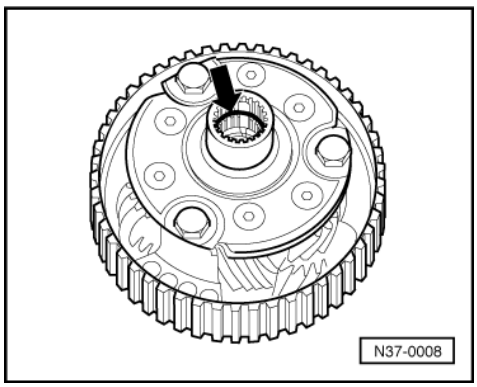

Assembling planetary gearbox

- -> Fit O-ring -arrow- into planet carrier.

Notes:

Protected by copyright. Copying for private or commercial purposes, in part or in whole, is not permitted unless authorised by AUDI AG. AUDI AG does not guarantee or accept any liability with respect to the correctness of information in this document. Copyright by AUDI AG.

- Use all parts of the exchange component when installing; do not use old parts.
- The planet carrier should be adjusted after replacing either the planet carrier, the large sun gear, the large input shaft or the small input shaft=>Page 115 .

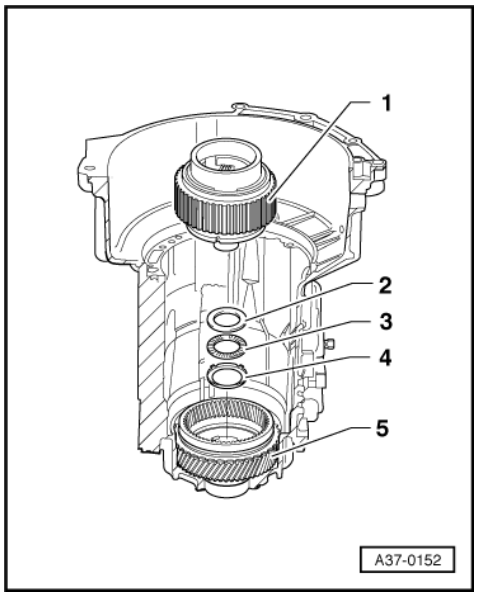

- -> Insert axial needle bearing with washers and planet carrier in the input gear.

1 - Install planet carrier with O-ring fitted
2 - Washer for axial needle bearing
3 - Axial needle bearing
4 - Washer for axial needle bearing; smooth side faces toward input gear
5 - Input gear; is fitted in gearbox housing

=> Page 79

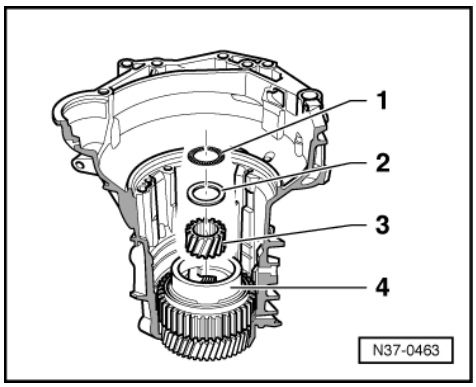

Gearboxes with code letters DMU, DMV, DMX, EPT, EPU, EPV:

- -> Inserting small sun gear with washer and axial needle bearing into planet carrier.

1 - Axial needle bearing
2 - Washer for axial needle bearing
3 - Small sun gear
4 - Planet carrier

- Centralize washer and axial needle bearing in small sun gear.

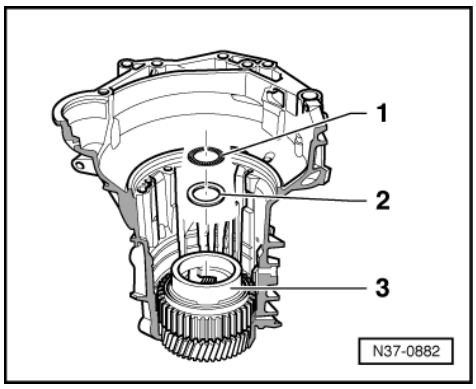

Gearboxes with other code letters:

- -> Place washer -2- and axial needle bearing -1- on the "small sun gear" in the planet carrier -3-.
- Centralize washer and axial needle bearing in small sun gear.

All models

- Insert shim(s).
- Insert inner and outer -B1- plates.
- Insert pressure plate of -B1- with flat side facing plates.

Note:

Thickness of pressure plate varies according to number of plates=>Page 91 The replacement pressure plate is assigned to the gearbox code letters.

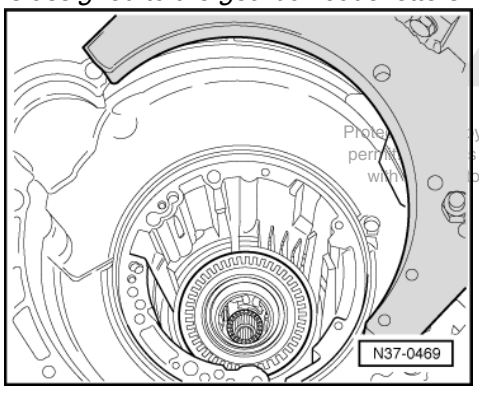

Protected by copyright. Copying for private or commercial purposes, in part or in whole, is not permitted unless authorised by AUDI AG. AUDI AG does not guarantee or accept any liability with respect to the correctness of information in this document. Copyright by AUDI AG.

- -> Insert dished washer with convex side facing towards freewheel.

Note:

When replacing the following components, adjust the reverse gear brake -B1- => Page 121 :

- Free wheel
- Piston for reverse gear brake -B1-
- Plates
- Gearbox housing

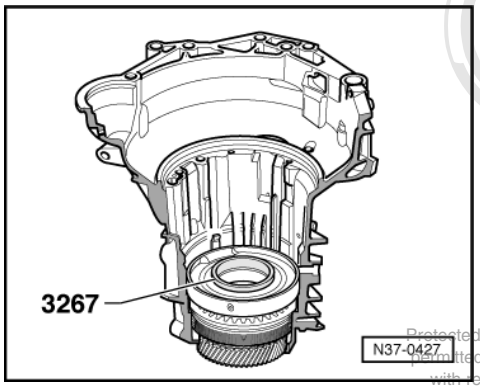

Protected by copyright. Copying for private or commercial purposes, in part or in whole, is not permitted unless authorised by AUDI AG. AUDI AG does not guarantee or accept any liability with respect to the correctness of information in this document. Copyright by AUDI AG.

- -> Preload freewheel rollers with assembly ring 3267 and insert free wheel.

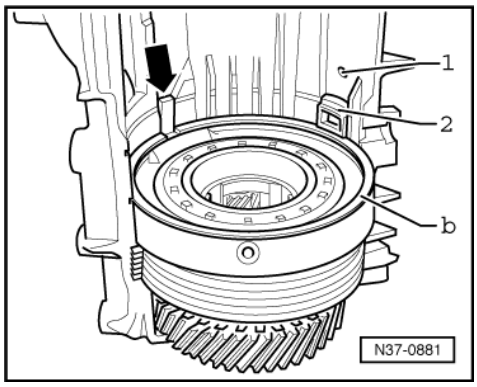

- -> Installation position of free wheel: The retaining wedge (arrow) must be seated in the machined groove on gearbox housing.
- Fit circlip -b- for free-wheel.
- Fit open ends of circlips facing toward retaining wedge (arrow) of free-wheel.
- Insert baffle block -2- in gearbox housing groove, where ATF breather drilling -1- is located.

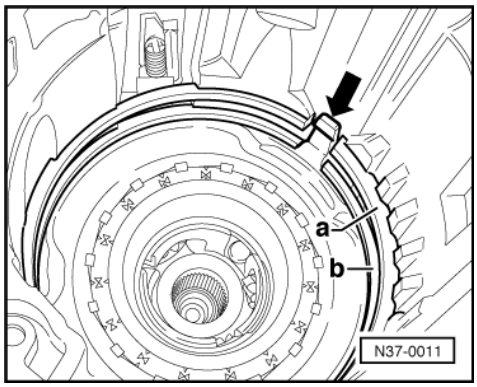

- -> Install circlip -a- for supporting tube for -B2- with open ends of circlip facing toward retaining wedge -arrow- of free wheel.
- Perform check measurement of -B1-=>Page 125 .

- Install gearbox speed sender -G38=>Page 192 .

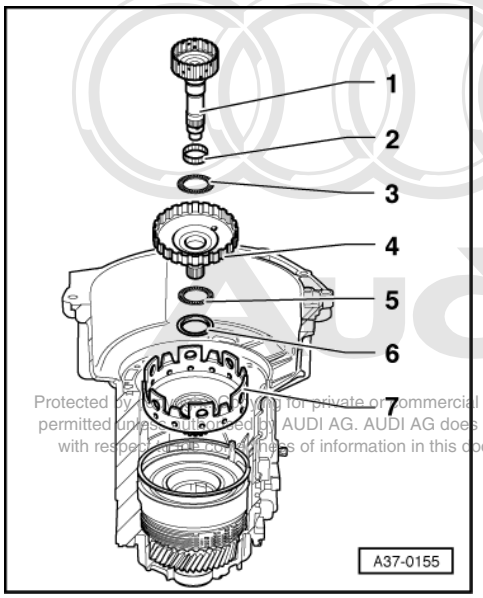

Protected by copyright. Copying for private or commercial purposes, in part or in whole, is not permitted unless authorised by AUDI AG. AUDI AG does not guarantee or accept any liability with respect to the correctness of information in this document. Copyright by AUDI AG.

- -> Install the parts in the gearbox housing in the reverse order of the numbering:

1 - Small drive shaft
2 - Needle bearing
3 - Axial needle bearing
4 - Large drive shaft
5 - Axial needle bearing
6 - Washer for axial needle bearing
(shoulder faces toward large sun gear)
7 - Large sun gear

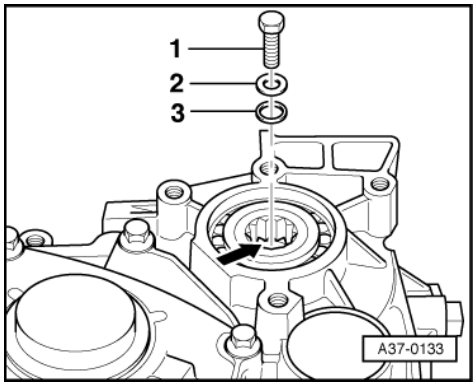

- -> Install bolt -1- for small drive shaft with washer -2- and shim -3-.
- Tighten bolt to 30 Nm.

Notes:

- Insert shim -3- onto small input shaft shoulder (arrow).
- Determining shim thickness => adjusting planet carrier, Page 115 .

- Carry out planet carrier check measurement => Page 120 .

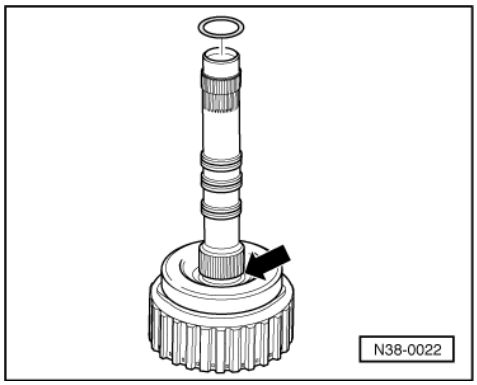

- -> Insert new O-ring in the recess in the turbine shaft (arrow).
- Moisten O-ring with ATF.

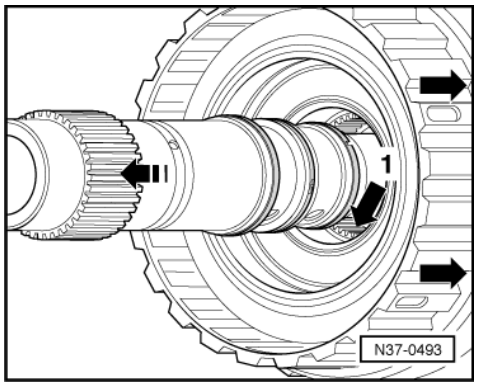

Protected by copyright. Copying for private or commercial purposes, in part or in whole, is not permitted unless authorised by AUDI AG. AUDI AG does not guarantee or accept any liability with respect to the correctness of information in this document. Copyright by AUDI AG.

Note:

On some gearboxes the clutches -K1- and -K3- must be pressed together before installing.

- Check that clutch -K1- can be fitted completely onto turbine shaft splines of -K3-.
- Do this by fitting -K1- onto -K3- by hand.
  - -> If splines (arrow 1) are visible in hub of -K1-, the clutches must be pressed together => Page 112 .

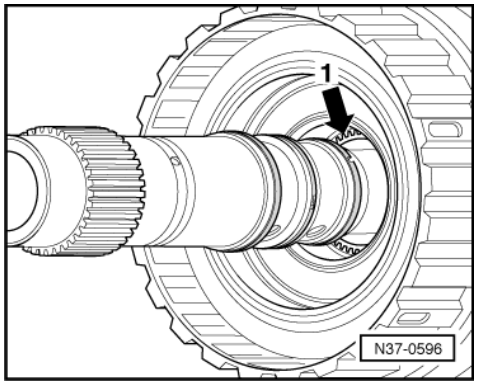

  - -> If the resistance of the O-ring is overcome when fitting the clutches together by hand, the splines - arrow 1 - of -K1 are no longer visible. In this case the clutches do not have to be pressed together.

Continue to assemble the gearbox.

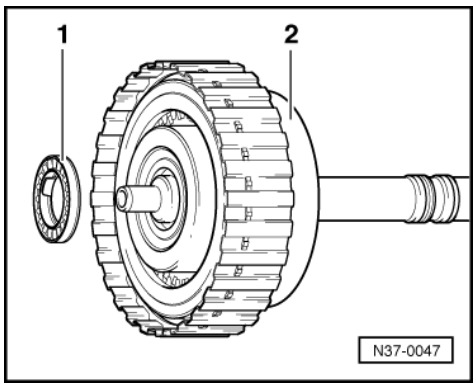

- -> Fit axial needle bearing together with washer -1- onto 3rd and 4th gear clutch -K3- , -Item 2-.
  - Installation position: bearing washer faces toward -K3-.

Protected by copyright. Copying for private or commercial purposes, in part or in whole, is not permitted unless authorised by AUDI AG. AUDI AG does not guarantee or accept any liability with respect to the correctness of information in this document. Copyright by AUDI AG.

Notes:

- Lubricate axial bearing washer with ATF to make sure that it adheres to -K3-.
- Shown in illustration on clutches which were not pressed together.

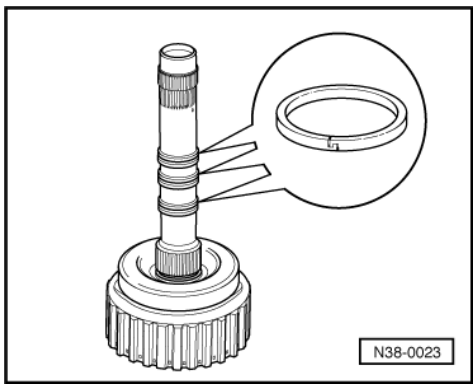

- -> Ensure piston rings seat correctly on -K3-.
- Ensure that the ends of the piston rings are hooked together.

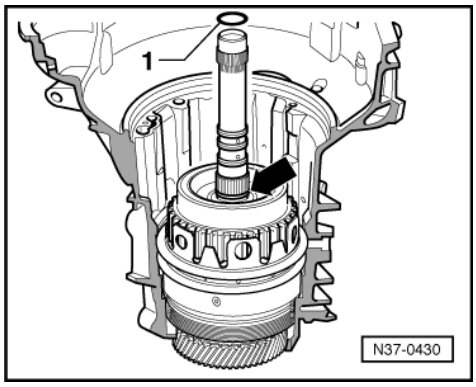

- -> Inserting 3rd and 4th gear clutch -K3-.

Note:

When installing, rotate 3rd and 4th gear clutch -K3- until all the plates have meshed.

- Fit seal -1- in the groove (arrow).
- Moisten O-ring with ATF.

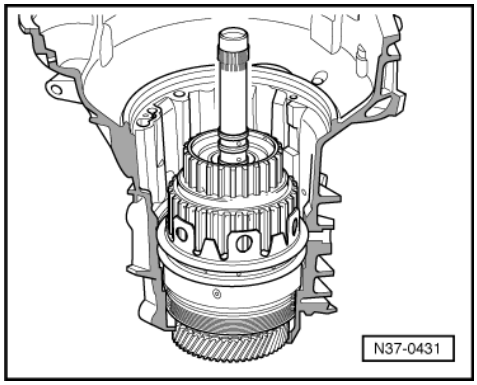

- -> Inserting 1st to 3rd gear clutch -K1-.

Note:

If clutches -K1- and K3- are pressed together, they can only be installed as one unit.

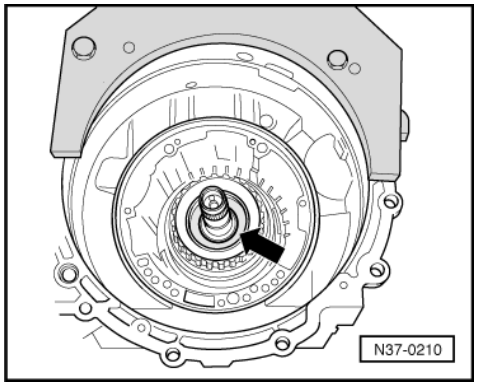

- -> Insert shim(s) -arrow- in -K1-.

Notes:

- The shim thickness must be recalculated when replacing -K1-, -K2-, the small input shaft or the ATF pump, => Adjusting clutch play between -K1- and -K2-, Page 126 .
- 1, 2 or 3 shims can be installed.

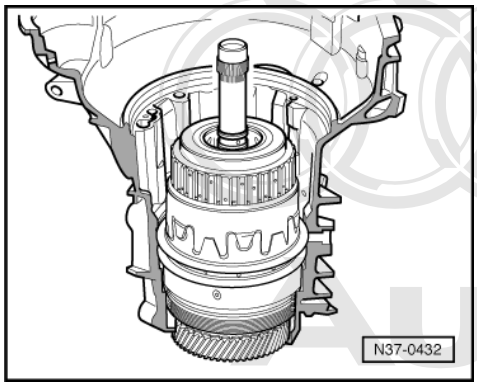

- -> Insert reverse gear clutch -K2-.

Protected by copyright. Copying for private or commercial purposes, in part or in whole, is not permitted unless authorised by AUDI AG. AUDI AG does not guarantee or accept any liability with respect to the correctness of information in this document. Copyright by AUDI AG.

Note:

When installing, rotate reverse gear clutch -K2- until all the plates have meshed.

- Insert supporting tube for plate set of 2nd and 4th gear brake -B2- so that recess on lower part of supporting tube engages in retaining wedge of free wheel.

Note:

When replacing the following components, adjust the 2nd and 4th gear brake -B2- :

- Gearbox housing
- Supporting tube
- ATF pump
- Corrugated spring washer
- Retaining ring
- Plates

These components are allocated as replacement parts according to gearbox code letters.

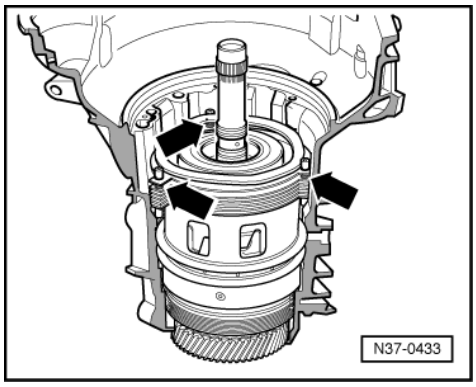

- -> Install -B2- 2nd and 4th gear brake plates as follows:
  - First insert a 3 mm thick outer plate.
  - Fit three spring caps into the outer plate.
  - Insert the compression springs (arrows).
  - Insert all the plates with the exception of the last outer plate.
  - Fit three spring caps onto compression springs.

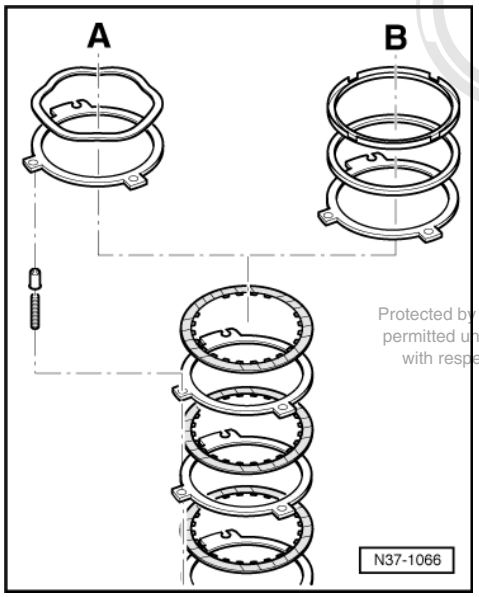

Protected by copyright. Copying for private or commercial purposes, in part or in whole, is not permitted unless authorised by AUDI AG. AUDI AG does not guarantee or accept any liability with respect to the correctness of information in this document. Copyright by AUDI AG.

There are two versions of brake -B2-:

A - Brake with corrugated spring washer
B - Brake with retaining ring

Gearboxes with a corrugated spring washer installed on the last outer plate of brake -B2-

(code letters => from Page 2):

Note:

On these gearboxes the play of brake -B2- is determined by the thickness of the last outer plate. Calculating thickness of last outer plate=>Page 132 .

- Insert last (measured) outer plate.

Note:

If it is necessary to fit two outer plates because of the results of the measurement, these should be fitted together on the spring caps.

- Install corrugated washer

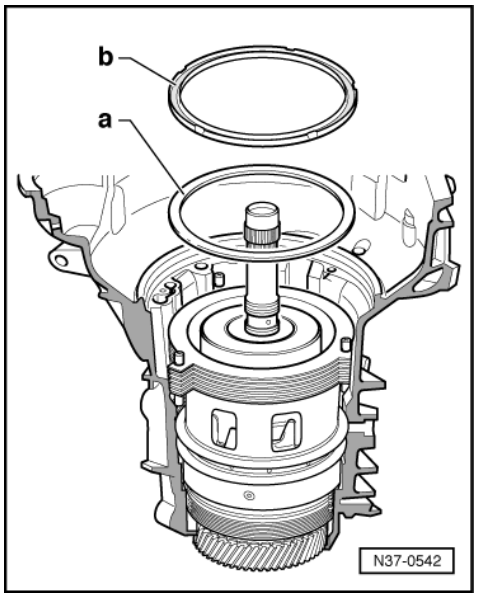

Protected by copyright. Copying for private or commercial purposes, in part or in whole, is not permitted unless authorised by AUDI AG. AUDI AG does not guarantee or accept any liability with respect to the correctness of information in this document. Copyright by AUDI AG.

Gearboxes with a shim and a retaining ring installed in brake -B2- (code numbers => from Page 2):

Note:

-> On these gearboxes, the thickness of the last outer plate is always 3 mm. The play of brake -B2- is determined by shim -a- onto which retaining ring -b- is inserted.

- Insert last outer plate -3 mm thick-.
- Determine thickness of shim => Page 131 and insert.
- Fit retaining ring onto shim.
  - Fitting position: smooth side facing shim

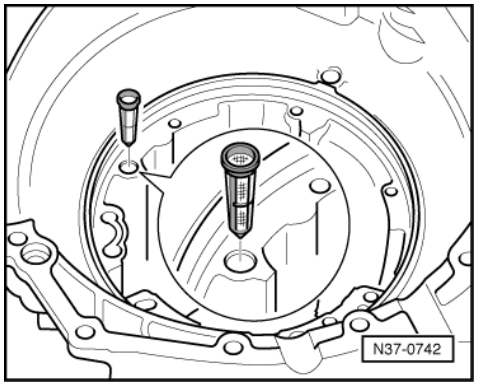

All models

- -> Clean and install strainer if fitted.

Note:

The strainer is located in the return pipe of the ATF cooler. It cannot be retrofitted on earlier gearbox versions.

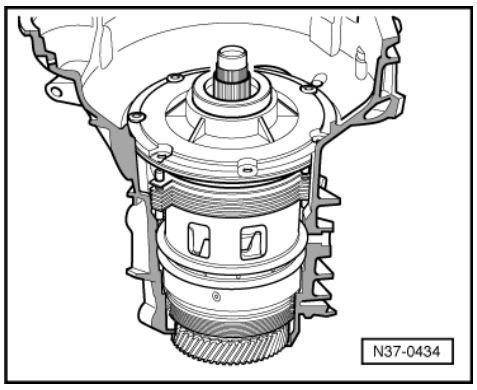

- Install ATF pump gasket, noting position of holes.
- Fit O-ring on ATF pump..

Note:

Ensure the piston rings are properly seated.

- -> Install ATF pump so that holes for securing bolts are correctly positioned.
- Tighten bolts evenly, crosswise, to 8 Nm.

Note:

Ensure that the O-ring is not damaged.

- Then turn bolts 90 ° further.

  Turning further can be done in several stages.

- Carry out check measurement of clutch play => Page 130 .

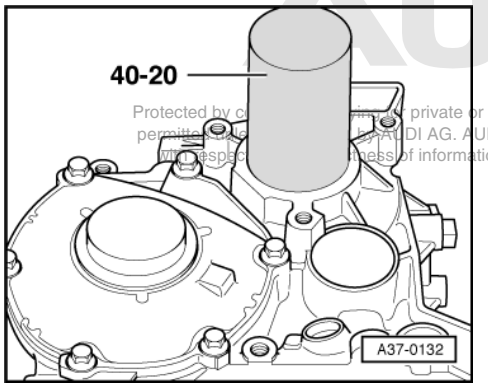

- -> Drive in cover with drive sleeve 40-20.
- Install gearbox speed sender -G38 =>Page 192 .

Protected by c private or commercial purposes, in part or in whole, is not permitte by AUDI AG. AUDI AG does not guarantee or accept any liability with respec ness of information in this document. Copyright by AUDI AG.

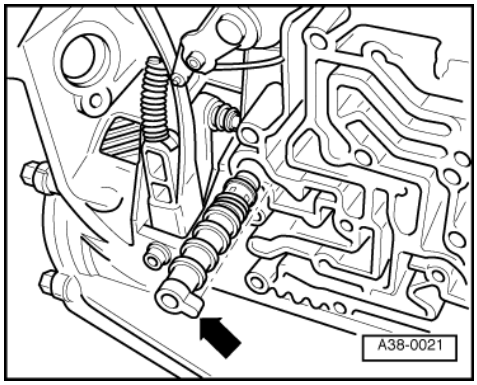

- -> Insert sealing plugs with O-rings.
  - Installation position: lug -arrow- fits into oil passage.

- Install valve body with conductor strip => from Page 169 .
- Install oil pan => from Page 169 .
- Install torque converter=>from Page 17 .
- Cleaning ATF lines and cooler => page 74 .
- Install gearbox => Page 55 .
- Fill up with ATF and check ATF level => Page 61 .

8.10 - Pressing clutch -K1- onto clutch -K3-

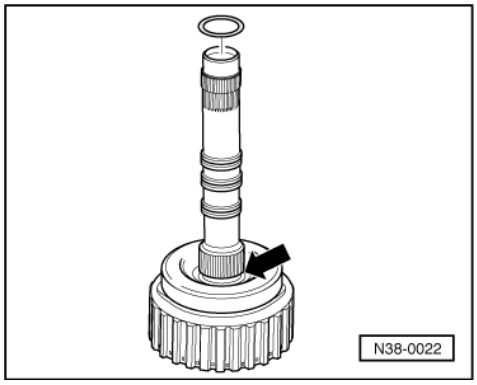

Protected by copyright. Copying for private or commercial purposes, in part or in whole, is not permitted unless authorised by AUDI AG. AUDI AG does not guarantee or accept any liability with respect to the correctness of information in this document. Copyright by AUDI AG.

Note:

On some gearboxes the clutches -K1- and -K3- must be pressed together before installing. The following procedure is required if -K1- and -K3- were separated for repairing or were supplied separately as replacement parts.

- Moisten O-ring with ATF.
- -> Insert new O-ring in the recess in the turbine shaft (arrow).

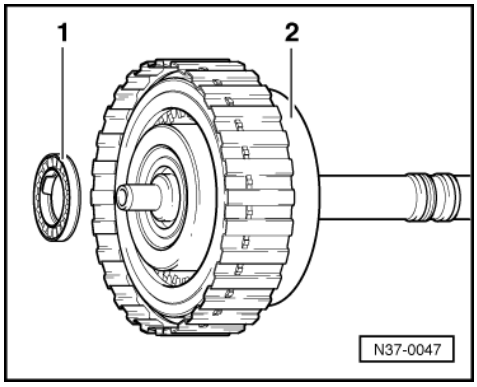

- -> Unclip axial needle bearing (1) with washer from 3rd and 4th gear clutch -K3- (2).

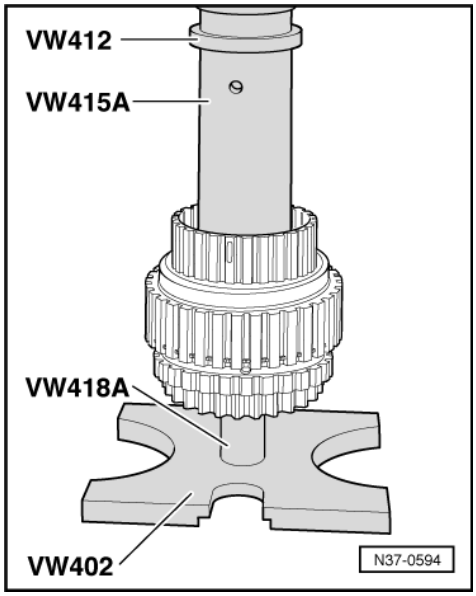

- Ensure the tool press surface is flat and not damaged.
- -> Prepare -K1- and -K3- for pressing as illustrated.

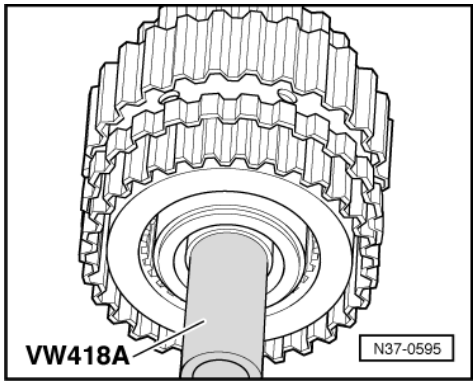

Protected by copyright. Copying for private or commercial purposes, in part or in whole, is not permitted unless authorised by AUDI AG. AUDI AG does not guarantee or accept any liability with respect to the correctness of information in this document. Copyright by AUDI AG.

- -> Before pressing on, align VW 418 A centrally onto surface for axial needle bearing (this illustration shows -K3- from below).
- Press clutch -K1- on carefully until stop is perceptible.
- Do not exert further pressure on clutches.
- Further procedure=>Page 107 .

8.11 - Planetary gearbox adjustments - overview

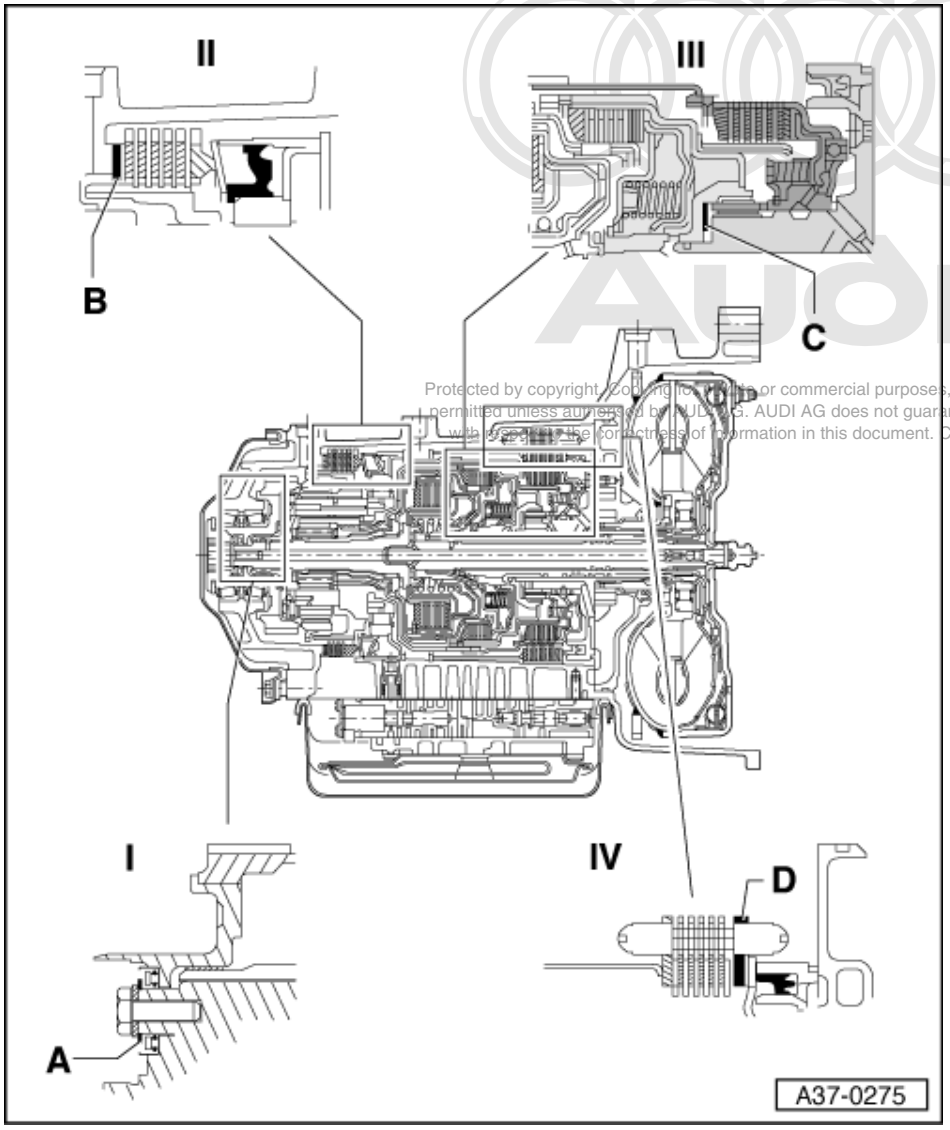

Protected by copyright. Copying for private or commercial purposes, in part or in whole, is not permitted unless authorised by AUDI AG. AUDI AG does not guarantee or accept any liability with respect to the correctness of information in this document. Copyright by AUDI AG.

I - Planet carrier

- A - Shim
- Determining thickness => Adjusting planet carrier, Page 115

II - Reverse gear brake -B1-

- B - Shim
- Determining thickness
  => Adjusting reverse gear brake -B1-, Page 121

III - Clutch play

- C - Shim
- Determining thickness => Adjusting clutch play between -K1- and -K2-, Page 126

IV - 2nd and 4th gear brake -B2-

- D - Outer plate
- Determining thickness
  => Adjusting 2nd and 4th gear brake -B2-, Page 131

8.12 - I - Adjusting planet carrier

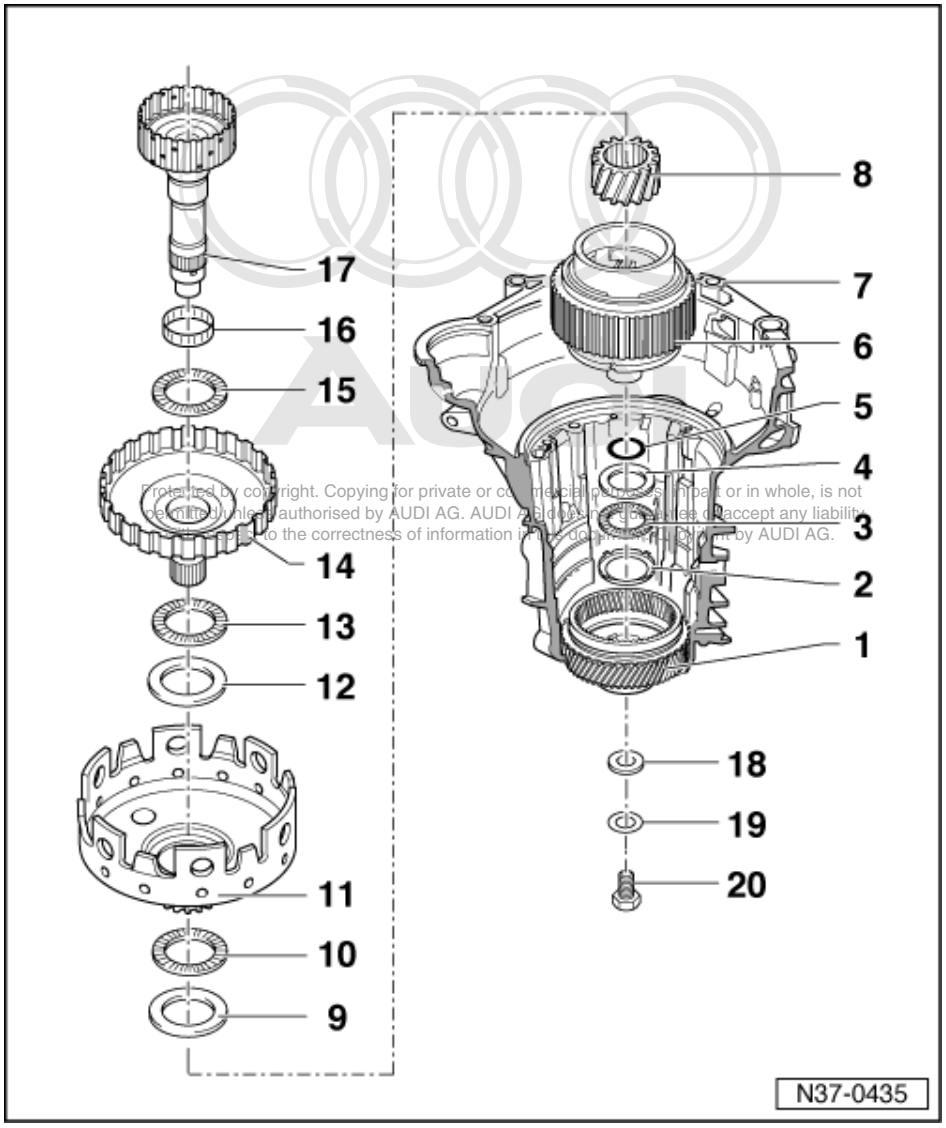

Protected by copyright. Copying for private or commercial purposes, in part or in whole, is not permitted unless authorised by AUDI AG. AUDI AG does not guarantee or accept any liability with respect to the correctness of information in this document. Copyright by AUDI AG.

Overview of components

Note:

When adjusting planet carrier, install components in gearbox housing without shim (Item 18).

1 Input gear
- Do not remove to adjust the planet carrier

2 Axial needle bearing washer
- Installation position: smooth side faces toward input gear

3 Axial needle bearing

4 Axial needle bearing washer

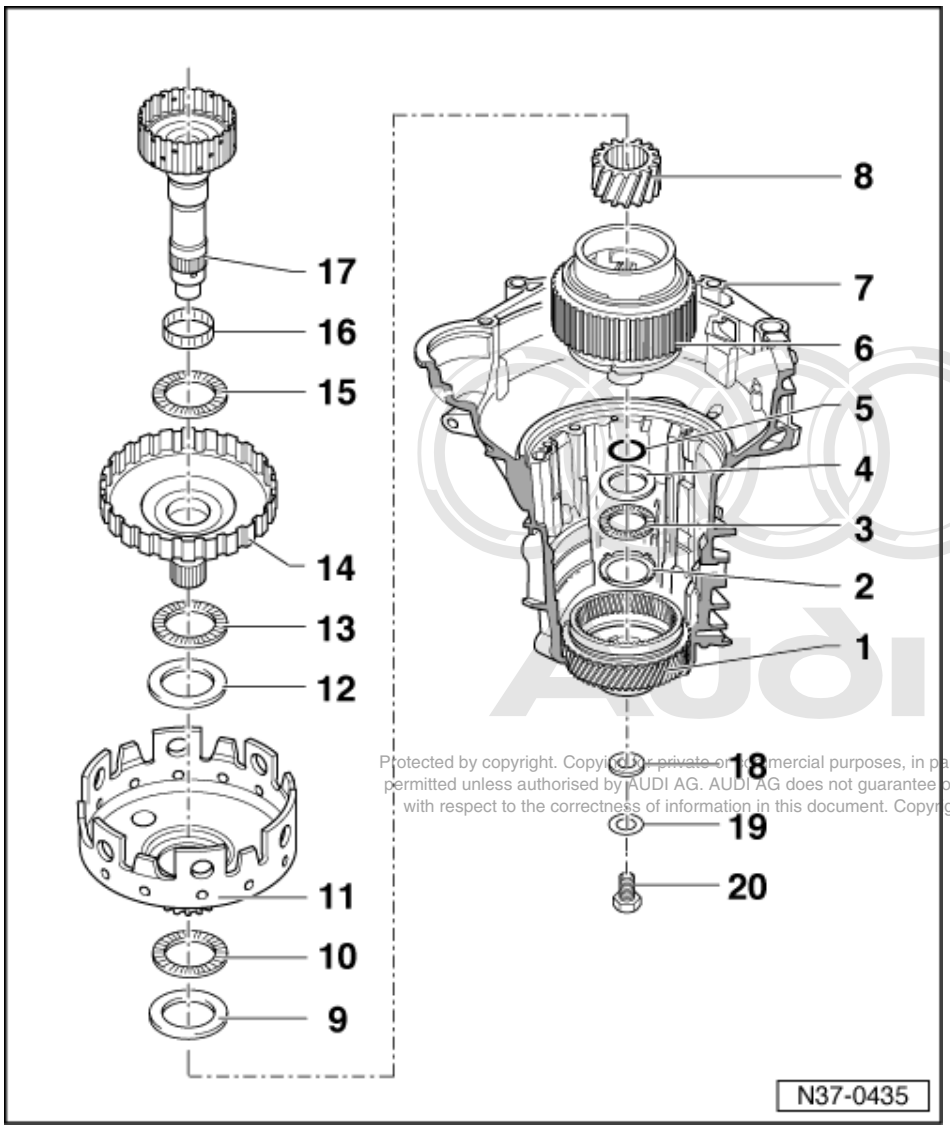

Protected by copyright. Copying for private or commercial purposes, in part or in whole, is not permitted unless authorised by AUDI AG. AUDI AG does not guarantee or accept any liability with respect to the correctness of information in this document. Copyright by AUDI AG.

5 O-ring

- Renew
- Insert into planet carrier => Assembling planet carrier, Page 101

6 Planet carrier

7 Gearbox housing

- With input gear and axial needle bearing
- Axial needle bearing remains in input gear
- If axial needle bearing is damaged => Removing and installing input gear, Page 206

8 Small sun gear

- Can only be taken out of planet carrier on gearboxes with codesDMU, DMV, DMX, EPT, EPU, EPV

9 Washer

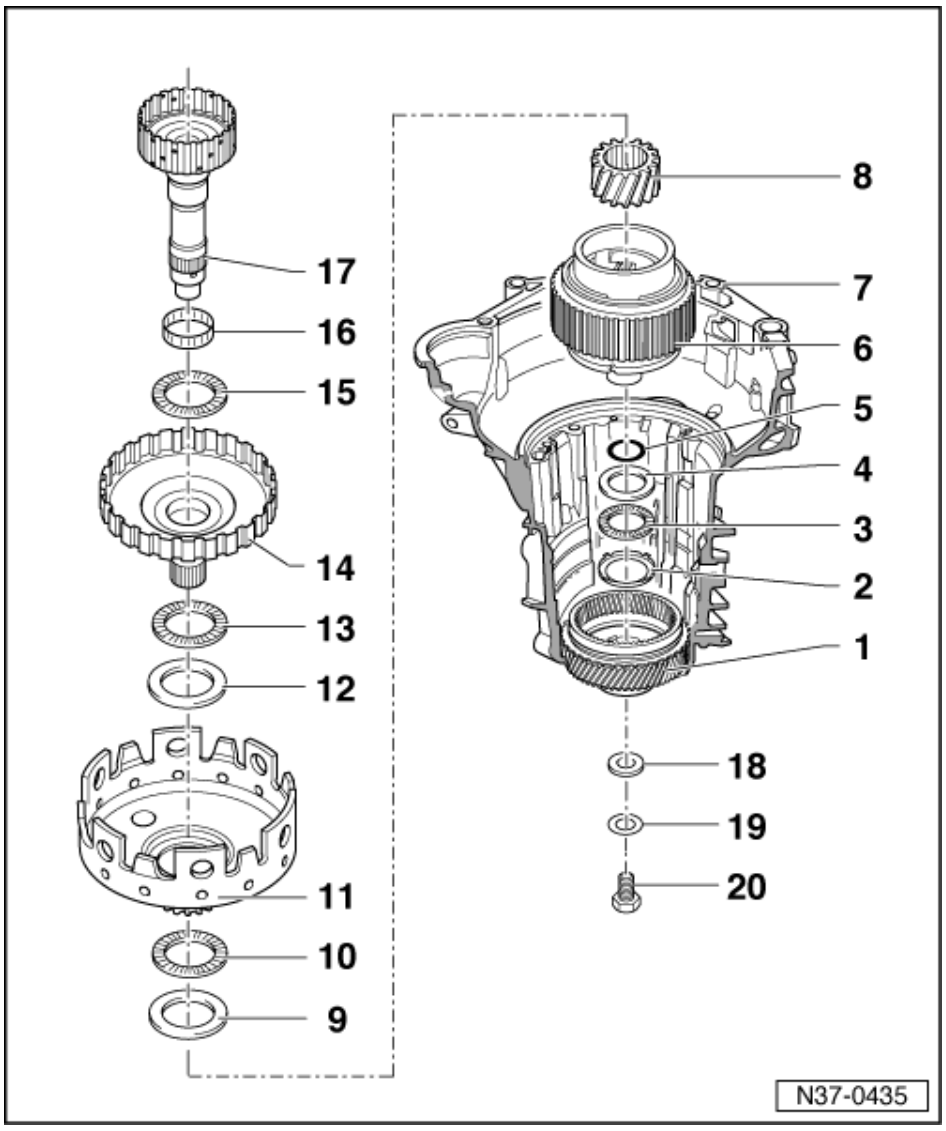

10 Axial needle bearing
11 Large sun gear
12 Washer
- Insert into large sun gear
  => Assembling planetary gearbox, Page 101

13 Axial needle bearing
14 Large input shaft
15 Axial needle bearing
16 Needle bearing
17 Small input shaft
18 Shim
- Do not install in planet carrier when adjusting

19 Washer
20 Bolt for small drive shaft - 30 Nm

Protected by copyright. Copying for private or commercial purposes, in part or in whole, is not permitted unless authorised by AUDI AG. AUDI AG does not guarantee or accept any liability with respect to the correctness of information in this document. Copyright by AUDI AG.

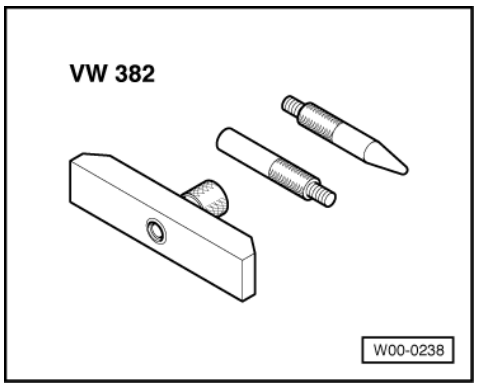

Special tools and workshop equipment required

- Measuring device VW 382
- Dial gauge

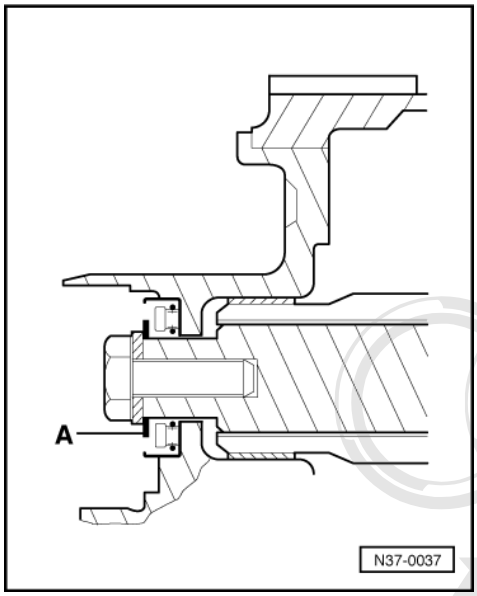

-> Determining shim -A-

- To adjust planet carrier, install all components (Items 1 to 9 and 14 to 18) => Page 115 in gearbox housing.

Protected by copyright. Copying for private or commercial purposes, in part or in whole, is not permitted unless authorised by AUDI AG. AUDI AG does not guarantee or accept any liability with respect to the correctness of information in this document. Copyright by AUDI AG.

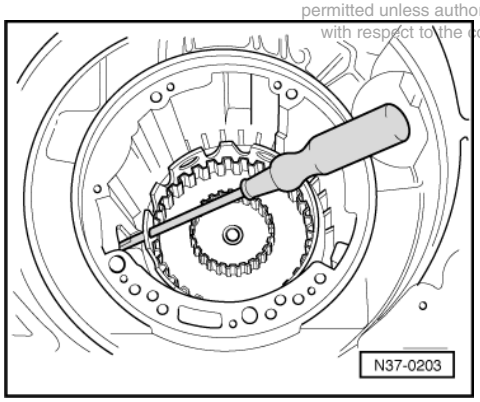

- Engage parking lock.
- -> To slacken bolt for small input shaft, insert screwdriver in holes of large sun gear.

Note:

If the parking lock cannot be engaged, use a second screwdriver to hold the large input shaft.

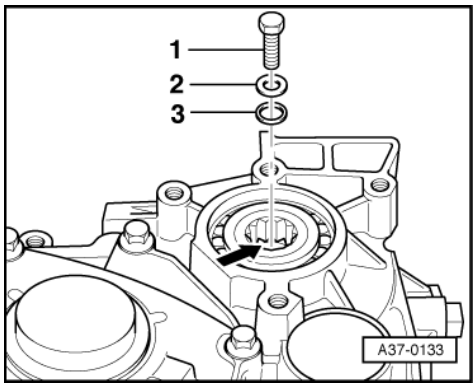

- -> Install bolt -1- for small drive shaft together with washer -2- but without shim -3-.
- Tighten bolt to 30 Nm.

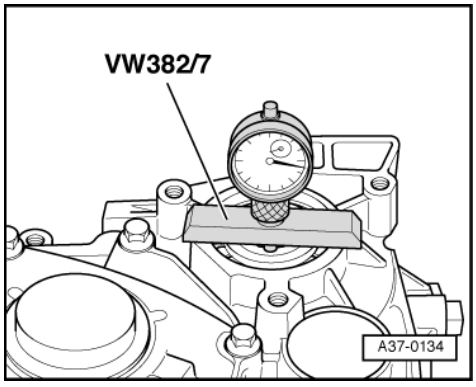

- -> Set up dial gauge so that tip of gauge is positioned on centre of bolt head with 1 mm preload.
- Zero dial gauge.
- Move small input shaft up and take reading.

• Reading in following example: 2.00 mm.

- Determine size of shim(s) according to table. Part Numbers

=> Parts catalogue

Protected by copyright. Copying for private or commercial purposes, in part or in whole, is not permitted unless authorised by AUDI AG. AUDI AG does not guarantee or accept any liability with respect to the correctness of information in this document. Copyright by AUDI AG.

Table of shims -A-

Gauge reading (mm)	Shim (mm)	Gauge reading (mm)	Shim (mm)
1.26 ... 1.35	1.0	2.26 ... 2.35	1.0 + 1.0
1.36 ... 1.45	1.1	2.36 ... 2.45	1.0 + 1.1
1.46 ... 1.55	1.2	2.46 ... 2.55	1.1 + 1.1
1.56 ... 1.65	1.3	2.56 ... 2.65	1.1 + 1.2
1.66 ... 1.75	1.4	2.66 ... 2.75	1.2 + 1.2
1.76 ... 1.85	1.5	2.76 ... 2.85	1.2 + 1.3
1.86 ... 1.95	1.6	2.86 ... 2.95	1.3 + 1.3
1.96 ... 2.05	1.7	2.96 ... 3.05	1.3 + 1.4
2.06 ... 2.15	1.8	3.06 ... 3.15	1.4 + 1.4

Gauge reading (mm)	Shim (mm)	Gauge reading (mm)	Shim (mm)
2.16 ... 2.25	1.9	3.16 ... 3.25	1.4 + 1.5

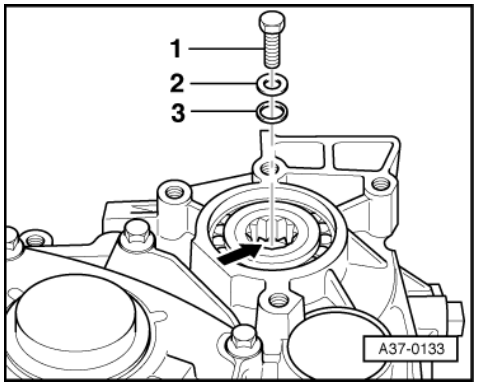

- Remove small input shaft bolt.
- -> Fit determined shim -3- onto small input shaft (arrow).

Example:

If the reading is 2.00 mm use a shim with a thickness of 1.7 mm.

- Insert bolt -1- for small input shaft together with washer -2-.
- Tighten bolt to 30 Nm.
- Carry out planet carrier check measurement => Page 120 .

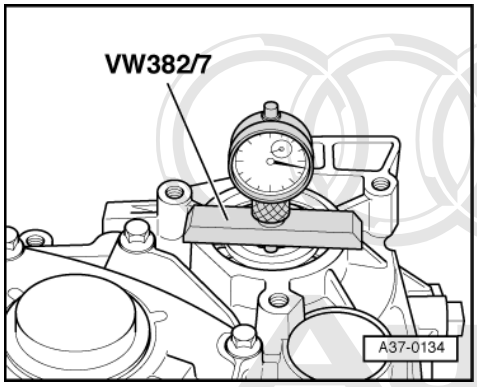

Planet carrier check measurement

Protected by copyright. Copying for private or commercial purposes, in part or in whole, is not permitted unless authorised by AUDI AG. AUDI AG does not guarantee or accept any liability with respect to the correctness of information in this document. Copyright by AUDI AG.

- -> Insert dial gauge in VW 382/7 and place the tip on the bolt of the small input shaft.
- Move small input shaft up and down and take reading of play on dial gauge.

• Play: min. = 0.23 mm; max. = 0.37 mm.

Note:

If the planet carrier has been adjusted with reverse gear brake -B1- and free wheel removed then before installing planet carrier install reverse gear brake -B1-, => Assembling planetary gearbox, Page 101 .

8.13 - II - Adjusting reverse gear brake -B1- - overview

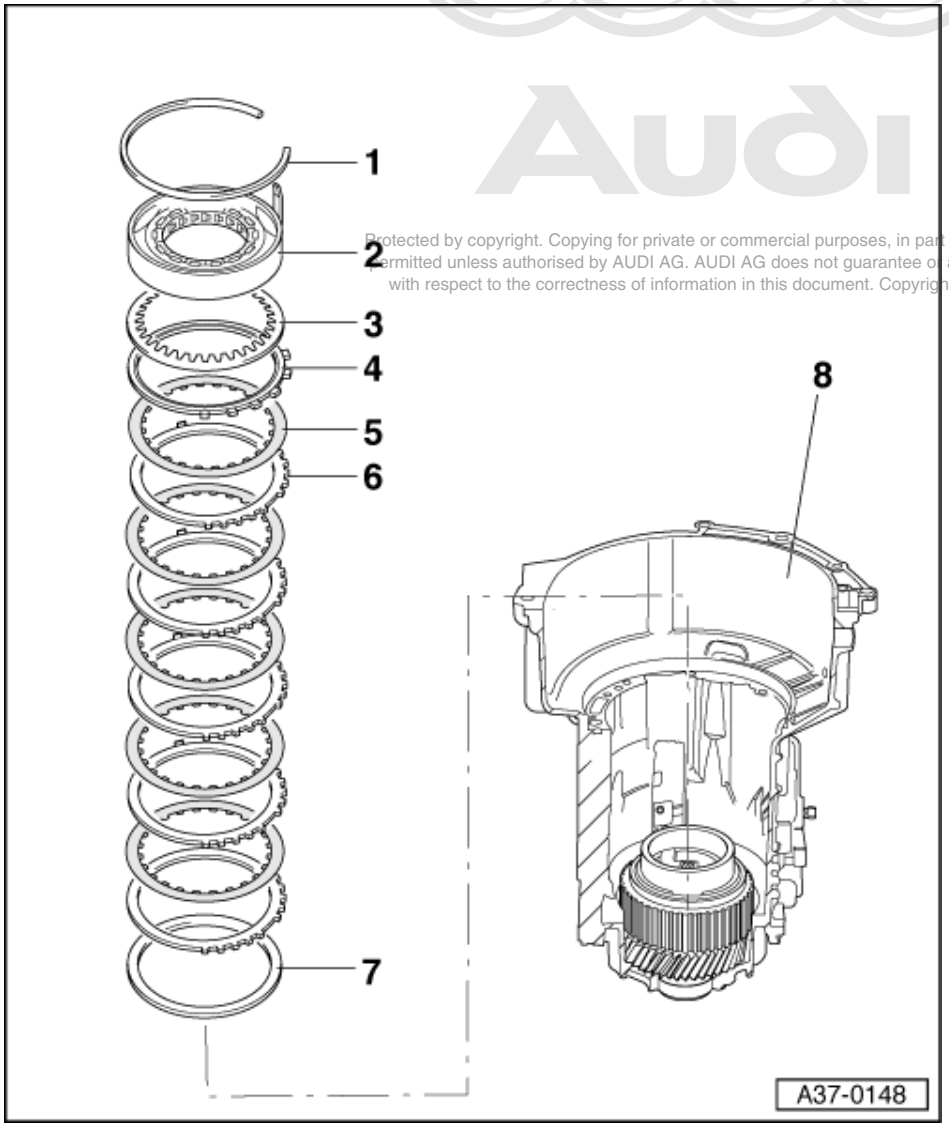

Protected by copyright. Copying for private or commercial purposes, in part or in whole, is not permitted unless authorised by AUDI AG. AUDI AG does not guarantee or accept any liability with respect to the correctness of information in this document. Copyright by AUDI AG.

Overview of components

1 Circlip
2 Free wheel with -B1- piston
3 Dished washer
- Installation position: Convex side faces toward free wheel

4 Pressure plate
- Installation position: Flat side faces toward plates
- As a replacement part it is assigned to the gearbox code letters (different identifications)

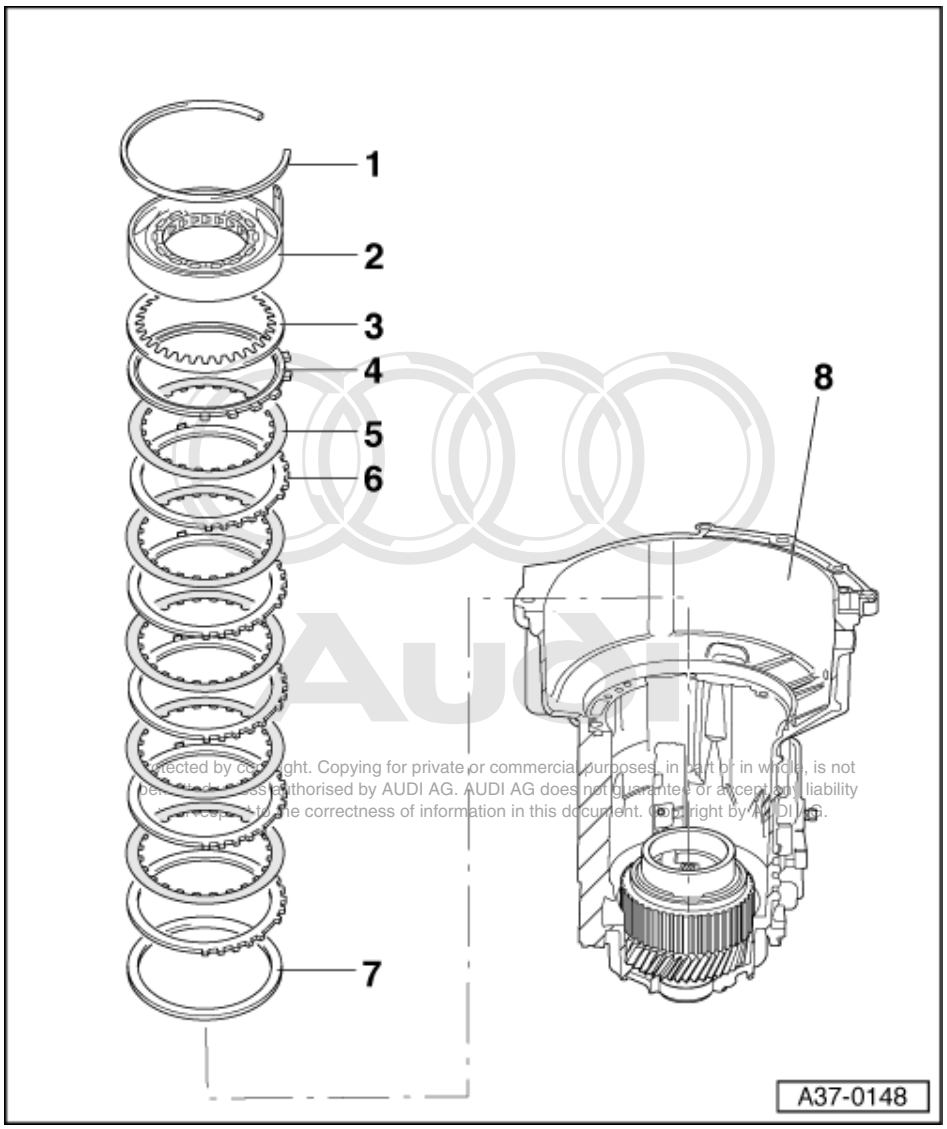

Audi
Protected by copyright. Copying for private or commercial purposes, in part or in whole, is not permitted unless authorised by AUDI AG. AUDI AG does not guarantee or accept any liability whatsoever for the correctness of information in this document. Copyright by AUDI AG.

5 Inner plate -B1-

- Quantity => from Page 2

6 Outer plate -B1-

- Quantity => from Page 2

7 Shim

- 1 or 2 shims can be installed

8 Gearbox housing

- With input gear and planet carrier installed

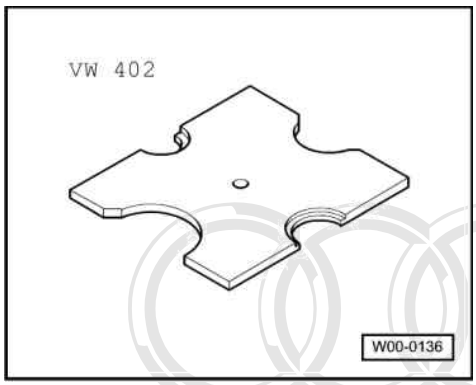

Special tools and workshop equipment required

- Press plate VW 402

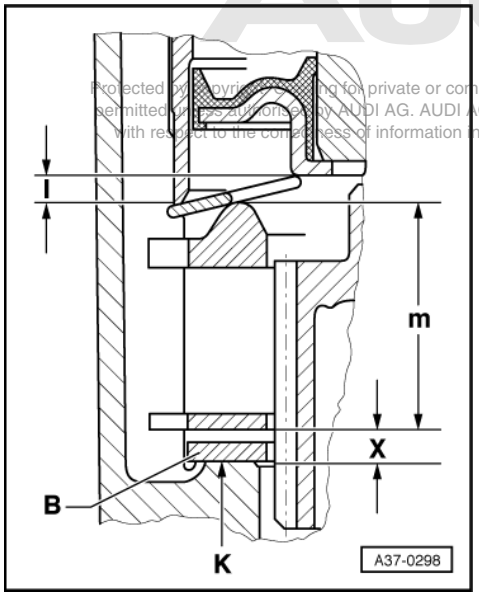

Protected by copyright. Copying for private or commercial purposes, in part or in whole, is not permitted unless authorised by AUDI AG. AUDI AG does not guarantee or accept any liability with respect to the correctness of information in this document. Copyright by AUDI AG.

-> Determining thickness of shim -B-

The thickness of the shim depends on the size of gap "x". Gap "x" is calculated using the following formula:

x = K + (l /2) - m

B	= Shim
x	= Gap
l	= Position of piston in free wheel; calculating "l"=> Page 124
m	= Height of plate set including pressure plate; calculating "m" => Page 124
K	= Constant value: 30.5 mm; "K" is determined by installation height in gearbox housing and is not adjustable.

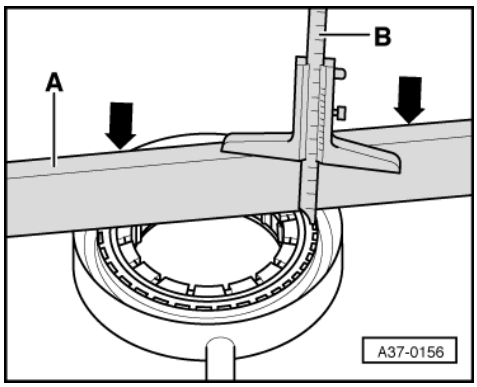

Calculating "l"

- Press piston into free wheel as far as stop.
- -> Place straightedge -A- onto outer race of free wheel and hold in position -arrows-.
- Use depth gauge -B- to measure down to inner edge of piston.

Example:

Reading	51.8 mm
- Straightedge	48.2 mm
= Calculated size "l"	3.6 mm

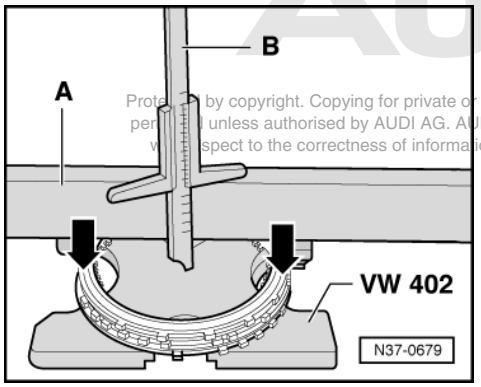

Protected by copyright. Copying for private or commercial purposes, in part or in whole, is not permitted unless authorised by AUDI AG. AUDI AG does not guarantee or accept any liability with respect to the correctness of information in this document. Copyright by AUDI AG.

Calculating "m"

- -> Place straightedge "A" on thrust plate.
- Compress set of plates including pressure plate in direction of arrow and measure the thickness of plate set with depth gauge "B".

Example:

Reading	77.2 mm
- Straightedge	48.2 mm
= Calculated size "m"	29.0 mm

Example for calculating gap:

x = K + (l /2) - m

x = 30.5 + (3.6 / 2) - 29.0 = 3.3 mm

- Determine size of shim(s) according to table. Part numbers

=> Parts catalogue

Table of shims -B-

Gap "x" (mm)	Shim(s) (mm)	Gap "x" (mm)	Shim(s) (mm)
2.36 ... 2.45	1.0	3.36 ... 3.45	1.0 + 1.0
2.46 ... 2.55	1.1	3.46 ... 3.55	1.0 + 1.1
2.56 ... 2.65	1.2	3.56 ... 3.65	1.1 + 1.1
2.66 ... 2.75	1.3	3.66 ... 3.75	1.1 + 1.2
2.76 ... 2.85	1.4	3.76 ... 3.85	1.2 + 1.2
2.86 ... 2.95	1.5	3.86 ... 3.95	1.2 + 1.3
2.96 ... 3.05	1.6	3.96 ... 4.05	1.3 + 1.3
3.06 ... 3.15	1.7	4.06 ... 4.15	1.3 + 1.4
3.16 ... 3.25	1.8	4.16 ... 4.25	1.4 + 1.4
3.26 ... 3.35	1.9		

Protected by copyright. Copying for private or commercial purposes, in part or in whole, is not permitted unless authorised by AUDI AG. AUDI AG does not guarantee or accept any liability with respect to the correctness of information in this document. Copyright by AUDI AG.

- After determining shim for -B1- carry out check measurement.

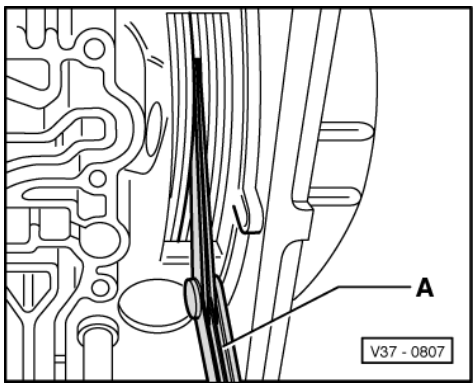

Reverse gear brake -B1- check measurement

- Install parts up to free wheel and secure with circlip
  => Assembling planetary gearbox, Page 101 .
- -> Use a feeler gauge -A- to measure play between the plates (accessible through gap next to valve body flange).

• Play: min. = 1.25 mm; max. = 1.55 mm.

8.14 - III - Adjusting clutch play between -K1- and -K2-

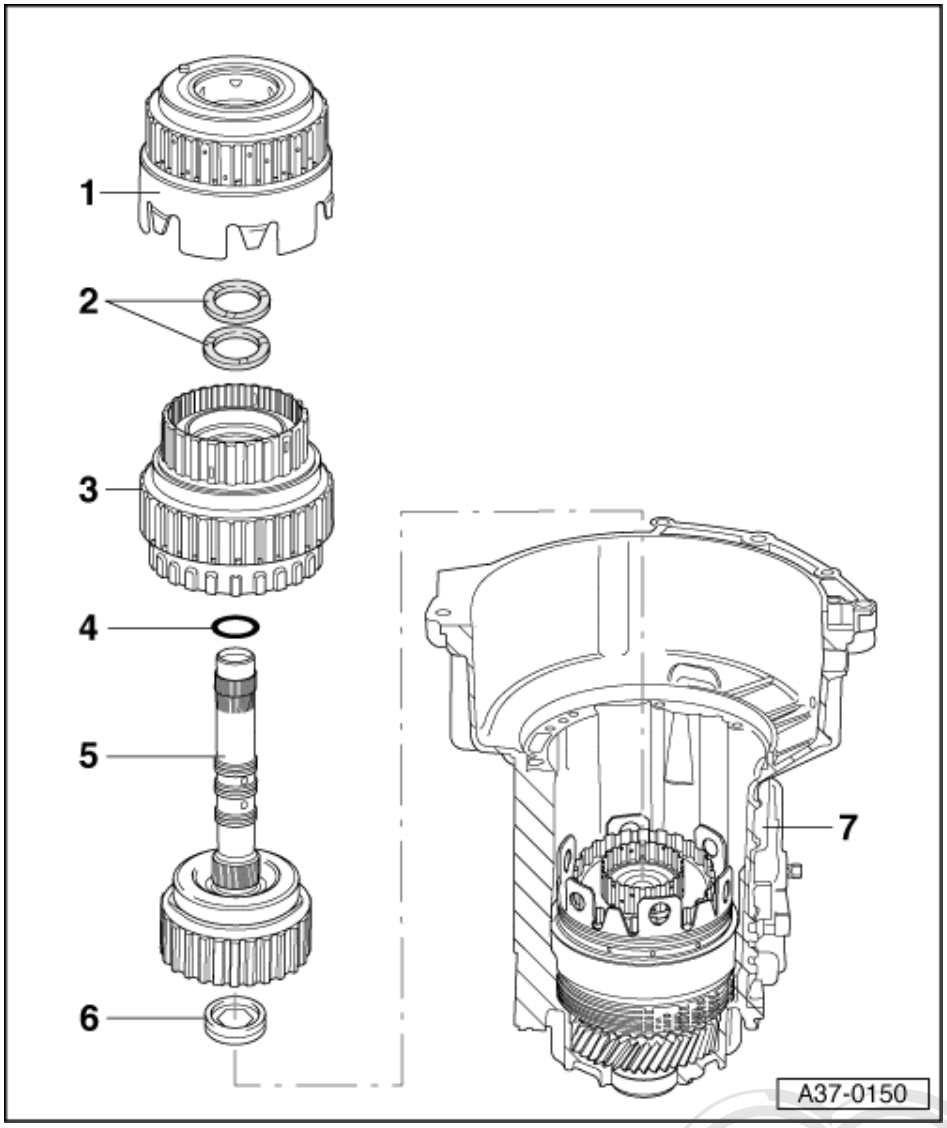

Overview of components

Note:

To adjust the clutch play, install components without shim(s) (Item 101

1 Reverse gear clutch -K2-

- Does not need to be installed to determine shim(s)
- Install for check measurement

2 Shim

- Do not install when adjusting clutch play
- Up to 3 shims may be installed

Protected by copyright. Copying for private or commercial purposes, in part or in whole, is not permitted unless authorised by AUDI AG. AUDI AG does not guarantee or accept any liability with respect to the correctness of information in this document. Copyright by AUDI AG.

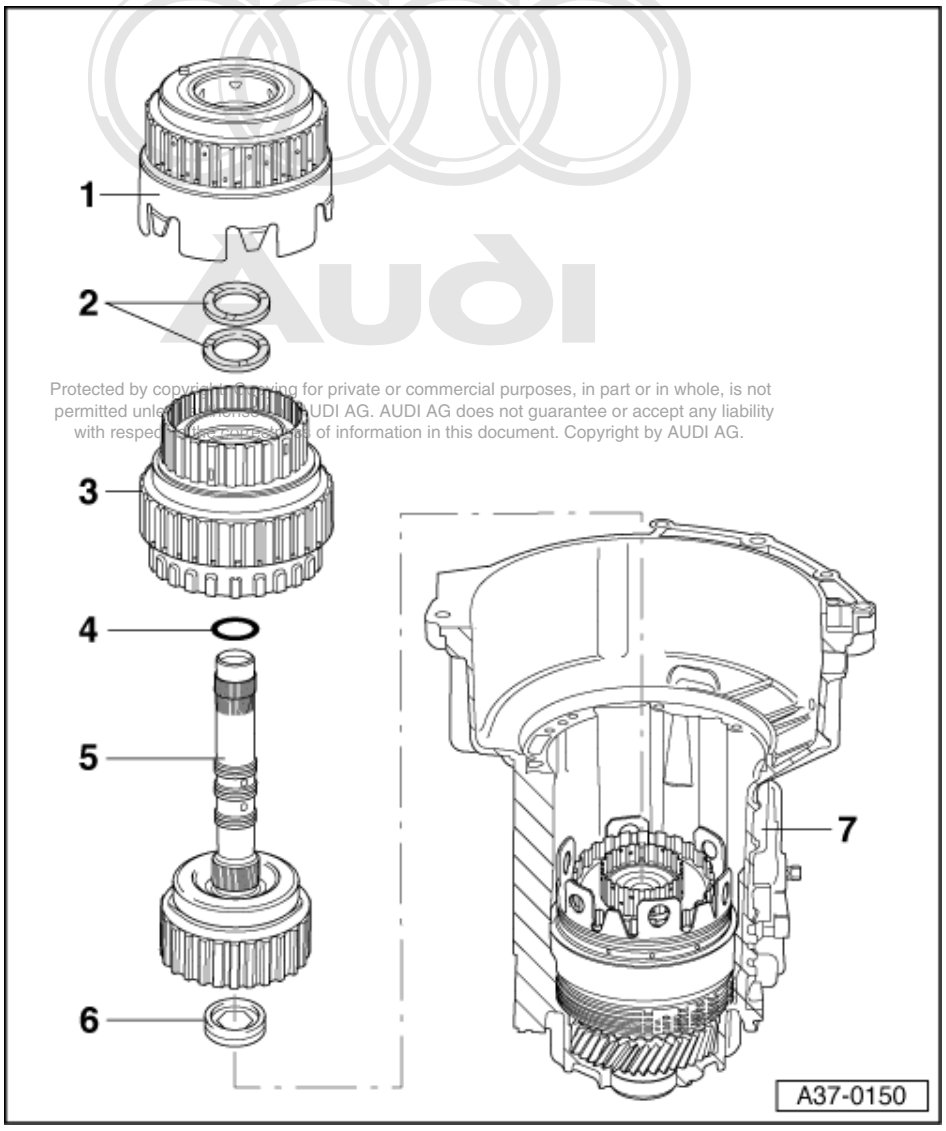

Protected by copyright. Copying for private or commercial purposes, in part or in whole, is not permitted unless authorised by AUDI AG. AUDI AG does not guarantee or accept any liability with respect to the correctness of information in this document. Copyright by AUDI AG.

3 1st to 3rd gear clutch -K1-

4 O-ring

5 3rd and 4th gear clutch -K3- with turbine shaft

6 Axial needle bearing with washer

- Axial needle bearing faces towards small input shaft
- Washer faces towards -K3-

7 Gearbox housing

- Planetary gearbox installed up to small input shaft => Assembling planetary gearbox, Page 101

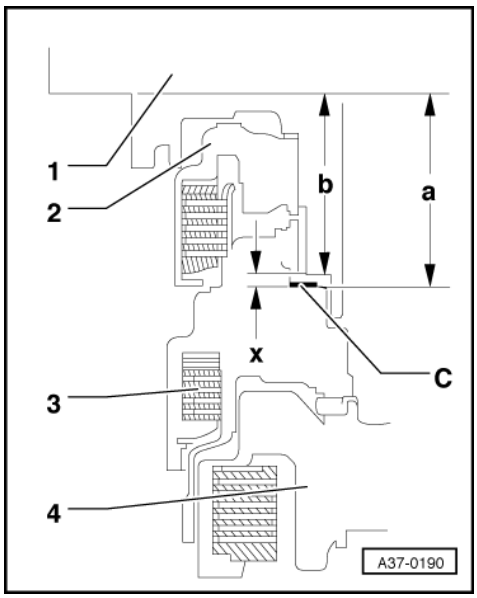

Determining thickness of shim(s) -C-

Conditions:

- Planet carrier has been installed and adjusted
  => Assembling planetary gearbox, Page 101
- To perform measurement, gearbox housing must be turned on repair stand so that input gear is facing downwards, as shown on => Page 126 .

-> The thickness of the shim(s) depends on the size of gap "x". Gap "x" is calculated using the following formula:

x = a - b

1 - ATF pump
2 - Reverse gear clutch -K2-
3 - 1st to 3rd gear clutch -K1-
4 - 3rd and 4th gear clutch -K3-

C = Shim(s)
x = Gap
a = Installed depth of clutch -K1-; calculating => Page 129
b = Size of ATF pump housing; calculating => Page 129

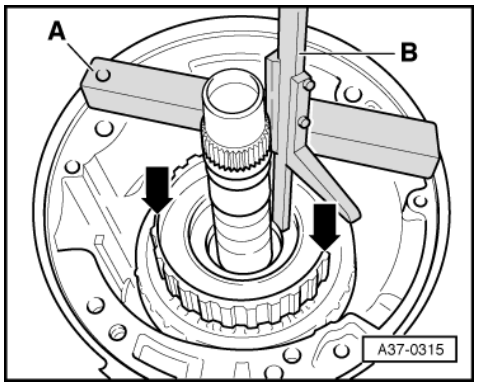

Protected by copyright. Copying for private or commercial purposes, in part or in whole, is not permitted unless authorised by AUDI AG. AUDI AG does not guarantee or accept any liability with respect to the correctness of information in this document. Copyright by AUDI AG.

Calculating "a"

- -> Place short straightedge "A" onto pump flange on gearbox housing.
- Press -K1- down in direction of arrow and measure distance into -K1- with depth gauge "B".

Example:	
Reading	73.7 mm

Example for calculating "a":

Reading	73.7 mm
- Straightedge	19.5 mm
= Calculated distance "a"	54.2 mm

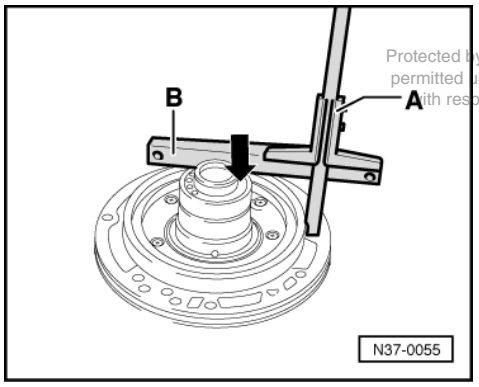

Protected by copyright. Copying for private or commercial purposes, in part or in whole, is not permitted unless authorised by AUDI AG. AUDI AG does not guarantee or accept any liability with respect to the correctness of information in this document. Copyright by AUDI AG.

Calculating "b"

- Place paper gasket onto ATF Pump.
- -> Place straightedge -B- onto stator support (arrow) and measure with depth gauge -A- to gasket of pump flange.

Example:

Reading	70.5 mm
- Straightedge	19.5 mm
= Calculated distance "b"	51.0 mm

Example for calculating "x":

Gap x = a - b

= 54.2 mm - 51.0 mm = 3.2 mm

- Determine size of shim(s) according to table. Part Numbers

=> Parts catalogue

Table of shims -C-

Gap "x" (mm)	Shim(s) (mm)
... 2.54	1.4
2.55 ... 3.09	1.0 + 1.0
3.10 ... 3.49	1.2 + 1.2
3.50 ... 3.89	1.4 + 1.4

Gap "x" (mm)	Shim(s) (mm)
3.90 ... 4.29	1.6 + 1.6
4.30 ... 4.69	1.8 + 1.8
4.70 ... 5.04	1.2 + 1.2 + 1.6
5.05 ... 5.25	1.2 + 1.2 + 1.8

The shims have various thicknesses:

blue	=	1.0 mm
green	=	1.2 mm
white	=	1.4 mm
black	=	1.6 mm
grey	=	1.8 mm

- Carry out clutch play check measurement after installing ATF pump.

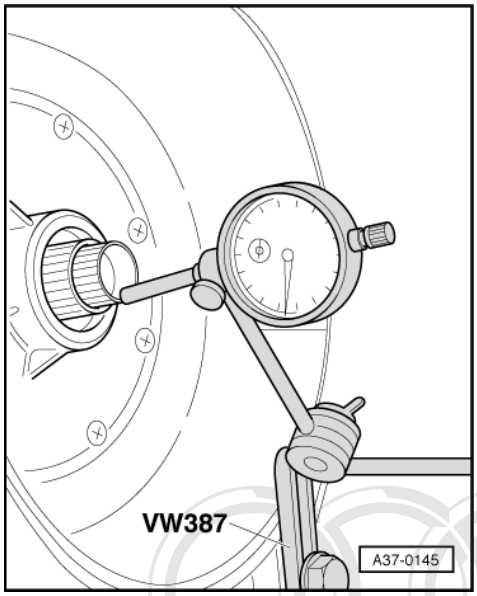

Check measurement (clutch play)

- The clutch play cannot be measured until the ATF pump has been installed.
- Reverse gear clutch -K1- must be installed.

- Attach dial gauge holder to gearbox housing and place dial gauge on turbine shaft with a preload of 1 mm.

Notes:

- Bring the gearbox into its normal position as installed in the vehicle to enable the turbine shaft to be moved.
- The turbine shaft should only be moved by hand; using pliers will damage the splines.

Copyright by AUDI AG. Copying or distribution of this document is prohibited. Reproduction or distribution of this document is prohibited. Unauthorised use of this document is prohibited. AUDI AG does not guarantee or assume any liability with respect to the correctness of information in this document. Copyright by AUDI AG.

- -> Pull turbine shaft out and push it in (shaft will be difficult to move) and read off play on dial gauge.

- Play: min. = 0.5 mm; max. = 1.2 mm.

8.15 - IV - Adjusting 2nd and 4th gear brake -B2-

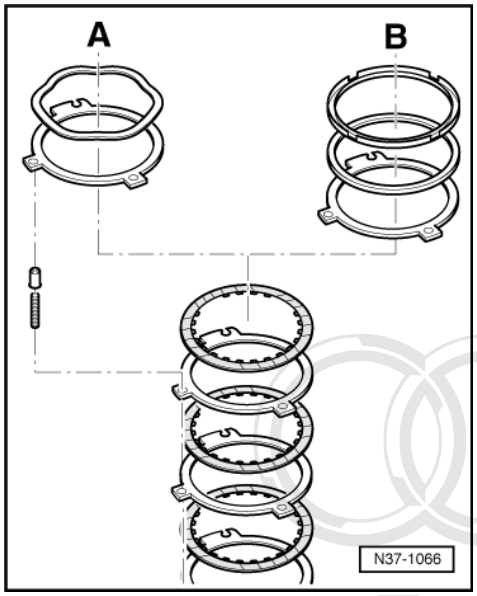

-> There are two types of gearboxes:

A - Gearboxes with a corrugated spring washer fitted on the last outer plate of brake -B2-(code letters=>from Page 132

B - Gearboxes with a shim and a retaining ring fitted on brake -B2- (code letters=>from Page 138

Protected by copyright. Copying for private or commercial purposes, in part or in whole, is not permitted unless authorised by AUDI AG. AUDI AG does not guarantee or accept any liability with respect to the correctness of information in this document. Copyright by AUDI AG.

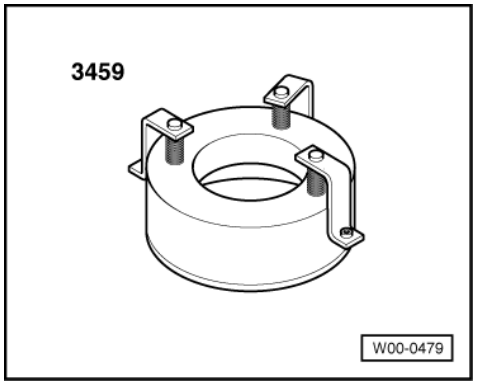

Special tools and workshop equipment required

- Adjustment appliance 3459

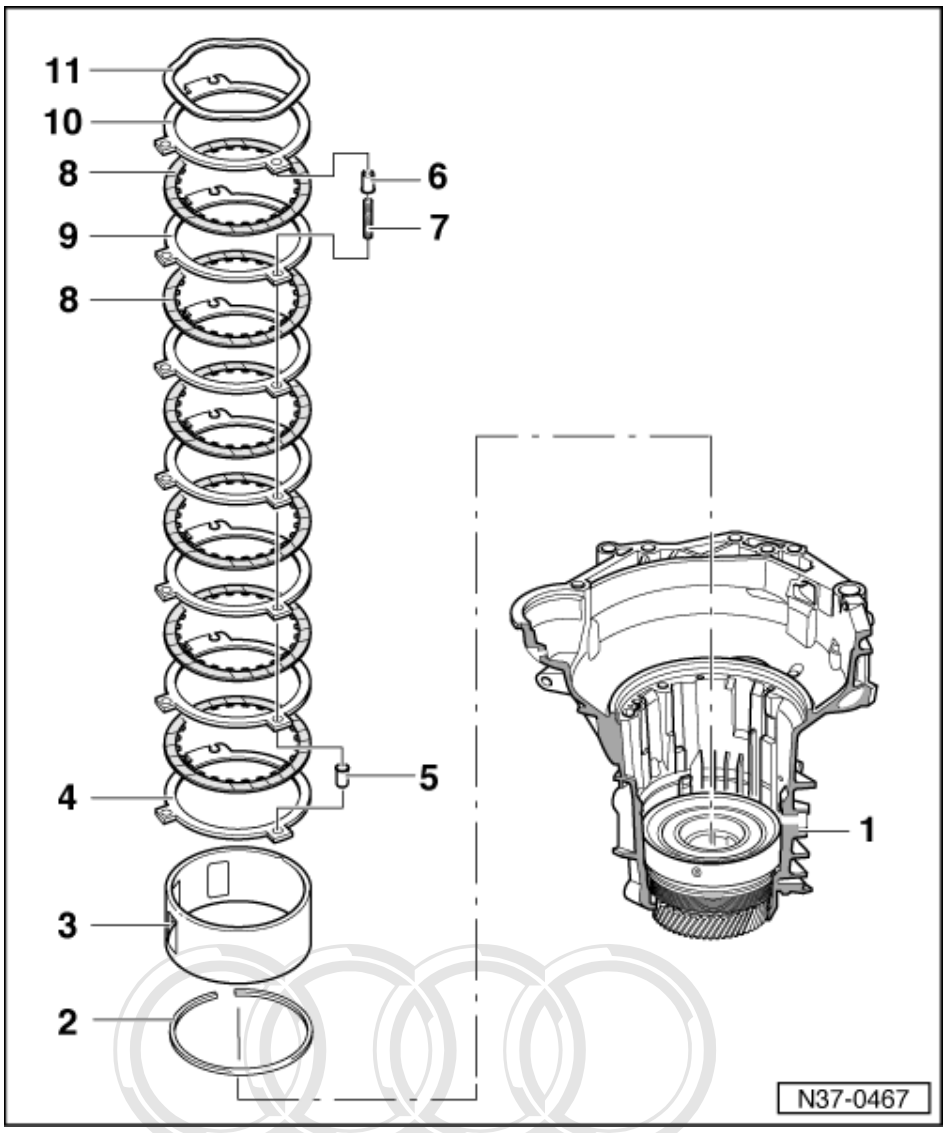

Adjusting 2nd and 4th gear brake -B2-

This adjustment instruction is only valid for gearboxes where a corrugated spring washer in brake -B2- on the last outer plate is installed (=> Items 10 and 11).

Gearbox code letters

Protected by copyright. Copying for private or commercial purposes, in part or in whole, is not permitted unless authorised by AUDI AG. AUDI AG does not guarantee or accept any liability with respect to the correctness of information in this document. Copyright by AUDI AG.

=> from Page 2 .

On these gearboxes the play of brake -B2- is determined by the thickness of the last outer plate(s) -Item 10 -.

Note:

Adjusting gearboxes without corrugated spring washer=> Page 138 .

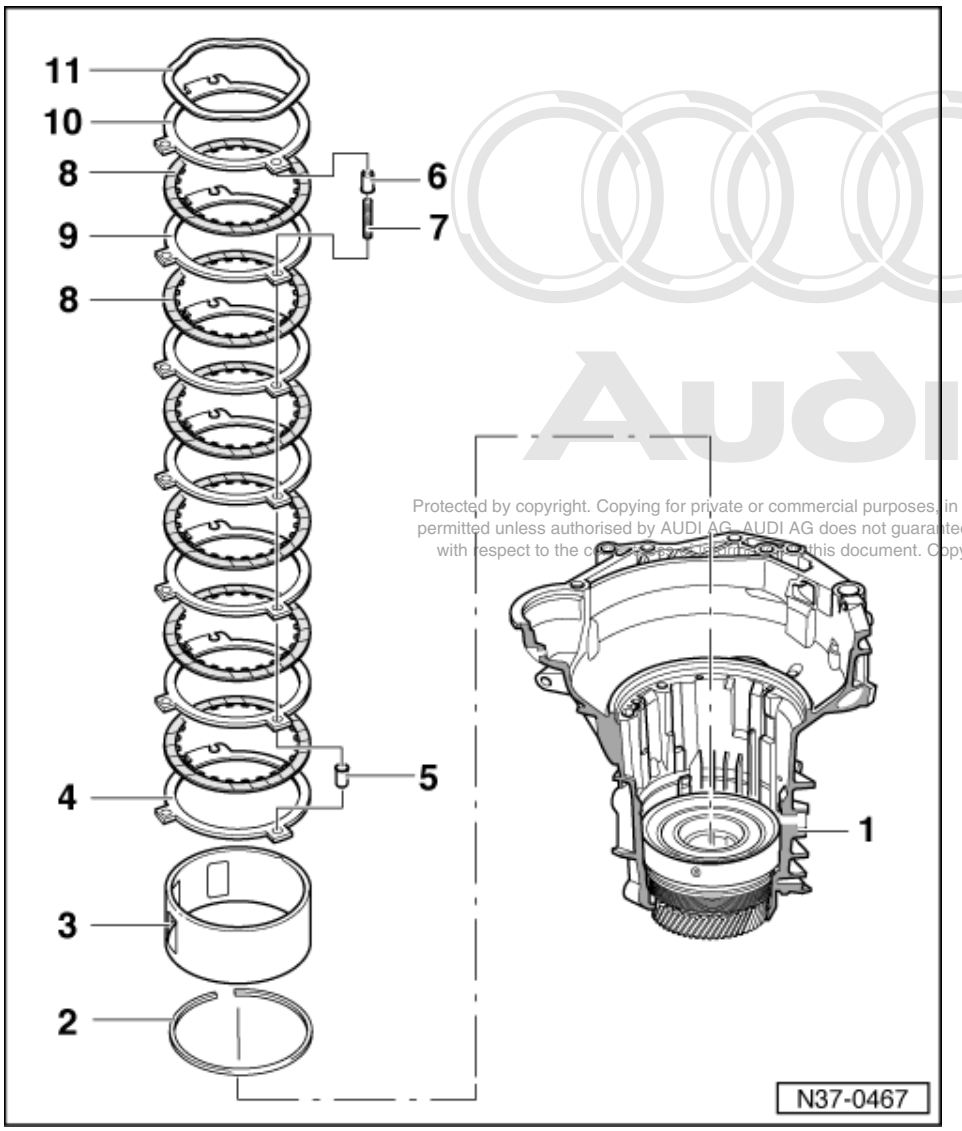

Protected by copyright. Copying for private or commercial purposes, in part or in whole, is not permitted unless authorised by AUDI AG. AUDI AG does not guarantee or accept any liability with respect to the correctness of information in this document. Copyright by AUDI AG.

- To adjust, install components without corrugated washer (item 11), without last outer plate (item 10) and without spring caps (item 6).

1 Gearbox housing

2 Circlip

- For supporting tube
- Installation position: Open ends face toward retaining wedge of free wheel

3 Supporting tube -B2-

- Spare part is allocated according to gearbox code letters
- Insert so that notch locates on freewheel wedge

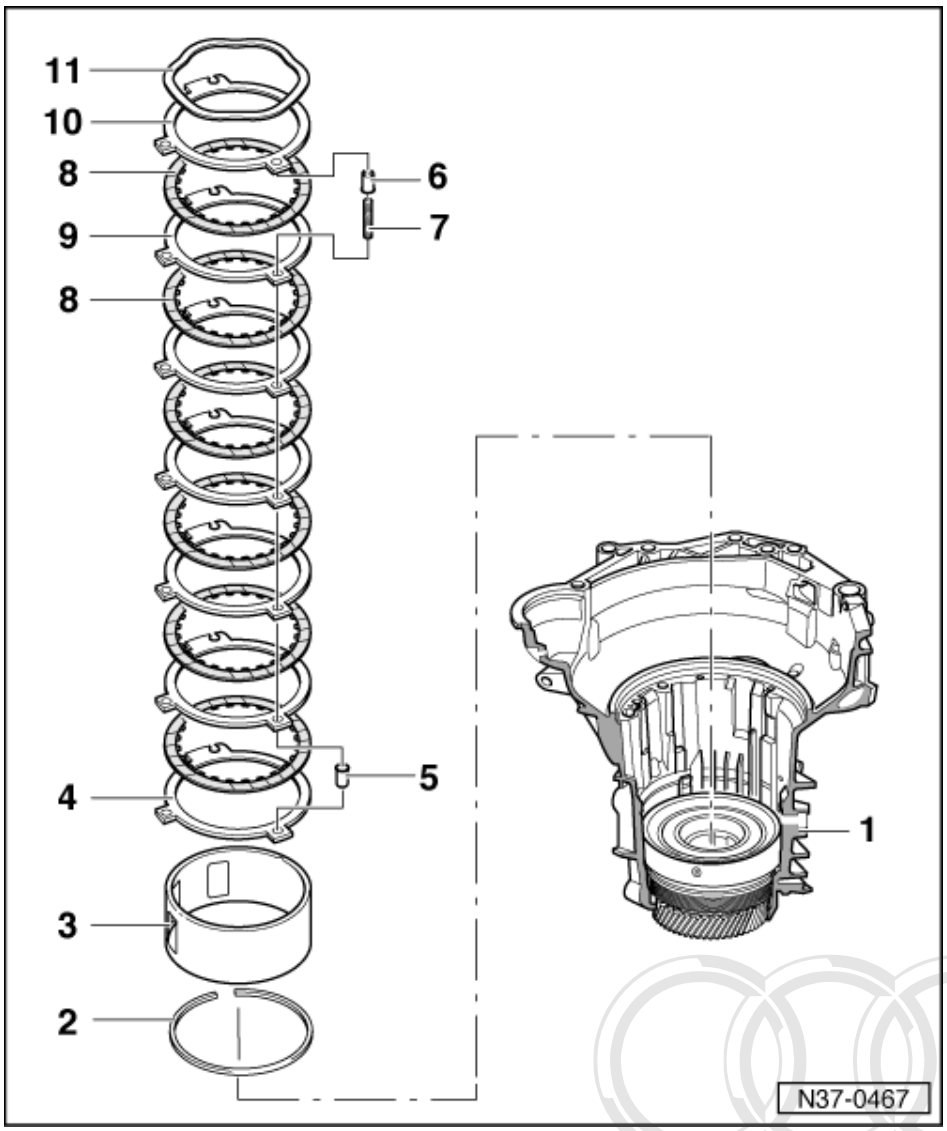

4 Outer plate -B2-
- 3 mm thick

5 Spring cap
- Install after installing first outer plate (item 4)

6 Spring cap
- Do not install when adjusting -B2-
- Install before installing last outer plate

7 Spring

8 Inner plate -B2-
- Quantity => from Page 2
- Spare part is allocated according to gearbox code letters

Protected by copyright. Copying for private or commercial purposes, in part or in whole, is not permitted unless authorised by AUDI AG. AUDI AG does not guarantee or accept any liability with respect to the correctness of information in this document. Copyright by AUDI AG.

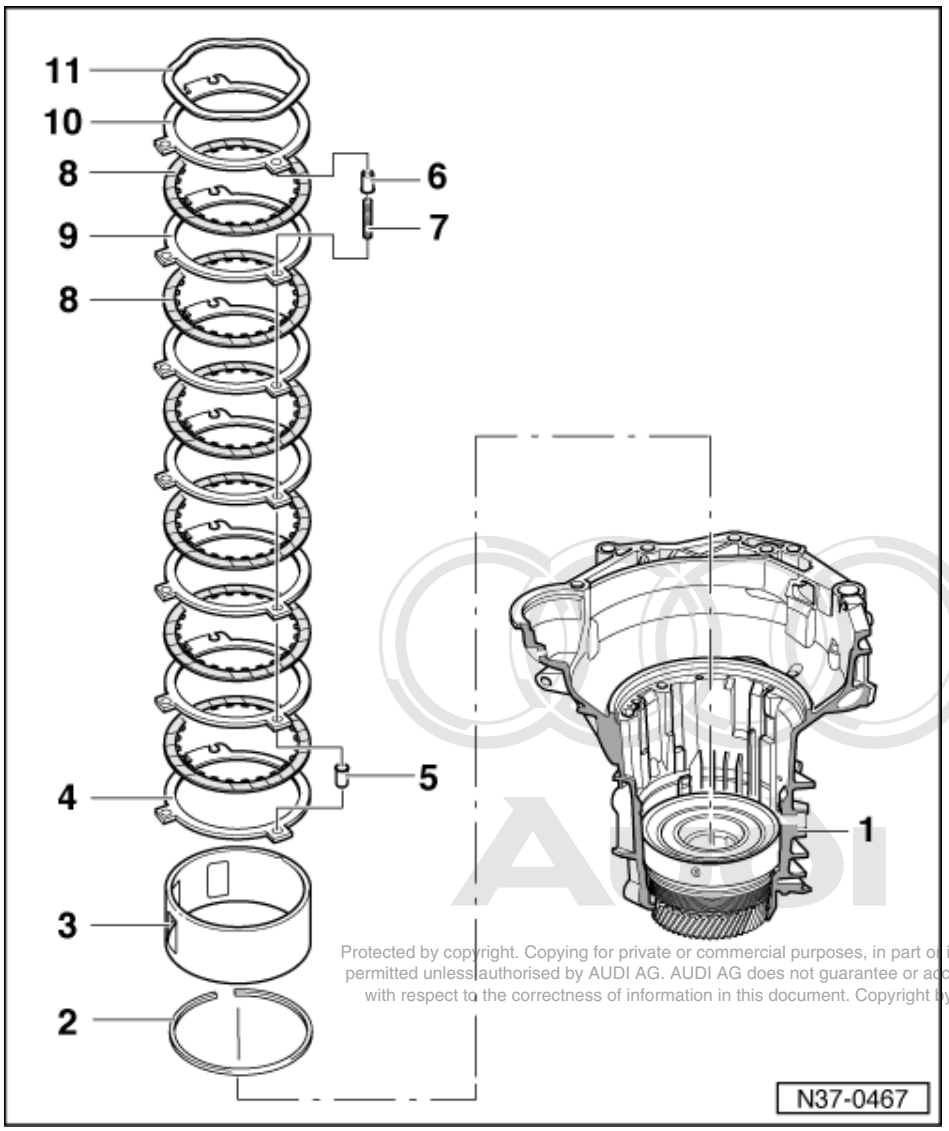

Protected by copyright. Copying for private or commercial purposes, in part or in whole, is not permitted unless authorised by AUDI AG. AUDI AG does not guarantee or accept any liability with respect to the correctness of information in this document. Copyright by AUDI AG.

9 Outer plate -B2-

- Always install 2 mm thick outer plates
- Quantity => from Page 2

10 Outer plate -B2-

- Do not install when adjusting -B2-
- To adjust, 2 outer plates can be installed.

11 Corrugated washer

- Do not install when adjusting -B2-

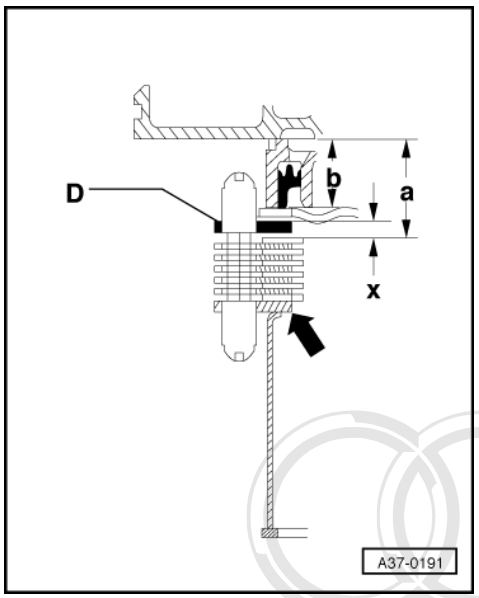

Calculating thickness of last outer plate -D-

-> The thickness of the outer plate(s) is determined by gap "x". Gap "x" is calculated using the following formula:

x = a - b - 3.6 mm

D = Outer plate(s)
x = Gap
a = Installed depth of 2nd and 4th gear brake -B2-; calculating => Page 136
b = Size of ATF pump housing; calculating => Page 137

Protected by copyright. Copying for private or commercial purposes, in part or in whole, is not permitted unless authorised by AUDI AG. AUDI AG does not guarantee or accept any liability with respect to the correctness of information in this document. Copyright by AUDI AG.

The illustration shows a cross-section of the brake -B2- in assembled form. Special tool 3459, which exerts a force onto the set of plates, is not illustrated.

3.6 mm is the allowance for settling resulting from the force exerted by special tool 3459.

Note:

The first outer plate -arrow- is 3 mm thick.

Calculating measurement "a"

Assemble planetary gearbox up to the last -B2- inner plate,
=> Page 101 . The last outer plate, the last 3 spring caps and the corrugated washer are not installed.

- Place special tool 3459 onto the last inner plate and turn so that the 3 clips align with the holes for the ATF pump.
- Bolt special tool to flange for ATF pump: tightening torque 5 Nm.

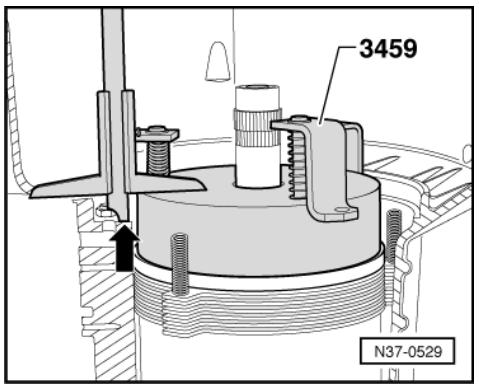

Note:

The plate set for -B2- is now pressed together for measurements.

- -> Measure from pump flange/gearbox housing -arrow- to 3459 with depth gauge.

Dimension a = Height of 3459 in mm - measured value

Example:

Height of 3459	60.0 mm
- Measured value	29.8 mm
= Calculated value "a"	30.2 mm

- Remove special tool 3459.

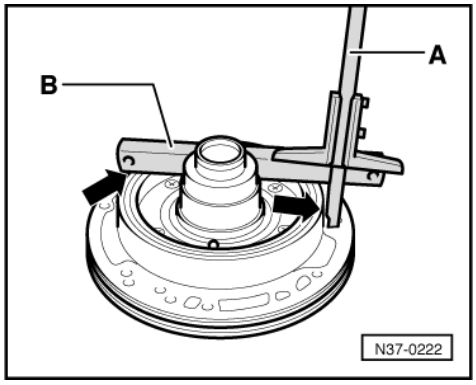

Calculating measurement "b"

- Push piston into ATF pump onto stop.
- Place paper gasket onto ATF Pump.
- -> Place straightedge "B" onto stator support (arrow) and measure with depth gauge "A" to gasket of pump flange.

Example:

Reading	40.1 mm
- Straightedge	19.5 mm
= Calculated size "b"	20.6 mm

Protected by copyright. Copying for private or commercial purposes, in part or in whole, is not permitted unless authorised by AUDI AG. AUDI AG does not guarantee or accept any liability with respect to the correctness of information in this document. Copyright by AUDI AG.

x = a - b - 3.6 mm

= 30.2 mm - 20.6 mm - 3.6 mm = 6.0 mm

- Determine thickness of outer plate(s) according to table. Part numbers

=> Parts catalogue

Table of outer plates -D-

Gap "x" (mm)	Outer plate(s) (mm)
4.25 ... 4.49	2.75
4.50 ... 4.74	3.00
4.75 ... 4.99	3.25
5.00 ... 5.24	3.50
5.25 ... 5.49	3.75
5.50 ... 5.74	2.00 + 2.00

Gap "x" (mm)	Outer plate(s) (mm)
5.75 ... 5.99	2.00 + 2.25
6.00 ... 6.24	2.25 + 2.25
6.25 ... 6.49	2.25 + 2.50
6.50 ... 6.74	2.50 + 2.50
6.75 ... 7.00	2.50 + 2.75

- Fit three spring caps onto the compression springs.
- Install last outer plate(s) as selected from table.
- Install corrugated washer
- Further installation instructions => Page 111 .

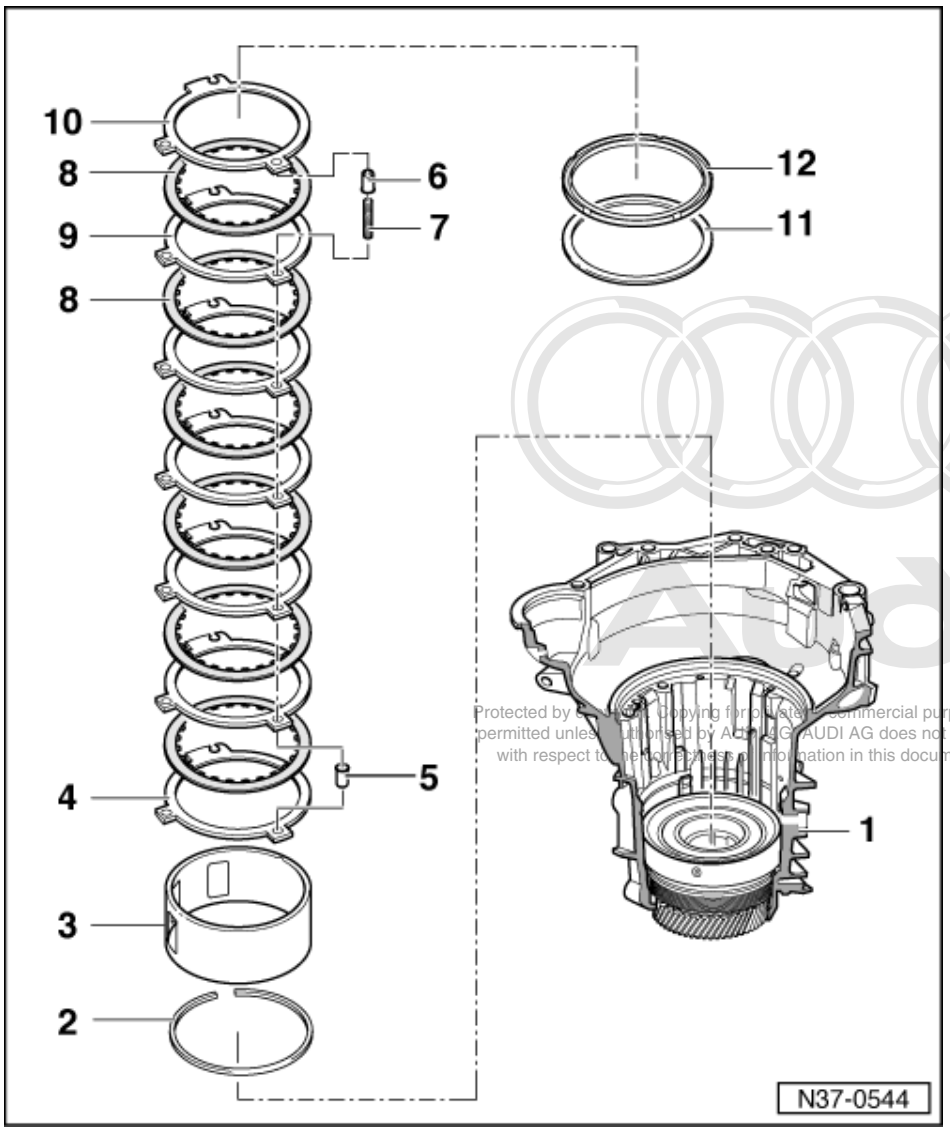

Protected by copyright. Copying for private or commercial purposes, in part or in whole, is not permitted unless authorised by AUDI AG. AUDI AG does not guarantee or accept any liability with respect to the correctness of information in this document. Copyright by AUDI AG.

Adjusting 2nd and 4th gear brake -B2-

These adjustment procedures are only valid for gearboxes with a shim and retaining ring installed in brake -B2-
(=> Items 11 and 12).

Gearbox code letters

=> from Page 2 .

In these gearboxes the play in brake -B2- is determined by the thickness of the shim -Item 11 -.

Note:

Adjusting gearboxes with corrugated spring washer=> Page 132 .

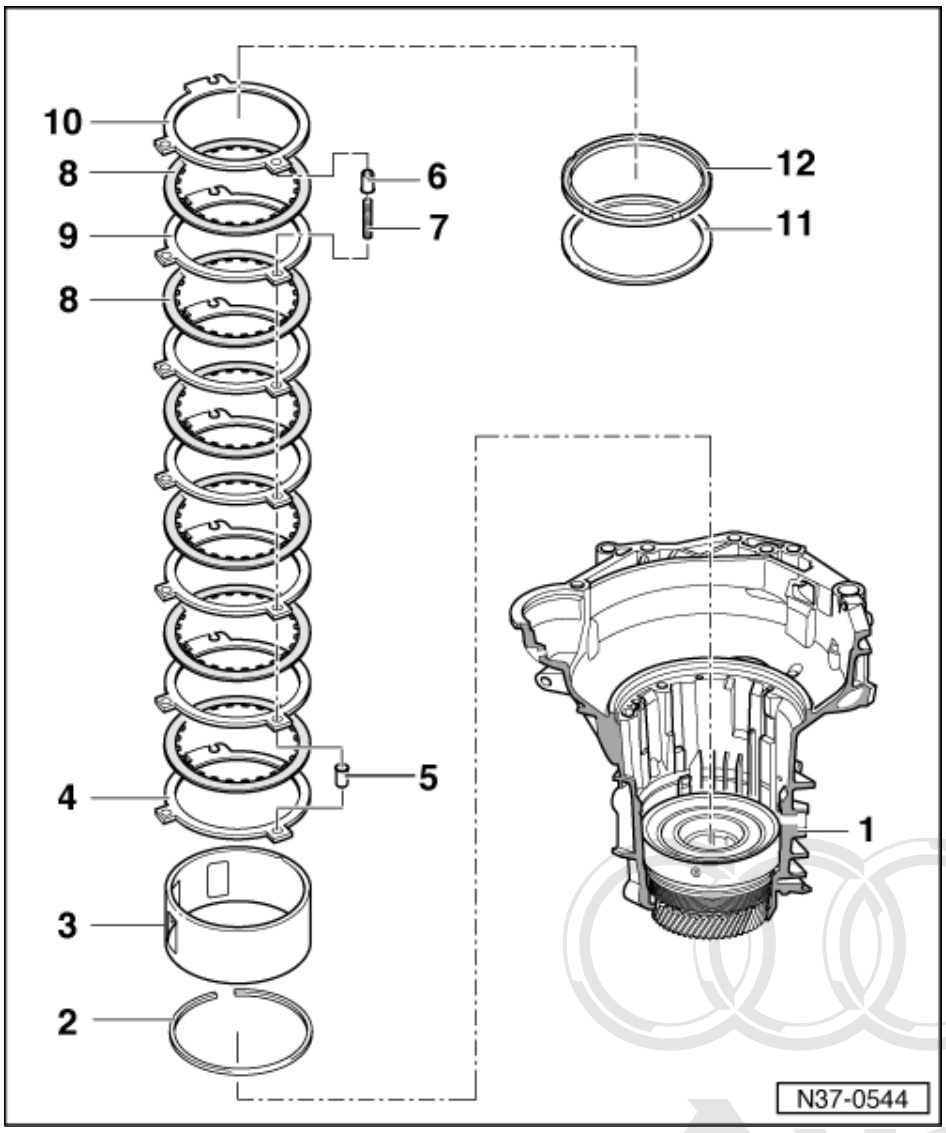

- To adjust, install components without shim (Item 11), without last outer plate (Item 10) and without spring caps (Item 6).

1 Gearbox housing

2 Circlip

- For supporting tube
- Installation position: Open ends face toward retaining wedge of free wheel

3 Supporting tube -B2-

- Spare part is assigned according to gearbox code letters
- Insert so that notch locates on freewheel wedge

Protected by copyright. Copying for private or commercial purposes, in part or in whole, is not permitted unless authorised by AUDI AG. AUDI AG does not guarantee or accept any liability with respect to the correctness of information in this document. Copyright by AUDI AG.

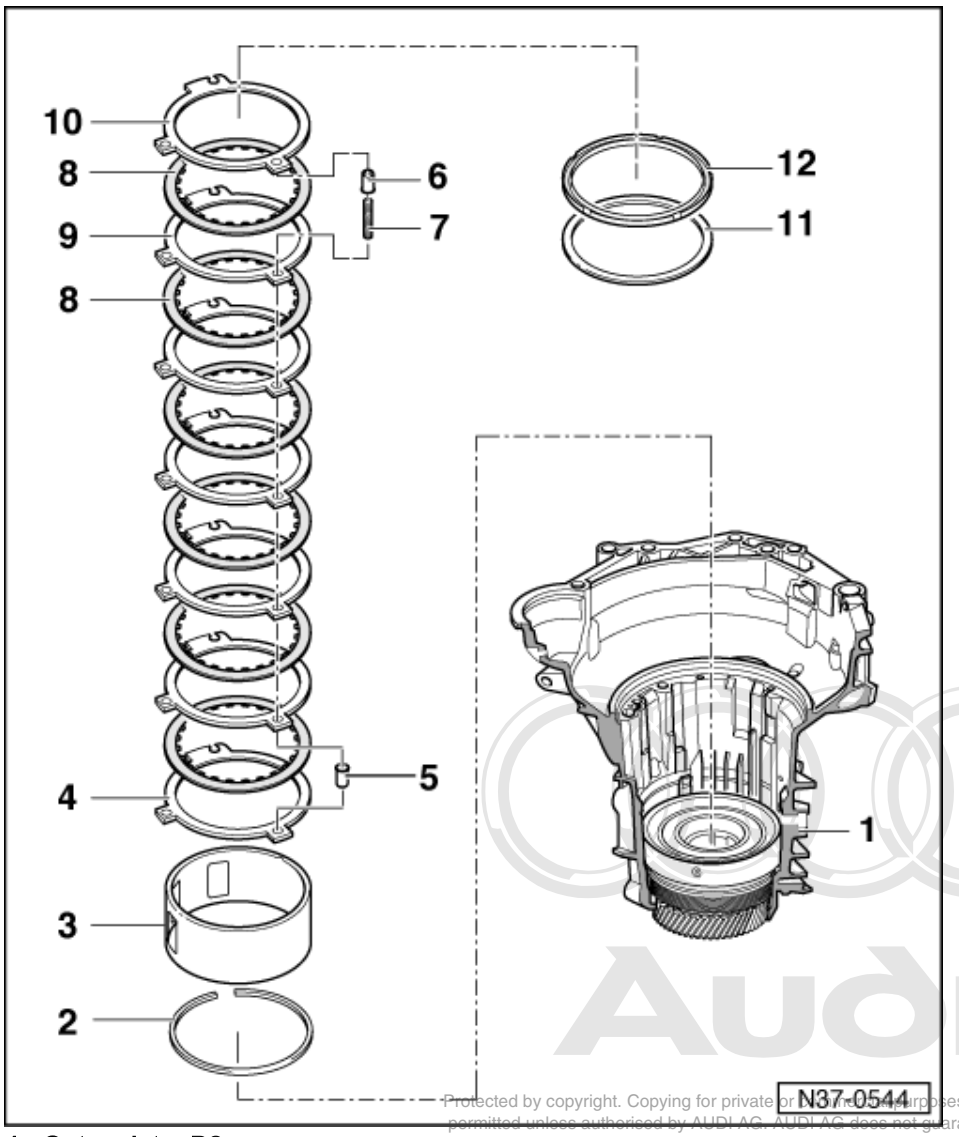

Protected by copyright. Copying for private or commercial purposes, in part or in whole, is not permitted unless authorised by AUDI AG. AUDI AG does not guarantee or accept any liability with respect to the correctness of information in this document. Copyright by AUDI AG.

4 Outer plate -B2-
- 3 mm thick

5 Spring cap
- Install after installing first outer plate (Item 4)

6 Spring cap
- Do not install when adjusting -B2-
- Install before installing last outer plate

7 Spring
- Spare part is allocated according to gearbox code letters

8 Inner plate -B2-
- Quantity => from Page 2
- Spare part is allocated according to gearbox code letters

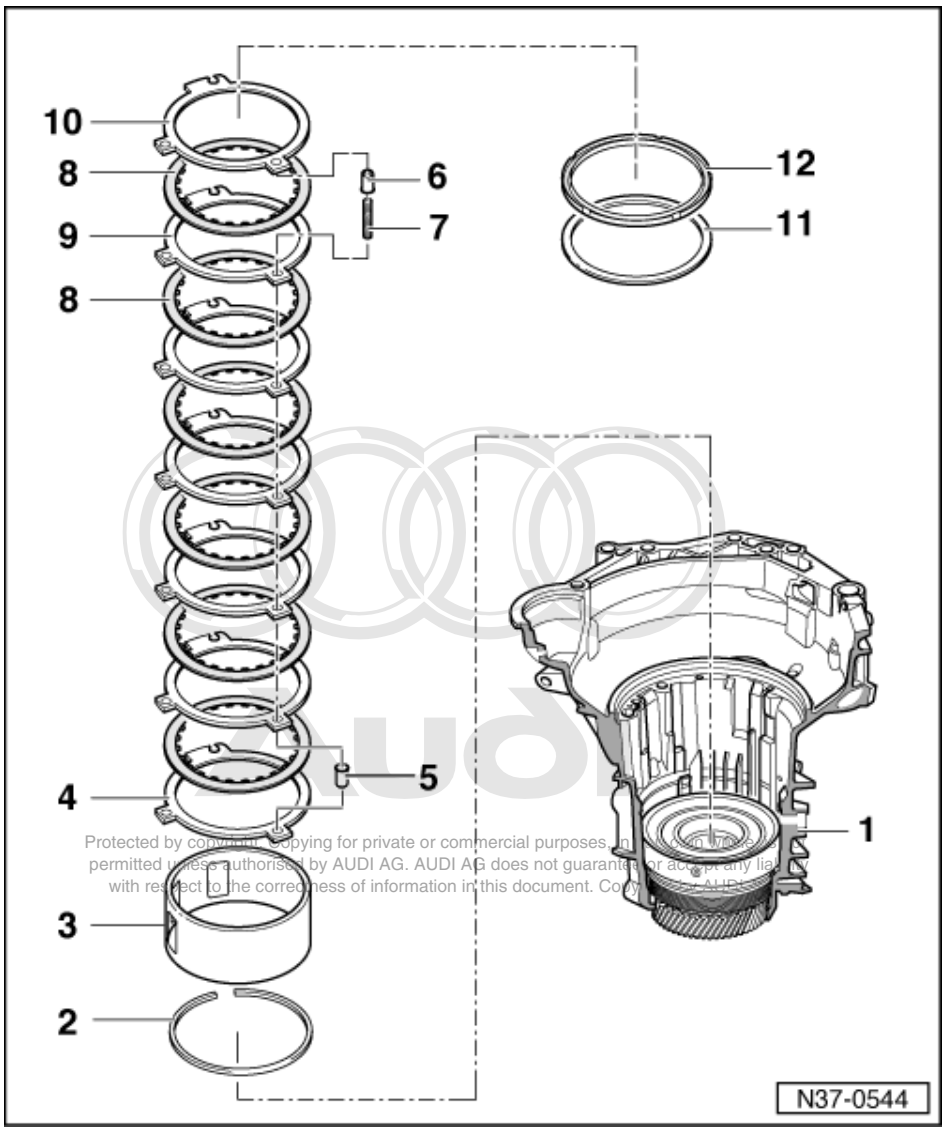

Protected by copyright. Copying for private or commercial purposes, in part or in whole, is not permitted unless authorised by AUDI AG. AUDI AG does not guarantee or accept any liability with respect to the correctness of information in this document. Copyright by AUDI AG.

9 Outer plate -B2-

- Always install 2 mm thick outer plates
- Quantity => from Page 2

10 Outer plate -B2-

- 3 mm thick
- Do not install when adjusting -B2-

11 Shim

- Do not install when adjusting -B2-

12 Retaining ring

- Inserted with smooth side facing last inner plate (Item 8) when adjusting -B2-

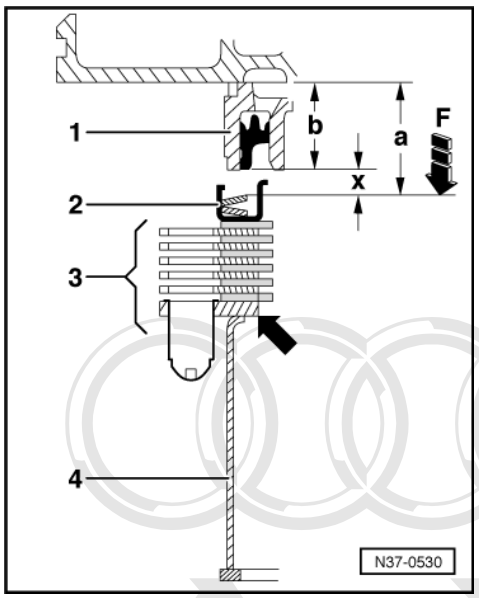

-> Determining thickness of shim(s)

The thickness of the shim depends on the size of gap "x". Gap "x" is calculated using the following formula:

Gap x = a - b - 2.65 mm

x = Gap

a = Installed depth of 2nd and 4th gear brake -B2-; calculating => Page 143

b = Size of ATF pump housing; calculating => Page 143

Protected by copyright. Copying for private or commercial purposes, in part or in whole, is not permitted. Unauthorized use may be prosecuted. AUDI AG does not guarantee or accept any liability with respect to the correctness of information in this document. Copyright by AUDI AG.

The illustration shows a cross-section of the brake -B2- in assembled form. Special tool 3459, which exerts a force -F- onto the set of plates, is not illustrated.

2.65 mm - The amount for settling is taken into account by force F.

1 - ATF pump
2 - Retaining ring
3 - -B2- plates without last outer plate
4 - Supporting tube

Notes:

- The first outer plate -arrow- is 3 mm thick.
- For measuring purposes do not insert last outer plate.

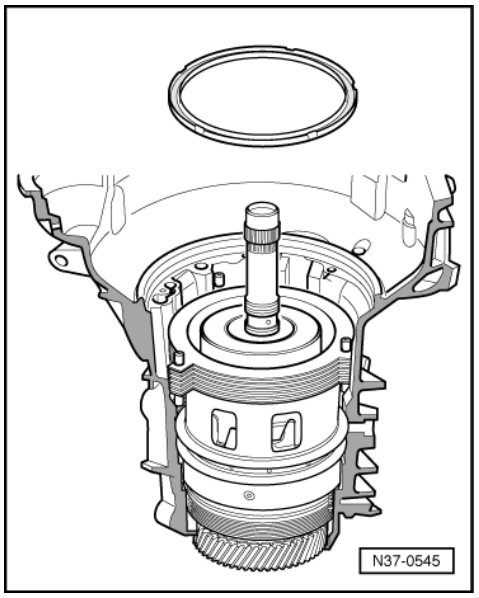

Calculating "a":

Assemble planetary gearbox up to the last -B2- inner plate, => Page 101 . The last outer plate and shim are not installed.

- -> Place retaining ring with smooth side onto last inner plate.
- Place 3459 onto retaining ring and turn so that the 3 clips align with the 3 holes for the ATF pump.
- Bolt special tool to flange for ATF pump: tightening torque 5 Nm.

Note:

The plate set for -B2- is now pressed together for measurements.

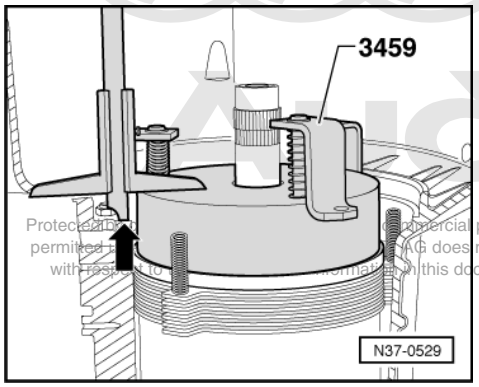

Protected by copyright. Copying for commercial purposes, in part or in whole, is not permitted unless authorized by AUDI AG. AUDI AG does not guarantee or accept any liability with respect to the correctness of information in this document. Copyright by AUDI AG.

- -> Measure from pump flange/gearbox housing -arrow- to 3459 with depth gauge.

Dimension a = Height of 3459 in mm - measured value

Example:

Height of 3459	60.0 mm
- Measured value	32.3 mm
= Calculated value "a"	27.3 mm

- Remove special tool 3459.
- Remove retaining ring.

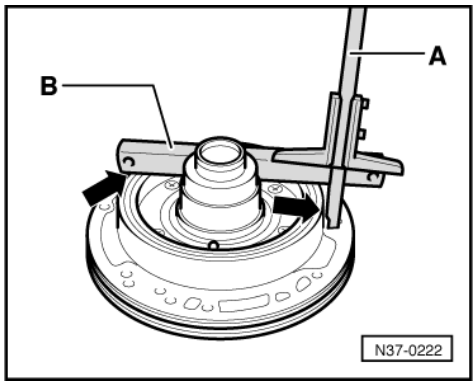

Calculating "b":

- Push piston into ATF pump onto stop.
- Place paper gasket onto ATF Pump.
- -> Place straightedge "B" onto stator support (arrow) and measure with depth gauge "A" to gasket of pump flange.

Example:

Reading	39.8 mm
- Straightedge	19.5 mm
= Calculated value "b"	20.3 mm

-> Gap x = a - b - 2.65 mm

Gap x = 27.3 - 20.3 - 2.65 mm = 4.35 mm

- Determine size of shim(s) according to table. Part numbers

Protected by copyright. Copying for private or commercial purposes, in part or in whole, is not permitted unless authorised by AUDI AG. AUDI AG does not guarantee or accept any liability with respect to the correctness of information in this document. Copyright by AUDI AG.

=> Parts catalogue

Table of shims:

Gap "x" (mm)	Shim(s) (mm)
3.25 ... 3.50	1.0
3.51 ... 3.75	1.25
3.76 ... 4.00	1.50
4.01 ... 4.25	1.75
4.26 ... 4.50	1.00 + 1.00
4.51 ... 4.75	1.00 + 1.25
4.76 ... 5.00	1.25 + 1.25
5.01 ... 5.25	1.25 + 1.50
5.26 ... 5.50	1.50 + 1.50
5.51 ...5.75	1.50 + 1.75
5.76 ...6.00	1.75 + 1.75

- Fit three spring caps onto the compression springs.
- Insert last outer plate -3 mm thick-.

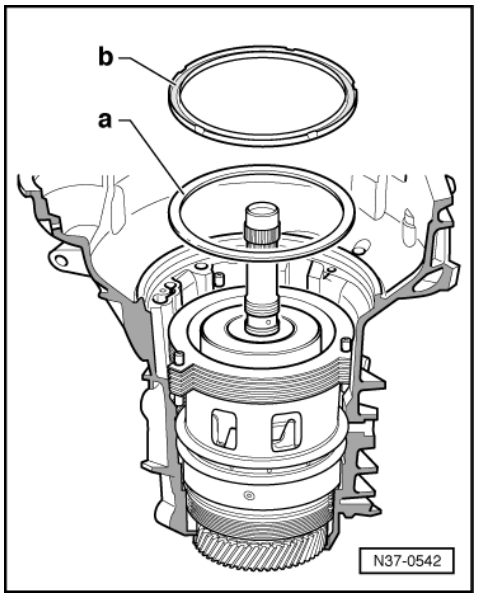

- -> Install shim(s) -a- as selected from table.
- Place retaining ring -b- onto shim(s). Smooth side facing shim.
- Further installation instructions => Page 111 .

38 - Gears, Hydraulic controls

1 - Dismantling and assembling ATF pump

1.1 - Dismantling and assembling ATF pump

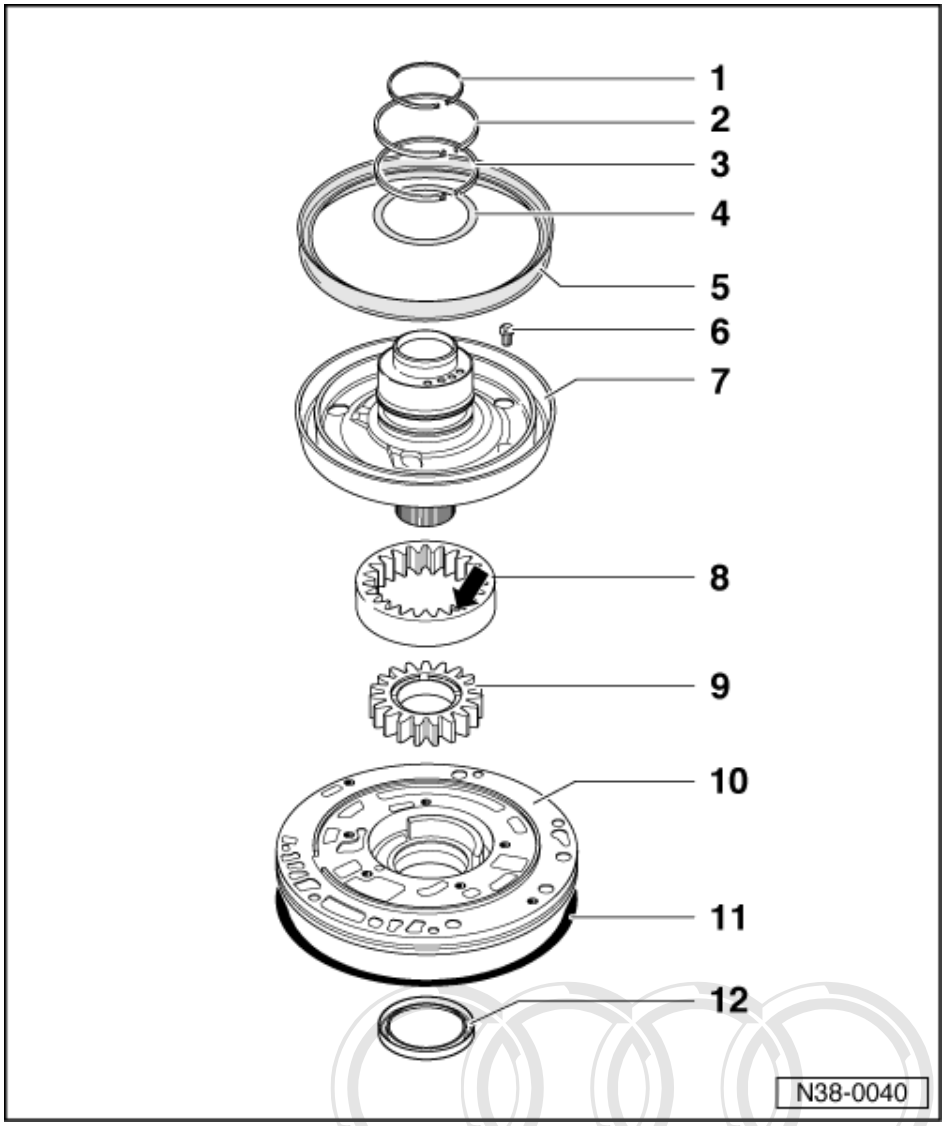

Note:

Select replacement parts for the ATF pump and the ATF pump itself according to the gearbox code letters.

1 Piston ring

- Check that it is correctly located =>Fig. 148
- Removing and installing => Fig. 148

2 Piston ring

- Check that it is correctly located =>Fig. 148
- Removing and installing => Fig. 148

Copyright. Copying for private or commercial purposes, in part or in whole, is not permitted unless authorised by AUDI AG. AUDI AG does not guarantee or accept any liability with respect to the correctness of information in this document. Copyright by AUDI AG.

3 Piston ring

- Check that it is correctly located
  =>Fig. 148
- Removing and installing
  => Fig. 148

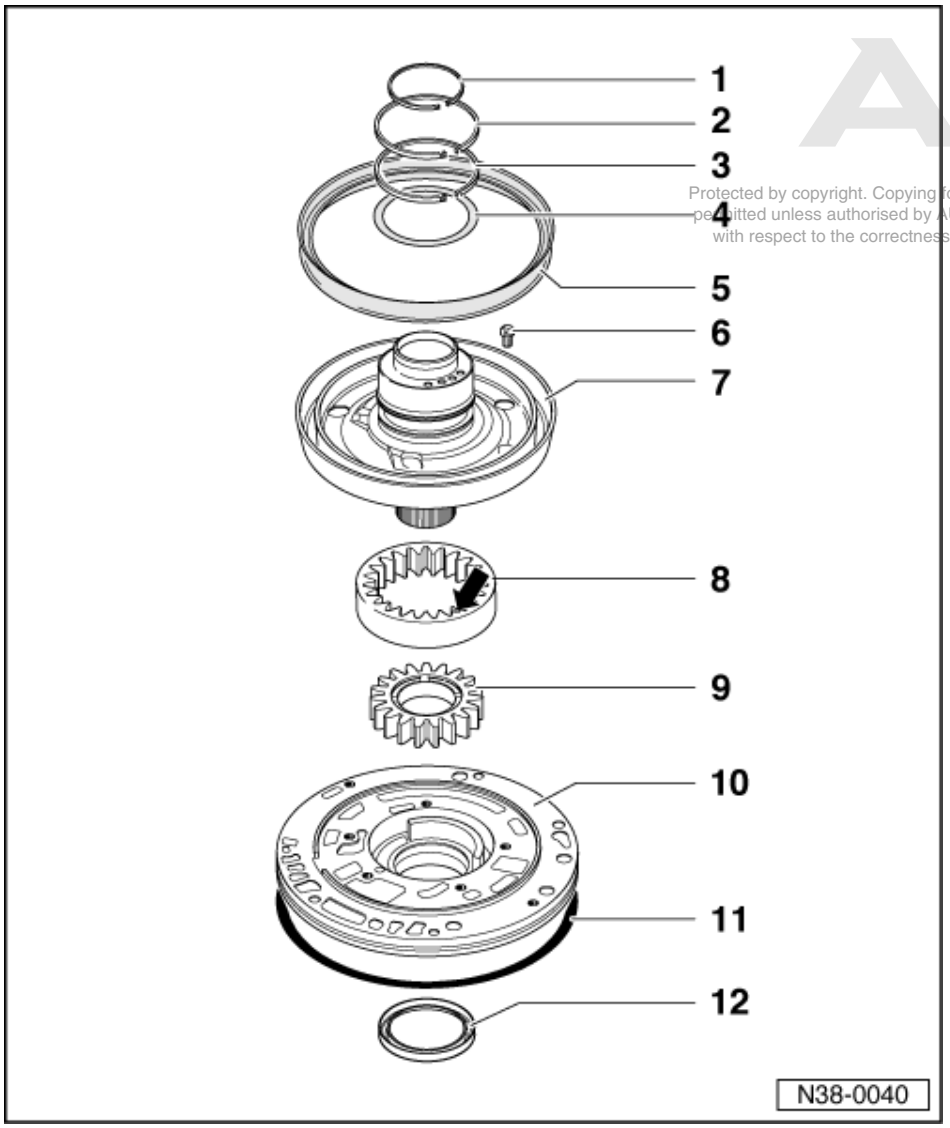

Protected by copyright. Copying for private or commercial purposes, in part or in whole, is not permitted unless authorised by AUDI AG. AUDI AG does not guarantee or accept any liability with respect to the correctness of information in this document. Copyright by AUDI AG.

4 Thrust washer

5 Piston

- Sealing lips are vulcanised to the piston
- To remove piston, use screwdriver to lever out of stator support at several points
- Moisten sealing lips with ATF before inserting
- Fitting location: sealing lip faces towards stator support
- Turn piston slightly when installing

6 Bolt - 10 Nm

- Then turn 45° further

7 Stator support

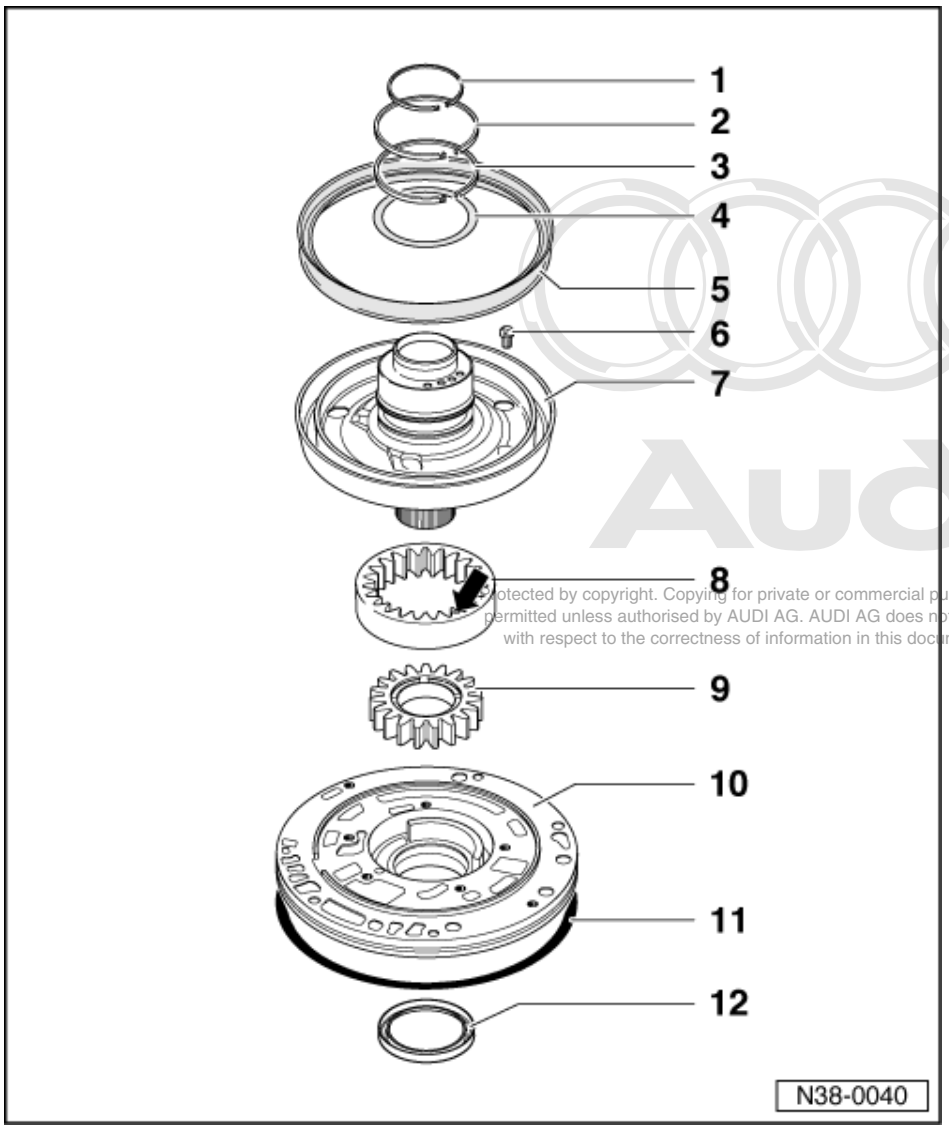

Protected by copyright. Copying for private or commercial purposes, in part or in whole, is not permitted unless authorised by AUDI AG. AUDI AG does not guarantee or accept any liability with respect to the correctness of information in this document. Copyright by AUDI AG.

8 Outer gear

- Installation position: manufacturer's mark -arrow- facing stator support
- If outer gear is incorrectly installed, the ATF pump may not operate freely in the installed position

9 Inner gear

- Larger shoulder faces toward stator support

10 Housing for ATF pump

11 O-ring

- Renew

12 Torque converter oil seal

- Removing and installing
=>Page 20

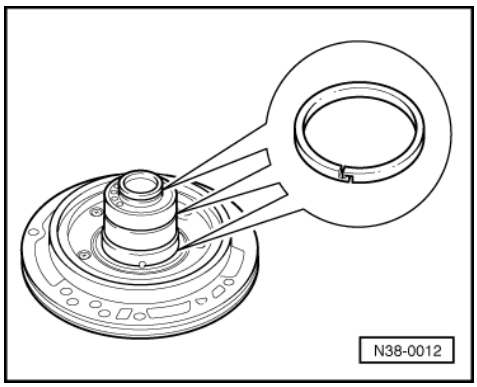

-> Fig.1 Checking that the piston rings are correctly located

- Ensure that the ends of the piston rings are hooked together.

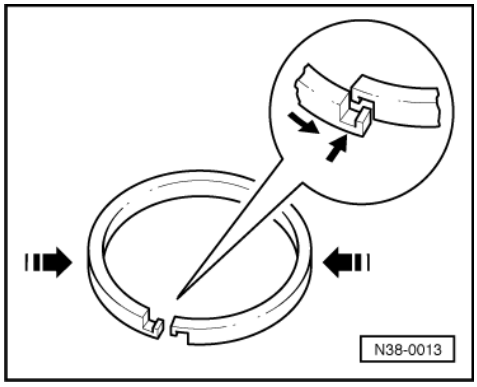

-> Fig.2 Removing and installing piston ring

Removing

- Press ends of piston ring together and release by hand.
- Press two ends of piston ring apart and remove; do not twist piston ring out of groove on one side.

Protected by copyright. Copying for private or commercial purposes, in part or in whole, is not permitted unless authorised by AUDI AG. AUDI AG does not guarantee or accept any liability with respect to the correctness of information in this document. Copyright by AUDI AG.

Installing

- Place piston ring in groove.
- To hook ends together press sides of ring in and guide ends over one another.

2 - Dismantling and assembling free wheel with -B1- piston

2.1 - Dismantling and assembling free wheel with -B1- piston

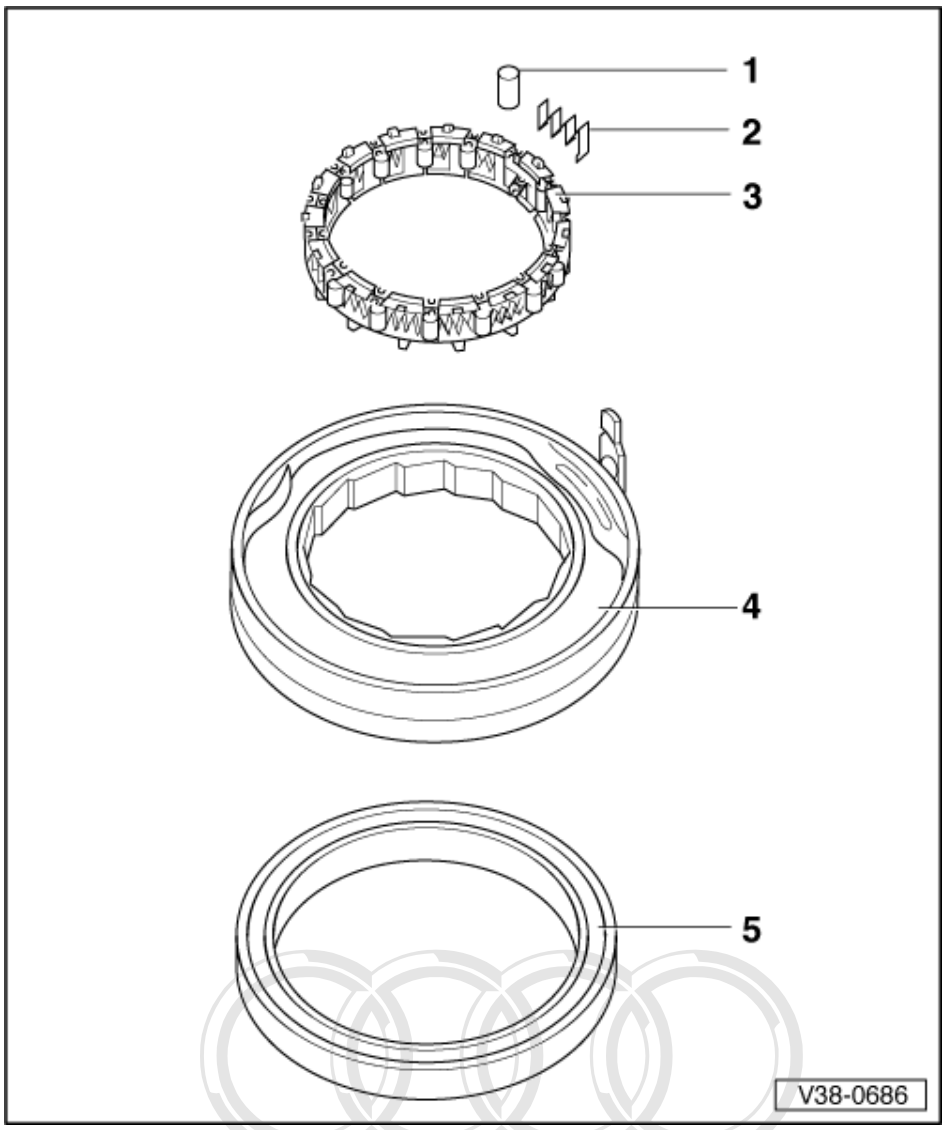

1 Rollers
- Installing
  => Fig. 150

2 Springs
- Installing
  => Fig. 150

3 Cage
- Removing and installing
  => Fig. 150
- Installation position
  => Fig. 151

4 Outer ring

5 Piston
- Sealing lips are vulcanised to the piston
- To remove, use screwdriver to lever out of outer ring at several points
- Moisten sealing lips with ATF before installing
- Installation position

Copyright by Audi AG. Copying for private or commercial purposes, in part or in whole, is not permitted unless authorised by AUDI AG. AUDI AG does not guarantee or accept any liability with respect to the correctness of information in this document. Copyright by AUDI AG.

=> Fig. 151

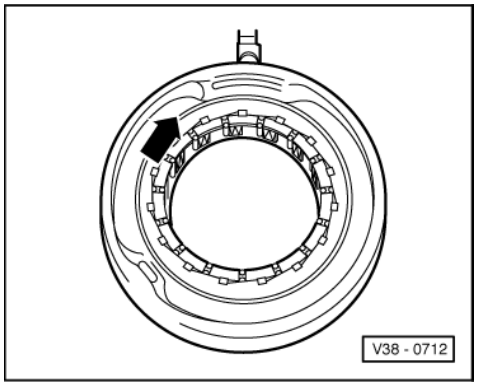

-> Fig.1 Removing and installing cage

Removing

- Turn cage to the left as far as the stop.
- Remove cage by pressing it up and out of the outer ring

Installing

- Insert cage into outer ring.
  - Installation position => Fig. 151
- To secure cage, turn it to the right as far as the stop -arrow-.

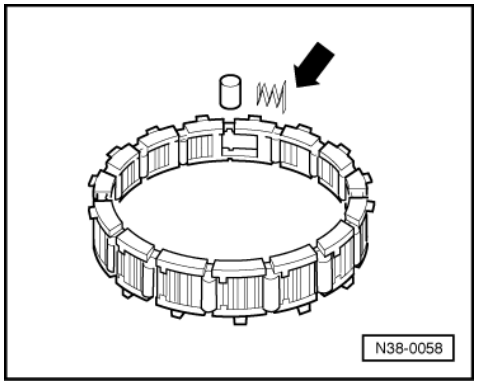

-> Fig.2 Installing rollers and springs

- Insert springs so that the longer ends of the springs -arrow- engage in the cage.
- Then insert roller between cage and spring.

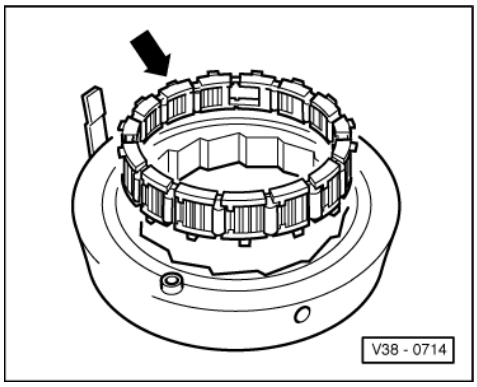

Protected by copyright. Copying for private or commercial purposes, in part or in whole, is not permitted unless authorised by AUDI AG. AUDI AG does not guarantee or accept any liability with respect to the correctness of information in this document. Copyright by AUDI AG.

-> Fig.3 Fitting location of cage in outer ring

- Install with large lugs (arrow) facing up.

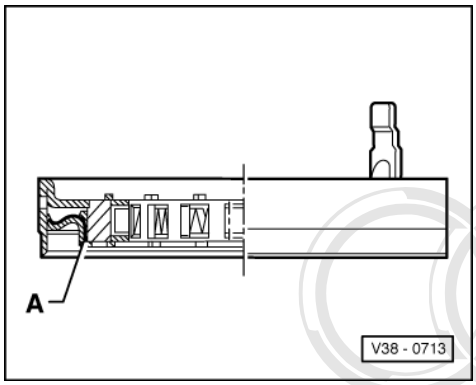

-> Fig.4 Installed position of piston

- Insert piston -A- as shown.

Protected by copyright. Copying for private or commercial purposes, in part or in whole, is not permitted unless authorised by AUDI AG. AUDI AG does not guarantee or accept any liability with respect to the correctness of information in this document. Copyright by AUDI AG.

3 - Dismantling and assembling 1st to 3rd gear clutch -K1-

3.1 - Dismantling and assembling 1st to 3rd gear clutch -K1-

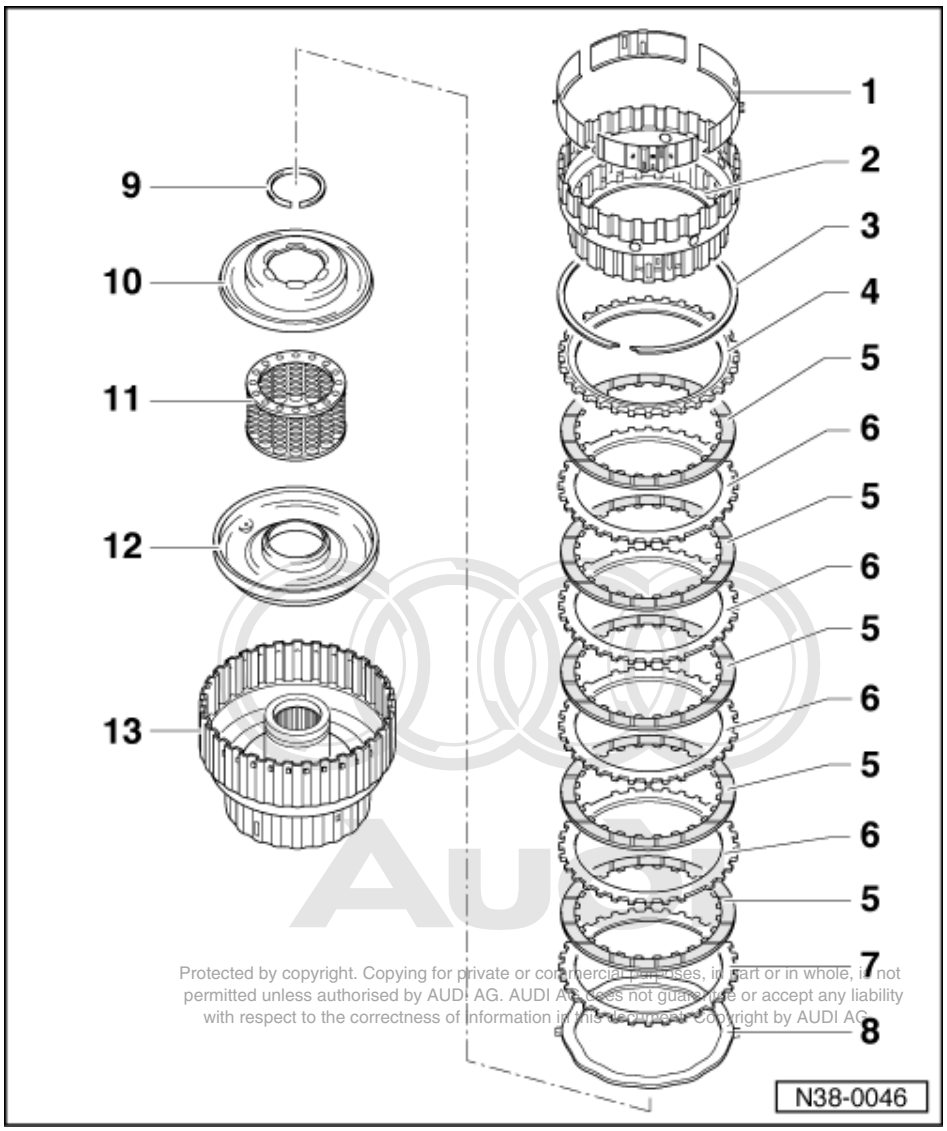

Protected by copyright. Copying for private or commercial purposes, in part or in whole, is not permitted unless authorised by AUDI AG. AUDI AG does not guarantee or accept any liability with respect to the correctness of information in this document. Copyright by AUDI AG.

Note:

The clutch should only be dismantled for cleaning or to visually check parts.

1 Supporting ring
- 4-piece, unclip from inner plate carrier
- Inserting
  =>Fig. 157

2 Inner plate carrier
- Inserting
  =>Fig. 158
- Assembling
  =>Fig. 157

3 Circlip
- Different thicknesses
- Do not mix up circlips for different clutches

- Mark after removing and insert in same position

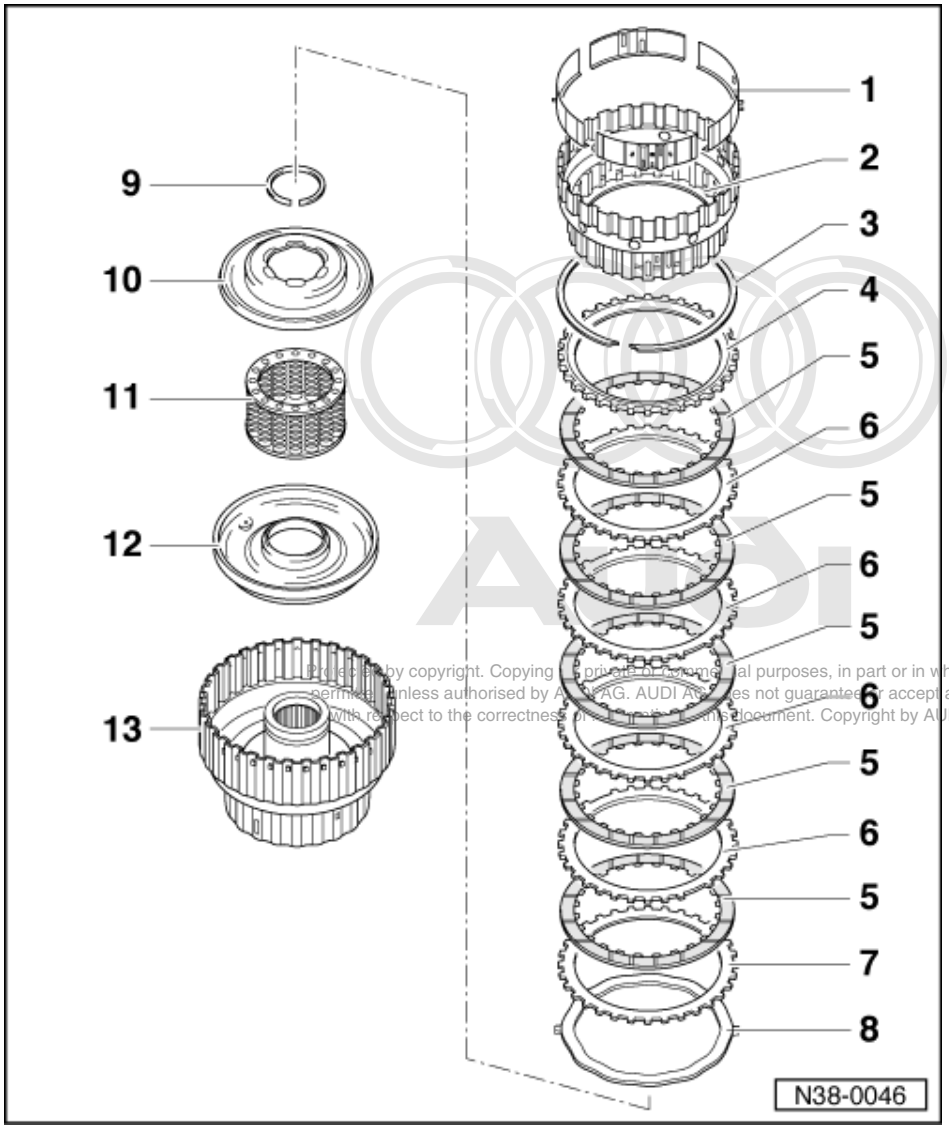

Protected by copyright. Copying for private or commercial purposes, in part or in whole, is not permitted unless authorised by AUDI AG. AUDI AG does not guarantee or accept any liability with respect to the correctness of information in this document. Copyright by AUDI AG.

4 Thrust plate

- Install with smooth side facing toward inner plate
- Insert together with inner plate carrier
  => Fig. 157

5 Inner plate

- Quantity=> from Page 2
- Installing
  => Fig. 157
- Soak new inner plates in ATF for 15 minutes before installing

6 Outer plate

- 1.5 mm thick
- Quantity=> from Page 2
- Installing
  => Fig. 157

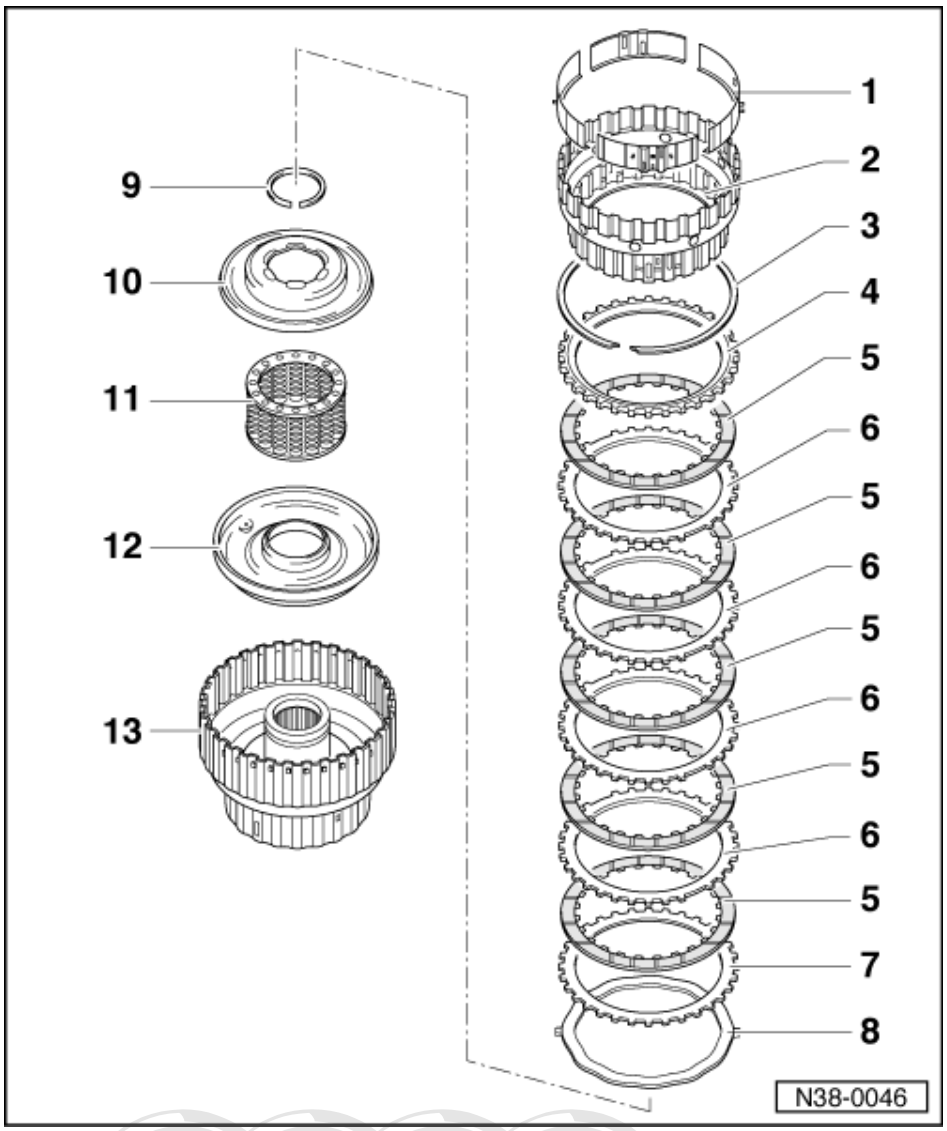

7 Outer plate

- 2.0 mm thick
- Installing
  => Fig. 157

8 Corrugated washer

9 Circlip

- Removing and installing
  =>Fig. 157
- Do not mix up circlips for different clutches
- Mark after removing and insert in same position

10 Piston cap

- Sealing lips are vulcanised to cap
- Moisten sealing lips with ATF before installing
- Turn cap slightly when installing

Protected by copyright. Copying for private or commercial purposes, in part or in whole, is not permitted unless authorised by AUDI AG. AUDI AG does not guarantee or accept any liability with respect to the correctness of information in this document. Copyright by AUDI AG.

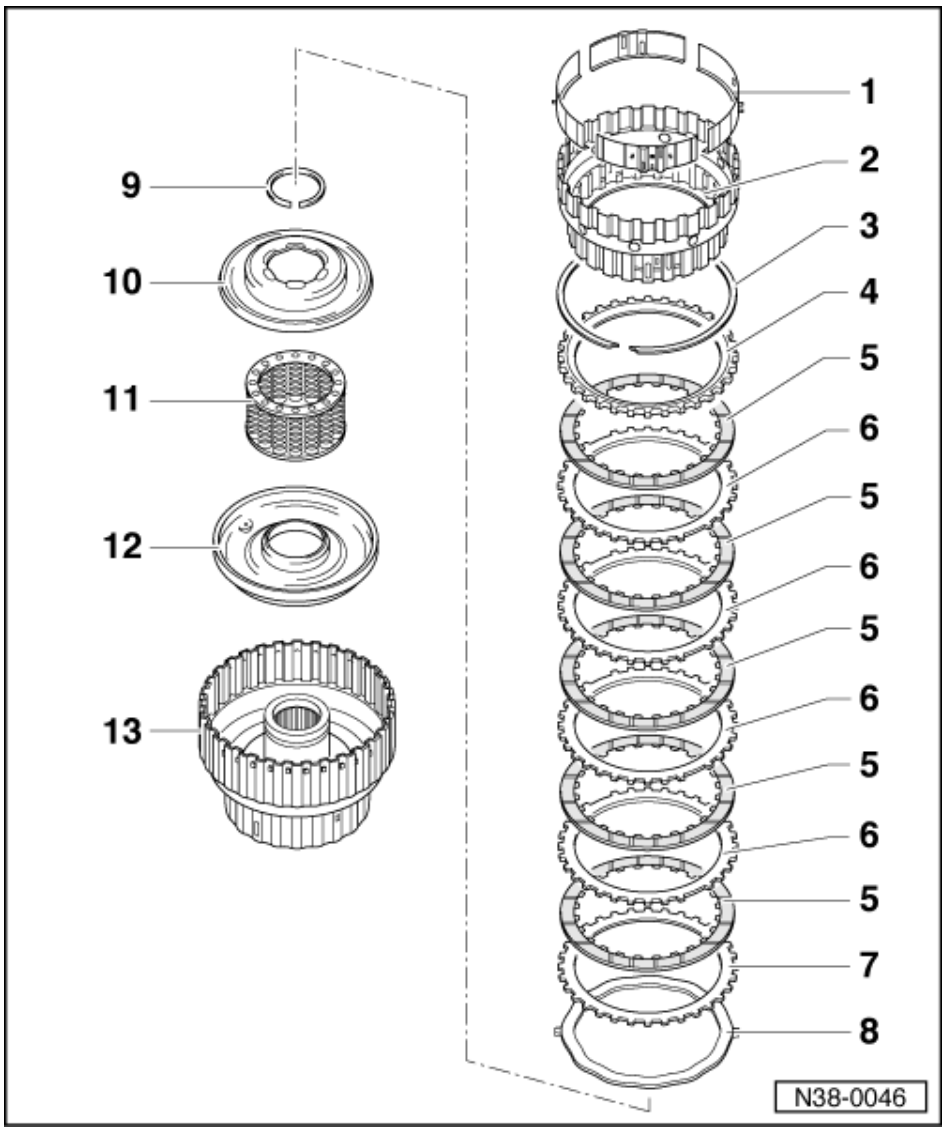

11 Intermediate spring ring

- With spring supporting shell and compression springs

12 Piston

- Use a screwdriver to lever piston out of clutch housing at several points
- Sealing lips are vulcanised to piston
- Moisten sealing lips with ATF before installing
- Turn piston slightly when installing

13 Clutch housing

- Before fitting inner plate carrier, insert corrugated washer (Item 157

Protected by copyright. Copying for private or commercial purposes, in part or in whole, is not permitted unless authorised by AUDI AG. AUDI AG does not guarantee or accept any liability with respect to the correctness of information in this document. Copyright by AUDI AG.

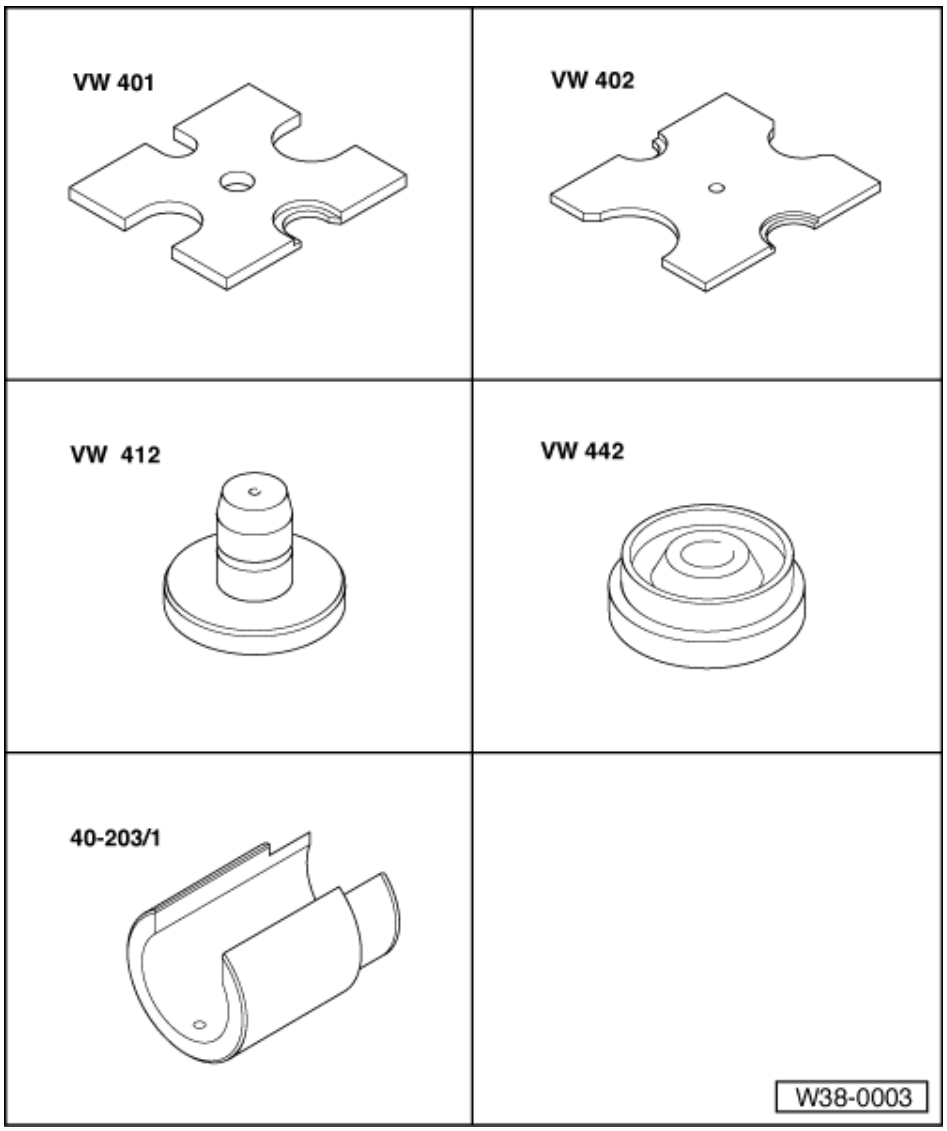

Special tools and workshop equipment required

- Thrust plate VW 401
- Thrust plate VW 402
- Press tool VW 412
- Press tool VW 442
- Tube, split 40-203/1

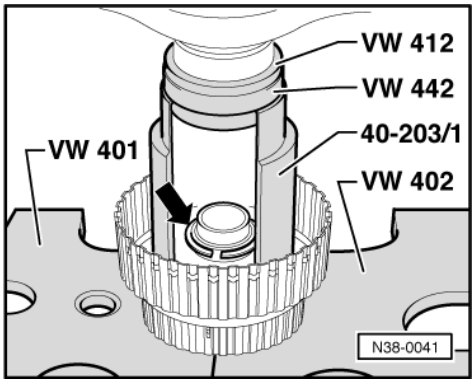

Protected by copyright. Copying for private or commercial purposes, in part or in whole, is not permitted unless authorised by AUDI AG. AUDI AG does not guarantee or accept any liability with respect to the correctness of information in this document. Copyright by AUDI AG.

-> Fig.1 Removing and installing circlip

- Press piston cap with intermediate spring ring down far enough for the circlip (arrow) to be inserted in the groove.

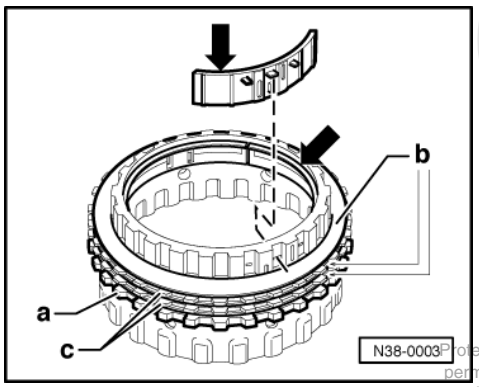

Protected by copyright. Copying for private or commercial purposes, in part or in whole, is not permitted unless authorised by AUDI AG. AUDI AG does not guarantee or accept any liability with respect to the correctness of information in this document. Copyright by AUDI AG.

-> Fig.2 Fitting thrust plate and plates onto inner plate carrier

- Install thrust plate -a- with smooth side facing inner plate and stepped side towards inner plate carrier.
- Install 3 inner plates -b- and 2 outer plates -c- (1.5 mm).
- Clip in supporting ring with step facing upwards (arrows).

Note:

Insert locating lugs correctly.

- Install corrugated washer and remaining plates in clutch housing => Fig. 157 .

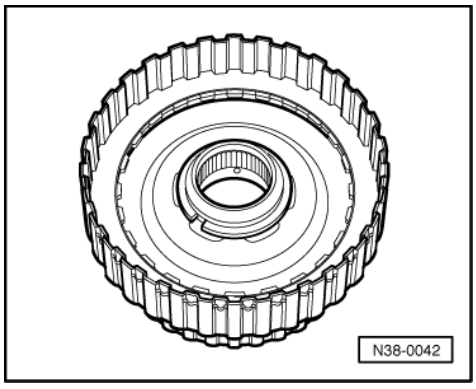

-> Fig.3 Installing corrugated washer and inner and outer plates in clutch housing

- First insert corrugated spring washer.
- Insert 2 mm thick outer plate.
- Insert remaining inner and outer plates.

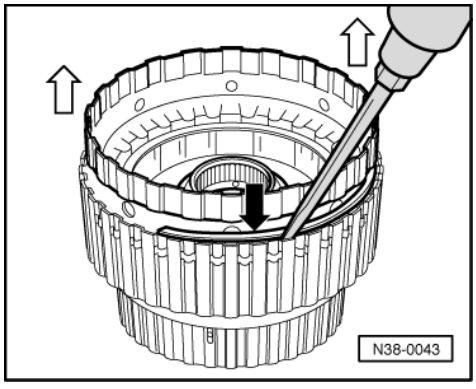

-> Fig.4 Inserting inner plate carrier and installing circlip

- Lift inner plate carrier slightly (white arrows) to install circlip (black arrow).

4 - Dismantling and assembling reverse gear clutch -K2-

4.1 - Dismantling and assembling reverse gear clutch -K2-

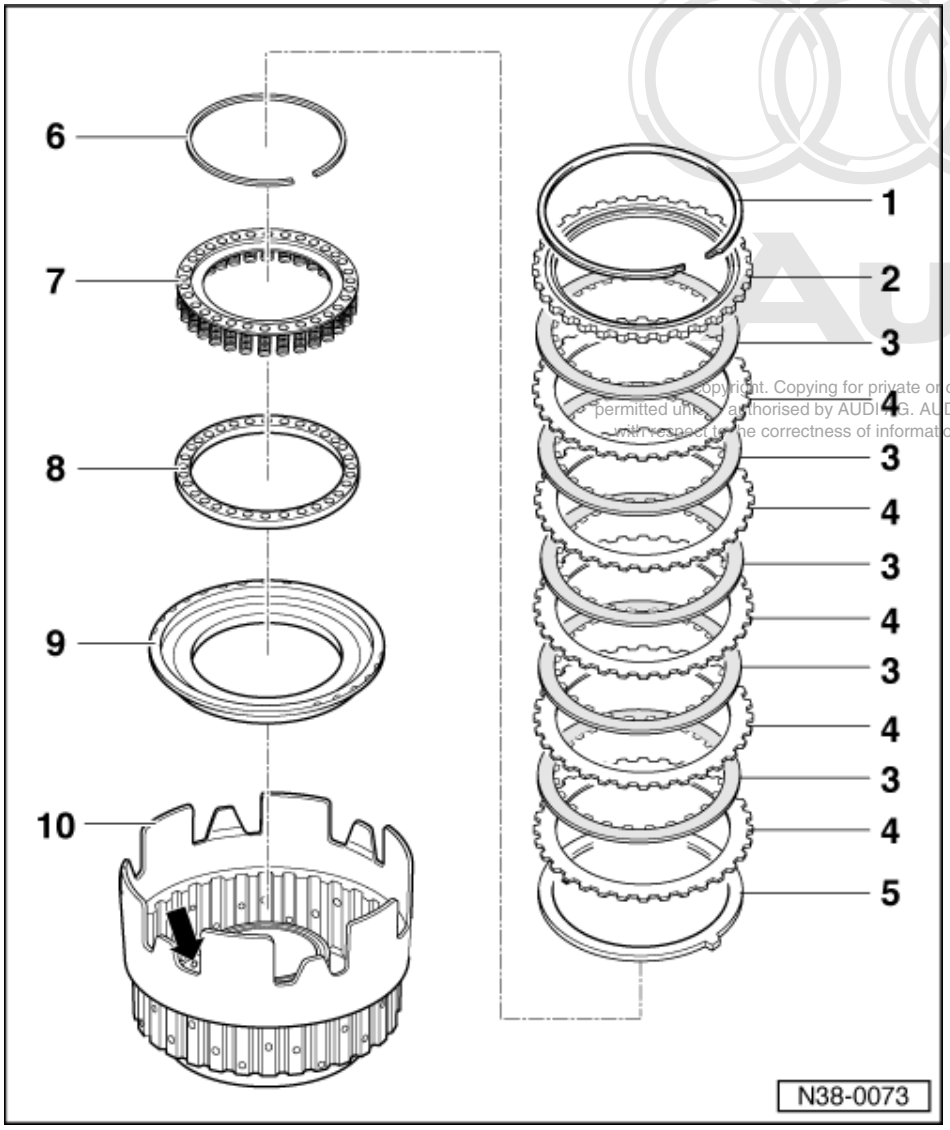

Copyright. Copying for private or commercial purposes, in part or in whole, is not permitted unless authorised by AUDI AG. AUDI AG does not guarantee or accept any liability with respect to the correctness of information in this document. Copyright by AUDI AG.

Notes:

- The clutch should only be dismantled for cleaning and for visual inspection.
- Be careful not to damage the ball valve -arrow- when repairing the clutch.

1 Circlip

- Different thickness
- Do not mix up circlips for different clutches
- Mark after removing and insert in same position

2 Thrust plate

- Smooth side faces toward plates

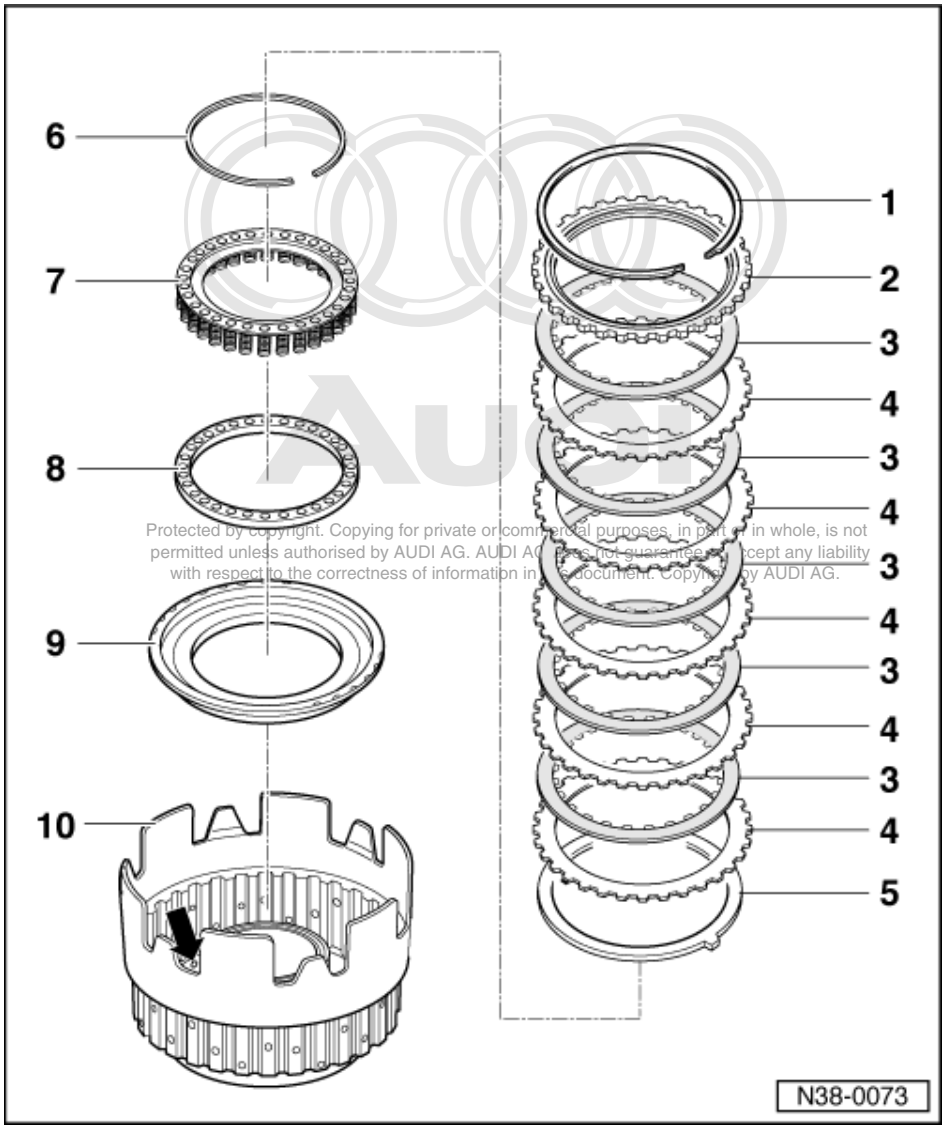

Protected by copyright. Copying for private or commercial purposes, in part or in whole, is not permitted unless authorised by AUDI AG. AUDI AG does not guarantee or accept any liability with respect to the correctness of information in this document. Copyright by AUDI AG.

3 Inner plate
- Quantity=> from Page 2
- Soak new inner plates in ATF for 15 minutes before installing

4 Outer plate
- Quantity=> from Page 2

5 Corrugated washer

6 Circlip
- Removing and installing
  => Fig. 162
- Installation position
  => Fig. 162
- Different thickness
- Do not mix up circlips for different clutches
- Mark after removing and insert in same position

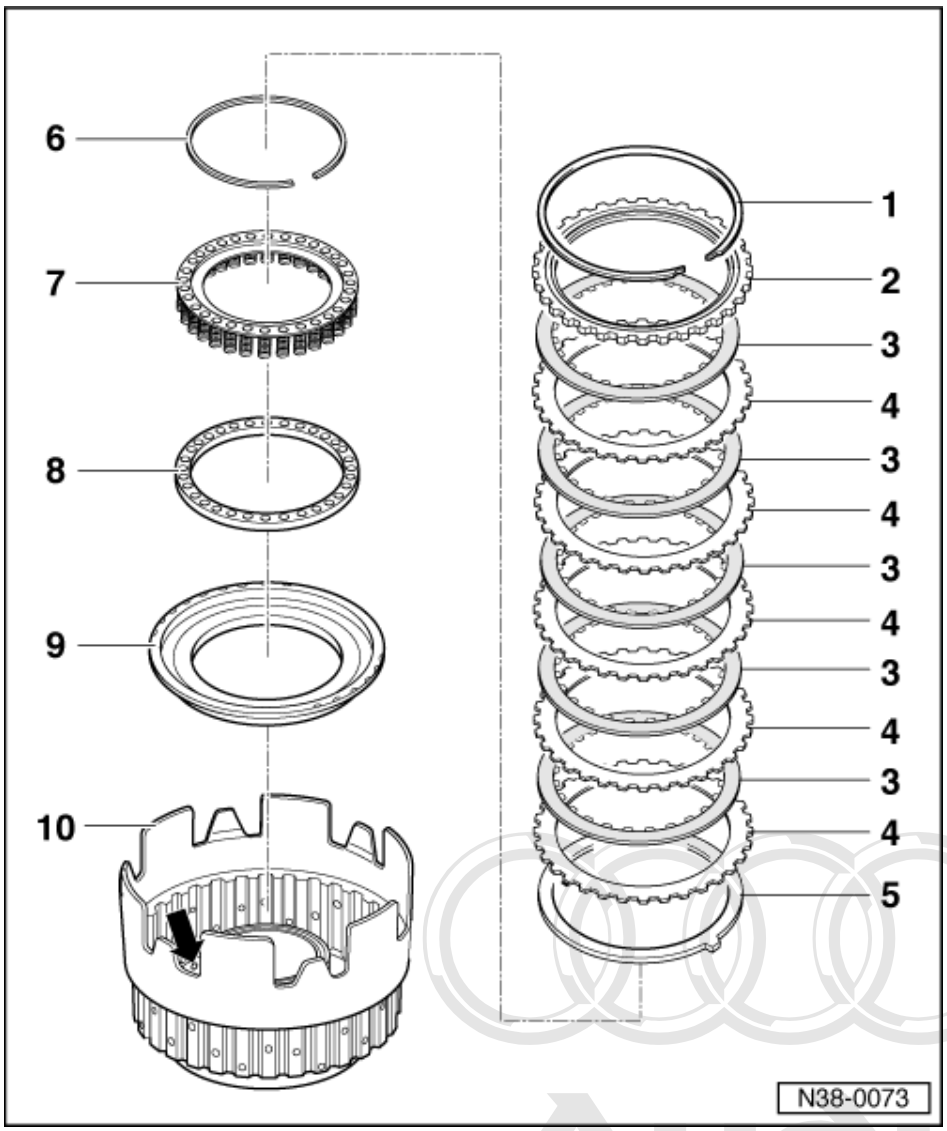

7 Spring supporting plate

- With springs
- Installation position
  => Fig. 162
- Before installing, fit together with spring supporting ring. Ensure springs are correctly located.

8 Spring supporting ring

9 Piston

- To remove, use a screwdriver to lever out of clutch housing at several points.
- Sealing lips are vulcanised to piston
- Moisten sealing lips with ATF before installing
- Turn piston slightly and keep straight when installing

10 Clutch housing

- With ball valve -arrow-

Protected by copyright. Copying for private or commercial purposes, in part or in whole, is not permitted unless authorised by AUDI AG. AUDI AG does not guarantee or accept any liability with respect to the correctness of information in this document. Copyright by AUDI AG.

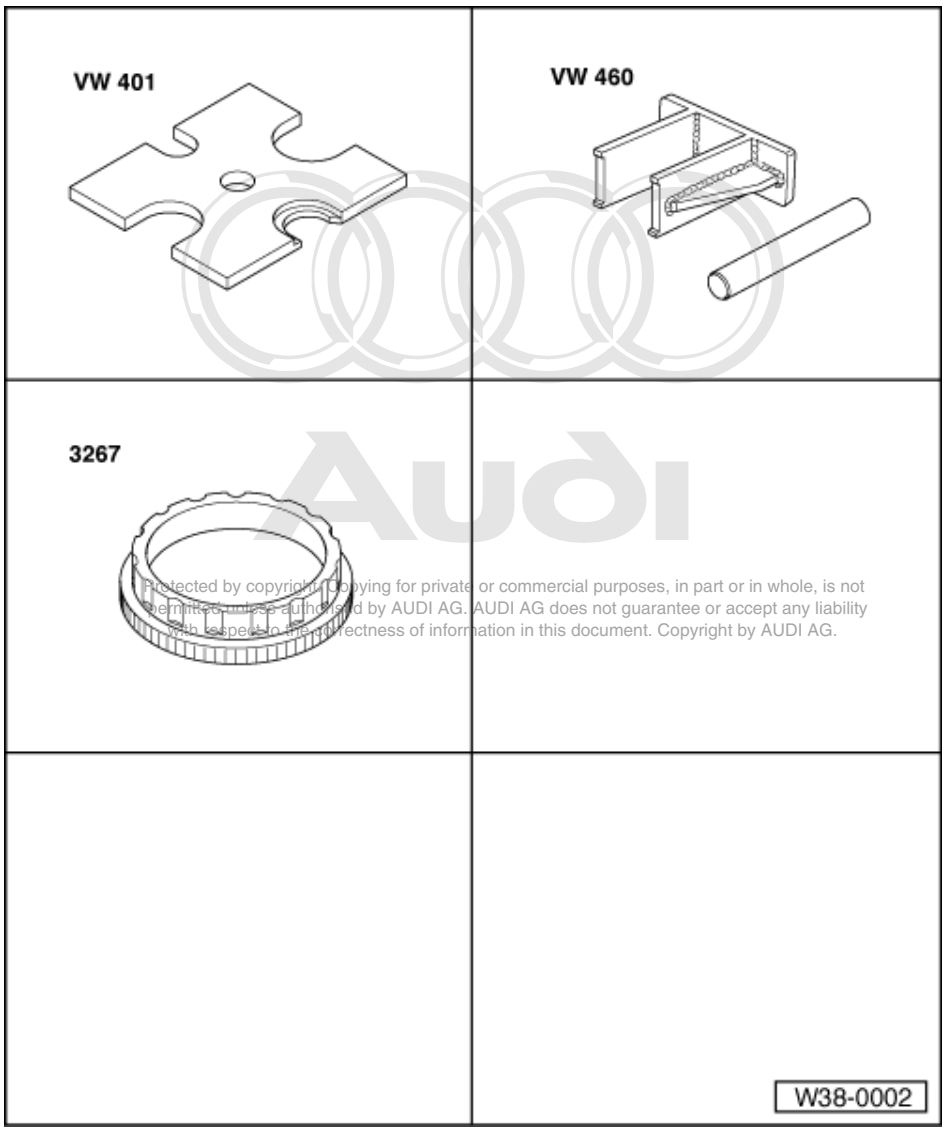

Protected by copyright. Copying for private or commercial purposes, in part or in whole, is not permitted unless authorised by AUDI AG. AUDI AG does not guarantee or accept any liability with respect to the correctness of information in this document. Copyright by AUDI AG.

Special tools and workshop equipment required

- Thrust plate VW 401
- Removing tool VW 460
- Assembly ring 3267

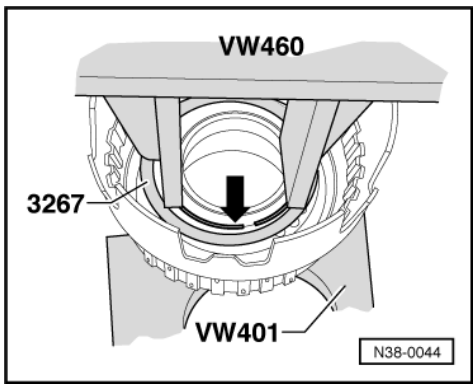

-> Fig.1 Removing and installing circlip

- Using 3267, carefully press down spring supporting plate just far enough to remove and install the circlip - arrow-.

Note:

Do not damage clutch housing ball valve.

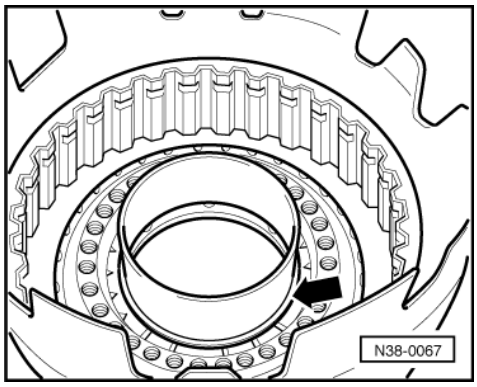

Protected by copyright. Copying for private or commercial purposes, in part or in whole, is not permitted unless authorised by AUDI AG. AUDI AG does not guarantee or accept any liability with respect to the correctness of information in this document. Copyright by AUDI AG.

-> Fig.2 Installation position of spring supporting plate, checking circlip

Circlip (arrow) must be seated in the groove of clutch housing. Spring supporting plate must be centred relative to hub.

Note:

Do not confuse the groove in the clutch housing with the shoulder on the shaft.

5 - Dismantling and assembling 3rd and 4th gear clutch -K3- with turbine shaft

5.1 - Dismantling and assembling 3rd and 4th gear clutch -K3- with turbine shaft

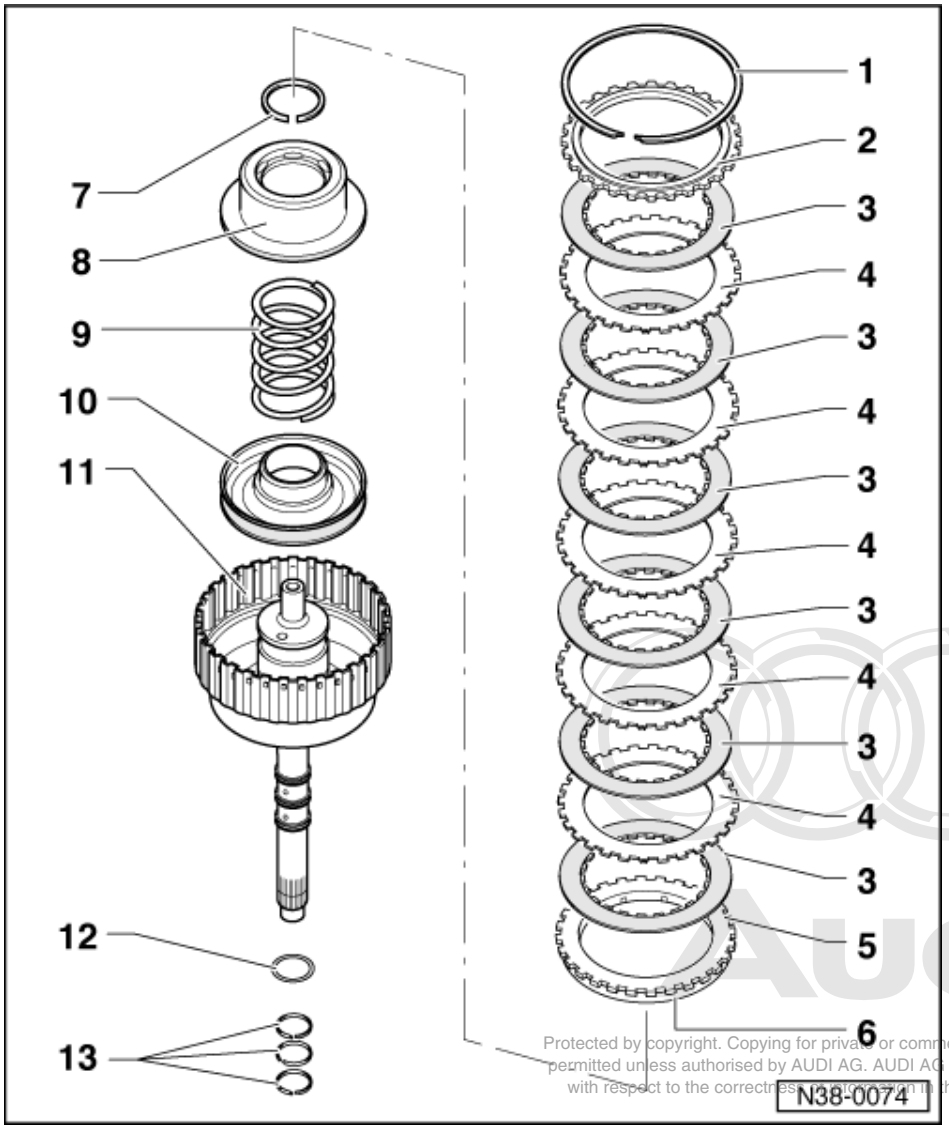

Protected by copyright. Copying for private or commercial purposes, in part or in whole, is not permitted unless authorised by AUDI AG. AUDI AG does not guarantee or accept any liability with respect to the correctness of information in this document. Copyright by AUDI AG.

Note:

The clutch should only be dismantled for cleaning or to visually check parts.

1 Circlip
- Different thickness
- Do not mix up circlips for different clutches
- Mark after removing and insert at same point

2 Thrust plate
- Fitting location: smooth side facing plates

3 Inner plate
- Quantity=>from Page 2
- Soak new plates in ATF for 15 minutes before installing

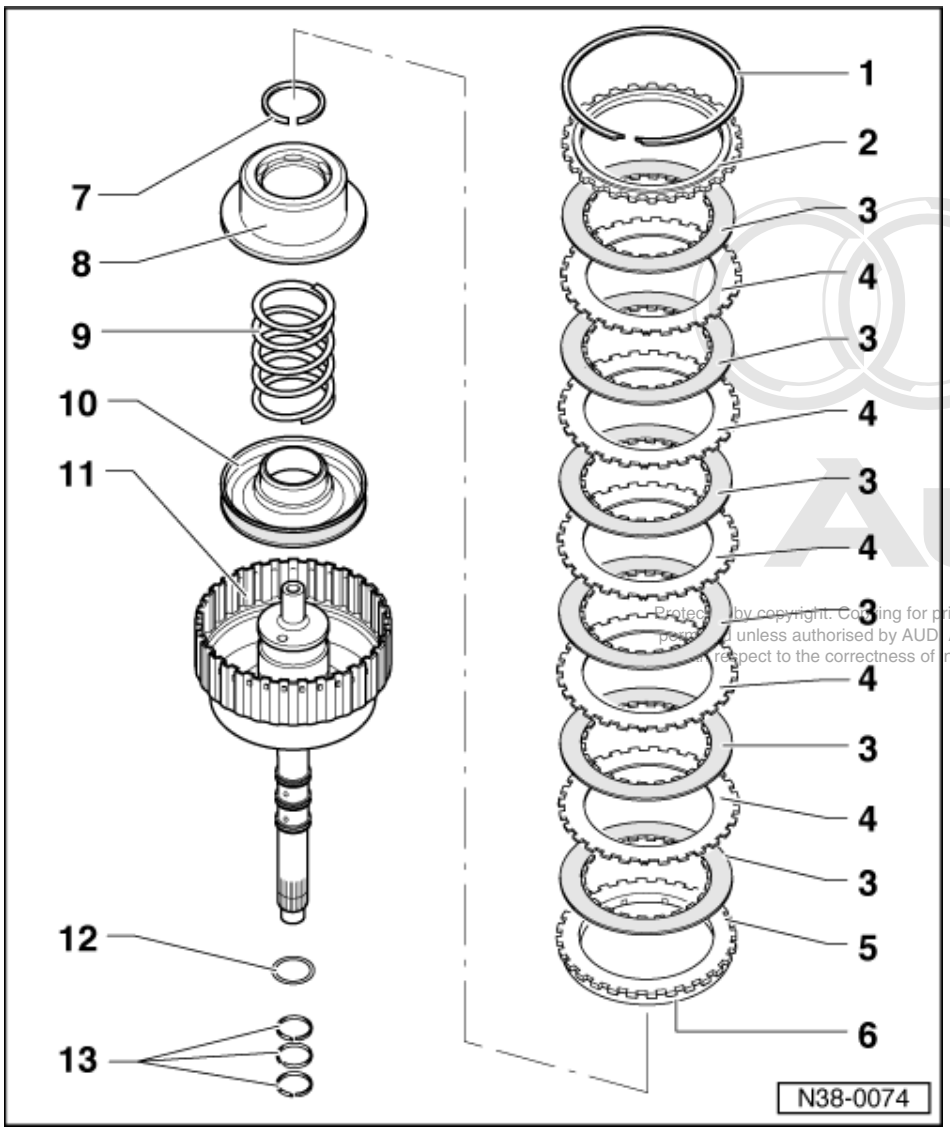

Protected by copyright. Copying for private or commercial purposes, in part or in whole, is not permitted unless authorised by AUDI AG. AUDI AG does not guarantee or accept any liability with respect to the correctness of information in this document. Copyright by AUDI AG.

4 Outer plate

- Quantity=>from Page 2

5 Pressure plate

- Peened to corrugated washer (item 6)
- Install with peened corrugated washer facing piston

6 Corrugated washer

- Peened to pressure plate (item 5)

7 Securing ring

- Removing and installing
  => Fig. 168
- Different thickness
- Do not mix up circlips for different clutches
- Mark after removing and insert at same point

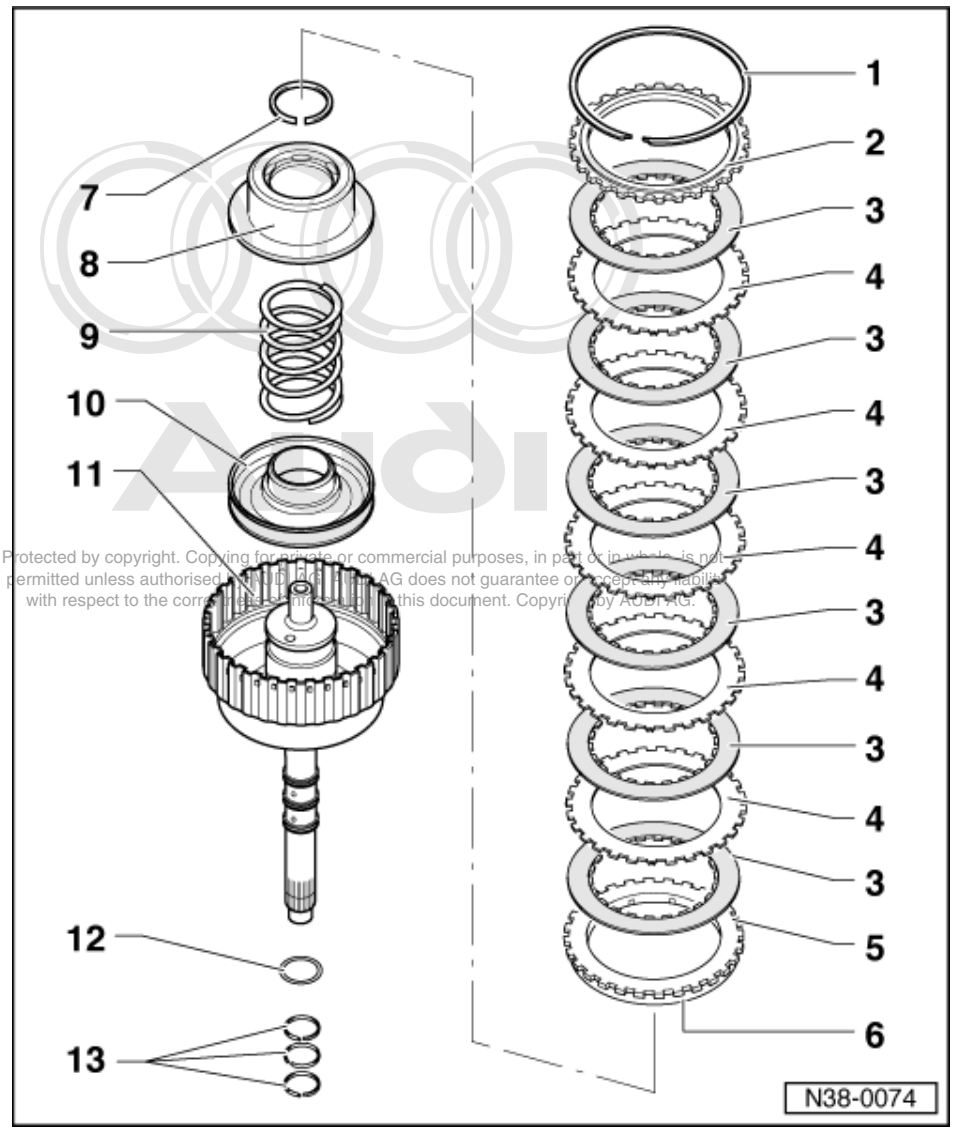

Protected by copyright. Copying for private or commercial purposes, in part or in whole, is not permitted unless authorised by AUDI AG. AUDI AG does not guarantee or accept any liability with respect to the correctness of information in this document. Copyright by AUDI AG.

8 Piston cap

- Is under strong spring pressure
- Sealing lips are vulcanised to piston cap
- Moisten with ATF before installing
- When removing and installing press down and fit circlip (Item 7)
- Removing and installing
  => Fig. 168

9 Spring

- Seat between piston and piston cap

10 Piston

- Sealing lips are vulcanised to piston
- Moisten with ATF before installing
- Turn piston slightly when installing

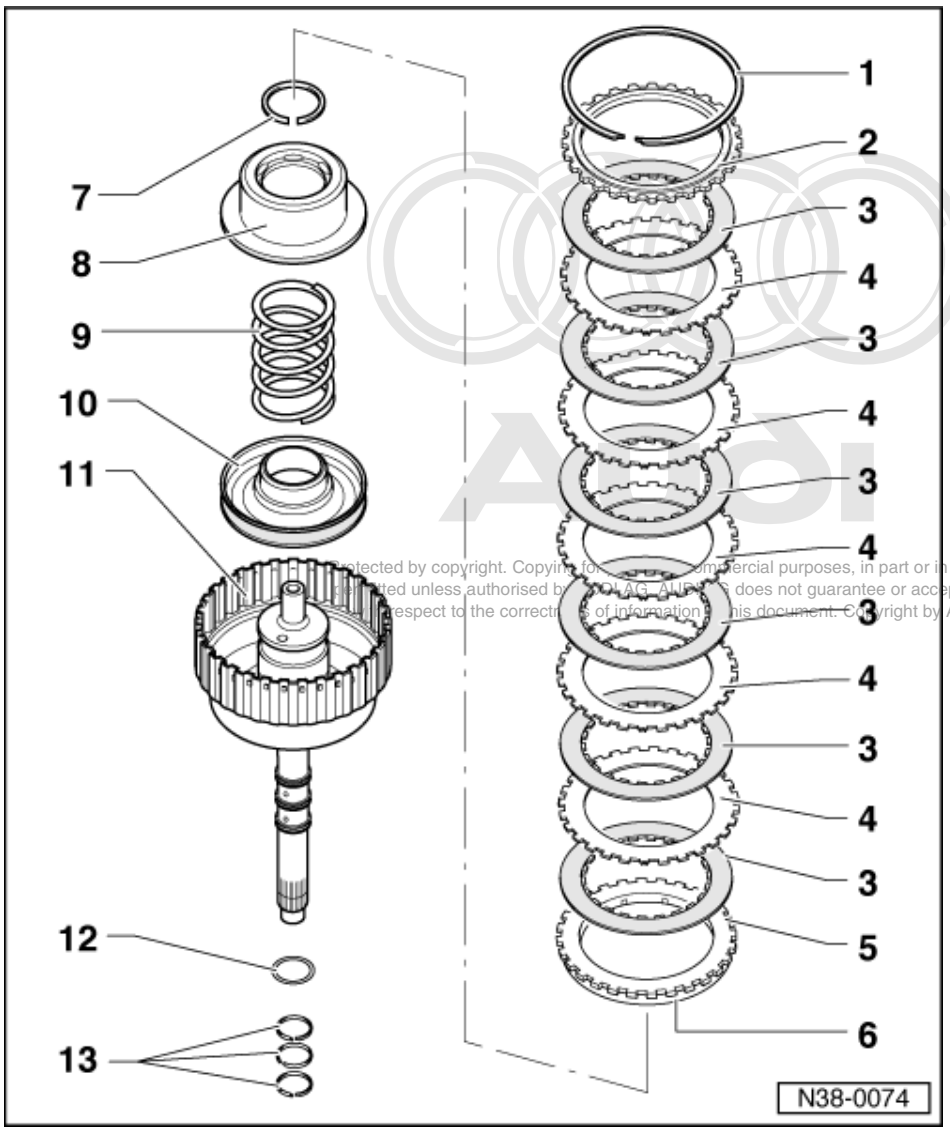

Protected by copyright. Copying for commercial purposes, in part or in whole, is not permitted unless authorised by AUDI AG. AUDI AG does not guarantee or accept any liability with respect to the correctness of information in this document. Copyright by AUDI AG.

11 Clutch housing with turbine shaft

- Height varies according to number of inner and outer plates
- Different versions according to gearbox code letters

12 O-ring

- Renew
- Installing
  =>Fig. 169

13 Piston ring

- Removing and installing
  => Fig. 168
- Check that it is correctly located
  => Fig. 168

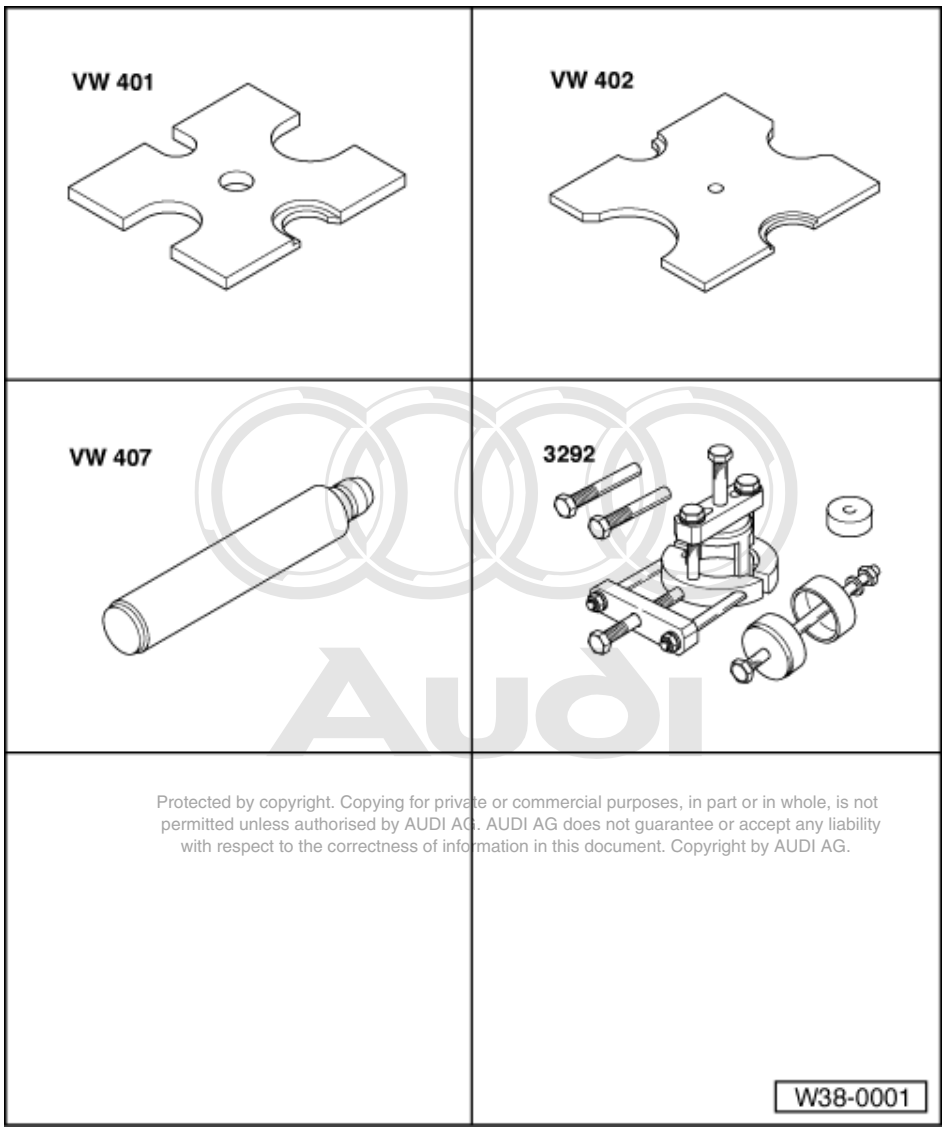

Protected by copyright. Copying for private or commercial purposes, in part or in whole, is not permitted unless authorised by AUDI AG. AUDI AG does not guarantee or accept any liability with respect to the correctness of information in this document. Copyright by AUDI AG.

Special tools and workshop equipment required

- Thrust plate VW 401
- Thrust plate VW 402
- Press tool VW 407
- 3292/1 From assembly tool 3292

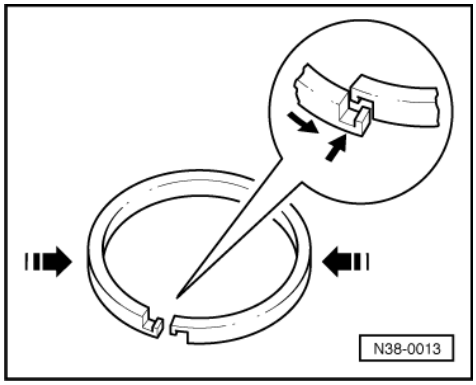

-> Fig1 Removing and installing piston ring

Removing

- Press piston ring together and release by hand
- Open out piston ring on both sides and take off; do not twist out of groove on one side.

Installing

- Place piston ring in groove.
- To hook ends together press sides of ring in and guide ends over one another.

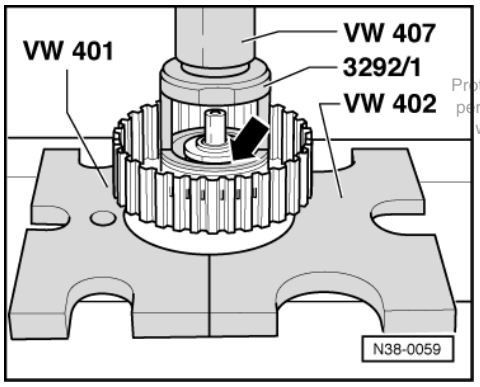

Protected by copyright. Copying for private or commercial purposes, in part or in whole, is not permitted unless authorised by AUDI AG. AUDI AG does not guarantee or accept any liability with respect to the correctness of information in this document. Copyright by AUDI AG.

-> Fig.2 Removing and installing circlip

- Press piston cap down carefully until the circlip -arrow- can be removed or installed.
- Mark circlip after removing and reinstall in same position.

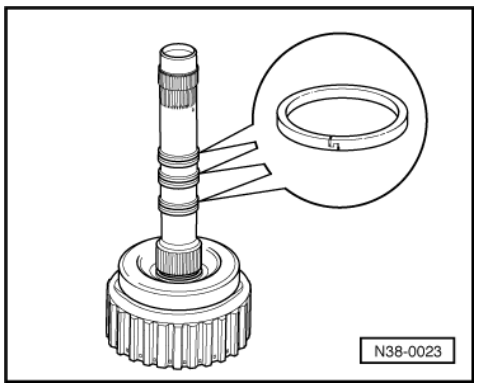

-> Fig.3 Checking seating of piston rings

- Ensure that the ends of the piston rings are hooked together.

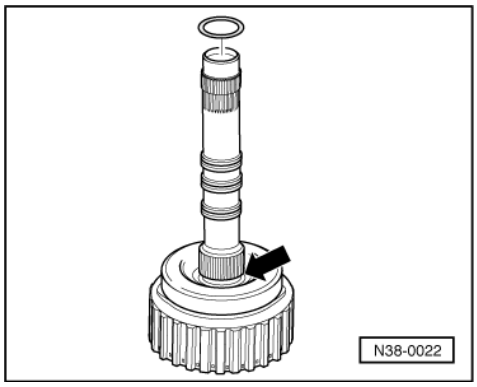

-> Fig.4 Installing O-ring

- Insert O-ring in the groove in the turbine shaft -arrow-.

6 - Removing and installing valve body

6.1 - Removing and installing valve body

Caution Do not run engine or tow vehicle with oil pan removed or when ATF has been drained from the gearbox.

Notes:

- An exchange component including all selector elements and the valve body is available for performing repairs on the Automatic gearbox 01N => Page 6
- Select the correct exchange component according to the gearbox code letters => from Page 2 .
- Installation instructions => from Page 2 (Assembling planetary gearbox).
- The parts shown in the following illustration can be removed with the gearbox installed.
- Always replace the valve body if it is dirty or defective.
- Rules for cleanliness when working on the automatic gearbox => Page 71 .
- General repair instructions =>Page 14 .
- LIghtly lubricate O-rings with ATF. Other types of lubricant can cause problems with the hydraulic actuation of the gearbox.

Protected by copyright. Copying for private or commercial purposes, in part or in whole, is not permitted unless authorised by AUDI AG. AUDI AG does not guarantee or accept any liability with respect to the correctness of information in this document. Copyright by AUDI AG.

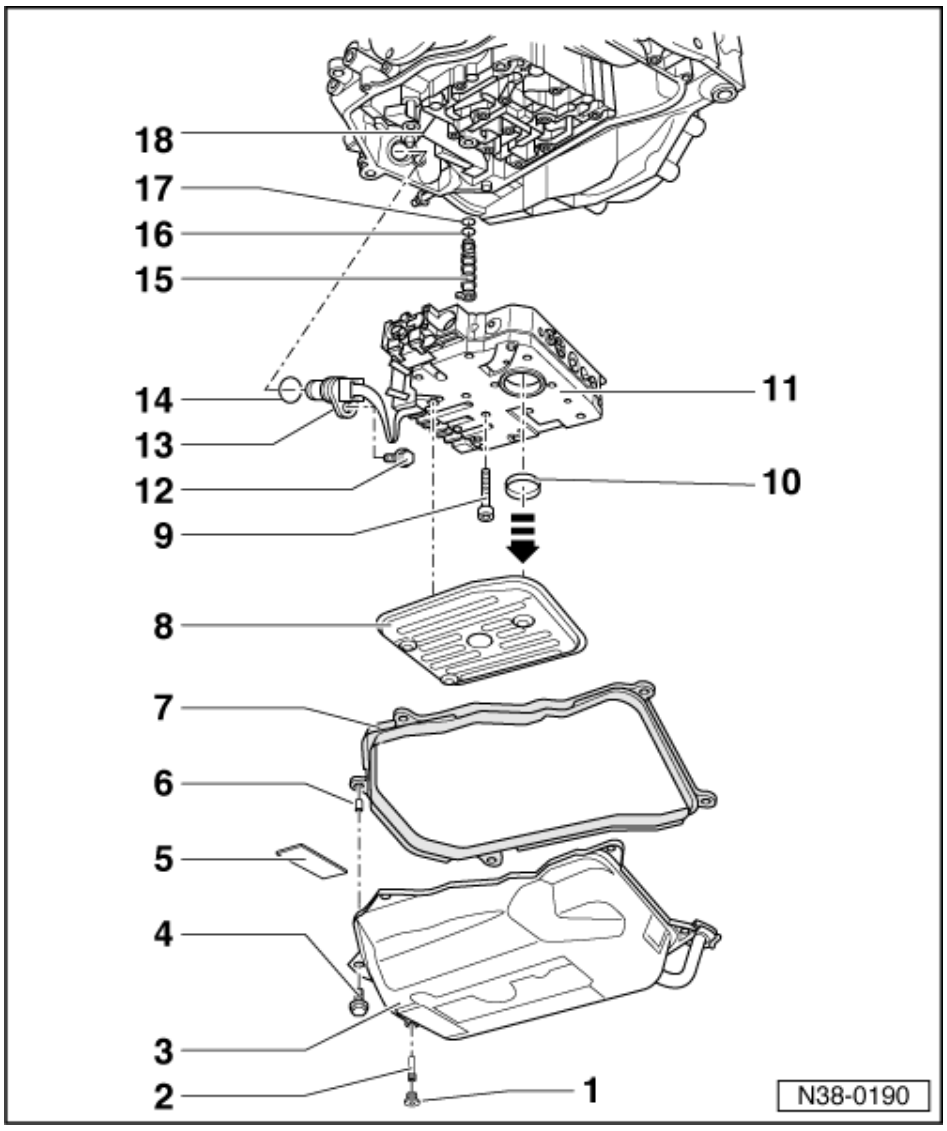

1 Plug

- Always renew seal
  =>Fig. 174
- Checking ATF level and topping-up => Page 61

2 Overflow pipe

- Remove to drain ATF
  => Fig. 174
- Checking ATF level and topping-up => Page 61

3 Oil pan

- Removing and installing
  => Page 175

4 Bolt - 12 Nm

- Tighten in several stages and in diagonal sequence

5 Magnet

- Insert in the recess in oil pan

Protected by copyright. Copying for private or commercial purposes, in part or in whole, is not permitted unless authorised by AUDI AG. AUDI AG does not guarantee or accept any liability with respect to the correctness of information in this document. Copyright by AUDI AG.

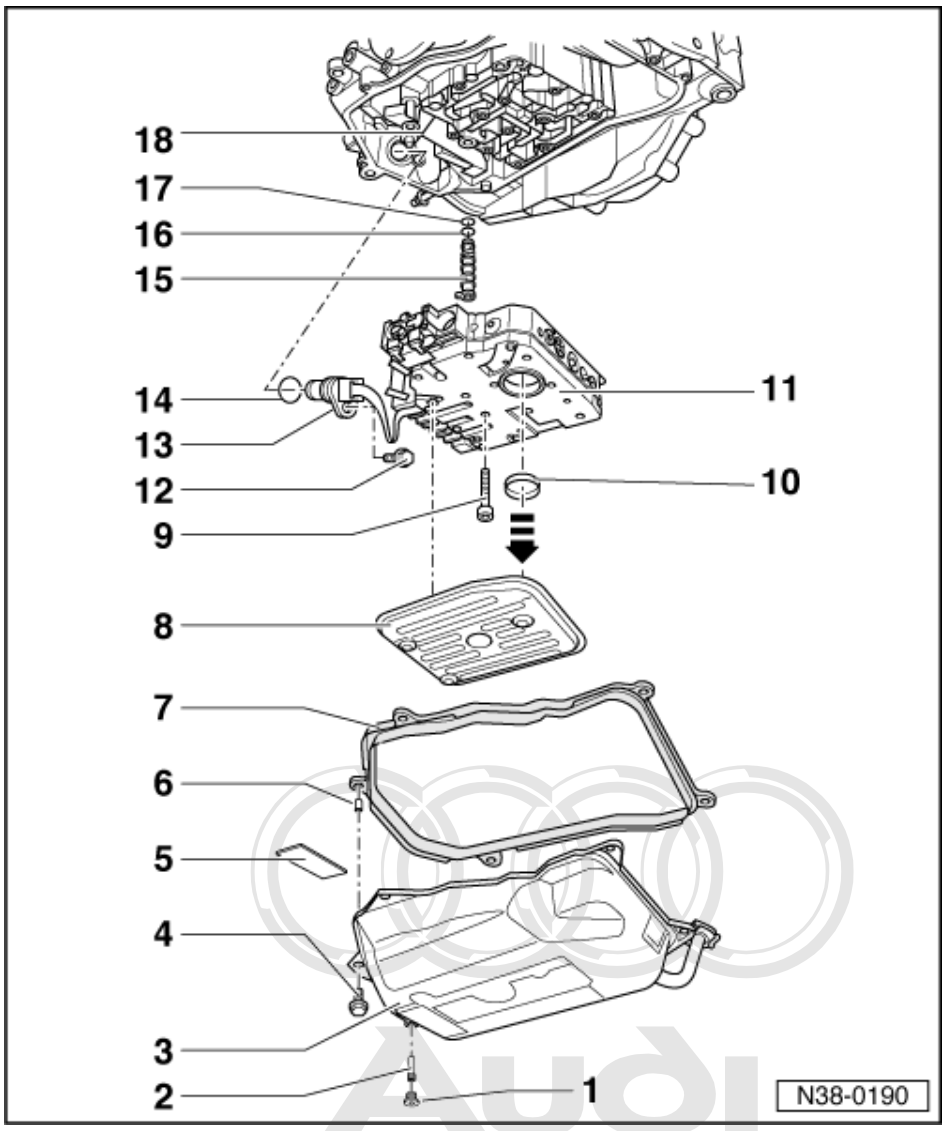

6 Spacer bush

- Press into gasket

by copyright. Copying for private or commercial purposes, in part or in whole, is not permitted unless authorised by AUDI AG. AUDI AG does not guarantee or accept any liability with respect to the correctness of information in this document. Copyright by AUDI AG.

7 Gasket

- Renew
- Press spacer bushes -Item 6 - into gasket

8 ATF screen

- Removing and installing
  => Page 176

9 Bolt - 5 Nm

10 Gasket

- Renew
- Press -arrow- onto suction collar on ATF strainer by hand =>Fig. 5

11 Valve body

- Marking
  =>Fig. 174
- Removing and installing
  => Page 177

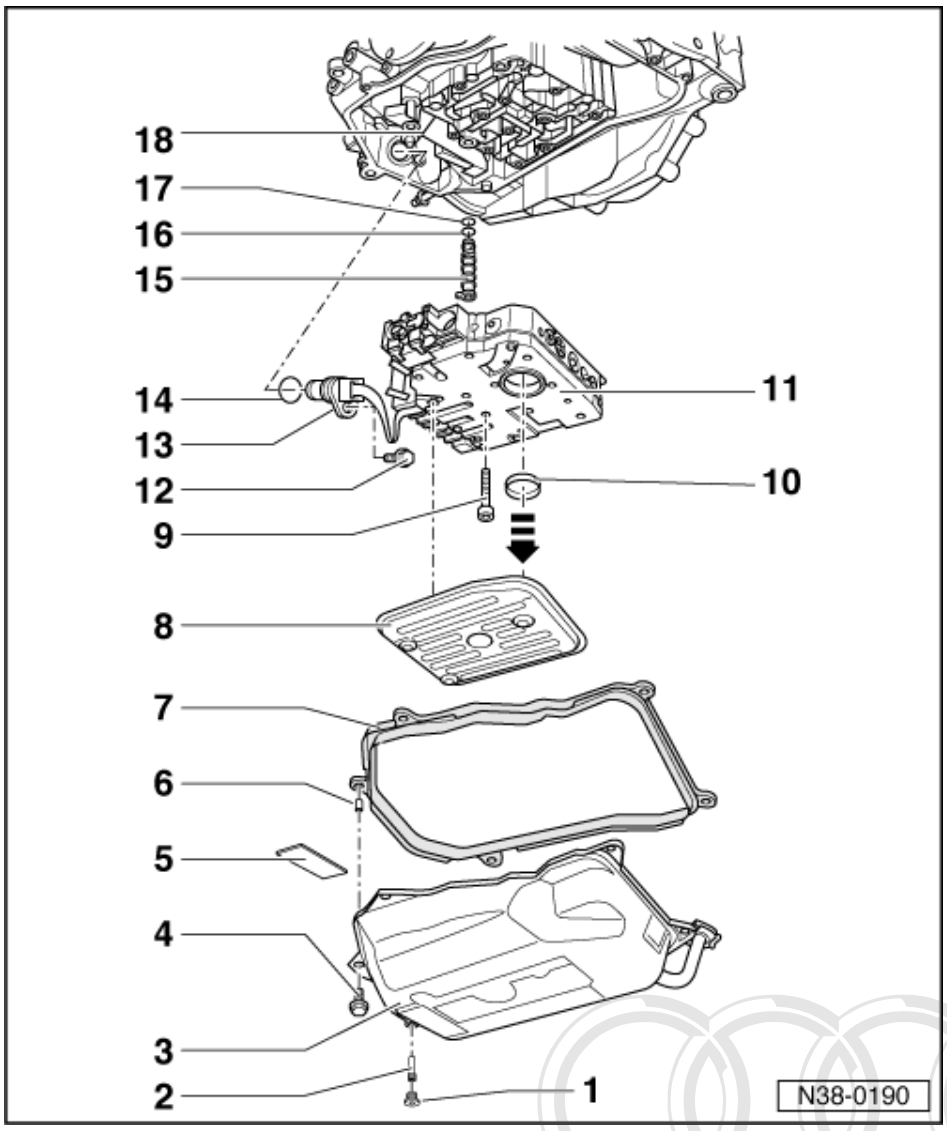

12 Bolt - 10 Nm

13 Conductor strip with connector for solenoid valves

- With cable transition piece and 10-pin connector
- The gearbox oil temperature (ATF) sender -G93 is integrated in the conductor strip.
- Removing and installing
  => Page 180
- Perform basic setting after installing a new conductor strip

14 O-ring

- For cable transition piece
- Renew

Protected by copyright. Copying for private or commercial purposes, in part or in whole, is not permitted unless authorised by AUDI AG. AUDI AG does not guarantee or accept any liability with respect to the correctness of information in this document. Copyright by AUDI AG.

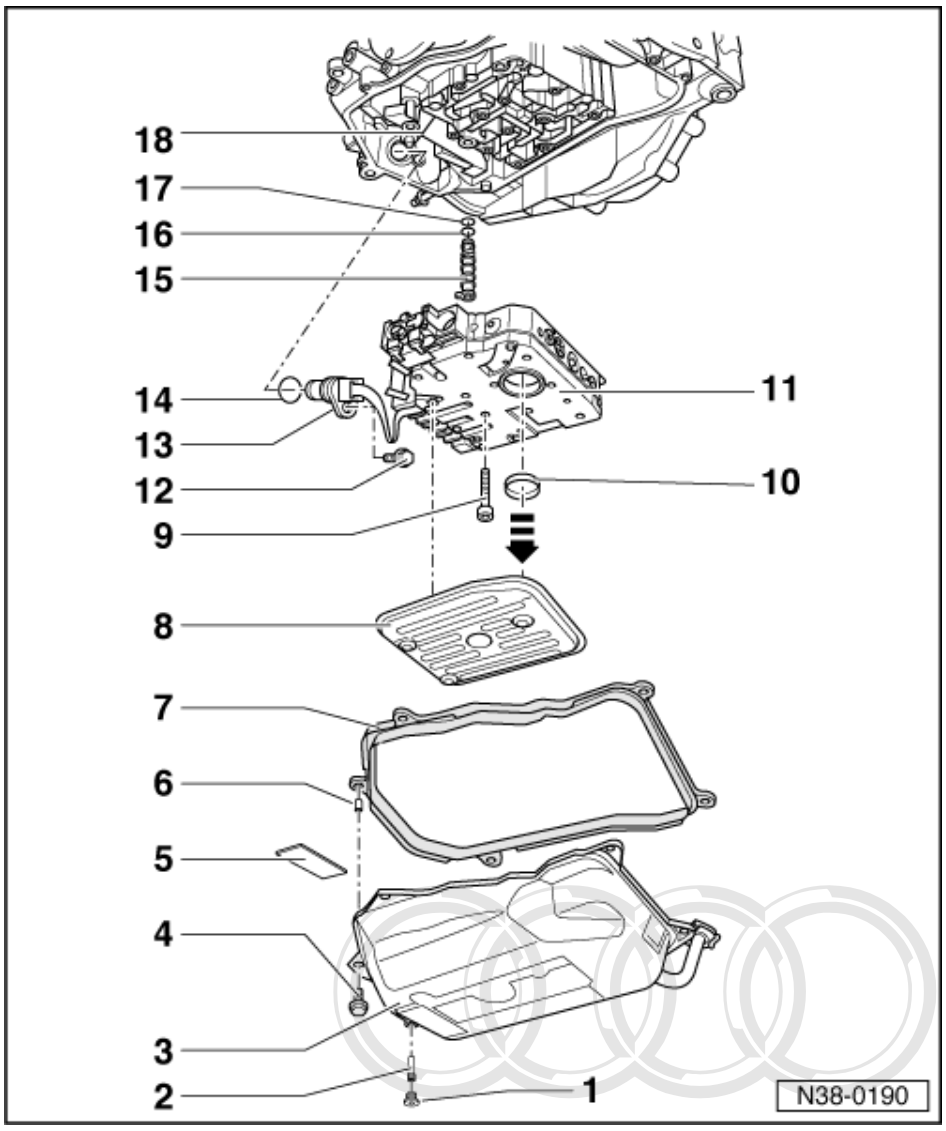

15 Sealing plug

- Take out before removing and installing free wheel
- Installation position
  => Fig. 175
- Place O-rings onto sealing plug

16 O-ring

- Renew

17 O-ring

- Renew

18 Operating rod for manual selector valve

- Adjusting=>Page 180

Protected by copyright. Copying for private or commercial purposes, in part or in whole, is not permitted unless authorised by AUDI AG. AUDI AG does not guarantee or accept any liability with respect to the correctness of information in this document. Copyright by AUDI AG.

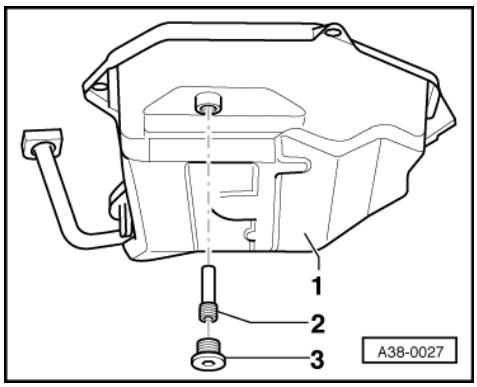

-> Fig.1 Draining ATF

- Remove ATF inspection plug -3- and overflow pipe -2- (5 mm hexagon socket).
- Drain ATF.
- Screw overflow pipe -2- in again onto stop (tightening torque: 2 Nm).

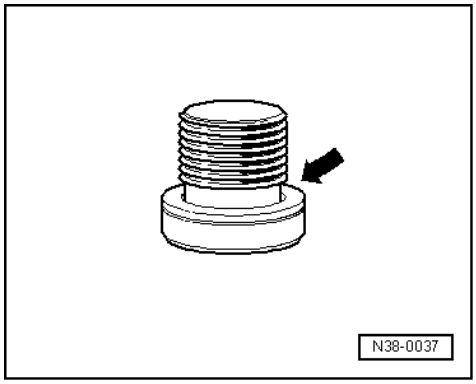

-> Fig.2 Replacing plug seal

- Cut open seal -arrow- for plug using side cutters.
- Change ATF or fill up after performing repairs; check ATF level and top up => Page 61 .

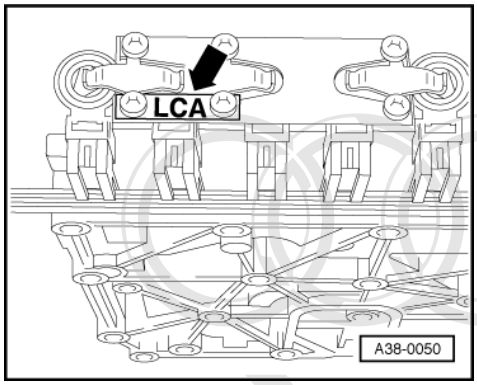

-> Fig.3 Identification of valve body

Code letters are stamped on an identifying tab. This tab must remain on the valve body.

Allocation valve body/gearbox =>from Page 2

Protected by copyright. Copying for private or commercial purposes, in part or in whole, is not permitted unless authorised by AUDI AG. AUDI AG does not guarantee or accept any liability with respect to the correctness and completeness of this document. Copyright by AUDI AG.

Note:
If the valve body has no identifying tab it must remain together with the gearbox. If a new valve body is fitted, ensure that it is the correct version for the gearbox => allocation from Page 2 .

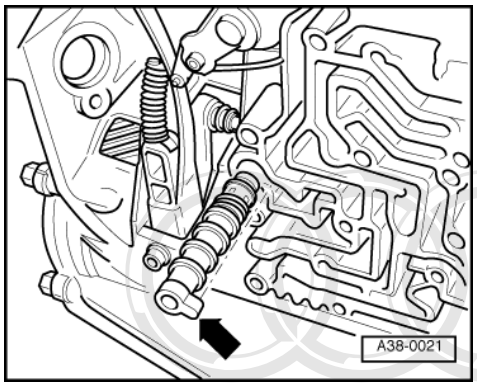

-> Fig.4 Installation position of sealing plug
- Insert sealing plug in hole in gearbox housing. The lug -arrow- is inserted into the oil channel.

Notes:
- Pull the sealing plug out of the gearbox housing before removing and installing the free wheel. Otherwise the sealing plug and the O-rings will be damaged.
- Insert sealing plug together with 2 O-rings.

Copyright by AUDI AG. All rights reserved. Copyright or private or commercial purposes, in part or in whole, is not permitted unless authorised by AUDI AG. AUDI AG does not guarantee or accept any liability with respect to the correctness of information in this document. Copyright by AUDI AG.

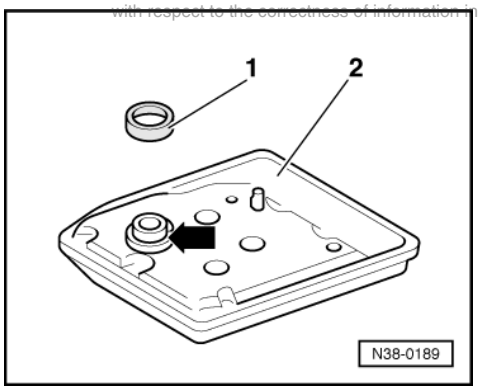

-> Fig.5 Installing seal
- Slide oil seal -1- onto suction collar -arrow- on ATF strainer by hand.

6.2 - Removing and installing oil pan

Special tools and workshop equipment required
- Drip tray

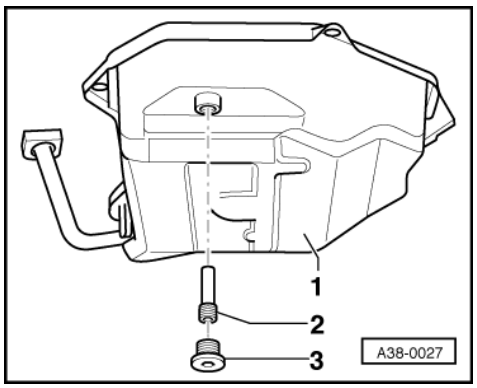

Removing

- Place container under the gearbox.
- -> Remove ATF inspection plug -3- and overflow pipe -2- (5 mm hexagon socket).
- Drain ATF.
- Unscrew oil pan bolts in diagonal sequence.

Note:

Clean the magnet in the oil pan. Ensure that the magnet is in full contact with the oil pan.

Installing

Install in reverse sequence; note the following points:

- Renew gaskets.
- Tighten oil pan bolts in diagonal sequence and in several stages.
- Change ATF or fill up after performing repairs; check ATF level and top up => Page 61 .

Tightening torques

Component	Nm
Overflow pipe to oil pan	2
Oil pan to gearbox housing (tighten in stages and in diagonal sequence)	8

6.3 - Removing and installing ATF screen

Removing

- Remove oil pan => Page 175 .
- Pull ATF screen off valve body.

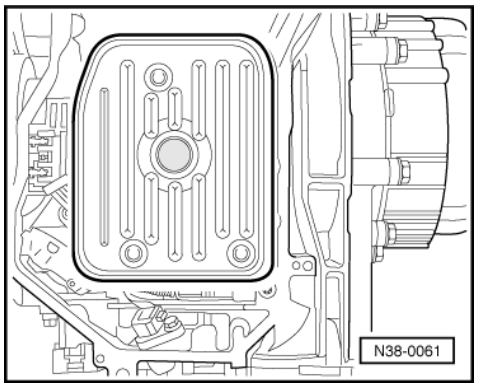

Protected by copyright. Copying for private or commercial purposes, in part or in whole, is not permitted unless authorised by AUDI AG. AUDI AG does not guarantee or accept any liability with respect to the correctness of information in this document. Copyright by AUDI AG.

Installing

- Press oil seal onto suction collar on ATF strainer.
- -> Press ATF screen approx. 3 mm into valve body (not onto stop).
- When installing oil pan the ATF screen will be pushed into correct installation position.
- Install oil pan => page 176 .
- Change ATF or fill up after performing repairs; check ATF level and top up => Page 61 .

6.4 - Removing and installing valve body

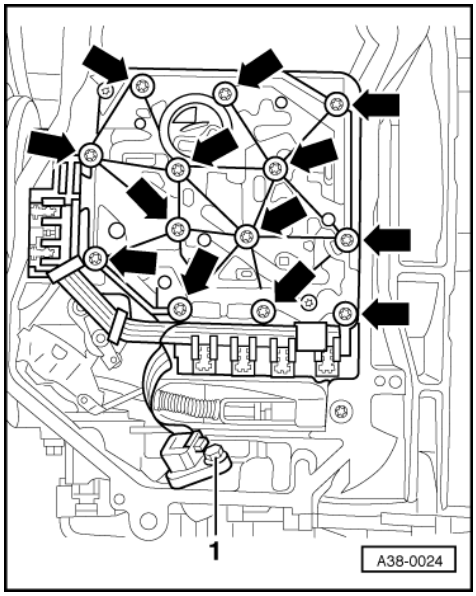

Removing

- Move selector lever to position "1".
- Remove oil pan => Page 175 .
- Remove ATF screen => Page 176 .
- -> Remove securing bolt -1- for 10-pin connector.
- Press 10-pin connector out of gearbox housing from outside to inside.
- Slacken bolts -arrows-.

Notes:

- Only slacken the securing bolts indicated in the illustration.
- If other bolts are slackened, this may affect the operation of the valve body or the valve body will come apart.

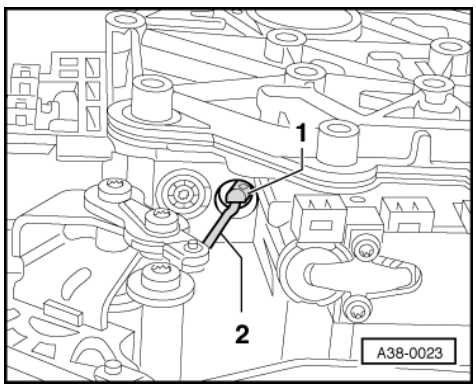

- -> Take valve body off gearbox; when performing this step, carefully unhook operating rod -2- for manual selector valve from manual selector valve -1-.
- Secure manual selector valve so that it cannot fall out.

Protected by copyright. Copying for private or commercial purposes, in part or in whole, is not permitted unless authorised by AUDI AG. AUDI AG does not guarantee or accept any liability with respect to the correctness of information in this document. Copyright by AUDI AG.

Installing

- Fit valve body on gearbox without using any force.
- Engage operating rod -2- in into manual selector valve -1-.
- Guide operating rod -2- with manual selector valve into valve body.

Note:

Fitting location of manual selector valve: the flat on the manual selector valve -1- faces toward the gearbox.

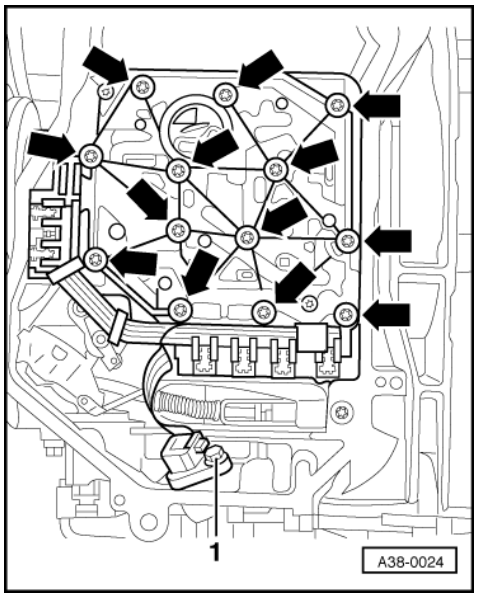

- -> First tighten valve body bolts -arrows- lightly.
- Then tighten alternately crosswise from inside to outside to 5 Nm.
- Route conductor strip so that it is not kinked or twisted when installing.
- Guide 10-pin connector through gearbox housing and tighten securing bolt -1-.
- Adjust operating rod for manual selector valve=>Page 180 .
- Install ATF screen => Page 176 .
- Install oil pan => page 176 .
- Change ATF or fill up after performing repairs; check ATF level and top up => Page 61 .

Protected by copyright. Copying for private or commercial purposes, in part or in whole, is not permitted unless authorised by AUDI AG. AUDI AG does not guarantee or accept any liability with respect to the correctness of information in this document. Copyright by AUDI AG.

Tightening torque

Component	Nm
Valve body to gearbox housing (tighten from inside to outside)	5

6.5 - Operating rod for manual selector valve

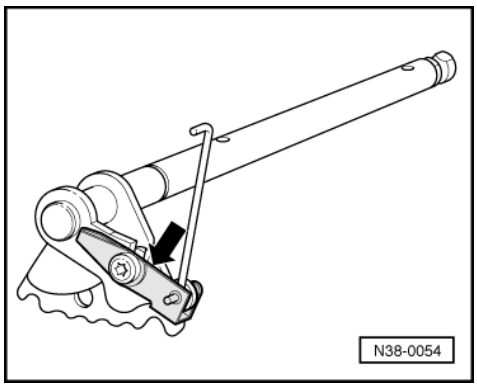

Replacing steel spring and bolt for selector shaft

- Valve body is installed

- -> Unscrew bolt for steel spring -arrow-.
- Remove steel spring with operating rod and lever from selector shaft in gearbox.

- Disengage operating rod from manual selector valve.

Notes:

- Make sure that manual selector valve does not drop out of valve body.
- The bolt and steel spring must always be replaced if they have been removed.

- Shift detent plate/shaft into position "1".
- Pull manual selector valve slightly out of valve body.

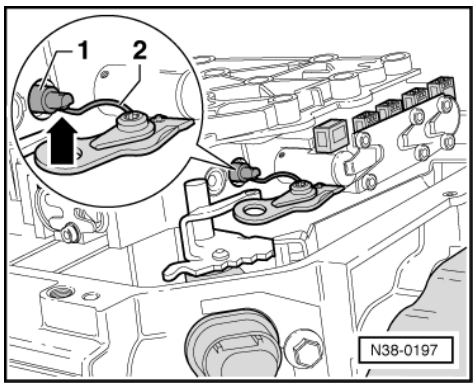

- -> Turn manual selector valve -1- so that flat shoulder -arrow- faces operating rod -2-.
- Hook operating rod with lever into manual selector valve as illustrated.

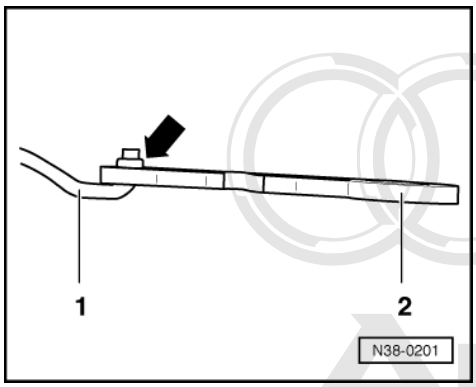

- -> Fit operating rod from below -1- into collar -arrow- of lever -2- on selector shaft.

Protected by copyright. Copying for private or commercial purposes, in part or in whole, is not permitted unless authorised by AUDI AG. AUDI AG does not guarantee or accept any liability with respect to the correctness of information in this document. Copyright by AUDI AG.

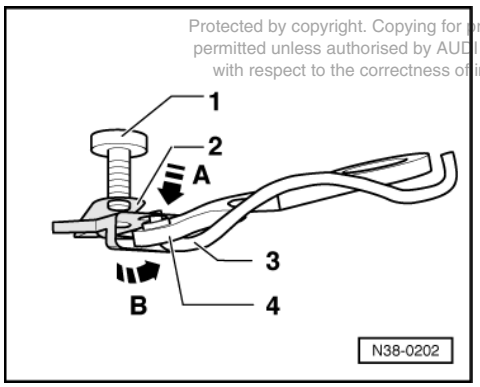

- -> Hook new steel spring -2- with new bolt -1- over end of operating rod -3- -arrow A- and slide lower lug over operating rod -arrow B-. At the same time, locate top of steel spring centrally on collar of lever -arrow A-.
- Swing steel spring over lever onto limit stop.
- Screw bolt in further until it is flush with lower edge of lever.

Note:

The bolt should not be fully tightened until after adjusting the operating lever.

- Adjust operating rod for manual selector valve=>Page 180 .

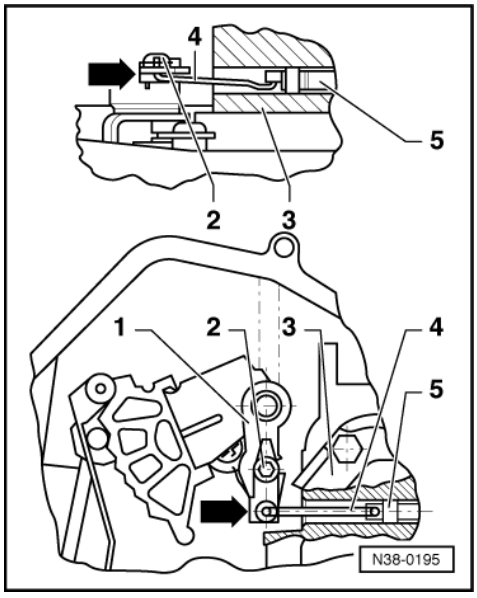

Adjusting operating rod for manual selector valve

Protected by copyright. Copying for private or commercial purposes, in part or in whole, is not permitted unless authorised by AUDI AG. AUDI AG does not guarantee or accept any liability with respect to the correctness of information in this document. Copyright by AUDI AG.

Note:

The bolt and steel spring must always be replaced if they have been removed=>Page 178 .

- Move selector shaft to position "P".
- -> Push operating rod -4- with manual selector valve -5- into valve body -3- as far as stop (direction of arrow) and tighten bolt -2- for lever to 4 Nm.

Notes:

- The manual selector valve must rest against the stop in the valve body when adjusting. Counter-hold in direction of arrow when tightening bolt.
- Do not push against the small limiting lever on the steel spring, as this would upset the adjustment.
- Check adjustment: when selector lever is in position "1", manual selector valve must be flush with outside of valve body.

6.6 - Removing and installing conductor strip with 10-pin connector

Notes:

- The gearbox oil temperature (ATF) sender -G93 is integrated in the conductor strip.
- Valve body installed or removed.

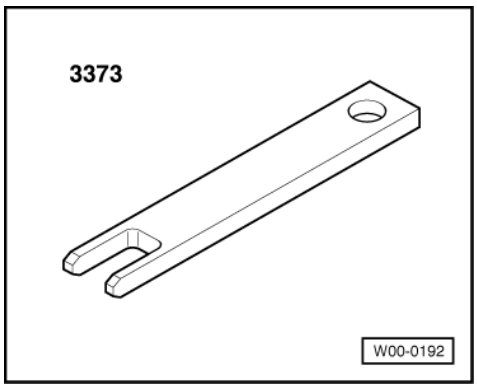

Special tools and workshop equipment required

- Lever for conductor strip 3373.

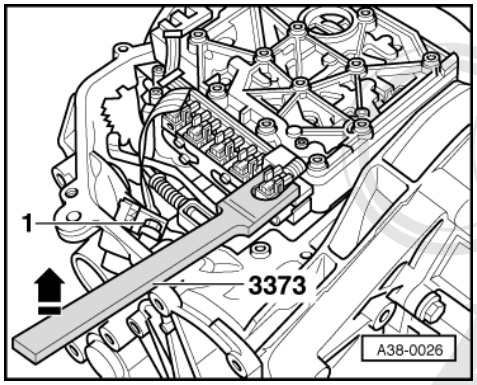

Protected by copyright. Copying for private or commercial purposes, in part or in whole, is not permitted unless authorised by AUDI AG. AUDI AG does not guarantee or accept any liability with respect to the correctness of information in this document. Copyright by AUDI AG.

Removing

- Remove oil pan => Page 175 .
- Remove ATF screen => Page 176 .
- -> Remove securing bolt -1- for 10-pin connector.
- Press 10-pin connector out of gearbox housing from outside to inside.
- Use 3373 to lever conductor strip off the solenoid valves in direction of arrow.

Note:

If the retaining catches on the solenoid valves are damaged, the valve body must be renewed.

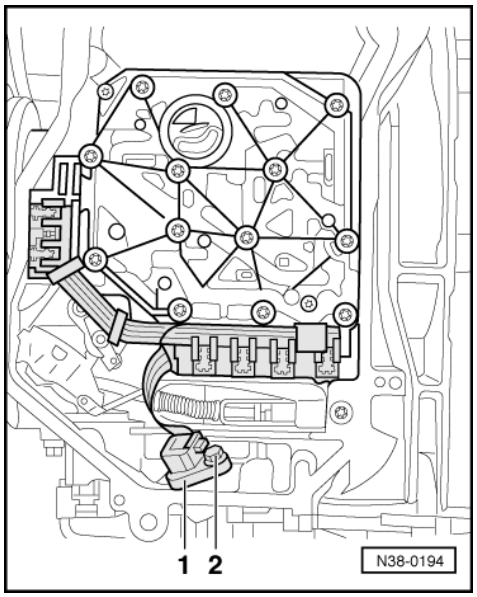

Installing

- -> Route conductor strip so that it is not kinked or twisted when installed.
- Press the individual connectors of the conductor strip onto the solenoid valves so that they engage properly.
- Fit new O-ring to connector -1- and moisten with ATF.
- Insert conductor foil connector in gearbox housing and tighten retaining bolt -2- to 10 Nm.
- Install ATF screen => Page 176 .
- Install oil pan => page 176 .

7 - Dismantling and assembling parking lock

7.1 - Dismantling and assembling parking lock

Caution Do not run the engine or tow the vehicle if the oil pan is removed or if ATF has been drained from the gearbox.

Notes:

- Rules for cleanliness when working on the automatic gearbox
  => Page 71 .
- General repair instructions =>Page 14 .
- Lightly lubricate O-rings with ATF. Other types of lubricant can cause problems with the hydraulic actuation of the gearbox.
- Multi-function switch -F125, gearbox speed sender -G38- and road speed sender -G68 can be tested by self-diagnosis.

=> Automatic gearbox 01N, Self-diagnosis; Repair group 01; Performing self-diagnosis; Reading measured value block Performing self-diagnosis Reading measured value block

- The output gear has to be removed in order to dismantle and assemble the parking lock => Removing and installing drive pinion, Page 214 .
- Shim "S4" for the drive pinion must be re-measured (=> Page 253) if the parking lock gear is renewed.
- Removing and installing planetary gearbox/final drive breather
  => Fig. 191

Protected by copyright. Copying for private or commercial purposes, in part or in whole, is not permitted unless authorised by AUDI AG. AUDI AG does not guarantee or accept any liability with respect to the correctness of information in this document. Copyright by AUDI AG.

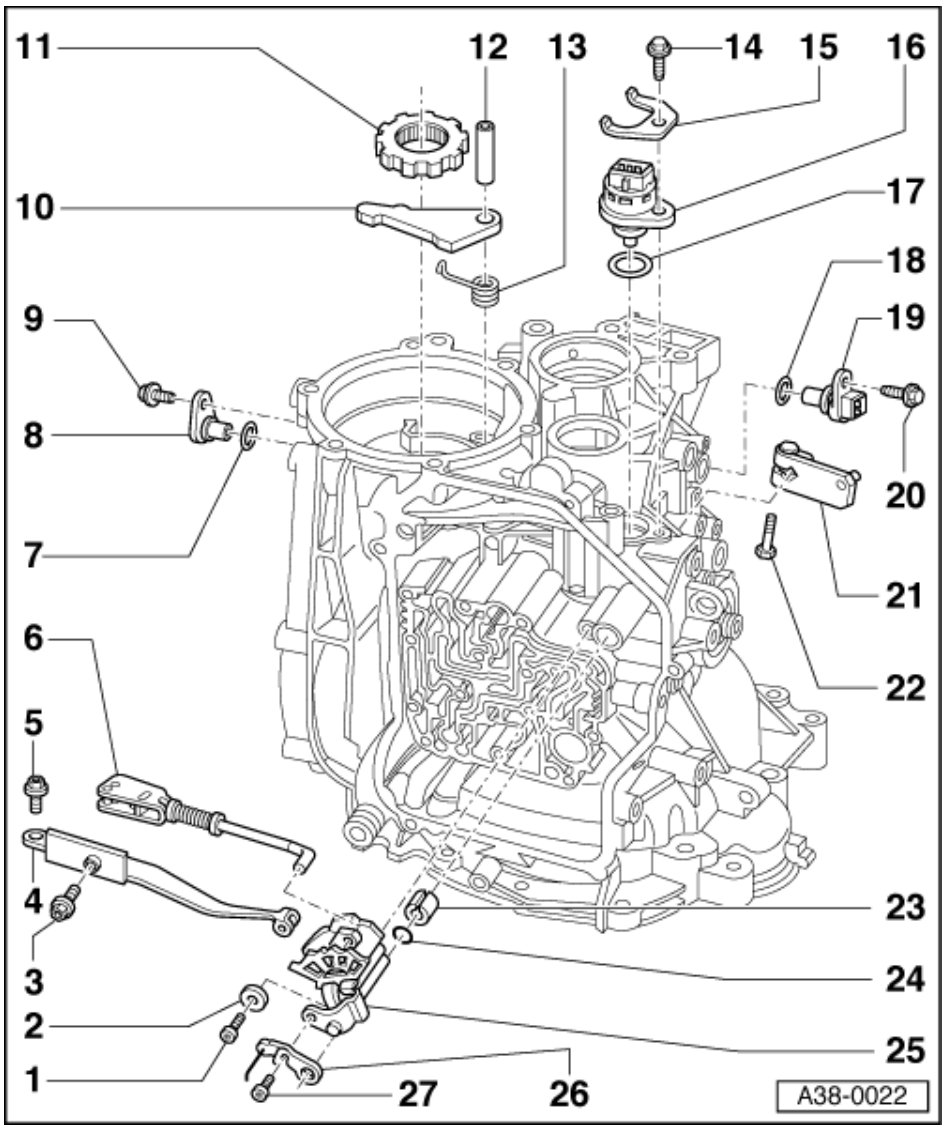

1 **Bolt - 10 Nm**
- Secures selector shaft
- Installing
  => Fig. 190

2 **Locking washer**
- Inserting
  => Fig. 190

3 **Bolt - 10 Nm**
- Assemble in correct sequence
  => Fig. 191

4 **Detent spring**
- To remove, remove drive pinion cover and output gear => from Page 214
- To remove, loosen bolts -Items 3 and 5 - and lift parking lock detent lever -Item 10 - by hand.

5 **Bolt - 10 Nm**
- Assemble in correct sequence
  => Fig. 191

6 **Engaging lever**
- Insert together with selector shaft and detent segment

Protected by copyright. Copying for private or commercial purposes, in part or in whole, is not permitted unless authorised by AUDI AG. AUDI AG does not guarantee or accept any liability with respect to the correctness of information in this document. Copyright by AUDI AG.

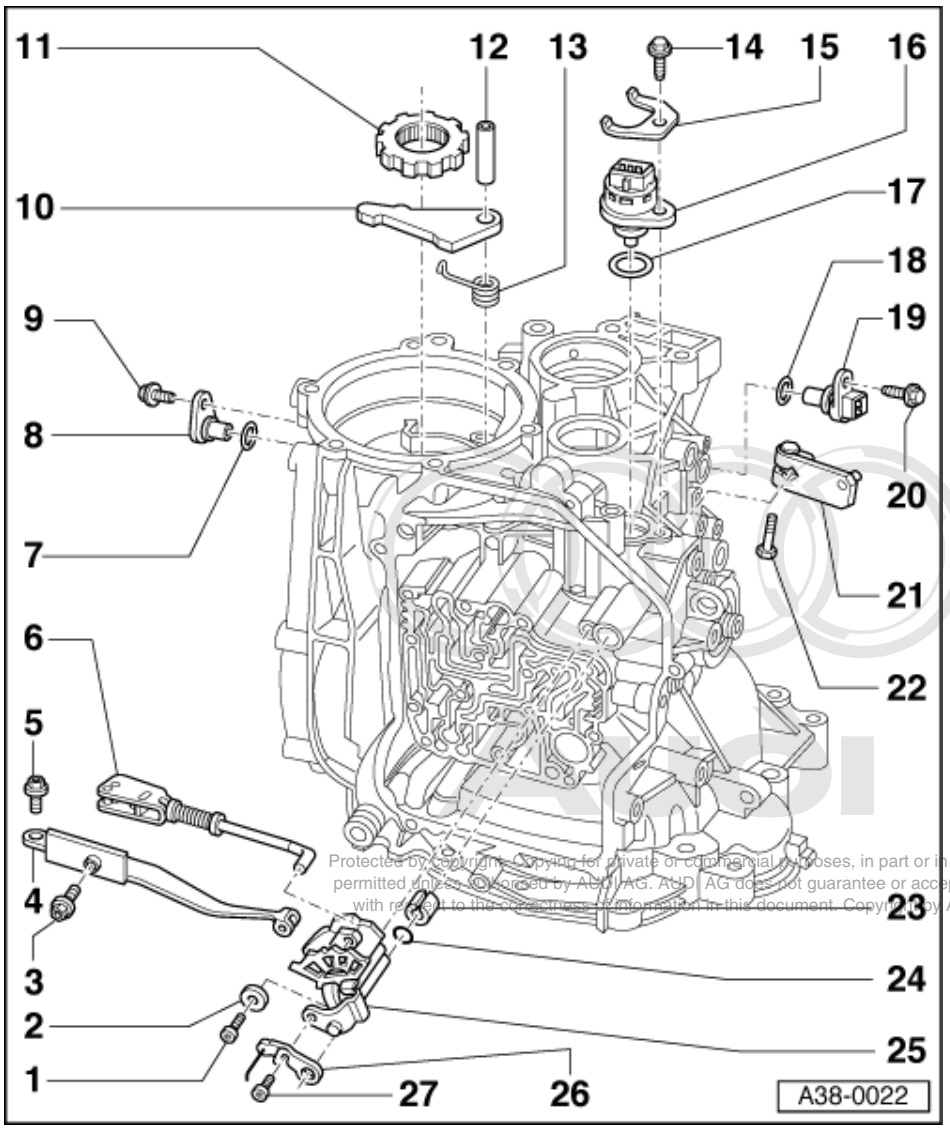

Protected by copyright. Copying for private or commercial purposes, in part or in whole, is not permitted unless authorised by AUDI AG. AUDI AG does not guarantee or accept any liability with respect to the correctness of information in this document. Copyright by AUDI AG.

7 O-ring
- Renew

8 Gearbox speed sender -G38
- Tested in the vehicle by self-diagnosis

=> Automatic gearbox 01N; Repair group 01; Performing self-diagnosis; Reading measured value block Performing self-diagnosis Reading measured value block

- Functioning is impaired by dirt; clean if necessary
- Removing and installing
  =>Page 192

9 Bolt - 10 Nm

10 Detent lever
- To remove, remove drive pinion cover and output gear => from Page 214
- To remove, pull out detent lever shaft -item 12 -
- Insert with return spring
- Installation position: must be aligned centrally with parking lock gear.

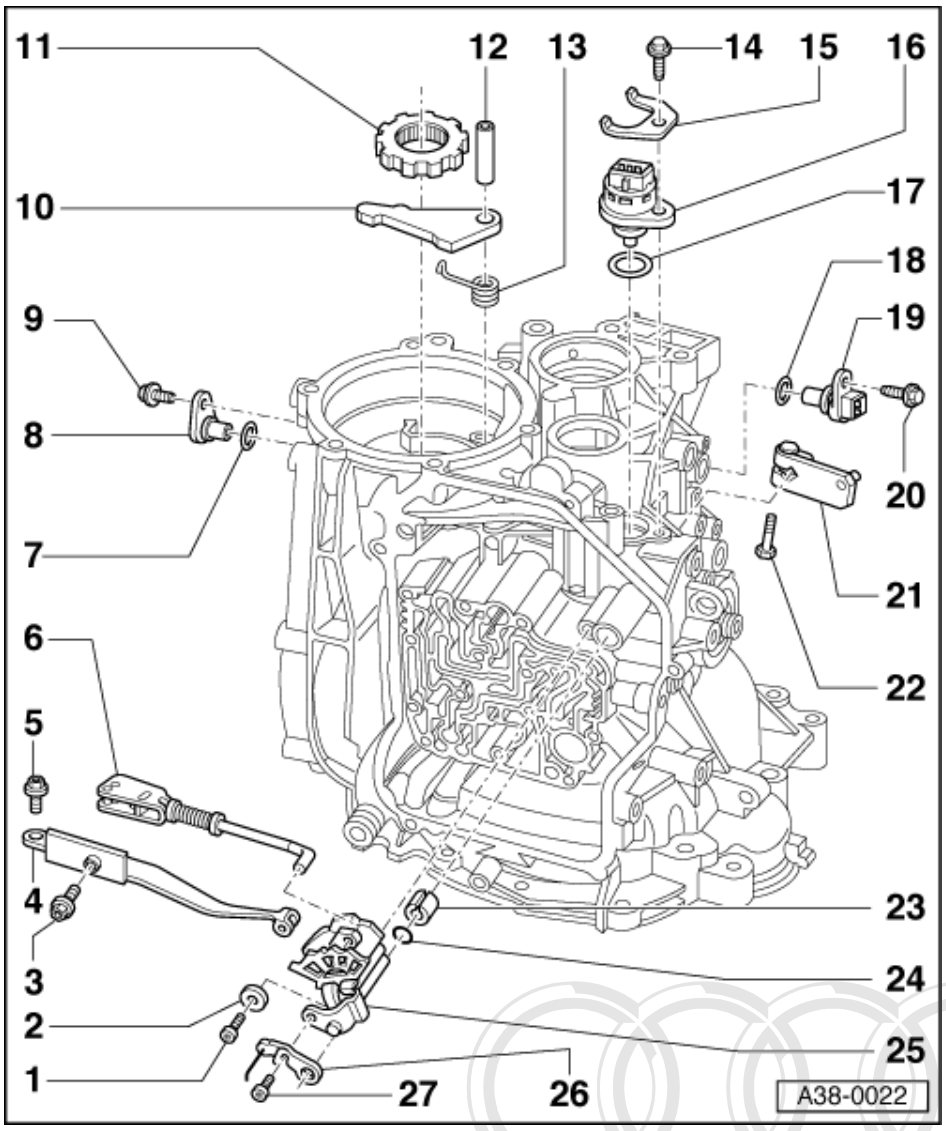

11 Parking lock gear

- To remove, remove drive pinion cover and output gear => from Page 214
- Installation position:
  Rounded side of parking lock gear faces drive pinion cover
- If parking lock gear is renewed, thickness of shim "S4" for drive pinion must be re-determined => Page 253

12 Shaft for detent lever

- Pulling out
  => Fig. 189
- Drive in with a drift
- Peening
  => Fig. 190

13 Return spring

- Supported on gearbox housing and hooked into detent lever

Protected by copyright. Copying for private or commercial purposes, in part or in whole, is not permitted unless authorised by AUDI AG. AUDI AG does not guarantee or accept any liability with respect to the correctness of information in this document. Copyright by AUDI AG.

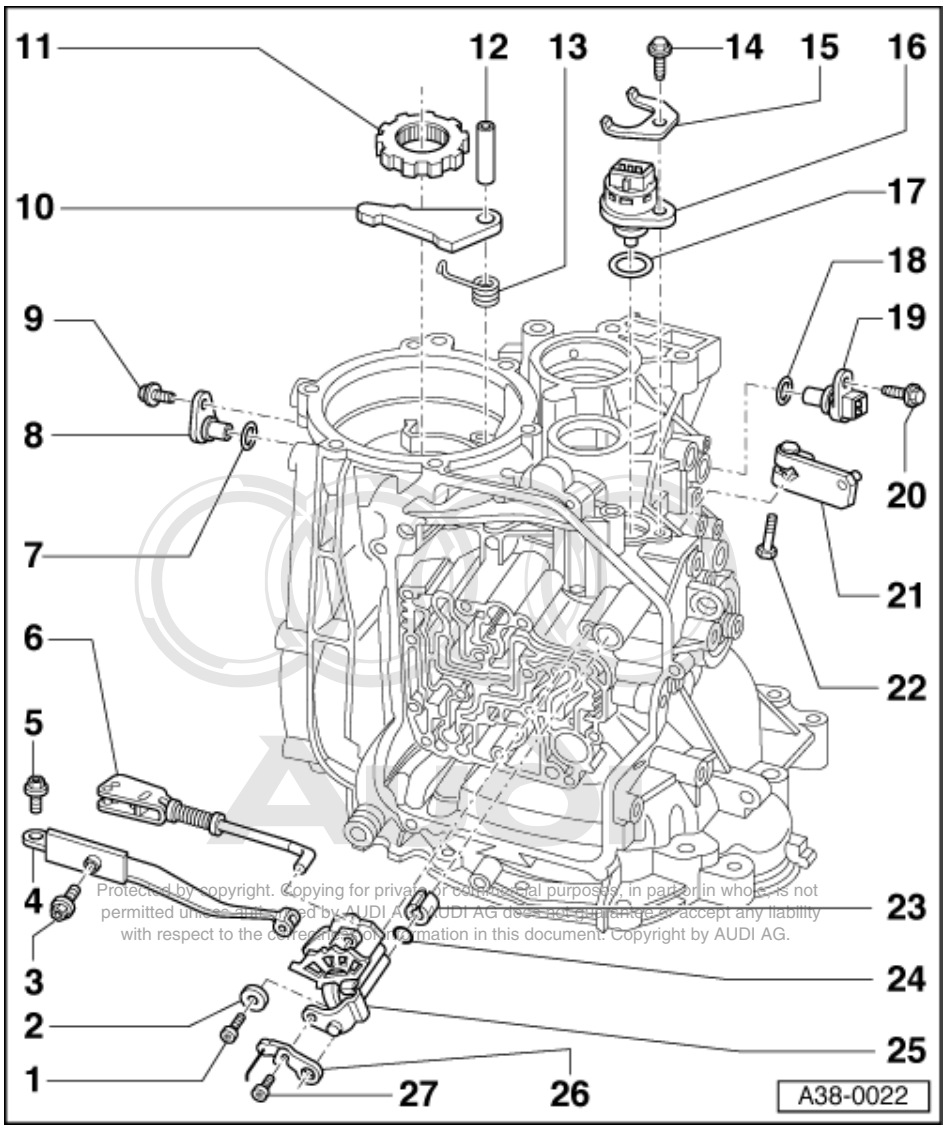

Protected by copyright. Copying for private or commercial purposes, in part or in whole, is not permitted unless authorised by AUDI AG. AUDI AG does not guarantee or accept any liability with respect to the correctness of information in this document. Copyright by AUDI AG.

14 Bolt - 10 Nm

15 Retainer

16 Multi-function switch -F125

- Remove before removing selector shaft -item 25 -
- Tested in the vehicle by self-diagnosis

=> Automatic gearbox 01N; Repair group 01; Performing self-diagnosis; Reading measured value block Performing self-diagnosis Reading measured value block

17 O-ring

- Renew

18 O-ring

- Renew

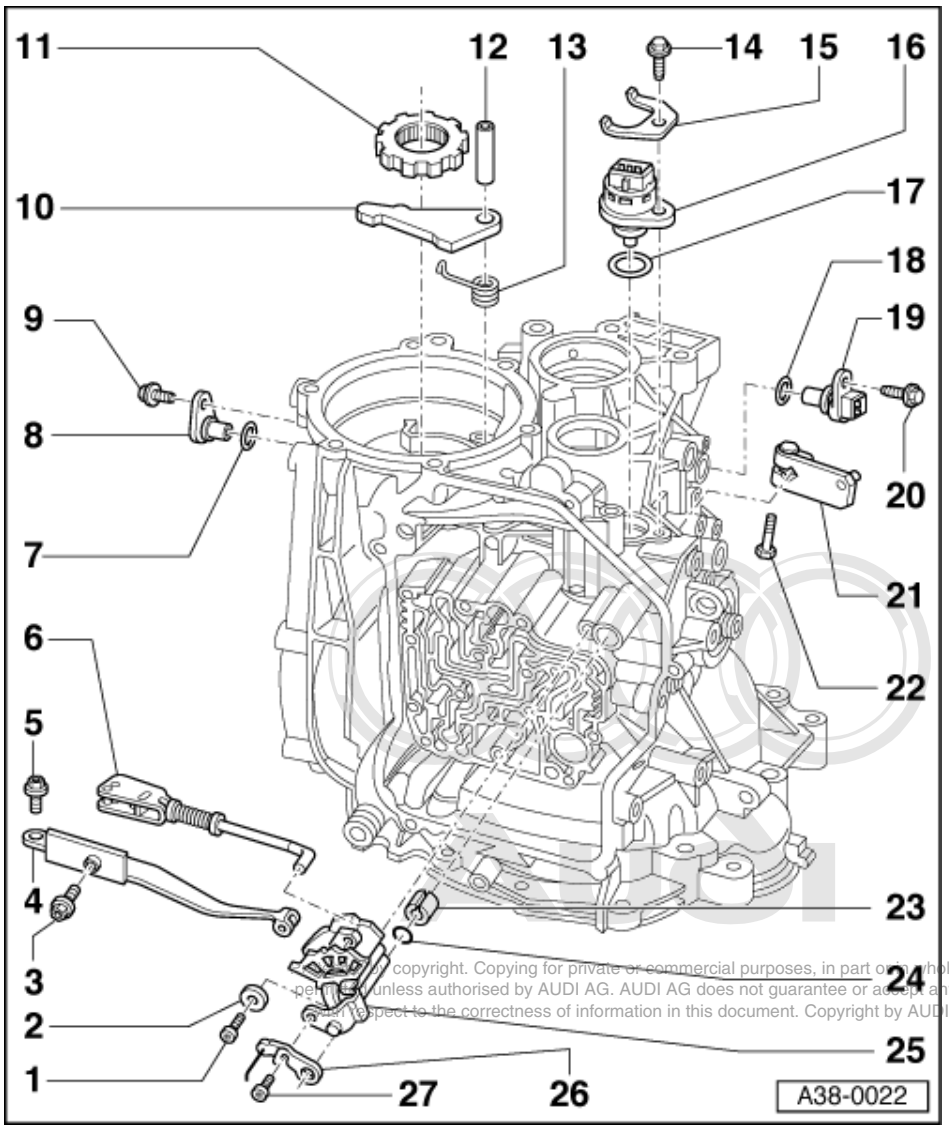

copyright. Copying for private or commercial purposes, in part or in whole, is not permitted unless authorised by AUDI AG. AUDI AG does not guarantee or accept any liability with respect to the correctness of information in this document. Copyright by AUDI AG.

19 Road speed sender -G68

- Tested in the vehicle by self-diagnosis

=> Automatic gearbox 01N; Repair group 01; Performing self-diagnosis; Reading measured value block Performing self-diagnosis Reading measured value block

- Functioning is impaired by dirt; clean if necessary
- Removing and installing
  =>Page 193

20 Bolt - 10 Nm

21 Lever

- For selector shaft

22 Bolt - 10 Nm

23 Mounting bush

- Drive in and drive out with drift
- Insert before installing selector shaft

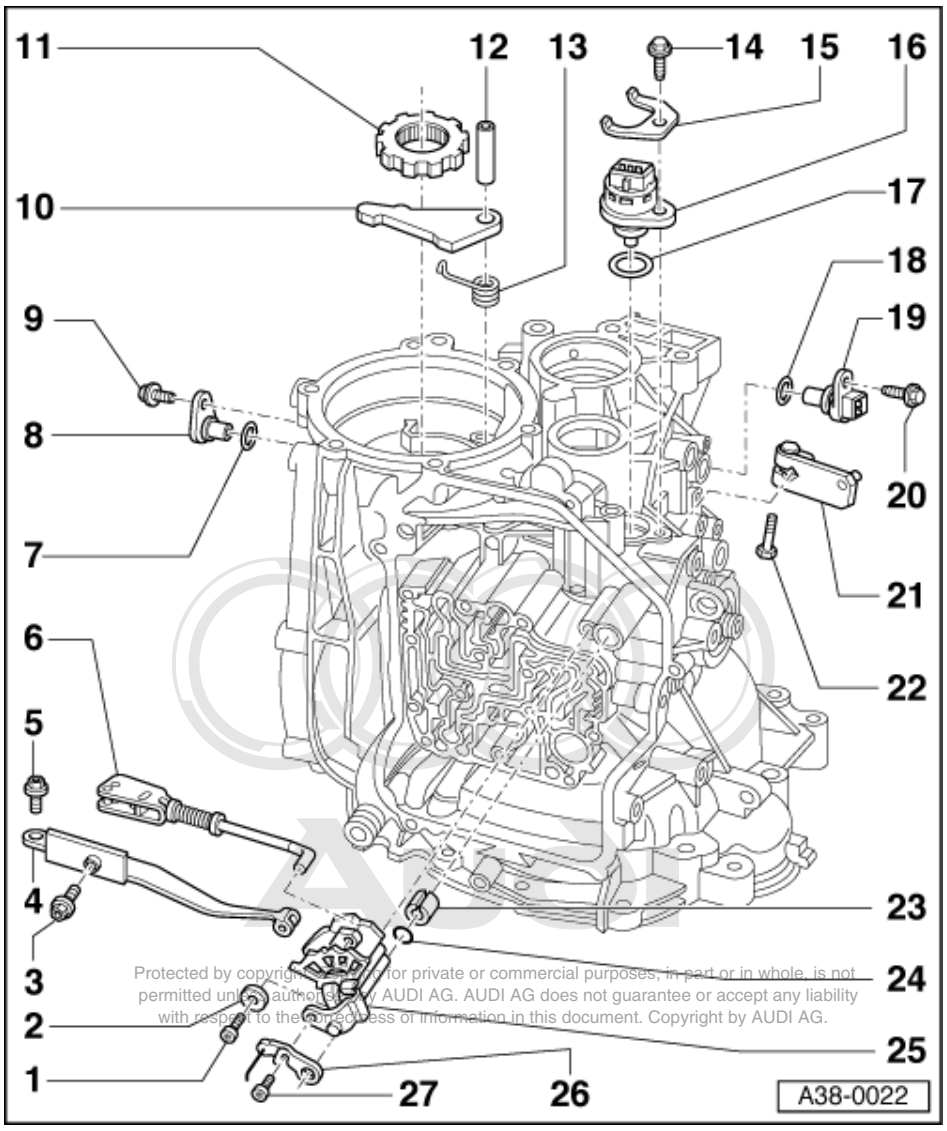

Protected by copyright. Copying for private or commercial purposes, in part or in whole, is not permitted unless authorised by AUDI AG. AUDI AG does not guarantee or accept any liability with respect to the correctness of information in this document. Copyright by AUDI AG.

24 O-ring

- Renew
- Seat in selector shaft groove
- Installation position
  => Fig. 190

25 Selector shaft

- Remove multi-function switch -F125 -Item 16 - and detent spring -Item 4 - before removing selector shaft
- When installing, insert together with engaging lever -item 6 -
- Secure with locking washer -Item 190
- Note positions of components
  => Fig. 190

26 Operating rod for manual selector valve

- Adjusting => Page 180

27 Bolt - 5 Nm

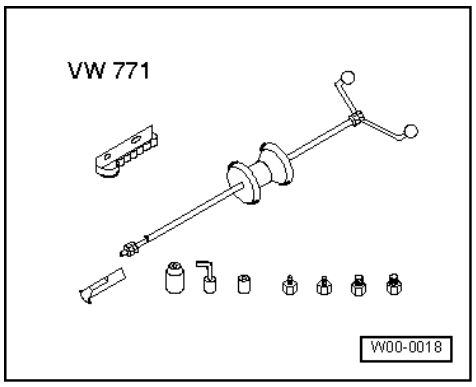

Special tools and workshop equipment required

- Multi-purpose tool VW 771

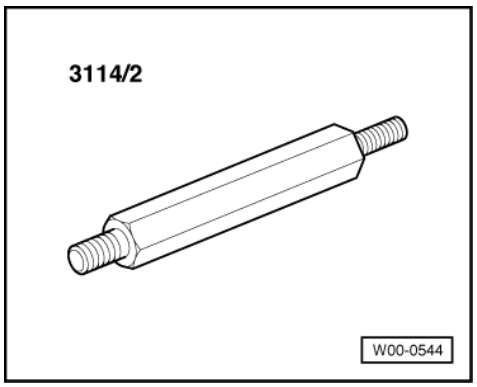

- Pin 3114/2

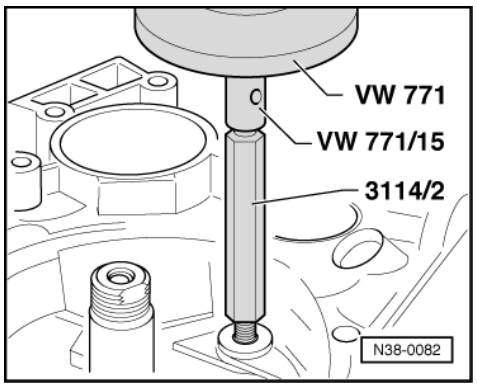

-> Fig.1 Pulling out shaft for detent lever

- Pull out shaft with multi-purpose tool VW 771.

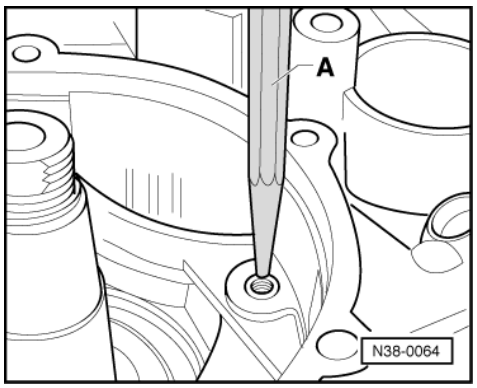

Protected by copyright. Copying for private or commercial purposes, in part or in whole, is not permitted unless authorised by AUDI AG. AUDI AG does not guarantee or accept any liability with respect to the correctness of information in this document. Copyright by AUDI AG.

-> Fig.2 Peening shaft for detent lever

- Drive in shaft with threaded hole upwards.
- Secure shaft by peening gearbox housing to shaft using a centre punch -A-.

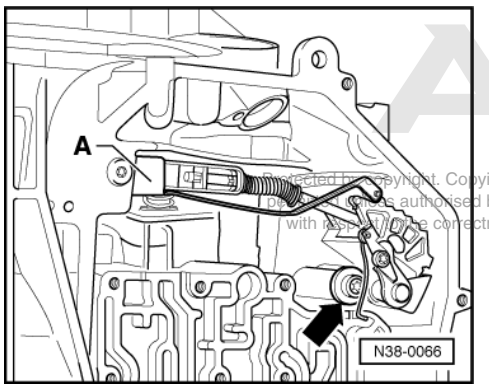

Protected by copyright. Copying for private or commercial purposes, in part or in whole, is not permitted unless authorised by AUDI AG. AUDI AG does not guarantee or accept any liability with respect to the correctness of information in this document. Copyright by AUDI AG.

-> Fig.3 Removing and installing selector shaft

- Remove bolt (arrow) and take out locking washer.

Note:

The selector shaft can be removed or installed after removing the detent spring -A-.

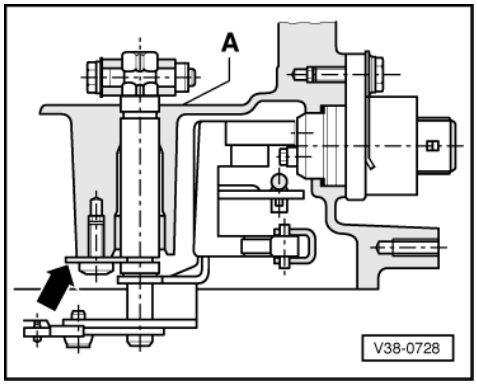

-> Arrow points to locking washer.

A - O-ring

Note:

The illustration shows the selector shaft in cross-section.

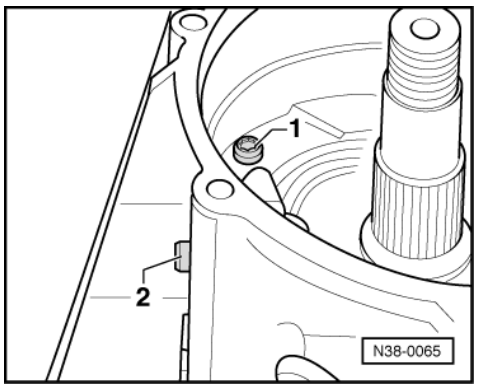

-> Fig.4 Inserting bolts for detent spring

- Screw in bolts -1- and -2- approx. 3 turns.
- Tighten bolt -2- to 10 Nm and then tighten bolt -1- to 10 Nm.

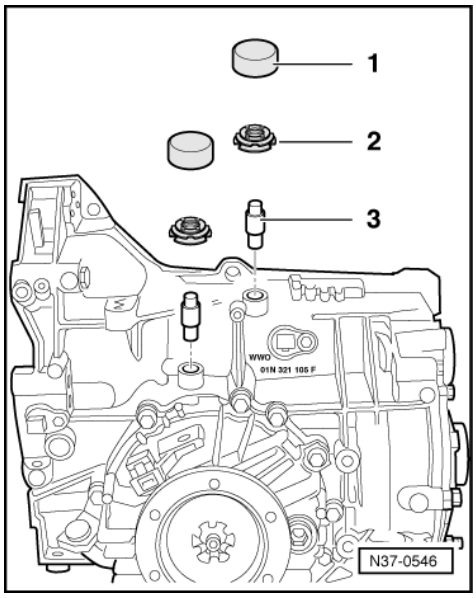

-> Fig.5 Removing and installing planetary gearbox/final drive breather

1 - Breather cap
2 - Breather
3 - Breather pipe
-Remove using pliers
-Drive onto stop with copper drift

8 - Removing and installing senders on gearbox housing

8.1 - Removing and installing senders on gearbox housing

8.2 - Removing and installing speedometer sender -G22

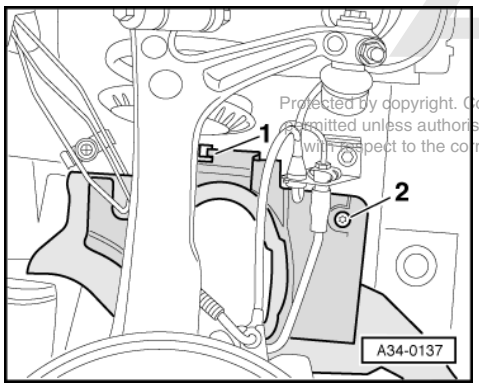

Protected by copyright. Copying for private or commercial purposes, in part or in whole, is not permitted unless authorised by AUDI AG. AUDI AG does not guarantee or accept any liability with respect to the correctness of information in this document. Copyright by AUDI AG.

Removing
- Remove front left wheel.

Vehicles with TDI engine:
- -> Remove bolt -2- on noise insulation cover above left drive shaft.
- Disengage retainer -1- and remove noise insulation cover.

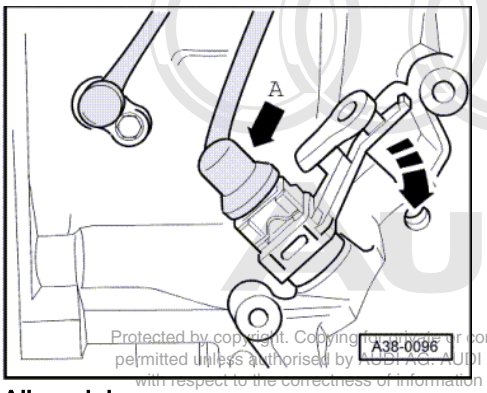

Protected by copyright. Copying for private or commercial purposes, in part or in whole, is not permitted unless authorised by AUDI AG. AUDI AG does not guarantee or accept any liability with respect to the correctness of information in this document. Copyright by AUDI AG.

All models
- -> Pull connector -arrow A- off sender.
- Press down sender retaining catch and turn -arrow-.
- Pull out sender.

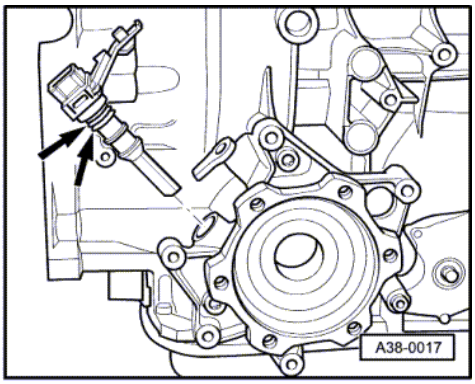

Installing
Install in reverse order but note following:
- -> Renew O-rings -arrows-.
- Lubricate O-rings with gear oil before inserting.
- Insert sender.
- Engage retaining catch on bearing bracket for flange shaft.

8.3 - Removing and installing gearbox speed sender -G38

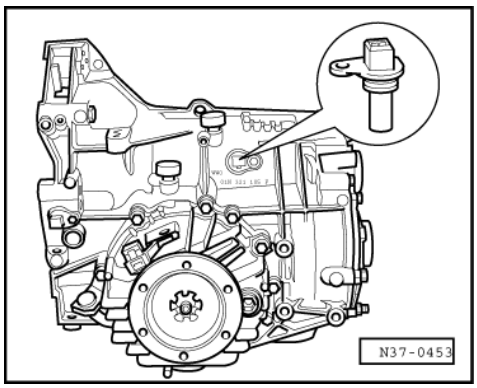

-> Location: the gearbox speed sender is located at top left of gearbox.

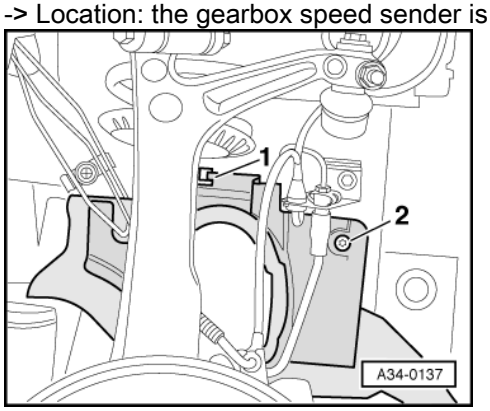

Vehicles with TDI engine:
- -> Remove bolt -2- on noise insulation cover above left drive shaft.
- Disengage retainer -1- and remove noise insulation cover.

All models
- Unplug electrical connector.
- Remove securing bolt.
- Pull out sender.
- Always renew O-ring.
- Moisten O-ring with ATF.

Installation is performed in the reverse order.

Tightening torque

Component	Nm
Sender -G38 to gearbox housing	10

8.4 - Removing and installing vehicle speed sender -G68

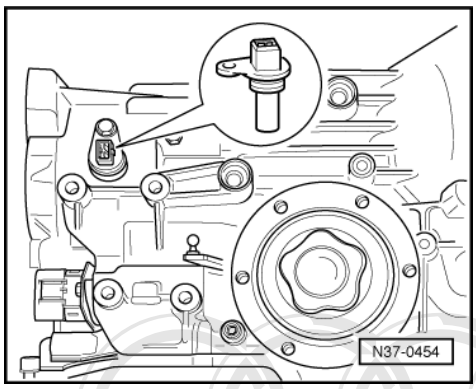

-> Location: the vehicle speed sender is located at top right of gearbox.

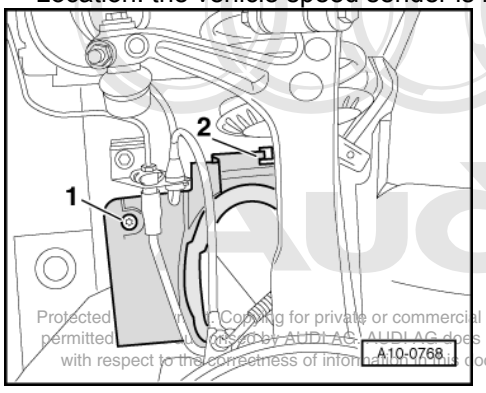

Protected ... Copying for private or commercial purposes, in part or in whole, is not permitted ... Copyright by AUDI AG. AUDI AG does not guarantee or accept any liability with respect to the correctness of information in this document. Copyright by AUDI AG.

Vehicles with TDI engine:

- -> Remove bolt -1- on noise insulation cover above right drive shaft.
- Disengage retainer -2- and remove noise insulation cover.

All models

- Unplug electrical connector.
- Remove securing bolt.
- Pull out sender.
- Always renew O-ring.
- Moisten O-ring with ATF.

Installation is performed in the reverse order.

Tightening torque

Component	Nm
Sender -G68 to gearbox housing	10

Protected by copyright. Copying for private or commercial purposes, in part or in whole, is not permitted unless authorised by AUDI AG. AUDI AG does not guarantee or accept any liability with respect to the correctness of information in this document. Copyright by AUDI AG.

39 - Final drive, Differential

1 - Checking oil in final drive

1.1 - Checking oil in final drive

Special tools and workshop equipment required

- Drip tray

Test sequence

- Drive the vehicle a short distance to warm up the gear oil.
- Position vehicle on hard, level standing e.g. on 4 pillar hoist or over pit.

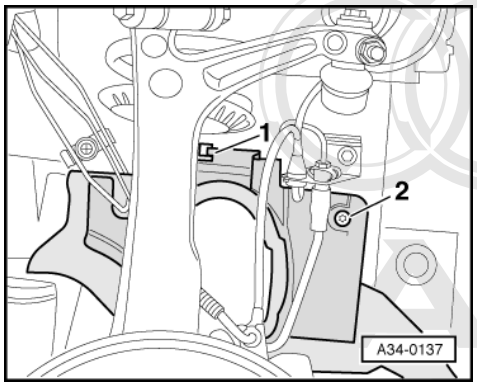

Protected by copyright. Copying for private or commercial purposes, in part or in whole, is not permitted unless authorised by AUDI AG. AUDI AG does not guarantee or accept any liability with respect to the correctness of information in this document. Copyright by AUDI AG.

Vehicles with TDI engine:

- -> Remove bolt -2- securing noise insulation cover above left drive shaft.
- Disengage retainer -1- and remove noise insulation cover.

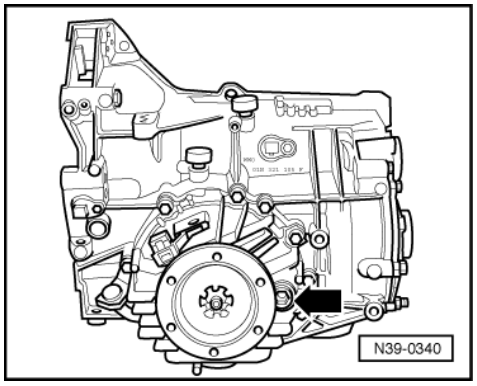

All models

- Place a drip tray underneath.
- -> Unscrew oil filler plug -arrow-.
  - Specification: oil level should be up to the bottom of the hole.
- Top up gear oil if necessary. Specifications => Page 6 .
- Clean bolt magnet.
- Screw in oil filler plug.

Tightening torque

Component	Nm
Oil filler plug.	25

2 - Renewing flange shaft oil seals

2.1 - Renewing flange shaft oil seals

2.2 - Renewing left-hand flange shaft oil seal

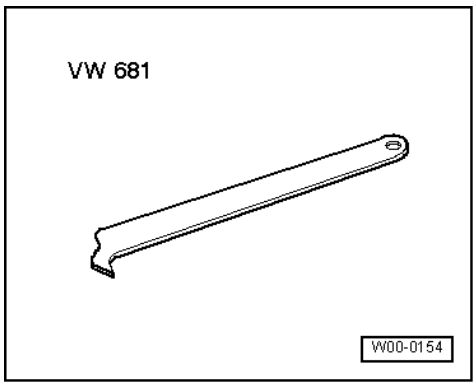

Special tools and workshop equipment required

- Extractor lever VW 681

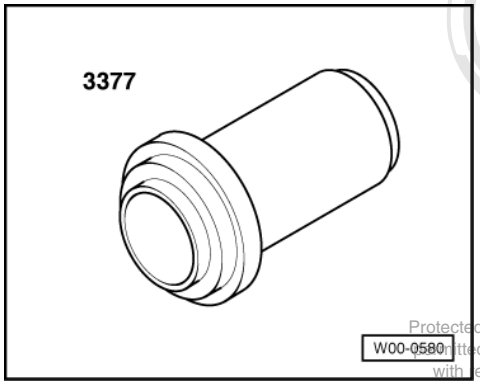

Protected by copyright. Copying for private or commercial purposes, in part or in whole, is not permitted unless authorised by AUDI AG. AUDI AG does not guarantee or accept any liability with respect to the correctness of information in this document. Copyright by AUDI AG.

- Press piece 3377
- Drip tray

Removing

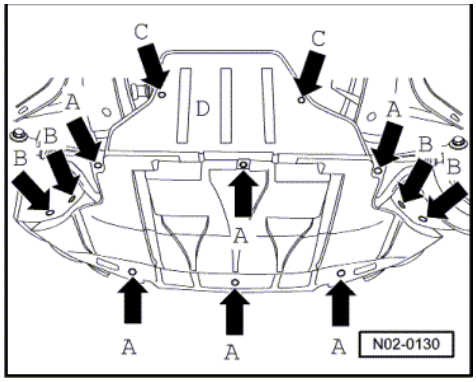

- Gearbox installed.

- Do not loosen collared bolt for drive shaft further than 90°while the vehicle is still standing on its wheels, otherwise the wheel bearing will be damaged.
- Remove front left wheel.

Vehicles with TDI engine:

- -> Remove rear noise insulation -D- (-arrows C-).

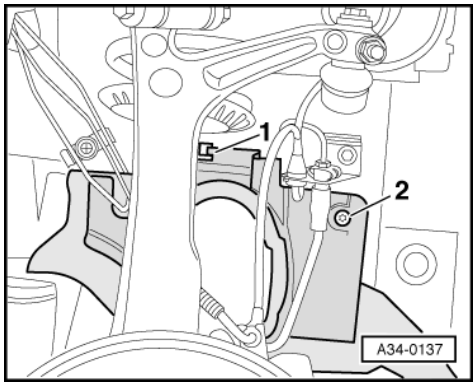

- -> Remove bolt -2- securing noise insulation cover above left drive shaft.
- Disengage retainer -1- and remove noise insulation cover.

All models

- Remove left drive shaft.

=> Running gear, Front and four-wheel drive; Repair group 40; Removing and installing drive shaft Removing and installing drive shaft

- Place container under the gearbox.
- Unscrew central bolt for left flange shaft (use pin to prevent flange shaft from turning).
- Pull out flange shaft.
- Pull out flange shaft oil seal with extractor lever VW 681.

Protected by copyright. Copying for private or commercial purposes, in part or in whole, is not permitted unless authorised by AUDI AG. AUDI AG does not guarantee or accept any liability with respect to the correctness of information in this document. Copyright by AUDI AG.

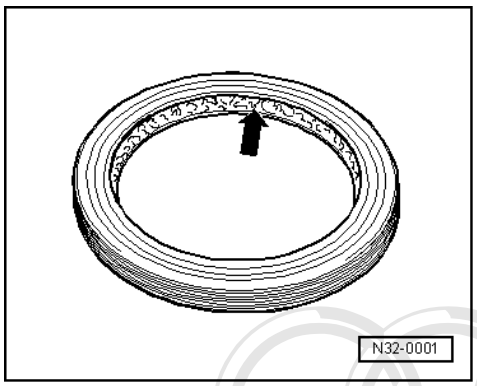

Installing

Install in reverse sequence; note the following points:

- Moisten outer circumference of seal with gear oil.
- -> Half fill space between sealing lip and dust lip with grease G 052 128 A1.

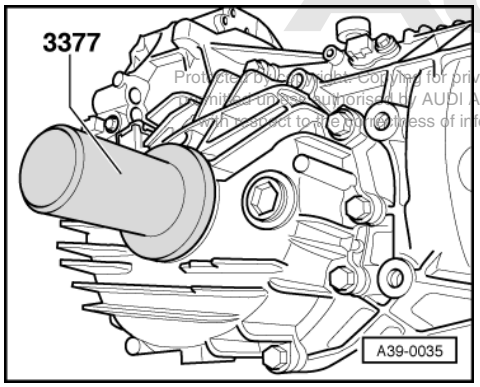

Protected by copyright. Copying for private or commercial purposes, in part or in whole, is not permitted unless authorised by AUDI AG. AUDI AG does not guarantee or accept any liability with respect to the correctness of information in this document. Copyright by AUDI AG.

Note:

Ensure that seal is inserted in housing at same depth all round.

- -> Drive new seal in onto stop, when doing this do not cant seal.
  - Installation position: open side of seal towards gearbox
- Install flange shaft with compression spring, thrust washer, tapered ring and circlip.

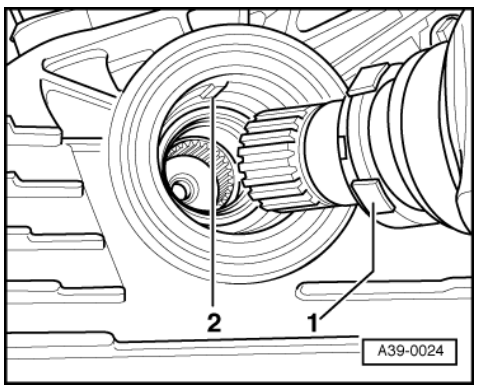

- -> Both lugs -2- on drive gear for speedometer sender must engage between tabs -1- on thrust washer.

Note:

Conical thrust surface on tapered ring faces towards differential.

- Insert left flange shaft into gearbox.
- Install left drive shaft.

=> Running gear, Front and four-wheel drive; Repair group 40; Removing and installing drive shaft Removing and installing drive shaft

- Check oil level in final drive of automatic gearbox => Page 195 .

Tightening torques

Component	Nm
Central bolt of left-hand flange shaft	30
Heat shield for drive shaft to gearbox	23

2.3 - Renewing right-hand drive flange oil seal

Protected by copyright. Copying for private or commercial purposes, in part or in whole, is not permitted unless authorised by AUDI AG. AUDI AG does not guarantee or accept any liability with respect to the correctness of information in this document. Copyright by AUDI AG.

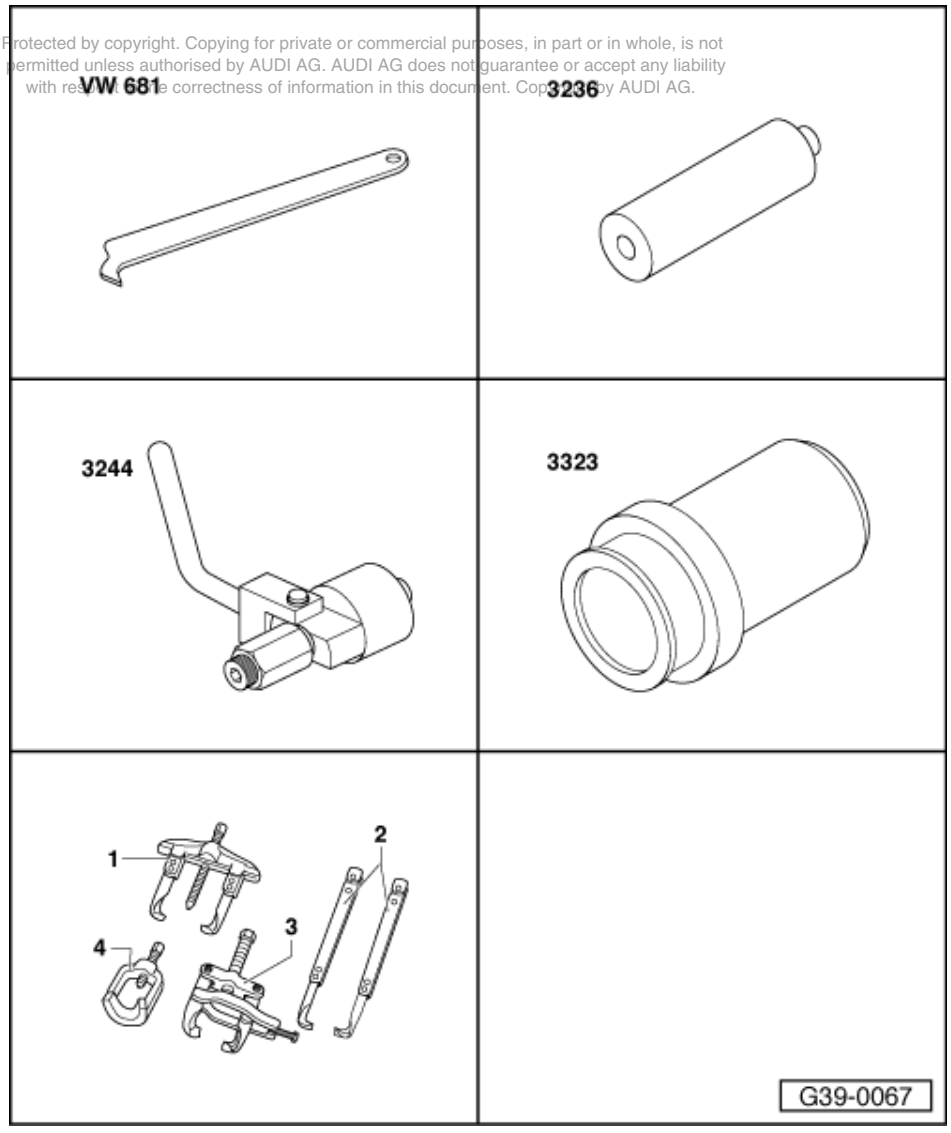

Special tools and workshop equipment required

- Oil seal extractor lever VW 681
- Press piece 3236
- Fitting appliance 3244
- Thrust piece 3323
- 2 - puller Kukko 18/1
- Waste fluid container

Removing

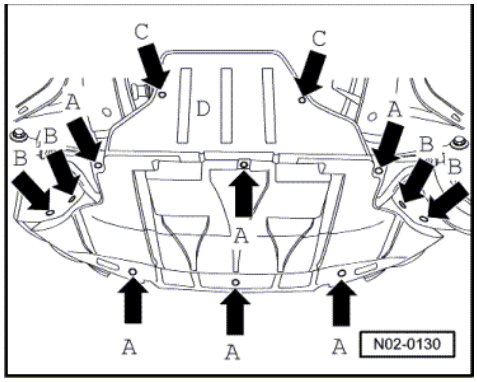

- Gearbox installed.

- Do not loosen collared bolt for drive shaft further than 90°while the vehicle is still standing on its wheels, otherwise the wheel bearing will be damaged.
- Remove right front wheel.

Vehicles with TDI engine:

- -> Remove rear noise insulation -D- (-arrows C-).

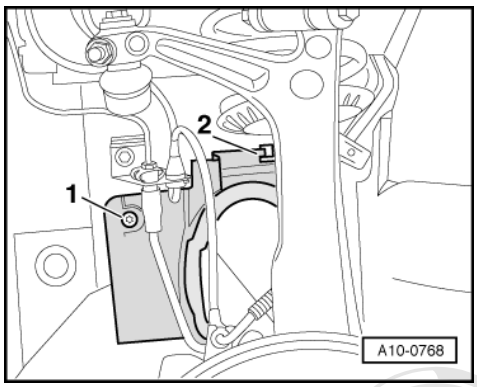

- -> Remove bolt -1- securing noise insulation cover above right drive shaft.
- Disengage retainer -2- and remove noise insulation cover.

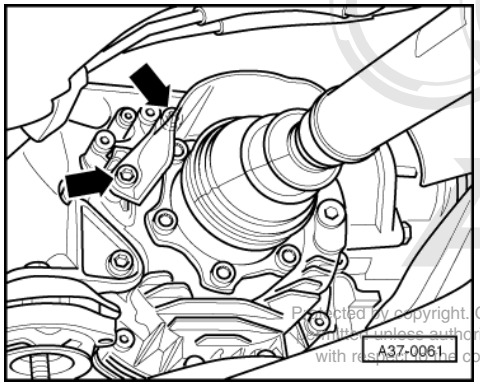

Protected by copyright. Copying for private or commercial purposes, in part or in whole, is not permitted unless authorised by AUDI AG. AUDI AG does not guarantee or accept any liability with respect to the correctness of information in this document. Copyright by AUDI AG.

All models

- -> Remove heat shield for right drive shaft -arrows-.
- Remove right drive shaft

=> Running gear, Front and four-wheel drive; Repair group 40; Removing and installing drive shaft Removing and installing drive shaft

- Pierce sealing cap in drive flange with a screwdriver and lever out.
- Lever off circlip.
- Place container under the gearbox.

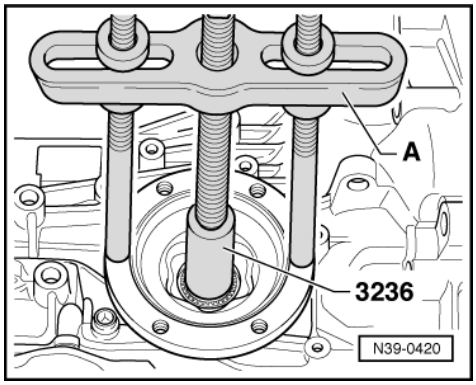

- -> Remove drive flange with press piece 3236 and two-arm puller Kukko 18/1 -A-.
- Pull out drive flange seal with extractor lever VW 681.

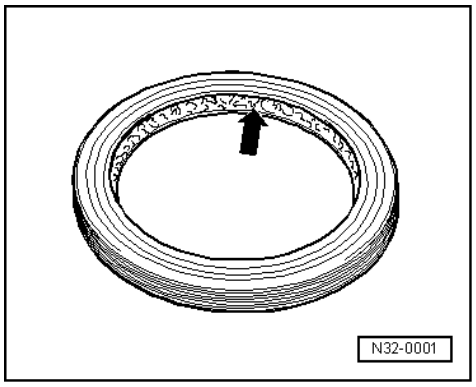

Installing

Install in reverse sequence; note the following points:

- Moisten outer circumference of seal with gear oil.
- -> Half fill space between sealing lip and dust lip -arrow- with grease G 052 128 A1.

Protected by copyright. Copying for private or commercial purposes, in part or in whole, is not permitted unless authorised by AUDI AG. AUDI AG does not guarantee or accept any liability with respect to the correctness of information in this document. Copyright by AUDI AG.

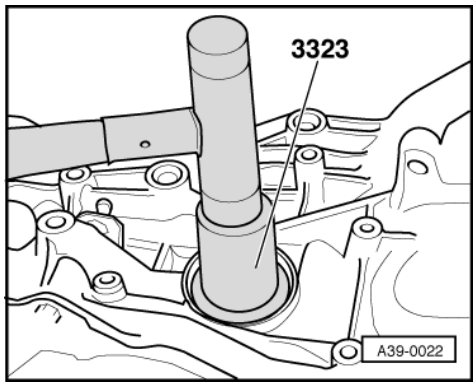

Note:

Ensure that seal is inserted in housing at same depth all round.

- -> Drive new seal in onto stop, when doing this do not cant seal.
  - Installation position: open side of seal towards gearbox

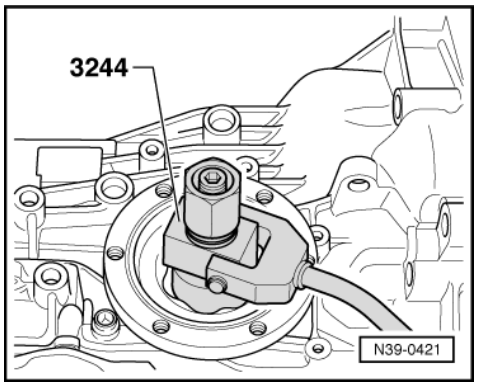

- -> Pull in drive flange.
- Fit new circlip.
- Drive new sealing cap into drive flange using 30 mm wrench socket.
- Install right drive shaft.

=> Running gear, Front and four-wheel drive; Repair group 40; Removing and installing drive shaft Removing and installing drive shaft

- Check oil level in final drive of automatic gearbox => Page 195 .

Tightening torque

Component	Nm
Heat shield for drive shaft to gearbox	25

Protected by copyright. Copying for private or commercial purposes, in part or in whole, is not permitted unless authorised by AUDI AG. AUDI AG does not guarantee or accept any liability with respect to the correctness of information in this document. Copyright by AUDI AG.

2.4 - Removing and installing grooved ball bearing on output shaft for drive flange

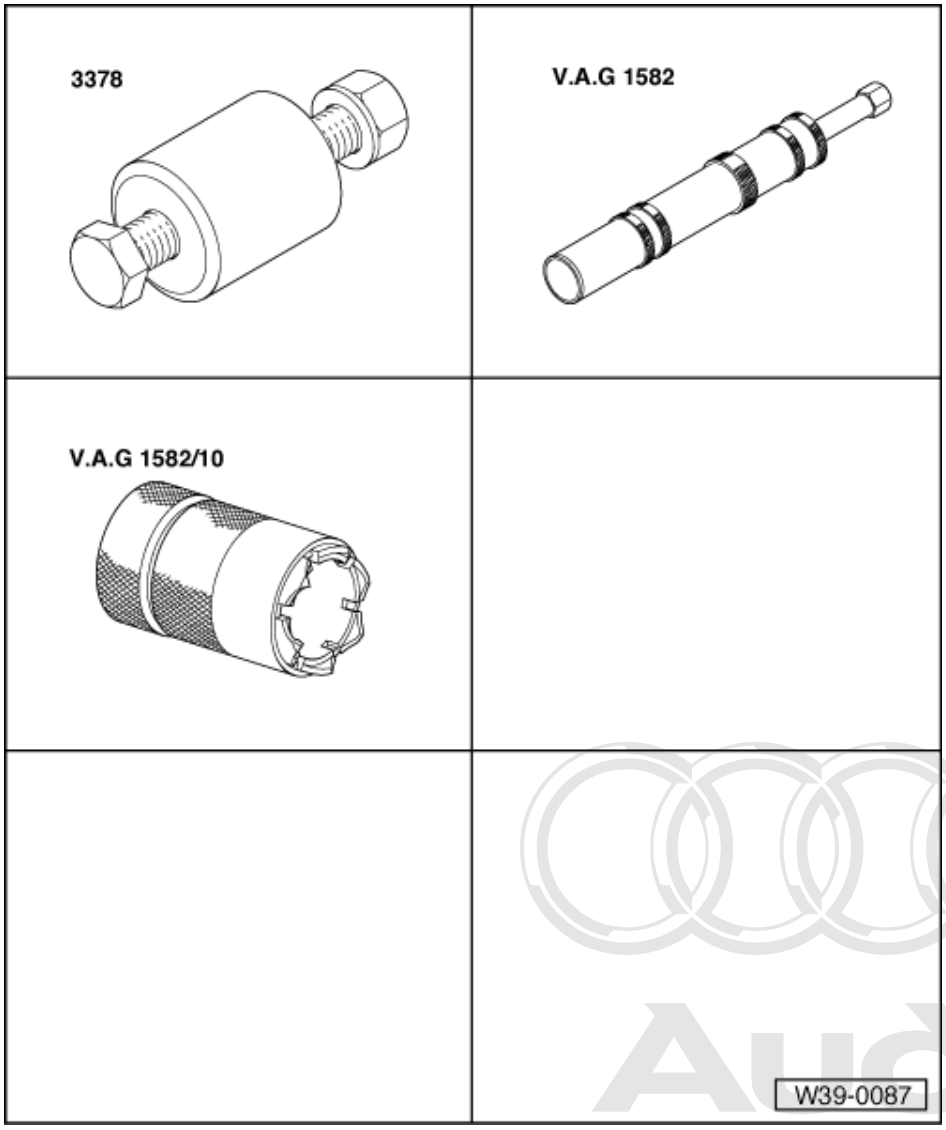

Protected by copyright. Copying for private or commercial purposes, in part or in whole, is not permitted unless authorised by AUDI AG. AUDI AG does not guarantee or accept any liability with respect to the correctness of information in this document. Copyright by AUDI AG.

Special tools and workshop equipment required

- Fitting sleeve 3378
- Tapered roller bearing puller V.A.G 1582
- Adapter V.A.G 1582/10

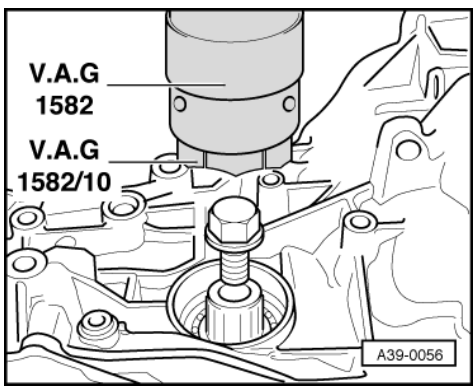

Removing

- Differential is installed.

- Remove right-hand drive flange oil seal => from Page 200 .
- Lever out circlip for grooved ball bearing.
- -> Insert M12 x 20 hexagon bolt with washer in drive flange output shaft hole.
- Tension claws of adapter V.A.G 1582/10 between balls on grooved ball bearing inner race.
- Pull out grooved ball bearing with puller V.A.G 1582.

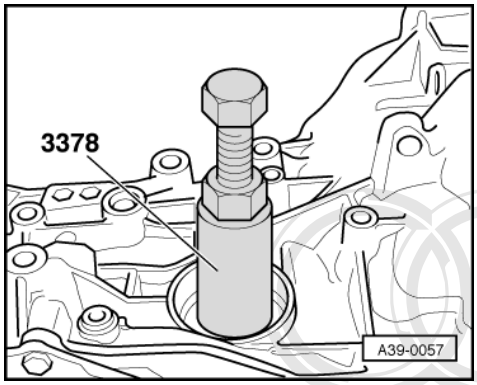

Installing

- -> Pull in grooved ball bearing together with tapered ring and spring.
- Insert circlip for grooved ball bearing.
- Drive in right-hand drive flange oil seal => from Page 201 .

Protected by copyright. Copying for private or commercial purposes, in part or in whole, is not permitted unless authorised by AUDI AG. AUDI AG does not guarantee or accept any liability with respect to the correctness of information in this document. Copyright by AUDI AG.

3 - Dismantling and assembling final drive

3.1 - Dismantling and assembling final drive

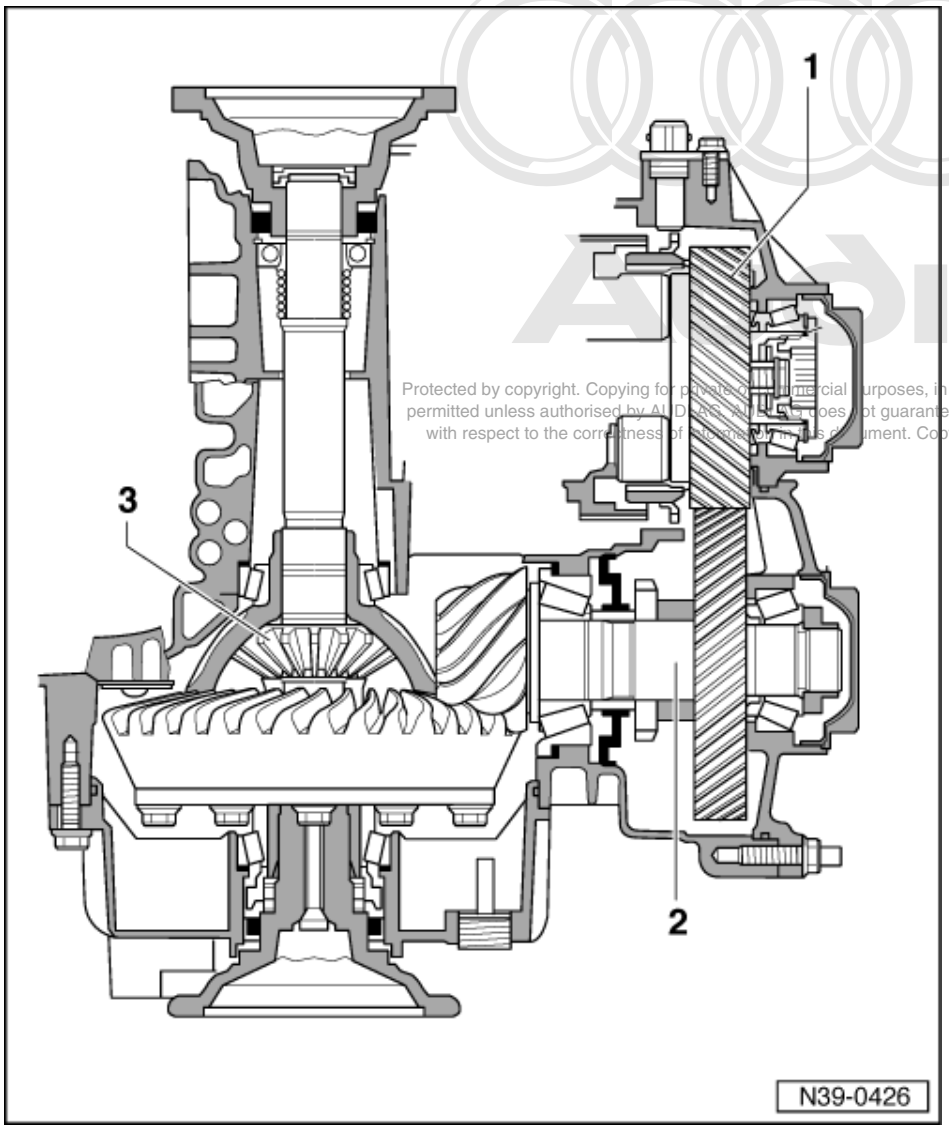

Protected by copyright. Copying for private or commercial purposes, in part or in whole, is not permitted unless authorised by AUDI AG. AUDI AG does not guarantee or accept any liability with respect to the correctness of information in this document. Copyright by AUDI AG.

3.2 - Repair overview of final drive

1 Input gear

- Removing and installing => Page 206
- Adjusting => Page 245
- Adjusting final drive (overview) =>Page 242
- Repairs on the input gear can only be performed after the individual components of the planetary gearbox have been removed.

2 Drive pinion

- Removing and installing => Page 214
- Adjusting crown wheel and drive pinion => Page 247
- Adjusting final drive (overview) => Page 242

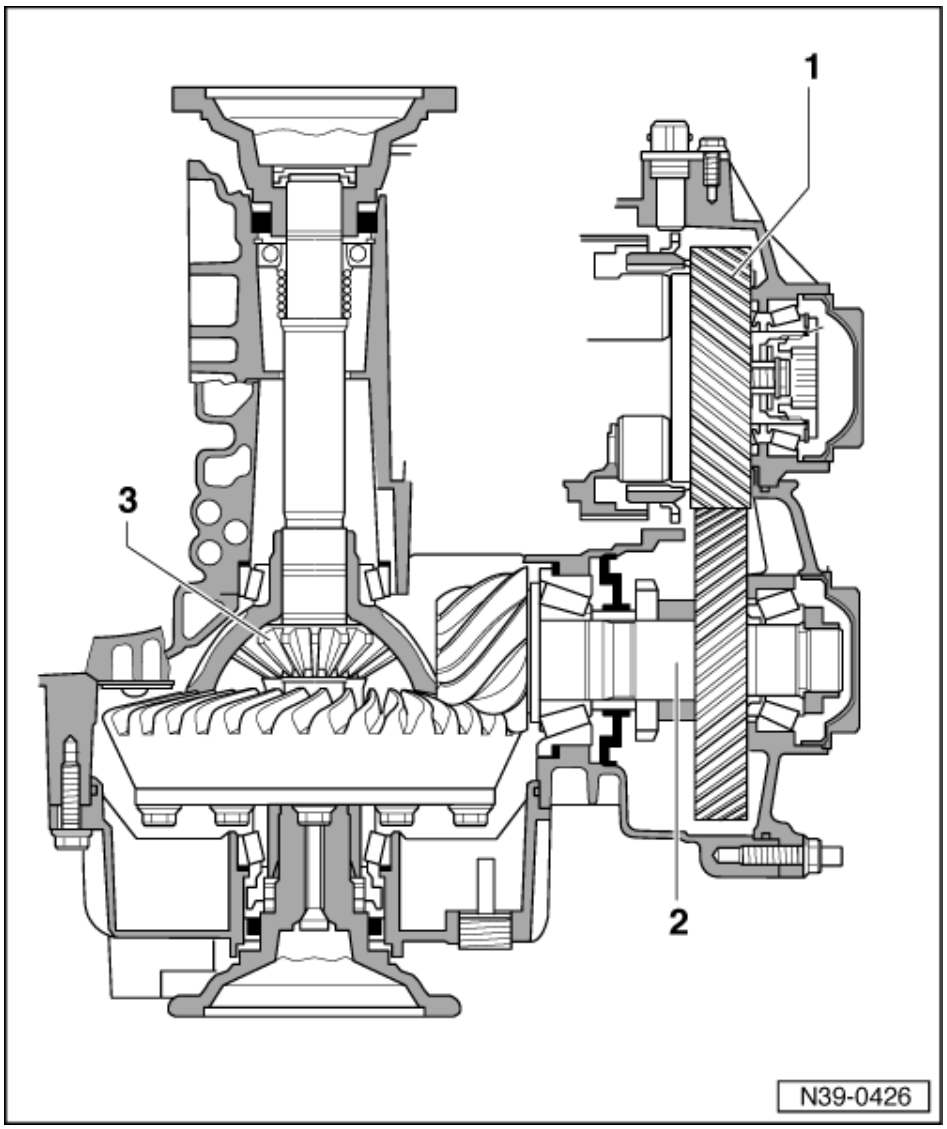

3 Differential

- Removing and installing
  => Page 226
- Dismantling and assembling
  => Page 231
- Adjusting crown wheel and drive pinion => Page 247
- Adjusting final drive (overview) => Page 242

3.3 - Removing and installing input gear

Notes:

- The input gear can only be removed once the planetary gearbox has been removed => Page 75 .
- If taper roller bearings are not renewed, set to previously measured friction torque again.
- The drive pinion and differential do not need to be removed in order to remove input gear.
- Always replace input gear and output gear together.
- After replacing the taper roller bearings, adjust the input gear, planet carrier and clutch play between K1 and K2=>Pages 126 .
- After replacing input gear (together with output gear), the input gear, "S4" shim, drive pinion, planet carrier and clutch play between K1 and K2 must be adjusted => Pages 126 .
- Always replace all taper roller bearings on the same shaft together, using bearings made by same manufacturer.

Protected by copyright. Copying or printing of this document, or any part of it, is not permitted unless authorised by AUDI AG. AUDI AG does not guarantee or accept any liability with respect to the correctness of information in this document. Copyright by AUDI AG.

- Do not interchange outer or inner races of bearings which are the same size.

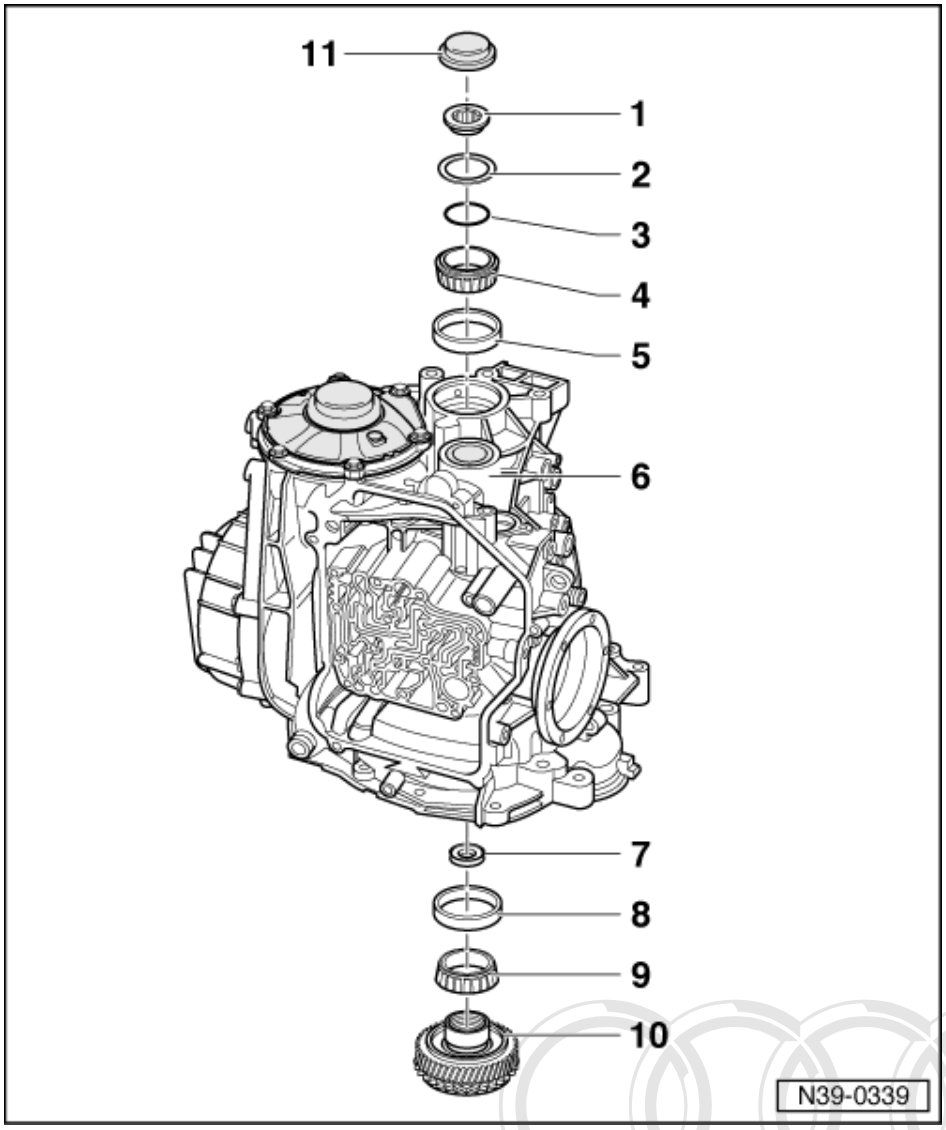

1 Socket head fastener - 250 Nm

- Engage parking lock to remove and install
- Removing and installing
  => Fig. 213
- Before installing socket head fastener insert axial needle bearing (item 7)

2 Dished washer

- Install with convex side facing toward socket head fastener

3 Shim

- Determining thickness => Adjusting input gear, Page 245

Protected by copyright. Copying for private or commercial purposes, in part or in whole, is not permitted unless authorised by AUDI AG. AUDI AG does not guarantee or accept any liability with respect to the correctness of information in this document. Copyright by AUDI AG.

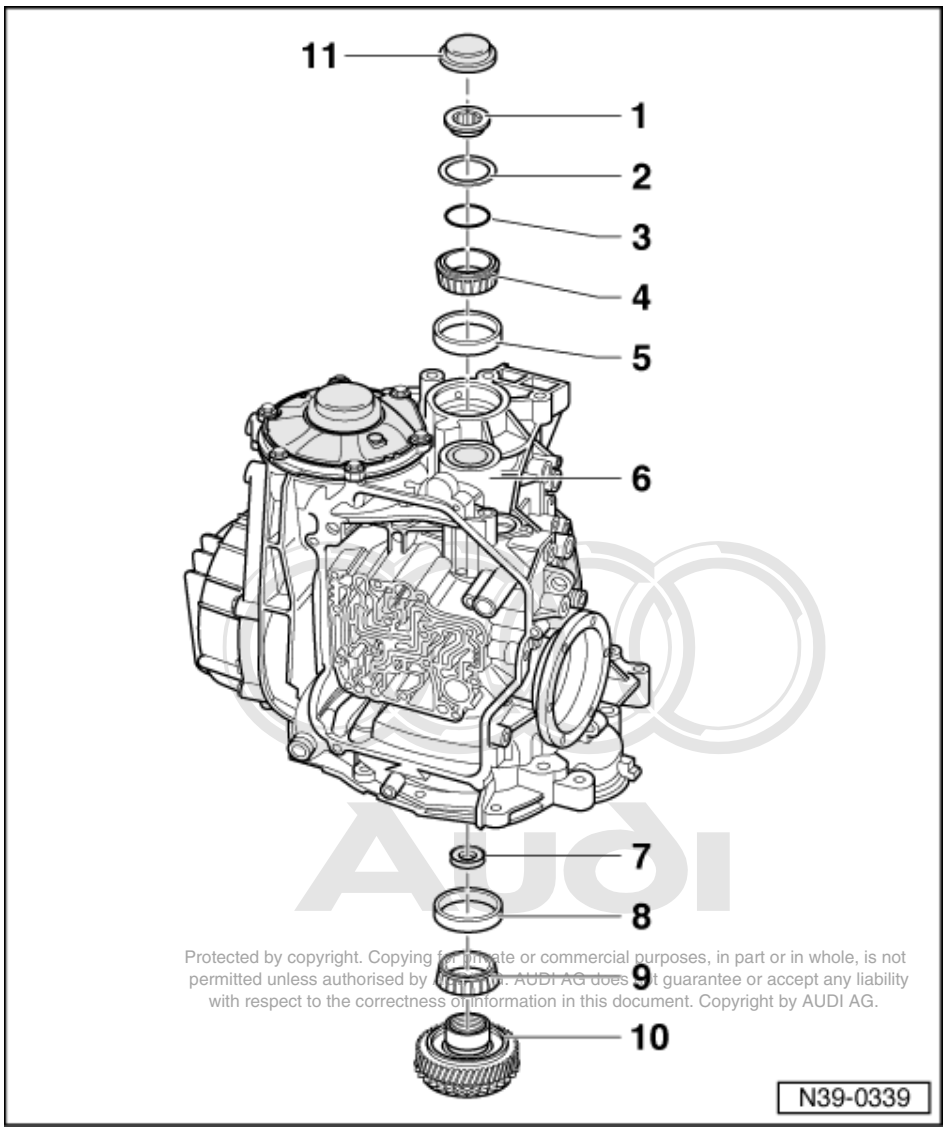

Protected by copyright. Copying for private or commercial purposes, in part or in whole, is not permitted unless authorised by AUDI AG. AUDI AG does not guarantee or accept any liability with respect to the correctness of information in this document. Copyright by AUDI AG.

4 Taper roller bearing inner race

- With roller cage
- Remove together with input gear -Item 10 -
- After measuring shim -Item 3 -, apply locking fluid AMV 185 101 A1 and fit onto input gear
- To install, drive several millimetres onto input gear -Item 10 -, then pull down with socket head fastener -Item 1 -

5 Taper roller bearing outer race

- Drive out with drift
- Insert with locking fluid AMV 185 101 A1
- Drive in with 30-205

6 Gearbox housing

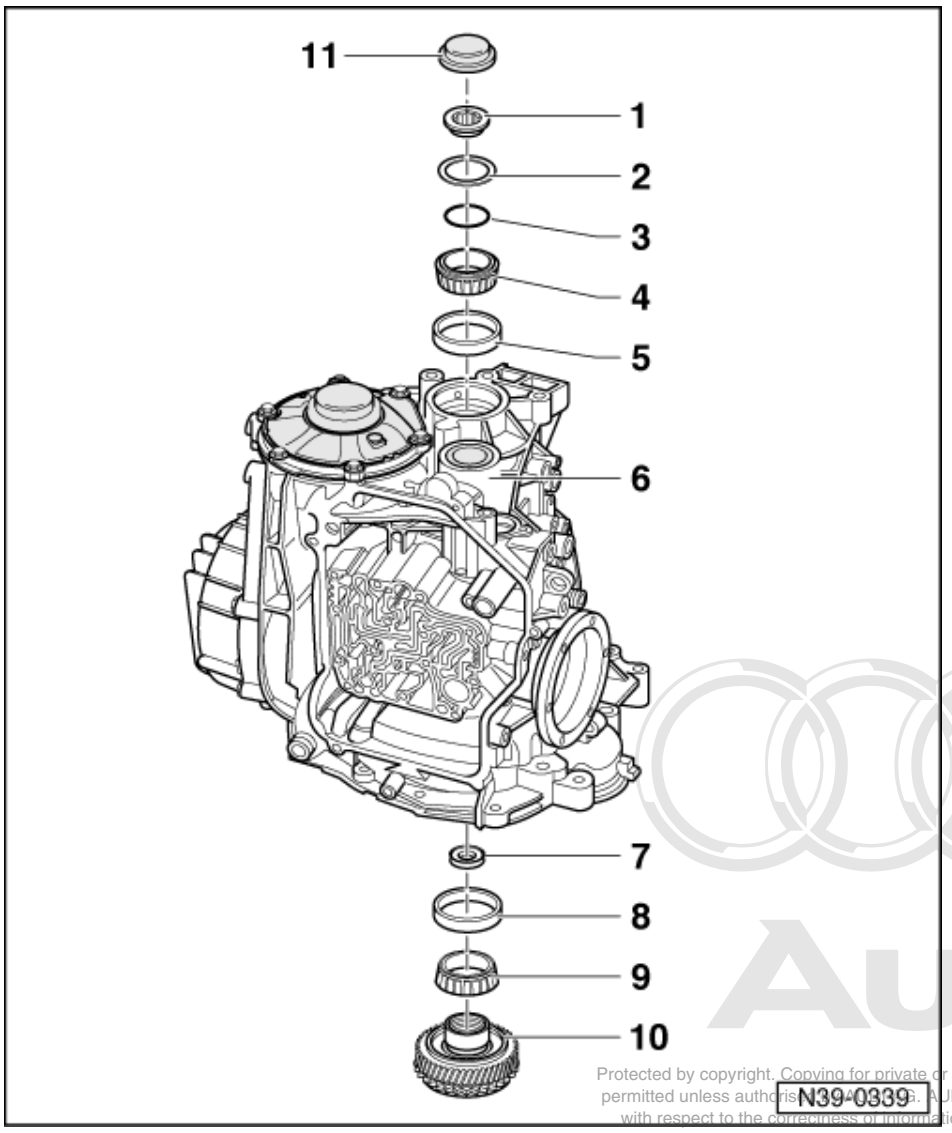

Protected by copyright. Copying for private or commercial purposes, in part or in whole, is not permitted unless authorised by AUDI AG. AUDI AG does not guarantee or accept any liability with respect to the correctness of information in this document. Copyright by AUDI AG.

7 Axial needle bearing

- Insert into input gear before installing socket head fastener (item 1)
- Install with flat side facing toward input gear

8 Taper roller bearing outer race

- Drive out with drift
- Insert with locking fluid AMV 185 101 A1
- Drive in with 30-205 and drift of correct length

9 Taper roller bearing inner race

- With roller cage
- Pulling off
  => Fig. 213
- Insert with locking fluid AMV 185 101 A1
- Pressing on
  =>Fig. 214

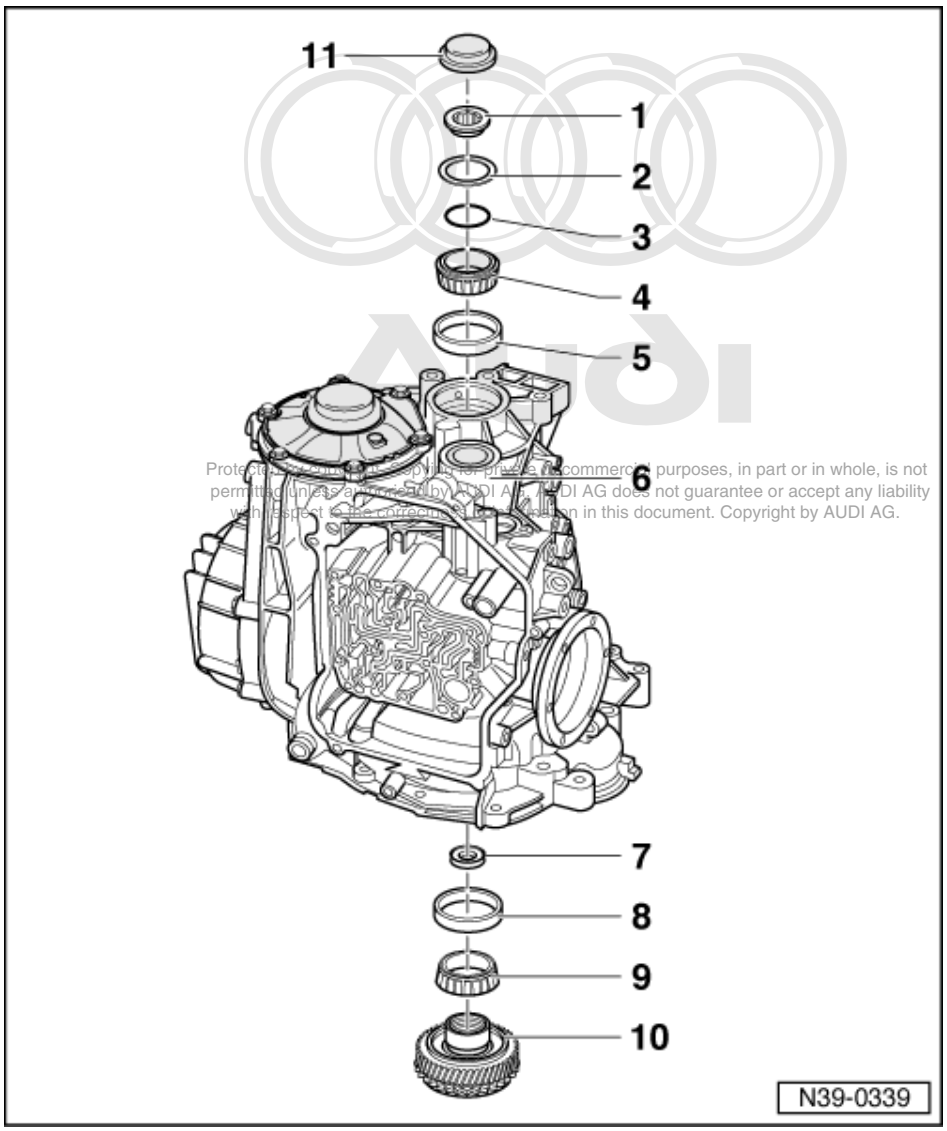

Protected by copyright. Copying for private or commercial purposes, in part or in whole, is not permitted unless authorised by AUDI AG. AUDI AG does not guarantee or accept any liability with respect to the correctness of information in this document. Copyright by AUDI AG.

10 Input gear

- With impulse wheel for road speed sender -G68
- Removing
  => Fig. 214
- Number of teeth => from page 2
- Adjusting =>Page 245
- If signs of damage exist, always replace input gear and output gear together
- If input gear is renewed, adjust planet carrier => Page 115 .

11 Sealing cap

- Driving out
  => Fig. 213
- Driving in
  => Fig. 214

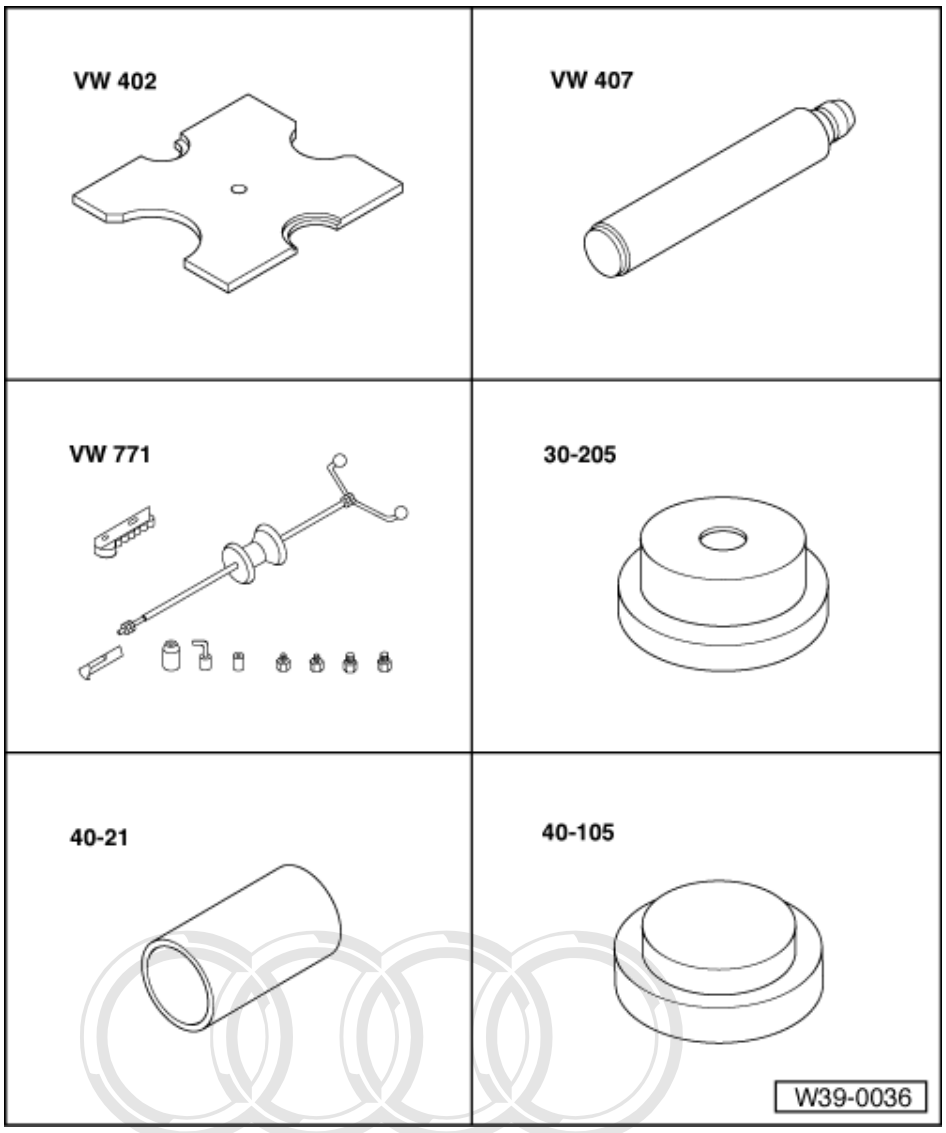

Special tools and workshop equipment required

- Thrust plate VW 402
- Press tool VW 407
- Multi-purpose tool VW 771
- Thrust plate 30-205
- Press tool 40-21
- Thrust plate 40-105

Protected by copyright. Copying for private or commercial purposes, in part or in whole, is not permitted unless authorised by AUDI AG. AUDI AG does not guarantee or accept any liability with respect to the correctness of information in this document. Copyright by AUDI AG.

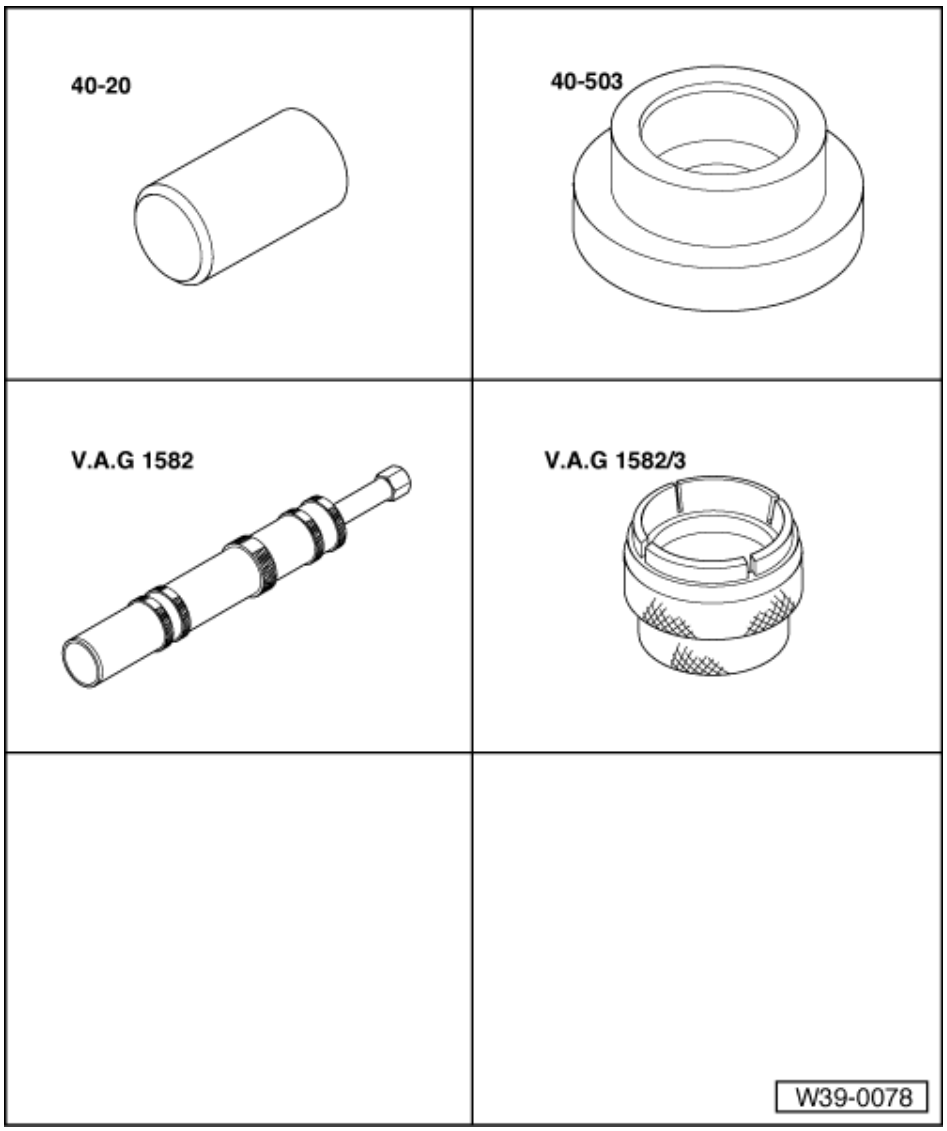

- Press tool 40-20
- Installing tool 40-503
- Tapered roller bearing puller V.A.G 1582
- Adapter 1582/3

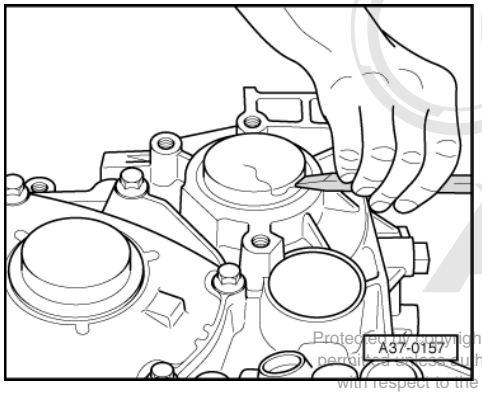

Protected by copyright. Copying for private or commercial purposes, in part or in whole, is not permitted unless authorised by AUDI AG. AUDI AG does not guarantee or accept any liability with respect to the correctness of information in this document. Copyright by AUDI AG.

-> Fig.1 Driving out sealing cap

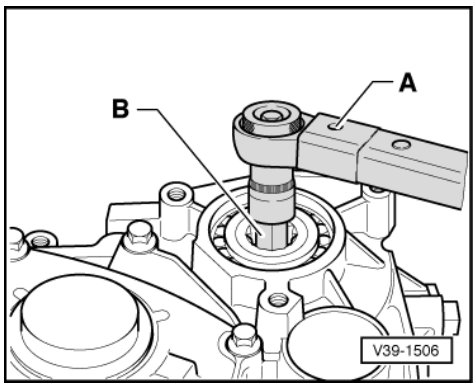

-> Fig.2 Removing and installing socket head fastener

A - Torque wrench
B - Socket attachment, 22 mm A/F

Protected by copyright. Copying for private or commercial purposes, in part or in whole, is not permitted unless authorised by AUDI AG. AUDI AG does not guarantee or accept any liability with respect to the correctness of information in this document. Copyright by AUDI AG.

- Engage parking lock to loosen and tighten.

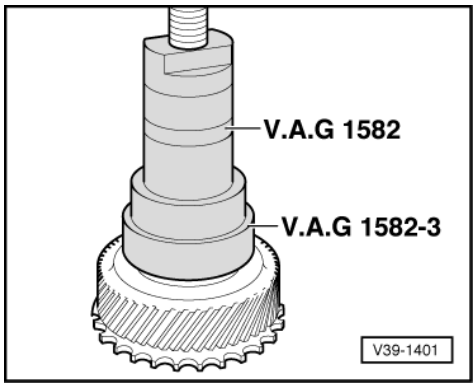

-> Fig.3 Pulling off taper roller bearing inner race

- Place press piece on input gear.

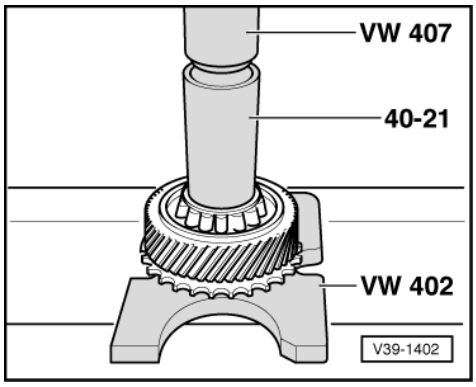

-> Fig.4 Pressing on taper roller bearing inner race

Note:

A press piece must be placed below the hub of the input gear to avoid damaging the input gear.

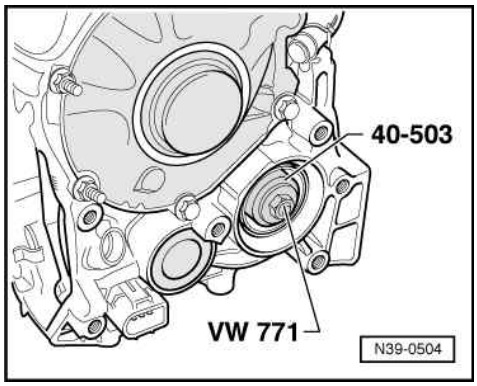

-> Fig.5 Removing input gear

- Fit press tool 40-503 with shoulder in threaded hole of input gear.
- Join press tool with VW 771 through hole of input gear.
- Drive out input gear carefully.

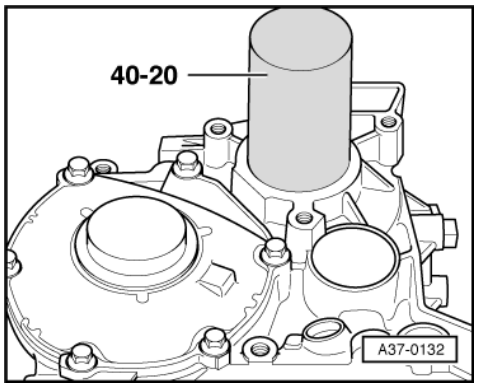

-> Fig.6 Driving in sealing cap

Protected by copyright. Copying for private or commercial purposes, in part or in whole, is not permitted unless authorised by AUDI AG. AUDI AG does not guarantee or accept any liability with respect to the correctness of information in this document. Copyright by AUDI AG.

3.4 - Removing and installing drive pinion

Notes:

- Drive pinion and crown wheel may only be replaced together.
- If the drive pinion cover, spacer tube, input gear or parking lock gear are renewed, re-determine thickness of shim "S4" for the drive pinion => Page 253 .
- If the taper roller bearings or the bush for the drive pinion are renewed, re-determine thickness of shims "S3" and "S4" for the drive pinion => Page 253 .
- If the drive pinion (with crown wheel) is renewed, re-determine thickness of shims "S3" and "S4" and shims "S1" and "S2" (for final drive) => Pages 260 .
- Always replace all taper roller bearings on same shaft together.
- The O-ring -Item 217 can be replaced with the gearbox installed. For other repair work the gearbox has to be removed.
- Oil seal for drive pinion, -Item 219 , must be installed dry. Do not oil or grease sealing lips.
- Adjustments are required when replacing components marked 1)

=>Adjustment overview Page 245 .

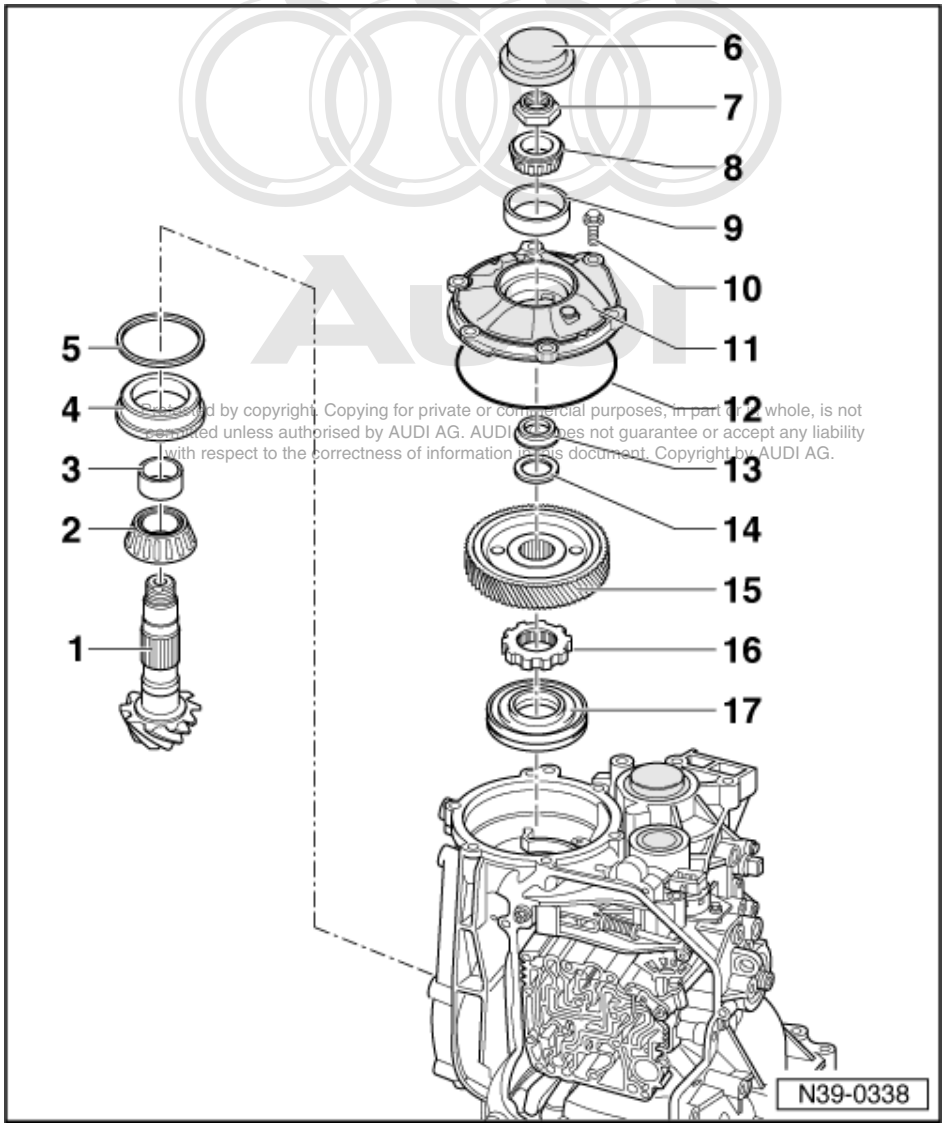

Protected by copyright. Copying for private or commercial purposes, in part or in whole, is not permitted unless authorised by AUDI AG. AUDI AG does not guarantee or accept any liability with respect to the correctness of information in this document. Copyright by AUDI AG.

1 Drive pinion1)

- To remove, remove differential
  =>Page 226
- Is mated to crown wheel. Renew complete drive set if damaged.
- Number of teeth => from page 2
- Adjusting crown wheel and drive pinion => Page 247
- Inserting
  => Fig. 223

2 Taper roller bearing inner race1)

- WIth roller cage
- Pulling off
  => Fig. 223
- Pressing on
  =>Fig. 223

3 Bush for drive pinion1)

- Pulling off
  => Fig. 223
- Pressing on
  =>Fig. 223

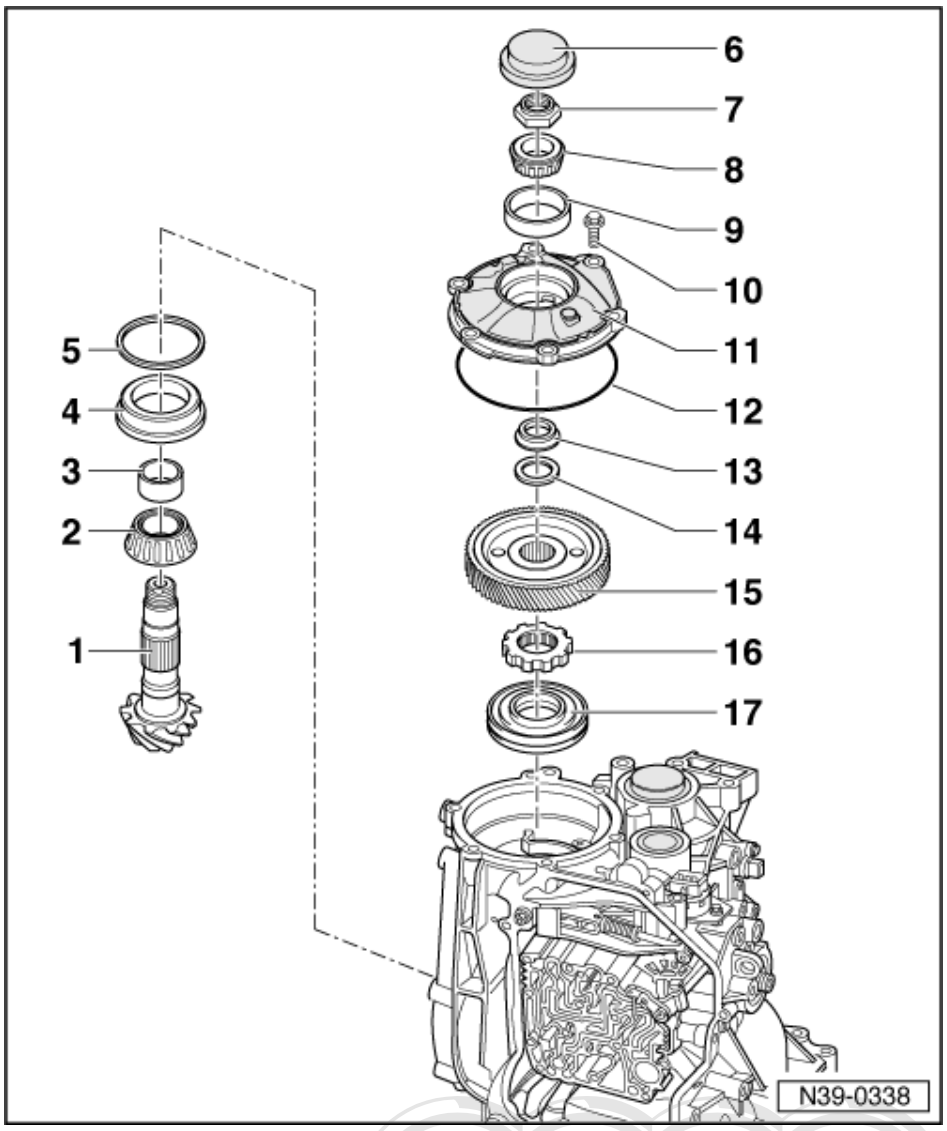

4 Taper roller bearing outer race1)

- Drive out with 3138
- Pulling in
  => Fig. 223

5 Shim "S3"

- Note thickness
- Adjustment overview
  => Page 245

6 Sealing cap

- Driving out
  => Fig. 225
- Driving in
  => Fig. 225

7 Hexagon nut

- Renew
- Engage parking lock to slacken or tighten
- Tightening torque => Page 253 , Adjusting drive pinion
- Secure by peening
  =>Fig. 225

Protected by copyright. Copying for private or commercial purposes, in part or in whole, is not permitted unless authorised by AUDI AG. AUDI AG does not guarantee or accept any liability with respect to the correctness of information in this document. Copyright by AUDI AG.

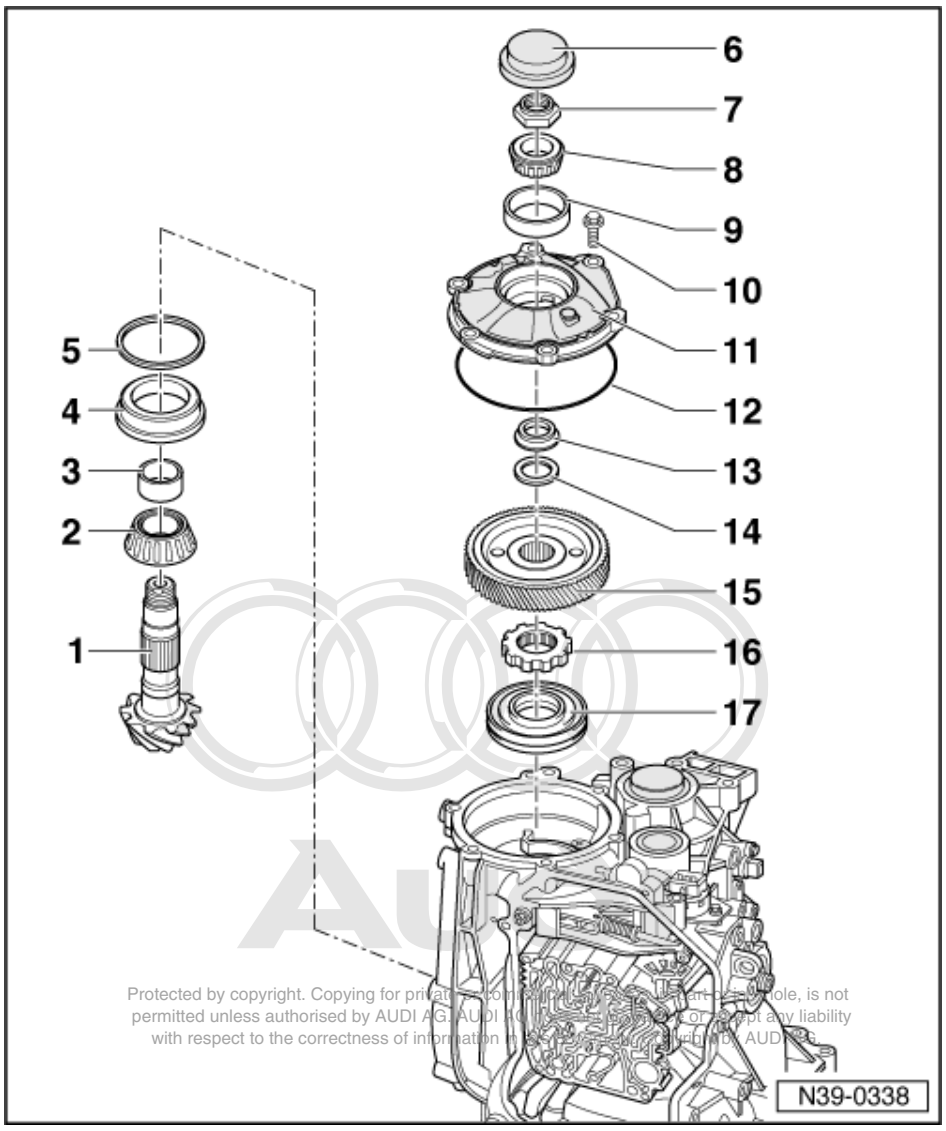

Protected by copyright. Copying for private or commercial purposes, in part or in whole, is not permitted unless authorised by AUDI AG. AUDI AG does not guarantee or accept any liability with respect to the correctness of information in this document. Copyright by AUDI AG.

8 Taper roller bearing inner race1)
- With roller cage

9 Taper roller bearing outer race1)
- Drive out with drift
- Pressing in
  =>Fig. 224

10 Bolt - 25 Nm
- Apply sealant AMV 188 200 03 when installing
- Tighten in stages and diagonally

11 Cover for drive pinion1)

12 O-ring
- Renew
- Can be renewed with gearbox installed

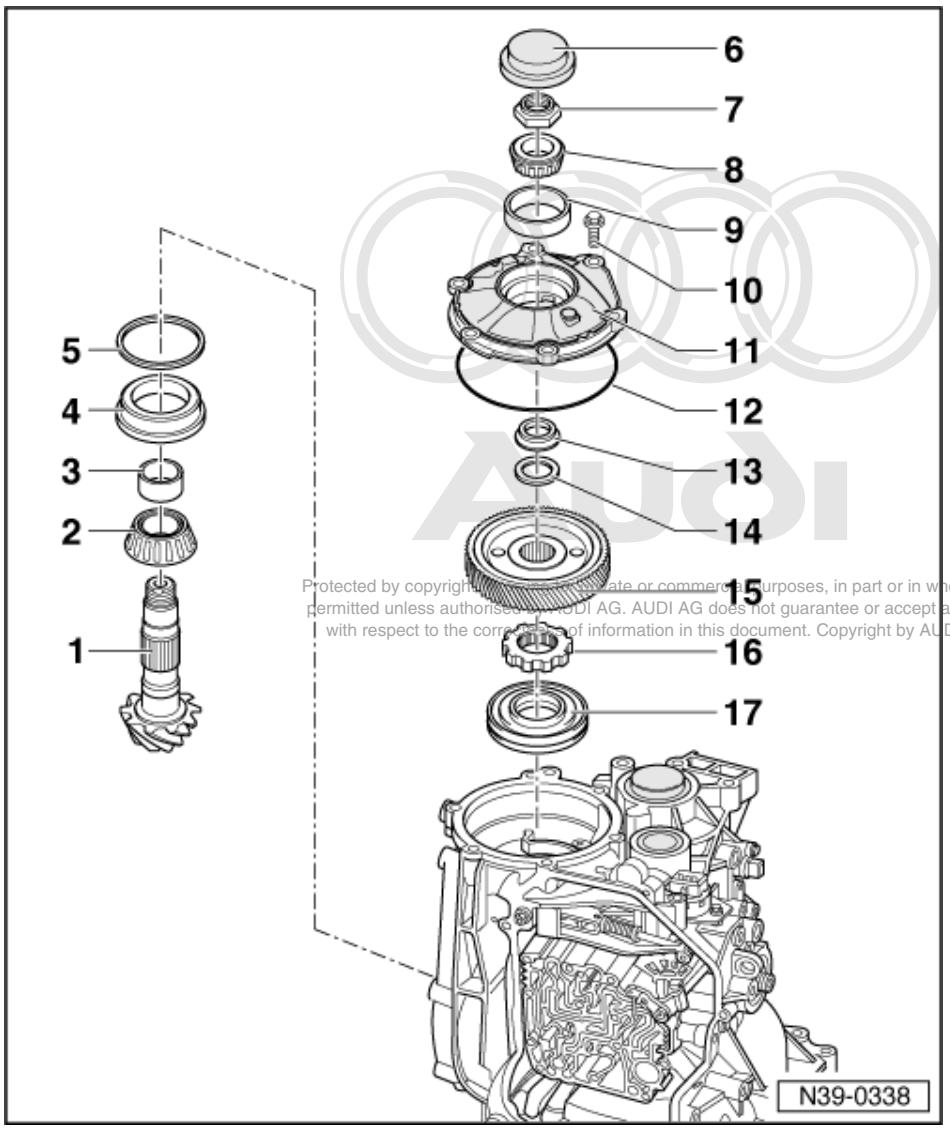

Protected by copyright. Copying for private or commercial purposes, in part or in whole, is not permitted unless authorised by AUDI AG. AUDI AG does not guarantee or accept any liability with respect to the correctness of information in this document. Copyright by AUDI AG.

13 Spacer tube1)

- Install with larger shoulder facing toward output gear

14 Shim "S4"

- Note thickness
- Adjustment overview
  => Page 245

15 Output gear1)

- Number of teeth =>from Page 2
- Pulling off
  => Fig. 224
- Install heated
- If signs of damage exist, always replace input gear and output gear together
- Install with raised collar facing toward parking lock gear

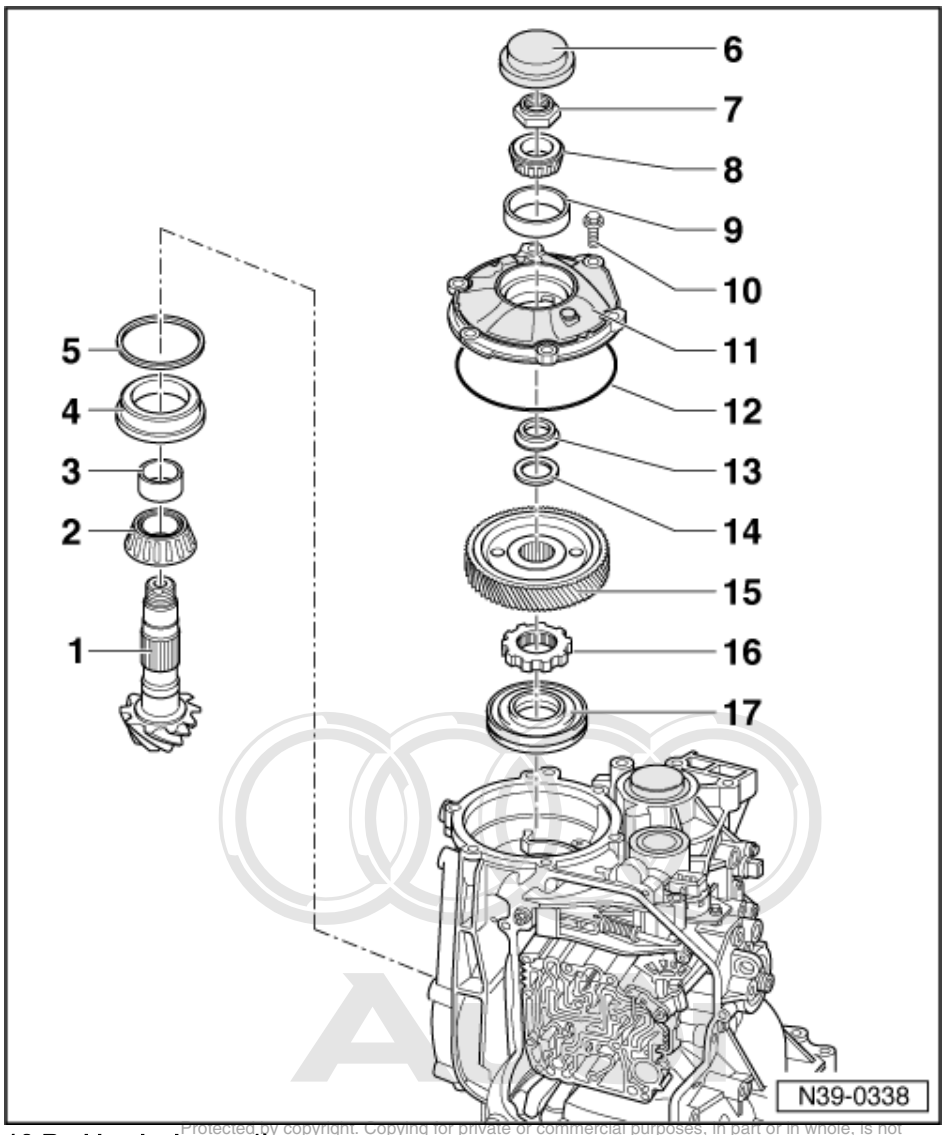

Protected by copyright. Copying for private or commercial purposes, in part or in whole, is not permitted unless authorised by AUDI AG. AUDI AG does not guarantee or accept any liability with respect to the correctness of information in this document. Copyright by AUDI AG.

16 Parking lock gear1)

- Install with rounded side facing toward output gear

17 Oil seal for drive pinion

- Drive out with drift
- Renew
- Oil seal should be installed dry
- Do not oil or grease sealing lips
- Driving in
  => Fig. 224

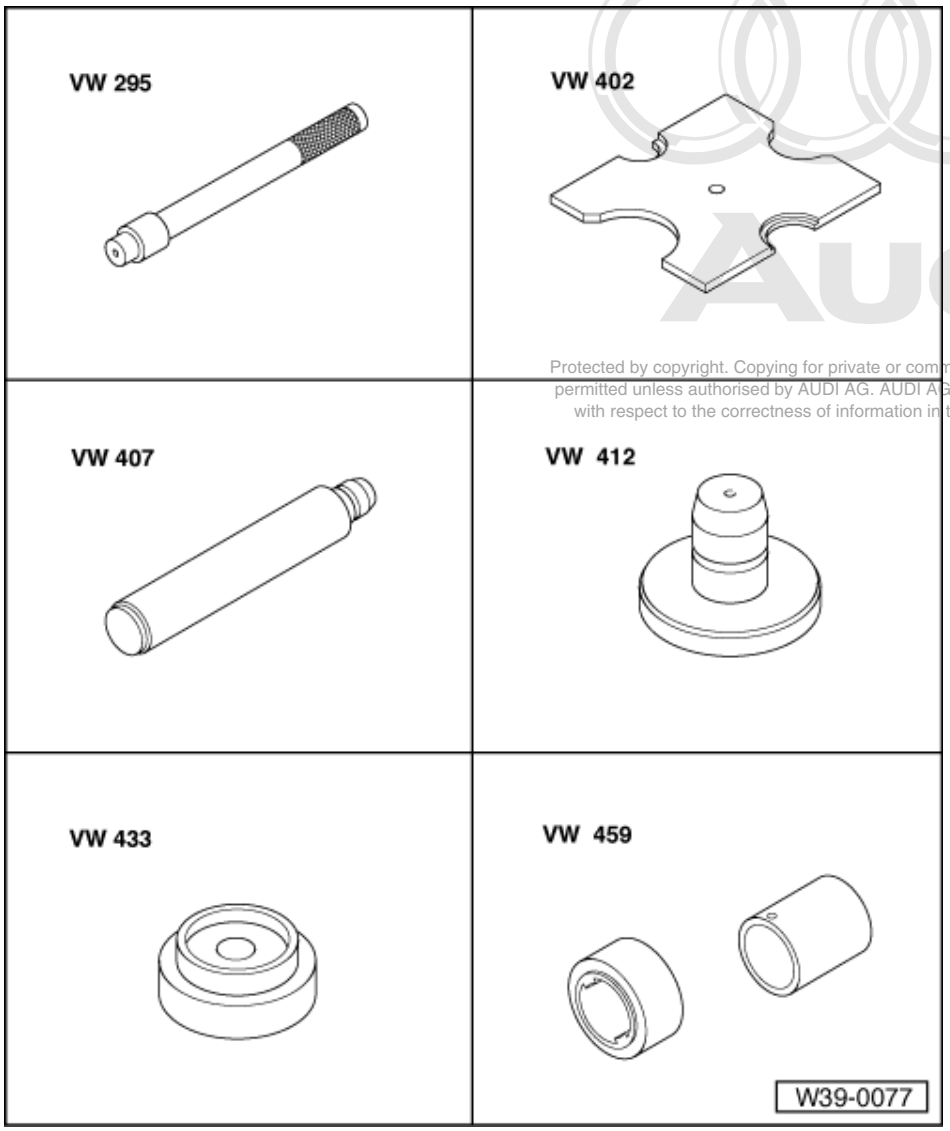

Protected by copyright. Copying for private or commercial purposes, in part or in whole, is not permitted unless authorised by AUDI AG. AUDI AG does not guarantee or accept any liability with respect to the correctness of information in this document. Copyright by AUDI AG.

Special tools and workshop equipment required

- Drift VW 295
- Thrust plate VW 402
- Press tool VW 407
- Press tool VW 412
- Press tool VW 433
- Installing and removing tool VW 459

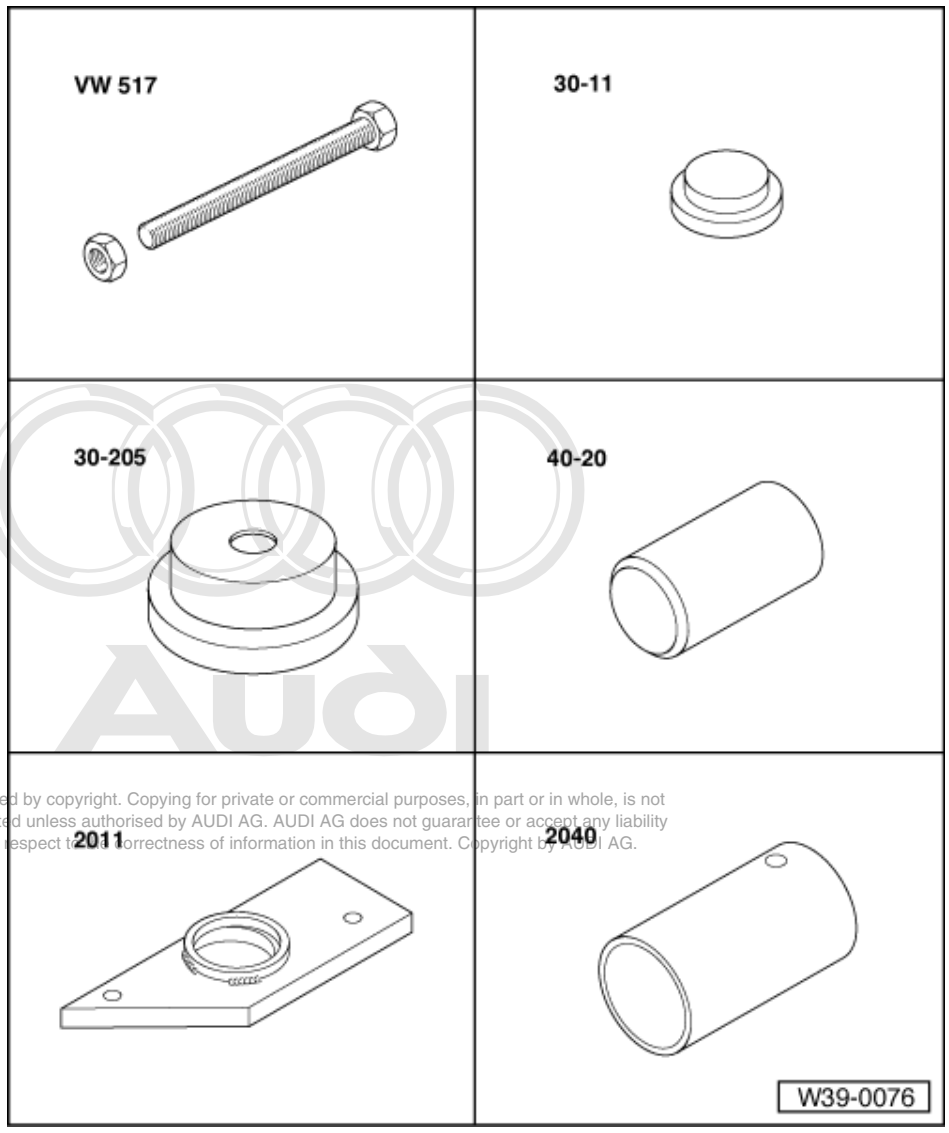

Protected by copyright. Copying for private or commercial purposes, in part or in whole, is not permitted unless authorised by AUDI AG. AUDI AG does not guarantee or accept any liability with respect to the correctness of information in this document. Copyright by AUDI AG.

- Threaded spindle VW 517
- Thrust plate 30-11
- Thrust plate 30-205
- Press tool 40-20
- Support bridge 2011
- Tube 2040

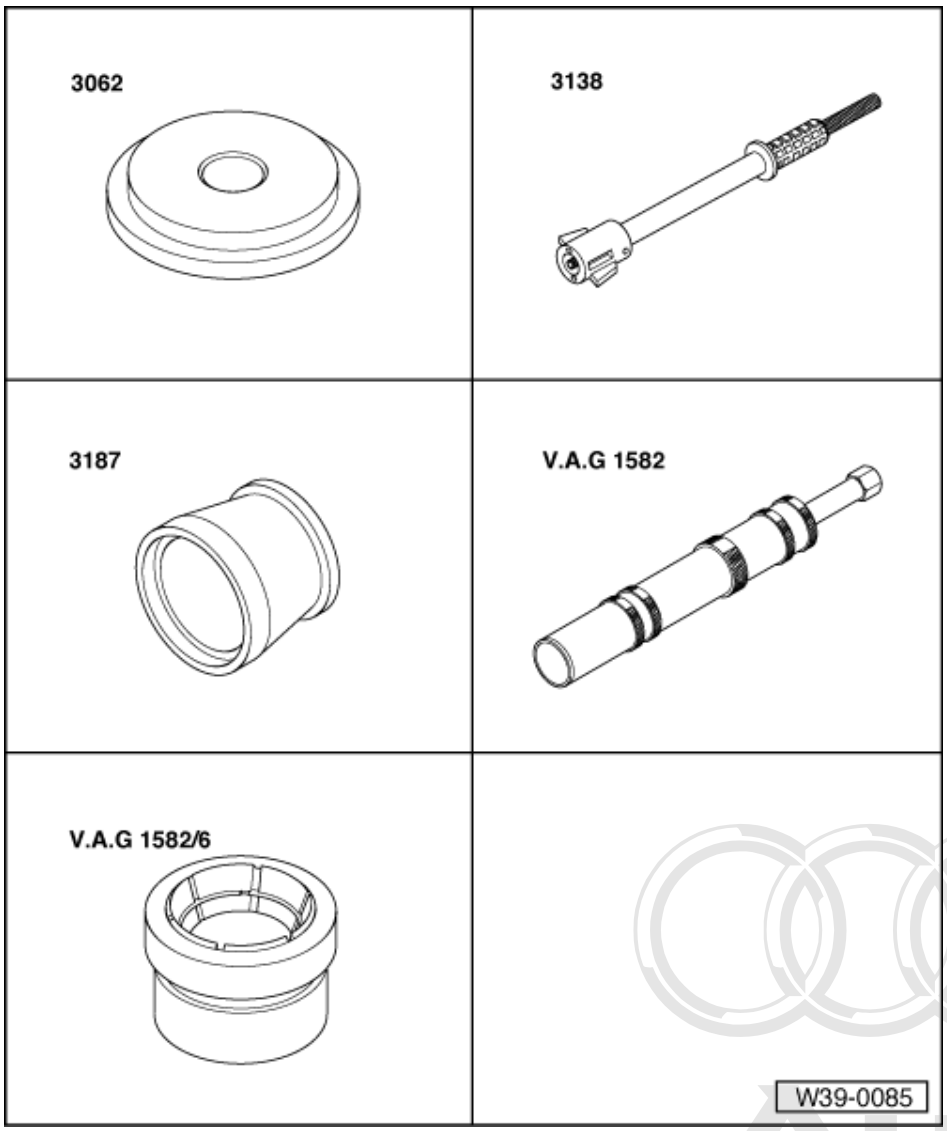

- Thrust pad 3062
- Drift 3138
- Assembly sleeve 3187
- Tapered roller bearing puller V.A.G 1582
- Adapter 1582/6

Protected by copyright. Copying for private or commercial purposes, in part or in whole, is not permitted unless authorised by AUDI AG. AUDI AG does not guarantee or accept any liability with respect to the correctness of information in this document. Copyright by AUDI AG.

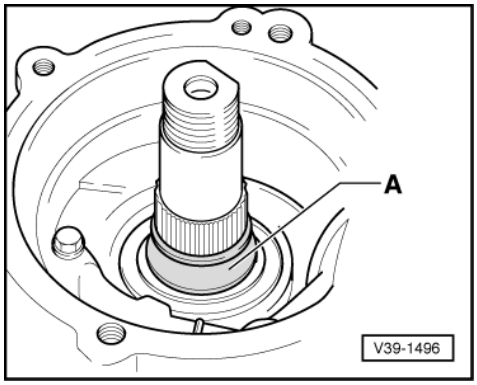

-> Fig.1 Inserting drive pinion

Use assembly sleeve 3187 to avoid damaging sealing lips when inserting drive pinion.

A - Assembly sleeve 3187

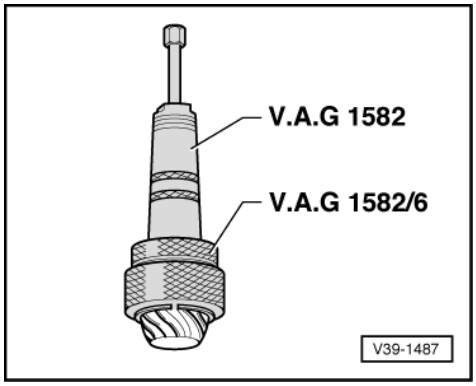

-> Fig.2 Pulling off taper roller bearing inner race with bush for drive pinion

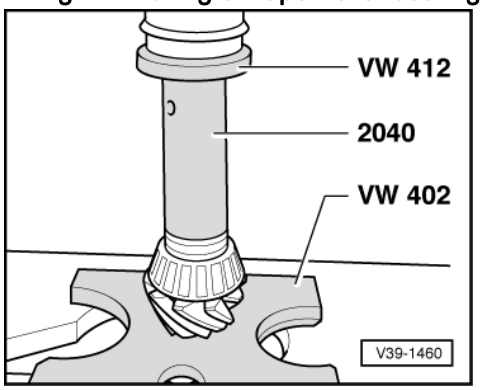

Protected by copyright. Copying for private or commercial purposes, in part or in whole, is not permitted unless authorised by AUDI AG. AUDI AG does not guarantee or accept any liability with respect to the correctness of information in this document. Copyright by AUDI AG.

-> Fig.3 Pressing on taper roller bearing inner race with bush for drive pinion

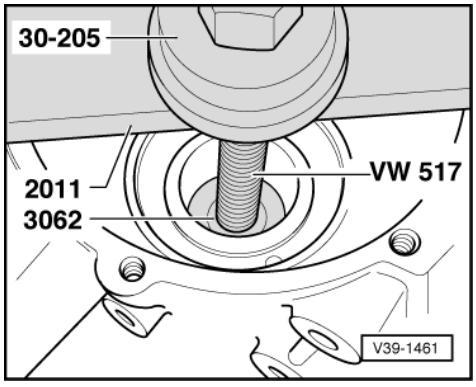

-> Fig.4 Pulling taper roller bearing outer race into gearbox housing

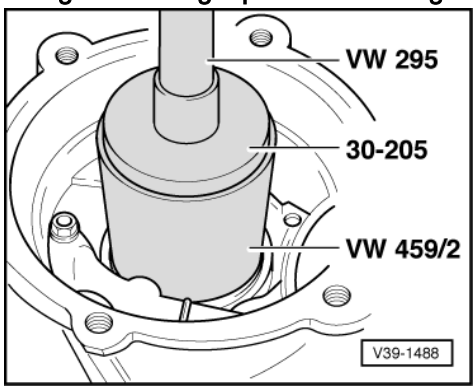

-> Fig.5 Driving in drive pinion oil seal onto stop

Note:

Oil seal should be installed dry; do not grease or oil sealing lips.

- Drive in seal as far as stop.
  - Install with raised collar (inner side) facing toward parking lock gear

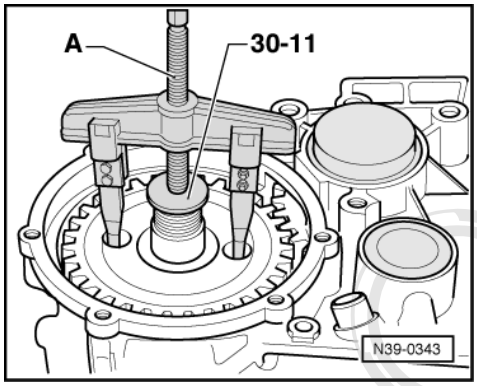

-> Fig.6 Pulling off output gear from drive pinion

A - Kukko 20-10 and pulling hook Matra V 172

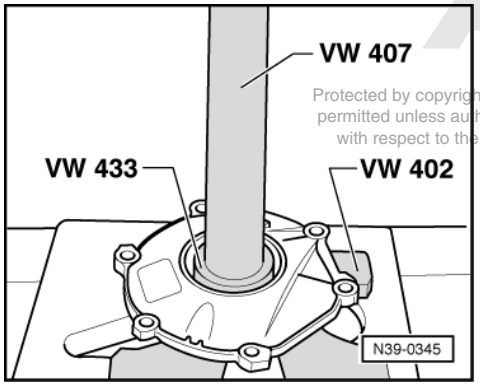

Protected by copyright. Copying for private or commercial purposes, in part or in whole, is not permitted unless authorised by AUDI AG. AUDI AG does not guarantee or accept any liability with respect to the correctness of information in this document. Copyright by AUDI AG.

-> Fig.7 Pressing in taper roller bearing outer race

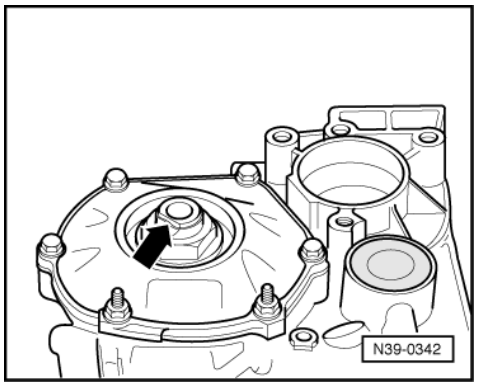

-> Fig.8 Peening hexagon nut

- Secure collar of hexagon nut by peening against flat face of drive pinion -arrow- using a punch.

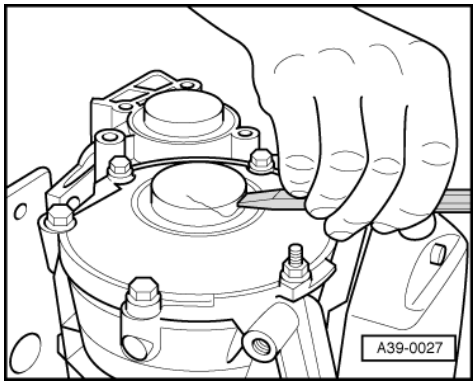

-> Fig.9 Driving out cover

The cover is damaged when it is removed.

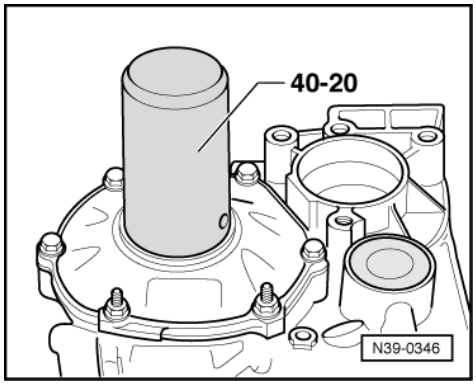

Protected by copyright. Copying for private or commercial purposes, in part or in whole, is not permitted unless authorised by AUDI AG. AUDI AG does not guarantee or accept any liability with respect to the correctness of information in this document. Copyright by AUDI AG.

-> Fig.10 Driving in cover

- Drive in new cover with 40-20 as far as stop.

3.5 - Removing and installing differential

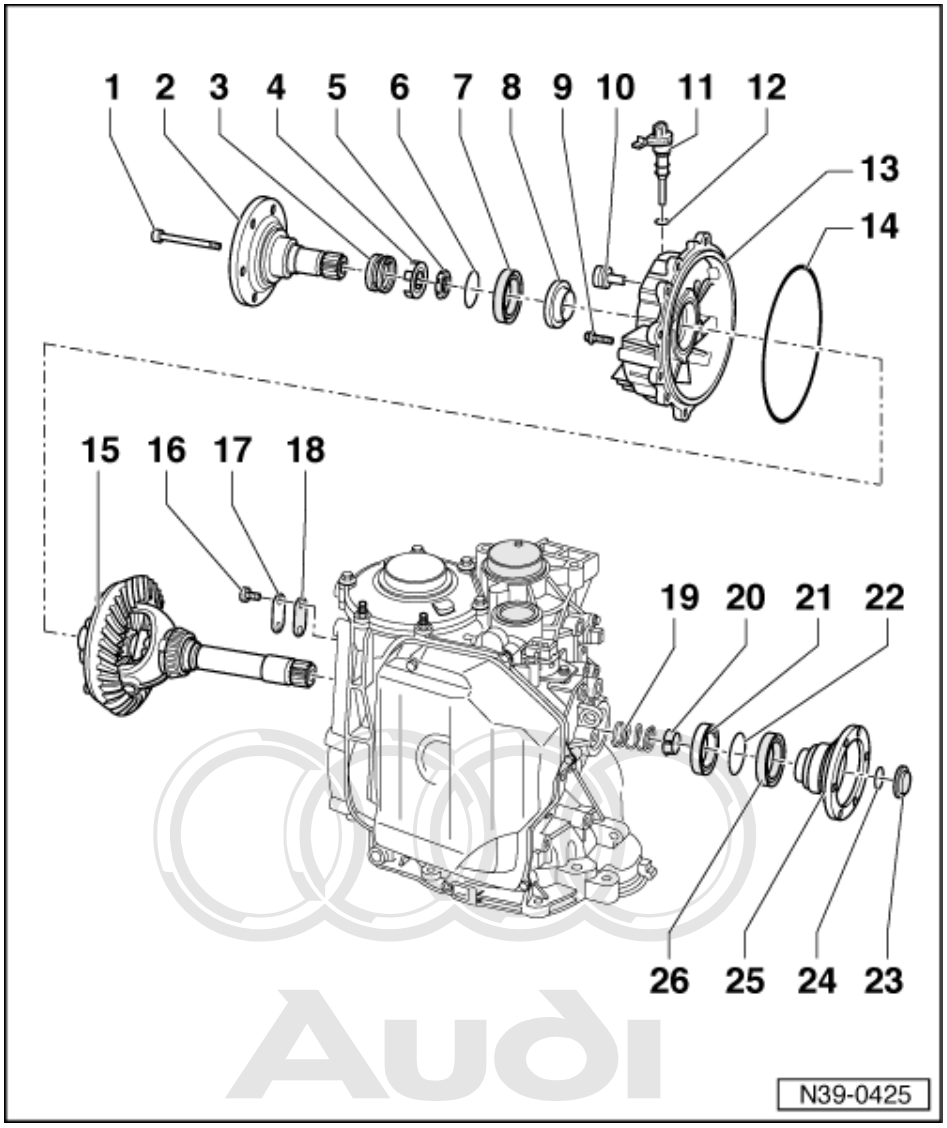

Protected by copyright. Copying for private or commercial purposes, in part or in whole, is not permitted unless authorised by AUDI AG. AUDI AG does not guarantee or accept any liability with respect to the correctness of information in this document. Copyright by AUDI AG.

Notes:

- The drive pinion does not need to be removed for removing and installing the differential
- With the exception of the differential and the cover for axle breather, all the components shown in the illustration can be removed with the gearbox installed.

1 **Bolt - 30 Nm**

2 **Flange shaft**

- Removing and installing
  => from Page 196

3 **Spring**

4 **Thrust washer**

- Installation position:
  Shoulder towards spring, tongue to tapered ring

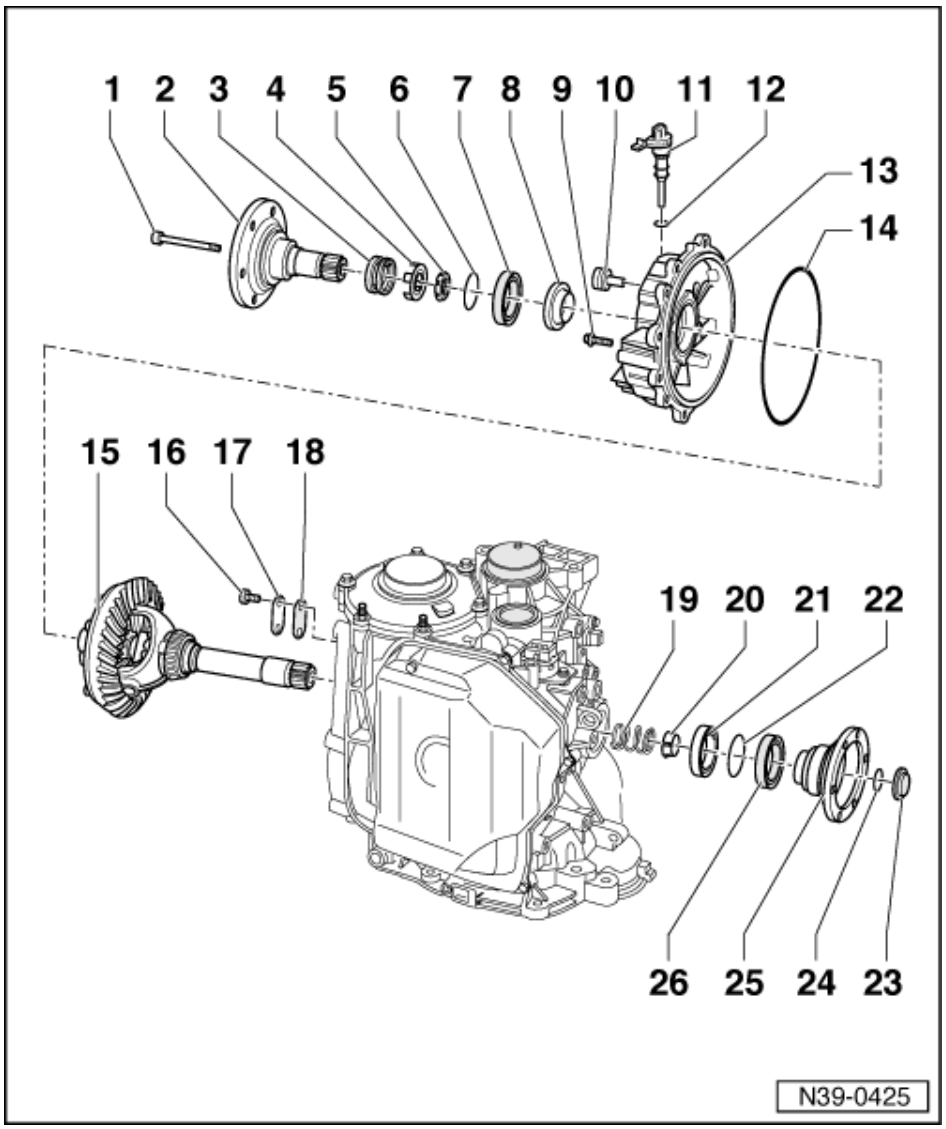

5 Tapered ring

- With grooves to secure thrust washer
- Installation position: Taper towards differential housing

6 Securing clip

- Holds taper ring, thrust washer and spring in position when flange shaft is removed

7 Oil seal for flange shaft

- Can be renewed with gearbox installed =>Page 196

8 Drive gear

- For speedometer sender -G22
- Remove oil seal for flange shaft before removing and installing
- Install so that lugs on inner circumference face flange shaft; the taper faces differential

Protected by copyright. Copying for private or commercial purposes, in part or in whole, is not permitted unless authorised by AUDI AG. AUDI AG does not guarantee or accept any liability with respect to the correctness of information in this document. Copyright by AUDI AG.

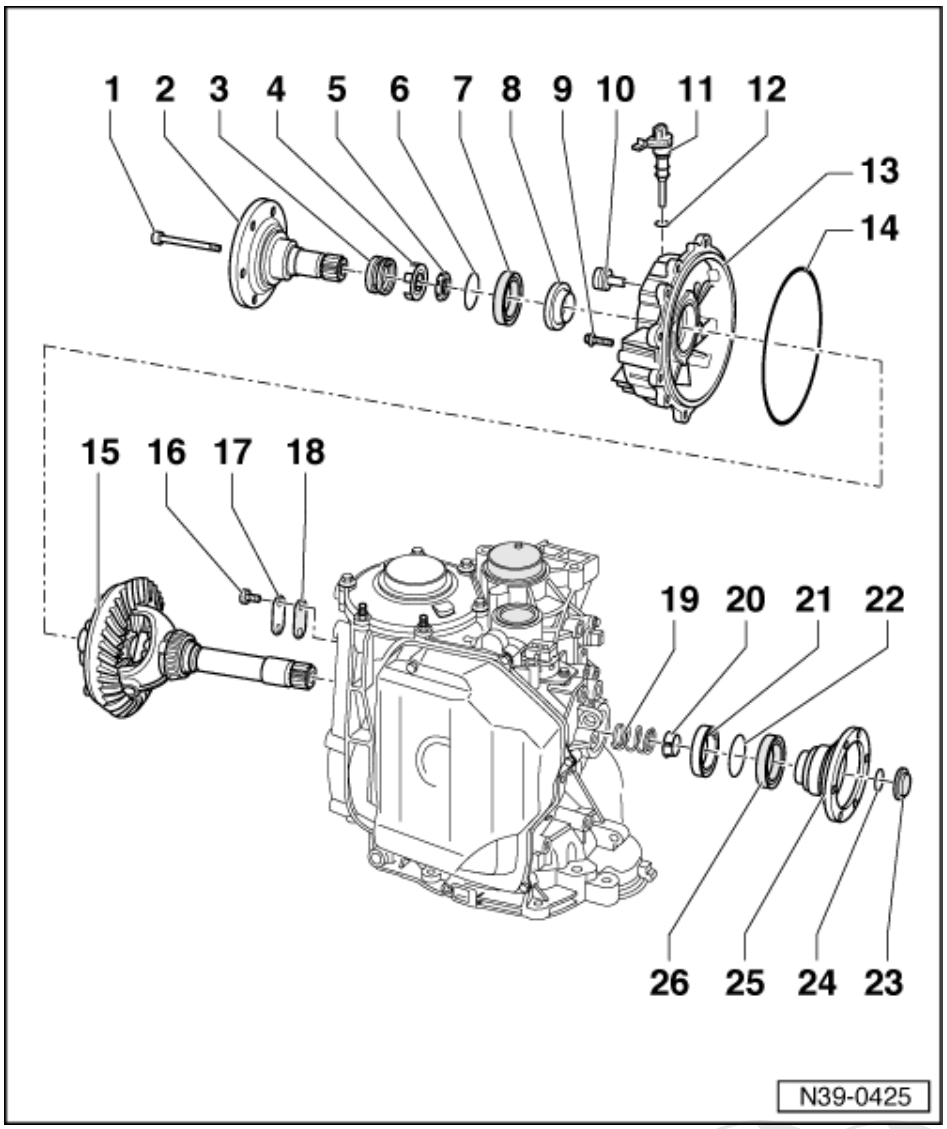

9 Bolt - 25 Nm

- Apply sealant AMV 188 200 03 when installing
- Tighten in stages and diagonally

10 Oil filler plug - 25 Nm

- Clean metal particles off magnet

11 Speedometer sender -G22

12 O-ring

- Renew

13 Cover for differential

- When replacing, re-determine shim "S1" for crown wheel => from Page 260

14 O-ring

- Renew
- Can be renewed with gearbox installed

Protected by copyright. Copying for private or commercial purposes, in part or in whole, is not permitted unless authorised by AUDI AG. AUDI AG does not guarantee or accept any liability with respect to the correctness of information in this document. Copyright by AUDI AG.

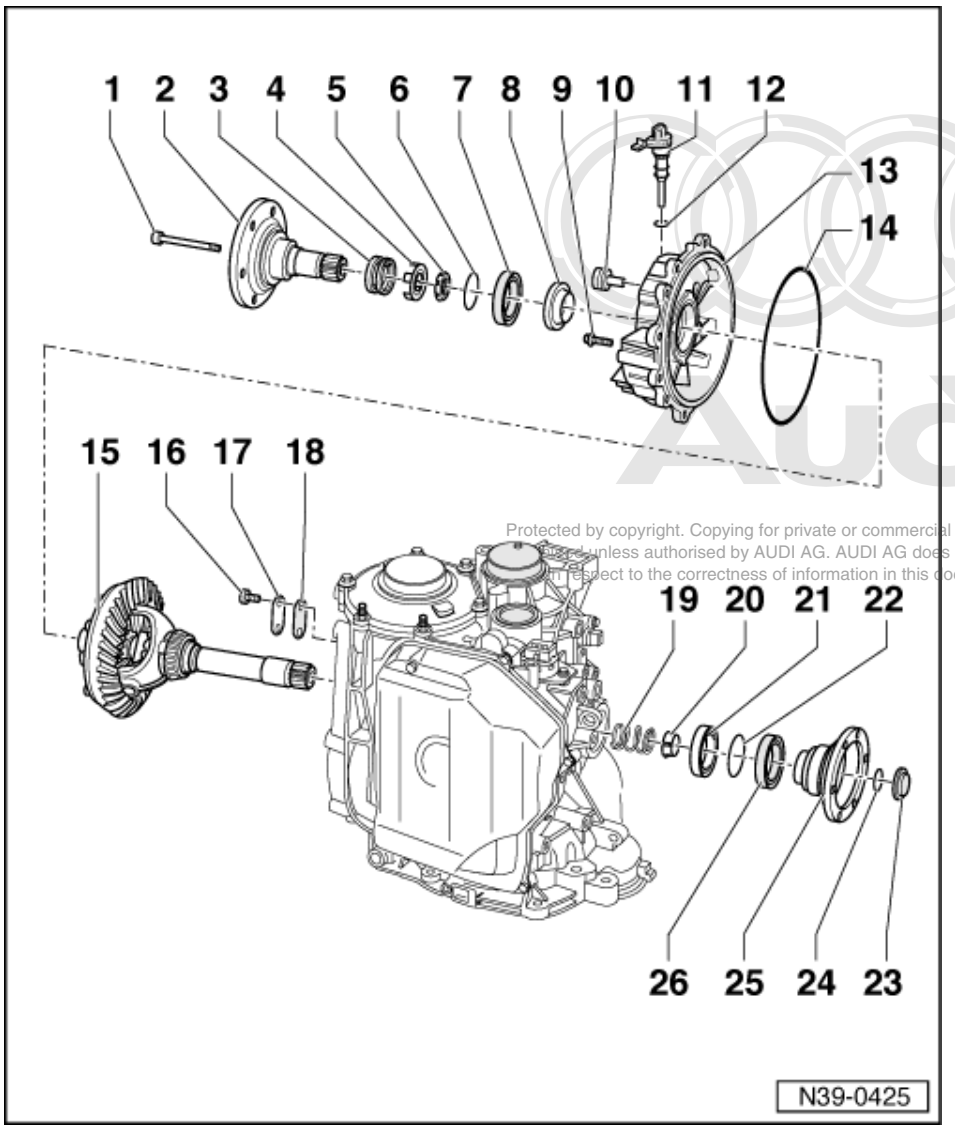

Protected by copyright. Copying for private or commercial purposes, in part or in whole, is not permitted unless authorised by AUDI AG. AUDI AG does not guarantee or accept any liability with respect to the correctness of information in this document. Copyright by AUDI AG.

15 Differential

- Remove with gearbox removed
- Remove cover for differential and right drive flange to remove differential
- Dismantling and assembling
  =>Page 231
- The tapered ring has to be removed before installing differential
- Re-determine shims "S1", "S2" and also shims "S3" and "S4" (for drive pinion) after renewing differential

16 Bolt - 10 Nm

- Apply sealant AMV 188 200 03 when installing

17 Cover

- For axle breather

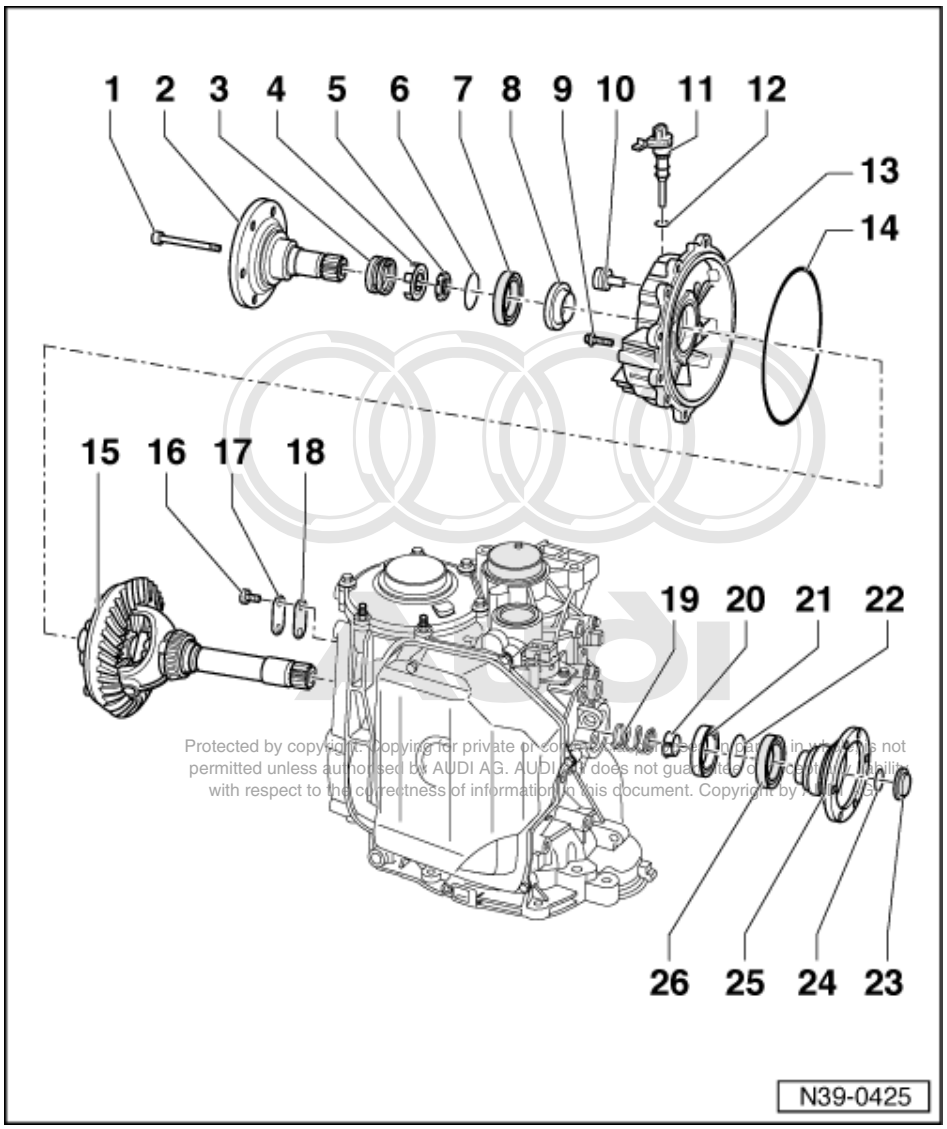

Protected by copyright. Copying for private or commercial purposes, in part or in whole, is not permitted unless authorised by AUDI AG. AUDI AG does not guarantee or accept any liability with respect to the correctness of information in this document. Copyright by AUDI AG.

18 Seal

- Renew

19 Spring

- When differential is installed, pull in together with grooved ball bearing -Item 204

20 Tapered ring

- Installation position: Stepped collar faces grooved ball bearing
- When differential is installed, pull in together with grooved ball bearing and spring
  => Page 204

21 Grooved ball bearing

- Removing and installing
  => from Page 203
- Remove before removing differential gearbox

22 Circlip

- Lever out with screwdriver

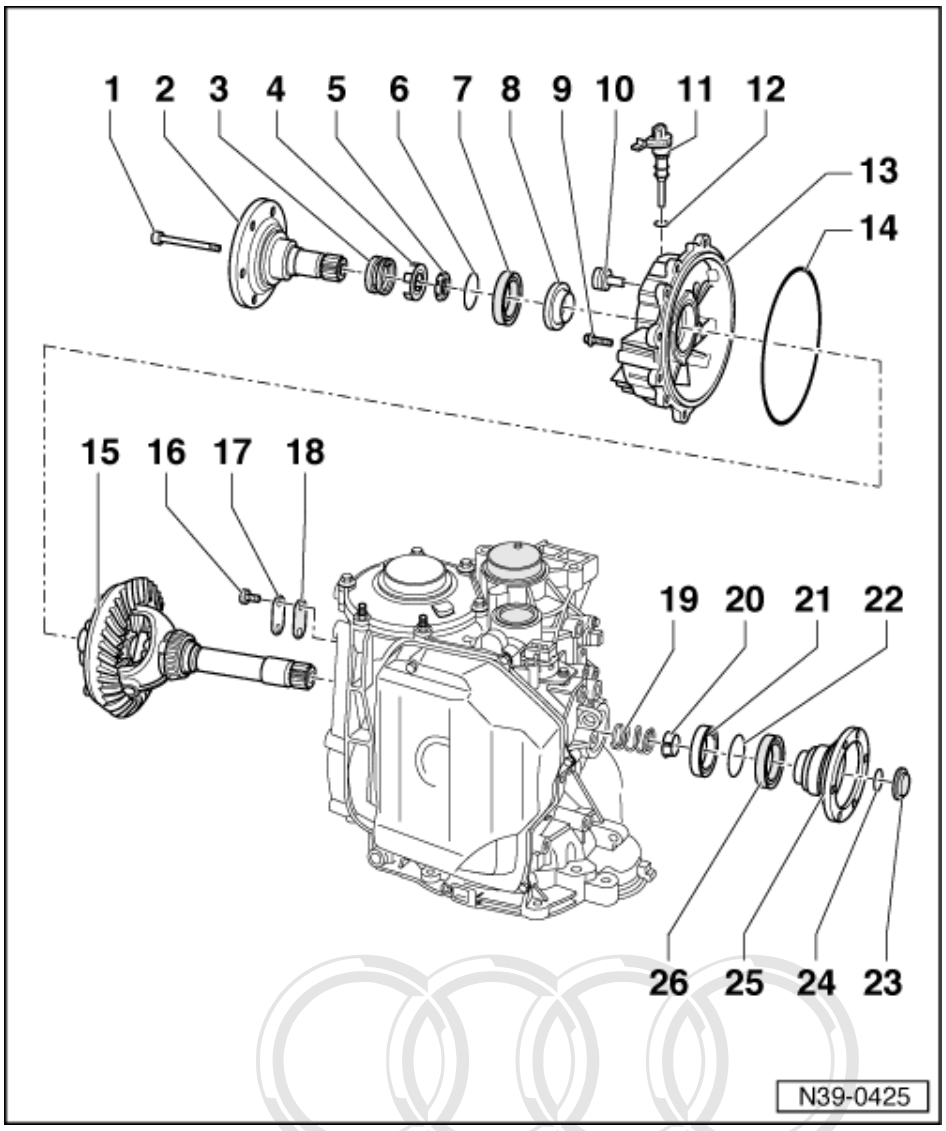

23 Sealing cap

- Renew
- To remove sealing cap, pierce with screwdriver and prise off
- Drive in with socket attachment 30 mm A/F

24 Circlip

25 Drive flange

- Removing and installing
  => from Page 200

Protected by copyright. Copying for private or commercial purposes, in part or in whole, is not permitted unless authorised by AUDI AG. AUDI AG does not guarantee or accept any liability with respect to the correctness of information in this document. Copyright by AUDI AG.

26 Oil seal for drive flange

- Removing and installing
  => from Page 200

3.6 - Dismantling and assembling differential

Notes:

- Crown wheel and drive pinion may only be replaced together.
- If the differential taper roller bearings, differential housing or cover for differential are renewed, re-determine thickness of shims "S1" and "S2" for differential=>Page 260 .
- If the crown wheel (with drive pinion) is renewed, re-determine thickness of shims "S1" and "S2" and shims "S3" and "S4" (for drive pinion)=>Pages 253 .

- Always replace all taper roller bearings on the same shaft together, with bearings made by the same manufacturer.
- Do not interchange outer or inner races of bearings which are the same size.
- Adjustments are required when replacing components marked 1)
  =>Adjustment overview Page 245 .

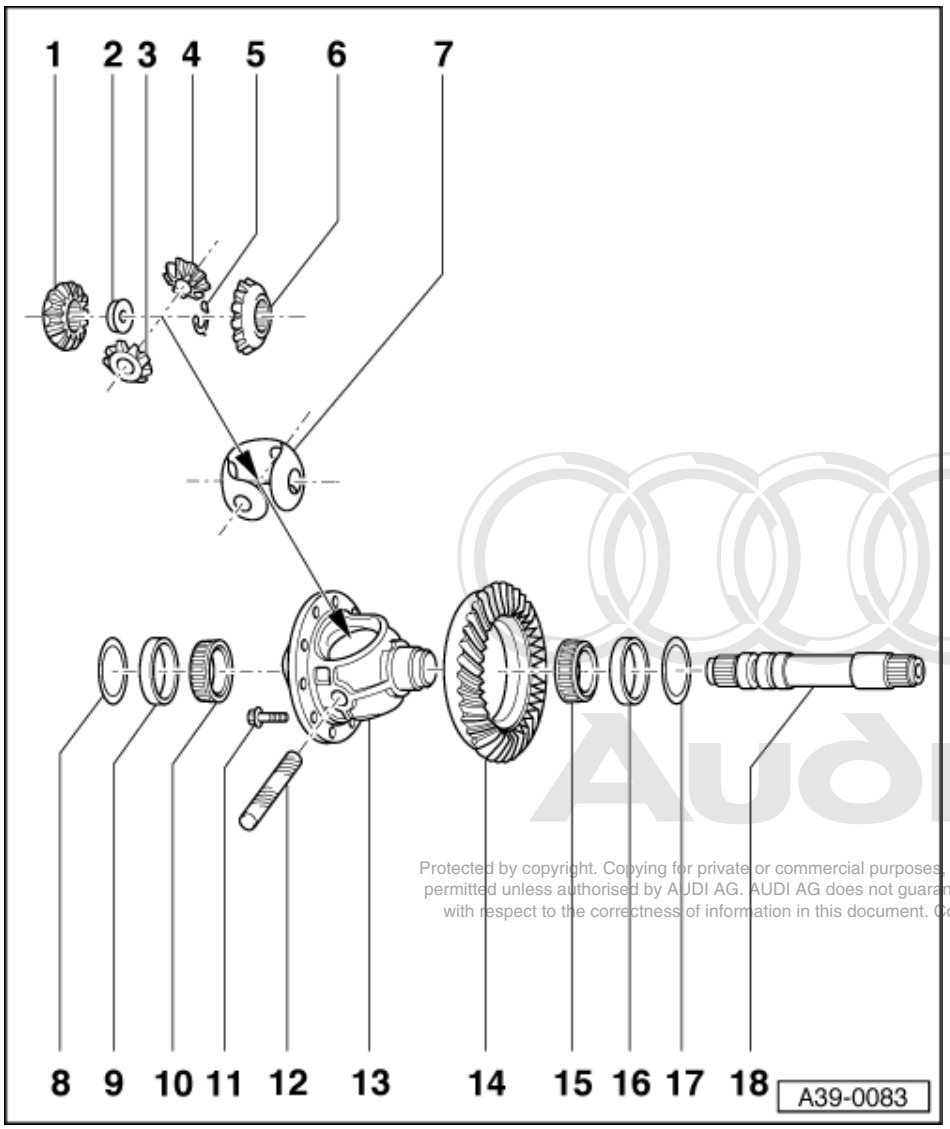

Protected by copyright. Copying for private or commercial purposes, in part or in whole, is not permitted unless authorised by AUDI AG. AUDI AG does not guarantee or accept any liability with respect to the correctness of information in this document. Copyright by AUDI AG.

1 **Sun wheel**
- Removing and installing
  => from Page 241

2 **Threaded piece**
- When installing, fit lugs in sun wheel.
- Insert before inserting shaft for bevel gears

3 **Planet pinion**
- Removing and installing
  => from Page 241

4 **Planet pinion**
- Removing and installing
  => from Page 241

5 **Circlip**
- For output shaft -Item 18 -

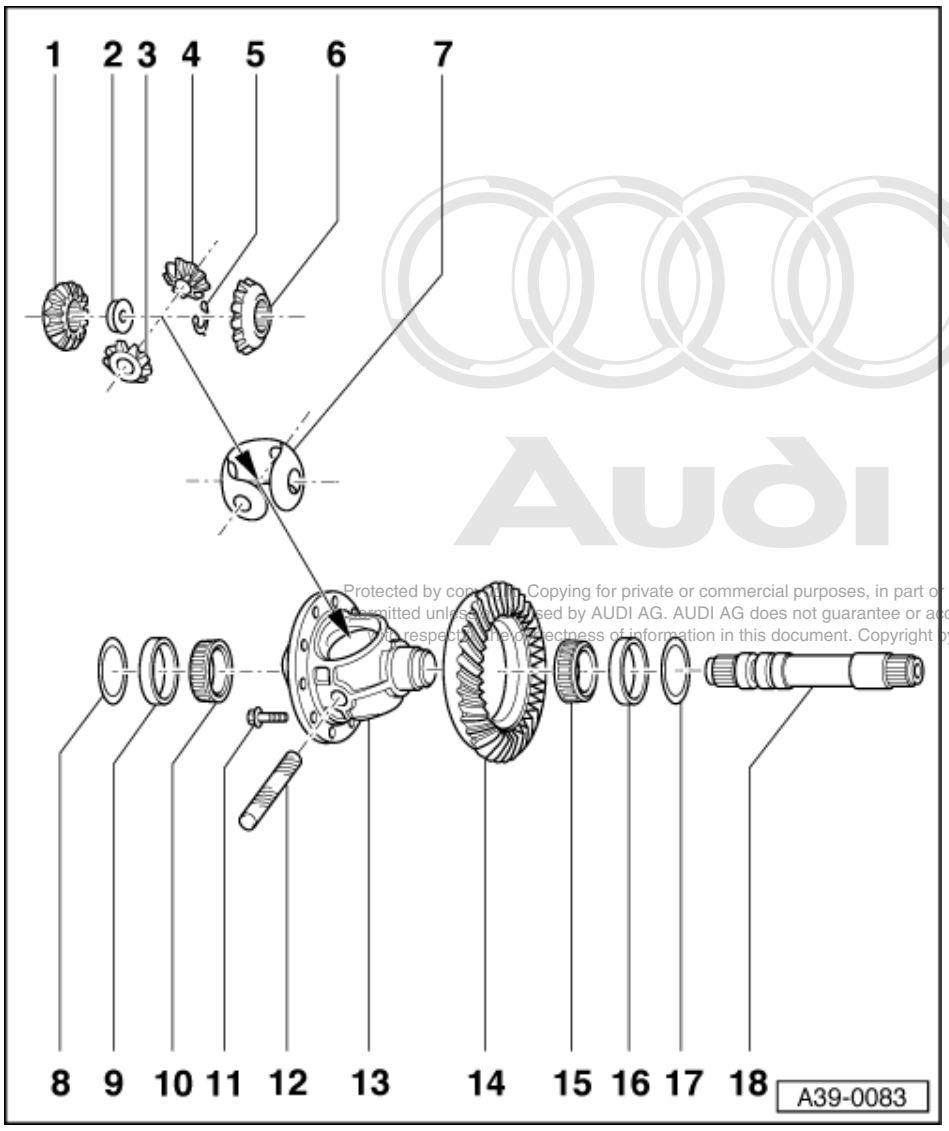

Protected by copyright. Copying for private or commercial purposes, in part or in whole, is not permitted unless authorised by AUDI AG. AUDI AG does not guarantee or accept any liability with respect to the correctness of information in this document. Copyright by AUDI AG.

6 Sun wheel

- Removing and installing
  => from Page 241

7 One-piece thrust washer

- Removing and installing
  => from Page 241
- Lubricate with gear oil and insert in gearbox housing before installing bevel gears

8 Shim "S1"

- Note thickness
- Adjustment overview
  => Page 245

9 Taper roller bearing outer race 1)

- Drive out with 3138
- Pressing in
  => Fig. 239

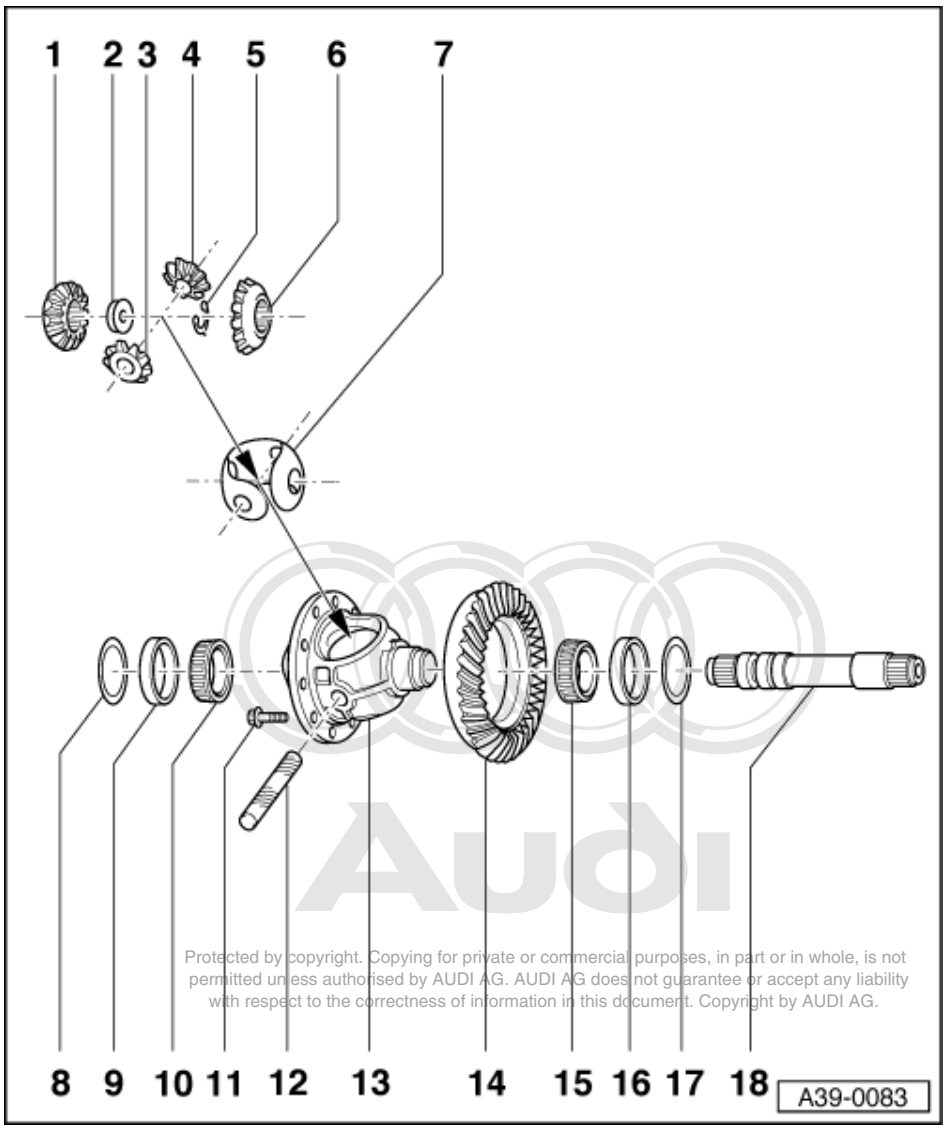

Protected by copyright. Copying for private or commercial purposes, in part or in whole, is not permitted unless authorised by AUDI AG. AUDI AG does not guarantee or accept any liability with respect to the correctness of information in this document. Copyright by AUDI AG.

10 Taper roller bearing inner race 1)

- With roller cage
- Pulling off
  => Fig. 239
- Pressing on
  => Fig. 239

11 Ribbed bolt - 80 Nm + 60°

- Renew

12 Shaft for bevel gears

- Removing and installing
  => from Page 241
- Check for wear; renew if necessary
- When driving in, do not damage one-piece thrust washer

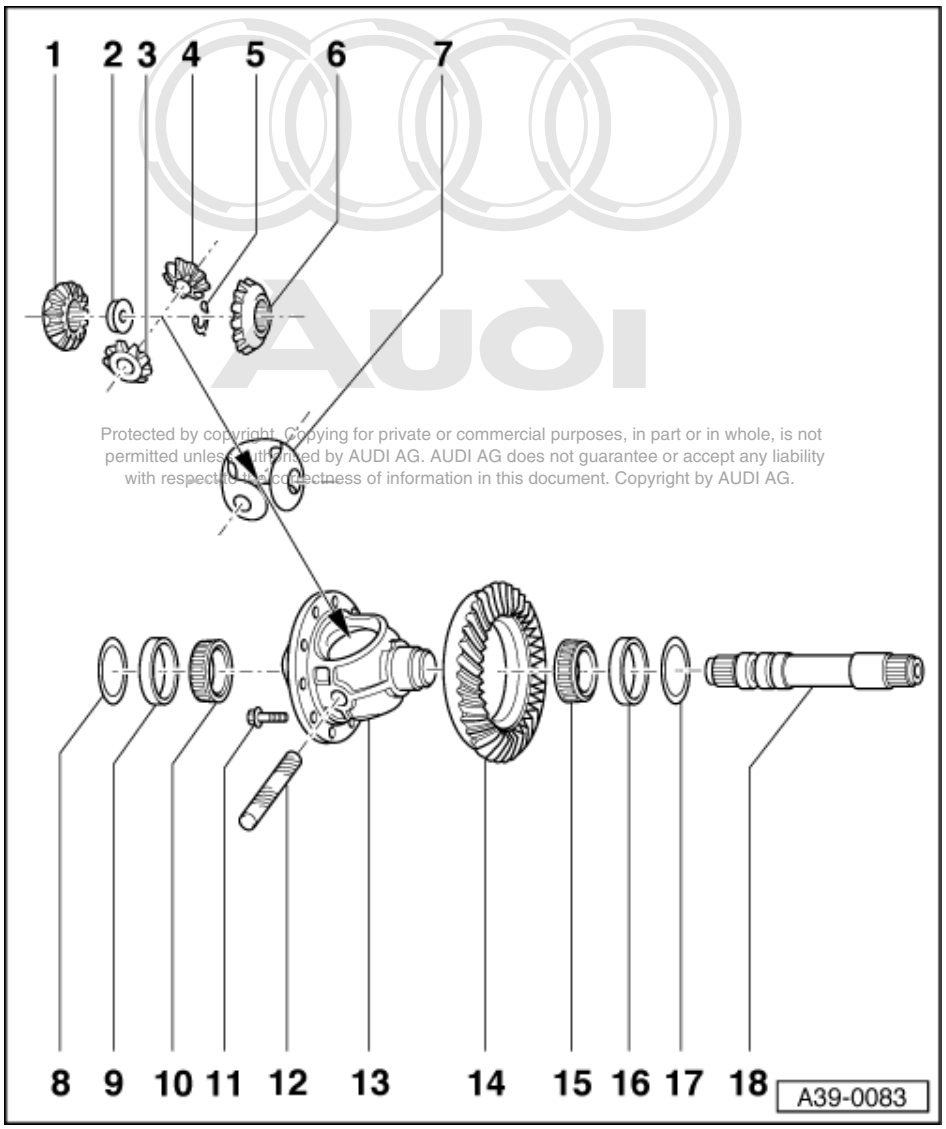

Protected by copyright. Copying for private or commercial purposes, in part or in whole, is not permitted unless authorised by AUDI AG. AUDI AG does not guarantee or accept any liability with respect to the correctness of information in this document. Copyright by AUDI AG.

13 Differential housing 1)

- When replaced, re-determine thickness of shims "S1" and "S2" for differential=> from Page 260

14 Crown wheel 1)

- Paired with drive pinion (final drive set)
- Select correct version according to code letters

=> Parts catalogue

- Number of teeth =>from Page 2
- Drive off differential with a drift
- Installing on differential housing
  => Fig. 240

15 Taper roller bearing inner race 1)

- Pulling off
  => Fig. 239
- Pressing on
  => Fig. 239

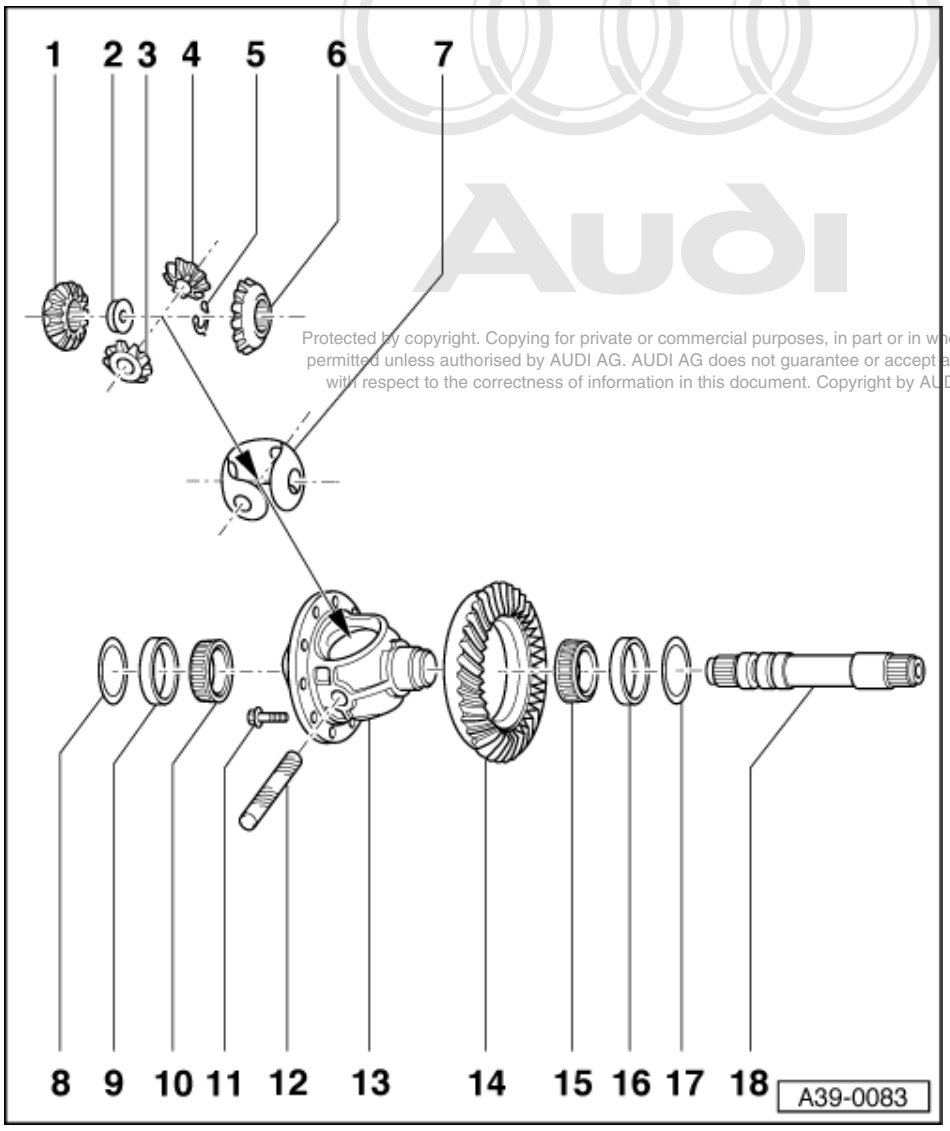

Protected by copyright. Copying for private or commercial purposes, in part or in whole, is not permitted unless authorised by AUDI AG. AUDI AG does not guarantee or accept any liability with respect to the correctness of information in this document. Copyright by AUDI AG.

16 Taper roller bearing outer race 1)

- Knock out with drift
- Pulling in
  => Fig. 240

17 Shim "S2"

- Note thickness
- Adjustment overview
  => Page 245

18 Output shaft for drive flange

- Removing and installing
  => from Page 241

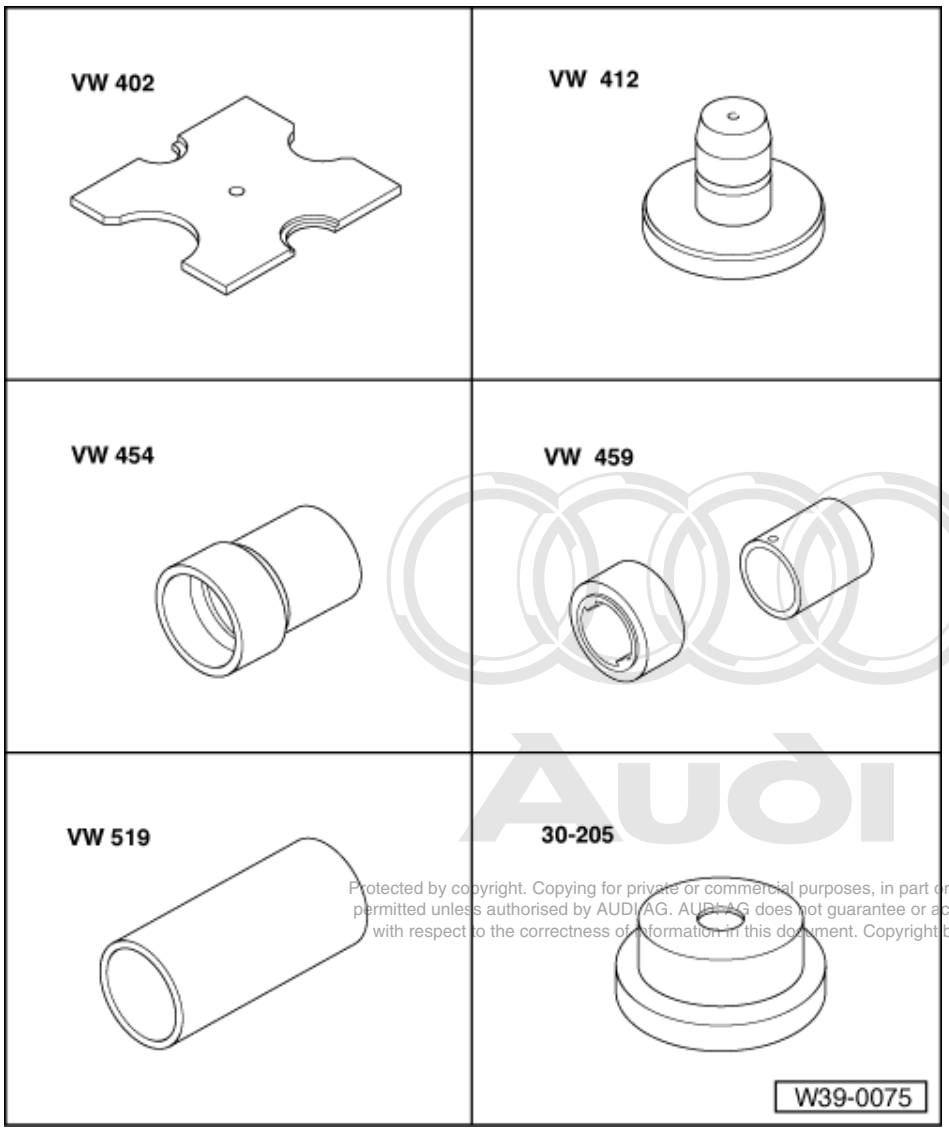

Protected by copyright. Copying for private or commercial purposes, in part or in whole, is not permitted unless authorised by AUDI AG. AUDI AG does not guarantee or accept any liability with respect to the correctness of information in this document. Copyright by AUDI AG.

Special tools and workshop equipment required

- Thrust plate VW 402
- Press tool VW 412
- Press tool VW 454
- Installing and removing tool VW 459
- Tube VW 519
- Thrust plate 30-205

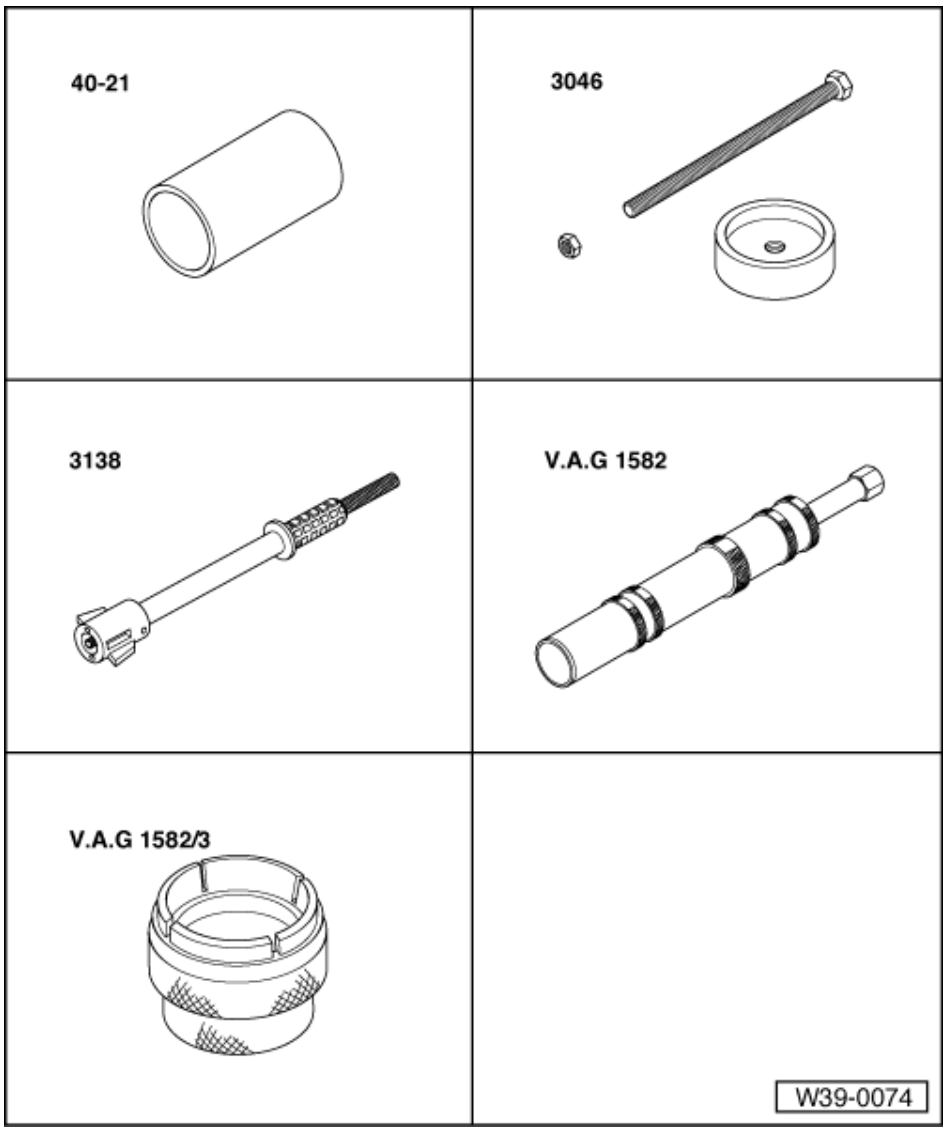

- Press tool 40-21
- Puller 3046
- Drift 3138
- Tapered roller bearing puller V.A.G 1582
- Adapter 1582/3

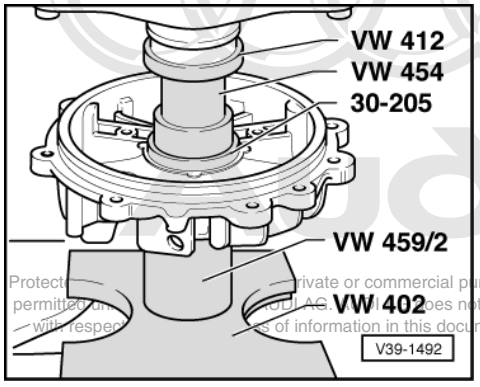

Protect... private or commercial purposes, in part or in whole, is not permitted... AUDI AG. AUDI AG does not guarantee or accept any liability with respect... of information in this document. Copyright by AUDI AG.

-> Fig.1 Pressing in taper roller bearing outer race

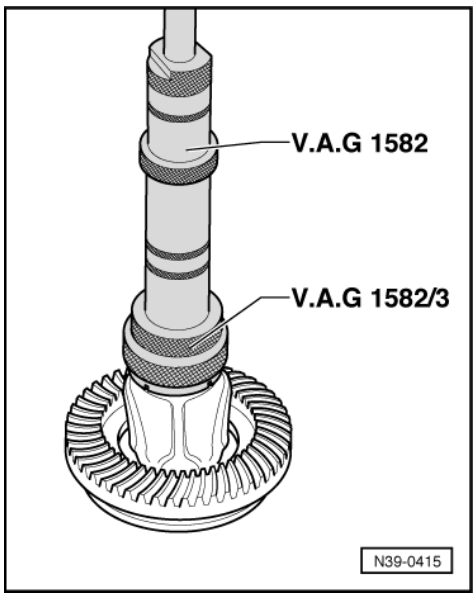

-> Fig.2 Pulling off taper roller bearing inner race

- Place press piece 40-105 on differential cage.

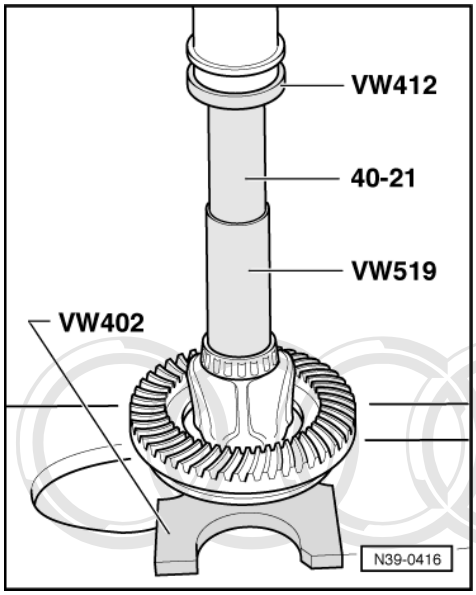

-> Fig.3 Pressing on taper roller bearing inner race

Caution
Wear protective gloves.

Protected by copyright. Copying for private or commercial purposes, in part or in whole, is not permitted unless authorised by AUDI AG. AUDI AG does not guarantee or accept any liability with respect to the correctness of information in this document. Copyright by AUDI AG.

- Heat bearing to approx. 100 °C, fit in position and press home.

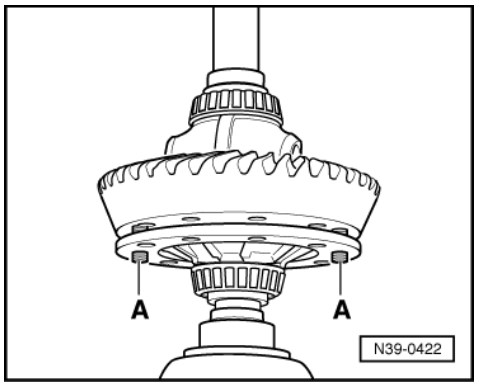

-> Fig.4 Installing crown wheel

Caution
Wear protective gloves.

- Use 2 centring pins -A- (local manufacture) as a guide.
- Heat crown wheel to approx. 100 °C and install.

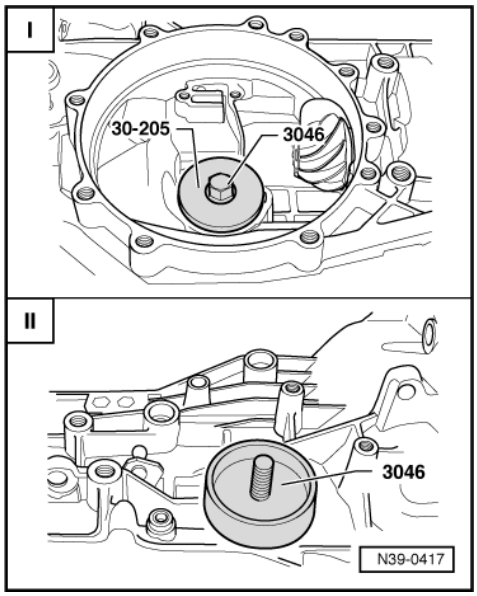

Protected by copyright. Copying for private or commercial purposes, in part or in whole, is not permitted unless authorised by AUDI AG. AUDI AG does not guarantee or accept any liability with respect to the correctness of information in this document. Copyright by AUDI AG.

-> Fig.5 Pulling in taper roller bearing outer race

I - Insert taper roller bearing outer race into gearbox housing with press plate 30-205.
II - Connect press piece of puller 3046 to spindle and pull in outer race.

Note:

To ensure that bearing race is pulled in straight, knock it in a short distance with a brass drift before applying press plate 30-205.

3.7 - Removing and installing differential bevel gears

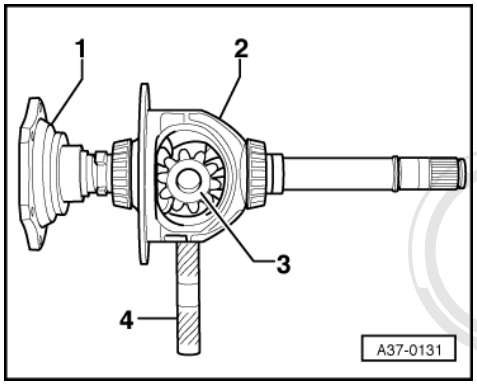

- Differential removed.

Dismantling

- Remove bolts on crown wheel and drive crown wheel off differential housing with a drift.
- -> Drive out shaft for bevel gears -4-.
- Remove threaded piece.
- Remove 3 differential bevel gears from differential housing.

Protected by copyright. Copying for private or commercial purposes, in part or in whole, is not permitted unless authorised by AUDI AG. AUDI AG does not guarantee or accept any liability with respect to the correctness of information in this document. Copyright by AUDI AG.

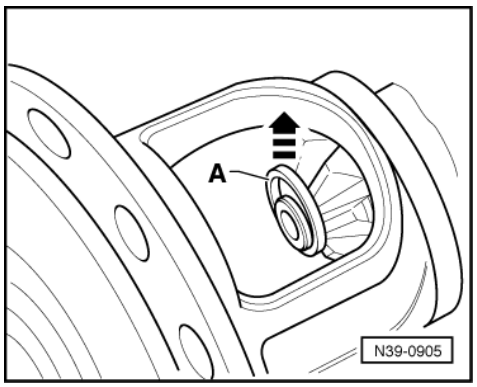

- -> Take off circlip -A- from drive flange output shaft -arrow-.
- Remove 4th differential bevel gear.
- Pull out output shaft for right-hand drive flange.
- Remove one-piece thrust washer from differential housing

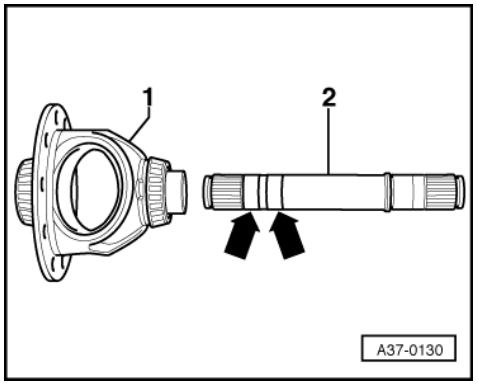

Assembling

- Lubricate one-piece thrust washer with gear oil and insert in differential housing -1-.
- -> Insert output shaft -2- for drive flange in differential housing -1-.
  - Note installation position: the end with two bearing seats -arrows- faces toward the differential.

- Fit sun wheel on output shaft -2-, and secure on shaft with circlip.

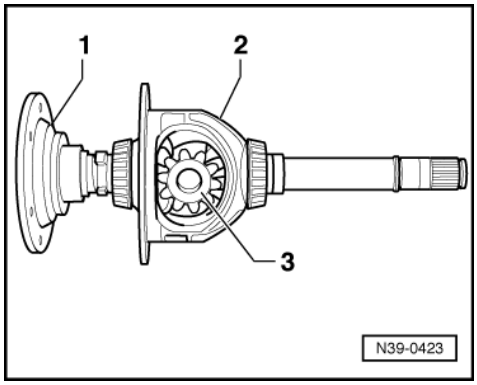

- -> To aid assembly, insert left flange shaft -1- into differential housing -2-.
- Secure sun wheel to left-hand flange shaft using bolt and threaded piece.
- Insert planet pinions -3- spaced 180° apart in openings in differential housing, and hold in place by hand.
- Rotate planet pinions -3- into final position by turning output shaft for drive flange.

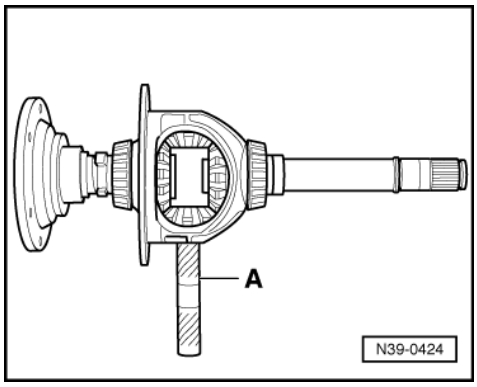

- -> Carefully drive in shaft -A- for planetary pinions. Ensure one-piece thrust washer is seated properly.
- Install crown wheel => Fig. 240 .

4 - Adjusting final drive

4.1 - Adjusting final drive

Notes:

- Overview of adjustments required after replacing individual gearbox components =>Page 245 .
- Lubricate all bearings with either gear oil or ATF before fitting, depending on which lubricant they run in when installed.
- Do not interchange outer or inner races of bearings which are the same size.
- Inspect shims for burrs and damage. Do not install damaged shims.
- Check thickness of shims by measuring at several points with a micrometer.

Protected by copyright. Copying for private or commercial purposes, in part or in whole, is not permitted unless authorised by AUDI AG. AUDI AG does not guarantee or accept any liability with respect to the correctness of information in this document. Copyright by AUDI AG.

4.2 - Overview of adjustments

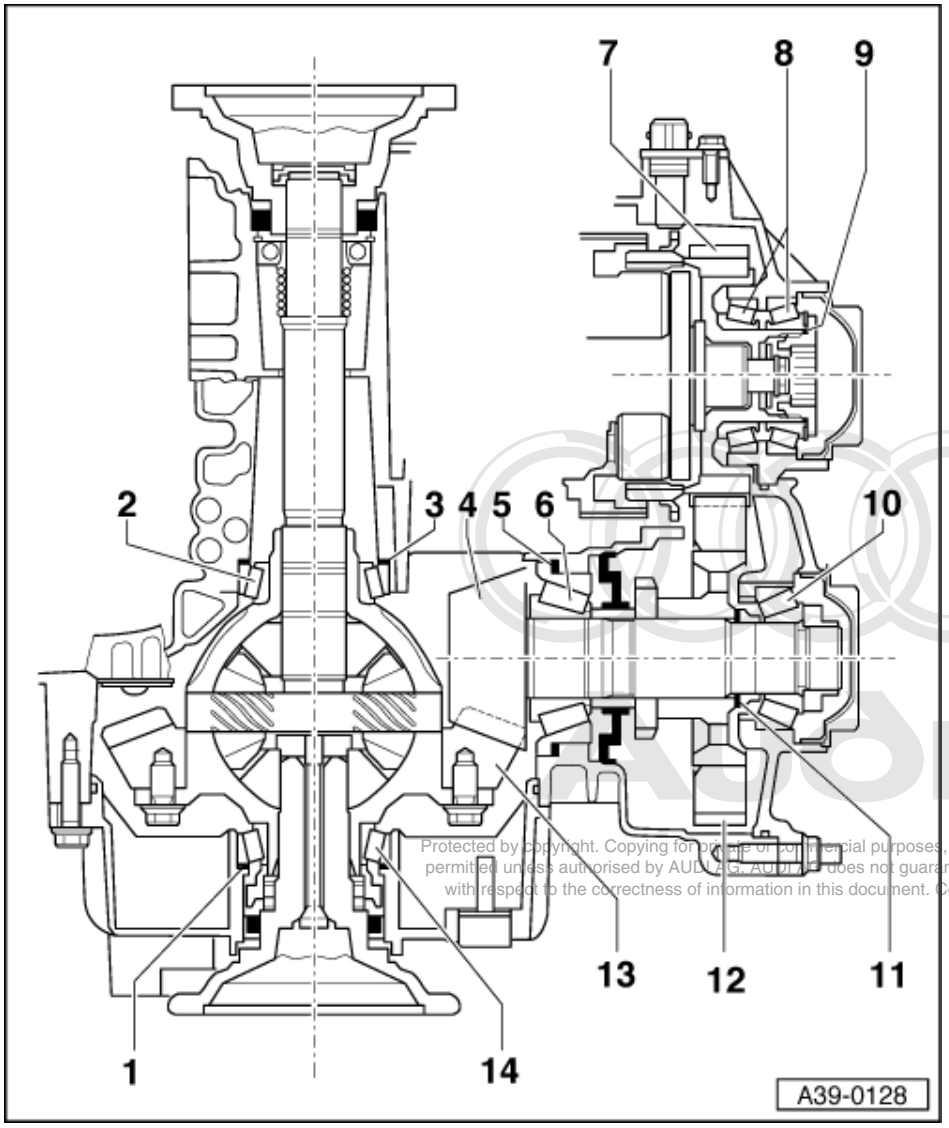

Protected by copyright. Copying for private or commercial purposes, in part or in whole, is not permitted unless authorised by AUDI AG. AUDI AG does not guarantee or accept any liability with respect to the correctness of information in this document. Copyright by AUDI AG.

See table on Page 245 to prevent unnecessary adjustment work on final drive after making repairs.

1 Shim "S1" for crown wheel
2 Taper roller bearings for differential
3 Shim "S2" for crown wheel
4 Drive pinion
- Adjusting crown wheel and pinion shaft => Page 247

5 Shim "S3" for drive pinion
6 Large taper roller bearing for drive pinion

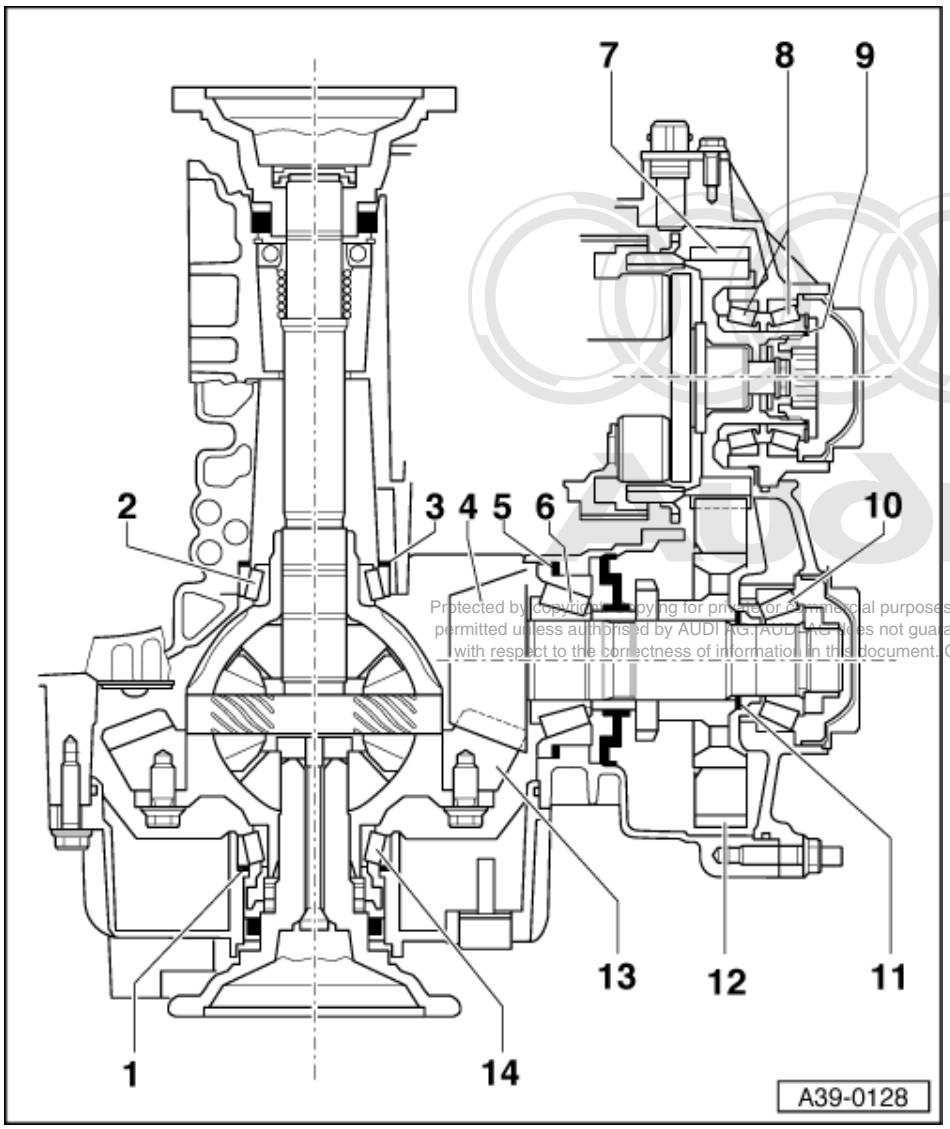

Protected by copyright. Copying for private or commercial purposes, in part or in whole, is not permitted unless authorised by AUDI AG. AUDI AG does not guarantee or accept any liability with respect to the correctness of information in this document. Copyright by AUDI AG.

7 Input gear
- Adjusting => Page 245

8 Taper roller bearings for input gear

9 Shim for input gear

10 Small taper roller bearing for drive pinion

11 Shim "S4" for drive pinion

12 Output gear
- Only replace together with input gear

13 Crown wheel
- Adjusting crown wheel and pinion shaft => Page 247

14 Taper roller bearings for differential

4.3 - Adjustment overview

Note:

When working on gearbox the following components only require adjustment if individual components have been replaced that directly affect the final drive adjustment. To eliminate unnecessary adjustments observe following table:

Component replaced: ▼	Adjustments required:				
	Crown wheel "S1"+"S2" => Page 247	Crown wheel "S1" => Page 260	Drive pinion "S3"+"S4" via "r" => Page 247	Drive pinion "S4" => Page 253	Adjust input gear 1) 3) => Page 245
Gearbox housing	X		X		X
Taper roller bearing for input gear					X
Input gear 1), output gear 1)				X	X
Drive pinion 2), crown wheel 2)	X		X		
Differential housing with-out crown wheel	X				

1) Always renew input gear and output gear together
2) Always renew drive pinion and crown wheel together
3) When adjusting input gear, re-adjust planet carrier and clutch play between K1 and K2

Component replaced: ▼	Adjustments required:				
	Crown wheel "S1"+"S2" => Page 247	Crown wheel "S1" => Page 260	Drive pinion "S3"+"S4" via "r" => Page 247	Dive pinion "S4" => Page 253	Adjust input gear 1) 3) => Page 245
Taper roller bearing for drive pinion			X		
Taper roller bearing for differential	X				
Cover for differential		X			
Drive pinion cover, drive pinion bush, parking lock wheel, spacer tube				X	

1) Always renew input gear and output gear together
3) When adjusting input gear, re-adjust planet carrier and clutch play between K1 and K2

4.4 - Adjusting input gear

Protected by copyright. Copying for private or commercial purposes, in part or in whole, is not permitted unless authorised by AUDI AG. AUDI AG does not guarantee or accept any liability with respect to the correctness of information in this document. Copyright by AUDI AG.

VW 382/7

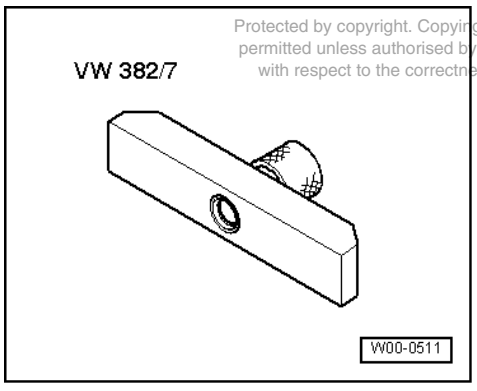

Special tools and workshop equipment required

- Bridge from measuring device VW 382/7

Work sequence

- Planetary gearbox removed

- Install outer races of both taper roller bearings and inner race of inner taper roller bearing with locking fluid AMV 185 101 A1=>Page 209 , -Item 8 -.
- Insert input gear with inner race of inner taper roller bearing in gearbox housing.

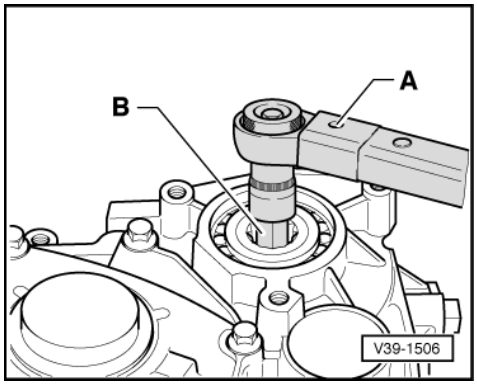

- Engage parking lock.
- -> Tighten socket head fastener to 100 Nm without dished washer and without shim.

A - Torque wrench
B - Socket attachment, 22 mm A/F

- Remove socket head fastener.

Protected by copyright. Copying for private or commercial purposes, in part or in whole, is not permitted unless authorised by AUDI AG. AUDI AG does not guarantee or accept any liability with respect to the correctness of information in this document. Copyright by AUDI AG.

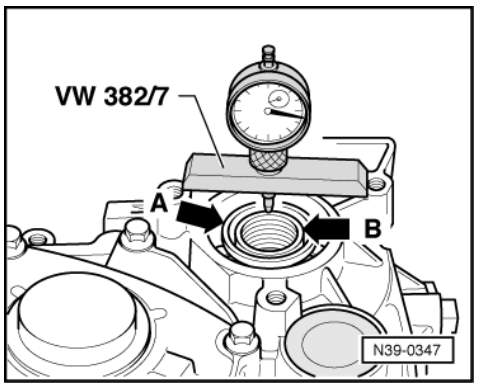

- Insert dial gauge and set to zero with 3 mm preload.
- -> Measure distance between input gear -B- and inner race -A- of taper roller bearing, and note dial gauge reading.

- Reading in following example: 1.00 mm.

The specified bearing preload is achieved by adding the thickness of the dished washer (1.50 mm) to the dial gauge reading (1.00 mm) and subtracting the bearing preload figure (0.18 mm).

Determining shim

Example:

Reading	1.00 mm
+ Dished washer	1.50 mm
- Bearing preload	0.18 mm

= Thickness of shim	2.32 mm

- Select shim of correct thickness from table. For Part No. refer to:

=> Parts catalogue

Table of shims for input gear

Measured thickness (mm)	Shim (mm)	Measured thickness (mm)	Shim (mm)
1.575 ... 1,599	1.600	2.075 ... 2.099	2.100
1.600 ... 1.624	1.625	2.100 ... 2.124	2.125
1.625 ... 1.649	1.650	2.125 ... 2.149	2.150
1.650 ... 1.674	1.675	2.150 ... 2.174	2.175
1.675 ... 1.699	1.700	2.175 ... 2.199	2.200
1.700 ... 1.724	1.725	2.200 ... 2.224	2.225
1.725 ... 1.749	1.750	2.225 ... 2.249	2.250
1.750 ... 1.774	1.775	2.250 ... 2.274	2.275
1.775 ... 1.799	1.800	2.275 ... 2.299	2.300
1.800 ... 1.824	1.825	2.300 ... 2.324	2.325
1.825 ... 1.849	1.850	2.325 ... 2.349	2.350
1.850 ... 1.874	1.875	2.350 ... 2.374	2.375
1.875 ... 1.899	1.900	2.375 ... 2.399	2.400
1.900 ... 1.924	1.925	2.400 ... 2.424	2.425
1.925 ... 1.949	1.950	2.425 ... 2.449	2.450
1.950 ... 1.974	1.975	2.450 ... 2.474	2.475
1.975 ... 1.999	2.000	2.475 ... 2.499	2.500
2.000 ... 2.024	2.025	2.500 ... 2.524	2.525
2.025 ... 2.049	2.050	2.525 ... 2.549	2.550
2.050 ... 2.074	2.075		

Protected by copyright. Copying for private or commercial purposes, in part or in whole, is not permitted unless authorised by AUDI AG. AUDI AG does not guarantee or accept any liability with respect to the correctness of information in this document. Copyright by AUDI AG.

- Remove input gear again => Page 206 .
- Install inner race of outer taper roller bearing with locking fluid AMV 185 101 A1.
- Insert axial needle bearing for planet carrier.
- Put shim onto input gear.
  - Installation position: flat side faces toward input gear.
- Fit dished washer.
  - Installation position: convex side faces toward socket head fastener.
- Tighten socket head fastener to 250 Nm.

5 - Adjusting drive pinion and crown wheel

5.1 - Adjusting drive pinion and crown wheel

General notes:

- Careful adjustment of the drive pinion and crown wheel is important for the service life and smooth running of the final drive. For this reason, the drive pinion and crown wheel are matched together during manufacture, and checked to ensure a good mesh pattern and quiet running in both directions of rotation. The position of quietest running is found by moving the drive pinion in an axial direction and at the same time lifting the crown wheel out of the zero-play mesh position by the amount necessary to maintain the backlash within the specified tolerance.
- The object of the adjustment is to reproduce the setting for quietest possible running, as obtained on the test machine in production.

- The deviation (tolerance) "r", which is related to the master gauge "Ro", is measured for the final drive sets supplied as replacement parts and marked on the outer circumference of the crown wheel. The final drive set (drive pinion and crown wheel) may only be replaced together as a matched pair.
- Observe the general repair instructions for taper roller bearings and shims.

5.2 - Adjusting and identification of gear sets

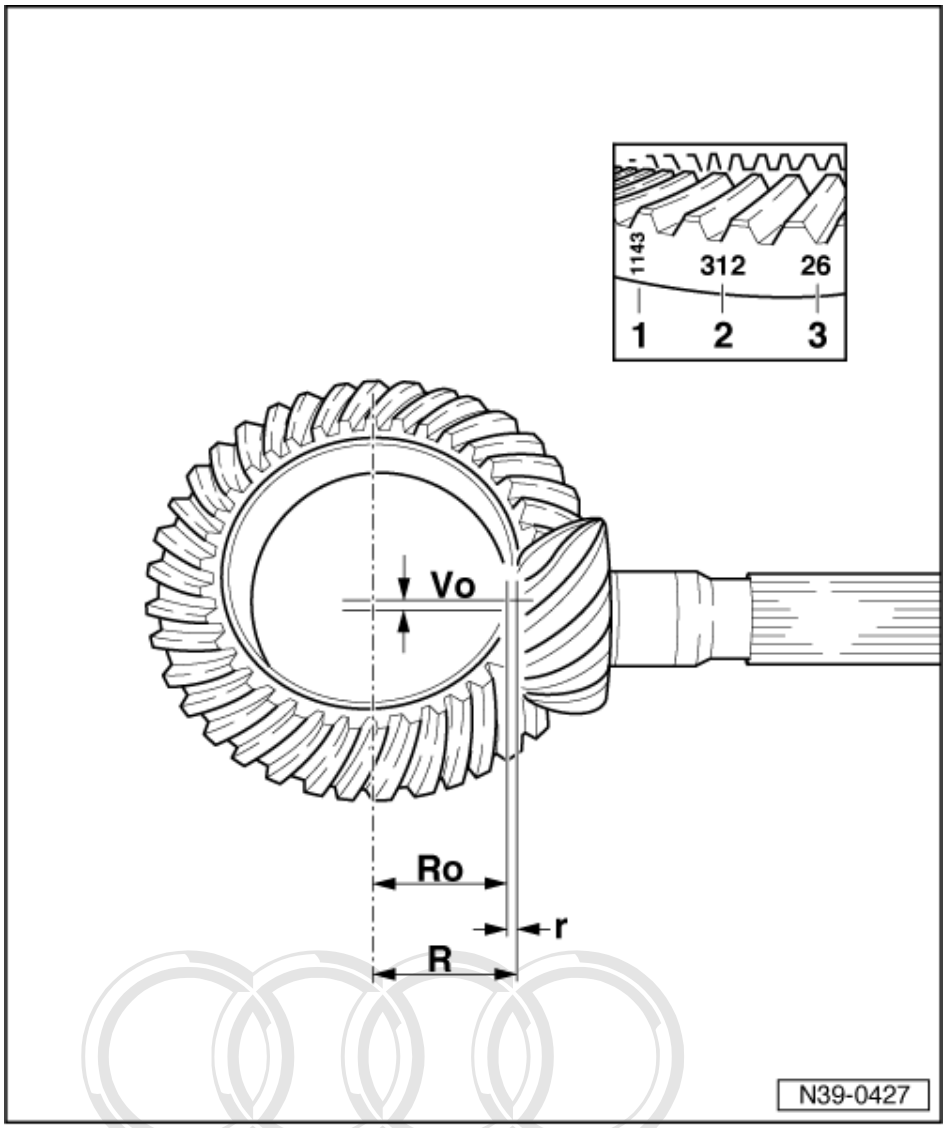

1 Identification "1143" signifies Oerlikon gear set with a ratio of 43 : 11.
2 Gear set pairing number (312).
3 Deviation (tolerance) "r" is based on the test machine master gauge used in the production. The deviation "r" is always given in 1/100 mm. Example: "26" signifies
r = 0.26 mm

Ro - Length of test machine master gauge used.
Ro -Crown wheel = 59.20 mm

Protected by copyright. Copying for private or commercial purposes, in part or in whole, is not permitted unless authorised by AUDI AG. Audi AG does not guarantee or accept any liability with respect to the correctness of information in this document. Copyright by AUDI AG.

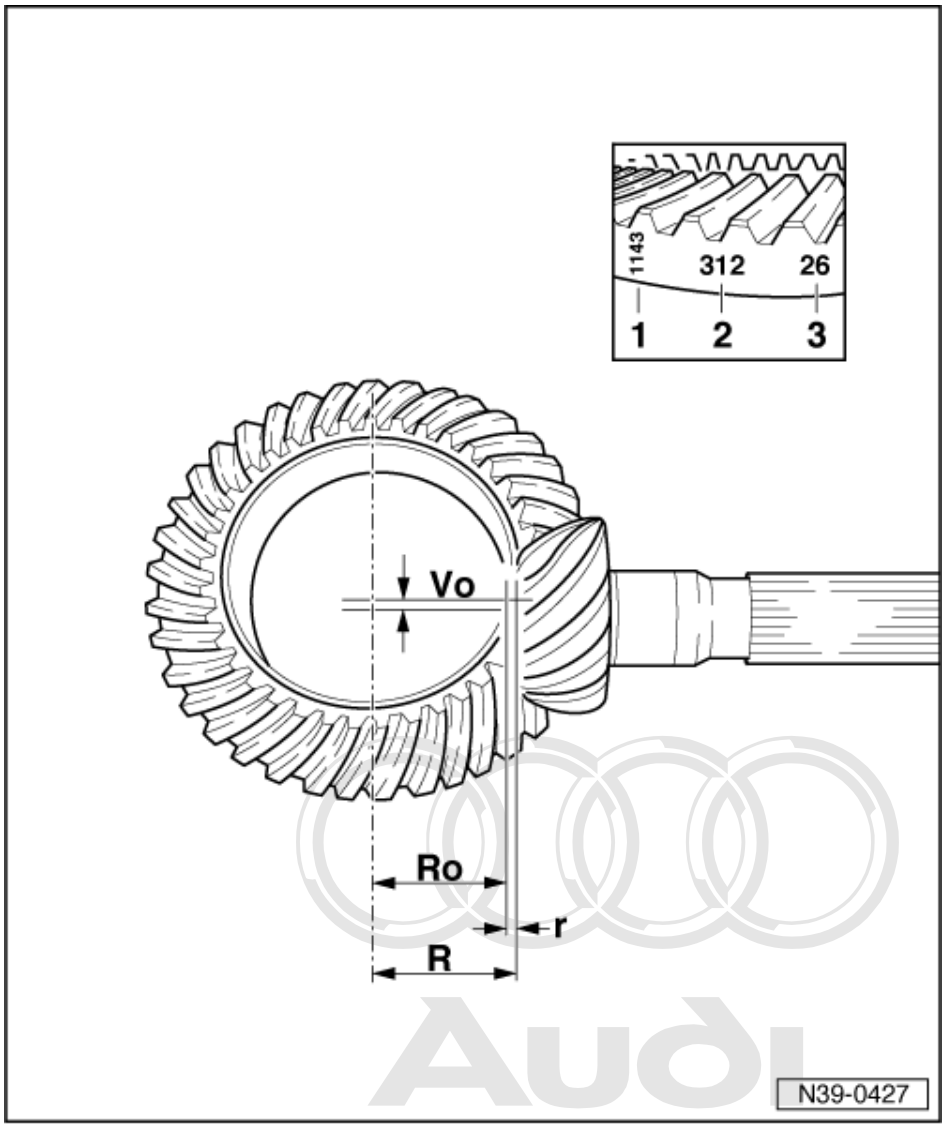

Protected by copyright. Copying for private or commercial purposes, in part or in whole, is not permitted unless authorised by AUDI AG. AUDI AG does not guarantee or accept any liability with respect to the correctness of information in this document. Copyright by AUDI AG.

R - Actual dimension between crown wheel and face of drive pinion at point with quietest running for this gear set.

Vo - Hypoid offset

5.3 - Recommended sequence for readjusting final drive set

The following work sequence is recommended to save time when the drive pinion and crown wheel have to be adjusted:

1.) Determine total shim thickness "Stotal" for "S1" +"S2" (sets preload for taper roller bearings for differential) => from Page 260 .

2.) Determine total shim thickness "Stotal" for "S3" + "S4" (sets preload for taper roller bearings for drive pinion) => from Page 253 .

3.) Distribute total shim thickness "Stotal" for "S3" + "S4" so that the distance from centre of crown wheel to face of drive pinion is the same as distance "R" which was determined during production => from Page 258 .

4.) Distribute total shim thickness "Stotal" for "S1" + "S2" so that the specified backlash between crown wheel and drive pinion is maintained => from Page 263 .

Note:

Overview of components and shims =>Page 243

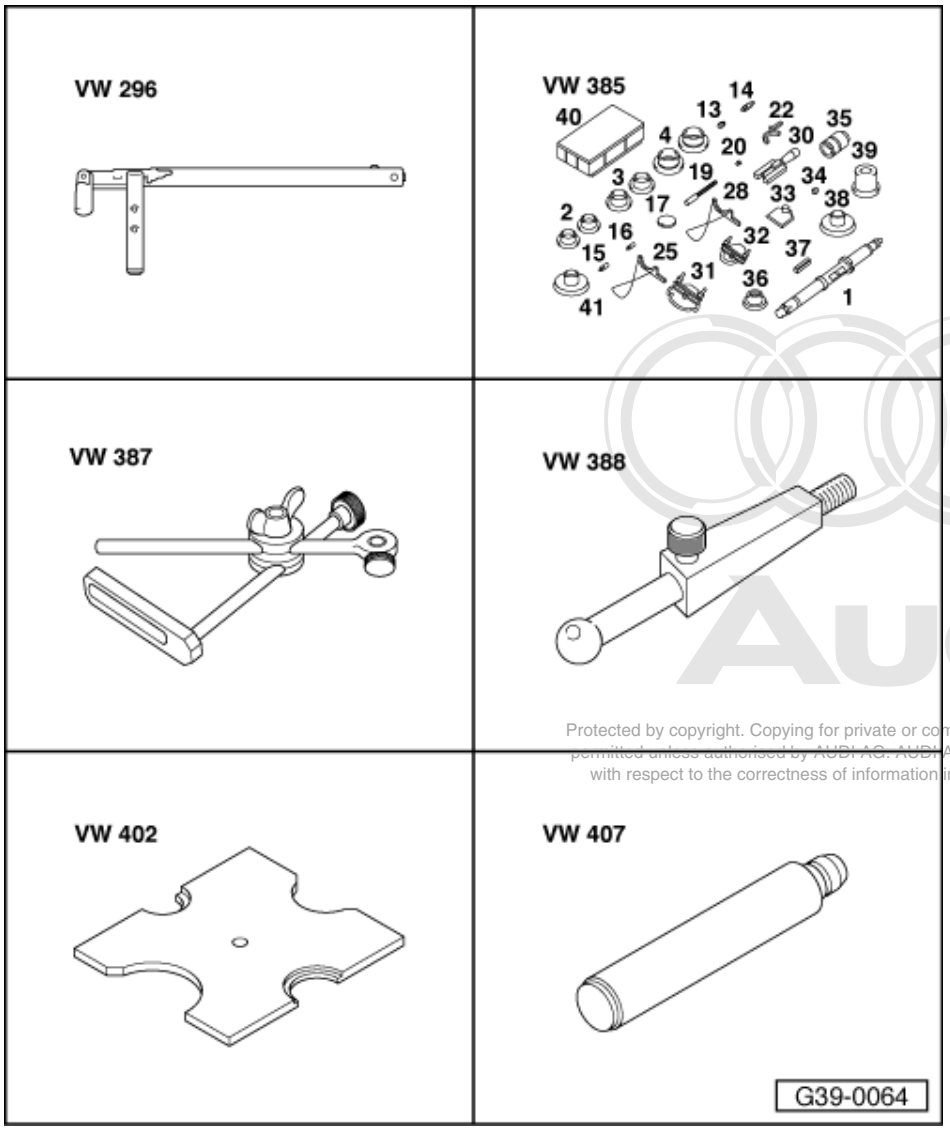

Protected by copyright. Copying for private or commercial purposes, in part or in whole, is not permitted unless authorised by AUDI AG. AUDI AG does not guarantee or accept any liability with respect to the correctness of information in this document. Copyright by AUDI AG.

Special tools and workshop equipment required

- Transmission removal lever VW 296
- Universal mandrel VW 385
- Universal dial gauge bracket VW 387
- Adjustable measuring lever VW 388
- Thrust plate VW 402

- Press tool VW 407

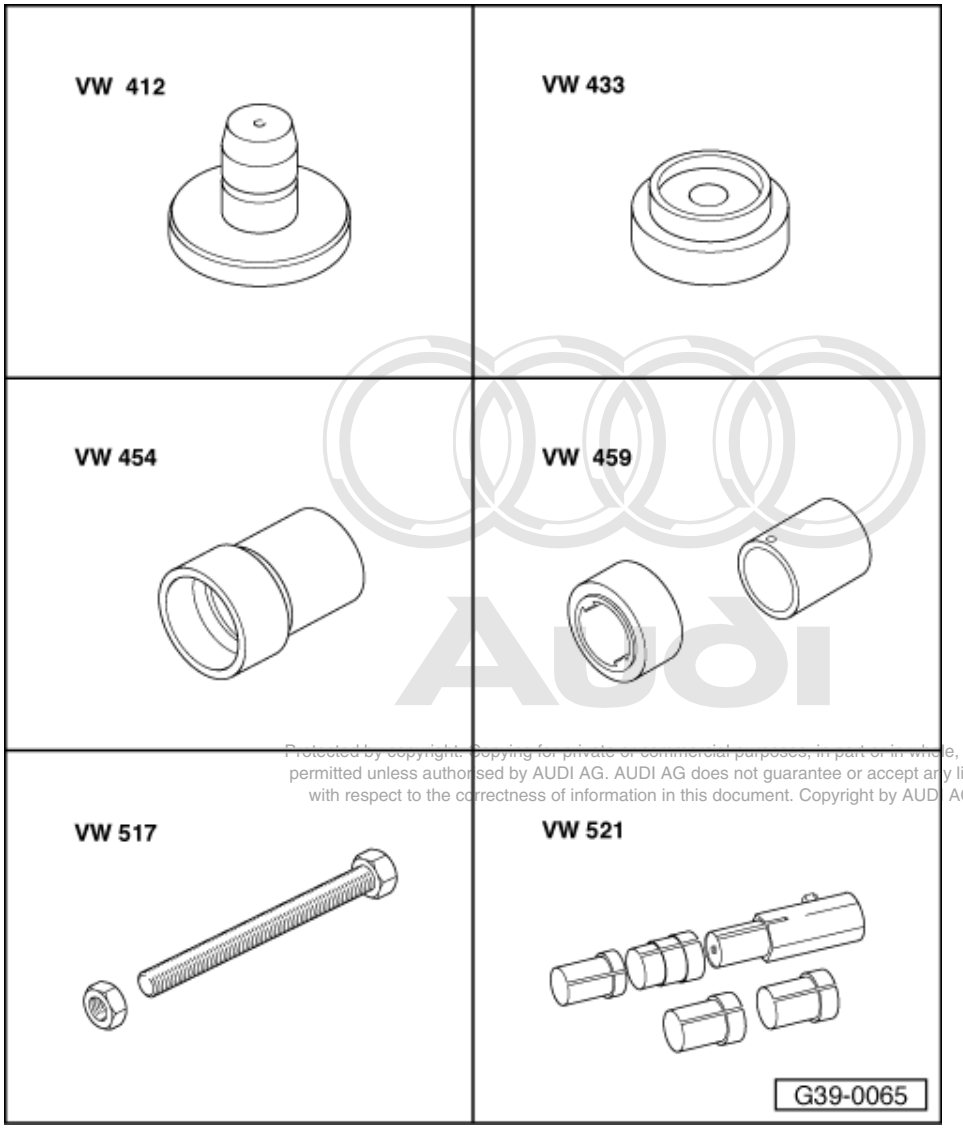

Protected by copyright. Copying for private or commercial purposes, in part or in whole, is not permitted unless authorised by AUDI AG. AUDI AG does not guarantee or accept any liability with respect to the correctness of information in this document. Copyright by AUDI AG.

- Press tool VW 412
- Press tool VW 433
- Press tool VW 454
- Installing and removing tool VW 459
- Threaded spindle VW 517
- Crown wheel adjusting device VW 521 with VW 521/4 and VW 521/8

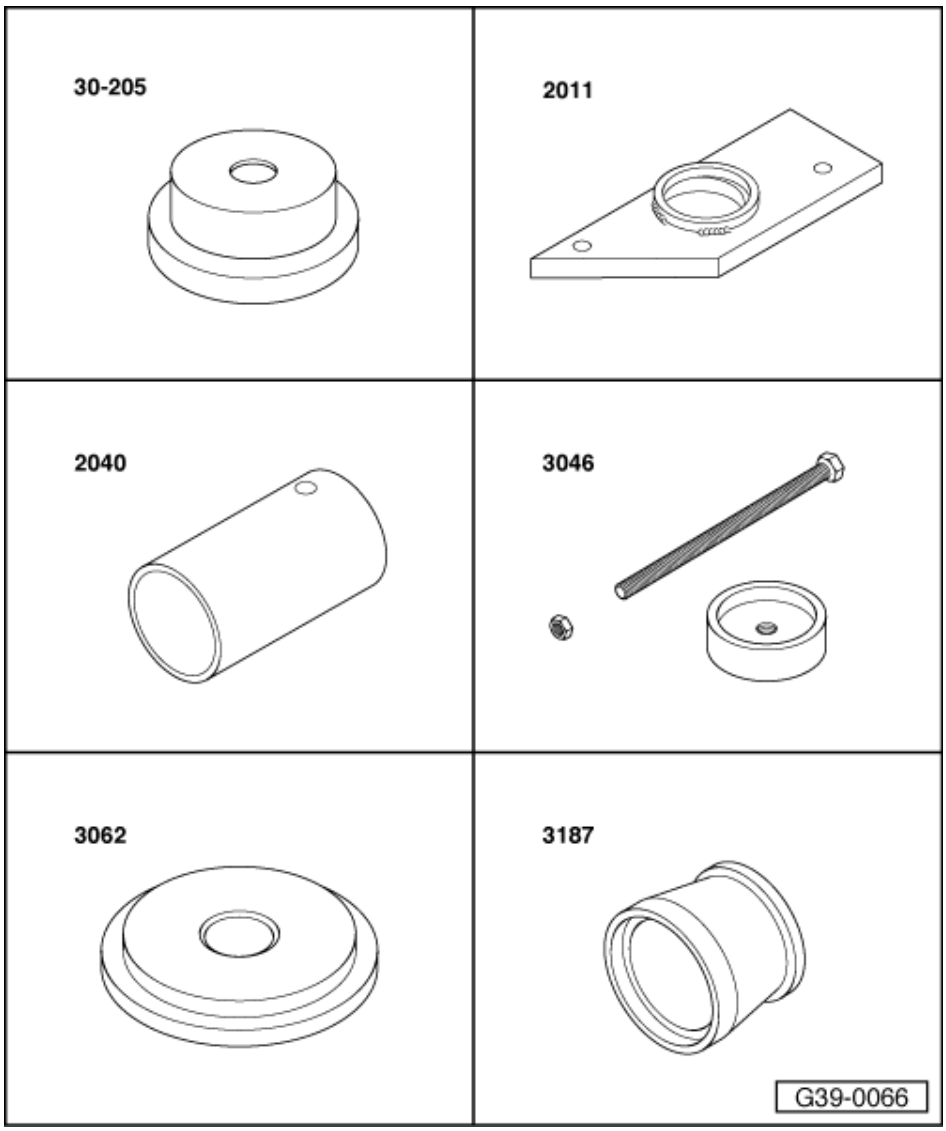

- Thrust plate 30-205
- Support bridge 2011
- Tube 2040
- Puller 3046
- Thrust pad 3062
- Assembly sleeve 3187

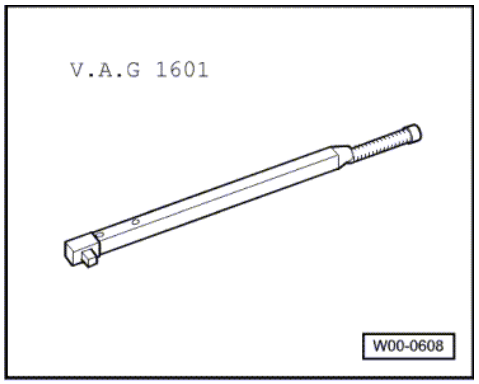

- Torque wrench V.A.G 1601 (150...800 Nm)

Protected by copyright. Copying for private or commercial purposes, in part or in whole, is not permitted unless authorised by AUDI AG. AUDI AG does not guarantee or accept any liability with respect to the correctness of information in this document. Copyright by AUDI AG.

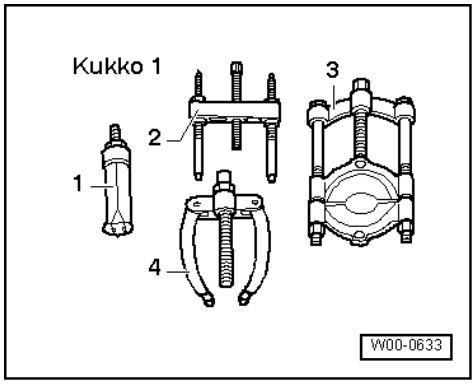

- Separating tool Kukko 17/2
- 41 mm AF socket insert
- Dial gauge

5.4 - Adjusting drive pinion

Note:

Position of components=>from Page 214 .

The table on Page 245 lists the repairs which require adjustment of the drive pinion.

The table also indicates whether the two shims "S3" and "S4" have to be measured, or only shim "S4".

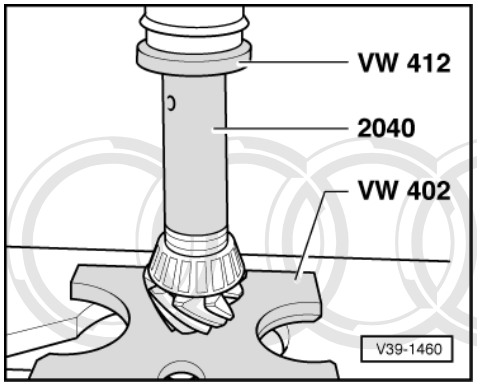

Determining total shim thickness "Stotal" for shims "S3" + "S4"

(Setting preload of taper roller bearings for drive pinion)

- -> Press on large taper roller bearing inner race with bush for drive pinion.

Protected by copyright. Copying for private or commercial purposes, in part or in whole, is not permitted unless authorised by AUDI AG. AUDI AG does not guarantee or accept any liability with respect to ... Copyright by AUDI AG.

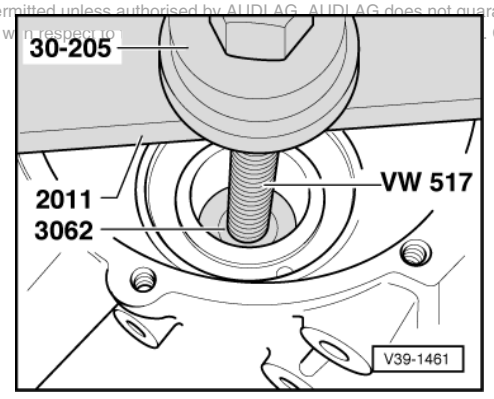

- -> Pull outer race of large taper roller bearing into gearbox housing onto stop with a provisional shim "S3" (1.50 mm).

Note:

For measurement purposes a provisional shim "S3" of 1.50 mm is installed; this shim is designated "S3" in the following. After determining measurement "e", "S3*" will be replaced by the correct shim "S3".*

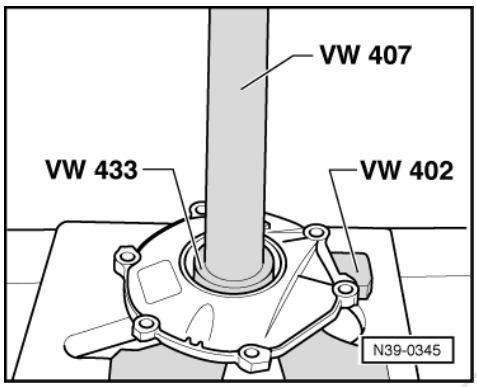

- -> Press taper roller bearing outer race into cover for drive pinion.

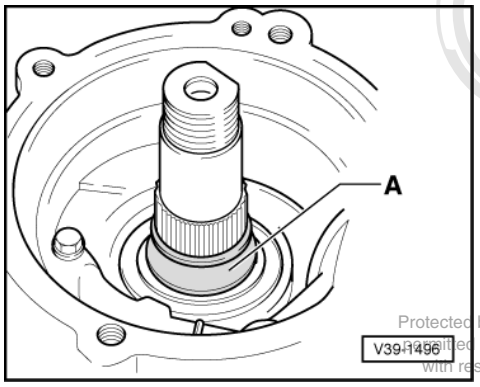

Protected by copyright. Copying for private or commercial purposes, in part or in whole, is not permitted unless authorised by AUDI AG. AUDI AG does not guarantee or accept any liability with respect to the correctness of information in this document. Copyright by AUDI AG.

- -> Insert drive pinion in gearbox housing.

A - Assembly sleeve 3187

Note:

Assembly sleeve 3187 is used when installing the drive pinion to prevent damage to the sealing lips.

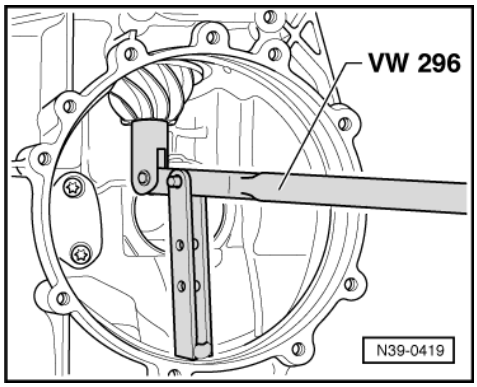

- -> Press drive pinion against taper roller bearing outer race (in gearbox housing) using press lever VW 296 and hold in this position.

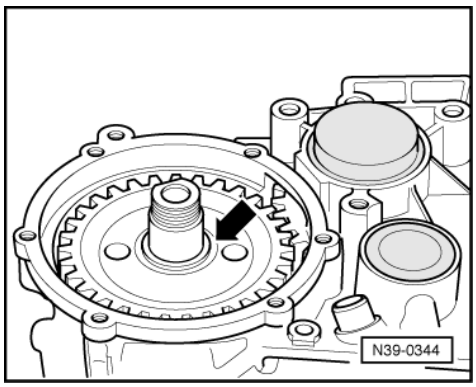

- -> Install parking lock gear, heated output gear and a 2.40 mm thick shim instead of "S4" -arrow- (use 2 x 1.20 mm shims).
- Slide on spacer tube.

Note:

Installation position of parking lock gear, output gear and spacer tube => from Page 218 .

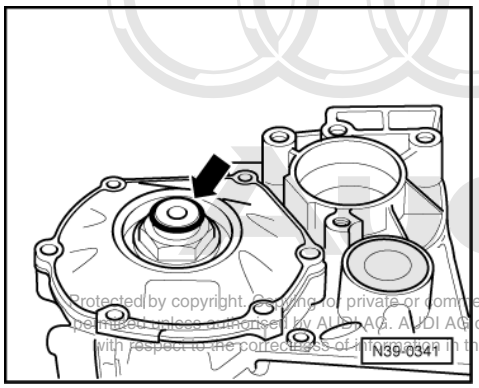

Protected by copyright. Copying for private or commercial purposes, in part or in whole, is not permitted unless authorised by AUDI AG. AUDI AG does not guarantee or accept any liability with respect to the correctness of information in this document. Copyright by AUDI AG.

- Fit cover for drive pinion.
- -> Insert taper roller bearing inner race and screw hexagon nut -arrow- onto drive pinion.
- Tighten the four bolts for drive pinion cover to 25 Nm.

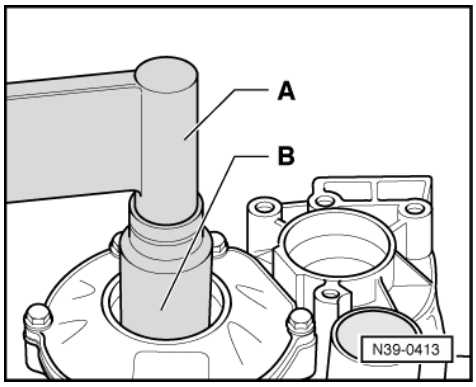

- Engage parking lock on lever for selector shaft.
- -> Pre-tighten hexagon nut to 350 Nm.

A - Torque wrench V.A.G 1601
B - Socket attachment, 41 mm A/F

- Loosen hexagon nut and tighten to 240 Nm.

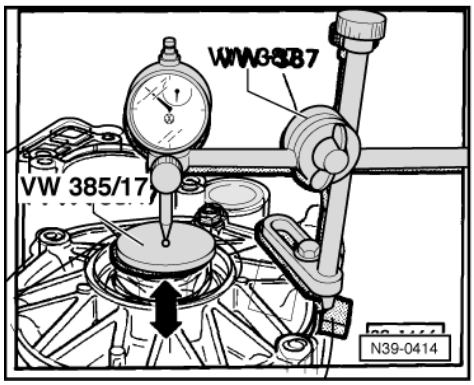

- -> Secure dial gauge bracket VW 387 to cover for drive pinion, place end measuring plate VW 385/17 onto drive pinion.
- Mount dial gauge and set to "0" with 1 mm preload.
- Move drive pinion up and down several times without turning.

Note:

When performing measurements, do not turn drive pinion as the bearings will otherwise settle and falsify the measurement results.

Protected by copyright. Copying for private or commercial purposes, in part or in whole, is not permitted unless authorised by AUDI AG. AUDI AG does not guarantee or accept any liability with respect to the correctness of information in this document. Copyright by AUDI AG.

- Read off axial play on dial gauge and note.

- Measurement in following example: 0.95 mm.

The specified bearing preload is achieved by subtracting the dial gauge reading (0.95 mm), the preload of the bearings (constant value of 0.15 mm) and the allowance for settling of bearings (constant value of 0.10 mm) from the 2 x 1.20 mm thick shims.

Determining thickness of provisional shim "S4*"

The provisional shim "S4" is replaced by the correct shim "S4" when measurement "e" has been determined.*

Example:

Shims inserted (instead of "S4")	2.40 mm
- Dial gauge reading	0.95 mm
- Preload (constant value)	0.15 mm
- Allowance for settling of bearings (constant value)	0.10 mm
= Thickness of shim "S4*"	1.20 mm

- Remove cover for drive pinion, spacer tube and provisional 2.40 mm shims used for measurement.
- Install shim "S4*" with the thickness calculated (1.20 mm in example) on drive pinion. Table of shims for "S4"=>Page 259 .

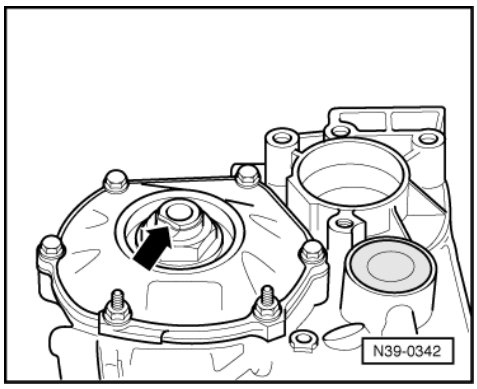

- -> Install drive pinion cover.
- Pre-tighten hexagon nut to 350 Nm, loosen, tighten to 240 Nm and peen using a drift -arrow-.

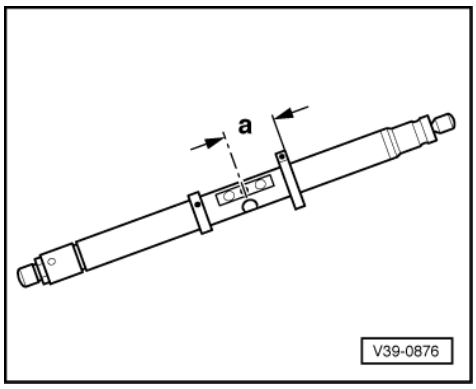

Determining measurement "e"

Note:

Measurement "e" is required to determine the final shim thickness of "S3" and "S4".

- -> Adjust setting ring of universal mandrel VW 385/1 to the following setting:
  - Distance a = 70 mm

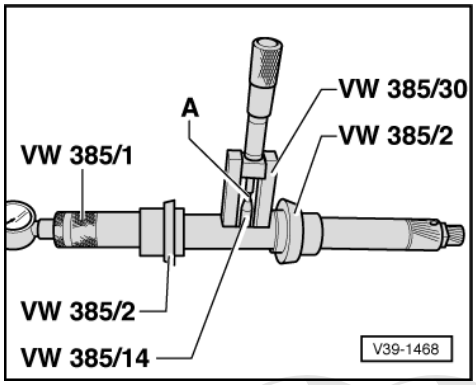

- -> Assemble universal mandrel VW 385/1 as illustrated:

  A - Dial gauge extension VW 385/16 = 12.3 mm long

- Set master gauge VW 385/30 to Ro = 59.2 mm (for crown wheel) and fit on universal mandrel.
- Set dial gauge (3 mm measuring range) to "0" with 2 mm preload.

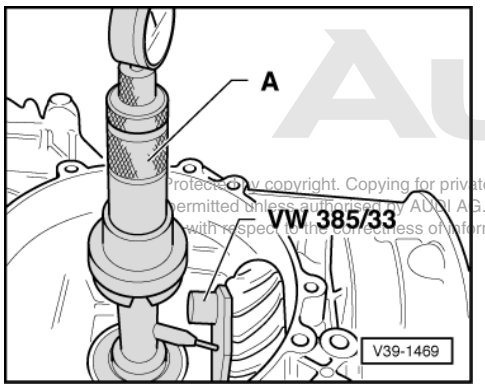

Protected by copyright. Copying for private or commercial purposes, in part or in whole, is not permitted unless authorised by AUDI AG. AUDI AG does not guarantee or accept any liability with respect to the correctness of information in this document. Copyright by AUDI AG.

- -> Place end measuring plate on face of drive pinion.

Note:

Ensure plate contact surface fits exactly and is free of oil.

- Insert universal mandrel -A-.
- Fit cover for differential and tighten the 4 bolts.
- Using sliding setting ring to pull 2nd centring disc outwards until mandrel can still just be turned by hand.

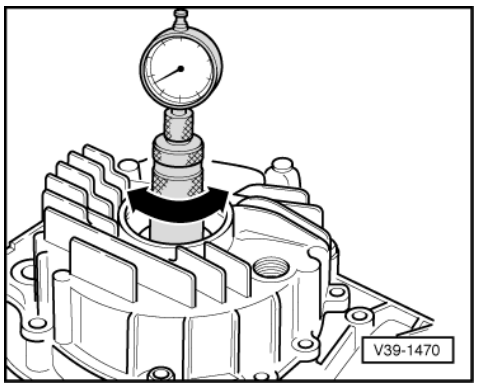

- -> Turn mandrel until tip of dial gauge makes contact with end measuring plate and indicates maximum deflection (return point). The reading obtained is measurement "e".

• In following example, reading "e" = 0.32 mm (red scale).

- Remove universal mandrel

Note:

Finally, check again that the dial gauge returns to "0" with master gauge VW 385/30 at 2 mm preload, otherwise repeat measurement.

Determining thickness of shim "S3"

Notes:

- The deviation "r" related to the master gauge "Ro" is measured for the final drive sets supplied as replacement parts and marked on outer circumference of the crown wheel=>Page 248 .
- If dial gauge reading is in red scale, dimension "e" must be added.
- If dial gauge reading is in black scale, dimension "e" must be subtracted.

"S3" = "S3*" - "r" - "e"
("e" in black scale)
or
"S3" = "S3*" - "r" + "e"
("e" in red scale)

Protected by copyright. Copying for private or commercial purposes, in part or in whole, is not permitted unless authorised by AUDI AG. AUDI AG does not guarantee or accept any liability with respect to the correctness of information in this document. Copyright by AUDI AG.

Example:	
Shim "S3*" already fitted	1.50 mm
- Deviation "r" (marked on circumference of crown wheel)	0.26 mm
+ Value measured for "e" (red scale)	0.32 mm
= Thickness of shim "S3"	1.56 mm

- Determine shim(s) as accurately as possible from table. Part numbers

=> Parts catalogue

Determining thickness of shim "S4"

"S4" = "S4*" - "r" - "e"
("e" in black scale)
or
"S4" = "S4*" - "r" + "e"
("e" in red scale)

Example:	
Shim "S4*" already fitted	1.20 mm
- Deviation "r" (marked on circumference of crown wheel)	0.26 mm
+ Value measured for "e" (red scale)	0.32 mm
= Thickness of shim "S4"	1.26 mm

- Determine shim(s) as accurately as possible from table. Part numbers

=> Parts catalogue

Notes:

Protected by copyright. Copying for private or commercial purposes, in part or in whole, is not permitted unless authorised by AUDI AG. AUDI AG does not guarantee or accept any liability with respect to the correctness of information in this document. Copyright by AUDI AG.

- If a thicker "S3" shim is required, also install a thicker "S4" shim (add the same amount).
- If a thinner "S3"shim is required, also install a thinner "S4" shim (subtract the same amount).

Table of shims for "S3"

Thickness of shims in mm			
1.05	1.30	1.55	1.80
1.10	1.35	1.60	1.85
1.15	1.40	1.65	
1.20	1.45	1.70	
1.25	1.50	1.75	

Table of shims for "S4"

Thickness of shims 1) in mm				
1.000	1.225	1.450	1.675	1.900
1.025	1.250	1.475	1.700	1.925
1.050	1.275	1.500	1.725	1.950
1.075	1.300	1.525	1.750	1.975
1.100	1.325	1.550	1.775	2.000
1.125	1.350	1.575	1.800	2.400
1.150	1.375	1.600	1.825	
1.175	1.400	1.625	1.850	
1.200	1.425	1.650	1.875	

1) Shim tolerance variations make it possible to find the exact thickness required for the "S4" shim; use 2 shims if necessary.

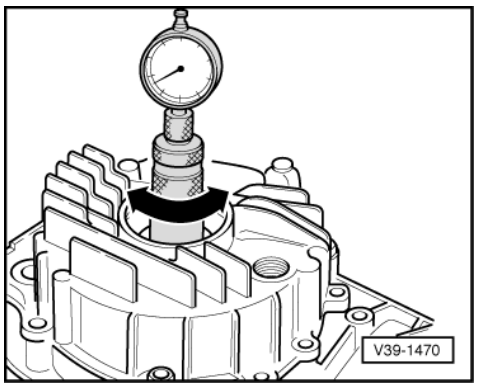

Carry out check measurement - checking dimension "r"

- Install drive pinion with shims "S3" and "S4" which have been measured.
- -> Insert universal mandrel (as described under "Determining measurement 'e'"=>Page 257) and perform check measurement.
- Turn the differential 5 turns in each direction to settle the taper roller bearings.
- Read off dial gauge anti-clockwise (red scale).
  - If the shims have been correctly selected, the deviation "r" (marked on outer circumference of crown wheel) must be shown - within a tolerance of ± 0.04 mm

5.5 - Adjusting crown wheel

(Adjusting differential)

The table on Page 245 lists the repairs which require adjustment of the crown wheel.

Determining total shim thickness "Stotal" for shims "S1" + "S2"

(Setting preload of taper roller bearing for differential)

- Drive pinion and differential removed.

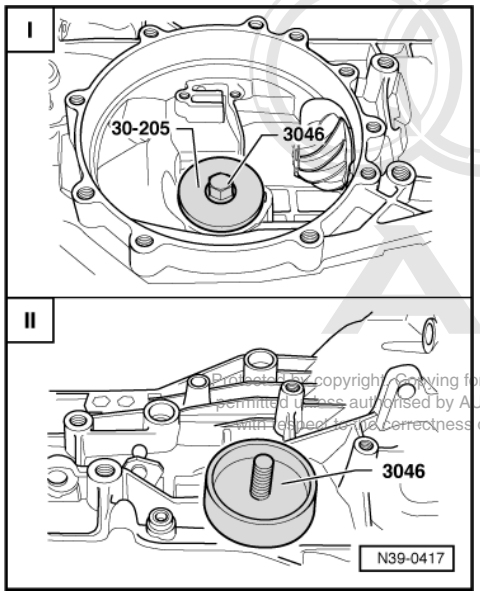

Protected by copyright. Copying for private or commercial purposes, in part or in whole, is not permitted unless authorised by AUDI AG. AUDI AG does not guarantee or accept any liability with respect to the correctness of information in this document. Copyright by AUDI AG.

- Take out old shims "S1" and "S2"=>Page 233 .

- Fit 1.5 mm provisional shim "S2" (2 shims of 0.75 mm) in taper roller bearing outer race seat.

Note:

For measurement purposes a provisional shim "S2" of 1.50 mm is installed; this shim is designated "S2" in the following. After determining the average backlash=>Page 262 , "S2*" will be replaced by the correct shim "S2".*

- -> Pull outer race of taper roller bearing into gearbox housing onto stop with shim "S2*".

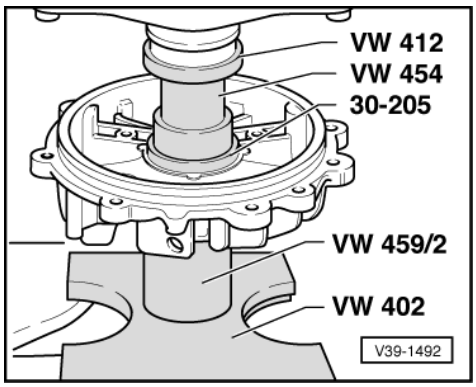

- -> Press taper roller bearing outer race without shim "S1" into cover for differential.
- Fit differential into gearbox housing.
- Fit differential cover and tighten bolts to 25 Nm.

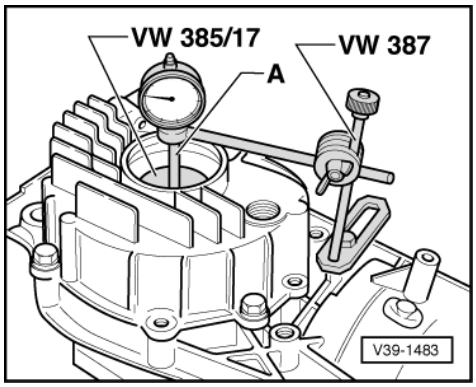

- -> Secure dial gauge bracket VW 387 to housing and place end measuring plate VW 385/17 on differential.
- Preload dial gauge to 1 mm and set to zero.
- Move differential up and down several times without turning it.

Note:

Do not turn differential when measuring otherwise the bearing will settle and a false measurement will be given.

- Read off axial play on dial gauge and note reading.

• Reading in following example: 0.60 mm.

"Stotal" = "S2*" + measurement + bearing preload

Example:		
	Installed shim(s) "S2*"	1.50 mm
+	Measurement	0.60 mm
+	Bearing preload (constant)	0.40 mm

Protected by copyright. Copying for private or commercial purposes, in part or in whole, is not permitted unless authorised by AUDI AG. AUDI AG does not guarantee or accept any liability with respect to the correctness of information in this document. Copyright by AUDI AG.

=	Total thickness "Stotal" for shims "S1" + "S2"	2.50 mm

Determining thickness of shim "S1*"

Notes:

- The provisional shim "S1*" will be replaced with the correct shim "S1" after determining the backlash.
- The total shim thickness "Stotal" remains unchanged.

"S1*"	=	"Stotal" - "S2*"

Example:		
	Total thickness "Stotal" for shims "S1" + "S2"	2.50 mm
-	Inserted shim(s) "S2*"	1.50 mm
=	Thickness of shim "S1*"	1.00 mm

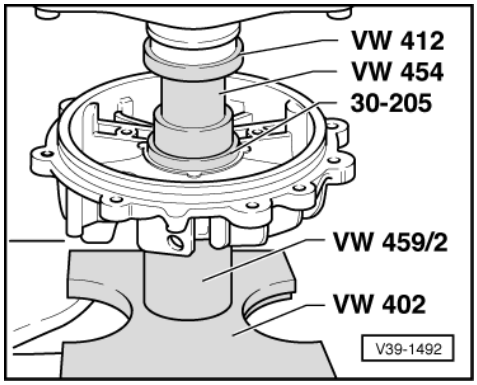

- -> Press outer race for taper roller bearing with a shim "S1*" of the calculated thickness (1.00 mm in example) into cover for differential. Table of shims available for "S1"=>Page 264 .
- Fit cover and tighten bolts to 25 Nm.

Adjusting backlash

(Setting position of crown wheel in gearbox housing)

- Drive pinion and shims "S3" and "S4" installed

- Install differential with shims "S1*" and "S2*".

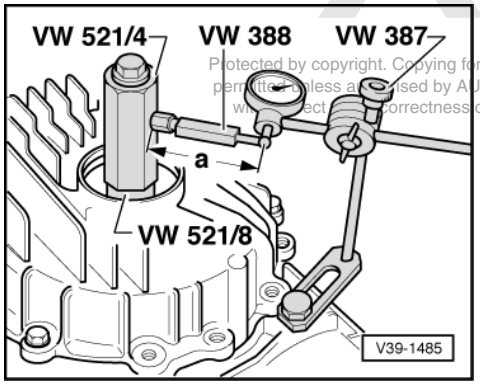

Protected by copyright. Copying for private or commercial purposes, in part or in whole, is not permitted unless authorised by AUDI AG. AUDI AG does not guarantee or accept any liability with respect to the correctness of information in this document. Copyright by AUDI AG.

- Fit differential cover and tighten bolts to 25 Nm.
- Turn the differential 5 turns in each direction to settle the taper roller bearings.
- -> Secure dial gauge retainer VW 387 onto housing.
- Attach crown wheel adjusting device VW 521/4 and VW 521/8.

- Set measuring lever VW 388 to dimension "a" = 70 mm.

Measure play between teeth flanks (backlash) as follows:

- Turn crown wheel until it makes contact with one tooth flank (end of backlash travel).
- Preload dial gauge to 1 mm and set to zero.
- Turn crown wheel back until it makes contact with the opposite tooth flank.
- Read off backlash and note reading.

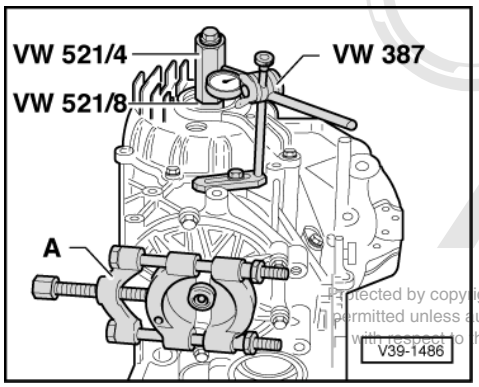

Protected by copyright. Copying for private or commercial purposes, in part or in whole, is not permitted unless authorised by AUDI AG. AUDI AG does not guarantee or accept any liability with respect to the correctness of information in this document. Copyright by AUDI AG.

- -> Fit separating device -A- (e.g. Kukko 17/2) if drive pinion turns whilst turning differential so that an exact backlash can be measured.
- Loosen locking screw of VW 521/4. Then turn crown wheel through a further 90°and repeat complete measuring process another 3 times. Add the four measured values together and calculate average backlash.

Determining average backlash

- Add the four measured values together and divide by four.

Example:		
	1st measurement	0.49 mm
+	2nd measurement	0.48 mm
+	3rd measurement	0.50 mm
+	4th measurement	0.49 mm
=	Sum of measured values	1.96 mm

• Result: the average backlash is 1.96 mm /4 = 0.49 mm.

If the individual measurements differ by more than 0.06 mm this means that the installation of the crown wheel is not correct or that the crown wheel and pinion themselves are defective. Recheck the installation, and if necessary renew crown wheel and pinion.

Determining thickness of shim"S2"

- Multiply the backlash figure by 1.17 (constant value), subtract the result from the thickness of the already inserted shim "S2" (1.50 mm in example), and add 0.20 mm for lift (constant value).

"S2" = "S2*" - backlash + lift

Example:		
	Installed shim(s) "S2*"	1.50 mm
-	Average backlash (0.49 mm) x 1.17	0.57 mm
+	Lift (constant)	0.20 mm
=	Thickness of shim "S2"	1.13 mm

- Determine shim(s) as accurately as possible from table. Part numbers

=> Parts catalogue

The following shims are available for "S2"

Shim thickness (mm) 1)		
0.55	0.75	0.95
0.60	0.80	1.00
0.65	0.85	1.05
0.70	0.90	

1) Using the shim tolerance variations it is possible to find the exact shim thickness required, insert two shims if necessary.

Determining thickness of shim "S1"

"S1" = "Stotal" - "S2"

Example:		
	Total thickness "Stotal" for "S1" + "S2"	2.50 mm
-	Thickness of shim "S2"	1.13 mm
=	Thickness of shim "S1"	1.37 mm

- Determine shim(s) as accurately as possible from table. Part numbers

=> Parts catalogue

The following shims are available for "S1"

Shim thickness (mm) 1)		
0.55	0.75	0.95
0.60	0.80	1.00
0.65	0.85	1.05
0.70	0.90	

1) Using the shim tolerance variations it is possible to find the exact shim thickness required, insert two shims if necessary.

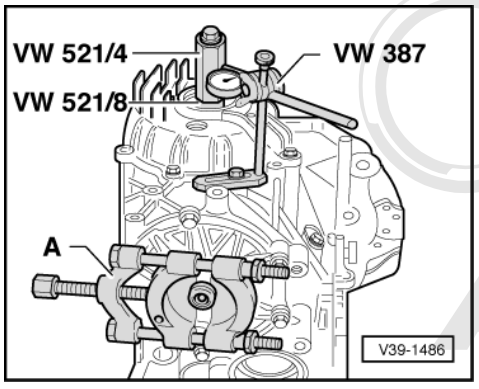

Protected by copyright. Copying for private or commercial purposes, in part or in whole, is not permitted unless authorised by AUDI AG. AUDI AG does not guarantee or accept any liability with respect to the accuracy of information in this document. Copyright by AUDI AG.

-> Carrying out measurement check - Measuring backlash

- After installing shims "S1" and "S2", turn differential 5 turns in both directions so that the taper roller bearings settle.
- Measure backlash four times on circumference.
  - Specification: 0.15 ... 0.25 mm