2003-06 ENGINE

Engine Lubrication - MDX

SPECIAL TOOLS

Ref. No.	Tool Number	Description	Qty
①	07HAA-PJ70100	Oil Filter Wrench	1
②	070AD-RCAA100	Oil Seal Driver, 64 mm	1

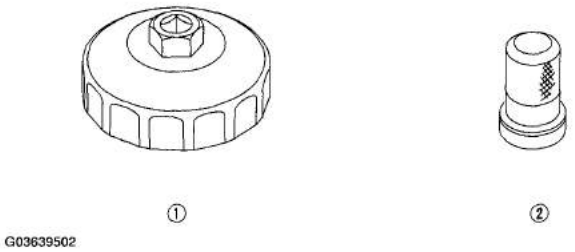

Fig. 1: Identifying Special Tool
Courtesy of AMERICAN HONDA MOTOR CO., INC.

COMPONENT LOCATION INDEX

cardiagn.com

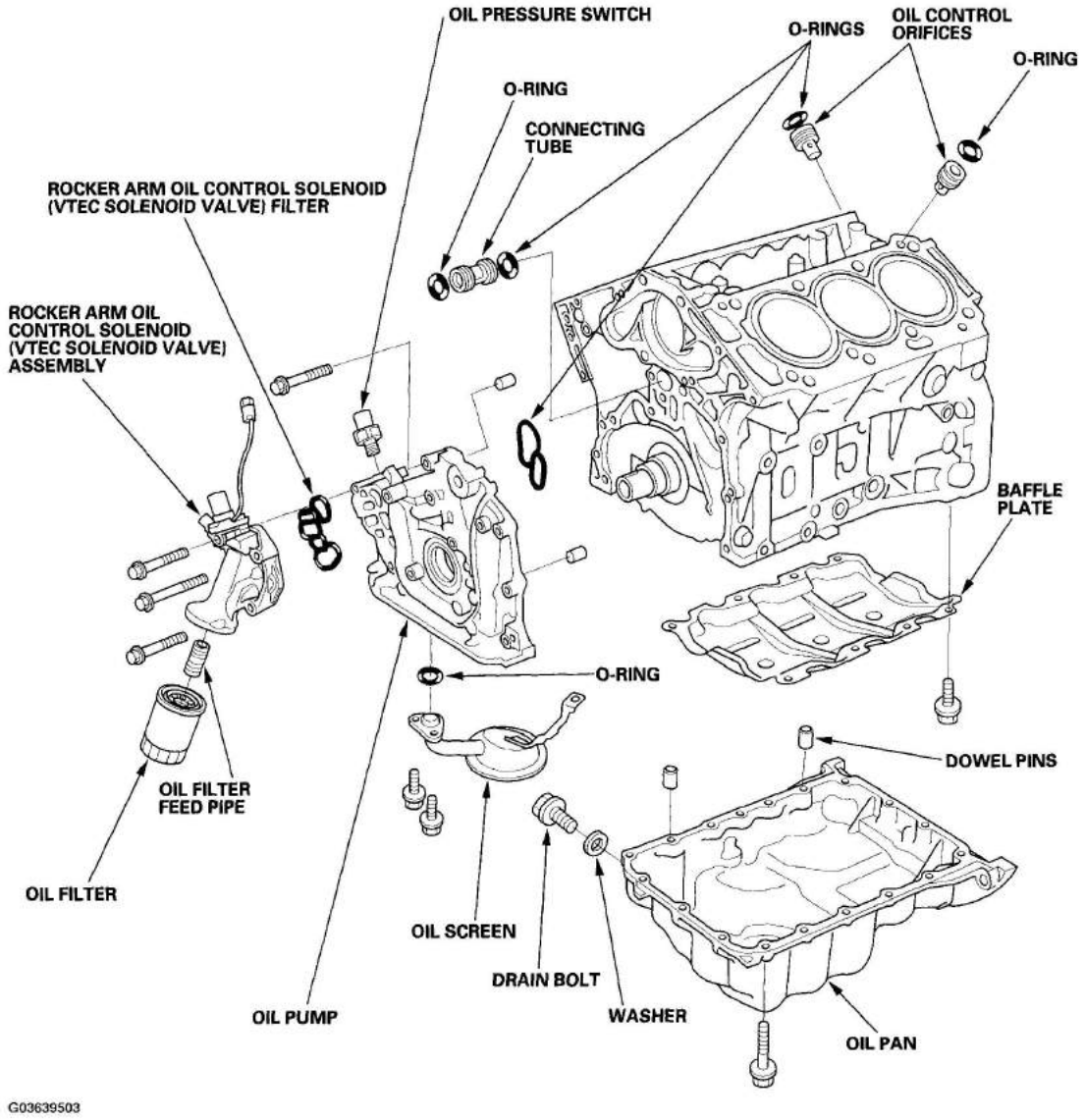

Fig. 2: Identifying Engine Lubrication Components
Courtesy of AMERICAN HONDA MOTOR CO., INC.

SYMPTOM TROUBLESHOOTING INDEX

SYMPTOM TROUBLESHOOTING INDEX

Symptom	Diagnostic procedure	Also check for
	1. Check for looseness in the engine oil fill cap, oil drain bolt, and oil filter. 2. Check for oil leaks. 3. Check for worn valve guide(s)	

cardiagn.com

Excessive engine oil consumption	(see**VALVE INSPECTION**) or worn valve stem seal(s) (see**VALVE, SPRING, AND VALVE SEAL REMOVAL**). 4. Check for damaged or worn piston ring(s) (see**PISTON RING REPLACEMENT**). 5. Check for damaged or worn engine internal parts (cylinder wall, pistons, etc.) (see**BLOCK AND PISTON INSPECTION**).	
Low oil pressure indicator does not come on with the ignition switch ON (II)	1. Do the gauge control unit input test (see **CONTROL UNIT INPUT TEST**). 2. Test the oil pressure switch (see **OIL PRESSURE SWITCH TEST**).	An open in the wire between the gauge control module and the oil pressure switch
Low oil pressure indicator stays on	1. Check the engine oil level. 2. Do the gauge control unit input test (see **CONTROL UNIT INPUT TEST**). 3. Test the oil pressure switch (see **OIL PRESSURE SWITCH TEST**). 4. Check the engine oil pressure (see **OIL PRESSURE TEST**). 5. Check the oil filter for clogging. 6. Check the oil screen for clogging. 7. Check the relief valve (see **OIL PUMP OVERHAUL**). 8. Test the oil pump (see **REMOVAL**).	A wire shorted to ground between the gauge control module and the oil pressure switch

OIL PRESSURE SWITCH TEST

1. Remove the YEL/RED wire (A) from the engine oil pressure switch (B).

cardiagn.com

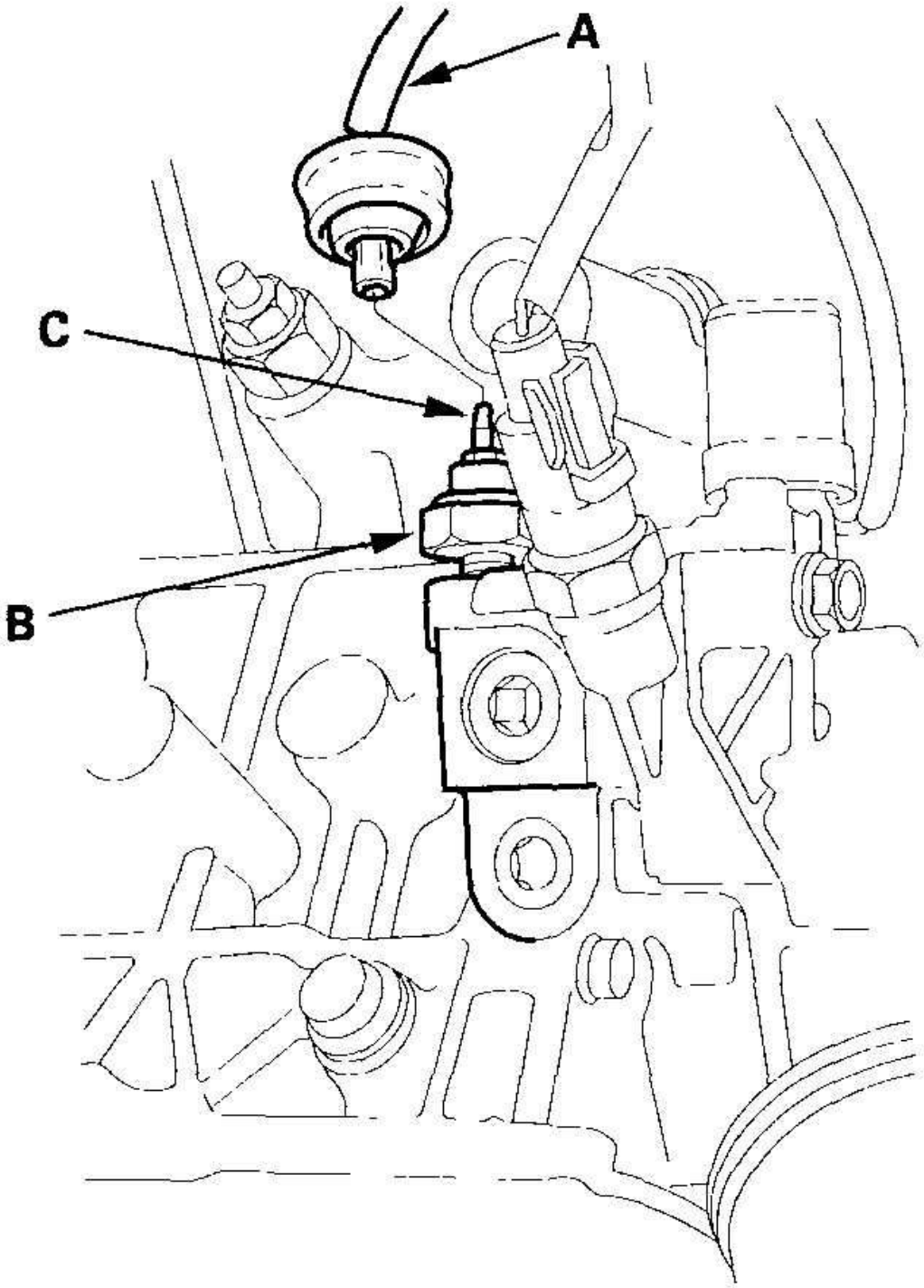

G03639504

cardiagn.com

Fig. 3: Removing YEL/Red Wire From Engine Oil Pressure Switch
Courtesy of AMERICAN HONDA MOTOR CO., INC.

2. Check for continuity between the positive terminal (C) and the engine (ground). There should be continuity with the engine stopped. There should be no continuity with the engine running.

OIL PRESSURE SWITCH REPLACEMENT

1. Disconnect the oil pressure switch connector, then remove the oil pressure switch.

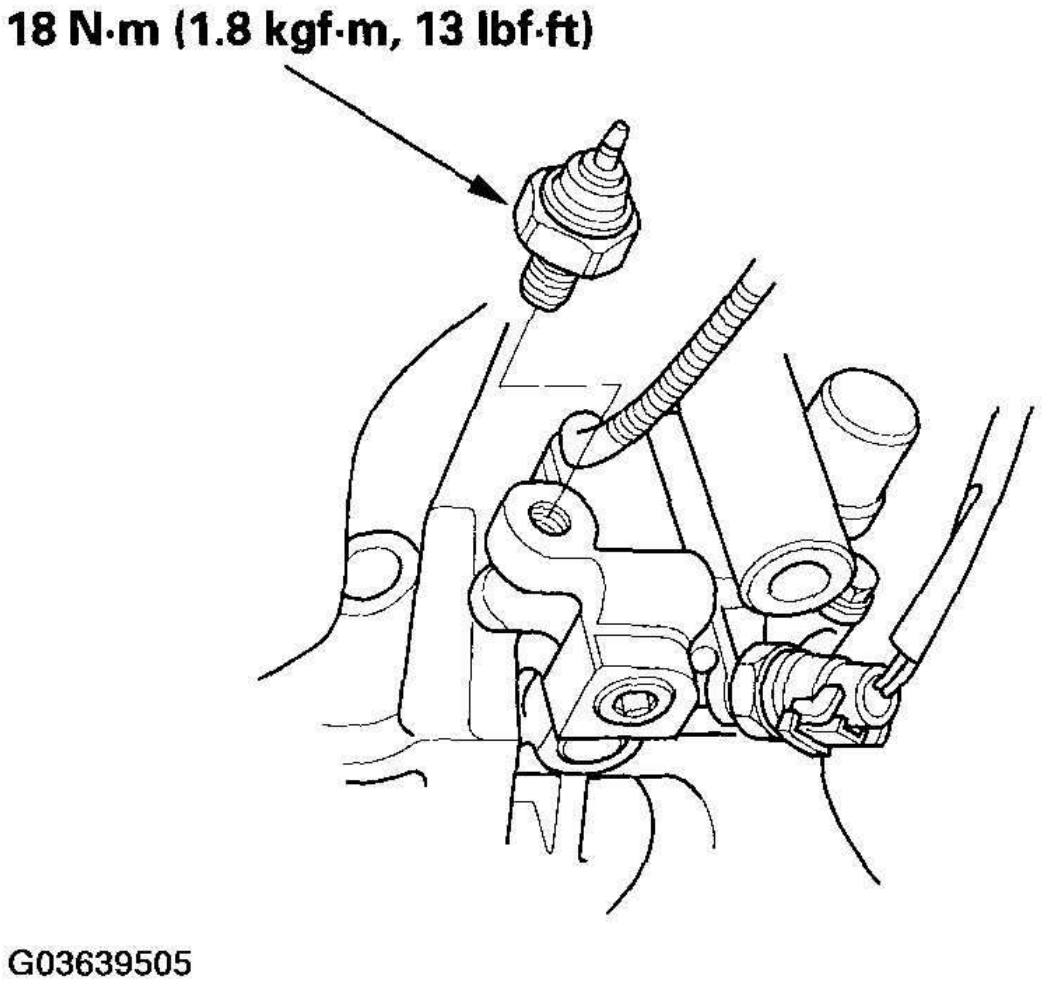

Fig. 4: Disconnecting Oil Pressure Switch Connector
Courtesy of AMERICAN HONDA MOTOR CO., INC.

2. Remove any old liquid gasket from the switch and switch mounting hole.

cardiagn.com

3. Apply a very small amount of liquid gasket to the oil pressure switch threads, then install the oil pressure switch.

NOTE: Using too much liquid gasket may cause liquid gasket to enter the oil passage or the end of the new oil pressure switch.

OIL PRESSURE TEST

If the low oil pressure indicator stays on with the engine running, check the engine oil level. If the oil level is correct:

1. Remove the engine oil pressure switch, then install an oil pressure gauge (A).

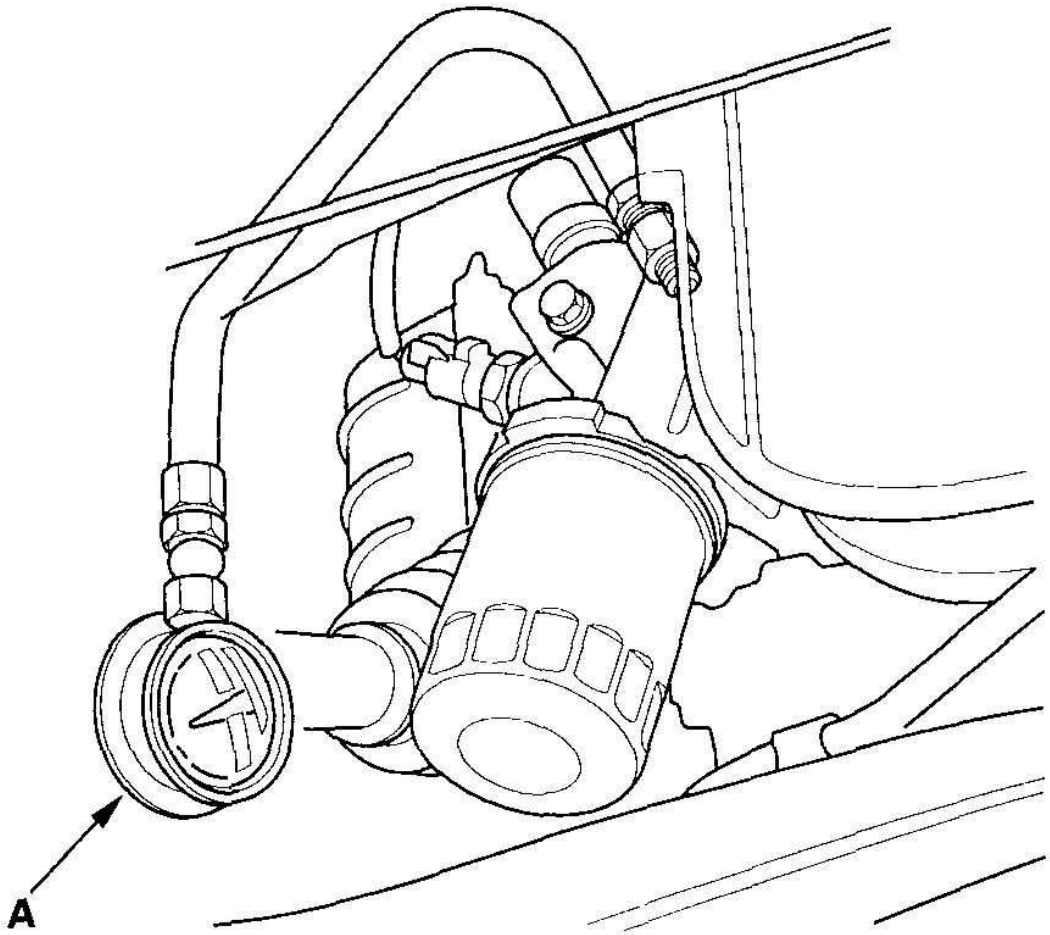

G03639506

cardiagn.com

Fig. 5: Installing Oil Pressure Gauge
Courtesy of AMERICAN HONDA MOTOR CO., INC.

2. Start the engine. Shut it off immediately if the gauge registers no oil pressure. Repair the problem before continuing.
3. Allow the engine to reach operating temperature (fan comes on at least twice). The pressure should be:

   Engine Oil Temperature: 176°F (80°C)

   Engine Oil Pressure:

   At Idle: 70 kPa (0.7 kgf/cm^2 ,10 psi) min.

   At 3,000 rpm: 490 kPa (5.0 kgf/cm^2 ,71 psi) min.
4. If oil pressure is not within specifications, inspect these items:
   - Replace the oil filter (see **ENGINE OIL FILTER REPLACEMENT**).
   - Check the oil screen for clogging.
   - Check the relief valve (see **OIL PUMP OVERHAUL**).
   - Inspect the oil pump (see **REMOVAL**).

ENGINE OIL REPLACEMENT

1. Warm up the engine.
2. Remove the drain bolt (A), and drain the engine oil.

cardiagn.com

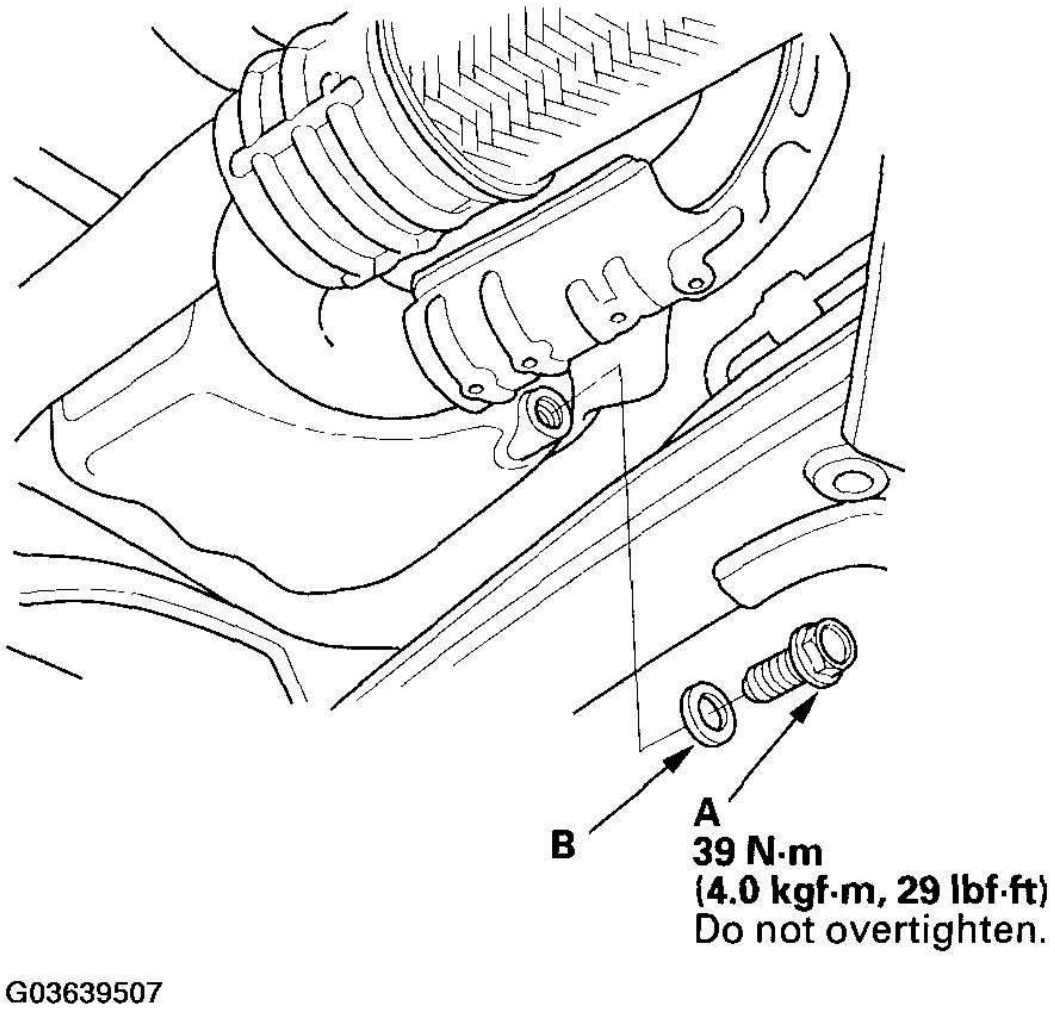

Fig. 6: Removing Drain Bolt
Courtesy of AMERICAN HONDA MOTOR CO., INC.

3. Reinstall the drain bolt with a new washer (B).
4. Refill with the recommended oil (see **LUBRICANTS & FLUIDS**).

Capacity

At Oil Change: 4.0 L (4.2 US qt)
At Oil Change including Filter: 4.3 L (4.5 US qt)
After Engine Overhaul: 5.0 L (5.3 US qt)

5. Run the engine for more than 3 minutes, then check for oil leakage.

cardiagn.com

ENGINE OIL FILTER REPLACEMENT

Special Tools Required

Oil filter wrench 07HAA-PJ70100

1. Remove the oil filter with the special tool.
2. Inspect the threads (A) and rubber seal (B) on the new filter. Clean the seat on the engine block, then apply a light coat of new engine oil to the filter rubber seal. Use only filters with a built-in bypass system.

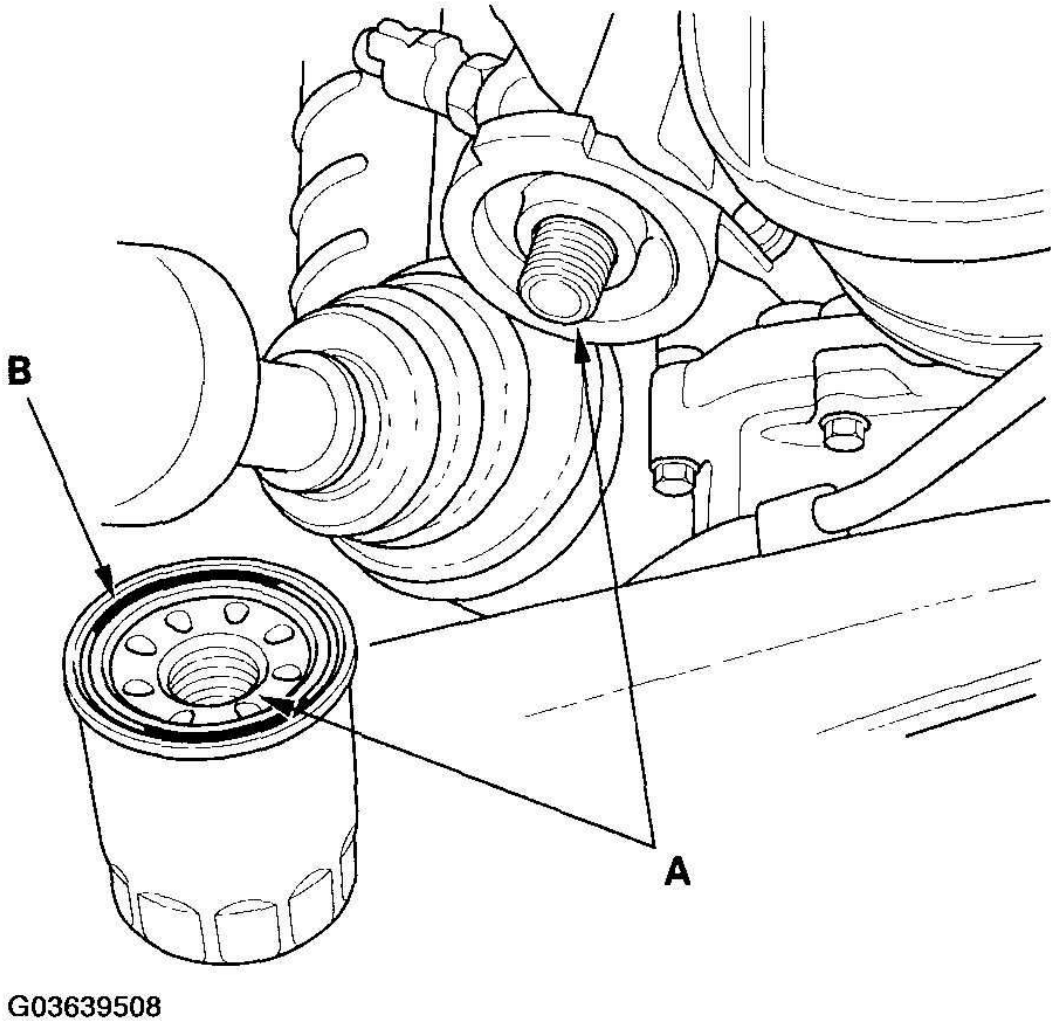

Fig. 7: Inspecting Threads And Rubber SealOn Filter
Courtesy of AMERICAN HONDA MOTOR CO., INC.

cardiagn.com

3. Install the oil filter by hand.
4. After the rubber seal seats, tighten the oil filter clockwise with the special tool.

   Tighten: 3/4 Turn Clockwise

   Tightening Torque: 12 N.m (1.2 kgf.m, 8.7 lbf.ft)

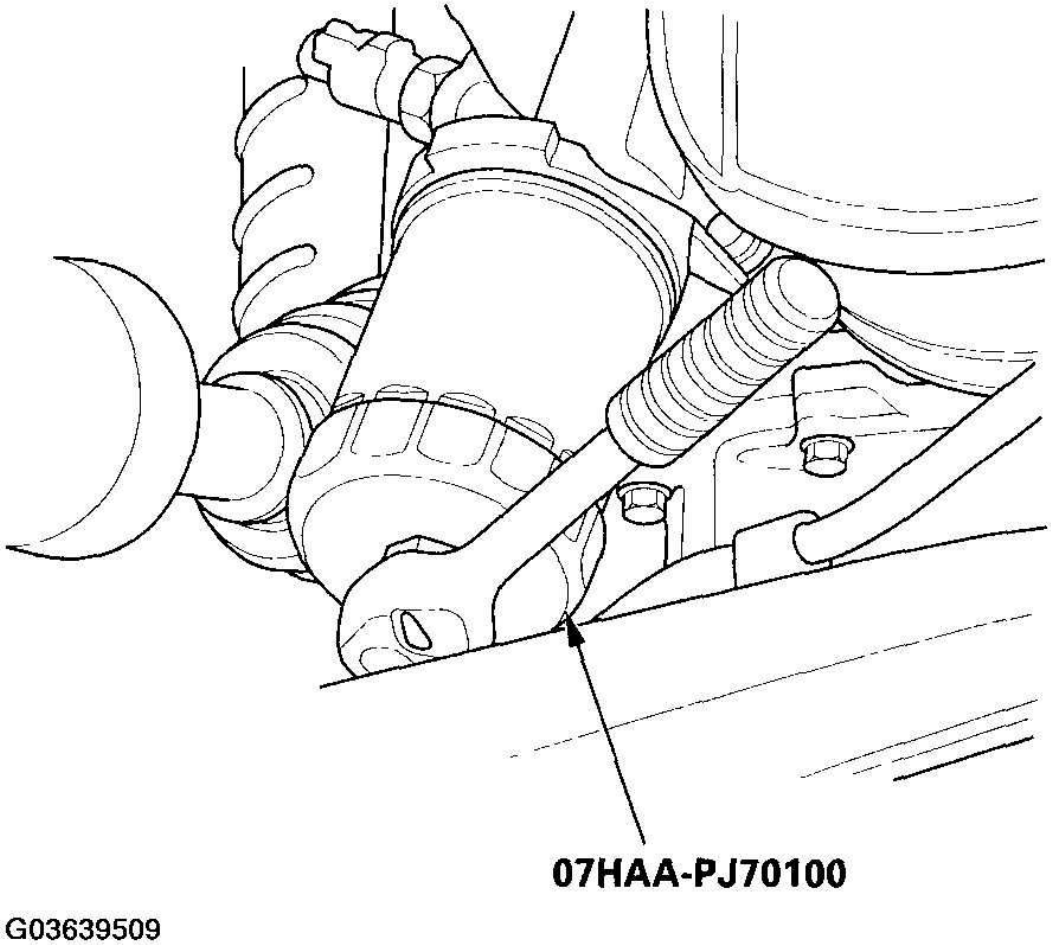

Fig. 8: Tightening Oil Filter With Special Tool
Courtesy of AMERICAN HONDA MOTOR CO., INC.

5. If four numbers or triangle(s) are printed around the outside of the filter, you can use the following procedure to tighten the filter.
   - Spin the filter on until its seal lightly seats against the block, and note which number or triangle(s) is at the bottom.
   - Tighten the filter by turning it clockwise three numbers or triangle(s) from the one you noted. For example, if triangle is at the bottom when the seal is lightly seated, tighten the filter until the

cardiagn.com

triangles comes around to the bottom.

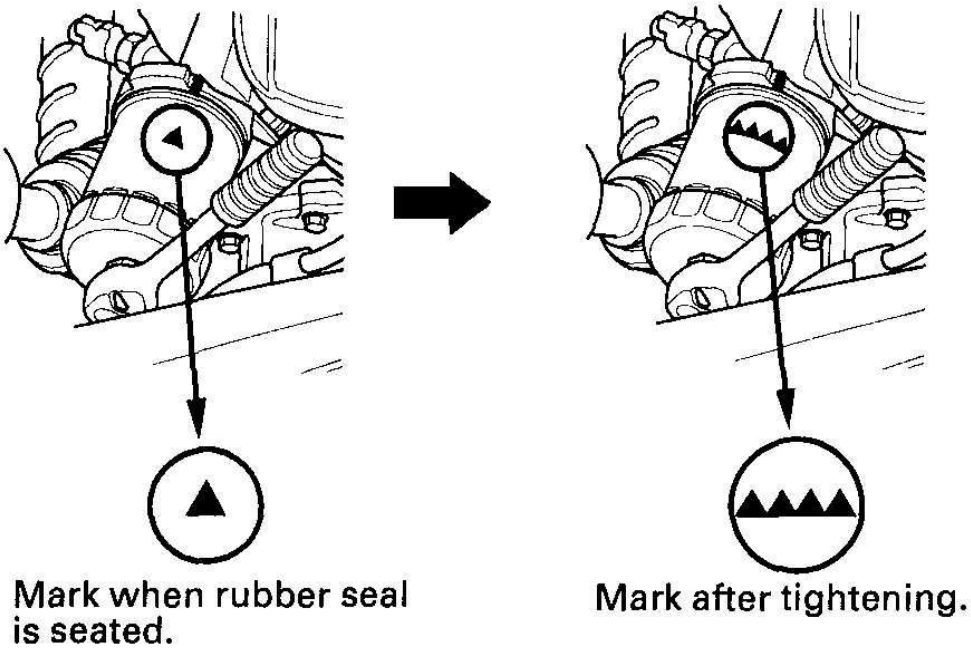

Number or Mark when rubber seal is seated	1 or ▼	2 or ▼▼	3 or ▼▼▼	4 or ▼▼▼▼
Number or Mark after tightening	4 or ▼▼▼▼	1 or ▼	2 or ▼▼	3 or ▼▼▼

G03639510

Fig. 9: Tightening Filter
Courtesy of AMERICAN HONDA MOTOR CO., INC.

6. After installation, fill the engine with oil up to the specified level, run the engine for more than 3 minutes, then check for oil leakage.

OIL FILTER FEED PIPE REPLACEMENT

1. Remove the filter (see **ENGINE OIL FILTER REPLACEMENT**).

cardiagn.com

2. Remove the oil filter feed pipe.

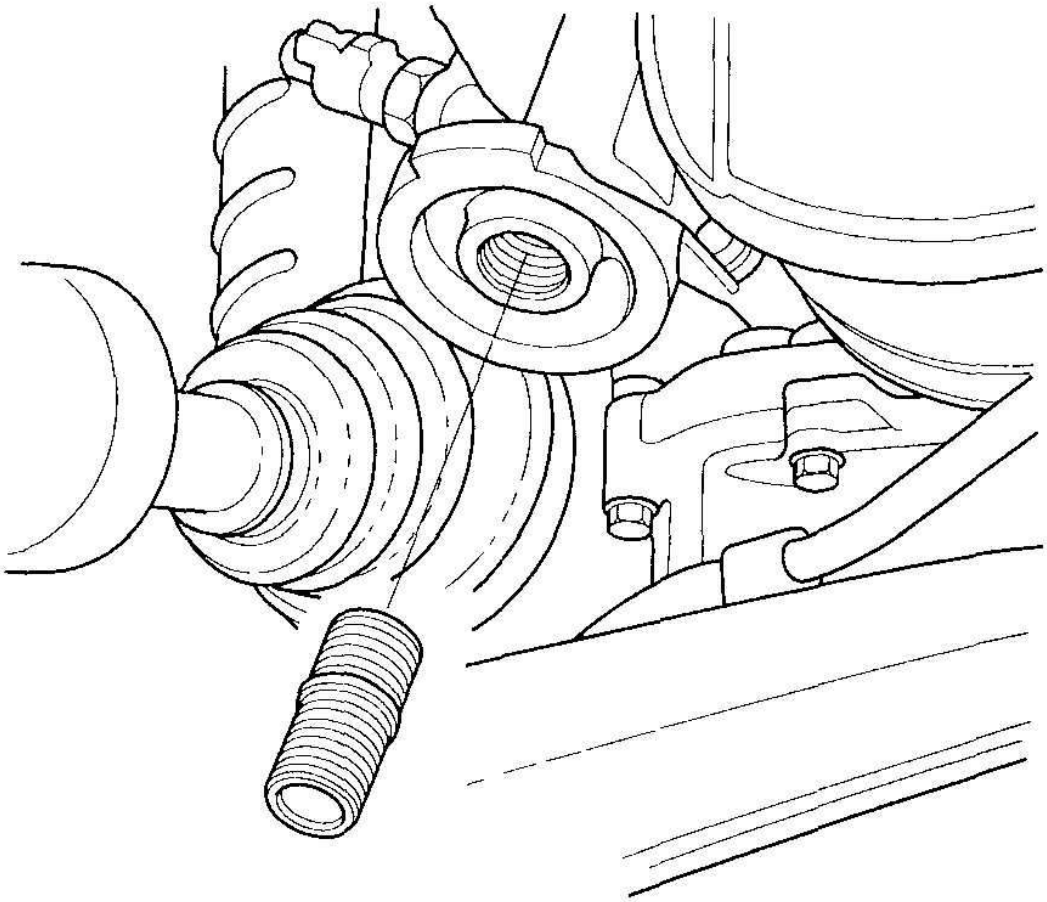

Fig. 10: Removing Oil Filter Feed Pipe
Courtesy of AMERICAN HONDA MOTOR CO., INC.

3. Install two 20 x 1.5 mm nuts (A) onto the new oil filter feed pipe, and hold one nut with a wrench, then tighten the other nut.

cardiagn.com

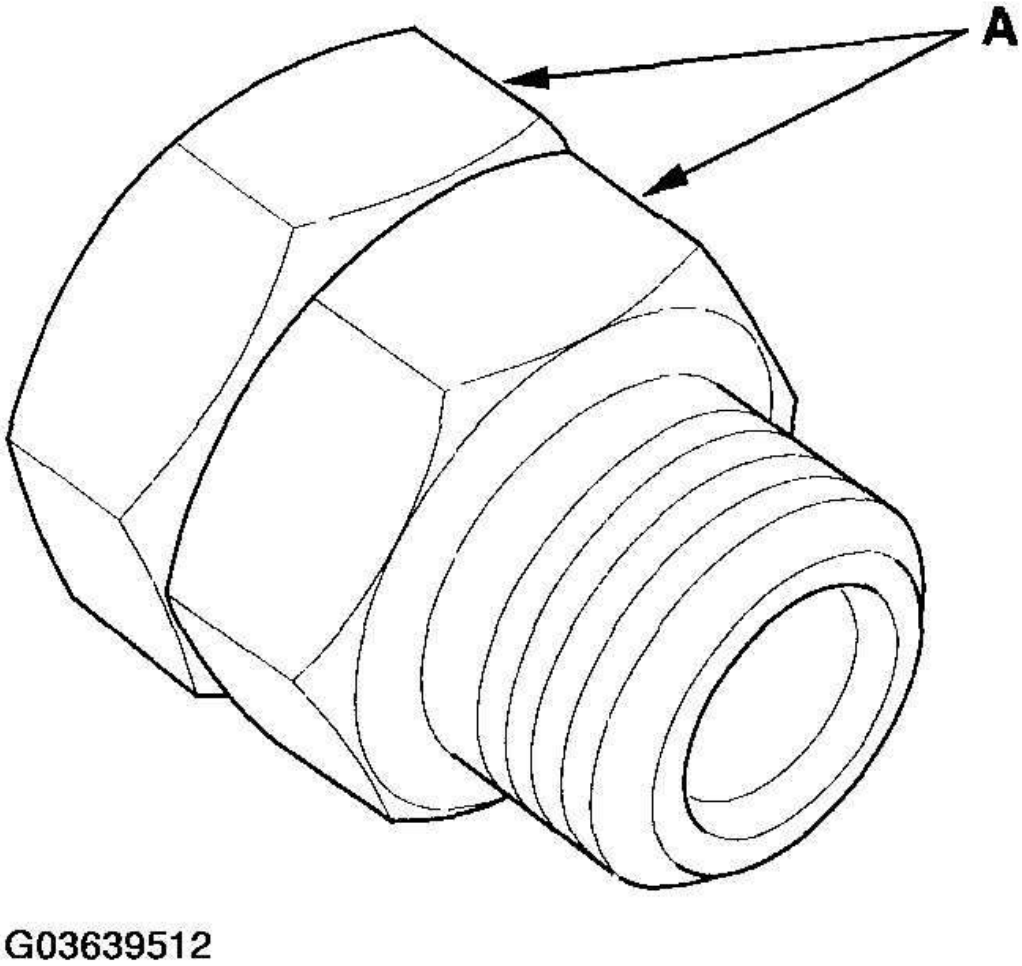

Fig. 11: Installing Nuts Onto Oil Filter Feed Pipe
Courtesy of AMERICAN HONDA MOTOR CO., INC.

4. Tighten the oil filter feed pipe to 49 N.m (5.0 kgf.m, 36 lbf.ft), then remove the nuts from the oil filter feed pipe.

OIL PUMP OVERHAUL

EXPLODED VIEW

cardiagn.com

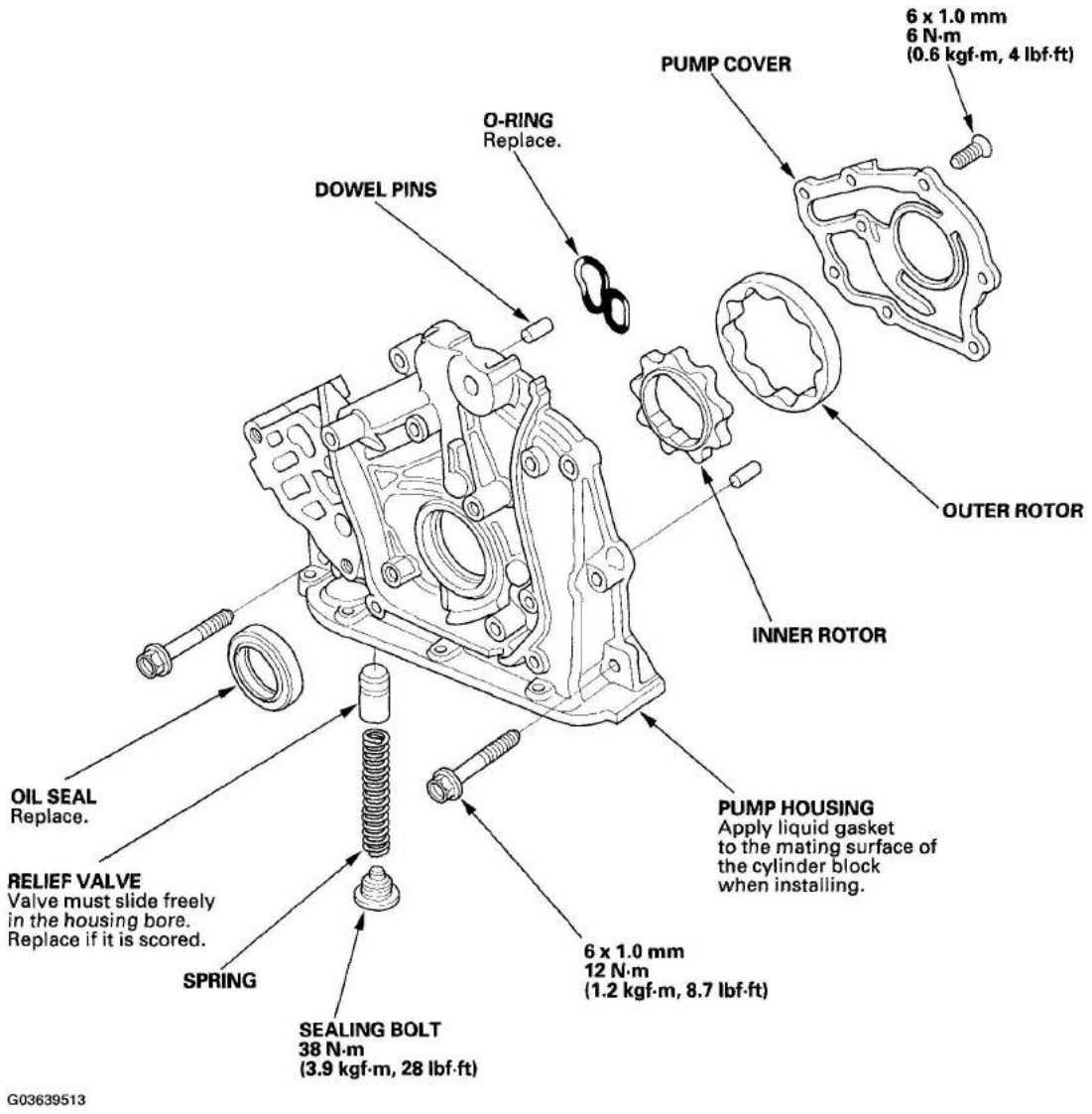

Fig. 12: Exploded View Of Oil Pump
Courtesy of AMERICAN HONDA MOTOR CO., INC.

Special Tools Required

Oil seal driver, 64 mm 070AD-RCAA100

REMOVAL

1. Drain the engine oil (see **ENGINE OIL REPLACEMENT**).
2. Turn the crankshaft so that the No. 1 piston is at top dead center (TDC) (see **TIMING BELT INSPECTION**).
3. Remove the timing belt (see **TIMING BELT REMOVAL**).

cardiagn.com

4. Remove the idler pulley.
5. Remove the crankshaft position (CKP) sensor (see **CKP SENSOR REPLACEMENT**).
6. Attach the chain hoist to the engine hanger on the power steering (P/S) pump bracket (see step 49 in **ENGINE REMOVAL**).
7. Remove the jack from under the oil pan.
8. Remove the rocker arm oil control solenoid (VTEC solenoid valve) and oil filter assembly (see**ROCKER ARM OIL CONTROL SOLENOID (VTEC SOLENOID (VTEC SOLENOID VALVE) REPLACEMENT).**
9. Remove the oil pan (see **OIL PAN REMOVAL**).
10. Remove the oil screen (A).

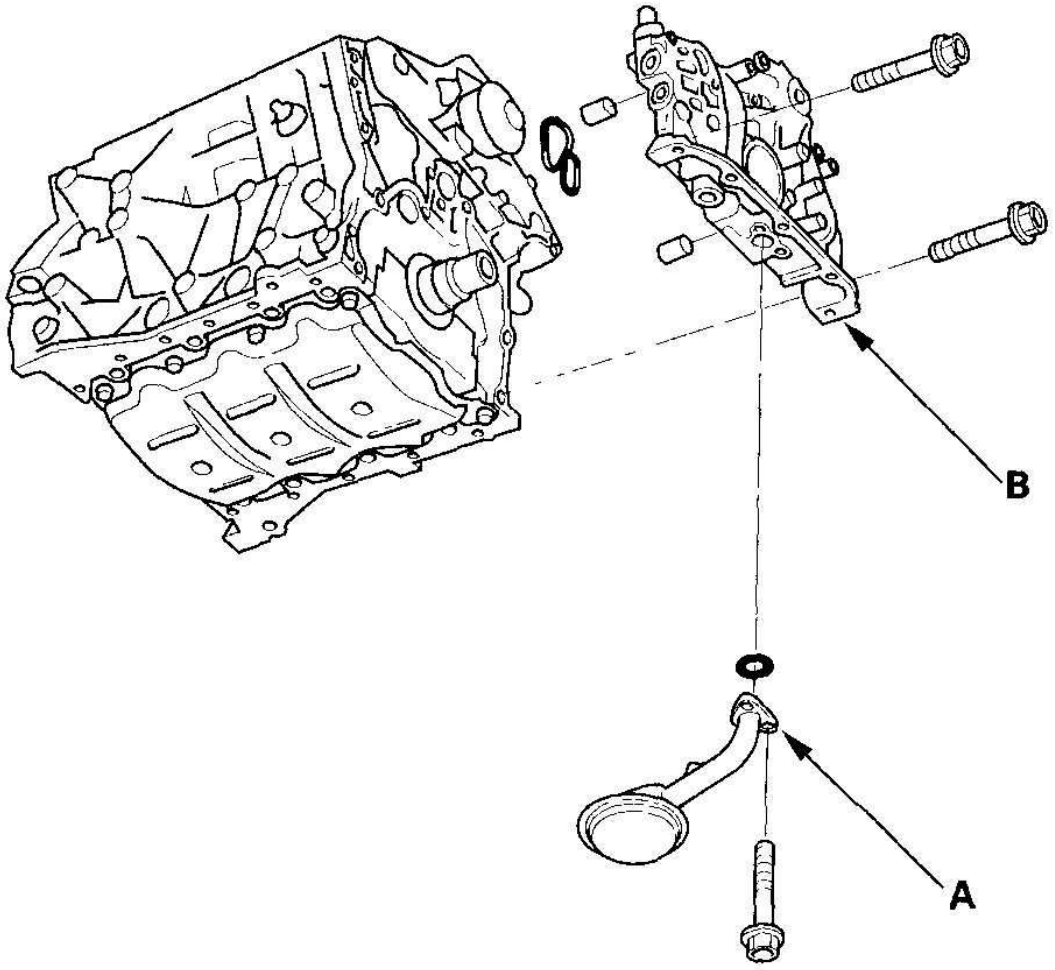

G03639514

Fig. 13: Removing Oil Screen

cardiagn.com

Courtesy of AMERICAN HONDA MOTOR CO., INC.

11. Remove the mounting bolts and the oil pump assembly (B).

INSPECTION

1. Remove the screws from the pump housing, then separate the housing and cover.
2. Check the inner-to-outer rotor radial clearance between the inner rotor (A) and outer rotor (B). If the inner-to-outer rotor clearance exceeds the service limit, replace the oil pump assembly.

Inner Rotor-to-Outer Rotor Radial Clearance

Standard (New): 0.04-0.16 mm (0.002-0.006 in.)
Service Limit: 0.20 mm (0.008 in.)

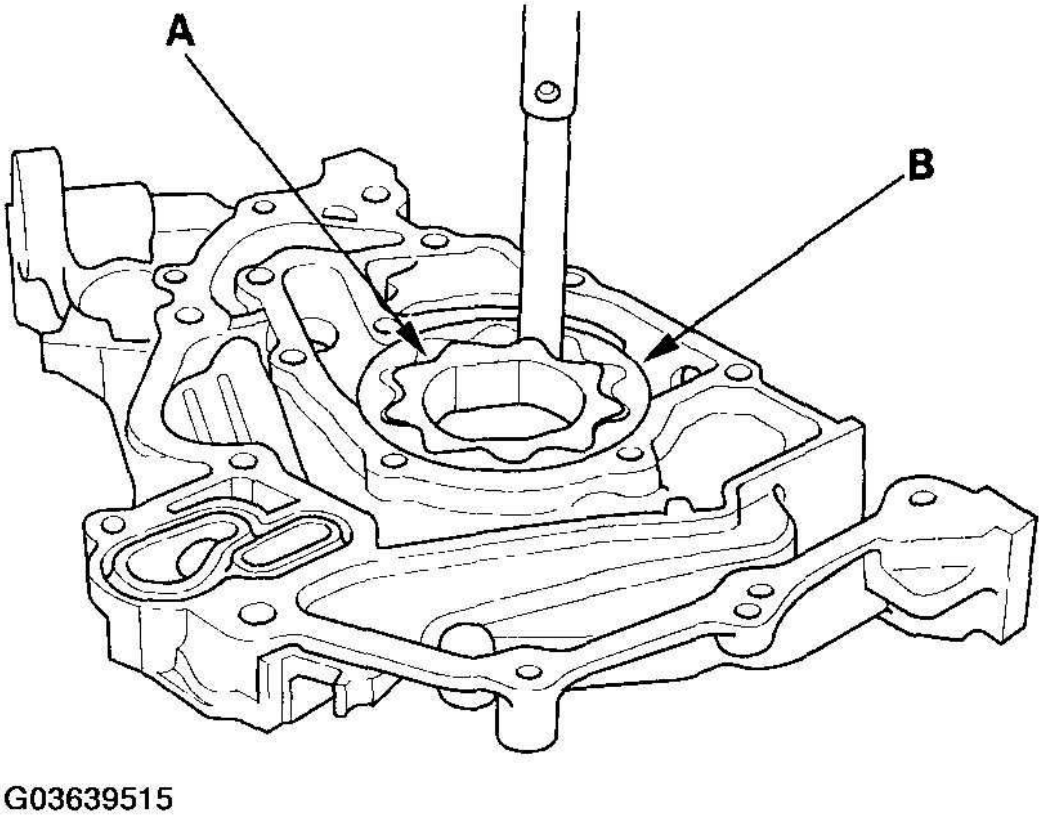

Fig. 14: Checking Inner-To-Outer Rotor Radial Clearance Between Inner And Outer Rotor
Courtesy of AMERICAN HONDA MOTOR CO., INC.

cardiagn.com

3. Check the housing-to-rotor axial clearance between the rotors (A) and pump housing (B). If the housing-to-rotor axial clearance exceeds the service limit, replace the oil pump assembly.

Housing-to-Rotor Axial Clearance

Standard (New): 0.02-0.07 mm (0.001-0.003 in.)
Service Limit: 0.12 mm (0.005 in.)

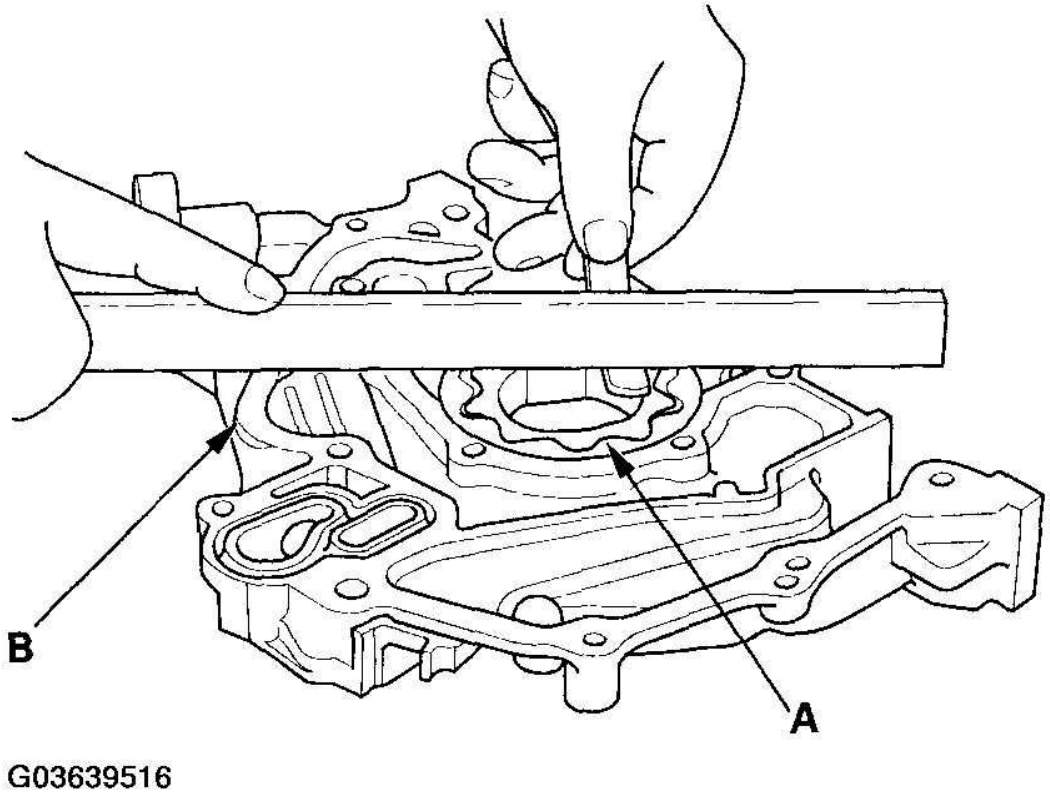

Fig. 15: Checking Housing-To-Rotor Axial Clearance Between Rotors And Pump Housing
Courtesy of AMERICAN HONDA MOTOR CO., INC.

4. Check the housing-to-outer rotor radial clearance between the outer rotor (A) and pump housing (B). If the housing-to-outer rotor radial clearance exceeds the service limit, replace the oil pump assembly.

Housing-to-Outer Rotor Radial Clearance

Standard (New): 0.10-0.19 mm (0.004-0.007 in.)
Service Limit: 0.20 mm (0.008 in.)

cardiagn.com

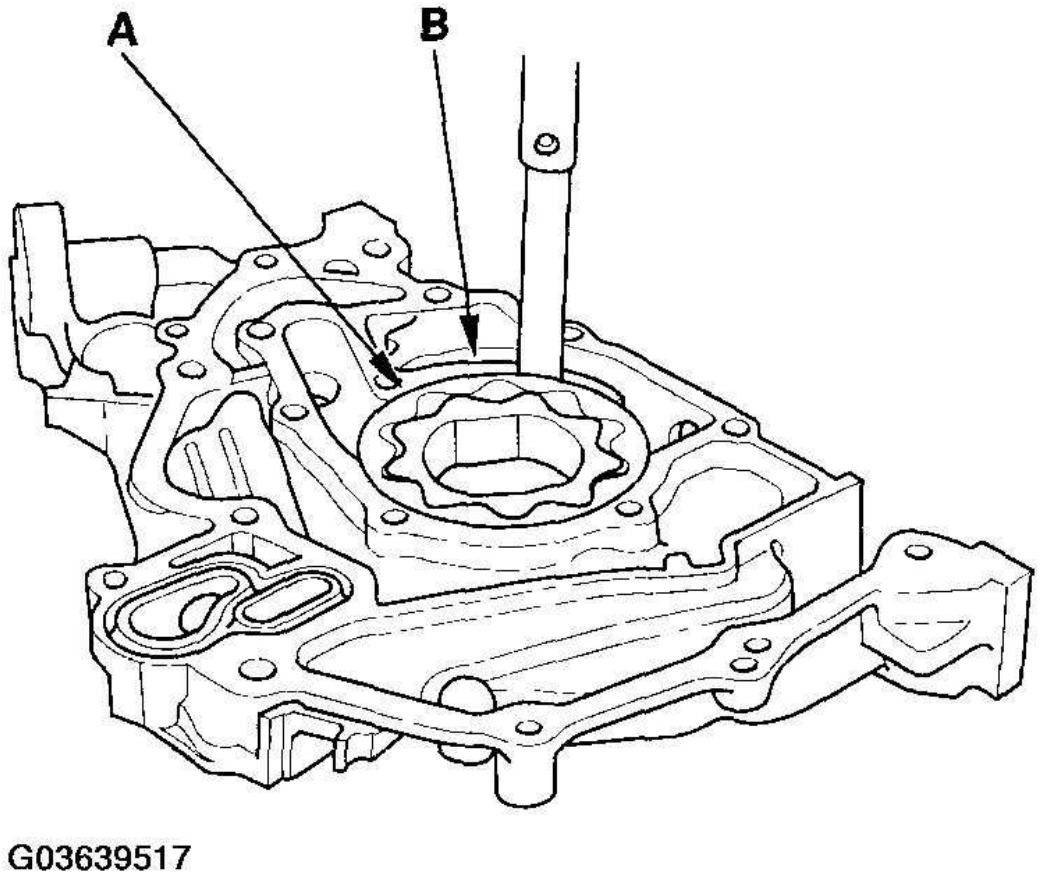

Fig. 16: Checking Housing-To-Outer Rotor Radial Clearance Between Outer And Pump Housing
Courtesy of AMERICAN HONDA MOTOR CO., INC.

5. Inspect both rotors and pump housing for scoring or other damage. Replace parts, if necessary.
6. Apply liquid thread lock to the pump housing screws, then install the oil pump cover.
7. Check that the oil pump turns freely.

INSTALLATION

1. Remove the old oil seal from the oil pump.
2. Gently tap in the new oil seal until the special tool bottoms on the pump.

cardiagn.com

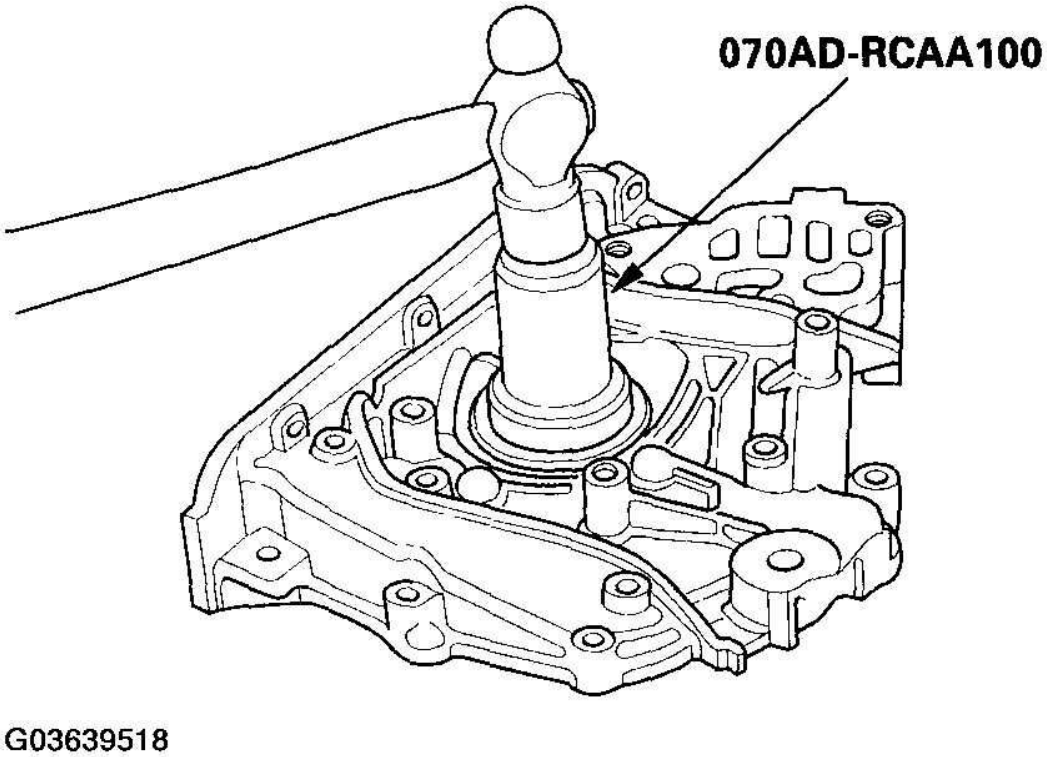

Fig. 17: Tapping In New Oil Seal
Courtesy of AMERICAN HONDA MOTOR CO., INC.

3. Remove any old liquid gasket from the oil pump mating surfaces, bolts, and bolt holes.
4. Clean and dry the oil pump mating surfaces.
5. Apply liquid gasket, P/N 08717-0004, 08718-0001, 08718-0002, 08718-0003, or 08718-0009, evenly to the engine block mating surface of the oil pump.

NOTE: **Do not install components if too much time has passed after applying the liquid gasket (for P/N 08718-0002, no more than 4 minutes, for all others, no more than 5 minutes). Instead, remove the old residue and reapply the liquid gasket.**

cardiagn.com

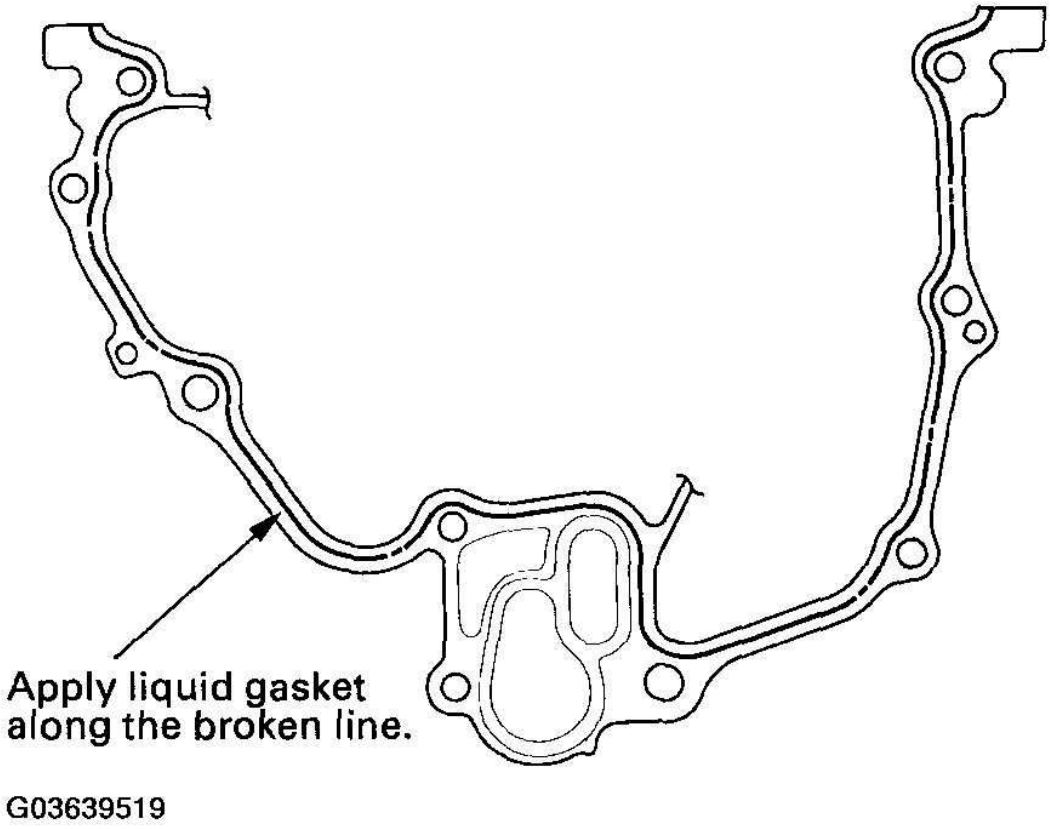

Fig. 18: Applying Liquid Gasket To Engine Block Mating Surface
Courtesy of AMERICAN HONDA MOTOR CO., INC.

6. Grease the lip of the oil seal, and apply oil to the new O-ring (A).

cardiagn.com

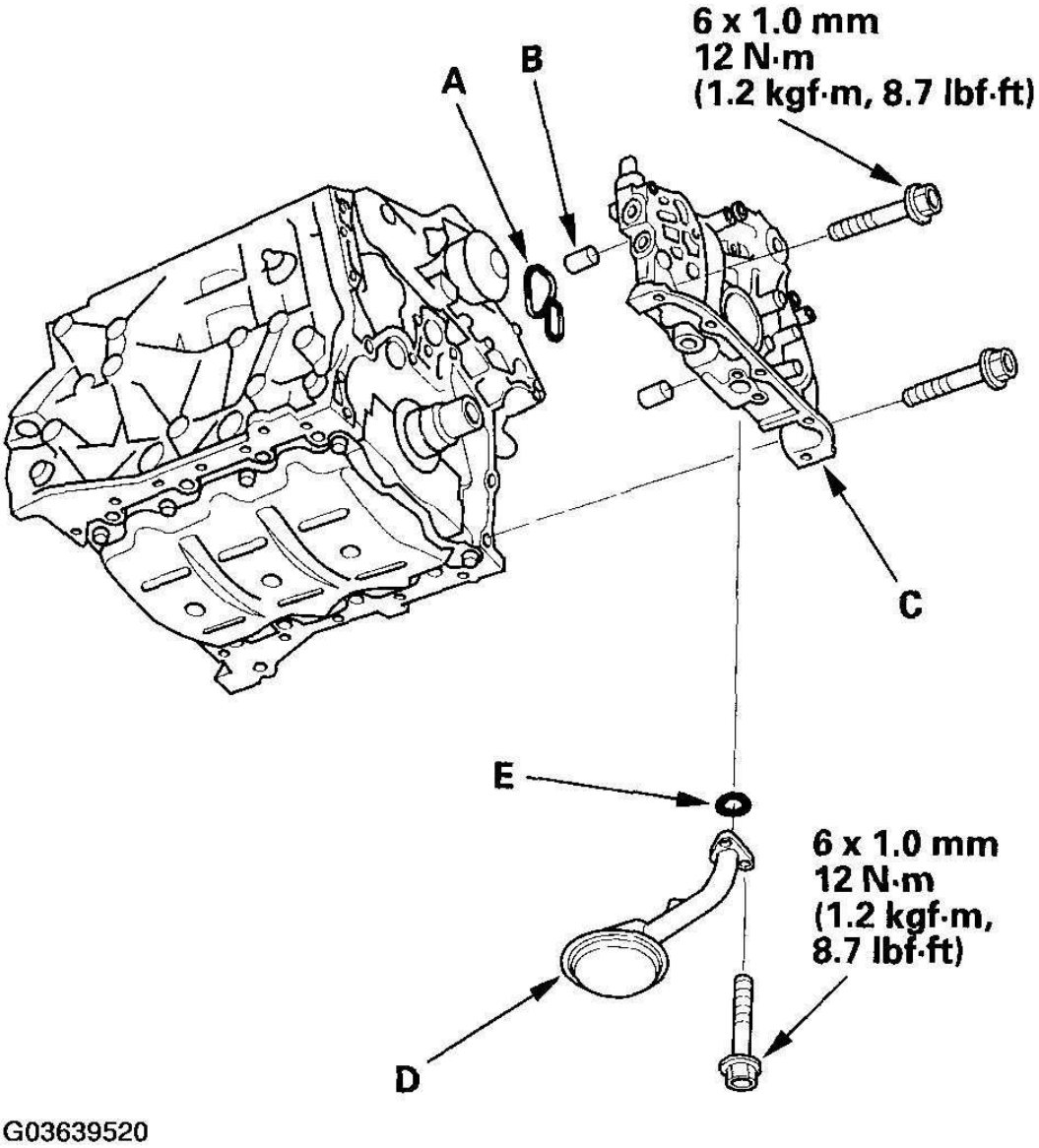

Fig. 19: Applying Oil To O-Ring
Courtesy of AMERICAN HONDA MOTOR CO., INC.

7. Install the dowel pins (B), then align the inner rotor with the crankshaft, and install the oil pump (C).
8. Clean the excess grease off the crankshaft, and check the seal for distortion.
9. Install the oil screen (D) with new O-ring (E).
10. Install the rocker arm oil control solenoid (VTEC solenoid valve)/oil filter assembly, with a new rocker arm oil control solenoid (VTEC solenoid valve) filter (see step 38 in **CRANKSHAFT AND PISTON INSTALLATION**).

cardiagn.com

11. Install the oil pan (see **OIL PAN INSTALLATION**).
12. Install the crankshaft position (CKP) sensor (see **CKP SENSOR REPLACEMENT**).
13. Install the timing belt (see **TIMING BELT INSTALLATION**).
14. Remove the engine hanger.

cardiagn.com