DESCRIPTION & OPERATION

WARNING: To avoid injury from accidental air bag deployment, read and carefully follow all WARNINGS and SERVICE PRECAUTIONS .

SUPPLEMENTAL INFLATABLE RESTRAINT (SIR) SYSTEM

Supplemental Inflatable Restraint (SIR) system is designed to supplement protection provided by driver and passenger-side seat belts. A frontal crash of sufficient force up to 30 degrees off center line of vehicle will deploy driver and passenger-side air bags. Steering column and knee bolsters below instrument panel also absorb crash energy.

SIR system consists of Sensing and Diagnostic Module (SDM), driver and passenger-side air bag modules, front-end discriminating sensor, SIR coil assembly and AIR BAG warning light in instrument cluster.

SENSING & DIAGNOSTIC MODULE (SDM)

SDM monitors vehicle velocity changes to detect frontal crashes which are severe enough to warrant air bag module deployment. When a frontal crash of sufficient force is detected, SDM causes enough current flow through air bag modules to deploy air bags. SDM also maintains a 23 Volt Loop Reserve (23 VLR) energy supply to provide deployment energy for up to 10 minutes after loss of voltage.

Additionally, SDM provides diagnostic monitoring of SIR system electrical components. When a malfunction is detected, SDM sets a Diagnostic Trouble Code (DTC) which can be retrieved using a scan tool. SDM warns driver of system malfunctions by controlling AIR BAG warning light.

AIR BAG WARNING LIGHT

Ignition switch applies battery voltage to AIR BAG warning light. SDM controls light by providing ground with a light driver. When ignition switch is first turned ON, AIR BAG warning light verifies system operation by flashing 7 times and turning off. During vehicle operation, AIR BAG warning light warns driver of malfunctions which could potentially affect SIR system operation.

FRONT-END DISCRIMINATING SENSOR

Front-end discriminating sensor is an auxiliary sensor which assists SDM in determining when deployment should occur by providing an input signal. Although front-end discriminating sensor is a mechanical sensor, it is not part of deployment loop.

SIR COIL ASSEMBLY

SIR coil assembly consists of 2 or more current-carrying coils. Coils are attached to steering column and allow

rotation of steering wheel, while maintaining continuous (directly wired) contact of deployment loop through driver-side air bag module.

AIR BAG MODULES

Air bag modules consist of an inflatable bag and an inflator. When vehicle is in an accident of sufficient force, SDM causes current flow through deployment loops. Current passing through inflators ignites inflator charges, producing gas which rapidly inflates air bags.

KNEE BOLSTERS

Knee bolsters are used to absorb energy and control forward movement of front passengers. This is accomplished by limiting leg movement during a frontal crash.

COMPONENT LOCATION

CONNECTOR IDENTIFICATION

NOTE: Refer to illustrations to identify SIR connector terminals. See Fig. 1 -Fig. 4 .

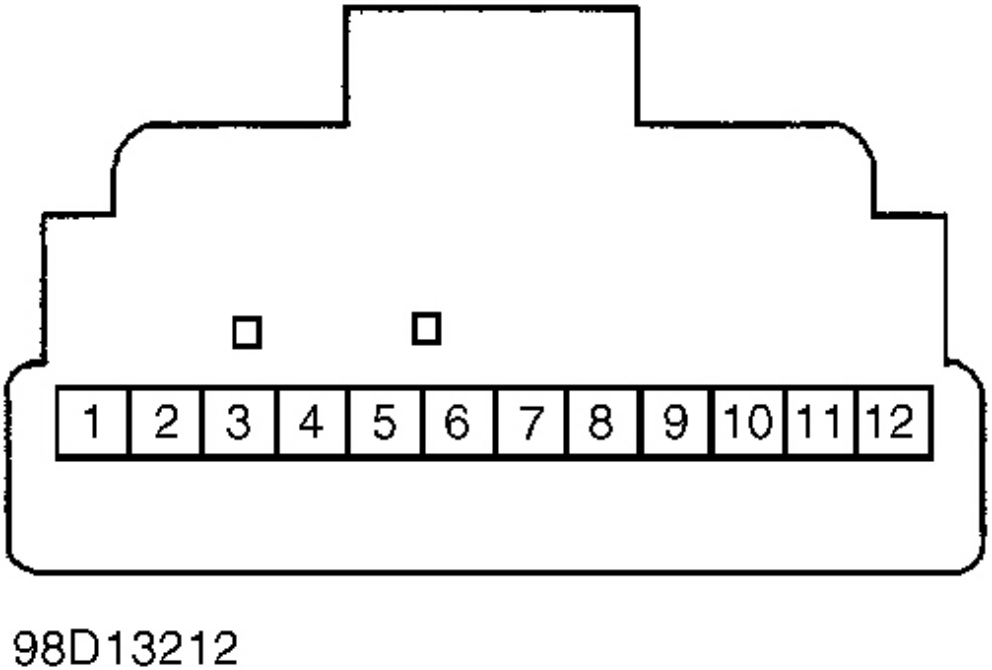

Fig. 1: Identifying SDM Connector Terminals
Courtesy of GENERAL MOTORS CORP.

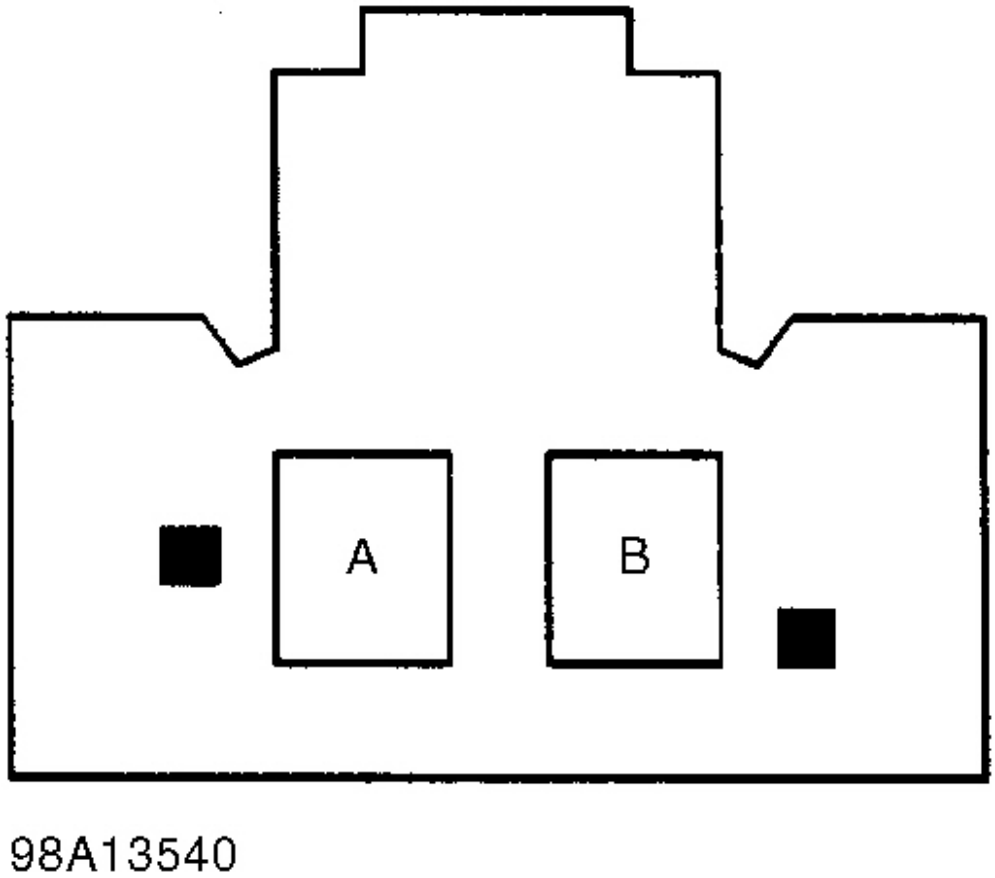

Fig. 2: Identifying Front-End Discriminating Sensor Connector Terminals
Courtesy of GENERAL MOTORS CORP.

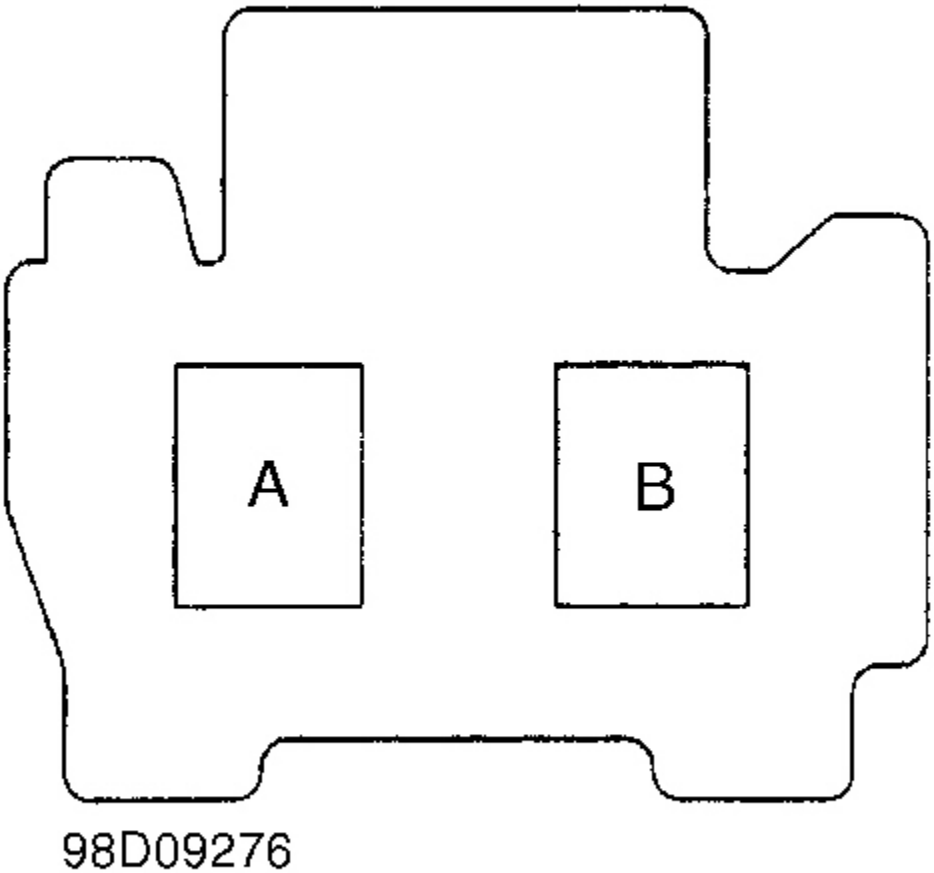

Fig. 3: Identifying SIR Coil Connector Terminals
Courtesy of GENERAL MOTORS CORP.

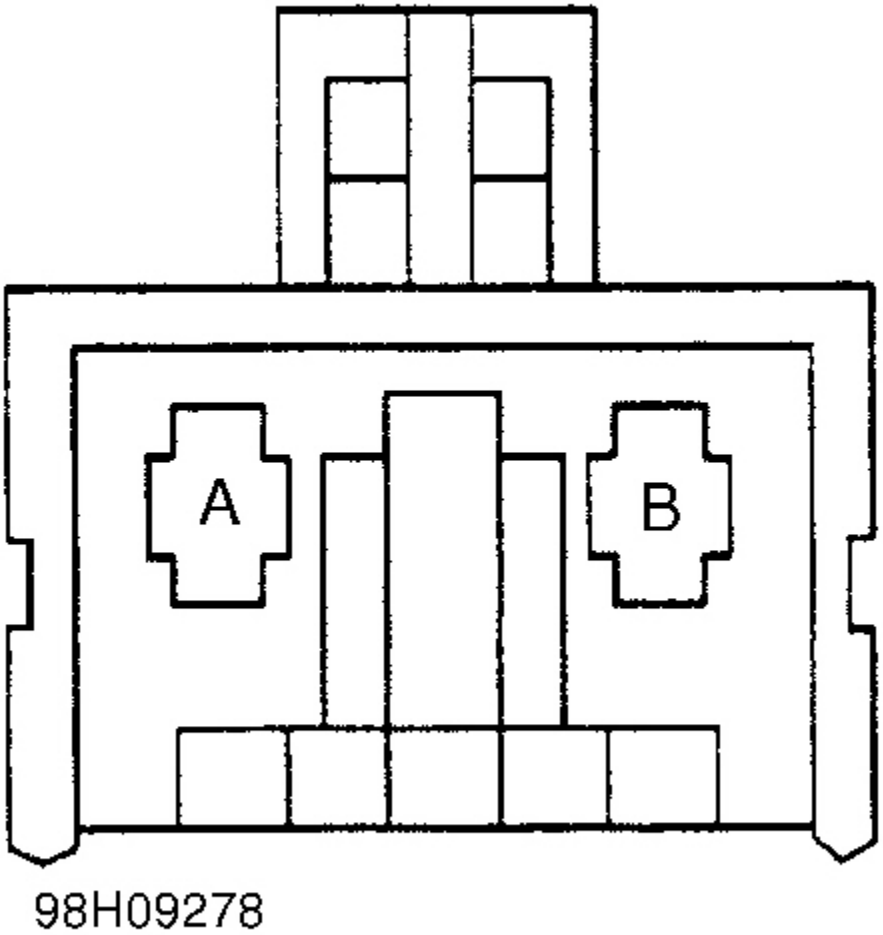

Fig. 4: Identifying Passenger-Side Air Bag Connector Terminals
Courtesy of GENERAL MOTORS CORP.

SERVICE PRECAUTIONS

Observe the following precautions when working with SIR system:

- SDM maintains sufficient voltage to cause air bag deployment for up to 10 minutes after ignition switch is turned OFF, battery is disconnected, or fuse powering SDM is removed. In order to begin servicing immediately, inflator modules must be removed from deployment loop. See **DISABLING & ACTIVATING AIR BAG SYSTEM** .
- After repairs, ensure AIR BAG warning light is working properly and no system faults are indicated. See

TESTING - SYSTEM OPERATION CHECK .

- Always wear safety glasses when servicing or handling an air bag module.
- Air bag modules must be stored in original special containers until used for service. Store in a clean, dry place, away from sources of extreme heat, sparks, or high electrical energy.
- Air bag modules or SDMs should not be subjected to temperatures greater than 150°F (65°C).
- Air bag modules or SDMs should not be used if they have been dropped from a height of 3 feet or greater.
- When placing a live air bag module on a bench or other surface, always make certain that trim cover faces up. This will reduce motion of module if accidentally deployed.
- After deployment, air bag surface may contain deposits of sodium hydroxide, which can irritate skin. Always wear safety glasses, rubber gloves and long-sleeved shirt during clean-up, and wash hands using mild soap and water. Follow correct disposal procedures. See **DISPOSAL PROCEDURES** .
- At no time should any electrical source be allowed near inflator on back of air bag module.
- **DO NOT** apply power to SIR system unless all components are connected or a diagnostic chart requests it, as this will set a diagnostic trouble code.
- When carrying a live air bag module, trim cover should be pointed away from body to minimize injury in case of accidental deployment.
- **DO NOT** attempt to service SDM, front-end discriminating sensor, SIR coil assembly, or air bag modules. If defective, these parts must be replaced.
- **DO NOT** probe a wire through insulator; this damages wire and eventually causes failure due to corrosion.
- When performing electrical tests, prevent accidental shorting of terminals. Such mistakes can damage fuses or components and may cause a second fault code to set, making diagnosis of original problem more difficult.
- When using diagnostic charts to diagnose SIR system, under no circumstances should a volt/ohmmeter, test light or any type of electrical equipment not specified by manufacturer be used. See **SPECIAL TOOLS** .
- If SIR system is not fully functional for any reason, vehicle should not be driven until system is repaired. DO NOT remove bulbs, modules, sensors or other components or in any way disable system from operating normally.

SPECIAL TOOLS

To avoid accidental deployment when working on SIR system, use only electrical test equipment specified by manufacturer. See **SIR RECOMMENDED TOOLS** table.

SIR RECOMMENDED TOOLS

Tool Name	Tool Number
Connector Test Adapter Kit	J-35616-A
Digital Multimeter	J-39200
Scan Tool	Tech 2
SIR Deployment Harness	J-38826

SIR Driver/Passenger Load Tool	J-38715-A
SIR Shorting Bar Tool	J-38715-96
Steering Wheel Puller	J-1859-03
Terminal Repair Kit	J-38125-A

DISABLING & ACTIVATING AIR BAG SYSTEM

CAUTION: When battery is disconnected, vehicle computer and memory systems may lose memory data. Driveability problems may exist until computer systems have completed a relearn cycle. See COMPUTER RELEARN PROCEDURES in GENERAL INFORMATION. Record preset radio stations and obtain code for theft deterrent-equipped radios before disconnecting battery.

DISABLING SYSTEM

WARNING: SDM maintains sufficient voltage to cause air bag deployment for up to 10 minutes after ignition switch is turned OFF, battery is disconnected, or fuse powering SDM is removed. In order to begin servicing immediately, inflator modules must be removed from deployment loop.

NOTE: When SDM fuse is removed and ignition switch is in RUN position, AIR BAG warning light will be on. This does not indicate a system malfunction.

1. Turn steering wheel to place vehicle wheels in straight-ahead position. Turn ignition switch to LOCK position and remove key.
2. Remove front floor kick-up panel. Remove SDM fuse (15 amp) located in instrument panel fuse block. Remove left sound insulator. Remove Connector Position Assurance (CPA) clip and disconnect driver-side Yellow 2-pin connector at base of steering column. See **Fig. 5** . Remove CPA clip and disconnect passenger-side Yellow 2-pin connector at base of steering column. See **Fig. 6** . System is now disabled.

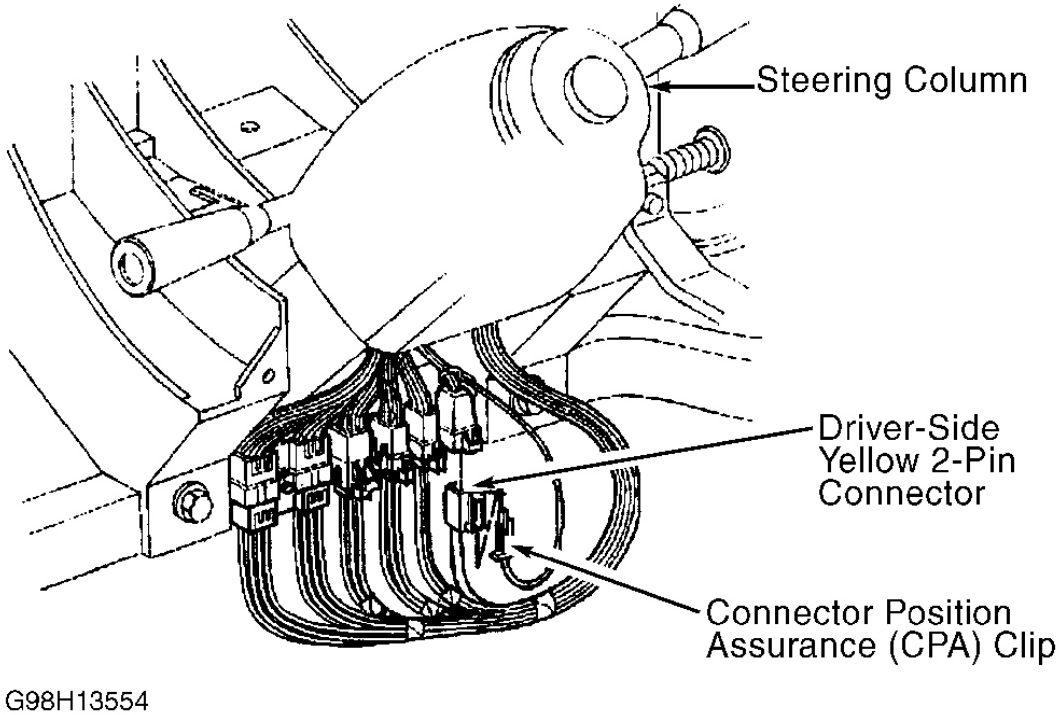

Fig. 5: Locating Driver-Side Yellow 2-Pin Connector
Courtesy of GENERAL MOTORS CORP.

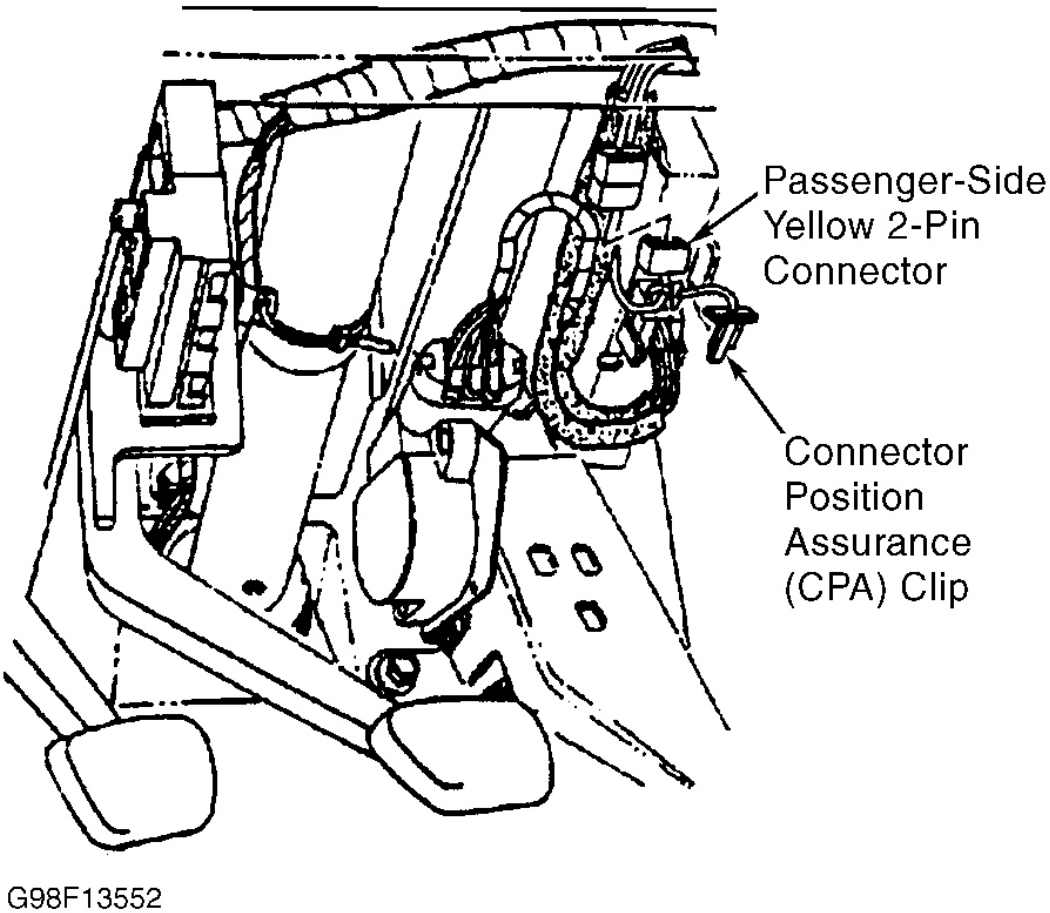

Fig. 6: Locating Passenger-Side Yellow 2-Pin Connector
Courtesy of GENERAL MOTORS CORP.

ACTIVATING SYSTEM

With key removed from ignition switch, Connect Yellow 2-pin connectors at base of steering column and install CPA clips. Install left sound insulator. Install SDM fuse. Install front floor kick-up panel. Check system for proper operation. See **TESTING - SYSTEM OPERATION CHECK** .

POST-COLLISION INSPECTION

When a vehicle has been involved in a collision, certain components of the passive restraint system must be inspected or replaced. See **PASSIVE RESTRAINT SYSTEM INSPECTION** article in the GENERAL INFORMATION section for post-collision inspection information.

ADJUSTMENTS

CENTERING COIL ASSEMBLY

1. If coil assembly has been removed from steering column and is being reinstalled, go to next step. New coil assemblies are pre-centered and include a centering tab that is removed once coil is installed.
2. Hold coil assembly with clear bottom upward to see coil bottom. While holding coil assembly housing, depress spring lock and rotate hub in direction of arrow until it stops. Coil ribbon should now be wound up snugly against center hub. Rotate coil hub in opposite direction approximately 2 1/2 turns. Release spring lock between locking tabs. See **Fig. 7** .

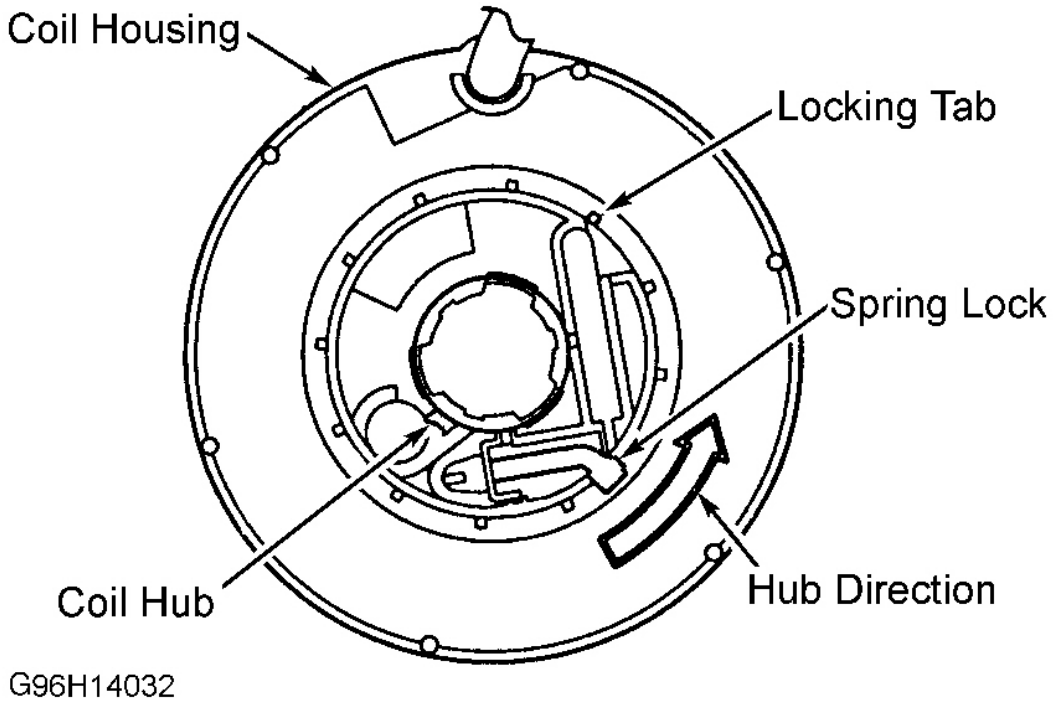

Fig. 7: Centering SIR Coil Assembly
Courtesy of GENERAL MOTORS CORP.

DISPOSAL PROCEDURES

WARNING: **To prevent accidental deployment and personal injury, deploy air bags before disposal. DO NOT dispose of undeployed air bag modules at normal refuse locations. Undeployed air bag modules contain substances that can cause severe illness or personal injury if sealed container is damaged during disposal.**

NOTE: **If vehicle is to be scrapped, perform on-vehicle air bag deployment procedure.**

ON-VEHICLE DEPLOYMENT

1. Before proceeding, see **SERVICE PRECAUTIONS** . Turn ignition switch OFF, remove key and put on safety glasses. Disconnect driver and passenger-side air bag module connectors. See **Fig. 5** and **Fig. 6** . Cut air bag module harness connector from vehicle leaving at least 6" of wire at connector.
2. Strip 1/2" (13 mm) of insulation from each connector wire lead. Cut 2 15-foot deployment wires from 18-gauge multi-strand wire. Strip 1/2" (13 mm) of insulation from both ends of wires. Twist wires together at one end to short.
3. Twist together one connector wire lead to other end of each deployment wire. See **Fig. 8** . Bend twisted connection flat and wrap tightly with electrical tape to insulate. Repeat this step for other connector wire lead.
4. Remove all loose objects from front seat, and ensure no one is in vehicle. Connect deployment harness to air bag module connector. Stretch wires away from car as far as possible.
5. Repeat steps 1) through 4) for passenger-side air bag module. Cover windshield and front door openings with a drop cloth.
6. Separate wire ends. Connect each pair of wires to a 12-volt battery. Air bags should deploy. Disconnect wires from battery. **DO NOT** touch air bag module area for at least 10 minutes due to heat generated during deployment. Wear gloves and safety glasses before handling deployed air bag module. Wash hands with mild soap and water afterward. Deployed air bag modules can be disposed of like any other part. Repeat deployment procedure for passenger-side air bag.
7. If air bag modules do not deploy, carefully remove from vehicle. See **AIR BAG MODULES** under REMOVAL & INSTALLATION. Temporarily store module with trim facing up. Contact manufacturer for proper disposal instructions.

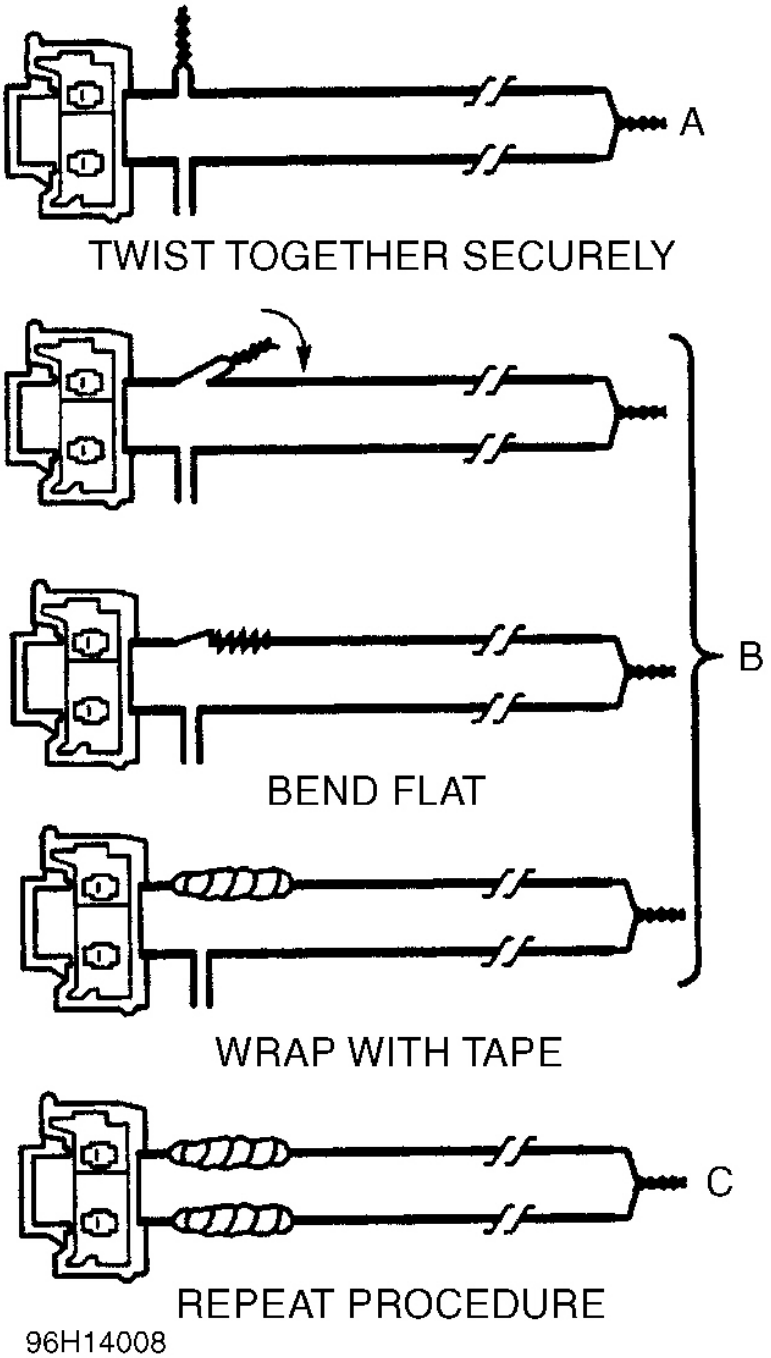

Fig. 8: Preparing Deployment Harness For On-Vehicle Deployment
Courtesy of GENERAL MOTORS CORP.

OFF-VEHICLE DEPLOYMENT

1. Before proceeding, see **SERVICE PRECAUTIONS** . Turn ignition switch OFF, remove key and put on safety glasses. Short 2 SIR Deployment Harness (J-38826) leads together by fully seating one banana plug into the other. Connect appropriate pigtail adapter to SIR deployment harness. See **Fig. 9** .
2. Remove driver-side air bag module. See **AIR BAG MODULES** under REMOVAL & INSTALLATION. Remove horn lead, redundant steering wheel control leads, horn buttons and steering wheel control buttons from air bag module, if applicable.
3. Place air bag module with vinyl trim cover facing up, on a work bench or other surface (preferably paved surface outdoors) away from any loose or flammable objects. Clear space at least 6 feet in diameter around air bag. Extend SIR deployment harness and pigtail adapter to full length from air bag module. Place a 12-volt battery near shorted end of SIR deployment harness.
4. Connect air bag module to pigtail adapter on SIR deployment harness. See **Fig. 9** . Ensure area around air bag module is clear of people or loose objects. Verify that air bag module is resting with trim cover facing up.
5. Separate 2 banana plugs on SIR deployment harness. Connect SIR deployment harness wires to battery. See **Fig. 9** . Air bag module should deploy immediately. If air bag module does not deploy, go to next step. Disconnect SIR deployment harness from battery. Short 2 SIR deployment harness leads together. **DO NOT** touch metal surfaces of air bag module for at least 10 minutes due to heat generated during deployment. Wear gloves and safety glasses when handling deployed air bag module. Wash hands with mild soap and water after handling. Dispose of deployed air bag module as you would any other part. Inspect pigtail adapter and SIR deployment harness for damage after each use. Repeat deployment procedure for passenger-side air bag module.
6. Ensure that SIR deployment harness is disconnected from battery and that 2 banana plugs have been shorted together. Disconnect pigtail adapter from air bag module. Temporarily store air bag module with trim cover facing up. Contact manufacturer for proper disposal instructions.

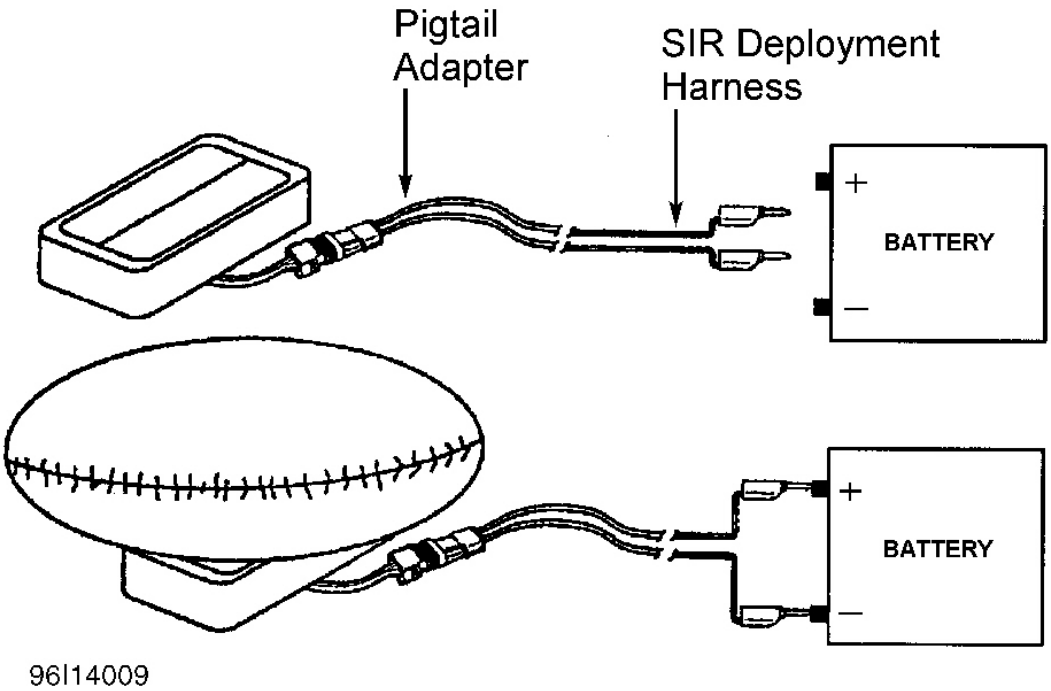

Fig. 9: Preparing Deployment Harness For Off-Vehicle Deployment
Courtesy of GENERAL MOTORS CORP.

REMOVAL & INSTALLATION

WARNING: **Failure to follow service precautions may result in air bag deployment and personal injury. See SERVICE PRECAUTIONS . After component replacement, check system operation. See TESTING - SYSTEM OPERATION CHECK .**

SENSING & DIAGNOSTIC MODULE (SDM)

Removal

1. Before proceeding, see **SERVICE PRECAUTIONS** . Disable air bag system. See **DISABLING & ACTIVATING AIR BAG SYSTEM** .
2. SDM is located behind center instrument panel on right side. Remove accessory trim plate. Remove heater and A/C control panel. Remove Connector Position Assurance (CPA) clip from Sensing and Diagnostic Module (SDM) connector and disconnect SDM harness connector from SDM.
3. Remove mounting fasteners and remove SDM from instrument panel center support. See **Fig. 10** .

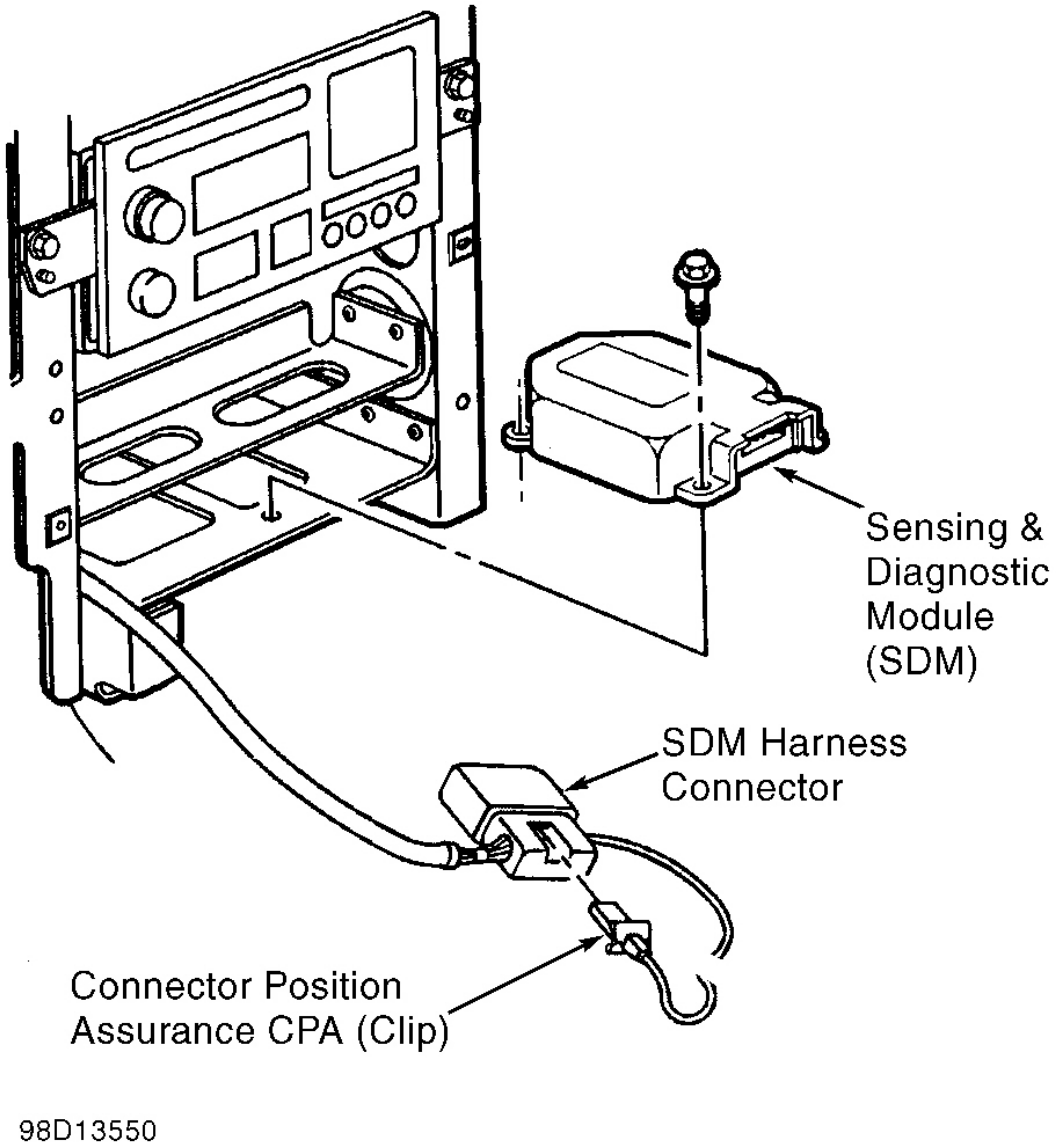

Fig. 10: Removing Sensing & Diagnostic Module (SDM)
Courtesy of GENERAL MOTORS CORP.

Installation

1. To install, reverse removal procedure. Connect SDM harness connector and install CPA clip. See **Fig. 10** . Tighten fasteners to 89 INCH lbs. (10 N.m).
2. Activate air bag system. See **DISABLING & ACTIVATING AIR BAG SYSTEM** . Check system for proper operation. See **TESTING - SYSTEM OPERATION CHECK** .

FRONT-END DISCRIMINATING SENSOR

Removal

1. Before proceeding, see **SERVICE PRECAUTIONS** . Disable air bag system. See **DISABLING & ACTIVATING AIR BAG SYSTEM** .
2. Discriminating sensor is located on front bumper impact bar. Remove engine air cleaner assembly. Remove CPA clip and disconnect sensor harness connector. Remove fasteners and remove sensor from vehicle. See **Fig. 11** .

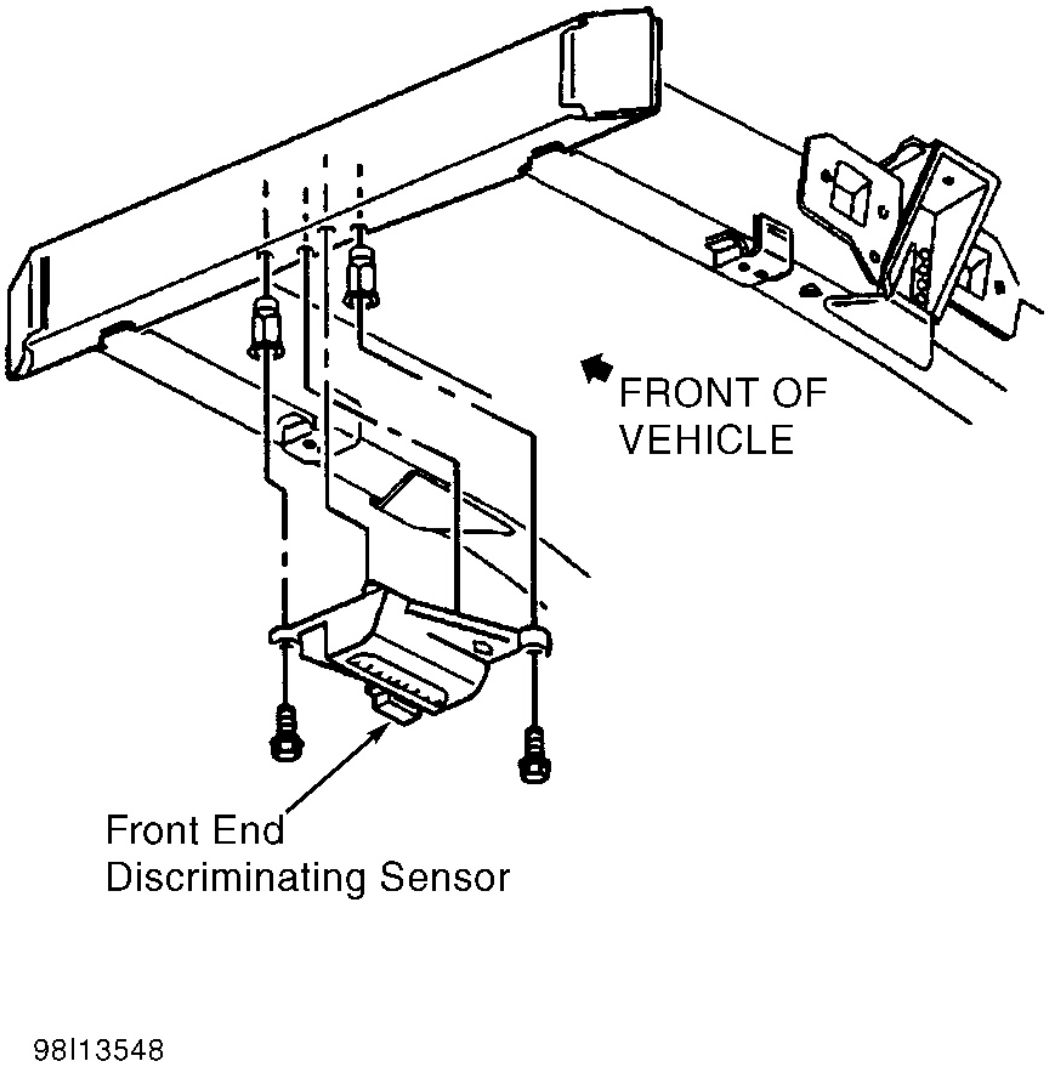

Fig. 11: Removing Front-End Discriminating Sensor
Courtesy of GENERAL MOTORS CORP.

Installation

To install, reverse removal procedure. Install sensor fasteners and tighten to 89 INCH lbs. (10 N.m). Activate air bag system. See **DISABLING & ACTIVATING AIR BAG SYSTEM** . Check system for proper operation. See **TESTING - SYSTEM OPERATION CHECK** .

STEERING WHEEL

Removal

1. Before proceeding, see **SERVICE PRECAUTIONS** . Disable air bag system. See **DISABLING & ACTIVATING AIR BAG SYSTEM** .
2. Remove driver-side air bag module. See **AIR BAG MODULES** . Remove steering wheel set nut. Using Steering Wheel Puller (J-1859-A) and Puller Legs (J-42120), remove steering wheel.

Installation

1. To install, reverse removal procedure. Use new steering wheel nut and tighten to 30 ft. lbs. (41 N.m). Install driver-side air bag module. See **AIR BAG MODULES** .
2. Activate air bag system. See **DISABLING & ACTIVATING AIR BAG SYSTEM** . Check system for proper operation. See **TESTING - SYSTEM OPERATION CHECK** .

SIR COIL ASSEMBLY

Removal

1. Before proceeding, see **SERVICE PRECAUTIONS** . Disable air bag system. See **DISABLING & ACTIVATING AIR BAG SYSTEM** .
2. Remove driver-side air bag. See **AIR BAG MODULES** . Remove steering wheel. See **STEERING WHEEL** . Remove upper and lower steering column shrouds.
3. Remove wire harness straps from steering wheel column wire harness. Remove retaining ring. Remove SIR coil and wave washer. See **Fig. 12** .

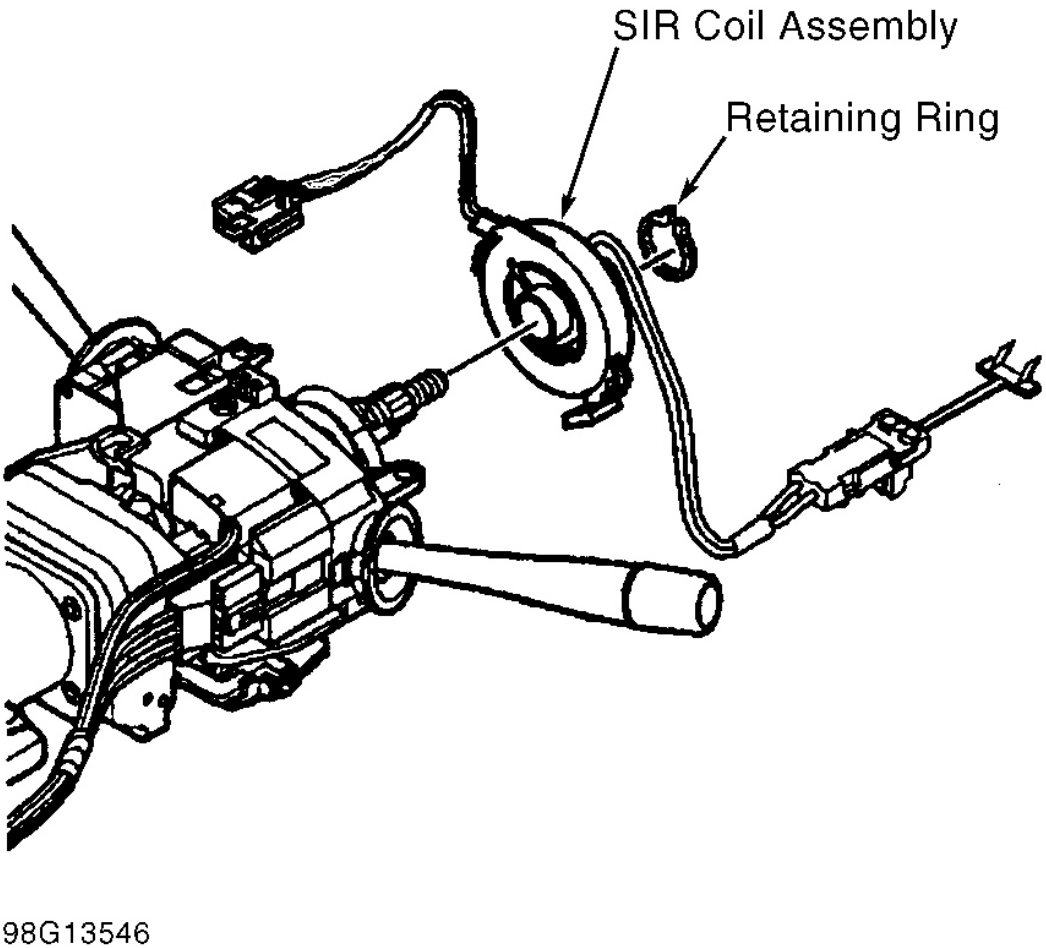

Fig. 12: Removing SIR Coil Assembly
Courtesy of GENERAL MOTORS CORP.

Installation

1. Center race and upper shaft assembly. Center SIR coil. Center wheels straight ahead. Center block tooth and centering mark on shaft assembly at 12 o'clock position. Install wave washer.
2. With shaft centered, coil centered and coil aligned with horn tower, slide coil onto shaft. Install retaining ring. Check that ring seats securely in groove on shaft.
3. Route lower coil wire along steering column jacket and install wire harness straps to steering column wire harness. Install upper and lower shrouds. Install steering wheel and driver-side air bag. Activate air bag system. See **DISABLING & ACTIVATING AIR BAG SYSTEM** . Check system for proper operation. See **TESTING - SYSTEM OPERATION CHECK** .

AIR BAG MODULES

Removal (Driver-Side)

1. Before proceeding, see **SERVICE PRECAUTIONS** . Disable air bag system. See **DISABLING & ACTIVATING AIR BAG SYSTEM** .
2. Remove screws retaining driver-side air bag to steering wheel. Partially remove driver-side air bag module and disconnect SIR connector from back of air bag. Disconnect horn wiring harness from steering column. Disconnect ground wire from steering column. Remove driver-side air bag from vehicle. See **Fig. 13** .

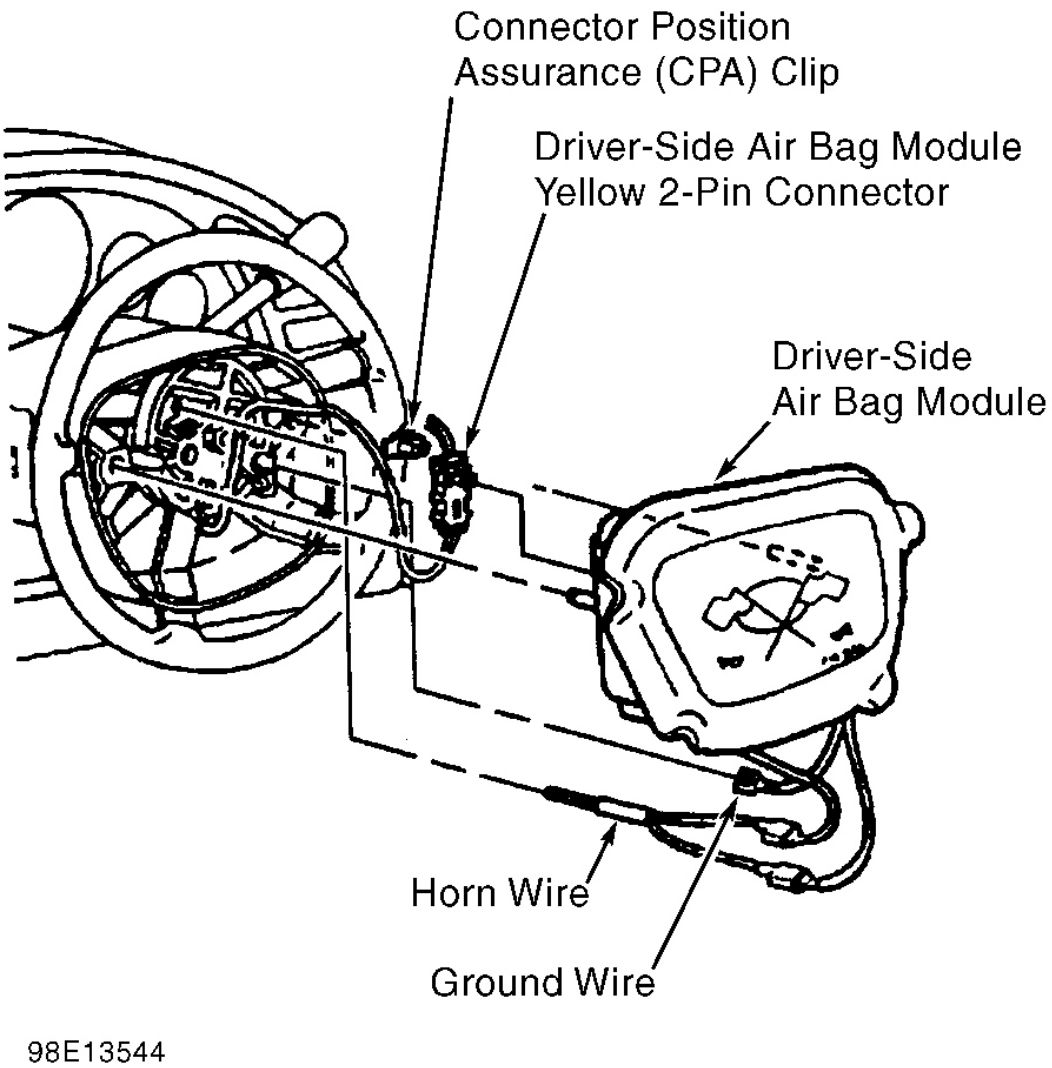

Fig. 13: Removing Driver-Side Air Bag
Courtesy of GENERAL MOTORS CORP.

Installation

To install, reverse procedure. See **Fig. 13** . Tighten air bag module screws to 54 INCH lbs. (6 N.m). Activate air bag system. See **DISABLING & ACTIVATING AIR BAG SYSTEM** . Check system for proper operation. See **TESTING - SYSTEM OPERATION CHECK** .

Removal (Passenger-Side)

1. Before proceeding, see **SERVICE PRECAUTIONS** . Disable air bag system. See **DISABLING & ACTIVATING AIR BAG SYSTEM** .
2. Remove instrument panel upper trim pad. Remove CPA clip and disconnect passenger-side air bag Yellow 2-pin connector. Remove fasteners. Remove passenger-side air bag module. See **Fig. 14** .

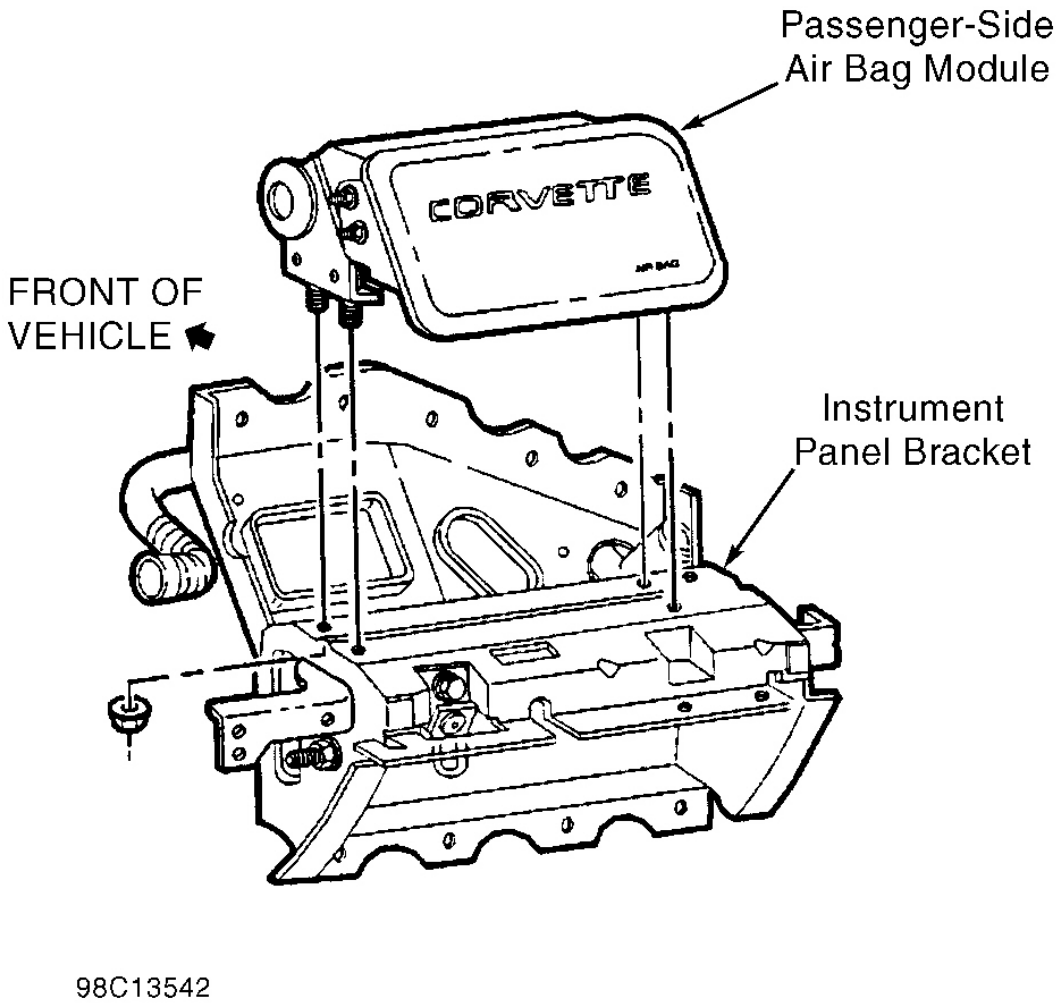

Fig. 14: Removing Passenger-Side Air Bag Module
Courtesy of GENERAL MOTORS CORP.

Installation

To install, reverse removal procedure. See **Fig. 14** . Tighten fasteners to 89 INCH lbs. (10 N.m). Activate air bag system. See **DISABLING & ACTIVATING AIR BAG SYSTEM** . Check system for proper operation. See **TESTING - SYSTEM OPERATION CHECK** .

TESTING - SYSTEM OPERATION CHECK

If system is functioning normally, AIR BAG warning light flashes 7 times and then turns off when ignition switch is turned ON. System malfunction is indicated when light does not illuminate at all, light comes on while vehicle is driven, light flashes 7 times and remains on, or light does not flash but remains on when ignition switch is turned on.

SIR system faults are usually due to a disconnected or loose electrical connector caused by previous service on vehicle. Always check SIR coil connector at base of steering column for loose or damaged wiring.

DIAGNOSIS & TESTING

WARNING: **Failure to follow service precautions may result in air bag deployment and personal injury. See SERVICE PRECAUTIONS . After component replacement, check system operation. See TESTING - SYSTEM OPERATION CHECK .**

DIAGNOSTIC TROUBLE CODES (DTCS)

Sensing & Diagnostic Module (SDM) provides a record of DTCs, stored according to type. SDM performs diagnostic monitoring of SIR system electrical components and sets a diagnostic trouble code (DTC) when a malfunction is detected. Current DTCs are stored in SDM and are erased when fault is corrected. Current DTCs can be read using a scan tool such as Tech 2.

SCAN TOOL DIAGNOSTICS

Scan Tool (Tech 2) reads and clears current and history codes. Ensure scan tool contains correct software cartridge for SIR diagnostics. To use scan tool, connect it to DLC connector, plug in power source and turn ignition switch to RUN position. Follow scan tool manufacturer instructions for communication with SIR system. Scan tool reads serial data from SDM data link output terminal No. 5 to DLC connector terminal No. 9.

DIAGNOSTIC PROCEDURES

Diagnostic procedures are designed to find and repair SIR malfunctions. It is important to use diagnostic charts and follow sequence listed below:

Perform SIR System Diagnostic Check

SIR System Diagnostic Check should always be starting point for any SIR diagnostics. It checks for proper AIR BAG warning light operation and SIR trouble codes using both flash code and scan tool methods.

Refer to Proper Diagnostic Chart

SIR Diagnostic System Check indicates correct chart to diagnose SIR problems. Bypassing procedures may result in extended diagnostic time, incorrect diagnosis and incorrect parts replacement.

Repeat SIR Diagnostic System Check

Performing SIR Diagnostic System Check after all repair or diagnostic procedures ensures that repair has been made correctly and that no other conditions exist.

TESTING - DIAGNOSTIC

NOTE: Following diagnostic charts are courtesy of General Motors Corp.

DIAGNOSTIC TROUBLE CODE (DTC) CHART

Trouble Code	Possible Cause
B1015	Passenger Deployment Loop Resistance High
B1016	Passenger Deployment Loop Resistance Low
B1017	Passenger Deployment Loop Open
B1018	Passenger Deployment Loop Short To Ground
B1019	Passenger Deployment Loop Short To Voltage
B1021	Driver Deployment Loop Resistance High
B1022	Driver Deployment Loop Resistance Low
B1024	Driver Deployment Loop Short To Ground
B1025	Driver Deployment Loop Short To Voltage
B1026	Driver Deployment Loop Open
B1035	Discriminating Sensor Closed Or Short To Ground
B1036	Discriminating Sensor Open Or Short To Voltage
B1051	Deployment Commanded
B1053	Deployment Commanded With Loop Malfunction
B1061	SIR Warning Light Malfunction
B1071	Internal SDM Malfunction

SIR DIAGNOSTIC SYSTEM CHECK

WARNING: **To avoid air bag deployment and injury when trouble shooting system, only use test equipment specified in diagnostic charts. Carefully follow all instructions.**

Circuit Description

Ignition switch supplies IGNITION POSITIVE VOLTAGE to SDM at terminal No. 10 using SDM fuse. When ignition switch is turned to RUN position, SDM responds by flashing AIR BAG warning light 7 times, then

turning off while performing tests on SIR system.

Diagnostic Chart Step References

NOTE: Following step references refer to test step numbers on diagnostic chart. See Fig. 15 . For circuit number and wire color identification, see WIRING DIAGRAMS .

1

AIR BAG warning light should flash 7 times after ignition switch is turned to RUN position.

2

AIR BAG warning light indicates improper operation. This test differentiates an warning light stays ON condition from an warning light does not come ON condition.

3

AIR BAG warning light should flash 7 times and turn OFF.

4

Checks for proper operation of serial data line.

6

Identifies stored diagnostic trouble codes and whether they are current or history.

7

Checks for proper operation of serial data line and identifies any stored history diagnostic trouble codes.

9

Refers to appropriate DTC Chart Diagnostic Aids for diagnosis of history DTCs.

Step	Action	Value(s)	Yes	No
1	Note the AIR BAG warning lamp while turning the ignition switch to the RUN position. Does the AIR BAG warning lamp flash seven times?	—	*Go to Step 3*	*Go to Step 2*
2	Does the AIR BAG warning lamp come ON steady?	—	Go to *AIR BAG Warning Lamp Comes On Steady*	Go to *AIR BAG Warning Lamp Does Not Come On*
3	Note the AIR BAG warning lamp after it flashed seven times. Does the AIR BAG warning lamp go OFF?	—	*Go to Step 7*	*Go to Step 4*
4	1. Turn the ignition switch to the OFF position. 2. Connect a scan tool to the Data Link Connector. Follow the directions in the instruction manual of the scan tool. 3. Turn the ignition switch to the RUN position. 4. Request the SIR Diagnostic Trouble Code (DTC) display. Is a current DTC displayed?	—	*Go to Step 6*	*Go to Step 5*
5	Does the scan tool indicate no data received?	—	Check Scan Tool	Go to *SDM Integrity Check*
6	1. Turn the ignition switch to the OFF position. 2. Record the displayed DTCs on the repair order, specifying as current or history. • When DTC B1051 is set, go to *DTC B1051 Deployment Commanded* table. • When DTC B1018 is set, go to *DTC B1018 Passenger Deployment Loop Short to GND* table. • When DTC B1024 is set, go to *DTC B1024 Driver Deployment Loop Short to Ground* table. 3. Diagnose the remaining DTCs from lowest to highest. 4. When only history DTCs exist, refer to Diagnostic Aids for that specific DTC. A history DTC indicates the malfunction has been repaired or is intermittent. Has current DTC diagnosis been performed and the current DTCs cleared?	—	*Go to Step 1*	—
7	1. Turn the ignition switch to the OFF position. 2. Connect a scan tool to the Data Link Connector. Follow the directions in the instruction manual of the scan tool. 3. Turn the ignition switch to the RUN position. 4. Request the SIR Diagnostic Trouble Code (DTC) display. Is a history DTC displayed?	—	*Go to Step 9*	*Go to Step 8*
8	Does the scan tool indicate no data received?	—	Check Scan Tool	System OK
9	1. Turn the ignition switch to the OFF position. 2. Record the displayed DTCs on the repair order specifying as history. 3. When DTC B1071 is set, go to *DTC B1071 Internal SDM Failure* table. 4. For all other DTCs, Refer to Diagnostic Aids for that specific DTC. A history DTC indicates the malfunction has been repaired or is intermittent. Has the diagnosis been performed and the DTCs cleared?	—	*Go to Step 1*	—

Fig. 15: SIR Diagnostic System Check
Courtesy of GENERAL MOTORS CORP.

SDM INTEGRITY CHECK

Circuit Description

When SDM recognizes IGNITION POSITIVE VOLTAGE applied to terminal No. 10 is greater than 8.2 volts, AIR BAG warning light is flashed 7 times to verify operation. At this time SDM performs POWER-ON tests followed by RESISTANCE MEASUREMENT test and CONTINUOUS MONITORING tests. When a malfunction is detected, SDM sets a current DTC and turns AIR BAG warning light ON. SDM clears current DTCs and moves them to a history file when malfunction is no longer detected or ignition switch is cycled, except for DTCs B1018, B1024, B1051, B1053 and B1071. DTCs B1018, B1024, B1051, and B1053 will not clear using scan tool CLEAR CODES. B1071 may not clear using scan tool CLEAR CODES. Repair malfunction that set DTC before replacing SDM.

Diagnostic Chart Step References

NOTE: **Following step references refer to test step numbers on diagnostic chart. See Fig. 16 . For circuit number and wire color identification, see WIRING DIAGRAMS .**

2

Confirms a circuit malfunction. If no current malfunction is occurring (History DTC set), refer to Diagnostic Aids for appropriate DTC. SDM should not be replaced for a history DTC other than DTC B1071.

3

Checks for a malfunction introduced into SIR system during diagnostic process. It is extremely unlikely that a malfunctioning SDM would cause a new malfunction to occur during diagnostic process.

4

When all circuitry outside SDM has been found to operate properly, as indicated by appropriate diagnostic chart, replace SDM.

Step	Action	Value(s)	Yes	No
1	Were you sent here from a symptom table or a Diagnostic Trouble Code (DTC) table?	—	*Go to Step 2*	Go to *SIR Diagnostic System Check*
2	1. Turn the ignition switch to the OFF position. 2. Reconnect all the SIR components, make sure all the components are properly mounted. 3. Make sure the ignition switch has been in the OFF position for at least 30 seconds. 4. Note the AIR BAG warning lamp while turning the ignition switch to the RUN position. Does the AIR BAG warning lamp flash seven times and then turn OFF?	—	*Go to Step 7*	*Go to Step 3*
3	Using the scan tool, request the SIR DTC display. Is the same symptom or DTC occurring as when the SIR Diagnostic System Check was first performed?	—	*Go to Step 4*	Go to the appropriate DTC table
4	1. Clear the SIR DTCs. 2. Turn the ignition switch to the OFF position for at least 30 seconds. 3. Note the AIR BAG warning lamp while turning the ignition switch to the RUN position. Does the AIR BAG warning lamp flash seven times then turn OFF?	—	System OK	*Go to Step 5*
5	1. Turn the ignition switch to the OFF position. 2. Replace the inflatable restraint Sensing and Diagnostic Module (SDM). Has the SDM been replaced?	—	*Go to Step 6*	—
6	Reconnect all the SIR system components, and make sure all the components are properly mounted. Have all the SIR components been reconnected and properly mounted?	—	Go to *SIR Diagnostic System Check*	—
7	Clear the SIR DTCs. Have the SIR DTCs been cleared?	—	Go to *SIR Diagnostic System Check*	—

98A09086

Fig. 16: SDM Integrity Check
Courtesy of GENERAL MOTORS CORP.

AIR BAG WARNING LIGHT COMES ON STEADY

Circuit Description

Ignition switch applies IGNITION POSITIVE VOLTAGE to SDM terminal No. 10 using SDM fuse, and to AIR BAG warning light using IPC fuse. AIR BAG warning light is connected to AIR BAG INDICATOR at SDM terminal No. 7. When ignition switch is first turned to RUN position, SDM responds by flashing AIR BAG warning light 7 times. If IGNITION POSITIVE VOLTAGE is outside normal operating range (8.2-17.1 volts), AIR BAG warning light will come ON steady with no DTCs set.

Diagnostic Chart Step References

NOTE: **Following step references refer to test step numbers on diagnostic chart. See Fig. 17 -Fig. 19 . For circuit number and wire color identification, see WIRING DIAGRAMS .**

2

Checks for sufficient voltage applied to SDM.

3

Checks excessive voltage applied to SDM.

4

Checks for properly installed CPA clip.

6

Determines whether SDM is turning on AIR BAG warning light.

7

Checks for damaged shorting bar.

9

Checks for short to ground in circuit 358.

10

Checks for short between circuits 358 and 851.

14

An open SDM fuse would cause AIR BAG warning light to come on steady.

15

Determines whether short to ground caused SDM fuse to open.

16

Determines whether short to ground is in wiring or internal to SDM.

20

Checks for disconnected SDM.

Checks for open in IGNITION POSITIVE VOLTAGE circuit.

Step	Action	Value(s)	Yes	No
1	Was the SIR Diagnostic System Check performed?	—	*Go to Step 2*	Go to *SIR Diagnostic System Check*
2	1. Turn the ignition switch to the OFF position. 2. Connect a scan tool to the Data Link Connector (DLC). 3. Turn the ignition switch to the ON position. 4. Request the SIR data list display. Is IGNITION more than the specified value?	8.2 V	*Go to Step 3*	*Go to Step 14*
3	1. Set the parking brake. 2. Start the engine. 3. Using the scan tool, read the SIR data list. Is IGNITION more than the specified value?	17.1 V	Go to *Battery Is Undercharged or Overcharged (Low/High Voltage Message)* in Engine Electrical	*Go to Step 4*
4	1. Turn the ignition switch to the OFF position. 2. Inspect the inflatable restraint Sensing and Diagnostic Module (SDM) harness connector CPA. Is the CPA properly installed?	—	*Go to Step 6*	*Go to Step 5*
5	Properly install the CPA. Are the repairs complete?	—	Go to *SIR Diagnostic System Check*	—
6	1. Disconnect the inflatable restraint steering wheel and IP module yellow 2-way connectors at the base of the steering column. 2. Disconnect the SDM harness connector. 3. Install *J 38715-96* SIR Shorting Bar Tool to the SDM harness connector. 4. Install the CPA. 5. Turn the ignition switch to the ON position. Does the AIR BAG warning lamp come ON steady?	—	*Go to Step 7*	Go to *Integrity Check*
7	1. Turn the ignition switch to the OFF position. 2. Remove *J 38715-96* from the SDM harness connector. 3. Inspect the shorting bar within the SDM harness connector. Is the shorting bar damaged or corroded?	—	*Go to Step 8*	*Go to Step 9*
8	Replace the SDM harness connector. Refer to *Wiring Repair.* Are the repairs complete?	—	*Go to Step 28*	—
9	1. Install *J 38715-96* to the SDM harness connector. 2. Install the CPA. 3. Disconnect the instrument cluster. 4. Measure the resistance from the SDM harness connector terminal 7 to ground. Is the resistance reading less than the specified value?		*Go to Step 10*	*Go to Step 13*

98A13532

Fig. 17: Air Bag Warning Light Comes On Steady (1 Of 3)

Step	Action	Value(s)	Yes	No
10	1. Disconnect CKT 851 from G104. 2. Measure the resistance from the SDM harness connector terminal 7 to terminal 6. Is the resistance reading less than the specified value?	OL	Go to Step 12	Go to Step 11
11	Repair a short-to-ground condition in CKT 358. Are the repairs complete?	—	Go to Step 28	—
12	1. Repair the short between CKTs 358 and 851. 2. Inspect CKT 851 for any cutting or chaffing. Are the repairs complete?	—	Go to Step 28	—
13	Service the instrument cluster. Are the repairs complete?	—	Go to Step 28	—
14	1. Turn the ignition switch to the OFF position. 2. Remove the SDM Fuse. 3. Inspect the SDM Fuse. Is the SDM Fuse good?	—	Go to Step 20	Go to Step 15
15	1. Replace the SDM Fuse. 2. Turn the ignition switch to the ON position for 10 seconds. 3. Turn the ignition switch to the OFF position. 4. Remove the SDM Fuse. 5. Inspect the SDM Fuse. Is the SDM Fuse good?	—	Go to Step 19	Go to Step 16
16	1. Disconnect the SDM. 2. Replace the SDM Fuse. 3. Turn the ignition switch to the ON position for 10 seconds. 4. Turn the ignition switch to the OFF position. 5. Remove the SDM Fuse. 6. Inspect the SDM Fuse. Is the SDM Fuse good?	—	Go to Step 18	Go to Step 17
17	1. Repair a short-to-ground condition in CKT 1139. 2. Connect the SDM. 3. Replace the SDM Fuse. Are the repairs complete?	—	Go to Step 28	—
18	1. Replace the inflatable restraint Sensing and Diagnostic Module (SDM). 2. Install the SDM Fuse. Are the repairs complete?	—	Go to Step 28	—
19	Install the SDM Fuse. Are the repairs complete?	—	Go to Step 28	—

98I13530

Fig. 18: Air Bag Warning Light Comes On Steady (2 Of 3)
Courtesy of GENERAL MOTORS CORP.

Step	Action	Value(s)	Yes	No
20	Inspect the SDM harness connector. Is the connector secure?	—	Go to Step 22	Go to Step 21
21	1. Properly connect the SDM harness connector. 2. Install the CPA. Are the repairs complete?	—	Go to Step 28	—
22	1. Disconnect the inflatable restraint steering wheel and IP module yellow 2-way connectors at the base of the steering column. 2. Disconnect the SDM. 3. Check for proper connection to the SDM at terminal 10. Is the SDM harness connector terminal damaged or corroded?	—	Go to Step 23	Go to Step 24
23	Replace the SDM harness connector. Refer to *Wiring Repair.* Are the repairs complete?	—	Go to Step 28	—
24	Inspect the SDM terminals for damage or corrosion. Are any terminals damaged or corroded?	—	Go to Step 25	Go to Step 26
25	Replace the inflatable restraint Sensing and Diagnostic Module (SDM). Are the repairs complete?	—	Go to Step 28	—
26	Measure the resistance from the SDM harness connector terminal 10 to each terminal of the SDM Fuse fuseholder. Is either resistance reading within the specified values?	0–5 Ω	Go to *Integrity Check*	Go to Step 27
27	Repair an open condition in CKT 1139. Are the repairs complete?	—	Go to Step 28	—
28	Reconnect all the SIR system components, make sure all the components are properly mounted. Have all the SIR components been reconnected and properly mounted?	—	Go to *SIR Diagnostic System Check*	—

98E13528

Fig. 19: Air Bag Warning Light Comes On Steady (3 Of 3)
Courtesy of GENERAL MOTORS CORP.

AIR BAG WARNING LIGHT DOES NOT COME ON

Circuit Description

Ignition switch applies IGNITION POSITIVE VOLTAGE to SDM terminal No. 10 using SDM fuse, and to AIR BAG warning light using IPC fuse. AIR BAG warning light is connected to AIR BAG INDICATOR at SDM terminal No. 7. When ignition switch is first turned to RUN position, SDM responds by flashing AIR BAG warning light 7 times.

Diagnostic Chart Step References

NOTE: Following step references refer to test step numbers on diagnostic chart. See Fig. 20 -Fig. 22 . For circuit number and wire color identification, see WIRING

DIAGRAMS .

2

Determines whether malfunction is in SDM circuitry or in instrument cluster power feed.

3

Determines whether voltage is present in AIR BAG warning light circuit.

4

Isolates circuit 358 and checks for short to voltage in circuit 358.

6

Determines whether malfunction is in instrument cluster connector.

8

Determines whether open is due to bad bulb.

10

Isolates open in AIR BAG warning light circuitry.

13

Determines whether power is available to instrument cluster power feed circuit.

14

Checks for short from instrument cluster power feed circuit to ground.

15

Determines whether short to ground due to short in wiring or internal to instrument cluster.

19

Determines whether malfunction is in instrument cluster connector.

21

Determines whether malfunction due to open power feed circuit from IPC fuse.

Step	Action	Value(s)	Yes	No
1	Was the SIR Diagnostic System Check performed?	—	*Go to Step 2*	Go to *SIR Diagnostic System Check*
2	1. Set the parking brake. 2. Turn the ignition switch to the ON position. Does the BRAKE indicator light?	—	*Go to Step 3*	*Go to Step 13*
3	1. Turn the ignition switch to the OFF position. 2. Disconnect the inflatable restraint steering wheel and IP module yellow 2-way connectors at the base of the steering column. 3. Disconnect the inflatable restraint Sensing and Diagnostic Module (SDM). 4. Install *J 38715-96* SIR Shorting Bar Tool to the SDM harness connector. 5. Install the CPA. 6. Turn the ignition switch to the ON position. 7. Measure the voltage on the SDM harness connector from terminal 7 to ground. Is the voltage more than the specified value?	10.0 V	*Go to Step 4*	*Go to Step 6*
4	1. Turn the ignition switch to the OFF position. 2. Disconnect the instrument cluster. 3. Turn the ignition switch to the ON position. 4. Measure the voltage on the SDM harness connector from terminal 7 to ground. Is the voltage less than the specified value?	1.0 V	Go to *Integrity Check*	*Go to Step 5*
5	1. Turn the ignition switch to the OFF position. 2. Repair a short-to-B+ condition in CKT 358. 3. Reconnect the instrument cluster. Are the repairs complete?	—	*Go to Step 24*	—
6	1. Turn the ignition switch to the OFF position. 2. Remove the instrument cluster. 3. Check for proper connection to the instrument cluster at terminal B12. Is the connector damaged or corroded?	—	*Go to Step 7*	*Go to Step 8*
7	Repair the instrument cluster harness connector. Are the repairs complete?	—	*Go to Step 24*	—
8	1. Remove the AIR BAG warning lamp bulb. 2. Inspect the bulb. Is the bulb good?	—	*Go to Step 10*	*Go to Step 9*

98C13526

Fig. 20: Air Bag Warning Light Does Not Come On (1 Of 3)
Courtesy of GENERAL MOTORS CORP.

Step	Action	Value(s)	Yes	No
9	1. Replace the AIR BAG warning lamp bulb. 2. Install the instrument cluster. Are the repairs complete?	—	*Go to Step 24*	—
10	1. Install the AIR BAG warning lamp bulb. 2. Measure the resistance from the instrument cluster harness connector terminal B12 to the SDM harness connector terminal 7. Is the resistance within the specified values?	0–5 Ω	*Go to Step 12*	*Go to Step 11*
11	1. Repair an open condition in CKT 358. 2. Install the instrument cluster. Are the repairs complete?	—	*Go to Step 24*	—
12	Service the instrument cluster. Are the repairs complete?	—	*Go to Step 24*	—
13	1. Turn the ignition switch to the OFF position. 2. Remove the IPC Fuse. 3. Inspect the fuse. Is the fuse good?	—	*Go to Step 19*	*Go to Step 14*
14	1. Replace the fuse. 2. Turn the ignition switch to the ON position for 10 seconds. 3. Turn the ignition switch to the OFF position. 4. Remove the IPC Fuse. 5. Inspect the fuse. Is the fuse good?	—	*Go to Step 18*	*Go to Step 15*
15	1. Disconnect the inflatable restraint steering wheel and IP module yellow 2-way connectors at the base of the steering wheel. 2. Disconnect the instrument cluster. 3. Replace the IPC Fuse. 4. Turn the ignition switch to the ON position for 10 seconds. 5. Turn the ignition switch to the OFF position. 6. Remove the IPC Fuse. 7. Inspect the fuse. Is the fuse good?	—	*Go to Step 17*	*Go to Step 16*
16	1. Repair a short-to-ground condition in CKT 139. 2. Replace the IPC Fuse. Are the repairs complete?	—	*Go to Step 24*	—

98A13524

Fig. 21: Air Bag Warning Light Does Not Come On (2 Of 3)
Courtesy of GENERAL MOTORS CORP.

Step	Action	Value(s)	Yes	No
17	1. Service the instrument cluster. 2. Install the IPC Fuse. Are the repairs complete?	—	*Go to Step 24*	—
18	Install the IPC Fuse. Are the repairs complete?	—	*Go to Step 24*	—
19	1. Remove the instrument cluster. 2. Check for proper connection to the instrument cluster at terminal A13. Is the connector damaged or corroded?	—	*Go to Step 20*	*Go to Step 21*
20	Repair the instrument cluster harness connector. Are the repairs complete?	—	*Go to Step 24*	—
21	Measure the resistance between the instrument cluster harness connector terminal A13 to each terminal of the IPC Fuse fuseholder. Is either reading within the specified values?	0–5 Ω	*Go to Step 23*	*Go to Step 22*
22	1. Repair an open condition in CKT 139. 2. Install the IPC Fuse. Are the repairs complete?	—	*Go to Step 24*	—
23	1. Repair an open condition in the power feed to the IPC Fuse. 2. Install the IPC Fuse. Are the repairs complete?	—	*Go to Step 24*	—
24	Reconnect all the SIR system components, make sure all the components are properly mounted. Have all the SIR components been reconnected and properly mounted?	—	Go to *SIR Diagnostic System Check*	—

98I13522

Fig. 22: Air Bag Warning Light Does Not Come On (3 Of 3)
Courtesy of GENERAL MOTORS CORP.

SCAN TOOL DOES NOT COMMUNICATE WITH SDM

Circuit Description

Data Link Connector (DLC), located under left side of instrument panel, supplies battery power and ground to scan tool which communicates with SDM over serial data circuit (circuit 800). Scan tool reads data list, reads DTCs and clears DTCs.

Diagnostic Chart Step References

NOTE: Following step references refer to test step numbers on diagnostic chart. See Fig. 23 and Fig. 24 . For circuit number and wire color identification, see WIRING DIAGRAMS .

2

This test checks for proper operation of scan tool.

4

This test checks for proper connection at DLC.

6

This test checks for proper connection at SDM harness connector.

11

This test checks for open in circuit 800.

13

This test checks for short to ground in circuit 800.

15

This test checks for short to B+ in circuit 800.

Step	Action	Value(s)	Yes	No
1	Was the SIR Diagnostic System Check performed?	—	*Go to Step 2*	Go to *SIR Diagnostic System Check*
2	1. Connect the scan tool to the Data Link Connector (DLC). 2. Turn on the scan tool. Does the scan tool power-up?	—	*Go to Step 3*	Go to *Scan Tool Inoperative* in Wiring Systems
3	Attempt to establish communication with the same system on a different vehicle. Can communication be established?	—	*Go to Step 4*	*Go to Step 17*

98A13680

Fig. 23: Scan Tool Does Not Communicate With SDM (1 Of 2)
Courtesy of GENERAL MOTORS CORP.

Step	Action	Value(s)	Yes	No
4	1. Turn the ignition switch to the OFF position. 2. Check for proper connection of the scan tool to the Data Link Connector (DLC) at terminal 9. Is the DLC damaged or corroded?	—	*Go to Step 5*	*Go to Step 6*
5	Repair the Data Link Connector (DLC). Are the repairs complete?	—	*Go to Step 18*	—
6	1. Disconnect the inflatable restraint steering wheel and IP module yellow 2-way connectors at the base of the steering column. 2. Disconnect the inflatable restraint Sensing and Diagnostic Module (SDM). 3. Check for proper connection at terminal 5 on the harness side of the SDM connector. Is the connector damaged or corroded?	—	*Go to Step 7*	*Go to Step 9*
7	Replace the SDM harness connector. Refer to *Wiring Repair.* Are the repairs complete?	—	*Go to Step 8*	—
8	Check for proper connection at terminal 5 of the SDM. Is the terminal damaged or corroded?	—	*Go to Step 10*	*Go to Step 18*
9	Check for proper connection at terminal 5 of the SDM. Is the terminal damaged or corroded?	—	*Go to Step 10*	*Go to Step 11*
10	Replace the inflatable restraint Sensing and Diagnostic Module (SDM). Are the repairs complete?	—	*Go to Step 18*	—
11	Measure the resistance from the SDM harness connector terminal 5 to the DLC terminal 9. Is the resistance reading within the specified values?	0–5 Ω	*Go to Step 13*	*Go to Step 12*
12	Repair an open condition in CKT 800. Are the repairs complete?	—	*Go to Step 18*	—
13	Measure the resistance from the DLC terminal 9 to ground. Is the resistance reading less than the specified value?	OL	*Go to Step 14*	*Go to Step 15*
14	Repair a short-to-ground condition in CKT 800. Are the repairs complete?	—	*Go to Step 18*	—
15	1. Turn the ignition switch to the ON position. 2. Measure the voltage from the DLC terminal 9 to ground. Is the measured voltage less than the specified value?	1.0 V	Go to *Integrity Check*	*Go to Step 16*
16	1. Turn the ignition switch to the OFF position. 2. Repair a short-to-B+ condition in CKT 800. Are the repairs complete?	—	*Go to Step 18*	—
17	Scan tool may be malfunctioning. Refer to scan tool instruction manual. Has proper scan tool operation been verified?	—	*Go to Step 18*	—
18	Reconnect all the SIR system components, make sure all the components are properly mounted. Have all the SIR components been reconnected and properly mounted?	—	Go to *SIR Diagnostic System Check*	—

98G13678

Fig. 24: Scan Tool Does Not Communicate With SDM (2 Of 2)
Courtesy of GENERAL MOTORS CORP.

DTC B1015: PASSENGER DEPLOYMENT LOOP RESISTANCE HIGH

Circuit Description

When ignition switch is turned to RUN position, SDM performs tests to diagnose critical internal malfunctions. IGNITION POSITIVE VOLTAGE and deployment voltages are measured to ensure they are within normal ranges. SDM then performs RESISTANCE MEASUREMENT test. PASSENGER LOW terminal No. 4 is grounded through an internal current sink, and PASSENGER HIGH terminal No. 1 is connected to an internal constant current source. By monitoring voltage difference between PASSENGER HIGH and PASSENGER LOW, SDM calculates combined resistance of passenger deployment loop using measured voltage.

Conditions For Setting DTC

DTC sets when driver and passenger frontal deployment loops are not open or shorted to voltage, passenger frontal deployment loop resistance is not shorted to ground, and is greater than 3 ohms. RESISTANCE MEASUREMENT test occurs only once each ignition cycle when IGNITION POSITIVE VOLTAGE is in normal range.

Action Taken

SDM turns on AIR BAG warning light and sets DTC.

Conditions For Clearing DTC

Current DTC clears when ignition switch is cycled and resistance is less than 3 ohms. History DTC clears when scan tool CLEAR CODES is received or when 250 malfunction-free ignition cycles have occurred. If CLEAR CODES is received, and DTC still exists, DTC will not reappear until next ignition cycle.

Diagnostic Aids

An intermittent condition is likely to be caused by a poor connection at passenger-side air bag connector terminals A or B, SDM terminals No. 1 or 4, or a poor wire to terminal connection in circuits 1403 or 1404. Note and compare resistance over multiple ignition cycles to determine intermittent condition.

Diagnostic Chart Step References

NOTE: **Following step references refer to test step numbers on diagnostic chart. See Fig. 25 -Fig. 27 . For circuit number and wire color identification, see WIRING DIAGRAMS .**

2

Determines deployment loop resistance measured by SDM.

3

Checks for proper contact or corrosion of passenger-side air bag module Yellow 2-pin connector.

10

Isolates malfunction to one side of passenger-side air bag module Yellow 2-pin connector.

11

Checks for proper contact and corrosion of passenger-side air bag module jumper connector.

16

Determines whether malfunction is due to passenger-side air bag module or module jumper.

19

Checks for proper contact and or corrosion of SDM connector.

24

Determines whether malfunction is in circuit 1403.

26

Determines whether malfunction is in circuit 1404.

Step	Action	Value(s)	Yes	No
1	Was the SIR Diagnostic System Check performed?	—	*Go to Step 2*	Go to *SIR Diagnostic System Check*
2	1. Turn the ignition switch to the OFF position. 2. Connect a scan tool to the DLC. 3. Turn the ignition switch to the RUN position. 4. Request the SIR data list display. 5. Read and record on the repair order the passenger deployment loop resistance PASSENGER RESISTANCE. Has the PASSENGER RESISTANCE been read and recorded on the repair order?	—	*Go to Step 3*	—
3	1. Turn the ignition switch to the OFF position. 2. Disconnect the inflatable restraint steering wheel and IP module yellow 2-way connectors. 3. Check for proper connection at terminals A and B on the IP harness side of the inflatable restraint IP module yellow 2-way jumper connector. Are the terminals damaged or corroded?	—	*Go to Step 4*	*Go to Step 6*
4	Replace the inflatable restraint IP module yellow 2-way IP harness connector. Refer to *Wiring Repair*. Are the repairs complete?	—	*Go to Step 5*	—
5	Check for proper connection at terminals A and B on the inflatable restraint IP module yellow 2-way jumper connector. Are the terminals damaged or corroded?	—	*Go to Step 7*	*Go to Step 28*
6	Check for proper connection at terminals A and B on the inflatable restraint IP module yellow 2-way jumper connector. Are the terminals damaged or corroded?	—	*Go to Step 7*	*Go to Step 8*
7	Repair the inflatable restraint IP module jumper harness. Refer to *Wiring Repair*. Are the repairs complete?	—	*Go to Step 28*	—

98C09855

Fig. 25: DTC B1015: Passenger Deployment Loop Resistance High (1 Of 3)
Courtesy of GENERAL MOTORS CORP.

Step	Action	Value(s)	Yes	No
8	1. Reconnect the yellow 2-way connectors. 2. Turn the ignition switch to the RUN position. 3. Using the scan tool, request the SIR data list display. 4. Read the passenger deployment loop resistance PASSENGER RESISTANCE. Is the passenger resistance more than the specified value?	3.0 Ω	*Go to Step 10*	*Go to Step 9*
9	1. Turn the ignition switch to the OFF position. 2. Replace the inflatable restraint IP module yellow 2–way IP harness connector. Refer to *Wiring Repair.* Are the repairs complete?	—	*Go to Step 28*	—
10	1. Turn the ignition switch to the OFF position. 2. Disconnect the yellow 2-way connectors. 3. Connect the *J 38715-A* SIR Driver/Passenger Load Tool to the harness connectors. 4. Turn the ignition switch to the RUN position. 5. Using the scan tool, request the data list display. 6. Read the passenger deployment loop resistance PASSENGER RESISTANCE. Is the passenger resistance more than the specified value?	3.0 Ω	*Go to Step 19*	*Go to Step 11*
11	1. Turn the ignition switch to the OFF position. 2. Disconnect the inflatable restraint IP module pigtail connector at the module jumper. 3. Check for proper connection at terminals A and B of the 2–way jumper connector. Are the terminals damaged or corroded?	—	*Go to Step 12*	*Go to Step 14*
12	Repair the inflatable restraint IP module jumper harness. Refer to *Wiring Repair.* Are the repairs complete?	—	*Go to Step 13*	—
13	Check for proper connection at terminals A and B on the inflatable restraint IP module yellow 2-way pigtail connector. Are the terminals damaged or corroded?	—	*Go to Step 15*	*Go to Step 28*
14	Check for proper connection at terminals A and B on the inflatable restraint IP module yellow 2-way pigtail connector. Are the terminals damaged or corroded?	—	*Go to Step 15*	*Go to Step 16*
15	Replace the inflatable restraint IP module. Are the repairs complete?	—	*Go to Step 28*	—
16	1. Disconnect the inflatable restraint IP module jumper harness connector from the *J 38715-A.* 2. Connect the connector to the jumper harness. 3. Connect *J 38715-A* to the inflatable restraint IP module side of the jumper. 4. Turn the ignition switch to the RUN position. 5. Using the scan tool, request the SIR data list display. 6. Read the passenger deployment loop resistance PASSENGER RESISTANCE. Is the passenger resistance more than the specified value?	3.0 Ω	*Go to Step 17*	*Go to Step 18*

98D09851

Fig. 26: DTC B1015: Passenger Deployment Loop Resistance High (2 Of 3)
Courtesy of GENERAL MOTORS CORP.

Step	Action	Value(s)	Yes	No
17	1. Turn the ignition switch to the OFF position. 2. Repair the high resistance condition in the inflatable restraint IP module jumper harness. Refer to *Wiring Repair.* Are the repairs complete?	—	*Go to Step 28*	—
18	1. Turn the ignition switch to the OFF position. 2. Replace the inflatable restraint IP module. Are the repairs complete?	—	*Go to Step 28*	—
19	1. Turn the ignition switch to the OFF position. 2. Disconnect the inflatable restraint Sensing and Diagnostic Module (SDM). 3. Disconnect the *J 38715-A.* 4. Check for proper connection at terminals 1 and 4 on the SDM harness connector. Is the harness connector damaged or corroded?	—	*Go to Step 20*	*Go to Step 22*
20	Replace the inflatable restraint Sensing and Diagnostic Module (SDM) harness connector. Refer to *Wiring Repair.* Are the repairs complete?	—	*Go to Step 21*	—
21	Check for proper connection at terminals 1 and 4 on the SDM. Are the terminals damaged or corroded?	—	*Go to Step 23*	*Go to Step 28*
22	Check for proper connection at terminals 1 and 4 on the SDM. Are the terminals damaged or corroded?	—	*Go to Step 23*	*Go to Step 24*
23	Replace the inflatable restraint Sensing and Diagnostic Module (SDM). Are the repairs complete?	—	*Go to Step 28*	—
24	1. Zero the *J 39200* Digital Multimeter. 2. Measure the resistance from the SDM harness connector terminal 1 to the inflatable restraint IP module yellow 2-way harness connector terminal A. Is the resistance reading within the specified values?	0–0.5 Ω	*Go to Step 26*	*Go to Step 25*
25	Repair the high resistance condition in CKT 1403. Are the repairs complete?	—	*Go to Step 28*	—
26	1. Zero the *J 39200.* 2. Measure the resistance from the SDM harness connector terminal 4 to the inflatable restraint IP module yellow 2-way harness connector terminal B. Is the resistance reading within the specified values?	0–0.5 Ω	Go to *SDM Integrity Check*	*Go to Step 27*
27	Repair the high resistance condition in CKT 1404. Are the repairs complete?	—	*Go to Step 28*	—
28	Reconnect all the SIR components, make sure all the components are properly mounted. Have all the SIR components been reconnected and properly mounted?	—	*Go to Step 29*	—
29	Clear all the SIR DTCs. Have all the DTCs been cleared?	—	Go to *SIR Diagnostic System Check*	—

98H09853

Fig. 27: DTC B1015: Passenger Deployment Loop Resistance High (3 Of 3)
Courtesy of GENERAL MOTORS CORP.

DTC B1016: PASSENGER DEPLOYMENT LOOP RESISTANCE LOW

Circuit Description

When ignition switch is turned to RUN position, SDM performs tests to diagnose critical internal malfunctions. IGNITION POSITIVE VOLTAGE and deployment voltages are measured to ensure they are within normal ranges. SDM then performs RESISTANCE MEASUREMENT test. PASSENGER LOW terminal No. 4 is grounded through an internal current sink, and PASSENGER HIGH terminal No. 1 is connected to an internal constant current source. By monitoring voltage difference between PASSENGER HIGH and PASSENGER LOW, SDM calculates combined resistance of passenger deployment loop using measured voltage.

Conditions For Setting DTC

DTC sets when driver and passenger deployment loops are not open or shorted to voltage, passenger frontal deployment loop is not shorted to ground and resistance is less than 1.4 ohms. Test occurs only once each ignition cycle when IGNITION POSITIVE VOLTAGE is in normal range.

Action Taken

SDM turns on AIR BAG warning light and sets DTC.

Conditions For Clearing DTC

Current DTC clears when ignition switch is cycled and resistance is greater than 1.4 ohms. History DTC clears when scan tool CLEAR CODES is received or when 250 malfunction-free ignition cycles have occurred. If CLEAR CODES is received, and DTC still exists, DTC will not reappear until next ignition cycle.

Diagnostic Aids

An intermittent condition is likely to be caused by a short between circuit 1403 and circuits 347, 348, or 1404, or a malfunctioning shorting bar on passenger-side air bag connector.

Diagnostic Chart Step References

NOTE: **Following step references refer to test step numbers on diagnostic chart. See Fig. 28 -Fig. 30 . For circuit number and wire color identification, see WIRING DIAGRAMS .**

2

Determines deployment loop resistance measured by SDM.

6

Isolates malfunction to one side of passenger-side air bag module Yellow 2-pin connector.

7

Checks for proper contact or corrosion of passenger-side air bag module jumper connector.

12

Determines whether malfunction is in passenger-side air bag module or module jumper.

15

Checks for short between circuits 1403 and 1404.

17

Checks for short between circuits 1403 and 348.

Step	Action	Value(s)	Yes	No
1	Was the SIR Diagnostic System Check performed?	—	*Go to Step 2*	Go to *SIR Diagnostic System Check*
2	1. Turn the ignition switch to the OFF position. 2. Connect a scan tool to the DLC. 3. Turn the ignition switch to the RUN position. 4. Request the SIR data list display. 5. Read and record on the repair order the passenger deployment loop resistance PASSENGER RESISTANCE. 6. Request the SIR DTC display. Is DTC B1022 also present?	—	*Go to Step 3*	*Go to Step 4*
3	1. Turn the ignition switch to the OFF position. 2. Disconnect the inflatable restraint steering wheel and IP module yellow 2-way connectors. 3. Repair the short from CKT 347 to CKT 1403. Are the repairs complete?	—	*Go to Step 20*	—
4	1. Turn the ignition switch to the OFF position. 2. Disconnect the inflatable restraint IP module yellow 2-way connector. 3. Reconnect the 2-way connector. 4. Make sure that the CPA is properly installed. 5. Turn the ignition switch to the RUN position. 6. Using a scan tool, request the SIR data list display. 7. Read the passenger deployment loop resistance PASSENGER RESISTANCE. Is PASSENGER RESISTANCE less than the specified value?	1.4 Ω	*Go to Step 6*	*Go to Step 5*
5	1. Turn the ignition switch to the OFF position. 2. Replace the inflatable restraint IP module yellow 2-way harness connector. Refer to *Wiring Repair.* Are the repairs complete?	—	*Go to Step 19*	—

98J09849

Fig. 28: DTC B1016: Passenger Deployment Loop Resistance Low (1 Of 3)

Step	Action	Value(s)	Yes	No
6	1. Turn the ignition switch to the OFF position. 2. Disconnect the inflatable restraint steering wheel and IP module yellow 2-way connectors. 3. Connect *J 38715-A* SIR Driver/Passenger Load Tool to the harness connectors. 4. Turn the ignition switch to the RUN position. 5. Using the scan tool, request the SIR data list display. 6. Read the passenger deployment loop resistance PASSENGER RESISTANCE. Is PASSENGER RESISTANCE less than the specified value?	1.4 Ω	*Go to Step 15*	*Go to Step 7*
7	1. Turn the ignition switch to the OFF position. 2. Disconnect the inflatable IP module pigtail connector from the module jumper. 3. Check for proper connection at terminals A and B on the jumper connector. Are the terminals damaged or corroded?	—	*Go to Step 8*	*Go to Step 10*
8	Repair the inflatable restraint IP module jumper harness. Refer to *Wiring Repair*. Are the repairs complete?	—	*Go to Step 9*	—
9	Check for proper connection at terminals A and B on the inflatable restraint IP module yellow 2-way pigtail connector. Are the terminals damaged or corroded?	—	*Go to Step 11*	*Go to Step 19*
10	Check for proper connection at terminals A and B on the inflatable restraint IP module yellow 2-way pigtail connector. Are the terminals damaged or corroded?	—	*Go to Step 11*	*Go to Step 12*
11	Replace the inflatable restraint IP module. Are the repairs complete?	—	*Go to Step 19*	—
12	1. Disconnect the inflatable restraint IP module jumper harness connector from *J 38715-A*. 2. Connect *J 38715-A* to the inflatable restraint IP module side of the jumper. 3. Turn the ignition switch to the RUN position. 4. Using the scan tool, request the SIR data list display. 5. Read the passenger deployment loop resistance PASSENGER RESISTANCE. Is PASSENGER RESISTANCE less than the specified value?	1.4 Ω	*Go to Step 14*	*Go to Step 13*
13	1. Turn the ignition switch to the OFF position. 2. Replace the inflatable restraint IP module. Are the repairs complete?	—	*Go to Step 19*	—
14	1. Turn the ignition to OFF. 2. Repair the short from CKT 1403 to CKT 1404 in the jumper harness. Are the repairs complete?	—	*Go to Step 19*	—

98F09847

Fig. 29: DTC B1016: Passenger Deployment Loop Resistance Low (2 Of 3)
Courtesy of GENERAL MOTORS CORP.

Step	Action	Value(s)	Yes	No
15	1. Turn the ignition switch to the OFF position. 2. Disconnect the inflatable restraint Sensing and Diagnostic Module (SDM). 3. Disconnect *J 38715-A*. 4. Measure the resistance from the SDM harness connector terminal 1 to terminal 4. Is the resistance less than the specified value?	OL	*Go to Step 16*	*Go to Step 17*
16	1. Turn the ignition switch to the OFF position. 2. Repair the short from CKT 1403 to CKT 1404. Are the repairs complete?	—	*Go to Step 19*	—
17	Measure the resistance from the SDM harness connector terminal 1 to terminal 3. Is the resistance less than the specified value?	OL	*Go to Step 18*	Go to *SDM Integrity Check*
18	Repair the short from CKT 1403 to CKT 348. Are the repairs complete?	—	*Go to Step 19*	—
19	Reconnect all the SIR system components, make sure all the components are properly mounted. Have all the SIR components been reconnected and properly mounted?	—	*Go to Step 20*	—
20	Clear the SIR DTCs. Have all the SIR DTCs been cleared?	—	Go to *SIR Diagnostic System Check*	—

98B09845

Fig. 30: DTC B1016: Passenger Deployment Loop Resistance Low (3 Of 3)
Courtesy of GENERAL MOTORS CORP.

DTC B1017: PASSENGER DEPLOYMENT LOOP OPEN

Circuit Description

When ignition switch is turned to RUN position, SDM performs tests to diagnose critical internal malfunctions. SDM measures to ensure IGNITION POSITIVE VOLTAGE is within normal range. SDM then performs DEPLOYMENT LOOP CONTINUITY test, measuring voltage difference between PASSENGER HIGH and PASSENGER LOW.

Conditions For Setting DTC

DTC sets when voltage difference between PASSENGER HIGH terminal No. 1 and PASSENGER LOW terminal No. 4 is greater than or equal to 400 millivolts for 500 milliseconds during DEPLOYMENT LOOP CONTINUITY, RESISTANCE MEASUREMENT, or CONTINUOUS MONITORING tests.

Action Taken

SDM turns on AIR BAG warning light and sets DTC.

Conditions For Clearing DTC

Current DTC clears when voltage difference between PASSENGER HIGH terminal No. 1 and PASSENGER LOW terminal No. 4 is less than 400 millivolts for 500 milliseconds. History DTC clears when scan tool CLEAR CODES is received or 250 malfunction-free ignition cycles have occurred.

Diagnostic Aids

An intermittent condition is likely to be caused by a poor connection at passenger-side air bag connector terminals A or B, SDM terminals No. 1 or 4, or an open in circuits 1403 or 1404.

Diagnostic Chart Step References

NOTE: Following step references refer to test step numbers on diagnostic chart. See Fig. 31 -Fig. 33 . For circuit number and wire color identification, see WIRING DIAGRAMS .

2

Determines deployment loop voltage difference measured by SDM.

3

Checks for proper contact or corrosion of Yellow 2-pin connector terminals.

10

Isolates malfunction to one side of passenger-side air bag module Yellow 2-pin connector.

11

Checks for proper contact or corrosion of passenger-side air bag module jumper connector.

16

Determines whether malfunction is due to passenger-side air bag module or module jumper.

19

Checks for proper contact or corrosion of SDM connector.

24

Determines whether malfunction is in circuit 1403.

26

Determines whether malfunction is in circuit 1404.

Step	Action	Value(s)	Yes	No
1	Was the SIR Diagnostic System Check performed?	—	*Go to Step 2*	Go to *SIR Diagnostic System Check*
2	1. Turn the ignition switch to the OFF position. 2. Connect a scan tool to the DLC. 3. Turn the ignition switch to the RUN position. 4. Request the SIR data list display. 5. Read and record on the repair order the passenger deployment loop voltage difference PASSENGER VDIF. Has the PASSENGER VDIF been read and recorded on the repair order?	—	*Go to Step 3*	—
3	1. Turn the ignition switch to the OFF position. 2. Disconnect the inflatable restraint steering wheel and IP module yellow 2-way connectors. 3. Check for proper connection at terminals A and B on the IP harness side of the inflatable restraint IP module yellow 2-way jumper connector. Are the terminals damaged or corroded?	—	*Go to Step 4*	*Go to Step 6*
4	Replace the inflatable restraint IP module yellow 2-way IP harness connector. Refer to *Wiring Repair.* Are the repairs complete?	—	*Go to Step 5*	—
5	Check for proper connection at terminals A and B on the inflatable restraint IP module yellow 2-way jumper connector. Are the terminals damaged or corroded?	—	*Go to Step 7*	*Go to Step 28*
6	Check for proper connection at terminals A and B on the inflatable restraint IP module yellow 2-way jumper connector. Are the terminals damaged or corroded?	—	*Go to Step 7*	*Go to Step 8*
7	Repair the inflatable restraint IP module jumper harness. Refer to *Wiring Repair.* Are the repairs complete?	—	*Go to Step 28*	—
8	1. Connect the inflatable restraint steering wheel and IP module yellow 2-way connectors. 2. Turn the ignition switch to the RUN position. 3. Using the scan tool, request the SIR data list display. 4. Read the passenger deployment loop voltage difference PASSENGER VDIF. Is the PASSENGER VDIF less than the specified value?	400 mV	*Go to Step 9*	*Go to Step 10*
9	1. Turn the ignition to OFF. 2. Replace the inflatable restraint IP module yellow 2-way IP harness connector. Refer to *Wiring Repair.* Are the repairs complete?	—	*Go to Step 28*	—

98G09843

Fig. 31: DTC B1017: Passenger Deployment Loop Open (1 Of 3)
Courtesy of GENERAL MOTORS CORP.

Step	Action	Value(s)	Yes	No
10	1. Turn the ignition switch to the OFF position. 2. Disconnect the inflatable restraint steering wheel and IP module yellow 2-way connectors. 3. Connect the *J 38715-A* SIR Driver/Passenger Load Tool to the harness connectors. 4. Turn the ignition switch to the RUN position. 5. Using the scan tool, request the data list display. 6. Read the passenger deployment loop voltage difference PASSENGER VDIF. Is the PASSENGER VDIF less than the specified value?	400 mV	*Go to Step 11*	*Go to Step 19*
11	1. Turn the ignition switch to the OFF position. 2. Disconnect the inflatable restraint IP module pigtail connector from the module jumper. 3. Check for proper connection at terminals A and B of the 2-way jumper connector. Are the terminals damaged or corroded?	—	*Go to Step 12*	*Go to Step 14*
12	Repair the inflatable restraint IP module jumper harness. Refer to *Wiring Repair*. Are the repairs complete?	—	*Go to Step 13*	—
13	Check for proper connection at terminals A and B on the inflatable restraint IP module yellow 2-way pigtail connector. Are the terminals damaged or corroded?	—	*Go to Step 15*	*Go to Step 28*
14	Check for proper connection at terminals A and B on the inflatable restraint IP module yellow 2-way pigtail connector. Are the terminals damaged or corroded?	—	*Go to Step 15*	*Go to Step 16*
15	Replace the inflatable restraint IP module. Are the repairs complete?	—	*Go to Step 28*	—
16	1. Disconnect the inflatable restraint IP module jumper harness connector from the *J 38715-A*. 2. Connect the connector to the jumper harness. 3. Connect *J 38715-A* to the inflatable restraint IP module side of the jumper. 4. Turn the ignition switch to the RUN position. 5. Using the scan tool, request the SIR data list display. 6. Read the passenger deployment loop voltage difference PASSENGER VDIF. Is PASSENGER VDIF less than the specified value?	400 mV	*Go to Step 17*	*Go to Step 18*
17	1. Turn the ignition switch to the OFF position. 2. Replace the inflatable restraint IP module. Are the repairs complete?	—	*Go to Step 28*	—
18	1. Turn the ignition switch to the OFF position. 2. Repair the high resistance condition in the inflatable restraint IP module jumper harness. Refer to *Wiring Repair*. Are the repairs complete?	—	*Go to Step 28*	—

98C09841

Fig. 32: DTC B1017: Passenger Deployment Loop Open (2 Of 3)
Courtesy of GENERAL MOTORS CORP.

Step	Action	Value(s)	Yes	No
19	1. Turn the ignition switch to the OFF position. 2. Disconnect the inflatable restraint Sensing and Diagnostic Module (SDM). 3. Disconnect the *J 38715-A*. 4. Check for proper connection at terminals 1 and 4 on the SDM harness connector. Is the connector damaged or corroded?	—	*Go to Step 20*	*Go to Step 22*
20	Replace the SDM harness connector. Refer to *Wiring Repair*. Are the repairs complete?	—	*Go to Step 21*	—
21	Check for proper connection at terminals 1 and 4 of the SDM. Are the terminals damaged or corroded?	—	*Go to Step 23*	*Go to Step 28*
22	Check for proper connection at terminals 1 and 4 of the SDM. Are the terminals damaged or corroded?	—	*Go to Step 23*	*Go to Step 24*
23	Replace the inflatable restraint Sensing and Diagnostic Module (SDM). Are the repairs complete?	—	*Go to Step 28*	—
24	1. Zero the *J 39200* Digital Multimeter. 2. Measure the resistance from the SDM harness connector terminal 1 to the inflatable restraint IP module yellow 2-way harness connector terminal A. Is the resistance reading within the specified values?	0–0.5 Ω	*Go to Step 26*	*Go to Step 25*
25	Repair the high resistance condition in CKT 1403. Are the repairs complete?	—	*Go to Step 28*	—
26	1. Zero the *J 39200*. 2. Measure the resistance from the SDM harness connector terminal 4 to the inflatable restraint IP module yellow 2-way harness connector terminal B. Is the resistance reading within the specified values?	0–0.5 Ω	Go to *SDM Integrity Check*	*Go to Step 27*
27	Repair the high resistance condition in CKT 1404. Are the repairs complete?	—	*Go to Step 28*	—
28	Reconnect all the SIR system components, make sure all the components are properly mounted. Have all the SIR components been reconnected and properly mounted?	—	*Go to Step 29*	—
29	Clear all the SIR DTCs. Have all the SIR DTCs been cleared?	—	Go to *SIR Diagnostic System Check*	—

98I09919

Fig. 33: DTC B1017: Passenger Deployment Loop Open (3 Of 3)
Courtesy of GENERAL MOTORS CORP.

DTC B1018: PASSENGER DEPLOYMENT LOOP SHORT TO GROUND

Circuit Description

When ignition switch is turned to RUN position, SDM performs tests to diagnose critical internal malfunctions. IGNITION POSITIVE VOLTAGE, 23 VLR and deployment loop voltages are measured to ensure they are within normal ranges. SDM monitors voltages at DRIVER LOW terminal No. 3 and PASSENGER LOW

terminal No. 4 to detect shorts to ground in air bag module circuits. Service wait time is 10 minutes. See **DISABLING & ACTIVATING AIR BAG SYSTEM** before replacing SIR components.

Conditions For Setting DTC

DTC sets when driver and passenger deployment loops are not open, driver deployment loop is not shorted to voltage, voltage at DRIVER LOW is greater than 3.3 volts, voltage at PASSENGER LOW is less than 3.3 volts for 500 milliseconds during POWER-ON, RESISTANCE MEASUREMENT, or CONTINUOUS MONITORING tests, and IGNITION POSITIVE VOLTAGE is within normal operating range.

Action Taken

SDM turns on AIR BAG warning light and sets DTCs B1018 and B1071.

Conditions For Clearing DTC

DTC clears when malfunction no longer occurs (has been repaired) and SDM has been replaced. DTC B1018 is a latched code and cannot be cleared.

Diagnostic Aids

An intermittent condition is likely to be caused by a short to ground in passenger-side air bag module circuit. DTC B1018 would be accompanied by DTC B1071. Inspect circuits 1403 and 1404 carefully for cutting or chafing. If wiring pigtail of passenger-side air bag module is damaged, component must be replaced. Careful inspection of circuits and components indicated on DTC B1018 chart is essential to ensure that replacement SDM is not damaged. Note and compare value of PASSENGER SENSELO over multiple ignition cycles to determine intermittent condition.

Diagnostic Chart Step References

NOTE: Following step references refer to test step numbers on diagnostic chart. See Fig. 34 and Fig. 35 . For circuit number and wire color identification, see WIRING DIAGRAMS .

2

Determines PASSENGER LOW voltage measured by SDM.

3

Isolates malfunction to one side of passenger-side air bag module Yellow 2-pin connector.

4

Determines whether malfunction is passenger-side air bag module or module jumper.

7

Determines whether malfunction is in circuit 1403.

9

Determines whether malfunction is in circuit 1404.

Step	Action	Value(s)	Yes	No
1	Was the SIR Diagnostic System Check performed?	—	*Go to Step 2*	Go to *SIR Diagnostic System Check*
2	1. Turn the ignition switch to the OFF position. 2. Connect a scan tool to the DLC. 3. Turn the ignition switch to the RUN position. 4. Request the SIR data list display. 5. Read and record on the repair order the passenger side low voltage PASSENGER SENSELO. Has the PASSENGER SENSELO been read and recorded on the repair order?	—	*Go to Step 3*	—
3	1. Turn the ignition switch to the OFF position. 2. Disconnect the inflatable restraint steering wheel and IP module yellow 2-way connectors. 3. Connect *J 38715-A* SIR Driver/Passenger Load Tool to the harness connectors. 4. Turn the ignition switch to the RUN position. 5. Using the scan tool, request the SIR data list display. 6. Read the passenger side low voltage PASSENGER SENSELO. Is PASSENGER SENSELO less than the specified value?	3.3 V	*Go to Step 7*	*Go to Step 4*
4	1. Turn the ignition switch to the OFF position. 2. Disconnect the inflatable restraint IP module jumper harness connector from the *J 38715-A*. 3. Connect the connector to the jumper. 4. Connect *J 38715-A* to the inflatable restraint IP module side of the jumper. 5. Turn the ignition switch to the RUN position. 6. Using the scan tool, request the SIR data list display. 7. Read the passenger side low voltage PASSENGER SENSELO. Is PASSENGER SENSELO less than the specified value?	3.3 V	*Go to Step 5*	*Go to Step 6*

98E09917

Fig. 34: DTC B1018: Passenger Deployment Loop Short To Ground (1 Of 2)
Courtesy of GENERAL MOTORS CORP.

Step	Action	Value(s)	Yes	No
5	1. Turn the ignition switch to the OFF position. 2. Repair the short-to-ground condition in the jumper harness. Are the repairs complete?	—	*Go to Step 11*	—
6	1. Turn the ignition switch to the OFF position. 2. Inspect the inflatable restraint IP module pigtail for damage and proper routing. 3. Replace the inflatable restraint IP module. Are the repairs complete?	—	*Go to Step 11*	—
7	1. Turn the ignition switch to the OFF position. 2. Disconnect the inflatable restraint Sensing and Diagnostic Module (SDM). 3. Disconnect the *J 38715-A*. 4. Measure the resistance on the SDM harness connector from terminals 1 to 6 (ground). Is the resistance less than the specified value?	OL	*Go to Step 8*	*Go to Step 9*
8	Repair a short-to-ground condition in CKT 1403. Are the repairs complete?	—	*Go to Step 11*	—
9	Measure the resistance on the SDM harness connector from terminals 4 to 6 (ground). Is the resistance less than the specified value?	OL	*Go to Step 10*	Go to *SDM Integrity Check*
10	Repair a short-to-ground condition in CKT 1404. Are the repairs complete?	—	*Go to Step 11*	—
11	1. Reconnect all the SIR system components, make sure all the components are properly mounted. 2. Turn the ignition switch to the RUN position. 3. Make sure PASSENGER SENSELO is more than the specified value. 4. Replace the inflatable restraint Sensing and Diagnostic Module (SDM). Have all the SIR components been reconnected and properly mounted?	3.3 V	Go to *SIR Diagnostic System Check*	—

98A09915

Fig. 35: DTC B1018: Passenger Deployment Loop Short To Ground (2 Of 2)
Courtesy of GENERAL MOTORS CORP.

DTC B1019: PASSENGER DEPLOYMENT LOOP SHORT TO VOLTAGE

Circuit Description

When ignition switch is turned to RUN position, SDM performs tests to diagnose critical internal malfunctions. IGNITION POSITIVE VOLTAGE, 23 VLR and deployment loop voltages are measured to ensure they are within normal ranges. SDM monitors voltages at DRIVER LOW terminal No. 3 and PASSENGER LOW terminal No. 4 to detect shorts to voltage in air bag module circuits.

Conditions For Setting DTC

DTC sets when voltage at DRIVER LOW terminal No. 3 is less than 4.8 volts, voltage at PASSENGER LOW

terminal No. 4 is greater than 4.8 volts for 500 milliseconds during CONTINUOUS MONITORING test, and IGNITION POSITIVE VOLTAGE is within normal operation range.

Action Taken

SDM turns on AIR BAG warning light and sets DTC.

Conditions For Clearing DTC

Current DTC clears when voltage at PASSENGER LOW terminal No. 4 is less than 4.8 volts for 500 milliseconds. History DTC clears when scan tool CLEAR CODES is received or 250 malfunction-free ignition cycles have occurred.

Diagnostic Aids

An intermittent condition is likely to be caused by a short to voltage in passenger-side air bag module circuit. Inspect circuits 1403 and 1404 carefully for cutting or chafing. If wiring pigtail of passenger-side air bag module is damaged, component must be replaced. Note and compare value of PASSENGER SENSELO over multiple ignition cycles to determine intermittent condition.

Diagnostic Chart Step References

NOTE: **Following step references refer to test step numbers on diagnostic chart. See Fig. 36 and Fig. 37 . For circuit number and wire color identification, see WIRING DIAGRAMS .**

2

Determines PASSENGER LOW voltage measured by SDM.

3

Isolates malfunction to one side of passenger-side air bag module Yellow 2-pin connector.

4

Determines whether malfunction is due to passenger-side air bag module or module jumper.

7

Determines whether malfunction is in circuit 1403.

9

Determines whether malfunction is in circuit 1404.

Step	Action	Value(s)	Yes	No
1	Was the SIR Diagnostic System Check performed?	—	*Go to Step 2*	Go to *SIR Diagnostic System Check*
2	1. Turn the ignition switch to the OFF position. 2. Connect a scan tool to the DLC. 3. Turn the ignition switch to the RUN position. 4. Request the SIR data list display. 5. Read and record on the repair order the passenger side low voltage PASSENGER SENSELO. Has the PASSENGER SENSELO been read and recorded on the repair order?	—	*Go to Step 3*	—
3	1. Turn the ignition switch to the OFF position. 2. Disconnect the inflatable restraint steering wheel and IP module yellow 2-way connectors. 3. Connect *J 38715-A* SIR Driver/Passenger Load Tool to the harness connectors. 4. Turn the ignition switch to the RUN position. 5. Using the scan tool, request the SIR data list display. 6. Read the passenger side low voltage PASSENGER SENSELO. Is PASSENGER SENSELO more than the specified value?	4.8 V	*Go to Step 7*	*Go to Step 4*
4	1. Turn the ignition switch to the OFF position. 2. Disconnect the inflatable restraint IP module jumper harness connector from the *J 38715-A*. 3. Connect the connector to the jumper. 4. Connect *J 38715-A* to the inflatable restraint IP module side of the jumper. 5. Turn the ignition switch to the RUN position. 6. Using the scan tool, request the SIR data list display. 7. Read the passenger side low voltage PASSENGER SENSELO. Is PASSENGER SENSELO more than the specified value?	4.8 V	*Go to Step 5*	*Go to Step 6*
5	1. Turn the ignition switch to the OFF position. 2. Repair the short-to-B+ condition in the inflatable restraint IP module jumper harness. Are the repairs complete?	—	*Go to Step 11*	—
6	1. Turn the ignition switch to the OFF position. 2. Inspect the inflatable restraint IP module pigtail for damage and proper routing. 3. Replace the inflatable restraint IP module. Are the repairs complete?	—	*Go to Step 11*	—
7	1. Turn the ignition switch to the OFF position. 2. Disconnect the inflatable restraint Sensing and Diagnostic Module (SDM). 3. Disconnect the *J 38715-A*. 4. Turn the ignition switch to the RUN position. 5. Measure the voltage on the SDM harness connector from terminal 1 to terminal 6 (ground). Is the measured voltage less than the specified value?	1.0 V	*Go to Step 9*	*Go to Step 8*

98F09913

Fig. 36: DTC B1019: Passenger Deployment Loop Short To Voltage (1 Of 2)
Courtesy of GENERAL MOTORS CORP.

Step	Action	Value(s)	Yes	No
8	1. Turn the ignition switch to the OFF position. 2. Repair a short-to-B+ condition in CKT 1403. Are the repairs complete?	—	*Go to Step 11*	—
9	Measure the voltage on the SDM harness connector from terminal 4 to terminal 6 (ground). Is the measured voltage less than the specified value?	1.0 V	Go to *SDM Integrity Check*	*Go to Step 10*
10	1. Turn the ignition switch to the OFF position. 2. Repair a short-to-B+ condition in CKT 1404. Are the repairs complete?	—	*Go to Step 11*	—
11	Reconnect all the SIR system components, make sure all the components are properly mounted. Have all the SIR components been reconnected and properly mounted?	—	*Go to Step 12*	—
12	Clear all the SIR DTCs. Have all the SIR DTCs been cleared?	—	Go to *SIR Diagnostic System Check*	—

98B09911

Fig. 37: DTC B1019: Passenger Deployment Loop Short To Voltage (2 Of 2)
Courtesy of GENERAL MOTORS CORP.

DTC B1021: DRIVER DEPLOYMENT LOOP RESISTANCE HIGH

Circuit Description

When ignition switch is turned to RUN position, SDM performs tests to diagnose critical internal malfunctions. IGNITION POSITIVE VOLTAGE and deployment loop voltages are measured to ensure they are within normal ranges. SDM then performs RESISTANCE MEASUREMENT test. DRIVER LOW terminal No. 3 is grounded through a current sink and a constant current source is connected to DRIVER HIGH terminal No. 2. By monitoring voltage difference between DRIVER HIGH and DRIVER LOW, SDM calculates resistance of driver deployment loop using measured voltage.

Conditions For Setting DTC

DTC sets when driver and passenger deployment loops are not open or shorted to voltage, driver deployment loop is not shorted to ground, and driver deployment loop resistance is greater than 3.8 ohms during RESISTANCE MEASUREMENT test. Test is run once each ignition cycle when IGNITION POSITIVE VOLTAGE is within normal operating range.

Action Taken

SDM turns on AIR BAG warning light and sets DTC.

Conditions For Clearing DTC

Current DTC clears when driver deployment loop resistance is less than 3.8 ohms and ignition switch is cycled. History DTC clears when scan tool CLEAR CODES is received or 250 malfunction-free ignition cycles have

occurred. When scan tool CLEAR CODES is received and fault still exists, DTC will not reappear until next ignition cycle.

Diagnostic Aids

An intermittent condition is likely to be caused by poor connection at terminals A or B of driver-side air bag Yellow 2-pin connector, terminals A or B of SIR coil connector, SDM terminals No. 2 and 3, or a poor wire to terminal connection in circuit 347 or 348. Note and compare value of driver deployment loop resistance over multiple ignition cycles to determine intermittent condition.

Diagnostic Chart Step References

NOTE: Following step references refer to test step numbers on diagnostic chart. See Fig. 38 -Fig. 40 . For circuit number and wire color identification, see WIRING DIAGRAMS .

2

Determines deployment loop resistance measured by SDM.

3

Checks for proper contact or corrosion of Yellow 2-pin connector.

10

Isolates malfunction to one side of driver-side air bag module Yellow 2-pin connector.

11

Determines whether malfunction is in SIR coil assembly or driver-side air bag module.

14

Checks for proper contact or corrosion of SDM connector.

19

Determines whether malfunction is in circuit 347.

21

Determines whether malfunction is in circuit 348.

Step	Action	Value(s)	Yes	No
1	Was the SIR Diagnostic System Check performed?	—	*Go to Step 2*	Go to *SIR Diagnostic System Check*
2	1. Turn the ignition switch to the OFF position. 2. Connect a scan tool to the DLC. 3. Turn the ignition switch to the RUN position. 4. Request the SIR data list display. 5. Read and record on the repair order the driver deployment loop resistance DRIVER RESISTANCE. Has the DRIVER RESISTANCE been read and recorded on the repair order?	—	*Go to Step 3*	—
3	1. Turn the ignition switch to the OFF position. 2. Disconnect the inflatable restraint steering wheel and IP module yellow 2-way connectors. 3. Check for proper connection at terminals A and B on the harness side of the inflatable restraint steering wheel module yellow 2-way connector. Are the terminals damaged or corroded?	—	*Go to Step 4*	*Go to Step 6*
4	Replace the yellow 2-way harness connector located at the base of the steering column. Refer to *Wiring Repair.* Are the repairs complete?	—	*Go to Step 5*	—
5	Check for proper connection at terminals A and B of the inflatable restraint steering wheel module coil side of the connector. Are the terminals damaged or corroded?	—	*Go to Step 7*	*Go to Step 23*

98H09909

Fig. 38: DTC B1021: Driver Deployment Loop Resistance High (1 Of 3)
Courtesy of GENERAL MOTORS CORP.

Step	Action	Value(s)	Yes	No
6	Check for proper connection at terminals A and B of the inflatable restraint steering wheel module coil side of the connector. Are the terminals damaged or corroded?	—	*Go to Step 7*	*Go to Step 8*
7	Replace the inflatable restraint steering wheel module coil. Are the repairs complete?	—	*Go to Step 23*	—
8	1. Connect the yellow 2-way connectors located near the base of the steering column. 2. Turn the ignition switch to the RUN position. 3. Using the scan tool, request the SIR data list display. 4. Read the driver deployment loop resistance DRIVER RESISTANCE. Is DRIVER RESISTANCE more than the specified value?	3.8 Ω	*Go to Step 10*	*Go to Step 9*
9	1. Turn the ignition switch to the OFF position. 2. Replace the yellow 2-way harness connector. Refer to *Wiring Repair.* Are the repairs complete?	—	*Go to Step 23*	—
10	1. Turn the ignition switch to the OFF position. 2. Disconnect the inflatable restraint steering wheel and IP module yellow 2-way connectors. 3. Connect *J 38715-A* SIR Driver/Passenger Load Tool to the harness connectors. 4. Turn the ignition switch to the RUN position. 5. Using the scan tool, request the data list display. 6. Read the driver deployment loop resistance DRIVER RESISTANCE. Is DRIVER RESISTANCE more than the specified value?	3.8 Ω	*Go to Step 14*	*Go to Step 11*
11	1. Turn the ignition switch to the OFF position. 2. Remove the inflatable restraint steering wheel module. 3. Disconnect *J 38715-A* from the driver 2-way harness connector. 4. Connect the 2-way connector. 5. Connect *J 38715-A* to the upper inflatable restraint steering wheel module coil connector. 6. Turn the ignition switch to the RUN position. 7. Using the scan tool, request the SIR data list display. 8. Read the driver deployment loop resistance DRIVER RESISTANCE. Is DRIVER RESISTANCE more than the specified value?	3.8 Ω	*Go to Step 13*	*Go to Step 12*
12	1. Turn the ignition switch to the OFF position. 2. Replace the inflatable restraint steering wheel module. Are the repairs complete?	—	*Go to Step 23*	—

98D09907

Fig. 39: DTC B1021: Driver Deployment Loop Resistance High (2 Of 3)
Courtesy of GENERAL MOTORS CORP.

Step	Action	Value(s)	Yes	No
13	1. Turn the ignition switch to the OFF position. 2. Replace the inflatable restraint steering wheel module coil. Are the repairs complete?	—	*Go to Step 23*	—
14	1. Turn the ignition switch to the OFF position. 2. Disconnect the inflatable restraint Sensing and Diagnostic Module (SDM). 3. Disconnect *J 38715-A.* 4. Check for proper connection at terminal 2 and terminal 3 on the harness side of the SDM connector. Is the connector damaged or corroded?	—	*Go to Step 15*	*Go to Step 17*
15	Replace the SDM harness connector. Refer to *Wiring Repair.* Are the repairs complete?	—	*Go to Step 16*	—
16	Check for proper connection at terminal 2 and terminal 3 on the SDM. Are the terminals damaged or corroded?	—	*Go to Step 18*	*Go to Step 23*
17	Check for proper connection at terminal 2 and terminal 3 on the SDM. Are the terminals damaged or corroded?	—	*Go to Step 18*	*Go to Step 19*
18	Replace the inflatable restraint Sensing and Diagnostic Module (SDM). Are the repairs complete?	—	*Go to Step 23*	—
19	1. Zero the *J 39200* Digital Multimeter. 2. Measure the resistance from the SDM harness connector terminal 2 to the inflatable restraint steering wheel module yellow 2-way harness connector terminal A. Is the resistance reading within the specified values?	0–0.5 Ω	*Go to Step 21*	*Go to Step 20*
20	Repair the high resistance condition in CKT 347. Are the repairs complete?	—	*Go to Step 23*	—
21	1. Zero the *J 39200.* 2. Measure the resistance from the SDM harness connector terminal 3 to the inflatable restraint steering wheel module yellow 2-way harness connector terminal B. Is the resistance reading within the specified values?	0–0.5 Ω	Go to *SDM Integrity Check*	*Go to Step 22*
22	Repair the high resistance condition in CKT 348. Are the repairs complete?	—	*Go to Step 23*	—
23	Reconnect all the SIR system components, make sure all the components are properly mounted. Have all the SIR components been reconnected and properly mounted?	—	*Go to Step 24*	—
24	Clear all the SIR DTCs. Have all the SIR DTCs been cleared?	—	Go to *SIR Diagnostic System Check*	—

98J09905

Fig. 40: DTC B1021: Driver Deployment Loop Resistance High (3 Of 3)
Courtesy of GENERAL MOTORS CORP.

DTC B1022: DRIVER DEPLOYMENT LOOP RESISTANCE LOW

Circuit Description

When ignition switch is turned to RUN position, SDM performs tests to diagnose critical internal malfunctions. IGNITION POSITIVE VOLTAGE and deployment loop voltages are measured to ensure they are within normal ranges. SDM then performs RESISTANCE MEASUREMENT test. DRIVER LOW terminal No. 3 is grounded through a current sink and an internal constant current source is connected to DRIVER HIGH terminal No. 2. By monitoring voltage difference between DRIVER HIGH and DRIVER LOW, SDM calculates resistance of driver deployment loop using measured voltage.

Conditions For Setting DTC

DTC sets when driver and passenger deployment loops are not open or shorted to voltage, driver deployment loop is not shorted to ground, and resistance is less than 1.7 ohms during RESISTANCE MEASUREMENT test. Test is run once each ignition cycle when IGNITION POSITIVE VOLTAGE is within normal operating range.

Action Taken

SDM turns on AIR BAG warning light and sets DTC.

Conditions For Clearing DTC

Current DTC clears when driver deployment loop resistance is greater than 1.7 ohms and ignition switch is cycled. History DTC clears when scan tool CLEAR CODES is received or 250 malfunction-free ignition cycles have occurred. When scan tool CLEAR CODES is received and fault still exists, DTC will not reappear until next ignition cycle.

Diagnostic Aids

An intermittent condition is likely to be caused by a short between circuit 347 and circuits 348, 1403, or 1404, or a malfunctioning shorting bar on driver-side air bag connector or SIR coil connector. Note and compare value of driver deployment loop resistance over multiple ignition cycles to determine intermittent condition.

Diagnostic Chart Step References

NOTE: Following step references refer to test step numbers on diagnostic chart. See Fig. 41 -Fig. 43 . For circuit number and wire color identification, see WIRING DIAGRAMS .

2

Determines deployment loop resistance measured by SDM.

6

Isolates malfunction to one side of driver-side air bag module Yellow 2-pin connector.

7

Determines whether malfunction is in SIR coil assembly or driver-side air bag module.

10

Determines whether malfunction is due to a short between circuits 347 and 348.

12

Determines whether malfunction is due to a short between circuits 347 and 1404.

Step	Action	Value(s)	Yes	No
1	Was the SIR Diagnostic System Check performed?	—	*Go to Step 2*	Go to *SIR Diagnostic System Check*
2	1. Turn the ignition switch to the OFF position. 2. Connect a scan tool to the DLC. 3. Turn the ignition switch to the RUN position. 4. Request the SIR data list display. 5. Read and record on the repair order the driver deployment loop resistance DRIVER RESISTANCE. 6. Request the SIR DTC display. Is DTC B1016 also present?	—	*Go to Step 3*	*Go to Step 4*
3	1. Turn the ignition switch to the OFF position. 2. Disconnect the inflatable restraint steering wheel and IP module yellow 2-way connectors. 3. Repair the short from CKT 347 to CKT 1403. Are the repairs complete?	—	*Go to Step 14*	—
4	1. Turn the ignition switch to the OFF position. 2. Disconnect the inflatable restraint steering wheel module yellow 2-way connector. 3. Reconnect the 2-way connector. 4. Inspect that the CPA is properly installed. 5. Turn the ignition switch to the RUN position. 6. Using a scan tool, request the SIR data list display. 7. Read the driver deployment loop resistance DRIVER RESISTANCE. Is DRIVER RESISTANCE less than the specified value?	1.7 Ω	*Go to Step 6*	*Go to Step 5*
5	1. Turn the ignition switch to the OFF position. 2. Replace the yellow 2-way harness connector. Refer to *Wiring Repair*. Are the repairs complete?	—	*Go to Step 14*	—

98E09903

Fig. 41: DTC B1022: Driver Deployment Loop Resistance Low (1 Of 3)
Courtesy of GENERAL MOTORS CORP.

Step	Action	Value(s)	Yes	No
6	1. Turn the ignition switch to the OFF position. 2. Disconnect the inflatable restraint steering wheel and IP module yellow 2-way connectors. 3. Connect *J 38715-A* SIR Driver/Passenger Load Tool to the harness connectors. 4. Turn the ignition switch to the RUN position. 5. Using the scan tool, request the SIR data list display. 6. Read the driver deployment loop resistance DRIVER RESISTANCE. Is DRIVER RESISTANCE less than the specified value?	1.7 Ω	*Go to Step 10*	*Go to Step 7*
7	1. Turn the ignition switch to the OFF position. 2. Remove the inflatable restraint steering wheel module. 3. Disconnect *J 38715-A* from the driver 2-way harness connector. 4. Connect the driver 2-way connector. 5. Connect *J 38715-A* to the upper inflatable restraint steering wheel module coil connector. 6. Turn the ignition switch to the RUN position. 7. Using the scan tool, request the SIR data list display. 8. Read the driver deployment loop resistance DRIVER RESISTANCE. Is DRIVER RESISTANCE less than the specified value?	1.7 Ω	*Go to Step 9*	*Go to Step 8*
8	1. Turn the ignition switch to the OFF position. 2. Replace the inflatable restraint steering wheel module. Are the repairs complete?	—	*Go to Step 14*	—
9	1. Turn the ignition switch to the OFF position. 2. Replace the inflatable restraint steering wheel module coil. Are the repairs complete?	—	*Go to Step 14*	—
10	1. Turn the ignition switch to the OFF position. 2. Disconnect the inflatable restraint Sensing and Diagnostic Module (SDM). 3. Disconnect *J 38715-A*. 4. Measure the resistance from the SDM harness connector terminal 2 to terminal 3. Is the resistance reading less than the specified value?	OL	*Go to Step 11*	*Go to Step 12*
11	Repair a short from CKT 347 to CKT 348. Are the repairs complete?	—	*Go to Step 14*	—
12	Measure the resistance from the SDM harness connector terminal 2 to terminal 4. Is the resistance reading less than the specified value?	OL	*Go to Step 13*	Go to *SDM Integrity Check*
13	Repair a short from CKT 347 to CKT 1404. Are the repairs complete?	—	*Go to Step 14*	—

98A09901

Fig. 42: DTC B1022: Driver Deployment Loop Resistance Low (2 Of 3)
Courtesy of GENERAL MOTORS CORP.

Step	Action	Value(s)	Yes	No
14	Reconnect all the SIR system components, make sure all the components are properly mounted. Have all the SIR components been reconnected and properly mounted?	—	*Go to Step 15*	—
15	Clear all the SIR DTCs. Have all the SIR DTCs been cleared?	—	Go to *SIR Diagnostic System Check*	—

98E09899

Fig. 43: DTC B1022: Driver Deployment Loop Resistance Low (3 Of 3)
Courtesy of GENERAL MOTORS CORP.

DTC B1024: DRIVER DEPLOYMENT LOOP SHORT TO GROUND

Circuit Description

When ignition switch is turned to RUN position, SDM performs tests to diagnose critical internal malfunctions. IGNITION POSITIVE VOLTAGE, 23 VLR and deployment loop voltages are measured to ensure they are within normal ranges. SDM monitors voltages at DRIVER LOW terminal No. 3 and PASSENGER LOW terminal No. 4 to detect shorts to ground in air bag module circuits. Service wait time is 10 minutes. See **DISABLING & ACTIVATING AIR BAG SYSTEM** before replacing SIR components.

Conditions For Setting DTC

DTC sets when driver and passenger deployment loops are not open, passenger deployment loop is not shorted to voltage, voltage at PASSENGER LOW terminal NO. 4 is greater than 3.3 volts, and voltage at DRIVER LOW terminal No. 3 is less than 3.3 volts for 500 milliseconds during POWER-ON, RESISTANCE MEASUREMENT, or CONTINUOUS MONITORING tests, and IGNITION POSITIVE VOLTAGE is within normal operating range.

Action Taken

SDM turns on AIR BAG warning light and sets DTCs B1024 and B1071.

Conditions For Clearing DTC

DTC clears when malfunction no longer occurs (has been repaired) and SDM has been replaced. DTC B1024 is a latched code and cannot be cleared.

Diagnostic Aids

An intermittent condition is likely to be caused by a short to ground in driver-side air bag module circuit. Inspect circuits 347 and 348 carefully for cutting or chafing. Careful inspection of circuits and components indicated on DTC B1024 chart is essential to ensure that replacement SDM is not damaged. Note and compare value of driver deployment loop resistance over multiple ignition cycles to determine intermittent condition.

Diagnostic Chart Step References

NOTE: **Following step references refer to test step numbers on diagnostic chart. See Fig. 44 and Fig. 45 . For circuit number and wire color identification, see WIRING DIAGRAMS .**

2

Determines DRIVER LOW voltage measured by SDM.

3

Isolates malfunction to one side of SIR coil connector.

4

Determines whether malfunction is due to driver-side air bag or SIR coil assembly.

7

Determines whether malfunction is in circuit 347.

9

Determines whether malfunction is in circuit 348.

Step	Action	Value(s)	Yes	No
1	Was the SIR Diagnostic System Check performed?	—	*Go to Step 2*	Go to *SIR Diagnostic System Check*
2	1. Turn the ignition switch to the OFF position. 2. Connect a scan tool to the DLC. 3. Turn the ignition switch to the RUN position. 4. Request the SIR data list display. 5. Read and record on the repair order the driver side low voltage DRIVER SENSELO. Has the DRIVER SENSELO been read and recorded on the repair order?	—	*Go to Step 3*	—
3	1. Turn the ignition switch to the OFF position. 2. Disconnect the inflatable restraint steering wheel and IP module yellow 2-way connectors. 3. Connect *J 38715-A* SIR Driver/Passenger Load Tool to the harness connectors. 4. Turn the ignition switch to the RUN position. 5. Using the scan tool, request the SIR data list display. 6. Read the driver side low voltage DRIVER SENSELO. Is DRIVER SENSELO less than the specified value?	3.3 V	*Go to Step 7*	*Go to Step 4*
4	1. Turn the ignition switch to the OFF position. 2. Remove the inflatable restraint steering wheel module. 3. Disconnect *J 38715-A* from the driver 2-way harness connector. 4. Connect the driver 2-way connector. 5. Connect *J 38715-A* to the upper inflatable restraint steering wheel module coil connector. 6. Turn the ignition switch to the RUN position. 7. Using the scan tool, request the SIR data list display. 8. Read the driver side low voltage DRIVER SENSELO. Is DRIVER SENSELO less than the specified value?	3.3 V	*Go to Step 6*	*Go to Step 5*

98A09897

Fig. 44: DTC B1024: Driver Deployment Loop Short To Ground (1 Of 2)
Courtesy of GENERAL MOTORS CORP.

Step	Action	Value(s)	Yes	No
5	1. Turn the ignition switch to the OFF position. 2. Replace the inflatable restraint steering wheel module. Are the repairs complete?	—	*Go to Step 11*	—
6	1. Turn the ignition switch to the OFF position. 2. Remove the inflatable restraint steering wheel module coil. 3. Inspect the coil and the wires for damage. 4. Replace the inflatable restraint steering wheel module coil. Are the repairs complete?	—	*Go to Step 11*	—
7	1. Turn the ignition switch to the OFF position. 2. Disconnect the inflatable restraint Sensing and Diagnostic Module (SDM). 3. Disconnect the *J 38715-A*. 4. Measure the resistance on the SDM harness connector from terminal 2 to terminal 6 (ground). Is the resistance reading less than the specified value?	OL	*Go to Step 8*	*Go to Step 9*
8	Repair a short-to-ground condition in CKT 347. Are the repairs complete?	—	*Go to Step 11*	—
9	Measure the resistance on the SDM harness connector from terminal 3 to terminal 6 (ground). Is the resistance reading less than the specified value?	OL	*Go to Step 10*	Go to *SDM Integrity Check*
10	Repair a short-to-ground condition in CKT 348. Are the repairs complete?	—	*Go to Step 11*	—
11	1. Reconnect all the SIR system components, make sure all the components are properly mounted. 2. Turn the ignition switch to the RUN position. 3. Make sure that DRIVER SENSELO is more than the specified value. 4. Replace the inflatable restraint Sensing and Diagnostic Module (SDM). Have all the SIR components been reconnected and properly mounted?	3.3 V	Go to *SIR Diagnostic System Check*	—

98G09895

Fig. 45: DTC B1024: Driver Deployment Loop Short To Ground (2 Of 2)
Courtesy of GENERAL MOTORS CORP.

DTC B1025: DRIVER DEPLOYMENT LOOP SHORT TO VOLTAGE

Circuit Description

When ignition switch is turned to RUN position, SDM performs tests to diagnose critical internal malfunctions. IGNITION POSITIVE VOLTAGE, 23 VLR and deployment loop voltages are measured to ensure they are within normal ranges. SDM monitors voltages at DRIVER LOW terminal No. 3 and PASSENGER LOW terminal No. 4 to detect shorts to voltage in air bag module circuits.

Conditions For Setting DTC

DTC sets when voltage at PASSENGER LOW terminal No. 4 is less than 4.8 volts, voltage at DRIVER LOW terminal No. 3 is greater than 4.8 volts for 500 milliseconds during CONTINUOUS MONITORING test, and IGNITION POSITIVE VOLTAGE is within normal operating range.

Action Taken

SDM turns on AIR BAG warning light and sets DTC.

Conditions For Clearing DTC

Current DTC clears when voltage at DRIVER LOW terminal No. 3 is less than 4.8 volts for 500 milliseconds. History DTC clears when scan tool CLEAR CODES is received or 250 malfunction-free ignition cycles have occurred.

Diagnostic Aids

An intermittent condition is likely to be caused by a short to voltage in air bag module circuit. Inspect circuits 347 and 348 carefully for cutting or chafing. Note and compare value of DRIVER SENSELO to determine intermittent condition.

Diagnostic Chart Step References

NOTE: Following step references refer to test step numbers on diagnostic chart. See Fig. 46 and Fig. 47 . For circuit number and wire color identification, see WIRING DIAGRAMS .

2

Checks DRIVER LOW voltage measured by SDM.

3

Isolates malfunction to one side of SIR coil connector.

4

Checks whether malfunction is in driver-side air bag module or SIR coil assembly.

7

Determines whether malfunction is in circuit 347.

9

Determines whether malfunction is in circuit 348.

Step	Action	Value(s)	Yes	No
1	Was the SIR Diagnostic System Check performed?	—	*Go to Step 2*	Go to *SIR Diagnostic System Check*
2	1. Turn the ignition switch to the OFF position. 2. Connect a scan tool to the DLC. 3. Turn the ignition switch to the RUN position. 4. Request the SIR data list display. 5. Read and record on the repair order the driver side low voltage DRIVER SENSELO. Has the DRIVER SENSELO been read and recorded on the repair order?	—	*Go to Step 3*	—
3	1. Turn the ignition switch to the OFF position. 2. Disconnect the inflatable restraint steering wheel and IP module yellow 2-way connectors. 3. Connect *J 38715-A* SIR Driver Passenger Load Tool to the harness connectors. 4. Turn the ignition switch to the RUN position. 5. Using the scan tool, request the SIR data list display. 6. Read the driver side low voltage DRIVER SENSELO. Is DRIVER SENSELO more than the specified value?	4.8 V	*Go to Step 7*	*Go to Step 4*
4	1. Turn the ignition switch to the OFF position. 2. Remove the inflatable restraint steering wheel module. 3. Disconnect *J 38715-A* from the driver 2-way harness connector. 4. Connect the driver 2-way connector. 5. Connect *J 38715-A* to the upper inflatable restraint steering wheel module coil connector. 6. Turn the ignition switch to the RUN position. 7. Using the scan tool, request the SIR data list display. 8. Read the driver side low voltage DRIVER SENSELO. Is DRIVER SENSELO more than the specified value?	4.8 V	*Go to Step 6*	*Go to Step 5*
5	1. Turn the ignition switch to the OFF position. 2. Replace the inflatable restraint steering wheel module. Are the repairs complete?	—	*Go to Step 11*	—
6	1. Turn the ignition switch to the OFF position. 2. Remove the inflatable restraint steering wheel module coil. 3. Inspect the coil and the wires for damage. 4. Replace the inflatable restraint steering wheel module coil. Are the repairs complete?	—	*Go to Step 11*	—

98B09893

Fig. 46: DTC B1025: Driver Deployment Loop Short To Voltage (1 Of 2)
Courtesy of GENERAL MOTORS CORP.

Step	Action	Value(s)	Yes	No
7	1. Turn the ignition switch to the OFF position. 2. Disconnect the inflatable restraint Sensing and Diagnostic Module (SDM). 3. Disconnect the *J 38715-A*. 4. Turn the ignition switch to the RUN position. 5. Measure the voltage on the SDM harness connector from terminal 2 to terminal 6 (ground). Is the measured voltage less than the specified value?	1.0 V	*Go to Step 9*	*Go to Step 8*
8	1. Turn the ignition switch to the OFF position. 2. Repair a short-to-B+ condition in CKT 347. Are the repairs complete?	—	*Go to Step 11*	—
9	Measure the voltage on the SDM harness connector from terminal 3 to terminal 6 (ground). Is the measured voltage less than the specified value?	1.0 V	Go to *SDM Integrity Check*	*Go to Step 10*
10	1. Turn the ignition switch to the OFF position. 2. Repair a short-to-B+ condition in CKT 348. Are the repairs complete?	—	*Go to Step 11*	—
11	Reconnect all the SIR components, make sure all the components are properly mounted. Have all the SIR components been reconnected and properly mounted?	—	*Go to Step 12*	—
12	Clear all the SIR DTCs. Have all the SIR DTCs been cleared?	—	Go to *SIR Diagnostic System Check*	—

98H09891

Fig. 47: DTC B1025: Driver Deployment Loop Short To Voltage (2 Of 2)
Courtesy of GENERAL MOTORS CORP.

DTC B1026: DRIVER DEPLOYMENT LOOP OPEN

Circuit Description

When ignition switch is turned to RUN position, SDM performs tests to diagnose critical internal malfunctions. SDM measures to ensure IGNITION POSITIVE VOLTAGE is within normal range. During DEPLOYMENT LOOP CONTINUITY test, SDM measures voltage difference between DRIVER HIGH and DRIVER LOW.

Conditions For Setting DTC

DTC sets when voltage difference between DRIVER HIGH terminal No. 2 and DRIVER LOW terminal No. 3 is greater than or equal to 400 millivolts for 500 milliseconds during DEPLOYMENT LOOP CONTINUITY, RESISTANCE MEASUREMENT, or CONTINUOUS MONITORING tests.

Action Taken

SDM turns on AIR BAG warning light and sets DTC.

Conditions For Clearing DTC

Current DTC clears when voltage difference between DRIVER HIGH terminal No. 2 and DRIVER LOW terminal No. 3 is less than 400 millivolts for 500 milliseconds. History DTC clears when scan tool CLEAR CODES is received or 250 malfunction-free ignition cycles have occurred.

Diagnostic Aids

An intermittent condition is likely to be caused by a poor connection at driver-side air bag module terminals A or B, SIR coil assembly terminals A or B, SDM terminals No. 2 or 3, or an open in circuit 347 or 348. An intermittent open in SIR coil assembly could also set this DTC. To test for bad SIR coil assembly, clear DTCs, then turn steering wheel back and forth with ignition switch in RUN position. If AIR BAG warning light comes ON and DTC B1026 has set again, SIR coil assembly is probably malfunctioning.

Diagnostic Chart Step References

NOTE: Following step references refer to test step numbers on diagnostic chart. See Fig. 48 -Fig. 50 . For circuit number and wire color identification, see WIRING DIAGRAMS .

2

Checks deployment loop voltage difference measured by SDM.

3

Checks for proper contact or corrosion of Yellow 2-pin connector.

10

Isolates malfunction to one side of SIR coil connector.

11

Checks whether malfunction is in driver-side air bag module or SIR coil assembly.

14

Checks for proper contact or corrosion of SDM connector.

19

Determines whether malfunction is in circuit 347.

21

Determines whether malfunction is in circuit 348.

Step	Action	Value(s)	Yes	No
1	Was the SIR Diagnostic System Check performed?	—	*Go to Step 2*	Go to *SIR Diagnostic System Check*
2	1. Turn the ignition switch to the OFF position. 2. Connect a scan tool to the DLC. 3. Turn the ignition switch to the RUN position. 4. Request the SIR data list display. 5. Read and record on the repair order the driver deployment loop voltage difference DRIVER VDIF. Has the DRIVER VDIF been read and recorded on the repair order?	—	*Go to Step 3*	—
3	1. Turn the ignition switch to the OFF position. 2. Disconnect the inflatable restraint steering wheel and IP module yellow 2-way connectors. 3. Inspect for proper connection at terminals A and B on the harness side of the inflatable restraint steering wheel module yellow 2-way connector. Are the terminals damaged or corroded?	—	*Go to Step 4*	*Go to Step 6*
4	Replace the inflatable restraint steering wheel module yellow 2-way harness connector. Refer to *Wiring Repair.* Are the repairs complete?	—	*Go to Step 5*	—
5	Check for proper connection at terminals A and B on the coil side of the connector. Are the terminals damaged or corroded?	—	*Go to Step 7*	*Go to Step 23*
6	Check for proper connection at terminals A and B on the coil side of the connector. Are the terminals damaged or corroded?	—	*Go to Step 7*	*Go to Step 8*
7	Replace the inflatable restraint steering wheel module coil. Are the repairs complete?	—	*Go to Step 23*	—
8	1. Connect the 2-way harness connectors. 2. Turn the ignition switch to the RUN position. 3. Using the scan tool, request the SIR data list display. 4. Read the driver deployment loop voltage difference DRIVER VDIF. Is DRIVER VDIF less than the specified value?	400 mV	*Go to Step 9*	*Go to Step 10*

98D09889

Fig. 48: DTC B1026: Driver Deployment Loop Open (1 Of 3)
Courtesy of GENERAL MOTORS CORP.

Step	Action	Value(s)	Yes	No
9	1. Turn the ignition switch to the OFF position. 2. Replace the inflatable restraint steering wheel module yellow 2-way harness connector. Refer to *Wiring Repair.* Are the repairs complete?	—	*Go to Step 23*	—
10	1. Turn the ignition switch to the OFF position. 2. Disconnect the inflatable restraint steering wheel and IP module yellow 2-way connectors. 3. Connect the *J 38715-A* SIR Driver/Passenger Load Tool to the harness connectors. 4. Turn the ignition switch to the RUN position. 5. Using the scan tool, request the SIR data list display. 6. Read the driver deployment loop voltage difference DRIVER VDIF. Is DRIVER VDIF less than the specified value?	400 mV	*Go to Step 11*	*Go to Step 14*
11	1. Turn the ignition switch to the OFF position. 2. Remove the inflatable restraint steering wheel module. 3. Disconnect the *J 38715-A* from the driver 2-way harness connector. 4. Connect the driver 2-way connector. 5. Connect *J 38715-A* to the upper inflatable restraint steering wheel module coil connector. 6. Turn the ignition switch to the RUN position. 7. Using the scan tool, request the SIR data list display. 8. Read the driver deployment loop voltage difference VDIF. Is DRIVER VDIF less than the specified value?	400 mV	*Go to Step 12*	*Go to Step 13*
12	1. Turn the ignition switch to the OFF position. 2. Replace the inflatable restraint steering wheel module. Are the repairs complete?	—	*Go to Step 23*	—
13	1. Turn the ignition switch to the OFF position. 2. Replace the inflatable restraint steering wheel module coil. Are the repairs complete?	—	*Go to Step 23*	—
14	1. Turn the ignition switch to the OFF position. 2. Disconnect the inflatable restraint Sensing and Diagnostic Module (SDM). 3. Disconnect the *J 38715-A.* 4. Check for proper connection at terminals 2 and 3 on the harness side of the SDM connector. Is the connector damaged or corroded?	—	*Go to Step 15*	*Go to Step 17*

98J09887

Fig. 49: DTC B1026: Driver Deployment Loop Open (2 Of 3)
Courtesy of GENERAL MOTORS CORP.

Step	Action	Value(s)	Yes	No
15	Replace the SDM harness connector. Refer to *Wiring Repair.* Are the repairs complete?	—	*Go to Step 16*	—
16	Check for proper connection at terminals 2 and 3 of the SDM. Are the terminals damaged or corroded?	—	*Go to Step 18*	*Go to Step 23*
17	Check for proper connection at terminals 2 and 3 of the SDM. Are the terminals damaged or corroded?	—	*Go to Step 18*	*Go to Step 19*
18	Replace the inflatable restraint Sensing and Diagnostic Module (SDM). Are the repairs complete?	—	*Go to Step 23*	—
19	1. Zero the *J 39200* Digital Multimeter. 2. Measure the resistance from the SDM harness connector terminal 2 to the inflatable restraint steering wheel module yellow 2-way harness connector terminal A. Is the resistance reading within the specified values?	0–0.5 Ω	*Go to Step 21*	*Go to Step 20*
20	Repair the high resistance condition in CKT 347. Are the repairs complete?	—	*Go to Step 23*	—
21	1. Zero the *J 39200.* 2. Measure the resistance from the SDM harness connector terminal 3 to the inflatable restraint steering wheel module yellow 2-way harness connector terminal B. Is the resistance reading within the specified values?	0–0.5 Ω	Go to *SDM Integrity Check*	*Go to Step 22*
22	Repair the high resistance condition in CKT 348. Are the repairs complete?	—	*Go to Step 23*	—
23	Reconnect all the SIR system components, make sure all the components are properly mounted. Have all the SIR components been reconnected and properly mounted?	—	*Go to Step 24*	—
24	Clear all the SIR DTCs. Have all the SIR DTCs been cleared?	—	Go to *SIR Diagnostic System Check*	—

98F09885

Fig. 50: DTC B1026: Driver Deployment Loop Open (3 Of 3)
Courtesy of GENERAL MOTORS CORP.

DTC B1035: DISCRIMINATING SENSOR CLOSED OR SHORT TO GROUND

Circuit Description

When ignition switch is turned to RUN position, SDM performs tests to diagnose critical internal malfunctions. IGNITION POSITIVE VOLTAGE, 23 VLR and deployment loop voltages are measured to ensure they are within normal ranges. SDM then performs CONTINUOUS MONITORING. SDM contains a resistor network connected to 5 volts, ground, and SDM front-end sensor signal terminal No. 9. One K/ohm resistor in front-end discriminating sensor, parallel to normally open switch, provides a parallel path to ground. This causes a specified percentage of voltage to appear at SDM front-end sensor signal input. This voltage is monitored to detect shorts to ground or a closed discriminating sensor.

Conditions For Setting DTC

DTC sets when SDM is configured for front-end discriminating sensor, voltage at SENSOR FEED terminal No. 9 is less than 0.5 volts for 500 milliseconds during CONTINUOUS MONITORING test, and IGNITION POSITIVE VOLTAGE is within normal operating range.

Action Taken

SDM sets DTC and commands IPC to turn on AIR BAG warning light.

Conditions For Clearing DTC

Current DTC clears when voltage at SENSOR FEED terminal No. 9 is greater than 2.4 volts for 500 milliseconds. History DTC clears when scan tool CLEAR CODES is received or 250 malfunction-free ignition cycles have occurred.

Diagnostic Aids

An intermittent condition is likely to be caused by a short to ground in discriminating sensor circuit. Inspect circuit 1834 carefully for cutting or chafing.

Diagnostic Chart Step References

NOTE: **Following step references refer to test step numbers on diagnostic chart. See Fig. 51 . For circuit number and wire color identification, see WIRING DIAGRAMS .**

2

Checks for malfunctioning discriminating sensor.

4

Checks for short to ground in circuit 1834.

5

Isolates the short to ground in circuit 1834 to one side of C102.

Step	Action	Value(s)	Yes	No
1	Was the SIR Diagnostic System Check performed?	—	*Go to Step 2*	Go to *SIR Diagnostic System Check*
2	1. Turn the ignition switch to the OFF position. 2. Disconnect the inflatable restraint front end discriminating sensor. 3. Measure the resistance between the sensor terminals A and B. Is the resistance reading more than the specified value?	950 Ω	*Go to Step 4*	*Go to Step 3*
3	Replace the inflatable restraint front end discriminating sensor. Are the repairs complete?	—	*Go to Step 8*	—
4	1. Disconnect the inflatable restraint Sensing and Diagnostic Module (SDM) harness connector. 2. Measure the resistance from the front end discriminating sensor harness connector terminal A to ground. Is the resistance reading less than the specified value?	OL	*Go to Step 5*	Go to *Integrity Check*
5	1. Disconnect C102. Refer to *SIR Components.* 2. Measure the resistance from the sensor harness connector terminal A to ground. Is the resistance reading less than the specified value?	OL	*Go to Step 6*	*Go to Step 7*
6	Repair a short-to-ground condition in CKT 1834 between C102 and the sensor harness connector. Are the repairs complete?	—	*Go to Step 8*	—
7	Repair a short-to-ground condition in CKT 1834 between C102 and the SDM harness connector. Are the repairs complete?	—	*Go to Step 8*	—
8	Reconnect all the SIR system components, make sure all the components are properly mounted. Have all the SIR components been reconnected and properly mounted?	—	*Go to Step 9*	—
9	Clear all the SIR DTCs. Have all the SIR DTCs been cleared?	—	Go to *SIR Diagnostic System Check*	—

98G13702

Fig. 51: DTC B1035: Discriminating Sensor Closed Or Short To Ground
Courtesy of GENERAL MOTORS CORP.

DTC B1036: DISCRIMINATING SENSOR OPEN OR SHORT TO VOLTAGE

Circuit Description

When ignition switch is turned to RUN position, SDM performs tests to diagnose critical internal malfunctions. IGNITION POSITIVE VOLTAGE, 23 VLR and deployment loop voltages are measured to ensure they are within normal ranges. SDM then performs CONTINUOUS MONITORING. SDM contains a resistor network connected to 5 volts, ground, and to SDM sensor signal terminal No. 9. One K/ohm resistor in front-end discriminating sensor, parallel to normally open switch, provides a parallel path to ground. This causes a

specified percentage of voltage to appear at SDM sensor signal input. This voltage is monitored to detect shorts to voltage or an open discriminating sensor.

Conditions For Setting DTC

DTC sets when SDM is configured for front-end discriminating sensor, voltage at SENSOR FEED terminal No. 9 is greater than 5 volts for 500 milliseconds during CONTINUOUS MONITORING test, and IGNITION POSITIVE VOLTAGE is within normal operating range.

Action Taken

SDM sets DTC and commands IPC to turn on AIR BAG warning light.

Conditions For Clearing DTC

Current DTC clears when voltage at SENSOR FEED is less than 3.2 volts for 500 milliseconds. History DTC clears when scan tool CLEAR CODES is received or 250 malfunction-free ignition cycles have occurred.

Diagnostic Aids

An intermittent condition is likely to be caused by a broken or chafed wire in discriminating sensor circuit. Inspect circuits 1834 and 851 carefully for cutting or chafing.

Diagnostic Chart Step References

NOTE: **Following step references refer to test step numbers on diagnostic chart. See Fig. 52 and Fig. 53 . For circuit number and wire color identification, see WIRING DIAGRAMS .**

2

Checks for proper contact or corrosion of sensor connector.

7

Checks for a malfunctioning discriminating sensor.

8

Checks for an open in circuit 851.

11

Isolates open in circuit 851 to one side of C102.

14

Checks for proper contact or corrosion of SDM connector.

19

Checks for an open in circuit 1834.

22

Isolates open in circuit 1834 to one side of C102.

25

Checks for short to voltage in circuit 1834.

Step	Action	Value(s)	Yes	No
1	Was the SIR Diagnostic System Check performed?	—	*Go to Step 2*	Go to *SIR Diagnostic System Check*
2	1. Turn the ignition switch to the OFF position. 2. Disconnect the inflatable restraint front end discriminating sensor. 3. Check for proper connection at the sensor harness connector terminals A and B. Are the terminals damaged or corroded?	—	*Go to Step 3*	*Go to Step 5*
3	Replace the sensor harness connector. Refer to *Wiring Repair.* Are the repairs complete?	—	*Go to Step 4*	—
4	Check for proper connection at the sensor connector terminals A and B. Are the terminals damaged or corroded?	—	*Go to Step 6*	*Go to Step 27*
5	Check for proper connection at the sensor connector terminals A and B. Are the terminals damaged or corroded?	—	*Go to Step 6*	*Go to Step 7*
6	Replace the inflatable restraint front end discriminating sensor. Are the repairs complete?	—	*Go to Step 27*	—
7	Measure the resistance between the sensor connector terminals A and B. Is the resistance reading more than the specified value?	1050 Ω	*Go to Step 6*	*Go to Step 8*
8	Measure the resistance from the sensor harness connector terminal B to ground. Is the resistance reading within the specified values?	0–5 Ω	*Go to Step 14*	*Go to Step 9*
9	1. Disconnect C102. Refer to *SIR Components.* 2. Check for proper connection at C102 terminal G. Is the terminal damaged or corroded?	—	*Go to Step 10*	*Go to Step 11*
10	Replace C102. Refer to *Wiring Repair.* Are the repairs complete?	—	*Go to Step 27*	—
11	Measure the resistance between the sensor harness connector terminal B and C102 terminal G. Is the resistance reading within the specified values?	0–5 Ω	*Go to Step 12*	*Go to Step 13*
12	Repair an open condition in CKT 851 between C102 and G104. Are the repairs complete?	—	*Go to Step 27*	—
13	Repair an open condition in CKT 851 between C102 and the inflatable restraint front end discriminator sensor harness connector. Are the repairs complete?	—	*Go to Step 27*	—
14	1. Disconnect the inflatable restraint steering wheel and IP module yellow 2-way connectors at the base of the steering column. 2. Disconnect the inflatable restraint Sensing and Diagnostic Module (SDM). 3. Check for proper connection at terminal 9 on the harness side of the SDM connector. Is the connector damaged or corroded?	—	*Go to Step 15*	*Go to Step 17*

98E13700

Fig. 52: DTC B1036: Discriminating Sensor Open Or Short To Voltage (1 Of 2)
Courtesy of GENERAL MOTORS CORP.

Step	Action	Value(s)	Yes	No
15	Replace the SDM harness connector. Refer to *Wiring Repair.* Are the repairs complete?	—	*Go to Step 16*	—
16	Check for proper connection at terminal 9 of the SDM. Is the terminal damaged or corroded?	—	*Go to Step 18*	*Go to Step 27*
17	Check for proper connection at terminal 9 of the SDM. Is the terminal damaged or corroded?	—	*Go to Step 18*	*Go to Step 19*
18	Replace the inflatable restraint Sensing and Diagnostic Module (SDM). Are the repairs complete?	—	*Go to Step 27*	—
19	Measure the resistance between the sensor harness connector terminal A and the SDM harness connector terminal 9. Is the resistance reading within the specified values?	0–5 Ω	*Go to Step 25*	*Go to Step 20*
20	1. Disconnect C102. 2. Check for proper connection at C102 terminal F. Is the terminal damaged or corroded?	—	*Go to Step 21*	*Go to Step 22*
21	Replace C102. Refer to *Wiring Repair.* Are the repairs complete?	—	*Go to Step 27*	—
22	Measure the resistance between the sensor harness connector terminal A and the C102 terminal F. Is the resistance reading within the specified values?	0–5 Ω	*Go to Step 23*	*Go to Step 24*
23	Repair an open condition in CKT 1834 between C102 and the SDM harness connector. Are the repairs complete?	—	*Go to Step 27*	—
24	Repair an open condition in CKT 1834 between C102 and the sensor harness connector. Are the repairs complete?	—	*Go to Step 27*	—
25	1. Turn the ignition switch to the ON position. 2. Measure the voltage on the sensor harness connector from terminal A to ground. Is the measured voltage less than the specified value?	1.0 V	Go to *Integrity Check*	*Go to Step 26*
26	1. Turn the ignition switch to the OFF position. 2. Repair a short-to-B+ condition in CKT 1834. Are the repairs complete?	—	*Go to Step 27*	—
27	Reconnect all the SIR system components, make sure all the components are properly mounted. Have all the SIR components been reconnected and properly mounted?	—	*Go to Step 28*	—
28	Clear all the SIR DTCs. Have all the SIR DTCs been cleared?	—	Go to *SIR Diagnostic System Check*	—

98A13698

Fig. 53: DTC B1036: Discriminating Sensor Open Or Short To Voltage (2 Of 2)
Courtesy of GENERAL MOTORS CORP.

DTC B1051: DEPLOYMENT COMMANDED

Circuit Description

SDM contains a sensing device which converts vehicle velocity changes to an electrical signal. Electrical signal

is processed by SDM and compared to a value stored in memory. When signal exceeds stored value, additional signal processing is performed and signals are compared to values stored in memory. When 2 signals exceed stored values, SDM causes current to flow through air bag modules, deploying air bags and causing DTC B1051 to set.

Conditions For Setting DTC

DTC sets when SDM detects a frontal crash, up to 30 degrees off centerline of vehicle, of sufficient force to warrant deployment of air bags.

Action Taken

SDM sets DTC, turns on AIR BAG warning light, and records crash data.

Conditions For Clearing DTC

DTC clears when malfunction no longer occurs (has been repaired) and SDM has been replaced. DTC B1051 is a latched code and cannot be cleared.

Diagnostic Chart Step References

NOTE: Following step references refer to test step numbers on diagnostic chart. See Fig. 54 . For circuit number and wire color identification, see WIRING DIAGRAMS .

2

If air bag modules have not deployed, DTC B1051 may have set falsely.

3

If DTC B1051 has set with no signs of frontal impact, DTC has set falsely.

Step	Action	Value(s)	Yes	No
1	Was the SIR Diagnostic System Check performed?	—	*Go to Step 2*	Go to *SIR Diagnostic System Check*
2	Turn the ignition switch to the OFF position. Has the inflator module(s) deployed?	—	*Go to Step 5*	*Go to Step 3*
3	Inspect the front of the vehicle and the undercarriage for signs of impact. Are there signs of impact?	—	*Go to Step 5*	*Go to Step 4*
4	Replace the inflatable restraint Sensing and Diagnostic Module (SDM). Are the repairs complete?	—	*Go to Step 6*	—
5	Replace components and perform inspections as required following an accident. Have the appropriate inspections and repairs been made?	—	*Go to Step 6*	—
6	Reconnect all the SIR system components, make sure all the components are properly mounted. Have all the SIR components been reconnected and properly mounted?	—	Go to *SIR Diagnostic System Check*	—

98B09218

Fig. 54: DTC B1051: Deployment Commanded
Courtesy of GENERAL MOTORS CORP.

DTC B1053: DEPLOYMENT COMMANDED WITH LOOP MALFUNCTION

Circuit Description

SDM contains a sensing device which converts vehicle velocity changes to an electrical signal. Electrical signal is processed by SDM and compared to a value stored in memory. When signal exceeds stored value, additional signal processing is performed and signals are compared to values stored in memory. When 2 signals exceed stored values, SDM will cause current to flow through air bag modules, deploying air bags. DTC B1053 will set when a deployment occurs while an inflator circuit fault exists that could result in a non-deployment situation in one or both air bag modules.

Conditions For Setting DTC

DTC sets when SDM detects a frontal crash, up to 30 degrees off centerline of vehicle, of sufficient force to warrant deployment of air bags.

Action Taken

SDM sets DTC, turns on AIR BAG warning light, and records crash data.

Conditions For Clearing DTC

DTC clears when malfunction no longer occurs (has been repaired) and SDM has been replaced. DTC B1053 is

a latched code and cannot be cleared.

Diagnostic Aids

DTC B1053 will be accompanied by another DTC (other than DTC B1071). Repair malfunction causing other DTCs before installing new SDM.

Diagnostic Chart Step References

NOTE: Following step references refer to test step numbers on diagnostic chart. See Fig. 55 . For circuit number and wire color identification, see WIRING DIAGRAMS .

2

If air bag modules have not deployed, DTC B1053 may have set falsely.

3

If DTC B1053 has set with no signs of frontal impact, DTC has set falsely.

Step	Action	Value(s)	Yes	No
1	Was the SIR Diagnostic System Check performed?	—	*Go to Step 2*	Go to *SIR Diagnostic System Check*
2	Turn the ignition switch to the OFF position. Has the inflator modules deployed?	—	*Go to Step 5*	*Go to Step 3*
3	Inspect the front of the vehicle and the undercarriage for signs of impact. Are there signs of impact?	—	*Go to Step 5*	*Go to Step 4*
4	Replace the inflatable restraint Sensing and Diagnostic Module (SDM). Are the repairs complete?	—	*Go to Step 6*	—
5	Replace components and perform inspections as required following an accident. Have the appropriate inspections and repairs been made?	—	*Go to Step 6*	—
6	Reconnect all the SIR system components, make sure all the components are properly mounted. Have all the SIR components been reconnected and properly mounted?	—	Go to *SIR Diagnostic System Check*	—

98H09216

Fig. 55: DTC B1053: Deployment Commanded With Loop Malfunction
Courtesy of GENERAL MOTORS CORP.

DTC B1061: AIR BAG WARNING LIGHT CIRCUIT FAILURE

Circuit Description

When ignition switch is turned to RUN position, battery voltage is applied to AIR BAG warning light and to IGNITION POSITIVE VOLTAGE input terminal No. 10. SDM responds by flashing AIR BAG warning light 7 times. SDM monitors light driver output by comparing output of AIR BAG WARNING INDICATOR terminal No. 7 to microprocessor commanded state.

Conditions For Setting DTC

DTC sets when output state at AIR BAG WARNING INDICATOR terminal No. 7 does not match commanded state of light driver for 400 milliseconds during CONTINUOUS MONITORING test, and IGNITION POSITIVE VOLTAGE is within normal operating range.

Action Taken

SDM sets DTC and attempts to turn on AIR BAG warning light.

Conditions For Clearing DTC

Current DTC clears when output state at AIR BAG WARNING INDICATOR terminal No. 7 matches commanded state of light driver for 400 milliseconds. History DTC clears when scan tool CLEAR CODES is received or 250 malfunction-free ignition cycles have occurred.

Diagnostic Aids

Refer to AIR BAG WARNING LIGHT COMES ON STEADY and AIR BAG WARNING LIGHT DOES NOT COME ON to diagnose warning light circuit malfunctions.

Diagnostic Chart Step References

NOTE: **Following step references refer to test step numbers on diagnostic chart. See Fig. 56 . For circuit number and wire color identification, see WIRING DIAGRAMS .**

2

When SDM is configured for serial data-controlled warning light, DTC B1061 will set.

Step	Action	Value(s)	Yes	No
1	Was the SIR Diagnostic System Check performed?	—	*Go to Step 2*	Go to *SIR Diagnostic System Check*
2	1. Malfunctions within the AIR BAG warning lamp circuitry can set this DTC. These malfunctions are addressed via the SIR Diagnostic System Check. Failure to properly perform the SIR Diagnostic System Check may result in misdiagnosis. Refer to Air Bag Warning Lamp Comes On Steady and Air Bag Warning Lamp Does Not Come On. 2. Turn the ignition switch to the RUN position. 3. Clear the SIR DTC codes. 4. Request the SIR DTC display. Is DTC B1061 set?	—	Go to *SDM Integrity Check*	Go to *SIR Diagnostic System Check*

98C09214

Fig. 56: DTC B1061: Air Bag Warning Light Circuit Failure
Courtesy of GENERAL MOTORS CORP.

DTC B1071: INTERNAL SDM FAILURE

NOTE: **When DTC B1018 or B1024 has been set, DTC B1071 sets, and SDM must be replaced. When scan tool CLEAR CODES is received and malfunction no longer exists, DTCs B1018 or B1024 and B1071 will remain current. Ensure short to ground condition is repaired prior to installing replacement SDM to avoid damage to component.**

Circuit Description

DTC B1071 indicates potential internal SDM malfunction.

Conditions For Setting DTC

DTC sets when any of the following conditions are detected by SDM:

1. 23 VLR voltage is out of normal operating range during POWER-ON or CONTINUOUS MONITORING tests.
2. Crash data recording reserve voltage discharge time failure for 3 consecutive ignition cycles during POWER-ON test.
3. Calculated checksum for internal memory does not match stored value during POWER-ON test.
4. Driver or passenger deployment loop is shorted to ground during CONTINUOUS MONITORING tests.
5. Accelerometer is malfunctioning during POWER-ON or CONTINUOUS MONITORING tests.
6. Driver or passenger current source is malfunctioning during RESISTANCE MEASUREMENT test.
7. Temporary memory storage area is malfunctioning during POWER-ON test.
8. SDM is unable to read from or write to EEPROM during POWER-ON test.

9. Arming sensor inside SDM is not closed during deployment event.
10. Voltage measured at DRIVER LOW and PASSENGER LOW is too low during POWER-ON or CONTINUOUS MONITORING tests.
11. Device in SDM that arms system for deployment is malfunctioning during POWER-ON or CONTINUOUS MONITORING tests.
12. Permanent memory storage area is malfunctioning during POWER-ON test.

Action Taken

SDM sets DTC and turns on AIR BAG warning light.

Conditions For Clearing DTC

Current DTC clears when malfunction has not been detected for 500 milliseconds. History DTC clears when scan tool CLEAR CODES is received or 250 malfunction-free ignition cycles have occurred.

Diagnostic Aids

When scan tool CLEAR CODES is received, some malfunctions only allow AIR BAG warning light to go out briefly then come back on.

Step	Action	Value(s)	Yes	No
1	Was the SIR Diagnostic System Check performed?	—	*Go to Step 2*	Go to *SIR Diagnostic System Check*
2	Is DTC B1018 set?	—	Go to *DTC B1018 Passenger Deployment Loop Short to GND*	*Go to Step 3*
3	Is DTC B1024 set?	—	Go to *DTC B1024 Driver Deployment Loop Short to Ground*	*Go to Step 4*
4	1. Turn the ignition switch OFF. 2. Replace the inflatable restraint Sensing and Diagnostic Module (SDM). Are the repairs complete?	—	Go to *SIR Diagnostic System Check*	—

98I09212

Fig. 57: DTC B1071: Internal SDM Failure
Courtesy of GENERAL MOTORS CORP.

WIRE REPAIR

SIR system requires special wiring repair procedures due to sensitive nature of circuitry. Wire Repair Kit (J-38125-A) contains special sealed splices for use in repairing SIR wiring. Splices use a heat shrink sleeve with

sealing adhesive to produce a sealed splice and a cross-hatched core crimp to produce a positive contact for low energy circuits.

Repair damaged SIR wire harness connectors and terminals (except pigtails) using connector repair assembly packs and splice crimping tool provided. Terminals in SIR system are manufactured from a special metal to provide necessary contact integrity for sensitive, low-energy circuits. These terminals are only available in connector repair assembly packs, and no other terminal should be substituted.

If individual terminals on SDM harness connector are damaged, SDM harness connector must be replaced using SDM harness connector pigtail assembly or SDM harness connector replacement kit. If individual terminals on any other SIR connector are damaged, entire connector must be replaced. Use appropriate connector repair assembly pack. Replace entire SIR wire harness, if necessary to maintain SIR circuit integrity.

DO NOT make wiring, connector or terminal repairs on components with wiring pigtails. If a wiring pigtail is damaged, entire component (including pigtail) should be replaced.

Any wiring other than a pigtail can be repaired by splicing in a new section of wire of same gauge. Sealed splices and crimping tool must be used for these splices. Open wire harness by removing tape as necessary, using a sewing seam ripper. Refer to instructions in kit for wiring repair procedure.

TORQUE SPECIFICATIONS

TORQUE SPECIFICATIONS

Application	**Ft. Lbs. (N.m)**
Steering Wheel Nut	30 (41)
	INCH Lbs. (N.m)
Driver-Side Air Bag Module Fasteners	54 (6)
Front-End Discriminating Sensor Fasteners	89 (10)
Passenger-Side Air Bag Module Fasteners	89 (10)
Sensing & Diagnostic Module (SDM) Fasteners	89 (10)

WIRING DIAGRAMS

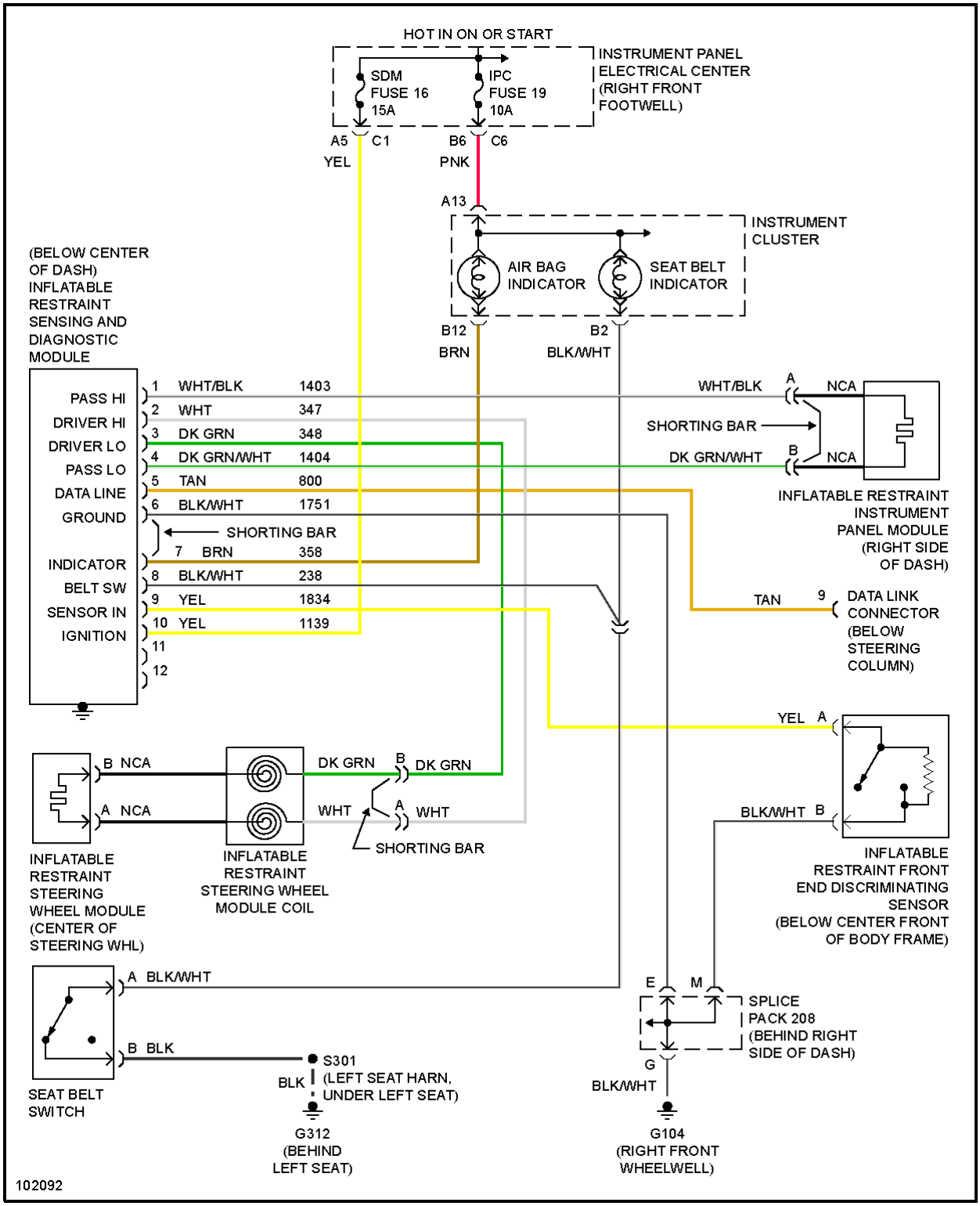
HOT IN ON OR START
INSTRUMENT PANEL ELECTRICAL CENTER (RIGHT FRONT FOOTWELL)
SDM FUSE 16 15A
IPC FUSE 19 10A
A5 C1 YEL
B6 C6 PNK
A13
INSTRUMENT CLUSTER
AIR BAG INDICATOR
SEAT BELT INDICATOR
B12 BRN
B2 BLK/WHT
(BELOW CENTER OF DASH) INFLATABLE RESTRAINT SENSING AND DIAGNOSTIC MODULE
PASS HI
DRIVER HI
DRIVER LO
PASS LO
DATA LINE
GROUND
INDICATOR
BELT SW
SENSOR IN
IGNITION
1 WHT/BLK 1403
2 WHT 347
3 DK GRN 348
4 DK GRN/WHT 1404
5 TAN 800
6 BLK/WHT 1751
SHORTING BAR
7 BRN 358
8 BLK/WHT 238
9 YEL 1834
10 YEL 1139
11
12
WHT/BLK A NCA
SHORTING BAR
DK GRN/WHT B NCA
INFLATABLE RESTRAINT INSTRUMENT PANEL MODULE (RIGHT SIDE OF DASH)
TAN 9
DATA LINK CONNECTOR (BELOW STEERING COLUMN)
YEL A
B NCA
A NCA
DK GRN B DK GRN
WHT A WHT
SHORTING BAR
INFLATABLE RESTRAINT STEERING WHEEL MODULE (CENTER OF STEERING WHL)
INFLATABLE RESTRAINT STEERING WHEEL MODULE COIL
BLK/WHT B
INFLATABLE RESTRAINT FRONT END DISCRIMINATING SENSOR (BELOW CENTER FRONT OF BODY FRAME)
A BLK/WHT
B BLK
SEAT BELT SWITCH
S301 (LEFT SEAT HARN, UNDER LEFT SEAT)
BLK
G312 (BEHIND LEFT SEAT)
E M
SPLICE PACK 208 (BEHIND RIGHT SIDE OF DASH)
G
BLK/WHT
G104 (RIGHT FRONT WHEELWELL)
102092

Fig. 58: SIR System Wiring Diagram