Audi A3 - The Engineering

Self Study Programme

For internal use only.
© VOLKSWAGEN AG K-VK-12, Wolfsburg
All rights reserved. Subject to technical changes.
640.2810.01 20 Technical Status: 07/96

❀ This paper was made using chlorine-free bleach.

Audi

Service Department

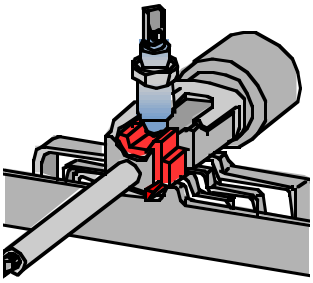

A3 The Engineering

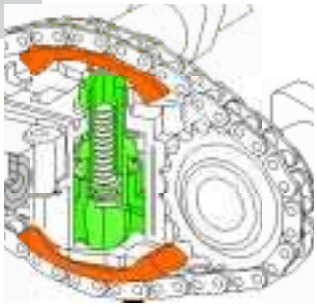

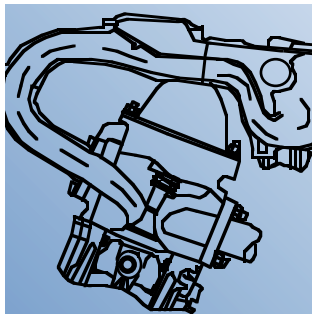

SSP 181/92

Audi A3
New models / New engineering..... **4**

Body
Programmed crumple zones..... **6**

Safety
Soft cushions and stable seats..... **10**

Test Your Knowledge
Subject: body and safety **14**

Engines
From engine lubrication to functional diagram... **16**

Test Your Knowledge
Subject: engines **50**

Gearbox
Tooth for tooth..... **52**

Running Gear
Well-clamped and adjustment-free..... **54**

Steering
Locking teeth and crash-tested..... **58**

Braking system
Power under pressure..... **62**

Test Your Knowledge
Subject: running gear, steering and brakes..... **63**

Electrical system
Switches and controls..... **64**

Answers
What you managed to remember..... **66**

The Self Study Programme is not a Workshop Manual!

Please refer to the relevant Service Literature for all inspection, adjustment and repair instructions.

New

Important/Note

Audi A3

New models
New engin-
eering

Safety

- Side padding
- Seats with high transverse rigidity
- Easy Entry
- Seat occupied recognition (SOR)

Body

- Side members
- Concertina principle
- Side reinforcement in doors
- Flush fitting between B pillar and sill Footwell cross member

Engines / Gearbox

- Engine lubrication
- Engine cooling
- Engine electrics
- System overviews
- Self-diagnosis
- Functional diagrams
- Reversing brake

In this SSP we will explain the technical details of the Audi A3 to you.

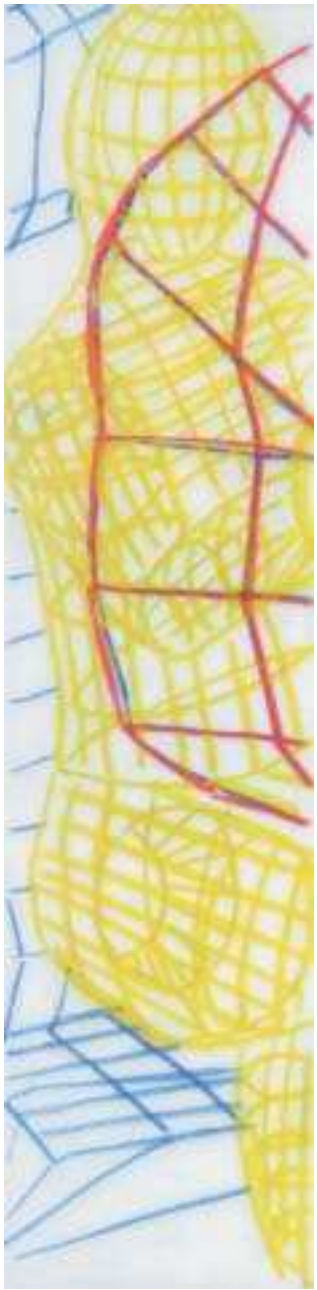

SSP 182/81

SSP 182/82

SSP 182/83

Running gear

- Cast wheel bearing housing with single-bolt clamp
- Caster
- Self-aligning double ball bearing
- Oblique rear axle mounting

Steering

- Locking teeth and clamp
- Lock
- Crash concept

Brake

- Disc brakes at front and rear
- Dacrometised bolts

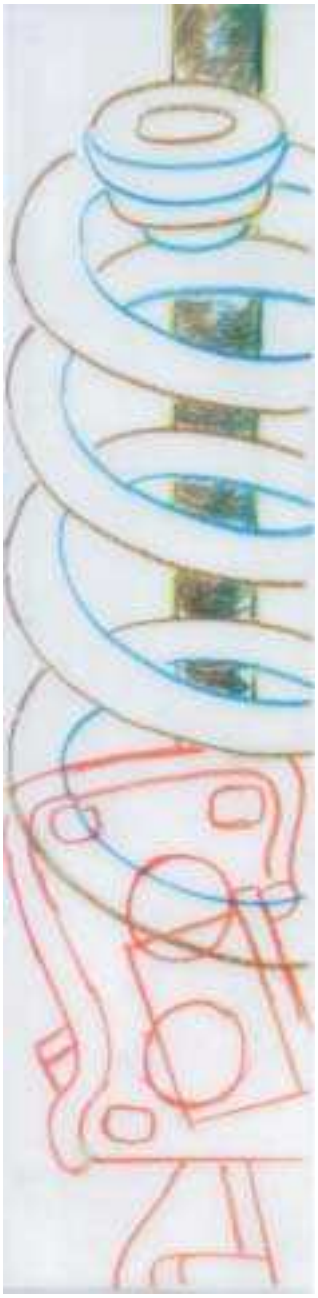

SSP 182/84

SSP 182/85

SSP 182/86

Above all, new, special construction and operation features.

Body

Safety is ...
programmed crumple zones

In other words:
When the car is designed, every effort is made to minimise deceleration forces acting on the occupants. To achieve this aim, the body must be deformable, because this enables it to absorb energy.

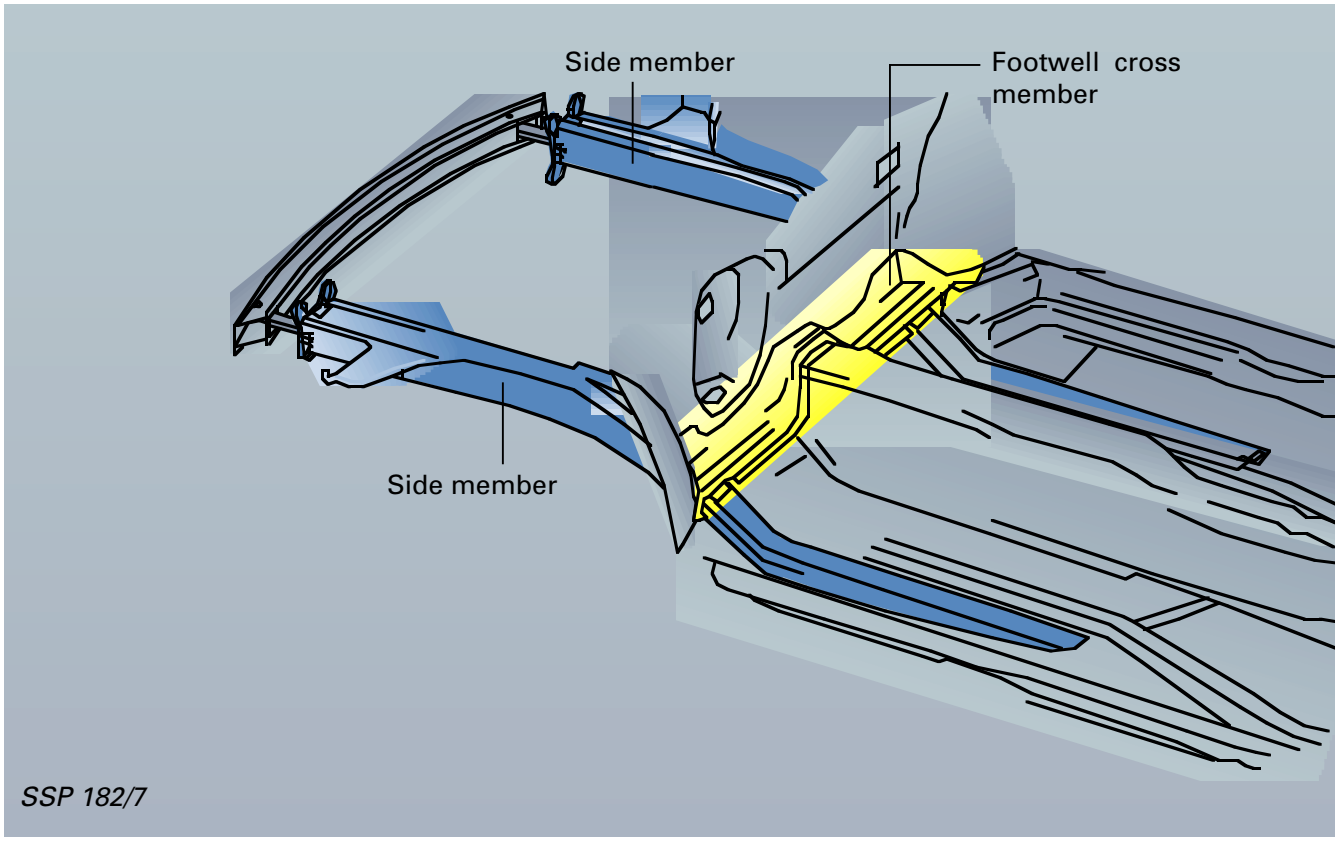

To ensure the occupant cell remains intact during a collision, the entire front section of the car is designed to deform in a predefined manner.

The specific deformation behaviour of the car's front section is mainly determined by the body side members.

Full extension side members

The front side members each consist of three mash seam welded panels with thicknesses of 2 mm, 3 mm and 1.5 mm.
The different material thicknesses are calculated depending on the strength they require and their location.

Side member

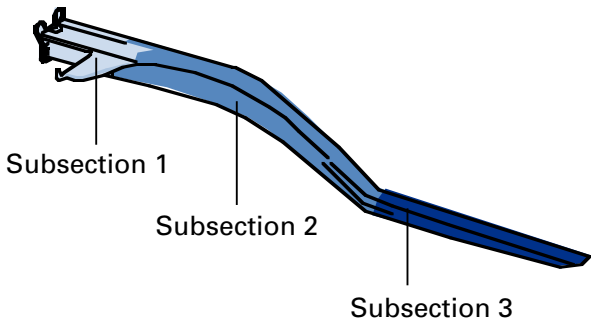

SSP 182/8

Crumpling principle of the side members

The side members fold up when compressed and therefore absorb a maximum of impact energy. We refer to this as the concentina principle.

Subsection of side member

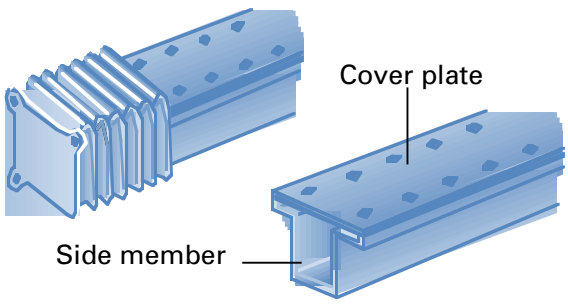

SSP 182/10

Body

During a side impact, the only solution is to distribute the impact force over the entire structure and reduce the impact force by means of additional energy absorbing elements.

High-strength side reinforcements in the doors

The side reinforcements consists of high-strength extruded aluminium sections. They are shaped in double rectangular sections made of aluminium and have a high energy absorption capacity.

During a side impact, the force exerted on the car is distributed to the A pillar, B pillar and sill by the side reinforcements.

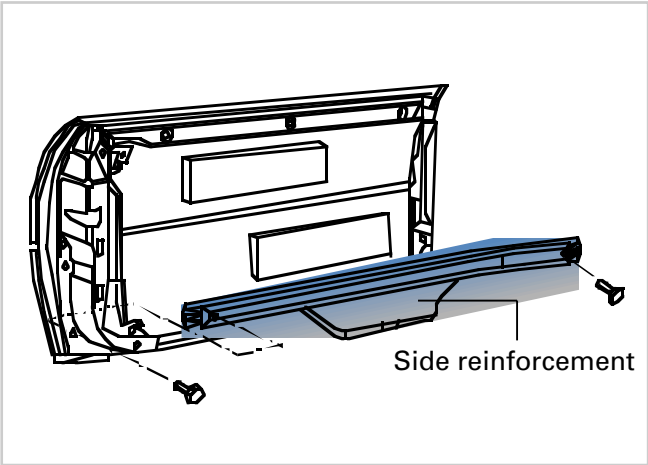

SSP 182/11

Positive interlocking of door and pillars and in sill area

During a side impact, the outer structure of the door crumples first. The A and B pillars as well as the strong sill beneath the door absorb additional forces. At the same time, they channel forces into the sturdy floorpan assembly.

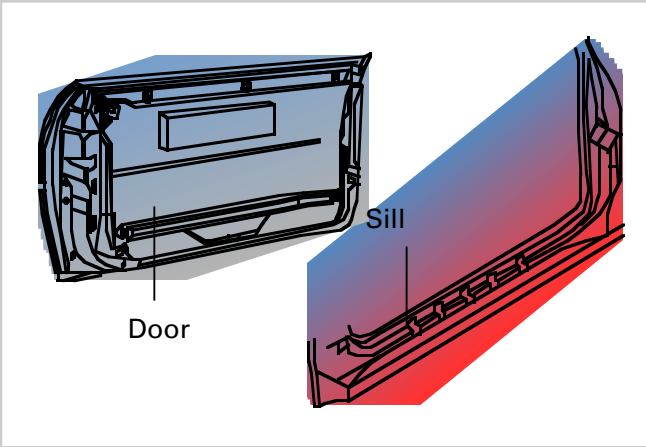

SSP 182/12

Connection between B pillar and reinforcement in sill

The connection between the B pillar and the reinforcement in the sill up to pillar A covers a large area. The reinforcement is formed in one piece and extends all the way along the structure.

This bond plays an important part in force distribution.

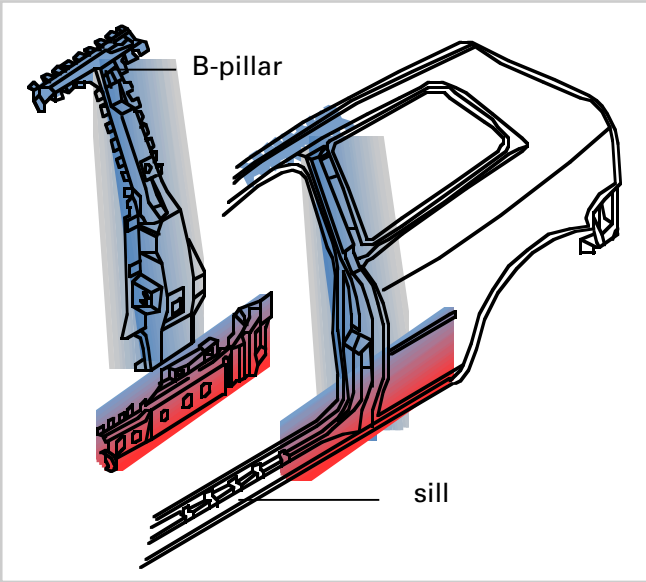

SSP 182/103

Integrated footwell cross member

During a collision, the integrated footwell cross member keeps the footwell intact and provides a rigid survival space for the occupants.

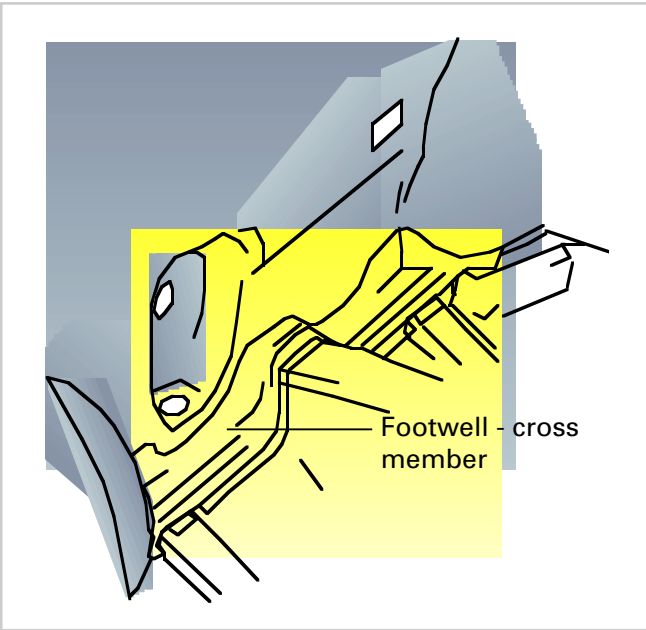

SSP 182/9

Soft cushions

During a side impact, body deformations follow a very limited, direct path. Only the overall depth of the door is available as a buffer.

Pelvis and rib paddings

The side paddings in the doors and side sections are made of rigid foam.

They are also energy absorbent, i.e. they soak up energy and thus dampen the side impact.

The car occupants are protected in the pelvis and rib areas.

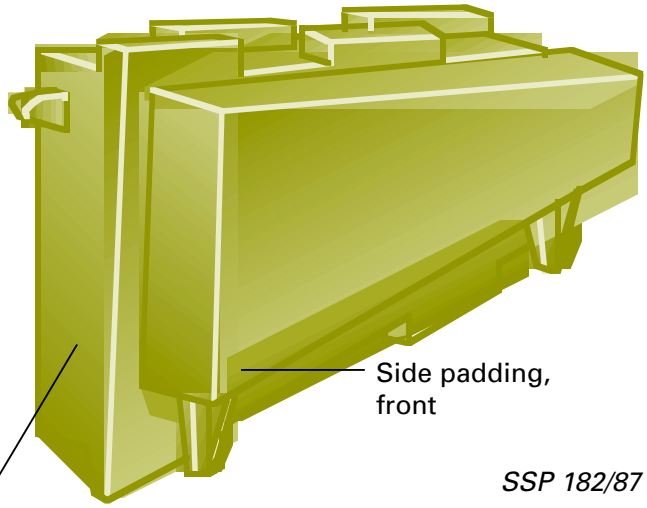

SSP 182/87

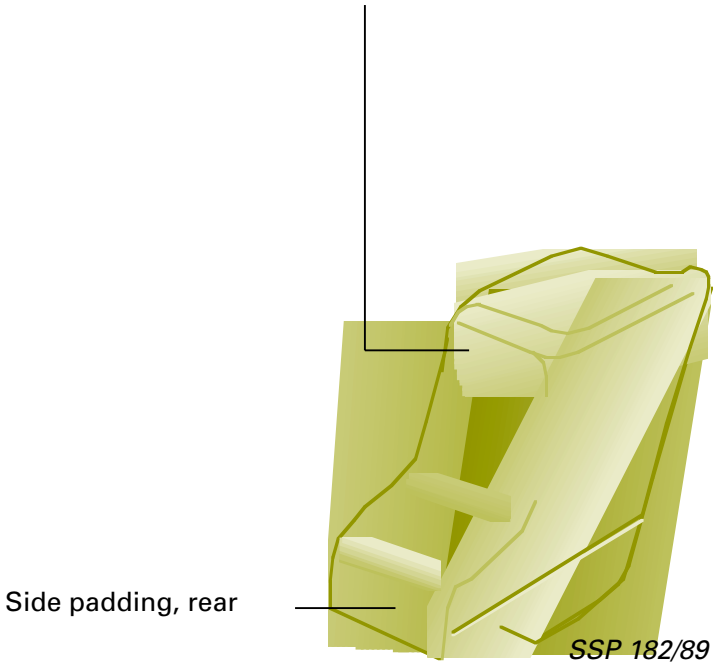

SSP 182/88

SSP 182/89

Sturdy seats

The Easy Entry system, optimal seating comfort and the highest standard in safety engineering make an excellent combination.

SSP 182/80

The Easy Entry system

When the back of the front seat is pushed forwards, the entire seat slides forwards. This makes the space behind the front seat larger and a passenger can enter the rear of the cabin more easily.

Seats with high transverse rigidity

A frame structure with high transverse rigidity is the result of:

- one circumferential square tube,
- one transversely mounted U-section,
- one sturdy support tube between the seat rail and seat frame.

During a side impact
As a result of the high transverse rigidity, the seats play a greater role in force distribution.

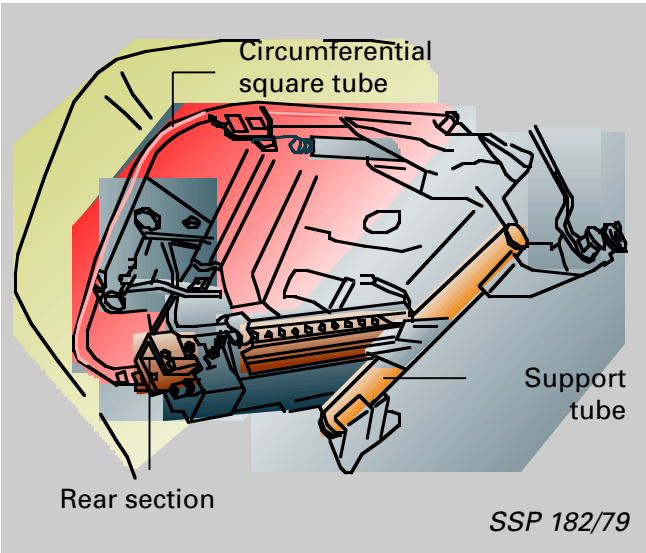

SSP 182/79

Trying to fold a triggered airbag back into its original shape would be quite an experience. It can be compared to trying to re-pack gifts which won't fit into their original box.

Therefore, we prefer not to trigger an airbag if it is not needed.
This requires a link between the airbag triggering function and the seat.

Seat occupied recognition

Seat unoccupied

When the ignition is switched on, the SOR always assumes that the seat is occupied. The change in state is recognised after 20s : "Seat unoccupied".

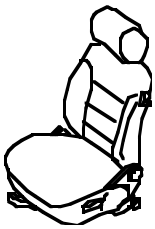

SSP 182/95

Seat occupied

When the ignition is switched on, the change in state is recognised as soon as the seat is occupied: "Seat occupied".

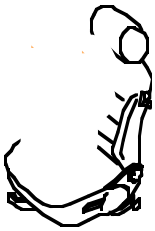

SSP 182/96

Seat occupancy is recognised by a pressure sensor in the front passenger seat.

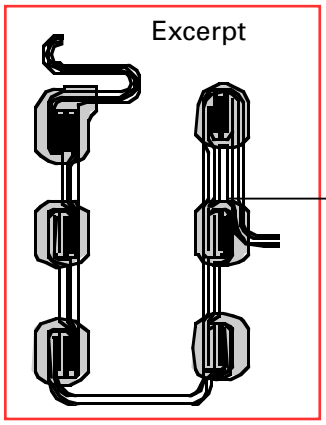

SSP 182/76

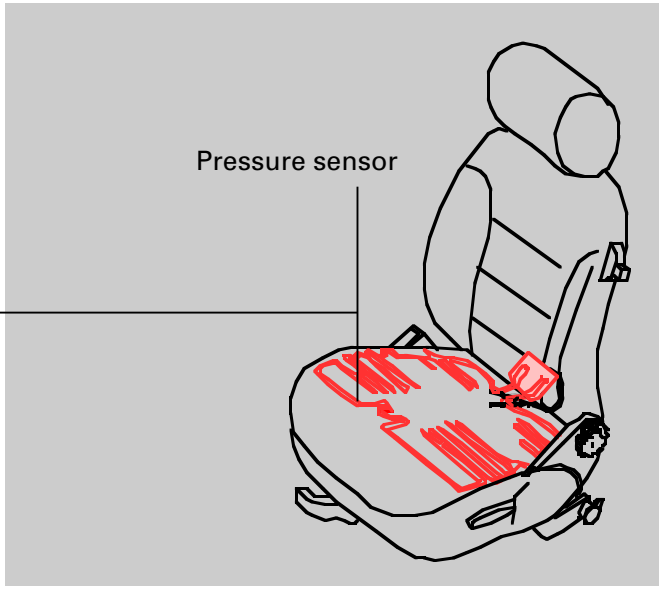

SSP 182/90

The pressure sensor

comprises two superimposed films.

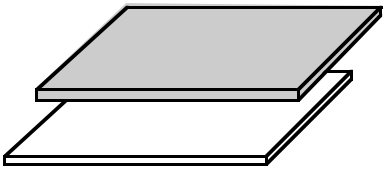

SSP 182/105

One of the films consists of an electrically conductive polymer.

SSP 182/107

The other film contains an interrupted electrical circuit with several positive and negative electrodes in the shape of fingers.

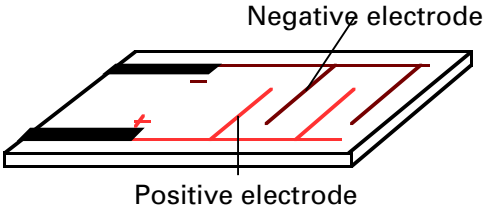

SSP 182/106

The electrically conductive polymer connects the positive contact to the negative contact.

This diagram illustrates only:

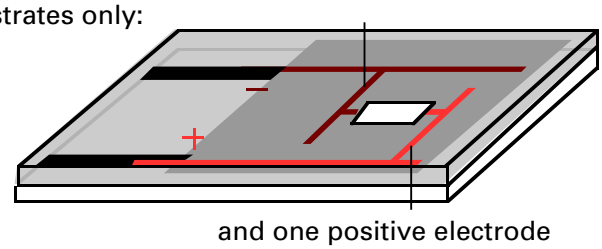

SSP 182/97

The electrical circuit is closed.

If no pressure is applied to the electrically conductive film, the resistance between the positive and negative contacts is high.

The resistance decreases the more the electrically conductive film is pressed against the positive and negative electrodes.

Using the information provided by the pressure sensor, the control unit assumes the following:

- high resistance
"seat unoccupied"

- low resistance
"seat occupied"

The airbag is activated in the event of a collision.

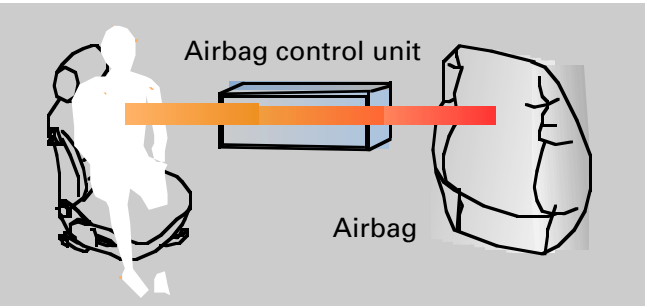

SSP 182/99

Test Your Knowledge

Now you can answer the following questions.

You will see what you have remembered.

1. Identify the subsections from which a side member is made. Specify the material thickness in millimetres.

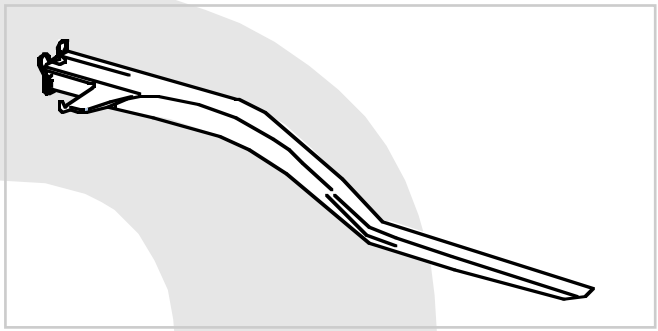

SSP 182/104

2. Which components define the specific deformation of the car's front section?

- -

- -

3. Please complete.

The side reinforcements are made of.....

.....

They are capable of absorbing ..... .

4. Side paddings protect the car's occupants in the ...

Please complete the above sentence by stating which parts of the body are protected.

- -

- -

5. Please mark with cross where applicable.

The support structure with high transverse rigidity for the seat comprises:

A One circumferential square tube

B One longitudinal rear section

C One sturdy support tube

6. The pressure sensor consists of two superimposed films.

Please complete the following text and drawing.

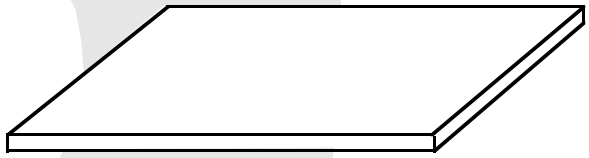

One of the films consists of
.....
.....

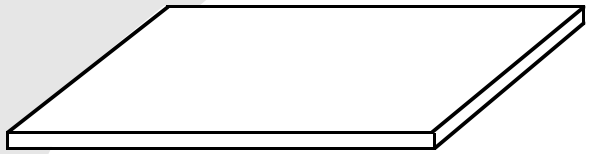

The other film contains.....

.....

SSP 182/114

7. Please complete and underline where appropriate.

If the seat is occupied,..... .... is exerted on
.....

The resistance is **high / low.**

Now you can answer all the questions.

If not, please read the relevant section again.

Well lubricated

On the following pages you will learn about the new features of the oil circuit.

- The oil pressure control valve is installed downstream of the oil filter. Therefore, there is only one oil pressure switch.
- The oil return cut-off valve is integrated into the filter connection.

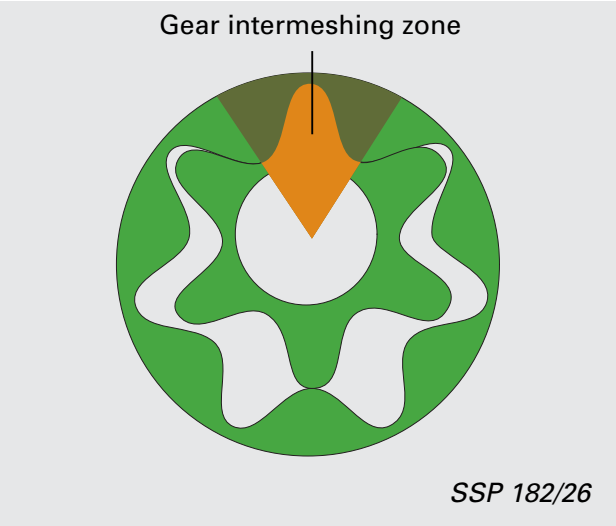

The oil pump
is an internal gear pump. The advantages of this are:

- The gear intermeshing zone is smaller, resulting in less friction
- The operating area is large, resulting in high suction capacity
- The number of moving parts is kept to a minimum

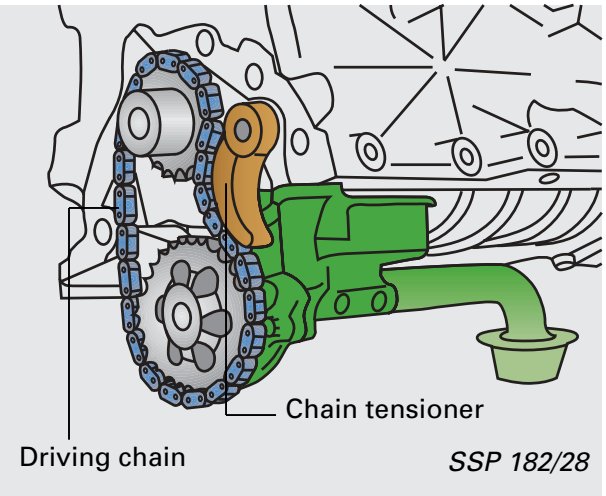

The oil pump
is driven by the crankshaft by means of a chain. The chain is tensioned by means of a spring-loaded sliding block, i.e. the chain tensioner.

Oil circuit

The oil ducts illustrated by broken lines in the overview only exist in the 1.9-ltr. TDI engine.

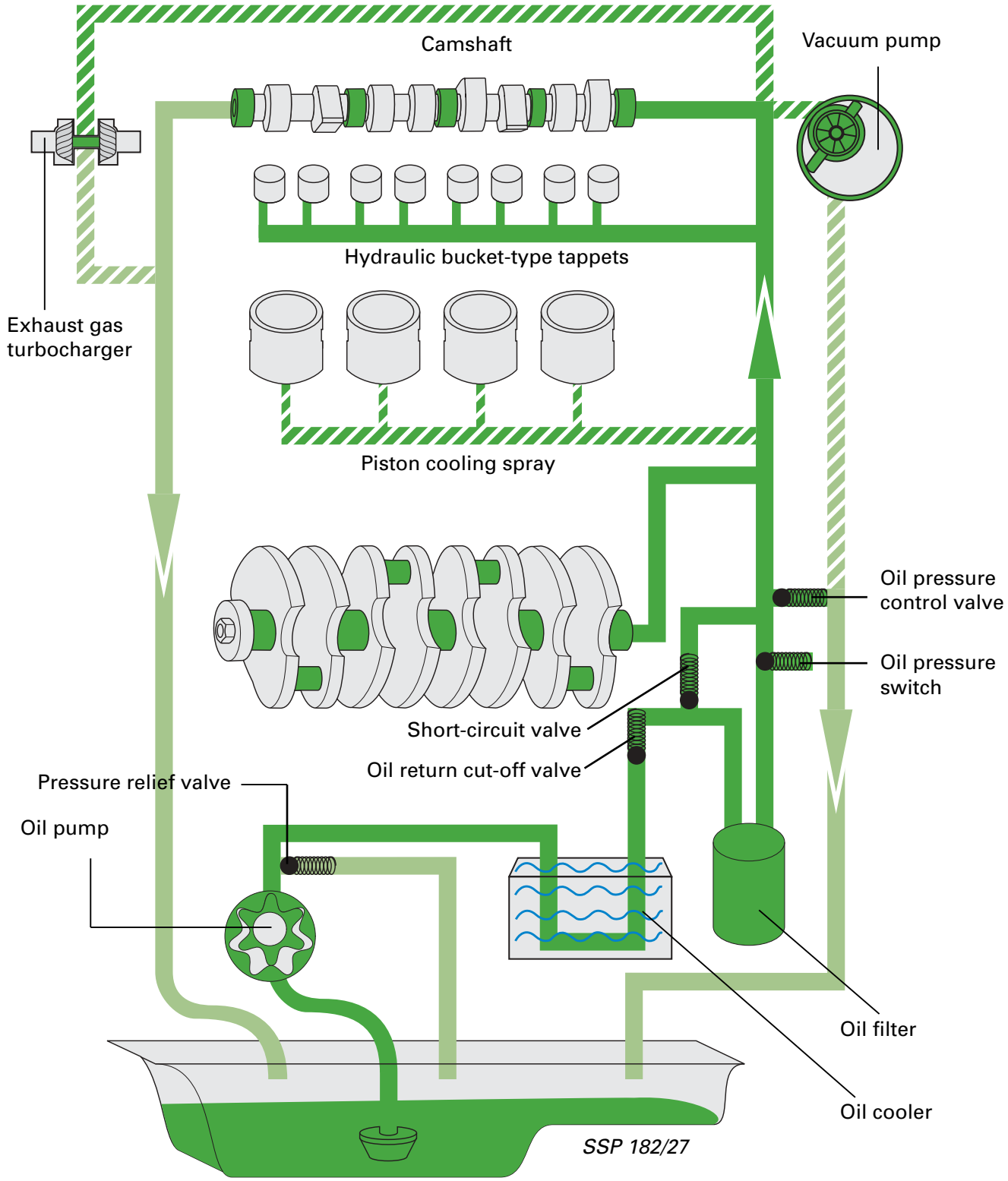

Well-cooled

The engine cooling system also has new features.

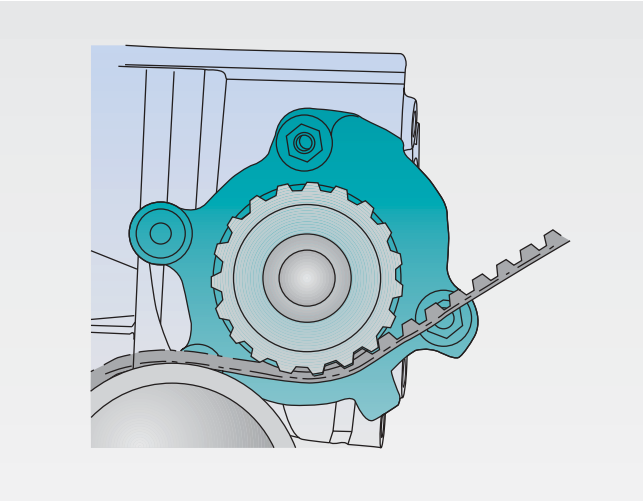

SSP 182/31

The coolant pump
is installed in the cylinder block. It is driven by the rib belt. The pump gear is made of plastic. The advantages of this are:

- Fewer components
- Less weight

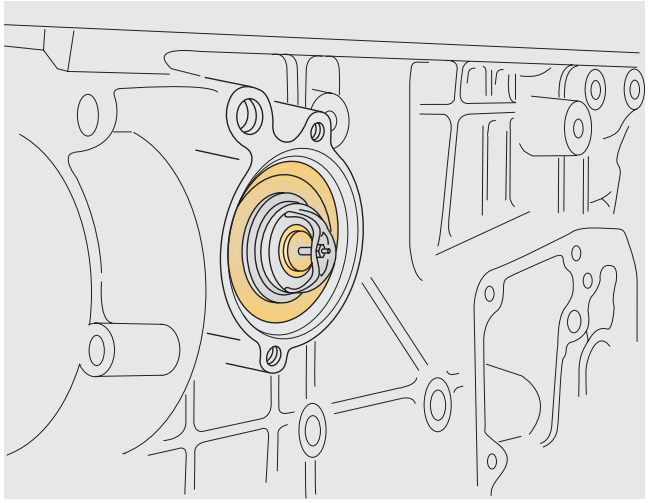

SSP 182/32

The coolant thermostat
is integrated in the cylinder block. This eliminates the need for a housing and saves weight.

Coolant circuit

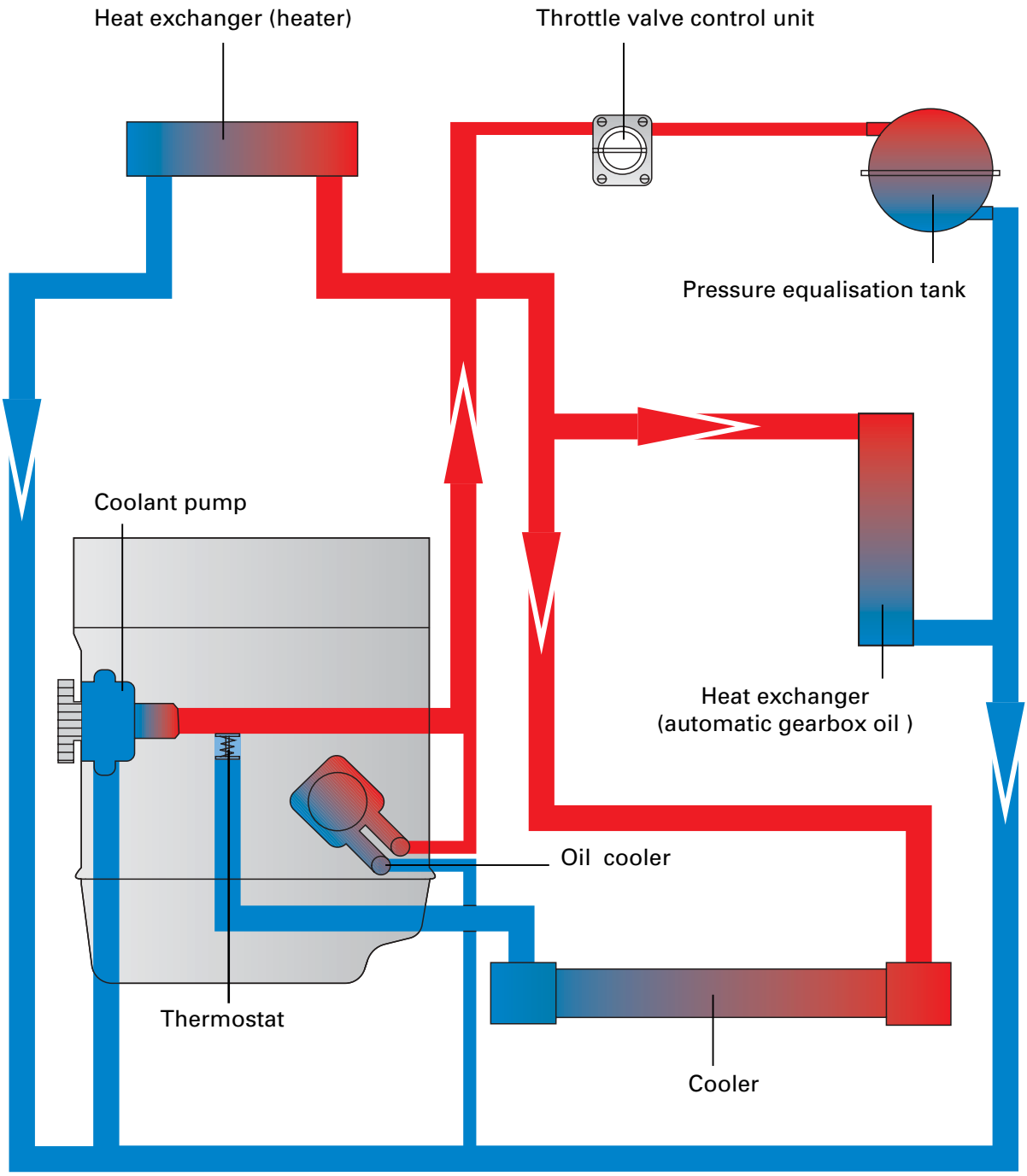

SSP 182/30

Special features of the 1.6-ltr. engine

Twin-path intake manifold

The 1.6-ltr. engine has a twin-path intake manifold. This enables the intake path length to be adapted to engine requirements.

The change-over flaps are vacuum-operated. A vacuum box located beneath the intake manifold ensures that the change-over flap can operate when there is insufficient vacuum.

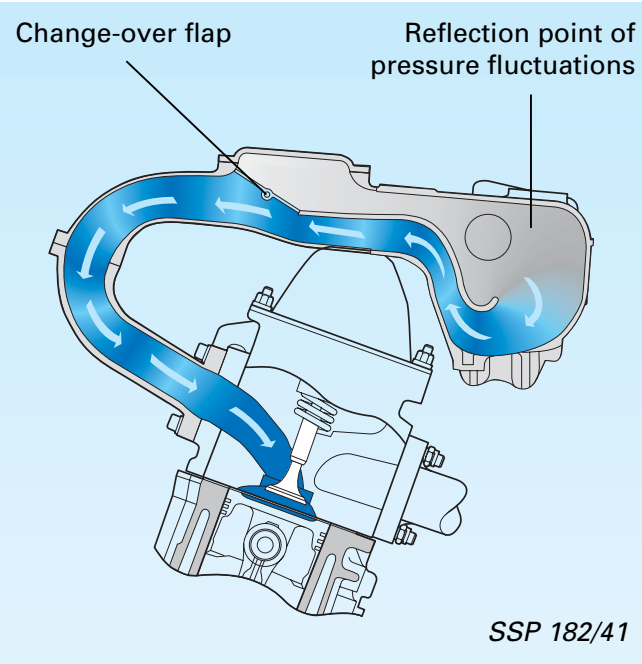

Position of the change-over flap at engine speeds of up to 4000 rpm
Long intake path = torque position

The downward movement of the piston produces pressure fluctuations in the intake air. These pressure fluctuations are reflected at the rear of the intake manifold. The length of the intake manifold is designed so that the reflected pressure fluctuations ensure the cylinder is filled with the correct amount of air-fuel mixture.

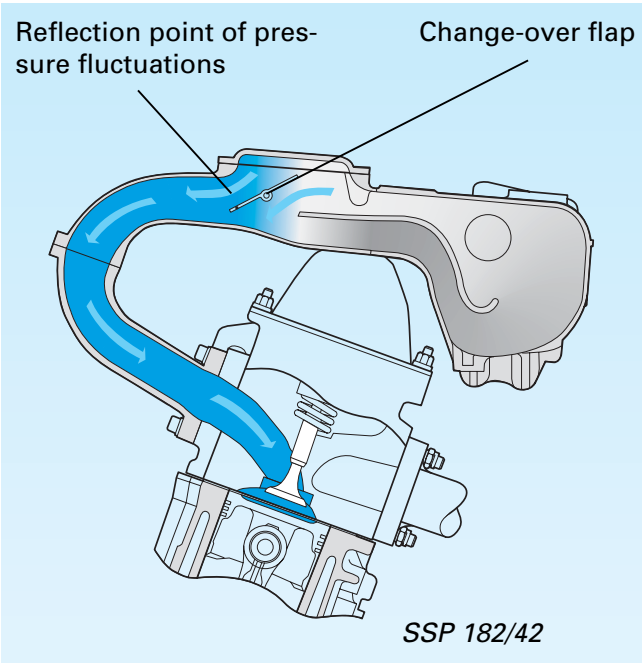

Position of change-over flap at engine speeds of greater than 4000 rpm
Short intake path = performance position

At high speeds less time is available to fill the cylinders. The intake path must therefore be short. The change-over flaps open the short intake path. The pressure fluctuations are reflected at the front of the intake manifold. This also ensures the cylinder is filled correctly at high speeds.

The change-over flaps are controlled by the engine control unit via the twin-path intake manifold change-over valve and the vacuum box.

Change-over flaps closed

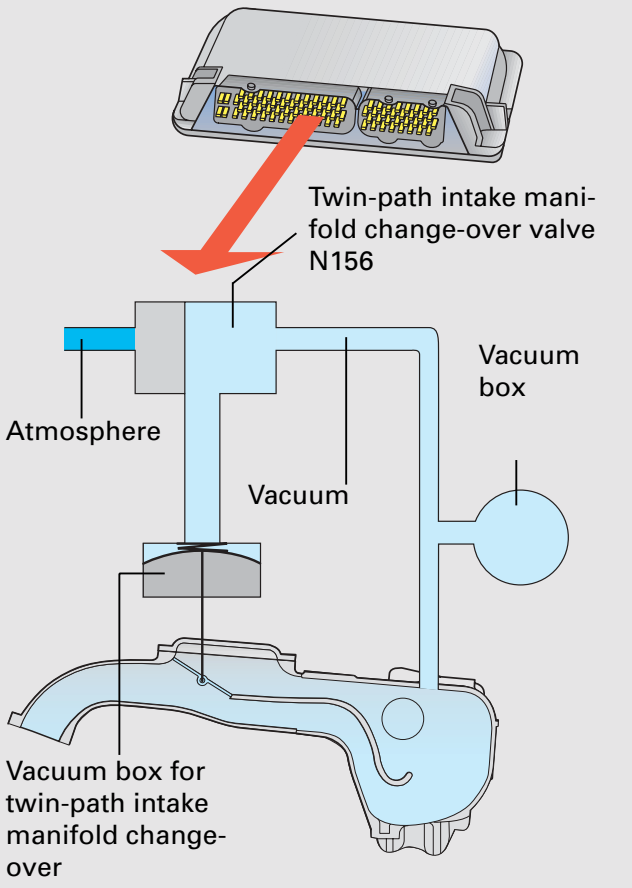

SSP 182/98

Change-over flaps open

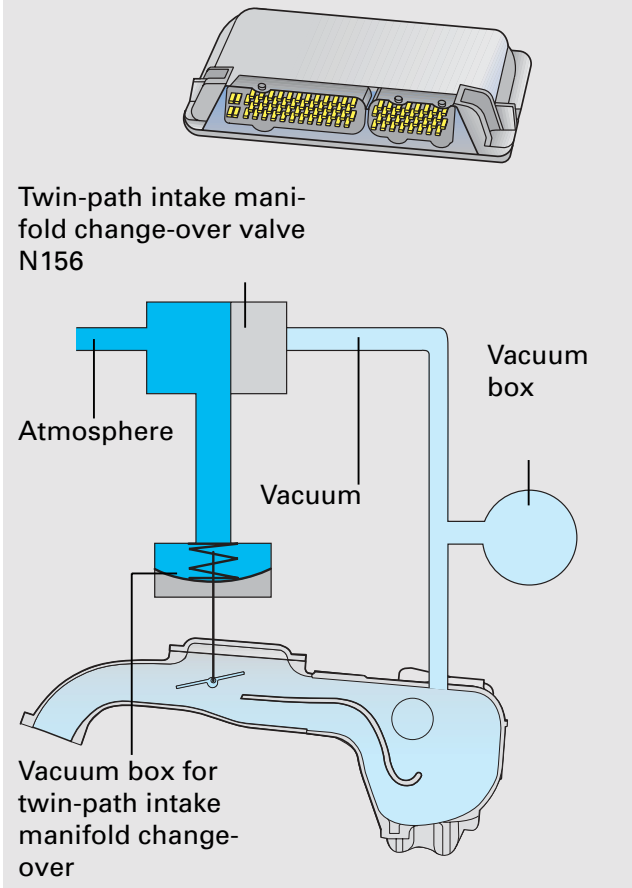

SSP 182/113

System overview, Simos 2

Sensors

Air mass meter G70

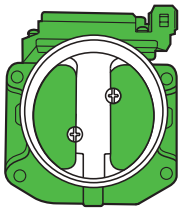

Engine speed sender G28

Hall sender G40

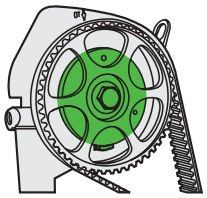

Lambda probe G39

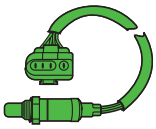

Throttle valve control unit J338
with
Throttle valve potentiometer G69
Throttle valve positioner potentiometer G88
Idling speed switch F60

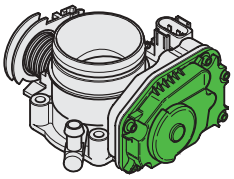

Intake air temperature sender G42

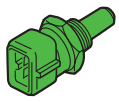

Coolant temperature sender G62

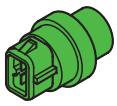

Knock sensor G61

Additional signals:
Road speed signal
Terminal 50
Air conditioner - ready
Signal for engine intervention

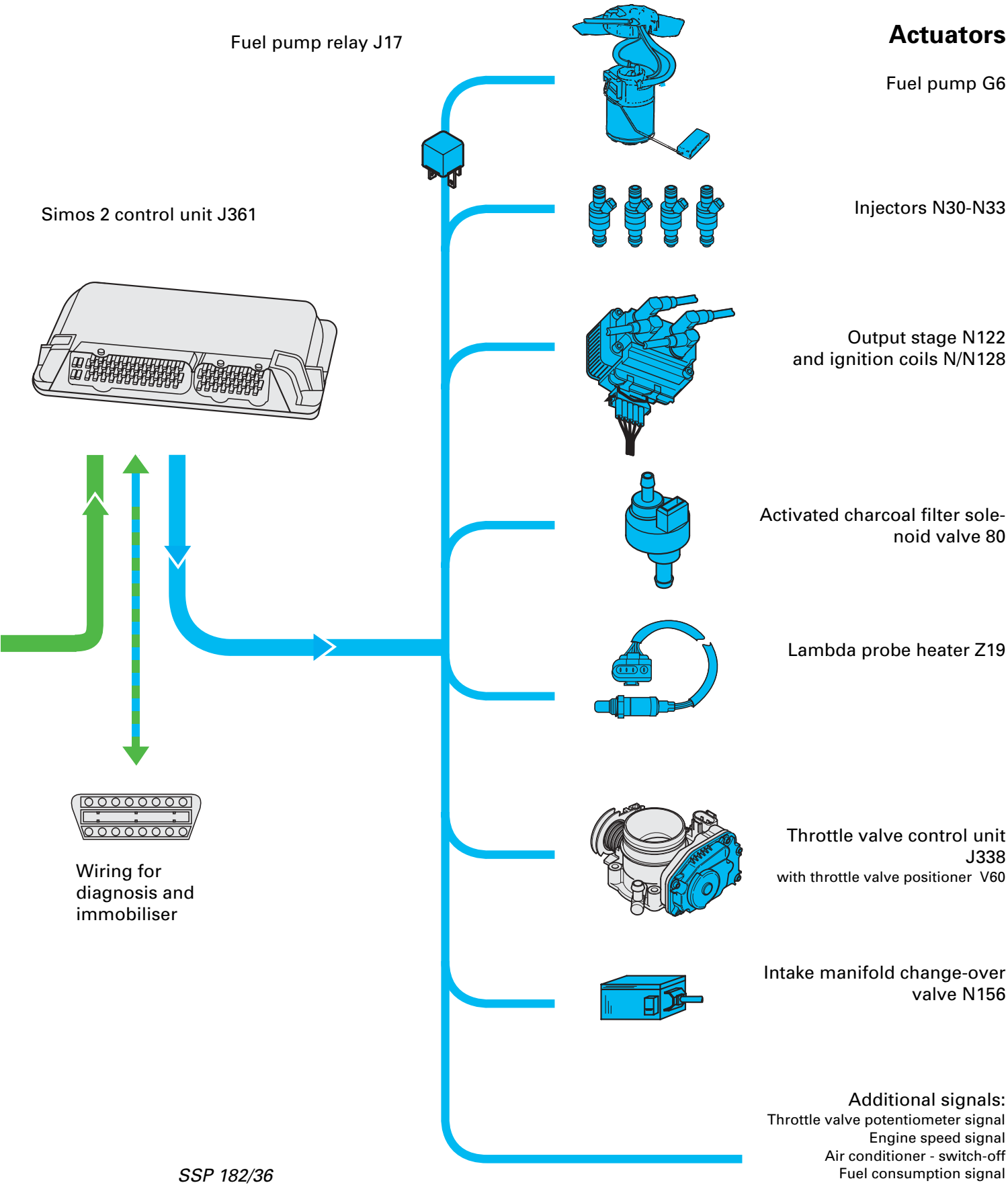
Fuel pump relay J17
Simos 2 control unit J361
Wiring for diagnosis and immobiliser
Actuators
Fuel pump G6
Injectors N30-N33
Output stage N122 and ignition coils N/N128
Activated charcoal filter solenoid valve 80
Lambda probe heater Z19
Throttle valve control unit J338
with throttle valve positioner V60
Intake manifold change-over valve N156
Additional signals:
Throttle valve potentiometer signal
Engine speed signal
Air conditioner - switch-off
Fuel consumption signal

SSP 182/36

Hall sender G40

Located behind the camshaft sprocket.
The 180° sender wheel is integrated in the camshaft sprocket.

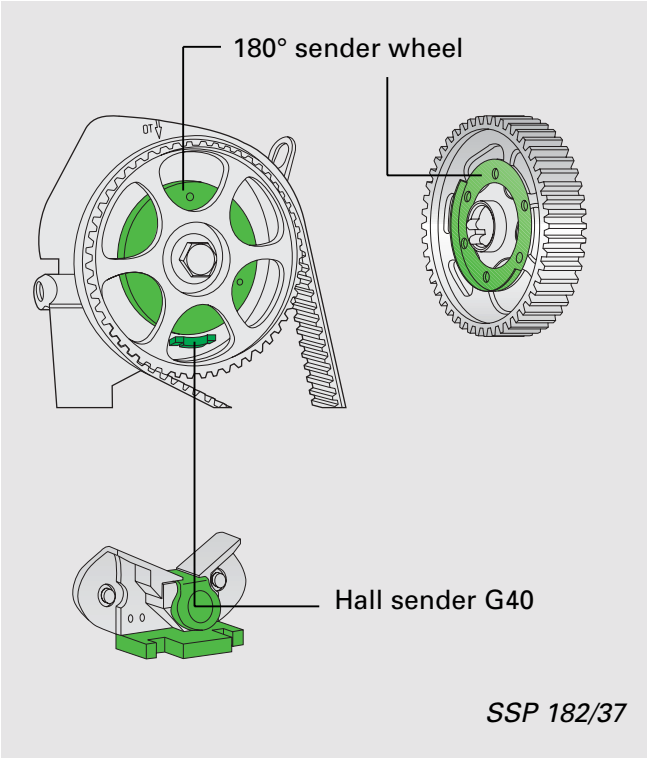

Signal utilisation

The signal is required to detect when the 1st cylinder is at TDC. The engine control unit defines the injection sequence accordingly. The signal is also required to control knocking in the individual cylinders.

Effects of signal failure

If the Hall sender fails, the knock control is switched off by the engine control unit and the ignition timing is lagged because the knock effects cannot be assigned to the cylinders. Nevertheless, the engine continues to run.

Self-diagnosis “Fault message“

Hall sender G40
“no signal“

Hall sender G40
“implausible signal“

Self-diagnosis "Read measured value block"

You can check to see if the valve timing of the engine is set correctly using the address word **"Read measured value block"**.

The falling edge of the Hall sender signal must coincide with the signal of the 88th tooth of the crankshaft sprocket (tolerance range ±2 teeth). The teeth of 2 revolutions of the crankshaft are then added.

The rising edge of the Hall sender signal must coincide with the 28th tooth of the crankshaft sprocket (tolerance range ±2 teeth). If the values coincide, you can assume that the engine valve timing is correct.

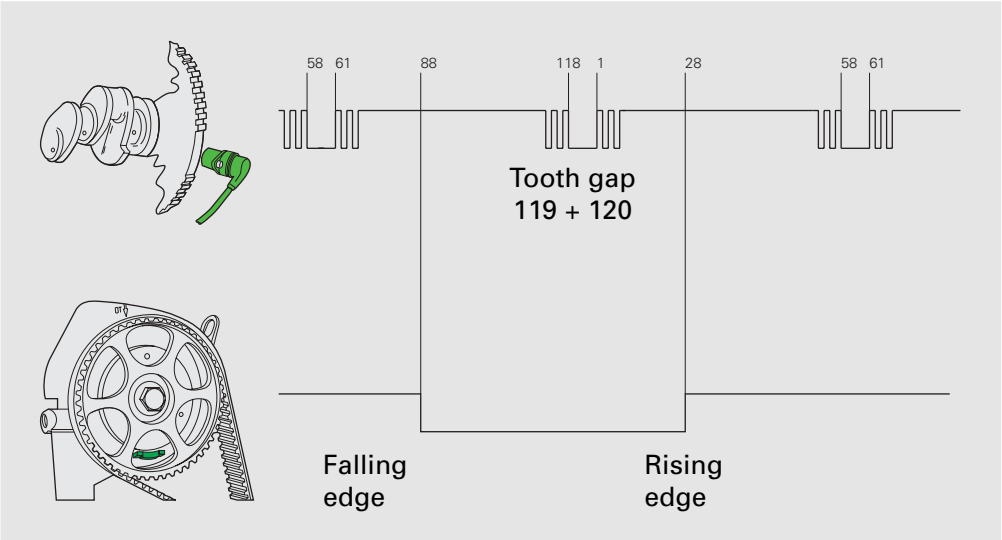

Crankshaft signal

Valve timing signal

SSP 182/102

Electrical circuit

62 Positive

67 Sensor earth

76 Hall sender signal

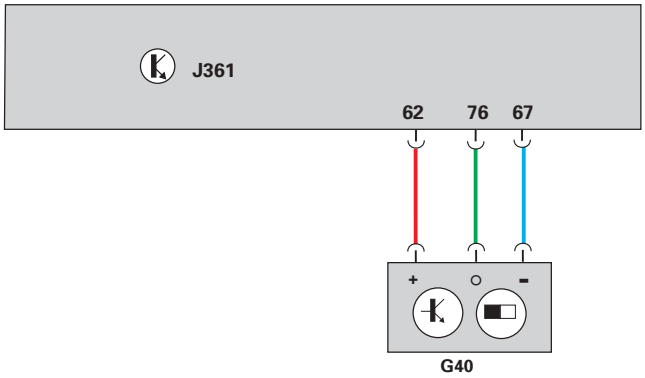

SSP 182/117

Self-diagnosis

Faults can be evaluated using fault reader V.A.G 1551 or 1552.

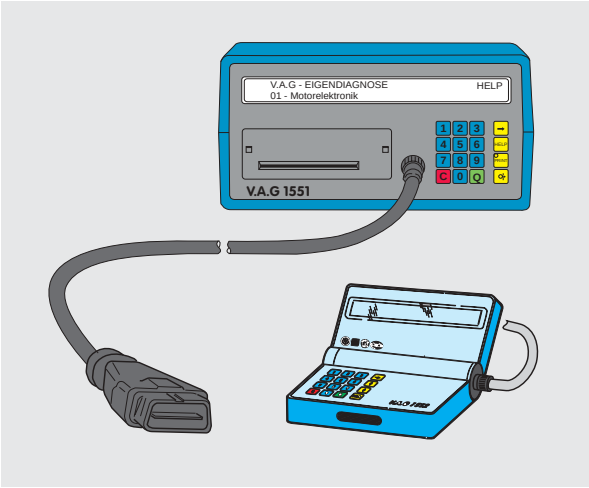

SSP 182/39

The following functions can be checked in the self-diagnosis using the address word:
((V.A.G SELF-DIAGNOSIS
01 - Motor electronics))

V.A.G - EIGENDIAGNOSE 01 - Motorelektronik	HELP

01 - Interrogate control unit version

02 - Interrogate fault memory

03 - Final control diagnosis

04 - Initiate basic setting

05 - Erase fault memory

06 - End of output

07 - Encode control unit

08 - Read measured value block

You can find explanatory notes on self-diagnosis and address words in the Workshop Manual.

The colour-coded components are checked during self-diagnosis.

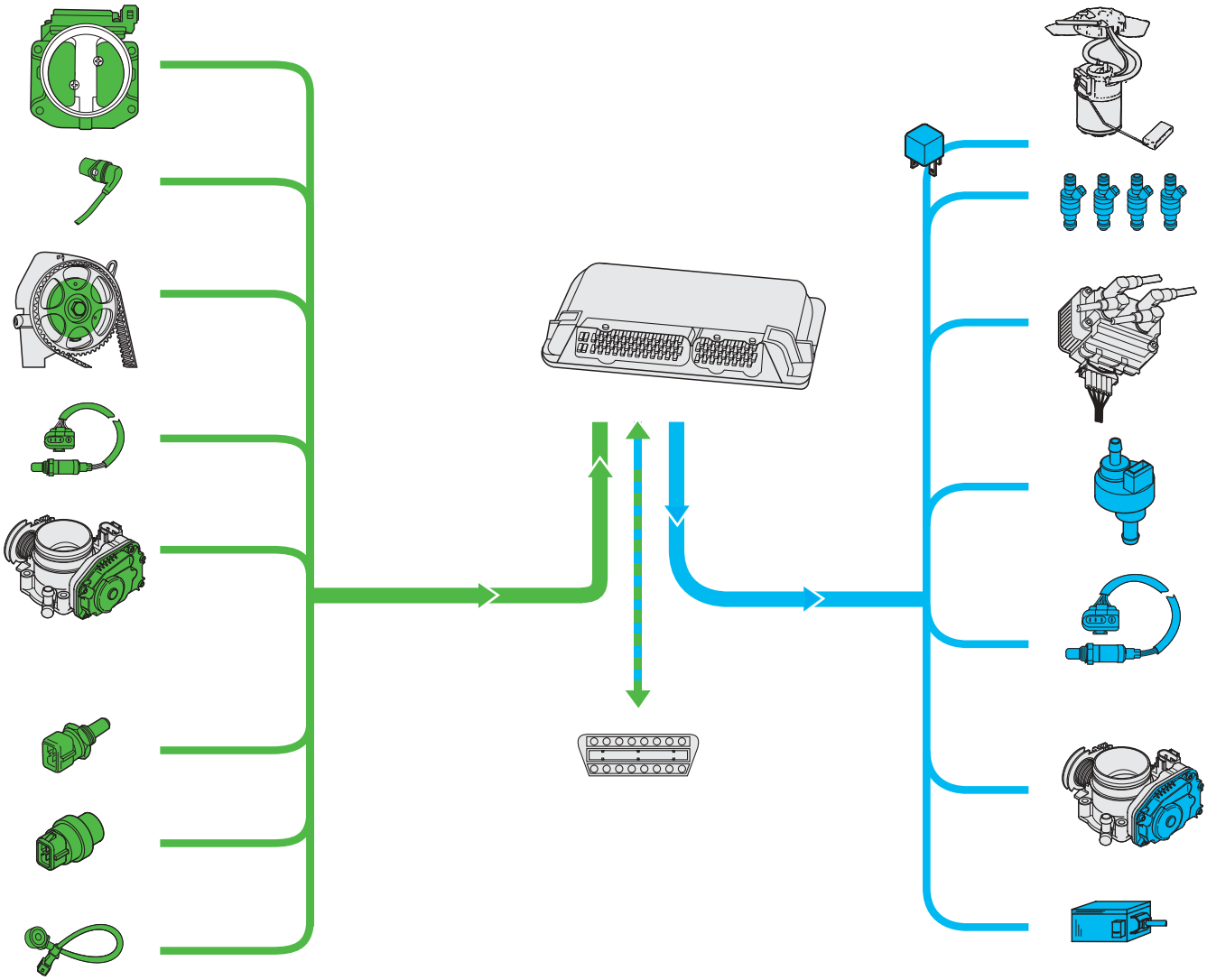

SSP 182/77

Functional diagram, Simos 2

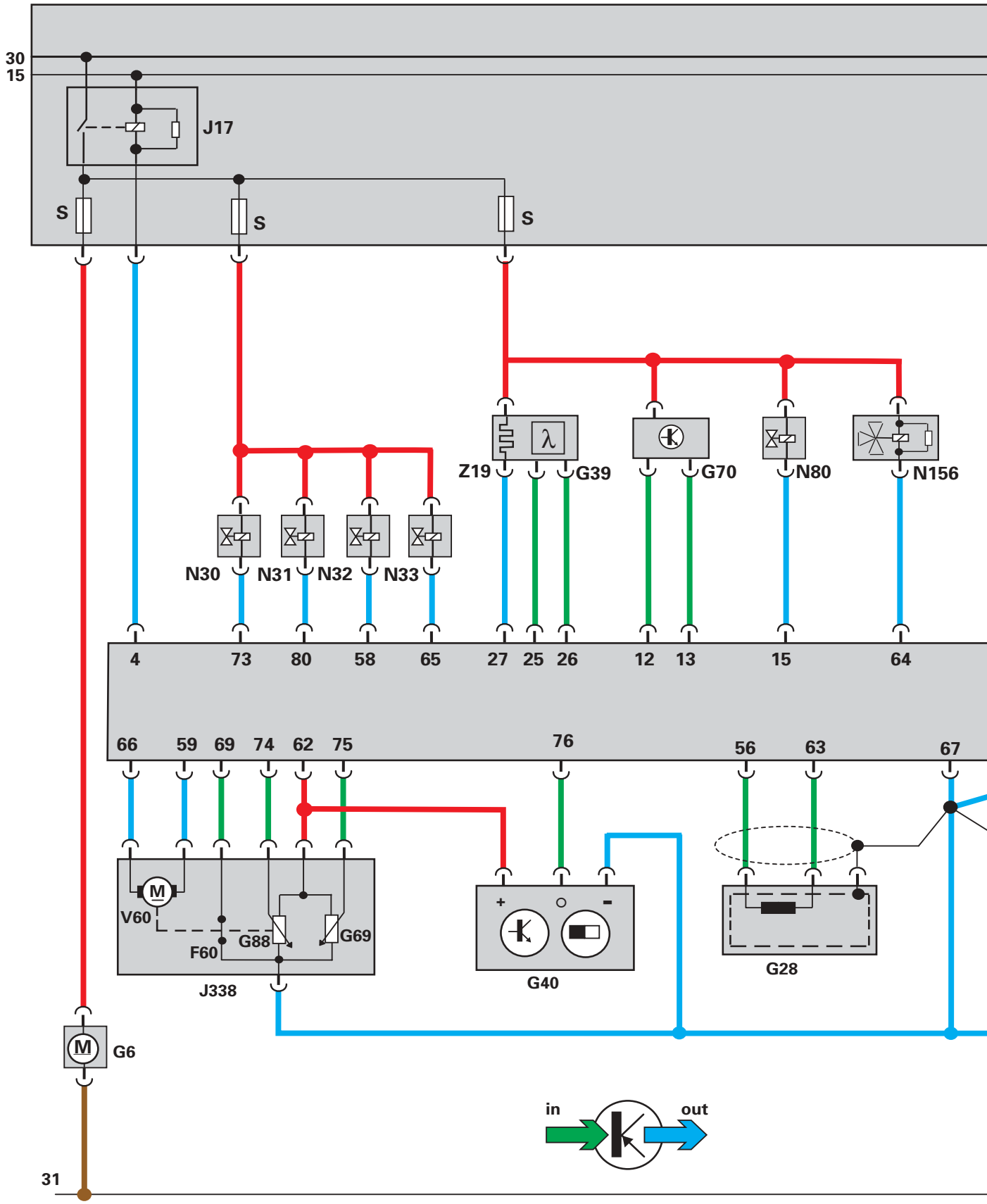

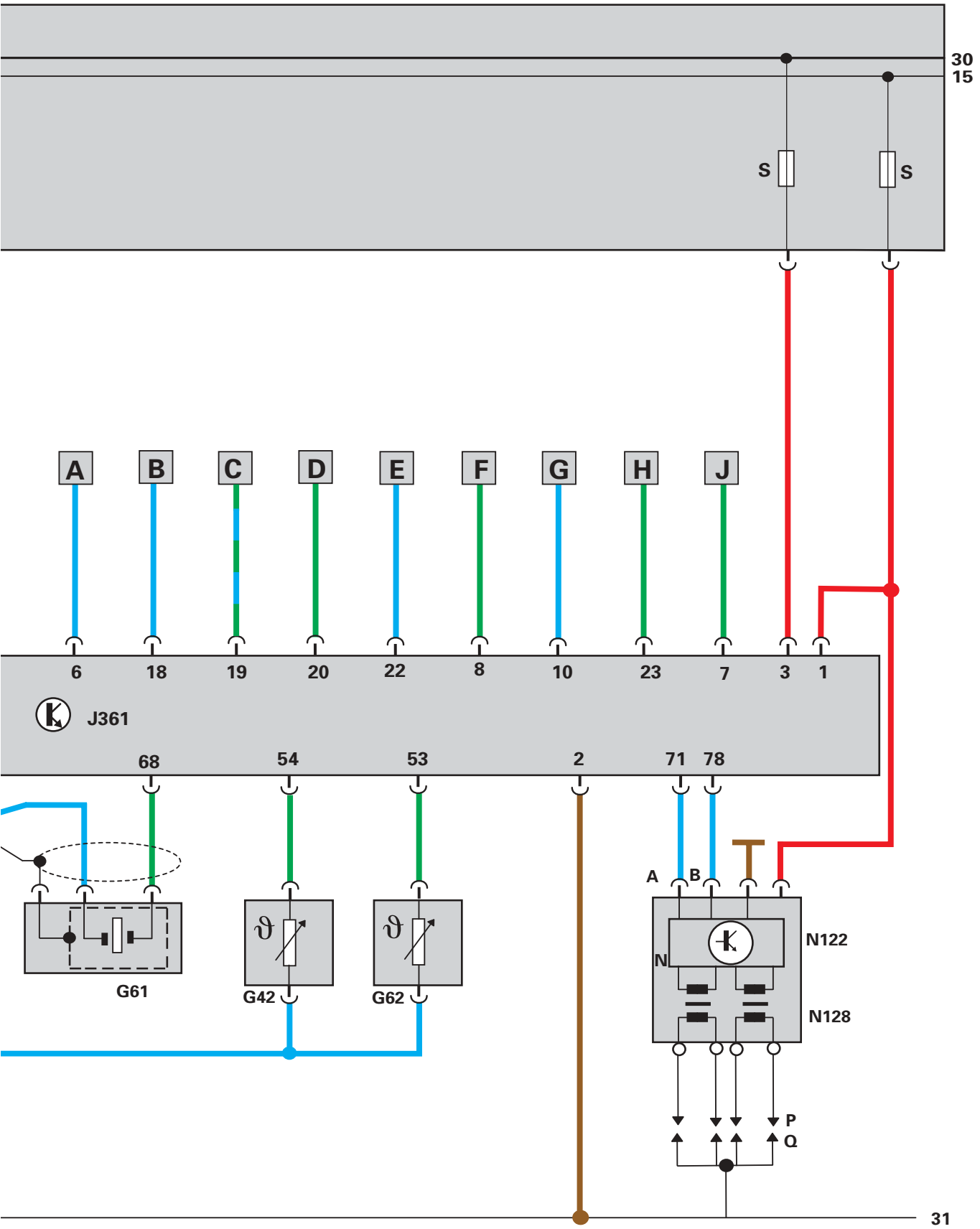
30
15
S
S
A
B
C
D
E
F
G
H
J
6
18
19
20
22
8
10
23
7
3
1
J361
68
54
53
2
71
78
G61
G42
G62
A
B
N
N122
N128
P
Q
31

SSP 182/40

Components:

F60	Idling speed switch
G6	Fuel pump
G28	Engine speed sender
G39	Lambda probe
G40	Hall sender
G42	Intake air temperature sender
G61	Knock sensor
G62	Coolant temperature sender
G69	Throttle valve potentiometer
G70	Air mass meter
G88	Throttle valve positioner potentiometer
J17	Fuel pump relay
J338	Throttle valve control unit
J361	SIMOS 2 control unit
N	Ignition coil
N30	Injector, cylinder 1
N31	Injector, cylinder 2
N32	Injector, cylinder 3
N33	Injector, cylinder 4
N80	Activated charcoal filter system solenoid valve 1
N122	Output stage
N128	Coil 2
N156	Intake manifold change-over valve
P	Spark plug connector
Q	Spark plug
V60	Throttle valve positioner
Z19	Lambda probe heater

Additional signals:

A	Engine speed signal
B	Fuel consumption signal
C	Wiring for diagnosis and immobiliser
D	Road speed sensor
E	Terminal 50
F	Air conditioner- switch-off
G	Air conditioner - ready
H	Signal for engine intervention
J	Throttle valve potentiometer signal

Colour code:

- Input signal
- Output signal
- Positive
- Earth

Dummy page

1.8-ltr. 5V engine ...

Variable valve timing

The different gas flow characteristics which take place in the engine combustion chamber have a major bearing on perfomance, torque and exhaust emissions.
Variable valve timing adapts valve timing to the demands of the engine. Its task is to adjust the valve opening and closing times as a function of speed.

This improves torque in the lower to medium speed range and performance in the upper speed range.
Variable valve timing also reduces pollutant emissions.

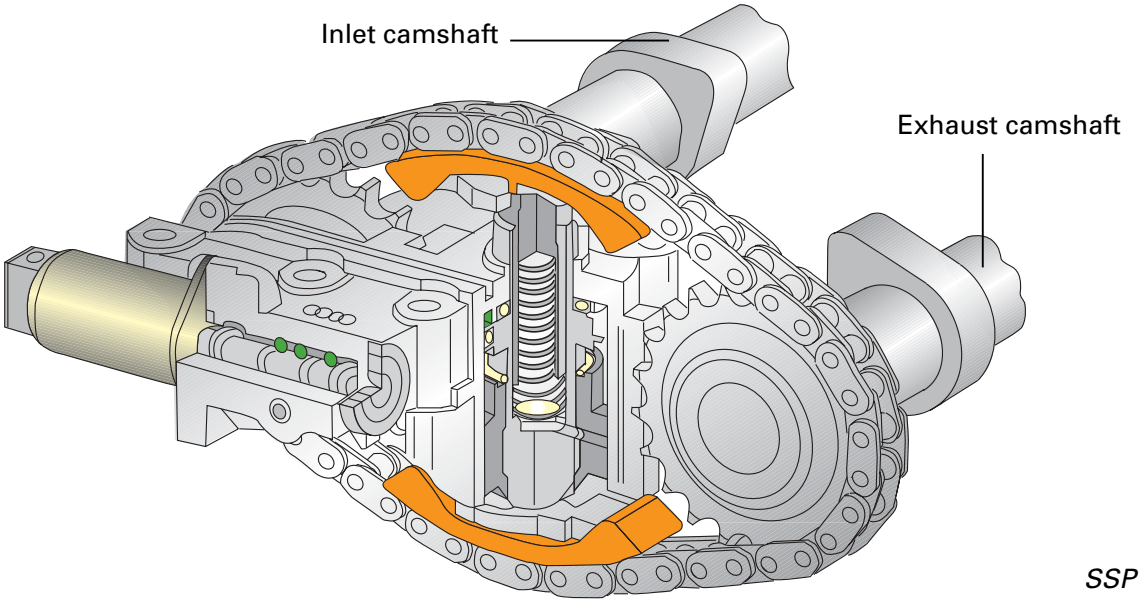

SSP 182/44

This is how it works:

Only the inlet camshaft is adjusted. The exhaust camshaft is driven by the crankshaft by means of the rib belt.
The inlet camshaft is driven by the exhaust camshaft by means of a chain.
The inlet camshaft is adjusted by an electrically controlled hydraulic cylinder which simultaneously acts as a chain tensioner.

When valve timing is adjusted, the inlet camshaft is adjusted towards “advance“.
Variable valve timing is controlled by the engine control unit.

Performance position

In the performance position, the change point of the timing chain is in advance of the inlet camshaft. This is the basic position. No timing adjustment takes place.

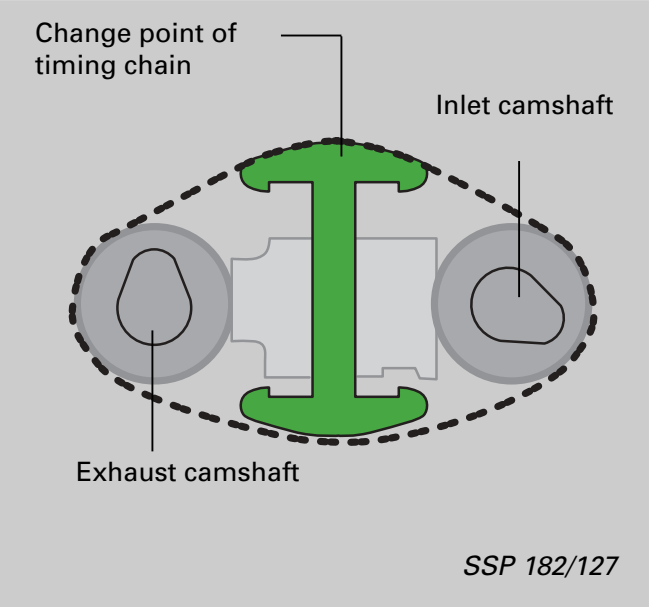

Torque position

To adjust valve timing, the chain tensioner is pressed downwards under oil pressure. This changes the change point of the timing chain. It is now after the inlet camshaft. The camshaft is adjusted towards “advance“.

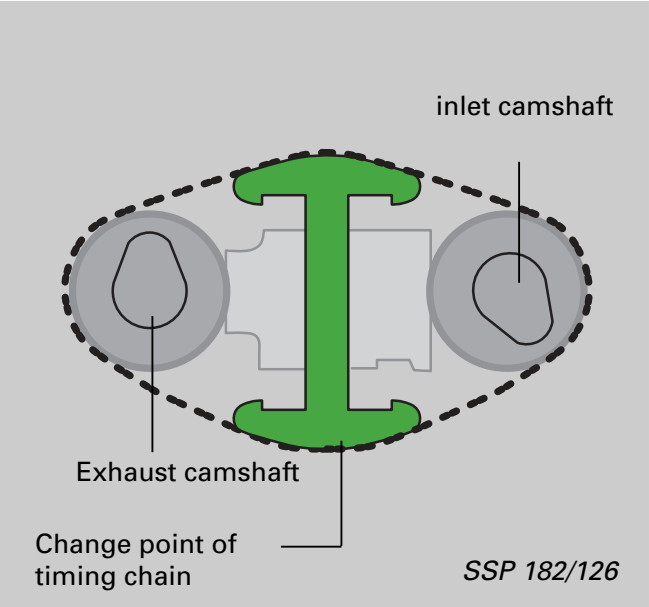

Basic position

The variable valve timing mechanism is supplied with oil through a drilling in the cylinder head. Depending on the position of the **adjusting piston,** oil pressure is applied to **control pipe A or B**.

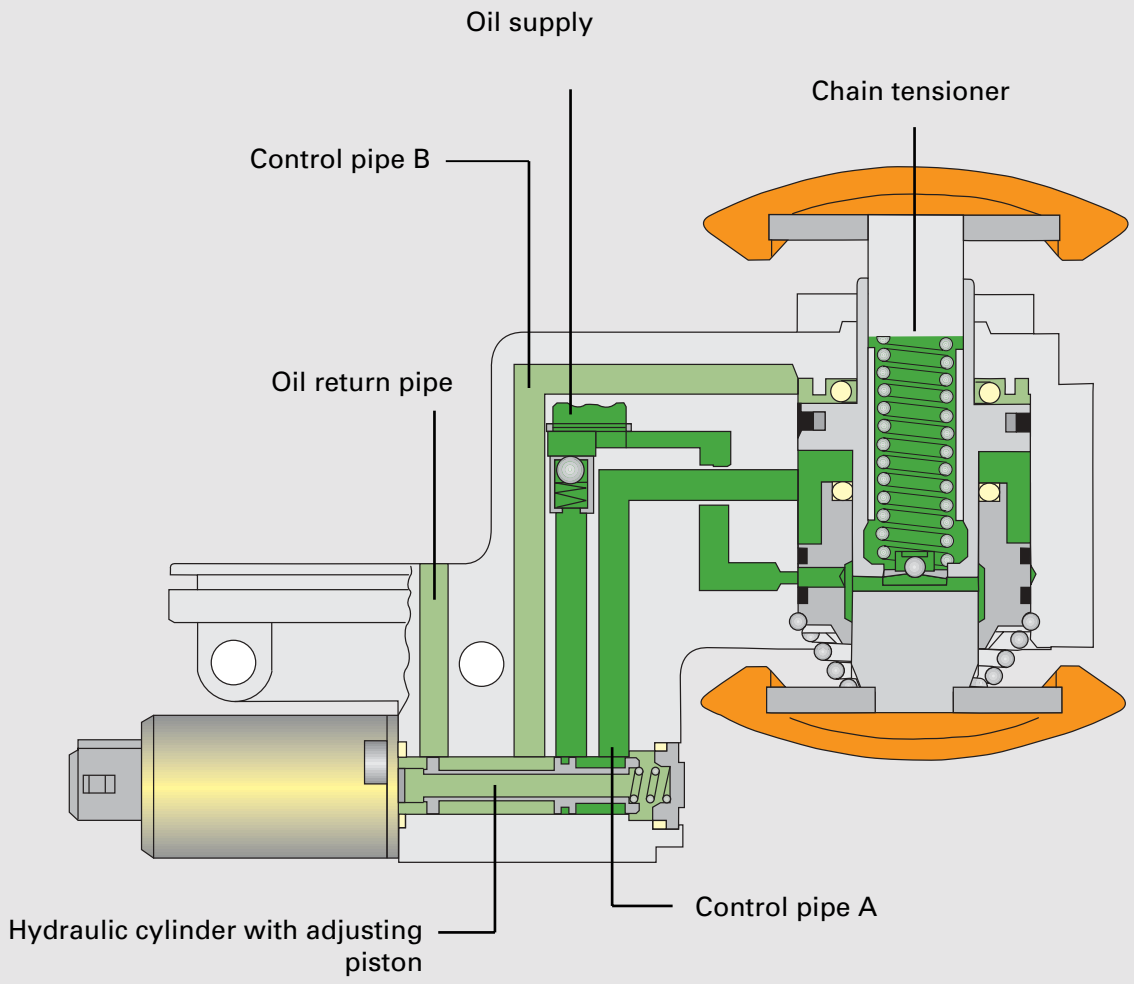

SSP 182/45

Performance position

In the de-energised state, **control pipe A** is open and oil pressure forces the **chain tensioner** into the **performance position** (basic position).

Torque position

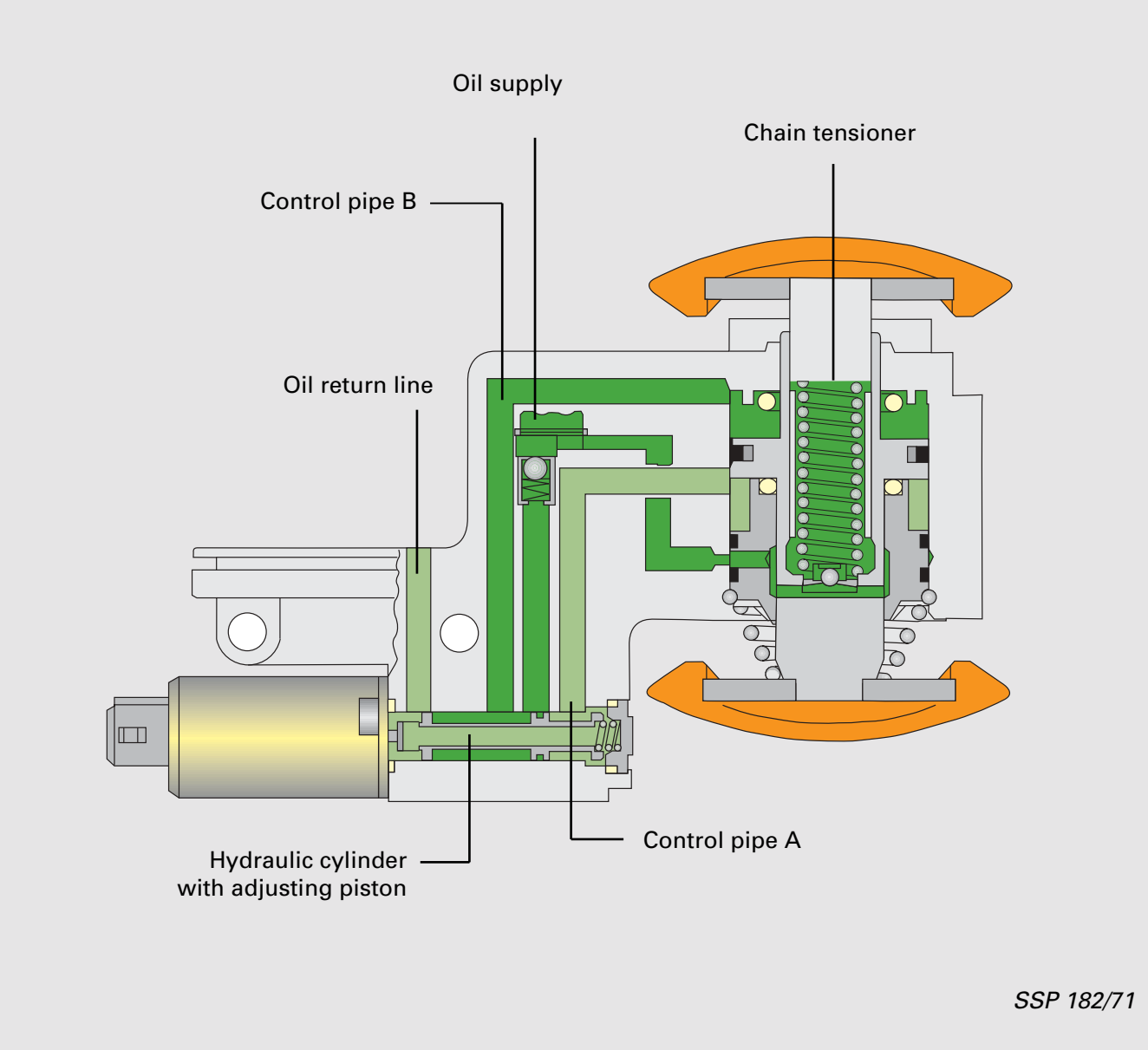

At speeds over 1300 rpm, the **control pipe B adjusting piston** opens and the **chain tensioner** is pressed downwards into the **torque position**. This alters the change point of the timing chain and the inlet camshaft opens and closes the valves earlier.

At speeds above 3600 rpm,
the chain tensioner is switched back to the **performance position**.

System overview, Motronic M 3.8.2

Sensors

Air mass meter G70

Engine speed sender G28

Hall sender G40

Throttle valve control unit J338
with
Throttle valve potentiometer G69
Throttle valve positioner potentiometer G88
Idling speed switch F60

Intake air temperature sender G42

Coolant temperature sender G62

Lambda probe G39

Knock sensor 1 G61

Knock sensor 2 G66

Additional signals:
Road speed sensor
Air conditioner - ready
Signal for engine intervention

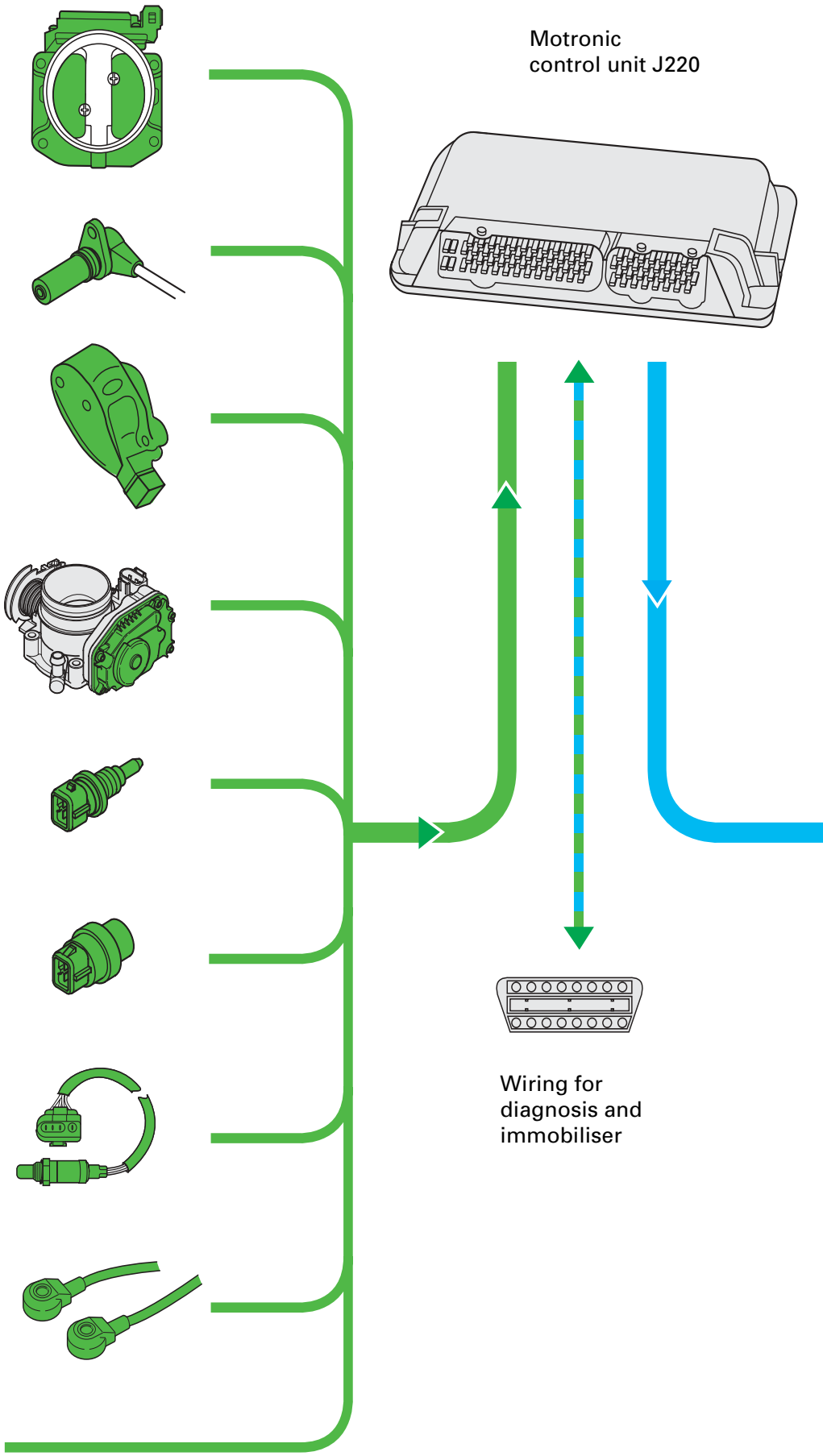

Actuators

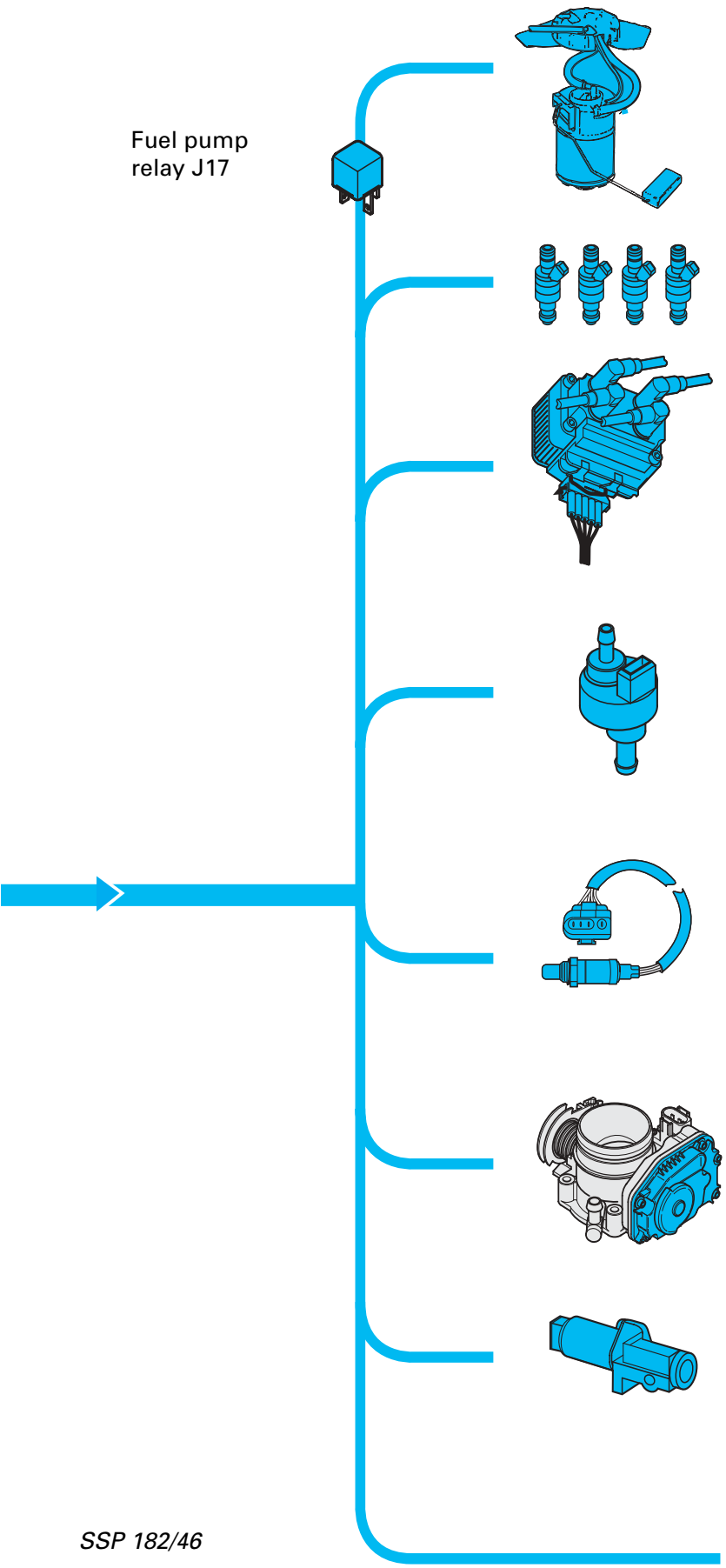

Fuel pump G6

Injectors N30-N33

Output stage N122
and ignition coils N/N128

Activated charcoal filter
solenoid valve 80

Lambda probe heater Z19

Throttle valve control unit
J338
with throttle valve positioner V60

Variable valve timing
valve 1 N205

Additional signals
Air conditioner - switch-off
Throttle valve potentiometer signal
Engine speed signal
Fuel consumption signal

SSP 182/46

Self-diagnosis

Faults can be evaluated using fault reader V.A.G 1551 or 1552.

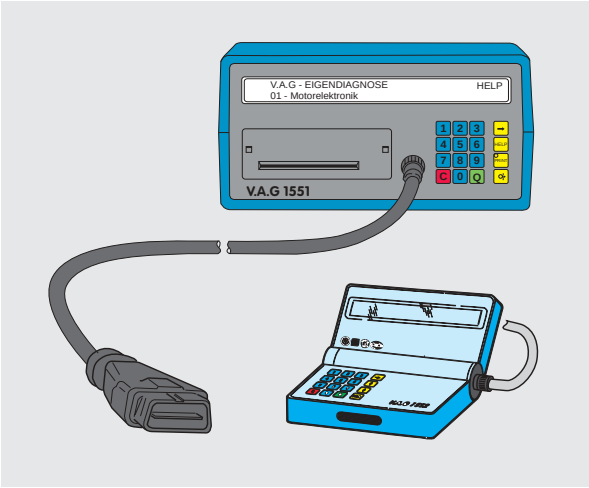

SSP 182/39

The following functions can be checked by the self-diagnosis using the address word:

V.A.G - EIGENDIAGNOSE	HELP
01 - Motorelektronik	

01 - Interrogate control unit version

02 - Interrogate fault memory

03 - Final control diagnosis

04 - Initiate basic setting

05 - Erase fault memory

06 - End of output

07 - Encode control unit

08 - Read measured value block

You can find explanatory notes on self-diagnosis and address words in the Workshop Manual.

The colour-coded components are checked during self-diagnosis.

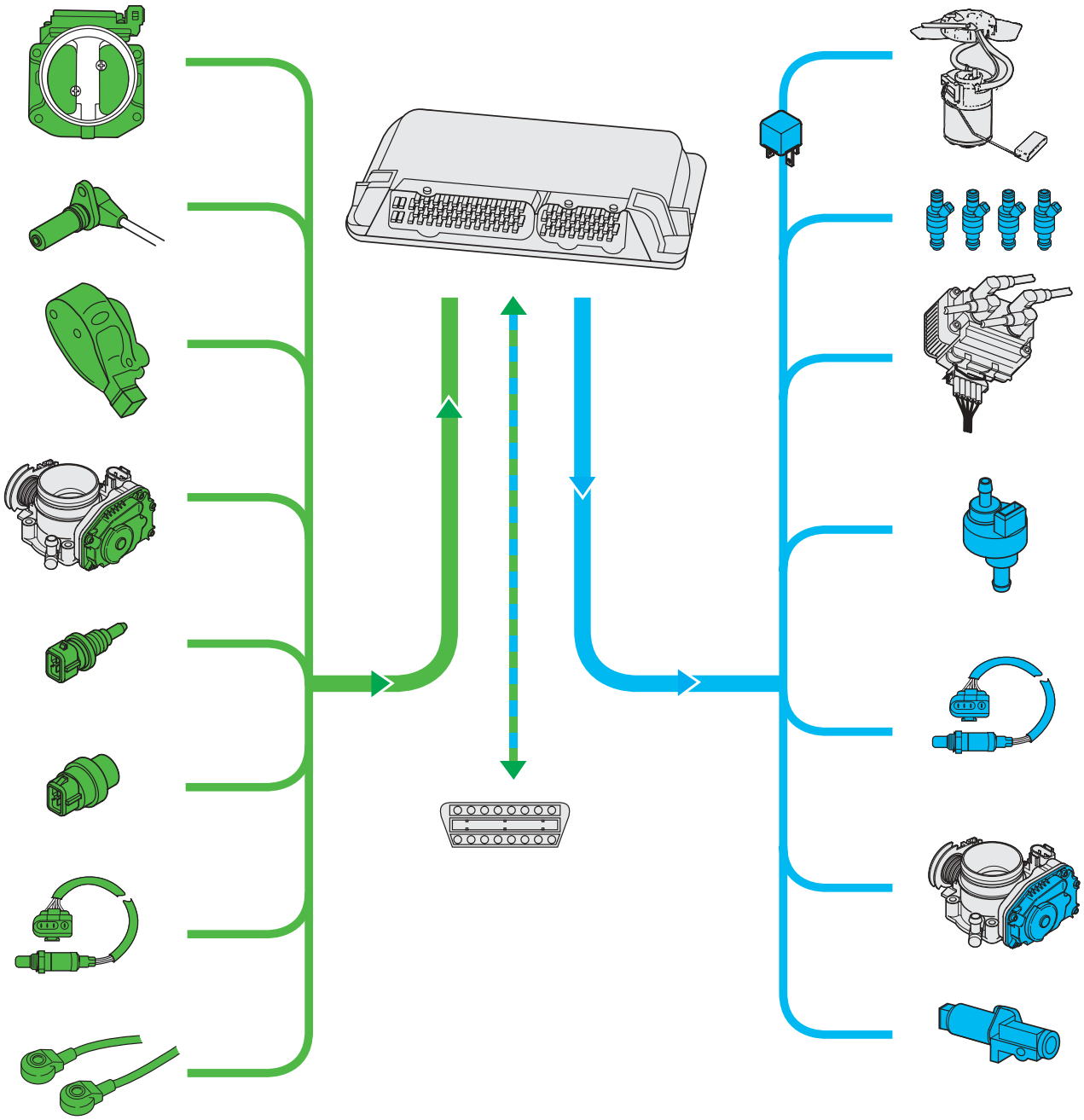

SSP 182/91

Functional diagram, Motronic M3.8.2

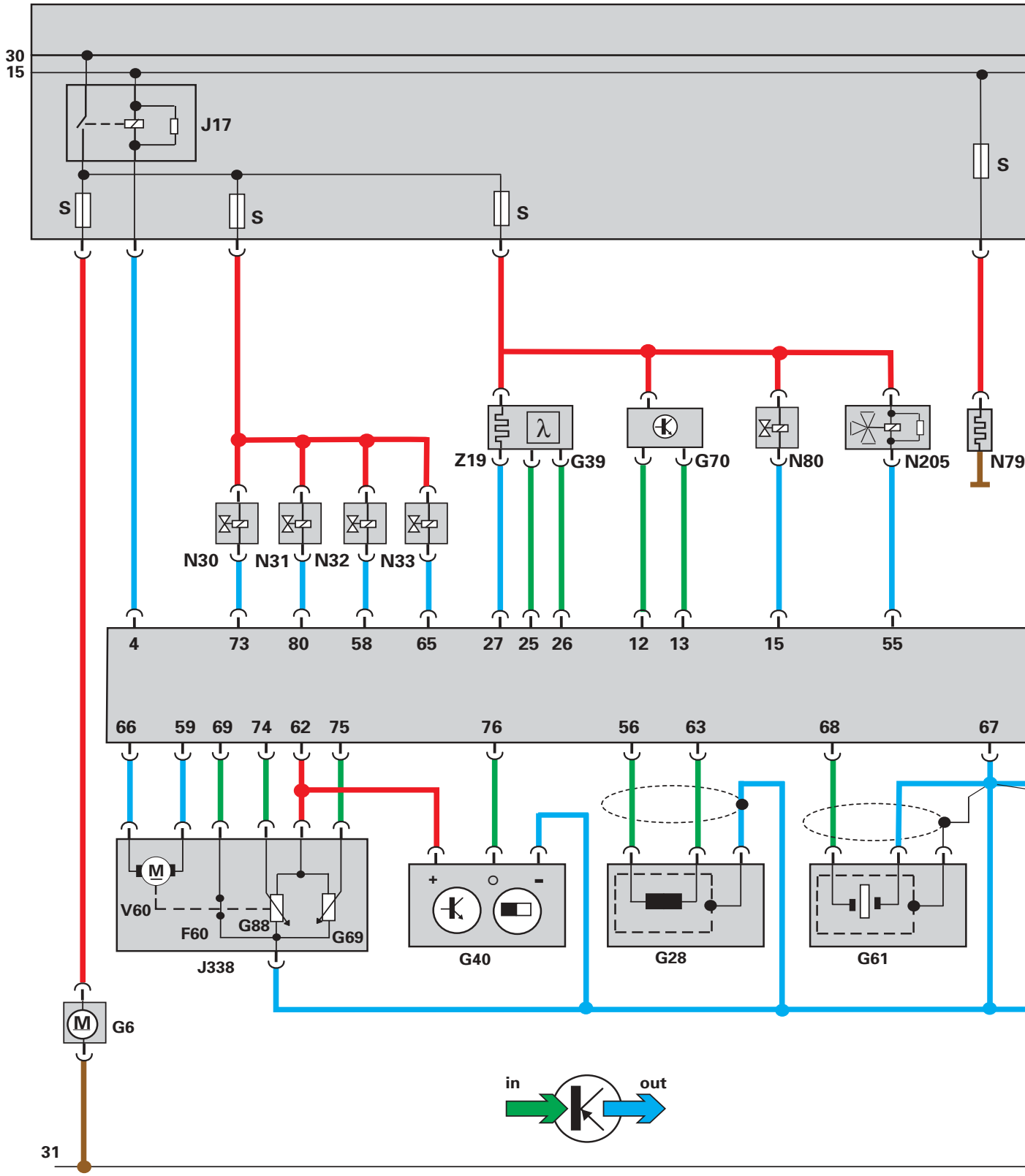

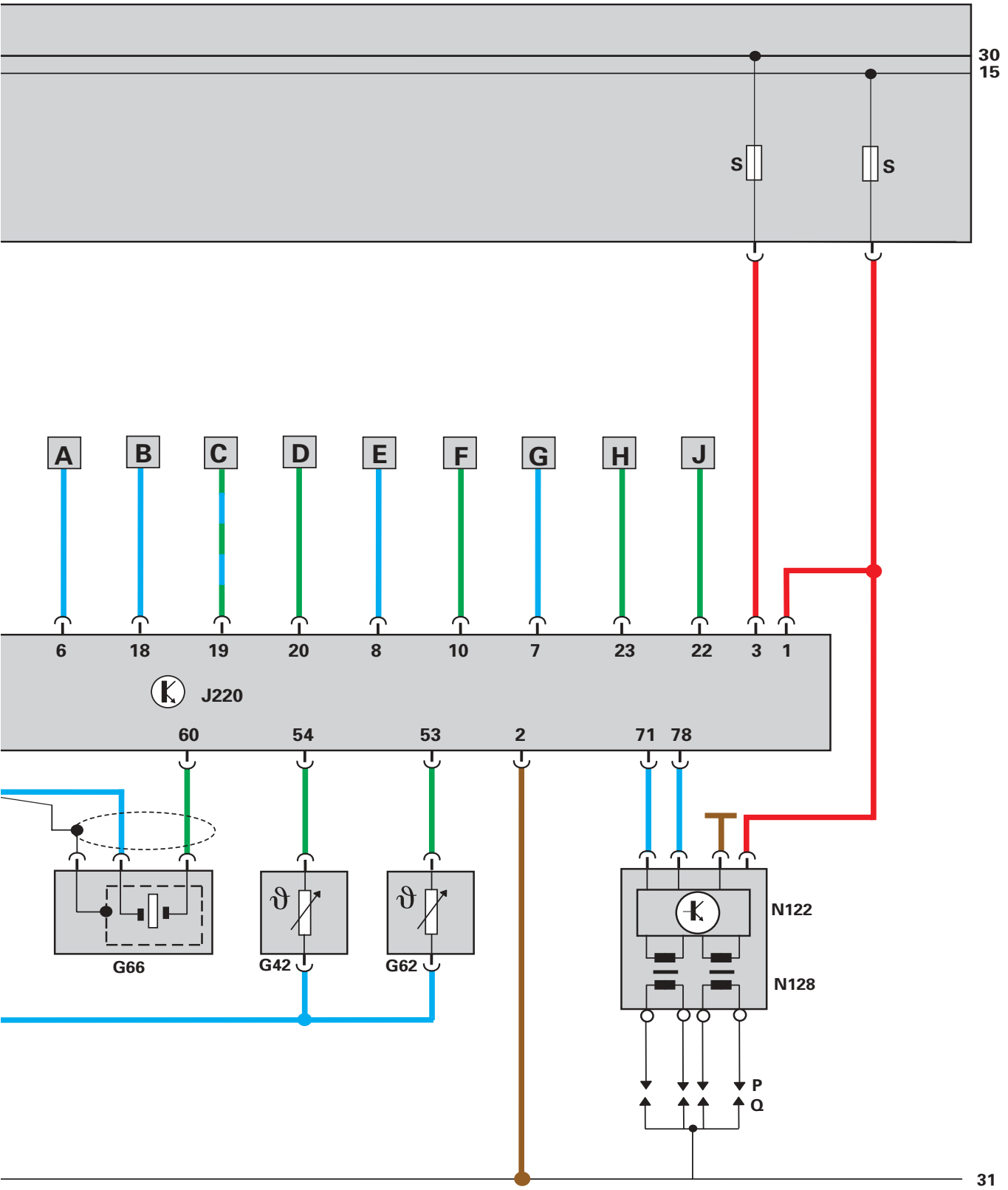
30
15
S
S
A
B
C
D
E
F
G
H
J
6
18
19
20
8
10
7
23
22
3
1
J220
60
54
53
2
71
78
G66
G42
G62
N122
N128
P
Q
31

SSP 182/47

Components:

F60	Idling speed switch
G6	Fuel pump
G28	Engine speed sender
G39	Lambda probe
G40	Hall sender
G42	Intake air temperature sender
G61	Knock sensor 1
G62	Coolant temperature sender
G66	Knock sensor 2
G69	Throttle valve potentiometer
G70	Air mass meter
G88	Throttle valve positioner potentiometer
J17	Fuel pump relay
J220	Motronic control unit
J338	Throttle valve control unit
N	Ignition coil
N30	Injector, cylinder 1
N31	Injector, cylinder 2
N32	Injector, cylinder 3
N33	Injector, cylinder 4
N79	Heater resistance (cylinder block breather)
N80	Activated charcoal filter system solenoid valve 1
N122	Output stage
N128	Ignition coil 2
N205	Variable valve timing valve 1
P	Spark plug connector
Q	Spark plug
V60	Throttle valve positioner
Z19	Lambda probe heater

Additional signals:

A	Engine speed signal
B	Fuel consumption signal
C	Wiring for diagnosis and immobiliser
D	Road speed signal
E	Air conditioner - switch-off
F	Air conditioner - ready
G	Throttle valve potentiometer signal
H	Signal for engine intervention
J	on automatic gearbox: terminal 50 on manual gearbox: earth

Colour code:

- Input signal
- Output signal
- Positive
- Earth

Dummy page

New features of the 1.9-ltr. TDI engine

Distributor injection pump

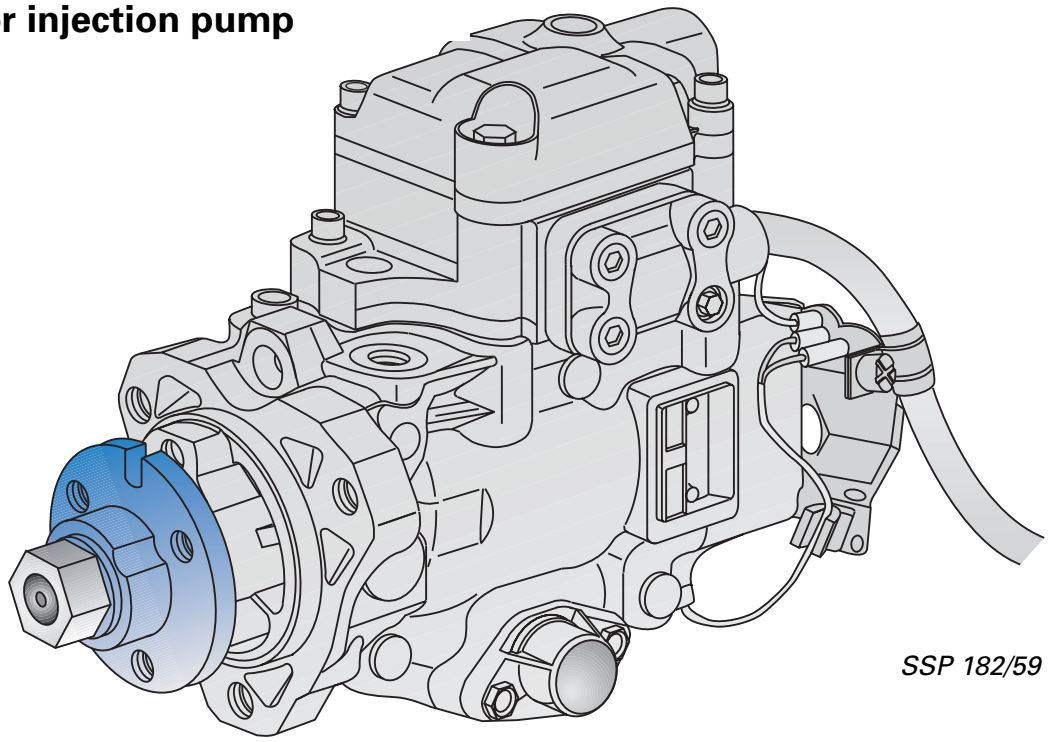

SSP 182/59

The distributor injection pump is preset. The flange is press-fitted on the drive shaft and must not be removed.

Injector pipes

The injector pipes are plastic-coated for anti-corrosion protection.

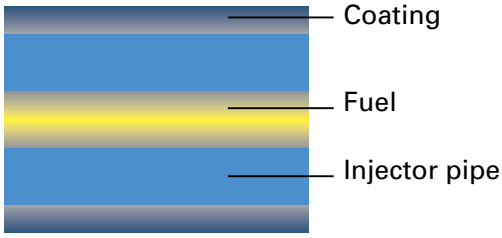

SSP 182/61

Non-return valve

A constant pressure valve is no longer required as before since it is not necessary to maintain a residual pressure in the injector pipe. A non-return valve is used instead.

The task of the non-return valve is to prevent excess fuel reaching the injector and cavitation in the injector pipe.
See SSP 124.

Reverse flow

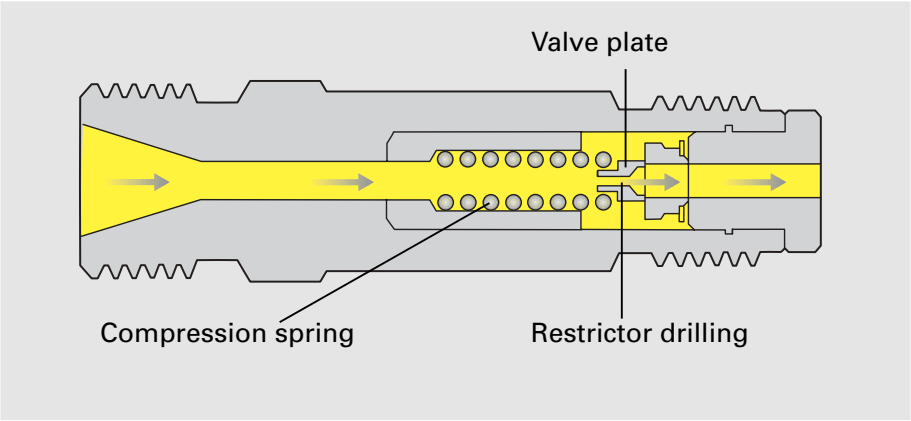

SSP 182/60

During reverse flow, the valve plate is closed under the force of the compression spring.
Fuel flows through the restrictor drilling. This dampens any existing pressure wave.

Fuel delivery

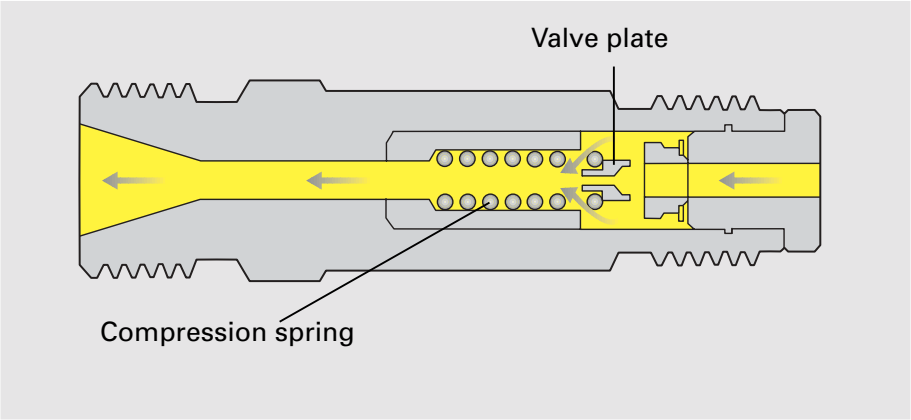

SSP 182/60

During fuel delivery, the valve plate is lifted by the fuel pressure and the restrictor drilling becomes ineffective.

Cylinder head cover

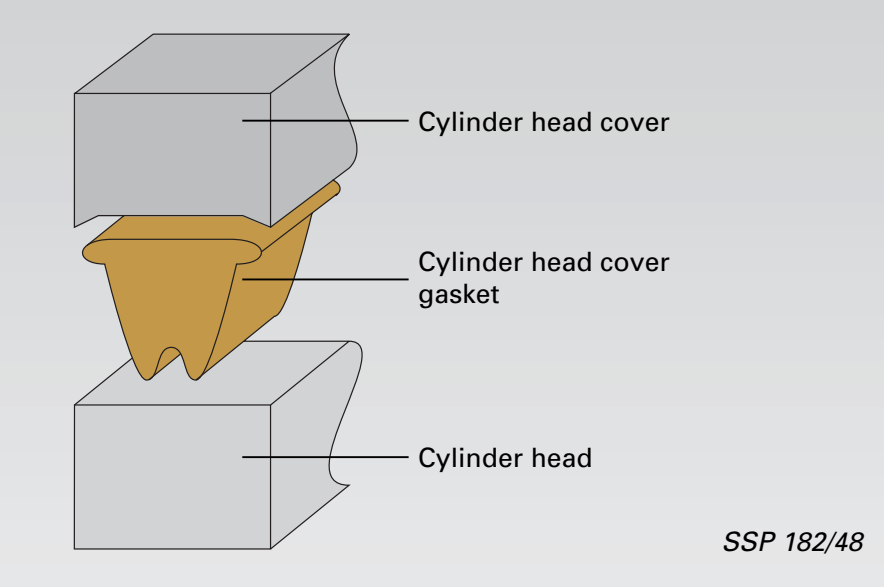

Before, the cylinder head cover gasket was not joined to the cylinder head cover. Two surfaces had to be sealed.

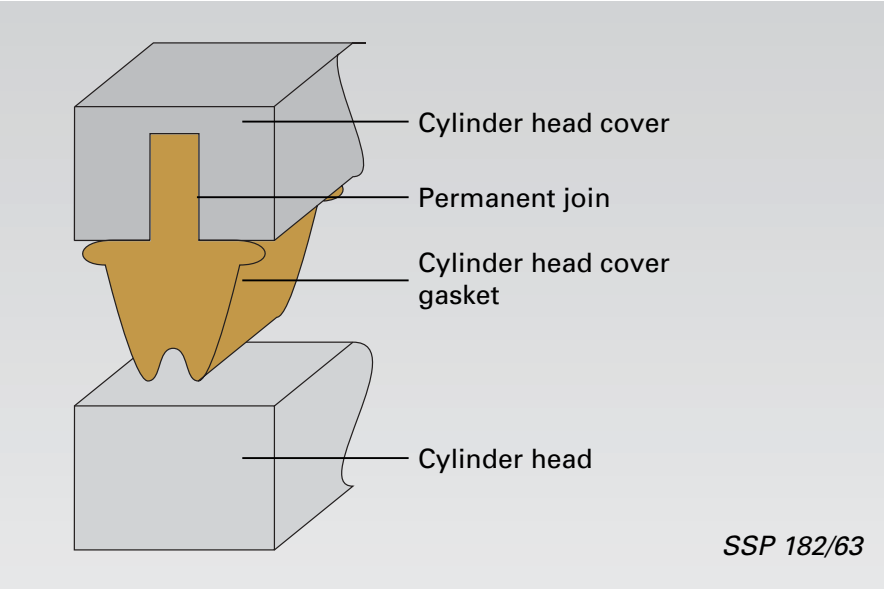

Now the cylinder head cover is permanently joined to the cylinder head cover gasket. Therefore, only one surface needs to be sealed.

Before you attach the cylinder head cover, please read the Workshop Manual.

Vacuum pump

The vacuum pump consists of a rotor and a vane. The vane is made of plastic and has a movable mounting.

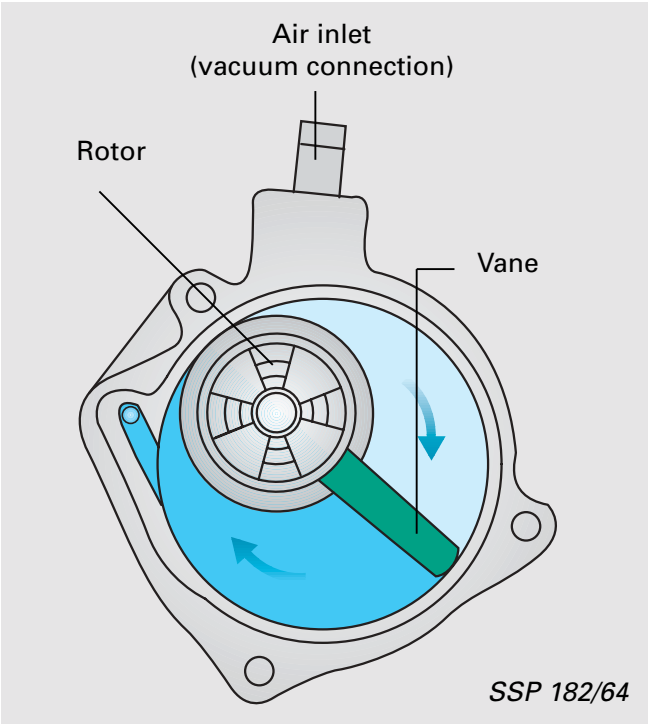

Expanding the cavity

The rotor is driven by the camshaft.
When the rotor turns, the vane is forced outwards and the cavity expands. The cavity fills up with air, thus producing a vacuum at the air inlet. The vacuum is utilised by the brake servo.

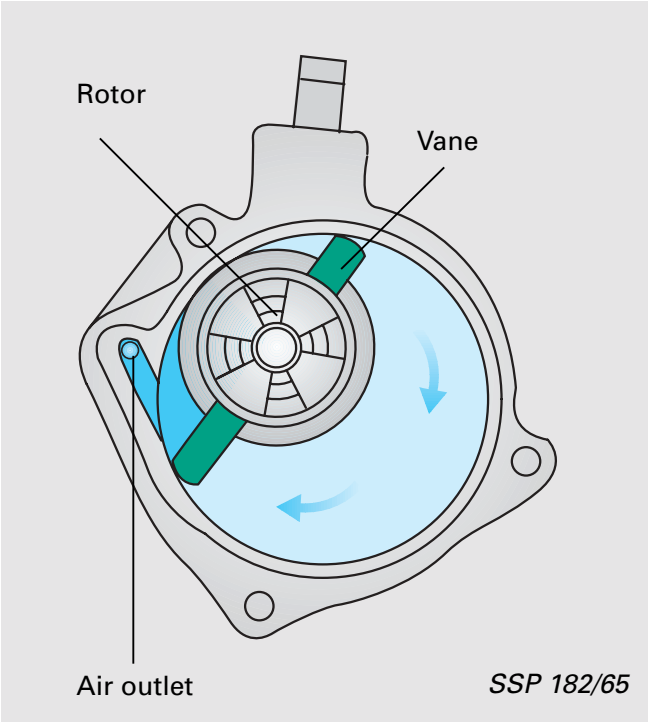

Diminishing the cavity

As the rotor and vane continue to turn, the cavity diminishes. As a result, the intake air is compressed and expelled through the air outlet to the cylinder head. At the same time another cavity forms.

System overview

Sensors

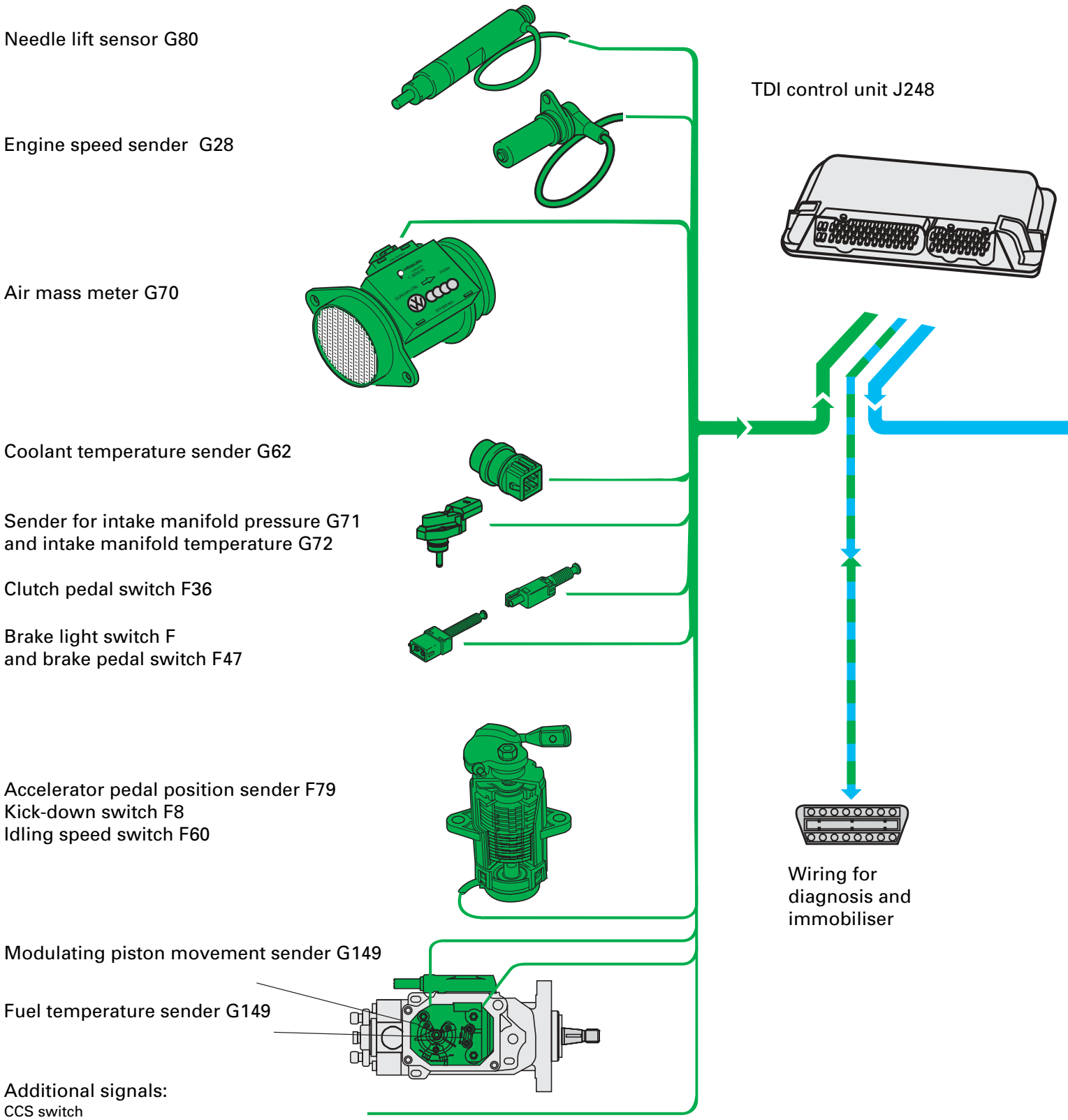

Additional signals:
CCS switch
Air conditioner - ready
Terminal DF
Road speed sensor
Signal for engine intervention

Actuators

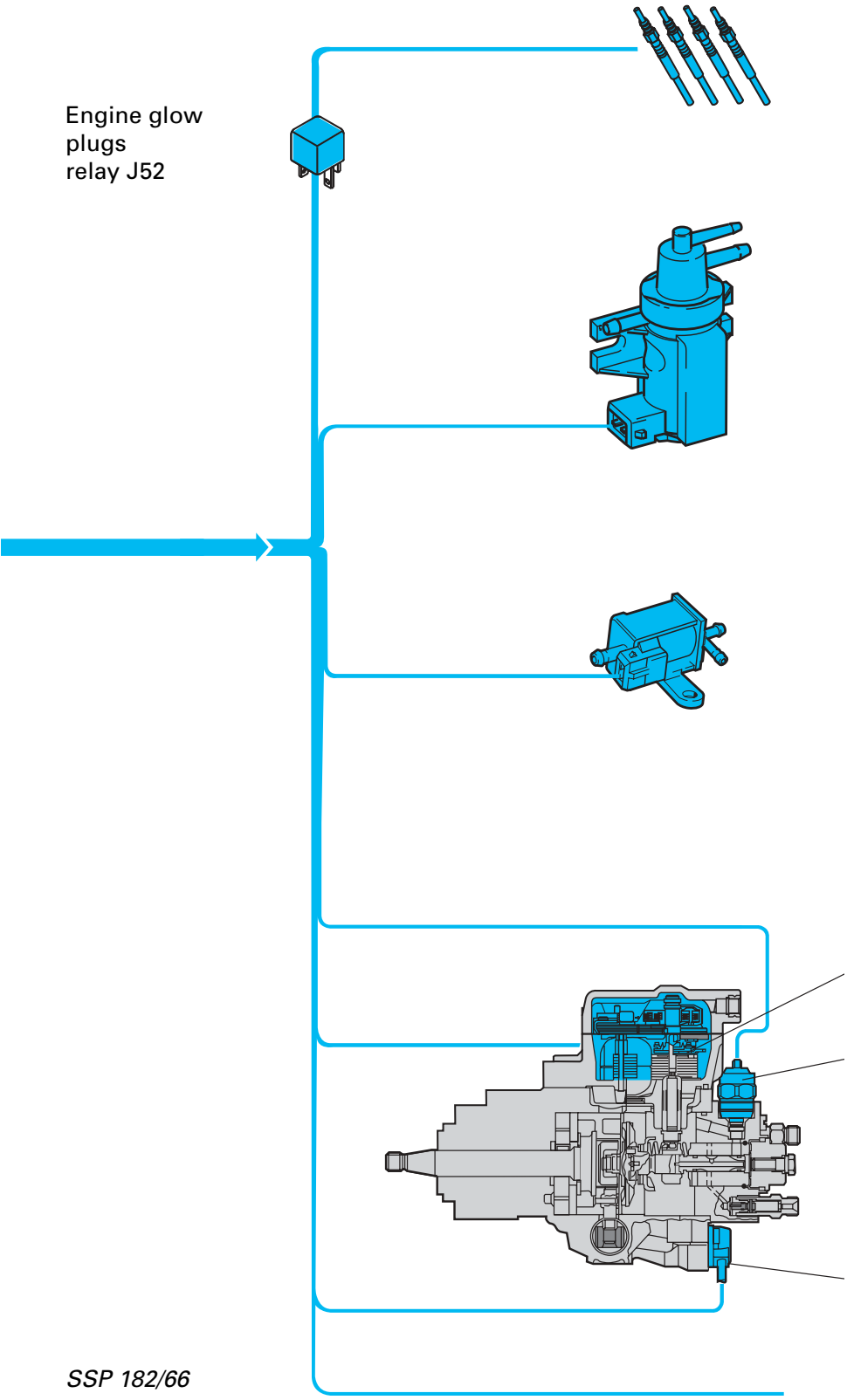

Additional signals:
Glow period control
Engine speed signal
Air conditioner - switch-off
Fuel consumption signal
Glow plug coolant
Kick-down signal
Accelerator pedal position signal

SSP 182/66

Self-diagnosis

Faults can be evaluated using fault reader V.A.G 1551 or 1552.

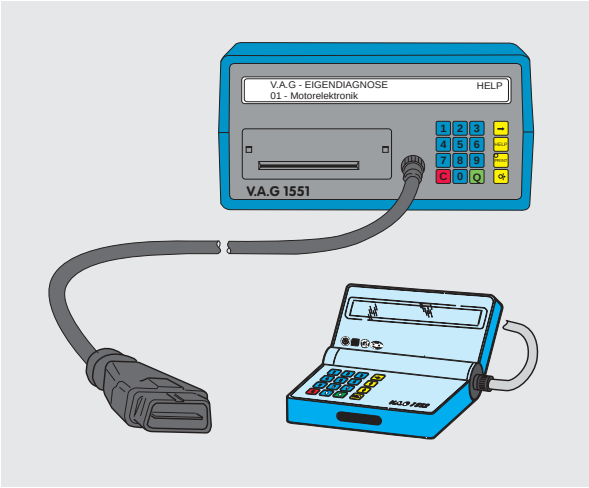

SSP 182/39

The following functions are checked by the self-diagnosis using the address word:

V.A.G - EIGENDIAGNOSE	HELP
01 - Motorelektronik	

01 - Interrogate control unit version

02 - Interrogate fault memory

03 - Final control diagnosis

04 - Initiate basic setting

05 - Erase fault memory

06 - End of output

07 - Encode control unit

08 - Read measured value block

You can find explanatory notes on the self-diagnostics and address words in the Workshop Manual.

The colour-coded components are checked during self-diagnosis.

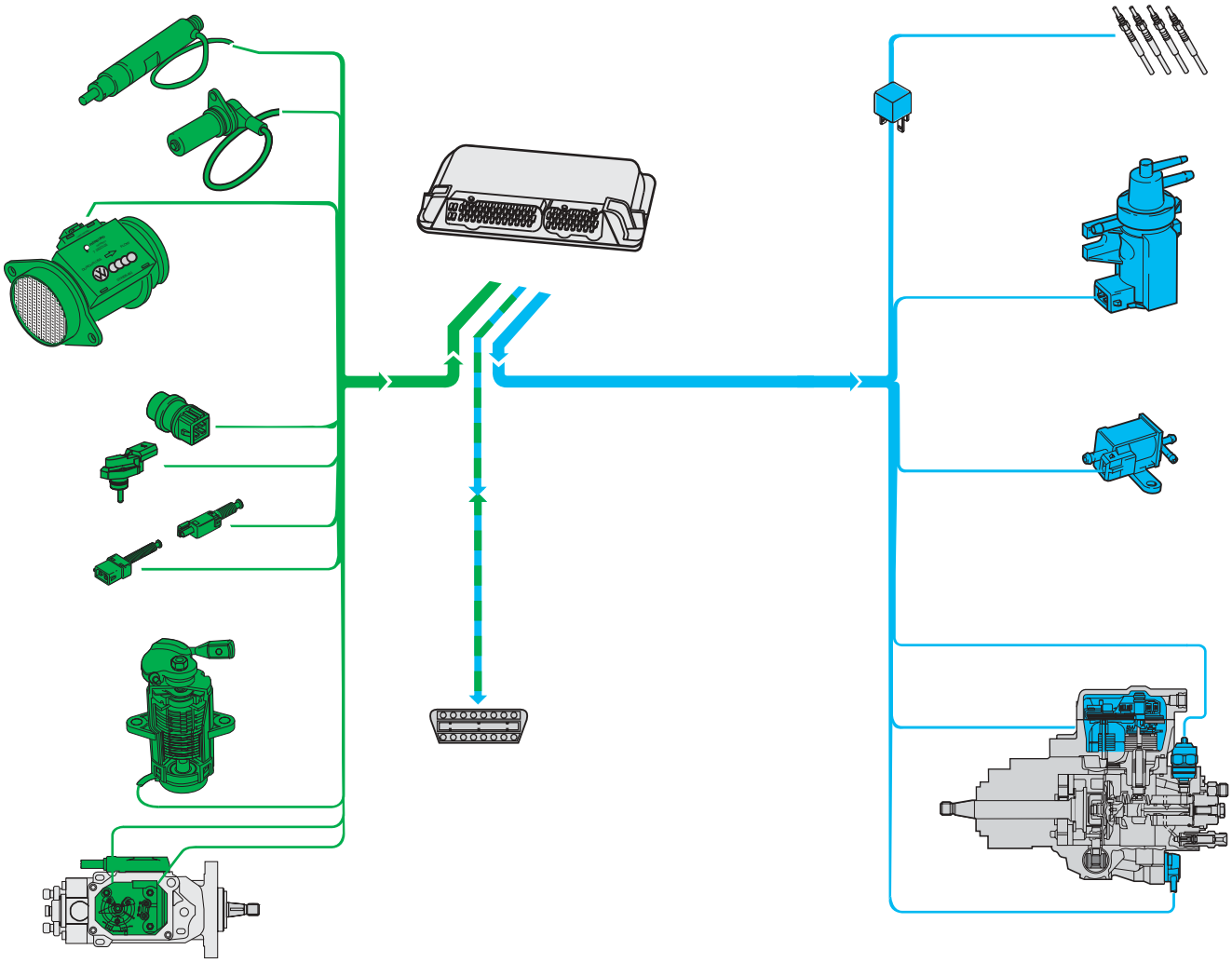

SSP 182/92

Functional diagram

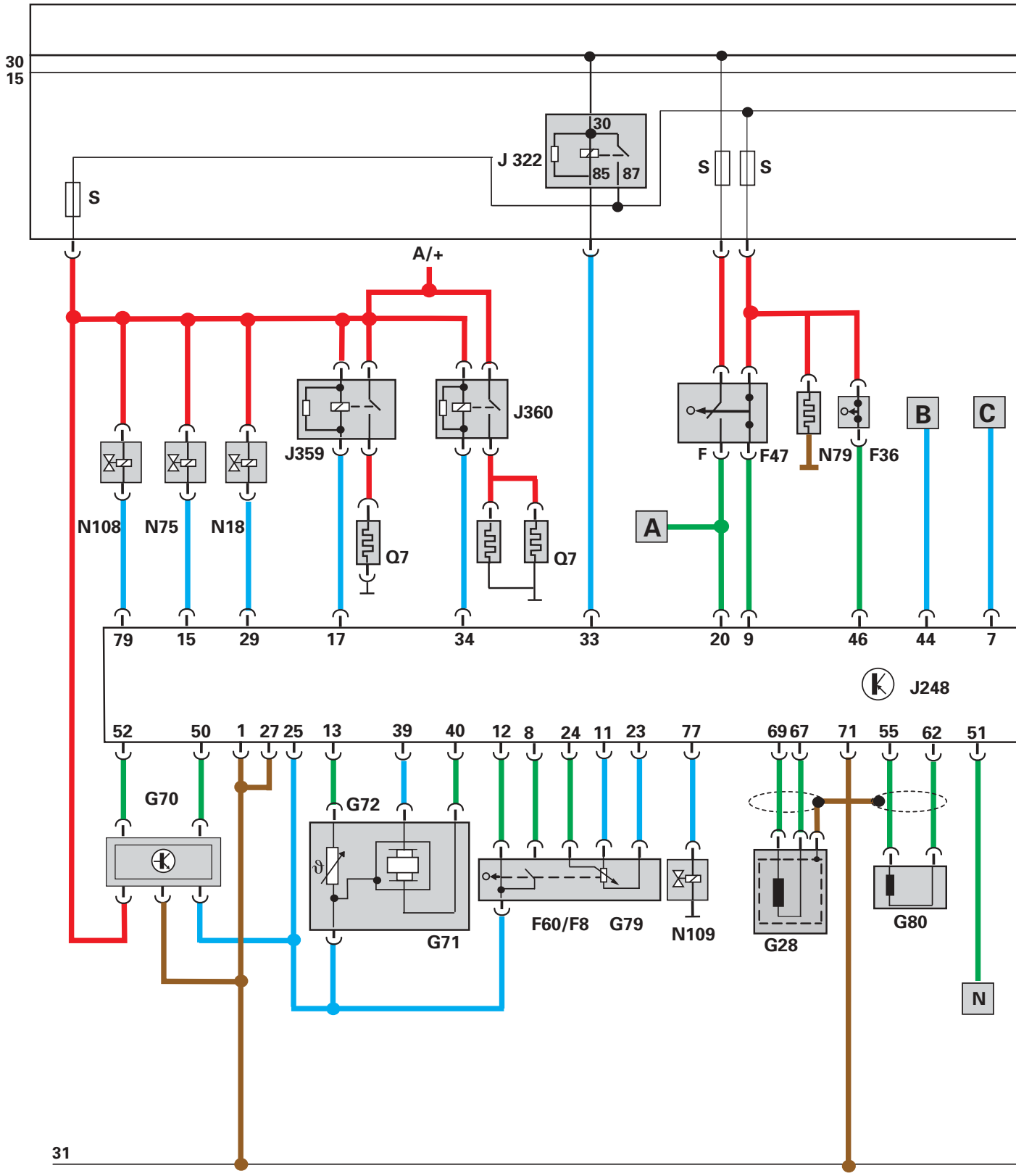

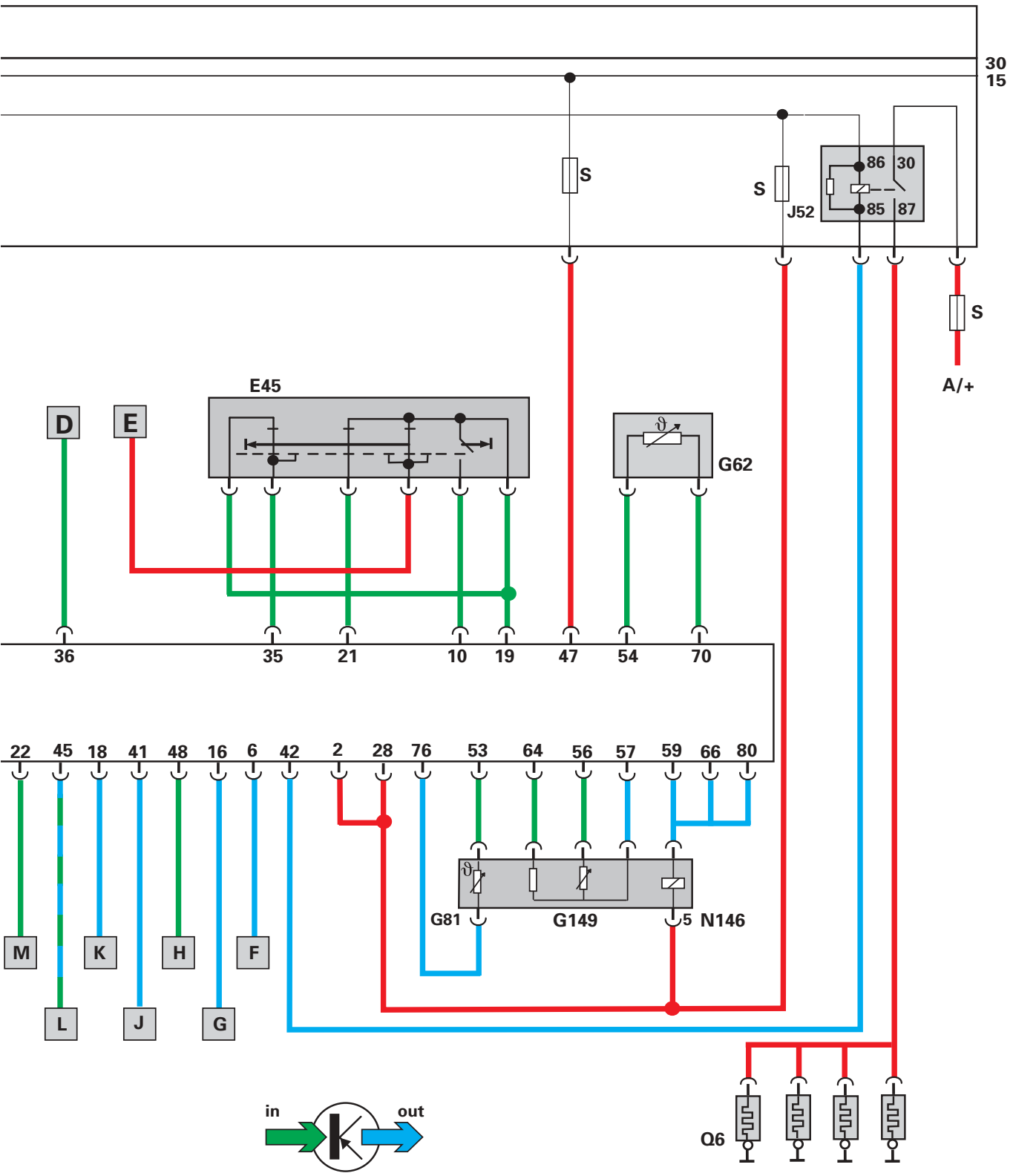
30
15
S
S
J52
86
30
85
87
S
A/+
E45
D
E
G62
36
35
21
10
19
47
54
70
22
45
18
41
48
16
6
42
2
28
76
53
64
56
57
59
66
80
G81
G149
5
N146
M
K
H
F
L
J
G
in
out
Q6

Components:

E45	Cruise control system switch (CCS)
F	Brake light switch
F8	Kick-down switch
F36	Clutch switch switch
F47	Brake pedal switch
F60	Idling speed switch
G28	Engine speed sender
G62	Coolant temperature sender
G70	Air mass meter
G71	Intake manifold pressure sender
G72	Intake manifold temperature sender
G79	Accelerator pedal position sender
G80	Needle lift sender
G81	Fuel temperature sender
G149	Modulating piston movement sender
J52	Engine glow plugs relay
J248	Diesel direct injection system control
J317	unit
J359	Voltage supply relay
J360	Low heater output relay
	High heater output relay
N18	Exhaust gas recirculation valve
N75	Charge pressure limitation solenoid valve
N79	Heater resistance (cylinder block breather)
N108	Commencement of injection valve
N109	Fuel cut-off valve
N146	Metering control
Q6	Engine glow plugs
Q7	Coolant heater elements

Additional signals:

A	Brake lights
B	Kick-down signal
C	Accelerator pedal position signal
D	Signal for engine intervention
E	Cruise control system voltage supply
F	Engine speed signal
G	Air conditioner - cutoff
H	Air conditioner - ready
J	Glow period control
K	Fuel consumption signal
L	Wiring for diagnosis and immobiliser
M	Terminal DF
O	Road speed sensor

Colour codes:

- Input signal
- Output signal
- Positive
- Earth

Test Your Knowledge

Just mark which answers are correct.
Sometimes only one answer is correct.
However sometimes they all are.

1. What are the advantages of the oil pump?

A Wide teeth intermeshing range

B Large working area = good intake characteristics

C Few moving parts

2. The 1.6-ltr. engine has a twin-path intake manifold.

2a. What does the twin-path intake manifold permit?

2b. How?

Hall sender G40

3. When can you assume that the engine valve timing is correct?

Please supplement the drawing.

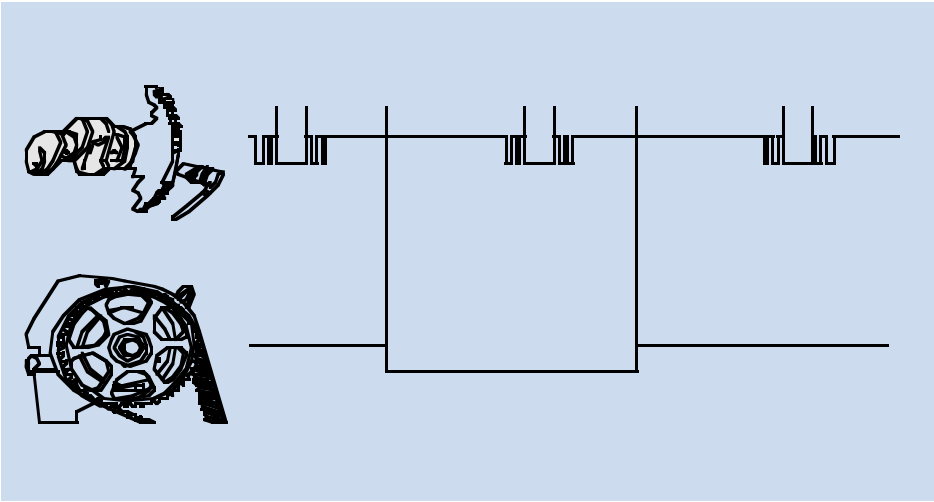

4. The task of variable valve timing is to:

Please mark the appropriate letters with a cross.

A To improve torque in the low to medium speed ranges.
To improve performance in the upper speed range.

B To improve torque in the upper to medium speed ranges.
To improve performance in the lower speed range.

C To adjust valve opening and closing times regardless of engine speed.

D To adjust the valve opening and closing times depending on engine speed.

5. This is the non-return valve.

5.a In which of the drawings is the restrictor drilling used?

Please enter the appropriate letter in box.

☐ Fuel flows through the restrictor drilling.

☐ The restrictor drilling becomes ineffective.

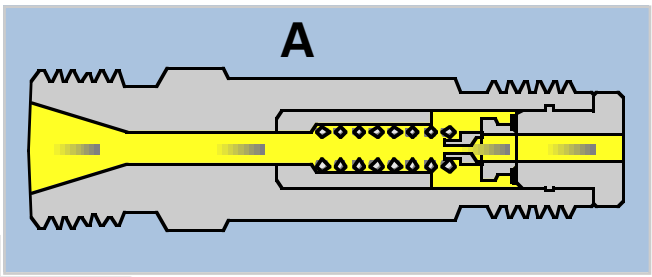

SSP 182/119

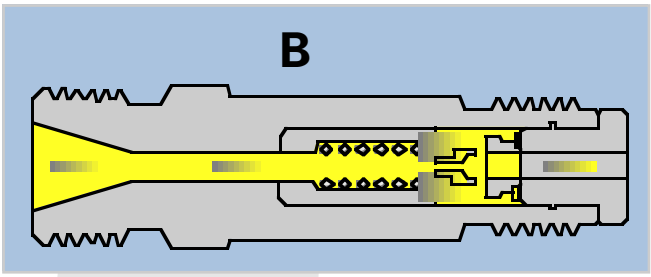

SSP 182/120

5.b What is the task of the non-return valve?

- -

- -

- -

7. The vacuum pump consists of a rotor and a vane.
The position of the vanes expands and diminishes the size of the cavity.

7.b Please complete and annotate drawings.

Expanding the cavity

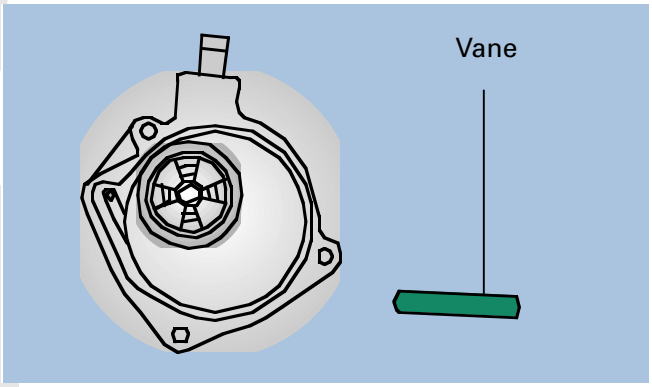

SSP 182/122

Diminishing the cavity

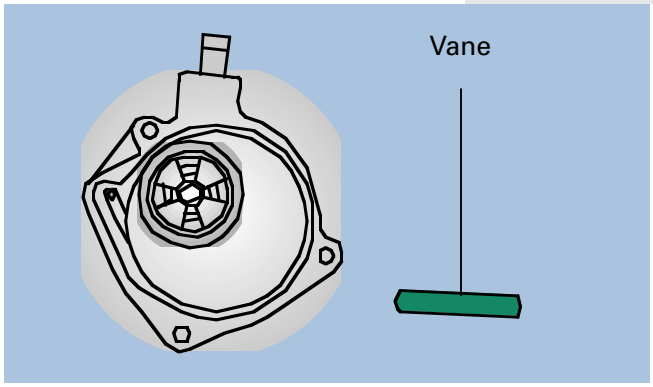

SSP 182/122

You can test your knowledge.

If you cannot decide how to answer one of the above questions, read through the related section again.

Tooth by tooth

The reason for “scratching noise“ when shifting the non-synchromesh reverse gear is often the long time which the input shaft requires to run out.

Function of reversing brake

When reverse gear is selected, the input shaft is braked as a result of synchronising the 5th gear.

When reverse is selected, the selector shaft executes a movement which presses the spring-loaded brake disc against the selector shaft lock.

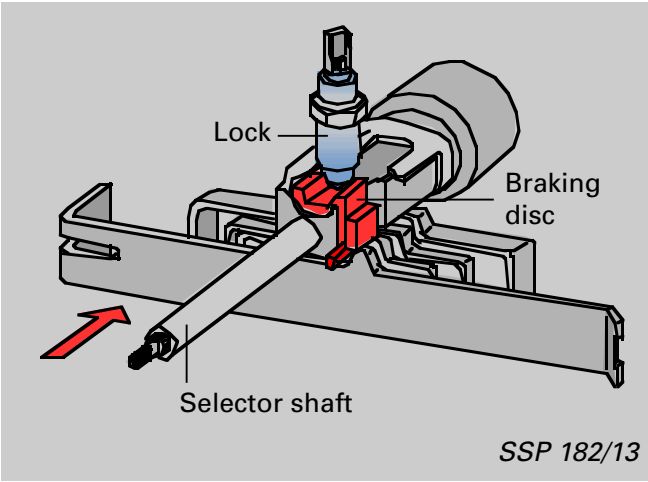

The spring-loaded brake disc rotates and displaces the selector mechanism for 5th gear. This synchronises the 5th gear and brakes the input shaft.

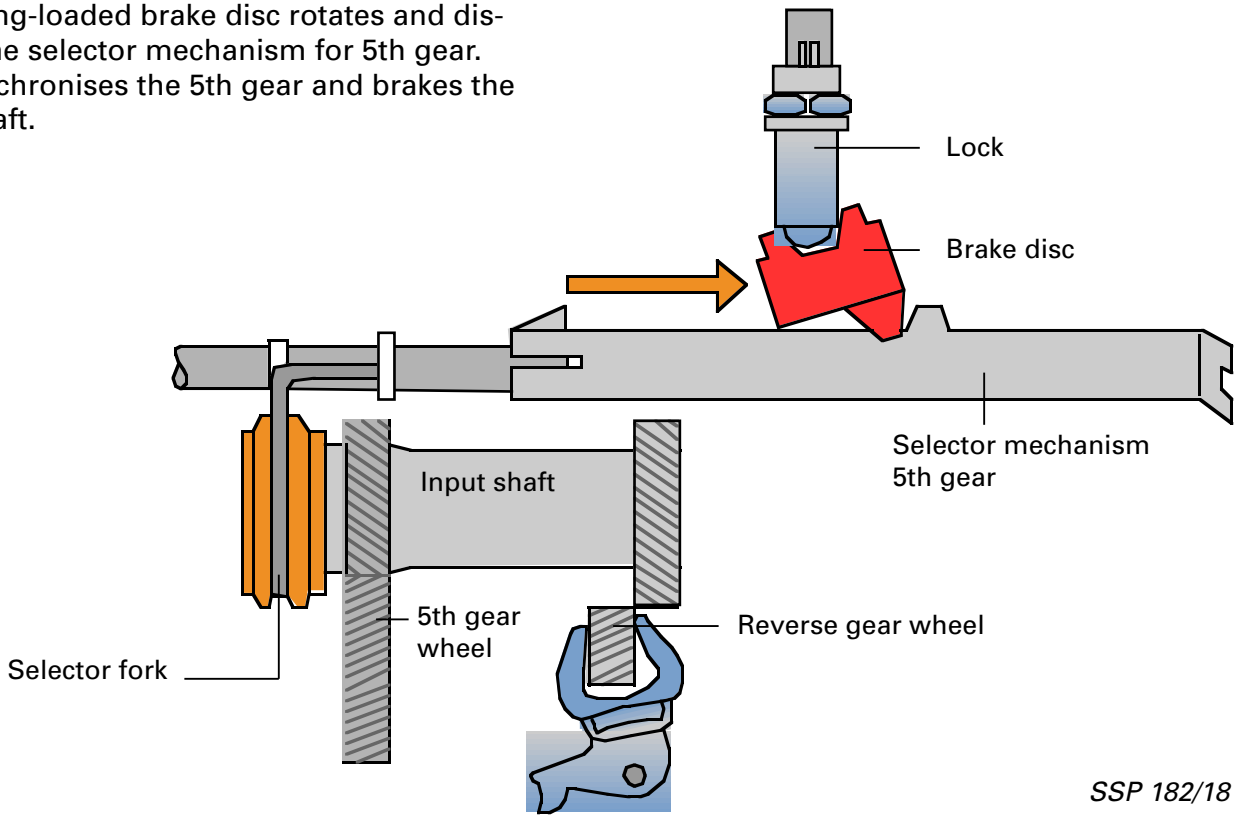

Reverse is engaged silently.

SSP 182/111

When reverse gear is selected, synchronisation of the 5th gear is cancelled.
The spring-loaded brake disc returns to its initial position.

Reverse gear is engaged.

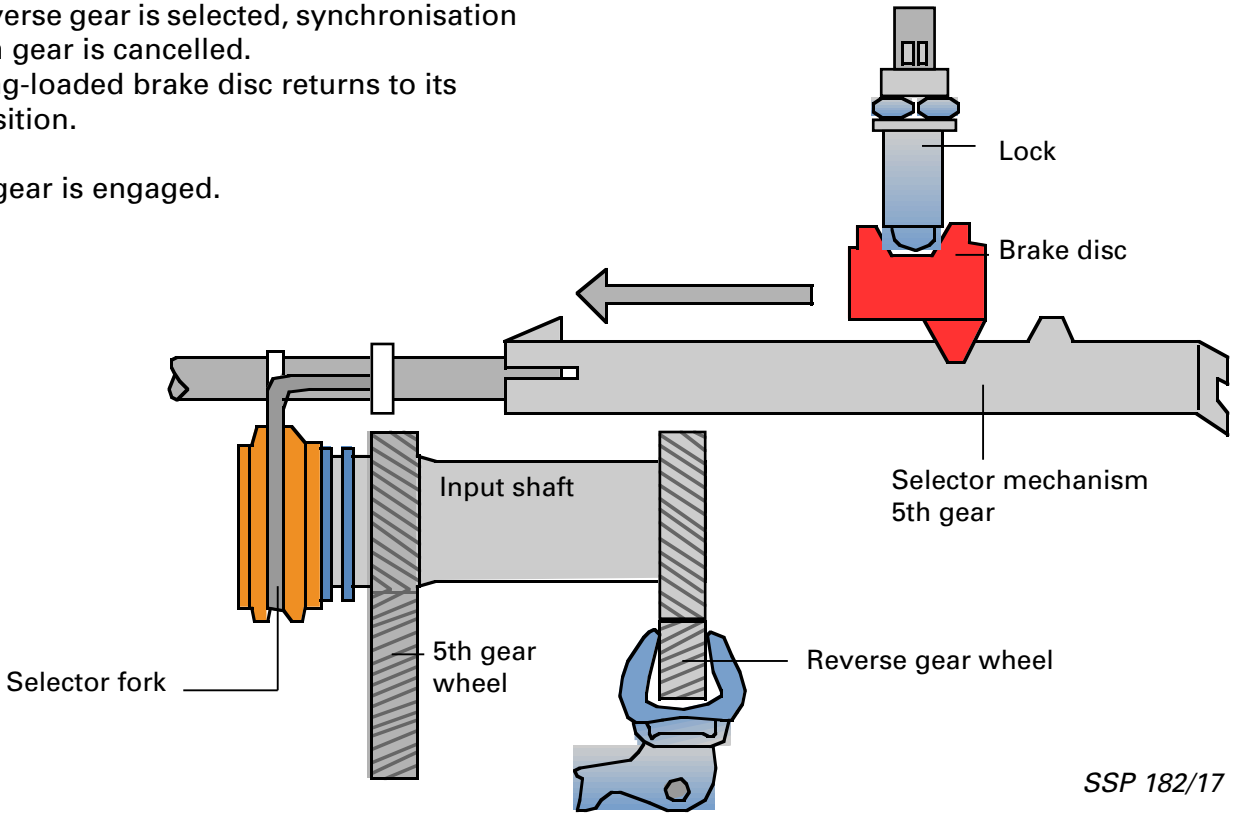

SSP 182/17

The reversing light switch and the selector shaft lock are combined in a single component.

SSP 182/100

Running Gear

Well-clamped and . . .

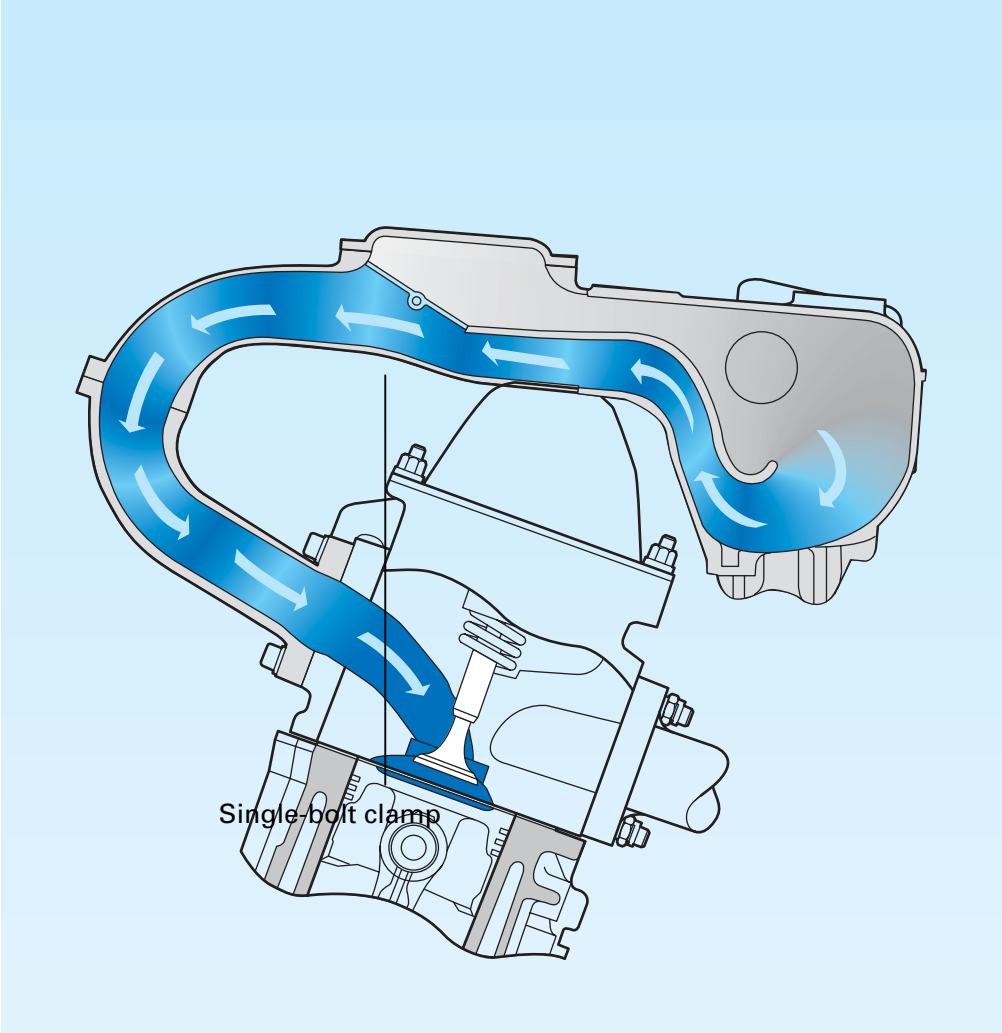

SSP 182/41

suspension is the 15“ running gear with suspension strut and wishbone.

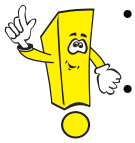

- Cast wheel bearing housing with “single-bolt clamp“
- 40 mm caster

Single-bolt clamp

The cast wheel bearing housing is equipped with
a “single-bolt clamp“ for the suspension strut. This simplifies renewal of the suspension strut.

There is no need for all-round lubrication of the wheel bearing outer race because the cast wheel bearing housing is self-lubricating.

Cast iron has a high graphite content which gives it self-lubricating properties.

- **Special tool:**
  Spreader -3424-

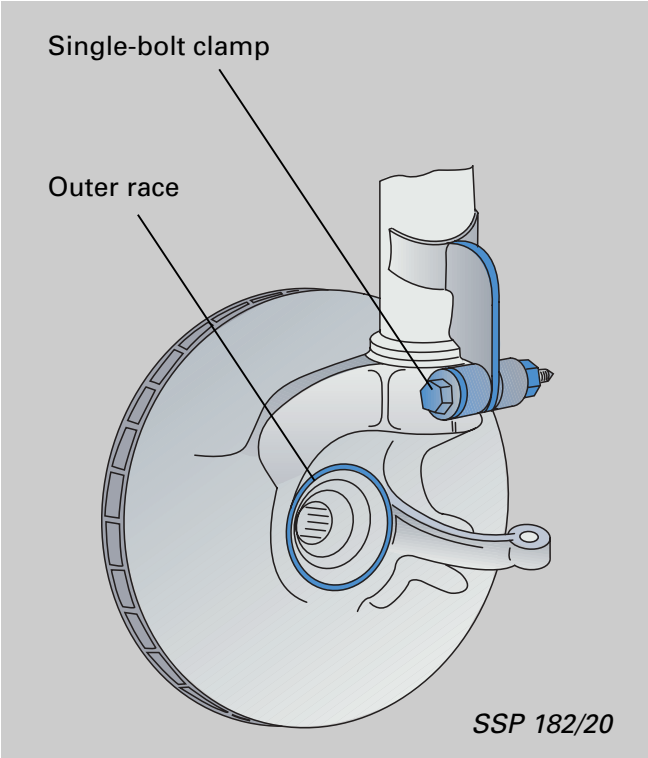

40 mm caster

The large caster of 40 mm ensures good directional stability.

Because the large caster makes steering more difficult, the Audi A3 has power steering as standard.

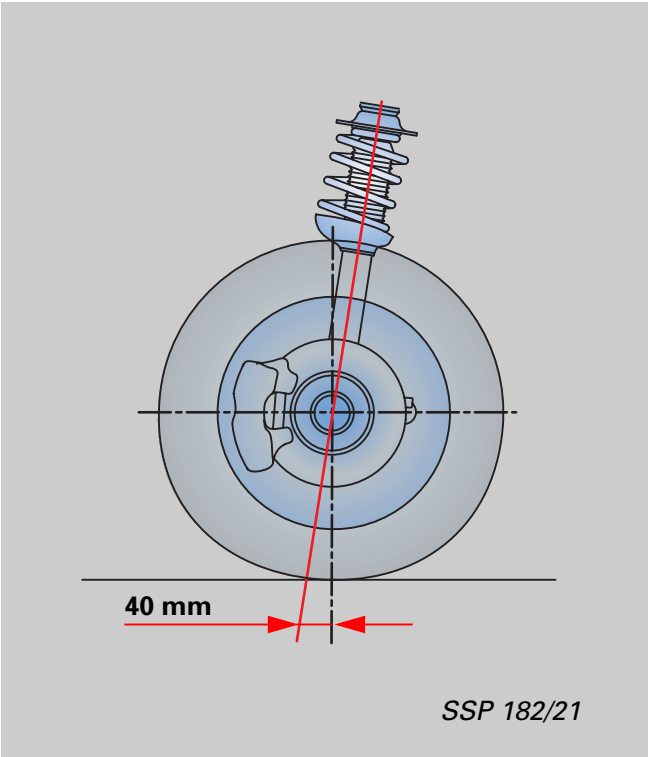

Running Gear

. . . no adjustment

SSP 182/42

The rear axle is a torsion beam axle. The dampers and springs are arranged separately, resulting in a large through-loading width of 1005 mm.
There is less driving noise in the interior because the dampers are secured by bolts in the wheel housing.

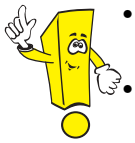

- Rear axle mounting inclined at an angle of 25°
- Wheel bearing: double ball bearing

Rear axle mounting inclined at an angle of 25°

When cornering, the lateral forces acting on the suspension alter the track and cause a self-steering effect of the rear suspension.
This is compensated by attaching the rear axle mountings at an angle and including a rubber mounting.

This optimises cornering stability.

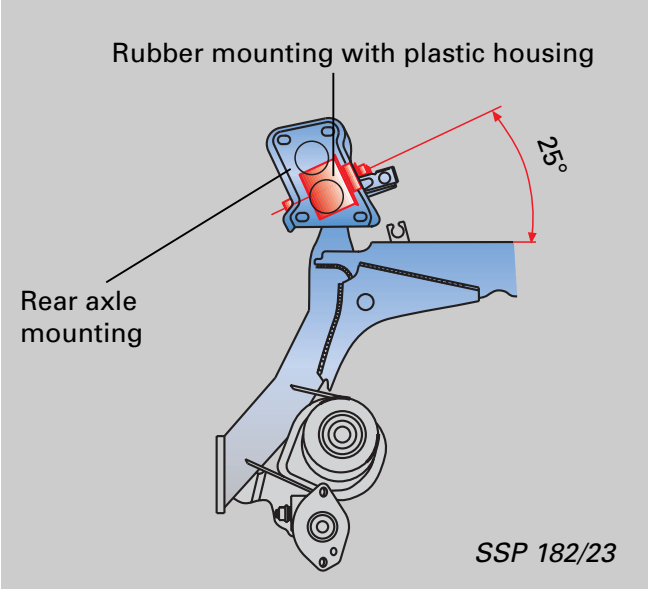

SSP 182/23

The rear axle mountings each consist of a rubber mounting in a plastic housing.

If the axle is displaced by lateral force, it is supported by inclined bearing pedestal by means of a rubber collar.

The rubber mountings correct the track. They must be press-fitted in the correct position.

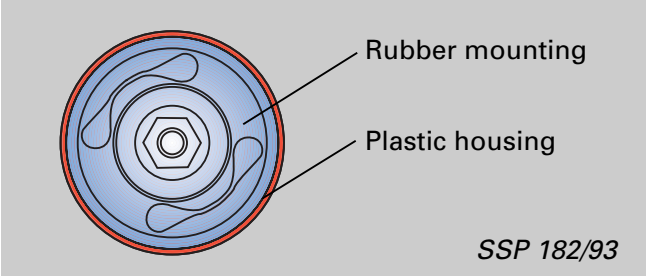

SSP 182/93

- **Special tool:** A 42-0110

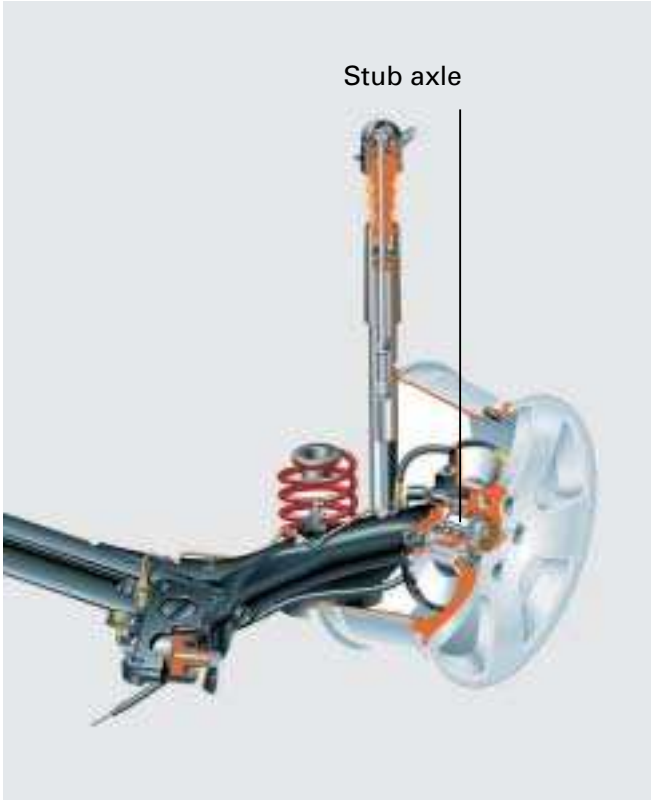

SSP 182/129

Wheel bearing: double ball bearing

The new wheel bearing is a double-row grooved ball bearing (double ball bearing). It consists of the bearing inner races, the balls and the wheel hub, which is also the outer ball bearing surface.

The wheel hub is press-fitted onto the stub axle
and tightened by means of a double hexagon nut and thrust washer.

It is not necessary to adjust the bearing play. Radial play exists in the bearing. The axial play depends on the tightening torque.

When working on the brake, the brake disc can be removed separately whilst the wheel hub remains fitted on the stub axle.

When the wheel hub is removed, the wheel bearing is damaged irreparably and must not be re-fitted.

- **Special tool:** 3420
  Thrust piece 3416/1
  Thrust piece 3416/2
  Tube 3416/3

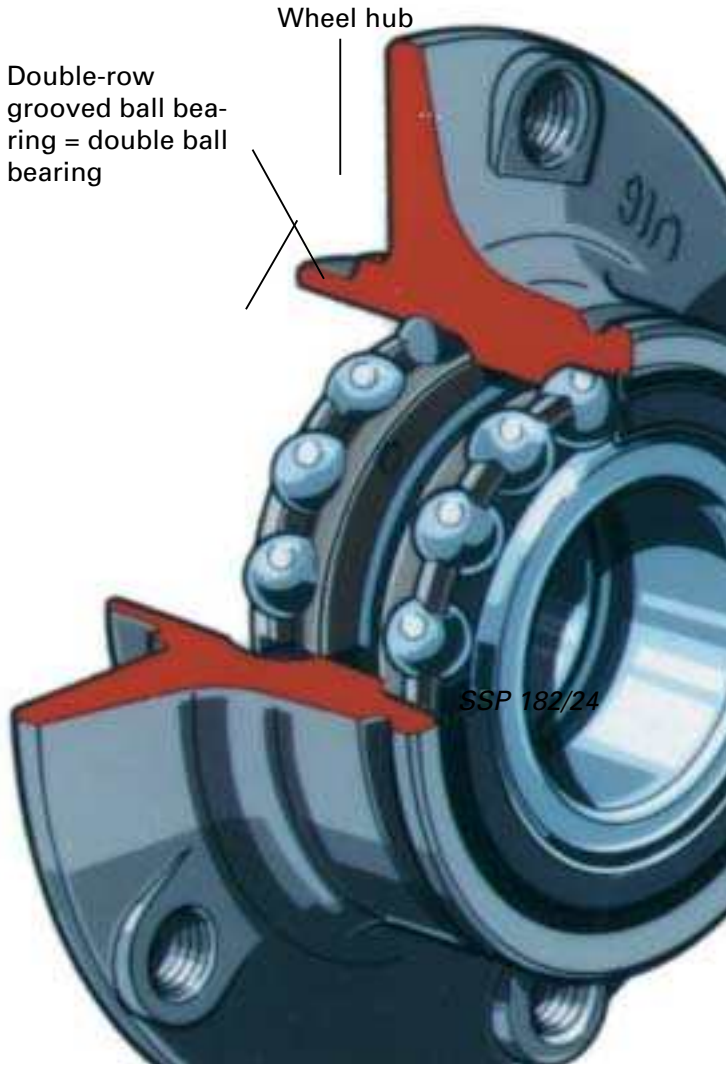

SSP 182/24

Steering

Locking teeth and . . .

When the clamp is released, a small gap arises between the steering bearing pedestal and the steering tube support.

This gap allows **rake and reach adjustment**.

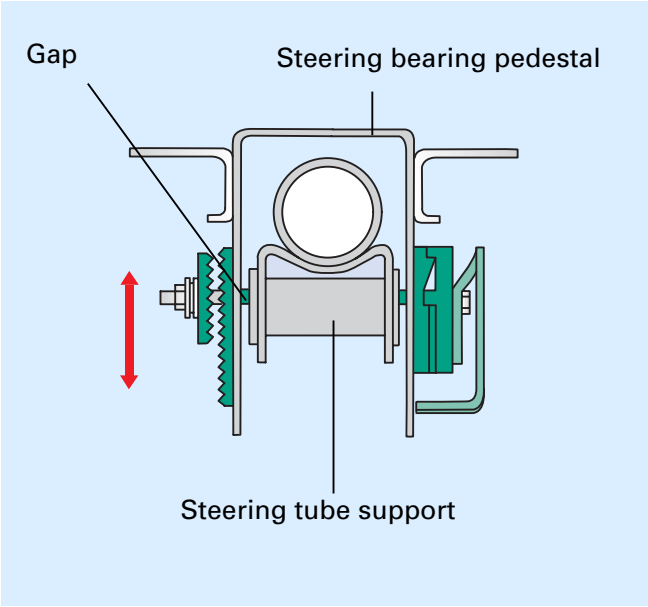

SSP 182/53

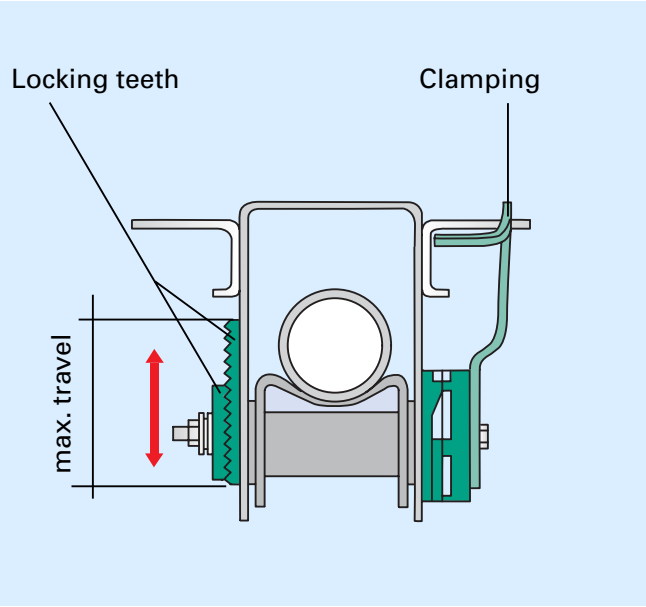

SSP 182/54

44 mm rake adjustment

The steering wheel can be adjusted in height by 44 mm via the locking teeth.
The selected height is fixed or released using the clamping lever.

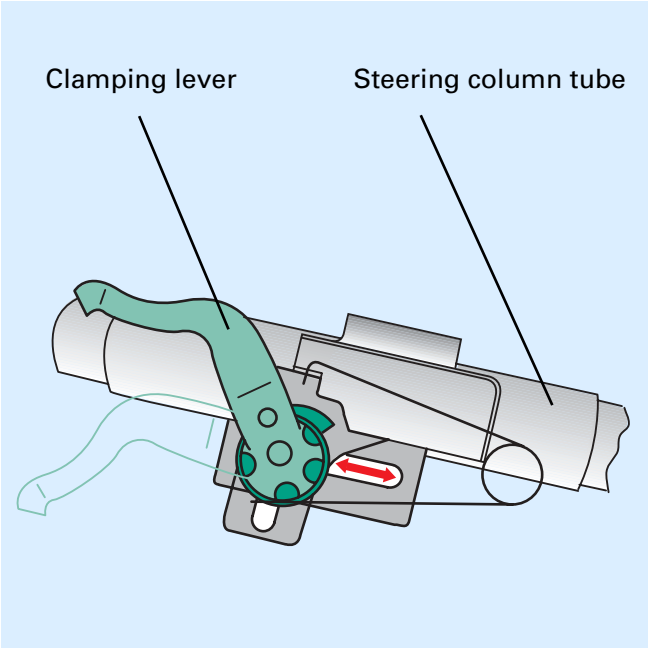

SSP 182/55

45 mm reach adjustment

The identical gap allows the steering column tube to be adjusted for reach.
The selected reach is fixed or released using the clamping lever.

Steering gear lock

Dynamic forces and lateral forces act on the steering.

The power steering gear is locked to the subframe, preventing it from slipping even if large steering forces are applied.

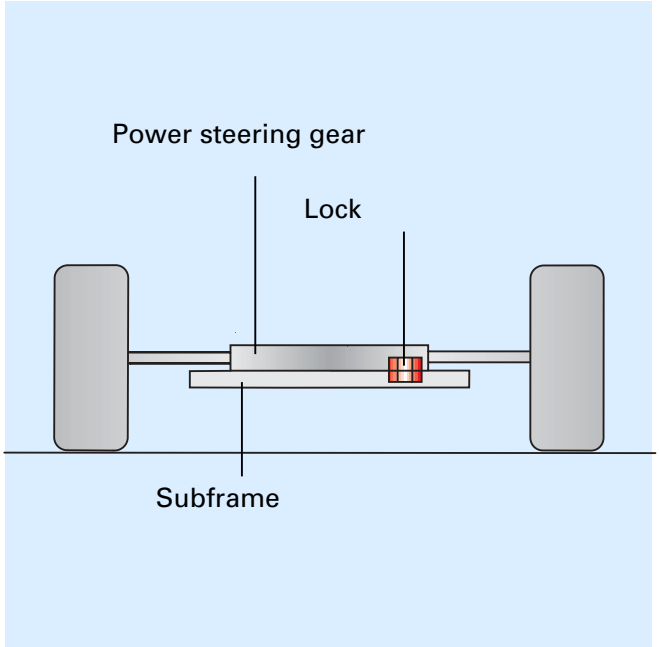

SSP 182/56

. . . crash-tested

The new crash concept prevents any further intrusion of the steering column and steering wheel into the occupant cell in the event of a collision.

In the following pictures, we will show you the measures taken to achieve this.

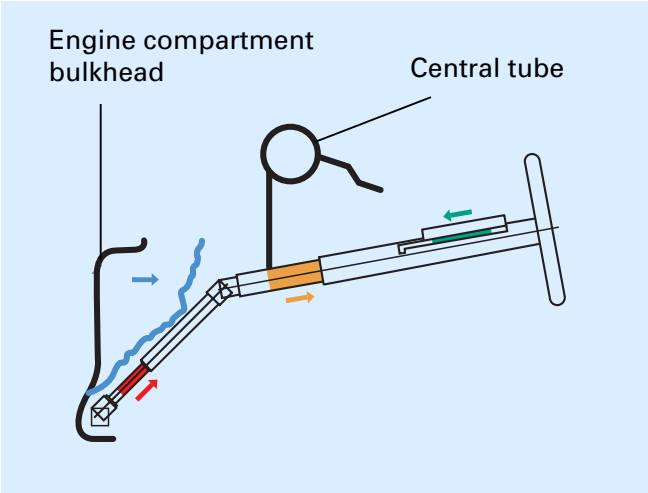

SSP 182/57

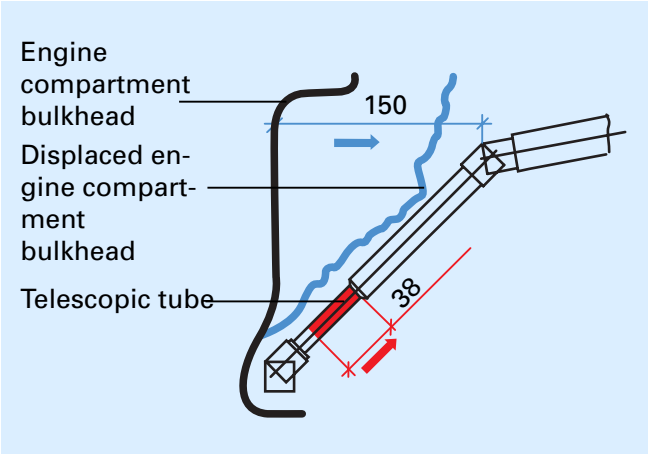

SSP 182/72

Force exerted from the front

The engine compartment bulkhead can be displaced by 150 mm towards the lower end of the steering column without causing damage to the steering column.

Force exerted from below

A telescopic tube enables the lower end of the steering tube to be compressed by 38 mm.

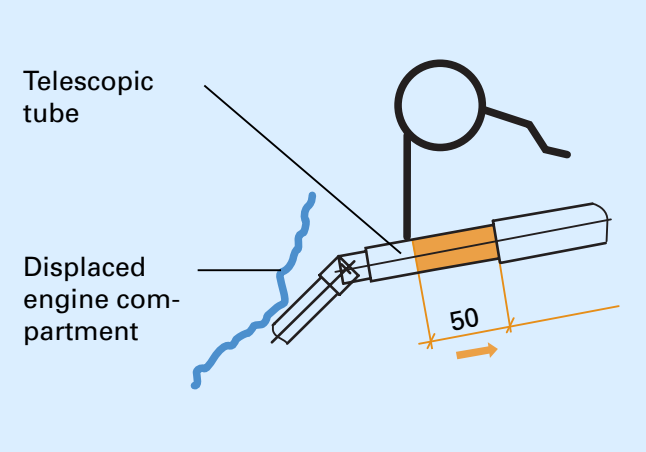

SSP 182/73

Force exerted from the front

Another telescopic tube integrated in the upper section of the steering column enables the steering column to be displaced by 50 mm.

. . . and crash-tested

Force exerted from the front

When the driver's body impacts with the inflated airbag, the steering column is displaced by a further 50 mm over the steering mounting pedestal.

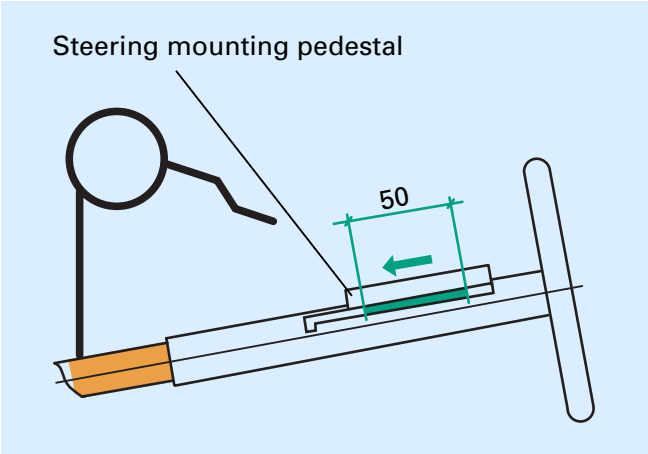

SSP 182/94

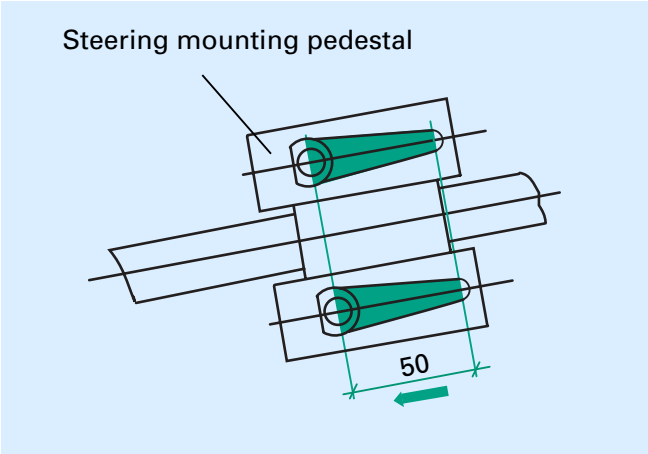

SSP 182/74

The airbag cushions the the driver and tapered oblong holes in the steering mounting pedestal convert the resulting force into distance.

The diagram shows a view of the steering mounting pedestal from above.

All sizes are given in millimetres.

Braking system

Power under pressure

The brake discs at the front are ventilated.

The cars are equipped with
a guide bolted onto the wheel bearing housing or **a guide cast onto the wheel bearing housing**
for the brake pads

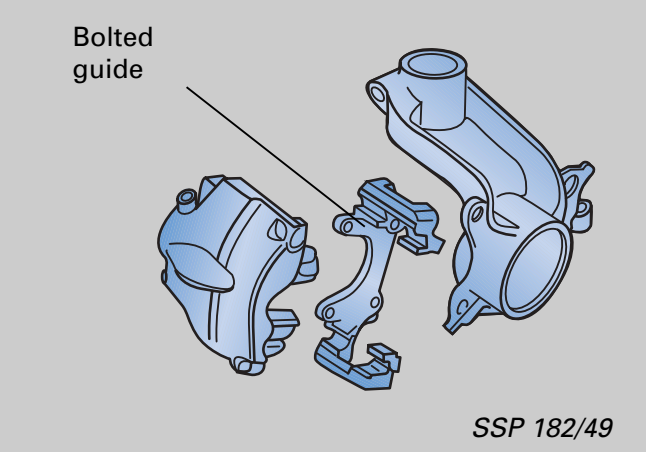

SSP 182/49

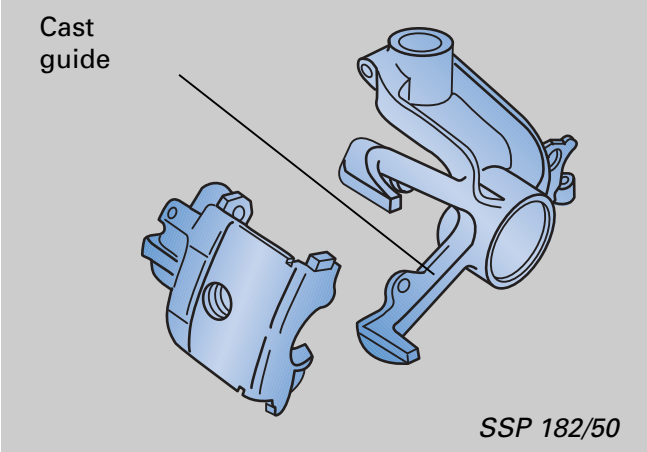

SSP 182/50

Brake disc, rear

The standard rear disc brake features an aluminium floating caliper.

Advantage: - low weight
- good thermal conductivity

SSP 182/51

Dacrometised bolts

All exterior bolts are dacrometised.
This coating, which contains zinc-aluminium powder, protects the bolts against corrosion.
You can find further information in SSP 160.

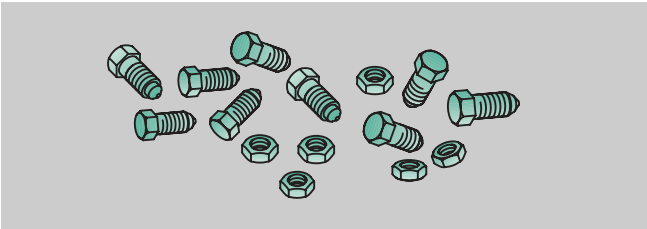

SSP 182/52

Questions about questions

1. Please complete.

The cast wheel bearing housing is provided with a .....

..... for the.....

..... .

2. The outer race of the wheel bearing must be greased.

☐ Yes ☐ No

3. Please complete.

Each of the rear axle mountings comprises

a..... with ..... .

3a. What are the advantages of this?

- -

- -

3b. Please complete.

The rear axle mounting must be press-fitted into.....
.

4. State the advantages of the new double ball bearing.

- -

- -

5. What purpose does the steering gear lock?

- -

- -

Dash panel insert

The command centre

The immobiliser control unit is integrated into the printed circuit board of the dash panel insert. The immobiliser self-diagnosis can be activated using the address word **“17 Dash panel insert“**.

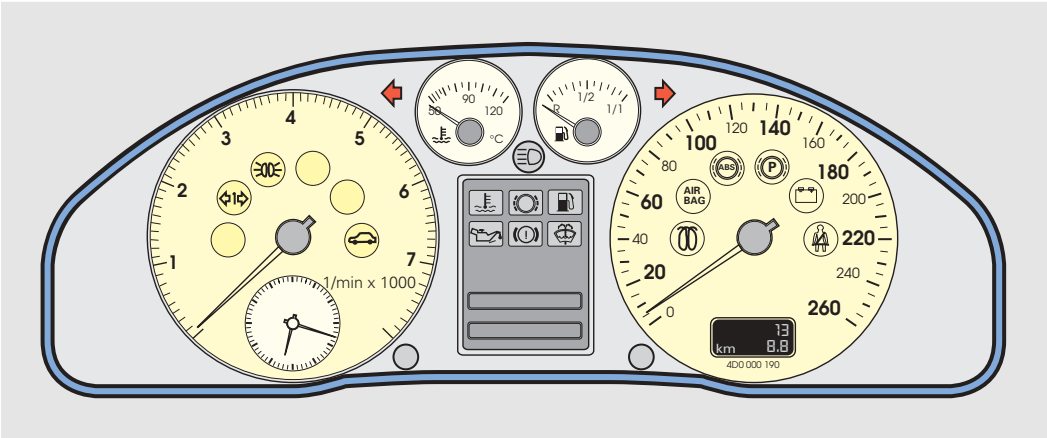

SSP 182/101

Self-diagnosis

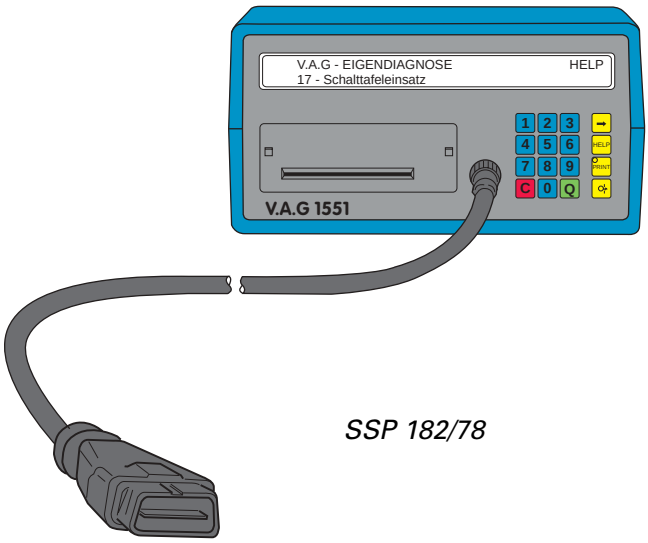

SSP 182/78

The following functions can be checked in the data transmission mode using the address word
“17 Dash panel insert“:

01 - Interrogate control unit version
02 - Interrogate fault memory
03 - Final control diagnosis
04 - Initiate basic setting
05 - Erase fault memory
06 - End of output
07 - Encode control unit
08 - Read measured value block
10 - Adaptation
11 - Log-in procedure

Notes

Answers

Pages 14 and 15

1.

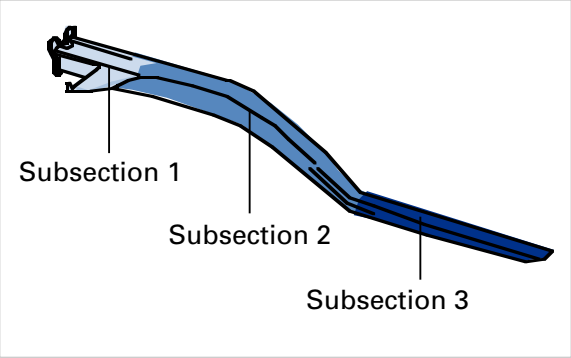

SSP 182/8

2. by the side members

3. ... high-strength extruded aluminium sections.

large amounts of energy...

4.

... pelvis and rib areas of the body...

5. [A] [C]

6.

SSP 182/107

One of the films consists of an electrically conductive polymer.

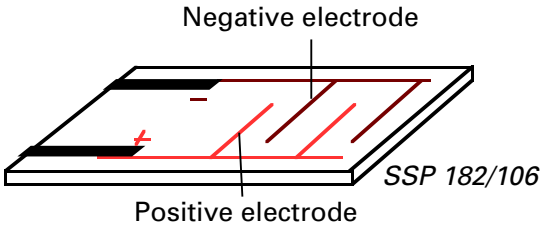

SSP 182/106

The other film contains an interrupted electric circuit with several positive and negative electrodes.

7. ... pressure is exerted on the electrically conductive film.
The resistance is low.

Page 50

1. [ ] [B] [C]

2a. The twin-path intake manifold enables the intake path length to be adapted to meet engine demands.

2b. By the position of the change-over flap. It can create long and short intake paths.

3.

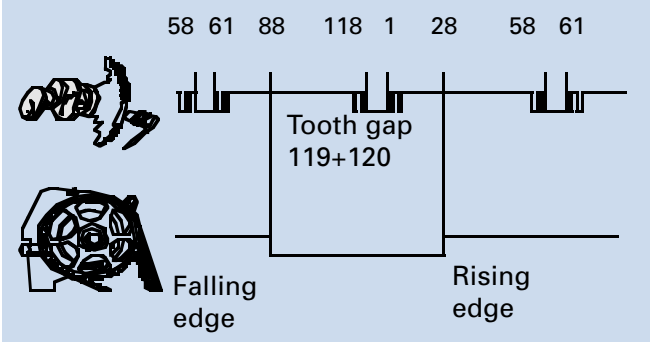

4. [A] [D]

Page 51

5a.

A Fuel flows through therestrictor drilling.

B the restrictor drilling becomes ineffective.

5.b The task of the non-return valve is to prevent excess fuel injection at the injector and cavitation in the injector pipe.

7.b Expanding the cavity

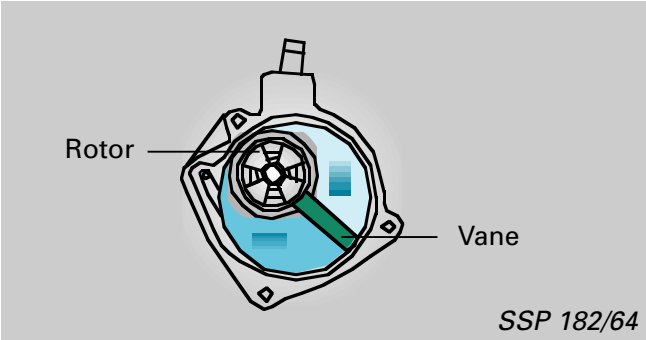

7.b Diminishing the cavity

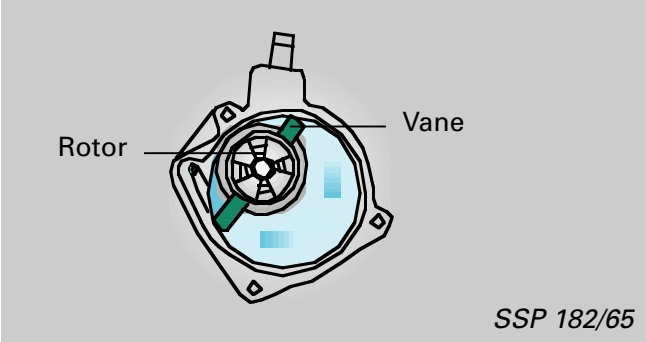

Page 63

1. ... Single-bolt clamp for the suspension strut ...

2. No

3. ... Rubber mounting with plastic housing

3.a Good self-steering response and silent running

3.b ... for a specific direction...

4. self-aligning; long service life

5. It prevents the steering gear from slipping when full steering lock is applied.

Notes

With the Audi A3,
Audi has achieved an ideal blend of safety, engineering, comfort and sportiness.

A car which meets discerning standards.

SSP 182/110