Automatic Transaxle (A5HF1)

GENERAL

AUTOMATIC TRANSAXLE SYSTEM
AUTOMATIC TRANSAXLE

AUTOMATIC TRANSAXLE CONTROL SYSTEM
SOLENOID VALVE
VFS(VARIABLE FORCE SOLENOID) VALVE
INPUT SPEED SENSOR
OUTPUT SPEED SENSOR
TRANSAXLE OIL TEMPERATURE SENSOR
TRANSAXLE RANGE (TR) SWITCH

GENERAL

SPECIFICATIONS EA49B794

Engine type		DIESEL(D2.2)
Transaxle type		A5HF1
Gear ratio	1ST	4.497
	2ND	2.442
	3RD	1.686
	4TH	1.233
	5TH	0.868
	REV.	4.586
Final gear ratio		3.333
T/M oil capacity(ℓ)※		10.9

※ The quantity in the chart above is for the reference. The actual filling quantity of the automatic transaxle fluid must be set according to 'INSPECTION' or 'REPLACEMENT' procesure of the automatic transaxle fluid.

Recommended transaxle oil			Diamond ATF SP Ⅲ or SK ATF SP Ⅲ
Check & Replenishment			Every one year or every 20,000km Every one year or every 15,000km only for European contries
Replacement	Private use	Normal use	No service required Every 100,000km only for Australia Every 90,000km only for European contries
		Severe use(*)	Every 40,000km Every 45,000km only for European contries
	Business use		

* Severe use(marked ' * ') is defined as:

1. Driving on rough road(bumpy road, gravel road, snowy road, unpaved road etc.).
2. Driving on mountain road, ascent/descent.
3. Repetition of short distance driving.
4. More than 50% operation in heavy city traffic during hot weather above 32°C(89.6°F).
5. Police car, Taxi, Commercial type operation or trailer towing, etc.

TIGHTENING TORQUE

ITEM		Nm	kgf·m	lb-ft
Control cable nut		8 ~ 12	0.8 ~ 1.2	5.8 ~ 8.6
Input shaft speed sensor		10 ~ 12	1.0 ~1.2	7 ~ 8
Output shaft speed sensor		10 ~ 12	1.0 ~1.2	7 ~ 8
Manual control lever		18 ~ 25	1.8 ~ 2.5	13 ~ 18
Transaxle range switch		10 ~ 12	1.0 ~1.2	7 ~ 8
Valve body cover		13 ~ 15	1.3 ~1.5	9.4 ~ 10.8
Valve body mounting bolt		10 ~ 12	1.0 ~1.2	7 ~ 8
Oil temperature sensor		10 ~ 12	1.0 ~1.2	7 ~ 8
Oil filler plug		29 ~ 34	2.9 ~ 3.4	21.4 ~ 25.1
Oil drain plug		40 ~ 50	4.0 ~ 5.0	29 ~ 36
Solenoid valve support		5 ~ 7	0.5 ~ 0.7	4 ~ 5
Pressure check plug		8 ~ 10	0.8 ~ 1.0	6 ~ 7
Transaxle mounting sub bracket nut		60 ~ 80	6.0 ~ 8.0	43 ~ 58
Transaxle mounting bracket bolts		40 ~ 55	4.0 ~ 5.5	29 ~ 40
Transaxle mounting insulator bolt		90 ~ 110	9.0 ~ 11	65 ~ 80
Transaxle and engine mounting bolt	Engine side(4ea)	65 ~ 85	6.5 ~ 8.5	47 ~ 61.5
	Transaxle side(3ea)	43 ~ 55	4.3 ~ 5.5	31.1 ~ 39.7
Drive plate bolt		46 ~ 53	4.6 ~ 5.3	33.3 ~ 38.3

LUBRICANT EFD4BAE2

Item	Specified lubricant	Quantity
Transmission oil	Diamond ATF SP-III	7.8ℓ (8.2 Us qt, 6.9Imp.qt)

SEALANT

Item	Specified Sealant
Rear cover Torque converter housing Valve body cover	Three Bond - TB 1281B or LOCTITE - FMD - 546
Transmission case side cover	Three Bond - TB 1389 or LOCTITE - 518
Side cover	Three Bond - TB 1389 or LOCTITE - 518/587

SPECIAL TOOLS EE7DCEB2

Tool (Number and name)	Illustration	Use
09200-38001 Engine support fixture	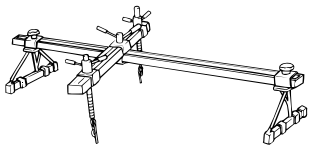 KKBF030A	- Removal and installation of transaxle

REFERENCE SERVICE TOOLS

Tool (Number and Name)	Remark
TRK00A Wiring Repair Kit	For more information of the wiring repair kit, please refer to BE group - "REFERENCE SERVICE TOOLS"

AUTOMATIC TRANSAXLE SYSTEM

DESCRIPTION E717EDDE

1. Structure & Technical highlights

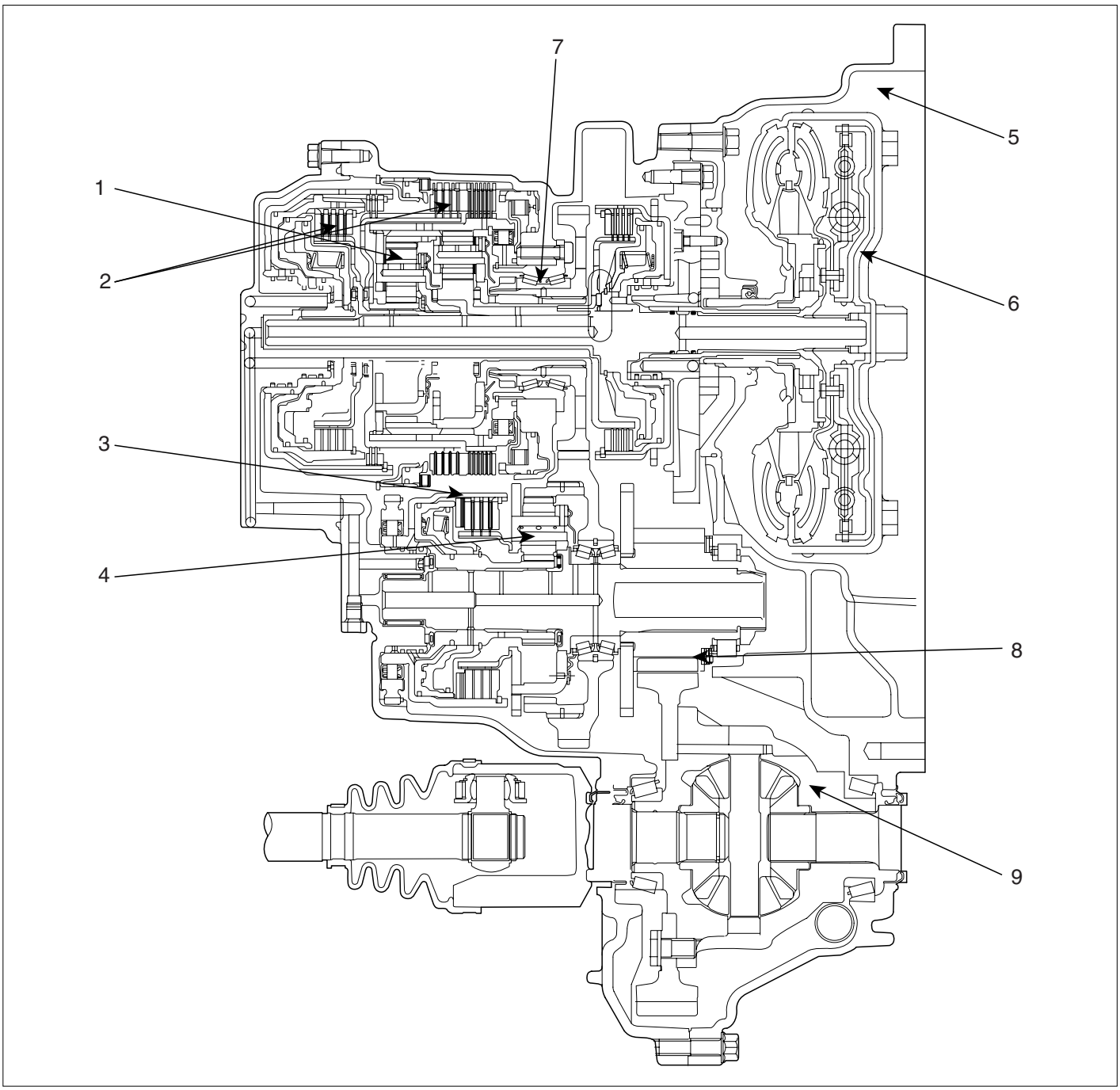

1. Overdrive planetary gear (3→4 pinions)
2. SSP(Single sided plate)
   -Overdrive clutch
   -2ND brake
3. Reduction band (Piston increased)
4. Direct planetary gear (3→4 pinions)
5. Case/ Housing intensity reinforced & redesigned
6. High capacity torque converter
7. Bearing outer diameter increased (Φ5 mm)
8. Differential gear (Increased width by 2mm)
9. Differential capacity increased (6.1→7)

EKBF002A

2. Variable Line Pressure Control
   - Description
     - Form the most suitable line pressure according to the vehicle driving condition
   - Special Features
     - VFS (Variable Force Solenoid) valve (For varying line pressure)
     - Reducing valve added(Stabilize control pressure in shiftings)
   - Effects
     - Improved power transmission efficiency and fuel consumption

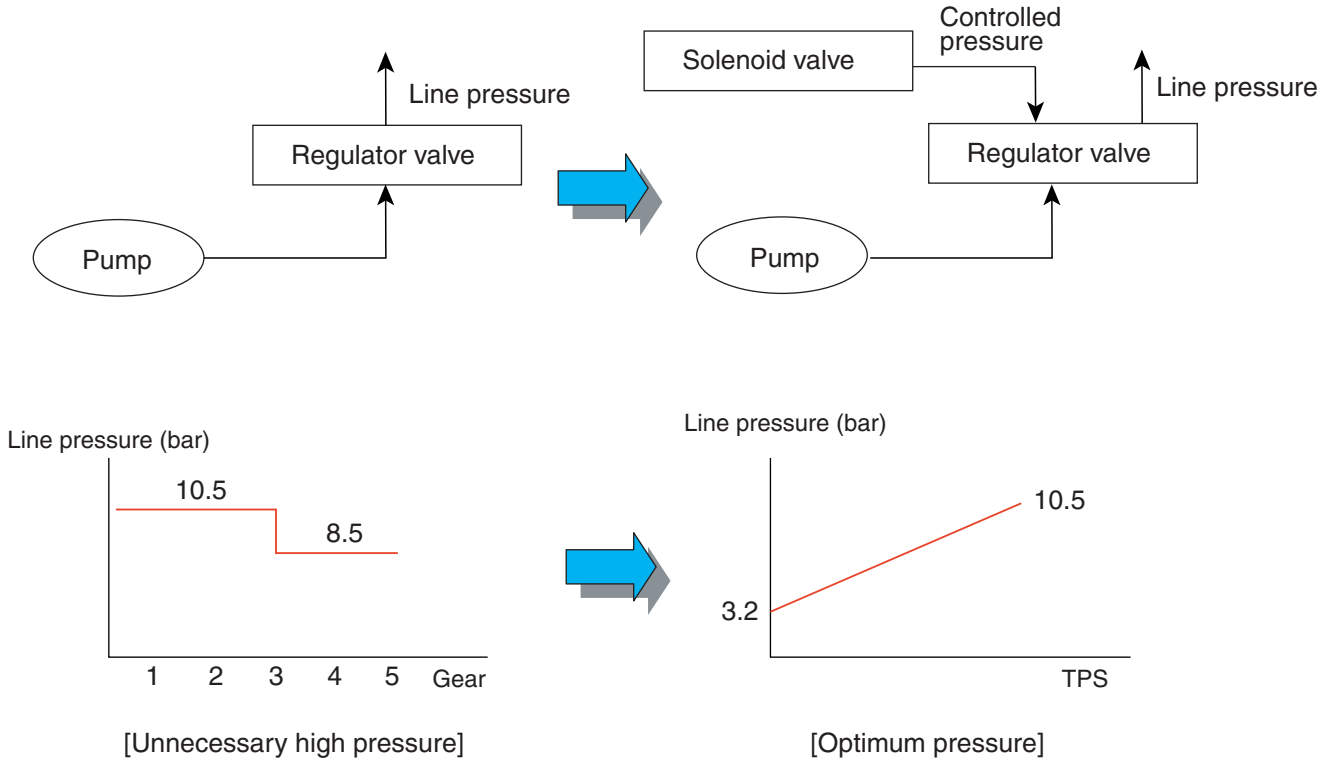

[Unnecessary high pressure] [Optimum pressure]

EKBF002B

3. Gear durability improvement and less-noisy gear development
   - Description
     - Optimal gear transmission ratio design from analyzing gears
   - Special Features
     - Apply High-strength gear material
     - Gear teeth width increased
     - Planetary gear (3 pinions → 4 pinions)
     - Less-noisy gear development
   - Effects
     - Durability improvement
     - Reduction of noise level

4. Case/Housing intensity reinforced
   - Description
     - Case/Housing intensity reinforced
   - Special Features
     - Converter housing intensity reinforced(Ribs added and thickness increased)
     - Most suitable stiff reinforcement through analyzing
   - Effects
     - Intensity increased and banding vibration decreased
     - NVH Performance improvement

5. New frictional material
   - Description
     - Apply new frictional material for capacity and durability improvement
   - Special Features
     - SSP (Single Sided Plate) applied only on overdrive clutch and 2nd brake
     - Apply the next generation frictional material(BWA 6100/D 0880-88)
   - Effects

- Thermal absorption capacity improvement
- Energy capacity and durability improvement

MECHANICAL SYSTEM EC240FFA

CLUTCHES AND BRAKES FOR EACH RANGE

		UD Clutch	OD Clutch	2ND Brake	LR Brake	REV Clutch	RED Brake	DIR Clutch	OWC 1	OWC 2
P		-	-	-	O	-	O	-	-	-
R		-	-	-	O	O	O	-	-	-
N		-	-	-	O	-	O	-	-	-
D	1st	O	-	-	O	-	O	-	●	●
	2nd	O	-	O	-	-	O	-	-	●
	3rd	O	O	-	-	-	O	-	-	●
	4th	-	O	O	-	-	O	-	-	●
	5th	-	O	O	-	-	-	O	-	-

(● : Locked when driving)

FUNCTIONS OF CLUTCHES AND BRAKES

Element	Sign	Function
Underdrive clutch	UD	Connect the input shaft with the underdrive sun gear
Reverse clutch	REV	Connect the input shaft with the reverse sun gear
Overdrive clutch	OD	Connect the input shaft with the overdrive carrier
Direct clutch	DIR	Connect the direct sun gear with the direct carrier
Low & Reverse brake	LR	Fix the planetary gear and the overdrive carrier
2nd brake	2ND	Fix the reverse sun gear
Reduction brake	RED	Fix the direct sun gear
One way clutch 1	OWC 1	Control the rotational driection of the low & reverse ring gear
One way clutch 2	OWC 2	Control the rotational driection of the direct sun gear

AUTOMATIC TRANSAXLE HYDRAULIC CIRCUIT

P/N

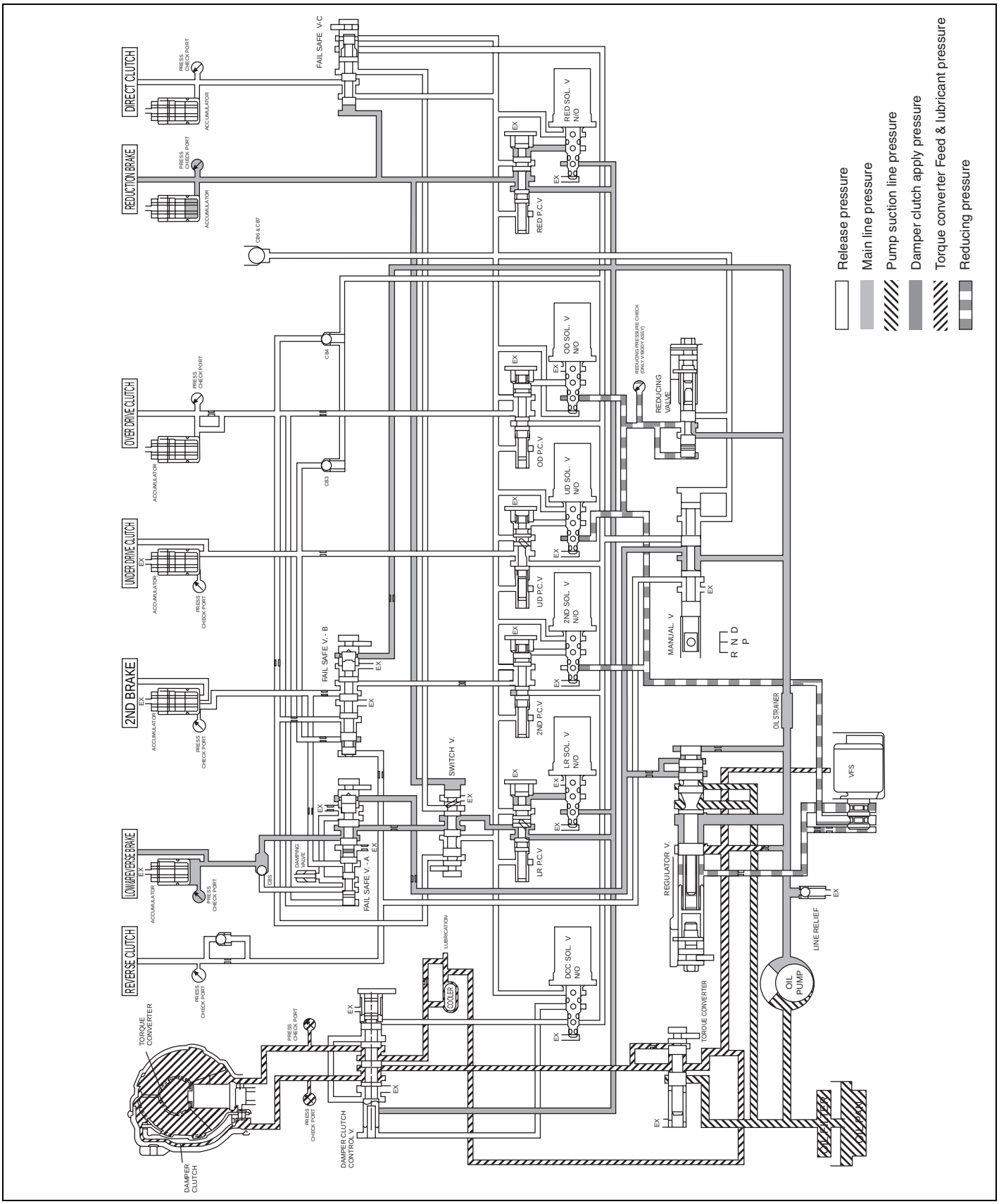

EKBF004A

D(1 RANGE)

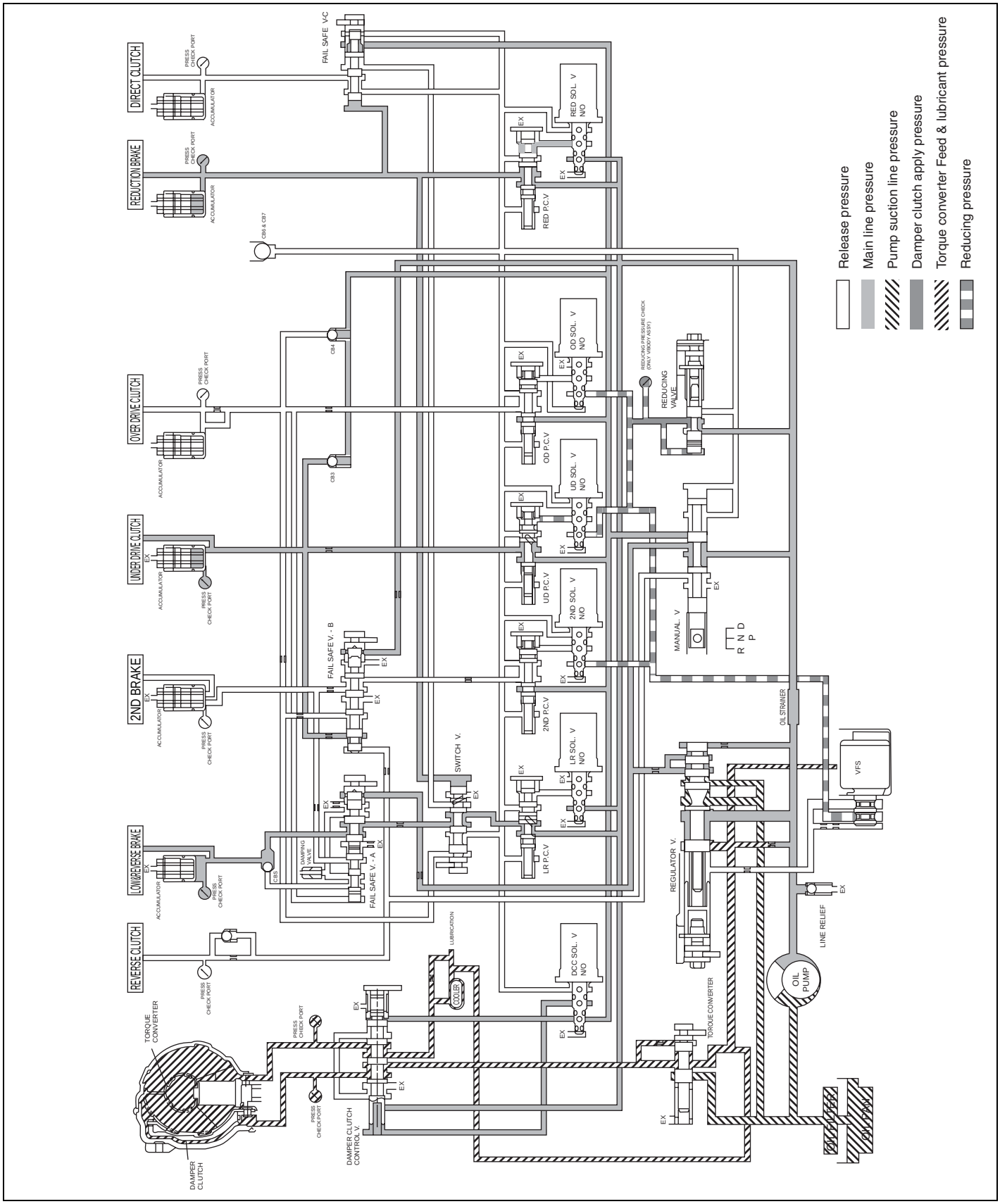

EKBF004B

D(2 RANGE)

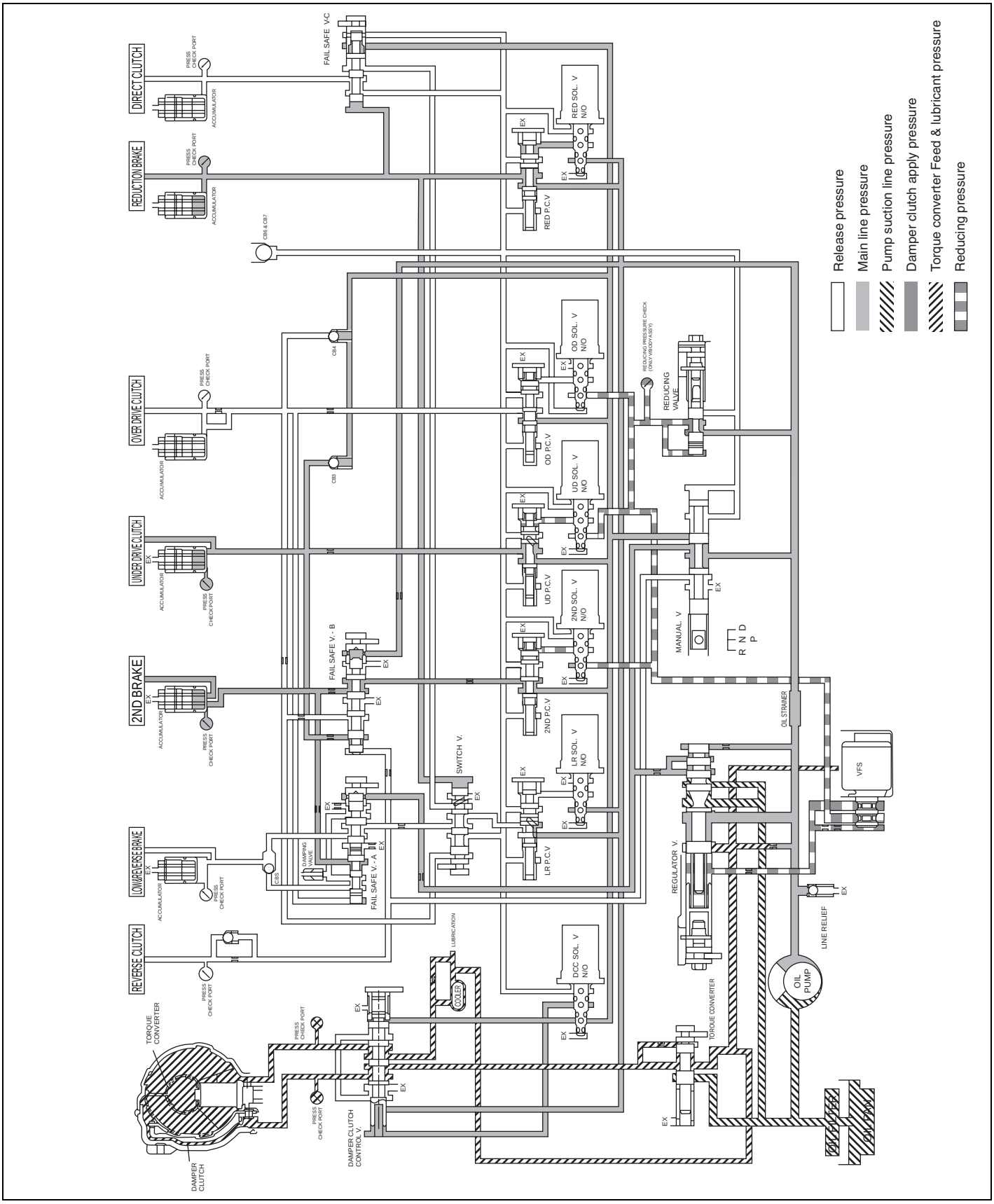

EKBF004C

D(3 RANGE)

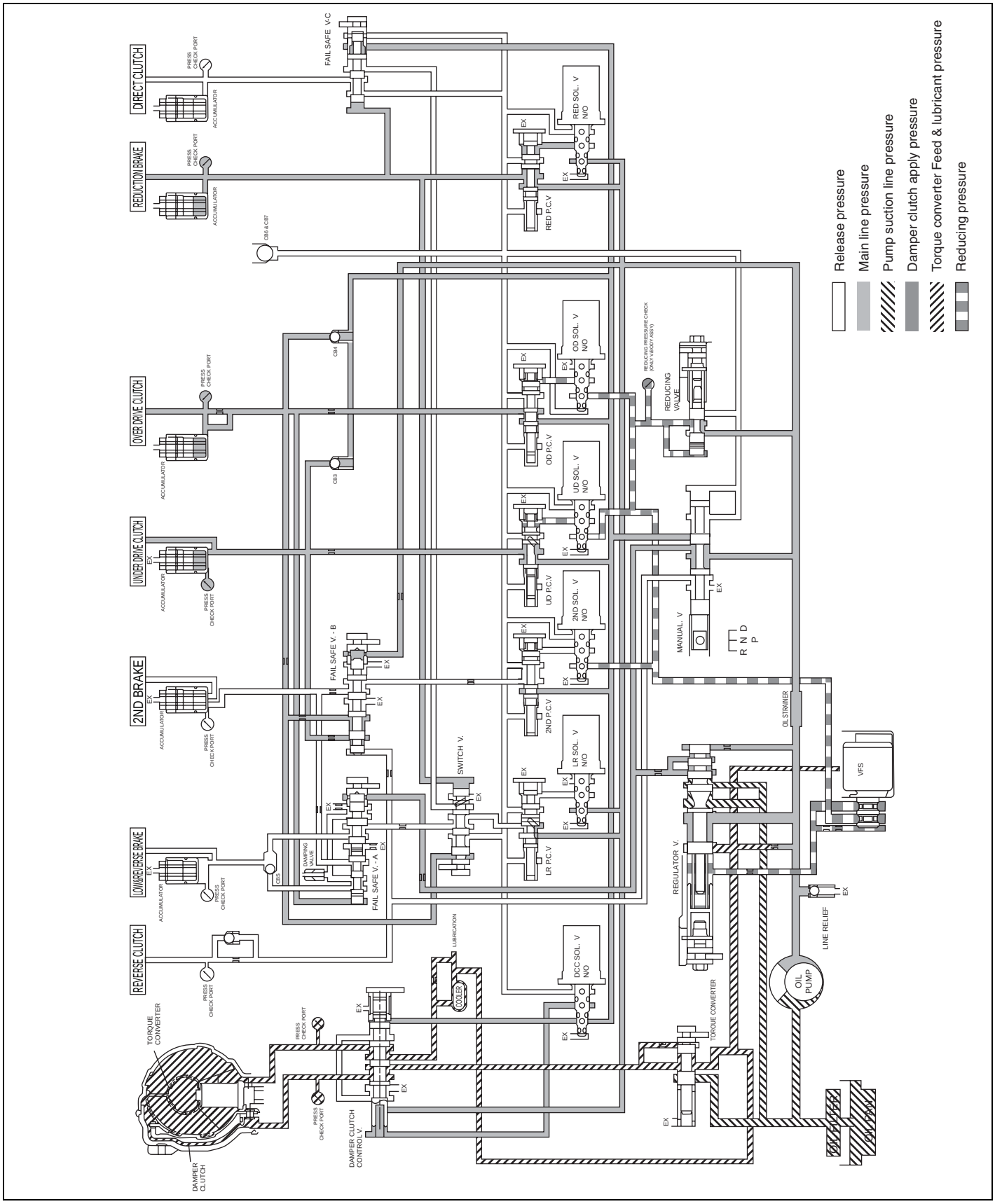

EKBF004D

D(4 RANGE)

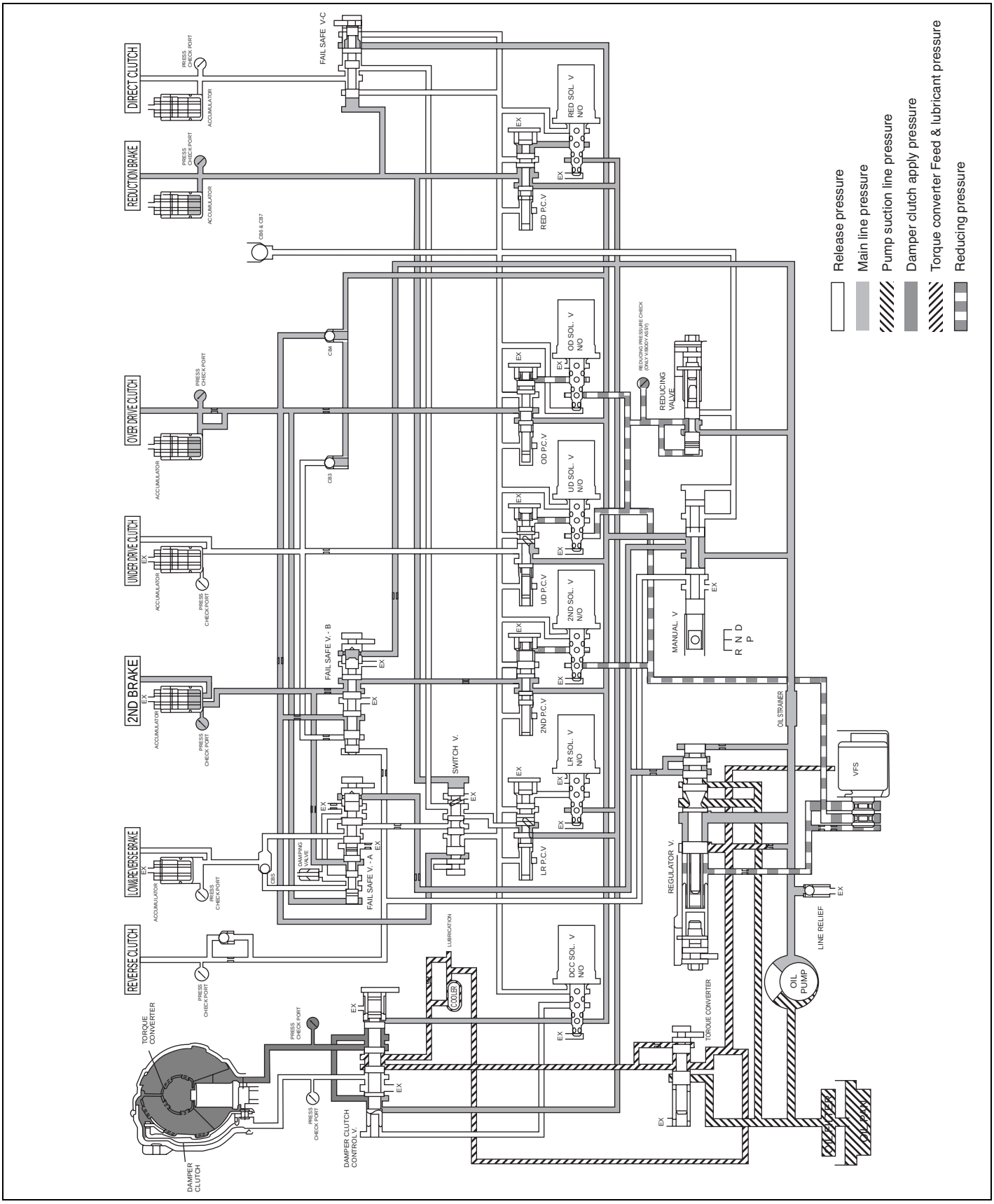

EKBF004E

D(5 RANGE)

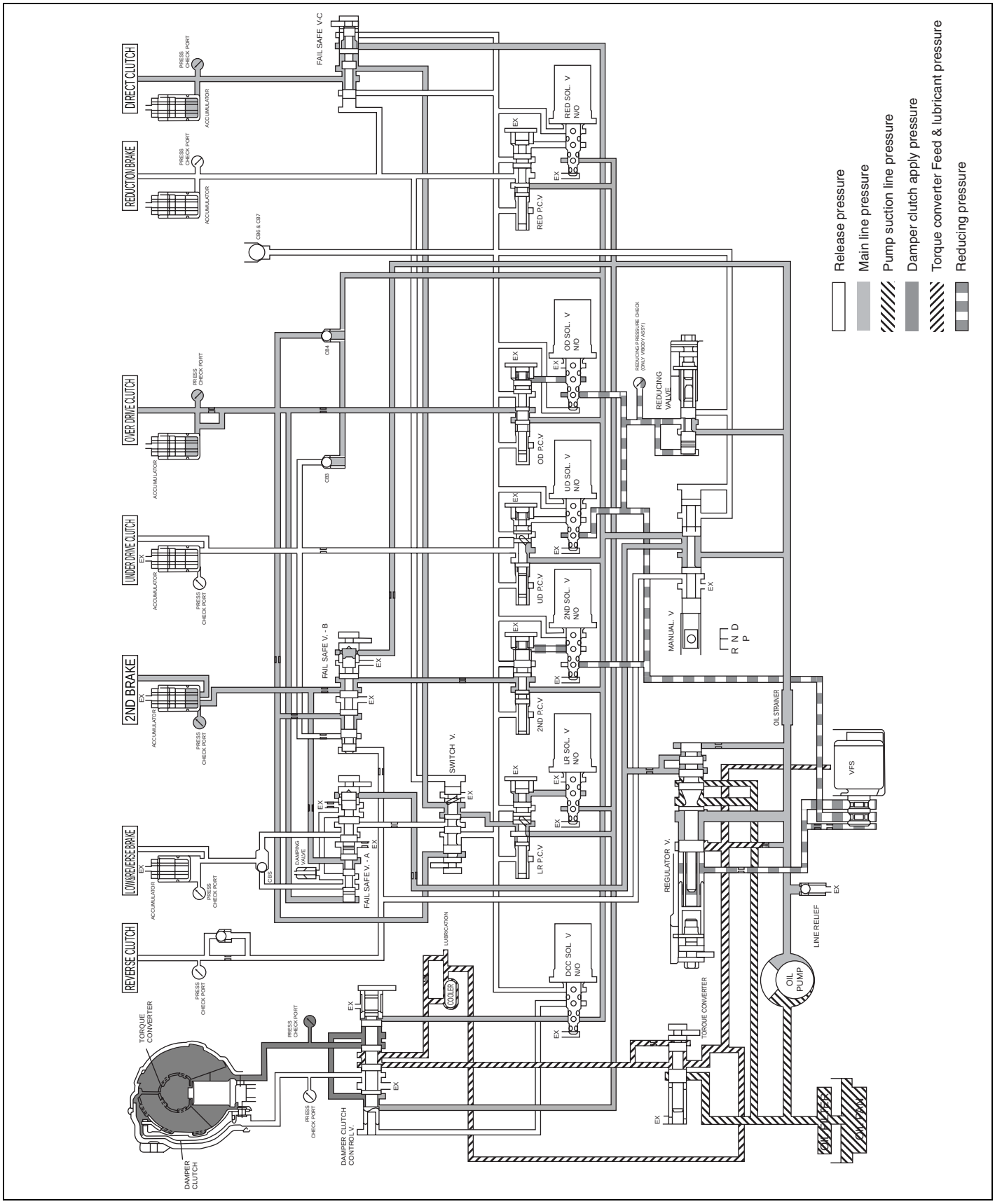

EKBF004F

R RANGE

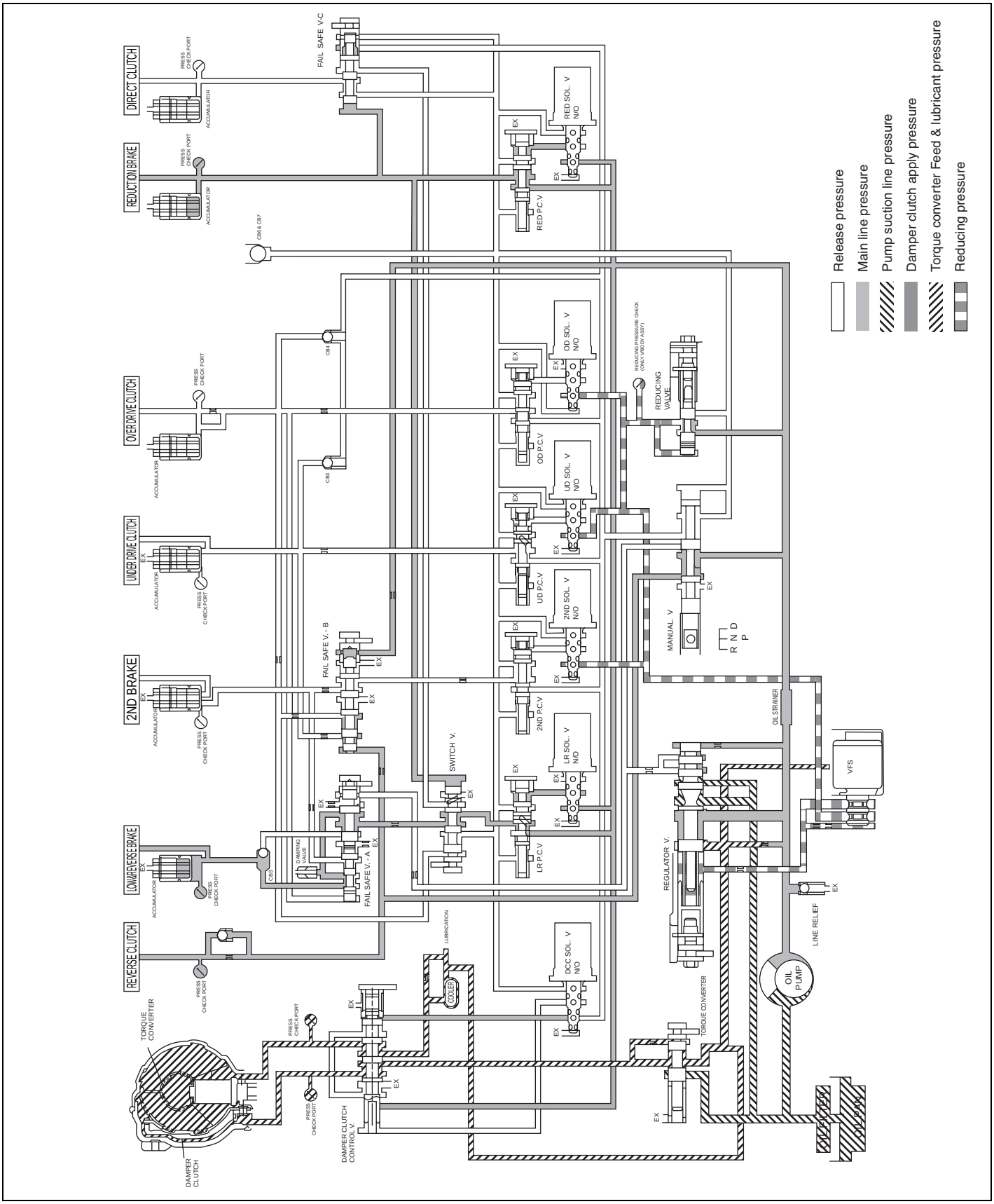

EKBF004G

INSPECTION CHART FOR DIAGNOSIS TROUBLE CODES (DTC) ECBB50AE

[2.2 DIESEL]

No	Code	Item	MIL	Remark
1	P0560	EEPROM BACK-UP LINE OPEN	OFF	ATA-21
2	P0605	EEPROM ERROR	OFF	ATA-23
3	P0703	BRAKE SWITCH SHORT	OFF	ATA-25
4	P0707	TRANSAXLE RANGE SWITCH CIRCUIT LOW INPUT	OFF	ATA-30
5	P0708	TRANSAXLE RANGE SWITCH CIRCUIT HIGH INPUT	OFF	ATA-37
7	P0712	TRANSAXLE FLUID TEMPERATURE SENSOR CIRCUIT LOW INPUT	OFF	ATA-40
8	P0713	TRANSAXLE FLUID TEMPERATURE SENSOR CIRCUIT HIGH INPUT	OFF	ATA-46
9	P0717	A/T INPUT SPEED SENSOR CIRCUIT - OPEN or SHORT(GND)	OFF	ATA-48
10	P0722	AT OUTPUT SPEED SENSOR CIRCUIT - OPEN or SHORT(GND)	OFF	ATA-55
11	P0731	GEAR 1 INCORRECT RATIO	OFF	ATA-61
12	P0732	GEAR 2 INCORRECT RATIO	OFF	ATA-67
13	P0733	GEAR 3 INCORRECT RATIO	OFF	ATA-72
14	P0734	GEAR 4 INCORRECT RATIO	OFF	ATA-77
15	P0735	GEAR 5 INCORRECT RATIO	OFF	ATA-81
17	P0741	TORQUE CONVERTER CLUTCH STUCK OFF	OFF	ATA-85
19	P0743	TORQUE CONVERTER CLUTCH CONTROL SOLENOID VALVE - OPEN or SHORT(GND)	OFF	ATA-89
21	P0748	VARIABLE FORCE SOLENOIDE VALVE - OPEN or SHORT(GND)	OFF	ATA-96
22	P0750	LOW and REVERSE SOLENOID VALVE CIRCUIT - OPEN or SHORT(GND)	OFF	ATA-103
23	P0755	UNDERDRIVE SOLENOID VALVE CIRCUIT - OPEN or SHORT(GND)	OFF	ATA-110
24	P0760	SECOND SOLENOID VALVE CIRCUIT - OPEN or SHORT(GND)	OFF	ATA-117
25	P0765	OVERDRIVE SOLENOID VALVE CIRCUIT - OPEN or SHORT(GND)	OFF	ATA-124
26	P0770	REDUCTION SOLENOID VALVE CIRCUIT - OPEN or SHORT(GND)	OFF	ATA-131
27	P0885	A/T CONTROL RELAY - SHORT(GND)	OFF	ATA-138
28	U0001	CAN BUS OFF	OFF	ATA-145
29	U0100	CAN TIME OUT FROM ECU	OFF	ATA-149

INPUT/OUTPUT SIGNAL VOLTAGE CHECK SHEET

[2.2 DIESEL]

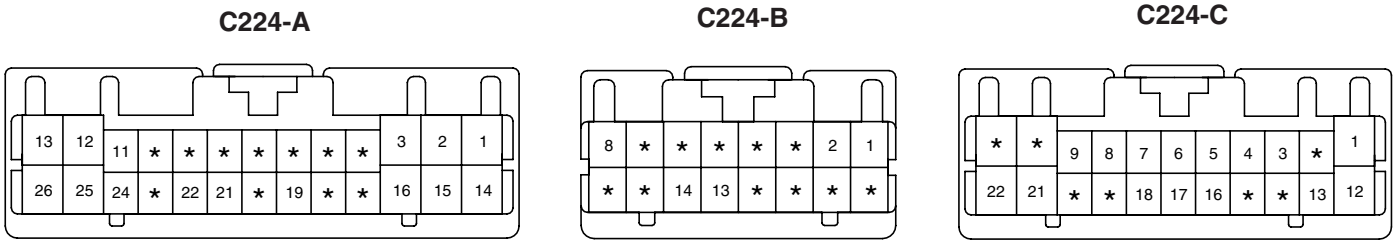

SCMAT6050D

PIN No.	Check item	Condition	Input/Output value		Measure-ment Value	Remarks
			Type	Level		
A01	UD Solenoid	Shifting	Pulse	HI : V_BAT LO : Max. 1.0V Vpeak : Max. 70V		-
A02 A03	A/T PWR Source	IG Off IG On IG. Key On IG. Key Off Idling Key Off from Idling Removing fuse 1/2/3 Refer to *1)	DC	Max. 0.5 V V_BAT Max. +/- 75V (ECU GND) Max. +/- 75V (ECU GND) Max. +/- 75V (ECU GND) Max. +/- 75V (ECU GND) Max. +/- 75V (ECU GND)	0.1 V 12.9 V N/A	-
A08	A/Cruise Signal	NORMAL ON CONTROL	DC	V_BAT 0 ~ 0.5 V		NO ACC
A11 A24	V_IG	IG Off IG On IG. Key On IG. Key Off Idling Key Off from Idling Removing fuse 1/2/3 Refer to *1)	DC	Max. 0.5 V V_BAT Max. +/- 75V (ECU GND) Max. +/- 75V (ECU GND) Max. +/- 75V (ECU GND) Max. +/- 75V (ECU GND) Max. +/- 75V (ECU GND)	0.1 V 12.7 V N/A	
A12	GND_PWR 1	Idling	DC	Max. 50mV		
A13	GND_PWR 2	Idling	DC	Max. 50mV		
A14	OD Solenoid	Shifting	Pulse	HI : V_BAT LO : Max. 1.0V Vpeak : Max. 70V		
A15	Damper clutch Solenoid	Lock_Up On	Pulse	HI : V_BAT LO : Max. 1.0V Vpeak : Max. 70V		
A16	2ND Solenoid	Shifting	Pulse	HI : V_BAT LO : Max. 1.0V Vpeak : Max. 70V		

PIN No.	Check item	Condition	Input/Output value		Measure-ment Value	Remarks
			Type	Level		
A19	Flash PWR Source	IG On IG Off	DC	4.0~5.0V Max. 0.5 V	4.7 V 0.1 V	
A21	Shift Position Signal (To Cluster)	Driving 1st 2nd 3rd 4th 5th	Pulse Duty ↑ ↑ ↑ ↑	HI : V_BAT LO : Max . 1.0V Freq.: 50 Hz±2% 12.5±2% 27.5±2% 42.5±2% 57.5±2% 72.5±2%	13.1 V 0.1 V 50 Hz 12.4 % 27.6 % 42.4 % 57.4 % 72.2 %	
A22	VFS Solenoid	Shifting	Pulse	HI : V_BAT LO : Max. 1.0V	13.6 V 0.3 V	
A25	GND_PWR 3	Idling	DC	Max. 50mV		
A26	GND_PWR 4	Idling	DC	Max. 50mV		
B01	Input speed sensor	Idling	Pulse	HI : Min. 4.0V LO : Max. 1.0V	5.18 V 0.5 V	
B02	Output speed sensor	30kph	Pulse	HI : Min. 4.0V LO : Max. 1.0V	5.18 V 0.5 V	
B08	V_BAT	Removing Key All	Cur-rent DC	Max. 2.0 mA V_BAT	1.03 mA 13.1 V	
B13	GND_Sensor	Idling	DC	Max. 50mV	0.76mV	
B14	Oil temp sensor_ATM	Idling	Analog	0.5V ~ 4.5V	2.68 V	59°C
C01	RED Solenoid	Shifting	Pulse	HI : V_BAT LO : Max. 1.0V Vpeak : Max. 70V		
C03	CAN_HI	HI LOW	Pulse	2.0 ~ 3.0 V 2.75～4.5 V	2.52 V 3.76 V	
C04	CAN_LO	HI LOW	Pulse	2.0 ~ 3.0 V 0.5～2.25 V	2.54 V 1.34 V	
C05	P range Selection	P Position Others	DC	V_BAT Max. 1.0V	12.6 V 0 V	
C06	N range Selection	N Position Others	DC	V_BAT Max. 1.0V	12.6 V 0 V	
C07	SPT Select Selection	Select Position Others	DC	V_BAT Max. 1.0V	12.4 V 0 V	
C08	SPT Down Selection	Down Position Others	DC	V_BAT Max. 1.0V	12.4 V 0 V	
C09	Brake SW(N.O)	Release Push	DC	Max. 0.5V V_BAT	12.2 V 0 V	
C12	LR Solenoid	Shifting	Pulse	HI : V_BAT LO : Max. 1.0V Vpeak : Max. 70V		

PIN No.	Check item	Condition	Input/Output value		Measure-ment Value	Remarks
			Type	Level		
C13	Diagnosis "K"	Using scantool	Pulse	Sending HI : V_BAT * 80%↑ LO : V_BAT * 20%↓ Receiving HI : V_BAT * 70%↑ LO : V_BAT * 30%↓	10.8 V 0.2 V	
C16	R range Selection	R Position Others	DC	V_BAT Max. 1.0V	12.2 V 0 V	
C17	D range Selection	D Position Others	DC	V_BAT Max. 1.0V	12.4 V 0 V	
C18	SPT Up Selection	UP Position Others	DC	V_BAT Max. 1.0V	12.6 V 0 V	
C21	Relay A/T control	Relay Off Relay On	DC	Max. 1.0V V_BAT	11.6 V 0 V	
C22	Earth for SIGNAL	Idling	DC	Max. 50 mV		

*1) Condition to measure surge on power : Falling Edge -70V, Rising Edge : 70V, Measuring time : 0.1 us/div.
*2) Condition to measure surge on signal : Falling Edge -25V, Rising Edge : 25V, Measuring time : 0.1 us/div.

SERVICE ADJUSTMENT PROCEDURE EEBAACB2

AUTOMATIC TRANSAXLE FLUID

INSPECTION

1. Drive the vehicle until the fluid reaches normal operating temperature [70~80°C(158~176°F)].
2. Place the vehicle on a level surface.
3. Move the selector lever through all gear positions. This will fill the torque converter and the hudraulic system with fluid and move the selector lever to the "N" (Neutral) or "P"(Park) position.
4. Before removing the oil level gauge, wipe all contaminants from around the oil level gauge. Then take out the oil level gauge and check the condition of the fluid.

   NOTE

   If the fluid smells as if it is burning, it means that the fluid has been contaminated by fine particles from the bushes and friction materials, a transaxle overhaul may be necessary.

5. Check that the fluid level is at the HOT mark on the oil level gauge. If the fluid level is low, add automatic transaxle fluid until the level reaches the "HOT" mark.

Auto transaxle fluid: DIAMOND ATF SP-III, SK ATF SP-III Quantity : 10.9ℓ (Diesel)

NOTE

Low fluid level can cause a variety of a abnormal conditions because it allows the pump to take in air along with fluid. Air trapped in the hydraulic system forms bubbles, which are compressable. Therefore, pressures will be erratic, causing delayed shifting ,slipping clutches and brakes, etc. Improper filling can also raise fluid level too high. When the transaxle has too much fluid, gears churn up foam and acuise the same conditions which occur with low fluid level, resulting in accelerated deterioration of automatic transaxle fluid. In either case, air bubbles can cause overheating, and fluid oxidation, which can interfere with normal valve, clutch, and brake operation. Foaming can also result in fluid escaping from the transaxle vent where it may be mistaken for a leak.

6. Insert the oil level gauge securely.

   NOTE

   When new, automatic transmission fluid should be red. The red dye is added so the assembly plant can identify it as transmission fluid and distinguish it from engine oil or antifreeze. The red dye, which is not an indicator of fluid quality, is not permanent. As the vehicle is driven the transmission fluid will begin to look darker. The color may eventually appear light brown.

REPLACEMENT

If you have a fluid changer, use this changer to replace the fluid. If you do not, replace it using the following procedure.

1. Disconnect the hose which connects the transmission and the oil cooler.
2. Start the engine and let the fluid drain out.

Running conditions : "N" range with engine idling.

CAUTION

The engine should be stopped within one minute after it is started. If the fluid has all drained out before then, the engine should be stopped at that point.

3. Romove the drain plug(A) from the bottom of the transmission case to drain the fluid.

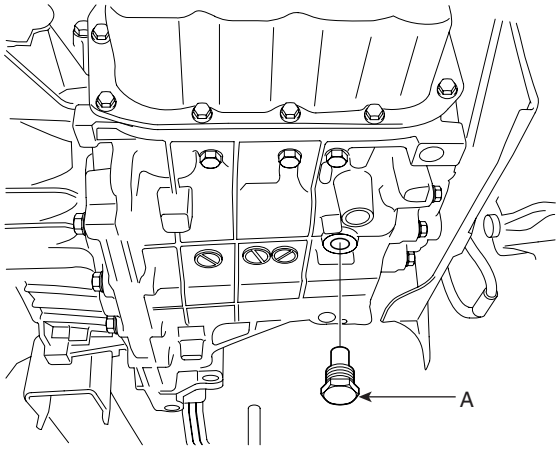

KKRE004C

4. Install the drain plug via the gasket, and tighten it to the specified torque.

TORQUE :
40 ~ 50Nm (4 ~ 5 kgf.m, 29 ~ 36 lb-ft)

5. Pour the new fluid in through the oil filler tube.

   CAUTION

   Stop pouring if the full volume of fluid cannot be poured in.

6. Repeat the procedure in step (2).

   NOTE

   Check the old fluid for contamination. If it has been contaminated, repeat the steps (5) and (6).

7. Pour the new fluid in through the oil filler tube.

8. Reconnect the hose which was disconnected in step (1) above and firmly replace the oil level gauge.(In case of this "replace", this means after wiping off any dirt around the oil level gauge, insert it into the filler tube.)

9. Start the engine and run it at idle for 1~2 minutes.

10. Move the select lever through all positions, and then move it to the "N" position.

11. Drive the vehicle until the fluid temperature rises to the normal temperature [70~80°C(158~176°F)], and then check the fluid level again. The fluid level must be at the HOT mark.

12. Firmly insert the oil level gauge into the oil filler tube.

DTC P0560 SYSTEM VOLTAGE

COMPONENT LOCATION E659BC0A

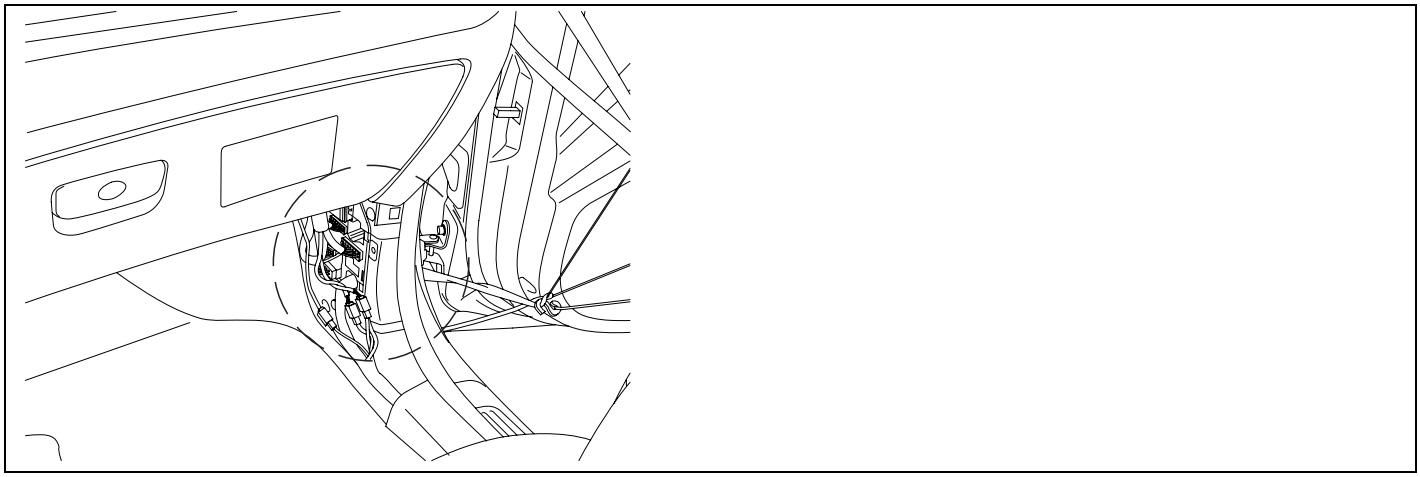

SCMAT6303D

GENERAL DESCRIPTION EFE964B1

TCU saves "LEARNING VALUE" and keeps it at certain value. Thorough this process, in order to "LEARNING VALUE" is protected from being erased at disconnecting battery cable and maintaining related components.

DTC DESCRIPTION EEAEA029

The TCM is detected an unexpected communication error with "EEPROM", the TCM sets this code.

DTC DETECTING CONDITION EE30DF34

Item	Detecting Condition	Possible cause
DTC Strategy	• Check Voltage range	• Faulty TCM • Faulty in harness
Enable Conditions	• Ne is normal • Ne ≥ 400rpm • Vb(Backup-line) ≥ 9V • Not Fail Safe Status • IG "ON"	
Threshold value	• Backup-line < 7 Volt	
Diagnostic Time	• 10sec	
Fail Safe		

COMPONENT INSPECTION E1E4F0FA

1. Connect scantool to data link connector.
2. Ignition "ON" & Engine "OFF".
3. Monitor the "DTC".
4. Is DTC Re-displayed?

YES

▶ Substitute with a known-good PCM/TCM and check for proper operation. If the problem is corrected, replace PCM/TCM as necessary and then go to "Verification of Vehicle Repair" procedure.

NO

▶ Go to "Verification of Vehicle Repair" procedure.

VERIFICATION OF VEHICLE REPAIR E532BD22

After a repair, it is essential to verify that the fault has been corrected.

1. Connect scan tool and select "Diagnostic Trouble Codes(DTCs)" mode.
2. Using a scantool, Clear DTC.
3. Operate the vehicle within DTC Enable conditions in General information.
4. Are any DTCs present ?

YES

▶ Go to the applicable troubleshooting procedure.

NO

▶ System performing to specification at this time.

DTC P0605 INTERNAL CONTROL MODULE READ ONLY MEMORY(ROM) ERROR

COMPONENT LOCATION EDD83FE7

Refer to DTC P0560.

GENERAL DESCRIPTION E9E58920

Refer to DTC P0560.

DTC DETECTING CONDITION E18AFFA4

Item	Detecting Condition	Possible Cause
DTC Strategy	• Check COMMUNICATION	• Faulty TCM
Enable Conditions	• COMMUNICATION ERROR WITH "EEPROM"	
Threshold Value	• Communication fail	
Diagnostic Time	• Detecting 20 times	
Fail safe		

COMPONENT INSPECTION EEE49117

1. Ignition "ON" & Engine "OFF".
2. Connect scan tool and select "Diagnostic Trouble Codes(DTCs)" mode.
3. Using a scantool, Clear DTC.
4. Using a "SCAN TOOL", Operate "LEARNING " Reset.
5. Perform the "LEARNING"
6. IG OFF ↔ IG ON (Repeat 2~3times), and then Monitor the "DTC"
7. Is DTC Re-displayed ?

YES

▶ Substitute with a known-good PCM/TCM and check for proper operation. If the problem is corrected, replace PCM/TCM as necessary and then Go to "Verification of Vehicle Repair" procedure.

NO

▶ Fault is intermittent caused by poor contact in the sensor's and/or TCM(PCM)'s connector or was repaired and TCM(PCM) memory was not cleared. And Go to Component Inspection procedure.

METHOD OF LEARNING RESET

※IT IS NECESSARY TO LEARNING RESET, AFTER REPLACED TRANSMISSION

1. ERASING CONDITION

1) SELECT LEVER POSITION IS "P" OR "N"
2) VEHICLE SPEED ═ 0km/h
3) IGNITION "ON", ENGINE "OFF"

2. USING A SCAN TOOL, OPERATE "LEARNING" RESET

3. IG "ON" ↔ IG "OFF"(2~3 TIMES), AFTER ERASE

VERIFICATION OF VEHICLE REPAIR EB77E6F8

Refer to DTC P0560.

DTC P0703 BRAKE S/W MALFUNCTION

COMPONENT LOCATION EAF521FA

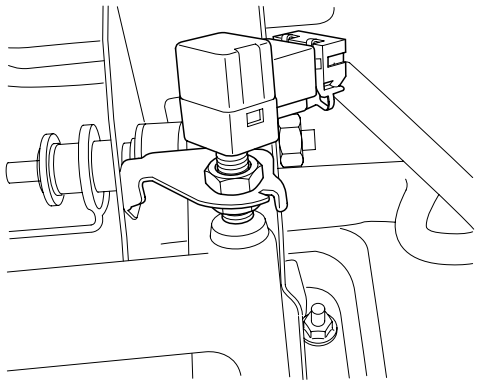

AKKF101A

GENERAL DESCRIPTION EAC62EEC

The HIVEC Automatic Transmission's function, of intelligence control, is based on the Fuzzy Control System. The Fuzzy Control System determines optimal gear positions as related to driver's intention and current driving conditions. The Brake Switch provides important information by deciding whether the vehicle is decelerating by the depression of the brake pedal, or if the speed is decreasing because the vehicle is running on the uphill.

DTC DESCRIPTION EBB9FC9A

The TCM(PCM) sets this code if a Brake Switch signal is input continuously, for an extended period of time, when the vehicle is supposed to be running (moving).

DTC DETECTING CONDITION E5D5DA82

Item	Detecting Condition	Possible Cause
DTC Strategy	• check signal for B+ Short	• Short to battery in circuit • Faulty Brake SWITCH Adjustment • Faulty Brake SWITCH • Faulty PCM
Enable Conditions	• No(Output Speed Sensor) ≥ 240rpm • Brake Switch "ON"	
Threshold Value	• +B Short	
Diagnostic Time	• More than 5 mins	
Fail Safe	• Intelligent-Shift is inhibited	

MONITOR SCANTOOL DATA EA94E582

1. Connect scantool to data link connector(DLC).
2. Ignition "ON" & Engine "OFF".
3. Monitor the "STOP LAMP SWITCH" parameter on the scantool.
4. Depress and release Foot Brake.

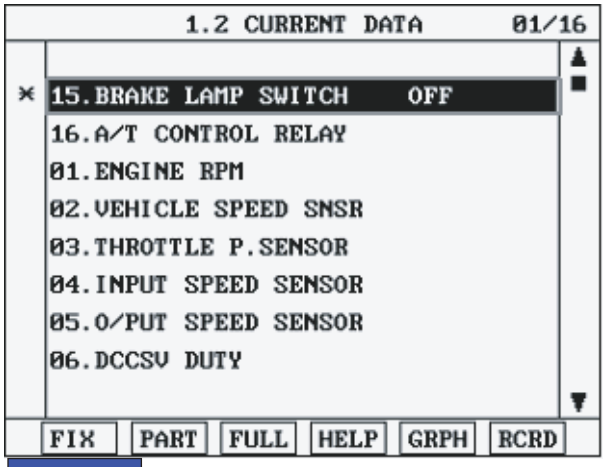

FIG.1)

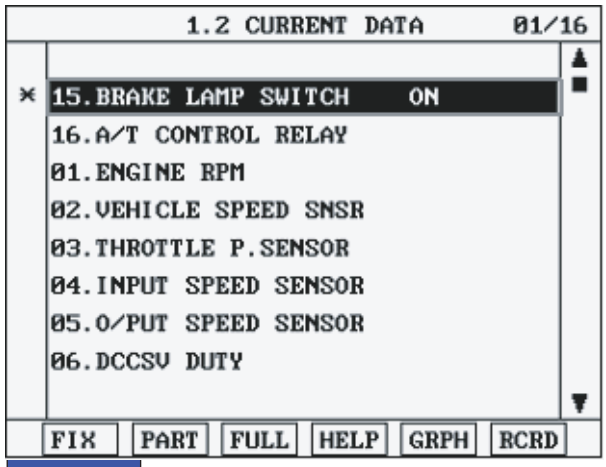

FIG.2)

FIG.1) Release foot brake status.
FIG.2) Depress foot brake status.

LKKG114A

5. Does "STOP LAMP SWITCH" follow the reference data?

YES

▶ Fault is intermittent caused by poor contact in the sensor's and/or TCM(PCM)'s connector or was repaired and TCM(PCM) memory was not cleared. Thoroughly check connectors for looseness, poor connection, bending, corrosion, contamination, deterioration or damage. Repair or replace as necessary and go to "Verification of Vehicle Repair" procedure

NO

▶ Go to "Terminal & Connector Inspection" procedure.

TERMINAL & CONNECTOR INSPECTION EEE141C4

1. Many malfunctions in the electrical system are caused by poor harness and terminals. Faults can also be caused by interference from other electrical systems, and mechanical or chemical damage.

2. Thoroughly check connectors for looseness, poor connection, bending, corrosion, contamination, deterioration, or damage.

3. Has a problem been found?

YES

▶ Repair as necessary and go to "Verification of Vehicle Repair" procedure.

NO

▶ Go to "Signal Circuit Inspection" procedure.

SIGNAL CIRCUIT INSPECTION EF97CFB5

1. Ignition "ON" & Engine "OFF".
2. Disconnect "BRAKE LAMP SWITCH" connector.
3. Measure voltage between terminal "1" of the sensor harness connector and chassis ground.

Specification : 0V

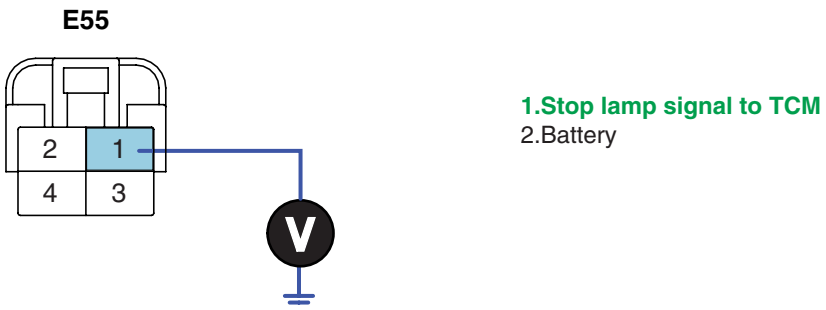

LKKG114B

4. Is voltage within specifications?

YES

▶ Go to "Component Inspection" procedure.

NO

▶ Check for Short to power circuit in harness. Repair as necessary and Go to "Verification of Vehicle Repair" procedure.

COMPONENT INSPECTION EC61D0D6

1. Check "STOP LAMP SWITCH"

   1) Ignition "OFF" & Engine "OFF".

   2) Disconnect "STOP LAMP SWITCH" connector and Remove "STOP LAMP SWITCH".

   3) Measure resistance between terminal "1" and "2" of the STOP LAMP SWITCH when plunger of the STOP LAMP SWITCH is pushed in.

Specification : Infinite

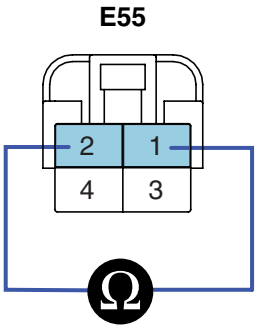

1.Stop lamp signal to TCM
2.Battery

LKKG114C

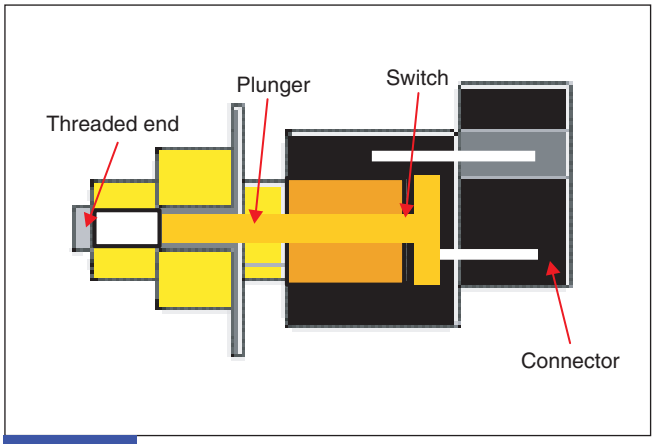

FIG.1)

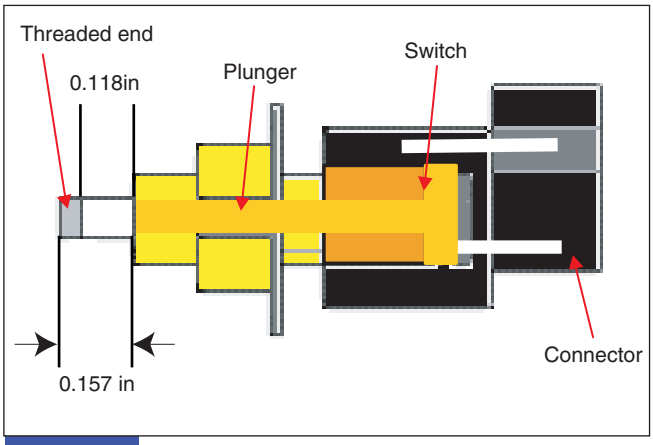

FIG.2)

FIG.1) Brake pedal is released-∞Ω
FIG.2) Brake pedal is depressed-0Ω

LKKG114D

4) Is resistance within specifications?

YES

▶ Go to "Adjust STOP LAMP SWITCH" as below.

NO

▶ Replace "STOP LAMP SWITCH" as necessary and Go to "Verification of Vehicle Repair" procedure.

2. Adjust "STOP LAMP SWITCH" Clearance

   1) Ignition "OFF" & Engine "OFF".

   2) Reinstall "STOP LAMP SWITCH".

   3) Adjust "STOP LAMP SWITCH" Clearance as below.

Specification : 0.9mm(0.04in)

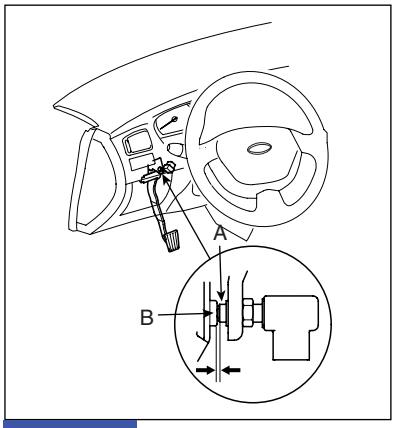

FIG.1)

FIG. 1) method of adjust : Screw in the "STOP LAMP SWITCH" until its plunger is fully de-pressed(threaded end (A) touching the pad (B) on the pedal arm). Then back off the switch 3/4 turn to make 0.9mm(0.04In) of clearance between the threaded end and pad Tighten the locknut firmly. Connect the "STOP LAMP SWITCH" connector. Make sure that the stop lamp goes off when the pedal is released.

LKKG114E

   4) After Adjusting, has problem been solved ?

   YES

   ▶ Go to "Verification of Vehicle Repair" procedure.

   NO

   ▶ Substitute with a known-good TCM/PCM and check for proper operation. If the problem is corrected, replace TCM/PCM and go to "Verification of Vehicle Repair" procedure.

VERIFICATION OF VEHICLE REPAIR E3DE13FA

After a repair, it is essential to verify that the fault has been corrected.

1. Connect scan tool and select "Diagnostic Trouble Codes(DTCs)" mode.
2. Using a scantool, Clear DTC.
3. Operate the vehicle within DTC Enable conditions in General information.
4. Are you DTCs present?

   YES

   ▶ Go to the applicable troubleshooting procedure.

   NO

   ▶ System performing to specification at this time.

DTC P0707 TRANSAXLE RANGE SWITCH - LOW INPUT

COMPONENT LOCATION EFE3A0CB

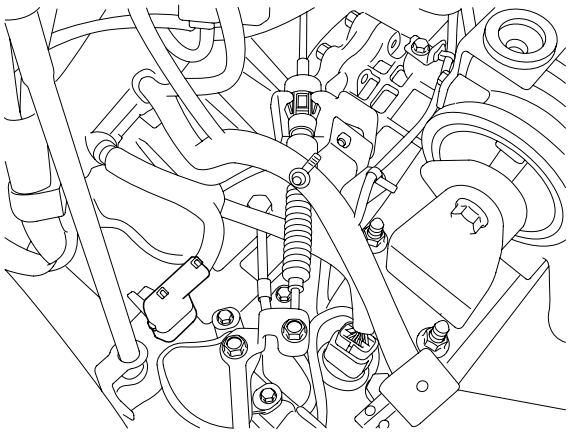

AKKF102A

GENERAL DESCRIPTION ECE1DD54

The Transaxle Range Switch sends the shift lever position information to the TCM(PCM) using a 12V (battery voltage) signal. When the shift lever is in the D (Drive) position the output signal of Transaxle Range Switch is 12V and in all other positions the voltage is 0V. The TCM(PCM) judges the shift lever position by reading all signals, for the Transaxle Range Switch, simultaneously.

DTC DESCRIPTION E161CB4E

The TCM(PCM) sets this code when the Transaxle Range Switch has no output signal for more than 30 seconds.

DTC DETECTING CONDITION EC4CBDED

Item	Detecting Condition	Possible cause
DTC Strategy	• Check for No signal	• Faulty Shift cable adjustment • Faulty Inhibitor switch and Manual control lever position adjustment • Open or short in circuit • Faulty TRANSAXLE RANGE SWITCH • Faulty TCM(PCM)
Enable Conditions	• Ne ≥ 1500 rpm • Vth ≥ 1.016V • Not FailSafe Status	
Threshold value	• No signal detected	
Diagnostic Time	• More than 30sec	
Fail Safe	• Recognition as previous signal - When P-D or R-D or D-R SHIFT is detected, it is regarded as N-D or N-R though "N" signal is not detected - When sports mode S/W is ON without P,R,N, D-RANGE signals, it is regarded sports mode.(DTC is not set)	

SIGNAL WAVEFORM EFAF83EC

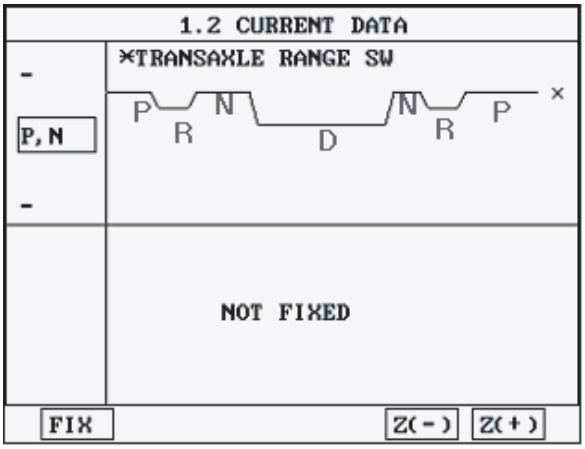

EKBF100A

MONITOR SCANTOOL DATA E9FAB598

1. Connect scantool to data link connector(DLC).
2. Ignition "ON" & Engine "OFF".
3. Monitor the "TRANSAXLE RANGE SWITCH" parameter on the scantool.
4. Shift selector lever from "P" range to other range.

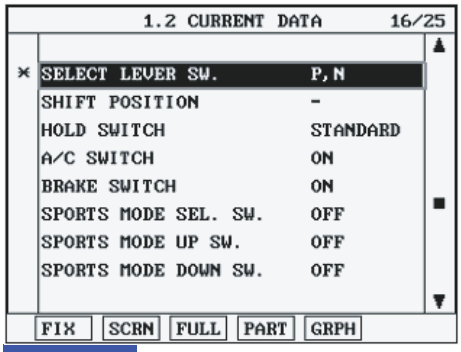

FIG.1)

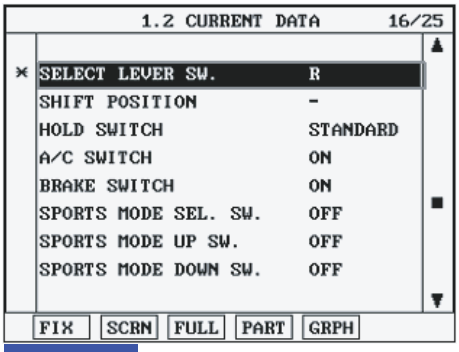

FIG.2)

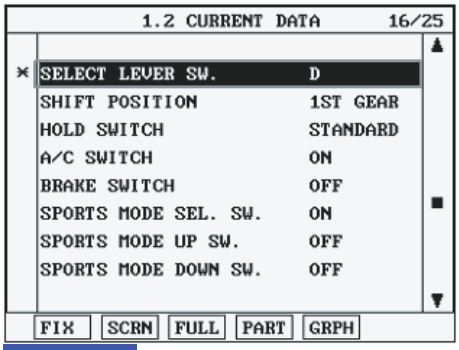

FIG.3)

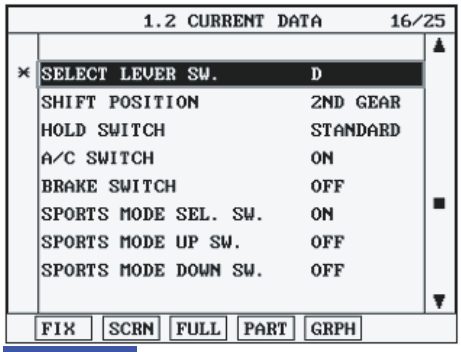

FIG.4)

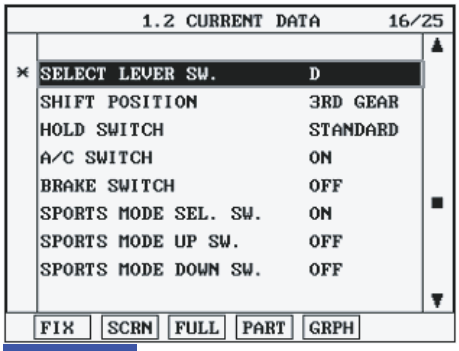

FIG.5)

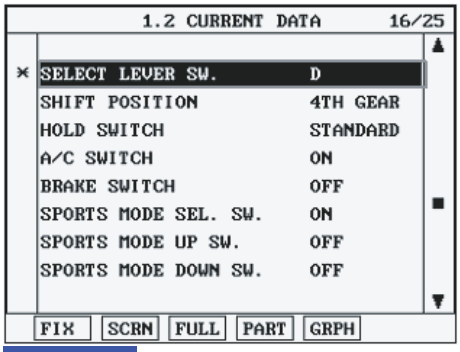

FIG.6)

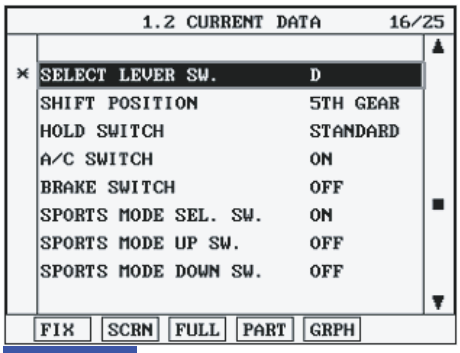

FIG.7)

FIG. 1) "P,N" Range
FIG. 2) "R" Range
FIG. 3) "D" Range 1st gear
FIG. 4) "D" Range 2nd gear
FIG. 5) "D" Range 3re gear
FIG. 6) "D" Range 4th gear
FIG. 7) "D" Range 5th gear

LLLG100A

5. Does "TRANSAXLE RANGE SWITCH" follow the reference data?

YES

▶ Fault is intermittent caused by poor contact in the sensor's and/or TCM(PCM)'s connector or was repaired and TCM(PCM) memory was not cleared. Thoroughly check connectors for looseness, poor connection, bending, corrosion, contamination, deterioration or damage. Repair or replace as necessary and go to "Verification of Vehicle Repair" procedure.

NO

▶ Go to "Terminal & connector inspection" procedure.

※ Most of fault that happen about inhibitor switch, result from faulty shift cable adjustment or incorrect location of manual control lever and inhibitor switch. So, when DTC which related Inhibitor switch or engine start defectiveness at "P" range happen, After check the shift cable adjustment or location of manual control lever and inhibitor switch, repair or replace as necessary.

TERMINAL & CONNECTOR INSPECTION EAA31DB3

1. Many malfunctions in the electrical system are caused by poor harness and terminal condition. Faults can also be caused by interference from other electrical systems, and mechanical or chemical damage.

2. Thoroughly check connectors for looseness, poor connection, bending, corrosion, contamination, deterioration, or damage.

3. Has a problem been found?

YES

▶ Repair as necessary and go to "Verification of vehicle repair" procedure.

NO

▶ Go to "Power circuit inspection" procedure.

POWER SUPPLY CIRCUIT INSPECTION E8EED173

1. CHECK POWER TO RANGE SWITCH

   1) Disconnect "TRANSAXLE RANGE SWITCH" connector.

   2) Ignition "ON" & Engine "OFF".

   3) Measure voltage between terminal "8" of the sensor harness connector and chassis ground.

Specification : approx. B+

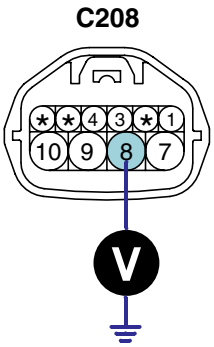

1. D Range
3. P Range
4. N Range
7. R Range
8. Power supply IG1
9. Starting circuit
10. Starting circuit

SCMAT6301L

   4) Is voltage within specifications?

YES

▶ Go to "Signal circuit inspection" procedure.

NO

▶ Check that Fuse 10A is installed or not blown.
▶ Check for open in harness. Repair as necessary and go to "Verification of vehicle repair" procedure.

SIGNAL CIRCUIT INSPECTION E7739DDB

1. Ignition "OFF".

2. Disconnect "TRANSAXLE RANGE SWITCH" and "TCM(PCM)" connector.

3. Measure resistance between each terminal of the sensor harness connector and TCM(PCM) harness connector as below.

Specification :

Pin No of "TRANSAXLE RANGE SWITCH"	C208 No.1	C208 No.3	C208 No.4	C208 No.7
Pin No of "TCM(PCM)" harness	C224-C No.17	C224-C No.5	C224-C No.6	C224-C No.16
Specification	0Ω	0Ω	0Ω	0Ω

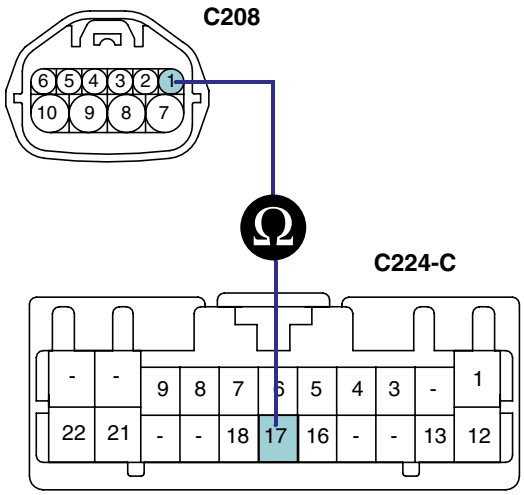

1. D Range
3. P Range
4. N Range
7. R Range
8. Power supply IG1
9. Starting circuit
10. Starting circuit

17. P Range
5. R Range
6. N Range
16. D Range

SCMAT6302L

4. Is resistance within specifications?

YES

▶ Go to "Component inspection" procedure.

NO

▶ Check for Open in harness. Repair as necessary and Go to "Verification of Vehicle Repair" procedure.

COMPONENT INSPECTION EDE50D35

1. Ignition "OFF".

2. Remove "TRANSAXLE RANGE SWITCH".

3. Measure the resistance between each terminal of the sensor.

Specification : approx. 0 Ω

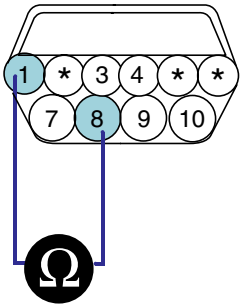

C208
Component side

1. D Range
3. P Range
4. N Range
7. R Range
8. Power supply IG1
9. Starting circuit
10. Starting circuit

Range \ Terminal	P	R	N	D	3	2	L
1				●			
2						●	
3	●						
4			●				
5					●		
6							●
7		●					
8	●	●	●	●	●	●	●
9	●		●				
10	●		●				

[RANGE SWITCH continuity check table (Case of SPORTS MODE vehicle has no 3,2,L range)]

SCMAT6303L

4. Is resistance within specifications?

YES

▶ Substitute with a known-good PCM/TCM and check for proper operation. If the problem is corrected, replace PCM/TCM as necessary and then go to "Verification of Vehicle Repair" procedure.

NO

▶ Replace "TRANSAXLE RANGE SWITCH" as necessary and Go to "Verification of Vehicle Repair" procedure.

VERIFICATION OF VEHICLE REPAIR EFEEFADF

After a repair, it is essential to verify that the fault has been corrected.

1. Connect scantool and select "Diagnostic Trouble Codes(DTCs)" mode.
2. Using a scantool, Clear DTC.
3. Operate the vehicle within DTC Enable conditions in General information.
4. Are any DTCs present?

YES

▶ Go to the applicable troubleshooting procedure.

NO

▶ System performing to specification at this time.

DTC P0708 TRANSAXLE RANGE SWITCH - HIGH INPUT

COMPONENT LOCATION EC58535A

Refer to DTC P0707.

GENERAL DESCRIPTION E3DEE0BD

Refer to DTC P0707.

DTC DESCRIPTION EFF1CACD

The TCM sets this code when the Transaxle Range Switch outputs multiple signals for more than 30 seconds.

DTC DETECTING CONDITION EDECC03F

Item	Detecting Condition	Possible cause
DTC Strategy	• Check for multiple signals	• Faulty Shift cable adjustment • Faulty Inhibitor switch and Manual control lever position adjustment • Open or short in circuit • Faulty TRANSAXLE RANGE SWITCH • Faulty TCM(PCM)
Enable Conditions	• IG "ON" • Not FailSafe Status	
Threshold value	• Multiple signal	
Diagnostic Time	• More than 30sec	
Fail Safe	• Recognition as previous signal - When P-D or R-D or D-R SHIFT is detected, it is regarded as N-D or N-R though "N" signal is not detected - When sports mode S/W is ON without P,R,N, D-RANGE signals, it is regarded sports mode.(DTC is not set)	

SIGNAL WAVEFORM E887562F

Refer to DTC P0707.

MONITOR SCANTOOL DATA E8B2B8B7

Refer to DTC P0707.

TERMINAL & CONNECTOR INSPECTION E548DF70

Refer to DTC P0707.

POWER SUPPLY CIRCUIT INSPECTION EFA6EE5A

1. Disconnect "TRANSAXLE RANGE SWITCH" connector.
2. Ignition "ON" & Engine "OFF".
3. Measure voltage between each terminal of the sensor harness connector and chassis ground.

Specification :

TERMINAL(C208)	No.1	No.3	No.4	No.7	No.8	No.9	No.10
SPECIFICATION	0V	0V	0V	0V	0V	0V	0V

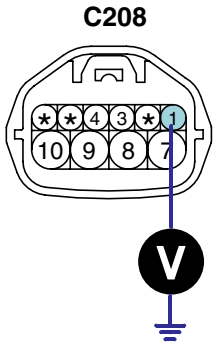

1. D Range
3. P Range
4. N Range
7. R Range
8. Power supply IG1
9. Starting circuit
10. Starting circuit

SCMAT6311L

4. Is voltage within specifications?

YES

▶ Go to "Signal circuit inspection" procedure.

NO

▶ Check for Short in harness. Repair as necessary and Go to "Verification of Vehicle Repair" procedure.

SIGNAL CIRCUIT INSPECTION EAC4BB41

1. Ignition "OFF".
2. Disconnect "TRANSAXLE RANGE SWITCH" and "TCM(PCM)" connector.
3. Measure resistance between each terminals of the sensor harness to check for Short.

Specification : Infinite

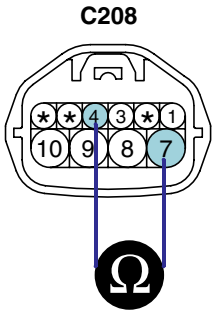

1. D Range
3. P Range
4. N Range
7. R Range
8. Power supply IG1
9. Starting circuit
10. Starting circuit

SCMAT6312L

4. Is resistance within specifications?

YES

▶ Go to "Component inspection" procedure.

NO

▶ Check for Short in harness. Repair as necessary and Go to "Verification of Vehicle Repair" procedure.

COMPONENT INSPECTION EC9018D7

Refer to DTC P0707.

VERIFICATION OF VEHICLE REPAIR EC17DB6F

<Refer to DTC P0707.

DTC P0712 FLUID(OIL) TEMPERATURE SENSOR CIRCUIT - LOW

COMPONENT LOCATION E526BABE

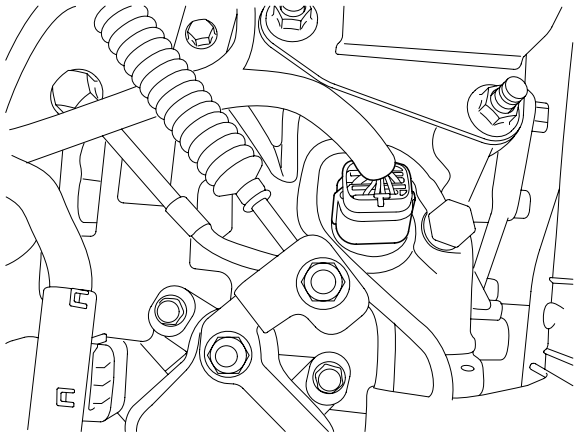

AKKF104A

GENERAL DESCRIPTION EC4171B6

The automatic TRANSAXLE fluid(ATF) temperature sensor is installed in the Valve Body. This sensor uses a thermistor whose resistance changes according to the temperature changes. The TCM supplies a 5V reference voltage to the sensor, and the output voltage of the sensor changes when the ATF temperature varies. The automatic TRANSAXLE fluid(ATF) temperature provides very important data for the TCM's control of the Torque Converter Clutch, and is also used for many other purposes.

DTC DESCRIPTION E459DF00

This DTC code is set when the ATF temperature output voltage is lower than a value generated by thermistor resistance, in a normal operating range, for approximately 1 second or longer. The TCM regards the ATF temperature as fixed at a value of 80°C(176°F).

DTC DETECTING CONDITION ECBFCFAC

Item	Detecting Condition	Possible cause
DTC Strategy	• Check for ground short	• Sensor signal circuit is short to ground. • Faulty sensor • Faulty PCM
Enable Conditions	• IG "ON" • Ne or Nt ≥ 400rpm • Not FailSafe Status	
Threshold Value	• voltage < 0.49V	
Diagnostic Time	• more than 1sec	
Fail Safe	• Learning control and Intelligent shift are inhibited. • Fluid temperature is regarded as 80°C(176°F)	

SPECIFICATION EC943BC5

TEMP.[°C(°F)]	Resistance(kΩ)	TEMP.[°C(°F)]	Resistance(kΩ)
-40(-40)	139.5	80(176)	1.08
-20(-4)	47.7	100(212)	0.63
0(32)	18.6	120(248)	0.38
20(68)	8.1	140(284)	0.25
40(104)	3.8	160(320)	0.16
60(140)	1.98		

MONITOR SCANTOOL DATA EEF7E77E

1. Connect scantool to data link connector(DLC).
2. Engine "ON".
3. Monitor the "TRANSAXLE FLUID TEMPERATURE SENSOR" parameter on the scan tool.

Specification : Increasing Gradually

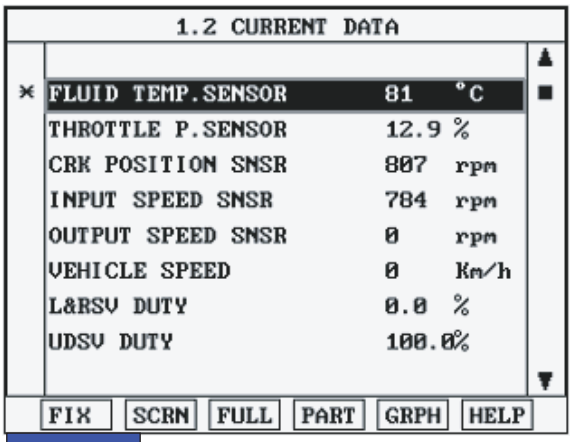

FIG.1)

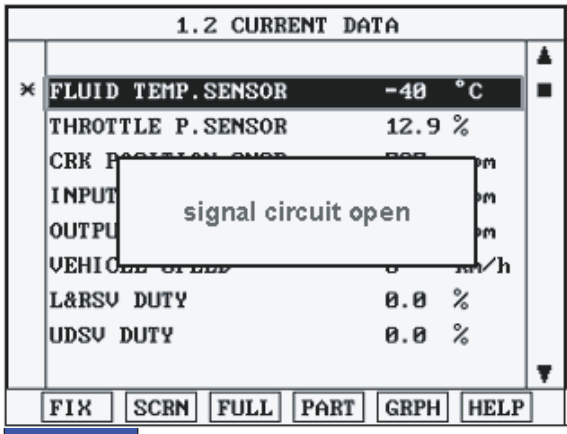

FIG.2)

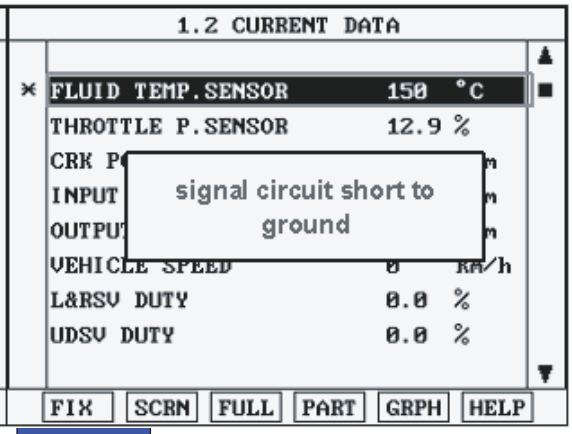

FIG.3)

FIG.1) Normal
FIG.2) Signal harness Open
FIG.3) Signal harness Short

SCMAT6321L

4. Does "TRANSAXLE FLUID TEMPERATURE SENSOR" follow the reference data?

YES

▶ Fault is intermittent caused by poor contact in the sensor's and/or TCM(PCM)'s connector or was repaired and TCM(PCM) memory was not cleared. Thoroughly check connectors for looseness, poor connection, bending, corrosion, contamination, deterioration or damage. Repair or replace as necessary and go to "Verification of Vehicle Repair" procedure.

NO

▶ Go to "Terminal & connector inspection" procedure.

TERMINAL & CONNECTOR INSPECTION E5EC571F

1. Many malfunctions in the electrical system are caused by poor harness and terminal condition. Faults can also be caused by interference from other electrical systems, and mechanical or chemical damage.
2. Thoroughly check connectors for looseness, poor connection, bending, corrosion, contamination, deterioration, or damage.
3. Has a problem been found?

YES

▶ Repair as necessary and go to "Verification of vehicle Repair" procedure.

NO

▶ Go to "Component inspection" procedure.

SIGNAL CIRCUIT INSPECTION EF4A81C2

1. Ignition "ON" & Engine "OFF".
2. Disconnect the "TRANSAXLE FLUID TEMPERATURE SENSOR" connector.
3. Measure the voltage between terminal "1" of the "TRANSAXLE FLUID TEMPERATURE SENSOR" harness connector and chassis ground.

Specification : Approx. 5 V

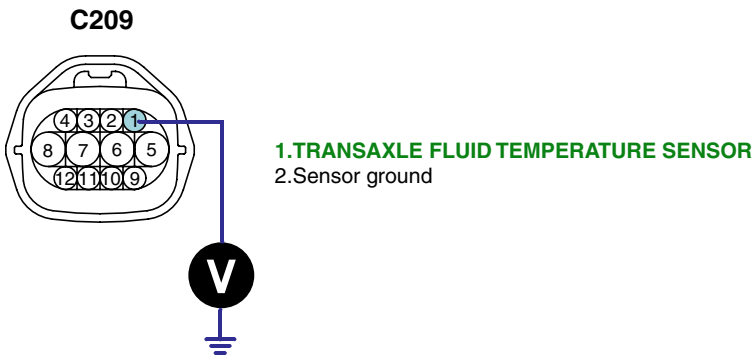

SCMAT6322L

4. Is voltage within specifications ?

YES

▶ Go to "Component Inspection" procedure.

NO

▶ Check for short to ground in harness. Repair as necessary and Go to "Verification of Vehicle Repair" procedure.

COMPONENT INSPECTION EF85D5EE

1. CHECK "TRANSAXLE FLUID TEMPERATURE SENSOR"

   1) Ignition "OFF".

   2) Disconnect the "TRANSAXLE FLUID TEMPERATURE SENSOR" connector.

   3) Measure the resistance between terminals "1" and "2" of the "TRANSAXLE FLUID TEMPERATURE SENSOR".

Specification : Refer to "Reference data"

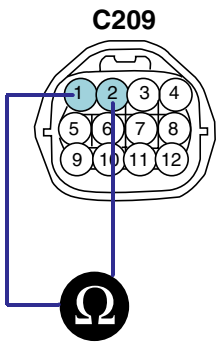

1.TRANSAXLE FLUID TEMPERATURE SENSOR
2.Sensor ground

SCMAT6323L

[REFERENCE DATA]

TEMP.[°C(°F)]	Resistance(kΩ)	TEMP.[°C(°F)]	Resistance(kΩ)
-40(-40)	139.5	80(176)	1.08
-20(-4)	47.7	100(212)	0.63
0(32)	18.6	120(248)	0.38
20(68)	8.1	140(284)	0.25
40(104)	3.8	160(320)	0.16
60(140)	1.98		

   4) Is resistance within specifications?

   YES

   ▶ Go to "CHECK PCM/TCM " as below.

   NO

   ▶ Replace "TRANSAXLE FLUID TEMPERATURE SENSOR" as necessary and Go to "Verification of Vehicle Repair" procedure.

2. CHECK PCM

   1) Ignition "ON" & Engine "OFF".

   2) Connect "TRANSAXLE FLUID TEMPERATURE SENSOR" connector.

   3) Install scan tool and select a SIMU-SCAN.

   4) Simulate voltage (0→5V) to "TRANSAXLE FLUID TEMPERATURE SENSOR" signal circuit.

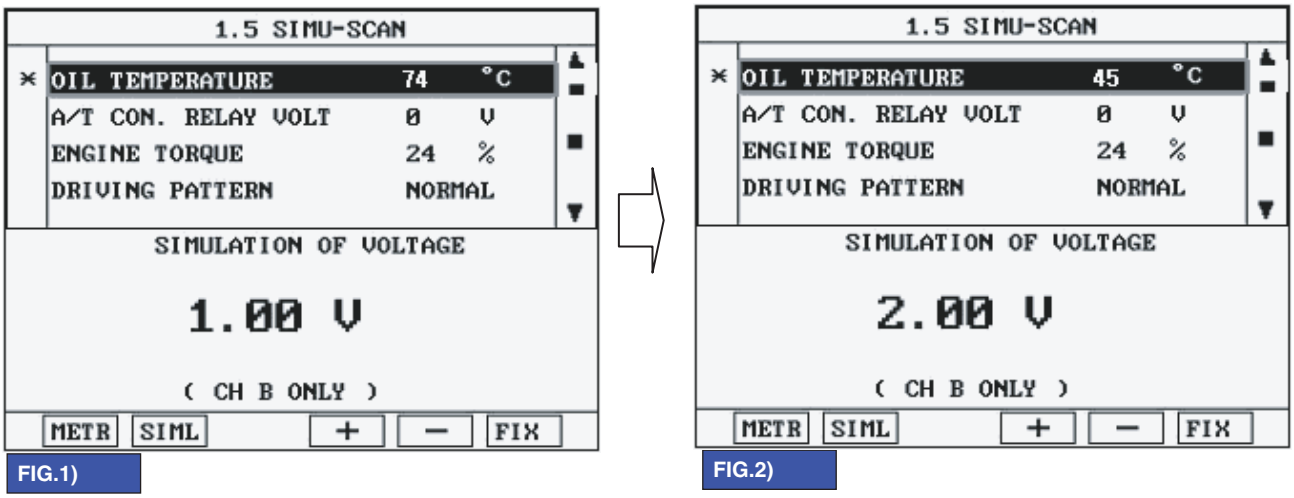

FIG.1) INPUT 1.00V → 74˚C
FIG.3) INPUT 2.00V → 45˚C

※The values are subject to change according to vehicle model or conditions.

SCMAT6324L

5) Is FLUID TEMP. SENSOR signal value changed according to simulation voltage?

YES

▶ Thoroughly check connectors for looseness, poor connection, bending, corrosion, contamination, deterioration, or damage. Repair or replace as necessary and then go to "Verification of Vehicle Repair" procedure.

NO

▶ Substitute with a known-good PCM/TCM and check for proper operation. If the problem is corrected, replace PCM/TCM as necessary and then go to "Verification of Vehicle Repair" procedure.

VERIFICATION OF VEHICLE REPAIR E909F321

After a repair, it is essential to verify that the fault has been corrected.

1. Connect scantool and select "Diagnostic Trouble Codes(DTCs)" mode.
2. Using a scantool, Clear DTC.
3. Operate the vehicle within DTC Enable conditions in General information.
4. Are any DTCs present?

YES

▶ Go to the applicable troubleshooting procedure.

NO

▶ System performing to specification at this time.

DTC P0713 FLUID(OIL) TEMPERATURE SENSOR CIRCUIT - HIGH

COMPONENT LOCATION E2AB033F

Refer to DTC P0712.

GENERAL DESCRIPTION EE6A7CC5

Refer to DTC P0712.

DTC DESCRIPTION E1F791FC

This DTC code is set when the ATF temperature output voltage is higher than a value generated by thermistor resistance, in a normal operating range, for an extended period of time. The TCM regards the ATF temperature as fixed at a value of 80°C(176°F).

DTC DETECTING CONDITION EF37E4AB

Item	Detecting Condition	Possible cause
DTC Strategy	• Check voltage range	• Sensor signal circuit is short to ground • Faulty sensor • Faulty PCM
Enable Conditions	• Engine speed > 2000rpm • Output speed > 1000rpm • Accumulated time in above condition : 10 min • Not FailSafe Status	
Threshold Value	• voltage > 4.57 V	
Diagnostic Time	• more than 60 seconds	
Fail Safe	• Learning control and Intelligent shift are inhibited • Fluid temperature is regarded as 80°C(176°F)	

SPECIFICATION E8A7022C

Refer to DTC P0712.

MONITOR SCANTOOL DATA EBDED7FA

Refer to DTC P0712.

TERMINAL & CONNECTOR INSPECTION EEF8AAFC

Refer to DTC P0712.

SIGNAL CIRCUIT INSPECTION EB170543

Refer to DTC P0712.

GROUND CIRCUIT INSPECTION E2F22C3F

1. Ignition "ON" & Engine "OFF".
2. Disconnect the "TRANSAXLE FLUID TEMPERATURE SENSOR" connector.
3. Measure the resistance between terminal "2" of the "TRANSAXLE FLUID TEMPERATURE SENSOR" harness connector and chassis ground.

Specification : Approx. 0Ω

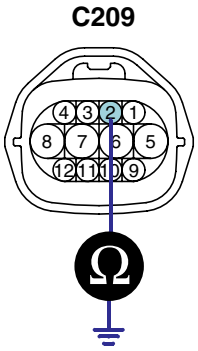

1.TRANSAXLE FLUID TEMPERATURE SENSOR
2.Sensor ground

SCMAT6325L

4. Is resistance within specifications?

YES

▶ Go to "Component inspection" procedure.

NO

▶ Check for open in harness. Repair as necessary and Go to "Verification of Vehicle Repair" procedure .

COMPONENT INSPECTION EF9EE8D6

Refer to DTC P0712.

VERIFICATION OF VEHICLE REPAIR E1E4DA2B

Refer to DTC P0712.

DTC P0717 INPUT SPEED SENSOR CIRCUIT - NO SIGNAL

COMPONENT LOCATION E42CBC20

AKKF107A

GENERAL DESCRIPTION EAEFD19C

The input(turbine) speed sensor outputs pulse-signals according to the revolutions of the input shaft of the transmission. The TCM determines the input shaft speed by counting the frequency of the pulses. This value is mainly used to control the optimum fluid pressure during shifting.

DTC DESCRIPTION E189A5C6

The TCM sets this code if an output pulse-signal is not detected, from the input speed sensor, when the vehicle is running faster than 30 km/h. The Fail-Safe function will be set by the TCM if this code is detected.

DTC DETECTING CONDITION E2EDB3C2

Item	Detecting Condition	Possible cause
DTC Strategy	• Check voltage range	• Signal circuit is open or short. • Sensor power circuit is open • Sensor ground circuit is open • Faulty INPUT SPEED SENSOR • Faulty PCM/TCM
Enable Conditions	• Inhibitor Switch position is D,3,2,L(A/T range switch) and SP(SPORTS MODE) • Eng revolution ≥ 2600 rpm In 1st or 2nd gear • A/T oil temp sensor voltage < 4.57 V • Not Fail Safe Status	
Threshold value	• No signal	
Diagnostic Time	• More than 1sec	
Fail Safe	• Locked into 3rd or 2nd gear. • Manual shifting is possible(2 nd → 3 rd, 3 rd → 2 nd)	

SPECIFICATION EADEFDB4

Input shaft & Output shaft speed sensor
- Type : Hall sensor
- Current consumption : 22mA(MAX)
- Sensor body and sensor connector have been unified as one.

SIGNAL WAVEFORM E703B2FE

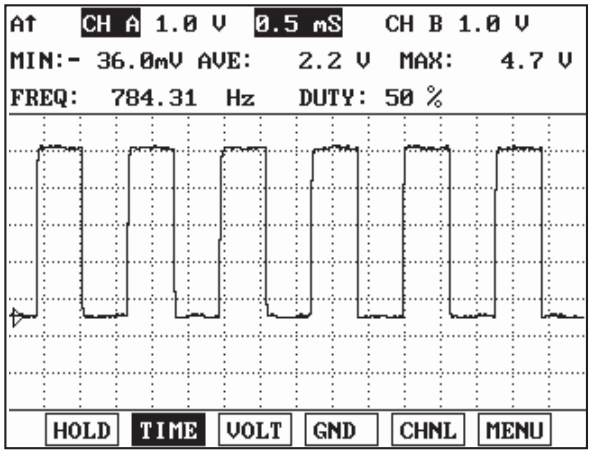

EKBF105A

MONITOR SCANTOOL DATA E83AE782

1. Connect scan tool to data link connector(DLC).
2. Engine "ON".
3. Monitor the "INPUT SPEED SENSOR" parameter on the scantool.
4. Driving at speed of over 19 Mile/h(30 Km/h).

Specification : Increasing Gradually

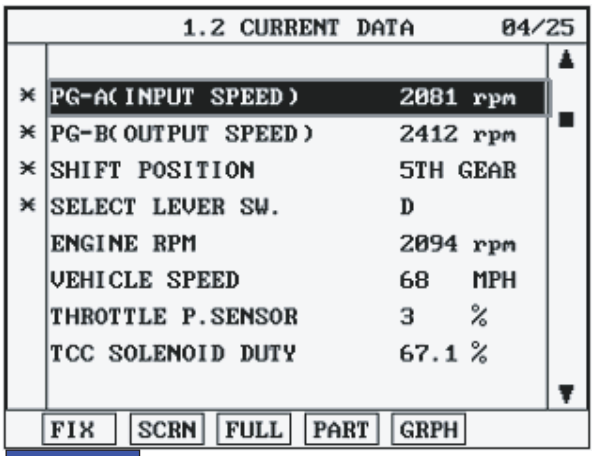

FIG.1)

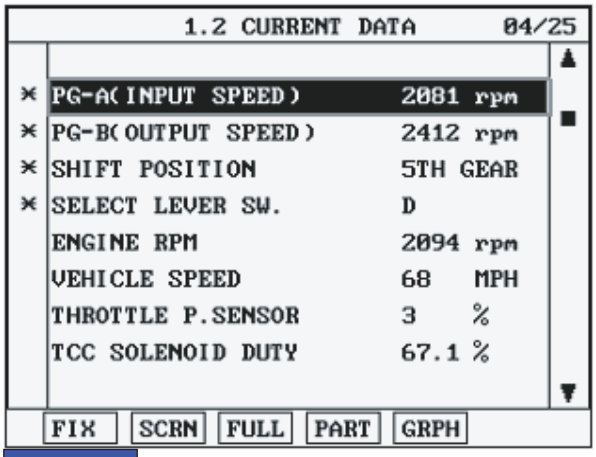

FIG.2)

FIG.1) Idling
FIG.2) Accelerating

SCMAT6331L

5. Does "Input speed sensor" follow the reference data?

YES

▶ Fault is intermittent caused by poor contact in the sensor's and/or TCM(PCM)'s connector or was repaired and TCM(PCM) memory was not cleared. Thoroughly check connectors for looseness, poor connection, bending, corrosion, contamination, deterioration or damage. Repair or replace as necessary and go to "Verification of Vehicle Repair" procedure.

NO

▶ Go to "Terminal & connector inspection" procedure.

TERMINAL & CONNECTOR INSPECTION EC769CA3

1. Many malfunctions in the electrical system may be caused from poor harness and terminal condition. These faults can be caused by interference from other electrical systems and mechanical or chemical damage.
2. Thoroughly check connectors for looseness, poor connection, bending, corrosion, contamination, deterioration, or damage.
3. Has a problem been found?

YES

▶ Repair as necessary and go to "Verification of vehicle repair" procedure.

NO

▶ Go to "Signal circuit inspection" procedure.

SIGNAL CIRCUIT INSPECTION E3B4D0BC

1. Ignition "ON" & Engine "OFF".
2. Disconnect the "INPUT SPEED SENSOR" connector.
3. Measure voltage between terminal "2" of the INPUT SPEED SENSOR harness connector and chassis ground.

Specification : approx. 5V

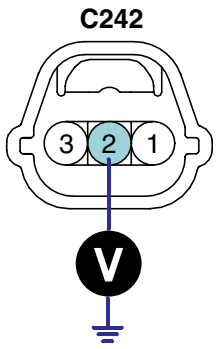

1. Sensor ground
2. **Input speed sensor**
3. Power supply IG1

SCMAT6332L

4. Is voltage within specification?

YES

▶ Go to "Power circuit Inspection" procedure.

NO

▶ Check for open or short in harness. Repair as necessary and Go to "Verification of Vehicle Repair" procedure.
▶ If signal circuit in harness is OK, Go to "Check PCM/TCM" of the "Component Inspection" procedure.

POWER SUPPLY CIRCUIT INSPECTION ECE0DC8E

1. Ignition "ON" & Engine "OFF".

2. Disconnect the "INPUT SPEED SENSOR" connector.

3. Measure voltage between terminal "3" of the INPUT SPEED SENSOR harness connector and chassis ground.

Specification : approx. B+

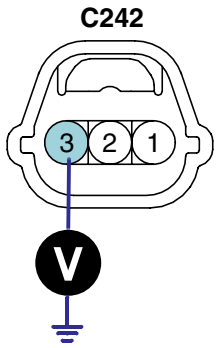

1. Sensor ground
2. Input speed sensor
3. **Power supply IG1**

SCMAT6333L

4. Is voltage within specification ?

YES

▶ Go to "Ground circuit inspection" procedure.

NO

▶ Check for open in harness. Repair as necessary and Go to "Verification of Vehicle Repair" procedure.

GROUND CIRCUIT INSPECTION EBCBAF15

1. Ignition "ON" & Engine "OFF".
2. Disconnect the "INPUT SPEED SENSOR" connector.
3. Measure resistance between terminal "1" of the INPUT SPEED SENSOR harness connector and chassis ground.

Specification : approx. 0 Ω

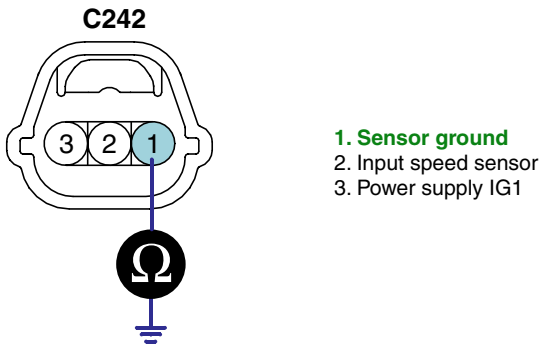

SCMAT6334L

4. Is resistance within specification?

YES

▶ Go to "Component Inspection" procedure.

NO

▶ Check for open in harness. Repair as necessary and Go to "Verification of Vehicle Repair" procedure.
▶ If ground circuit in harness is OK, Go to "Check PCM/TCM" of the "Component Inspection" procedure.

COMPONENT INSPECTION EDFB0779

1. Check "INPUT SPEED SENSOR"

   1) Ignition "OFF".

   2) Disconnect the "INPUT SPEED SENSOR" connector.

   3) Measure resistance between terminal "1","2" and "2","3" and "1","3" of the "INPUT SPEED SENSOR" connector.

Specification : Refer to "Reference data"

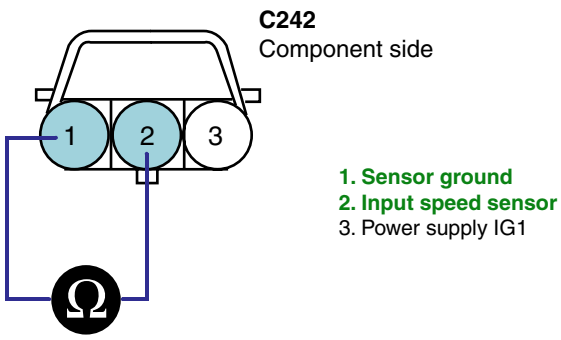

SCMAT6335L

   4) Is resistance within specifications?

[REFERENCE DATA]

Data	Reference Data	
Current	22 mA	
Air Gap	Input sensor	1.3 mm
	Output sensor	0.85 mm
Resistance	Input sensor	Above 4 MΩ
	Output sensor	Above 4 MΩ
Voltage	High	4.8 ~ 5.2V
	Low	Below 0.8V

YES

▶ Go to "CHECK PCM" as below.

NO

▶ Replace "INPUT SPEED SENSOR" as necessary and Go to "Verification of Vehicle Repair" procedure.

2. CHECK PCM/TCM

   1) Ignition "ON" & Engine "OFF".

   2) Connect "INPUT SPEED SENSOR" connector.

   3) Install scantool and select a SIMU-SCAN.

   4) Simulate frequency to INPUT SPEED SENSOR signal circuit.

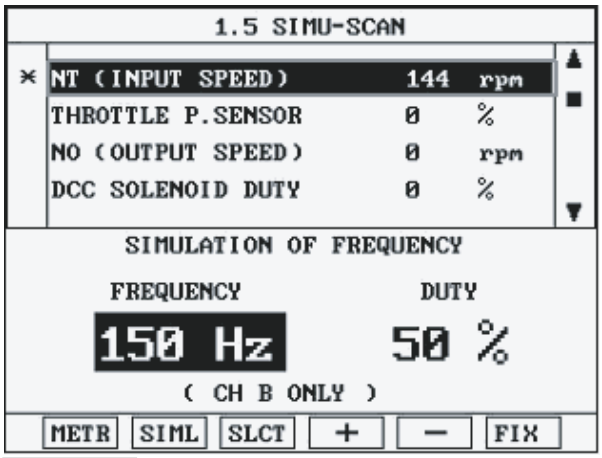

FIG.1)

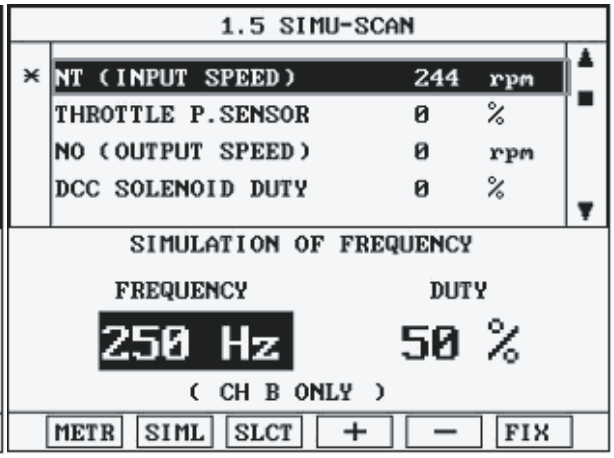

FIG.2)

FIG.1) INPUT 150Hz → 144rpm
FIG.2) INPUT 250Hz → 244rpm

※ The values are subject to change according to vehicle model or conditions

EKBF105G

5) Is "INPUT SPEED SENSOR" signal value changed according to simulation frequency?

YES

▶ Thoroughly check connectors for looseness, poor connection, bending, corrosion, contamination, deterioration, or damage. Repair or replace as necessary and then go to "Verification of Vehicle Repair" procedure.

NO

▶ Substitute with a known-good PCM/TCM and check for proper operation. If the problem is corrected, replace PCM/TCM as necessary and then go to "Verification of Vehicle Repair" procedure.

VERIFICATION OF VEHICLE REPAIR EE5DDD84

After a repair, it is essential to verify that the fault has been corrected.

1. Connect scan tool and select "Diagnostic Trouble Codes(DTCs)" mode.
2. Using a scan tool, Clear DTC.
3. Operate the vehicle within DTC Enable conditions in General information.
4. Is resistance within specification ?

YES

▶ Go to the applicable troubleshooting procedure.

NO

▶ System performing to specification at this time.

DTC P0722 OUTPUT SPEED SENSOR CIRCUIT - NO SIGNAL

COMPONENT LOCATION EABFACED

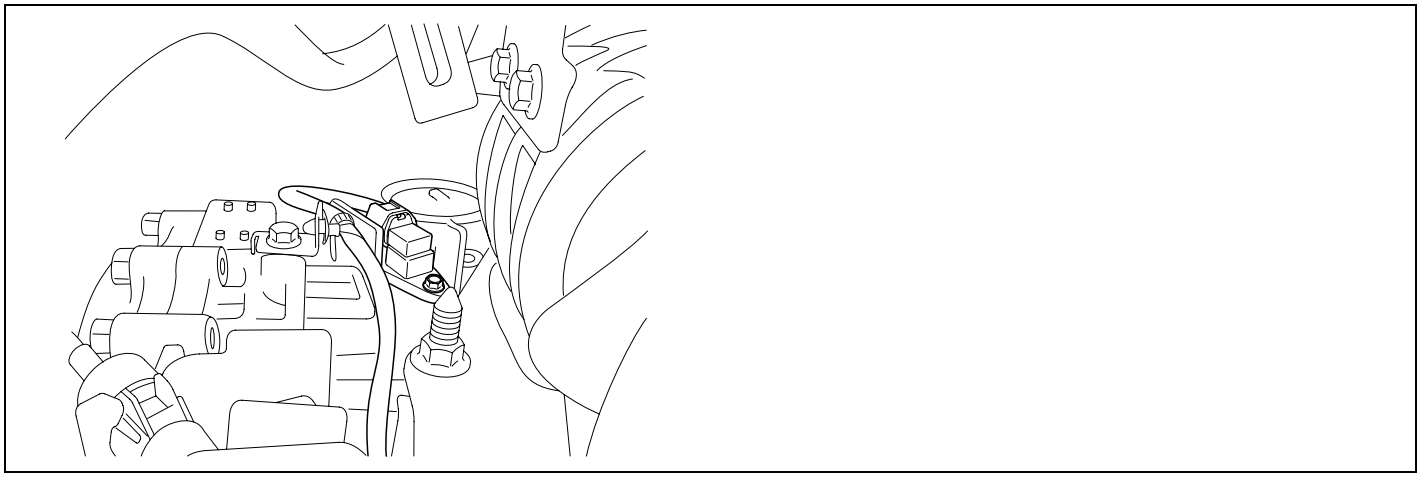

SCMAT6304D

GENERAL DESCRIPTION E23829A7

The Output Speed Sensor outputs pulse-signals according to the revolutions of the output shaft of the transmission. The Output Speed Sensor is installed in front of the Transfer Drive Gear to determine the Transfer Drive Gear rpms by counting the frequency of the pulses. This value, together with the throttle position data, is mainly used to decide the optimum gear position.

DTC DESCRIPTION EF6EE2C7

The TCM sets this code if the calculated value of the pulse-signal is noticeably different from the value calculated, using the Vehicle Speed Sensor output, when the vehicle is running faster than 30 km/h. The TCM will initiate the fail safe function if this code is detected.

DTC DETECTING CONDITION EF9F8AC3

Item	Detecting Condition	Possible cause
DTC Strategy	• Check voltage range	• Signal circuit is open or short • Sensor power circuit is open • Sensor ground circuit is open • Faulty OUTPUT SPEED SENSOR • Faulty PCM
Enable Conditions	• Vehicle speed is over 19 Mile/h(30 Km/h) in D,3,2,L(A/T range switch) and SP(SPORTS MODE) • Eng revolution ≥ 2600 rpm In 1st or 2nd gear • A/T oil temp sensor voltage < 4.57 V • Not Fail Safe Status	
Threshold value	• If the output from the output speed sensor is continuously 50% lower than the value calculated by vehicle speed sensor	
Diagnostic Time	• More than 1sec	
Fail Safe	• Locked into 3rd or 2nd gear • Apply an electric current to Solenoid valve • Manual shifting is possible(2nd→3rd, 3rd→2nd)	

SPECIFICATION EDEFCFB1

Refer to DTC P0717.

SIGNAL WAVEFORM EB135F12

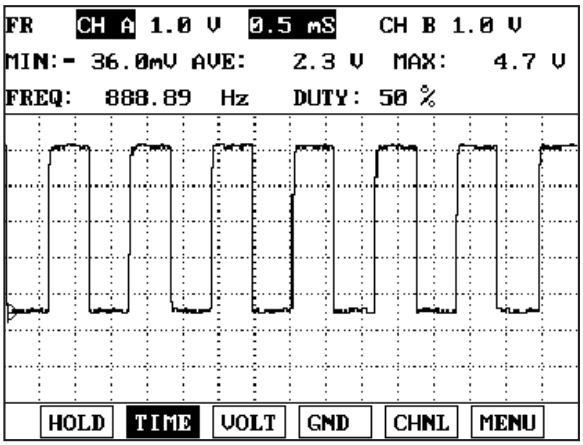

EKBF106A

MONITOR SCANTOOL DATA E0309262

1. Connect scantool to data link connector(DLC).
2. Engine "ON".
3. Monitor the "OUTPUT SPEED SENSOR" parameter on the scantool.
4. Driving at speed of over 30 Km/h(19 mph).

Specification : Increasing Gradually

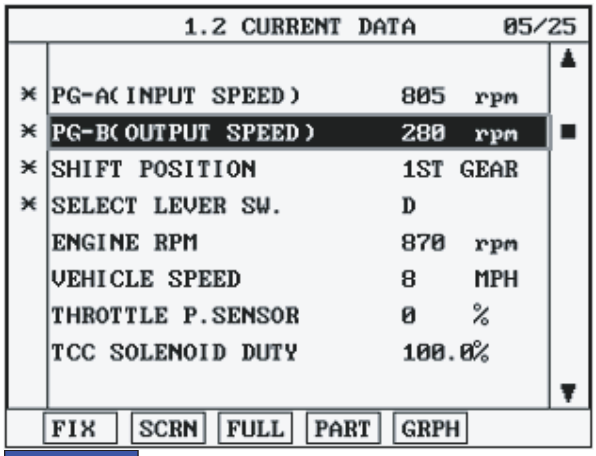

FIG.1)

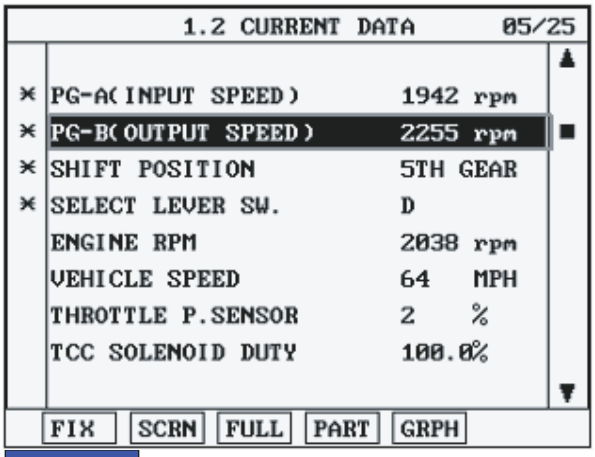

FIG.2)

FIG.1) Low-speed
FIG.2) High-speed

SCMAT6341L

5. Does "Output speed sensor" follow the reference data?

YES

▶ Fault is intermittent caused by poor contact in the sensor's and/or TCM(PCM)'s connector or was repaired and TCM(PCM) memory was not cleared. Thoroughly check connectors for looseness, poor connection, bending, corrosion, contamination, deterioration or damage. Repair or replace as necessary and go to "Verification of Vehicle Repair" procedure.

NO

▶ Go to "Terminal & connector inspection" procedure.

TERMINAL & CONNECTOR INSPECTION EF868D27

Refer to DTC P0717.

SIGNAL CIRCUIT INSPECTION E5D5E9A7

1. Ignition "ON" & Engine "OFF".
2. Disconnect the "OUTPUT SPEED SENSOR" connector.
3. Measure voltage between terminal "2" of the OUTPUT SPEED SENSOR harness connector and chassis ground.

Specification : approx. 5V

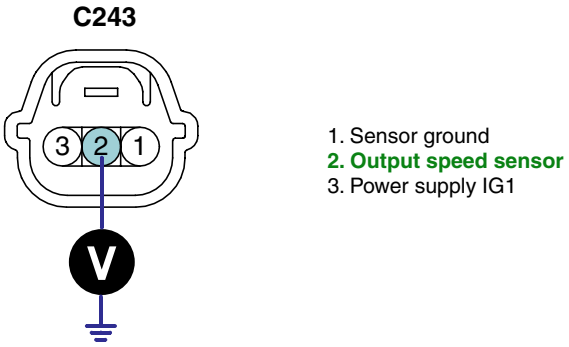

SCMAT6342L

4. Is voltage within specification?

YES

▶ Go to "Power circuit Inspection" procedure.

NO

▶ Check for open or short in harness. Repair as necessary and Go to "Verification of Vehicle Repair" procedure.
▶ If signal circuit in harness is OK, Go to "Check PCM/TCM" of the "Component Inspection" procedure.

POWER SUPPLY CIRCUIT INSPECTION EFB2AF6A

1. Ignition "ON" & Engine "OFF".
2. Disconnect the "OUTPUT SPEED SENSOR" connector.
3. Measure voltage between terminal "3" of the "OUTPUT SPEED SENSOR" harness connector and chassis ground.

Specification : approx. B+

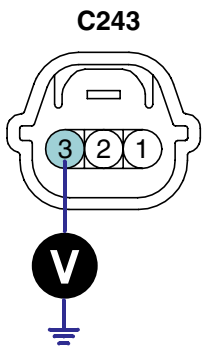

1. Sensor ground
2. Output speed sensor
3. **Power supply IG1**

SCMAT6343L

4. Is voltage within specification?

YES

▶ Go to "Ground circuit inspection" procedure.

NO

▶ Check for open in harness. Repair as necessary and Go to "Verification of Vehicle Repair" procedure.

GROUND CIRCUIT INSPECTION E8A15D01

1. Ignition "ON" & Engine "OFF".
2. Disconnect the "OUTPUT SPEED SENSOR" connector.
3. Measure resistance between terminal "1" of the OUTPUT SPEED SENSOR harness connector and chassis ground.

Specification : approx. 0Ω

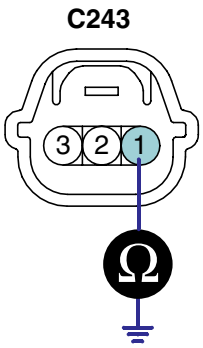

1. **Sensor ground**
2. Output speed sensor
3. Power supply IG1

SCMAT6344L

4. Is resistance within specifications?

YES

▶ Go to "Component Inspection" procedure.

NO

▶ Check for open in harness. Repair as necessary and Go to "Verification of Vehicle Repair" procedure.
▶ If ground circuit is OK, Go to "Check PCM/TCM" of the "Component Inspection" procedure.

COMPONENT INSPECTION E75FB13E

1. Check "OUTPUT SPEED SENSOR"

   1) Ignition "OFF".

   2) Disconnect the "OUTPUT SPEED SENSOR" connector.

   3) Measure resistance between terminal "1","2" and "2","3" and "1","3" of the "OUTPUT SPEED SENSOR" connector.

Specification : Refer to "Reference data"

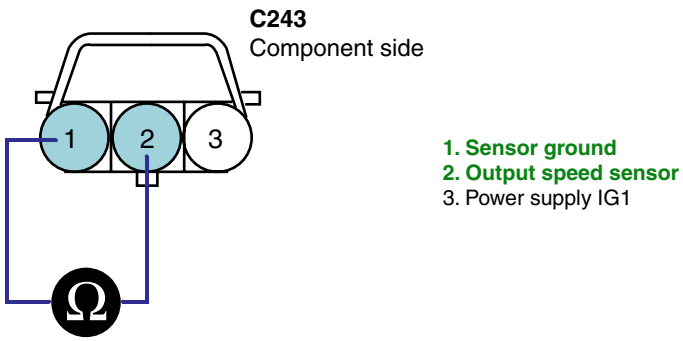

SCMAT6345L

   4) Is resistance within specifications?

[REFERENCE DATA]

Data	Reference Data	
Current	22 mA	
Air Gap	Input sensor	1.3 mm
	Output sensor	0.85 mm
Resistance	Input sensor	Above 4 MΩ
	Output sensor	Above 4 MΩ
Voltage	High	4.8 ~ 5.2V
	Low	Below 0.8V

YES

▶ Go to "CHECK PCM/TCM " as below.

NO

▶ Replace "OUTPUT SPEED SENSOR" as necessary and Go to "Verification of Vehicle Repair" procedure.

2. CHECK PCM/TCM

1) Ignition "ON" & Engine "OFF".

2) Connect "OUTPUT SPEED SENSOR" connector.

3) Install scantool and select a SIMU-SCAN.

4) Simulate frequency to OUTPUT SPEED SENSOR signal circuit.

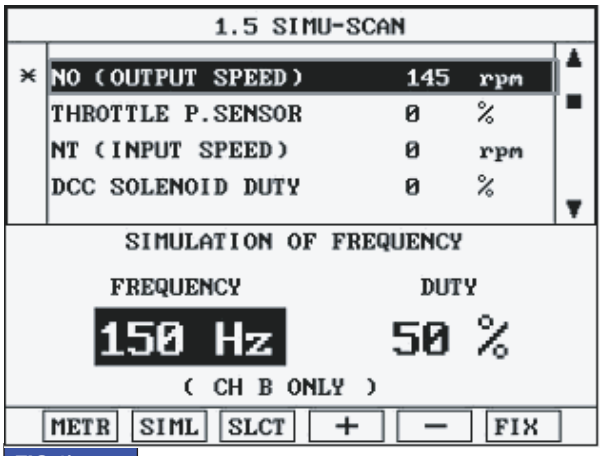

FIG.1)

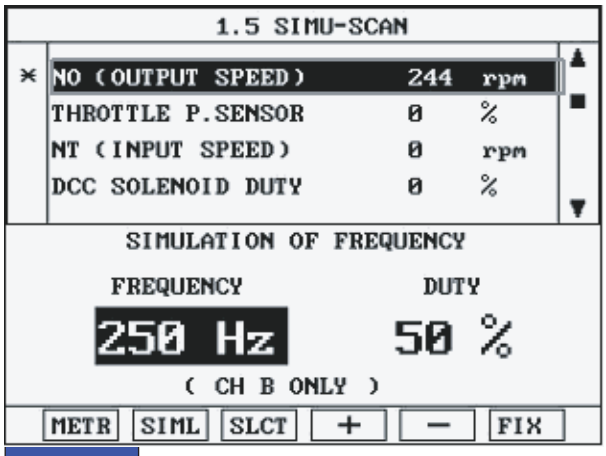

FIG.2)

FIG.1) INPUT 150Hz → 145rpm
FIG.2) INPUT 250Hz → 244rpm

※ The values are subject to change according to vehicle model or conditions

EKBF106G

5) Is "OUTPUT SPEED SENSOR" signal value changed according to simulation frequency?

YES

▶ Thoroughly check connectors for looseness, poor connection, bending, corrosion, contamination, deterioration, or damage. Repair or replace as necessary and then go to "Verification of Vehicle Repair" procedure.

NO

▶ Substitute with a known-good PCM/TCM and check for proper operation. If the problem is corrected, replace PCM/TCM as necessary and then go to "Verification of Vehicle Repair" procedure.

VERIFICATION OF VEHICLE REPAIR EE9B7BA0

Refer to DTC P0717.

DTC P0731 GEAR 1 INCORRECT RATIO

COMPONENT LOCATION E7E3BCB9

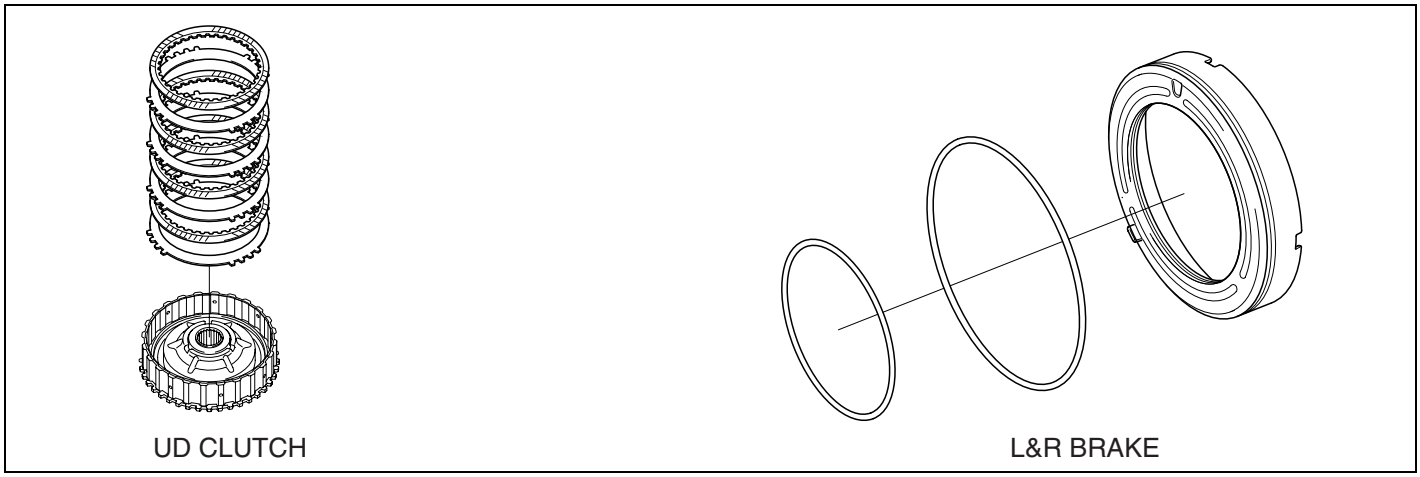

EKBF300A

GENERAL DESCRIPTION E452D379

The value of the input shaft speed should be equal to the value of the output shaft speed, when multiplied by the 1st gear ratio, while the transaxle is engaged in the 1st gear. For example, if the output speed is 1000 rpm and the 1st gear ratio is 4.497, then the input speed is 4,497 rpm.

DTC DESCRIPTION E26B1774

This code is set if the value of input shaft speed is not equal to the value of the output shaft, when multiplied by the 1st gear ratio, while the transaxle is engaged in 1st gear. This malfunction is mainly caused by mechanical troubles such as control valve sticking or solenoid valve malfunctioning rather than an electrical issue.

DTC DETECTING CONDITION EEABEA7B

Item	Detecting Condition	Possible cause
DTC Strategy	• 1st gear incorrect ratio	• Faulty Input speed sensor • Faulty output speed sensor • Faulty UD clutch or LR brake or Oneway clutch
Enable Conditions	• Engine speed > 450rpm • Output speed > 350rpm • After 2 sec is passed from shift finish of shift to 1st gear • Input speed > 0rpm • A/T oil temp > -23.5°C(-9.4°F) • Voltage of Battery > 10V • TRANSAXLE RANGE SWITCH is normal	
Threshold value	• | Input speed - output speed ×1st gear ratio | ≥ 200rpm	
Diagnostic Time	• more than 1sec	
Fail Safe	• Locked into 3rd gear.(If diagnosis code P0731 is output four times, the transaxle is locked into 3rd gear)	

SIGNAL WAVEFORM E4B9132B

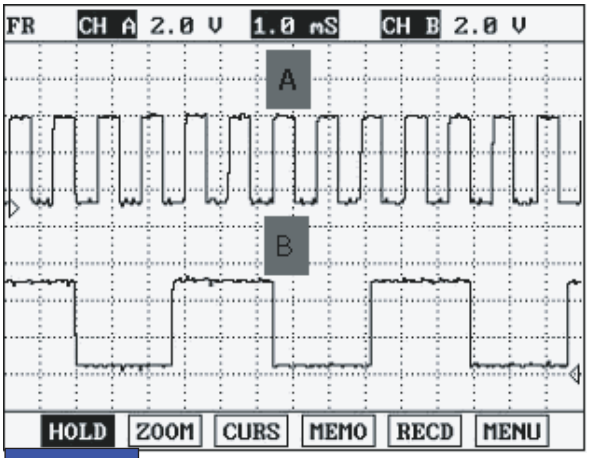

FIG.1)

A : INPUT SPEED SENSOR
B : OUTPUT SPEED SENSOR

EKBF107A

MONITOR SCANTOOL DATA EEFABBAD

1. Connect scan tool to data link connector(DLC).
2. Engine "ON".
3. Monitor the "ENGINE SPEED, INPUT SPEED SENSOR, OUTPUT SPEED SENSOR, GEAR POSITION" parameter on the scan tool.
4. Perform the "STALL TEST" with gear position "1"

Specification : 2100~2800 engine rpm

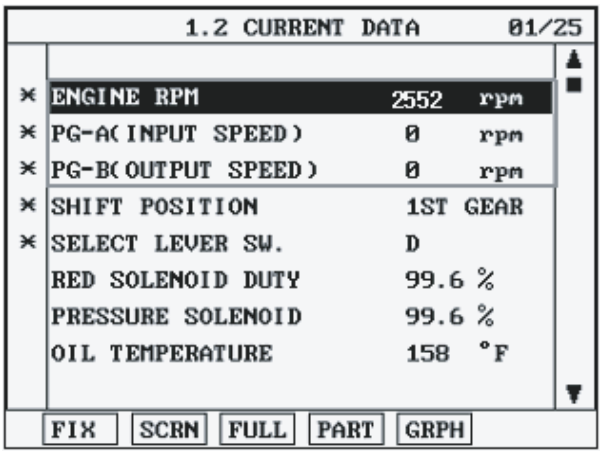

SCMAT6351L

OPERATING ELEMENT OF EACH SHIFTING RANGE

GEAR POSI-TION	ELEMENT								
	L/R BRAKE	2ND BRAKE	U/D CLUTCH	O/D CLUTCH	RED BRAKE	DIR CLUTCH	REV CLUTCH	OWC1	OWC2
1st	O		O		O			●	●
2nd		O	O		O				●
3rd			O	O	O				●
4th		O		O	O				●
5th		O		O		O			
REV	O				O		O		
N,P	O				O				

Low & Reverse Brake is released When the vehicle speed over the 5MPH(7km/h).

Stall test procedure in D1 and reason

Procedure

1. Warm up the engine.
2. After positioning the select lever in "D", depress the foot brake pedal fully after that, depress the accelerator pedal to the maximum.
   * The slippage of 1st gear operating parts can be detected by stall test in D

Reason for stall test

1. If there is no mechanical defaults in A/T, all slippages occurrs in torque converter.
2. Therefore, engine revolution is output, but input and output speed revolution must be "zero" due to wheel's lock.
3. If 1st gear operating part has faults, input speed revolution will be out of specification.
4. If output speed revolution is output. It means that the foot brake force is not applied fully. Remeasuring is required.

5. Is "STALL TEST " within specification?

YES

▶ Go to "Signal circuit inspection" procedure.

NO

▶ Go to "Component inspection" procedure.

CAUTION

1. ***Do not let anybody stand in front of or behind the vehicle while this test is being carried out.***
2. ***Check the A/T fluid level and temperature and the engine coolant temperature.***
   - ***Fluid level : At the hot mark on the oil level gauge.***
   - ***Fluid temperature : 176 °F~ 212 °F (80~100 °C).***
   - ***Engine coolant temperature : 176 °F~ 212 °F (80~100 °C).***
3. ***Chock both rear wheel(left and right).***
4. ***Pull the parking brake lever on with the brake pedal fully depressed.***
5. ***The throttle should not be left fully open for more than eight second.***
6. ***If stall test is being performed more than once, move the selector lever to 'N' and run the engine at 1000 RPM to allow the transaxle fluid to cool prior to subsequent tests.***

SIGNAL CIRCUIT INSPECTION EDA47110

1. Connect Scan tool.
2. Engine "ON".
3. Monitor the "INPUT & OUTPUT SPEED SENSOR" parameter on the scan tool.
4. Accelerate the Engine speed until about 2000 rpm in the 1st gear.

Specification : INPUT SPEED - (OUTPUT SPEED × GEAR RATIO) ≤ 200 RPM

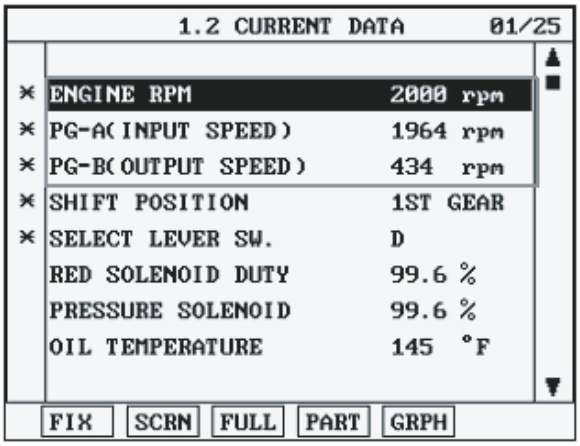

LKKG107E

5. Does "INPUT & OUTPUT SPEED SENSOR" within specifications?

YES

▶ Go to "Component Inspection" procedure.

NO

▶ Check for electrical noise of circuit in INPUT &OUTPUT SPEED SENSOR or Replace INPUT & OUTPUT SPEED SENSOR. Repair as necessary and Go to "Verification of Vehicle Repair" procedure.

COMPONENT INSPECTION E65C8AD4

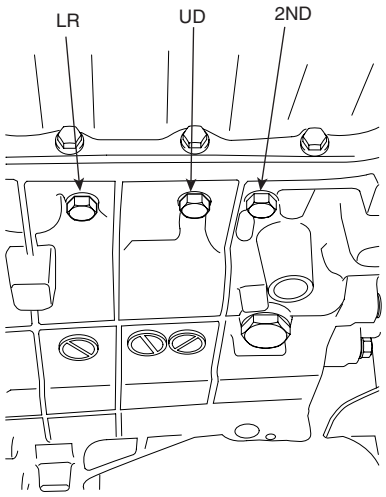

EKBF107D

1. Connect oil pressure gauge to "UD" and "L/R" and "RED" port.
2. Engine "ON".
3. Drive a car with gear position 1 in "SPORTS MODE".
4. Compare it with reference data as below.

Specification : refer to Standard Oil Pressure Table as below

LEVER POSITION	INPUT SPEED	VFS CURRENT	SOLENOID VALVE DUTY (%)						ELEMENT	P(MPa)
			LR	DCC	2ND	UD	OD	RED*		
D	2500rpm	200mA	0	0	100	0	100	0	LR	1.03±0.02
↑	↑	↑	60	↑	↑	↑	↑	↑		0.52±0.04
↑	↑	↑	75	↑	↑	↑	↑	↑		0.23±0.04
↑	↑	↑	100	↑	↑	↑	↑	↑		0
↑	↑	↑	100	↑	0	0	100	0	2ND	1.03±0.02
↑	↑	↑	↑	↑	60	↑	↑	↑		0.55±0.04
↑	↑	↑	↑	↑	75	↑	↑	↑		0.22±0.04
↑	↑	↑	↑	↑	100	↑	↑	↑		0
↑	↑	↑	100	↑	100	0	0	0	OD	1.03±0.02
↑	↑	↑	↑	↑	↑	↑	60	↑		0.52±0.04
↑	↑	↑	↑	↑	↑	↑	75	↑		0.21±0.04
↑	↑	↑	↑	↑	↑	↑	100	↑		0
↑	↑	↑	100	↑	100	0	0	0	UD	1.03±0.02
↑	↑	↑	↑	↑	↑	60	↑	↑		0.47±0.04
↑	↑	↑	↑	↑	↑	75	↑	↑		0.17±0.04
↑	↑	↑	↑	↑	↑	100	↑	↑		0
↑	↑	↑	100	↑	0	100	0	0	RED*	1.03±0.02
↑	↑	↑	↑	↑	↑	↑	↑	60		0.54±0.04
↑	↑	↑	↑	↑	↑	↑	↑	75		0.27±0.04
↑	↑	↑	↑	↑	↑	↑	↑	100		0
↑	↑	↑	100	↑	0	100	0	100	DIR*	0
↑	↑	↑	75	↑	↑	↑	↑	↑		0.27±0.04
↑	↑	↑	60	↑	↑	↑	↑	↑		0.54±0.04
↑	↑	↑	0	↑	↑	↑	↑	↑		1.03±0.02
R	↑	250mA	0	↑	100	100	100	0	LR	1.55±0.25

※ The values are subject to change according to vehicle model or condition.

EKBF107E

5. Is oil pressure value within specifications?

YES

▶ Repair AUTO TRANSAXLE(Clutch or Brake) as necessary and Go to "Verification of Vehicle Repair" procedure.

NO

▶ Replace AUTO TRANSAXLE (BODY CONTROL VALVE faulty) as necessary and Go to "Verification of Vehicle Repair " procedure.

VERIFICATION OF VEHICLE REPAIR E90D4F81

After a repair, it is essential to verify that the fault has been corrected.

1. Connect scantool and select "Diagnostic Trouble Codes(DTCs)" mode.
2. Using a scantool, Clear DTC.
3. Operate the vehicle within DTC Enable conditions in General information.
4. Are any DTCs present ?

YES

▶ Go to the applicable troubleshooting procedure.

NO

▶ System performing to specification at this time.

DTC P0732 GEAR 2 INCORRECT RATIO

COMPONENT LOCATION E0F5DE82

EKBF300B

GENERAL DESCRIPTION E0E24CF7

The value of the input shaft speed should be equal to the value of the output shaft speed, when multiplied by the 2nd gear ratio, while the transaxle is engaged in the 2nd gear. For example, if the output speed is 1000 rpm and the 2nd gear ratio is 2.442, then the input speed is 2,442 rpm.

DTC DESCRIPTION E79E971D

This code is set if the value of input shaft speed is not equal to the value of the output shaft, when multiplied by the 2nd gear ratio, while the transaxle is engaged in 2nd gear. This malfunction is mainly caused by mechanical troubles such as control valve sticking or solenoid valve malfunctioning rather than an electrical issue.

DTC DETECTING CONDITION E6FA6BCA

Item	Detecting Condition	Possible cause
DTC Strategy	• 2nd gear incorrect ratio	• Faulty Input speed sensor • Faulty output speed sensor • Faulty UD clutch or 2nd brake
Enable Conditions	• Engine speed > 450rpm • Output speed > 500rpm • After 2sec is passed from shift finish of shift to 2nd gear • Input speed > 0rpm • A/T oil temp > -23.5°C(-9.4°F) • Voltage of Battery > 10V • TRANSAXLE RANGE SWITCH is normal	
Threshold value	• | Input speed/2nd gear ratio - output speed | ≥ 200rpm	
Diagnostic Time	• more than 1sec	
Fail Safe	• Locked into 3 rd gear.(If diagnosis code P0732 is output four times, the transaxle is locked into 3rd gear)	

SIGNAL WAVEFORM E6EC8EC1

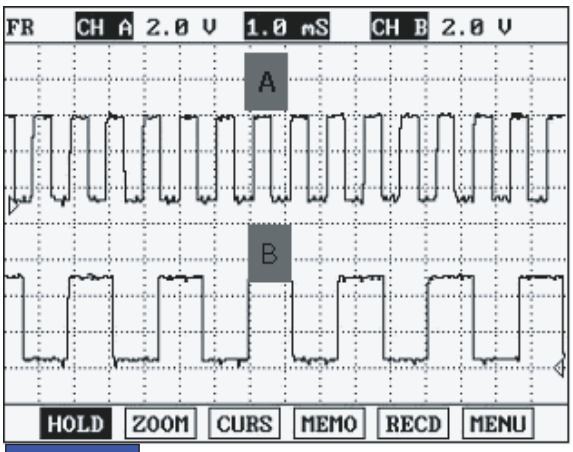

FIG.1)

A : INPUT SPEED SENSOR
B : OUTPUT SPEED SENSOR

EKBF108A

MONITOR SCANTOOL DATA E10BDE50

1. Connect scan tool to data link connector(DLC).
2. Engine "ON".
3. Monitor the "ENGINE SPEED, INPUT SPEED SENSOR, OUTPUT SPEED SENSOR, GEAR POSITION" parameter on the scan tool.
4. Perform the "STALL TEST" with gear position "2".

Specification : 2100~2800 engine rpm

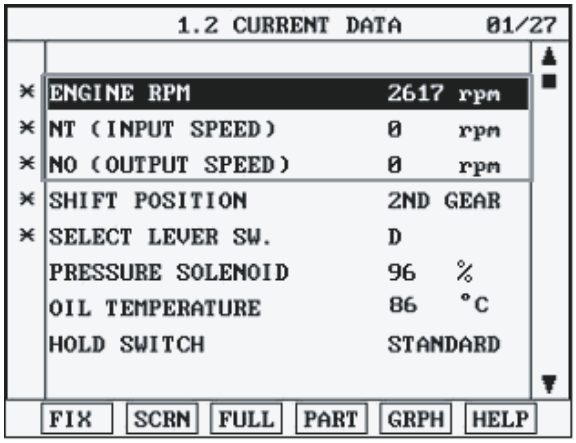

EKBF108B

OPERATING ELEMENT OF EACH SHIFTING RANGE

GEAR POSI-TION	ELEMENT								
	L/R BRAKE	2ND BRAKE	U/D CLUTCH	O/D CLUTCH	RED BRAKE	DIR CLUTCH	REV CLUTCH	OWC1	OWC2
1st	O		O		O			●	●
2nd		O	O		O				●
3rd			O	O	O				●
4th		O		O	O				●
5th		O		O		O			
REV	O				O		O		
N,P	O				O				

Low & Reverse Brake is released When the vehicle speed over the 5MPH(7km/h)

Stall test procedure in D2 and reason

Procedure

1. Warm up the engine.
2. After positioning the select lever in "D" or "ON" of the HOLD SW (Operate UP SHIFT in case of "SPORTS MODE"),depress the foot brake pedal fully after that, depress the accelerator pedal to the maximum.
   * The slippage of 2nd gear operating parts can be detected by stall test in D2.

Reason for stall test

1. If there is no mechanical defaults in A/T, all slippages occurrs in torque converter.
2. Therefore, engine revolution is output, but input and output speed revolution must be "zero" due to wheel's lock.
3. If 2nd brake system(2nd gear operating part) has faults, input speed revolution will be out of specification.
4. If output speed revolution is output. It means that the foot brake force is not applied fully. Remeasuring is required.

5. Is "STALL TEST " within specification?

YES

▶ Go to "Signal circuit inspection" procedure.

NO

▶ Go to "Component inspection" procedure.

CAUTION

1. ***Do not let anybody stand in front of or behind the vehicle while this test is being carried out.***
2. ***Check the A/T fluid level and temperature and the engine coolant temperature.***
   - ***Fluid level : At the hot mark on the oil level gauge.***
   - ***Fluid temperature : 176 °F~ 212 °F (80~100 °C).***
   - ***Engine coolant temperature : 176 °F~ 212 °F (80~100 °C).***
3. ***Chock both rear wheel(left and right).***
4. ***Pull the parking brake lever on with the brake pedal fully depressed.***
5. ***The throttle should not be left fully open for more than eight second.***
6. ***If stall test is being performed more than once, move the selector lever to 'N' and run the engine at 1000 RPM to allow the transaxle fluid to cool prior to subsequent tests.***

SIGNAL CIRCUIT INSPECTION E4CCFA74

1. Connect Scantool.
2. Engine "ON".
3. Monitor the "INPUT & OUTPUT SPEED SENSOR" parameter on the scantool.
4. Accelerate the Engine speed until about 2000 rpm in the 2nd gear.

Specification : INPUT SPEED - (OUTPUT SPEED × GEAR RATIO) ≤ 200 RPM

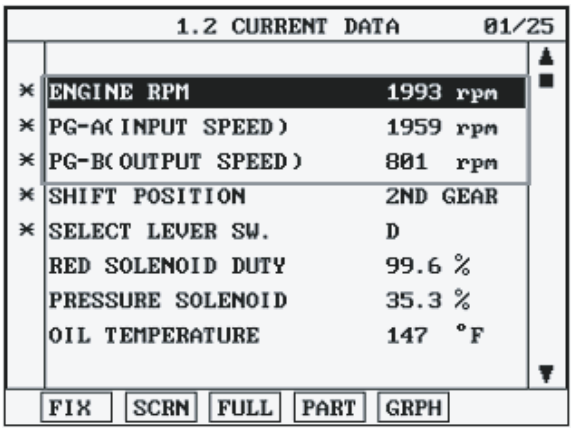

LKKG108E

5. Does "INPUT & OUTPUT SPEED SENSOR" within specifications?

YES

▶ Go to "Component Inspection" procedure.

NO

▶ Check for electrical noise of circuit in INPUT & OUTPUT SPEED SENSOR or Replace INPUT & OUTPUT SPEED SENSOR. Repair as necessary and Go to "Verification of Vehicle Repair" procedure.

COMPONENT INSPECTION E682A591

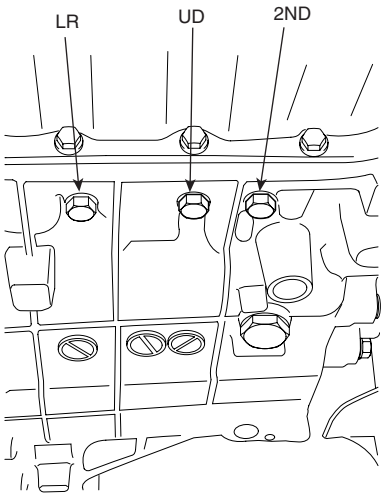

EKBF108D

1. Connect oil pressure gauge to "UD" and "2ND" and "RED" port.
2. Engine "ON".
3. Drive a car with gear position 2 in "SPORTS MODE".
4. Compare it with reference data as below.

Specification : Refer to DTC P0731

5. Is oil pressure value within specifications?

YES

▶ Repair AUTO TRANSAXLE(Clutch or Brake) as necessary and Go to "Verification of Vehicle Repair" procedure.

NO

▶ Replace AUTO TRANSAXLE (BODY CONTROL VALVE faulty) as necessary and Go to "Verification of Vehicle Repair " procedure.

VERIFICATION OF VEHICLE REPAIR E3F6C260

Refer to DTC P0731.

DTC P0733 GEAR 3 INCORRECT RATIO

COMPONENT LOCATION E82A95B5

EKBF300E

GENERAL DESCRIPTION E2F0A586

The value of the input shaft speed should be equal to the value of the output shaft speed, when multiplied by the 3rd gear ratio, while the transaxle is engaged in the 3rd gear. For example, if the output speed is 1,000 rpm and the 3rd gear ratio is 1.686, then the input speed is 1,686 rpm.

DTC DESCRIPTION E6DFDA57

This code is set if the value of input shaft speed is not equal to the value of the output shaft, when multiplied by the 3rd gear ratio, while the transaxle is engaged in 3rd gear. This malfunction is mainly caused by mechanical troubles such as control valve sticking or solenoid valve malfunctioning rather than an electrical issue.

DTC DETECTING CONDITION E0EAA5E4

Item	Detecting Condition	Possible cause
DTC Strategy	• 3rd gear incorrect ratio	• Faulty Input speed sensor • Faulty output speed sensor • Faulty UD clutch or OD clutch
Enable Conditions	• Engine speed > 450rpm • Output speed > 900rpm • After 2 sec is passed from shift finish of shift to 3rd gear • Input speed > 0rpm • A/T oil temp > -23.5°C(-9.4°F) • Voltage of Battery > 10V • TRANSAXLE RANGE SWITCH is normal	
Threshold value	• | Input speed/3rd gear ratio - output speed | ≥ 200rpm	
Diagnostic Time	• more than 1sec	
Fail Safe	• Locked into 3 rd gear.(If diagnosis code P0733 is output four times, the transaxle is locked into 3rd gear)	

SIGNAL WAVEFORM EBA5589F

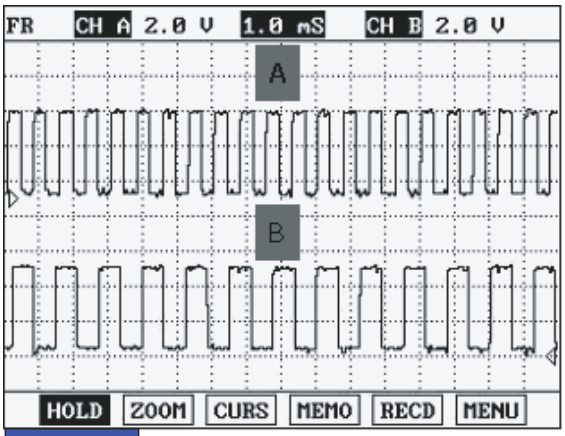

FIG.1)

A : INPUT SPEED SENSOR
B : OUTPUT SPEED SENSOR

EKBF109A

MONITOR SCANTOOL DATA E7787F30

1. Connect scan tool to data link connector(DLC).
2. Engine "ON".
3. Monitor the "ENGINE SPEED, INPUT SPEED SENSOR, OUTPUT SPEED SENSOR, GEAR POSITION" parameter on the scan tool.
4. Disconnect the solenoid valve connector and perform the "STALL TEST".

Specification : 2100~2800 engine rpm

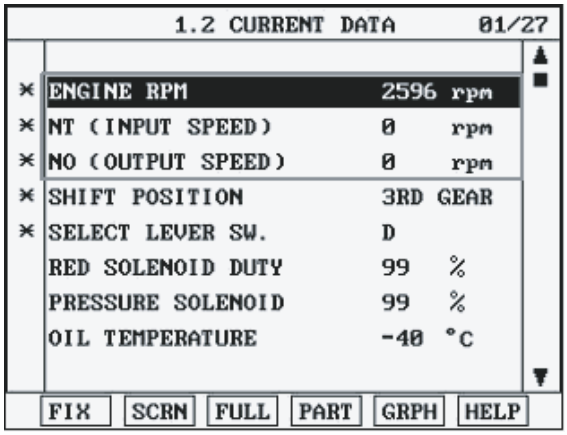

EKBF109B

OPERATING ELEMENT OF EACH SHIFTING RANGE

GEAR POSI-TION	ELEMENT								
	L/R BRAKE	2ND BRAKE	U/D CLUTCH	O/D CLUTCH	RED BRAKE	DIR CLUTCH	REV CLUTCH	OWC1	OWC2
1st	O		O		O			●	●
2nd		O	O		O				●
3rd			O	O	O				●
4th		O		O	O				●
5th		O		O		O			
REV	O				O		O		
N,P	O				O				

Low & Reverse Brake is released When the vehicle speed over the 5MPH(7km/h)

Stall test procedure in D3 and reason

Procedure

1. Warm up the engine.
2. After making 3rd gear hold by disconnecting the solenoid connector, and Then depress the foot brake pedal fully After that, step on the accelerator pedal to the maximum.
   * The slippage of 3rd gear operating parts can be detected by stall test in D3.

Reason for stall test

1. If there is no mechanical defaults in A/T, all slippages occurrs in torque converter.
2. Therefore, engine revolution is output, but input and output speed revolution must be "zero" due to wheel's lock.
3. If OD clutch system(3rd gear operating part) has faults, input speed revolution will be out of specification.
4. If output speed revolution is output. It means that the foot brake force is not applied fully. Remeasuring is required.

5. Is "STALL TEST " within specification?

YES

▶ Go to "Signal circuit inspection" procedure.

NO

▶ Go to "Component inspection" procedure.

CAUTION

1. ***Do not let anybody stand in front of or behind the vehicle while this test is being carried out.***
2. ***Check the A/T fluid level and temperature and the engine coolant temperature.***
   - ***Fluid level : At the hot mark on the oil level gauge.***
   - ***Fluid temperature : 176 °F~ 212 °F (80~100 °C).***
   - ***Engine coolant temperature : 176 °F~ 212 °F (80~100 °C).***
3. ***Chock both rear wheel(left and right).***
4. ***Pull the parking brake lever on with the brake pedal fully depressed.***
5. ***The throttle should not be left fully open for more than eight second.***
6. ***If stall test is being performed more than once, move the selector lever to 'N' and run the engine at 1000 RPM to allow the transaxle fluid to cool prior to subsequent tests.***

SIGNAL CIRCUIT INSPECTION E88593BD

1. Connect Scantool.
2. Engine "ON".
3. Monitor the "INPUT & OUTPUT SPEED SENSOR" parameter on the scantool.
4. Accelerate the Engine speed until about 2000 rpm in the 3rd gear.

Specification : INPUT SPEED - (OUTPUT SPEED × GEAR RATIO) ≤ 200 RPM

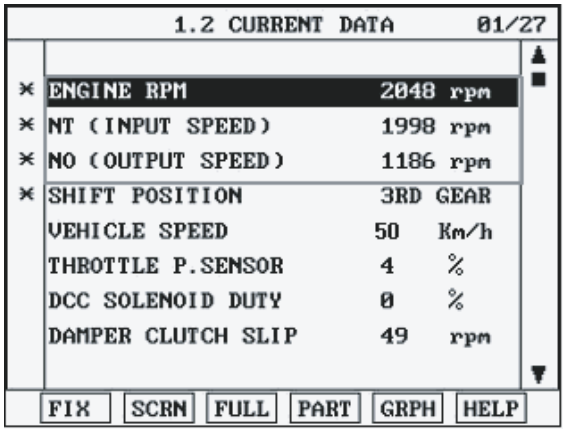

EKBF109C

5. Is "INPUT & OUTPUT SPEED SENSOR" within specifications?

YES

▶ Go to "Component Inspection" procedure.

NO

▶ Check for electrical noise of circuit in INPUT & OUTPUT SPEED SENSOR or Replace INPUT & OUTPUT SPEED SENSOR. Repair as necessary and Go to "Verification of Vehicle Repair" procedure .

COMPONENT INSPECTION EBA7A39D

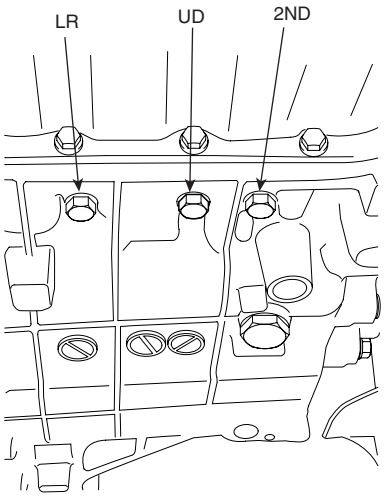

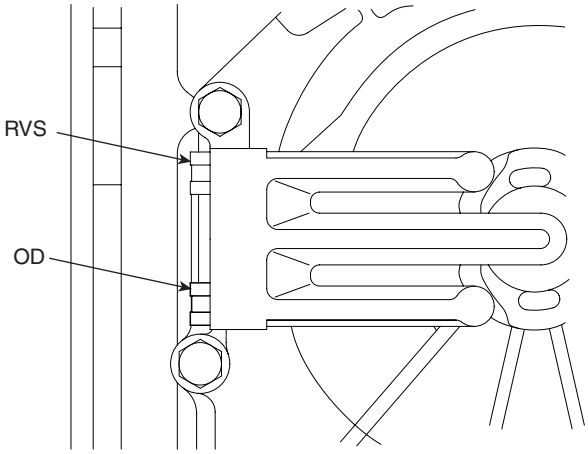

EKBF109D

1. Connect oil pressure gauge to "UD" and "OD" and "RED" port.
2. Engine "ON".
3. Drive a car with gear position 3 in "SPORTS MODE".
4. Compare it with reference data as below.

Specification : Refer to DTC P0731

5. Is oil pressure value within specifications?

YES

▶ Repair AUTO TRANSAXLE(Clutch or Brake) as necessary and Go to "Verification of Vehicle Repair" procedure.

NO

▶ Replace AUTO TRANSAXLE (BODY CONTROL VALVE faulty) as necessary and Go to "Verification of Vehicle Repair" procedure.

VERIFICATION OF VEHICLE REPAIR E30B2DBE

Refer to DTC P0731.

DTC P0734 GEAR 4 INCORRECT RATIO

COMPONENT LOCATION E32F0641

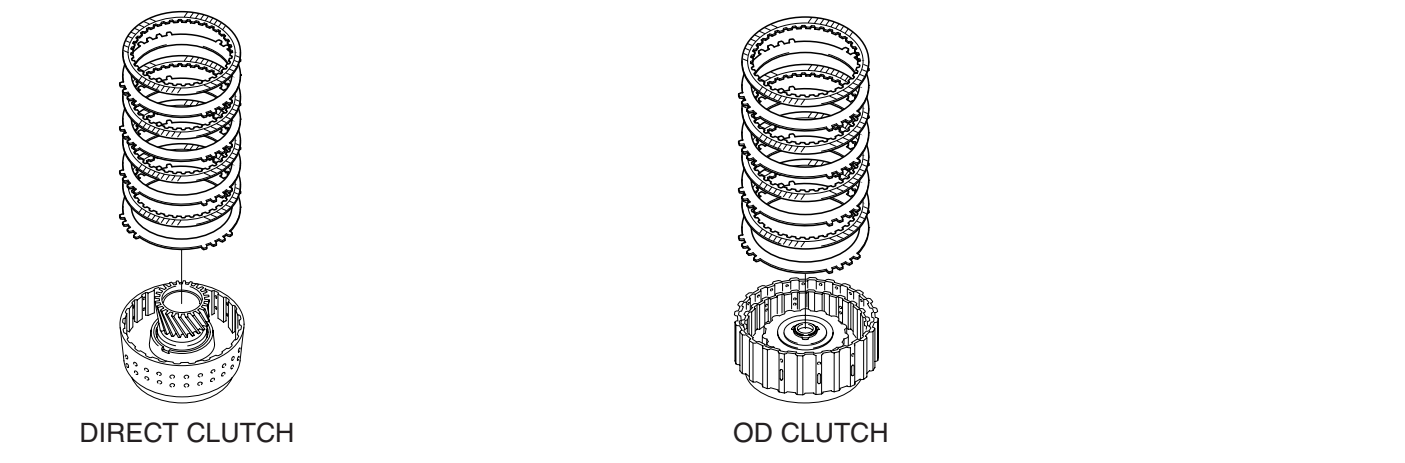

EKBF300D

GENERAL DESCRIPTION ECF8BAB8

The value of the input shaft speed should be equal to the value of the output shaft speed, when multiplied by the 4th gear ratio, while the transaxle is engaged in the 4th gear. For example, if the output speed is 1,000 rpm and the 4th gear ratio is 1.233, then the input speed is 1,233 rpm.

DTC DESCRIPTION E1BE8B16

This code is set if the value of input shaft speed is not equal to the value of the output shaft, when multiplied by the 4th gear ratio, while the transaxle is engaged in 4th gear. This malfunction is mainly caused by mechanical troubles such as control valve sticking or solenoid valve malfunctioning rather than an electrical issue.

DTC DETECTING CONDITION EDC1DA1C

Item	Detecting Condition	Possible cause
DTC Strategy	• 4th gear incorrect ratio	• Faulty Input speed sensor • Faulty output speed sensor • Faulty UD clutch or 2nd brake
Enable Conditions	• Engine speed > 450rpm • Output speed > 900rpm • After 2 sec is passed from shift finish of shift to 4th gear • Input speed > 0rpm • A/T oil temp sensor voltage < 4.5V • Voltage of Battery > 10V • TRANSAXLE RANGE SWITCH is normal	
Threshold value	• | Input speed/4th gear ratio - output speed | ≥ 200rpm	
Diagnostic Time	• More than 1sec	
Fail Safe	• Locked into 3 rd gear.(If diagnosis code P0734 is output four times, the transaxle is locked into 3rd gear)	

SIGNAL WAVEFORM E1A2A310

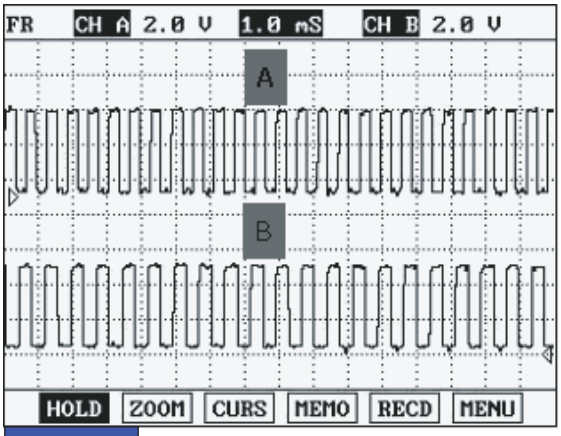

FIG.1)

A : INPUT SPEED SENSOR
B : OUTPUT SPEED SENSOR

EKBF110A

MONITOR SCANTOOL DATA E3711A1E

※ Go to "Signal circuit Inspection" procedure.

OPERATING ELEMENT OF EACH SHIFTING RANGE

GEAR POSI-TION	ELEMENT								
	L/R BRAKE	2ND BRAKE	U/D CLUTCH	O/D CLUTCH	RED BRAKE	DIR CLUTCH	REV CLUTCH	OWC1	OWC2
1st	O		O		O			●	●
2nd		O	O		O				●
3rd			O	O	O				●
4th		O		O	O				●
5th		O		O		O			
REV	O				O		O		
N,P	O				O				

Low & Reverse Brake is released When the vehicle speed over the 5MPH(7km/h)

SIGNAL CIRCUIT INSPECTION E90DE02D

1. Connect Scantool.
2. Engine "ON".
3. Monitor the "INPUT & OUTPUT SPEED SENSOR" parameter on the scantool.
4. Accelerate the Engine speed until about 2000 rpm in the 4th gear.

Specification : INPUT SPEED - (OUTPUT SPEED × GEAR RATIO) ≤ 200 RPM

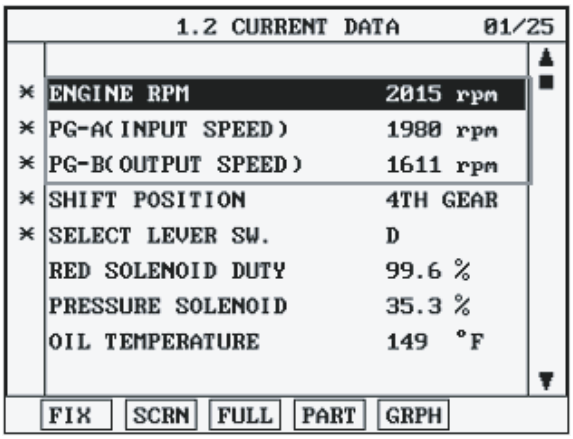

LKKG110D

5. Is "INPUT & OUTPUT SPEED SENSOR" within specifications?

YES

▶ Go to "Component Inspection" procedure.

NO

▶ Check for electrical noise of circuit in INPUT & OUTPUT SPEED SENSOR or Replace INPUT & OUTPUT SPEED SENSOR. Repair as necessary and Go to "Verification of Vehicle Repair" procedure.

COMPONENT INSPECTION EF8ABA6E

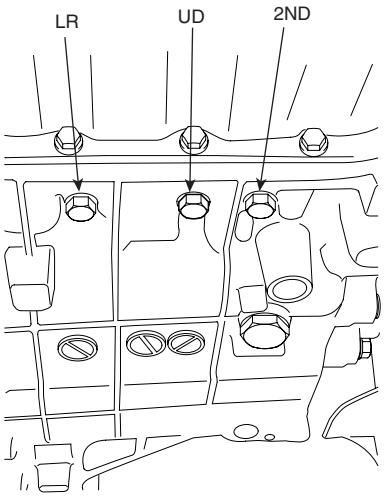

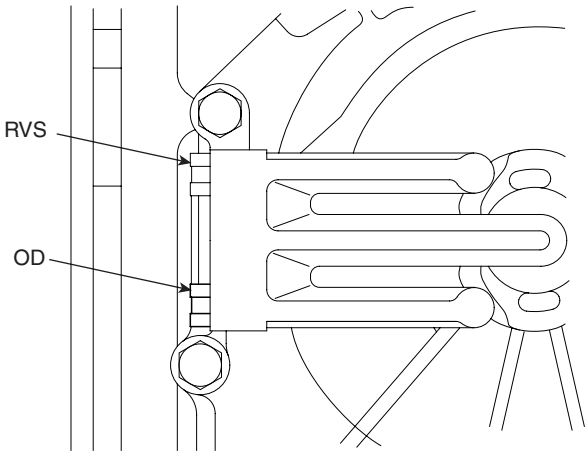

EKBF110C

1. Connect oil pressure gauge to "2ND" and "OD" and "RED" port.
2. Engine "ON".
3. Drive a car with gear position 4 in "SPORTS MODE".
4. Compare it with reference data as below.

Specification : Refer to DTC P0731

5. Is oil pressure value within specifications?

YES

▶ Repair AUTO TRANSAXLE(Clutch or Brake) as necessary and Go to "Verification of Vehicle Repair" procedure.

NO

▶ Replace AUTO TRANSAXLE (BODY CONTROL VALVE faulty) as necessary and Go to "Verification of Vehicle Repair" procedure.

VERIFICATION OF VEHICLE REPAIR E4FEA9B6

Refer to DTC P0731.

DTC P0735 GEAR 5 INCORRECT RATIO

COMPONENT LOCATION E7F59CA4

EKBF300C

GENERAL DESCRIPTION E2F16E1A

The value of the input shaft speed should be equal to the value of the output shaft speed, when multiplied by the 5th gear ratio, while the transaxle is engaged in the 5th gear. For example, if the output speed is 1,000 rpm and the 5th gear ratio is 0.868, then the input speed is 868 rpm.

DTC DESCRIPTION E0A9DE14

This code is set if the value of input shaft speed is not equal to the value of the output shaft, when multiplied by the 5th gear ratio, while the transaxle is engaged in 5th gear. This malfunction is mainly caused by mechanical troubles such as control valve sticking or solenoid valve malfunctioning rather than an electrical issue.

DTC DETECTING CONDITION E705144B

Item	Detecting Condition	Possible cause
DTC Strategy	• 5th gear incorrect ratio	• Faulty Input speed sensor • Faulty output speed sensor • Faulty UD clutch or 2nd brake
Enable Conditions	• Engine speed > 450rpm • Output speed > 900rpm • After 2 sec is passed from shift finish of shift to 5th gear • Input speed > 0rpm • A/T oil temp sensor voltage < 4.5V • Voltage of Battery > 10V • TRANSAXLE RANGE SWITCH is normal	
Threshold value	• | Input speed/5th gear ratio - output speed | ≥ 200rpm	
Diagnostic Time	• More than 1sec	
Fail Safe	• Locked into 3 rd gear.(If diagnosis code 0735 is output four times, the transaxle is locked into 3rd gear)	

SIGNAL WAVEFORM EE9B7FFF

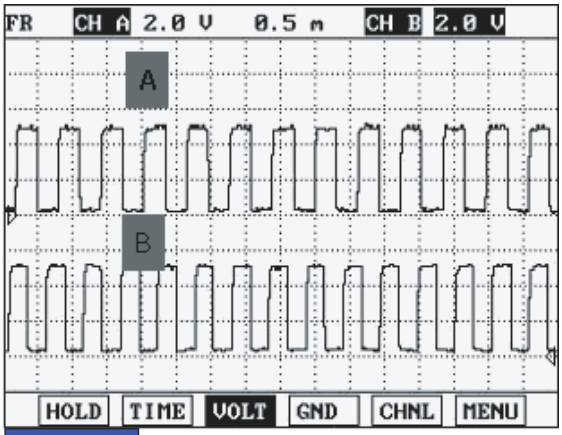

FIG.1)

A : INPUT SPEED SENSOR
B : OUTPUT SPEED SENSOR

EKBF111A

MONITOR SCANTOOL DATA E4E5CFF7

※ Go to "Signal circuit Inspection" procedure

OPERATING ELEMENT OF EACH SHIFTING RANGE

GEAR POSI-TION	ELEMENT								
	L/R BRAKE	2ND BRAKE	U/D CLUTCH	O/D CLUTCH	RED BRAKE	DIR CLUTCH	REV CLUTCH	OWC1	OWC2
1st	O		O		O			●	●
2nd		O	O		O				●
3rd			O	O	O				●
4th		O		O	O				●
5th		O		O		O			
REV	O				O		O		
N,P	O				O				

Low & Reverse Brake is released When the vehicle speed over the 5MPH(7km/h)

SIGNAL CIRCUIT INSPECTION E96CF16A

1. Connect Scan tool.
2. Engine "ON".
3. Monitor the "INPUT & OUTPUT SPEED SENSOR" parameter on the scan tool.
4. Accelerate the Engine speed until about 2000 rpm in the 5th gear.

Specification : INPUT SPEED - (OUTPUT SPEED × GEAR RATIO) ≤ 200 RPM

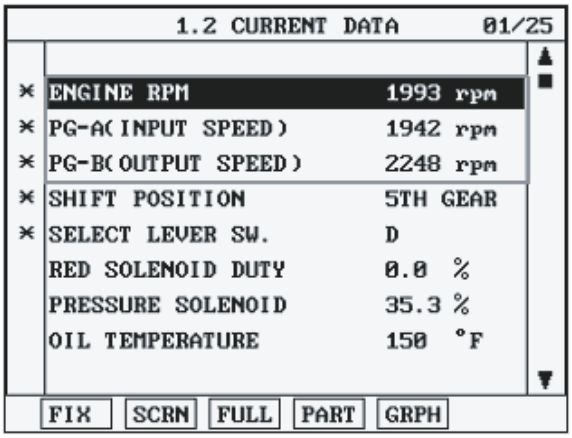

LKKG111D

5. Does "INPUT & OUTPUT SPEED SENSOR" follow the reference data?

YES

▶ Go to "Component Inspection" procedure.

NO

▶ Check for electrical noise of circuit in INPUT & OUTPUT SPEED SENSOR or Replace INPUT & OUTPUT SPEED SENSOR. Repair as necessary and Go to "Verification of Vehicle Repair" procedure.

COMPONENT INSPECTION E4A28F94

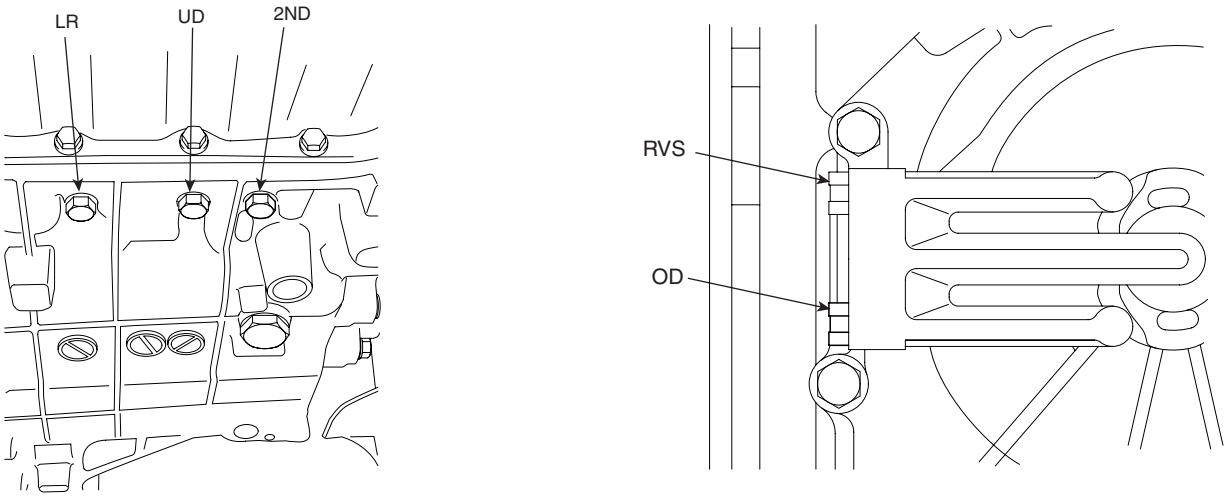

EKBF111C

1. Connect oil pressure gauge to "OD" and "2nd" and "DIR" port.
2. Engine "ON".
3. Drive a car with gear position "5".
4. Compare it with reference data as below.

Specification : Refer to DTC P0731

5. Is oil pressure value within specification?

YES

▶ Repair AUTO TRANSAXLE(Clutch or Brake) as necessary and Go to "Verification of Vehicle Repair" procedure.

NO

▶ Replace AUTO TRANSAXLE (BODY CONTROL VALVE faulty) as necessary and Go to "Verification of Vehicle Repair" procedure.

VERIFICATION OF VEHICLE REPAIR E06AE1A6

Refer to DTC P0731.

DTC P0741 TORQUE CONVERTER CLUTCH CIRCUIT - STUCK OFF

GENERAL DESCRIPTION E07758A2

The PCM/TCM controls the locking and unlocking of the Torque Converter Clutch (or Damper Clutch), to the input shaft of the transmission, by appling hydraulic pressure. The main purpose of T/C clutch control is to save fuel by decreasing the hydraulic load inside the T/C. The PCM/TCM outputs duty pulses to control the Damper Clutch Control Solenoid Valve(DCCSV) and hydraulic pressure is applied to the DC according to the DCC duty ratio value. When the duty ratio is high, high pressure is applied and the Damper Clutch is locked. The normal operating range of the Damper Clutch Control duty ratio value is from 30%(unlocked) to 85%(locked).

DTC DESCRIPTION EAAEC30F

The PCM/TCM increases the duty ratio to engage the Damper Clutch by monitoring slip rpms (difference vlaue beteween engine speed and turbine speed). To decrease the slip of the Damper Clutch, the PCM/TCM increases the duty ratio by appling more hyraulic pressure. When slip rpm does not drop with 100% duty ratio, the PCM/TCM determines that the Torque Converter Clutch is stuck OFF and sets this code.

DTC DETECTING CONDITION E5D59CBB

Item	Detecting Condition	Possible cause
DTC Strategy	• Stuck "OFF"	※ TORQUE CON-VERTER(DAMPER) CLUTCH : TCC • Faulty TCC or oil pressure system • Faulty TCC solenoid valve • Faulty body control valve • Faulty PCM/TCM
Enable Conditions	• DCC Solenoid valve is being controled • DCC Solenoid valve duty rate is 100% • Not FailSafe Status • IG "ON"	
Threshold value	• Detected abnormal slip	
Diagnostic Time	• more than 4sec	
Fail Safe	• Damper clutch abnormal system (If diagnosis code P0741 is output four times, TORQUE CONVERTER(DAMPER) CLUTCH is not controlled by PCM/TCM)	

MONITOR SCANTOOL DATA E19AD886

1. Connect scantool to data link connector(DLC).
2. Engine "ON".
3. Select "D RANGE" and drive vehicle.
4. Monitor the "TORQUE CONVERTER(DAMPER) CLUTCH" parameter on the scantool.

Specification : TCC SLIP < 160RPM(In condition that TCC SOL. DUTY > 80%)

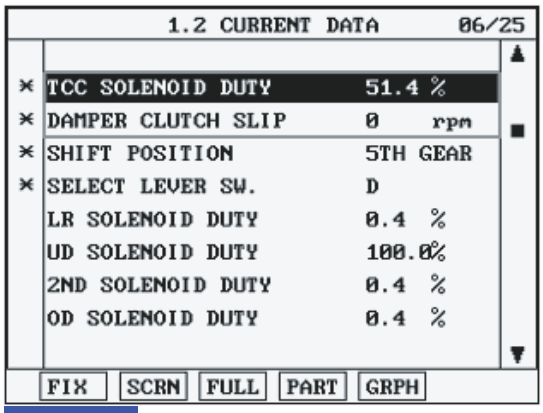

FIG.1)

FIG.1) : Normal status

SCMAT6352L

5. Are "TCC SOLENOID DUTY and TCC SLIP" within specifications?

YES

▶ Fault is intermittent caused by poor contact in the sensor's and/or TCM(PCM)'s connector or was repaired and TCM(PCM) memory was not cleared. Thoroughly check connectors for looseness, poor connection, bending, corrosion, contamination, deterioration or damage. Repair or replace as necessary and go to "Verification of vehicle repair" procedure.

NO

▶ Go to "Component inspection" procedure.

COMPONENT INSPECTION E6C4F1B9

1. CHECK TORQUE CONVERTER CLUTCH SOLENOID VALVE

   1) Connect scantool to data link connector(DLC).

   2) Ignition "ON" & Engine "OFF".

   3) Select A/T solenoid valve actuator test and operate actuator test.

   4) Can you hear operating tone for using TCC SOLENOID VALVE actuator testing function?

   YES

   ▶ Go to "CHECK OIL PRESSURE" as below.

   NO

   ▶ Replace "TCC SOLENOID VALVE" as necessary and go to "Verification of vehicle repair" procedure.

2. CHECK OIL PRESSURE

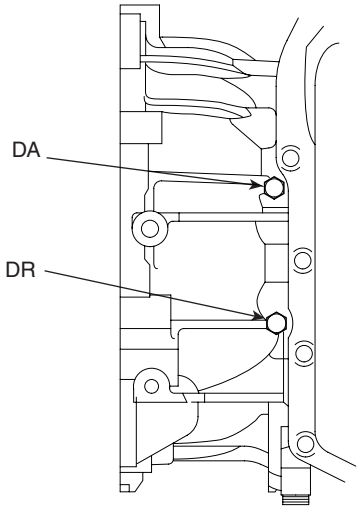

KKCF212B

   1) Connect oil pressure gauge to "DA" ports.

   2) Engine "ON".

   3) After connecting Scantool and monitor the "TCC SOLENIOD VALVE DUTY" parameter on the scantool data list.

   4) Operate vehicle with 3rd or 4th gear and operate the "TCC SOLENIOD VALVE DUTY" more than 85%.

Specification : Oil pressure gauge approx 735.4960KPa(7.5kg/㎠)-(In condition that TCC SOL. DUTY > 85%)

5) Is oil pressure value within specification?

YES

▶ Repair TORQUE CONVERTER CLUTCH(REPLACE Torque Converter) as necessary and go to "Verification of vehicle repair" procedure.

NO

▶ Replace A/T assembly (or valve body assembly) as necessary and go to "Verification of vehicle repair" procedure.

VERIFICATION OF VEHICLE REPAIR EAFEDF81

After a repair, it is essential to verify that the fault has been corrected.

1. Connect scantool and select "Diagnostic Trouble Codes(DTCs)" mode.
2. Using a scantool, Clear DTC.
3. Operate the vehicle within DTC Enable conditions in General information.
4. Are any DTCs present ?

YES

▶ Go to the applicable troubleshooting procedure.

NO

▶ System performing to specification at this time.

DTC P0743 TORQUE CONVERTER CLUTCH CIRCUIT - ELECTRICAL

COMPONENT LOCATION EEF13DF1

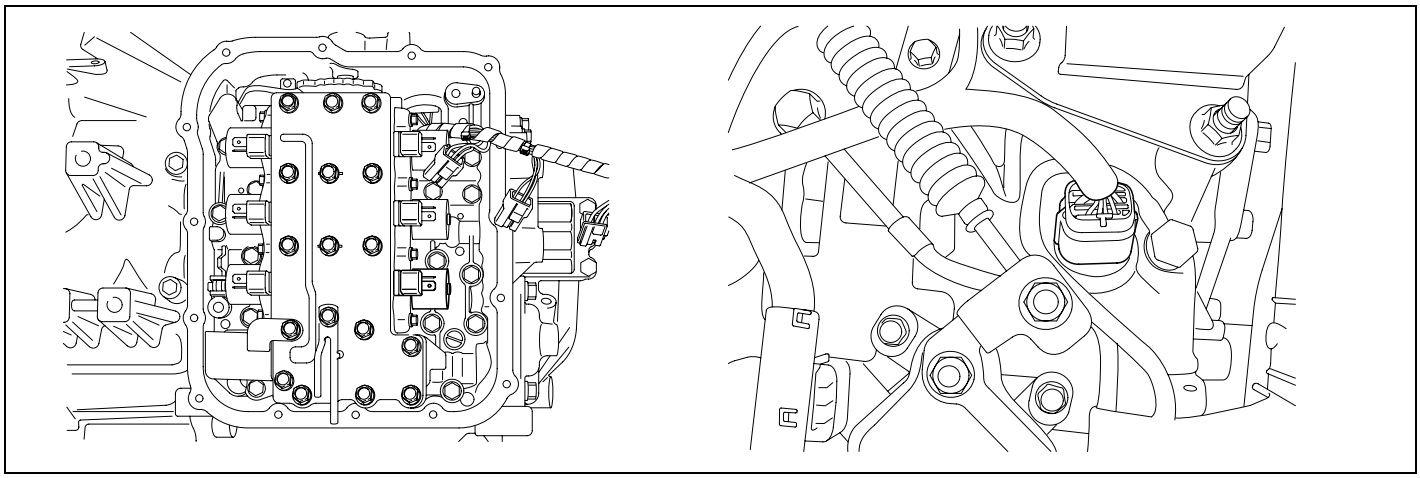

AKKF116A

GENERAL DESCRIPTION E5CEBC87

The PCM/TCM controls the locking and unlocking of the Torque Converter Clutch (or Damper Clutch), to the input shaft of the transmission, by appling hydraulic pressure. The main purpose of T/C clutch control is to save fuel by decreasing the hydraulic load inside the T/C. The PCM/TCM outputs duty pulses to control the Damper Clutch Control Solenoid Valve(DCCSV) and hydraulic pressure is applied to the DC according to the DCC duty ratio value. When the duty ratio is high, high pressure is applied and the Damper Clutch is locked. The normal operating range of the Damper Clutch Control duty ratio value is from 30%(unlocked) to 85%(locked).

DTC DESCRIPTION E7853B62

The PCM/TCM checks the Damper Clutch Control Signal by monitoring the feedback signal from the solenoid valve drive circuit. If an unexpected signal is monitored (for example, high voltage is detected when low voltage is expected, or low voltage is detected when high voltage is expected) the PCM/TCM judges that DCCSV circuit is malfunctioning and sets this code.

DTC DETECTING CONDITION E2767337

Item	Detecting Condition	Possible cause
DTC Strategy	• Stuck "ON"	※ TORQUE CONVERTER(DAMPER) CLUTCH : TCC • Faulty TCC or oil pressure system • Faulty TCC solenoid valve • Faulty body control valve • Faulty TCM(PCM)
Enable Conditions	• DCC Solenoid valve is being controlled • Voltage of AT relay ≥ 10V • Not Fail Safe Status • IG "ON"	
Threshold value	• DCC Solenoid valve status "OPEN" or "GROUND SHORT"	
Diagnostic Time	• more than 320msec	
Fail Safe	• Locked in 3 rd gear.(Control relay off)	

SPECIFICATION EDB8AE29

Solenoid Valve for Pressure Control

- Sensor type : Normal open 3-way
- Operating temperature : -22~266°F(-30°C～130°C)
- Frequency :
  - LR, 2ND, UD, OD, RED : 61.27Hz (at the ATF temp. -20°C above)
  - DCC : 30.64Hz
  - VFS : 600 ± 20Hz

- Internal resistance :
  - 2.7~3.4Ω (68°F or 20°C) - LR, 2ND, UD, OD, RED, DCC
  - 4.35±0.35Ω (68°F or 20°C) - VFS

- Surge voltage : 56 V(except VFS)

SIGNAL WAVEFORM EDC0EEC0

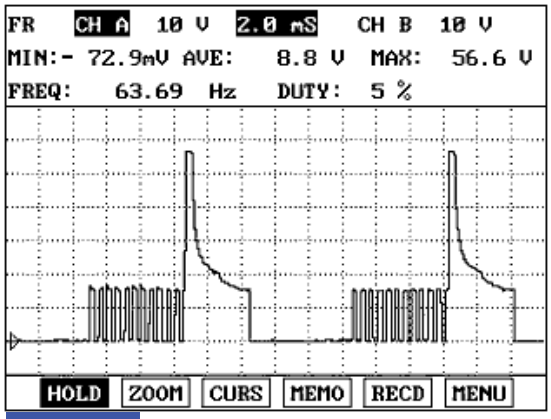

FIG.1)

FIG.1) : Operating of "DCCSV"

EKBF115A

MONITOR SCANTOOL DATA EF966DFD

1. Connect scantool to data link connector(DLC)
2. Engine "ON".
3. Monitor the "TCC SOL. VALVE" parameter on the scantool
4. Select "D RANGE" and Operate "TCC SOLENOID DUTY" more than 40%.

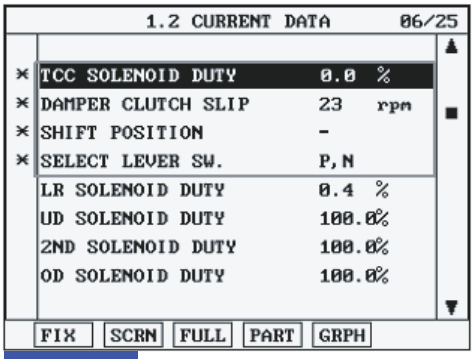

FIG.1)

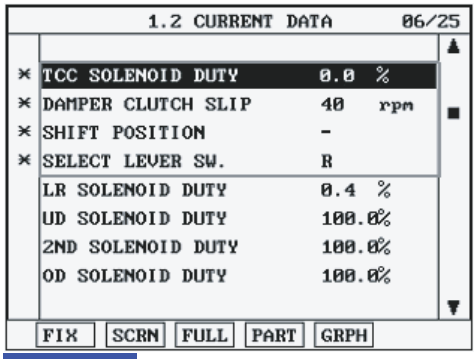

FIG.2)

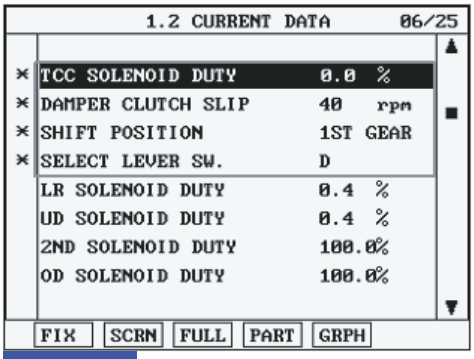

FIG.3)

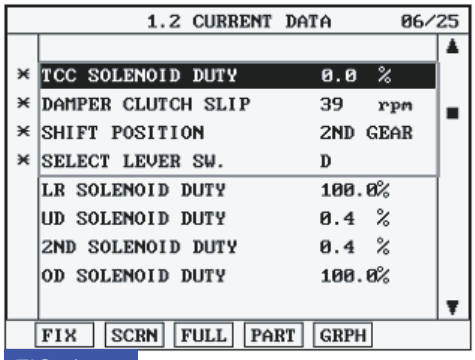

FIG.4)

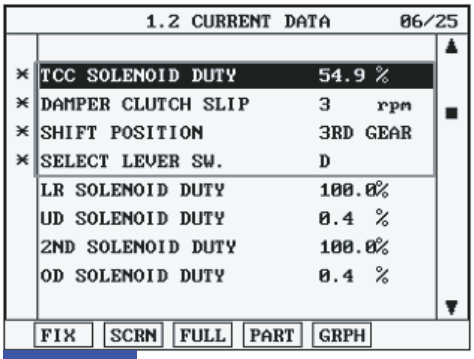

FIG.5)

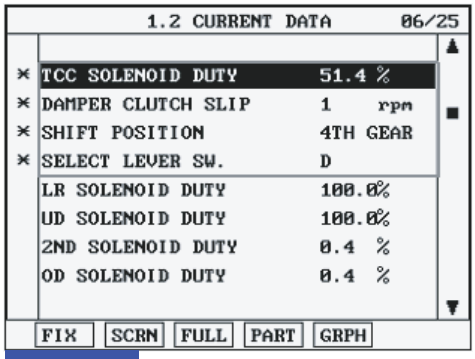

FIG.6)

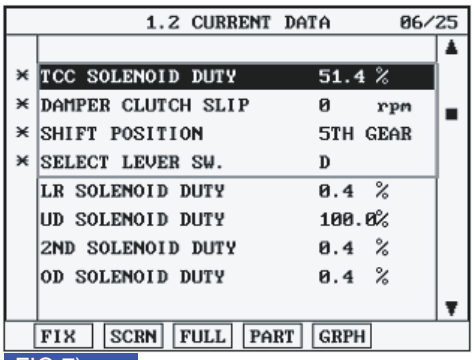

FIG.7)

FIG. 1) P,N
FIG. 2) "R"
FIG. 3) "D 1st" gear
FIG. 4) "2nd" gear
FIG. 5) "3rd" gear
FIG. 6) "4th" gear
FIG. 7) "5th" gear

LKKG209B

5. Does "TCC SOLENOID DUTY " follow the reference data?

YES

▶ Fault is intermittent caused by poor contact in the sensor's and/or TCM(PCM)'s connector or was repaired and TCM(PCM) memory was not cleared. Thoroughly check connectors for looseness, poor connection, bending, corrosion, contamination, deterioration or damage. Repair or replace as necessary and go to "Verification of vehicle repair" procedure.

NO

▶ Go to "Terminal & connector inspection " procedure.

TERMINAL & CONNECTOR INSPECTION E1343488

1. Many malfunctions in the electrical system are caused by poor harness and terminal condition. Faults can also be caused by interference from other electrical systems, and mechanical or chemical damage.
2. Thoroughly check connectors for looseness, poor connection, bending, corrosion, contamination, deterioration, or damage.
3. Has a problem been found?

YES

▶ Repair as necessary and then go to "Verification of vehicle repair" procedure.

NO

▶ Go to "Power supply circuit inspection" procedure.

POWER SUPPLY CIRCUIT INSPECTION E0470472

1. Disconnect "A/T SOLENOID VALVE" connector.
2. Measure voltage between terminal "6" of the sensor harness connector and chassis ground.
3. Engine OFF → ON.

Specification: 12V is measured only for approx. 0.5sec

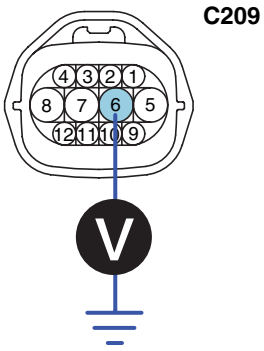

3. UD solenoid valve
4. 2ND solenoid valve
5. A/T battery
6. **A/T battery**
7. VF solenoid valve(-)
8. VF solenoid valve(+)
9. DCC solenoid valve
10. RED solenoid valve
11. LR solenoid valve
12. OD solenoide valve

SCMAT6361L

4. Is voltage within specifications?

YES

▶ Go to "Signal circuit inspection" procedure.

NO

▶ Check that A/T-20A fuse in engine room junction is installed or not blown.
▶ Check for open in harness. Repair as necessary and go to "Verification of vehicle repair" procedure.

SIGNAL CIRCUIT INSPECTION E958FA8D

1. Check signal circuit open inspection.

   1) Ignition "OFF".

   2) Disconnect "A/T SOLENOID VALVE" connector and "PCM/TCM" connector.
   Measure resistance between terminal "9" of the ATM SOLENOID VALVE harness connector and terminal "15" of the TCM harness connector.

Specification: approx. 0 Ω

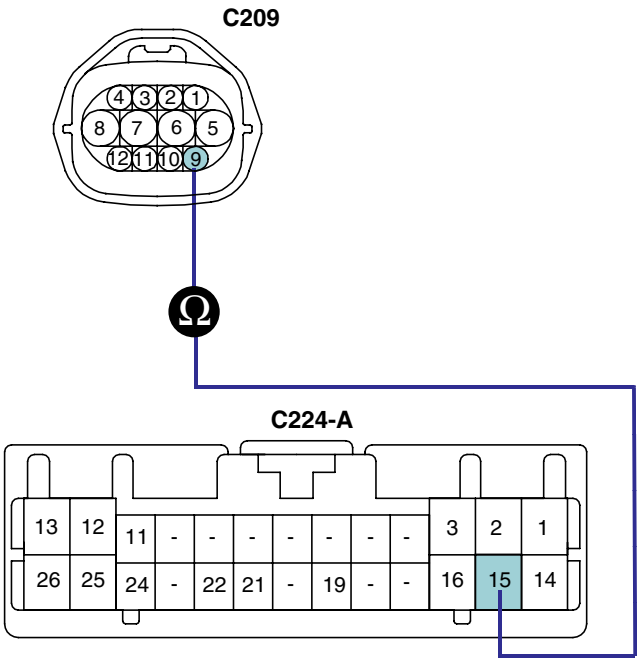

3. UD solenoid valve
4. 2ND solenoid valve
5. A/T battery
6. A/T battery
7. VF solenoid valve(+)
8. VF solenoid valve(-)
9. DCC solenoid valve
10.RED solenoid valve
11. LR solenoid valve
12. OD solenoid valve

01.UD solenoid valve control
14.OD solenoid valve control
15.DCC solenoid valve control
16.2ND solenoid valve control
22.VF solenoid valve(-)

SCMAT6362L

   3) Is resistance within specifications?

YES

▶ Go to "Check signal circuit short inspection" procedure.

NO

▶ Check for open in harness. Repair as necessary and go to "Verification of vehicle repair" procedure.

2. Check signal circuit short inspection

   1) Ignition "OFF".

   2) Disconnect "A/T SOLENOID VALVE" connector and "PCM/TCM" connector.

   3) Measure resistance between terminal "9" of the ATM SOLENOID VALVE harness and chassis ground.

Specification: Infinite

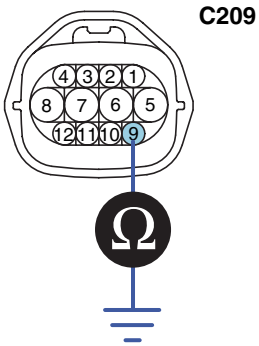

3. UD solenoid valve
4. 2ND solenoid valve
5. A/T battery
6. A/T battery
7. VF solenoid valve(+)
8. VF solenoid valve(-)
9. **DCC solenoid valve**
10. RED solenoid valve
11. LR solenoid valve
12. OD solenoide valve

SCMAT6363L

   4) Is resistance within specifications?

YES

▶ Go to "Component inspection" procedure.

NO

▶ Check for short to ground in harness. Repair as necessary and go to "Verification of vehicle repair" procedure.

COMPONENT INSPECTION E8A46886

1. CHECK SOLENOID VALVE

   1) Ignition "OFF".

   2) Disconnect "A/T SOLENOID VALVE" connector.

   3) Measure resistance between terminal "6" and terminal "9" of the ATM SOLENOID VALVE harness connector.

Specification: Approximately 2.7~3.4 Ω [20°C(68°F)]

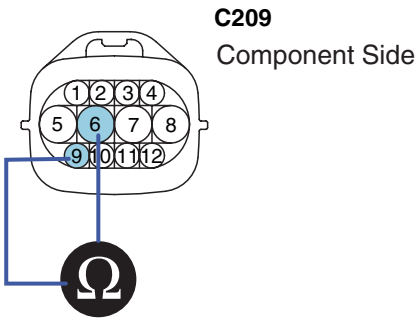

3. UD solenoid valve
4. 2ND solenoid valve
5. A/T battery
6. **A/T battery**
7. VF solenoid valve(-)
8. VF solenoid valve(+)
9. **DCC solenoid valve**
10. RED solenoid valve
11. LR solenoid valve
12. OD solenoide valve

SCMAT6364L

4) Is resistance within specification?

YES

▶ Go to "CHECK PCM/TCM" as below.

NO

▶ Replace TCC SOLENOID VALVE as necessary and go to "Verification of vehicle repair" procedure.

2. CHECK PCM/TCM

1) Connect scantool to data link connector(DLC).

2) Ignition "ON" & Engine "OFF".

3) Select A/T solenoid valve actuator test and operate actuator test.

4) Can you hear operating sound for TCC SOLENOID VALVE actuator testing function?

YES

▶ Go to "Verification of vehicle repair" procedure.

NO

▶ Replace PCM/TCM as necessary and go to "Verification of vehicle repair" procedure.

ACTUATOR TEST CONDITION

1. IG SWITCH ON
2. TRANSAXLE RANGE SWITCH is normal
3. P RANGE
4. Vehicle Speed 0mph(0km/h)
5. Throttle position sensor < 1V
6. IDLE SWITCH ON
7. ENGINE RPM 0

VERIFICATION OF VEHICLE REPAIR E21BB1F7

After a repair, it is essential to verify that the fault has been corrected.

1. Connect scantool and select "Diagnostic Trouble Codes(DTCs)" mode.

2. Using a scantool, Clear DTC.

3. Operate the vehicle within DTC Enable conditions in General information.

4. Are any DTCs present?

YES

▶ Go to the applicable troubleshooting procedure.

NO

▶ System performing to specification at this time.

DTC P0748 PRESSURE CONTROL SOLENOID VALVE A - ELECTRICAL

COMPONENT LOCATION EE1ADEA9

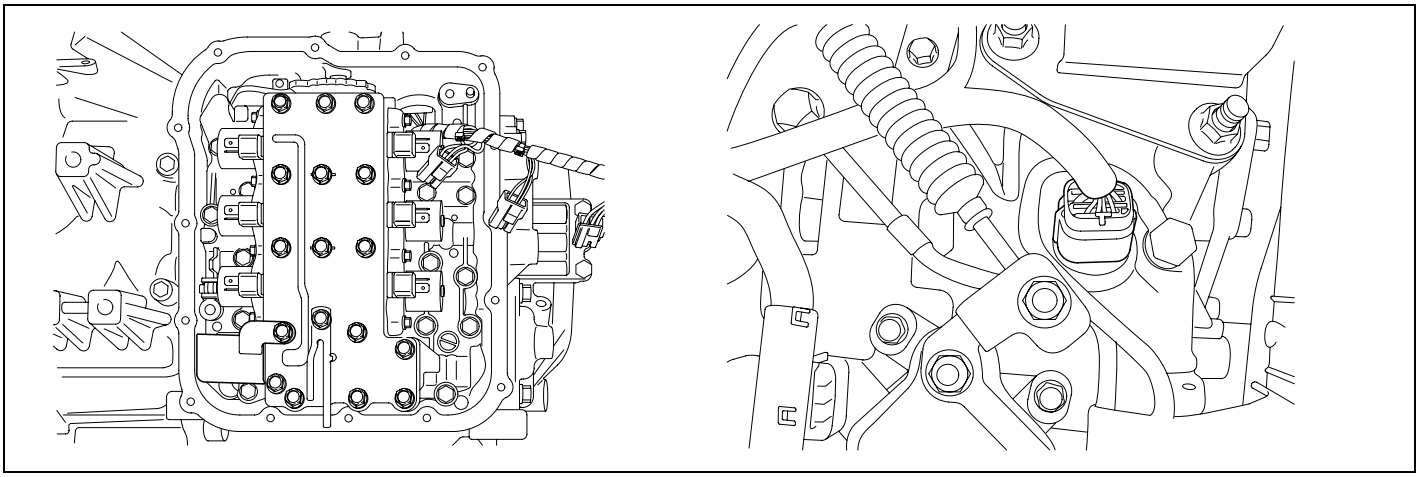

AKKF116U

GENERAL DESCRIPTION E8C28EFB

Variable Force Solenoid (Linear Solenoid) : With the duty control which uses higher frequency(600Hz), instead of the existing PWM type which adapts low frequency(60Hz) to control, spool valve can be controlled precisely.
In PWM control, the amount of oil flow is determined by the duration of "ON"signal among continuously repeated ON/OFF signals.
In VFS, the amount is decided by the width of the oil passage.

DTC DESCRIPTION E7FEEABF

The TCM checks the VFS Control Signal by monitoring the feedback signal from the solenoid valve drive circuit. If an unexpected signal is monitored (for example, high voltage is detected when low voltage is expected, or low voltage is detected when high voltage is expected), the TCM judges that the Low and Reverse control solenoid circuit is malfunctioning and sets this code.

DTC DETECTING CONDITION E7DA9EA8

Item	Detecting Condition	Possible cause
DTC Strategy	• Check voltage range	• Open or short in circuit • Faulty VF SOLENOID VALVE • Faulty PCM/TCM
Enable Conditions	• 18V > Voltage Battery > 10V • VFS SOL Duty ≥ 8.4% • IG "ON" • Not Fail Safe Status	
Threshold value	• Out of available voltage range	
Diagnostic Time	• more than 320msec	
Fail Safe	• GRD shord : Locked in 3 rd gear.(Control relay off) • OPEN or B+ short : not control VFS	

SPECIFICATION EC6F1DB0

Refer to DTC P0743.

SIGNAL WAVEFORM E8AAAE5D

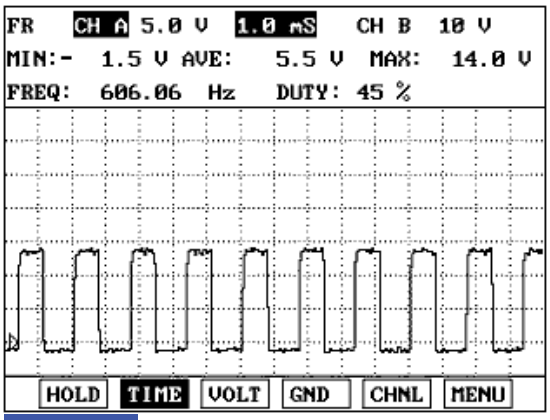

FIG.1)

FIG.1) : Wave form of "VFS"

EKBF116A

MONITOR SCANTOOL DATA ED568D3E

1. Connect scantool to data link connector(DLC).
2. Engine "ON".
3. Monitor the "PRESS CONTROL SOL. VALVE" parameter on the scantool.
4. Shift gear at each position.

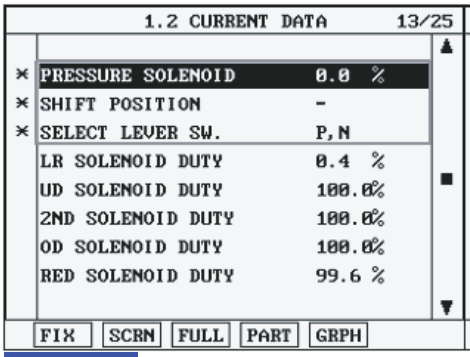

FIG.1)

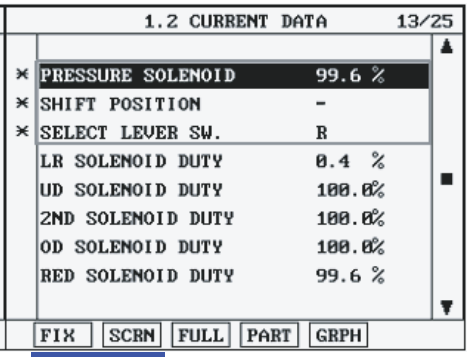

FIG.2)

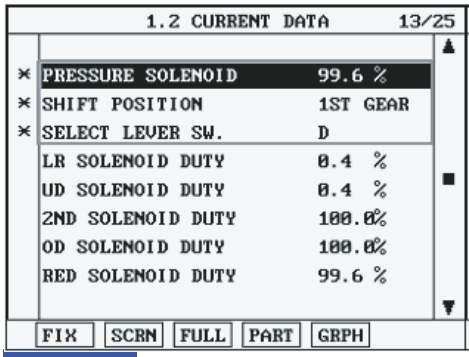

FIG.3)

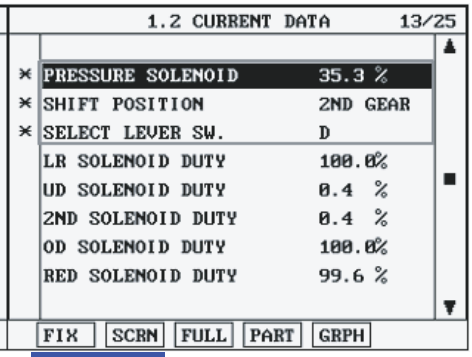

FIG.4)

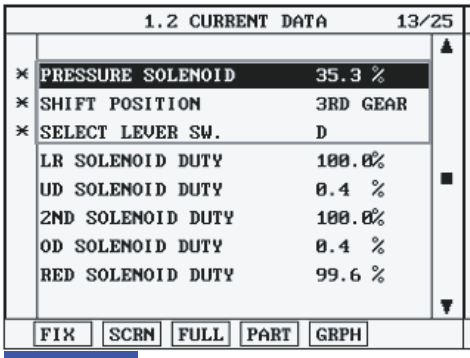

FIG.5)

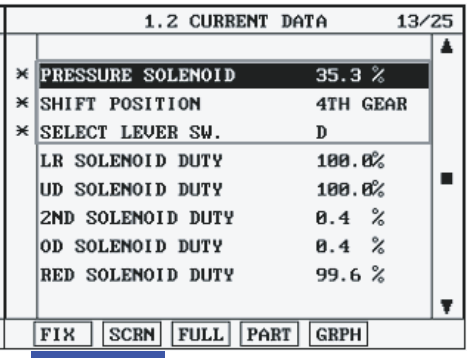

FIG.6)

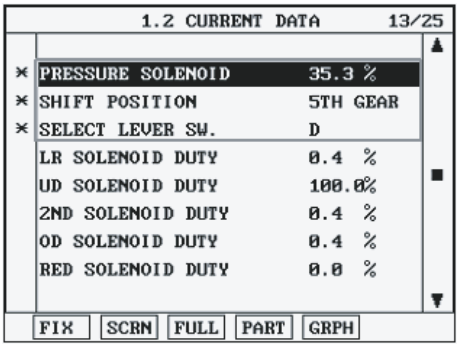

FIG.7)

FIG. 1) P,N
FIG. 2) "R"
FIG. 3) "D 1st" gear
FIG. 4) "2nd" gear
FIG. 5) "3rd" gear
FIG. 6) "4th" gear
FIG. 7) "5th" gear

LKKG209C

5. Does "PRESS CONTROL SOL DUTY " follow the reference data?

YES

▶ Fault is intermittent caused by poor contact in the sensor's and/or TCM(PCM)'s connector or was repaired and TCM(PCM) memory was not cleared. Thoroughly check connectors for looseness, poor connection, bending, corrosion, contamination, deterioration or damage. Repair or replace as necessary and go to "Verification of vehicle repair" procedure.

NO

▶ Go to "Terminal & connector inspection" procedure.

TERMINAL & CONNECTOR INSPECTION E8D66ED7

Refer to DTC P0743.

POWER SUPPLY CIRCUIT INSPECTION E62D4DDE

1. Disconnect "A/T SOLENOID VALVE" connector.
2. Measure voltage between terminal "7" of the sensor harness connector and chassis ground.
3. Measure voltage of VFS solenoid valve.

Specification:	Approx.12V

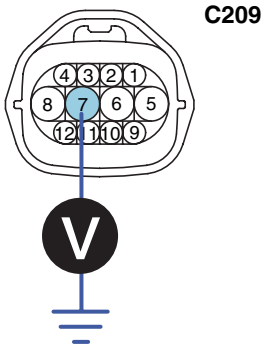

3. UD solenoid valve
4. 2ND solenoid valve
5. A/T battery
6. A/T battery
7. VF solenoid valve(+)
8. VF solenoid valve(-)
9. DCC solenoid valve
10.RED solenoid valve
11. LR solenoid valve
12. OD solenoide valve

SCMAT6365L

4. Is voltage within specifications?

YES

▶ Go to "Signal circuit inspection" procedure.

NO

▶ Check that A/T-20A fuse in engine room junction is installed or not blown.
▶ Check for open in harness. Repair as necessary and go to "Verification of vehicle repair" procedure.

SIGNAL CIRCUIT INSPECTION EFA578D0

1. Check signal circuit open inspection.

   1) Ignition "OFF".

   2) Disconnect "A/T SOLENOID VALVE" connector and "PCM/TCM" connector.
   Measure resistance between terminal "7" of the ATM SOLENOID VALVE harness connector and terminal "22" of the PCM/TCM harness connector.

Specification: approx. 0 Ω

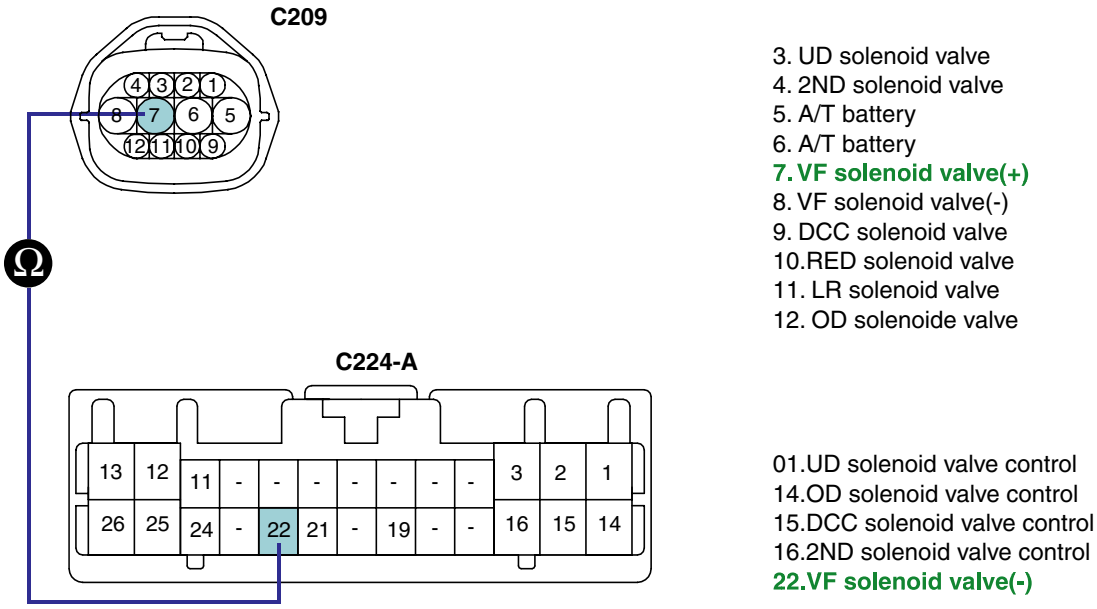

SCMAT6366L

   3) Is resistance within specifications?

   YES

   ▶ Go to "Check signal circuit short inspection" procedure.

   NO

   ▶ Check for open in harness. Repair as necessary and go to "Verification of vehicle repair" procedure.

2. Check signal circuit short inspection

   1) Ignition "OFF".

   2) Disconnect "A/T SOLENOID VALVE" connector and "PCM/TCM" connector

   3) Measure resistance between terminal "8" of the ATM SOLENOID VALVE harness and chassis ground.

Specification: Infinite

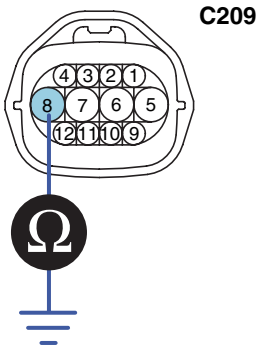

3. UD solenoid valve
4. 2ND solenoid valve
5. A/T battery
6. A/T battery
7. VF solenoid valve(+)
8. VF solenoid valve(-)
9. DCC solenoid valve
10.RED solenoid valve
11. LR solenoid valve
12. OD solenoide valve

SCMAT6367L

4) Is resistance within specifications?

YES

▶ Go to "Component inspection" procedure.

NO

▶ Check for short to ground in harness. Repair as necessary and go to "Verification of vehicle repair" procedure.

COMPONENT INSPECTION EBB36BC3

1. CHECK SOLENOID VALVE

1) Ignition "OFF".

2) Disconnect "A/T SOLENOID VALVE" connector.

3) Measure resistance between terminal "7" and terminal "8" of the ATM SOLENOID VALVE harness connector.

Specification: Approximately 4.35±0.35Ω [20°C(68°F)]

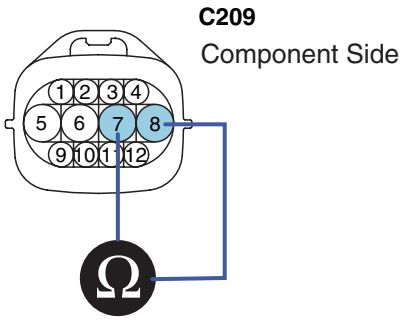

3. UD solenoid valve
4. 2ND solenoid valve
5. A/T battery
6. A/T battery
7. VF solenoid valve(+)
8. VF solenoid valve(-)
9. DCC solenoid valve
10.RED solenoid valve
11. LR solenoid valve
12. OD solenoide valve

SCMAT6368L

4) Is resistance within specification?

YES

▶ Go to "CHECK PCM/TCM" as below.

NO

▶ Replace "PRESS CONTROL SOL VALVE(VFS)" as necessary and go to "Verification of vehicle repair" procedure.

2. CHECK PCM/TCM

1) Connect scantool to data link connector(DLC).

2) Ignition "ON" & Engine "OFF".

3) Select A/T Solenoid valve Actuator test and Operate Actuator test.

4) Can you hear operating sound for "PRESS CONTROL SOL VALVE(VFS)" Actuator testing function?

YES

▶ Go to "Verification of vehicle repair" procedure.

NO

▶ Replace PCM/TCM as necessary and go to "Verification of vehicle repair" procedure.

ACTUATOR TEST CONDITION

1. IG SWITCH ON
2. TRANSAXLE RANGE SWITCH is normal
3. P RANGE
4. Vehicle Speed 0mph(0km/h)
5. Throttle position sensor < 1V
6. IDLE SWITCH ON
7. ENGINE RPM 0

VERIFICATION OF VEHICLE REPAIR E34559E6

Refer to DTC P0743.

DTC P0750 SHIFT CONTROL SOLENOID VALVE A CIRCUIT MALFUNCTION

COMPONENT LOCATION EC54E5ED

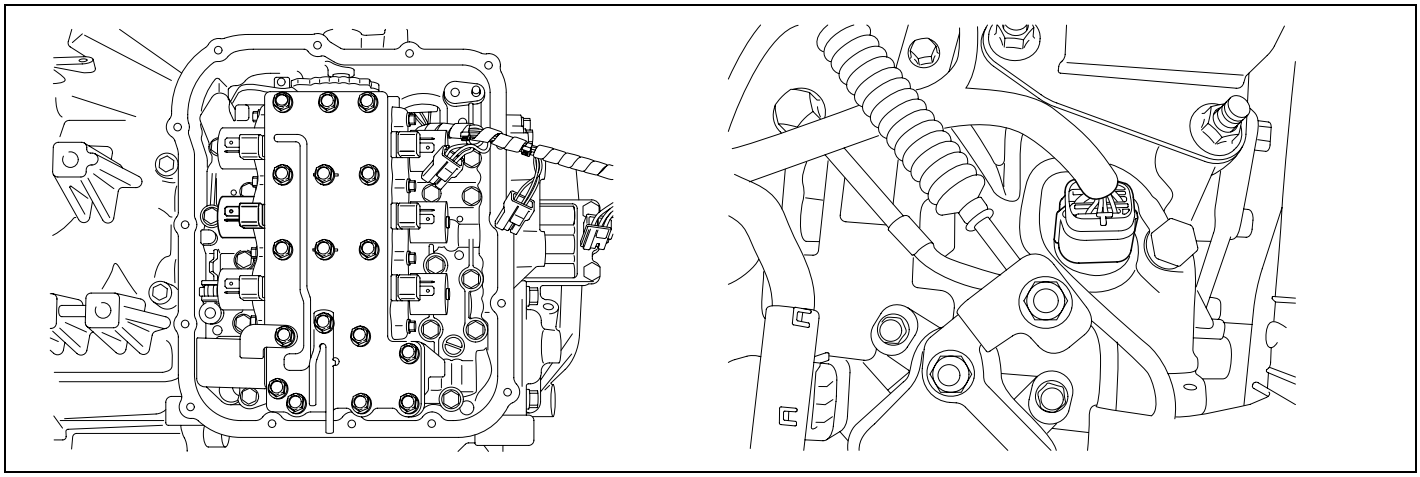

AKKF117G

GENERAL DESCRIPTION E9004129

The Automatic transmission changes the gear position of the transmission by utilizing a combination of clutches and brakes, which are controlled by solenoid valves. This automatic transmission consists of a: LR (Low and Reverse Brake), 2ND (2nd Brake), UD (Under Drive Clutch), OD (Over Drive Clutch), REV (Reverse Clutch), and a RED (Reduction Brake, only for 5 speed transmissions). The LR Brake is engaged in the 1st gear and reverse gear positions.

DTC DESCRIPTION E700E62E

The TCM checks the Low and Reverse Control Signal by monitoring the feedback signal from the solenoid valve drive circuit. If an unexpected signal is monitored (for example, high voltage is detected when low voltage is expected, or low voltage is detected when high voltage is expected), the TCM judges that the Low and Reverse control solenoid circuit is malfunctioning and sets this code.

DTC DETECTING CONDITION ECAEDCB1

Item	Detecting Condition	Possible cause
DTC Strategy	• Check voltage range	• Open or short in circuit • Faulty LR SOLENOID VALVE • Faulty PCM/TCM
Enable Conditions	• Not being control for "N-D or N-R" • Voltage of AT relay ≥ 10V • Not Fail Safe Status • IG "ON"	
Threshold value	• Out of available voltage range	
Diagnostic Time	• more than 320 ms	
Fail Safe	• Locked in 3 rd gear.(Control relay off)	

SPECIFICATION EBBA2E7C

Refer to DTC P0743.

SIGNAL WAVEFORM E657B66E

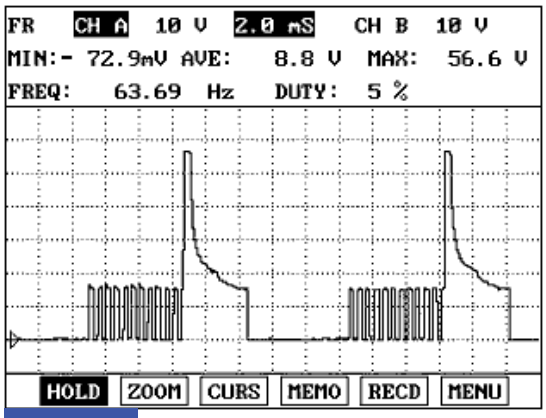

FIG.1)

FIG.1) : "2nd" gear → "1st" gear

EKBF117A

MONITOR SCANTOOL DATA EBC98BD9

1. Connect scantool to data link connector(DLC).
2. Engine "ON".
3. Monitor the "LR SOL. VALVE" parameter on the scantool.
4. Shift gear at each position.

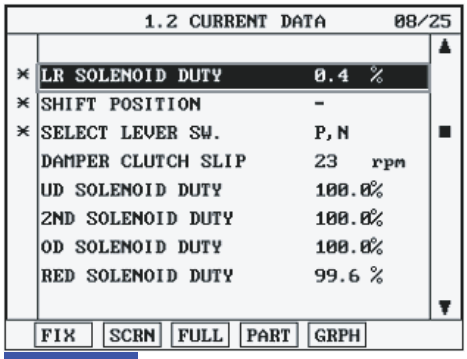

FIG.1)

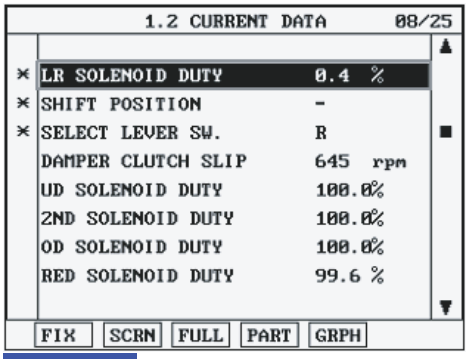

FIG.2)

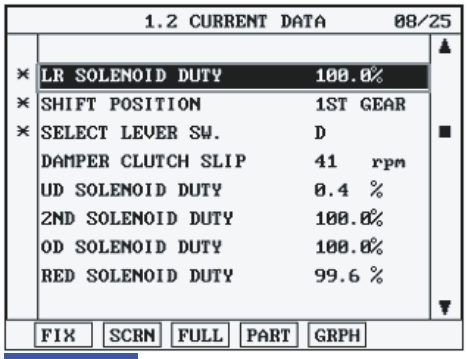

FIG.3)

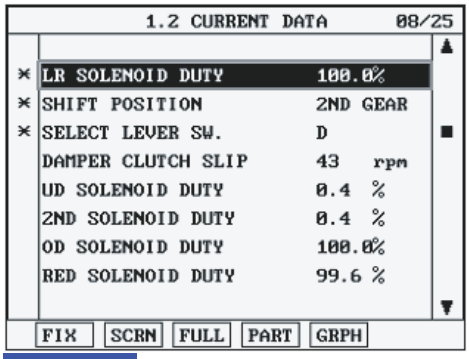

FIG.4)

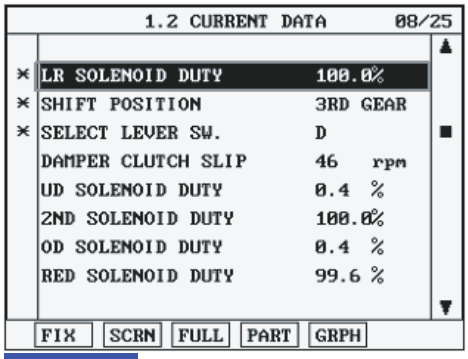

FIG.5)

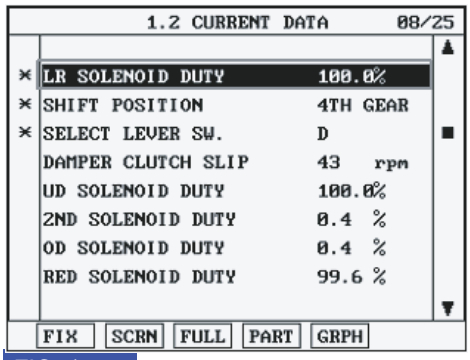

FIG.6)

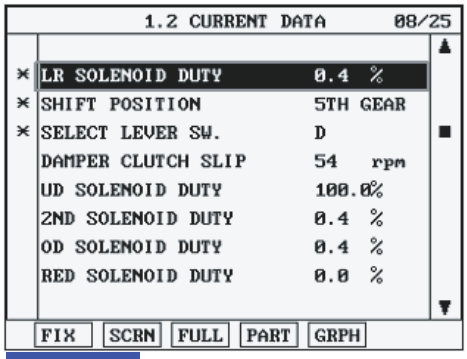

FIG.7)

FIG. 1) P,N
FIG. 2) "R"
FIG. 3) "D 1st" gear
FIG. 4) "2nd" gear
FIG. 5) "3rd" gear
FIG. 6) "4th" gear
FIG. 7) "5th" gear

LKKG209D

5. Does "LR SOLENOID DUTY " follow the reference data?

YES

▶ Fault is intermittent caused by poor contact in the sensor's and/or TCM(PCM)'s connector or was repaired and TCM(PCM) memory was not cleared. Thoroughly check connectors for looseness, poor connection, bending, corrosion, contamination, deterioration or damage. Repair or replace as necessary and go to "Verification of vehicle repair" procedure.

NO

▶ Go to "Terminal & connector inspection " procedure.

TERMINAL & CONNECTOR INSPECTION E8E9D1C6

Refer to DTC P0743.

POWER SUPPLY CIRCUIT INSPECTION EEDFC93C

1. Disconnect "A/T SOLENOID VALVE" connector.
2. Measure voltage between terminal "6" of the sensor harness connector and chassis ground.
3. Engine OFF → ON.

Specification: 12V is measured only for approx. 0.5sec

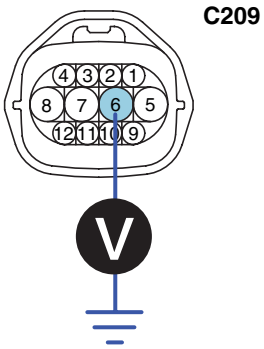

3. UD solenoid valve
4. 2ND solenoid valve
5. A/T battery
6. **A/T battery**
7. VF solenoid valve(-)
8. VF solenoid valve(+)
9. DCC solenoid valve
10. RED solenoid valve
11. LR solenoid valve
12. OD solenoide valve

SCMAT6361L

4. Is voltage within specifications?

YES

▶ Go to "Signal circuit inspection" procedure.

NO

▶ Check that A/T-20A fuse in engine room junction is installed or not blown.
▶ Check for open in harness. Repair as necessary and go to "Verification of vehicle repair" procedure.

SIGNAL CIRCUIT INSPECTION EDD3AF39

1. Check signal circuit open inspection

   1) Ignition "OFF".

   2) Disconnect "A/T SOLENOID VALVE" connector and "PCM/TCM" connector.
   Measure resistance between terminal "11" of the ATM SOLENOID VALVE harness connector and terminal "12" of the PCM/TCM harness connector.

Specification: approx. 0 Ω

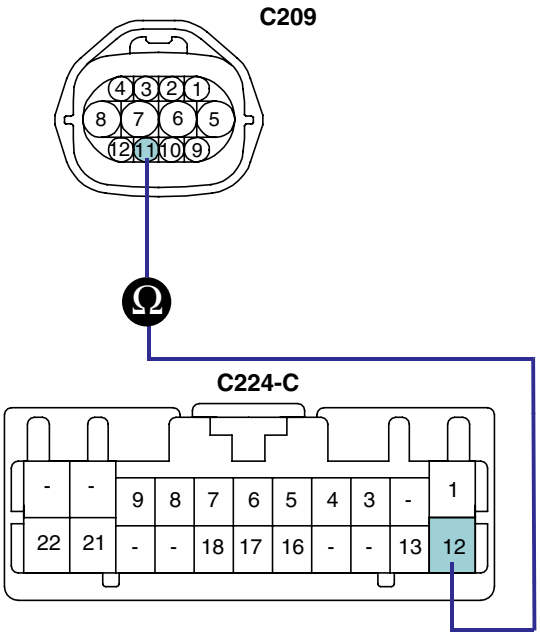

3. UD solenoid valve
4. 2ND solenoid valve
5. A/T battery
6. A/T battery
7. VF solenoid valve(+)
8. VF solenoid valve(-)
9. DCC solenoid valve
10. RED solenoid valve
11. LR solenoid valve
12. OD solenoid valve

1. RED solenoid valve
12. LR solenoid valve

SCMAT6371L

   3) Is resistance within specifications?

   YES

   ▶ Go to "Check signal circuit short inspection" procedure.

   NO

   ▶ Check for open in harness. Repair as necessary and go to "Verification of vehicle repair" procedure.

2. Check signal circuit short inspection

   1) Ignition "OFF".

   2) Disconnect "A/T SOLENOID VALVE" connector and "PCM/TCM" connector.

   3) Measure resistance between terminal "11" of the ATM SOLENOID VALVE harness and chassis ground.

Specification: Infinite

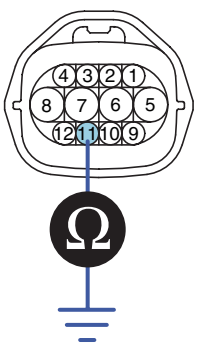

3. UD solenoid valve
4. 2ND solenoid valve
5. A/T battery
6. A/T battery
7. VF solenoid valve(+)
8. VF solenoid valve(-)
9. DCC solenoid valve
10.RED solenoid valve
11. LR solenoid valve
12. OD solenoide valve

SCMAT6372L

4) Is resistance within specifications?

YES

▶ Go to "Component inspection" procedure.

NO

▶ Check for short to ground in harness. Repair as necessary and go to "Verification of vehicle repair" procedure.

COMPONENT INSPECTION EDFF35FB

1. CHECK SOLENOID VALVE

1) Ignition "OFF".

2) Disconnect "A/T SOLENOID VALVE" connector.

3) Measure resistance between terminal "6" and terminal "11" of the ATM SOLENOID VALVE harness connector.

Specification: Approximately 2.7~3.4 Ω [20°C(68°F)]

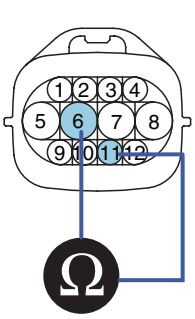

3. UD solenoid valve
4. 2ND solenoid valve
5. A/T battery
6. A/T battery
7. VF solenoid valve(+)
8. VF solenoid valve(-)
9. DCC solenoid valve
10.RED solenoid valve
11. LR solenoid valve
12. OD solenoide valve

SCMAT6373L

4) Is resistance within specification?

YES

▶ Go to "CHECK PCM/TCM" as below.

NO

▶ Replace LR SOLENOID VALVE as necessary and go to "Verification of vehicle repair" procedure.

2. CHECK PCM/TCM

1) Connect scantool to data link connector(DLC).

2) Ignition "ON" & Engine "OFF".

3) Select A/T solenoid valve actuator test and operate actuator test.

4) Can you hear operating sound for LR SOLENOID VALVE actuator testing function?

YES

▶ Go to "Verification of vehicle repair" procedure.

NO

▶ Replace PCM/TCM as necessary and go to "Verification of vehicle repair" procedure.

ACTUATOR TEST CONDITION

1. IG SWITCH ON
2. TRANSAXLE RANGE SWITCH is normal
3. P RANGE
4. Vehicle Speed 0mph(0km/h)
5. Throttle position sensor < 1V
6. IDLE SWITCH ON
7. ENGINE RPM 0

VERIFICATION OF VEHICLE REPAIR EDDAF7CA

Refer to DTC P0743.

DTC P0755 SHIFT CONTROL SOLENOID VALVE B CIRCUIT MALFUNCTION

COMPONENT LOCATION E7C0CAFC

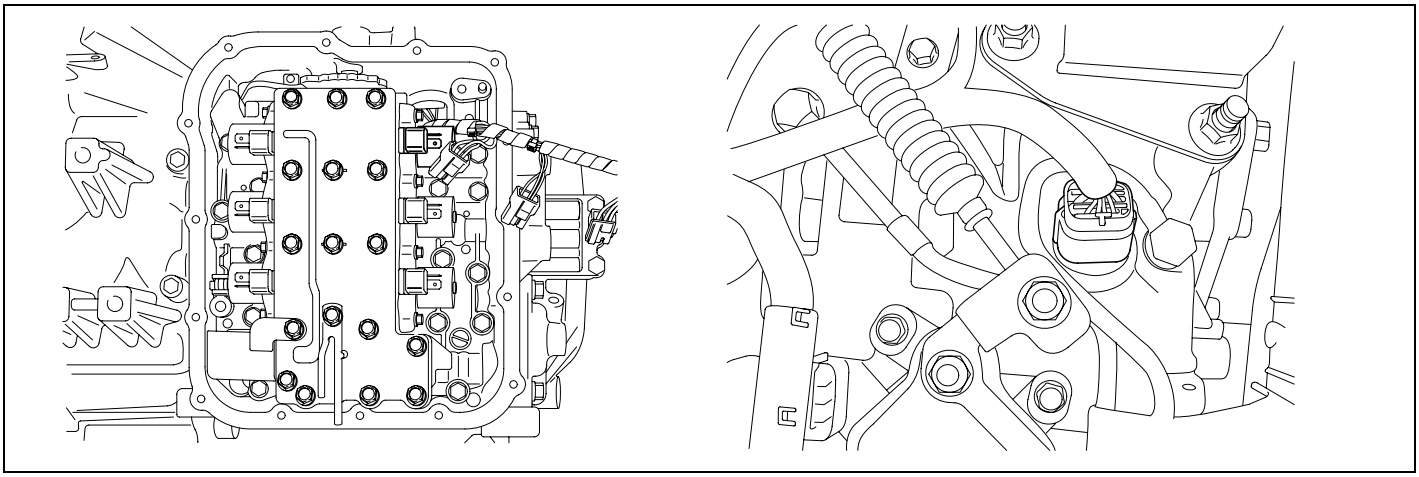

AKKF118G

GENERAL DESCRIPTION EDA36EBC

The Automatic transmission changes the gear position of the transmission by utilizing a combination of clutches and brakes, which are controlled by solenoid valves. This automatic transmission consists of a: LR (Low and Reverse Brake), 2ND (2nd Brake), UD (Under Drive Clutch), OD (Over Drive Clutch), REV (Reverse Clutch), and a RED (Reduction Brake, only for 5 speed transmissions).
The UD Clutch is engaged in the 1st gear, 2nd gear and 3rd gear positions.

DTC DESCRIPTION EE4CCE54

The TCM checks the Under Drive Clutch Control Signal by monitoring the feedback signal from the solenoid valve drive circuit. If an unexpected signal is monitored (for example, high voltage is detected when low voltage is expected, or low voltage is detected when high voltage is expected), the TCM judges that Under Drive control solenoid circuit is malfunctioning and sets this code.

DTC DETECTING CONDITION E2CC19A0

Item	Detecting Condition	Possible cause
DTC Strategy	• Check voltage range	• Open or short in circuit • Faulty UD SOLENOID VALVE • Faulty PCM/TCM
Enable Conditions	• Not being control for "N-D or N-R" • Voltage of AT relay ≥ 10V • Not Fail Safe Status • IG "ON"	
Threshold value	• Out of available voltage range	
Diagnostic Time	• more than 320 ms	
Fail Safe	• Locked in 3 rd gear.(Control relay off)	

SPECIFICATION E6666FEF

Refer to DTC P0743.

SIGNAL WAVEFORM EFCFA1B5

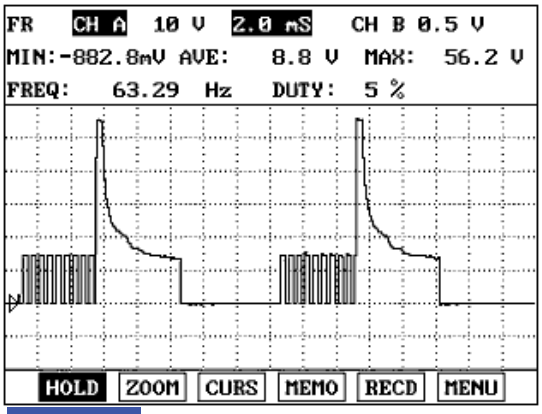

FIG.1)

FIG.1) : "N" → "D"

EKBF118A

MONITOR SCANTOOL DATA EFBBD1ED

1. Connect scantool to data link connector(DLC)
2. Engine "ON".
3. Monitor the "UD SOL. VALVE" parameter on the scantool.
4. Shift gear at each position.

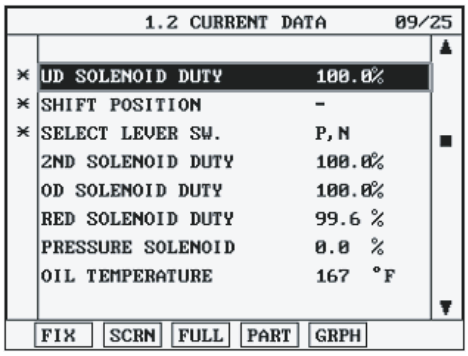

FIG.1)

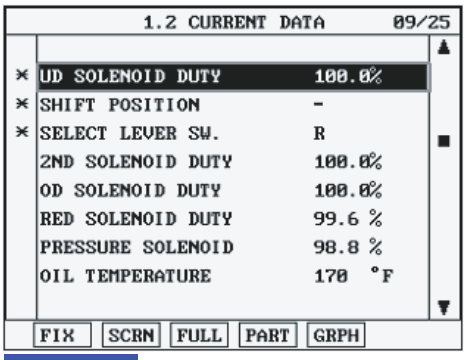

FIG.2)

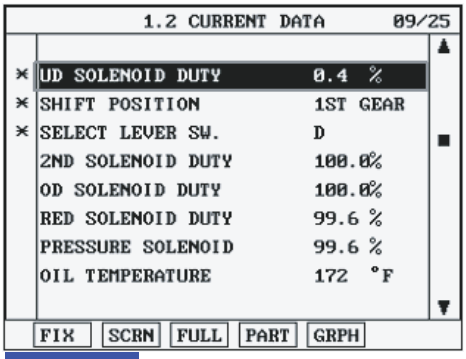

FIG.3)

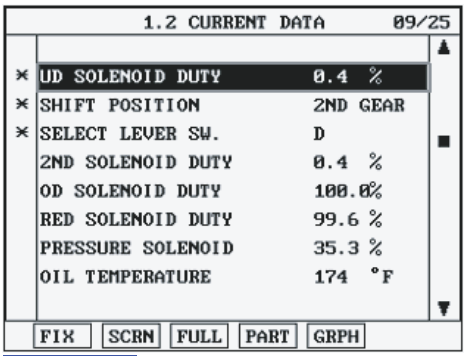

FIG.4)

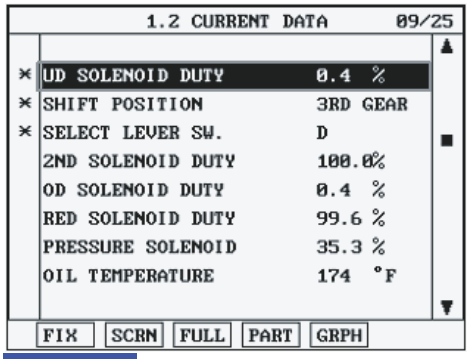

FIG.5)

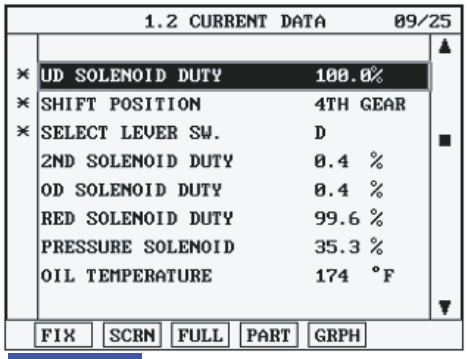

FIG.6)

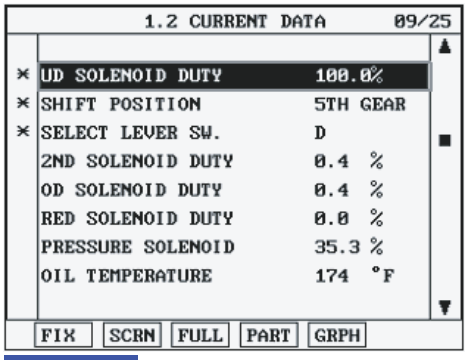

FIG.7)

FIG. 1) P,N
FIG. 2) "R"
FIG. 3) "D 1st" gear
FIG. 4) "2nd" gear
FIG. 5) "3rd" gear
FIG. 6) "4th" gear
FIG. 7) "5th" gear

LKKG209F

5. Does "UD SOLENOID DUTY " follow the reference data?

YES

▶ Fault is intermittent caused by poor contact in the sensor's and/or TCM(PCM)'s connector or was repaired and TCM(PCM) memory was not cleared. Thoroughly check connectors for looseness, poor connection, bending, corrosion, contamination, deterioration or damage. Repair or replace as necessary and go to "Verification of vehicle repair" procedure.

NO

▶ Go to "Terminal & connector inspection" procedure.

TERMINAL & CONNECTOR INSPECTION E2752FCE

Refer to DTC P0743.

POWER SUPPLY CIRCUIT INSPECTION E33A3FB4

1. Disconnect "A/T SOLENOID VALVE" connector.
2. Measure voltage between terminal "5" of the sensor harness connector and chassis ground.
3. Engine OFF → ON.

Specification: 12V is measured only for approx. 0.5sec

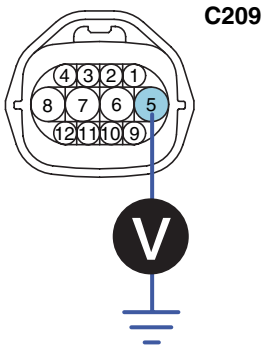

3. UD solenoid valve
4. 2ND solenoid valve
5. **A/T battery**
6. A/T battery
7. VF solenoid valve(+)
8. VF solenoid valve(-)
9. DCC solenoid valve
10. RED solenoid valve
11. LR solenoid valve
12. OD solenoide valve

SCMAT6375L

4. Is voltage within specifications?

YES

▶ Go to "Signal circuit inspection" procedure.

NO

▶ Check that A/T-20A fuse in engine room junction is installed or not blown.
▶ Check for open in harness. Repair as necessary and go to "Verification of vehicle repair" procedure.

SIGNAL CIRCUIT INSPECTION EE5DB907

1. Check signal circuit open inspection

   1) Ignition "OFF".

   2) Disconnect "A/T SOLENOID VALVE" connector and "PCM/TCM" connector.
   Measure resistance between terminal "3" of the ATM SOLENOID VALVE harness connector and terminal "1" of the PCM/TCM harness connector.

Specification: approx. 0 Ω

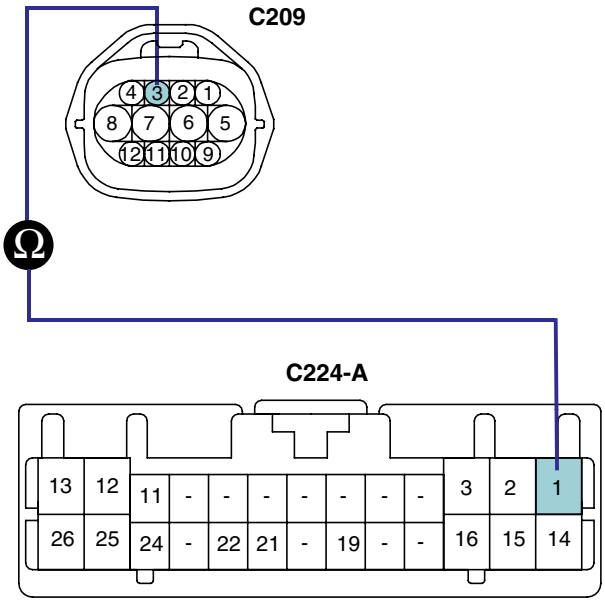

3. UD solenoid valve
4. 2ND solenoid valve
5. A/T battery
6. A/T battery
7. VF solenoid valve(+)
8. VF solenoid valve(-)
9. DCC solenoid valve
10.RED solenoid valve
11. LR solenoid valve
12. OD solenoid valve

01.UD solenoid valve control
14.OD solenoid valve control
15.DCC solenoid valve control
16.2ND solenoid valve control
22.VF solenoid valve(-)

SCMAT6376L

   3) Is resistance within specifications?

   YES

   ▶ Go to "Check signal circuit short inspection" procedure.

   NO

   ▶ Check for open in harness. Repair as necessary and go to "Verification of vehicle repair" procedure.

2. Check signal circuit short inspection

   1) Ignition "OFF".

   2) Disconnect "A/T SOLENOID VALVE" connector and "PCM/TCM" connector.

   3) Measure resistance between terminal "3" of the ATM SOLENOID VALVE harness and chassis ground.

Specification: Infinite

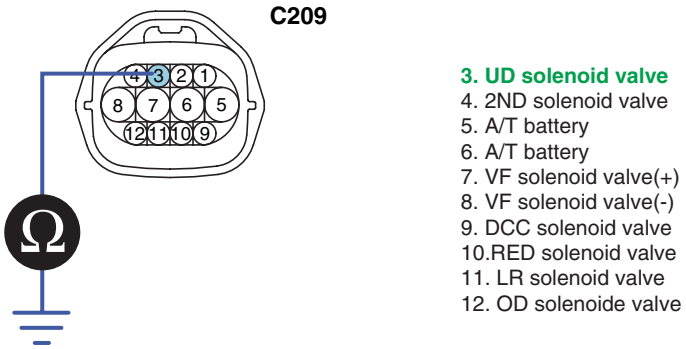

SCMAT6377L

4) Is resistance within specifications?

YES

▶ Go to "Component inspection" procedure.

NO

▶ Check for short to ground in harness. Repair as necessary and go to "Verification of vehicle repair" procedure.

COMPONENT INSPECTION E5C5CD3A

1. CHECK SOLENOID VALVE

1) Ignition "OFF".

2) Disconnect "A/T SOLENOID VALVE" connector.

3) Measure resistance between terminal "3" and terminal "5" of the ATM SOLENOID VALVE harness connector.

Specification: Approximately 2.7~3.4 Ω [20°C(68°F)]

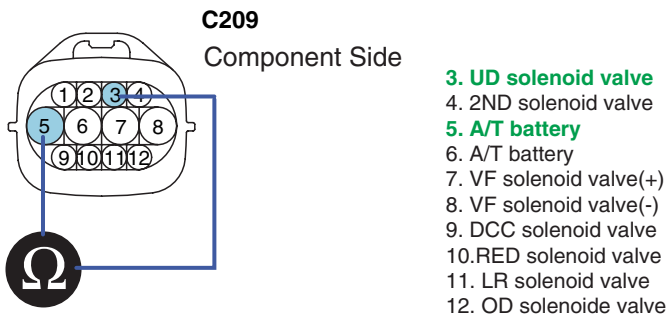

SCMAT6378L

4) Is resistance within specification?

YES

▶ Go to "CHECK PCM/TCM" as below.

NO

▶ Replace UD SOLENOID VALVE as necessary and go to "Verification of vehicle repair" procedure.

2. CHECK PCM/TCM

1) Connect scantool to data link connector(DLC).

2) Ignition "ON" & Engine "OFF".

3) Select ATM solenoid valve actuator test and operate actuator test.

4) Can you hear operating sound for UD SOLENOID VALVE actuator testing function?

YES

▶ Go to "Verification of vehicle repair" procedure.

NO

▶ Replace PCM/TCM as necessary and go to "Verification of vehicle repair" procedure.

ACTUATOR TEST CONDITION

1. IG SWITCH ON
2. TRANSAXLE RANGE SWITCH is normal
3. P RANGE
4. Vehicle Speed 0mph(0km/h)
5. Throttle position sensor < 1V
6. IDLE SWITCH ON
7. ENGINE RPM 0

VERIFICATION OF VEHICLE REPAIR E66AC01F

Refer to DTC P0743.

DTC P0760 SHIFT CONTROL SOLENOID VALVE C CIRCUIT MALFUNCTION

COMPONENT LOCATION E7A70B21

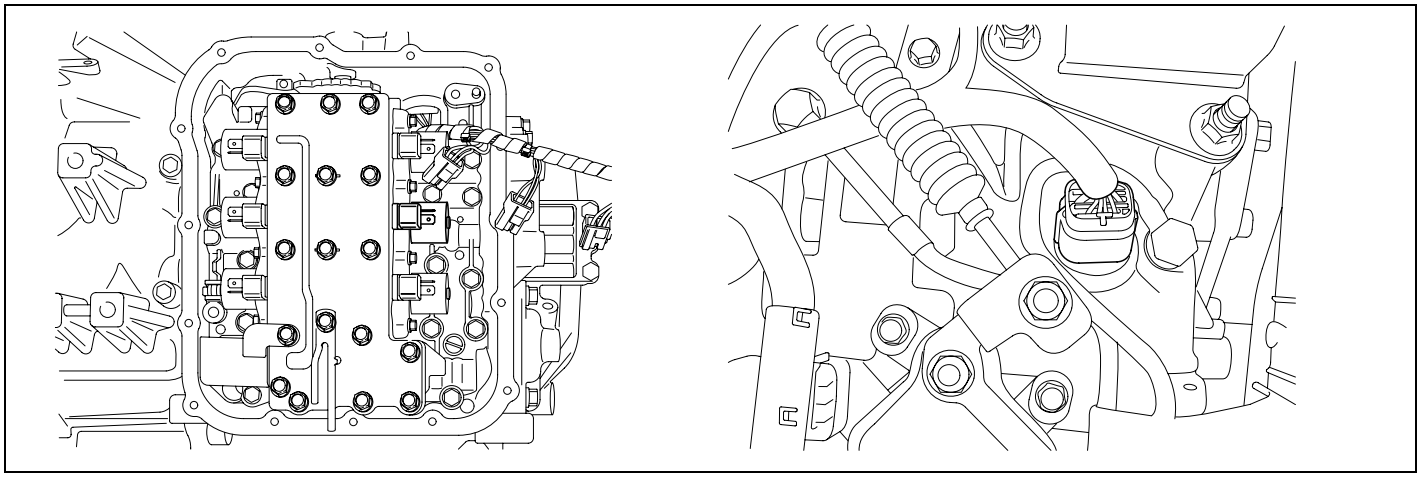

AKKF119F

GENERAL DESCRIPTION EACB5813

The Automatic transmission changes the gear position of the transmission by utilizing a combination of clutches and brakes, which are controlled by solenoid valves. This automatic transmission consists of a: LR (Low and Reverse Brake), 2ND (2nd Brake), UD (Under Drive Clutch), OD (Over Drive Clutch), REV (Reverse Clutch), and a RED (Reduction Brake, only for 5 speed transmissions).
The 2ND Brake is engaged in the 2nd gear and 4th gear positions.

DTC DESCRIPTION EDF0F0FD

The TCM checks the Under Drive Clutch Control Signal by monitoring the feedback signal from the solenoid valve drive circuit. If an unexpected signal is monitored, (For example, high voltage is detected when low voltage is expected or low voltage is detected when high voltage is expected) the TCM judges that 2nd Brake drive control solenoid circuit is malfunctioning and sets this code.

DTC DETECTING CONDITION EBFA32F7

Item	Detecting Condition	Possible cause
DTC Strategy	• Check voltage range	• Open or short in circuit • Faulty 2ND SOLENOID VALVE • Faulty PCM/TCM
Enable Conditions	• Not being control for "N-D or N-R" • Voltage of AT relay ≥ 10V • Not Fail Safe Status • IG "ON"	
Threshold value	• Out of available voltage range	
Diagnostic Time	• more than 320 ms	
Fail Safe	• Locked in 3 rd gear.(Control relay off)	

SPECIFICATION E4C4B2BD

Refer to DTC P0743.

SIGNAL WAVEFORM ECB8FD2E

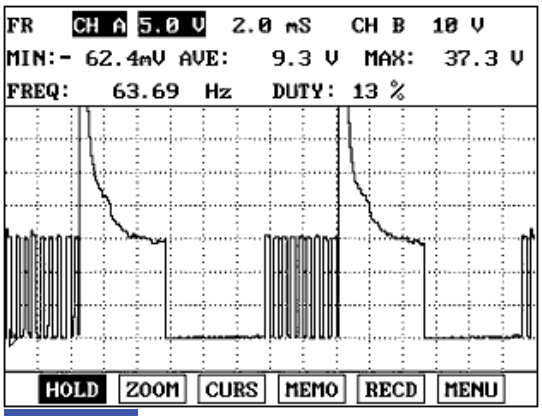

FIG.1)

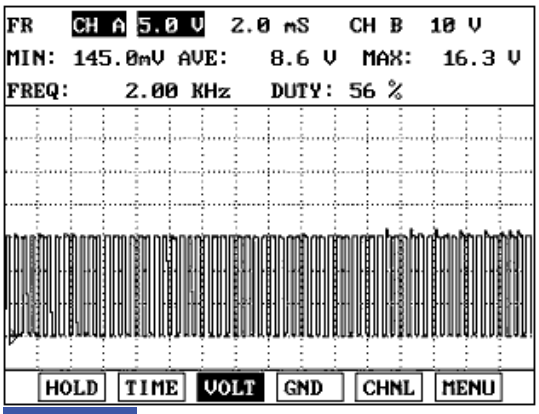

FIG.2)

FIG. 1) "2ND" gear → "1st" gear
FIG. 2) "P & N" Range

EKBF119A

MONITOR SCANTOOL DATA EBFBD6DA

1. Connect scantool to data link connector(DLC).
2. Engine "ON".
3. Monitor the "2nd SOL. VALVE" parameter on the scantool.
4. Shift gear at each position.

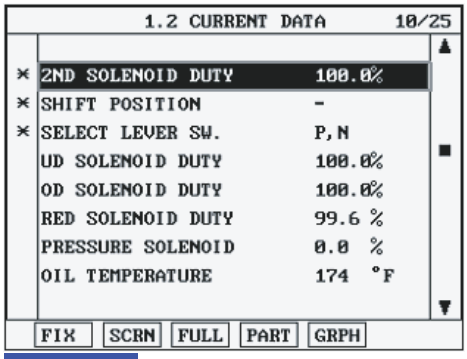

FIG.1)

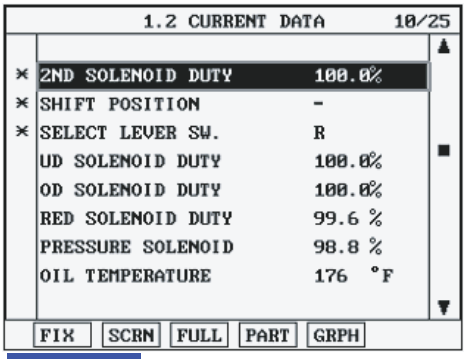

FIG.2)

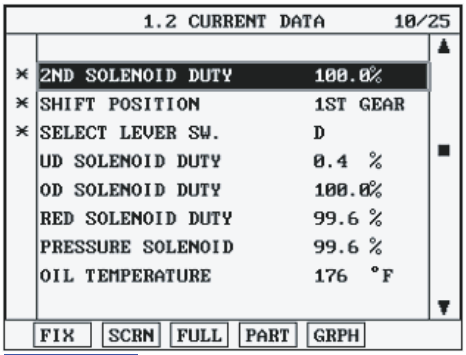

FIG.3)

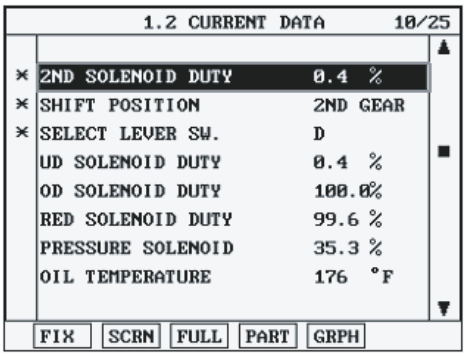

FIG.4)

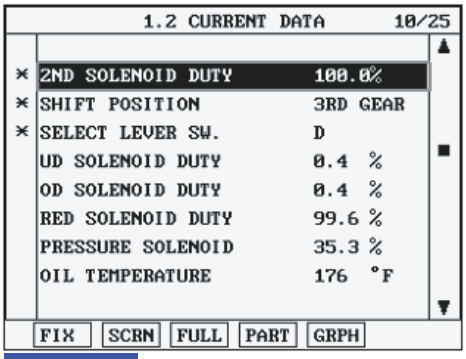

FIG.5)

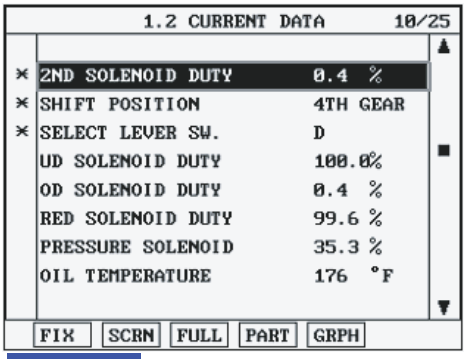

FIG.6)

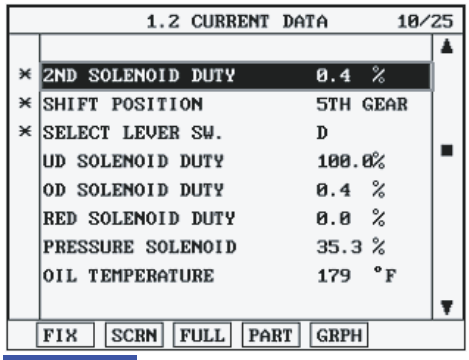

FIG.7)

FIG. 1) P,N
FIG. 2) "R"
FIG. 3) "D 1st" gear
FIG. 4) "2nd" gear
FIG. 5) "3rd" gear
FIG. 6) "4th" gear
FIG. 7) "5th" gear

LKKG209G

5. Does "2nd SOLENOID DUTY " follow the reference data?

YES

▶ Fault is intermittent caused by poor contact in the sensor's and/or TCM(PCM)'s connector or was repaired and TCM(PCM) memory was not cleared. Thoroughly check connectors for looseness, poor connection, bending, corrosion, contamination, deterioration or damage. Repair or replace as necessary and go to "Verification of vehicle repair" procedure.

NO

▶ Go to "Terminal & connector inspection " procedure.

TERMINAL & CONNECTOR INSPECTION EF32EB6C

Refer to DTC P0743.

POWER SUPPLY CIRCUIT INSPECTION ED96171A

1. Disconnect "A/T SOLENOID VALVE" connector.
2. Measure voltage between terminal "5" of the sensor harness connector and chassis ground.
3. Engine OFF → ON.

Specification: 12V is measured only for approx. 0.5sec

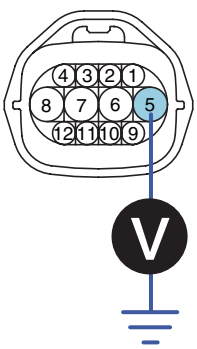

3. UD solenoid valve
4. 2ND solenoid valve
5. **A/T battery**
6. A/T battery
7. VF solenoid valve(+)
8. VF solenoid valve(-)
9. DCC solenoid valve
10. RED solenoid valve
11. LR solenoid valve
12. OD solenoide valve

SCMAT6375L

4. Is voltage within specifications?

YES

▶ Go to "Signal circuit inspection" procedure.

NO

▶ Check that A/T-20A fuse in engine room junction is installed or not blown.
▶ Check for open in harness. Repair as necessary and go to "Verification of vehicle repair" procedure.

SIGNAL CIRCUIT INSPECTION EB1BAC90

1. Check signal circuit open inspection

   1) Ignition "OFF".

   2) Disconnect "A/T SOLENOID VALVE" connector and "PCM" connector.
   Measure resistance between terminal "4" of the ATM SOLENOID VALVE harness connector and terminal "16" of the PCM/TCM harness connector.

Specification: approx. 0 Ω

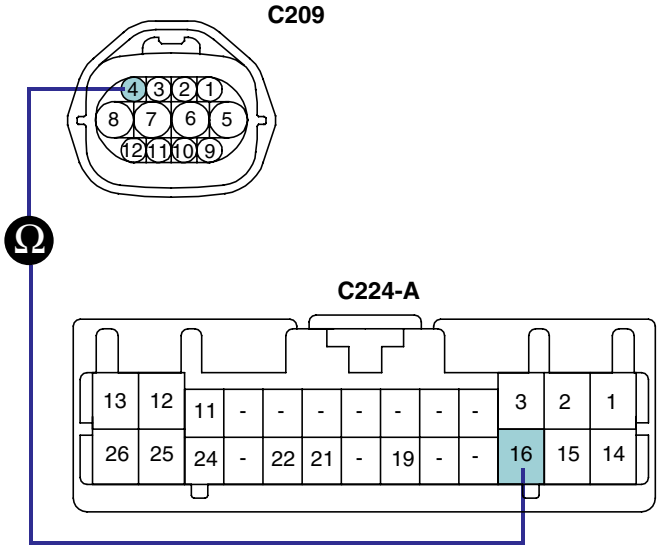

3. UD solenoid valve
4. 2ND solenoid valve
5. A/T battery
6. A/T battery
7. VF solenoid valve(+)
8. VF solenoid valve(-)
9. DCC solenoid valve
10. RED solenoid valve
11. LR solenoid valve
12. OD solenoid valve

01. UD solenoid valve control
14. OD solenoid valve control
15. DCC solenoid valve control
16. 2ND solenoid valve control
22. VF solenoid valve(-)

SCMAT6381L

   3) Is resistance within specifications?

   YES

   ▶ Go to "Check signal circuit short inspection" procedure.

   NO

   ▶ Check for open in harness. Repair as necessary and go to "Verification of vehicle repair" procedure.

2. Check signal circuit short inspection

   1) Ignition "OFF".

   2) Disconnect "A/T SOLENOID VALVE" connector and "PCM/TCM" connector.

   3) Measure resistance between terminal "4" of the ATM SOLENOID VALVE harness and chassis ground.

Specification: Infinite

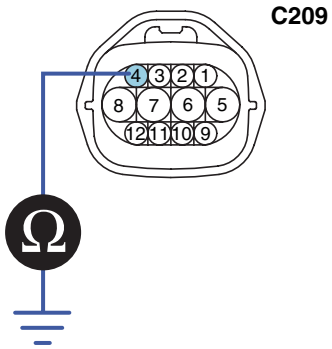

3. UD solenoid valve
4. 2ND solenoid valve
5. A/T battery
6. A/T battery
7. VF solenoid valve(+)
8. VF solenoid valve(-)
9. DCC solenoid valve
10.RED solenoid valve
11. LR solenoid valve
12. OD solenoide valve

SCMAT6382L

4) Is resistance within specifications?

YES

▶ Go to "Component inspection" procedure.

NO

▶ Check for short to ground in harness. Repair as necessary and go to "Verification of vehicle repair" procedure.

COMPONENT INSPECTION E0E382D1

1. CHECK SOLENOID VALVE

1) Ignition "OFF".

2) Disconnect "A/T SOLENOID VALVE" connector.

3) Measure resistance between terminal "4" and terminal "5" of the ATM SOLENOID VALVE harness connector.

Specification: Approximately 2.7~3.4 Ω [20°C(68°F)]

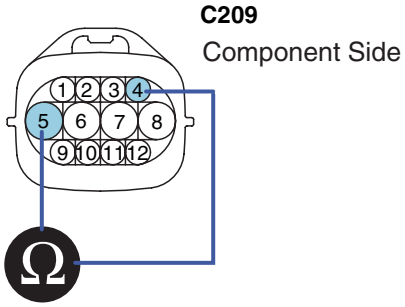

3. UD solenoid valve
4. 2ND solenoid valve
5. A/T battery
6. A/T battery
7. VF solenoid valve(+)
8. VF solenoid valve(-)
9. DCC solenoid valve
10.RED solenoid valve
11. LR solenoid valve
12. OD solenoide valve

SCMAT6383L

4) Is resistance within specification?

YES

▶ Go to "CHECK PCM/TCM" as below.

NO

▶ Replace 2nd SOLENOID VALVE as necessary and go to "Verification of vehicle repair" procedure.

2. CHECK PCM/TCM

1) Connect scantool to data link connector(DLC).

2) Ignition "ON" & Engine "OFF".

3) Select A/T solenoid valve actuator test and operate actuator test.

4) Can you hear operating sound for 2nd SOLENOID VALVE actuator testing function?

YES

▶ Go to "Verification of vehicle repair" procedure.

NO

▶ Replace PCM/TCM as necessary and go to "Verification of vehicle repair" procedure.

ACTUATOR TEST CONDITION

1. IG SWITCH ON
2. TRANSAXLE RANGE SWITCH is normal
3. P RANGE
4. Vehicle Speed 0mph(0km/h)
5. Throttle position sensor < 1V
6. IDLE SWITCH ON
7. ENGINE RPM 0

VERIFICATION OF VEHICLE REPAIR E2D079D3

Refer to DTC P0743.

DTC P0765 SHIFT CONTROL SOLENOID VALVE D CIRCUIT MALFUNCTION

COMPONENT LOCATION EB6A2FBF

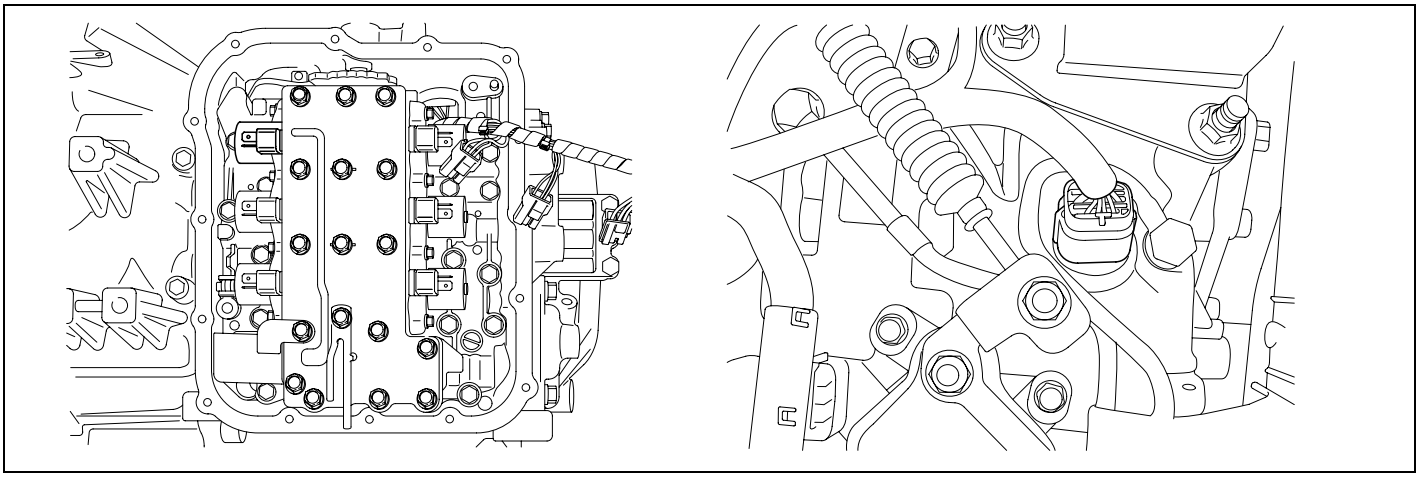

AKKF120Z

GENERAL DESCRIPTION E95FCDFF

The Automatic transmission changes the gear position of the transmission by utilizing a combination of clutches and brakes, which are controlled by solenoid valves. This automatic transmission consists of a: LR (Low and Reverse Brake), 2ND (2nd Brake), UD (Under Drive Clutch), OD (Over Drive Clutch), REV (Reverse Clutch), and a RED (Reduction Brake, only for 5 speed transmissions).
The OD Clutch is engaged in the 3rd gear and 4th gear positions.

DTC DESCRIPTION E03C0BFC

The TCM checks the Under Drive Clutch Control Signal by monitoring the feedback signal from the solenoid valve drive circuit. If an unexpected signal is monitored (for example, high voltage is detected when low voltage is expected or low voltage is detected when high voltage is expected), the TCM judges that the OVER DRIVE CLUTCH drive control solenoid circuit is malfunctioning and sets this code.

DTC DETECTING CONDITION EA2CE5E2

Item	Detecting Condition	Possible cause
DTC Strategy	• Check voltage range	• Open or short in circuit • Faulty OD SOLENOID VALVE • Faulty PCM/TCM
Enable Conditions	• Not being control for "N-D or N-R" • Voltage of AT relay ≥ 10V • Not Fail Safe Status • IG "ON"	
Threshold value	• Out of available voltage range	
Diagnostic Time	• more than 320 ms	
Fail Safe	• Locked in 3 rd gear.(Control relay off)	

SPECIFICATION E0AE1686

Refer to DTC P0743.

SIGNAL WAVEFORM ECFDEE4F

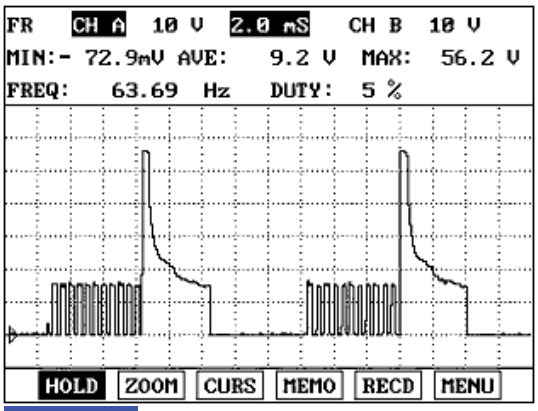

FIG.1)

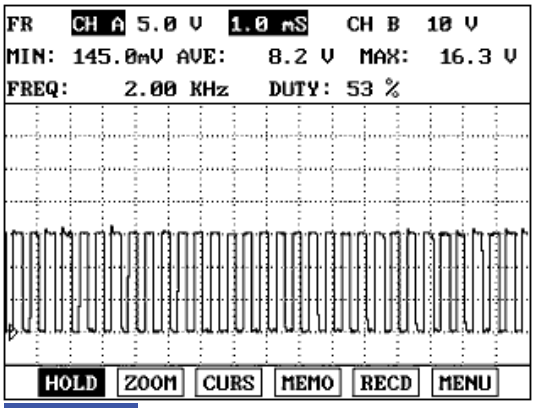

FIG.2)

FIG. 1) "3rd" gear → "2nd" gear
FIG. 2) "P & N" Range

EKBF120A

MONITOR SCANTOOL DATA EC923FED

1. Connect scantool to data link connector(DLC).
2. Engine "ON".
3. Monitor the "OD SOL. VALVE" parameter on the scantool.
4. Shift gear at each position.

Specification: 2nd gear → 0.0%, 3nd gear → 100%

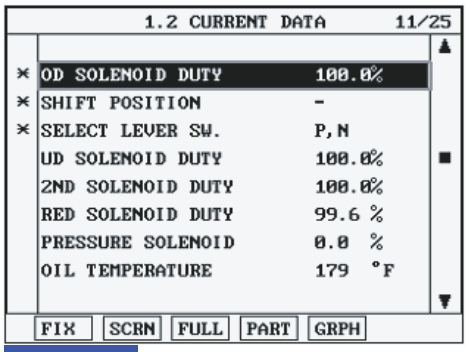

FIG.1)

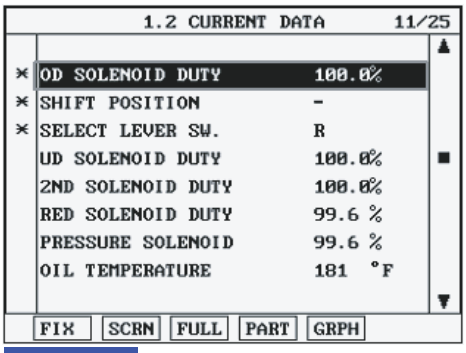

FIG.2)

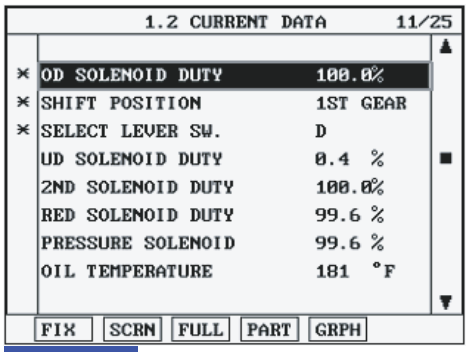

FIG.3)

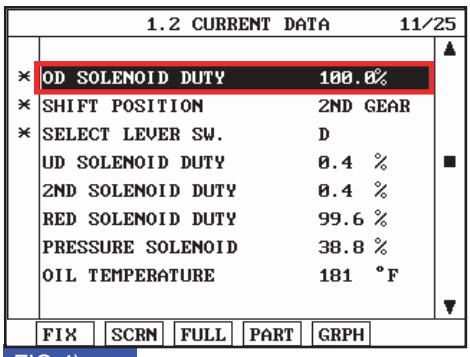

FIG.4)

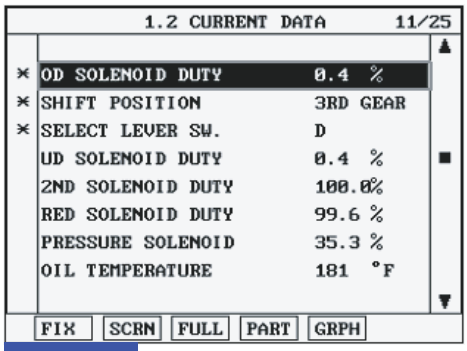

FIG.5)

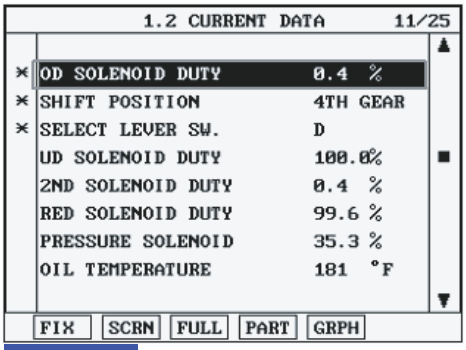

FIG.6)

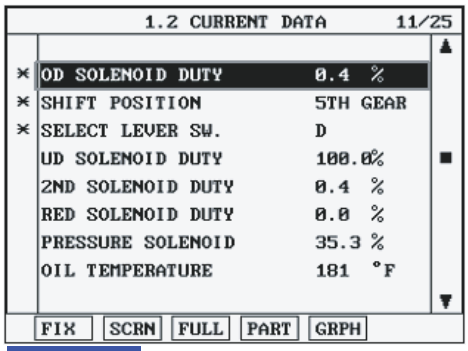

FIG.7)

FIG. 1) P,N
FIG. 2) "R"
FIG. 3) "D 1st" gear
FIG. 4) "2nd" gear
FIG. 5) "3rd" gear
FIG. 6) "4th" gear
FIG. 7) "5th" gear

LKKG209H

5. Does "OD SOLENOID DUTY " follow the reference data?

YES

▶ Fault is intermittent caused by poor contact in the sensor's and/or TCM(PCM)'s connector or was repaired and TCM(PCM) memory was not cleared. Thoroughly check connectors for looseness, poor connection, bending, corrosion, contamination, deterioration or damage. Repair or replace as necessary and go to "Verification of vehicle repair" procedure.

NO

▶ Go to "Terminal & connector inspection " procedure.

TERMINAL & CONNECTOR INSPECTION E438324B

Refer to DTC P0743.

POWER SUPPLY CIRCUIT INSPECTION E4F67AE3

1. Disconnect "A/T SOLENOID VALVE" connector.
2. Measure voltage between terminal "5" of the sensor harness connector and chassis ground.
3. Engine OFF → ON.

Specification: 12V is measured only for approx. 0.5sec

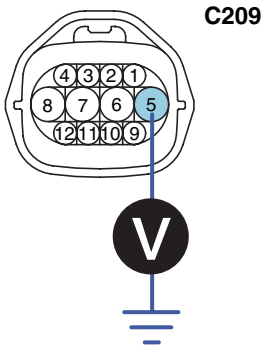

3. UD solenoid valve
4. 2ND solenoid valve
5. **A/T battery**
6. A/T battery
7. VF solenoid valve(+)
8. VF solenoid valve(-)
9. DCC solenoid valve
10. RED solenoid valve
11. LR solenoid valve
12. OD solenoide valve

SCMAT6375L

4. Is voltage within specifications?

YES

▶ Go to "Signal circuit inspection" procedure.

NO

▶ Check that A/T-20A fuse in engine room junction is installed or not blown.
▶ Check for open in harness. Repair as necessary and go to "Verification of vehicle repair" procedure.

SIGNAL CIRCUIT INSPECTION E6ACE15D

1. Check signal circuit open inspection

   1) Ignition "OFF".

   2) Disconnect "A/T SOLENOID VALVE" connector and "PCM/TCM" connector.
   Measure resistance between terminal "12" of the ATM SOLENOID VALVE harness connector and terminal "14" of the PCM/TCM harness connector.

Specification: approx. 0 Ω

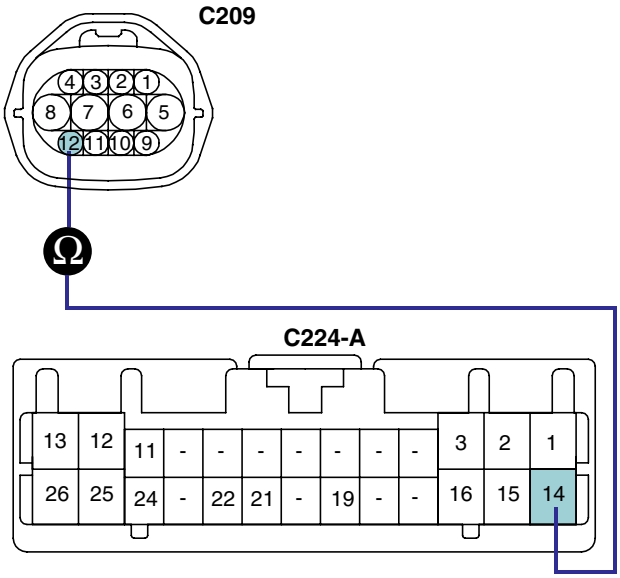

3. UD solenoid valve
4. 2ND solenoid valve
5. A/T battery
6. A/T battery
7. VF solenoid valve(+)
8. VF solenoid valve(-)
9. DCC solenoid valve
10. RED solenoid valve
11. LR solenoid valve
12. OD solenoid valve

01. UD solenoid valve control
14. OD solenoid valve control
15. DCC solenoid valve control
16. 2ND solenoid valve control
22. VF solenoid valve(-)

SCMAT6385L

   3) Is resistance within specifications?

   YES

   ▶ Go to "Check signal circuit short inspection" procedure.

   NO

   ▶ Check for open in harness. Repair as necessary and go to "Verification of vehicle repair" procedure.

2. Check signal circuit short inspection

   1) Ignition "OFF".

   2) Disconnect "A/T SOLENOID VALVE" connector and "PCM/TCM" connector.

   3) Measure resistance between terminal "12" of the ATM SOLENOID VALVE harness and chassis ground.

Specification: Infinite

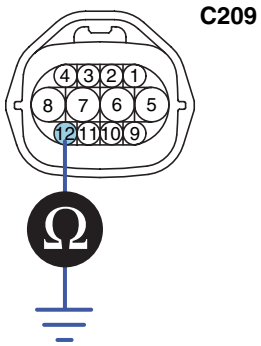

3. UD solenoid valve
4. 2ND solenoid valve
5. A/T battery
6. A/T battery
7. VF solenoid valve(+)
8. VF solenoid valve(-)
9. DCC solenoid valve
10.RED solenoid valve
11. LR solenoid valve
12. OD solenoid valve

SCMAT6386L

4) Is resistance within specifications?

YES

▶ Go to "Component inspection" procedure.

NO

▶ Check for short to ground in harness. Repair as necessary and go to "Verification of vehicle repair" procedure.

COMPONENT INSPECTION E5452827

1. CHECK SOLENOID VALVE

1) Ignition "OFF".

2) Disconnect "A/T SOLENOID VALVE" connector.

3) Measure resistance between terminal "5" and terminal "12" of the ATM SOLENOID VALVE harness connector.

Specification: Approximately 2.7~3.4 Ω [20°C(68°F)]

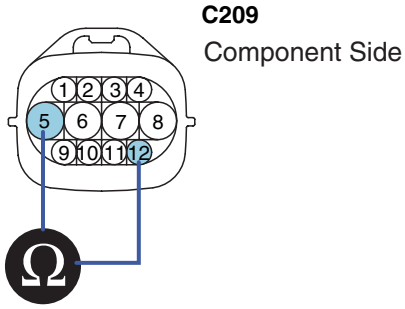

3. UD solenoid valve
4. 2ND solenoid valve
5. A/T battery
6. A/T battery
7. VF solenoid valve(+)
8. VF solenoid valve(-)
9. DCC solenoid valve
10.RED solenoid valve
11. LR solenoid valve
12. OD solenoid valve

SCMAT6387L

4) Is resistance within specification?

YES

▶ Go to "CHECK PCM/TCM" as below.

NO

▶ Replace OD SOLENOID VALVE as necessary and go to "Verification of vehicle repair" procedure.

2. CHECK PCM/TCM

1) Connect scantool to data link connector(DLC).

2) Ignition "ON" & Engine "OFF".

3) Select A/T solenoid valve actuator test and operate actuator test.

4) Can you hear operating sound for OD SOLENOID VALVE actuator testing function?

YES

▶ Go to "Verification of vehicle repair" procedure.

NO

▶ Replace PCM/TCM and go to "Verification of vehicle repair" procedure.

ACTUATOR TEST CONDITION

1. IG SWITCH ON
2. TRANSAXLE RANGE SWITCH is normal
3. P RANGE
4. Vehicle Speed 0mph(0km/h)
5. Throttle position sensor < 1V
6. IDLE SWITCH ON
7. ENGINE RPM 0

VERIFICATION OF VEHICLE REPAIR E1B3F5DA

Refer to DTC P0743.

DTC P0770 SHIFT CONTROL SOLENOID VALVE E CIRCUIT MALFUNCTION

COMPONENT LOCATION EE8DD590

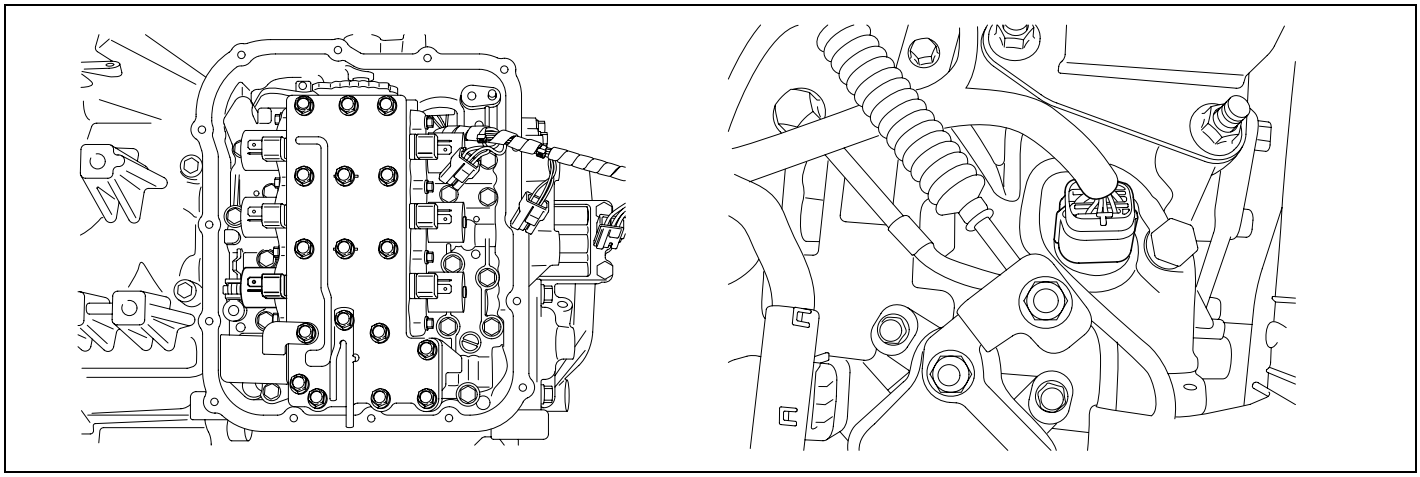

AKKF120K

GENERAL DESCRIPTION E85EDBFC

The Automatic transmission changes the gear position of the transmission by utilizing a combination of clutches and brakes, which are controlled by solenoid valves. This automatic transmission consists of a: LR (Low and Reverse Brake), 2ND (2nd Brake), UD (Under Drive Clutch), OD (Over Drive Clutch), REV (Reverse Clutch), and a RED (Reduction Brake, only for 5 speed transmissions).
The RED Brake is engaged in the 1st, 2nd, 3rd gear and reverse gear positions.

DTC DESCRIPTION E74450E8

The TCM checks the Reduction Control Signal by monitoring the feedback signal from the solenoid valve drive circuit. If an unexpected signal is monitored (for example, high voltage is detected when low voltage is expected, or low voltage is detected when high voltage is expected), the TCM judges that the Reduction control solenoid circuit is malfunctioning and sets this code.

DTC DETECTING CONDITION E083D2CD

Item	Detecting Condition	Possible cause
DTC Strategy	• Check voltage range	• Open or short in circuit • Faulty RED SOLENOID VALVE • Faulty PCM/TCM
Enable Conditions	• Not being control for "N-D or N-R" • Voltage of AT relay ≥ 10V • Not Fail Safe Status • IG "ON"	
Threshold value	• Out of available voltage range	
Diagnostic Time	• more than 320 ms	
Fail Safe	• Locked in 3 rd gear.(Control relay off)	

SPECIFICATION E4C50EBE

Refer to DTC P0743.

SIGNAL WAVEFORM EFF854FE

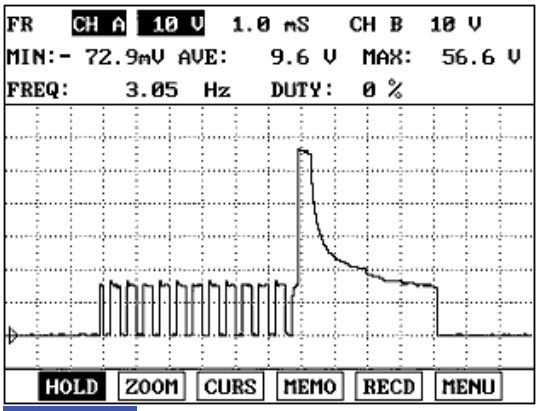

FIG.1)

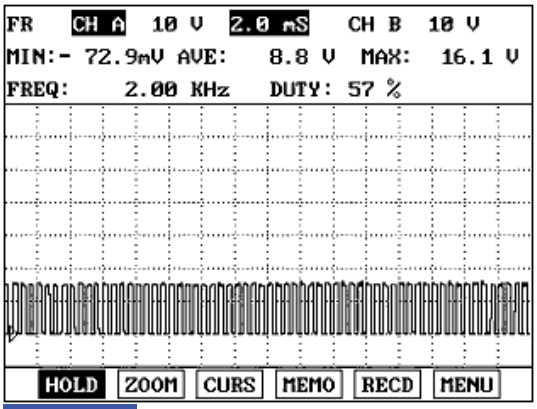

FIG.2)

FIG. 1) "5TH" gear → "4TH" gear
FIG. 2) "P & N" Range

EKBF121A

MONITOR SCANTOOL DATA E9E7C945

1. Connect scantool to data link connector(DLC).
2. Engine "ON".
3. Monitor the "RED SOL. VALVE" parameter on the scantool.
4. Shift gear at each position.

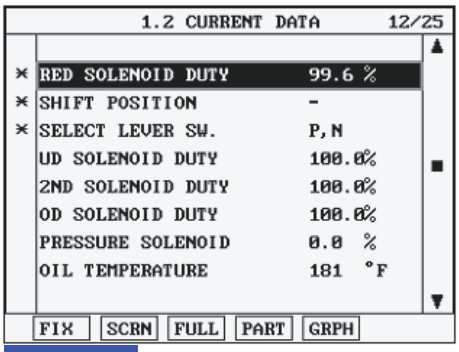

FIG.1)

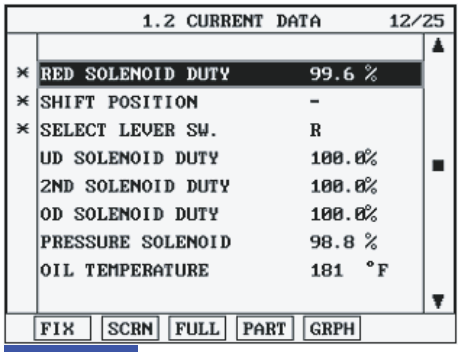

FIG.2)

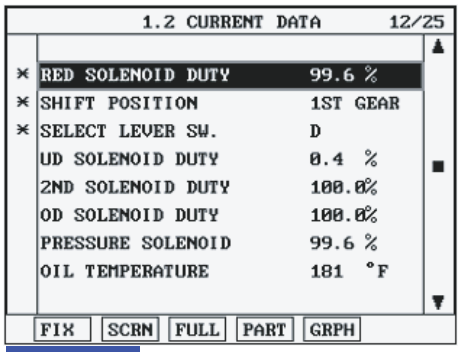

FIG.3)

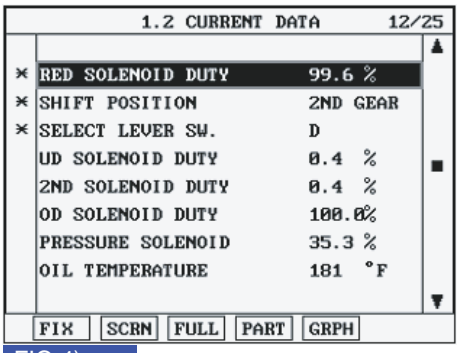

FIG.4)

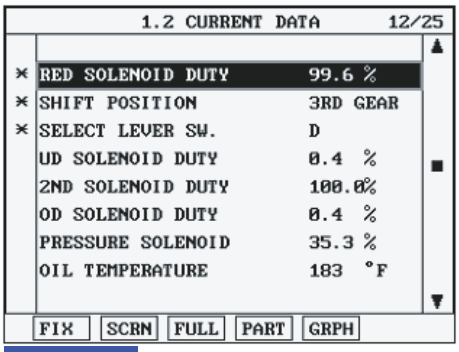

FIG.5)

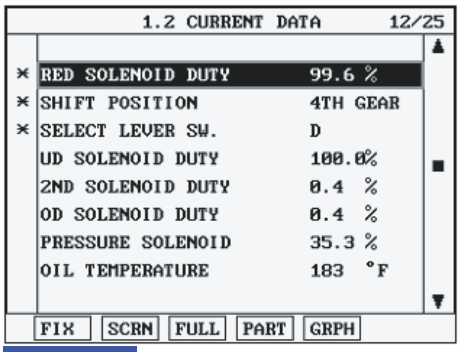

FIG.6)

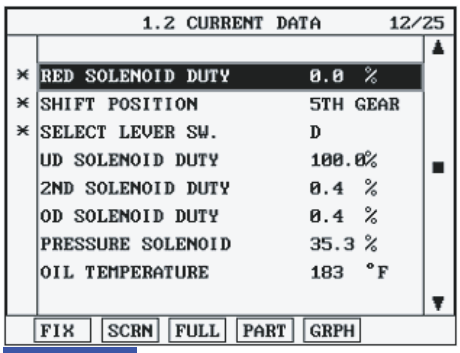

FIG.7)

FIG. 1) P,N
FIG. 2) "R"
FIG. 3) "D 1st" gear
FIG. 4) "2nd" gear
FIG. 5) "3rd" gear
FIG. 6) "4th" gear
FIG. 7) "5th" gear

LKKG209I

5. Does "RED SOLENOID DUTY " follow the reference data?

YES

▶ Fault is intermittent caused by poor contact in the sensor's and/or TCM(PCM)'s connector or was repaired and TCM(PCM) memory was not cleared. Thoroughly check connectors for looseness, poor connection, bending, corrosion, contamination, deterioration or damage. Repair or replace as necessary and go to "Verification of vehicle repair" procedure.

NO

▶ Go to "Terminal & connector inspection " procedure.

TERMINAL & CONNECTOR INSPECTION E8A77B5F

Refer to DTC P0743.

POWER SUPPLY CIRCUIT INSPECTION EE460A0B

1. Disconnect "A/T SOLENOID VALVE" connector.
2. Measure voltage between terminal "6" of the sensor harness connector and chassis ground.
3. Engine OFF → ON.

Specification: 12V is measured only for approx. 0.5sec

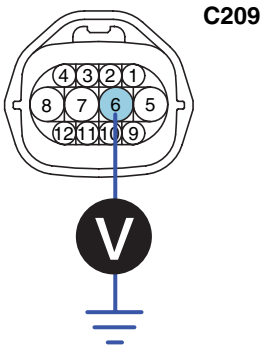

3. UD solenoid valve
4. 2ND solenoid valve
5. A/T battery
6. **A/T battery**
7. VF solenoid valve(-)
8. VF solenoid valve(+)
9. DCC solenoid valve
10. RED solenoid valve
11. LR solenoid valve
12. OD solenoide valve

SCMAT6361L

4. Is voltage within specifications?

YES

▶ Go to "Signal circuit inspection" procedure.

NO

▶ Check that A/T-20A fuse in engine room junction is installed or not blown.
▶ Check for open in harness. Repair as necessary and go to "Verification of vehicle repair" procedure.

SIGNAL CIRCUIT INSPECTION E40039FE

1. Check signal circuit open inspection

   1) Ignition "OFF".

   2) Disconnect "A/T SOLENOID VALVE" connector and "PCM/TCM" connector.
   Measure resistance between terminal "10" of the ATM SOLENOID VALVE harness connector and terminal "1" of the PCM/TCM harness connector.

Specification: approx. 0 Ω

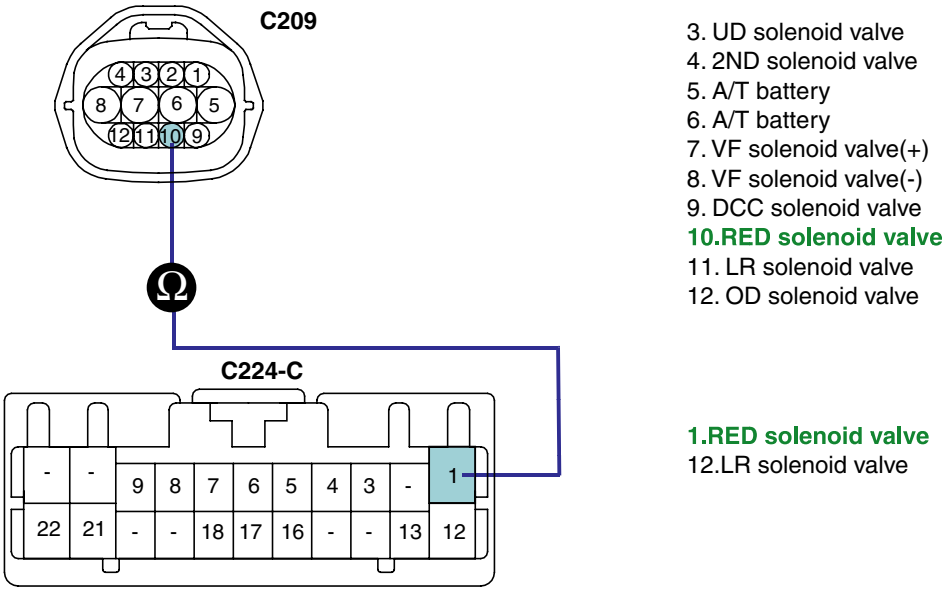

SCMAT6391L

   3) Is resistance within specifications?

   YES

   ▶ Go to "Check signal circuit short inspection" procedure.

   NO

   ▶ Check for open in harness. Repair as necessary and go to "Verification of vehicle repair" procedure.

2. Check signal circuit short inspection

   1) Ignition "OFF".

   2) Disconnect "A/T SOLENOID VALVE" connector and "PCM/TCM" connector.

   3) Measure resistance between terminal "10" of the ATM SOLENOID VALVE harness and chassis ground.

Specification: Infinite

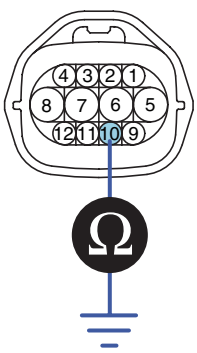

3. UD solenoid valve
4. 2ND solenoid valve
5. A/T battery
6. A/T battery
7. VF solenoid valve(+)
8. VF solenoid valve(-)
9. DCC solenoid valve
10. RED solenoid valve
11. LR solenoid valve
12. OD solenoide valve

SCMAT6392L

4) Is resistance within specifications?

YES

▶ Go to "Component inspection" procedure.

NO

▶ Check for short to ground in harness. Repair as necessary and go to "Verification of vehicle repair" procedure.

COMPONENT INSPECTION E3792D36

1. CHECK SOLENOID VALVE

1) Ignition "OFF".

2) Disconnect "A/T SOLENOID VALVE" connector.

3) Measure resistance between terminal "6" and terminal "10" of the ATM SOLENOID VALVE harness connector.

Specification: Approximately 2.7~3.4 Ω [20°C(68°F)]

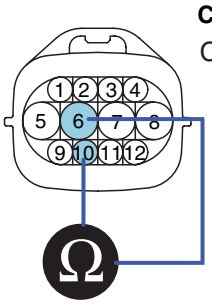

3. UD solenoid valve
4. 2ND solenoid valve
5. A/T battery
6. A/T battery
7. VF solenoid valve(+)
8. VF solenoid valve(-)
9. DCC solenoid valve
10. RED solenoid valve
11. LR solenoid valve
12. OD solenoide valve

SCMAT6393L

4) Is resistance within specification?

YES

▶ Go to "CHECK PCM/TCM" as below.

NO

▶ Replace RED SOLENOID VALVE as necessary and go to "Verification of vehicle repair" procedure.

2. CHECK PCM/TCM

1) Connect scantool to data link connector(DLC).

2) Ignition "ON" & Engine "OFF".

3) Select A/T solenoid valve actuator test and operate actuator test.

4) Can you hear operating sound for RED SOLENOID VALVE actuator testing function?

YES

▶ Go to "Verification of vehicle repair" procedure.

NO

▶ Replace PCM/TCM as necessary and go to "Verification of vehicle repair" procedure.

ACTUATOR TEST CONDITION

1. IG SWITCH ON
2. TRANSAXLE RANGE SWITCH is normal
3. P RANGE
4. Vehicle Speed 0mph(0km/h)
5. Throttle position sensor < 1V
6. IDLE SWITCH ON
7. ENGINE RPM 0

VERIFICATION OF VEHICLE REPAIR E65205D0

Refer to DTC P0743.

DTC P0885 A/T RELAY CIRCUIT MALFUNCTION

COMPONENT LOCATION E2FECFF8

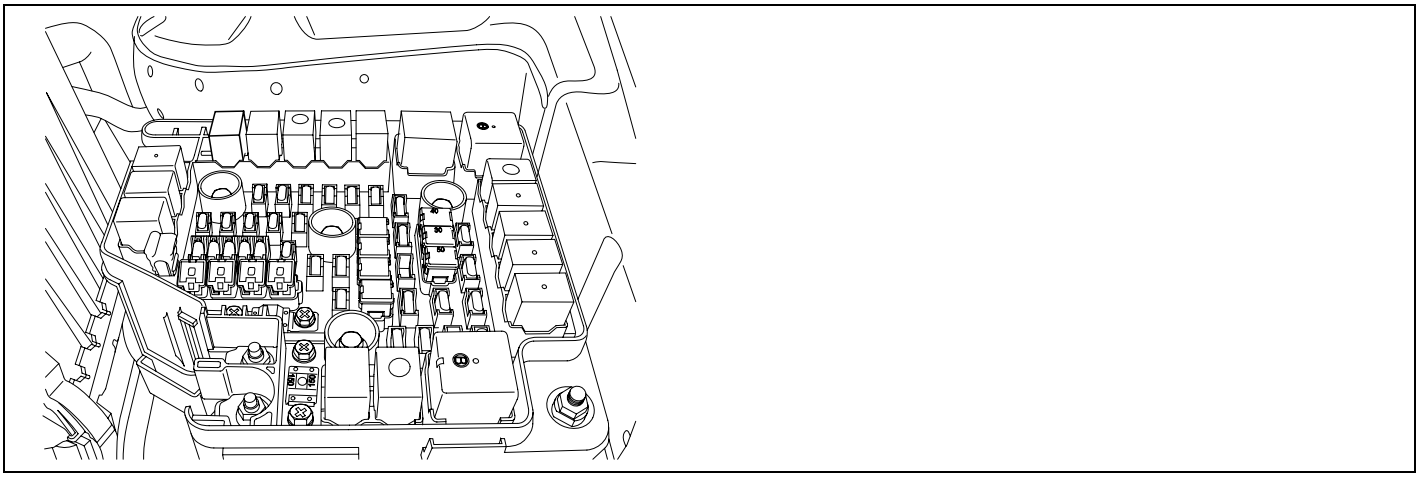

SCMAT6305D

GENERAL DESCRIPTION E879B263

The HIVEC Automatic Transmission supplies the power to the solenoid valves by way of a control relay. When the TCM sets the relay to ON, the relay operates and the battery power is supplied to all the solenoid valves. When the TCM sets the relay to OFF, all solenoid valve power is shut off and the transmission is held in the 3rd gear position. (Fail Safe Mode).

DTC DESCRIPTION E9ED9E9C

The TCM checks the A/T control relay signal by monitoring the control signal. If, after the ignition key is turned on, a voltage value that is out of specification is detected the TCM sets this code.

DTC DETECTING CONDITION E14898D7

Item	Detecting Condition	Possible cause
DTC Strategy	• Check voltage range	• Open or short in circuit • Faulty A/T control relay • Faulty PCM/TCM
Enable Conditions	• Voltage of Battery > 9V • Time after TCM turns on > 0.5sec • Voltage of A/T Relay > 9V • Not Fail Safe Status • IG "ON"	
Threshold value	• Voltage < 7V	
Diagnostic Time	• more than 0.1sec	
Fail Safe	• Locked in 3 rd gear.(control relay off)	

MONITOR SCANTOOL DATA EDBCA4E3

1. Connect scantool to data link connector(DLC).
2. Ignition "ON" & Engine "OFF".
3. Monitor the "A/T CON. RELAY VOLT" parameter on the scantool.

Specification : Approx. B+

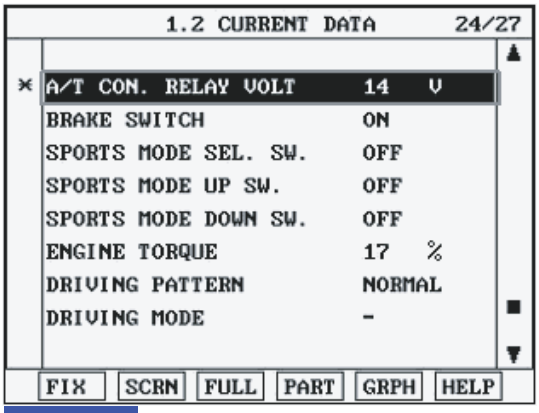

FIG.1)

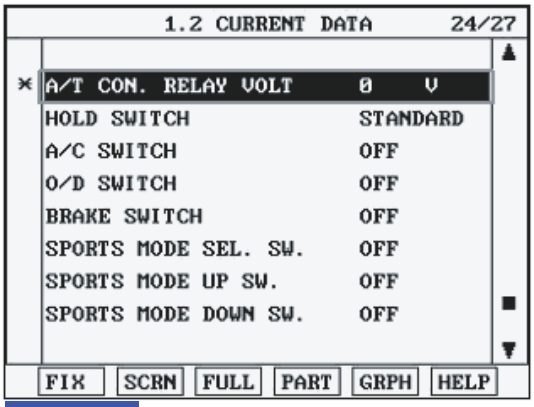

FIG.2)

FIG. 1) Normal status for "A/T RELAY"
FIG. 2) Open status for "A/T RELAY"

EKBF122A

4. Is A/T RELAY VOLT within specifications?

YES

▶ Fault is intermittent caused by poor contact in the sensor's and/or TCM(PCM)'s connector or was repaired and TCM(PCM) memory was not cleared. Thoroughly check connectors for looseness, poor connection, bending, corrosion, contamination, deterioration or damage. Repair or replace as necessary and go to "Verification of Vehicle Repair" procedure.

NO

▶ Go to "Terminal & Connector Inspection" procedure.

TERMINAL & CONNECTOR INSPECTION E145F8AD

1. Many malfunctions in the electrical system are caused by poor harness and terminal condition. Faults can also be caused by interference from other electrical systems, and mechanical or chemical damage.
2. Thoroughly check connectors for looseness, poor connection, bending, corrosion, contamination, deterioration, or damage.
3. Has a problem been found?

YES

▶ Repair as necessary and then go to "Verification of Vehicle Repair" procedure.

NO

▶ Go to "Power circuit inspection" procedure.

POWER SUPPLY CIRCUIT INSPECTION EC39BCBE

1. Ignition "ON" & Engine "OFF".
2. Disconnect the "A/T CONTROL RELAY" connector.
3. Measure the voltage between terminal "1" of the "A/T CONTROL RELAY" harness connector and chassis ground.

Specification : Approx. B+

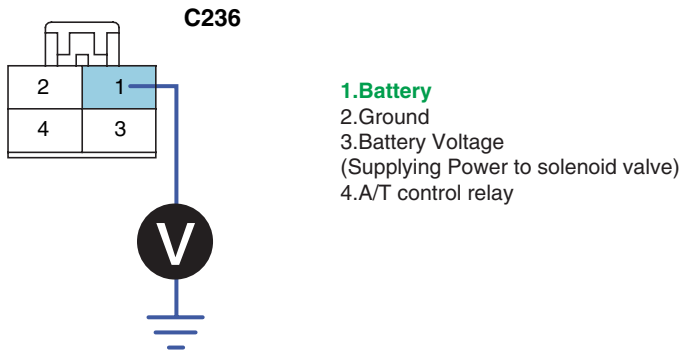

SCMAT6401D

4. Is voltage within specifications?

YES

▶ Go to "Signal circuit inspection" procedure.

NO

▶ Check that A/T-20A Fuse in engine room junction is installed or not blown.
▶ Check for Open in harness. Repair as necessary and Go to "Verification of Vehicle Repair" procedure.

SIGNAL CIRCUIT INSPECTION ECBB472C

1. CHECK A/T control relay harness

   1) Ignition "OFF".

   2) Disconnect the "A/T CONTROL RELAY" connector.

   3) Measure the voltage between terminal "4" of the "A/T CONTROL RELAY" harness connector and chassis ground.

   4) Engine OFF → ON.

Specification: 12V is measured only for approx. 0.5sec

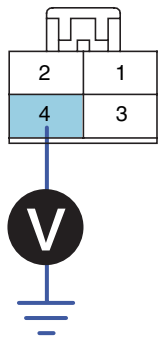

1.Battery
2.Ground
3.Battery Voltage
(Supplying Power to solenoid valve)
4.A/T control relay

SCMAT6402D

   5) Is voltage within specifications?

   YES

   ▶ Go to "Check Supplying Power to solenoid valve" procedure.

   NO

   ▶ Check for open in harness. Repair as necessary and Go to "Verification of Vehicle Repair" procedure.
   ▶ If signal circuit is OK, Substitute with a known-good PCM/TCM and check for proper operation. If the problem is corrected, replace PCM/TCM and then go to "Verification of Vehicle Repair" procedure.

2. CHECK Supplying Power to solenoid valve harness

   1) Ignition "OFF".

   2) Disconnect the "A/T CONTROL RELAY" and PCM/TCM connector.
   Measure the resistance between terminal "3" of the "A/T CONTROL RELAY" harness connector and terminal "2,3" of the PCM/TCM harness connector.

Specification : Approx. 0 Ω

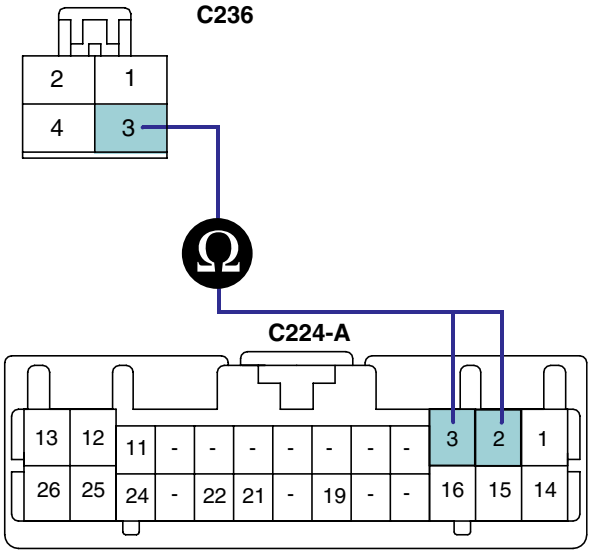

1.Battery
2.Ground
3.Battery Voltage
(Supplying Power to solenoid valve)
4.A/T control relay

2.Battery Voltage
3.Battery Voltage

SCMAT6403D

3) Is resistance within specifications?

YES

▶ Go to "Ground circuit inspection" procedure.

NO

▶ Check that A/T-20A Fuse in engine room junction is installed or not blown.
▶ Check for open in harness. Repair as necessary and Go to "Verification of Vehicle Repair" procedure.

GROUND CIRCUIT INSPECTION E8CC970F

1. Ignition "OFF".
2. Connect the "A/T CONTROL RELAY" connector.
3. Measure the resistance between terminal "2" of the "A/T CONTROL RELAY" harness connector and chassis ground.

Specification : Approx. 0 Ω

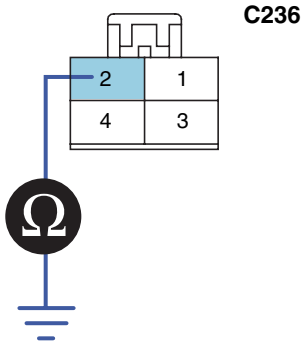

1.Battery
2.Ground
3.Battery Voltage
(Supplying Power to solenoid valve)
4.A/T control relay

SCMAT6404D

4. Is resistance within specifications?

YES

▶ Go to "Component inspection" procedure.

NO

▶ Check for open in harness. Repair as necessary and Go to "Verification of Vehicle Repair" procedure.

COMPONENT INSPECTION E49EFEFE

1. Ignition "OFF".
2. Remove "A/T CONTROL RELAY".
3. Measure the resistance between each terminal of the sensor.

Specification:

Item	Terminal No	
Resistance	1(red) - 3(black)	INFINITE
	2(black) - 4(red)	
supply(B+) to number 4 and supply (B-) to number 2	1(red) - 3(black)	0Ω

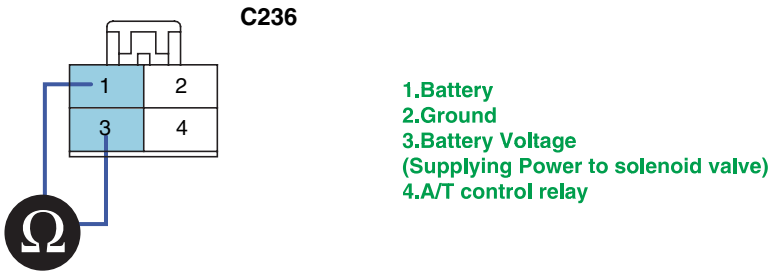

SCMAT6405D

4. Is resistance with in specifications?

YES

▶ Thoroughly check connectors for looseness, poor connection, bending, corrosion, contamination, deterioration, or damage. Repair or replace as necessary and then go to "Verification of Vehicle Repair" procedure.

NO

▶ Replace ATM CONTROL RELAY and then go to "Verification of Vehicle Repair" procedure.

VERIFICATION OF VEHICLE REPAIR ED2CF808

After a repair, it is essential to verify that the fault has been corrected.

1. Connect scantool and select "Diagnostic Trouble Codes(DTCs)" mode.
2. Using a scantool, Clear DTC.
3. Operate the vehicle within DTC Enable conditions in General information.
4. Are any DTCs present ?

YES

▶ Go to the applicable troubleshooting procedure.

NO

▶ System performing to specification at this time.

DTC U0001 CAN COMMUNICATION MALFUNCTION

COMPONENT LOCATION EA761FDF

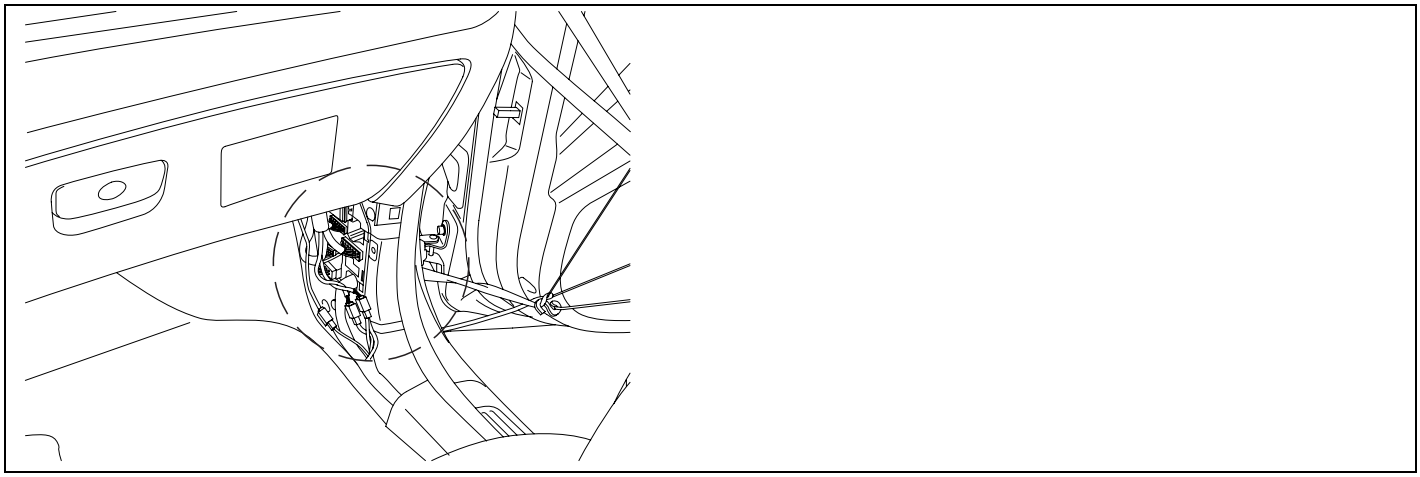

SCMAT6306D

GENERAL DESCRIPTION EBB0AD30

The TCM can either receive data from the Engine Control Module or ABS control module, or it can send data to the ECM and ABSCM by using CAN communication. The CAN communicaton is one of the vehicle communications method, which is now widely used to transfer the vehicle data.

DTC DESCRIPTION E03977FB

When the TCM cannot read the data from the ECM through the CAN-BUS line, the TCM sets this code.
CAN-BUS circuit malfunctioning or ECM can be a posssible cause of this DTC.

DTC DETECTING CONDITION EDF2BE4D

Item	Detecting Condition	Possible cause
DTC Strategy	• Check voltage range	• Open or Short in CAN communication harness • Faulty ECM • Faulty TCM
Enable Conditions	• Not Fail Safe Status • IG "ON" • Ne ≥ 100rpm	
Threshold value	• Receive a message "BUS OFF" from CAN MI-COM	
Diagnostic Time		
Fail Safe	• INTELLIGENT SHIFT and is inhibited • Learning for oil pressure control is inhibited • Torque Retard requirement is inhibited • Direct connection control of TCC is inhibited	

SIGNAL WAVEFORM E59EC1CB

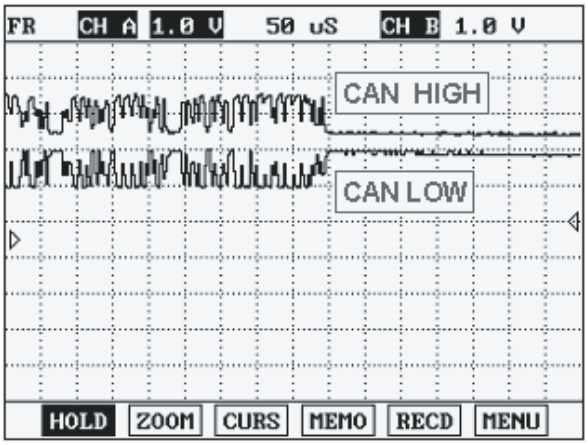

LKKG115A

MONITOR SCANTOOL DATA ED1236B5

1. Connect scantool to data link connector(DLC).
2. Engine "ON".
3. Monitor the "CAN COMMUNICATION SERVICE DATA (ENGINE RPM, VEHICLE SPEED SENSOR, THROTTLE P. SENSOR)" parameters on the scantool.

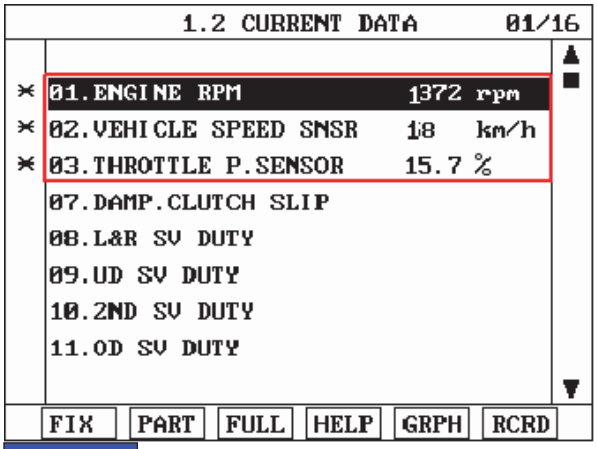

FIG.1)

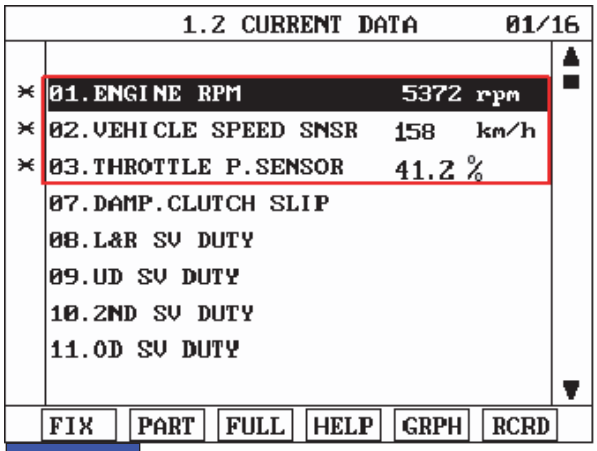

FIG.2)

FIG.1) Low-RPM

FIG.2) High-RPM

LKKG115B

4. Does "CAN BUS LINE DATA " follow the reference data?

YES

▶ Fault is intermittent caused by poor contact in the sensor's and/or TCM(PCM)'s connector or was repaired and TCM(PCM) memory was not cleared. Thoroughly check connectors for looseness, poor connection, bending, corrosion, contamination, deterioration or damage. Repair or replace as necessary and go to "Verification of Vehicle Repair" procedure .

NO

▶ Go to "Terminal & Connector Inspection" procedure.

TERMINAL & CONNECTOR INSPECTION EF5197C6

1. Many malfunctions in the electrical system are caused by poor harness and terminals. Faults can also be caused by interference from other electrical systems, and mechanical or chemical damage.
2. Thoroughly check connectors for looseness, poor connection, bending, corrosion, contamination, deterioration, or damage.
3. Has a problem been found?

YES

▶ Repair as necessary and then go to "Verification of Vehicle Repair" procedure .

NO

▶ Go to "Signal circuit inspection" procedure .

SIGNAL CIRCUIT INSPECTION E123A3DB

1. Ignition "ON" & Engine "OFF".
2. Disconnect the "TCM" and "ABS ECM" connector.
3. Measure Resistence between terminal 3 and 4 of the TCM harness connector.

Specification : Approx. 120 ± 10 Ω

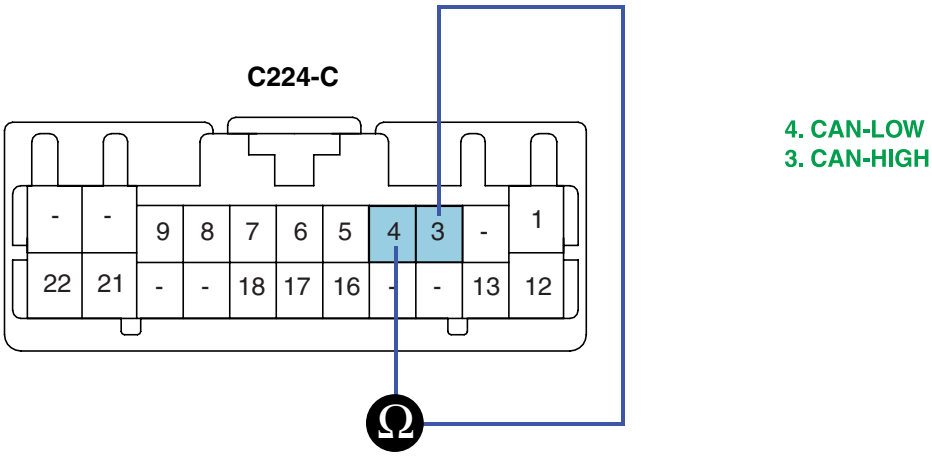

SCMAT6411L

4. Is measured resistance within specifications?

YES

▶ Substitute with a known-good PCM/TCM and check for proper operation. If the problem is corrected, replace PCM/TCM as necessary and then go to "Verification of Vehicle Repair" procedure.

NO

▶ Check connectors for looseness, poor connection, bending, corrosion, contamination, deterioration or damage of ECM.and then Repair or replace Resistance for CAN communication as necessary and go to "Verification of Vehicle Repair" procedure .

VERIFICATION OF VEHICLE REPAIR E9FE64EC

After a repair, it is essential to verify that the fault has been corrected.

1. Connect scan tool and select "Diagnostic Trouble Codes(DTCs)" mode.
2. Using a scantool, Clear DTC.
3. Operate the vehicle within DTC Enable conditions in General information.
4. Are any DTCs present?

YES

▶ Go to the applicable troubleshooting procedure.

NO

▶ System performing to specification at this time.

DTC U0100 CAN MI-COM OR CIRCUIT MAL.

COMPONENT LOCATION ECCDDB76

Refer to DTC U0001.

GENERAL DESCRIPTION EC72F81B

Refer to DTC U0001.

DTC DESCRIPTION E328681E

Refer to DTC U0001.

DTC DETECTING CONDITION EDCB1F3F

Item	Detecting Condition	Possible cause
DTC Strategy	• Check voltage range	• Open or Short in CAN communication harness • Faulty ECM • Faulty TCM
Enable Conditions	• Not Fail Safe Status • IG "ON" • Ne ≥ 100rpm	
Threshold value	• Receive a message "BUS OFF" from CAN MI-COM	
Diagnostic Time	• More than 1.5 sec	
Fail Safe	• INTELLIGENT SHIFT and is inhibited • learning for oil pressure control is inhibited • Torque Retard requirement is inhibited • direct connection control of TCC is inhibited	

SIGNAL WAVEFORM E59B3434

Refer to DTC U0001.

MONITOR SCANTOOL DATA EFAF8C87

1. Connect scantool to data link connector(DLC).
2. Engine "ON".
3. Monitor the "CAN COMMUNICATION SERVICE DATA (ENGINE RPM, VEHICLE SPEED SENSOR, THROTTLE P. SENSOR)" parameters on the scantool.

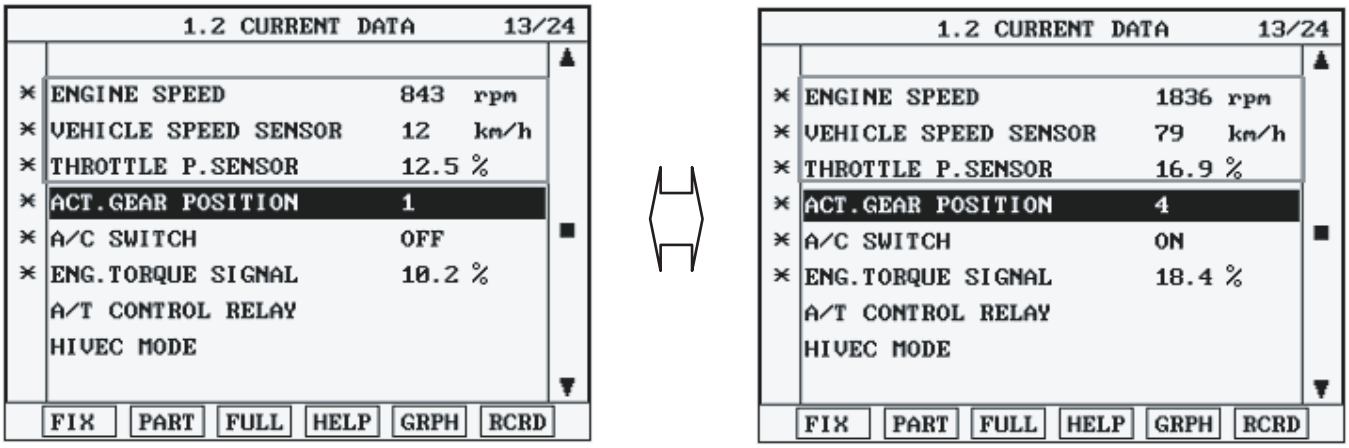

LKKG115D

4. Does "CAN BUS LINE DATA " follow the reference data?

YES

▶ Fault is intermittent caused by poor contact in the sensor's and/or TCM(PCM)'s connector or was repaired and TCM(PCM) memory was not cleared. Thoroughly check connectors for looseness, poor connection, bending, corrosion, contamination, deterioration or damage.Repair or replace as necessary and go to "Verification of Vehicle Repair" procedure.

NO

▶ Go to "Terminal & Connector Inspection" procedure.

TERMINAL & CONNECTOR INSPECTION EEE2E73F

Refer to DTC U0001.

SIGNAL CIRCUIT INSPECTION EEB48E26

Refer to DTC U0001.

VERIFICATION OF VEHICLE REPAIR E85CE21D

Refer to DTC U0001.

AUTOMATIC TRANSAXLE

COMPONENTS (1) E8DDBB36

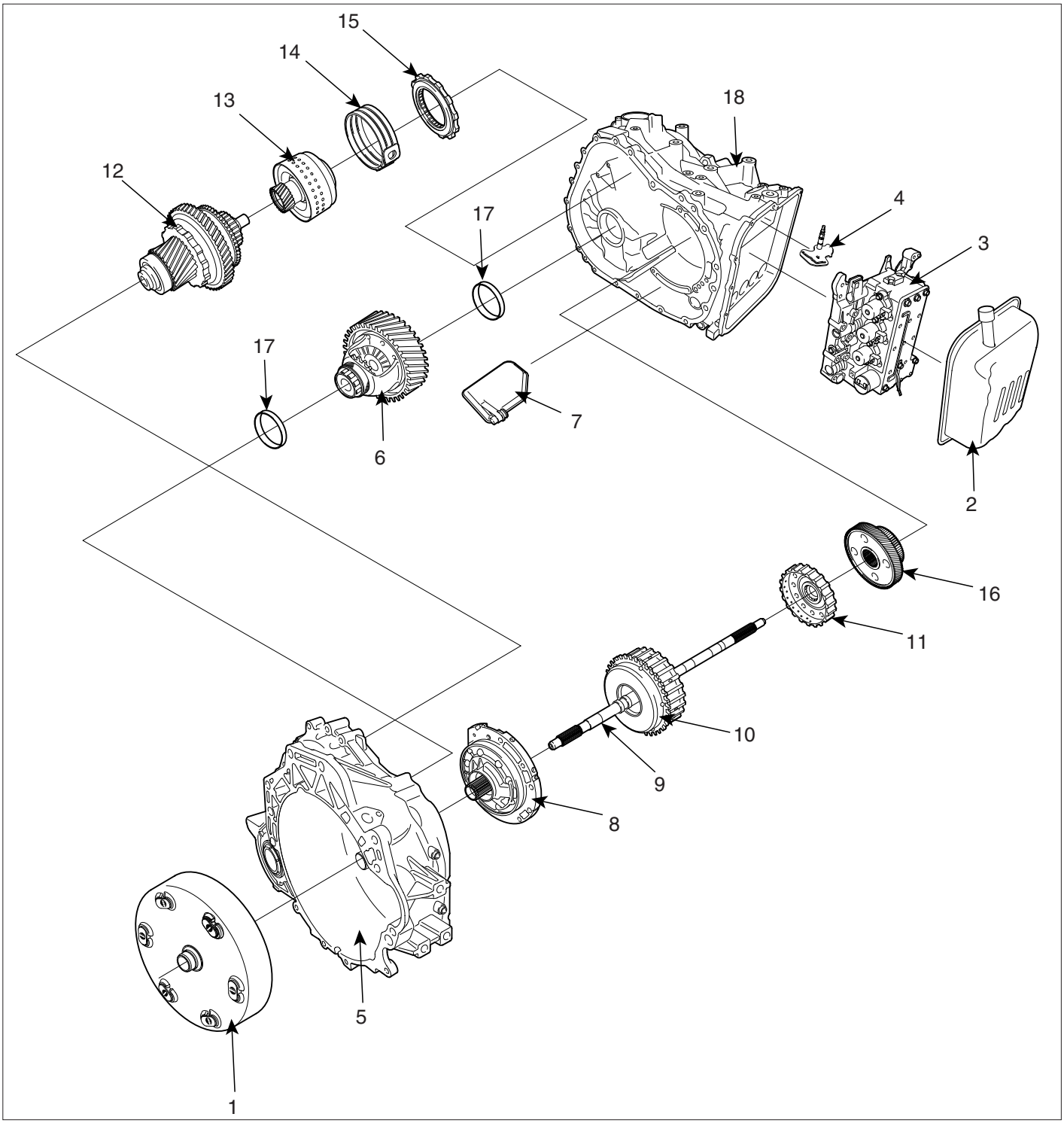

1. Torque converter
2. Valve body cover
3. Valve body assembly
4. Manual control shaft assembly
5. Converter housing
6. Differential assembly
7. Main oil filter
8. Oil pump
9. Input shaft
10. Underdrive clutch assembly
11. Underdrive clutch hub
12. Direct planetary carrier assembly
13. Direct clutch assembly
14. Reduction brake band
15. One way clutch
16. Transfer drive gear
17. Differential bearing case
18. Transaxle case

LKKG001A

COMPONENTS (2)

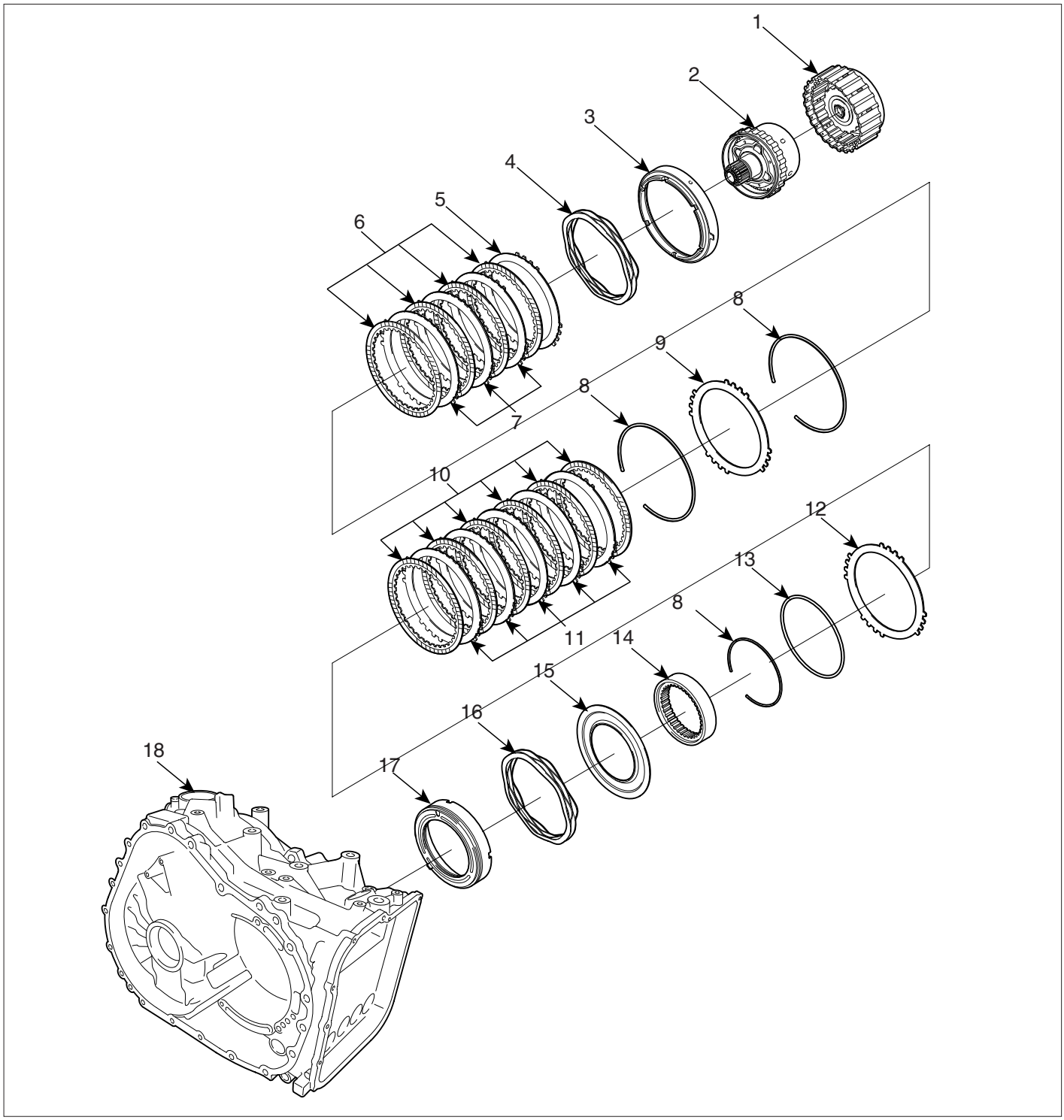

1. Reverse sun gear
2. Planetary gear assembly
3. 2nd brake retainer
4. 2nd brake return spring
5. 2nd brake pressure plate
6. 2nd brake discs
7. 2nd brake plates
8. Snap ring
9. Brake reaction plate
10. Brake discs
11. Brake plates
12. Low&Reverse brake pressure plate
13. Wave spring
14. Oneway clutch inner race
15. Brake spring retainer
16. Low&Reverse brake return spring
17. Low&Reverse brake piston
18. Transaxle case

LKKG001B

REMOVAL EFF4FD42

CAUTION

- ***Use a cover not to damage the vehicle surface.***
- ***Disconnect connectors carefully not to be damaged.***

NOTE

- *Mark wires or hoses for identification.*

1. Remove the inter cooler and the engine cover. (see EM group)
2. Remove the battery (A).

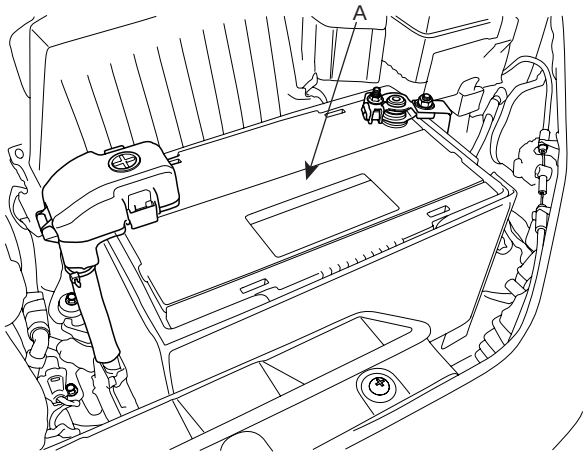

SCMAT6001D

3. Disconnect the AFS connector (A).

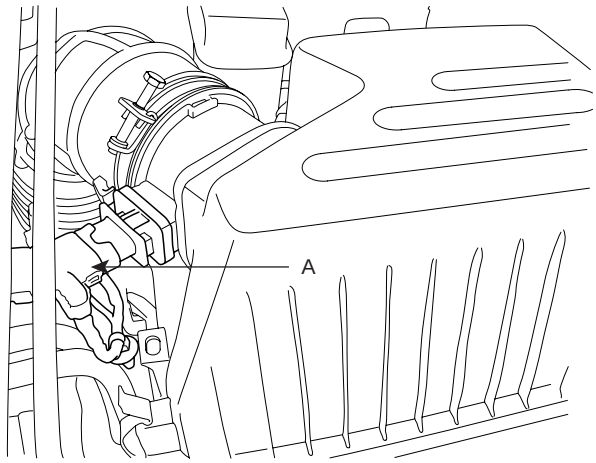

SCMMT6002D

4. Remove the air cleaner upper cover (B) by loosening the clamp bolt (A) and the clips.

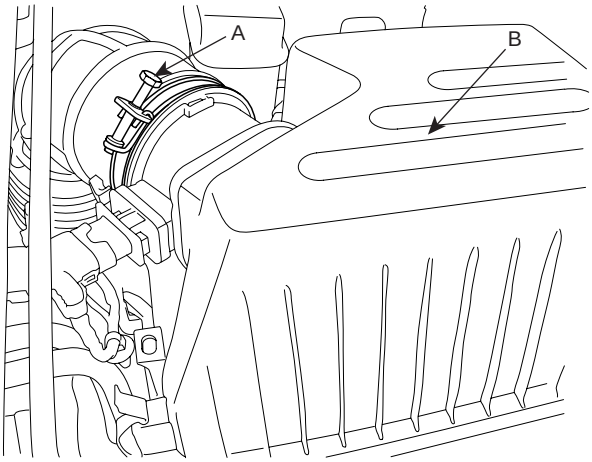

SCMMT6060D

5. Remove the air cleaner lower part (B) by removing the two mounting bolts (A).

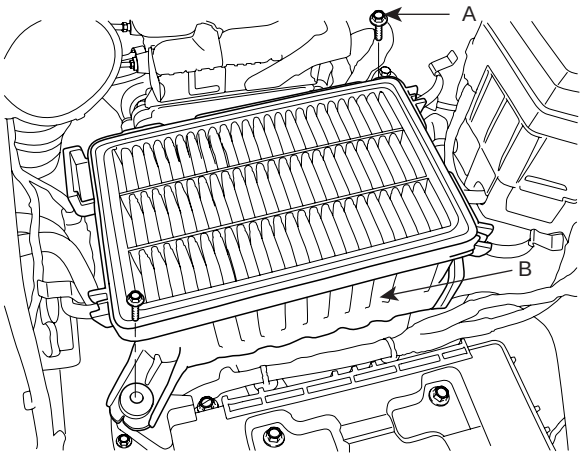

SCMMT6004D

6. Remove the battery tray (B) by removing the four mounting bolts (A).

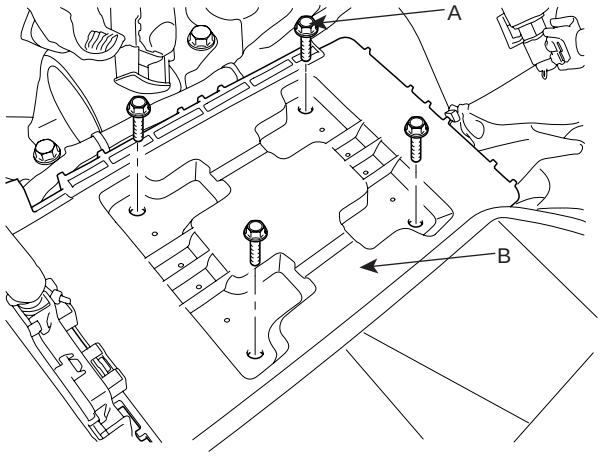

SCMAT6006D

7. Disconnect the transaxle wire harness connectors.

1) Remove the inhibiter switch connector (A).

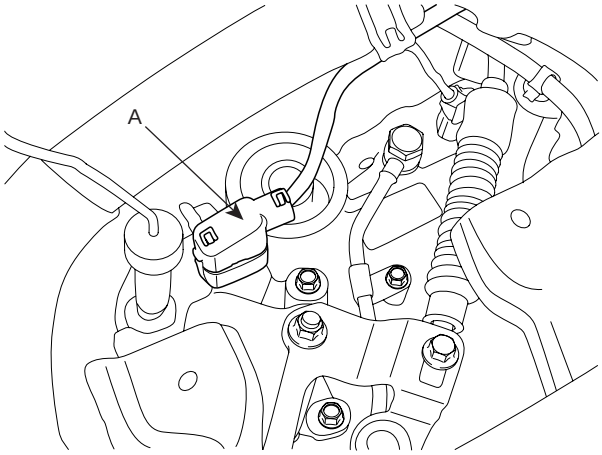

SCMAT6007D

2) Remove the solenoid valve connector (A).

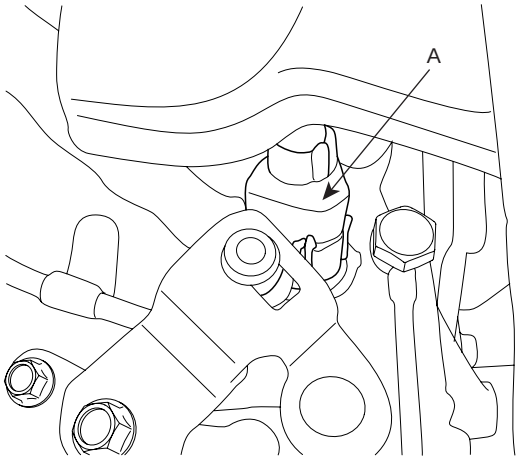

SCMAT6008D

3) Remove the input speed sensor connector (A).

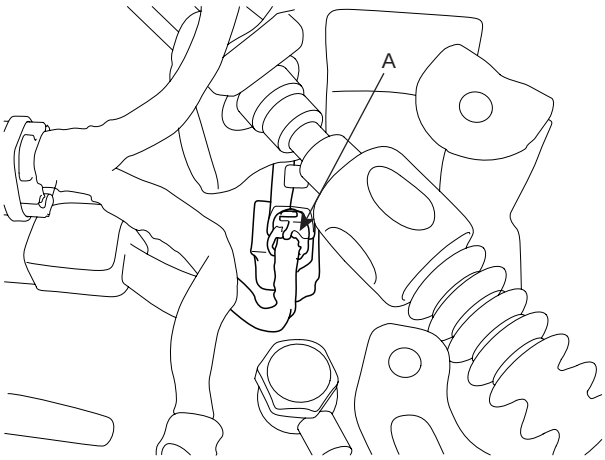

SCMAT6009D

4) Remove the output speed sensor connector (A).

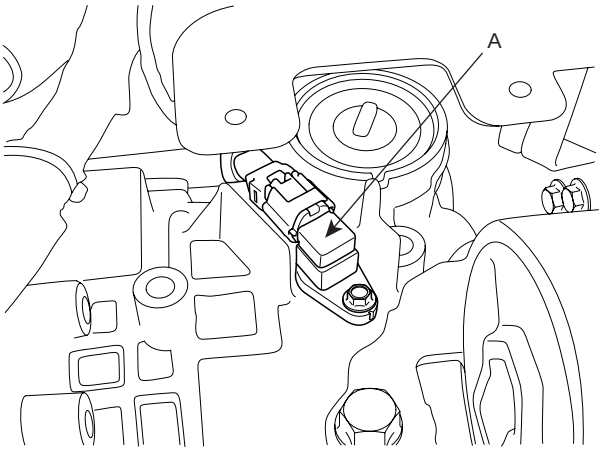

SCMAT6010D

5) Remove the vehicle speed sensor connector (A).

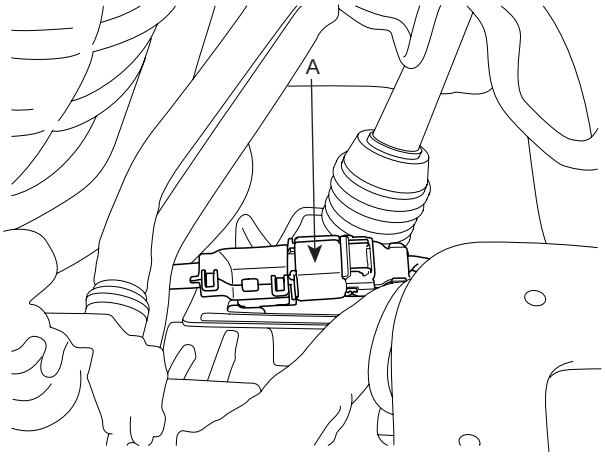

SCMAT6011D

8. Remove the control cable assembly(C) by removing the nut (A) and clip (B).

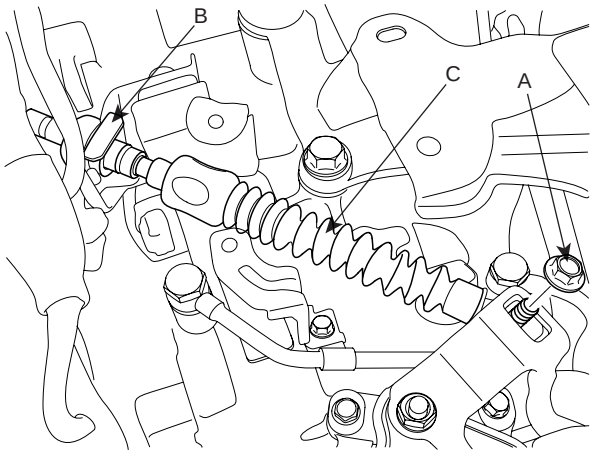

SCMAT6012D

9. Disconnect the transaxle oil cooler hoses (B) from the tubes by loosening the clamps (A).

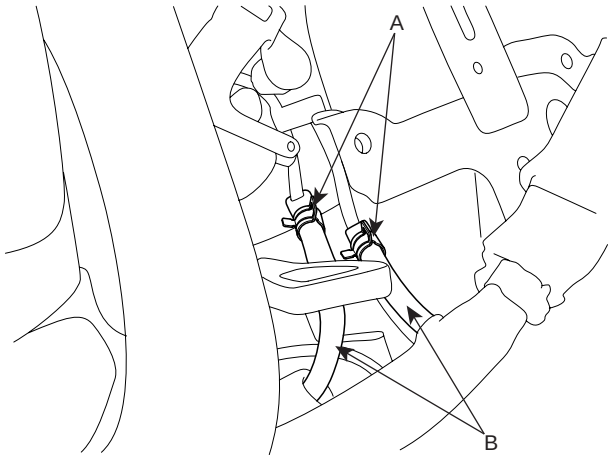

SCMAT6013D

10. Remove the transaxle mounting bolts (A).

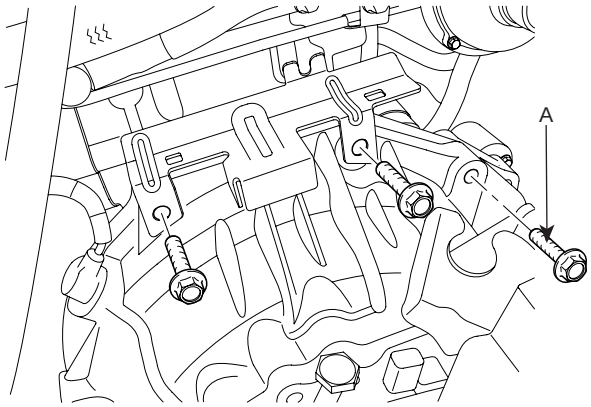

AKKF002O

11. Remove the starter motor by disconnecting the connector. (see EE group)

12. Using the SST(09200-38001), hold the engine and transaxle assembly safely.

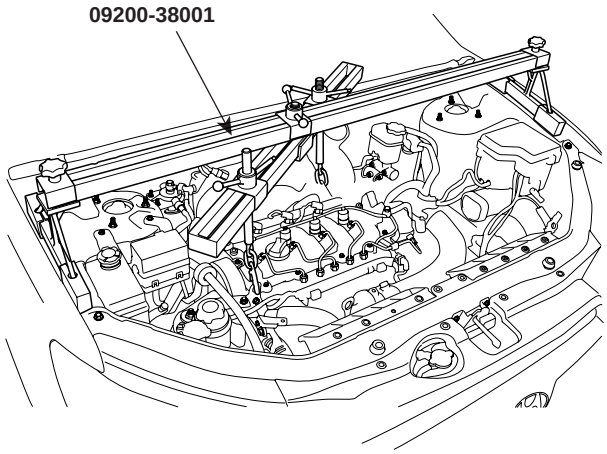

SCMAT6014D

13. Remove the transaxle insulator mounting bolts (A).

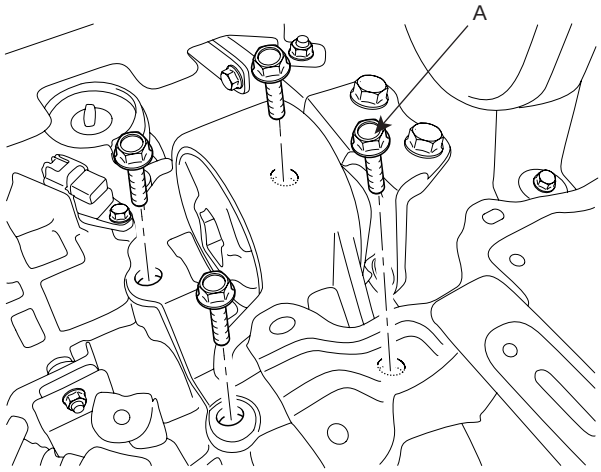

SCMAT6015D

14. Remove the front wheels. (see SS group)

15. Lift up the vehicle.

16. Remove the power steering column joint bolt and the EPS connector. (see ST group)

17. Remove the under cover (A).

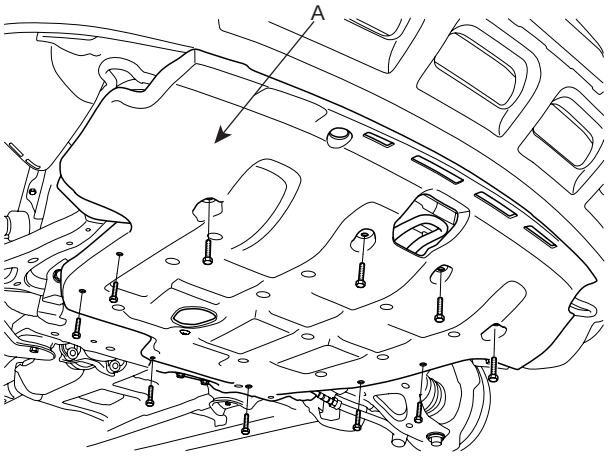

SCMAT6016D

18. Drain the transaxle fluid.

19. Drain power steering fluid through the return tube (A). (see ST group)

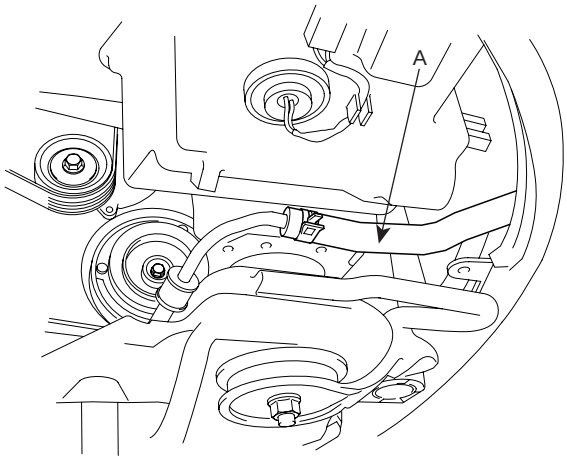

SCMAT6010L

20. Disconnect the power steering pressure tube (A) from the power steering oil pump.

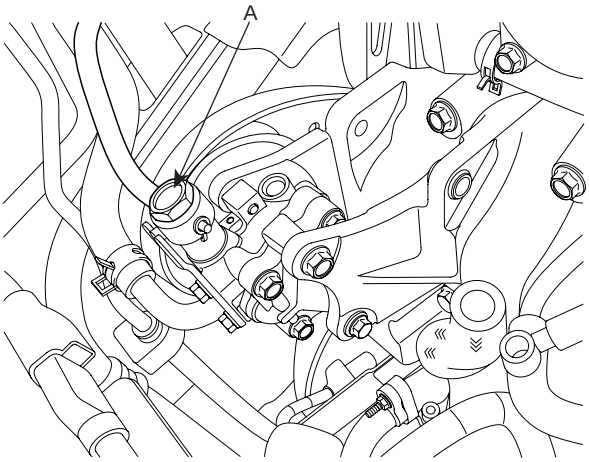

SCMAT6018D

21. Disconnect the lower arm, the tie rod end ball joint, the stabilizer bar link from the front knuckle. (see SS group)

22. Remove the roll stopper mounting bolts.

23. Remove the mounting bolts from the sub frame by supporting the sub frame with a jack. (see SS group)

24. Remove drive shaft from transaxle. (see DS group).

25. Install a jack for supporting the transaxle assembly.

26. In case of 4WD, remove the transfer case assembly. (see MT group's 'Transfer case')

27. Remove the drive plate bolts (A) and the transaxle lower mounting bolts (B-4EA).

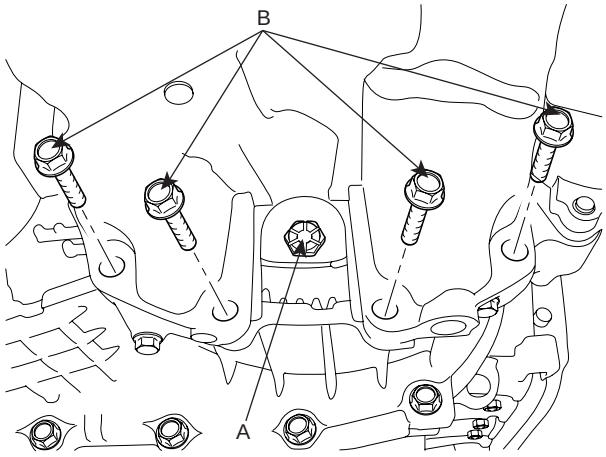

SCMAT6019D

28. Lifting the vehicle up and lowering the jack slowly, remove the transaxle assembly.

INSTALLATION E02F548D

Installation is in the reverse order of removal.
Perform the following :

- Adjust the shift cable.
- Refill the transaxle with fluid.
- Refill the radiator with engine coolant.
- Bleed air from the cooling system with the heater valve open.
- Clean the battery posts and cable terminals with sandpaper, assemble them, and apply grease to prevent corrosion.

1. Lowering the vehicle or lifting up a jack, install the transaxle assembly.

2. Tighten the transaxle lower mounting bolts (B-4EA).

TORQUE:
65~85 Nm(6.5~8.5 kgf.m, 47.0~61.5 lb-ft)

3. Install the drive plate bolts (A) by turning the timing gear.

TORQUE:
46~53 Nm(4.6~5.3 kgf.m, 33.3~38.3 lb-ft)

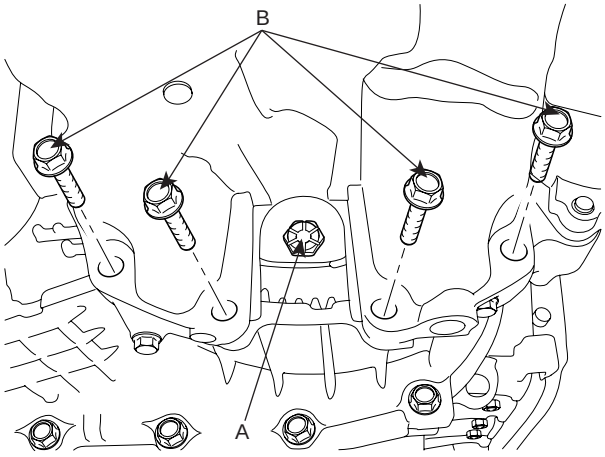

SCMAT6019D

4. In case of 4WD, install the transfer case assembly. (see MT group's 'Transfer case')

5. After removing a jack, insert the drive shafts. (see DS group)

6. Install the sub frame. (see SS group).

7. Tighten the roll stopper mounting bolts.

TORQUE:
90~110 Nm(9~11 kgf.m, 65.1~79.5 lb-ft)

8. Connect the lower arm, the tie rod end ball joint, the stabilizer bar link to the front knuckle. (see SS group)

9. Install the under cover (A).

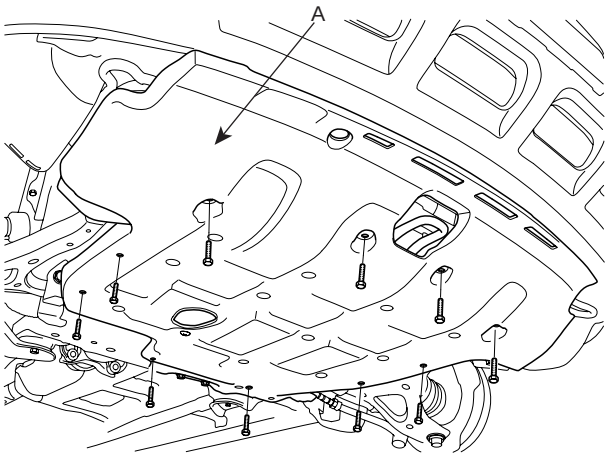

SCMAT6016D

10. Install the steering column joint bolt and the EPS connector. (see ST group)

11. Connect the return tube(A) with a clamp. (see ST group)

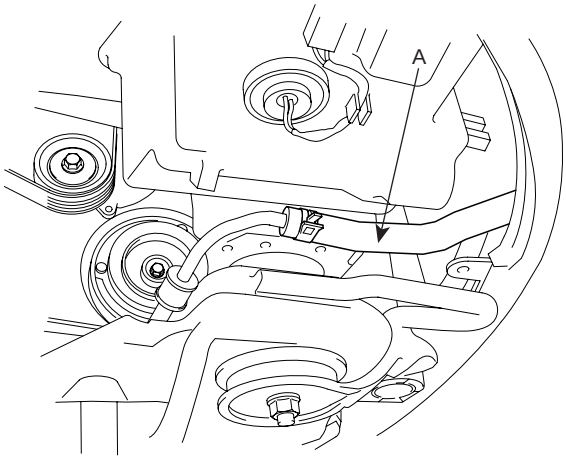

SCMAT6010L

12. Install the front wheels and tires.

13. Tighten the transaxle insulator mounting bolt (A).

TORQUE:
90~110 Nm(9~11 kgf.m, 65.1~79.5 lb-ft)

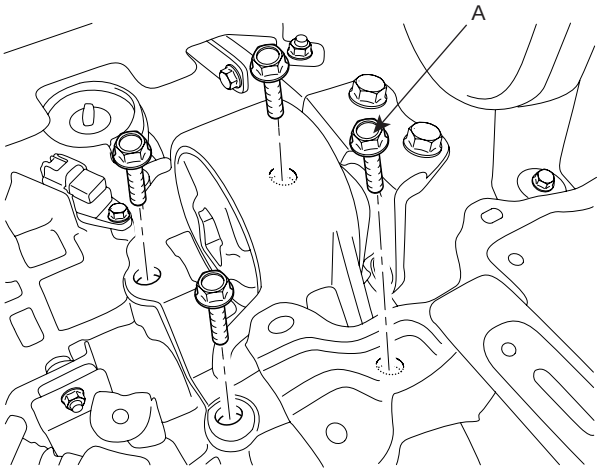

SCMAT6015D

14. Tighten the transaxle mounting bolts (A).

TORQUE:
43~55 Nm(4.3~5.5 kgf.m, 31.1 ~ 39.7 lb-ft)

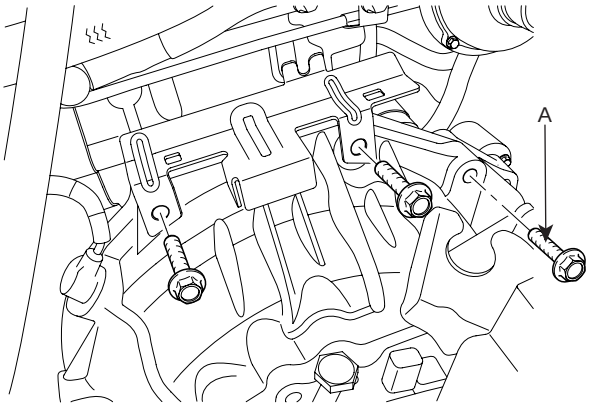

AKKF002O

15. Remove the SST (09200-38001) holding the engine and transaxle assembly.

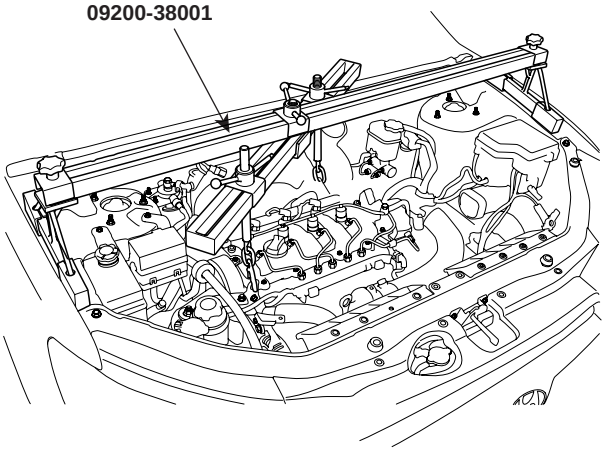

SCMAT6014D

16. Install the starter motor. (see EE group).

TORQUE:
65~85 Nm(6.5~8.5 kgf.m, 47.0~61.5 lb-ft)

17. Connect the power steering pressure tube (A) to the power steering oil pump.

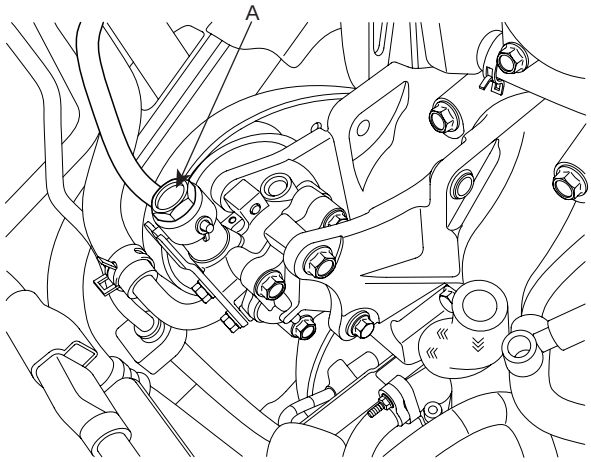

SCMAT6018D

18. Connect the transaxle oil cooler hoses (A) to the tubes by fastening the clamps (B).

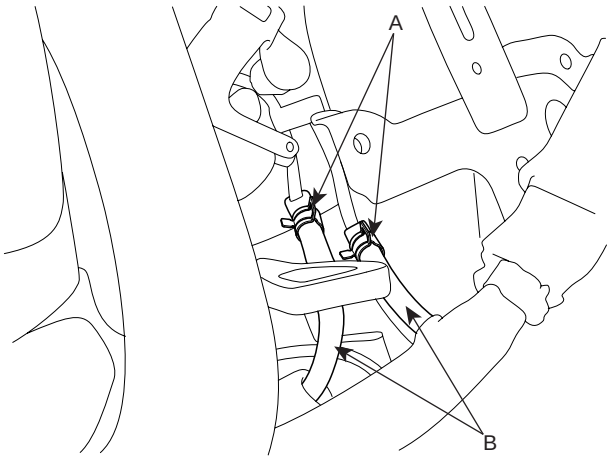

SCMAT6013D

19. Install the control cable assembly(C) by tightening the nut (A) and clip (B).

TORQUE:
10~14 Nm(1.0~1.4 kgf.m, 7.2~10.1 lb-ft)

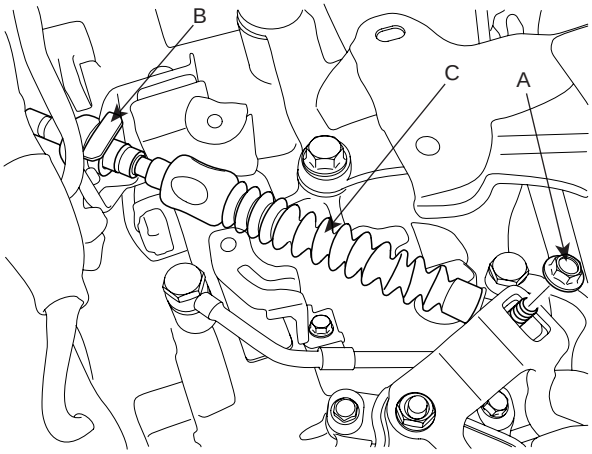

SCMAT6012D

20. Connect the transaxle wire harness connectors.

1) Install the inhibiter switch connector (A).

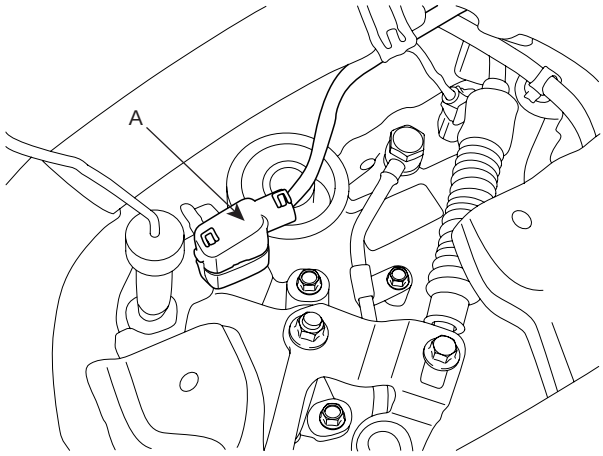

SCMAT6007D

2) Install the solenoid valve connector (A).

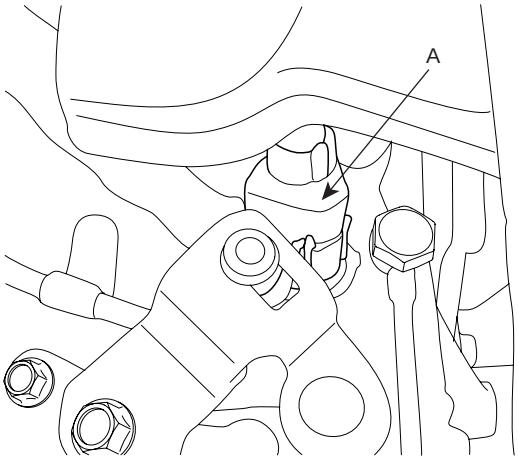

SCMAT6008D

3) Install the input speed sensor connector (A).

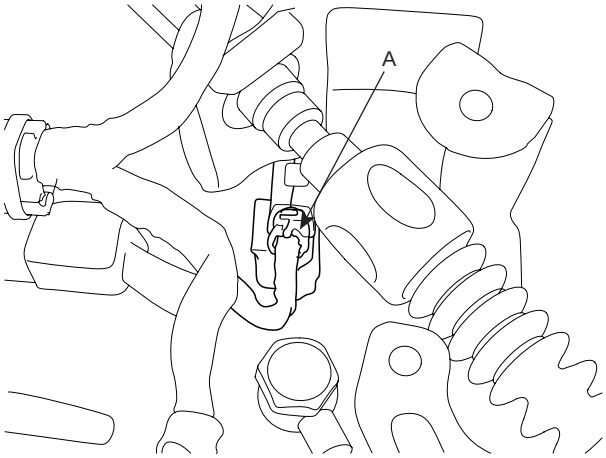

SCMAT6009D

4) Install the output speed sensor connector (A).

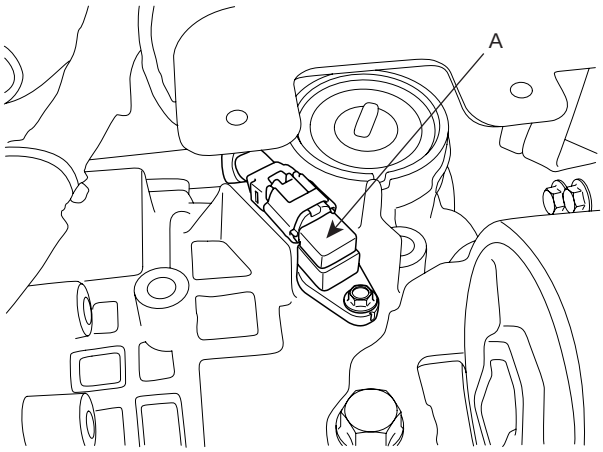

SCMAT6010D

5) Install the vehicle speed sensor connector (A).

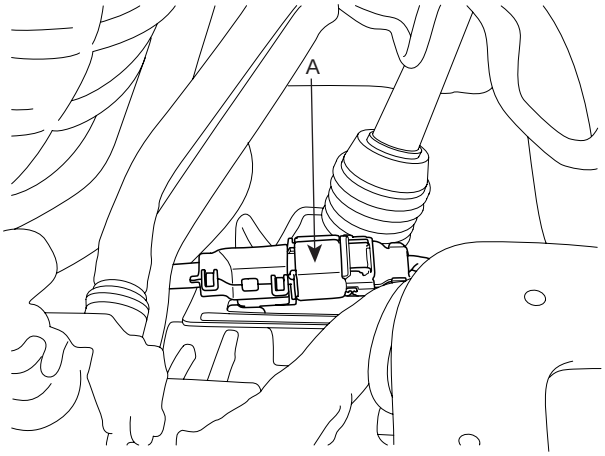

SCMAT6011D

21. Install the battery tray (B) by tightening the four mounting bolts (A).

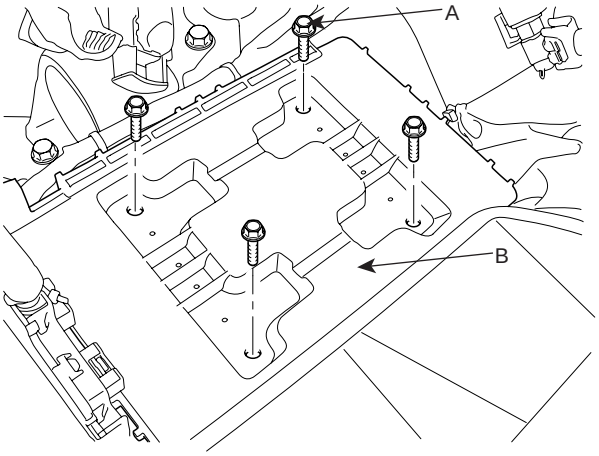

SCMAT6006D

22. Install the air cleaner lower part (B) by installing the two mounting bolts (A).

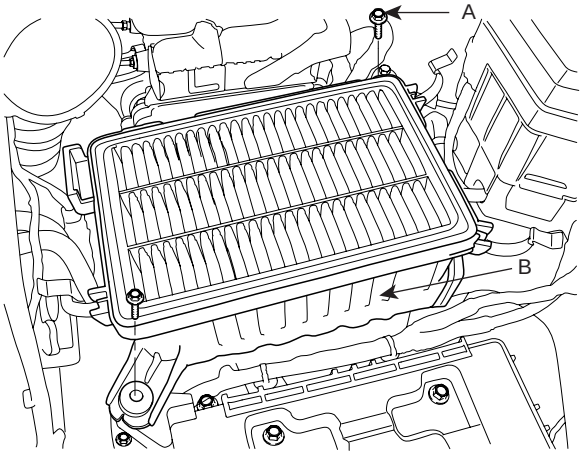

SCMMT6004D

23. Install the air cleaner upper cover (B) by fastening the clamp bolt (A) and the clips.

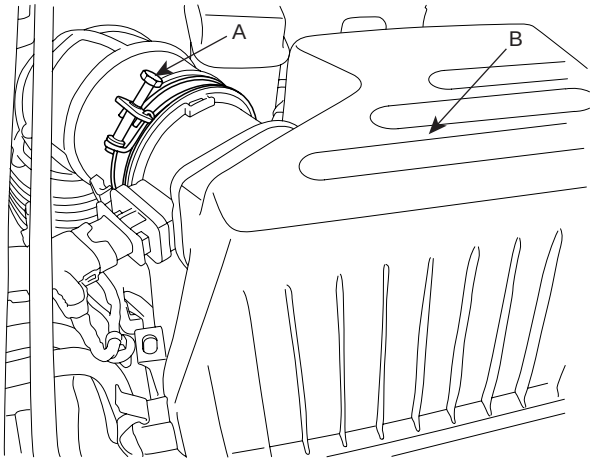

SCMMT6060D

24. Connect the AFS connector (A).

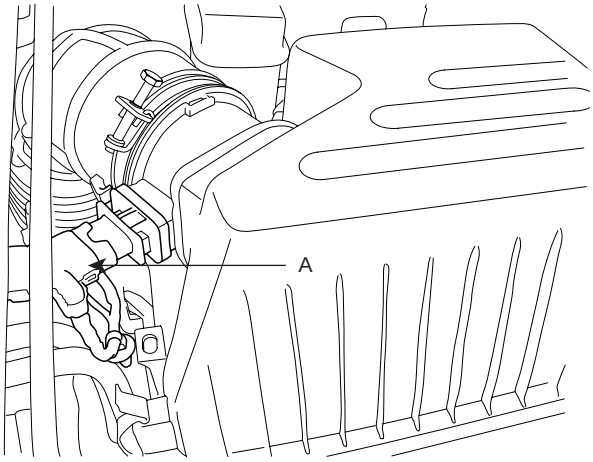

SCMMT6002D

25. Install the battery (A).

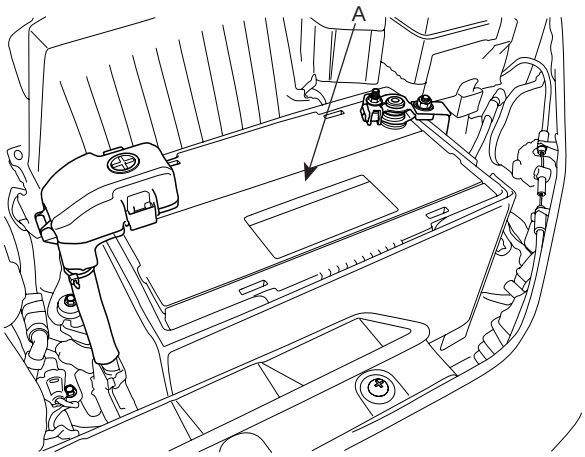

SCMAT6001D

26. Refill the transaxle fluid. (see 'Service adjustment procedure')

27. Refill the power steering fluid. (see 'ST' group)

CAUTION

After installing the inter cooler assembly, bleed the air in the system.

28. Install the engine cover and the inter cooler assembly. (see 'EM' group)

NOTE

When replacing the automatic transaxle, reset the automatic transaxle's values by using the High- Scan Pro.

a. Connect the Hi-Scan Pro connector to the data link connector under the crash pad and power cable to the cigar jack under the center facia.
b. Turn the ignition switch on and power on the Hi-Scan Pro.
c. Select the vehicle's name.
d. Select 'AUTOMATIC TRANSAXLE'.

```
1. HYUNDAI VEHICLE DIAGNOSIS ▼
MODEL  : SANTAFE(CM)06-
SYSTEM : AUTOMATIC TRANSAXLE
         GASOLINE
  01. DIAGNOSTIC TROUBLE CODES
  02. CURRENT DATA
  03. FLIGHT RECORD
  04. ACTUATION TEST
  05. SIMU-SCAN
  06. FREEZE FRAME DATA
  07. RESETTING AUTO T/A VALUES
  08. IDENTIFICATION CHECK
```

SCMAT6511L

e. Select 'RESETTING AUTO T/A VALUES' and perform the procedure.

```
1.7. RESETTING AUTO T/A VALUES

THIS FUNCTION IS FOR RESETTING
THE ADAPTIVE VALUES FROM THE
USED AUTO T/A WHEN REPLACING IT.

IF YOU ARE READY,
          PRESS [ENTER] KEY!
```

SCMAT6512L

f. Perform the procedure by pressing F1 (REST).

```
1.7. RESETTING AUTO T/A VALUES

RESETTING AUTO T/A VALUES
CONDITION   IG KEY ON
            TRANSAXLE RANGE : P
            VEHICLE SPEED : 0
            ENGINE OFF

PRESS [REST], IF YOU ARE READY !

REST
```

SCMAT6513L

AUTOMATIC TRANSAXLE CONTROL SYSTEM

SOLENOID VALVE

DESCRIPTION E2DBB4CE

TCM calculates the best condition using the information from all kinds of sensors. If the solenoid valve receives the information on the oil pressure, the solenoid valve actuates according to the driving signal. All kinds of regulators in the valve body are controlled to change the oil passage and also the line pressure is controlled by TCM.

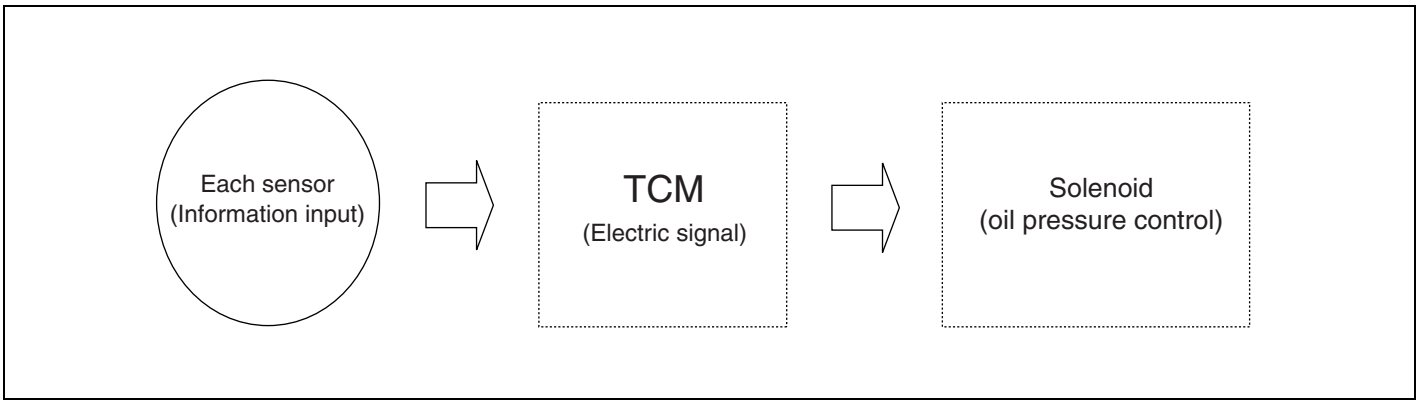

BKGF017A

● **PWM (Pluse Width Modulation) SOLENOID VALVE**

Structure and functions

PWM solenoid valve is composed of five solenoid valves and the oil capacity in the solenoid valve is changed by the electric duty value of TCM. The oil pressure of the valve body and the torque converter engages or disengages the damper clutch. The solenoid valves send the operating oil pressure to the clutches and brakes at the each range and also control the strength and weakness of oil pressure to reduce the shock when shifting the range.

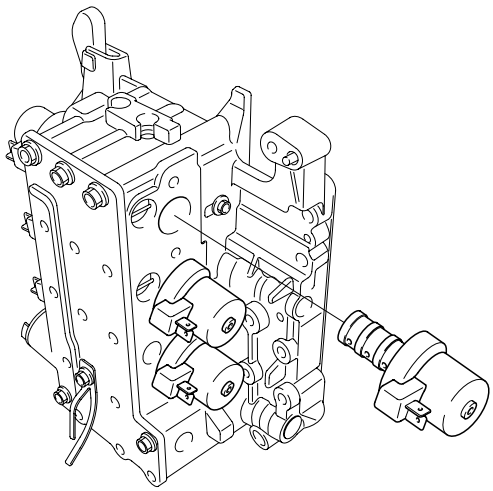

<PWM Solenoid valve>

SCMAT6002L

C209

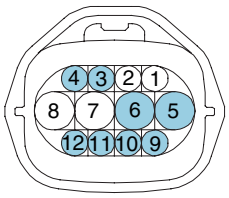

1.Fluid temperature sensor
2.Fluid temperature sensor ground
3.UD Solenoid valve
4.2ND Solenoid valve
5.A/T battery
6.A/T battery
7.A/T battery
8.VF Solenoid valve ground
9.DCC Solenoid valve
10.RED Solenoid valve
11.LR Solenoid valve
12.OD Solenoid valve

SCMAT6001L

PWM (PLUSE WIDTH MODULATION) SOLENOID

Range	PWM solenoid valve				
	PCSV-A (SCSV-B)	PCSV-B (SCSV-C)	PCSV-C (SCSV-D)	PCSV-D (TCC SV)	ON, OFF (SCSV-A)
N, P	OFF	ON	ON	OFF	ON
1st	ON	ON	OFF	OFF	ON
2nd	ON	OFF	OFF	ON	OFF
3rd	OFF	ON	OFF	ON	OFF
4th	OFF	OFF	ON	ON	OFF
Reverse	OFF	OFF	ON	OFF	ON
LOW	OFF	ON	OFF	OFF	ON

PWM (PLUSE WIDTH MODULATION) SOLENOID VALVE CONTROL FEATURE

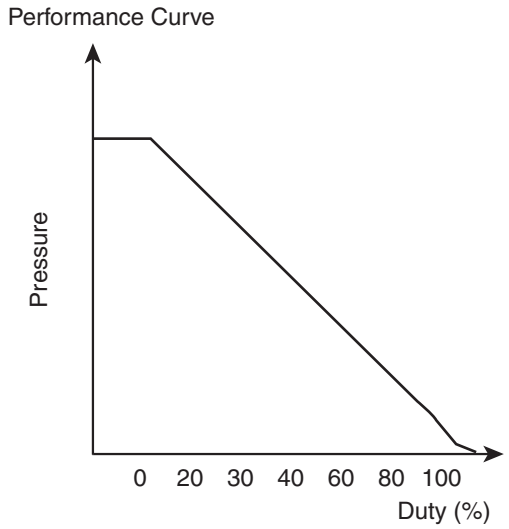

<PWM Solenoid valve performance curve>

BKGF017D

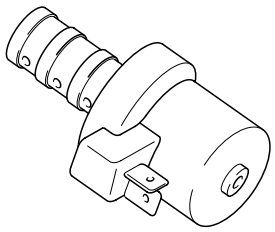

<PWM Solenoid valve form>

SCMAT6003L

PWM solenoid valve is controlled linearly according to the duty ratio.

Item	Contents
Type	3way & Normal High
Input resistance	12V
Coil resistance	3.2±0.2Ω
Pulse	50HZ

REMOVAL E91C4C3C

1. Remove the battery terminal.
2. Lift the vehicle.
3. Remove the splash shield.
4. Loosen the drain plug and drain the transaxle oil.
5. Remove the valve body cover.
6. Disconnect the solenoid valve connectors.
7. Remove the solenoid valve(B-6EA) by removing the supporting bracket(A).

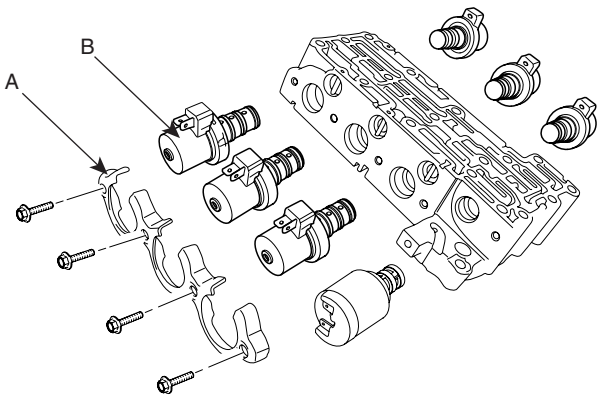

SCMAT6033D

INSTALLATION EFD8F825

1. Install the solenoid valve(B-6EA) and the supporting bracket(A).

   CAUTION

   Apply the ATF oil or White Vaseline to the O-ring not to be damaged.

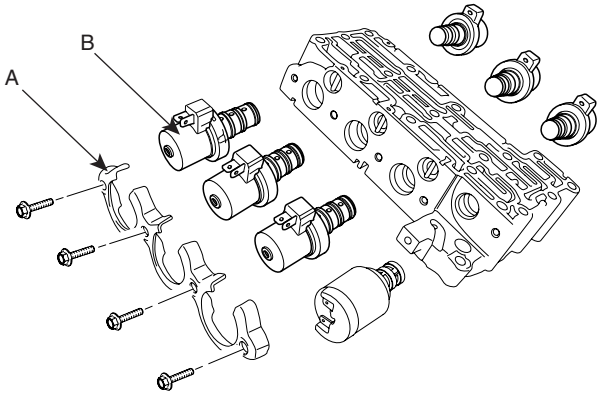

SCMAT6033D

2. Connect the solenoid valve connector.

   CAUTION

   When connecting the solenoid valve connector, check the connector for rust, dirt, or oil, then reconnect it.

3. Continue to apply liquid gasket at application points at the valve body cover with Ø2.5mm (0.098in) thickness.

Liquid gasket Part name : Threebond 1281B

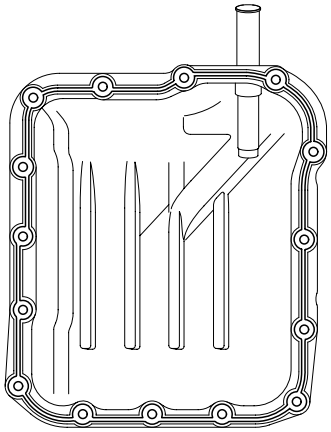

SCMAT6052D

4. Tighten the mounting bolt with the specified torque after installing the valve body cover.

TORQUE : 10~12Nm(1.0~1.2kgf.m, 7~8lb-ft)

5. Install the drain plug and refill the transaxle fluid.

TORQUE : 35~45Nm(3.5~4.5kgf.m, 25~32lb-ft)

6. Install the splash shield.
7. Lower the vehicle and install the battery terminal.

VFS(VARIABLE FORCE SOLENOID) VALVE

DESCRIPTION E9FA1D98

VFS valve controls the regulator valve and varies the line pressure from 4.5bar to 10.5bar according to the throttle open angle and the shift range. The holder is installed on the upper side of the case and the filter is installed to the two places on the holder outside to prevent in the strange material from flowing in the VFS.

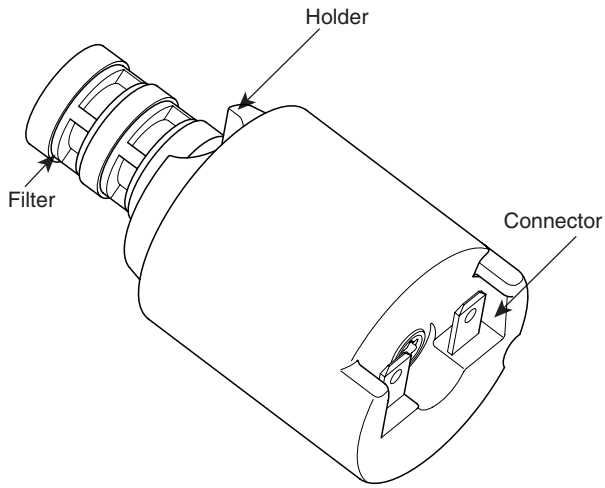

<VFS assembly >

SCMAT6011L

VFS (VARIABLE FORCE SOLENOID) VALVE CONTROL FEATURE

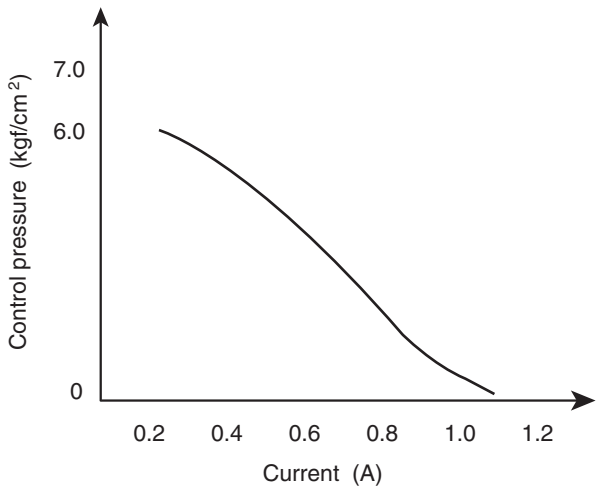

<VFS Solenoid valve performance curve>

BKGF018B

PWM solenoid valve is controlled linearly according to the current value.

Item	Contents
type	3way & Normal High
Input resistance	12V
Coil resistance	3.5 ± 0.2 Ω
Operating current	0 ~ 1200 mA
Pulse	50HZ

1.Fluid temperature sensor
2.Fluid temperature sensor ground
3.UD Solenoid valve
4.2ND Solenoid valve
5.A/T battery
6.A/T battery
7.A/T battery
8.VF Solenoid valve ground
9.DCC Solenoid valve
10.RED Solenoid valve
11.LR Solenoid valve
12.OD Solenoid valve

SCMAT6009L

REMOVAL EEEA3EC8

1. Remove the battery terminal.
2. Lift the vehicle.
3. Remove the splash shield.
4. Loosen the drain plug and drain the transaxle oil.
5. Remove the valve body cover.
6. Remove the VFS reservoir(A).

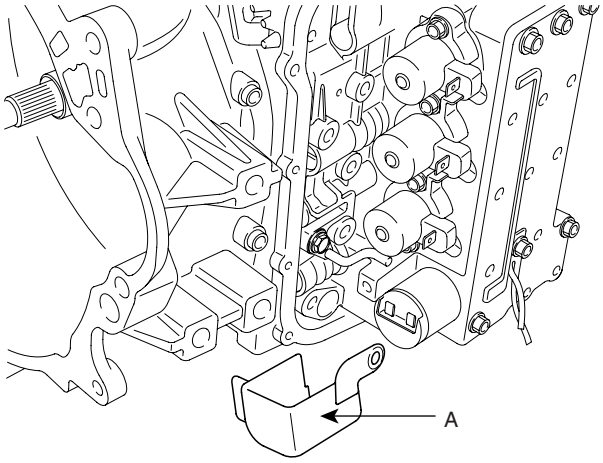

SCMAT6034D

7. Disconnect the VFS solenoid valve connector.
8. Remove the solenoid valve assembly(A).

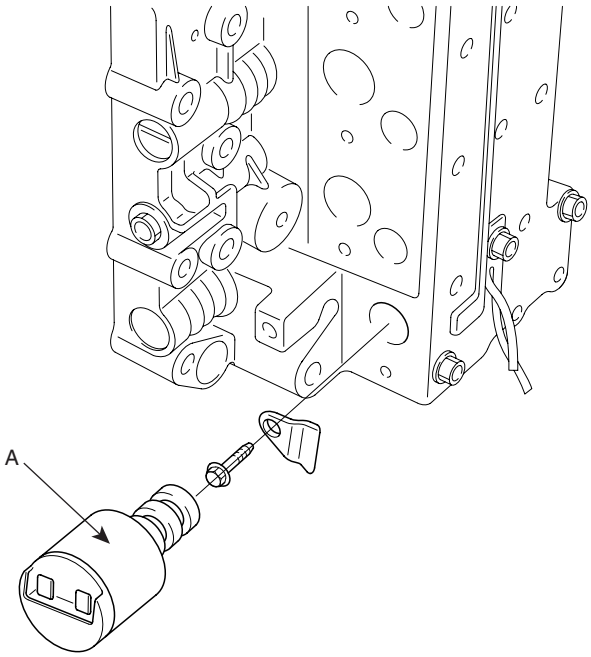

KKCF009D

INSTALLATION E31C8972

1. Install the solenoid valve(A).

CAUTION

Apply the ATF oil or White Vaseline to the O-ring not to be damaged.

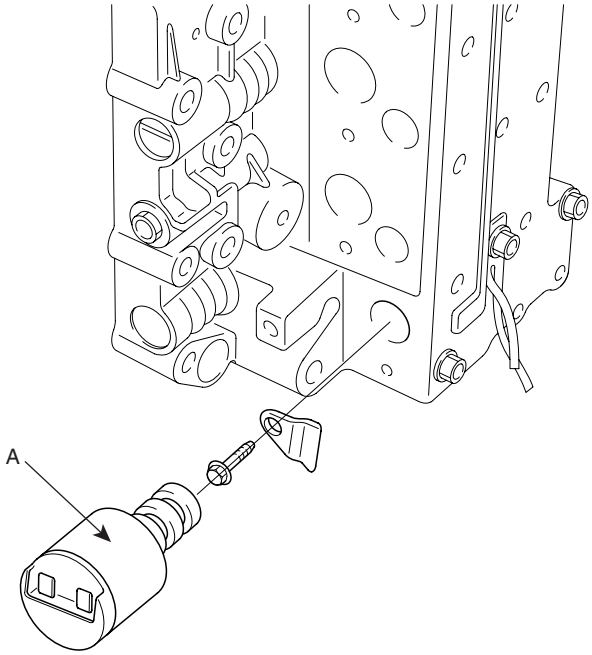

KKCF009D

2. Connect the solenoid valve connector to the valve body.

CAUTION

When connecting the solenoid valve connector, check the connector for rust, dirt, or oil, then re-connect it.

3. Install the VFS reservoir(A).

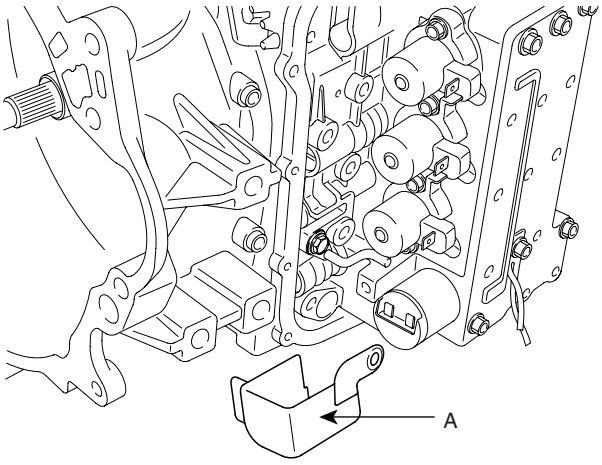

SCMAT6034D

4. Continue to apply liquid gasket at application points at the valve body cover with Ø2.5mm (0.098in) thickness.

Liquid gasket Part name : Threebond 1281B

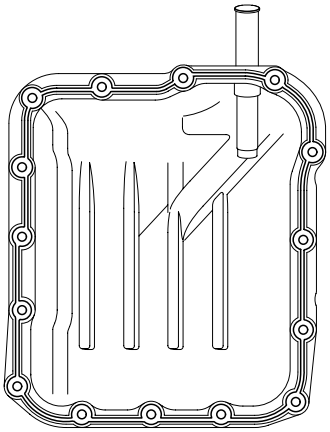

SCMAT6052D

5. Tighten the mounting bolt with the specified torque after installing the valve body cover.

TORQUE : 10~12Nm(1.0~1.2kgf.m, 7~8lb-ft)

6. Install the drain plug and refill the transaxle fluid.

TORQUE : 35~45Nm(3.5~4.5kgf.m, 25~32lb-ft)

7. Install the splash shield.

8. Lower the vehicle and install the battery terminal.

INPUT SPEED SENSOR

DESCRIPTION EBD4BF9F

Sensor type	1. Type : HALL SENSOR 2. Operating voltage : DC 12V 3. Current consumption : 22mA (Max)
Function	1. Input shaft speed sensor: Detect the input shaft rotation at the OD & REV retainer side to control oil pressure when shifting. 2. Feedback control, clutch-clutch control, damper clutch control, shift range control, incorrect ratio control and sensor trouble detection signal.
Connector	**C242** 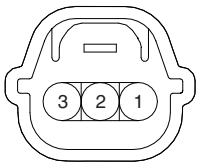 1. Ground 2. Power source 3. Input SCMAT6004L

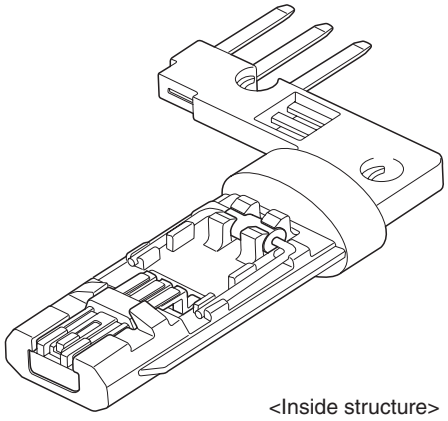

BKGF012B

Item	Inspection item	Standard value
Air gap	Input shaft speed sensor	0.05in(1.3mm)
Sensor resistance	Input shaft speed sensor	Over 4 MΩ
Output voltage	HIGH	Over 4.8V
	LOW	Below 0.8V

REMOVAL EED7E4CB

1. Remove the battery terminal.
2. Remove the battery and battery tray.
3. Remove the air cleaner assembly. (see the automatic transaxle-Removal/ installation procedures)
4. Remove the input shaft speed sensor connector.
5. Remove the input shaft speed sensor(A).

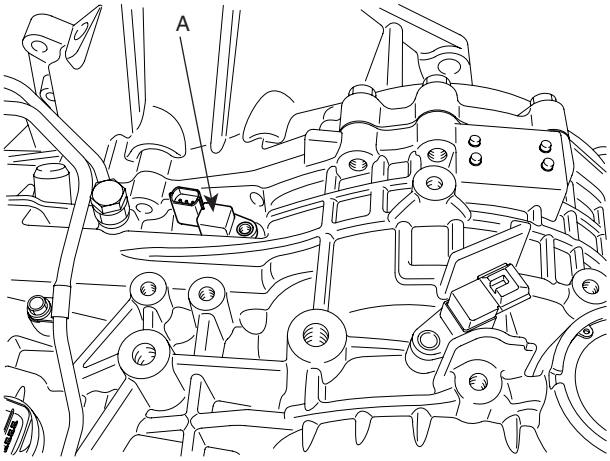

SCMAT6037D

INSTALLATION EE7CFF15

1. Install the new O-ring to the input shaft speed sensor.
2. Install the input shaft speed sensor.

TORQUE: 10~12Nm(1.0~1.2kgf.m, 7~8lb-ft)

CAUTION

While installing the input shaft speed sensor, do not allow dust or other foreign particles to enter the transaxle.

3. Check the connector for dust, dirt, or oil, and then connect the connector securely.
4. Installation is the reverse of removal.

OUTPUT SPEED SENSOR

DESCRIPTION EE59F1CD

Sensor type	1. Type : HALL SENSOR 2. Output voltage : DC 12V 3. Current consumption : 22mA (Max)
Function	1. Output shaft speed sensor : Detect the output shaft rpm(T/F DRIVE GEAR RPM) at the T/F drive gear 2. Feedback control, clutch-clutch control, damper clutch control, shift range control, incorrect ratio control and sensor trouble detection signal.
Connector	**C243** 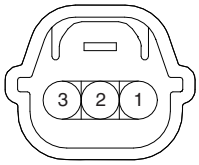 1. Ground 2. Power source 3. Input SCMAT6005L

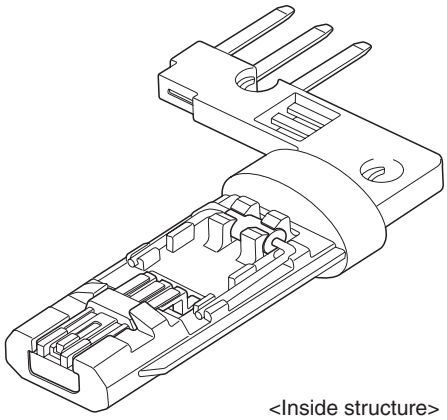

<Inside structure>

BKGF012B

Item	Inspection item	Standard value
Air gap	Output shaft speed sensor	0.05in(1.3mm)
Sensor resistance	Output shaft speed sensor	Over 4 MΩ
Output voltage	HIGH	Over 4.8V
	LOW	Below 0.8V

REMOVAL E2D1DE7E

1. Remove the battery terminal.
2. Remove the battery and battery tray.
3. Remove the air cleaner assembly. (see the automatic transaxle- Removal/ installation procedures)
4. Remove the output shaft speed sensor connector.
5. Remove the output shaft speed sensor(A).

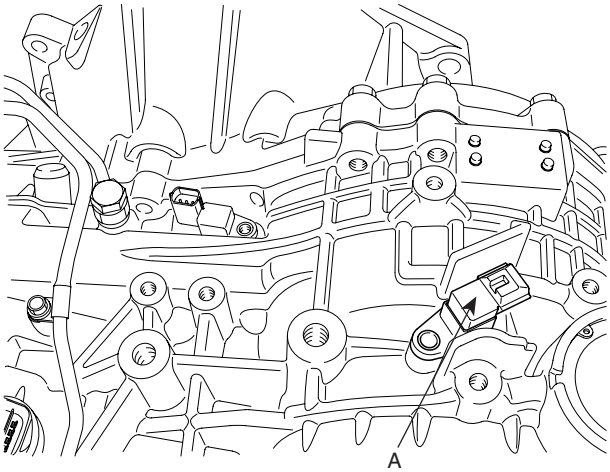

SCMAT6039D

INSTALLATION EDDDA414

1. Install the new O-ring to the output shaft speed sensor.
2. Remove the output shaft speed sensor.

TORQUE: 10~12Nm(1.0~1.2kgf.m, 7~8lb-ft)

CAUTION

While installing the output shaft speed sensor, do not allow dust or other foreign particles to enter the transaxle.

3. Check the connector for dust, dirt, or oil, then connect the connector securel.
4. Installation is the reverse of removal.

TRANSAXLE OIL TEMPERATURE SENSOR

DESCRIPTION E7EEEEF5

Sensor type	1. Type : Thermister 2. Use available temperature :-40~160°C(-40~320°F)
Function and feature	1. Detect the temperature of ATF through the thermistor which is exposed outside. 2. When shifting the range, it is used as the oil pressure control information.
Connector	C209 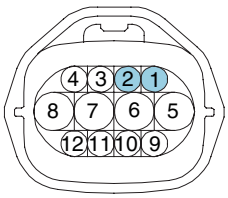 **1.Fluid temperature sensor** **2.Fluid temperature sensor ground** 3.UD Solenoid valve 4.2ND Solenoid valve 5.A/T battery 6.A/T battery 7.A/T battery 8.VF Solenoid valve ground 9.DCC Solenoid valve 10.RED Solenoid valve 11.LR Solenoid valve 12.OD Solenoid valve SCMAT6006L

Temp.[°C(°F)]	Resistance (KΩ)	Voltage (V)	Temp.[°C(°F)]	Resistance (KΩ)	Voltage (V)
-40(-40)	140.5	4.447	80(176)	1.085	0.932
-20(-4)	47.95	4.207	100(212)	0.63	0.591
0(32)	18.6	3.725	120(248)	0.385	0.381
20(68)	8.05	2.996	140(284)	0.25	0.255
40(104)	3.85	2.176	160(320)	0.16	0.166
60(140)	1.975	1.453			

REMOVAL E7B2DE5B

1. Remove the battery terminal.
2. Lift the vehicle.
3. Remove the splash shield.
4. Loosen the drain plug and drain the transaxle oil.
5. Remove the valve body cover.
6. Disconnect the oil temperature sensor connector and remove the sensor(A) from the valve body.

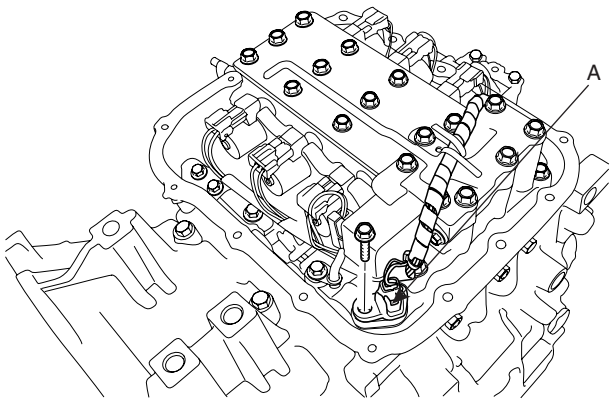

SCMAT6042D

INSTALLATION E8C2FBA3

1. Install the oil temperature sensor(A) and connect the sensor connector.

   CAUTION

   When connecting the oil temperature connector, check the connector for rust, dirt, or oil, then reconnect it.

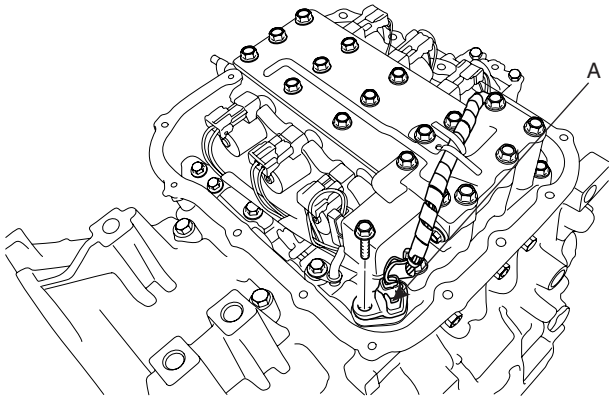

SCMAT6042D

2. Continue to apply liquid gasket at application points at the valve body cover with Ø0.098in(2.5mm) thickness.

Liquid gasket Part name : Threebond 1281B

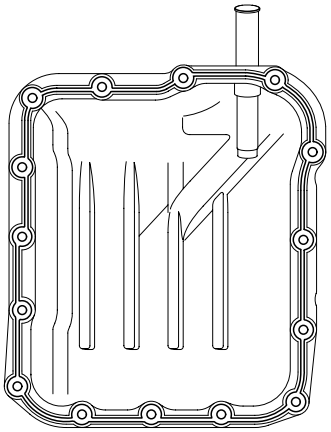

SCMAT6052D

3. Tighten the mounting bolt with the specified torque after installing the valve body cover.

TORQUE: 10~12Nm(1.0~1.2kgf.m, 7~8lb-ft)

4. Install the drain plug.

TORQUE : 35~45Nm(3.5~4.5kgf.m, 25~32lb-ft)

5. Installation is the reverse of the removal.

TRANSAXLE RANGE (TR) SWITCH

DESCRIPTION E3E6B37C

Sensor tyep	1. Type : ROTARY 2. Available temperature range : -40~150°C(-40~320°F) 3. TORQUE : 10~12Nm(1.0~1.2kgf.m, 7~8lb-ft)
Function	Detect the position of select lever through the contact switch. It makes starting possible in "P" and "N".

C208

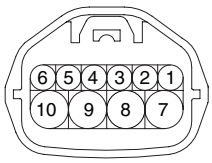

1. D range
3. P range
4. N range
7. R range
8. Power supply IG1
9. Start circuit
10. Start circuit

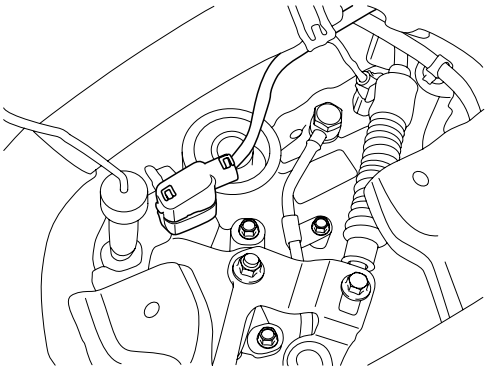

<Installation location>

SCMAT6007L

Terminal No. / Shift lever	P	R	N	D	3	2	L
1				●			
2						●	
3	●						
4			●				
5					●		●
6							
7		●					
8	●	●	●	●	●	●	●
9	●		●				
10	●		●				

SCMAT6008L

REMOVAL E0EF8ADF

1. Remove the battery terminal.
2. Remove the battery and battery tray.
3. Remove the air cleaner assembly(Refer to the automatic transaxle-Removal/installation procedures).
4. Disconnect the inhibitor switch connector(A).

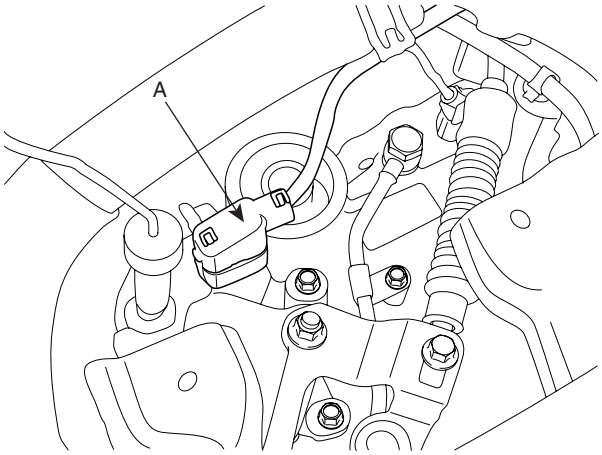

SCMAT6045D

5. Remove the control cable(A) from the manual control lever.

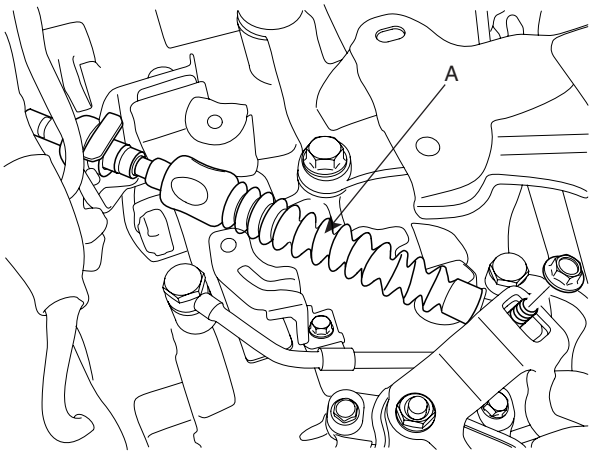

SCMAT6046D

6. Remove the inhibitor switch(A) and manual control lever(B).

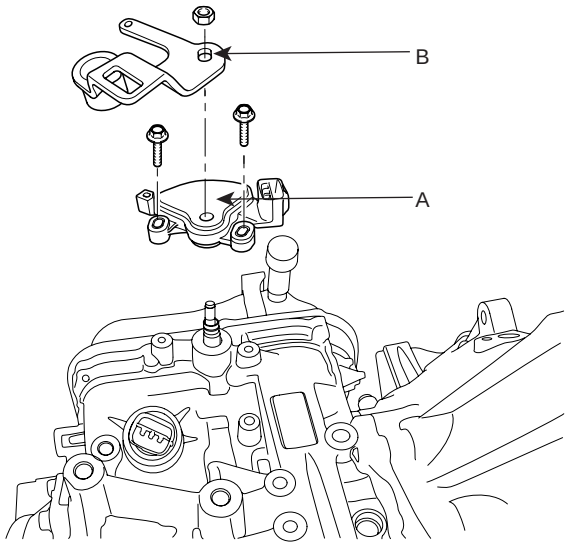

SCMAT6047D

INSTALLATION E38D55AE

1. Set the inhibitor switch to the "N" position.
2. Set the inhibitor switch control shaft to the "N" position.
3. Install the inhibitor switch and manual control lever.

TORQUE
Shaft nut: 17~21Nm(1.7~2.1kgf.m, 12~15lb-ft)
Bolt(2EA): 10~12Nm(1.0~1.2kgf.m, 7~8lb-ft)

4. Install the control cable to the manual control lever.
5. Connect the inhibitor switch connector.
6. Installation is the reverse of the removal.
7. Turn the ignition switch ON after installation.
   Move the shift lever from "P" range to "L" range, and verify that the A/T gear position indicator follows the transaxle range switch.