2003-06 ACCESSORIES & EQUIPMENT

Interior Trim - MDX

COMPONENT LOCATION INDEX

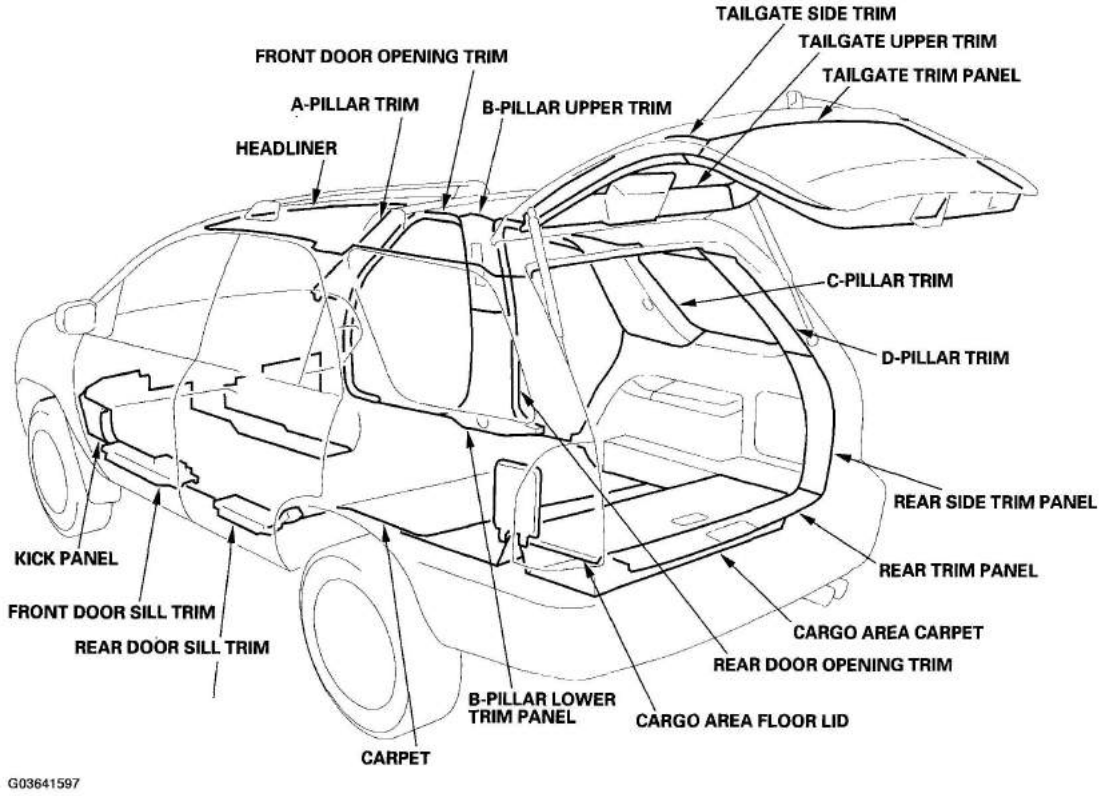

Fig. 1: Locating Interior Trim Components
Courtesy of AMERICAN HONDA MOTOR CO., INC.

TRIM REMOVAL/INSTALLATION - DOOR AREAS

Special Tools Required

KTC trim tool set SOJATP2014

NOTE:

- **Put on gloves to protect your hands.**
- **Take care not to bend or scratch the trim and panels.**
- **Use the appropriate tool from the KTC trim tool set to avoid damage when prying components.**

1. Pull out the fuel fill door opener knob (A), and detach the tabs (B) from the kick panel (C) and B-pillar

cardiagn.com

lower trim (D), and pull the front door sill trim (E) up by hand to detach the clips (F) and a clip (G) (driver's), then remove it.

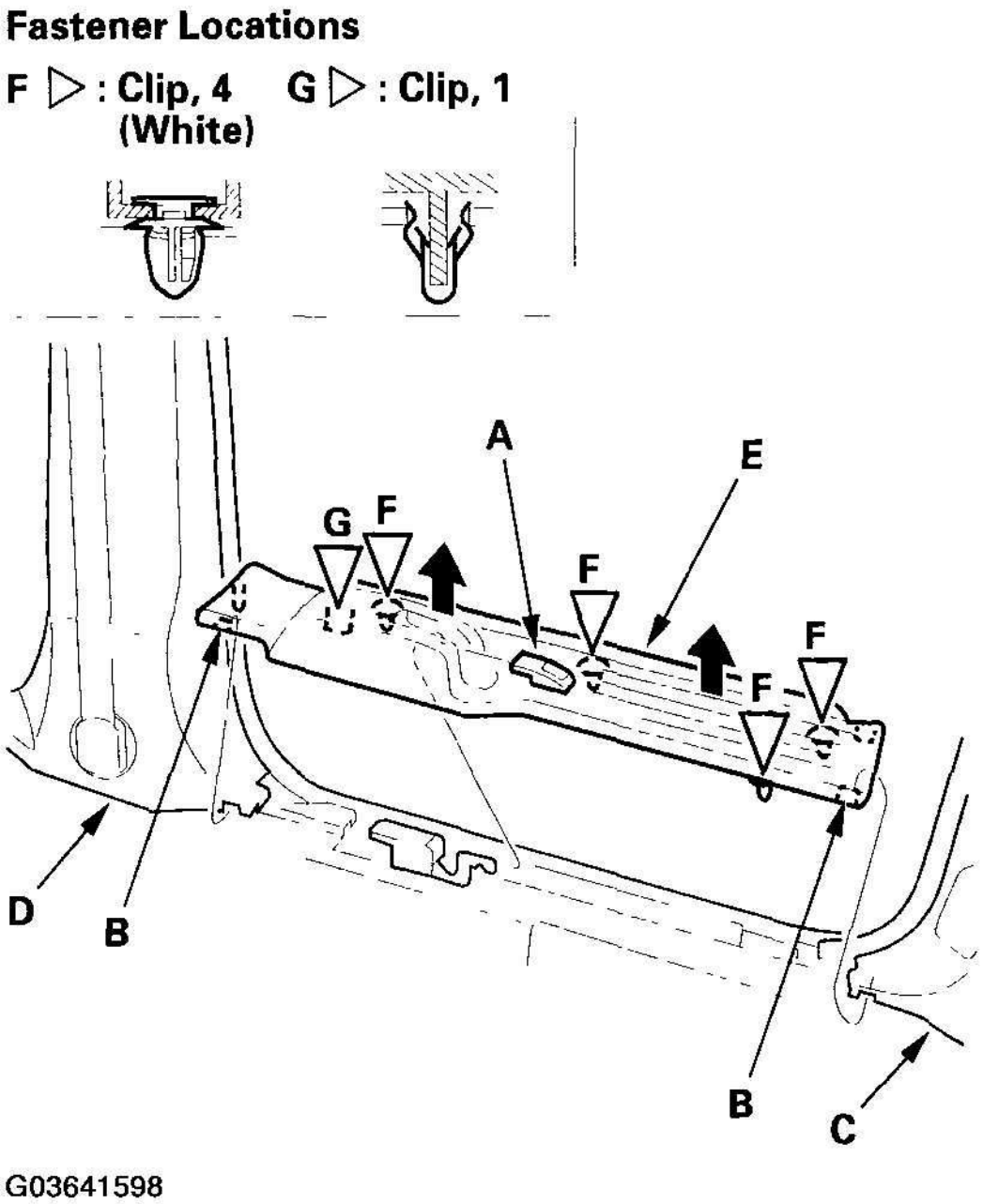

Fig. 2: Pulling Fuel Fill Door Opener Knob
Courtesy of AMERICAN HONDA MOTOR CO., INC.

cardiagn.com

2. Remove the kick panel (A).

   -1 Pull out the door opening trim (B) as needed from the kick panel hook (C) and the door opening flange.

   -2 Release the clip (D).

   -3 Pull the kick panel back by hand to detach the clip (E), then remove it.

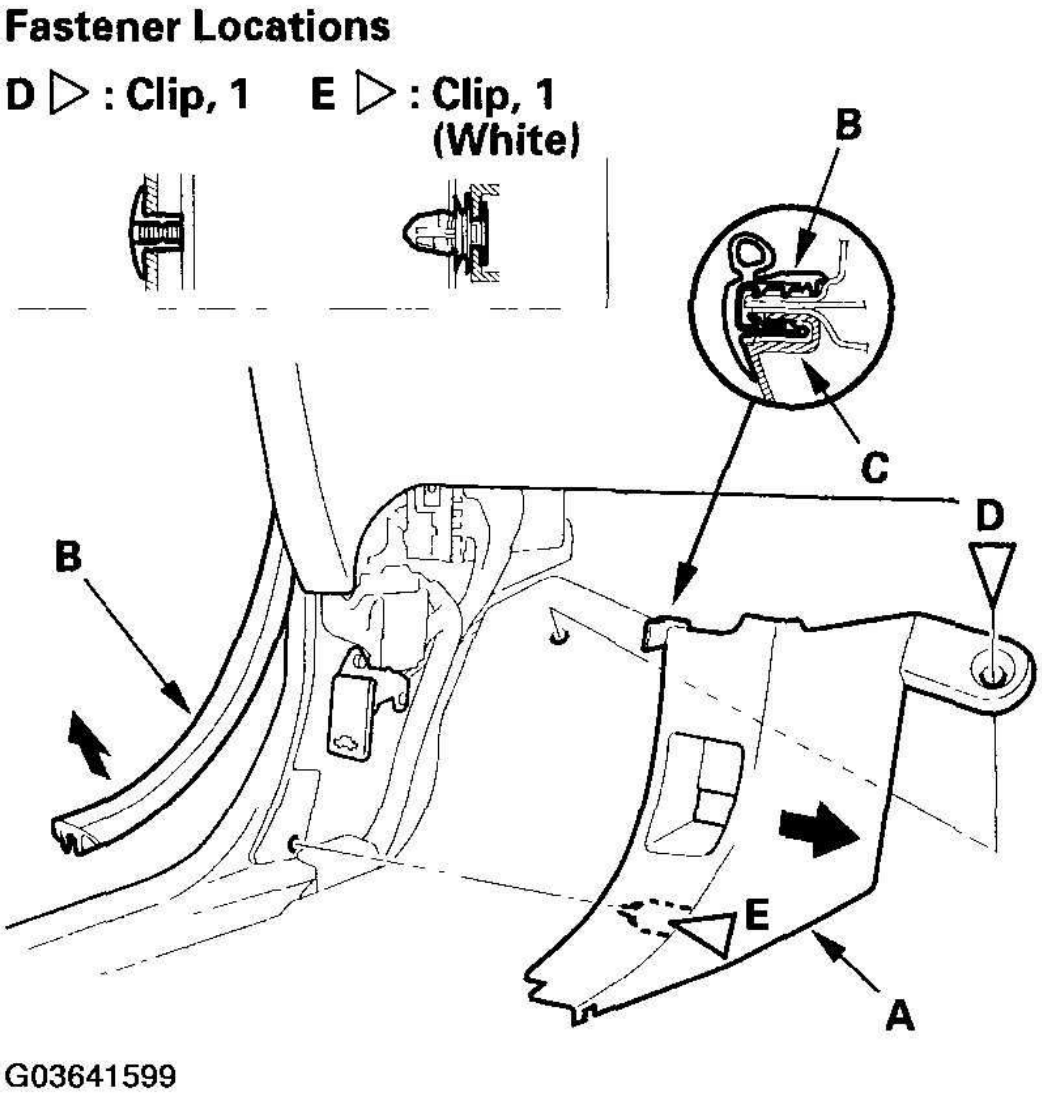

Fig. 3: Removing Kick Panel
Courtesy of AMERICAN HONDA MOTOR CO., INC.

3. Pull out the front door opening trim (A) from the trim hooks (B) and around the front door opening

cardiagn.com

flange, then remove the trim.

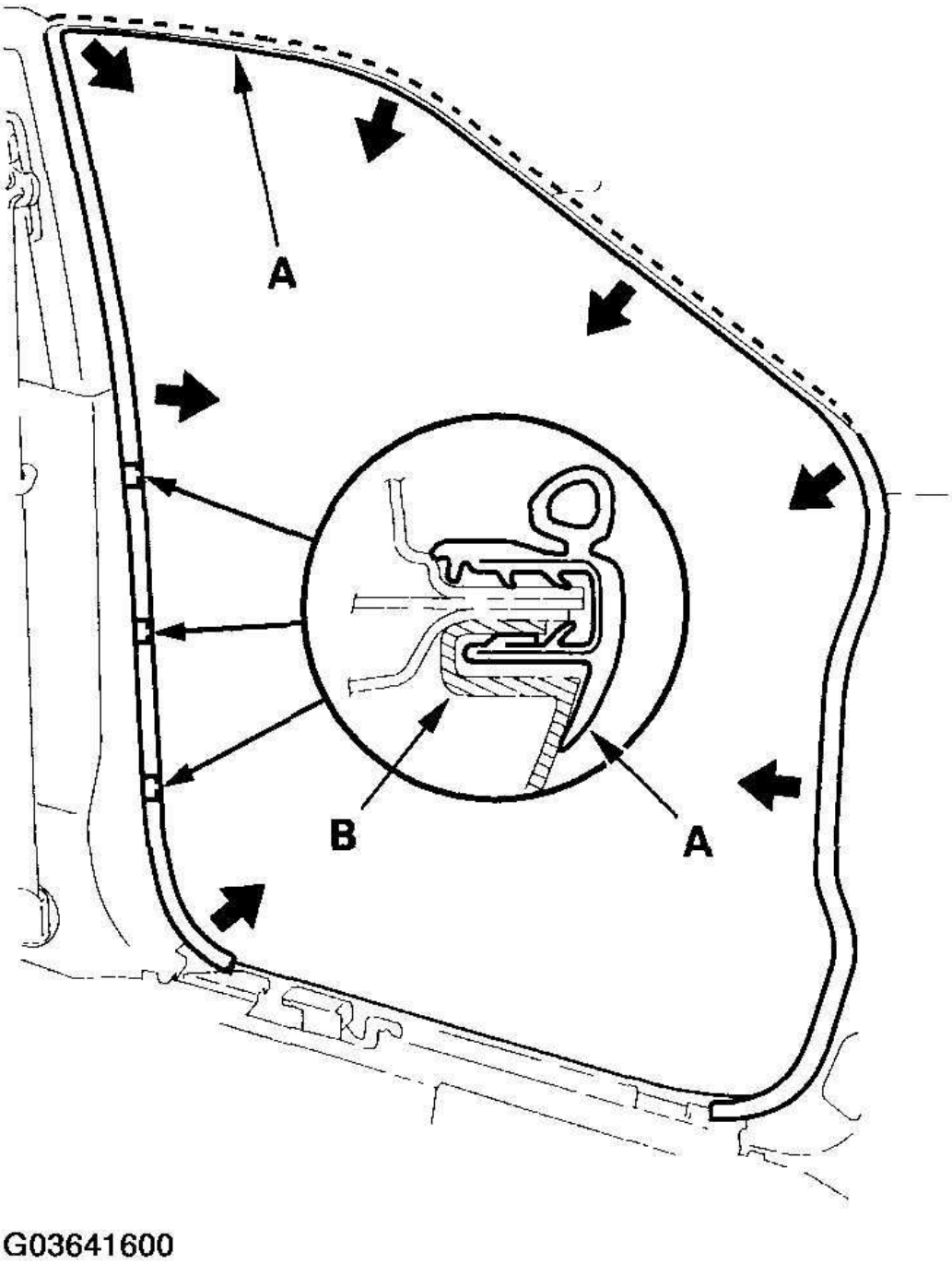

Fig. 4: Pulling Front Door Opening Trim

cardiagn.com

Courtesy of AMERICAN HONDA MOTOR CO., INC.

4. Detach the tabs (A) and hook (B) from the B-pillar lower trim (C) and rear side trim panel (D), and pull the rear door sill trim (E) up by hand to detach the clips (F), then remove it.

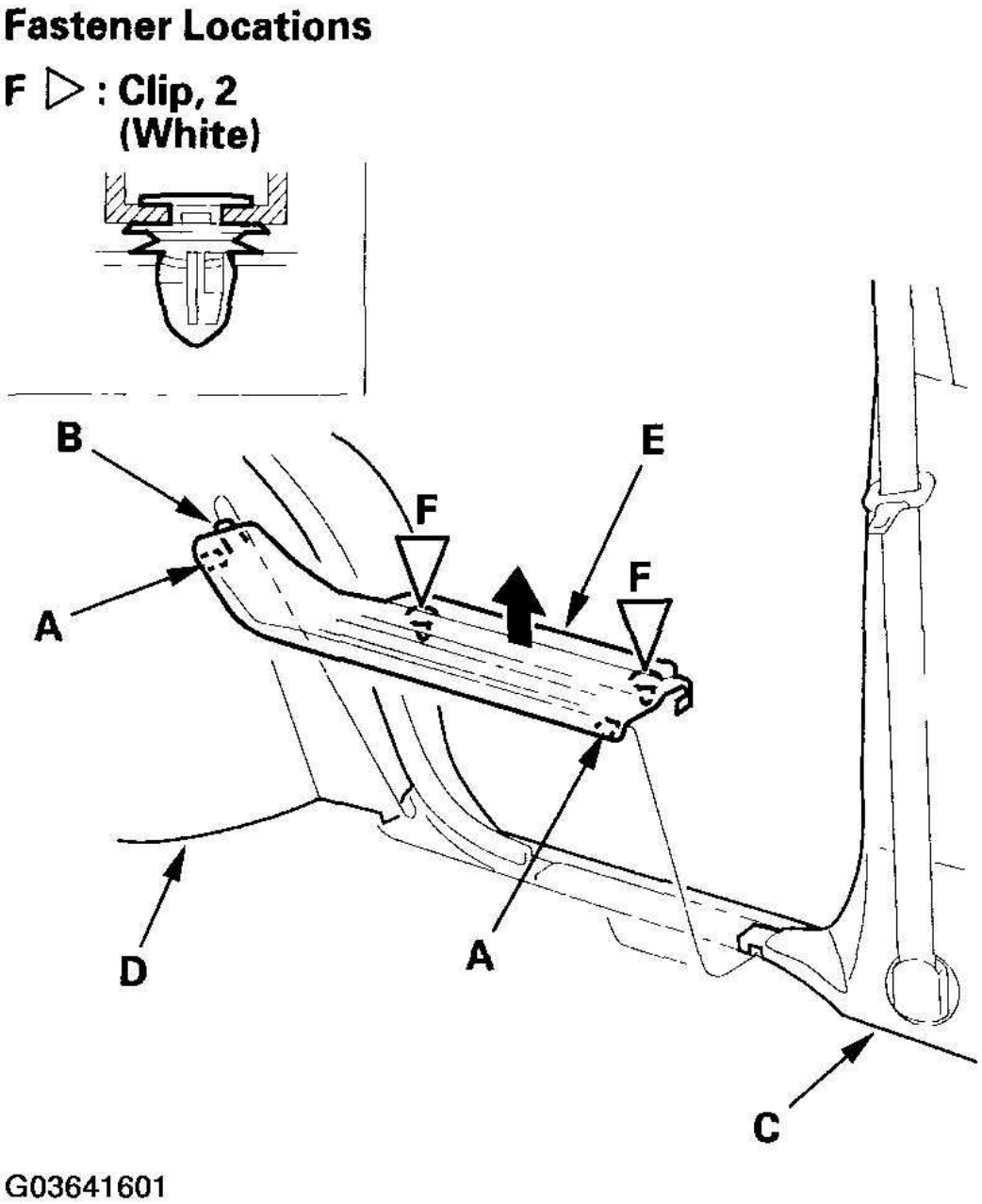

Fig. 5: Detaching Tabs And Hook From B-Pillar Lower Trim & Rear Side Trim Panel

cardiagn.com

Courtesy of AMERICAN HONDA MOTOR CO., INC.

5. Pull out the rear door opening trim (A) from the trim hooks (B) and around the rear door opening flange, then remove the trim.

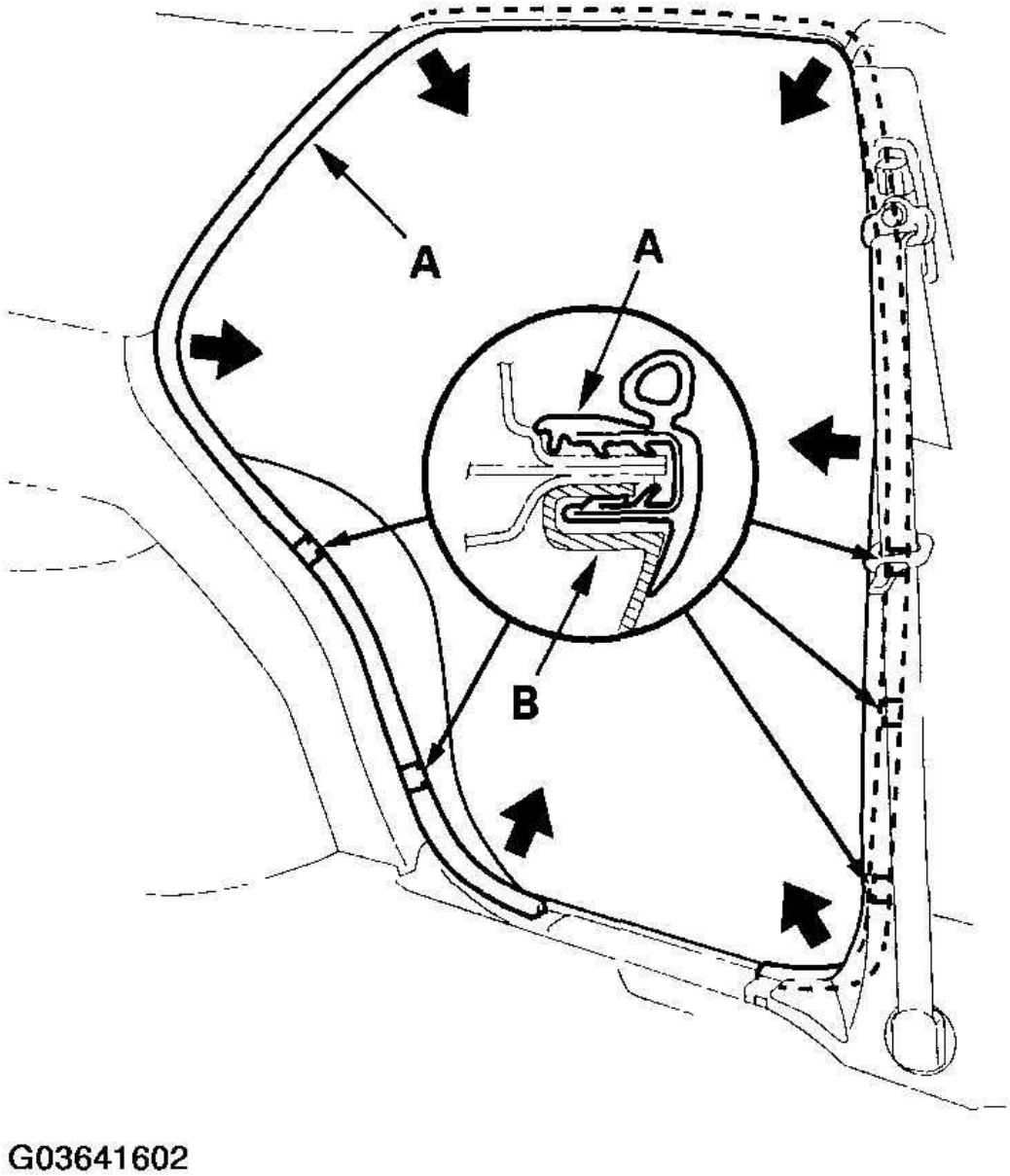

Fig. 6: Pulling Out Rear Door Opening Trim From Trim Hooks
Courtesy of AMERICAN HONDA MOTOR CO., INC.

cardiagn.com

6. Install the trim in the reverse order of removal, and note these items:
   - Check the clips for damage or stress-whitening, and replace them with new one.
   - Push the clips and hooks into place securely.

TRIM REMOVAL/INSTALLATION - PILLAR AREAS

Special Tools Required

KTC trim tool set SOJATP2014

A-PILLAR - '03 MODEL

NOTE:

- **Put on gloves to protect your hands.**
- **Take care not to bend or scratch the trim and panels.**
- **Use the appropriate tool from the KTC trim tool set to avoid damage when prying components.**

1. Pull out the front door opening trim as needed (see step 3 in **TRIM REMOVAL/INSTALLATION - DOOR AREAS**).
2. Pull the A-pillar trim (A) back by hand to detach the clips, pull the trim up, then remove the trim.

cardiagn.com

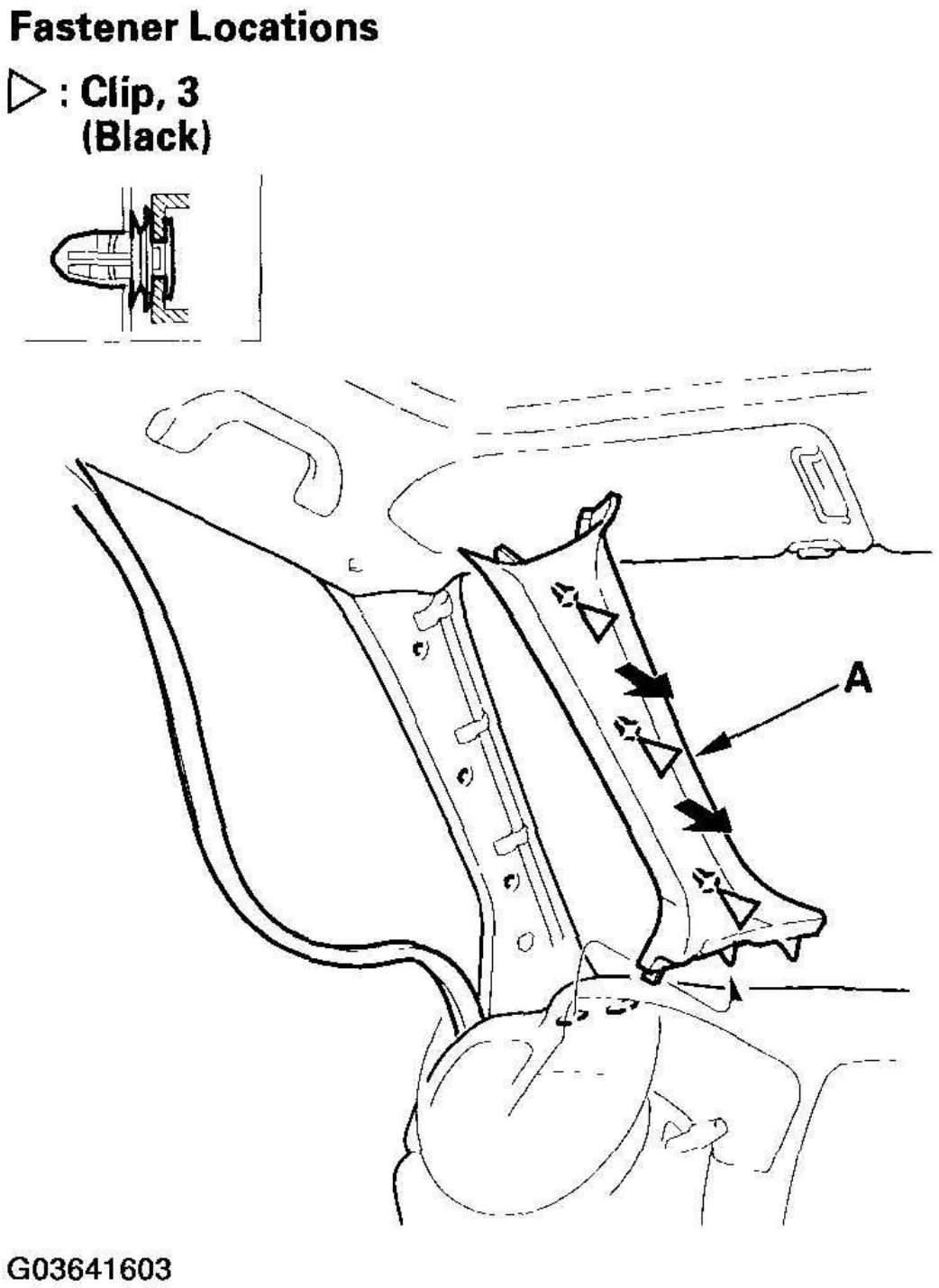

Fig. 7: Pulling A-Pillar Trim Back By Hand To Detach Clips
Courtesy of AMERICAN HONDA MOTOR CO., INC.

cardiagn.com

3. Install the trim in the reverse order of removal, and note these items:
   - Replace any damaged clips with new ones.
   - Push the clips into place securely.

A-PILLAR - '04-06 MODELS

SRS components are located in this area. Review the SRS component locations (see **2004-2006 MODELS**) and the precautions and procedures (see **PRECAUTIONS AND PROCEDURES**) before performing repairs or service.

NOTE:

- **Put on gloves to protect your hands.**
- **Take care not to bend or scratch the trim and panels.**
- **Use the appropriate tool from the KTC trim tool set to avoid damage when prying components.**

1. Pull out the front door opening trim as needed (see step 3 in **TRIM REMOVAL/INSTALLATION - DOOR AREAS**).
2. Remove the A-pillar trim (A).
   -1 Pry the A-pillar cap (B), out until it is stopped by the hooks (C) in the grommet (D).
   -2 Pull the trim back by hand to detach the clip.
   -3 Release the hooks on the grommet and pull the cap out. Discard it.

cardiagn.com

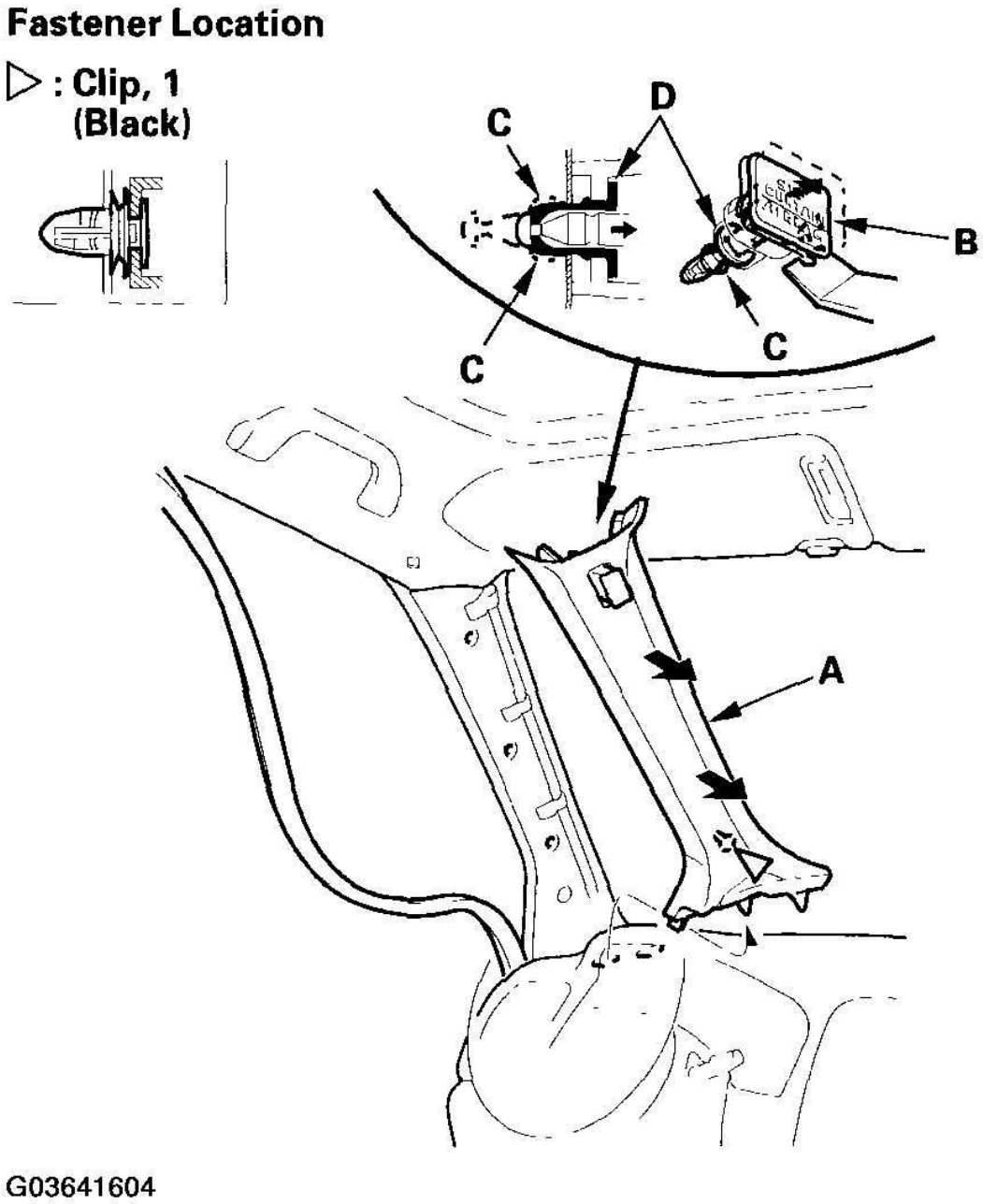

Fig. 8: Removing A-Pillar Trim (2004-06 Models)
Courtesy of AMERICAN HONDA MOTOR CO., INC.

3. Install the trim in the reverse order of removal, and note these items:
   - Replace the clip with a new one, if it is damaged.
   - Do not reuse the A-pillar cap; always replace it.

cardiagn.com

- If the side curtain airbag has deployed, replace the A-pillar trim with a new one.
- To prevent the side curtain airbags from deploying improperly and possibly causing injury, inspect removed pieces and replace them if they have any of these types of damage:
  - -Any cracks, deformations, or stress-whitenings in the A-pillar trim (A)
  - -Any cracks, or stress-whitenings in the grommet and clip seating surfaces (B)
  - -Bent or broken grommet (C)
- Replace any damaged parts with new ones.
- Make sure the top of the trim overlaps with the headliner correctly (see **COMPONENT REPLACEMENT/INSPECTION AFTER DEPLOYMENT**).
- Push the clips into place securely.

cardiagn.com

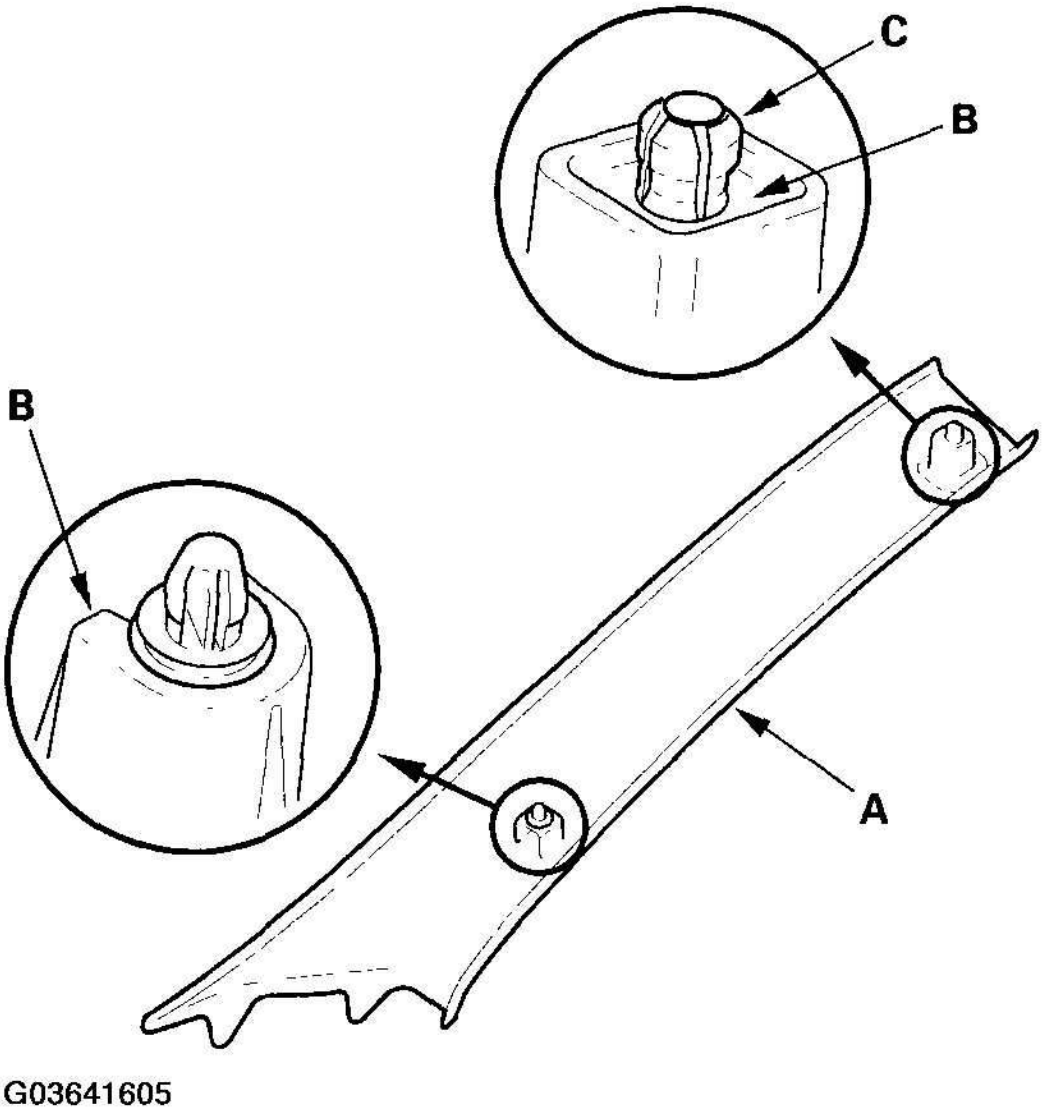

Fig. 9: Pushing Clips Securely
Courtesy of AMERICAN HONDA MOTOR CO., INC.

B-PILLAR - '03 MODEL

NOTE:

- **Put on gloves to protect your hands.**
- **Take care not to bend or scratch the trim and panels.**
- **Use the appropriate tool from the KTC trim tool set to avoid damage when prying components.**

cardiagn.com

1. Remove these items:
   - Front door sill trim (see step 1 in **TRIM REMOVAL/INSTALLATION - DOOR AREAS**)
   - Rear door sill trim (see step 4 in **TRIM REMOVAL/INSTALLATION - DOOR AREAS**)
   - Front door opening trim, as needed (see step 3 in **TRIM REMOVAL/INSTALLATION - DOOR AREAS**)
   - Rear door opening trim, as needed (see step 5 in **TRIM REMOVAL/INSTALLATION - DOOR AREAS**)
2. Driver's: Pull the front seat belt lower anchor cover (A) up, and remove the lower anchor bolt (B).

cardiagn.com

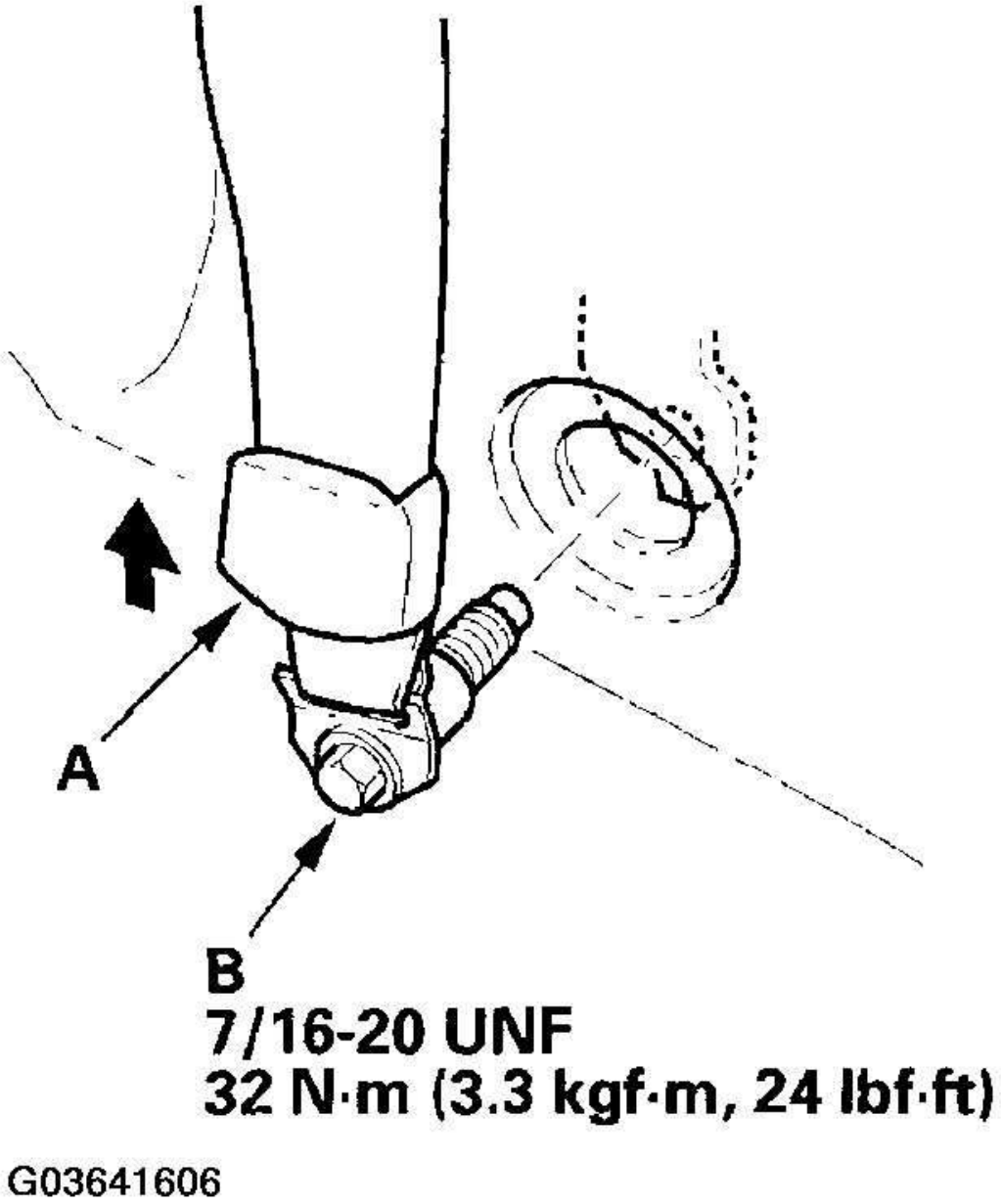

Fig. 10: Removing Lower Anchor Bolt
Courtesy of AMERICAN HONDA MOTOR CO., INC.

3. Remove the B-pillar lower trim (A).

   -1 While pulling both upper edges of the B-pillar lower trim outward, pull the top of the trim back to release the hooks (B).

cardiagn.com

-2 Detach the clips.

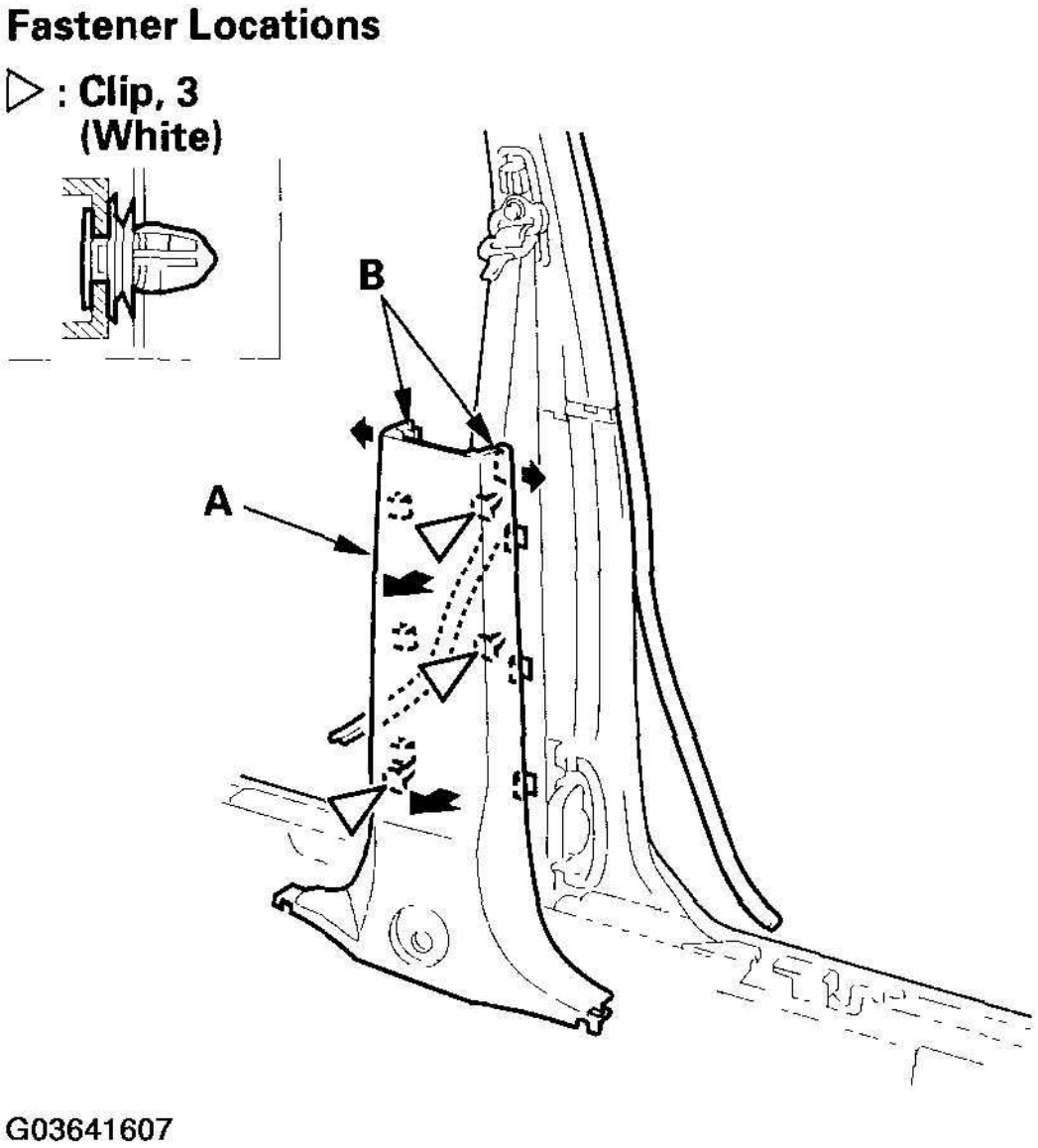

Fig. 11: Removing B-Pillar Lower Trim
Courtesy of AMERICAN HONDA MOTOR CO., INC.

4. Remove the upper anchor cover (A), and remove the upper anchor bolt (B).

cardiagn.com

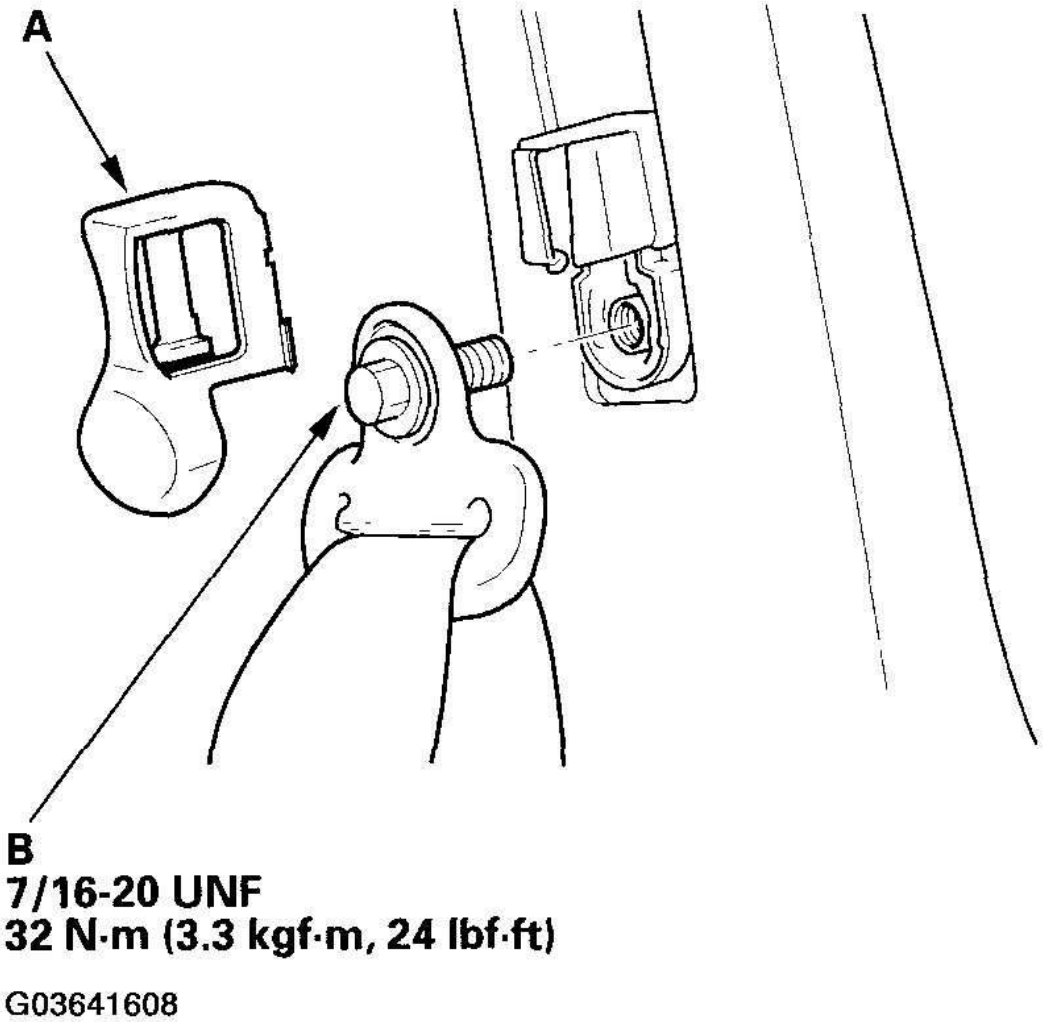

Fig. 12: Removing Upper Anchor Cover
Courtesy of AMERICAN HONDA MOTOR CO., INC.

5. Pull the top of the B-pillar upper trim (A) back to detach the upper clip, and pull the trim up to release the lower hook (B), then remove it.

cardiagn.com

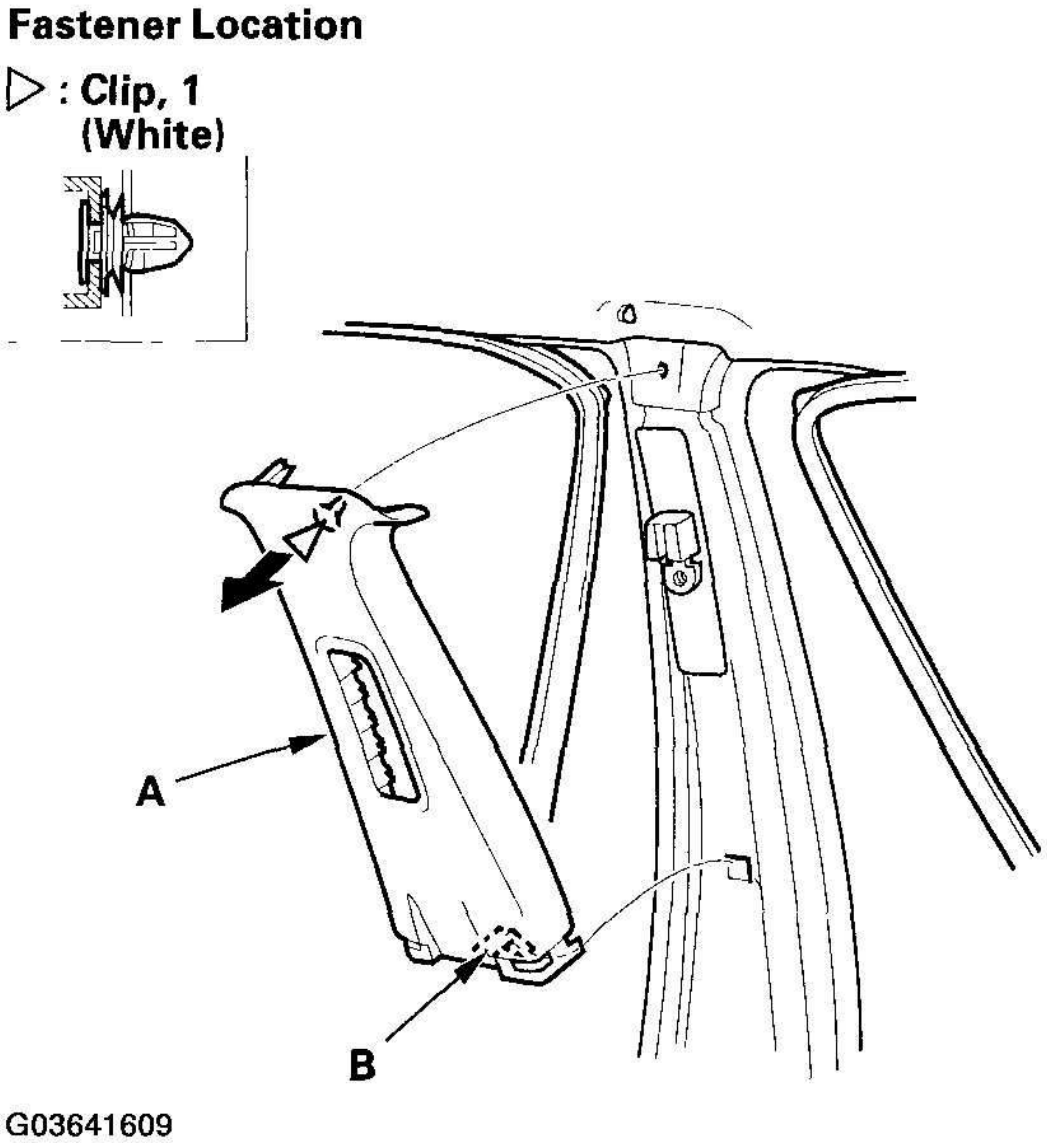

Fig. 13: Pulling Top Of B-Pillar Upper Trim
Courtesy of AMERICAN HONDA MOTOR CO., INC.

6. Install the trim in the reverse order of removal, and note these items:
   - Replace any damaged clips with new ones.
   - Push the clips into place securely.
   - Apply liquid thread lock to the anchor bolts before reinstallation.
   - Before installing the anchor bolts, make sure there are no twists or kinks in the seat belts.

cardiagn.com

B-PILLAR - '04 -'06 MODELS

SRS components are located in this area. Review the SRS component locations (see **2004-2006 MODELS**) and the precautions and procedures (see **PRECAUTIONS AND PROCEDURES**) before performing repairs or service.

NOTE:

- **Put on gloves to protect your hands.**
- **Take care not to bend or scratch the trim and panels.**
- **Use the appropriate tool from the KTC trim tool set to avoid damage when prying components.**

1. Remove these items:
   - Front door sill trim (see step **TRIM REMOVAL/INSTALLATION - DOOR AREAS**)
   - Rear door sill trim (see step 4 in **TRIM REMOVAL/INSTALLATION - DOOR AREAS**)
   - Front door opening trim, as needed (see step 3 in **TRIM REMOVAL/INSTALLATION - DOOR AREAS**)
   - Rear door opening trim, as needed (see step 5 in **TRIM REMOVAL/INSTALLATION - DOOR AREAS**)
2. Driver's: Pull the front seat belt lower anchor cover (A) up, and remove the lower anchor bolt (B).

cardiagn.com

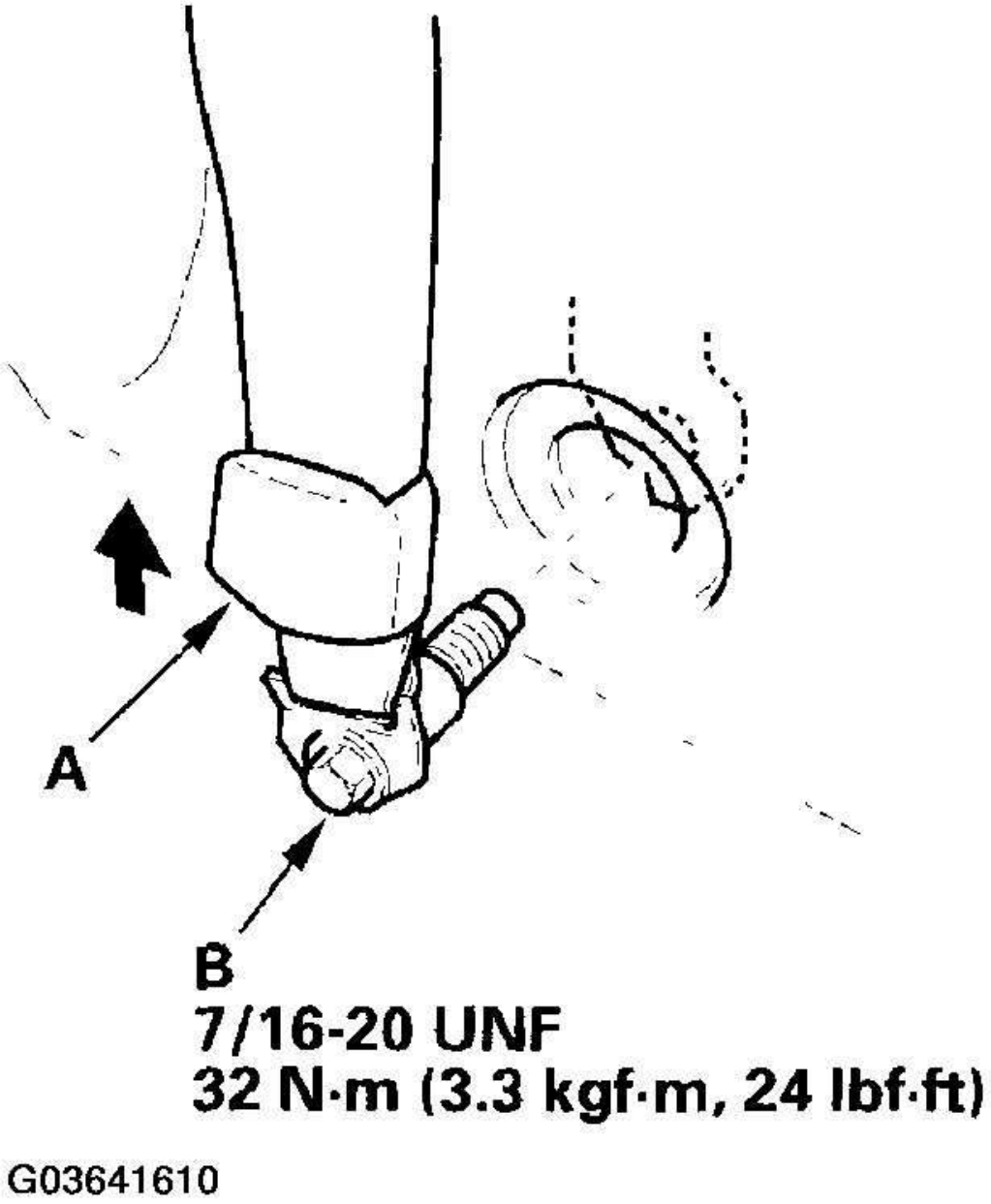

Fig. 14: Pulling Front Seat Belt Lower Anchor Cover Up (Driver's)
Courtesy of AMERICAN HONDA MOTOR CO., INC.

3. Remove the B-pillar lower trim (A).
   -1 While pulling both upper edges of the B-pillar lower trim outward, pull the top of the trim back

cardiagn.com

to release the hooks (B).

-2 Detach the clips.

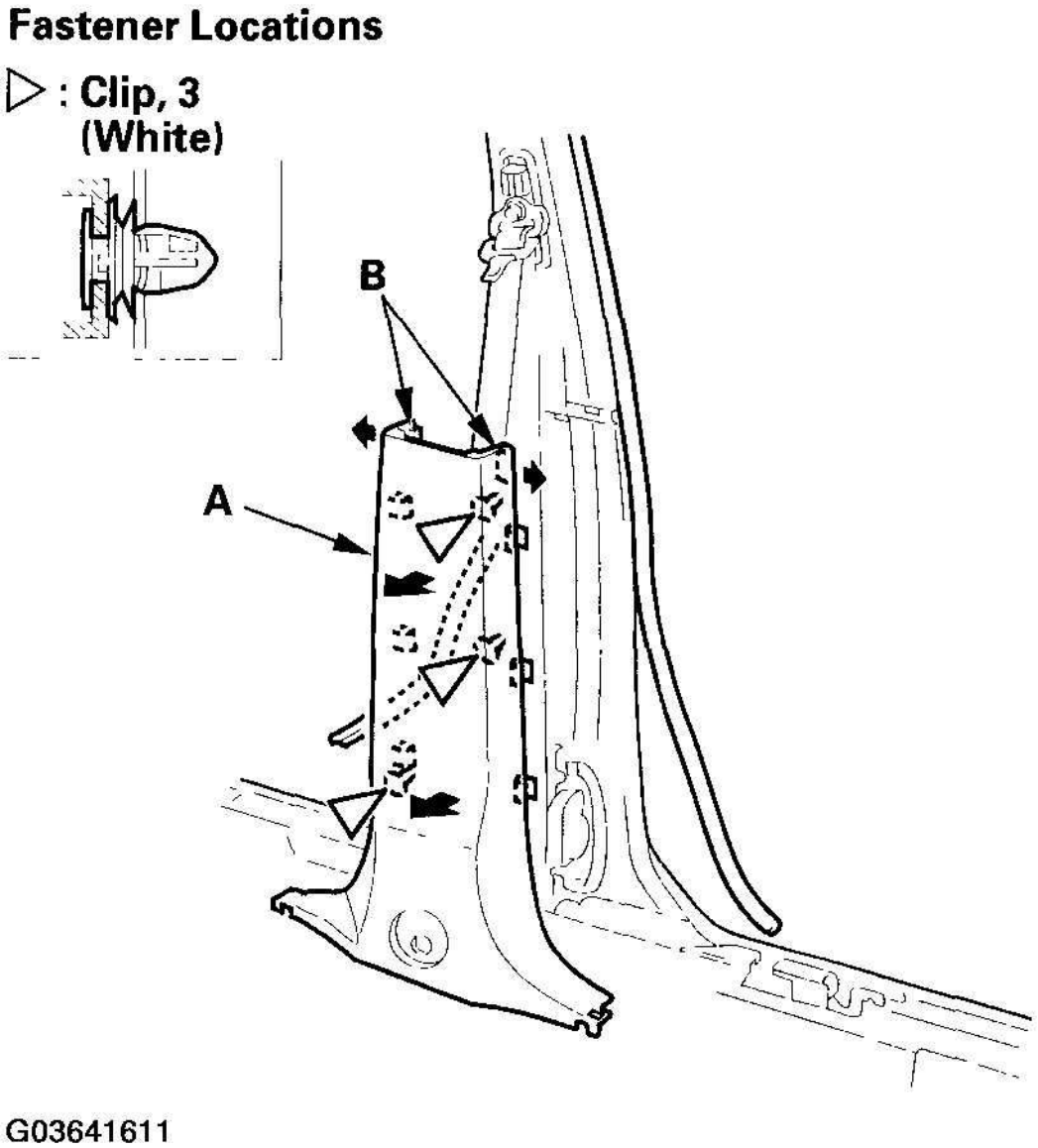

Fig. 15: Removing B-Pillar Lower Trim (2004-06 Models)
Courtesy of AMERICAN HONDA MOTOR CO., INC.

4. Remove the upper anchor cover (A), and remove the upper anchor bolt (B).

cardiagn.com

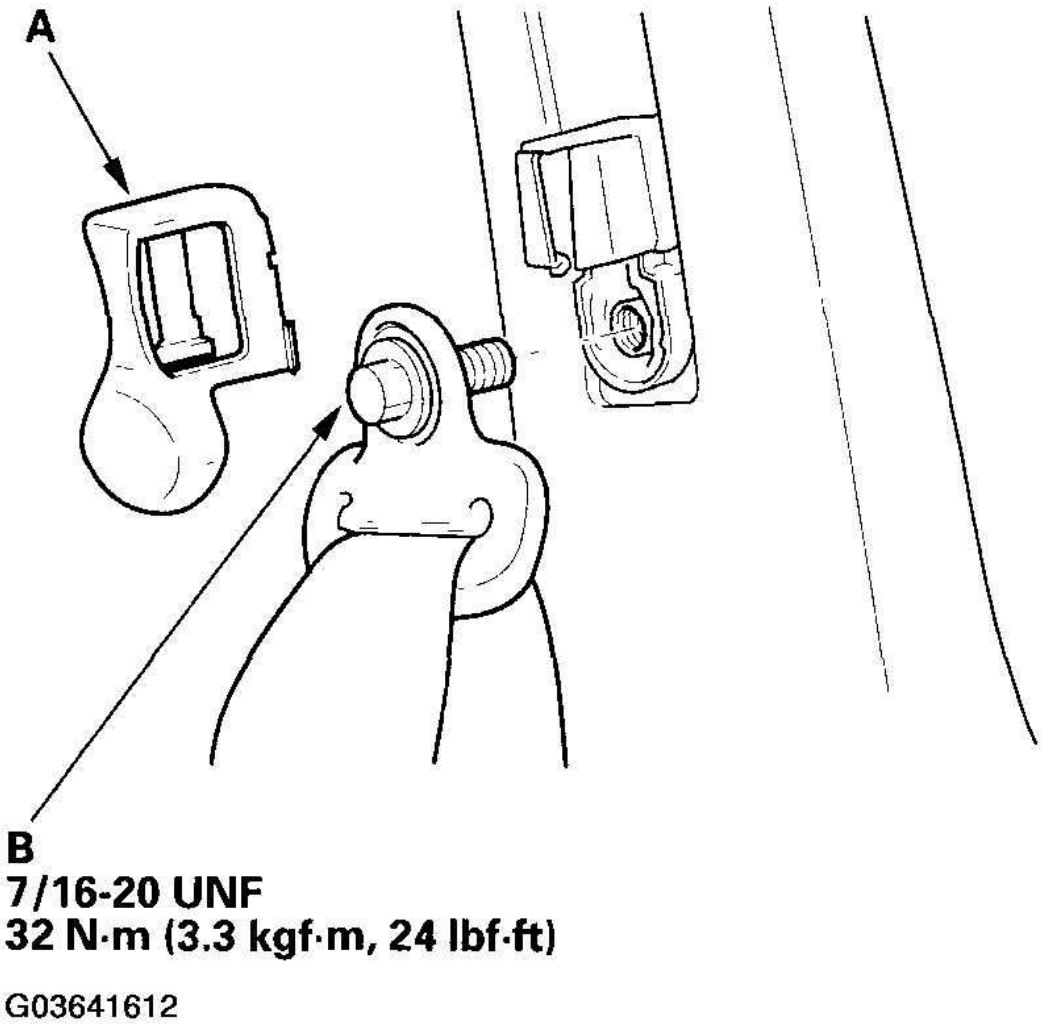

Fig. 16: Removing Upper Anchor Cover
Courtesy of AMERICAN HONDA MOTOR CO., INC.

5. Remove the B-pillar upper trim (A).
   - -1 Pull the bottom of the trim back while releasing the lower hooks (B).
   - -2 Detach the clip.
   - -3 Lower the trim to release the upper two hooks (C) from the body, and disengage the top of the trim from the edge of the headliner (D).

cardiagn.com

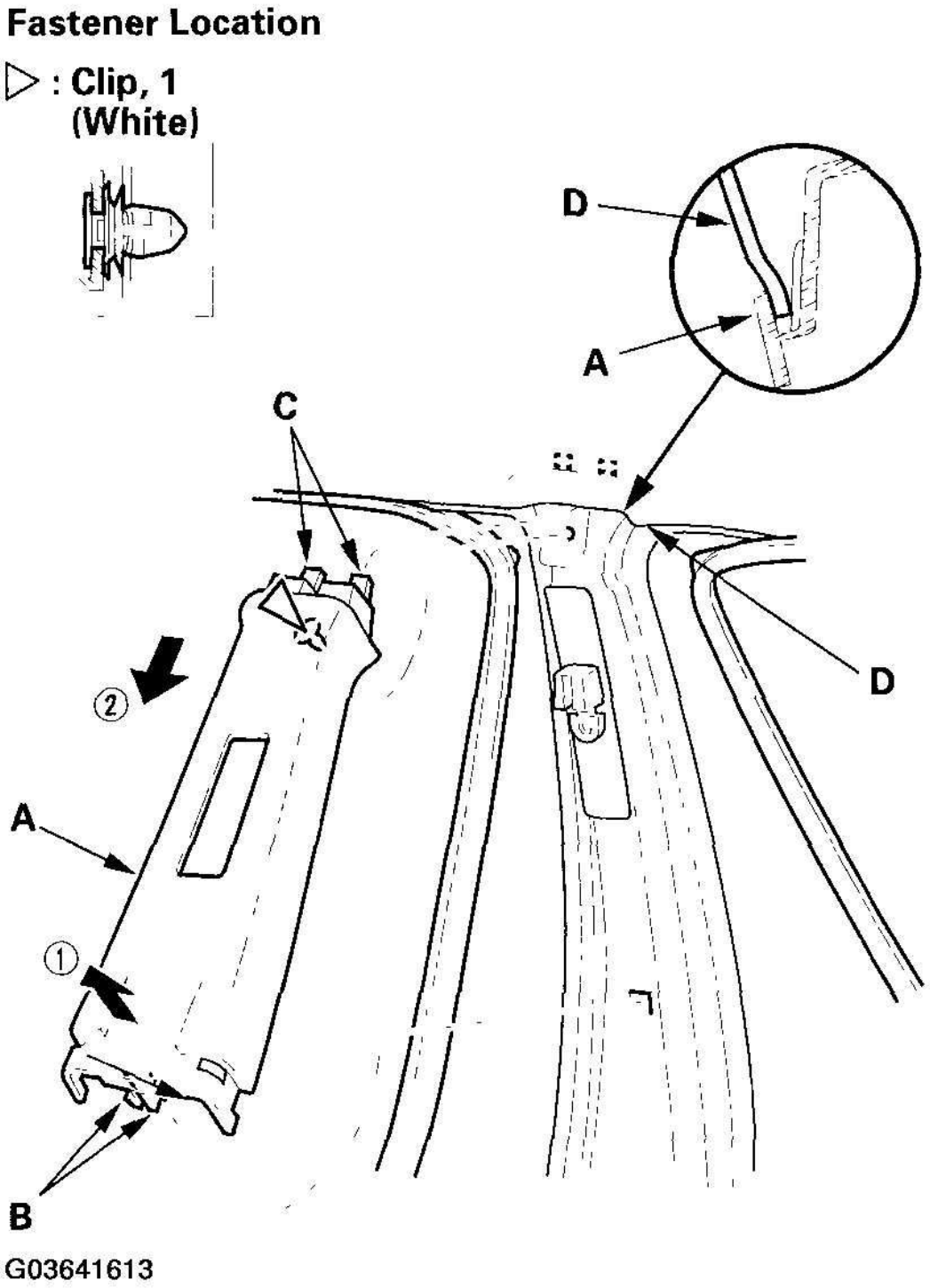

Fig. 17: Removing B-Pillar Upper Trim (2004-06 Models)
Courtesy of AMERICAN HONDA MOTOR CO., INC.

cardiagn.com

6. Install the trim in the reverse order of removal, and note these items:
   - Replace any damaged clips with new ones.
   - If the side curtain airbag has deployed, replace the B-pillar upper trim with a new one.
   - To prevent the side curtain airbags from deploying improperly and possibly causing injury, inspect removed pieces and replace them if they have any of these types of damage:

     -Any cracks, deformations, or stress-whitenings in the B-pillar upper trim (A)

     -Any cracks, or stress-whitenings in the grommet and clip seating surfaces (B)

     -Any cracks or deformations in the B-pillar lower trim (C), and any breakages in the part (D) that fits into the B-pillar upper trim
   - Make sure the top of the trim overlaps with the headliner correctly (see **COMPONENT REPLACEMENT/INSPECTION AFTER DEPLOYMENT**).
   - Make sure the trim hooks are installed into the holes in the body securely.
   - Push the clips into place securely.
   - Apply liquid thread lock to the front seat belt upper anchor bolt before installation.
   - Before installing the anchor bolt, make sure there are no twists or kinks in the seat belt.

cardiagn.com

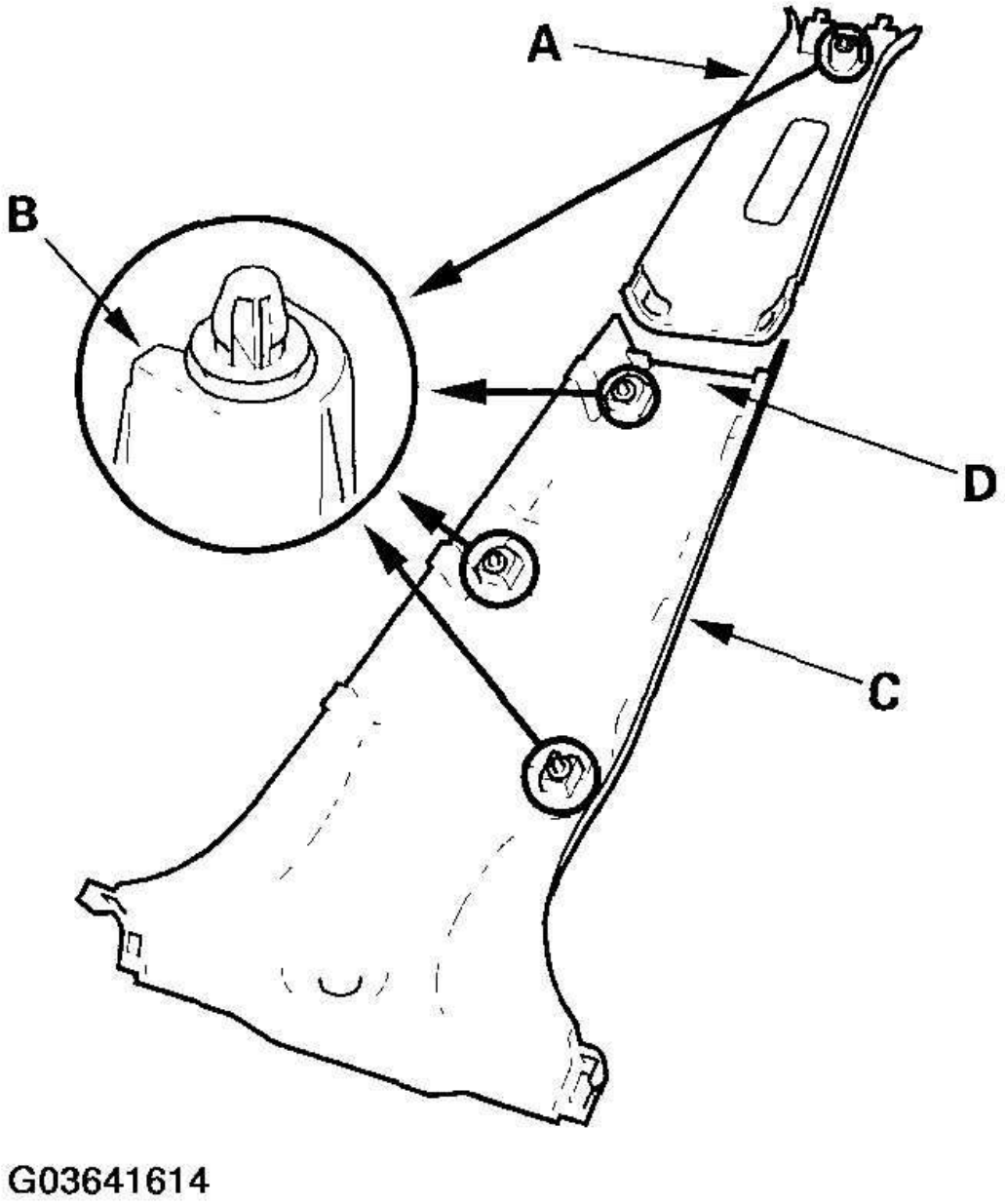

Fig. 18: Installing Trim B-Pillar Trim
Courtesy of AMERICAN HONDA MOTOR CO., INC.

C-PILLAR - '03 MODEL

NOTE:

- **Put on gloves to protect your hands.**

cardiagn.com

- **Take care not to bend or scratch the trim and panels.**
- **Use the appropriate tool from the KTC trim tool set to avoid damage when prying components.**

1. Remove these items:
   - Rear door opening trim, as needed (see step 5 in **TRIM REMOVAL/INSTALLATION - DOOR AREAS**)
   - Rear side trim panel, upper portion as needed (see step 5 in **TRIM REMOVAL/INSTALLATION - REAR SIDE LOWER AREA**)
2. Remove the upper anchor cap (A), and remove the upper anchor bolt (B).

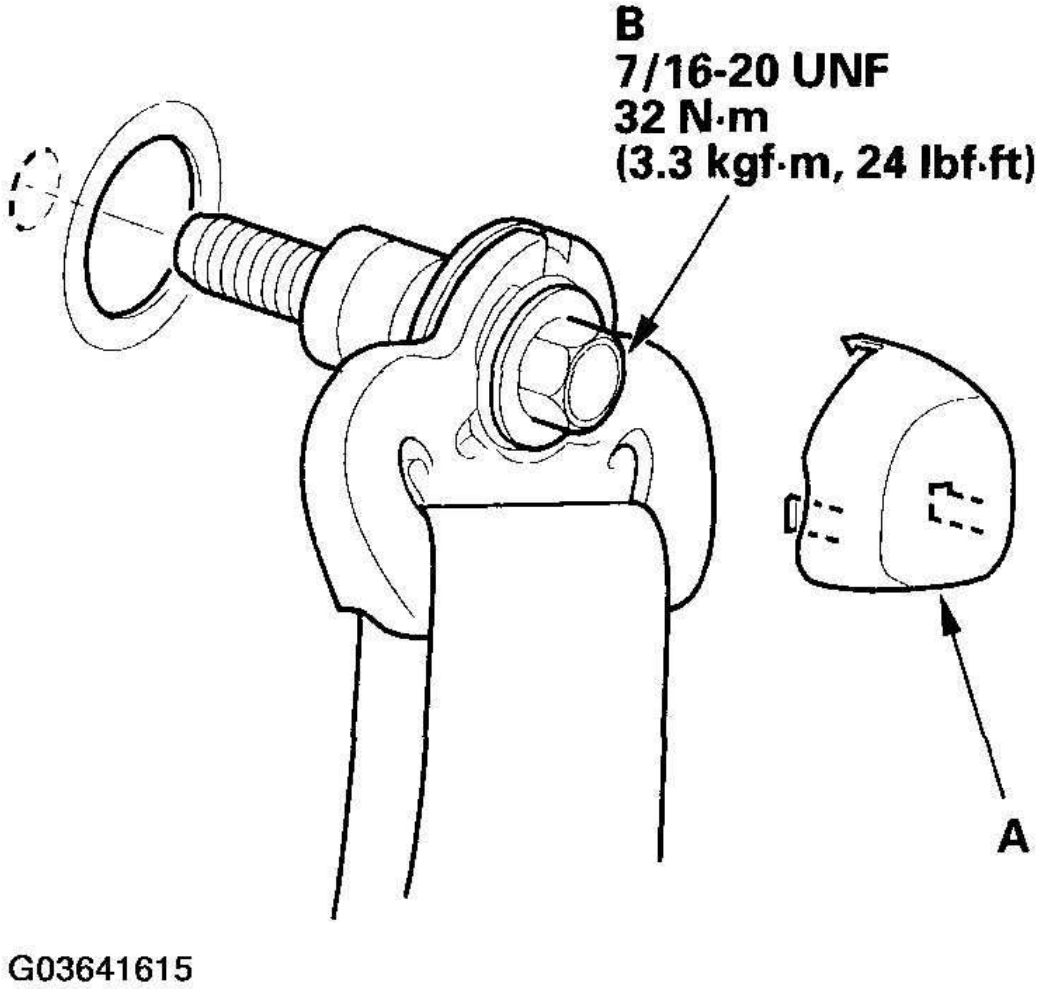

Fig. 19: Removing Upper Anchor Cap

cardiagn.com

Courtesy of AMERICAN HONDA MOTOR CO., INC.

3. While pulling the upper portion of the rear side trim panel (A) back, pull the C-pillar trim (B) back to detach the clips, then remove it.

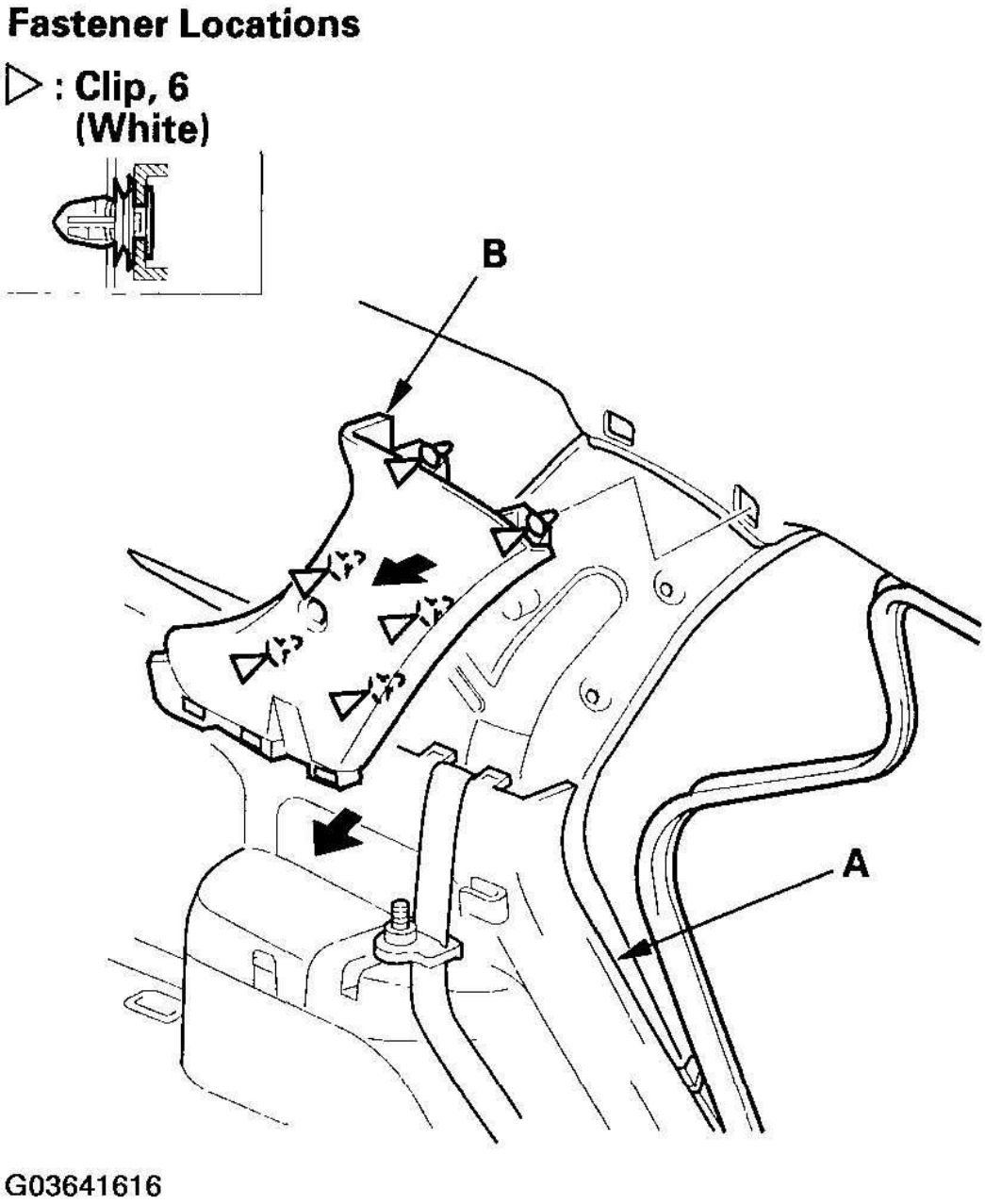

Fig. 20: Pulling Rear Side Trim Panel And C-Pillar Trim Back To Detach Clips

cardiagn.com

Courtesy of AMERICAN HONDA MOTOR CO., INC.

4. Install the trim in the reverse order of removal, and note these items:
   - Replace any damaged clips with new ones.
   - Push the clips into place securely.
   - Apply liquid thread lock to the anchor bolts before reinstallation.
   - Before installing the anchor bolts, make sure there are no twists or kinks in the seat belts.

C-PILLAR - '04 - '06 MODELS

SRS components are located in this area. Review the SRS component locations (see **2004-2006 MODELS**) and the precautions and procedures (see **PRECAUTIONS AND PROCEDURES**) before performing repairs or service.

NOTE:
- **Put on gloves to protect your hands.**
- **Take care not to bend or scratch the trim and panels.**
- **Use the appropriate tool from the KTC trim tool set to avoid damage when prying components.**

1. Remove these items:
   - Rear door opening trim, as needed (see step 5 in **TRIM REMOVAL/INSTALLATION - DOOR AREAS**)
   - Rear side trim panel, upper portion as needed (see step 5 in **TRIM REMOVAL/INSTALLATION - REAR SIDE LOWER AREA**)
2. Remove the upper anchor cap (A), and remove the upper anchor bolt (B).

cardiagn.com

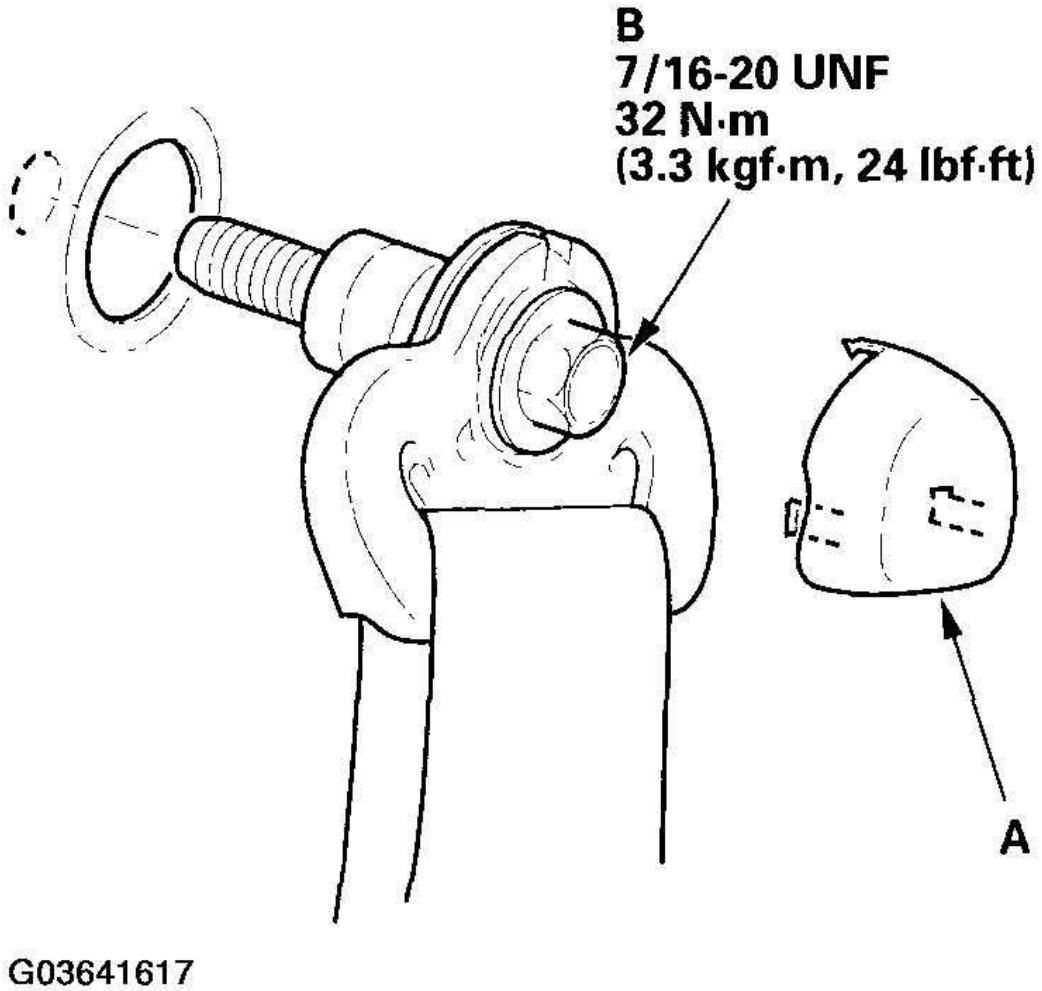

Fig. 21: Removing Upper Anchor Cap
Courtesy of AMERICAN HONDA MOTOR CO., INC.

3. Remove the C-pillar trim (A).

   -1 While pulling the upper portion of the rear side trim panel (B) out, pull the C-pillar trim out to detach the clips, then pull it down to free it from the headliner (C).

   -2 Lower the trim to disengage the top of it from the edge of the headliner, and unhook the trim.

cardiagn.com

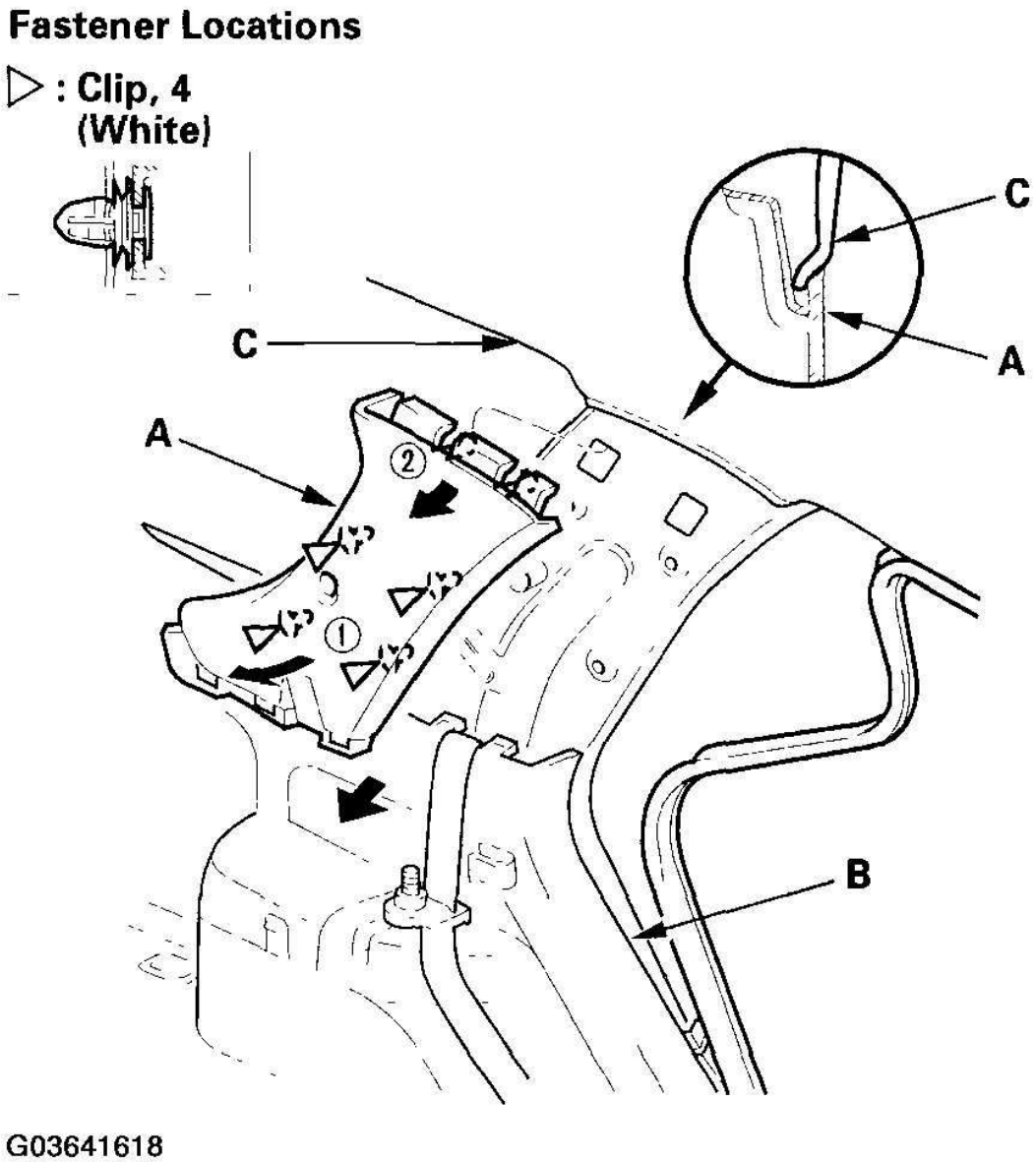

Fig. 22: Removing C-Pillar Trim
Courtesy of AMERICAN HONDA MOTOR CO., INC.

4. Install the trim in the reverse order of removal, and note these items:
   - Replace any damaged clips with new ones.
   - If the side curtain airbag has deployed, replace the C-pillar trim with a new one.
   - To prevent the side curtain airbags from deploying improperly and possibly causing injury, inspect removed pieces and replace them if they have any of these types of damage:

cardiagn.com

-Any cracks, deformations, or stress-whitenings in the C-pillar trim (A) and upper hooks (B)

-Any cracks, or stress-whitenings in the clip seating surfaces (C)

- Make sure the top of the trim overlaps with the headliner correctly (see **COMPONENT REPLACEMENT/INSPECTION AFTER DEPLOYMENT**).
- Push the clips and hooks into place securely.
- Apply liquid thread lock to the anchor bolts before reinstallation.
- Before installing the anchor bolts, make sure there are no twists or kinks in the seat belts.

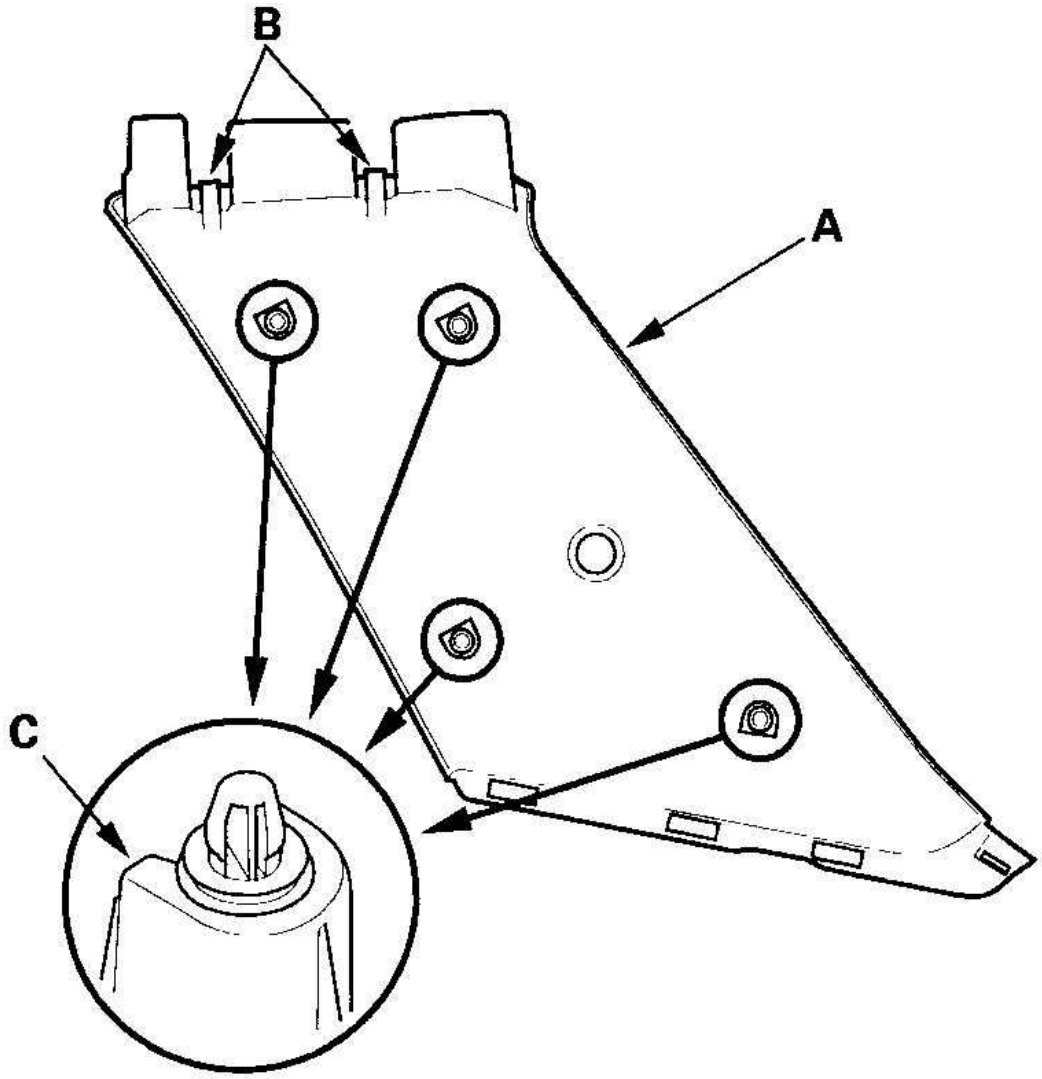

G03641619

cardiagn.com

Fig. 23: Installing C-Pillar Trim
Courtesy of AMERICAN HONDA MOTOR CO., INC.

D-PILLAR - '03 MODEL

NOTE:

- **Put on gloves to protect your hands.**
- **Take care not to bend or scratch the trim and panels.**
- **Use the appropriate tool from the KTC trim tool set to avoid damage when prying components.**

1. Remove the tailgate weatherstrip as needed (see **TAILGATE WEATHERSTRIP REPLACEMENT**).
2. Remove the upper anchor cap (A), and remove the upper anchor bolt (B).

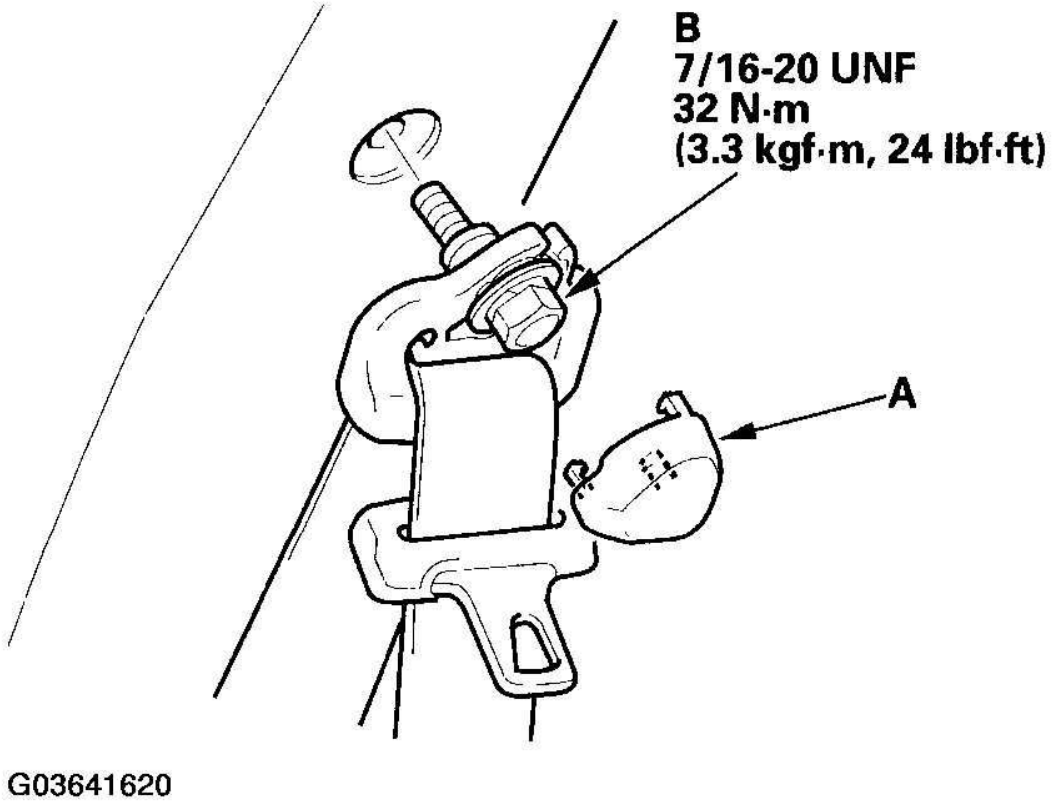

Fig. 24: Removing Upper Anchor Cap
Courtesy of AMERICAN HONDA MOTOR CO., INC.

3. Detach the clips, and release the lower hooks (A) by pulling the D-pillar trim (B) up, then remove the trim.

cardiagn.com

Fastener Locations

▷ : Clip, 4 (White)

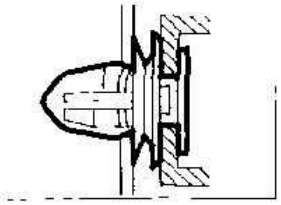

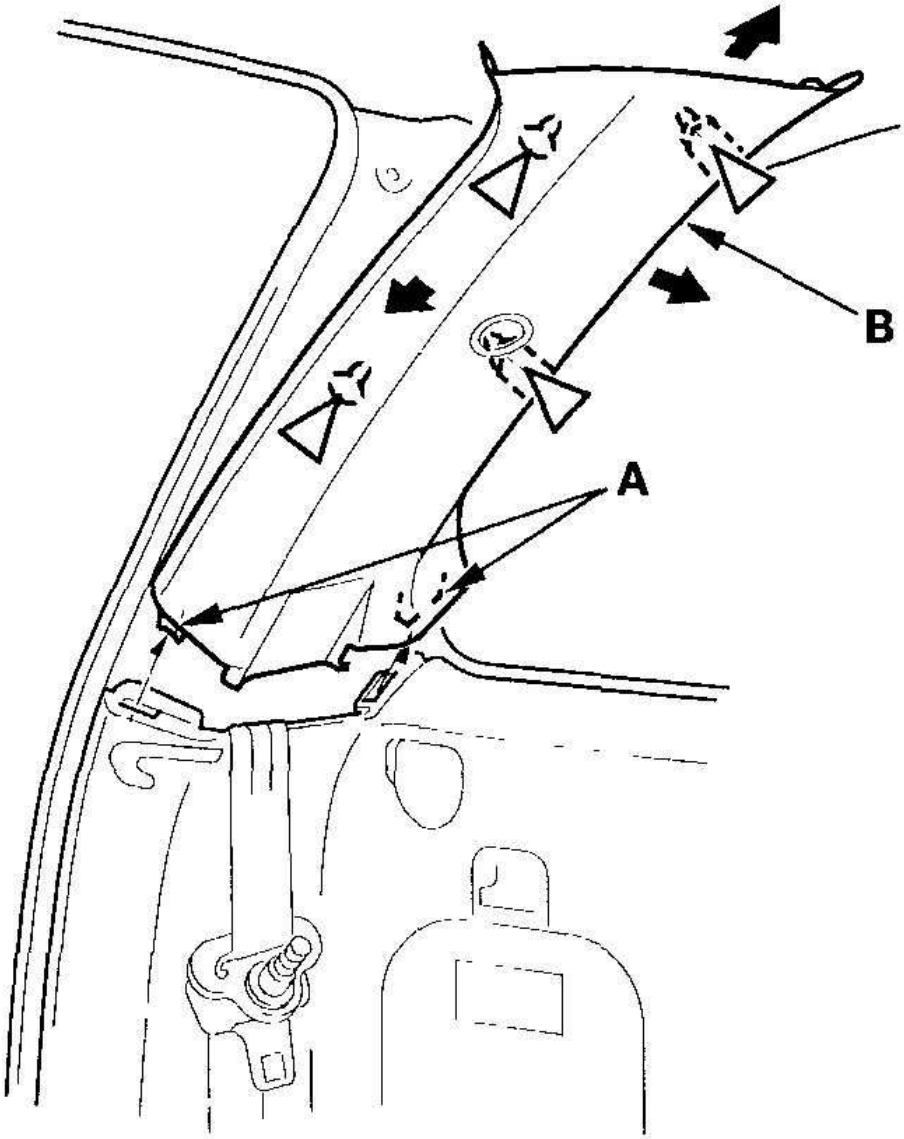

G03641621

cardiagn.com

Fig. 25: Releasing Lower Hooks Pulling D-Pillar Trim
Courtesy of AMERICAN HONDA MOTOR CO., INC.

4. Install the trim in the reverse order of removal, and note these items:
   - Replace any damaged clips with new ones.
   - Push the clip portions into place securely.
   - Apply liquid thread lock to the anchor bolts before reinstallation.
   - Before installing the anchor bolts, make sure there are no twists or kinks in the seat belts.

D-PILLAR - '04 -'06 MODELS

SRS components are located in this area. Review the SRS component locations (see **2004-2006 MODELS**) and the precautions and procedures (see **PRECAUTIONS AND PROCEDURES**) before performing repairs or service.

NOTE:

- **Put on gloves to protect your hands.**
- **Take care not to bend or scratch the trim and panels.**
- **Use the appropriate tool from the KTC trim tool set to avoid damage when prying components.**

1. Remove the tailgate weatherstrip as needed (see **TAILGATE WEATHERSTRIP REPLACEMENT**).
2. Remove the upper anchor cap (A), and remove the upper anchor bolt (B).

cardiagn.com

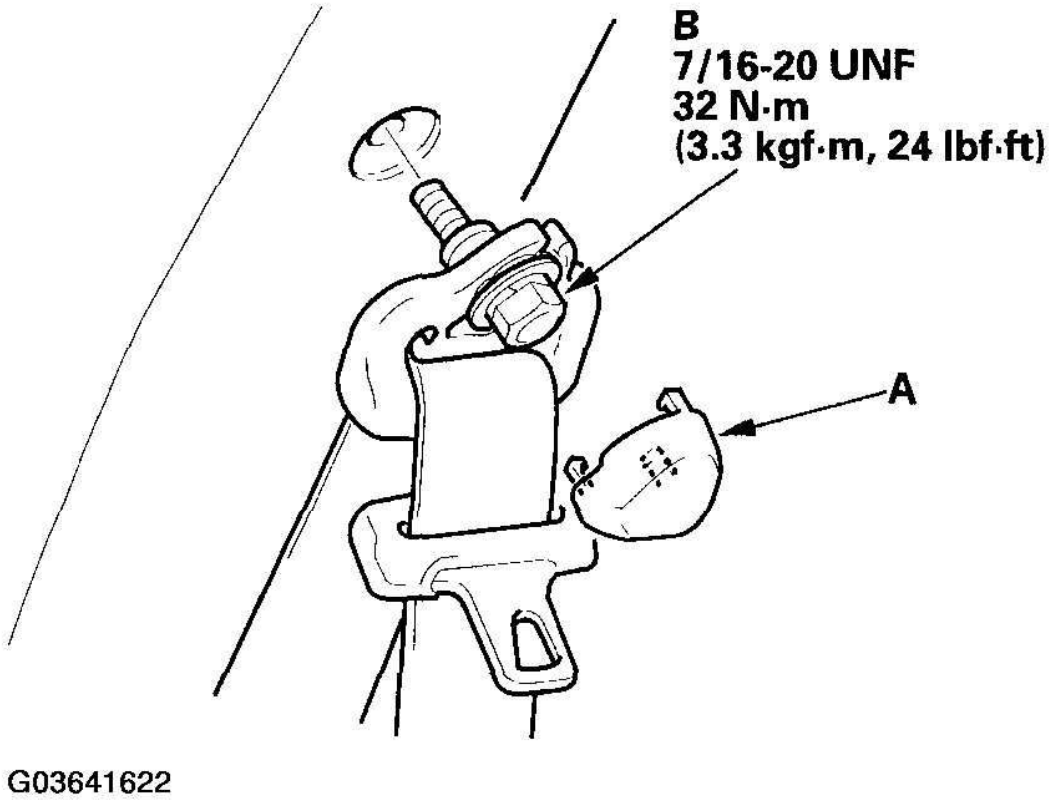

Fig. 26: Removing Upper Anchor Cap
Courtesy of AMERICAN HONDA MOTOR CO., INC.

3. Remove the D-pillar trim (A).
   - -1 Pry the D-pillar cap (B) out until it is stopped by the hooks (C) in the grommet (D).
   - -2 Pull the trim back by hand to detach the clips (E, F).
   - -3 Release the lower hooks (G) by pulling the trim up.
   - -4 Release the hooks on the grommet and pull the cap out. Discard the cap.

cardiagn.com

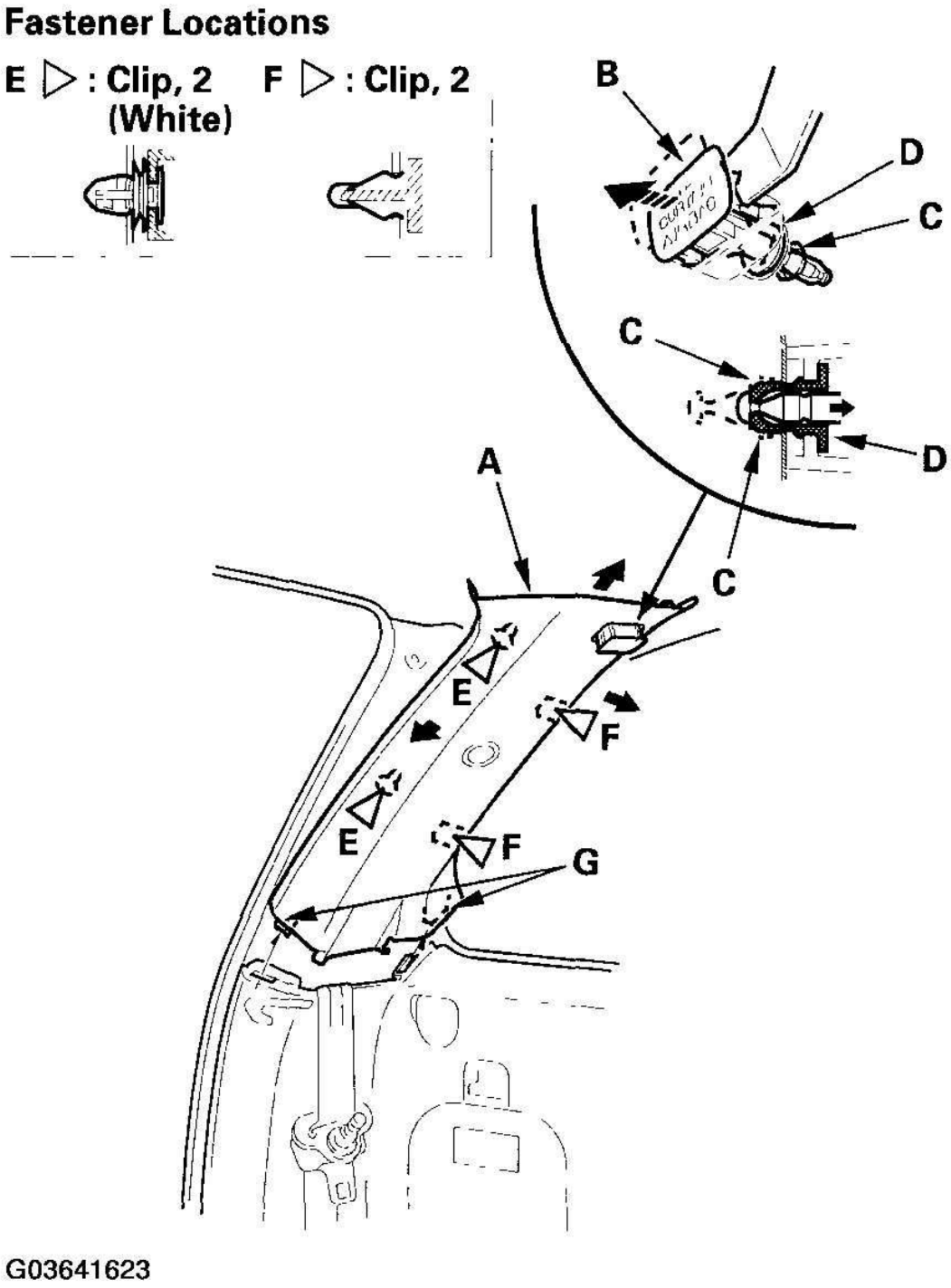

Fig. 27: Removing D-Pillar Trim
Courtesy of AMERICAN HONDA MOTOR CO., INC.

cardiagn.com

4. Install the trim in the reverse order of removal, and note these items:
   - Replace any damaged clips with new ones.
   - Do not reuse the D-pillar cap; always replace it.
   - If the side curtain airbag has deployed, replace the D-pillar trim with a new one.
   - To prevent the side curtain airbags from deploying improperly and possibly causing injury, inspect removed pieces and replace them if they have any of these types of damage:
     -Any cracks, deformations, or stress-whitenings in the D-pillar trim (A)
     -Any cracks, or stress-whitenings in the grommet and clip seating surfaces (B)
   - Make sure the top of the trim overlaps with the headliner correctly (see **COMPONENT REPLACEMENT/INSPECTION AFTER DEPLOYMENT**).
   - Push the clips into place securely.
   - Apply liquid thread lock to the anchor bolts before reinstallation.
   - Before installing the anchor bolts, make sure there are no twists or kinks in the seat belts.

cardiagn.com

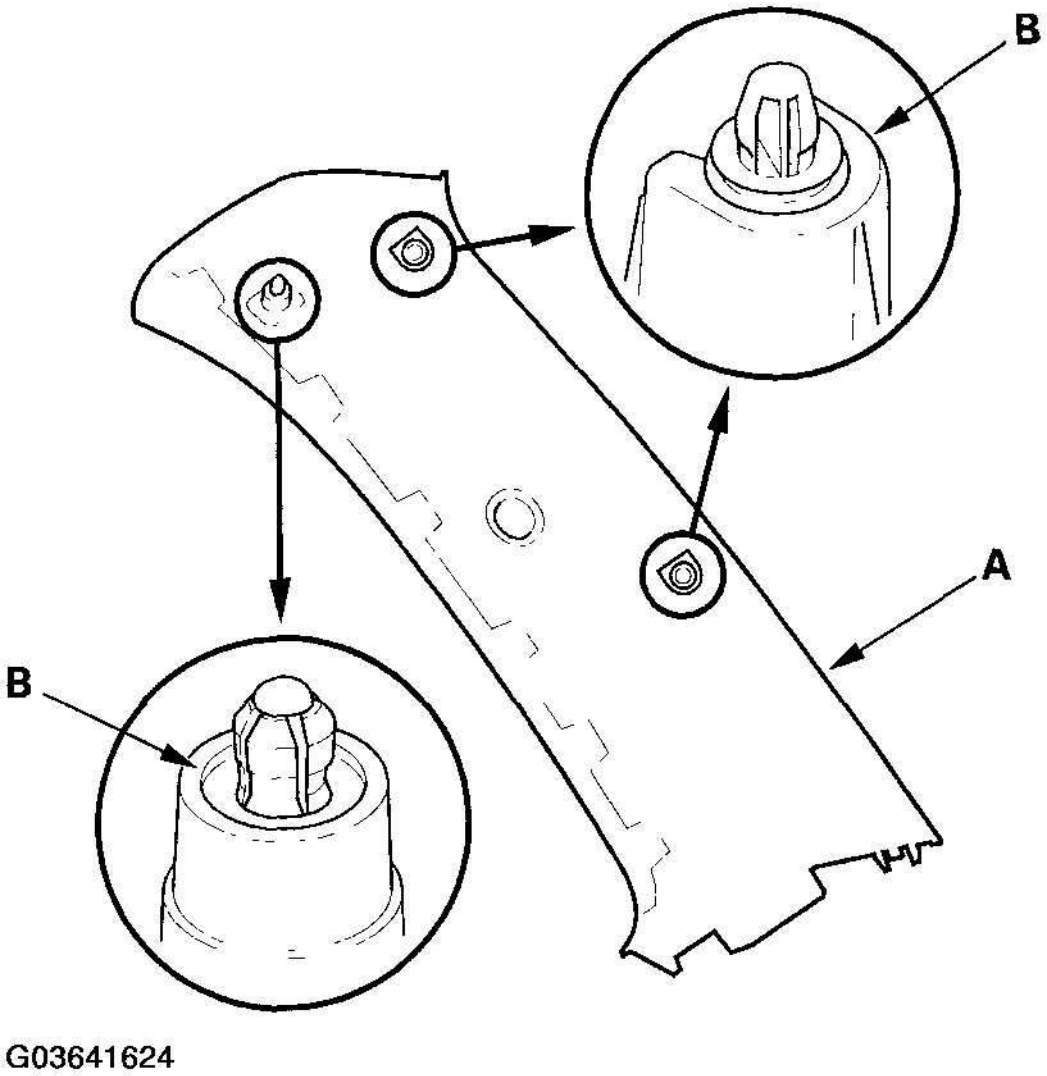

Fig. 28: Installing D-Pillar Trim
Courtesy of AMERICAN HONDA MOTOR CO., INC.

TRIM REMOVAL/INSTALLATION - REAR SIDE LOWER AREA

Special Tools Required

KTC trim tool set SOJATP2014

NOTE:

- **Put on gloves to protect your hands.**
- **Take care not to bend or scratch the trim and panels.**

cardiagn.com

- **Use the appropriate tool from the KTC trim tool set to avoid damage when prying components.**

1. Remove these items:
   - D-pillar trim, '03 model (see **D-PILLAR - '03 MODEL**), '04-06 models (see **D-PILLAR - '04-06 MODELS**)
   - Third row seat (see**THIRD ROW SEAT REMOVAL/INSTALLATION**)
   - Rear door opening trim, as needed (see step 5 in **TRIM REMOVAL/INSTALLATION - DOOR AREAS**)
   - Tailgate weatherstrip, as needed (see **TAILGATE WEATHERSTRIP REPLACEMENT**)
   - Jack cover and jack, left side
2. Remove the cargo area floor lid (A).

cardiagn.com

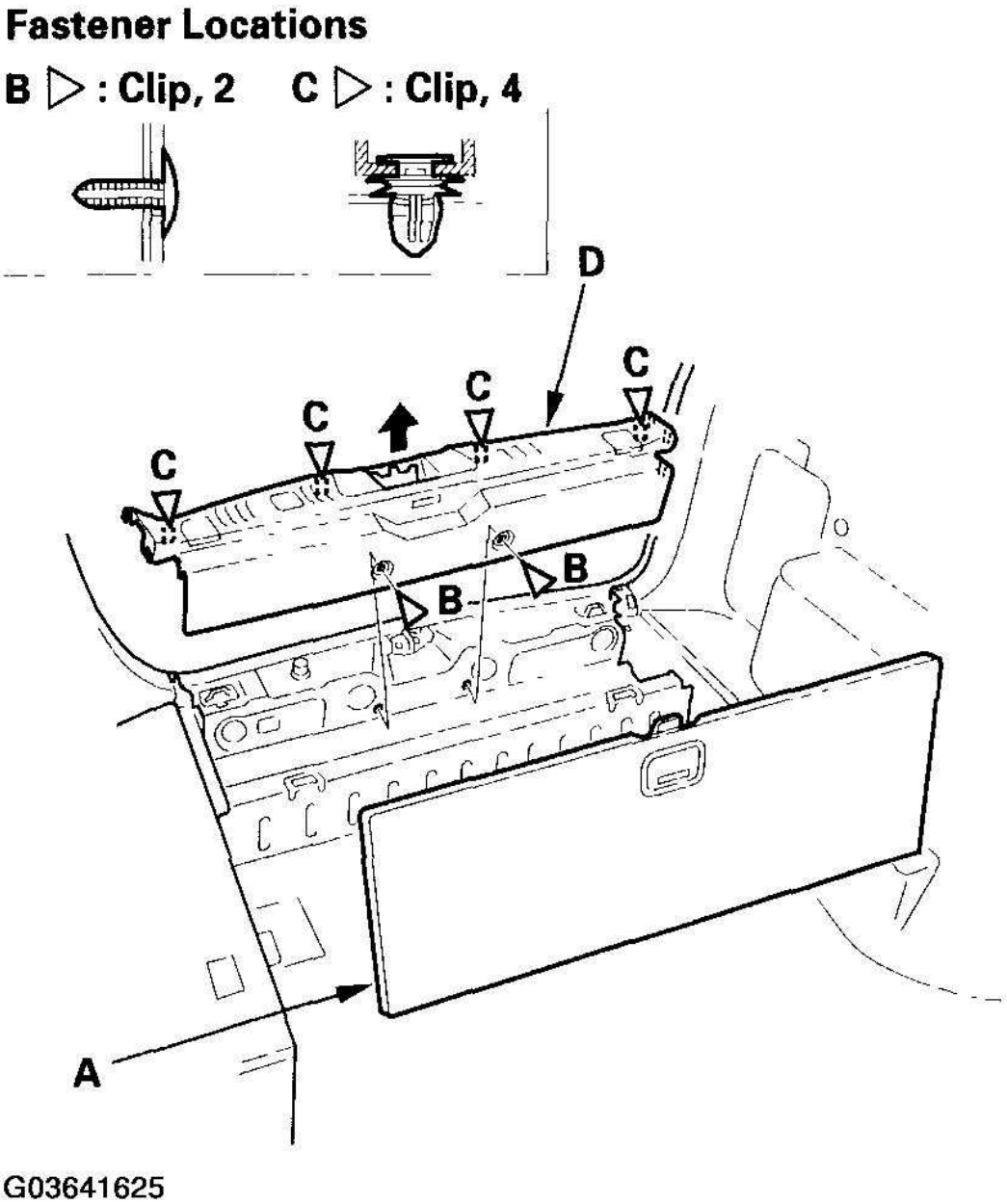

Fig. 29: Removing Cargo Area Floor Lid
Courtesy of AMERICAN HONDA MOTOR CO., INC.

3. Release the clips (B), and detach the clips (C), then remove the rear trim panel (D).
4. Right side: If necessary, detach the upper clips and release side hooks (A), then remove the rear speaker grille (B) by pulling it up.

cardiagn.com

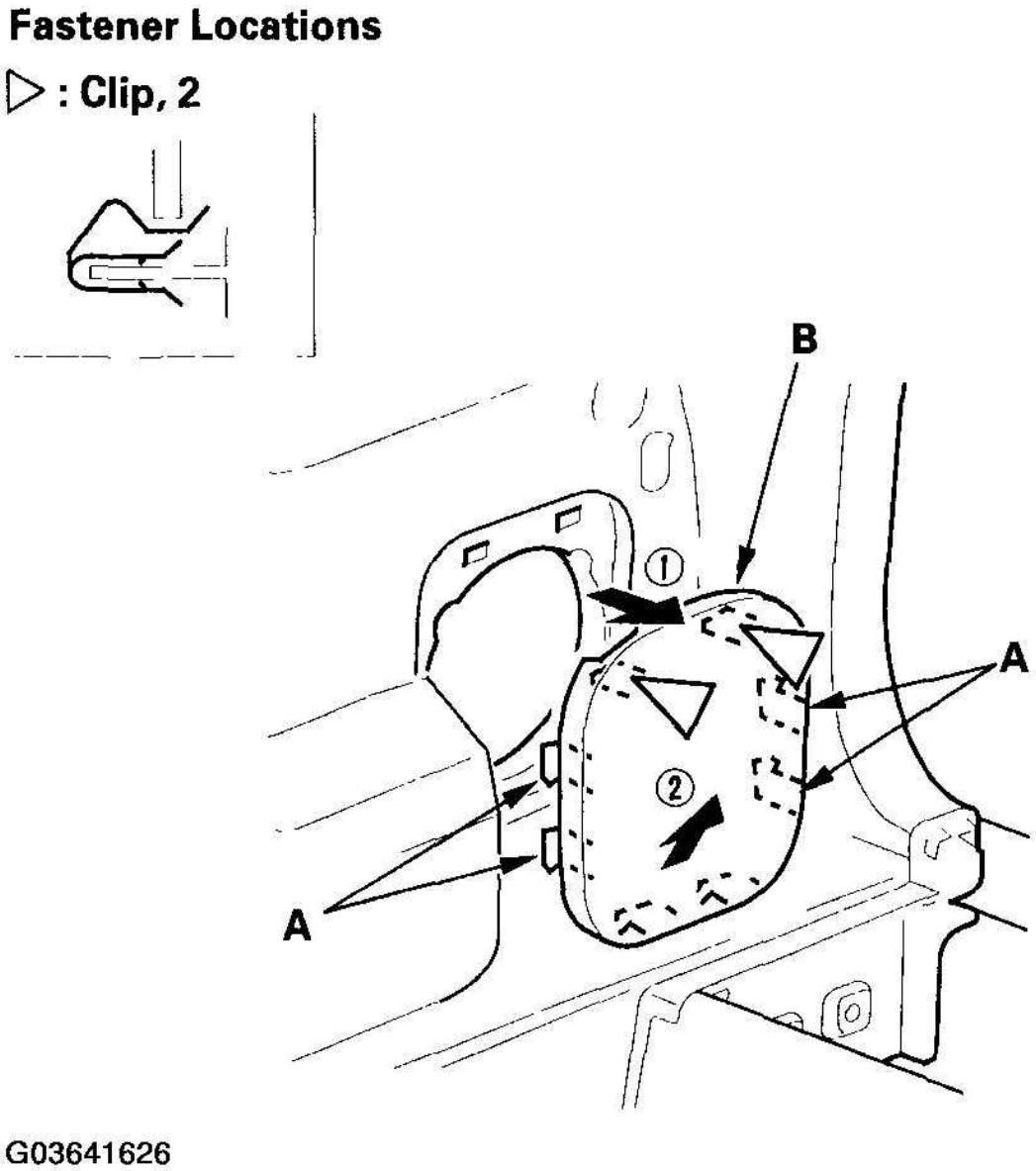

Fig. 30: Detaching Upper Clips And Releasing Side Hooks
Courtesy of AMERICAN HONDA MOTOR CO., INC.

5. Remove the left rear side trim panel (A) or right rear side trim panel (B).
   - -1 Remove the tie-down hooks (C).
   - -2 Right side: Pry up on the lid (D), then remove the screw.
   - -3 Pry out the lid (E), then remove the screws and cargo net hook(F).
   - -4 Release the clips (G).

cardiagn.com

-5 Detach the clips (H, I) by pulling the trim panel back. -6 Disconnect the rear accessory power socket connector (J) and brake light failure sensor connector (K) on the left side, and if equipped, the rear entertainment system auxiliary jack connector (L) on the right side.

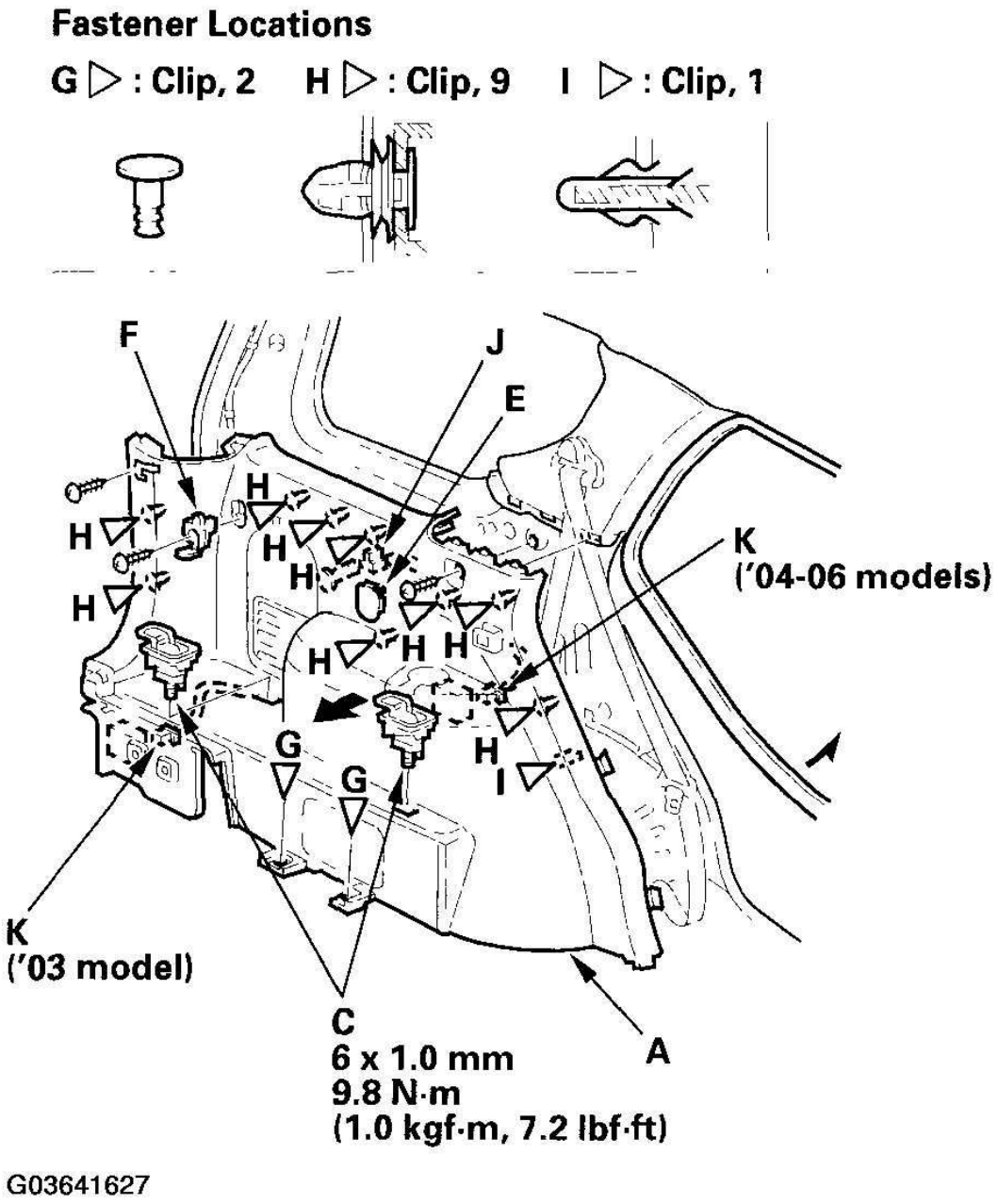

Fig. 31: Removing Left Rear Side Trim Panel
Courtesy of AMERICAN HONDA MOTOR CO., INC.

cardiagn.com

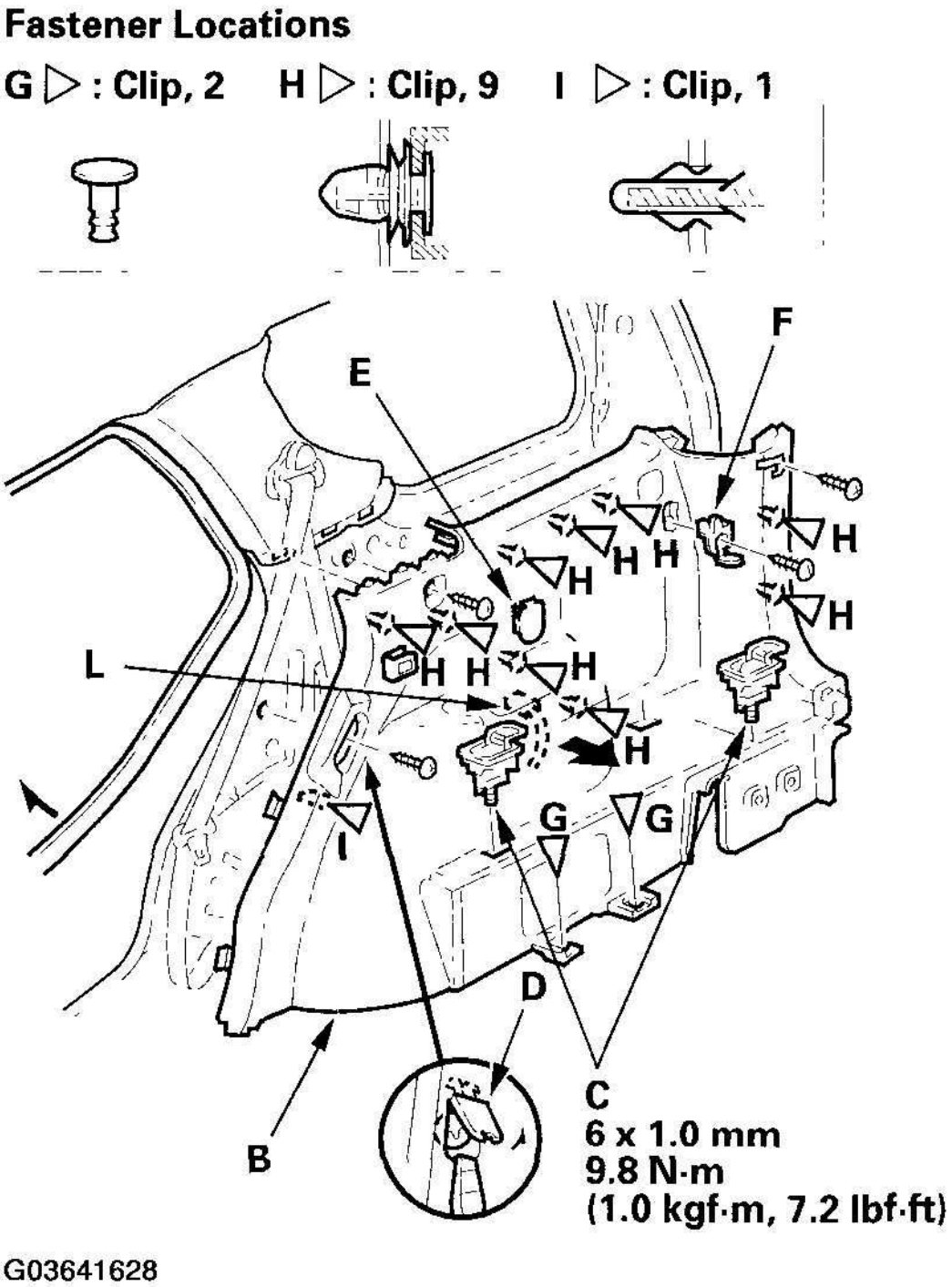

Fig. 32: Removing Right Rear Side Trim Panel
Courtesy of AMERICAN HONDA MOTOR CO., INC.

cardiagn.com

6. Install the panel in the reverse order of removal, and note these items:
   - Check the clip(s) for damage or stress-whitened, and replace them with new one(s).
   - Make sure each connector is plugged in properly.

TRIM REMOVAL/INSTALLATION - TAILGATE AREA

Special Tools Required

KTC trim tool set SOJATP2014

NOTE:

- **Put on gloves to protect your hands.**
- **Take care not to bend or scratch the trim and panels.**
- **Use the appropriate tool from the KTC trim tool set to avoid damage when prying components.**

1. Remove the tailgate upper trim (A).

   -1 Detach the hooks (B) and tabs (C) from the left tailgate side trim (D) and right tailgate side trim (E).

   -2 Pull the tailgate upper trim back by hand to detach the clips, and release the hooks (F) on the high-mount brake light (G).

cardiagn.com

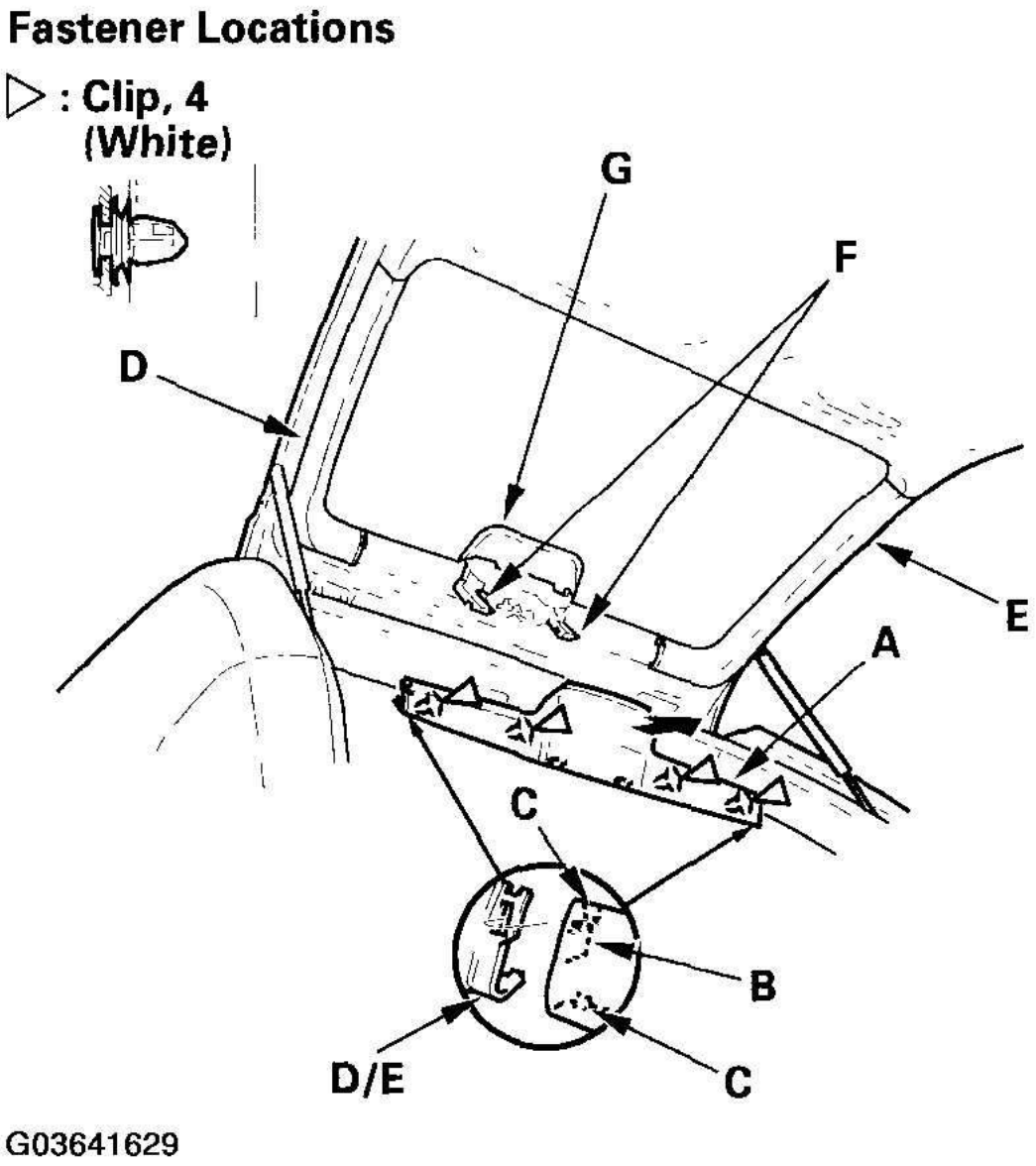

Fig. 33: Removing Tailgate Upper Trim
Courtesy of AMERICAN HONDA MOTOR CO., INC.

2. Remove the left tailgate side trim (A) and the right tailgate side trim (B).
   - -1 Pull out the top of the side trim to detach the clips.
   - -2 Release the hooks (C) from the tailgate lower trim panel (D).

cardiagn.com

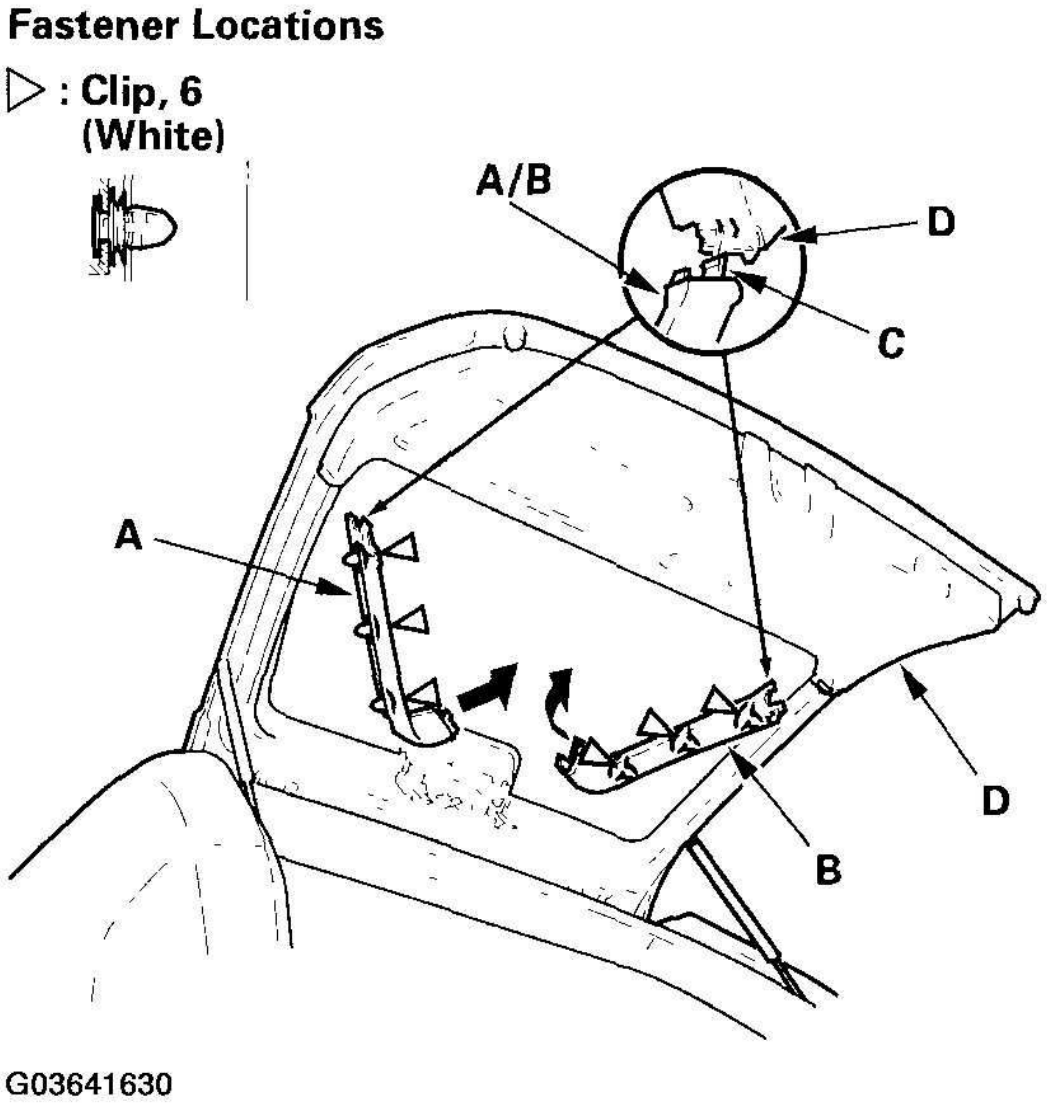

Fig. 34: Removing Left And Right Tailgate Side Trim
Courtesy of AMERICAN HONDA MOTOR CO., INC.

3. Remove the tailgate trim panel (A).
   - -1 Pry out the lid (B), remove the screws (C), then remove the tailgate handle (D).
   - -2 Release the clips (E).
   - -3 Pull out the trim panel to detach the clips (F), and pull the trim panel up.
   - -4 Disconnect the tailgate light connector (G).

cardiagn.com

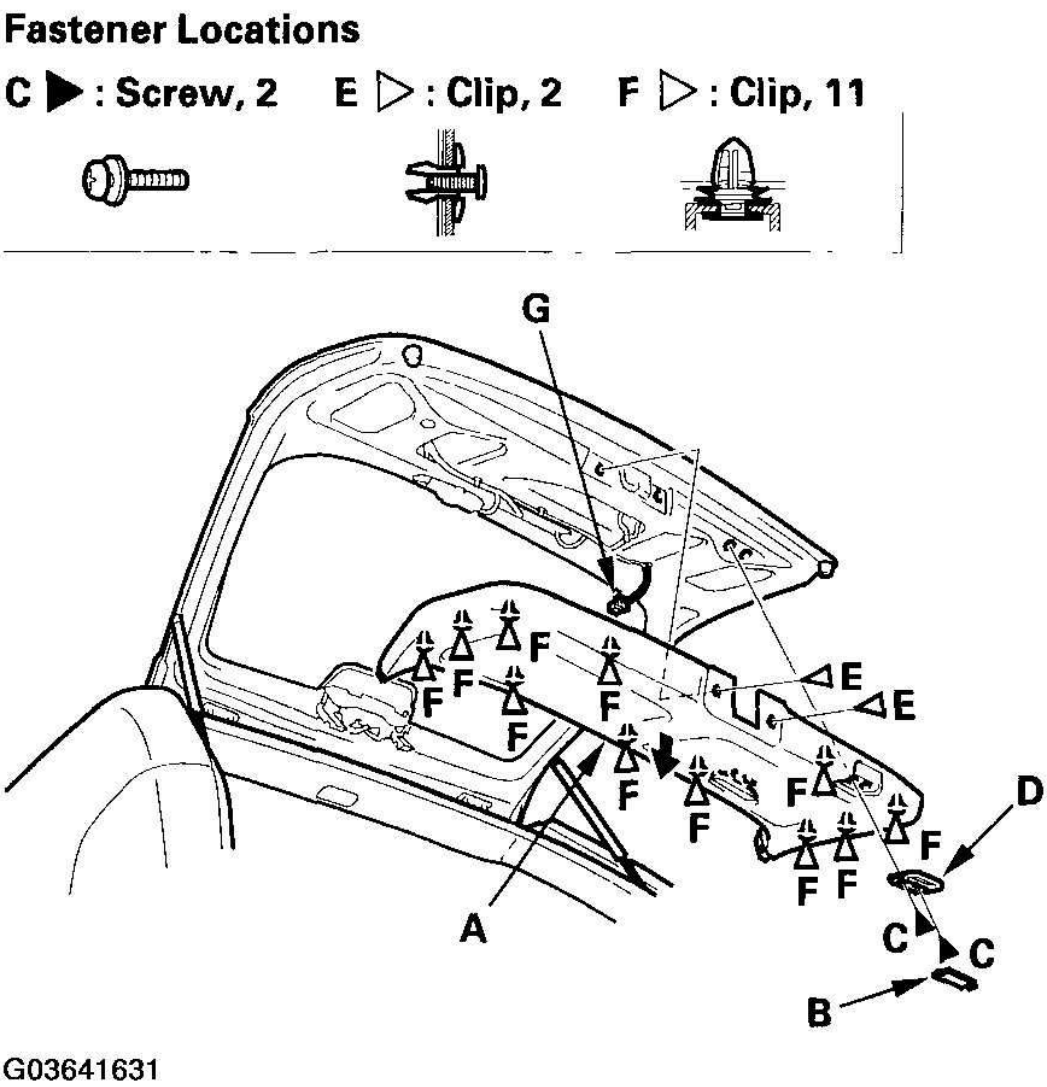

Fig. 35: Removing Tailgate Trim Panel
Courtesy of AMERICAN HONDA MOTOR CO., INC.

4. Install the panel in the reverse order of removal, and note these items:
   - Check the clip(s) for damage or stress-whitened, and replace them with new one(s).
   - Make sure the connector is plugged in properly.
   - Push the clips and hooks into place securely.

HEADLINER REMOVAL/INSTALLATION

Special Tools Required

cardiagn.com

KTC trim tool set SOJATP2014

'04-06 models: SRS components are located in this area. Review the SRS component locations (see **2004-2006 MODELS**) and the precautions and procedures (see **PRECAUTIONS AND PROCEDURES**) before performing repairs or service.

NOTE:

- **Use the appropriate tool from the KTC trim tool set to avoid damage when prying components.**
- **When prying with a flat-tip screwdriver, wrap it with protective tape to prevent damage.**
- **Take care not to bend and scratch the headliner.**
- **Be careful not to damage the dashboard and other interior trim.**

1. Remove these items:
   - Front door opening trim, both sides as needed (see step 3 in **TRIM REMOVAL/INSTALLATION - DOOR AREAS**)
   - A-pillar trim, both sides, '03 model (see **A-PILLAR - '03 MODEL**), '04-06 models (see **A-PILLAR - '04-06 MODELS**)
   - Rear door opening trim, both sides as needed (see step 5 in **TRIM REMOVAL/INSTALLATION - DOOR AREAS**)
   - Front seat belt upper anchor bolt, both sides (see step 4 on **FRONT SEAT BELT REPLACEMENT**)
   - B-pillar upper trim, one side for '03 model (see **B-PILLAR - '03 MODEL**)
   - B-pillar upper trim, both sides for '04-06 models (see **B-PILLAR - '04-'06 MODELS**)
2. Remove these items:
   - Second row seat belt upper anchor bolt, middle and both sides (see step 2 in**SECOND ROW SEAT BELT REPLACEMENT**)
   - C-pillar trim, one side for '03 model (see **C-PILLAR - '03 MODEL**)
   - C-pillar trim, both sides for '04-06 models (see **C-PILLAR - '04-'06 MODELS**)
   - Third row seat belt upper anchor bolt, both sides (see step 1 in **THIRD ROW SEAT BELT**)
   - D-pillar trim, both sides, '03 model (see **D-PILLAR - '03 MODEL**), '04-06 models (see **D-PILLAR - '04-'06 MODELS**)
3. If equipped, remove the rain sensor cover (see **CONTROL UNIT INPUT TEST**).
4. Release the tabs (A) on both sides with a trim tool, then remove the sunvisor cap (B) from the bracket (C). Turn the cap, and remove it.

cardiagn.com

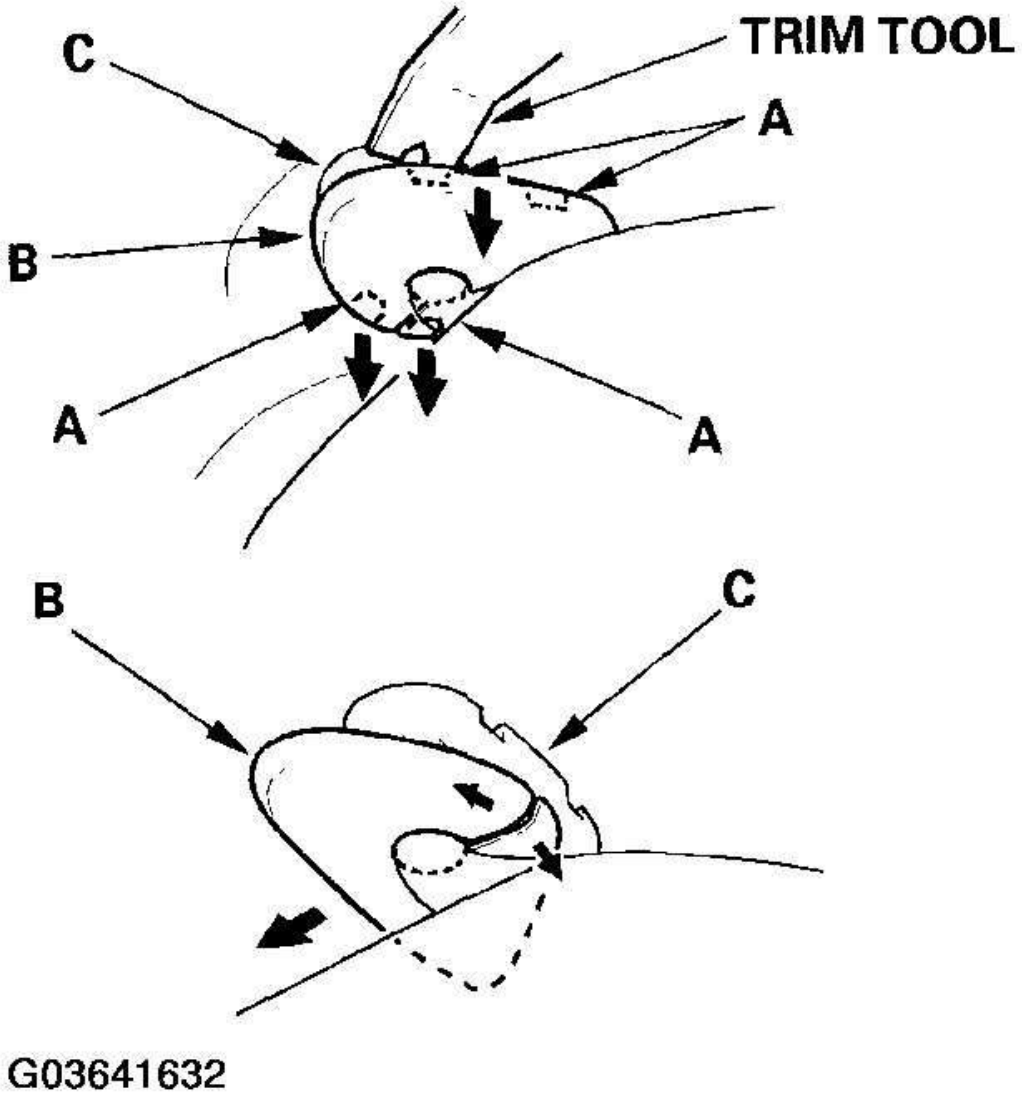

Fig. 36: Removing Sunvisor Cap
Courtesy of AMERICAN HONDA MOTOR CO., INC.

5. Remove the sunvisor (A) and holder (B) from both sides.
   - -1 Using a T25 Torx bit, remove the ET screws.
   - -2 Remove the sunvisor from the body and holder.
   - -3 Disconnect the vanity mirror light connector (C).
   - -4 Using a flat-tip screwdriver, push the hook (D), and turn the holder 90°, then pull it out.

cardiagn.com

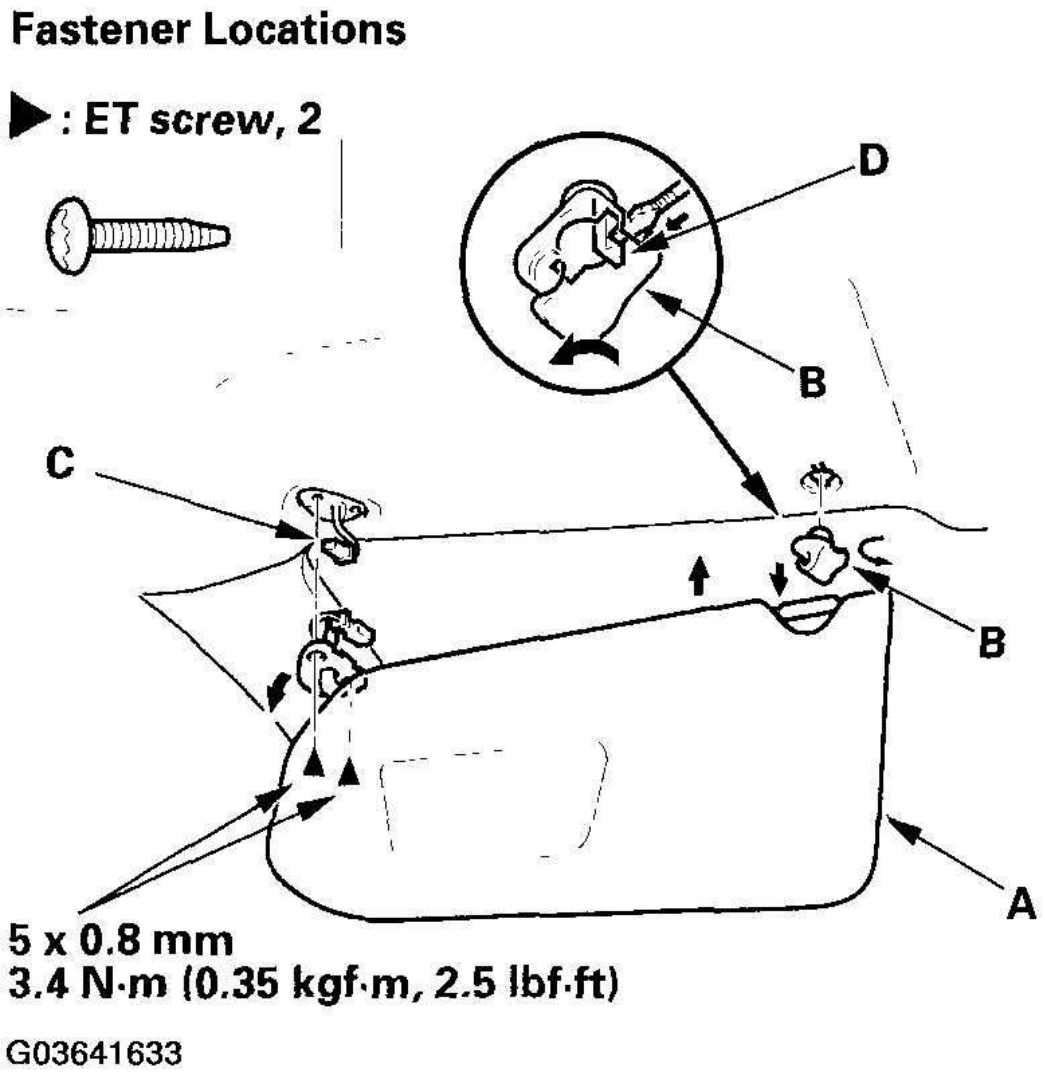

Fig. 37: Removing Sunvisor And Holder From Both Sides
Courtesy of AMERICAN HONDA MOTOR CO., INC.

6. '03 model: Remove the roof console (A).

   -1 Remove the lens (B).

   -2 Remove the screws.

   -3 Pull out the roof console, and disconnect the front individual map light/Home Link unit connector (C). If equipped with navigation system, disconnect the navigation microphone connector (D).

cardiagn.com

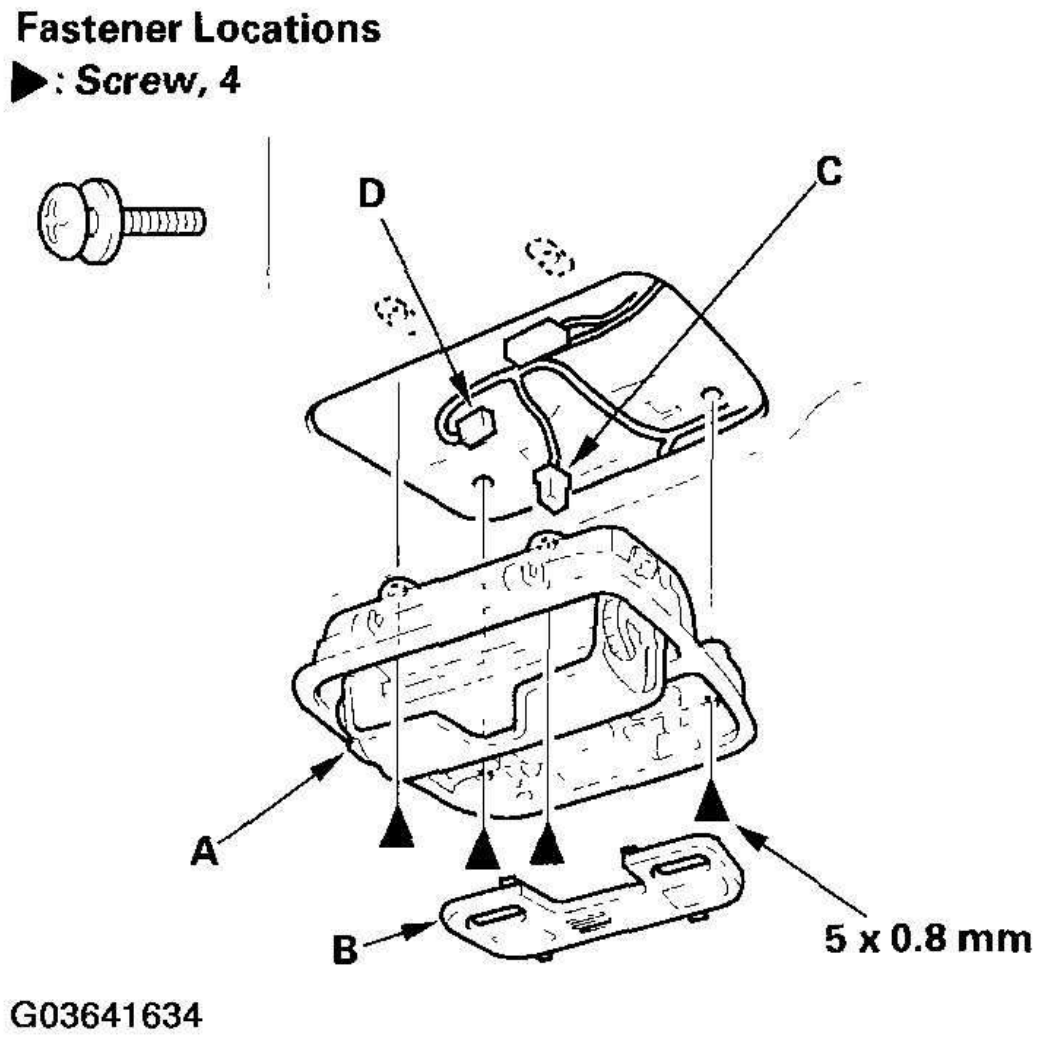

Fig. 38: Removing Roof Console (2003 Model)
Courtesy of AMERICAN HONDA MOTOR CO., INC.

7. '04-06 models: Remove the roof console (A).

   -1 Using the appropriate KTC trim tool, remove the moonroof switch (see **SWITCH TEST**).

   -2 Remove the front individual map lights (see **FRONT INDIVIDUAL MAP LIGHT TEST**).

   -3 Remove the bolts, then remove the roof console. If equipped with HFL, disconnect the HFL unit connector (B).

cardiagn.com

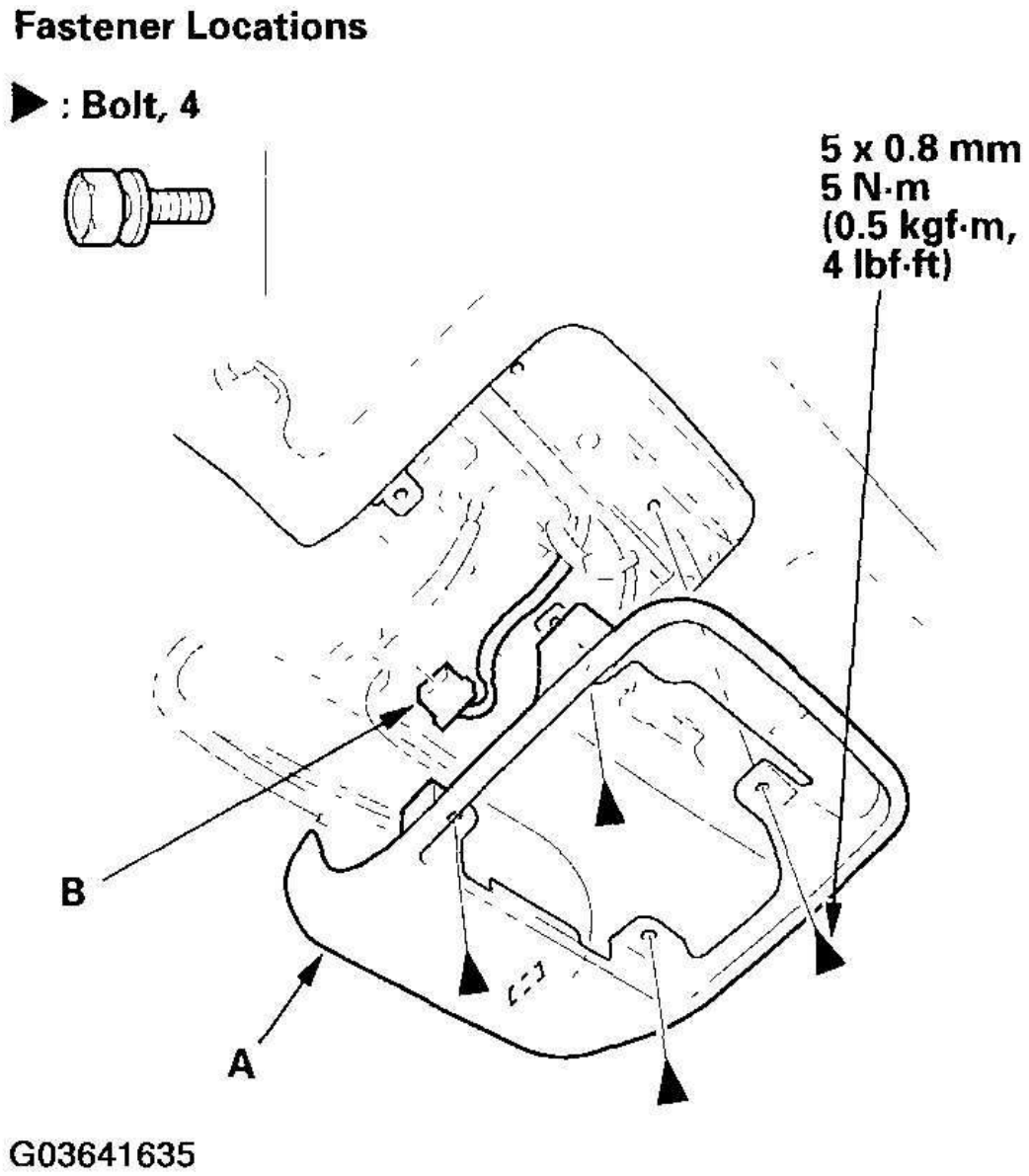

Fig. 39: Removing Roof Console (2004-'06 Model)
Courtesy of AMERICAN HONDA MOTOR CO., INC.

8. '03 model: Remove the caps (A), and remove the ET screws, then remove the grab handles (B) (driver's, passenger's, and second row passenger's).

cardiagn.com

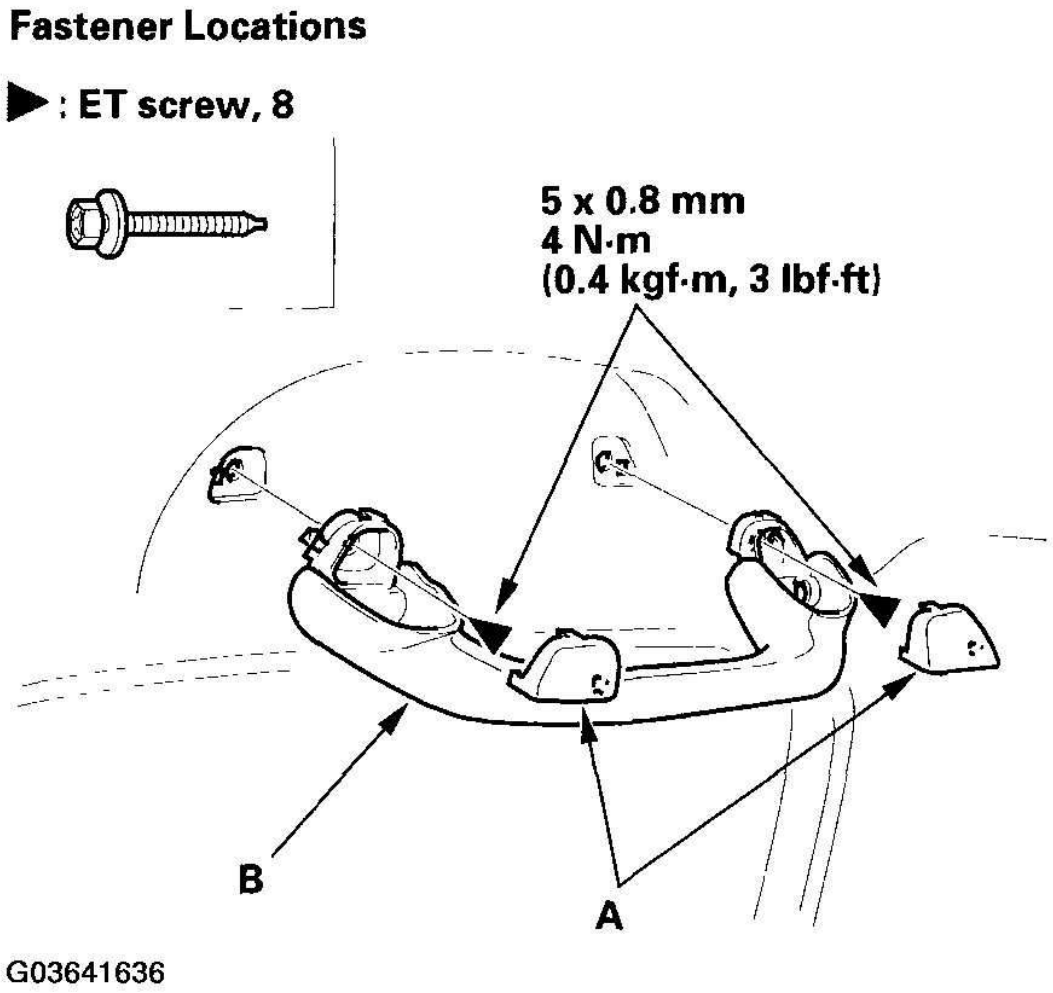

Fig. 40: Removing Grab Handles (2003 Model)
Courtesy of AMERICAN HONDA MOTOR CO., INC.

9. '04 model: Remove the caps (A), and remove the self-tapping ET screws, then remove the grab handle (B) (driver's, passenger's, and second row passenger's).

cardiagn.com

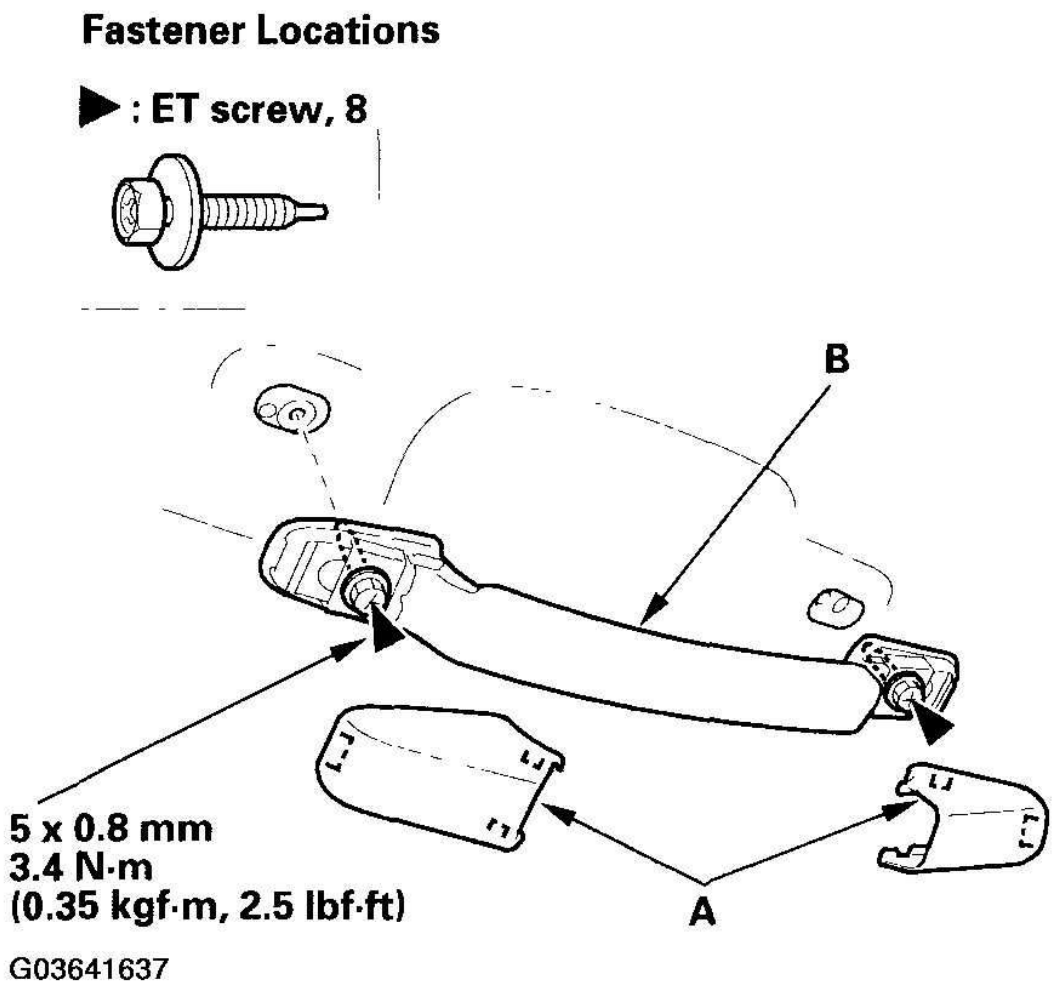

Fig. 41: Removing Grab Handles (2004 Model)
Courtesy of AMERICAN HONDA MOTOR CO., INC.

10. '05-06 models: Remove the caps (A), and remove the bolts, then remove the grab handle (B) (driver's, passenger's, and second row passenger's).

cardiagn.com

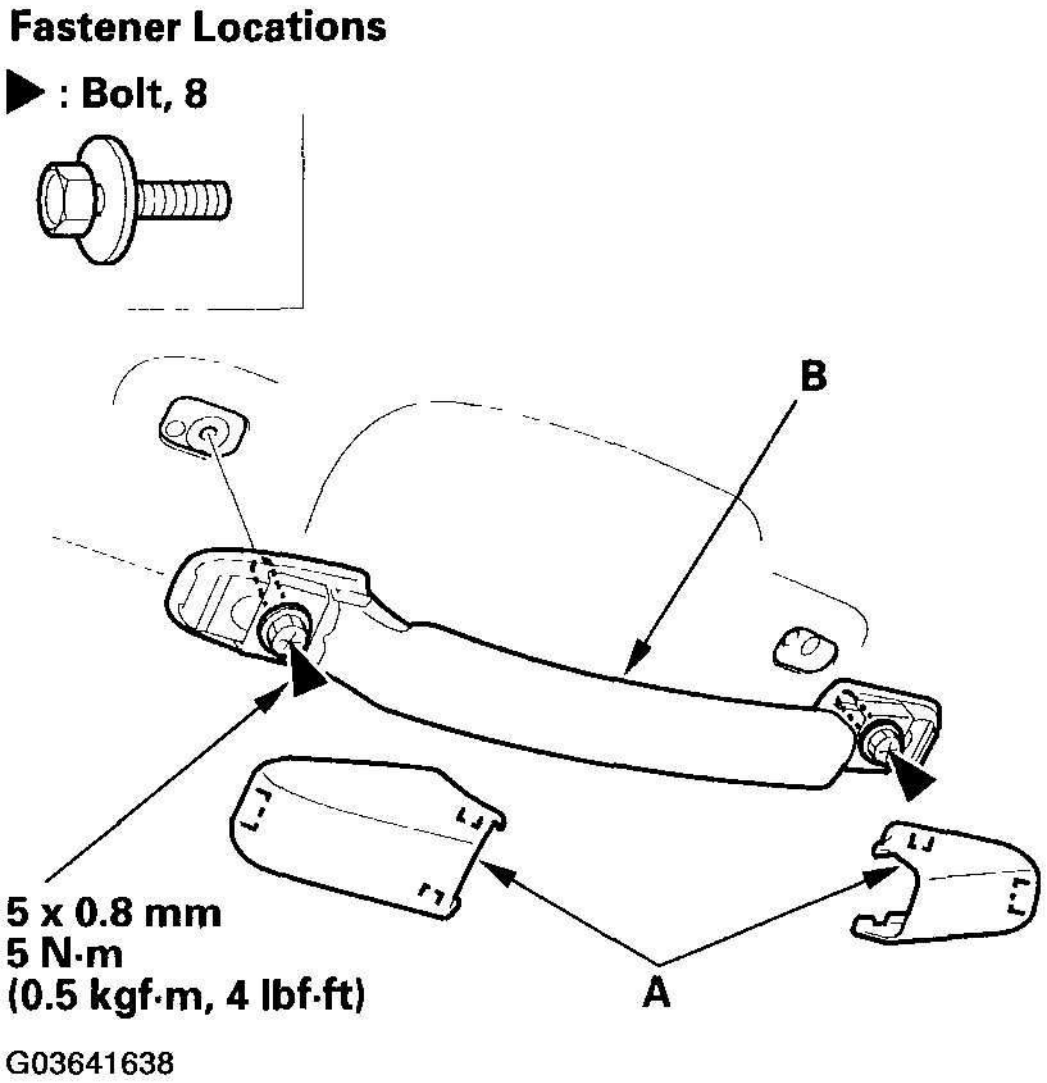

Fig. 42: Removing Grab Handles (2005-'06 Models)
Courtesy of AMERICAN HONDA MOTOR CO., INC.

11. Remove the center second row seat belt cover (see step 1 in **CENTER SECOND ROW SEAT BELT**).
12. Remove the rear individual map lights (see **REAR INDIVIDUAL MAP LIGHT TEST**).
13. If equipped with rear entertainment system, remove the rear controller and screen cover (see **REAR CONTROLLER AND SCREEN REMOVAL/INSTALLATION**).
14. '03 model: Remove the ET screws, then remove the separation net cap (A) from both sides.

cardiagn.com

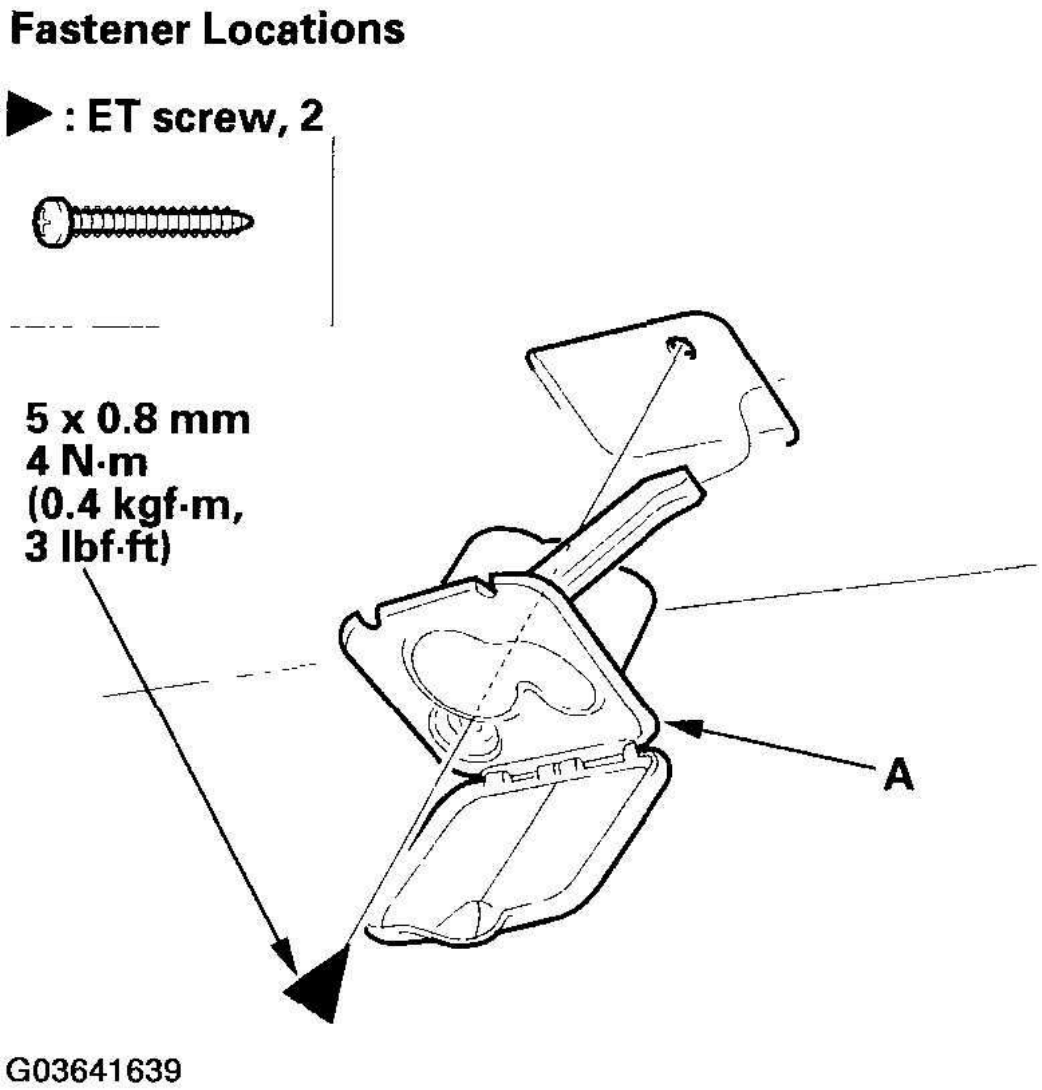

Fig. 43: Removing Separation Net Cap (2003 Model)
Courtesy of AMERICAN HONDA MOTOR CO., INC.

15. '04-06 models: Remove the ET screws, then remove the separation net lid (A) from both sides.

cardiagn.com

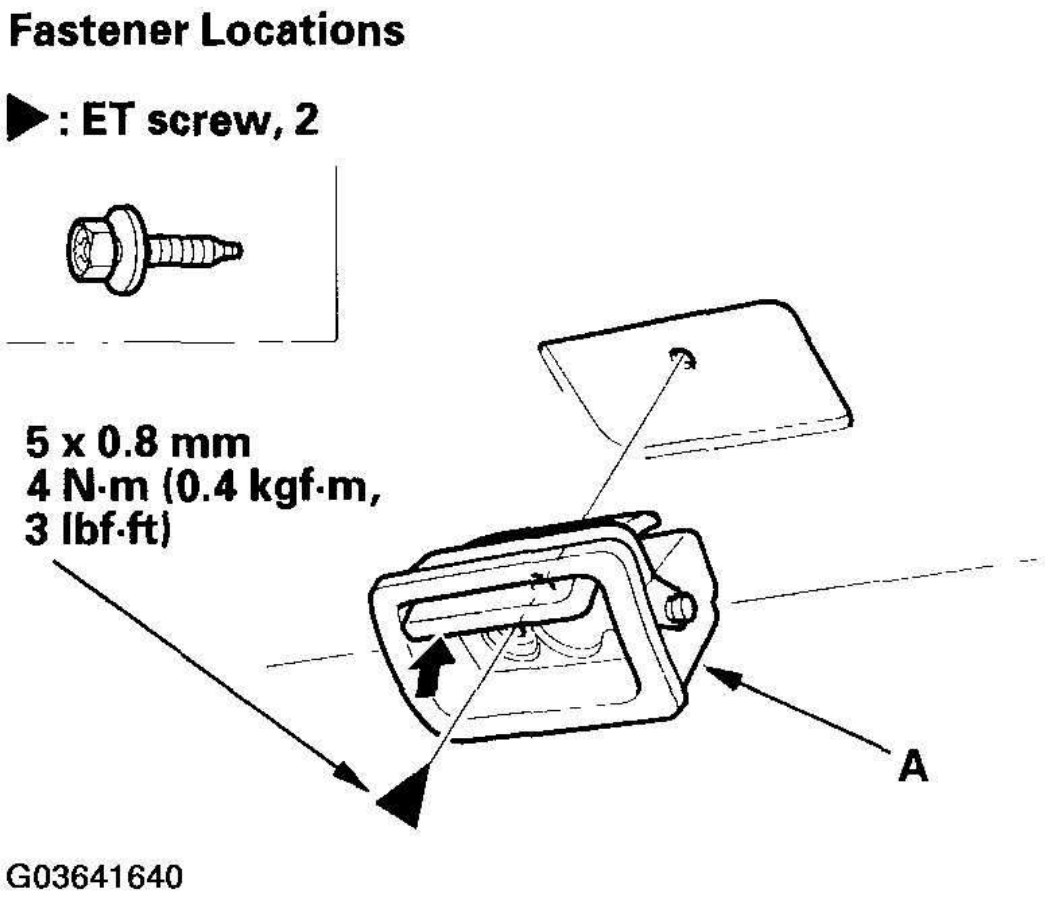

Fig. 44: Removing Separation Net Lid (2004-06 Models)
Courtesy of AMERICAN HONDA MOTOR CO., INC.

16. '03 model: Remove the screws, then remove the coat hangers (A) from both sides.

cardiagn.com

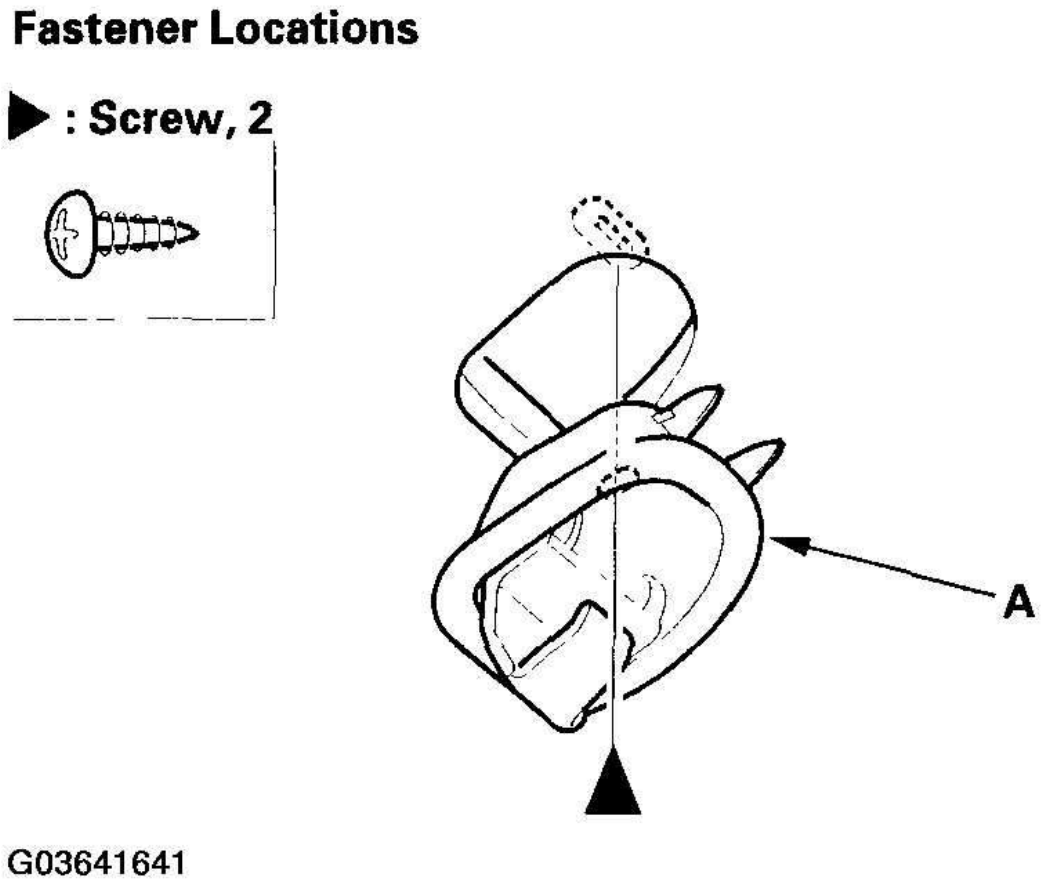

Fig. 45: Removing Coat Hangers (2003 Models)
Courtesy of AMERICAN HONDA MOTOR CO., INC.

17. Remove the rear ceiling light (for some models) (see **REAR CEILING LIGHT TEST/REPLACEMENT**).
18. If equipped, detach the clips and remove the rear roof speaker grille (A).

cardiagn.com

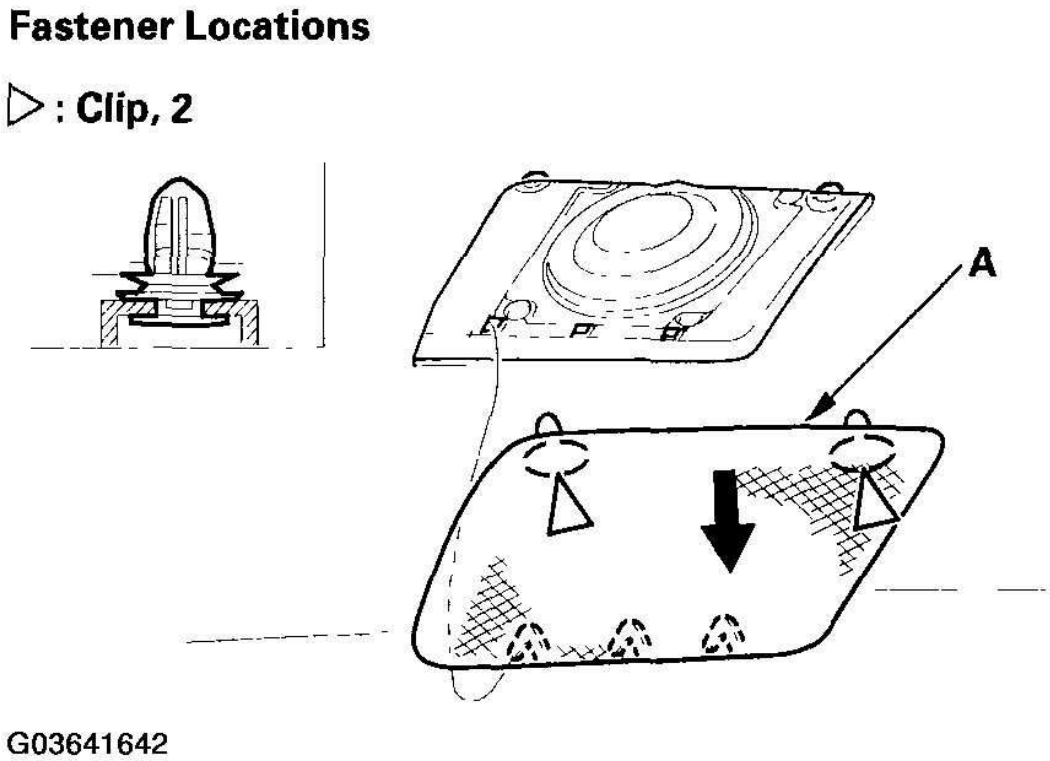

Fig. 46: Removing Rear Roof Speaker Grille
Courtesy of AMERICAN HONDA MOTOR CO., INC.

19. Remove the headliner.

    -1 '03 model: Remove the upper portion of the B-pillar trim (A) (see step 5 in **B-PILLAR - '03 MODEL**), and C-pillar trim (B) (see step 3 in **C-PILLAR - '03 MODEL**) from one side of the vehicle.

    -2 Moonroof model: Remove the socket plug (C) and roof trim (D).

    -3 With help of an assistant, detach the clips, and lower the headliner (E) on the side you removed the pillar trim.

    -4 Remove the headliner through the tailgate opening.

cardiagn.com

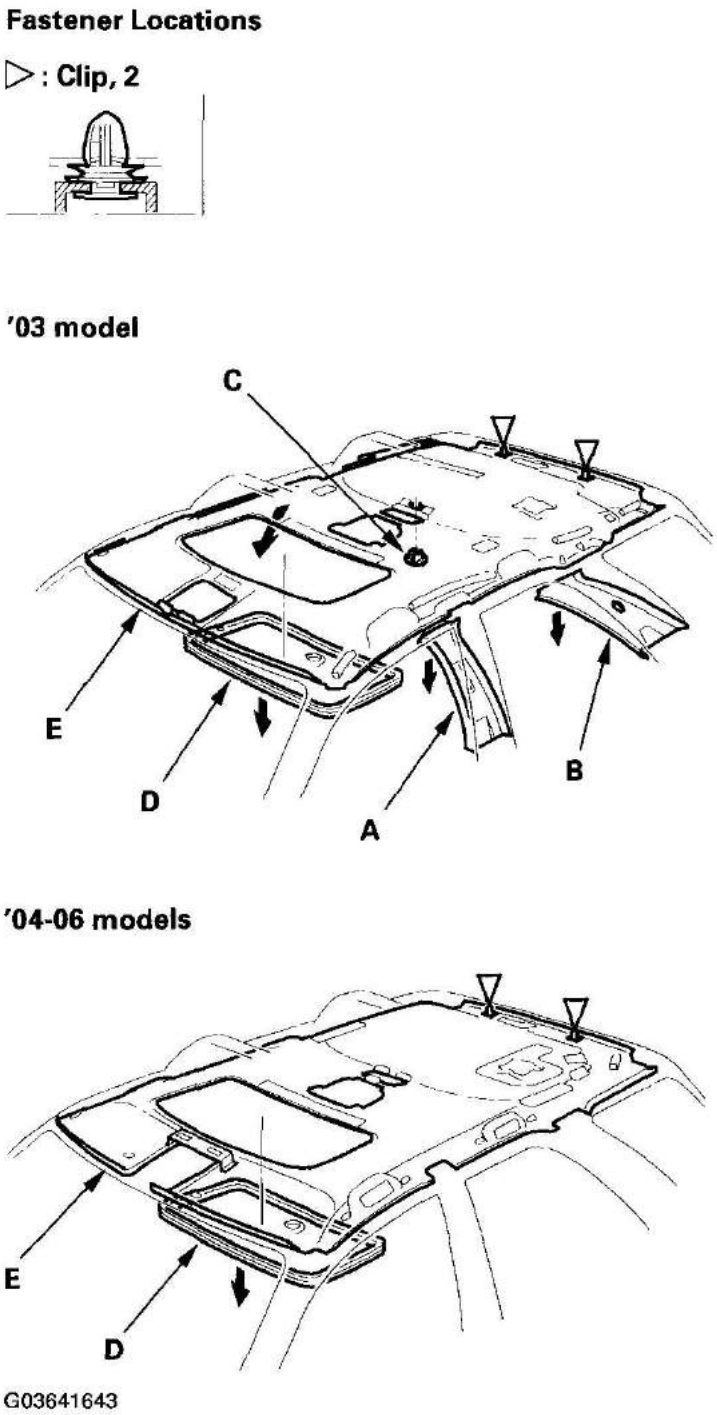

Fig. 47: Removing Headliner
Courtesy of AMERICAN HONDA MOTOR CO., INC.

20. Install the headliner in the reverse order of removal, and note these items:

cardiagn.com

- Check the clip(s) for damage or stress-whitened, and replace them with new one(s).
- When reinstalling the headliner through the tailgate opening, be careful not to fold or bend it. Also, be careful not to scratch the body.
- For moonroof model: When reinstalling the roof trim, center the joining ends at the rear of the moonroof frame.
- If the threads are worn out on a visor or grab handle, or separation net cap mounting ET screw, use an oversized screw made specifically for this application.

Visor mounting ET screws: P/N90137-S30-003

Grab handle mounting ET screws ('05-06 models): P/N 90136-S0A-003

Separation net cap mounting ET screws: P/N90137-S3V-A01

- Make sure the pillar trims overlap the headliner correctly (see **COMPONENT REPLACEMENT/INSPECTION AFTER DEPLOYMENT**).
- Check that both sides of the headliner are securely attached to the trim.
- Push the clips into place securely.

CARPET REPLACEMENT

SRS components are located in this area. Review the SRS component locations for the appropriate model:

- '03 model (see **COMPONENT LOCATION INDEX**)
- '04-06 models (see**2004-2006 MODELS**)

Also review the precautions and procedures (see **PRECAUTIONS AND PROCEDURES**) before performing repairs or service.

NOTE:

- **Put on gloves to protect your hands.**
- **Take care not to damage, wrinkle or twist the carpet.**
- **Be careful not to damage the dashboard or other interior trim pieces.**

1. Remove these items:
   - Front seats, both sides (see **FRONT SEAT REMOVAL/INSTALLATION**)
   - Second row seats, both sides (see **SECOND ROW SEAT REMOVAL/INSTALLATION**)
   - Front door sill trim, both sides (see step 1 in **TRIM REMOVAL/INSTALLATION - DOOR AREAS**)
   - Rear door sill trim, both sides (see step 4 in **TRIM REMOVAL/INSTALLATION - DOOR AREAS**)
   - B-pillar lower trim panel, both sides, '03 model (see **B-PILLAR - '03 MODEL**), '04-06 models (see **B-PILLAR - '04-'06 MODELS**)

cardiagn.com

- Kick panel, both sides (see step 2 in **TRIM REMOVAL/INSTALLATION - DOOR AREAS**)
- Console side trim, both sides (see step 4 in **CENTER CONSOLE REMOVAL/INSTALLATION**)
- Console rear trim (see step 5 in **CENTER CONSOLE REMOVAL/INSTALLATION**)
- Third row seat front mounting bolts, both sides (see step 1 on **THIRD ROW SEAT REMOVAL/INSTALLATION**)

2. Release the retainers (A) and fasteners (B), lift both third row seat cushions (C) up, then pull the carpet (D) from under the center console (E) and both rear side trim panels (F). Remove the carpet.

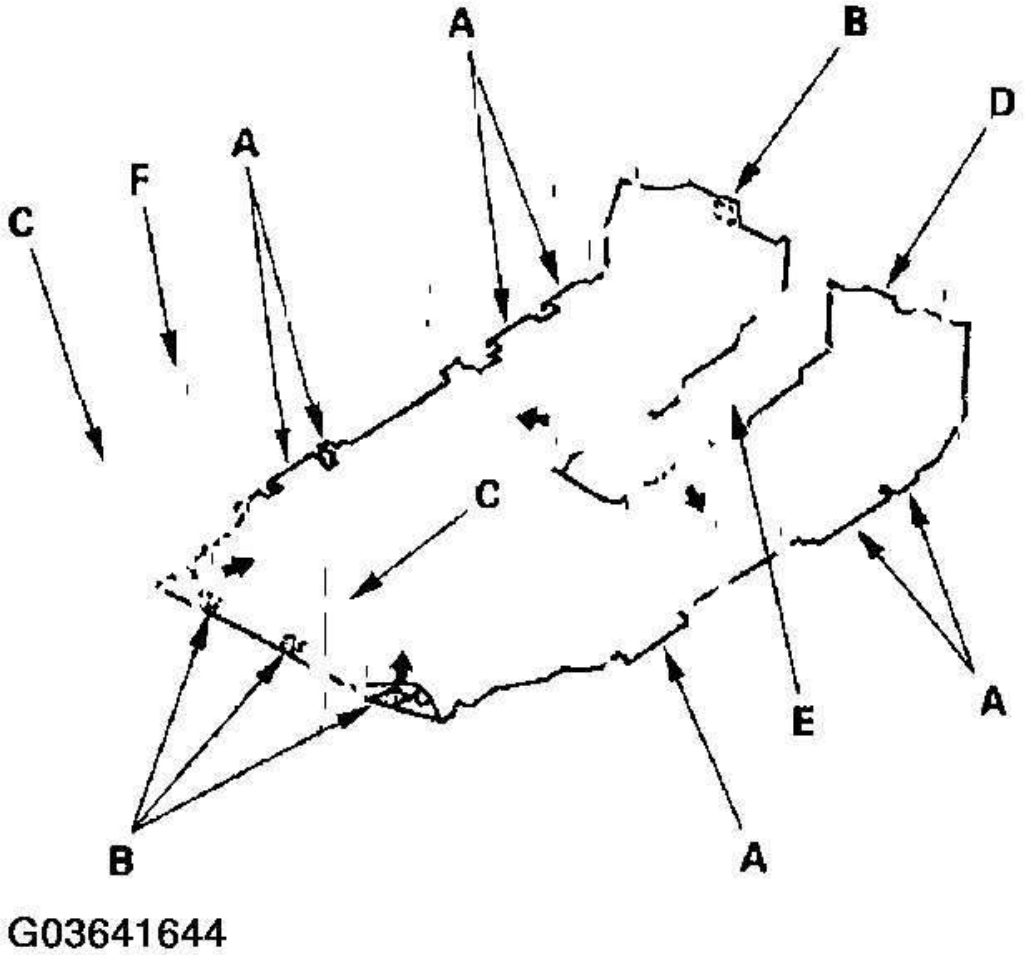

Fig. 48: Removing Carpet
Courtesy of AMERICAN HONDA MOTOR CO., INC.

cardiagn.com

3. Install the carpet in the reverse order of removal, and note these items:
   - Take care not to damage, wrinkle, or twist the carpet.
   - Make sure the seat harness is routed correctly.

CARGO AREA CARPET REPLACEMENT

NOTE:
- **Put on gloves to protect your hands.**
- **Be careful not to damage the interior trim parts.**

1. Remove these items:
   - Third row seat, both sides (see **THIRD ROW SEAT REMOVAL/INSTALLATION**)
   - Rear trim panel (see **TRIM REMOVAL/INSTALLATION - REAR SIDE LOWER AREA**)
   - Rear side trim panel, both sides (see **TRIM REMOVAL/INSTALLATION - REAR SIDE LOWER AREA**)
2. Remove the screws (A), then remove the hinges (B).

cardiagn.com

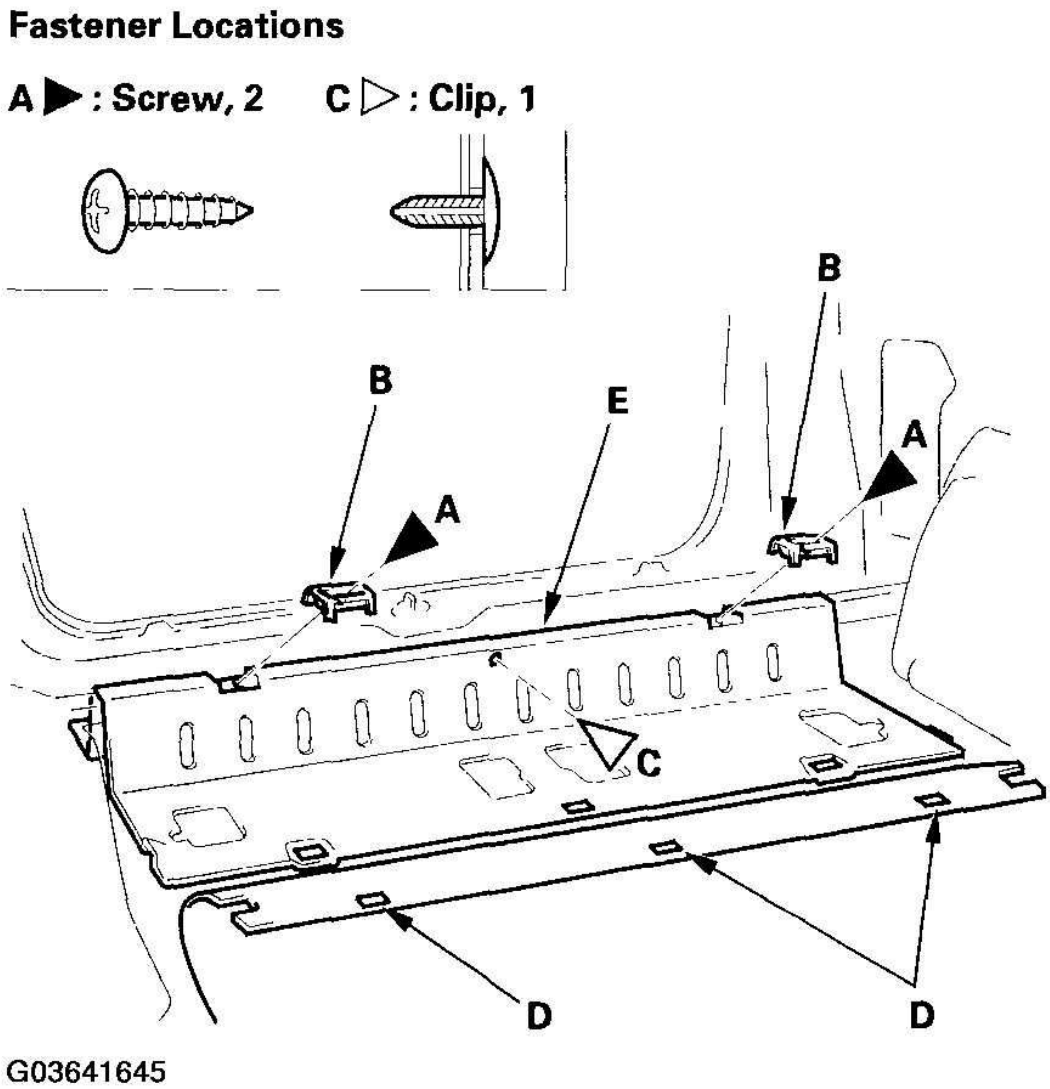

Fig. 49: Removing Hinges
Courtesy of AMERICAN HONDA MOTOR CO., INC.

3. Detach the clip (C) and release the fasteners (D), then remove the cargo area carpet (E).
4. Install the cargo area carpet in the reverse order of removal, and replace the clip if it's damaged.

cardiagn.com