2004 HUMMER H2 Owner Manual

Seats and Restraint Systems 1-1
Front Seats 1-2
Rear Seats 1-7
Safety Belts 1-16
Child Restraints 1-38
Air Bag System 1-61
Restraint System Check 1-73
Features and Controls 2-1
Keys 2-2
Doors and Locks 2-7
Windows 2-14
Theft-Deterrent Systems 2-16
Starting and Operating Your Vehicle 2-18
Mirrors 2-34
OnStar® System 2-40
HomeLink® Transmitter 2-42
Storage Areas 2-45
Sunroof 2-50
Vehicle Personalization 2-51
Instrument Panel 3-1
Instrument Panel Overview 3-2
Climate Controls 3-19
Warning Lights, Gages, and Indicators 3-26
Driver Information Center (DIC) 3-44
Audio System(s) 3-62
Driving Your Vehicle 4-1
Your Driving, the Road, and Your Vehicle 4-2
Towing 4-65
Service and Appearance Care 5-1
Service 5-3
Fuel 5-5
Checking Things Under the Hood 5-10
All-Wheel Drive 5-48
Rear Axle 5-50
Front Axle 5-51
Bulb Replacement 5-52
Windshield Wiper Blade Replacement 5-59
Tires 5-60
Appearance Care 5-92
Vehicle Identification 5-101
Electrical System 5-101
Capacities and Specifications 5-111
Maintenance Schedule 6-1
Maintenance Schedule 6-2
Customer Assistance and Information 7-1
Customer Assistance and Information 7-2
Reporting Safety Defects 7-10
Index 1

Downloaded from www.Manualslib.com manuals search engine

GENERAL MOTORS, GM, the GM Emblem, HUMMER and the name HUMMER is a registered trademark and H2 is a trademark of General Motors Corporation.

This manual includes the latest information at the time it was printed. We reserve the right to make changes after that time without further notice. For vehicles first sold in Canada, subsitute the name “General Motors of Canada Limited” for HUMMER whenever it appears in this manual.

Please keep this manual in your vehicle, so it will be there if you ever need it when you’re on the road. If you sell the vehicle, please leave this manual in it so the new owner can use it.

Canadian Owners

You can obtain a French language copy of this manual from your dealer or from:

Helm, Incorporated
P.O. Box 07130
Detroit, MI 48207

How to Use This Manual

Many people read their owner’s manual from beginning to end when they first receive their new vehicle. If you do this, it will help you learn about the features and controls for your vehicle. In this manual, you will find that pictures and words work together to explain things.

Index

A good place to look for what you need is the Index in back of the manual. It is an alphabetical list of what is in the manual, and the page number where you will find it.

Litho in U.S.A.
Part No. S2427 A First Edition

©Copyright General Motors Corporation 08/01/03
All Rights Reserved

Downloaded from www.Manualslib.com manuals search engine

Safety Warnings and Symbols

You will find a number of safety cautions in this book. We use a box and the word CAUTION to tell you about things that could hurt you if you were to ignore the warning.

⚠ CAUTION:

These mean there is something that could hurt you or other people.

In the caution area, we tell you what the hazard is. Then we tell you what to do to help avoid or reduce the hazard. Please read these cautions. If you don't, you or others could be hurt.

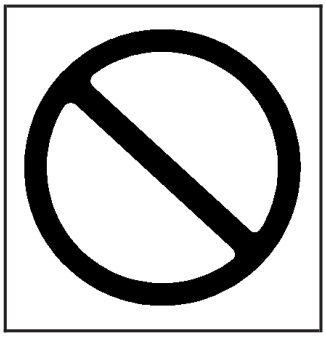

You will also find a circle with a slash through it in this book. This safety symbol means "Don't," "Don't do this" or "Don't let this happen."

Downloaded from www.Manualslib.com manuals search engine

Vehicle Damage Warnings

Also, in this book you will find these notices:

Notice: **These mean there is something that could damage your vehicle.**

A notice will tell you about something that can damage your vehicle. Many times, this damage would not be covered by your warranty, and it could be costly. But the notice will tell you what to do to help avoid the damage.

When you read other manuals, you might see CAUTION and NOTICE warnings in different colors or in different words.

You'll also see warning labels on your vehicle. They use the same words, CAUTION or NOTICE.

Vehicle Symbols

Your vehicle has components and labels that use symbols instead of text. Symbols, used on your vehicle, are shown along with the text describing the operation or information relating to a specific component, control, message, gage or indicator.

If you need help figuring out a specific name of a component, gage or indicator, reference the following topics:

- Seats and Restraint Systems in Section 1
- Features and Controls in Section 2
- Instrument Panel Overview in Section 3
- Climate Controls in Section 3
- Warning Lights, Gages and Indicators in Section 3
- Audio System(s) in Section 3
- Engine Compartment Overview in Section 5

Downloaded from www.Manualslib.com manuals search engine

These are some examples of symbols you may find on your vehicle:

CAUTION POSSIBLE INJURY	LATCH BOTH LAP AND SHOULDER BELTS TO PROTECT OCCUPANT DO NOT TWIST SAFETY BELT WHEN ATTACHING		MASTER LIGHTING SWITCH	ENGINE COOLANT TEMP	FUSE BOX ACCESS
PROTECT EYES BY SHIELDING	FASTEN SEAT BELTS	AIR BAG	TURN SIGNALS	BATTERY CHARGING SYSTEM	ENGINE COOLANT FAN
CAUSTIC BATTERY ACID COULD CAUSE BURNS	MOVE SEAT FULLY REARWARD SECURE CHILD SEAT	DO NOT INSTALL A REAR-FACING CHILD RESTRAINT IN THIS SEATING POSITION	PARKING LAMPS	BRAKE	FUEL
AVOID SPARKS OR FLAMES	PULL BELT OUT COMPLETELY THEN SECURE CHILD SEAT	DO NOT INSTALL A FORWARD-FACING CHILD RESTRAINT IN THIS SEATING POSITION	HAZARD WARNING FLASHER	COOLANT	OWNER'S MANUAL
SPARK OR FLAME COULD EXPLODE BATTERY	POWER WINDOW	DOOR LOCK UNLOCK	DAYTIME RUNNING LAMPS	ENGINE OIL PRESSURE	SERVICE
			FOG LAMPS	ANTI-LOCK BRAKES	SERVICE MANUAL

Downloaded from www.Manualslib.com manuals search engine

✍ NOTES

Downloaded from www.Manualslib.com manuals search engine

Section 1 Seats and Restraint Systems

Front Seats 1-2
Power Seats 1-2
Power Lumbar 1-3
Heated Seats 1-4
Reclining Seatbacks 1-5
Head Restraints 1-6
Rear Seats 1-7
Rear Seat Operation 1-7
Heated Seats 1-8
60/40 Split Bench Seat 1-8
Third Row Seats 1-10
Safety Belts 1-16
Safety Belts: They Are for Everyone 1-16
Questions and Answers About Safety Belts 1-21
How to Wear Safety Belts Properly 1-21
Driver Position 1-22
Safety Belt Use During Pregnancy 1-29
Right Front Passenger Position 1-30
Rear Seat Passengers 1-30
Rear Safety Belt Comfort Guides for Children and Small Adults 1-34
Safety Belt Extender 1-37
Child Restraints 1-38
Older Children 1-38
Infants and Young Children 1-40
Child Restraint Systems 1-44
Where to Put the Restraint 1-47
Top Strap 1-48
Top Strap Anchor Location 1-49
Lower Anchorages and Top Tethers for Children (LATCH System) 1-50
Securing a Child Restraint Designed for the LATCH System 1-52
Securing a Child Restraint in a Rear Seat Position 1-53
Securing a Child Restraint in the Right Front Seat Position 1-55
Air Bag System 1-61
Where Are the Air Bags? 1-63
When Should an Air Bag Inflate? 1-65
What Makes an Air Bag Inflate? 1-65
How Does an Air Bag Restrain? 1-65
What Will You See After an Air Bag Inflates? ...1-66
Air Bag Off Switch 1-68
Servicing Your Air Bag-Equipped Vehicle 1-72
Adding Equipment to Your Air Bag-Equipped Vehicle 1-73
Restraint System Check 1-73
Checking Your Restraint Systems 1-73
Replacing Restraint System Parts After a Crash 1-74

Downloaded from www.Manualslib.com manuals search engine

Front Seats

Power Seats

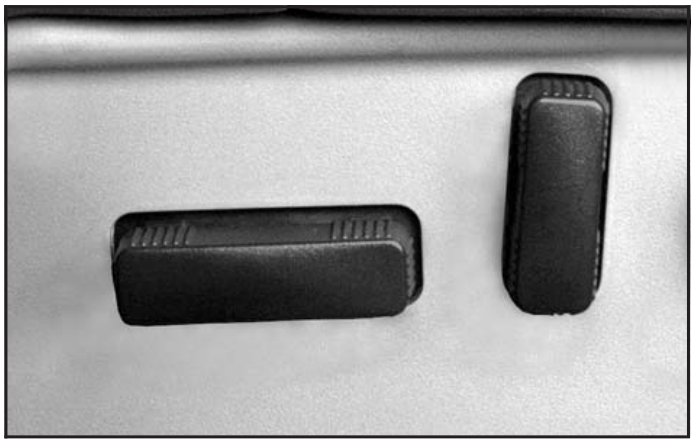

The power seat controls are located on the outboard edge of the front seats.

Horizontal Control: This control adjusts the seat cushion.

- Raise or lower the front of the seat by raising or lowering the forward edge of the control. Raise or lower the rear of the seat by raising or lowering the rear edge of the control.
- Move the seat forward or rearward by moving the whole control toward the front or toward the rear of the vehicle.
- Lower or raise the entire seat cushion by moving the whole control up or down.

Vertical Control: This control adjusts the seatback.

Move the reclining front seatback rearward or forward by moving the control toward the rear or toward the front of the vehicle. This adjusts the angle of the seatback.

For more information on the reclining seatbacks, see *Reclining Seatbacks on page 1-5*.

Your vehicle may have a memory function which allows seat settings to be saved and recalled. See *Memory Seat on page 2-51* for more information.

Downloaded from www.Manualslib.com manuals search engine

Power Lumbar

Your vehicle's seats may be equipped with power lumbar.

You can increase or decrease lumbar support in an area of the lower seatback with this control, located on the outboard sides of the front seat(s).

To increase support, press and hold the front of the control. To decrease support, press and hold the rear of the control. Let go of the control when the lower seatback reaches the desired level of support.

You can also reshape the side wing area of the lower seatback for more lateral support.

To increase support, press and hold the top of the control. To decrease support, press and hold the bottom of the control. Let go of the control when the lower seatback reaches the desired level of support.

Your vehicle may have a memory function which allows seat settings to be saved and recalled. See *Memory Seat on page 2-51* for more information.

Downloaded from www.Manualslib.com manuals search engine

Heated Seats

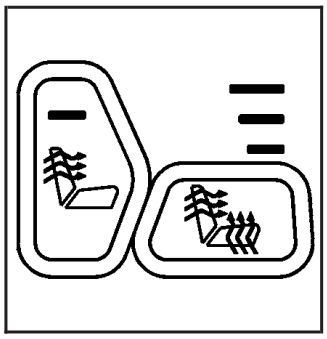

Your vehicle may have heated front seats. The buttons used to control this feature are located on the front doors. The engine must be running for the heated seat feature to work.

To heat the entire seat, press the horizontal button with the heated seat symbol. Press the button to cycle through the temperature settings of high, medium and low and to turn the heated seat off. Indicator lights will glow to designate the level of heat selected, three for high, two for medium, and one for low.

The low setting warms the seatback and cushion until the seat temperature is near body temperature. The medium and high settings heat the seatback and seat cushion to a slightly higher temperature. You will be able to feel heat in about two minutes.

To heat only the seatback, press the vertical button with the heated seatback symbol. An indicator light on the seatback button will glow to designate that only the seatback is being heated. Additional presses of the seatback button will cycle through the heat levels for the seatback only. Press the horizontal button again to heat the whole seat.

The heated front seats will shut off automatically when the ignition is turned off.

Downloaded from www.Manualslib.com manuals search engine

Reclining Seatbacks

Your vehicle's front seatbacks have a recline feature which is described earlier. See *Power Seats on page 1-2*.

But don't have a seatback reclined if your vehicle is moving.

⚠ CAUTION:

Sitting in a reclined position when your vehicle is in motion can be dangerous. Even if you buckle up, your safety belts can't do their job when you're reclined like this.

The shoulder belt can't do its job. In a crash, you could go into it, receiving neck or other injuries.

The lap belt can't do its job either. In a crash the belt could go up over your abdomen. The belt forces would be there, not at your pelvic bones. This could cause serious internal injuries.

For proper protection when the vehicle is in motion, have the seatback upright. Then sit well back in the seat and wear your safety belt properly.

Downloaded from www.Manualslib.com manuals search engine

Head Restraints

Adjust your head restraint so that the top of the restraint is closest to the top of your head. This position reduces the chance of a neck injury in a crash.

Pull straight up on the head restraint to raise it and push it down to lower it.

The front head restraints can also be tilted forward in addition to being slid up or down. To tilt either of the front head restraints do the following:

Pull the head restraint toward you until you hear a click. Then let go. The head restraint will stay in this position unless you pull it forward more until another click is heard. There are four positions available: initial position, first click, second click, and third click. After the third position (three clicks) is reached, pulling the head restraint farther will release it back to the normal upright position.

The rear head restraints can be slid up or down just as the front head restraints, but they do not tilt.

Downloaded from www.Manualslib.com manuals search engine

Rear Seats

Rear Seat Operation

Entering or Exiting the Third Row Seats

To enter or exit the third row seat (if equipped) you must fold the second row seat down following the instructions later in this section. See “Folding the Seatbacks” under *60/40 Split Bench Seat on page 1-8*. If you are exiting the third row seat with no assistance, do the following:

1. Reach over the second row seat and pull up on the strap loop. Then pull the seat cushion up and push it forward.

2. Next, push the seatback forward until it is flat with the floor.

Be sure to return the seat to the upright position when finished. Pull forward and push rearward on the seat to make sure it is locked in place.

⚠ CAUTION:

If the seatback isn’t locked, it could move forward in a sudden stop or crash. That could cause injury to the person sitting there. Always press rearward on the seatback to be sure it is locked.

Downloaded from www.Manualslib.com manuals search engine

Heated Seats

If your vehicle has this feature, the buttons used to control this feature are located on the back of the center console. The engine must be running for the heated seat feature to work.

To heat the seat, press the button to cycle through the temperature settings of high and low. Press the button a third time to turn the feature off. An indicator light will glow for each heat setting when the feature is operating.

The heated rear seats will shut off automatically when the ignition is turned off.

60/40 Split Bench Seat

The 60/40 split bench seats can be folded to give you more cargo space.

Folding the Seatbacks

The seatbacks are equipped with rearward folding head restraints. When the seatback is being folded down, the head restraint will automatically fold rearward.

To fold the rear seat, do the following:

1. Make sure that nothing is under or in front of the seat.

2. Pull up on the strap loop located at the rear of the seat cushion and pull the seat cushion up and fold it forward.

3. Pull the seatback forward and fold it down until it is flat.

If the seatback cannot fold flat because it interferes with the cushion, try moving the front seat forward and/or bringing the front seatback more upright.

Downloaded from www.Manualslib.com manuals search engine

Returning the Seats to an Upright Position

⚠ CAUTION:

If the seatback isn't locked, it could move forward in a sudden stop or crash. That could cause injury to the person sitting there. Always press rearward on the seatback to be sure it is locked.

⚠ CAUTION:

A safety belt that is improperly routed, not properly attached, or twisted won't provide the protection needed in a crash. The person wearing the belt could be seriously injured. After raising the rear seatback, always check to be sure that the safety belts are properly routed and attached, and are not twisted.

To return the seat(s) to the upright position, do the following:

1. Lift the seatback up and push it rearward all the way.
2. Lower the seat cushion until it latches into position.
3. Pull forward on the seatback and up on the seat cushion to make sure the seat is securely in place.
4. Return the head restraints to the upright position.
5. Check to see that the safety belt buckles on the driver's side seat are accessible to the outboard and center occupants and are not under the seat cushions.

Downloaded from www.Manualslib.com manuals search engine

Third Row Seats

If your vehicle has a third row seat, the seatback can be folded and the entire seat tilted or removed from the vehicle.

Folding the Seatback

To fold the seatback, do the following:

1. Pull up on the release lever, labeled 1, located on the rear of the seatback, and push the seatback forward.

Unfolding the Seatback

⚠ CAUTION:

If the seatback isn't locked, it could move forward in a sudden stop or crash. That could cause injury to the person sitting there. Always press rearward on the seatback to be sure it is locked.

Downloaded from www.Manualslib.com manuals search engine

To return the seatback to the passenger position, do the following:

1. Pull up on the release lever labeled 1 and then pull up on the seatback until the seatback locks into the upright position.

2. Push forward on the seatback to make sure it is locked into position.

Tilting the Seat

1. Fold the seatback forward using the instructions listed previously.

2. Unlatch the seat from the floor by pulling up on the lever labeled 2, located on the rear of the seat.

3. Lift the rear of the seat up from the floor and push it forward until it locks into place. You will not be able to unlatch the seat from the floor unless the seatback is folded down.

The seat will now remain locked in the upright position.

Downloaded from www.Manualslib.com manuals search engine

Returning the Seat to an Upright Position

⚠ CAUTION:

If the seatback isn't locked, it could move forward in a sudden stop or crash. That could cause injury to the person sitting there. Always press rearward on the seatback to be sure it is locked.

To return the seatback to an upright position, do the following:

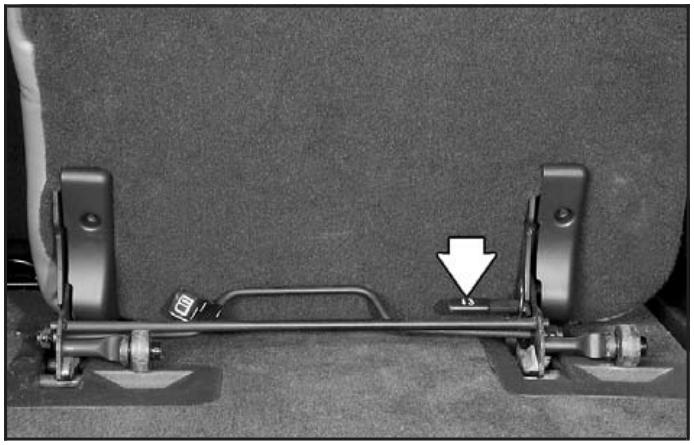

1. Pull the lever labeled 3 toward you.
2. While still holding lever 3 toward you, grasp the top of the seat and pull it toward you slightly.
3. Let go of lever 3 and pull the seat completely down.
4. Push down on the seat firmly. Try pulling it up to be sure it is locked into place.

Downloaded from www.Manualslib.com manuals search engine

5. Pull up on the release lever labeled 1 and then pull up on the seatback until the seatback locks into the upright position.

Removing the Seat

To remove the seat, do the following:

1. Open the liftgate.

2. Fold the seatback forward onto the seat cushion by using the lever labeled 1. The seat cannot be removed unless the seatback is folded.

Downloaded from www.Manualslib.com manuals search engine

3. To unlatch the rear of the seat from the floor, pull up on the release lever labeled 2, at the rear of the seat, and lift the rear of the seat up from the floor.

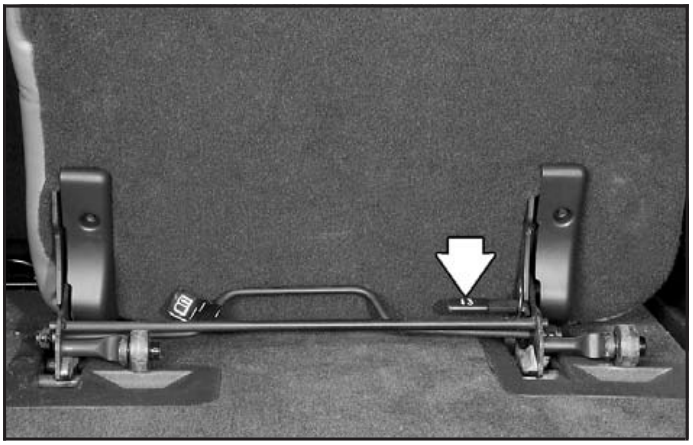

4. Squeeze the release handle while pulling the seat out.
5. While holding the rear of the seat up, roll the seat out of the vehicle.

Downloaded from www.Manualslib.com manuals search engine

Replacing the Seat

⚠ CAUTION:

If the seatback isn't locked, it could move forward in a sudden stop or crash. That could cause injury to the person sitting there. Always press rearward on the seatback to be sure it is locked.

⚠ CAUTION:

A seat that isn't locked into place properly can move around in a collision or sudden stop. People in the vehicle could be injured. Be sure to lock the seat into place properly when installing it.

⚠ CAUTION:

A safety belt that is improperly routed, not properly attached, or twisted won't provide the protection needed in a crash. The person wearing the belt could be seriously injured. After raising the rear seatback, always check to be sure that the safety belts are properly routed and attached, and are not twisted.

To replace the seat, do the following:

1. While holding the rear of the seat up, slide the front wheels into the slots on the floor. The front latches should lock into place. If the latches do not lock, try tilting the rear of the seat upwards.

Downloaded from www.Manualslib.com manuals search engine

2. Once the latches are engaged, let the seat drop into place. Release the lever labeled 1 and pull the seatback up to return it to its upright position.

3. Push and pull on the seat to make sure it is locked into place. The seatback cannot be raised to the upright position unless the seat is secured to the floor.

Safety Belts

Safety Belts: They Are for Everyone

This part of the manual tells you how to use safety belts properly. It also tells you some things you should not do with safety belts.

⚠ CAUTION:

Don't let anyone ride where he or she can't wear a safety belt properly. If you are in a crash and you're not wearing a safety belt, your injuries can be much worse. You can hit things inside the vehicle or be ejected from it. You can be seriously injured or killed. In the same crash, you might not be, if you are buckled up. Always fasten your safety belt, and check that your passengers' belts are fastened properly too.

Downloaded from www.Manualslib.com manuals search engine

⚠ CAUTION:

It is extremely dangerous to ride in a cargo area, inside or outside of a vehicle. In a collision, people riding in these areas are more likely to be seriously injured or killed. Do not allow people to ride in any area of your vehicle that is not equipped with seats and safety belts. Be sure everyone in your vehicle is in a seat and using a safety belt properly.

Your vehicle has a light that comes on as a reminder to buckle up. See *Safety Belt Reminder Light on page 3-28*.

In most states and in all Canadian provinces, the law says to wear safety belts. Here's why: *They work*.

You never know if you'll be in a crash. If you do have a crash, you don't know if it will be a bad one.

A few crashes are mild, and some crashes can be so serious that even buckled up, a person wouldn't survive. But most crashes are in between. In many of them, people who buckle up can survive and sometimes walk away. Without belts they could have been badly hurt or killed.

After more than 30 years of safety belts in vehicles, the facts are clear. In most crashes buckling up does matter... a lot!

Downloaded from www.Manualslib.com manuals search engine

Why Safety Belts Work

When you ride in or on anything, you go as fast as it goes.

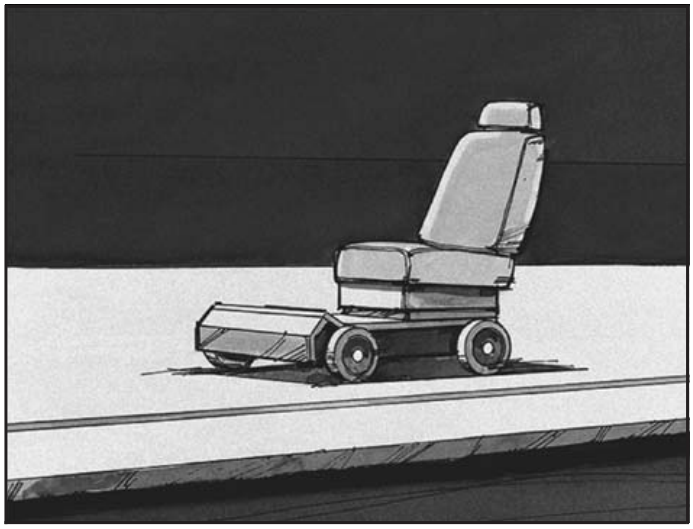

Take the simplest vehicle. Suppose it's just a seat on wheels.

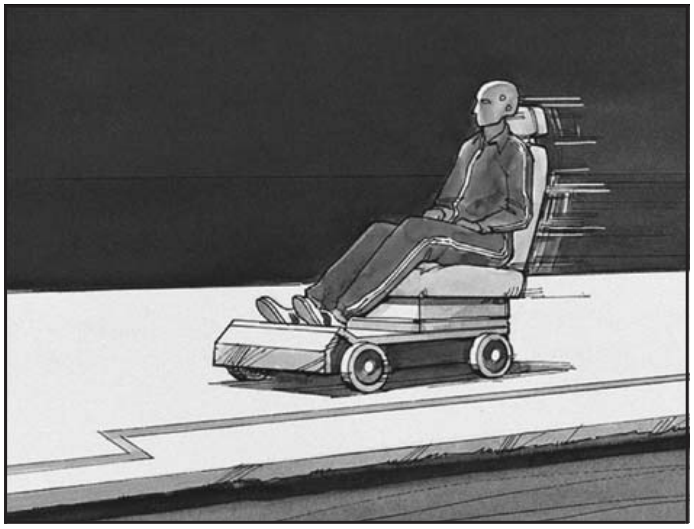

Put someone on it.

Downloaded from www.Manualslib.com manuals search engine

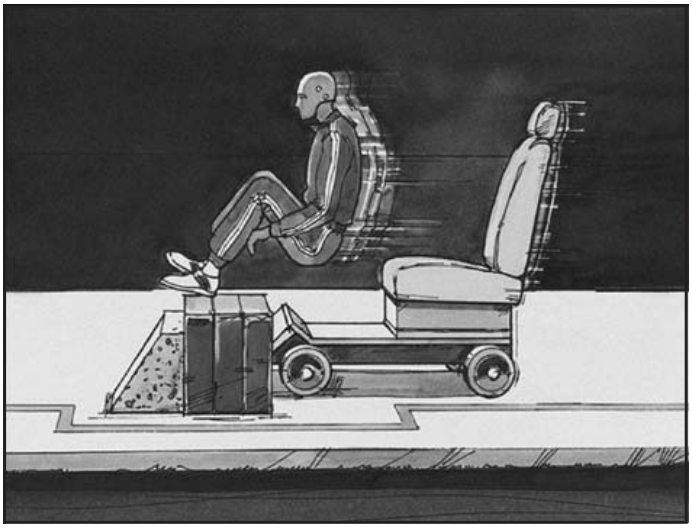

Get it up to speed. Then stop the vehicle. The rider doesn't stop.

The person keeps going until stopped by something. In a real vehicle, it could be the windshield...

Downloaded from www.Manualslib.com manuals search engine

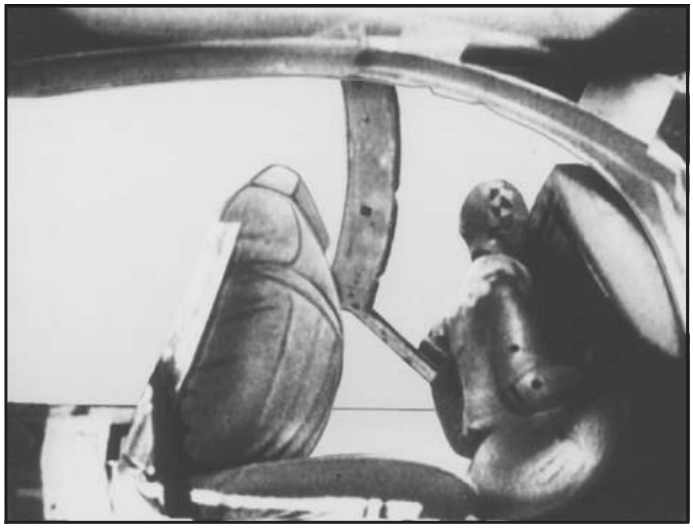

or the instrument panel...

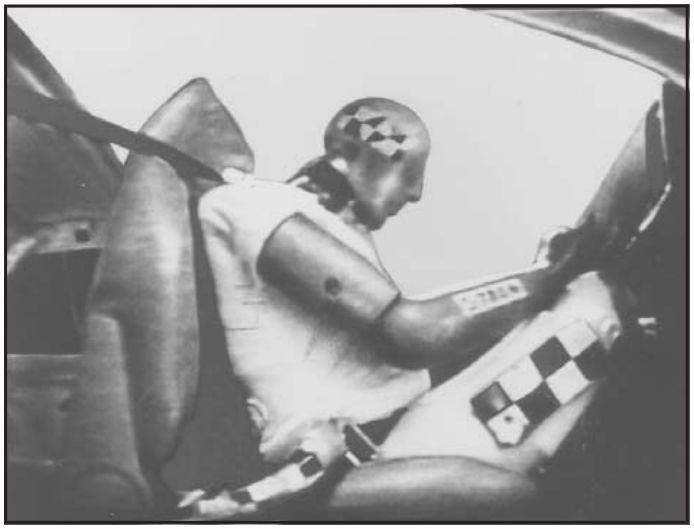

or the safety belts!

With safety belts, you slow down as the vehicle does. You get more time to stop. You stop over more distance, and your strongest bones take the forces. That's why safety belts make such good sense.

Downloaded from www.Manualslib.com manuals search engine

Questions and Answers About Safety Belts

Q: Won't I be trapped in the vehicle after an accident if I'm wearing a safety belt?

A: You *could* be – whether you're wearing a safety belt or not. But you can unbuckle a safety belt, even if you're upside down. And your chance of being conscious during and after an accident, so you *can* unbuckle and get out, is *much* greater if you are belted.

Q: If my vehicle has air bags, why should I have to wear safety belts?

A: Air bags are in many vehicles today and will be in most of them in the future. But they are supplemental systems only; so they work *with* safety belts – not instead of them. Every air bag system ever offered for sale has required the use of safety belts. Even if you're in a vehicle that has air bags, you still have to buckle up to get the most protection. That's true not only in frontal collisions, but especially in side and other collisions.

Q: If I'm a good driver, and I never drive far from home, why should I wear safety belts?

A: You may be an excellent driver, but if you're in an accident – even one that isn't your fault – you and your passengers can be hurt. Being a good driver doesn't protect you from things beyond your control, such as bad drivers.

Most accidents occur within 25 miles (40 km) of home. And the greatest number of serious injuries and deaths occur at speeds of less than 40 mph (65 km/h).

Safety belts are for everyone.

How to Wear Safety Belts Properly

This part is only for people of adult size.

Be aware that there are special things to know about safety belts and children. And there are different rules for smaller children and babies. If a child will be riding in your vehicle, see *Older Children on page 1-38* or *Infants and Young Children on page 1-40*. Follow those rules for everyone's protection.

First, you'll want to know which restraint systems your vehicle has.

We'll start with the driver position.

Downloaded from www.Manualslib.com manuals search engine

Driver Position

This part describes the driver's restraint system.

Lap-Shoulder Belt

The driver has a lap-shoulder belt. Here is how to wear it properly.

1. Close and lock the door.
2. Adjust the seat so you can sit up straight. To see how, see "Seats" in the Index

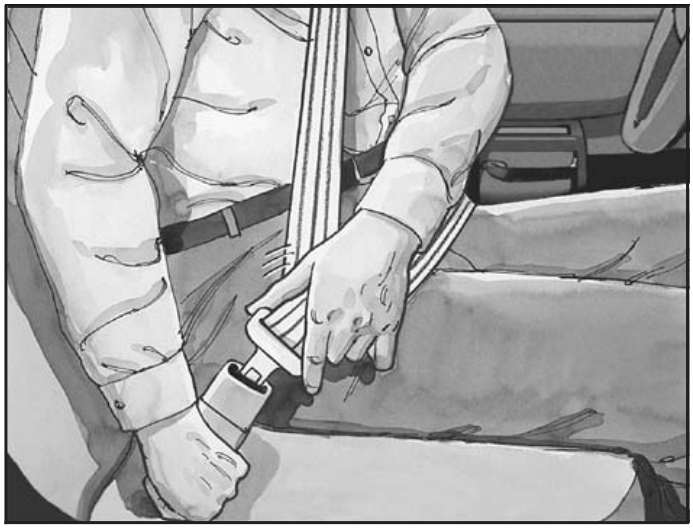

3. Pick up the latch plate and pull the belt across you. Do not let it get twisted.

   The shoulder belt may lock if you pull the belt across you very quickly. If this happens, let the belt go back slightly to unlock it. Then pull the belt across you more slowly.

4. Push the latch plate into the buckle until it clicks.

   Pull up on the latch plate to make sure it is secure. If the belt is not long enough, see *Safety Belt Extender on page 1-37*.

   Make sure the release button on the buckle is positioned so you would be able to unbuckle the safety belt quickly if you ever had to.

Downloaded from www.Manualslib.com manuals search engine

5. To make the lap part tight, pull down on the buckle end of the belt as you pull up on the shoulder belt.

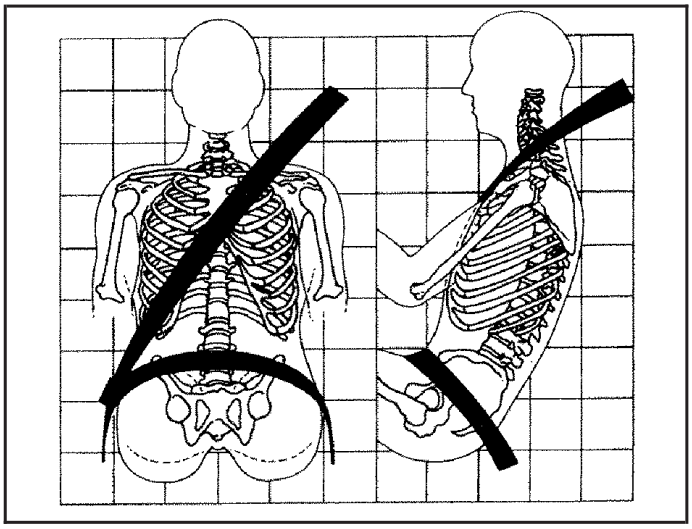

The lap part of the belt should be worn low and snug on the hips, just touching the thighs. In a crash, this applies force to the strong pelvic bones. And you would be less likely to slide under the lap belt. If you slid under it, the belt would apply force at your abdomen. This could cause serious or even fatal injuries. The shoulder belt should go over the shoulder and across the chest. These parts of the body are best able to take belt restraining forces.

The safety belt locks if there is a sudden stop or a crash, or if you pull the belt very quickly out of the retractor.

Downloaded from www.Manualslib.com manuals search engine

Q: **What's wrong with this?**

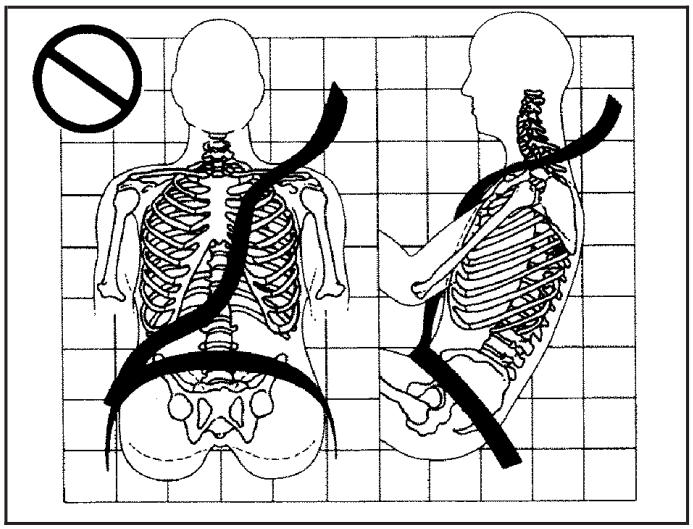

A: The shoulder belt is too loose. It will not give nearly as much protection this way.

⚠ CAUTION:

You can be seriously hurt if your shoulder belt is too loose. In a crash, you would move forward too much, which could increase injury. The shoulder belt should fit against your body.

Downloaded from www.Manualslib.com manuals search engine

Q: **What's wrong with this?**

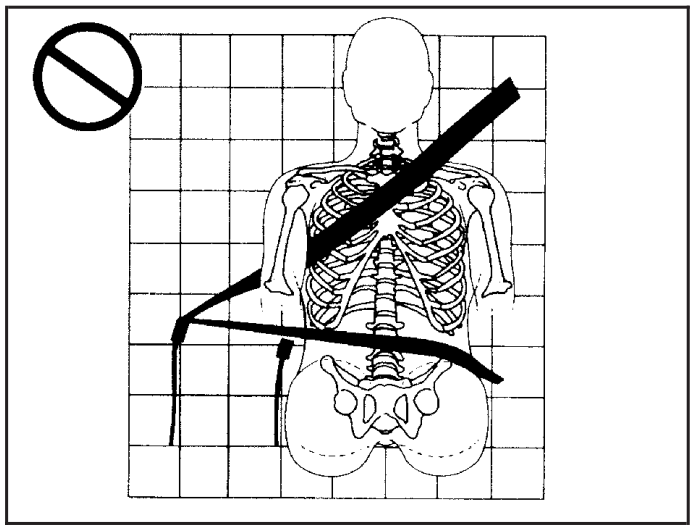

A: The belt is buckled in the wrong place.

⚠ CAUTION:

You can be seriously injured if your belt is buckled in the wrong place like this. In a crash, the belt would go up over your abdomen. The belt forces would be there, not at the pelvic bones. This could cause serious internal injuries. Always buckle your belt into the buckle nearest you.

Downloaded from www.Manualslib.com manuals search engine

Q: What's wrong with this?

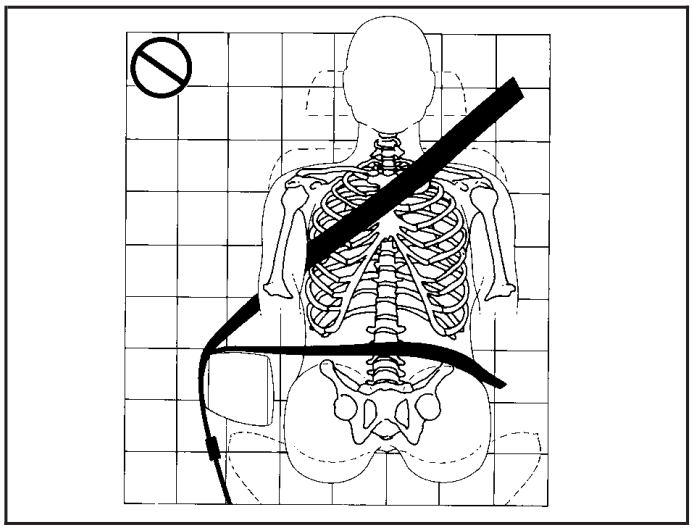

A: The belt is over an armrest.

⚠ CAUTION:

You can be seriously injured if your belt goes over an armrest like this. The belt would be much too high. In a crash, you can slide under the belt. The belt force would then be applied at the abdomen, not at the pelvic bones, and that could cause serious or fatal injuries. Be sure the belt goes under the armrests.

Downloaded from www.Manualslib.com manuals search engine

Q: What's wrong with this?

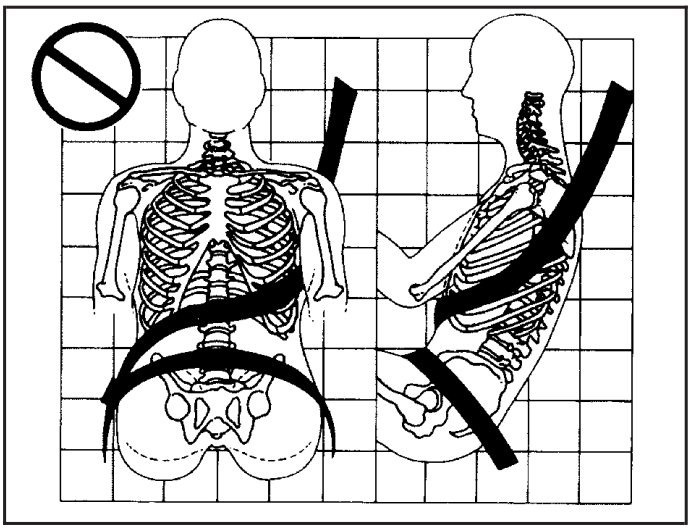

A: The shoulder belt is worn under the arm. It should be worn over the shoulder at all times.

⚠ CAUTION:

You can be seriously injured if you wear the shoulder belt under your arm. In a crash, your body would move too far forward, which would increase the chance of head and neck injury. Also, the belt would apply too much force to the ribs, which aren't as strong as shoulder bones. You could also severely injure internal organs like your liver or spleen.

Downloaded from www.Manualslib.com manuals search engine

Q: **What's wrong with this?**

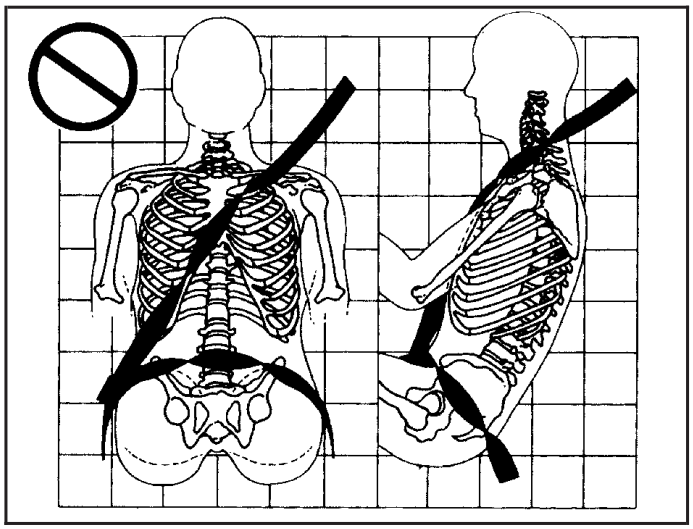

A: The belt is twisted across the body.

⚠ CAUTION:

You can be seriously injured by a twisted belt. In a crash, you wouldn't have the full width of the belt to spread impact forces. If a belt is twisted, make it straight so it can work properly, or ask your dealer to fix it.

Downloaded from www.Manualslib.com manuals search engine

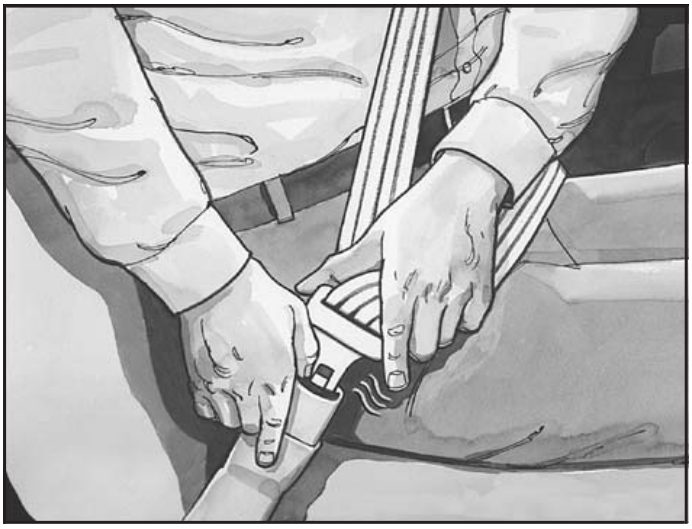

To unlatch the belt, just push the button on the buckle. The belt should go back out of the way.

Before you close the door, be sure the belt is out of the way. If you slam the door on it, you can damage both the belt and your vehicle.

Safety Belt Use During Pregnancy

Safety belts work for everyone, including pregnant women. Like all occupants, they are more likely to be seriously injured if they don't wear safety belts.

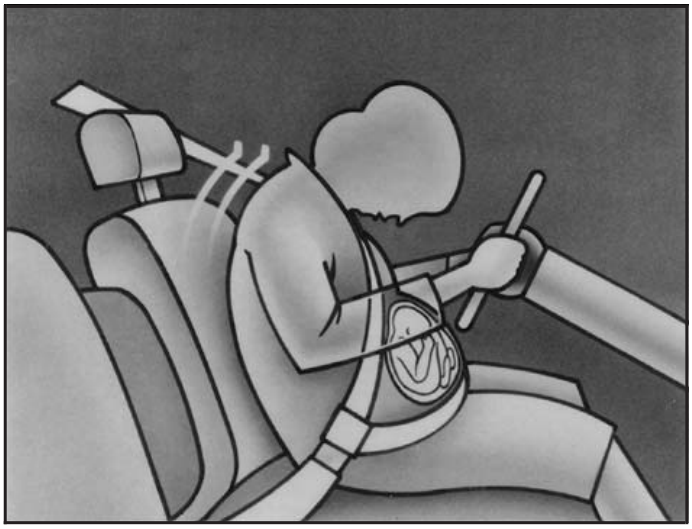

A pregnant woman should wear a lap-shoulder belt, and the lap portion should be worn as low as possible, below the rounding, throughout the pregnancy.

Downloaded from www.Manualslib.com manuals search engine

The best way to protect the fetus is to protect the mother. When a safety belt is worn properly, it's more likely that the fetus won't be hurt in a crash. For pregnant women, as for anyone, the key to making safety belts effective is wearing them properly.

Right Front Passenger Position

To learn how to wear the right front passenger's safety belt properly, see *Driver Position on page 1-22*.

The right front passenger's safety belt works the same way as the driver's safety belt – except for one thing. If you ever pull the shoulder portion of the belt out all the way, you will engage the child restraint locking feature. If this happens, just let the belt go back all the way and start again.

Rear Seat Passengers

It is very important for rear seat passengers to buckle up! Accident statistics show that unbelted people in the rear seat are hurt more often in crashes than those who are wearing safety belts.

Rear passengers who are not safety belted can be thrown out of the vehicle in a crash. And they can strike others in the vehicle who are wearing safety belts.

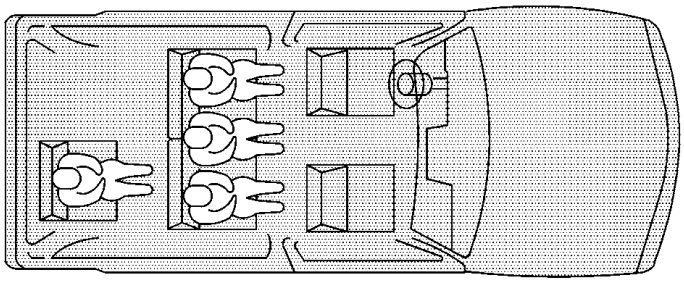

Downloaded from www.Manualslib.com manuals search engine

Lap-Shoulder Belt

All rear seating positions have lap-shoulder belts. Here is how to wear one properly.

1. Pick up the latch plate and pull the belt across you. Do not let it get twisted.

   The lap-shoulder belt may lock if you pull the belt across you very quickly. If this happens, let the belt go back slightly to unlock it. Then pull the belt across you more slowly.

2. Push the latch plate into the buckle until it clicks.

   Pull up on the latch plate to make sure it is secure.

   When the shoulder belt is pulled out all the way, it will lock. If it does, let it go back all the way and start again.

   If the belt is not long enough, see *Safety Belt Extender on page 1-37*.

   Make sure the release button on the buckle is positioned so you would be able to unbuckle the safety belt quickly if you ever had to.

Downloaded from www.Manualslib.com manuals search engine

3. To make the lap part tight, pull down on the buckle end of the belt as you pull up on the shoulder part.

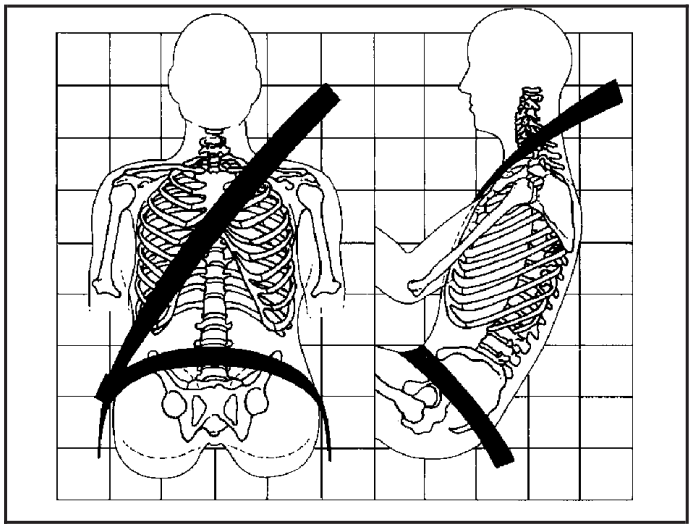

The lap part of the belt should be worn low and snug on the hips, just touching the thighs. In a crash, this applies force to the strong pelvic bones. And you would be less likely to slide under the lap belt. If you slid under it, the belt would apply force at your abdomen. This could cause serious or even fatal injuries. The shoulder belt should go over the shoulder and across the chest. These parts of the body are best able to take belt restraining forces.

The safety belt locks if there is a sudden stop or a crash. The safety belt also locks if you pull the belt very quickly out of the retractor.

Downloaded from www.Manualslib.com manuals search engine

⚠ CAUTION:

You can be seriously hurt if your shoulder belt is too loose. In a crash, you would move forward too much, which could increase injury. The shoulder belt should fit against your body.

To unlatch the belt, just push the button on the buckle.

Downloaded from www.Manualslib.com manuals search engine

Rear Safety Belt Comfort Guides for Children and Small Adults

Rear shoulder belt comfort guides will provide added safety belt comfort for older children who have outgrown booster seats and for small adults. When installed on a shoulder belt, the comfort guide better positions the belt away from the neck and head.

Comfort guides are provided for each outside passenger in the second row seat and one guide for the single third row seat. To provide added safety belt comfort for children who have outgrown child restraints and booster seats and for smaller adults, the comfort guides may be installed on the shoulder belts. Here is how to install a comfort guide and use the safety belt:

Second Row Seat

1. For the second row, remove the guide from its storage clip on the trim panel near the side of the seatback.

Downloaded from www.Manualslib.com manuals search engine

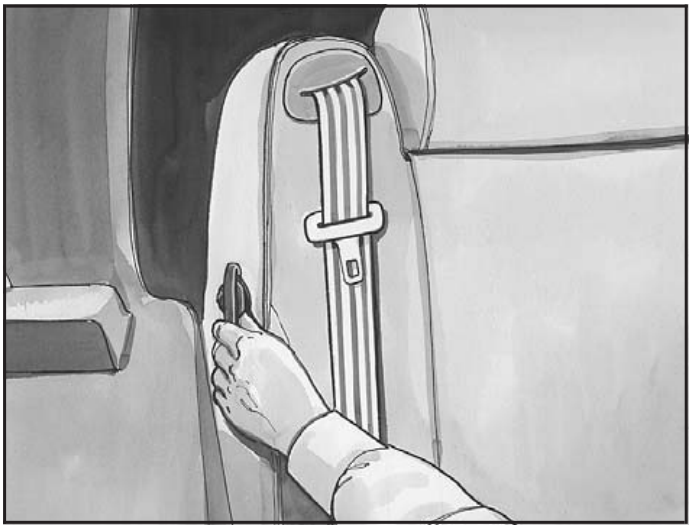

Third Row Seat

For the third row, remove the guide from its storage clip on the side of the seatback.

2. Place the guide over the belt and insert the two edges of the belt into the slots of the guide.

Downloaded from www.Manualslib.com manuals search engine

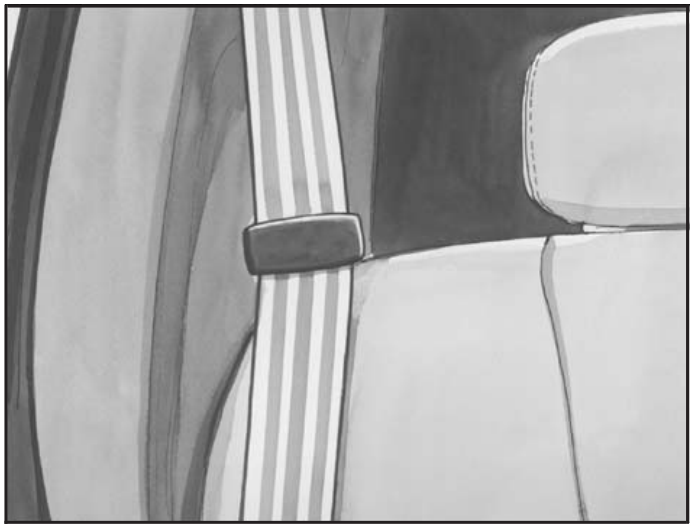

3. Be sure that the belt is not twisted and it lies flat. The guide must be on top of the belt.

Second Row Seat

Downloaded from www.Manualslib.com manuals search engine

Third Row Seat

4. Buckle, position and release the safety belt as described in *Rear Seat Passengers on page 1-30*. Make sure that the shoulder belt crosses the shoulder.

To remove and store the comfort guides, squeeze the belt edges together so that you can take them out of the guides. For the second row, slide the guide onto its storage clip on the trim panel near the side of the seatback. For the third row, slide the guide onto its storage clip on the side of the seatback. Make sure you remove the comfort guide from the belt before you fold a rear seat down.

Safety Belt Extender

If the vehicle's safety belt will fasten around you, you should use it.

But if a safety belt isn't long enough to fasten, your dealer will order you an extender. It's free. When you go in to order it, take the heaviest coat you will wear, so the extender will be long enough for you. The extender will be just for you, and just for the seat in your vehicle that you choose. Don't let someone else use it, and use it only for the seat it is made to fit. To wear it, just attach it to the regular safety belt.

Downloaded from www.Manualslib.com manuals search engine

Child Restraints

Older Children

Older children who have outgrown booster seats should wear the vehicle's safety belts.

Q: What is the proper way to wear safety belts?

A: If possible, an older child should wear a lap-shoulder belt and get the additional restraint a shoulder belt can provide. The shoulder belt should not cross the face or neck. The lap belt should fit snugly below the hips, just touching the top of the thighs. It should never be worn over the abdomen, which could cause severe or even fatal internal injuries in a crash.

Accident statistics show that children are safer if they are restrained in the rear seat.

In a crash, children who are not buckled up can strike other people who are buckled up, or can be thrown out of the vehicle. Older children need to use safety belts properly.

Downloaded from www.Manualslib.com manuals search engine

⚠ CAUTION:

Never do this.

Here two children are wearing the same belt. The belt can't properly spread the impact forces. In a crash, the two children can be crushed together and seriously injured. A belt must be used by only one person at a time.

Q: What if a child is wearing a lap-shoulder belt, but the child is so small that the shoulder belt is very close to the child's face or neck?

A: If the child is sitting in a rear seat outside position, move the child toward the center of the vehicle. Also, see *Rear Safety Belt Comfort Guides for Children and Small Adults on page 1-34*. If the child is sitting in the center position, move the child toward the safety belt buckle. In either case, be sure that the shoulder belt still is on the child's shoulder, so that in a crash the child's upper body would have the restraint that belts provide.

Downloaded from www.Manualslib.com manuals search engine

⚠ CAUTION:

Never do this.

Here a child is sitting in a seat that has a lap-shoulder belt, but the shoulder part is behind the child. If the child wears the belt in

CAUTION: (Continued)

CAUTION: (Continued)

this way, in a crash the child might slide under the belt. The belt's force would then be applied right on the child's abdomen. That could cause serious or fatal injuries.

Wherever the child sits, the lap portion of the belt should be worn low and snug on the hips, just touching the child's thighs. This applies belt force to the child's pelvic bones in a crash.

Infants and Young Children

Everyone in a vehicle needs protection! This includes infants and all other children. Neither the distance traveled nor the age and size of the traveler changes the need, for everyone, to use safety restraints. In fact, the law in every state in the United States and in every Canadian province says children up to some age must be restrained while in a vehicle.

Every time infants and young children ride in vehicles, they should have the protection provided by appropriate restraints. Young children should not use the vehicle's adult safety belts alone, unless there is no other choice. Instead, they need to use a child restraint.

Downloaded from www.Manualslib.com manuals search engine

⚠ CAUTION:

People should never hold a baby in their arms while riding in a vehicle. A baby doesn't weigh much -- until a crash. During a crash a baby will become so heavy it is not possible to hold it. For example, in a crash at only 25 mph (40 km/h), a 12-lb. (5.5 kg) baby will suddenly become a 240-lb. (110 kg) force on a person's arms. A baby should be secured in an appropriate restraint.

Downloaded from www.Manualslib.com manuals search engine

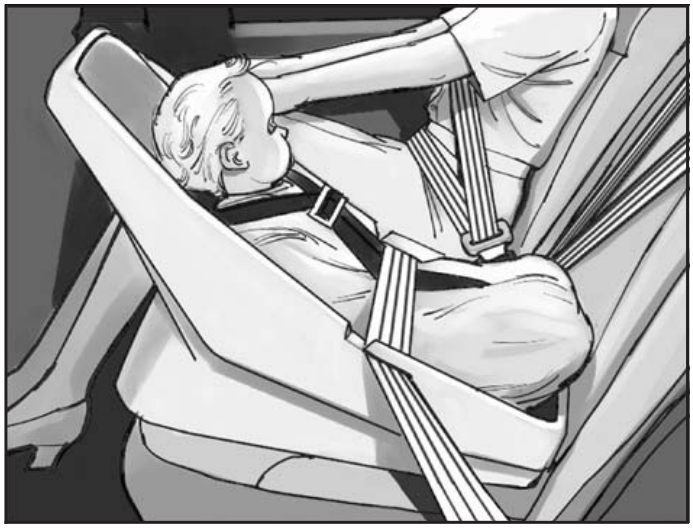

⚠ CAUTION:

Children who are up against, or very close to, any air bag when it inflates can be seriously injured or killed. Air bags plus lap-shoulder belts offer outstanding protection for adults and older children, but not for young children and infants. Neither the vehicle's safety belt system nor its air bag system is designed for them. Young children and infants need the protection that a child restraint system can provide.

Q: What are the different types of add-on child restraints?

A: Add-on child restraints, which are purchased by the vehicle's owner, are available in four basic types. Selection of a particular restraint should take into consideration not only the child's weight, height, and age but also whether or not the restraint will be compatible with the motor vehicle in which it will be used.

Downloaded from www.Manualslib.com manuals search engine

For most basic types of child restraints, there are many different models available. When purchasing a child restraint, be sure it is designed to be used in a motor vehicle. If it is, the restraint will have a label saying that it meets federal motor vehicle safety standards.

The restraint manufacturer's instructions that come with the restraint state the weight and height limitations for a particular child restraint. In addition, there are many kinds of restraints available for children with special needs.

⚠ CAUTION:

Newborn infants need complete support, including support for the head and neck. This is necessary because a newborn infant's neck is weak and its head weighs so much compared with the rest of its body. In a crash, an infant in a rear-facing seat settles into the restraint, so the crash forces can be distributed across the strongest part of an infant's body, the back and shoulders. Infants always should be secured in appropriate infant restraints.

⚠ CAUTION:

The body structure of a young child is quite unlike that of an adult or older child, for whom the safety belts are designed. A young child's hip bones are still so small that the vehicle's regular safety belt may not remain low on the hip bones, as it should. Instead, it may settle up around the child's abdomen. In a crash, the belt would apply force on a body area that's unprotected by any bony structure. This alone could cause serious or fatal injuries. Young children always should be secured in appropriate child restraints.

Downloaded from www.Manualslib.com manuals search engine

Child Restraint Systems

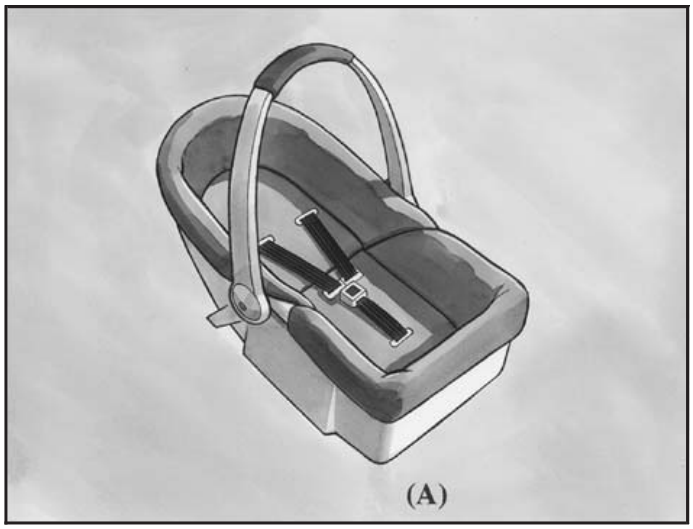

An infant car bed (A), a special bed made for use in a motor vehicle, is an infant restraint system designed to restrain or position a child on a continuous flat surface. Make sure that the infant's head rests toward the center of the vehicle.

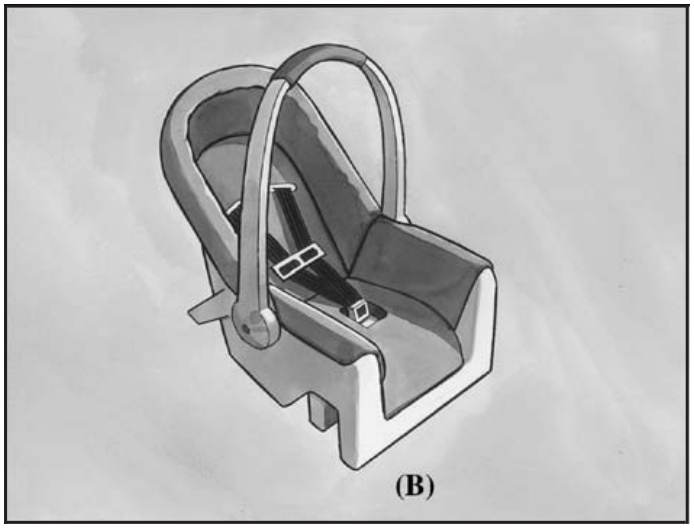

A rear-facing infant seat (B) provides restraint with the seating surface against the back of the infant. The harness system holds the infant in place and, in a crash, acts to keep the infant positioned in the restraint.

Downloaded from www.Manualslib.com manuals search engine

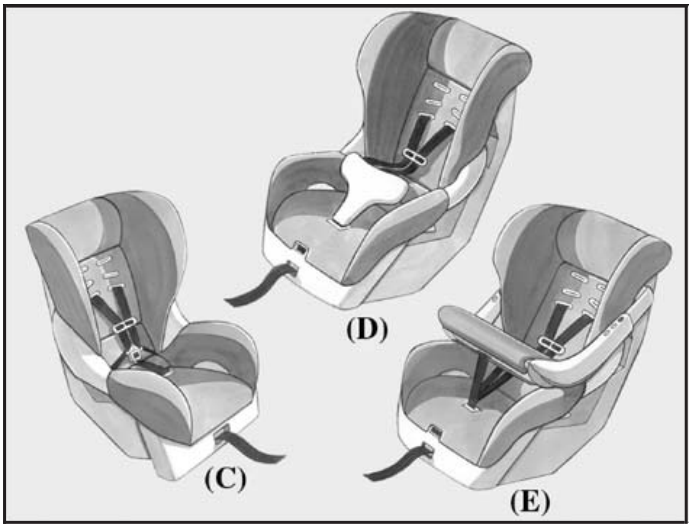

A forward-facing child seat (C-E) provides restraint for the child's body with the harness and also sometimes with surfaces such as T-shaped or shelf-like shields.

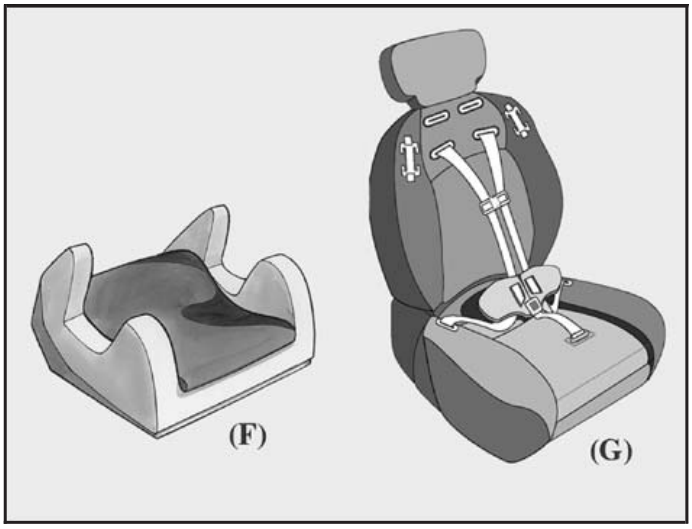

A booster seat (F-G) is a child restraint designed to improve the fit of the vehicle's safety belt system. Some booster seats have a shoulder belt positioner, and some high-back booster seats have a five-point harness. A booster seat can also help a child to see out the window.

Downloaded from www.Manualslib.com manuals search engine

Q: How do child restraints work?

A: A child restraint system is any device designed for use in a motor vehicle to restrain, seat, or position children. A built-in child restraint system is a permanent part of the motor vehicle. An add-on child restraint system is a portable one, which is purchased by the vehicle's owner.

For many years, add-on child restraints have used the adult belt system in the vehicle. To help reduce the chance of injury, the child also has to be secured within the restraint. The vehicle's belt system secures the add-on child restraint in the vehicle, and the add-on child restraint's harness system holds the child in place within the restraint.

One system, the three-point harness, has straps that come down over each of the infant's shoulders and buckle together at the crotch. The five-point harness system has two shoulder straps, two hip straps and a crotch strap. A shield may take the place of hip straps. A T-shaped shield has shoulder straps that are attached to a flat pad which rests low against the child's body. A shelf- or armrest-type shield has straps that are attached to a wide, shelf-like shield that swings up or to the side.

When choosing a child restraint, be sure the child restraint is designed to be used in a vehicle. If it is, it will have a label saying that it meets federal motor vehicle safety standards.

Then follow the instructions for the restraint. You may find these instructions on the restraint itself or in a booklet, or both. These restraints use the belt system or the LATCH system in your vehicle, but the child also has to be secured within the restraint to help reduce the chance of personal injury. When securing an add-on child restraint, refer to the instructions that come with the restraint which may be on the restraint itself or in a booklet, or both, and to this manual. The child restraint instructions are important, so if they are not available, obtain a replacement copy from the manufacturer.

Downloaded from www.Manualslib.com manuals search engine

Where to Put the Restraint

Accident statistics show that children are safer if they are restrained in the rear rather than the front seat. We, therefore, recommend that child restraints be secured in a rear seat, including an infant riding in a rear-facing infant seat, a child riding in a forward-facing child seat and an older child riding in a booster seat.

If you need to secure a child restraint in the right front passenger's seat, there is a switch on the instrument panel that you can use to turn off the passenger's air bag. See *Air Bag Off Switch on page 1-68* and *Securing a Child Restraint in the Right Front Seat Position on page 1-55*, for more on this including important safety information.

Never put a rear-facing child restraint in the right front passenger seat unless the air bag is off. Here is why:

⚠ CAUTION:

A child in a rear-facing child restraint can be seriously injured or killed if the right front passenger's air bag inflates. This is because the back of the rear-facing child restraint would be very close to the inflating air bag. Be sure to turn off the air bag before using a rear-facing child restraint in the right front seat position.

Even though the air bag off switch is designed to turn off the passenger's air bag, no system is fail safe, and no one can guarantee that an air bag will not deploy under some unusual circumstance, even though it is turned off. General Motors recommends that rear-facing child restraints be secured in the rear seat, even if the air bag is off.

If you secure a forward-facing child restraint in the right front seat, always move the front passenger seat as far back as it will go. It is better to secure the child restraint in a rear seat.

Downloaded from www.Manualslib.com manuals search engine

Wherever you install it, be sure to secure the child restraint properly.

Keep in mind that an unsecured child restraint can move around in a collision or sudden stop and injure people in the vehicle. Be sure to properly secure any child restraint in your vehicle — even when no child is in it.

Top Strap

Some child restraints have a top strap, or “top tether.” It can help restrain the child restraint during a collision. For it to work, a top strap must be properly anchored to the vehicle. Some top strap-equipped child restraints are designed for use with or without the top strap being anchored. Others require the top strap always to be anchored. Be sure to read and follow the instructions for your child restraint. If yours requires that the top strap be anchored, don’t use the restraint unless it is anchored properly.

If the child restraint does not have a top strap, one can be obtained, in kit form, for many child restraints. Ask the child restraint manufacturer whether or not a kit is available.

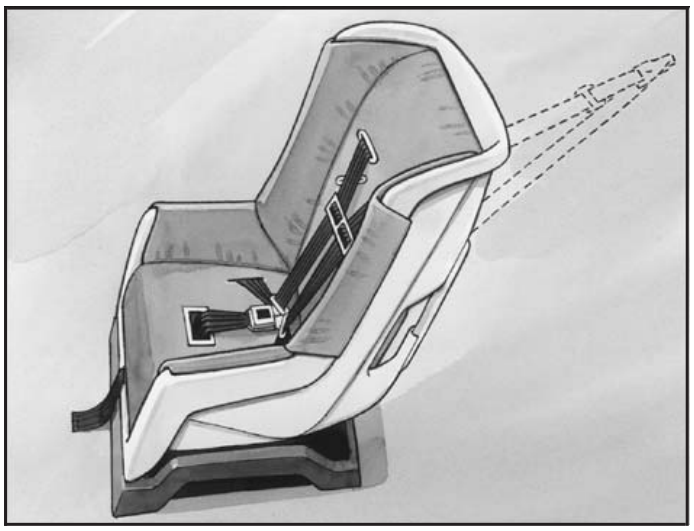

In Canada, the law requires that forward-facing child restraints have a top strap, and that the strap be anchored. In the United States, some child restraints also have a top strap. If your child restraint has a top strap, it should be anchored.

Anchor the top strap to one of the following anchor points. Be sure to use an anchor point located on the same side of the vehicle as the seating position where the child restraint will be placed. Raise the head restraint and route the top strap under it.

Downloaded from www.Manualslib.com manuals search engine

⚠ CAUTION:

Each top tether bracket is designed to anchor only one child restraint. Attaching more than one child restraint to a single bracket could cause the anchor to come loose or even break during a crash. A child or others could be injured if this happens. To help prevent injury to people and damage to your vehicle, attach only one child restraint per bracket.

Once you have the top strap anchored, you'll be ready to secure the child restraint itself. Tighten the top strap when and as the child restraint manufacturer's instructions say.

Top Strap Anchor Location

A child restraint with a top strap should only be used in the second or third row. Don't use a child restraint with a top strap in the front seat because there's no place to anchor the top strap.

An anchor loop bracket for a top strap is located at the bottom rear of the seat cushion for each seating position in the second row and in the outboard passenger position in the third row.

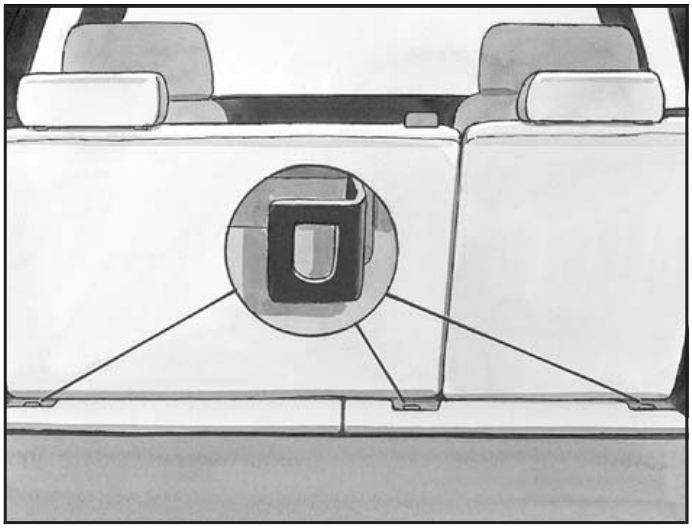

Second Row Seats

Downloaded from www.Manualslib.com manuals search engine

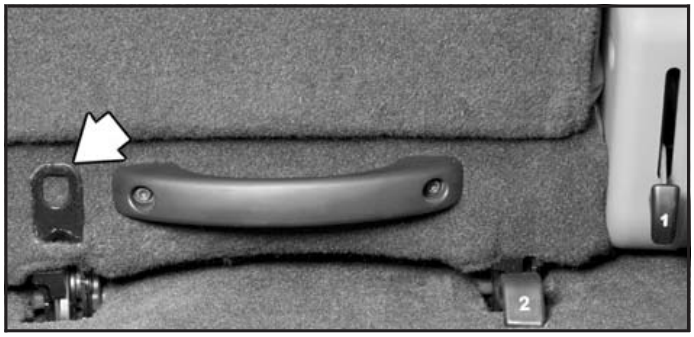

Third Row Seat

Lower Anchorages and Top Tethers for Children (LATCH System)

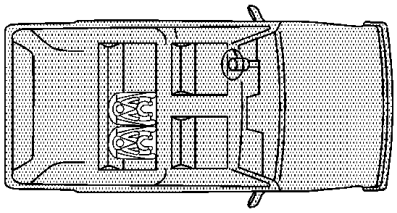

Your vehicle has the LATCH system. You will find anchors (A) in the center and right side passenger second row seating positions.

This system, designed to make installation of child restraints easier, does not use the vehicle's safety belts. Instead, it uses vehicle anchors (A, B) and child restraint attachements to secure the restraints. Some restraints also use another vehicle anchor to secure a top tether strap (C).

Downloaded from www.Manualslib.com manuals search engine

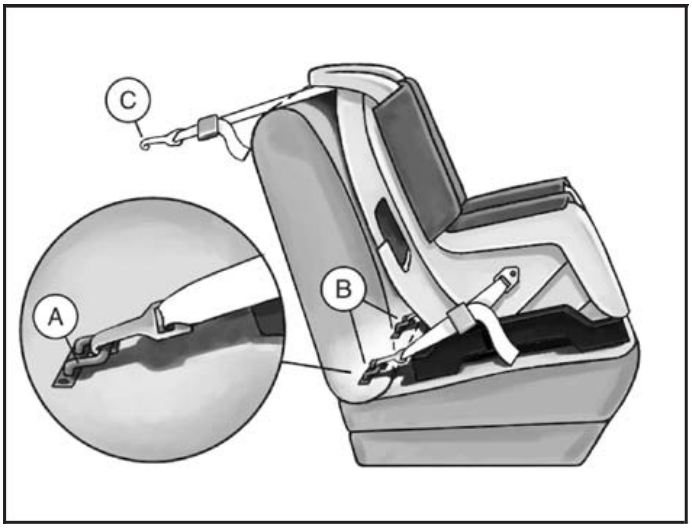

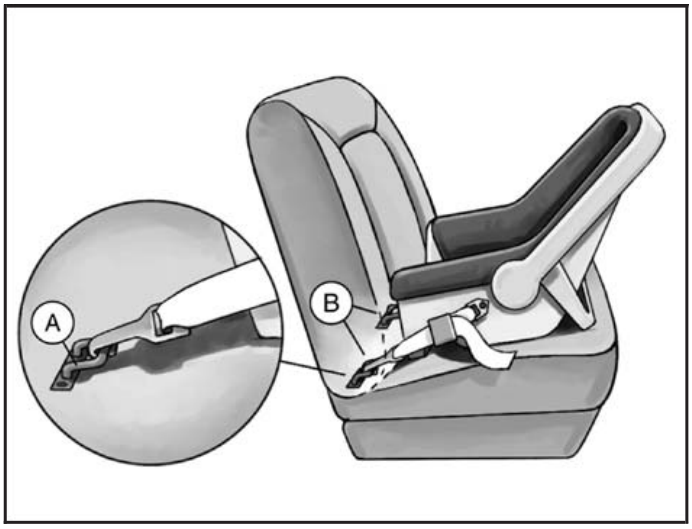

In order to use the LATCH system in your vehicle, you need a child restraint designed for that system.

Downloaded from www.Manualslib.com manuals search engine

To assist you in locating the lower anchors for this child restraint system, each seating position with the LATCH system has a visible metal anchorage point in the seat where the seatback meets the seat cushion.

⚠ CAUTION:

If a LATCH-type child restraint is not attached to its anchorage points, the restraint will not be able to protect the child correctly. In a crash, the child could be seriously injured or killed. Make sure that a LATCH-type child restraint is properly installed using the anchorage points, or use the vehicle's safety belts to secure the restraint, following the instructions that came with that restraint, and also the instructions in this manual.

Securing a Child Restraint Designed for the LATCH System

1. Find the LATCH anchorages for the seating position you want to use, where the bottom of the seatback meets the back of the seat cushion. See *Lower Anchorages and Top Tethers for Children (LATCH System) on page 1-50*.
2. Put the child restraint on the seat.
3. Attach and tighten the LATCH attachments on the child restraint to the LATCH anchorages in the vehicle. The child restraint instructions will show you how.
4. If the child restraint is forward-facing, attach and tighten the top tether to the top tether anchorage. The child restraint instructions will show you how. Also see *Top Strap on page 1-48*.
5. Push and pull the child restraint in different directions to be sure it is secure.

To remove the child restraint, simply unhook the top tether from the top tether anchorage and then disconnect the LATCH attachments from the LATCH anchorages.

Downloaded from www.Manualslib.com manuals search engine

Securing a Child Restraint in a Rear Seat Position

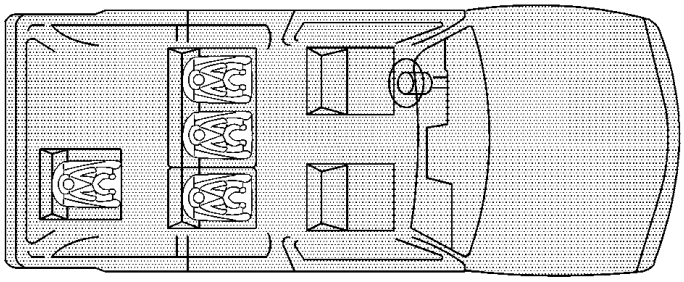

If your child restraint is equipped with the LATCH system, see *Lower Anchorages and Top Tethers for Children (LATCH System) on page 1-50*. See *Top Strap on page 1-48* if the child restraint has one.

If your child restraint does not have the LATCH system, you will be using the lap-shoulder belt to secure the child restraint in this position. Be sure to follow the instructions that came with the child restraint. Secure the child in the child restraint when and as the instructions say.

1. Put the restraint on the seat.
2. Pick up the latch plate, and run the lap and shoulder portions of the vehicle's safety belt through or around the restraint. The child restraint instructions will show you how.

Downloaded from www.Manualslib.com manuals search engine

3. Buckle the belt. Make sure the release button is positioned so you would be able to unbuckle the safety belt quickly if you ever had to.

4. Pull the rest of the shoulder belt all the way out of the retractor to set the lock.

Downloaded from www.Manualslib.com manuals search engine

5. To tighten the belt, feed the shoulder belt back into the retractor while you push down on the child restraint. If you are using a forward-facing child restraint, you may find it helpful to use your knee to push down on the child restraint as you tighten the belt.
6. Push and pull the child restraint in different directions to be sure it is secure.

To remove the child restraint, just unbuckle the vehicle's safety belt and let it go back all the way. The safety belt will move freely again and be ready to work for an adult or larger child passenger.

Securing a Child Restraint in the Right Front Seat Position

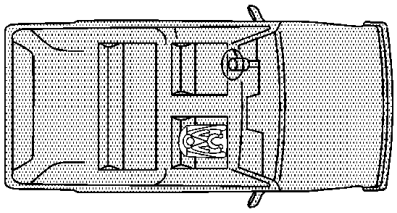

Downloaded from www.Manualslib.com manuals search engine

If your child restraint is equipped with the LATCH system, see *Lower Anchorages and Top Tethers for Children (LATCH System) on page 1-50*. See *Top Strap on page 1-48* if your child restraint has one.

Your vehicle has a right front passenger air bag. There is a switch on the instrument panel that you can use to turn off the right front passenger's air bag when you need to secure a child restraint at the right front passenger's position. See *Air Bag Off Switch on page 1-68* for more on this, including important safety information.

United States

Downloaded from www.Manualslib.com manuals search engine

Canada

A rear seat is a safer place to secure a forward-facing child restraint.

Never put a rear-facing child restraint in the right front passenger's seat unless the air bag is off. Here is why:

⚠ CAUTION:

A child in a rear-facing child restraint can be seriously injured or killed if the right front passenger's air bag inflates. This is because the back of the rear-facing child restraint would be very close to the inflating air bag. Be sure to turn off the air bag before using a rear-facing child restraint in the right front seat position.

Even though the air bag off switch is designed to turn off the passenger's air bag, no system is fail safe, and no one can guarantee that an air bag will not deploy under some unusual circumstance, even though it is turned off. General Motors recommends that rear-facing child restraints be secured in the rear seat, even if the air bag is off.

If you secure a forward-facing child restraint in the right front seat, always move the front passenger seat as far back as it will go. It is better to secure the child restraint in a rear seat.

Downloaded from www.Manualslib.com manuals search engine

⚠ CAUTION:

If the air bag readiness light ever comes on when you have turned off the air bag, it means that something may be wrong with the air bag system. The right front passenger's air bag could inflate even though the switch is off. If this ever happens, don't let anyone whom the national government has identified as a member of a passenger air bag risk group sit in the right front passenger's position (for example, don't secure a rear-facing child restraint in the right front seat) until you have your vehicle serviced. See "Air Bag Off Switch."

You will be using a lap-shoulder belt to secure the child restraint in this position. Be sure to follow the instructions that came with the child restraint. Secure the child in the child restraint when and as the instructions say.

1. Your vehicle has a right front passenger's air bag. See *Air Bag Off Switch on page 1-68*. If your child restraint is forward-facing, move the seat as far back as it will go before securing the restraint in this seat. See "Seats" in the Index. If you need to use a rear-facing child restraint in this seat, make sure the air bag is off once the child restraint has been installed.
2. Put the child restraint on the seat.
3. Pick up the latch plate, and run the lap and shoulder portions of the vehicle's safety belt through or around the restraint. The child restraint instructions will show you how.

Downloaded from www.Manualslib.com manuals search engine

4. Buckle the belt. Make sure the release button is positioned so you would be able to unbuckle the safety belt quickly if you ever had to.

5. Pull the rest of the shoulder belt all the way out of the retractor to set the lock.

Downloaded from www.Manualslib.com manuals search engine

6. To tighten the belt, feed the shoulder belt back into the retractor while you push down on the child restraint. If you are using a forward-facing child restraint, you may find it helpful to use your knee to push down on the child restraint as you tighten the belt.
7. Push and pull the child restraint in different directions to be sure it is secure.

To remove the child restraint, just unbuckle the vehicle's safety belt and let it go back all the way. The safety belt will move freely again and be ready to work for an adult or larger child passenger.

If you had turned the air bag off with the switch, remember to be sure to use the air bag off switch to turn on the right front passenger's air bag when you remove the child restraint from the vehicle unless the person who will be sitting there is a member of the passenger air bag risk group. See *Air Bag Off Switch on page 1-68*.

⚠ CAUTION:

If the right front passenger's air bag is turned off for a person who isn't in a risk group identified by the national government, that person won't have the extra protection of an air bag. In a crash, the air bag wouldn't be able to inflate and help protect the person sitting there. Don't turn off the passenger's air bag unless the person sitting there is in a risk group. See "Air Bag Off Switch" in the Index for more on this, including important safety information.

Downloaded from www.Manualslib.com manuals search engine

Air Bag System

This part explains the air bag system.

Your vehicle has air bags – one air bag for the driver and another air bag for the right front passenger.

Frontal air bags are designed to help reduce the risk of injury from the force of an inflating air bag. But these air bags must inflate very quickly to do their job and comply with federal regulations.

Here are the most important things to know about the air bag system:

⚠ CAUTION:

You can be severely injured or killed in a crash if you are not wearing your safety belt — even if you have air bags. Wearing your safety belt during a crash helps reduce your chance of hitting things inside the vehicle or being ejected from it. Air bags are designed to work with safety belts, but do not replace them. Airbags are designed to deploy only in moderate to severe frontal and near frontal crashes. They are not designed to inflate in rollover, rear or low-speed frontal crashes, or in many side crashes. And, for some unrestrained occupants, air bags may provide less protection in frontal crashes than more forceful air bags have provided in the past. Everyone in your vehicle should wear a safety belt properly — whether or not there is an air bag for that person.

Downloaded from www.Manualslib.com manuals search engine

⚠ CAUTION:

Air bags inflate with great force, faster than the blink of an eye. If you're too close to an inflating air bag, as you would be if you were leaning forward, it could seriously injure you. Safety belts help keep you in position before and during a crash. Always wear your safety belt, even with air bags. The driver should sit as far back as possible while still maintaining control of the vehicle.

⚠ CAUTION:

Anyone who is up against, or very close to, any air bag when it inflates can be seriously injured or killed. Air bags plus lap-shoulder belts offer the best protection for adults, butnot for young children and infants. Neither the vehicle's safety belt system nor its air bag system is designed for them. Young children and infants need the protection that a child restraint system can provide. Always secure children properly in your vehicle. To read how, see *Older Children on page 1-38* and *Infants and Young Children on page 1-40*.

Downloaded from www.Manualslib.com manuals search engine

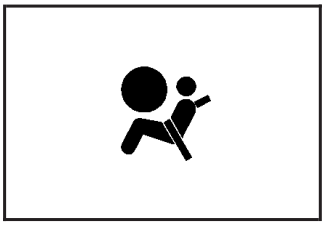

There is a air bag readiness light on the instrument panel, which shows the air bag symbol.

The system checks the air bag electrical system for malfunctions. The light tells you if there is an electrical problem. See *Air Bag Readiness Light on page 3-28* for more information.

Where Are the Air Bags?

The driver's air bag is in the middle of the steering wheel.

Downloaded from www.Manualslib.com manuals search engine

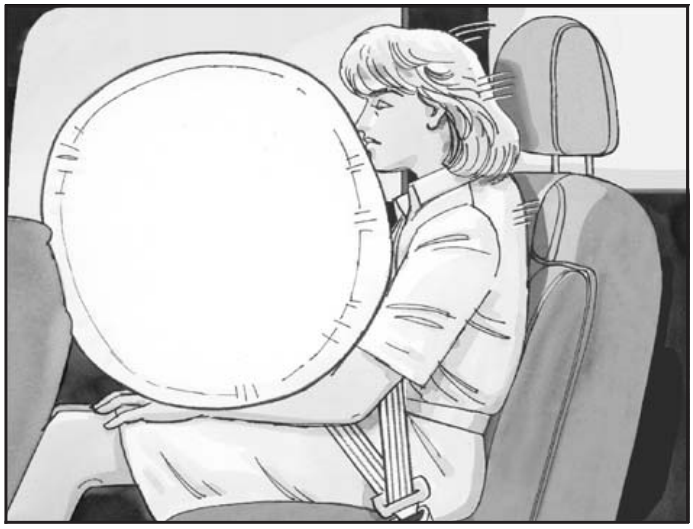

The right front passenger's air bag is in the instrument panel on the passenger's side.

⚠ CAUTION:

If something is between an occupant and an air bag, the bag might not inflate properly or it might force the object into that person causing severe injury or even death. The path of an inflating air bag must be kept clear. Don't put anything between an occupant and an air bag, and don't attach or put anything on the steering wheel hub or on or near any other air bag covering.

Downloaded from www.Manualslib.com manuals search engine

When Should an Air Bag Inflate?

An air bag is designed to inflate in a moderate to severe frontal, or near-frontal crash. The air bag will inflate only if the impact speed is above the system's designed 'threshold level'.

If your vehicle goes straight into a wall that doesn't move or deform, the threshold level is about 9 to 17 mph (14 to 27 km/h). The threshold level can vary, however, with specific vehicle design, so that it can be somewhat above or below this range. If your vehicle strikes something that will move or deform, such as a parked car, the threshold level will be higher. The air bag is not designed to inflate in rollovers, rear impacts, or in many side impacts because inflation would not help the occupant.

In any particular crash, no one can say whether an air bag should have inflated simply because of the damage to a vehicle or because of what the repair costs were. Inflation is determined by the angle of the impact and how quickly the vehicle slows down in frontal or near-frontal impacts.

The air bag system is designed to work properly under a wide range of conditions, including off-road usage. Observe safe driving speeds, especially on rough terrain. As always, wear your safety belt. See *Off-Road Driving on page 4-17* for more tips on off-road driving.

What Makes an Air Bag Inflate?

In an impact of sufficient severity, the air bag sensing system detects that the vehicle is in a crash. The sensing system triggers a release of gas from the inflator, which inflates the air bag. The inflator, air bag, and related hardware are all part of the air bag modules inside the steering wheel and in the instrument panel in front of the right front passenger.

How Does an Air Bag Restrain?

In moderate to severe frontal or near-frontal collisions, even belted occupants can contact the steering wheel or the instrument panel. Air bags supplement the protection provided by safety belts. Air bags distribute the force of the impact more evenly over the occupant's upper body, stopping the occupant more gradually. But air bags would not help you in many types of collisions, including rollovers, rear impacts and many side impacts, primarily because an occupant's motion is not toward those air bags. Air bags should never be regarded as anything more than a supplement to safety belts, and then only in moderate to severe frontal or near-frontal collisions.

Downloaded from www.Manualslib.com manuals search engine

What Will You See After an Air Bag Inflates?

After an air bag inflates, it quickly deflates, so quickly that some people may not even realize the air bag inflated. Some components of the air bag module – the steering wheel hub for the driver's air bag, or the instrument panel for the right front passenger's bag – will be hot for a short time. The parts of the bag that come into contact with you may be warm, but not too hot to touch. There will be some smoke and dust coming from the vents in the deflated air bags. Air bag inflation doesn't prevent the driver from seeing or being able to steer the vehicle, nor does it stop people from leaving the vehicle.

⚠ CAUTION:

When an air bag inflates, there is dust in the air. This dust could cause breathing problems for people with a history of asthma or other breathing trouble. To avoid this, everyone in the vehicle should get out as soon as it is safe to do so. If you have breathing problems but can't get out of the vehicle after an air bag inflates, then get fresh air by opening a window or a door. If you experience breathing problems following an air bag deployment, you should seek medical attention.

Downloaded from www.Manualslib.com manuals search engine

Your vehicle has a feature that will automatically unlock the doors and turn the interior lamps on when the air bags inflate (if battery power is available). You can lock the doors again and turn the interior lamps off by using the door lock and interior lamp controls.

In many crashes severe enough to inflate the air bag, windshields are broken by vehicle deformation. Additional windshield breakage may also occur from the right front passenger air bag.

- Air bags are designed to inflate only once. After they inflate, you'll need some new parts for your air bag system. If you don't get them, the air bag system won't be there to help protect you in another crash. A new system will include air bag modules and possibly other parts. The service manual for your vehicle covers the need to replace other parts.
- Your vehicle is equipped with a crash sensing and diagnostic module, which records information about the air bag system. The module records information about the readiness of the system, when the system commands air bag inflation and driver's safety belt usage at deployment.

  The module also records speed, engine rpm, brake and throttle data.
- Let only qualified technicians work on your air bag system. Improper service can mean that an air bag system won't work properly. See your dealer for service.

Notice: **If you damage the covering for the driver's or the right front passenger's air bag, the bag may not work properly. You may have to replace the air bag module in the steering wheel or both the air bag module and the instrument panel for the right front passenger's air bag. Do not open or break the air bag coverings.**

Downloaded from www.Manualslib.com manuals search engine

Air Bag Off Switch

Your vehicle has a switch on the instrument panel that you can use to turn off the right front passenger's air bag.

United States

Canada

Downloaded from www.Manualslib.com manuals search engine

This switch should only be turned to the off position if the person in the right front passenger's position is a member of a passenger risk group identified by the national government as follows:

Infant.*An infant (less than 1 year old) must ride in the front seat because:*

- *my vehicle has no rear seat;*
- *my vehicle has a rear seat too small to accommodate a rear-facing infant seat; or*
- *the infant has a medical condition which, according to the infant's physician, makes it necessary for the infant to ride in the front seat so that the driver can constantly monitor the child's condition.*

Child age 1 to 12.*A child age 1 to 12 must ride in the front seat because:*

- *my vehicle has no rear seat;*
- *although children ages 1 to 12 ride in the rear seat(s) whenever possible, children ages 1 to 12 sometimes must ride in the front because no space is available in the rear seat(s) of my vehicle; or*
- *the child has a medical condition which, according to the child's physician, makes it necessary for the child to ride in the front seat so that the driver can constantly monitor the child's condition.*

Medical Condition.*A passenger has a medical condition which, according to his or her physician:*

- *causes the passenger air bag to pose a special risk for the passenger; and*
- *makes the potential harm from the passenger air bag in a crash greater than the potential harm from turning off the air bag and allowing the passenger, even if belted, to hit the dashboard or windshield in a crash.*

⚠ CAUTION:

If the right front passenger's air bag is turned off for a person who isn't in a risk group identified by the national government, that person won't have the extra protection of an air bag. In a crash, the air bag wouldn't be able to inflate and help protect the person sitting there. Don't turn off the passenger's air bag unless the person sitting there is in a risk group.

Downloaded from www.Manualslib.com manuals search engine

United States

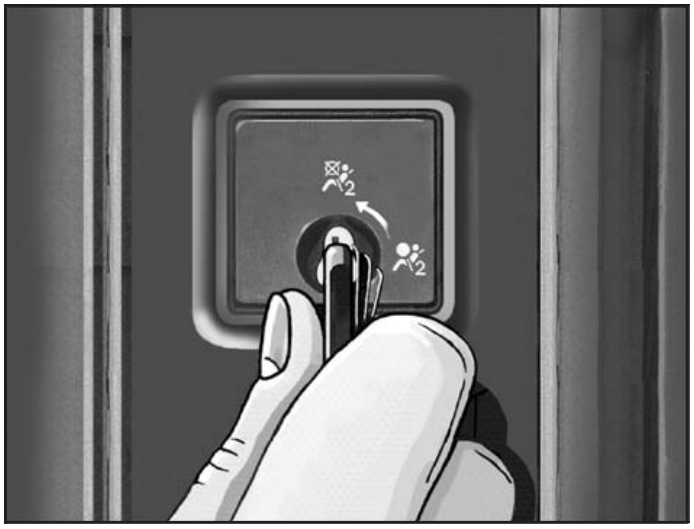

Canada

To turn off the right front passenger's air bag, insert your ignition key into the switch, push in, and move the switch to the off position.

The air bag off light will come on to let you know that the right front passenger's air bag is off. The right front passenger's air bag will remain off until you turn it back on again, and the air bag off light will stay on to remind you that the air bag is off.

Downloaded from www.Manualslib.com manuals search engine

⚠ CAUTION:

If the air bag readiness light ever comes on when you have turned off the air bag, it means that something may be wrong with the air bag system. The right front passenger's air bag could inflate even though the switch is off. If this ever happens, don't let anyone whom the national government has identified as a member of a passenger air bag risk group sit in the right front passenger's position (for example, don't secure a rear-facing child restraint in the right front seat) until you have your vehicle serviced.

United States

Downloaded from www.Manualslib.com manuals search engine

Canada

To turn the right front passenger's air bag on again, insert your ignition key into the switch, push in, and move the switch to the on position.

Servicing Your Air Bag-Equipped Vehicle

Air bags affect how your vehicle should be serviced. There are parts of the air bag system in several places around your vehicle. You don't want the system to inflate while someone is working on your vehicle. Your dealer and the service manual have information about servicing your vehicle and the air bag system. To purchase a service manual, see *Service Publications Ordering Information on page 7-11*.

⚠ CAUTION:

For up to 2 minutes after the ignition key is turned off and the battery is disconnected, an air bag can still inflate during improper service. You can be injured if you are close to an air bag when it inflates. Avoid yellow wires, wires wrapped with yellow tape or yellow connectors. They are probably part of the air bag system. Be sure to follow proper service procedures, and make sure the person performing work for you is qualified to do so.

The air bag system does not need regular maintenance.

Downloaded from www.Manualslib.com manuals search engine

Adding Equipment to Your Air Bag-Equipped Vehicle

Q: Is there anything I might add to the front of the vehicle that could keep the air bags from working properly?

A: Yes. If you add things that change your vehicle's frame, bumper system, front end sheet metal or height, they may keep the air bag system from working properly. Also, the air bag system may not work properly if you relocate any of the air bag sensors. If you have any questions about this, you should contact Customer Assistance before you modify your vehicle. The phone numbers and addresses for Customer Assistance are in Step Two of the *Customer Satisfaction Procedure on page 7-2*.

Restraint System Check

Checking Your Restraint Systems

Now and then, make sure the safety belt reminder light and all your belts, buckles, latch plates, retractors and anchorages are working properly. Look for any other loose or damaged safety belt system parts. If you see anything that might keep a safety belt system from doing its job, have it repaired.

Torn or frayed safety belts may not protect you in a crash. They can rip apart under impact forces. If a belt is torn or frayed, get a new one right away.

Also look for any opened or broken air bag covers, and have them repaired or replaced. (The air bag system does not need regular maintenance.)

Downloaded from www.Manualslib.com manuals search engine

Replacing Restraint System Parts After a Crash

⚠ CAUTION:

A crash can damage the restraint systems in your vehicle. A damaged restraint system may not properly protect the person using it, resulting in serious injury or even death in a crash. To help make sure your restraint systems are working properly after a crash, have them inspected and any necessary replacements made as soon as possible.

If you've had a crash, do you need new belts or LATCH system parts?

After a very minor collision, nothing may be necessary. But if the belts were stretched, as they would be if worn during a more severe crash, then you need new parts.

If the LATCH system was being used during a more severe crash, you may need new LATCH system parts.

If belts are cut or damaged, replace them. Collision damage also may mean you will need to have LATCH system, safety belt or seat parts repaired or replaced. New parts and repairs may be necessary even if the belt or LATCH system wasn't being used at the time of the collision.

If an air bag inflates, you'll need to replace air bag system parts. See the part on the air bag system earlier in this section.

Downloaded from www.Manualslib.com manuals search engine

Section 2 Features and Controls

Keys 2-2
Remote Keyless Entry System 2-3
Remote Keyless Entry System Operation 2-4
Doors and Locks 2-7
Door Locks 2-7
Power Door Locks 2-8
Delayed Locking 2-9
Programmable Automatic Door Locks 2-9
Rear Door Security Locks 2-11
Lockout Protection 2-12
Liftgate 2-13
Windows 2-14
Power Windows 2-15
Sun Visors 2-16
Theft-Deterrent Systems 2-16
Content Theft-Deterrent 2-16
Passlock® 2-18
Starting and Operating Your Vehicle 2-18
New Vehicle Break-In 2-18
Ignition Positions 2-19
Starting Your Engine 2-20
Engine Coolant Heater 2-21
Automatic Transmission Operation 2-22
All-Wheel Drive 2-25
Parking Brake 2-29
Shifting Into Park (P) 2-30
Shifting Out of Park (P) 2-32
Parking Over Things That Burn 2-32
Engine Exhaust 2-33
Running Your Engine While You Are Parked 2-33
Mirrors 2-34
Automatic Dimming Rearview Mirror with Compass and Temperature Display 2-34
Outside Power Mirrors 2-37
Outside Convex Mirror 2-38
Outside Heated Mirrors 2-39
Outside Automatic Dimming Mirror with Curb View Assist 2-39
OnStar® System 2-40
HomeLink® Transmitter 2-42
Programming the HomeLink® Transmitter 2-42
Storage Areas 2-45
Glove Box 2-45
Center Overhead Console 2-46
Center Console Storage Area 2-46
Luggage Carrier 2-46
Rear Seat Armrest 2-49
Sunroof 2-50
Vehicle Personalization 2-51
Memory Seat 2-51

Downloaded from www.Manualslib.com manuals search engine

Keys

⚠ CAUTION:

Leaving children in a vehicle with the ignition key is dangerous for many reasons. They could operate the power windows or other controls or even make the vehicle move. The children or others could be badly injured or even killed. Do not leave the keys in a vehicle with children.

Downloaded from www.Manualslib.com manuals search engine

Your vehicle has one double-sided key for the ignition and all door locks.

If you ever lose your keys, your dealer will be able to assist you with obtaining replacements.

In an emergency contact roadside assistance. See *Roadside Assistance Program on page 7-5*.

If you ever lock your keys in your vehicle, you may be able to have your doors unlocked automatically with the OnStar® system if you have an active OnStar® subscription. For more information see *OnStar® System on page 2-40*.

Remote Keyless Entry System

Your keyless entry system operates on a radio frequency subject to Federal Communications Commission (FCC) Rules and with Industry Canada.

This device complies with Part 15 of the FCC Rules. Operation is subject to the following two conditions:

1. This device may not cause interference, and
2. This device must accept any interference received, including interference that may cause undesired operation of the device.

This device complies with RSS-210 of Industry Canada. Operation is subject to the following two conditions:

1. This device may not cause interference, and
2. This device must accept any interference received, including interference that may cause undesired operation of the device.

Changes or modifications to this system by other than an authorized service facility could void authorization to use this equipment.

Downloaded from www.Manualslib.com manuals search engine

At times you may notice a decrease in range. This is normal for any remote keyless entry system. If the transmitter does not work or if you have to stand closer to your vehicle for the transmitter to work, try this:

- Check the distance. You may be too far from your vehicle. You may need to stand closer during rainy or snowy weather.
- Check the location. Other vehicles or objects may be blocking the signal. Take a few steps to the left or right, hold the transmitter higher, and try again.
- Check to determine if battery replacement is necessary. See “Battery Replacement” under *Remote Keyless Entry System Operation on page 2-4*.
- If you are still having trouble, see your dealer or a qualified technician for service.

Remote Keyless Entry System Operation

You can lock and unlock your doors from about 3 feet (1 m) up to 100 feet (30 m) away using the remote keyless entry transmitter supplied with your vehicle.

(Unlock): Press this button once to unlock the driver’s door. The interior lamps will come on. Pressing unlock again within three seconds will cause the remaining doors to unlock.

You can choose different feedback options for each press of the unlock button. See *DIC Operation and Displays on page 3-44* for more information.

Downloaded from www.Manualslib.com manuals search engine

(Lock): Press this button once to lock all of the doors. Pressing lock again within three seconds may cause the horn to chirp for lock confirmation. You can choose different feedback options for each press of the lock button. See *DIC Operation and Displays on page 3-44* for more information.

(Panic): Press this button to sound the horn and flash the headlamps and taillamps for up to 30 seconds. Panic can be turned off by pressing the button again, by waiting for 30 seconds, or by starting the vehicle.

Matching Transmitter(s) to Your Vehicle

Each remote keyless entry transmitter is coded to prevent another transmitter from unlocking your vehicle. If a transmitter is lost or stolen, a replacement can be purchased through your dealer. Remember to bring any remaining transmitters with you when you go to your dealer. When the dealer matches the replacement transmitter to your vehicle, any remaining transmitters must also be matched. Once your dealer has coded the new transmitter, the lost transmitter will not unlock your vehicle. Each vehicle can have a maximum of four transmitters matched to it.

Battery Replacement

Under normal use, the battery in your remote keyless entry transmitter should last about two years.

You can tell the battery is weak if the transmitter won't work at the normal range in any location. If you have to get close to your vehicle before the transmitter works, it's probably time to change the battery.

Notice: **When replacing the battery, use care not to touch any of the circuitry. Static from your body transferred to these surfaces may damage the transmitter.**

Downloaded from www.Manualslib.com manuals search engine

To replace the battery in the keyless entry transmitter, do the following:

1. Insert a thin object, such as a coin, in the slot between the covers of the transmitter housing near the key ring hole. Remove the bottom by twisting the coin.
2. Remove and replace the battery with a three-volt CR2032 or equivalent battery, positive (+) side up.
3. Align the covers and snap them together.
4. Resynchronize the transmitter. See “Resynchronization” next.
5. Check the operation of the transmitter.

Resynchronization

Resynchronization may be necessary due to the security method used by this system. The transmitter does not send the same signal twice to the receiver. The receiver will not respond to a signal that has been sent previously. This prevents anyone from recording and playing back the signal from the transmitter.

To resynchronize your transmitter, stand close to your vehicle and press and hold the lock and unlock buttons on the transmitter at the same time for 15 seconds. The door locks should cycle to confirm synchronization. If the locks do not cycle, see your dealer for service.

Downloaded from www.Manualslib.com manuals search engine

Doors and Locks

Door Locks

⚠ CAUTION:

Unlocked doors can be dangerous.

- **Passengers — especially children — can easily open the doors and fall out of a moving vehicle. When a door is locked, the handle will not open it. You increase the chance of being thrown out of the vehicle in a crash if the doors are not locked. So, wear safety belts properly and lock the doors whenever you drive.**
- **Young children who get into unlocked vehicles may be unable to get out. A child can be overcome by extreme heat and can suffer permanent injuries or even death from heat stroke. Always lock your vehicle whenever you leave it.**
- **Outsiders can easily enter through an unlocked door when you slow down or stop your vehicle. Locking your doors can help prevent this from happening.**

There are several ways to lock and unlock your vehicle.

To unlock the door from the outside, use the keyless entry system or the key.

To unlock or lock the door from the inside, slide the manual lever forward or rearward.

Downloaded from www.Manualslib.com manuals search engine

Power Door Locks

The power door lock switches are located on the driver's and front passenger's armrests.

(Lock): Remove the ignition key and press the lock symbol to lock all of the doors.

If the delayed locking feature is on, the doors will not lock until five seconds after the last door is closed. Press the lock symbol twice to override this feature and lock all of the doors immediately. See *Delayed Locking on page 2-9* for more information.

(Unlock): To unlock the doors, press the unlock symbol.

Cargo Area Door Lock Switch

Your vehicle may have a power lock switch in the cargo area on the passenger side of the liftgate opening trim.

This switch operates identically to the power door lock switches on the driver's and front passenger's armrests.

Downloaded from www.Manualslib.com manuals search engine

Delayed Locking

When locking the doors with the power lock switch or the keyless entry transmitter and a door or the liftgate (if equipped) is open, the delayed locking feature will delay locking the doors until five seconds after the last door is closed. You will hear three chimes to signal that the delayed locking feature is in use.

Pressing the power lock switch or the lock button on the keyless entry transmitter twice will override the delayed locking feature and immediately lock all the doors.

You can turn the delayed locking feature off or back on again by doing the following:

1. Press and hold the power door lock switch in the lock position.
2. Press unlock twice on the remote keyless entry transmitter.

This feature will not operate if the key is in the ignition.

You can also program this feature using the DIC. See “Delayed Locking” under *DIC Operation and Displays on page 3-44*.

Programmable Automatic Door Locks

Your vehicle is equipped with an automatic lock/unlock feature which enables you to program your vehicle’s power door locks. You can program this feature through the Driver Information Center (DIC), or by the following method. See *DIC Operation and Displays on page 3-44* for more information on DIC programming.

Programmable Locking Feature

The following is the list of available programming options:

Mode 1: All doors lock when the transmission is shifted out of Park.

Mode 2: All doors lock when the vehicle speed is greater than 8 mph (13 km/h).

Mode 3: No automatic door locking.

Downloaded from www.Manualslib.com manuals search engine

The following instructions tell you how to change the automatic door lock mode. Choose one of the three programming options listed above before entering the program mode. To enter the program mode, do the following:

1. Begin with the ignition off. Then pull the turn signal/multifunction lever toward you and hold it there while you perform the next step.
2. Turn the key to RUN then back to LOCK twice. Then, with the key in LOCK, release the turn signal/multifunction lever. Once you do this, the doors will lock and unlock, the horn will chirp twice, and a 30-second timer will begin. You are now ready to program the automatic door lock feature.
3. Press the lock side of the power lock switch once. You will hear one, two, or three chimes. The number of chimes tells you which lock mode is currently selected. Continue to press the door lock switch until the number of chimes that you hear matches the number of the mode that you want. If you take longer than 30 seconds, the locks will automatically lock and unlock and the horn will chirp twice to indicate that you have left the program mode. If this occurs, you can repeat the procedure beginning with Step 1 to re-enter the programming mode.

You can exit the program mode any time by turning the ignition to RUN (the doors will automatically lock and unlock and the horn will chirp twice to indicate that you are leaving the program mode). If the lock/unlock switches are not pressed while in the programming mode, the current automatic settings will not be modified.

Programmable Unlocking Feature

The following is the list of available programming options:

Mode 1: Driver's door unlocks when the transmission is shifted into PARK (P).

Mode 2: All doors unlock when the transmission is shifted into PARK (P).

Mode 3: All doors unlock when the key is removed from the ignition.

Mode 4: No automatic door unlock.

Downloaded from www.Manualslib.com manuals search engine

The following instructions tell you how to change the automatic door unlock mode. Choose one of the four programming options listed above before entering the program mode. To enter the program mode, do the following:

1. Begin with the ignition off. Then pull the turn signal/multifunction lever toward you and hold it there while you perform the next step.
2. Turn the key to RUN and LOCK twice. Then, with the key in LOCK, release the turn signal/multifunction lever. Once you do this, the doors will lock and unlock, the horn will chirp twice, and a 30-second timer will begin. You are now ready to program the automatic door unlock feature.
3. Press the unlock side of the power lock switch once. You will hear one, two, three, or four chimes. The number of chimes tells you which unlock mode is currently selected. Continue to press the door unlock switch until the number of chimes that you hear matches the number of the mode that you want. If you take longer than 30 seconds, the locks will automatically lock and unlock and the horn will chirp twice to indicate that you have left the program mode. If this occurs, you can repeat the procedure beginning with Step 1 to re-enter the programming mode.

You can exit the program mode any time by turning the ignition to RUN (the doors will automatically lock and unlock and the horn will chirp twice to indicate that you are leaving the program mode). If the lock/unlock switches are not pressed while in the programming mode, the current automatic settings will not be modified.

Rear Door Security Locks

With this feature, you can lock the rear doors so they can't be opened from the inside by passengers.

This feature is located on the inside edge of the rear doors.

Downloaded from www.Manualslib.com manuals search engine

To use one of the locks, do the following:

1. Open one of the rear doors.

2. Turn the lock counterclockwise with your ignition key to engage the rear door security lock.

3. Close the door.
4. Do the same thing to the other rear door.

The rear doors or your vehicle cannot be opened from the inside when this feature is in use. If you want to open the rear door while the security lock is engaged, unlock the door and open the door from the outside.

To disengage the child security lock feature, turn the lock clockwise with your ignition key.

Lockout Protection

This feature protects you from locking your key in the vehicle when the key is in the ignition and a door is open.

If the power lock switch is pressed when a door is open and the key is in the ignition, all of the doors will lock and then the driver's door will unlock.

Downloaded from www.Manualslib.com manuals search engine

Liftgate

⚠ CAUTION:

It can be dangerous to drive with the liftgate open because carbon monoxide (CO) gas can come into your vehicle. You can not see or smell CO. It can cause unconsciousness and even death. If you must drive with the liftgate open or if electrical wiring or other cable connections must pass through the seal between the body and the liftgate:

- **Make sure all other windows are shut.**
- **Turn the fan on your heating or cooling system to its highest speed and select the control setting that will force outside air into your vehicle. See *Automatic Climate Control System on page 3-19*.**
- **If you have air outlets on or under the instrument panel, open them all the way. See *Engine Exhaust on page 2-33*.**

To unlock the liftgate, press the unlock button on any of the power door lock switches or the remote keyless entry transmitter.

Open the liftgate by pulling the handle located in the center of the door.

To lock the liftgate, press the lock button on any of the power door lock switches or the remote keyless entry transmitter.

Downloaded from www.Manualslib.com manuals search engine

Windows

⚠ CAUTION:

Leaving children, helpless adults, or pets in a vehicle with the windows closed is dangerous. They can be overcome by the extreme heat and suffer permanent injuries or even death from heat stroke. Never leave a child, a helpless adult, or a pet alone in a vehicle, especially with the windows closed in warm or hot weather.

Downloaded from www.Manualslib.com manuals search engine

Power Windows

The controls for the power windows are located on the armrest on each of the side doors. The switches operate the windows when the ignition is in RUN, ACCESSORY or when Retained Accessory Power (RAP) is active. See “Retained Accessory Power” under *Ignition Positions on page 2-19*.

The driver’s door also has a switch for each of the passenger’s windows.

Press the top of the switch to lower the window. Pull up the top of the switch to raise the window.

Express-Down Windows

The driver’s and front passenger’s window switches have an express-down feature that allows you to lower the window without continuously pressing the switch. Press the top of the window switch down fully to activate the feature. Lightly tap the switch to open the window slightly. The express-down feature can be interrupted at any time by pulling up on the top of the switch.

Lockout Switch

Press the lockout switch to prevent passengers from operating the power windows from their switches. A light in the lockout switch will come on to show that the switch has been activated. Press the lockout switch again to return to normal operation.

Downloaded from www.Manualslib.com manuals search engine

Sun Visors

To block out glare, you can swing down the visors. You can also swing them out to help block glare at the front and side windows.

Illuminated Visor Vanity Mirrors

Pull the sunvisor down and lift the mirror cover to turn on the lamps.

Theft-Deterrent Systems

Vehicle theft is big business, especially in some cities. Although your vehicle has a number of theft-deterrent features, we know that nothing we put on it can make it impossible to steal.

Content Theft-Deterrent

Your vehicle is equipped with a content theft-deterrent alarm system.

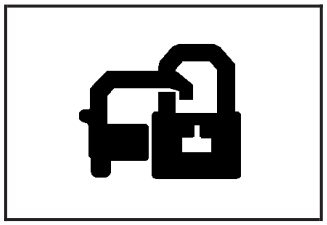

With this system, the security light in the instrument panel cluster will flash as you open the door if your ignition is off.

This light reminds you to activate the theft-deterrent system. Here's how to do it:

1. Open the door.
2. Lock the door with the power door lock switch or the remote keyless entry transmitter. The security light should come on and stay on.
3. Close all doors. The security light should go off after about 30 seconds. The alarm is not armed until the security light goes off.

If a locked door is opened without the key or the remote keyless entry transmitter, the alarm will go off. The headlamps and parking lamps will flash for two minutes, and the horn will sound for 30 seconds, then will turn off to save the battery power. You can choose different feedback options for the alarm. See *Driver Information Center (DIC) on page 3-44*.

Downloaded from www.Manualslib.com manuals search engine

Remember, the theft-deterrent system won't activate if you lock the doors with a key or use the manual door lock. It activates only if you use a power door lock switch with the door open, or with the remote keyless entry transmitter. You should also remember that you can start your vehicle with the correct ignition key if the alarm has been set off.

Here's how to avoid setting off the alarm by accident:

- If you don't want to activate the theft-deterrent system, the vehicle should be locked with the door key *after* the doors are closed.
- Always unlock a door with a key, or use the remote keyless entry transmitter. Unlocking a door any other way will set off the alarm.

If you set off the alarm by accident, unlock any door with the key. You can also turn off the alarm by pressing unlock on the remote keyless entry transmitter. The alarm won't stop if you try to unlock a door any other way.

Testing the Alarm

The alarm can be tested by following these steps:

1. From inside the vehicle, lower the driver's window and open the driver's door.
2. Activate the system by locking the doors with the power door lock switch while the door is open, or with the remote keyless entry transmitter.
3. Get out of the vehicle, close the door and wait for the security light to go out.
4. Then reach in through the window, unlock the door with the manual door lock and open the door. This should set off the alarm.

While the alarm is set, the power door unlock switch is not operational.

If the alarm does not sound when it should but the headlamps flash, check to see if the horn works. The horn fuse may be blown. To replace the fuse, see *Fuses and Circuit Breakers on page 5-102*.

If the alarm does not sound or the headlamps do not flash, the vehicle should be serviced by your dealer.

Downloaded from www.Manualslib.com manuals search engine

Passlock®

Your vehicle is equipped with the Passlock® theft-deterrent system.

Passlock® is a passive theft-deterrent system. Passlock® enables fuel if the ignition lock cylinder is turned with a valid key. If a correct key is not used or the ignition lock cylinder is tampered with, the fuel system is disabled and the vehicle will not start.

During normal operation, the security light will turn off approximately five seconds after the key is turned to RUN.

If the engine stalls and the security light flashes, wait about 10 minutes until the light stops flashing before trying to restart the engine. Remember to release the key from START as soon as the engine starts.

If the engine does not start after three tries, the vehicle needs service.

If the engine is running and the security light comes on, you will be able to restart the engine if you turn the engine off. However, your Passlock® system is not working properly and must be serviced by your dealer. Your vehicle is not protected by Passlock® at this time. You may also want to check the fuse. See *Fuses and Circuit Breakers on page 5-102*. See your dealer for service.

In an emergency, call the Roadside Assistance Center. See *Roadside Assistance Program on page 7-5*.

Starting and Operating Your Vehicle

New Vehicle Break-In

Notice: **Your vehicle does not need an elaborate "break-in." But it will perform better in the long run if you follow these guidelines:**

- **Keep your speed at 55 mph (88 km/h) or less for the first 500 miles (805 km).**
- **Do not drive at any one speed — fast or slow — for the first 500 miles (805 km). Do not make full-throttle starts.**
- **Avoid making hard stops for the first 200 miles (322 km) or so. During this time your new brake linings are not yet broken in. Hard stops with new linings can mean premature wear and earlier replacement. Follow this breaking-in guideline every time you get new brake linings.**
- **Do not tow a trailer during break-in. See *Towing a Trailer on page 4-75* for more information.**

Downloaded from www.Manualslib.com manuals search engine

Ignition Positions

With your key in the ignition switch you can turn it to four different positions.

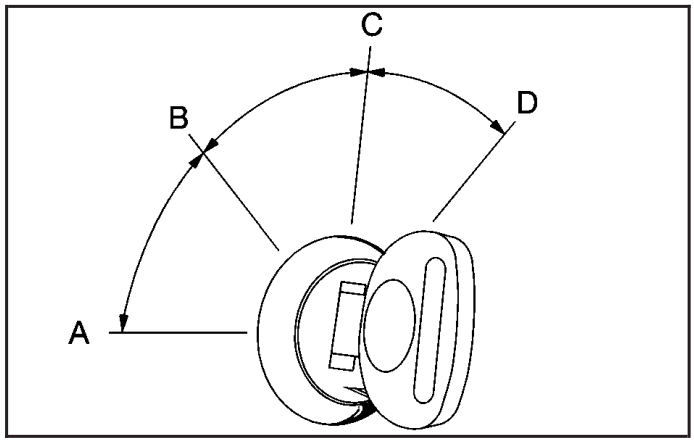

A (LOCK): This position locks your ignition and transmission. It's a theft-deterrent feature. You will only be able to remove your key when the ignition is turned to LOCK.

Notice: **If your key seems stuck in LOCK and you can not turn it, be sure you are using the correct key; if so, is it all the way in? Turn the key only with your hand. Using a tool to force it could break the key or the ignition switch. If none of these works, then your vehicle needs service.**

B (ACCESSORY): This position allows you to use things like the radio, power windows and the windshield wipers when the engine is off.

C (RUN): This position is for driving.

D (START): This position starts your engine.

Retained Accessory Power (RAP)

The Retained Accessory Power (RAP) feature will allow certain features on your vehicle to continue to work for up to 10 minutes after the ignition key is turned to LOCK.

Downloaded from www.Manualslib.com manuals search engine

Starting Your Engine

Move your shift lever to PARK (P) or NEUTRAL (N). Your engine won't start in any other position – that's a safety feature. To restart when you're already moving, use NEUTRAL (N) only.

Notice: **Do not try to shift to PARK (P) if your vehicle is moving. If you do, you could damage the transmission. Shift to PARK (P) only when your vehicle is stopped.**

1. With your foot off the accelerator pedal, turn the ignition key to START. When the engine starts, let go of the key. The idle speed will go down as your engine gets warm.

Notice: **Holding your key in START for longer than 15 seconds at a time will cause your battery to be drained much sooner. And the excessive heat can damage your starter motor. Wait about 15 seconds between each try to help avoid draining your battery or damaging your starter.**

2. If it doesn't start within 10 seconds, push the accelerator pedal all the way to the floor, while you hold the ignition key in START. When the engine starts, let go of the key and let up on the accelerator pedal. Wait about 15 seconds between each try.

When starting your engine in very cold weather (below 0°F or –18°C), do this:

1. With your foot off the accelerator pedal, turn the ignition key to START and hold it there up to 15 seconds. When the engine starts, let go of the key.
2. If your engine still won't start (or starts but then stops), it could be flooded with too much gasoline. Try pushing your accelerator pedal all the way to the floor and holding it there as you hold the key in START for about three seconds. When the engine starts, let go of the key and accelerator. If the vehicle starts briefly but then stops again, do the same thing, but this time keep the pedal down for five or six seconds. This clears the extra gasoline from the engine.

Notice: **Your engine is designed to work with the electronics in your vehicle. If you add electrical parts or accessories, you could change the way the engine operates. Before adding electrical equipment, check with your dealer. If you do not, your engine might not perform properly.**

Downloaded from www.Manualslib.com manuals search engine

Engine Coolant Heater

Your vehicle may be equipped with an engine coolant heater.

In very cold weather, 0°F (–18°C) or colder, the engine coolant heater can help. You'll get easier starting and better fuel economy during engine warm-up.

Usually, the coolant heater should be plugged in a minimum of four hours prior to starting your vehicle. At temperatures above 32°F (0°C), use of the coolant heater is not required.

To Use the Engine Coolant Heater

1. Turn off the engine.

2. Locate the electrical cord near the front recovery loop on the driver's side of the vehicle.

3. Plug it into a normal, grounded 110-volt AC outlet.

⚠ CAUTION:

Plugging the cord into an ungrounded outlet could cause an electrical shock. Also, the wrong kind of extension cord could overheat and cause a fire. You could be seriously injured. Plug the cord into a properly grounded three-prong 110-volt AC outlet. If the cord will not reach, use a heavy-duty three-prong extension cord rated for at least 15 amps.

4. Before starting the engine, be sure to unplug and store the cord as it was before to keep it away from moving engine parts. If you don't, it could be damaged.

How long should you keep the coolant heater plugged in? The answer depends on the outside temperature, the kind of oil you have, and some other things. Instead of trying to list everything here, we ask that you contact your dealer in the area where you'll be parking your vehicle. The dealer can give you the best advice for that particular area.

Downloaded from www.Manualslib.com manuals search engine

Automatic Transmission Operation

Your vehicle is equipped with an automatic transmission and features an electronic shift position indicator located within the instrument panel cluster.

There are several different positions for your shift lever.

PARK (P): This position locks your drive wheels. It's the best position to use when you start your engine because your vehicle can't move easily.

⚠ CAUTION:

It is dangerous to get out of your vehicle if the shift lever is not fully in PARK (P) with the parking brake firmly set. Your vehicle can roll.

Do not leave your vehicle when the engine is running unless you have to. If you have left the engine running, the vehicle can move

CAUTION: (Continued)

CAUTION: (Continued)

suddenly. You or others could be injured. To be sure your vehicle will not move, even when you are on fairly level ground, always set your parking brake and move the shift lever to PARK (P). See *Shifting Into Park (P) on page 2-30*. If you are pulling a trailer, see *Towing a Trailer on page 4-75*.

⚠ CAUTION:

Your vehicle will be free to roll — even if your shift lever is in PARK (P) — if your transfer case is in NEUTRAL. So, be sure the transfer case is in a drive gear — not in NEUTRAL. See *Shifting Into Park (P) on page 2-30*.

Downloaded from www.Manualslib.com manuals search engine

REVERSE (R): Use this gear to back up.

Notice: **Shifting to REVERSE (R) while your vehicle is moving forward could damage the transmission. The repairs would not be covered by your warranty. Shift to REVERSE (R) only after your vehicle is stopped.**

To rock your vehicle back and forth to get out of snow, ice or sand without damaging your transmission, *see If You Are Stuck: In Sand, Mud, Ice or Snow on page 4-56*.

NEUTRAL (N): In this position, your engine doesn't connect with the drive wheels. To restart when you're already moving, use NEUTRAL (N) only.

⚠ CAUTION:

Shifting into a drive gear while your engine is running at high speed is dangerous. Unless your foot is firmly on the brake pedal, your vehicle could move very rapidly. You could lose control and hit people or objects. Do not shift into a drive gear while your engine is running at high speed.

Notice: **Shifting out of PARK (P) or NEUTRAL (N) with the engine running at high speed may damage the transmission. The repairs would not be covered by your warranty. Be sure the engine is not running at high speed when shifting your vehicle.**

Downloaded from www.Manualslib.com manuals search engine

DRIVE (D): This position is for normal driving. If you need more power for passing, and you're:

- Going less than about 35 mph (55 km/h), push your accelerator pedal about halfway down.
- Going about 35 mph (55 km/h) or more, push the accelerator all the way down.

You'll shift down to the next gear and have more power.

DRIVE (D) can be used when towing a trailer, carrying a heavy load, driving on steep hills or for off-road driving. You may want to shift the transmission to THIRD (3) or, if necessary, a lower gear selection if the transmission shifts too often.

THIRD (3): This position is also used for normal driving, however it offers more power and lower fuel economy than DRIVE (D).

SECOND (2): This position gives you more power but lower fuel economy. You can use SECOND (2) on hills. It can help control your speed as you go down steep mountain roads, but then you would also want to use your brakes off and on.

If you manually select SECOND (2), the transmission will drive in second gear. You may use this feature for reducing the speed of the rear wheels when you are trying to start your vehicle from a stop on slippery road surfaces. Once the vehicle is moving, shift into DRIVE (D).

FIRST (1): This position gives you even more power, but lower fuel economy than SECOND (2). You can use it on very steep hills, or in deep snow or mud. If the shift lever is put in FIRST (1) while the vehicle is moving forward, the transmission won't shift into first gear until the vehicle is going slowly enough.

Notice: **Spinning the tires or holding the vehicle in one place on a hill using only the accelerator pedal may damage the transmission. If you are stuck, do not spin the tires. When stopping on a hill, use the brakes to hold the vehicle in place.**

On cold days, approximately 32°F (0°C) or colder, your transmission is designed to shift differently until the engine reaches normal operating temperature. This is intended to improve heater performance.

Downloaded from www.Manualslib.com manuals search engine

Tow/Haul Mode

Your vehicle is equipped with a tow/haul mode. The button is located on the instrument panel to the right of the steering wheel.

You can use this feature to assist when towing or hauling a heavy load. See “Tow/Haul Mode” under *Towing a Trailer on page 4-75* for more information.

All-Wheel Drive

All-wheel drive sends your engine’s driving power to all four wheels for extra traction. To get the most satisfaction out of all-wheel drive, you must be familiar with its operation.

Notice: **Driving on pavement in 4HI Lock or 4LO Lock for extended periods may cause premature wear on your vehicle’s powertrain and tires. Do not drive in 4HI Lock or 4LO Lock on pavement for extended periods.**

Transfer Case Buttons

The transfer case buttons are located to the right of the instrument panel cluster. Use these switches to shift into and out of the different all-wheel drive modes.

You can choose between four modes:

(4HI): This setting is used for driving in most street and highway situations. You can also use this setting for light or variable off-road conditions.

(4HI Lock): Use this mode when you need extra traction in most off-road situations such as sand, mud, snow or level, rocky trails.

Downloaded from www.Manualslib.com manuals search engine

(4LO Lock): This mode delivers extra torque to all four wheels and is used for extreme off-road conditions. You might choose 4LO Lock if you are driving off-road, deep sand, mud, or snow and climbing or descending steep hills.

When in this mode you can also choose to lock the rear axle for additional traction in extreme off-road situations. See *Locking Rear Axle on page 4-11*.

Notice: **Operating your vehicle in 4LO Lock above 50 mph (80 km/h) for any extended period of time could cause damage to the transfer case. Do not operate your vehicle in 4LO Lock above 50 mph (80 km/h) for extended periods.**

⚠ CAUTION:

Shifting the transfer case to NEUTRAL can cause your vehicle to roll even if the transmission is in PARK (P). You or someone else could be seriously injured. Be sure to set the parking brake before placing the transfer case in NEUTRAL. See *Parking Brake on page 2-29*.

N (NEUTRAL): Shift the vehicle's transfer case to NEUTRAL only when towing your vehicle. See *Recreational Vehicle Towing on page 4-65* or *Towing Your Vehicle on page 4-65* for more information.

Indicator lights in the buttons show which mode you are in. The indicator lights will come on briefly when you turn on the ignition and one will stay on. If the lights do not come on, you should take your vehicle to your dealer for service. An indicator light will flash while shifting the transfer case. It will remain illuminated when the shift is complete. If for some reason the transfer case cannot make a requested shift, it will return to the last chosen setting.

If the SERVICE 4WD message stays on, you should take your vehicle to your dealer for service. See "Service 4WD message" under *Driver Information Center (DIC) on page 3-44*.

Downloaded from www.Manualslib.com manuals search engine

Shifting into 4HI or 4HI Lock

With the vehicle traveling less than 40 mph (64 km/h), press and release the 4HI or 4HI Lock button. The indicator light will flash while shifting. It will remain illuminated when the shift is complete.

It may be necessary to drive backwards for a short distance of 25 feet (7.5 m) to get the lock feature to disengage.

Shifting into 4LO Lock

To shift into 4LO Lock, the ignition must be in RUN and the vehicle must be stopped or moving less than 2 mph (3.2 km/h) with the transmission in NEUTRAL (N). The preferred method for shifting into 4LO is to have your vehicle moving 1 to 2 mph (1.6 to 3.2 km/h). Press and release the 4LO Lock button. You must wait for the 4LO Lock indicator light to stop flashing and remain illuminated before shifting your transmission in gear.

Notice: **Shifting the transmission into gear before the indicator light stops flashing could cause damage to the transfer case. Always wait until the indicator lights stops flashing before putting the transmission back in gear.**

It is typical for your vehicle to exhibit significant engagement noise and bump when shifting between 4LO and 4HI ranges or from NEUTRAL with the engine running.

If the 4LO Lock button is pressed when your vehicle is in gear and/or moving, the 4LO Lock indicator light will flash for 15 seconds and not complete the shift unless your vehicle is moving less than 2 mph (3.2 km/h) and the transmission is in NEUTRAL (N). After 15 seconds the transfer case will return to the setting last chosen.

Shifting Out of 4LO Lock

To shift from 4LO Lock to 4HI or 4HI Lock, your vehicle must be stopped or moving less than 2 mph (3.2 km/h) with the transmission in NEUTRAL (N) and the ignition in RUN. The preferred method for shifting out of 4LO Lock is to have your vehicle moving 1 to 2 mph (1.6 to 3.2 km/h). Press and release the 4HI or 4HI Lock button. You must wait for the 4HI or 4HI Lock indicator light to stop flashing and remain illuminated before shifting your transmission into gear.

It is typical for your vehicle to exhibit significant engagement noise and bump when shifting between 4LO and 4HI ranges or from NEUTRAL with the engine running.

Downloaded from www.Manualslib.com manuals search engine

If the 4HI or 4HI Lock button is pressed when your vehicle is in gear and/or moving, the 4HI or 4HI Lock indicator light will flash for 15 seconds but will not complete the shift unless your vehicle is moving less than 2 mph (3.2 km/h) and the transmission is in NEUTRAL (N).

Notice: **Shifting the transmission into gear before the indicator light stops flashing could cause damage to the transfer case. Always wait until the indicator lights stops flashing before putting the transmission back in gear.**

Shifting into NEUTRAL

To shift the transfer case to NEUTRAL, do the following:

1. Make sure the vehicle is parked so that it will not roll.
2. Set the parking brake.
3. Start the vehicle or turn the ignition to RUN.
4. Connect the vehicle to the towing vehicle.
5. Put the transmission in NEUTRAL (N).
6. Shift the transfer case to 4HI.
7. Simultaneously press and hold the 4HI and 4LO Lock buttons for 10 seconds. The red NEUTRAL light will come on when the transfer case shift to NEUTRAL is complete.
8. Turn the ignition to LOCK.
9. Place the transmission shift lever in PARK (P).
10. Release the parking brake prior to towing.

Shifting Out of NEUTRAL

To shift the transfer case out of NEUTRAL, do the following:

1. Set the parking brake and apply the regular brake pedal.
2. Shift the transmission to NEUTRAL (N) and turn the ignition to RUN with the engine off.
3. Press the button for the desired transfer case shift position (4HI, 4HI Lock or 4LO Lock).
4. After the transfer case has shifted out of NEUTRAL the red light will go out.
5. You may start the engine and shift the transmission to the desired position.

Notice: **Shifting the transmission into gear before the indicator light stops flashing could cause damage to the transfer case. Always wait until the indicator lights stops flashing before putting the transmission back in gear.**

Downloaded from www.Manualslib.com manuals search engine

Parking Brake

To set the parking brake, hold the regular brake pedal down with your right foot. Push down the parking brake pedal with your left foot.

A chime will activate and the warning light will flash when the parking brake is applied and the vehicle is moving at least 3 mph (5 km/h) for at least three seconds.

To release the parking brake, hold the regular brake pedal down. Pull the bottom edge of the lever, located above the parking brake pedal, with the parking brake symbol, to release the parking brake.

If the ignition is on when the parking brake is released, the brake system warning light will go off.

Notice: **Driving with the parking brake on can overheat the brake system and cause premature wear or damage to brake system parts. Verify that the parking brake is fully released and the brake warning light is off before driving.**

If you are towing a trailer and are parking on any hill, see *Towing a Trailer on page 4-75*.

Downloaded from www.Manualslib.com manuals search engine

Shifting Into Park (P)

⚠ CAUTION:

It can be dangerous to get out of your vehicle if the shift lever is not fully in PARK (P) with the parking brake firmly set. Your vehicle can roll. If you have left the engine running, the vehicle can move suddenly. You or others could be injured. To be sure your vehicle will not move, even when you are on fairly level ground, use the steps that follow. If you are pulling a trailer, see *Towing a Trailer on page 4-75*.

1. Hold the brake pedal down with your right foot and set the parking brake.
2. Move the shift lever into PARK (P) like this:

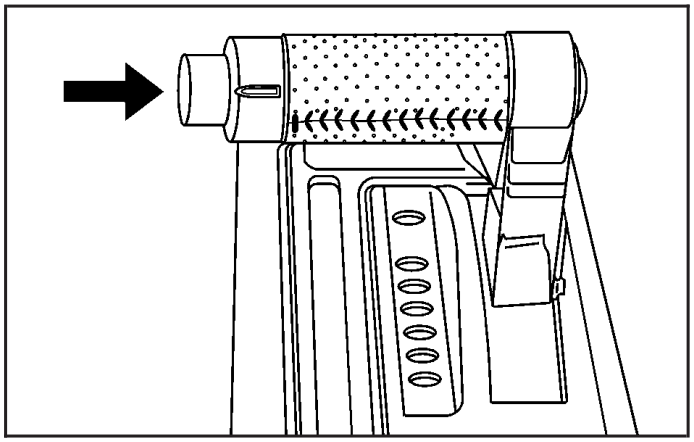

- Press the button on the end of the shift lever.

Downloaded from www.Manualslib.com manuals search engine

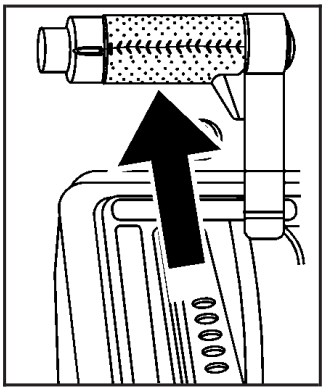

3. While still pressing the button, move the lever forward as far as it will go. Let go of the button and the lever.

4. Turn the ignition key to LOCK.
5. Remove the key and take it with you. If you can leave your vehicle with the ignition key in your hand, your vehicle is in PARK (P).

Leaving Your Vehicle With the Engine Running

⚠ CAUTION:

It can be dangerous to leave your vehicle with the engine running. Your vehicle could move suddenly if the shift lever is not fully in PARK (P) with the parking brake firmly set. And, if you leave the vehicle with the engine running, it could overheat and even catch fire. You or others could be injured. Do not leave your vehicle with the engine running.

If you have to leave your vehicle with the engine running, be sure your vehicle is in PARK (P) and the parking brake is firmly set before you leave it. After you move the shift lever into PARK (P), hold the regular brake pedal down. Then, see if you can move the shift lever away from PARK (P) without first pulling it toward you. If you can, it means that the shift lever wasn't fully locked into PARK (P).

Downloaded from www.Manualslib.com manuals search engine

Torque Lock

If you are parking on a hill and you don't shift your vehicle into PARK (P) properly, the weight of the vehicle may put too much force on the parking pawl in the transmission. You may find it difficult to pull the shift lever out of PARK (P). This is called torque lock.
To prevent torque lock, set the parking brake and then shift into PARK (P) properly before you leave the driver's seat. To find out how, see *Shifting Into Park (P) on page 2-30*.

When you are ready to drive, move the shift lever out of PARK (P) before you release the parking brake.

If torque lock does occur, you may need to have another vehicle push yours a little uphill to take some of the pressure from the parking pawl in the transmission, so you can pull the shift lever out of PARK (P).

Shifting Out of Park (P)

Your vehicle has an automatic transmission shift lock control system. You have to fully apply your regular brakes before you can shift from PARK (P) when the ignition is in RUN. See *Automatic Transmission Operation on page 2-22*.

Parking Over Things That Burn

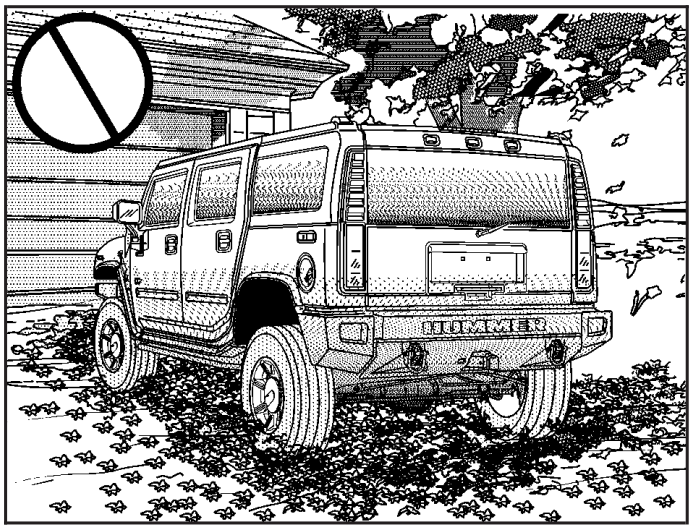

⚠ CAUTION:

Things that can burn could touch hot exhaust parts under your vehicle and ignite. Do not park over papers, leaves, dry grass or other things that can burn.

Downloaded from www.Manualslib.com manuals search engine

Engine Exhaust

⚠ CAUTION:

Engine exhaust can kill. It contains the gas carbon monoxide (CO), which you can not see or smell. It can cause unconsciousness and death.

You might have exhaust coming in if:

- **Your exhaust system sounds strange or different.**
- **Your vehicle gets rusty underneath.**
- **Your vehicle was damaged in a collision.**
- **Your vehicle was damaged when driving over high points on the road or over road debris.**
- **Repairs were not done correctly.**
- **Your vehicle or exhaust system had been modified improperly.**

If you ever suspect exhaust is coming into your vehicle:

- **Drive it only with all the windows down to blow out any CO; and**
- **Have your vehicle fixed immediately.**

Running Your Engine While You Are Parked

It is better not to park with the engine running. But if you ever have to, here are some things to know.

⚠ CAUTION:

Idling the engine with the climate control system off could allow dangerous exhaust into your vehicle. See the earlier Caution under *Engine Exhaust on page 2-33*.

Also, idling in a closed-in place can let deadly carbon monoxide (CO) into your vehicle even if the climate control fan is at the highest setting. One place this can happen is a garage. Exhaust — with CO — can come in easily. NEVER park in a garage with the engine running.

Another closed-in place can be a blizzard. See *Winter Driving on page 4-52*.

Downloaded from www.Manualslib.com manuals search engine

⚠ CAUTION:

It can be dangerous to get out of your vehicle if the shift lever is not fully in PARK (P) with the parking brake firmly set. Your vehicle can roll. Do not leave your vehicle when the engine is running unless you have to. If you have left the engine running, the vehicle can move suddenly. You or others could be injured. To be sure your vehicle will not move, even when you are on fairly level ground, always set your parking brake and move the shift lever to PARK (P).

⚠ CAUTION:

All-wheel drive vehicles with the transfer case in NEUTRAL will allow the vehicle to roll, even if your shift lever is in PARK (P). So, be sure the transfer case is in a drive gear — not in NEUTRAL. Always set your parking brake.

Follow the proper steps to be sure your vehicle will not move. See *Shifting Into Park (P) on page 2-30*.

If you are pulling a trailer, see *Towing a Trailer on page 4-75*.

Mirrors

Automatic Dimming Rearview Mirror with Compass and Temperature Display

The automatic dimming mirror will automatically dim to the proper level to minimize glare from lights behind you after dark.

The mirror also includes a display in the upper right corner of the mirror. The compass reading and the outside temperature will both appear in the display at the same time. The dual display can be turned on or off by briefly pressing either the TEMP or the COMP button.

Downloaded from www.Manualslib.com manuals search engine

Temperature Display

The temperature can be displayed by pressing the TEMP button. Press the TEMP button once briefly to toggle the temperature reading on and off. To alternate the temperature reading between Fahrenheit and Celsius, press and hold the TEMP button for approximately four seconds until the display blinks °F and °C. Press and release the TEMP button to toggle between the Fahrenheit and Celsius readings. After about four seconds of inactivity, the display will stop blinking and display the last selection made.

Press and release the TEMP button to toggle the temperature display between Fahrenheit or Celsius.

If an abnormal temperature reading is displayed for an extended period of time (30 minutes), see your dealer. Under certain circumstances, a delay in updating the temperature is normal.

Automatic Dimming Mirror Operation

Press and hold the TEMP button for about eight seconds to turn the automatic dimming feature on or off. The indicator light to the right of the TEMP button will turn on or off to show you when the automatic dimming feature is activated. Once the mirror is turned off, it will remain off until it is turned back on, or until the vehicle is restarted.

Compass Operation

Press the COMP button once briefly to turn the compass on or off.

When the ignition and the compass feature are on, the compass will show two character boxes for about two seconds. After two seconds, the mirror will display the compass heading.

Compass Calibration

The compass may need calibration if one of the following occurs:

- If CAL is displayed while driving in the vehicle.
- After about five seconds, the display does not show a compass heading (N for North, for example), there may be a strong magnetic field interfering with the compass. Such interference may be caused by a magnetic antenna mount, magnetic note pad holder or a similar magnetic item.
- The compass does not display the correct heading and the compass zone variance is set correctly.

In order to calibrate, CAL must be displayed in the mirror compass windows. If CAL is not displayed, push in the COMP button for about eight seconds or until CAL is displayed.

Downloaded from www.Manualslib.com manuals search engine

The compass can be calibrated by driving the vehicle in circles at five mph (8 km/h) or less until the display reads a direction.

Compass Variance

Compass variance is the difference between earth's magnetic north and true geographic north. If not adjusted to account for compass variance, your compass could give false readings.

The mirror is set in zone eight upon leaving the factory. It will be necessary to adjust the compass to compensate for compass variance if you live outside zone eight. Under certain circumstances, as during a long distance cross-country trip, it will be necessary to adjust for compass variance.

To adjust for compass variance, do the following:

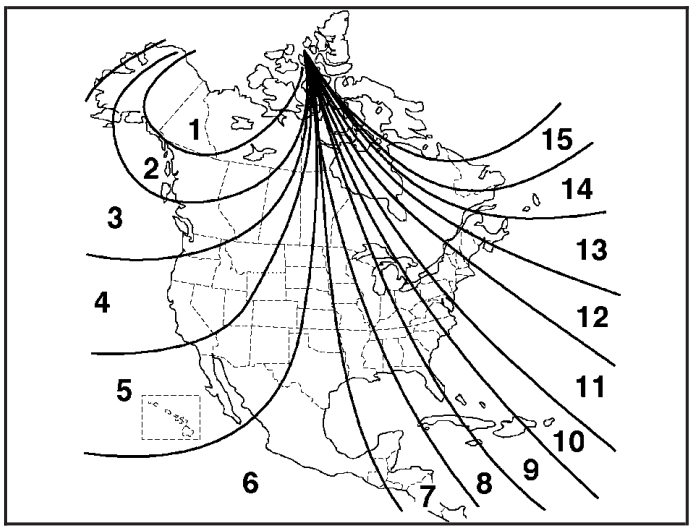

1. Find your current location and variance zone number on the zone map.
2. Press and hold the COMP button for five seconds until a zone number appears in the display.
3. Press the COMP button on the bottom of the mirror until the new zone number appears in the display. After you stop pressing the button, the display will show a compass direction within a few seconds.

Downloaded from www.Manualslib.com manuals search engine

Cleaning the Mirror

Use a paper towel or similar material dampened with glass cleaner. Do not spray glass cleaner directly on the mirror as that may cause the liquid cleaner to enter the mirror housing.

Outside Power Mirrors

The controls are located on the driver's door armrest.

Move the upper selector switch to the left or right to choose the mirror you want to adjust; then press the dots located on the four-way control pad to adjust the mirror.

The mirrors may also include a memory function which works in conjunction with the memory seats. See *Memory Seat on page 2-51* for more information.

Power Folding Mirrors

To fold or unfold the mirrors, move the selector switch, located above the mirror control, to the middle position. The mirror control will illuminate. Press the right or left side of the mirror control to fold or unfold the mirrors. You may notice the mirror glass adjust as the mirrors fold in; this is normal. The mirror glass will reposition itself once the mirrors are unfolded.

If the mirrors are accidentally folded/unfolded manually, they may shake or flutter at normal driving speeds and may not stay in the unfolded position. If this happens, you will need to reset the mirrors. See "Resetting the Power Folding Mirrors" next.

Downloaded from www.Manualslib.com manuals search engine

Resetting the Power Folding Mirrors

You will need to reset the power folding mirrors if:

- They are accidently manually folded/unfolded.
- The mirrors will not stay in the unfolded position.
- The mirrors shake and flutter at normal driving speeds.

To reset the power folding mirrors, fold and unfold them at least three times using the mirror controls. This will reset them to their normal detent position.

Outside Convex Mirror

Your passenger's side mirror is convex. A convex mirror's surface is curved so you can see more from the driver's seat.

⚠ CAUTION:

A convex mirror can make things (like other vehicles) look farther away than they really are. If you cut too sharply into the right lane, you could hit a vehicle on your right. Check your inside mirror or glance over your shoulder before changing lanes.

Downloaded from www.Manualslib.com manuals search engine

Outside Heated Mirrors

Your vehicle may have this feature.

This button is located on the climate control panel.

Press this button to warm the heated driver's and passenger's outside rearview mirrors to help clear them of ice, snow and condensation.

If your vehicle has a rear window defogger, it will also operate when you press this button. See "Rear Window Defogger" under *Automatic Climate Control System on page 3-19* for more information.

Outside Automatic Dimming Mirror with Curb View Assist

Your vehicle may have this feature.

The driver's outside mirror will adjust for the glare of the headlamps behind you. See *Automatic Dimming Rearview Mirror with Compass and Temperature Display on page 2-34*.

Your vehicle's mirrors will also be capable of performing the curb view assist mirror function. This feature will cause the passenger's and/or driver's mirror to tilt to a preselected position when the vehicle is in REVERSE (R). This feature may be useful in allowing you to view the curb when you are parallel parking.

When the vehicle is shifted out of REVERSE (R) and a short delay has occurred, the passenger's and/or driver's mirror will return to its original position.

To change the preselected tilt position, adjust the mirrors to the desired position while the vehicle is in REVERSE (R). When the vehicle is shifted out of REVERSE (R), this new position is saved in memory as the tilt position.

Downloaded from www.Manualslib.com manuals search engine

This feature can be enabled/disabled through the Driver Information Center. See *Driver Information Center (DIC) on page 3-44* for more information.

OnStar® System

OnStar® uses global positioning system (GPS) satellite technology, wireless communications, and state of the art call centers to provide you with a wide range of safety, security, information and convenience services.

A complete OnStar® user's guide and the terms and conditions of the OnStar® Subscription Service Agreement are included with your vehicle's glove box literature. For more information, visit www.onstar.com, contact OnStar® at 1-888-4-ONSTAR (1-888-466-7827), or press the blue OnStar® button to speak to an OnStar® advisor 24 hours a day, 7 days a week.

A completed Subscription Service Agreement is required prior to delivery of OnStar® services and prepaid calling minutes are also required for OnStar® Personal Calling and OnStar® Virtual Advisor use. Terms and conditions of the Subscription Service Agreement can be found at www.onstar.com.

OnStar® Services

One of the following plans is normally included for a specific duration with each vehicle equipped with OnStar®. You can upgrade or extend your OnStar® service plan to meet your needs.

Safe and Sound Plan

- Automatic Notification of Air Bag Deployment
- Emergency Services
- Roadside Assistance
- Stolen Vehicle Assistance
- AccidentAssist
- Remote Door Unlock
- Remote Diagnostics
- Online Concierge

Downloaded from www.Manualslib.com manuals search engine

Directions and Connections Plan

- All Safe and Sound Plan services
- Route Support
- RideAssist
- Information and Convenience Services

Luxury and Leisure Plan

- All Directions and Connections Plan services
- Personal Concierge

OnStar® Personal Calling

As an OnStar® subscriber, the Personal Calling capability is there for you if your hand-held cell phone is lost, forgotten or has a low battery. It's a hands-free wireless phone that's integrated into your vehicle. You can place calls nationwide using simple voice commands with no additional contracts and no additional roaming charges. For more information, refer to the OnStar® user's guide included with your vehicle's glovebox literature, visit www.onstar.com, contact OnStar® at 1-888-4-ONSTAR (1-888-466-7827), or press the blue OnStar® button to speak to an OnStar® advisor 24 hours a day, 7 days a week.

OnStar® Virtual Advisor

Virtual Advisor is a feature of OnStar® Personal Calling that uses minutes to access up-to-date weather and traffic reports for your area, news and sports updates, stock quotes, entertainment and more. You are also able to listen and reply to your e-mail through your vehicle's speakers. See the OnStar® user's guide for more information.

OnStar® Steering Wheel Controls

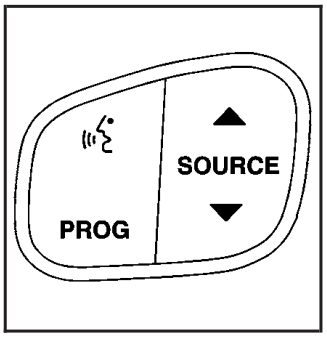

: If your vehicle is equipped with the steering wheel control buttons you can use them to interact with the OnStar® system.

See the OnStar® user's guide for more information.

Downloaded from www.Manualslib.com manuals search engine

HomeLink® Transmitter

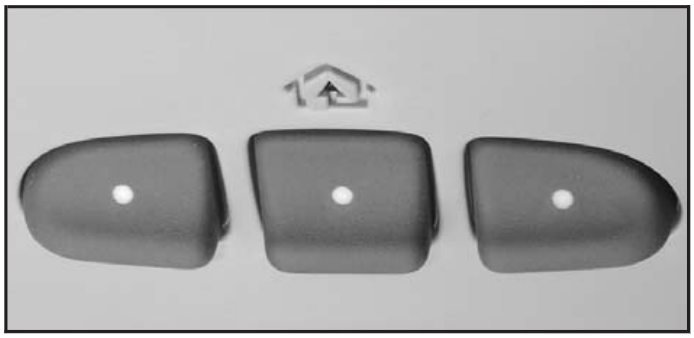

HomeLink® a combined universal transmitter and receiver, provides a way to replace up to three hand-held transmitters used to activate devices such as gate operators, garage door openers, entry door locks, security systems and home lighting. Additional HomeLink® information can be found on the internet at www.homelink.com or by calling 1-800-355-3515.

This device complies with Part 15 of the FCC Rules. Operation is subject to the following two conditions: (1) this device may not cause harmful interference, and (2) this device must accept any interference received, including interference that may cause undesired operation.

This device complies with RSS-210 of Industry Canada. Operation is subject to the following two conditions: (1) this device may not cause interference, and (2) this device must accept any interference, including interference that may cause undesired operation of the device.

Changes and modifications to this system by other than an authorized service facility could void authorization to use this equipment.

Programming the HomeLink® Transmitter

Do not use the HomeLink® Transmitter with any garage door opener that does not have the “stop and reverse” feature. This includes any garage door opener model manufactured before April 1, 1982. If you have a newer garage door opener with rolling codes, please be sure to follow steps 6 through 8 to complete the programming of your HomeLink® Transmitter.

Read the instructions completely before attempting to program the HomeLink® Transmitter. Because of the steps involved, it may be helpful to have another person available to assist you in programming the transmitter.

Downloaded from www.Manualslib.com manuals search engine

Keep the original transmitter for use in other vehicles as well as for future HomeLink® programming. It is also recommended that upon the sale of the vehicle, the programmed HomeLink® buttons should be erased for security purposes. Refer to “Erasing HomeLink® Buttons” or, for assistance, contact HomeLink® on the internet at: www.homelink.com or by calling 1-800-355-3515.

Be sure that people and objects are clear of the garage door or gate operator you are programming. When programming a garage door, it is advised to park outside of the garage.

It is recommended that a new battery be installed in your hand-held transmitter for quicker and more accurate transmission of the radio frequency.

Your vehicle’s engine should be turned off while programming the transmitter. Follow these steps to program up to three channels:

1. Press and hold down the two outside buttons, releasing only when the indicator light begins to flash, after 20 seconds. Do not hold down the buttons for longer than 30 seconds and do not repeat this step to program a second and/or third transmitter to the remaining two HomeLink® buttons.
2. Position the end of your hand-held transmitter about 1 to 3 inches (3 to 8 cm) away from the HomeLink® buttons while keeping the indicator light in view.
3. Simultaneously press and hold both the desired button on HomeLink® and the hand-held transmitter button. Do not release the buttons until Step 4 has been completed.

   Some entry gates and garage door openers may require you to substitute Step 3 with the procedure noted in “Gate Operator and Canadian Programming” later in this section.
4. The indicator light will flash slowly at first and then rapidly after HomeLink® successfully receives the frequency signal from the hand-held transmitter. Release both buttons.
5. Press and hold the newly-trained HomeLink® button and observe the indicator light.

   If the indicator light stays on constantly, programming is complete and your device should activate when the HomeLink® button is pressed and released.

   To program the remaining two HomeLink® buttons, begin with Step 2 under “Programming HomeLink®.” Do not repeat Step 1 as this will erase all of the programmed channels.

   If the indicator light blinks rapidly for two seconds and then turns to a constant light, continue with Steps 6 through 8 following to complete the programming of a rolling-code equipped device (most commonly, a garage door opener).

Downloaded from www.Manualslib.com manuals search engine

6. Locate in the garage, the garage door opener receiver (motor-head unit). Locate the “Learn” or “Smart” button. This can usually be found where the hanging antenna wire is attached to the motor-head unit.
7. Firmly press and release the “Learn” or “Smart” button. The name and color of the button may vary by manufacturer.

   You will have 30 seconds to start Step 8.
8. Return to the vehicle. Firmly press and hold the programmed HomeLink® button for two seconds, then release. Repeat the press/hold/release sequence a second time, and depending on the brand of the garage door opener (or other rolling code device), repeat this sequence a third time to complete the programming.

   HomeLink® should now activate your rolling-code equipped device.

To program the remaining two HomeLink® buttons, begin with Step 2 of “Programming HomeLink®.” Do not repeat Step 1.

Gate Operator and Canadian Programming

Canadian radio-frequency laws require transmitter signals to “time out” or quit after several seconds of transmission. This may not be long enough for HomeLink® to pick up the signal during programming. Similarly, some U.S. gate operators are manufactured to “time out” in the same manner.

If you live in Canada, or you are having difficulty programming a gate operator by using the “Programming HomeLink®” procedures (regardless of where you live), replace Step 3 under “Programming HomeLink®” with the following:

Continue to press and hold the HomeLink® button while you press and release every two seconds (cycle) your hand-held transmitter until the frequency signal has been successfully accepted by HomeLink®. The indicator light will flash slowly at first and then rapidly. Proceed with Step 4 under “Programming HomeLink®” to complete.

Using HomeLink®

Press and hold the appropriate HomeLink® button for at least half of a second. The indicator light will come on while the signal is being transmitted.

Downloaded from www.Manualslib.com manuals search engine

Erasing HomeLink® Buttons

To erase programming from the three buttons do the following:

1. Press and hold down the two outside buttons until the indicator light begins to flash, after 20 seconds.
2. Release both buttons. Do not hold for longer than 30 seconds.

HomeLink® is now in the train (learning) mode and can be programmed at any time beginning with Step 2 under “Programming HomeLink®.”

Individual buttons can not be erased, but they can be reprogrammed. See “Reprogramming a Single HomeLink® Button” next.

Reprogramming a Single HomeLink® Button

To program a device to HomeLink® using a HomeLink® button previously trained, follow these steps:

1. Press and hold the desired HomeLink® button. Do not release the button.
2. The indicator light will begin to flash after 20 seconds. While still holding the HomeLink® button, proceed with Step 2 under “Programming HomeLink®.”

Resetting Defaults

To reset HomeLink® to default settings do the following:

1. Hold down the two outside buttons for about 20 seconds until the indicator light begins to flash.
2. Continue to hold both buttons until the HomeLink® indicator light turns off.
3. Release both buttons.

For questions or comments, contact HomeLink® at 1-800-355-3515, or on the internet at www.homelink.com.

Storage Areas

Glove Box

To open your glove box, lift up the latch and pull the door open.

Downloaded from www.Manualslib.com manuals search engine

Center Overhead Console

Your vehicle is equipped with either a short or long overhead console.

To open a door on the console, push on the rear edge of the door and let it swing open. Push the door up until it latches to close the door.

The overhead consoles also includes reading lamps, the HomeLink transmitter buttons and the sunroof switch (if equipped).

Center Console Storage Area

Your vehicle has a console compartment between the bucket seats.

To open it, press the button on the side of the console and swing the console lid open.

Luggage Carrier

If your vehicle has this feature, you can load cargo on top of your vehicle.

The luggage carrier consists of siderails attached to the roof and crossrails which can be moved back and forth to accommodate various cargo sizes.

Notice: **Loading cargo on the luggage carrier that weighs more than 300 lbs. (136 kg) or hangs over the rear or sides of the vehicle may damage your vehicle. Load cargo only on top of the crossrails and tie the cargo down to the crossrail support cargo tie-down loops, making sure to fasten it securely.**

Don't exceed the maximum vehicle capacity when loading your vehicle. For more information on vehicle capacity and loading, see *Loading Your Vehicle on page 4-67*.

Downloaded from www.Manualslib.com manuals search engine

Adjusting the Crossrails

Adjust the crossrails to fit your load by doing the following:

1. Loosen the lock knobs on the crossrail supports by turning the knobs counterclockwise. Only loosen them enough to allow the crossrails to slide easily.
2. Slide the crossrails to the desired position, being sure to align the lines in the side rails with the arrows on the crossrail supports.
3. Tighten the lock knobs and then try to move the crossrails back and forth to be sure that they do not move.
4. Once you load the cargo onto the crossrails, secure it by tying it down to the crossrail support cargo tie-down loops. Do not load cargo directly on the roof of your vehicle.

   Be sure you do not cover the roof marker lamps or the Center-High-Mounted Stoplamp (CHMSL) (If equipped) with cargo.

To prevent damage or loss of cargo check now and then to make sure the luggage and cargo are still securely fastened and the crossrails are tight.

Stop Tabs

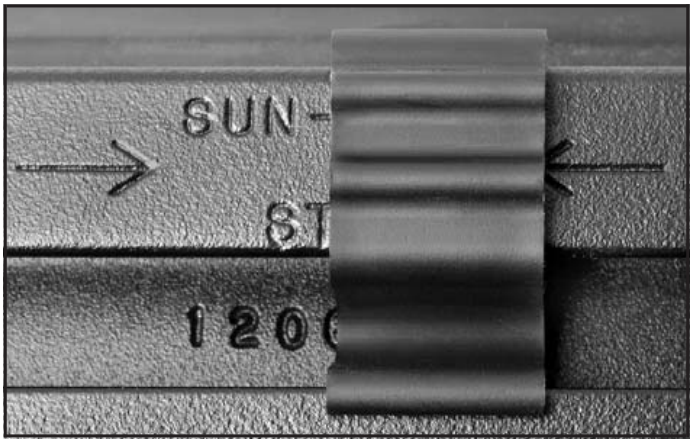

Downloaded from www.Manualslib.com manuals search engine

If your vehicle has a sunroof, it will have a crossrail stop tab placed in the siderail in the spot labeled SUN—ROOF STOP. This tab prevents you from moving the crossrails past the opening of the sunroof and loading cargo too far forward.

Your vehicle will also have a stop tab in the crossrail in the spot labeled ON STAR STOP. This tab prevents loading cargo too close to the OnStar antenna which will cause the OnStar and navigation system (if equipped) to function improperly or not at all.

Vehicles with the off-road lamps will have additional stop tabs placed in the siderails to prevent you from moving the lamps too far rearward, causing them to shine into the optional sunroof opening.

Crossrail Channels

Notice: **If you drive your vehicle through an automatic car wash that does not have enough clearance for any roof-mounted accessories (such as off-road lamps or a roof basket) on your vehicle, you can damage your vehicle. To avoid damaging your vehicle in a car wash, remove any roof-mounted accessories if you can, and do not use an automatic car wash while roof-mounted accessories are on your vehicle. See *Cleaning the Outside of Your Vehicle on page 5-95* for more information.**

The crossrails have built in channels to allow you to attach other items designed for this system, such as basket luggage carriers, bike racks, ski racks, etc.

To use the crossrail channels, do the following:

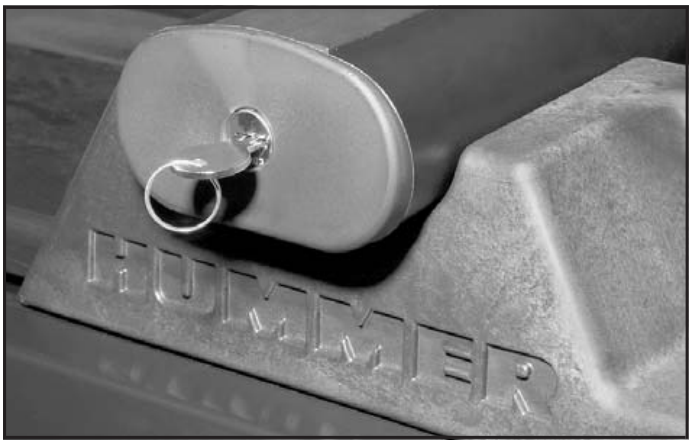

1. Use the included key to unlock the crossrail end cap by turning it counterclockwise. If you ever loose a key, your dealer will be able to help you obtain a replacement.

Downloaded from www.Manualslib.com manuals search engine

2. Pull the end cap straight out from the crossrail.

3. Peel back the rub strip from the crossrail.
4. Slide the accessory you are using into the crossrail channel and secure it as the accessory instructions direct.
5. Place the crossrail endcap back on and lock it with the key.

You will not be using the rub strip when using crossrail accessories. When you remove any crossrail accessory, be sure to reinstall the rub strip. To do this, press the rub strip in place until it seats into the channel of the crossrail.

Rear Seat Armrest

Your vehicle is equipped with a rear armrest/cupholder.

To open it, pull up and then out on the tab, located at the top center of the armrest, and pull the armrest down.

Cargo Tie Downs

There are two cargo tie downs located on the inside of the liftgate in the rear of the vehicle. You can use these to secure cargo inside the vehicle with the liftgate closed.

Downloaded from www.Manualslib.com manuals search engine

Sunroof

Your vehicle may be equipped with a power sliding sunroof. To operate your sunroof, the ignition needs to be on or RAP needs to be active. See “Retained Accessory Power” under *Ignition Positions on page 2-19*. The switch used to operate the sunroof is located in the overhead console.

The sunroof is equipped with five positions:

- **First open stop:** To open the sunroof and sunshade, press and hold the rear side of the switch until the sunroof reaches the desired position or until it reaches the first open stop. For more information on using the sunshade, see “Sunshade Operation” later in this section.
- **Second open stop:** To open it further, press and hold the rear side of the switch until the sunroof reaches the desired position or until it reaches the second open stop.
- **Fully open:** To open the sunroof completely, press and hold the rear side of the switch until the sunroof opens completely.
- **Closed:** To close the sunroof, press and hold the front of the switch until the sunroof reaches the desired position or until it is fully closed and stops on its own. The sunroof will not be fully seated unless the switch is held until the sunroof stops moving.

Downloaded from www.Manualslib.com manuals search engine

- **Vent:** The vent position allows you to open the rear of the sunroof by tilting it upward. To use the vent position, start with the sunroof in the fully closed position, then press and hold the front side of the switch until the sunroof reaches the desired vent position or until it stops moving. To close the sunroof from the vent position, press and hold the rear side of the switch until the sunroof is fully closed.

Do not to leave the sunroof open for long periods of time as debris may collect in the tracks.

Sunshade Operation

The sunshade will open automatically when opening the sunroof.

To adjust the sunshade, pull it backward or forward to the desired position. The sunshade can not be closed further than the current closed position of the sunroof.

Although the sunshade opens automatically when opening the sunroof, it must be manually pulled closed after closing the sunroof.

Vehicle Personalization

Memory Seat

If your vehicle has this feature, the controls for the memory function are located on the driver's door.

These buttons are used to program and recall memory settings for the driver's seat, both the driver's and passenger's outside mirror, the radio station presets, and the previously used climate control system settings. The settings for these features can be personalized for both driver 1 and driver 2. Driver 1 or driver 2 corresponds to the memory buttons labeled 1 and 2 on the driver's door and the numbers on the back of the remote keyless entry transmitters.

Downloaded from www.Manualslib.com manuals search engine

To store the memory settings, do the following:

1. Adjust the driver's seat (including the seatback recliner, lumbar, and side wing area), both of the outside mirrors, and the radio station presets to your preference.
2. Press and hold the 1 or 2 (for driver 1 or 2) button of the memory control for three seconds. A double chime will sound to let you know that the position has been stored.

To repeat the procedure for a second driver, follow the preceding steps, but press the other numbered memory control button.

Each time button 1 or 2 is pressed and released while the vehicle is in PARK (P), a single chime will sound and the memory position will be recalled.

If you use the unlock button on the remote keyless entry transmitter to enter your vehicle, the preset driver's seat, mirror positions, radio station presets and the previously used climate control system settings will be recalled if programmed to do so through the Driver Information Center (DIC). See *DIC Operation and Displays on page 3-44*. The numbers on the back of the transmitters, 1 or 2, correspond to the numbers on the memory controls.

The seat, radio station presets and mirror positions can also be recalled when placing the key in the ignition if programmed to do so through the Driver Information Center (DIC). See *DIC Operation and Displays on page 3-44*.

To stop recall movement of the memory seat feature at any time, press one of the memory buttons or power seat controls.

Downloaded from www.Manualslib.com manuals search engine

Easy Exit Seat

The controls for this memory function are located on the driver's door.

(Easy Exit Seat): This button is used to program and recall the desired driver's seat position when exiting/entering the vehicle. The seat position, can be personalized for both driver 1 and driver 2.

To store the seat exit position for driver 1 or 2, do the following:

1. Press and release the 1 or 2 button or press the unlock button on the desired remote keyless entry transmitter. The seat will move to the stored memory position.
2. Adjust the seat to the desired exit position.
3. Press and hold the exit button of the memory control for three seconds. A double chime will sound to let you know that the position has been stored for the identified driver (1 or 2).

To use the seat exit position, do one of the following:

- Press the exit button on the memory control.
- Or, if this feature is activated in the DIC, then remove the key from the ignition; the seat will then move to the exit position.

See *DIC Operation and Displays on page 3-44* for more information on activating this feature in the DIC.

Downloaded from www.Manualslib.com manuals search engine

NOTES

Downloaded from www.Manualslib.com manuals search engine

Section 3 Instrument Panel

Instrument Panel Overview 3-2
Hazard Warning Flashers 3-4
Other Warning Devices 3-5
Horn 3-5
Tilt Wheel 3-5
Turn Signal/Multifunction Lever 3-6
Exterior Lamps 3-13
Interior Lamps 3-16
Accessory Power Outlets 3-18
Ashtrays and Cigarette Lighter 3-18
Climate Controls 3-19
Automatic Climate Control System 3-19
Outlet Adjustment 3-25
Climate Controls Personalization 3-25
Warning Lights, Gages, and Indicators 3-26
Instrument Panel Cluster 3-27
Speedometer and Odometer 3-28
Tachometer 3-28
Safety Belt Reminder Light 3-28
Air Bag Readiness Light 3-28
Air Bag Off Light 3-30
Charging System Light 3-32
Voltmeter Gage 3-32
Brake System Warning Light 3-33
Anti-Lock Brake System Warning Light 3-34
Traction Off Light 3-35
Engine Coolant Temperature Gage 3-35
Transmission Temperature Gage 3-36
Malfunction Indicator Lamp 3-38
Oil Pressure Gage 3-41
Security Light 3-42
Cruise Control Light 3-42
Tow/Haul Mode Light 3-42
Fuel Gage 3-43
Low Fuel Warning Light 3-43
Driver Information Center (DIC) 3-44
DIC Operation and Displays 3-44
DIC Warnings and Messages 3-56
Audio System(s) 3-62
Setting the Time 3-62
Radio with Cassette and CD 3-63
Radio with Six-Disc CD 3-74
Navigation/Radio System 3-86
Rear Seat Audio (RSA) 3-87
Theft-Deterrent Feature 3-88
Audio Steering Wheel Controls 3-89
Radio Reception 3-90
Care of Your Cassette Tape Player 3-90
Care of Your CDs and DVDs 3-92
Care of Your CD and DVD Player 3-92
Fixed Mast Antenna 3-92
Chime Level Adjustment 3-92

Downloaded from www.Manualslib.com manuals search engine

Instrument Panel Overview

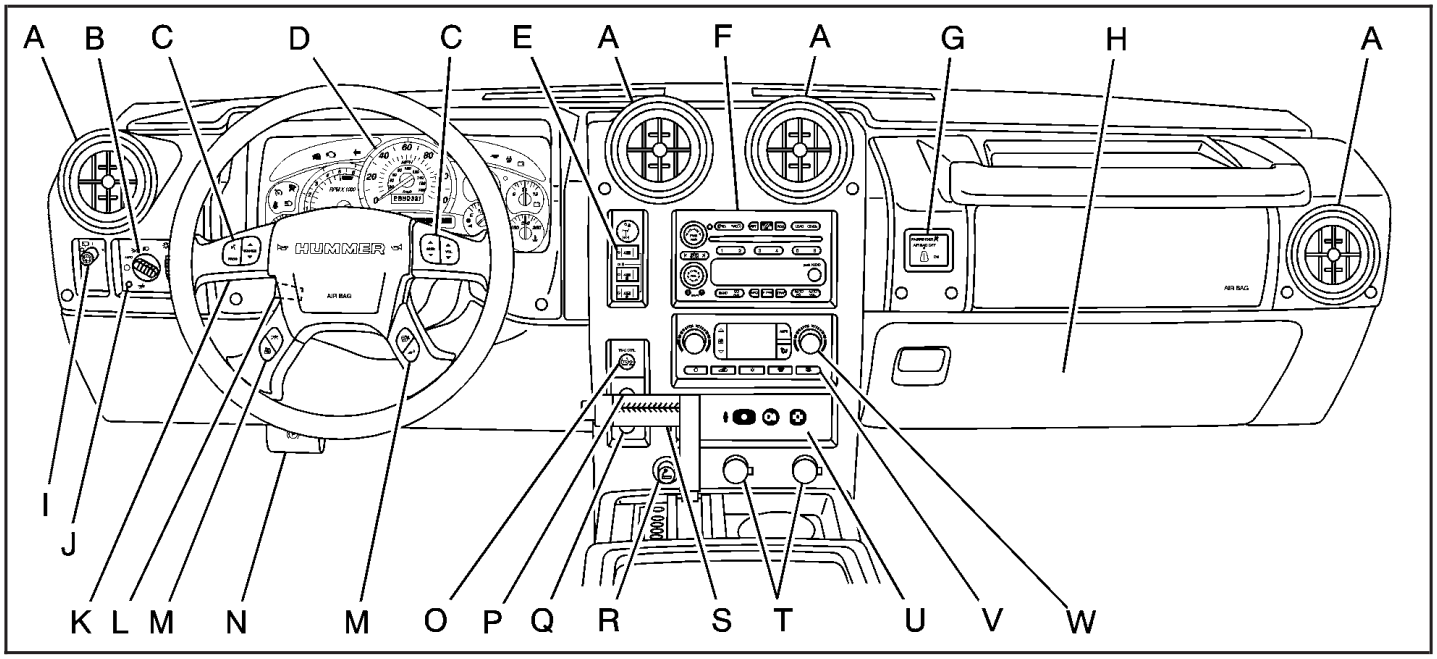

Downloaded from www.Manualslib.com manuals search engine

The main components of your instrument panel are the following:

A. Air Outlets. See *Outlet Adjustment on page 3-25*.

B. Exterior Lamps Control. See *Exterior Lamps on page 3-13*.

C. OnStar® and Radio Steering Wheel Buttons (If Equipped). See *OnStar® System on page 2-40* and *Audio Steering Wheel Controls on page 3-89*.

D. Instrument Panel Cluster. See *Instrument Panel Cluster on page 3-27*.

E. Locking Rear Axle and All-wheel Drive Buttons. See *Locking Rear Axle on page 4-11* and *All-Wheel Drive on page 2-25*.

F. Audio System. See *Audio System(s) on page 3-62*.

G. Air Bag Switch. See *Air Bag Off Switch on page 1-68*.

H. Glove Box. See *Glove Box on page 2-45*.

I. Rear Wiper/Washer Control. See “Rear Window Washer/Wiper” under *Turn Signal/Multifunction Lever on page 3-6*.

J. Dome Override Button. See *Interior Lamps on page 3-16*.

K. Turn Signal/Multifunction Lever. See *Turn Signal/Multifunction Lever on page 3-6*.

L. Tilt Lever. See *Tilt Wheel on page 3-5*.

M. Driver Information Center (DIC) Buttons. See *Driver Information Center (DIC) on page 3-44*.

N. Parking Brake Release. See *Parking Brake on page 2-29*.

O. Traction Control Button. See *Traction Control System (TCS) on page 4-9*.

P. Tow/Haul Selector Button. See “Tow/Haul Mode” under *Automatic Transmission Operation on page 2-22*.

Q. Ride Height Selector Button (If Equipped). See *Selectable Extended Rear Ride Height on page 4-73*.

R. Cigarette Lighter (If Equipped). See *Ashtrays and Cigarette Lighter on page 3-18*.

S. Shift Lever. See *Automatic Transmission Operation on page 2-22*.

T. Accessory Power Outlets (If Equipped). See *Accessory Power Outlets on page 3-18*.

U. OnStar Buttons. See *OnStar® System on page 2-40*.

V. Rear Window Defogger Button. See “Rear Window Defogger” under *Automatic Climate Control System on page 3-19*.

W. Comfort Control System. See *Automatic Climate Control System on page 3-19*.

Downloaded from www.Manualslib.com manuals search engine

Hazard Warning Flashers

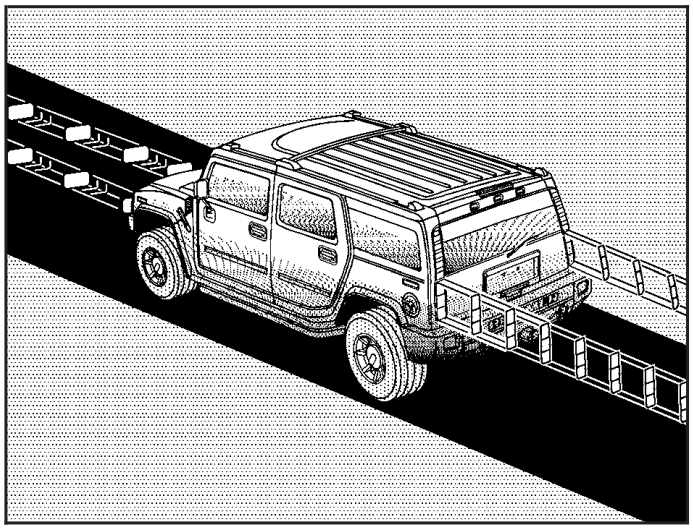

Your hazard warning flashers let you warn others. They also let police know you have a problem. Your front and rear turn signal lamps will flash on and off.

But they won't flash if you're braking.

The hazard warning flasher button is located at the top of the steering column.

Press the button to make your front and rear turn signal lamps flash on and off.

Your hazard warning flashers work no matter what position your key is in, and even if the key isn't in.

To turn off the flashers, press the button until the first click and release.

When the hazard warning flashers are on, your turn signals won't work.

Downloaded from www.Manualslib.com manuals search engine

Other Warning Devices

If you carry reflective triangles, you can use them to warn others. Set one up at the side of the road about 300 feet (100 m) behind your vehicle.

Horn

To sound the horn, press the center pad on the steering wheel.

Tilt Wheel

The tilt steering wheel allows you to adjust the steering wheel before you drive. You can raise it to the highest level to give your legs more room when you enter and exit the vehicle.

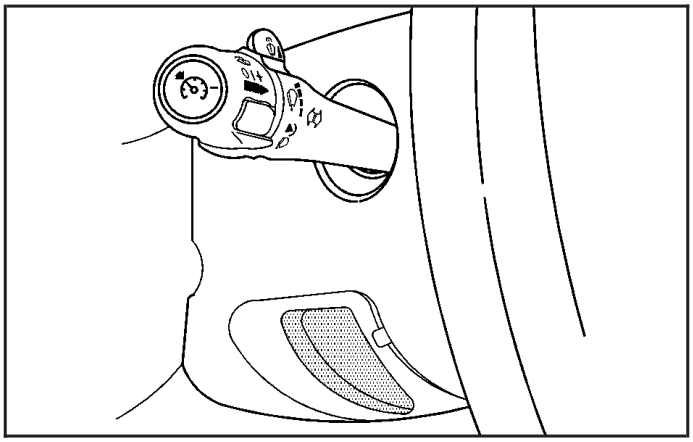

The tilt lever is located on the driver's side of the steering column under the turn signal lever.

To tilt the wheel, hold the steering wheel and pull the lever. Move the steering wheel to a comfortable level, then release the lever to lock the wheel in place.

Downloaded from www.Manualslib.com manuals search engine

Turn Signal/Multifunction Lever

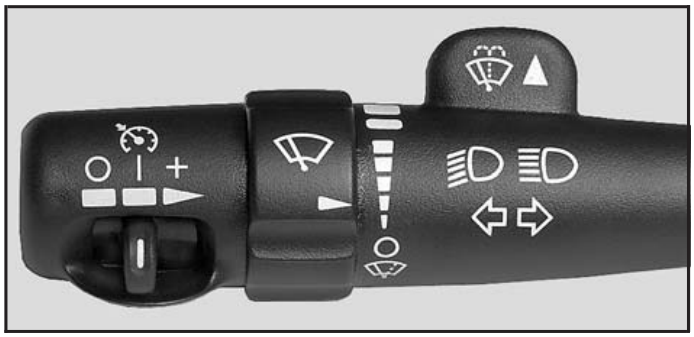

The lever on the left side of the steering column includes the following:

- Turn and Lane Change Signals
- Headlamp High/Low-Beam Changer
- Flash-to-Pass
- Windshield Wipers
- Windshield Washer
- Cruise Control

For information on the exterior lamps, see *Exterior Lamps on page 3-13*.

Turn and Lane Change Signals

The turn signal has two upward (for right) and two downward (for left) positions. These positions allow you to signal a turn or a lane change.

To signal a turn, move the lever all the way up or down. When the turn is finished, the lever will return automatically.

To signal a lane change, just raise or lower the lever until the arrow starts to flash. Hold it there until you complete your lane change. The lever will return by itself when you release it.

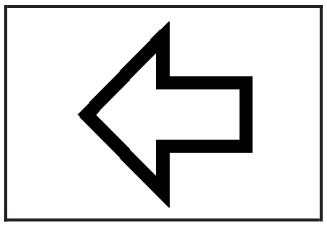

An arrow on the instrument panel cluster will flash in the direction of the turn or lane change.

As you signal a turn or a lane change, if the arrows flash more quickly than normal, a signal bulb may be burned out and other drivers won't see your turn signal.

Downloaded from www.Manualslib.com manuals search engine

If a bulb is burned out, replace it to help avoid an accident. If the arrows don't go on at all when you signal a turn, check for burned-out bulbs and a blown fuse. See *Fuses and Circuit Breakers on page 5-102*.

Turn Signal On Chime

If your turn signal is left on for more than 3/4 of a mile (1.2 km), a chime will sound at each flash of the turn signal and the message TURN SIGNAL ON will also appear in the DIC. To turn the chime and message off, move the turn signal lever to the off position.

Headlamp High/Low-Beam Changer

(Headlamp High/Low Beam Changer): To change the headlamps from low to high beam, push the lever toward the instrument panel. To return to low-beam headlamps, pull the multifunction lever toward you, then release it.

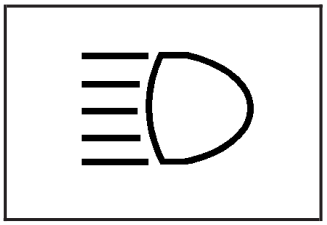

When the high beams are on, this indicator light on the instrument panel cluster will also be on.

Flash-to-Pass

This feature lets you use your high-beam headlamps to signal a driver in front of you that you want to pass. It works even if your headlamps are in the automatic position.

To use it, pull the turn signal lever toward you, then release it.

If your headlamps are in the automatic position or on low beam, your high-beam headlamps will turn on. They'll stay on as long as you hold the lever toward you. The high-beam indicator on the instrument panel cluster will come on. Release the lever to return to normal operation.

Downloaded from www.Manualslib.com manuals search engine

Windshield Wipers

You control the windshield wipers by turning the band with the wiper symbol on it.

(Mist): For a single wiping cycle, turn the band to mist. Hold it there until the wipers start. Then let go. The wipers will stop after one wipe. If you want more wipes, hold the band on mist longer.

(Delay): You can set the wiper speed for a long or short delay between wipes. This can be very useful in light rain or snow. Turn the band to choose the delay time. The closer to the top of the lever, the shorter the delay.

(Low Speed): For steady wiping at low speed, turn the band away from you to the first solid band past the delay settings.

(High Speed): For high-speed wiping, turn the band further, to the second solid band past the delay settings.

(Off): To stop the wipers, move the band to off.

Be sure to clear ice and snow from the wiper blades before using them. If they're frozen to the windshield, carefully loosen or thaw them. If your blades do become worn or damaged, get new blades or blade inserts.

Windshield Washer

(Washer Fluid): There is a paddle marked with the windshield washer symbol at the top of the multifunction lever. To spray washer fluid on the windshield, push the paddle. The wipers will clear the window and then either stop or return to your preset speed.

⚠ CAUTION:

In freezing weather, do not use your washer until the windshield is warmed. Otherwise the washer fluid can form ice on the windshield, blocking your vision.

Downloaded from www.Manualslib.com manuals search engine

Rear Window Washer/Wiper

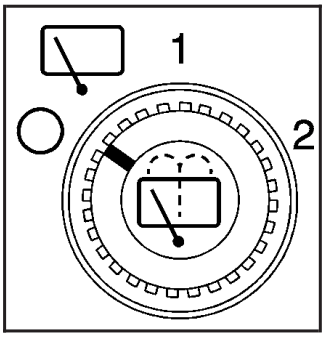

If your vehicle has a rear window washer/wiper, this knob is located on the instrument panel to the left of the steering wheel.

To turn the rear wiper on, turn the knob to either 1 or 2. For long delayed wiping, turn the knob to 1. For short delayed wiping, turn the knob to 2

◯ **(Off):** To turn the wiper off, turn the knob to this symbol.

(Washer Fluid): To wash the window, press the knob with this symbol.

The rear window washer uses the same fluid bottle as the windshield washer. However, the rear window washer will run out of fluid before the windshield washer. If you can wash your windshield but not your rear windows, check the fluid level.

Cruise Control

◯ **(Off):** This position turns the system off.

(On): This position activates the system.

+ (Resume/Accelerate): Push the lever to this symbol to make the vehicle accelerate or resume to a previously set speed.

(Set): Press this button to set the speed.

With cruise control, you can maintain a speed of about 25 mph (40 km/h) or more without keeping your foot on the accelerator. This can really help on long trips. Cruise control does not work at speeds below about 25 mph (40 km/h).

Downloaded from www.Manualslib.com manuals search engine

If you apply your brakes, the cruise control will shut off.

⚠ CAUTION:

Cruise control can be dangerous where you can not drive safely at a steady speed. So, do not use your cruise control on winding roads or in heavy traffic.

Cruise control can be dangerous on slippery roads. On such roads, fast changes in tire traction can cause needless wheel spinning, and you could lose control. Do not use cruise control on slippery roads.

Setting Cruise Control

⚠ CAUTION:

If you leave your cruise control on when you are not using cruise, you might hit a button and go into cruise when you do not want to. You could be startled and even lose control. Keep the cruise control switch off until you want to use cruise control.

1. Move the cruise control switch to on.
2. Get up to the speed you want.
3. Press in the set button at the end of the lever and release it.
4. Take your foot off the accelerator pedal.

Downloaded from www.Manualslib.com manuals search engine

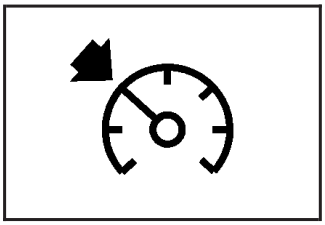

The cruise symbol on the instrument panel will illuminate when the cruise control is engaged.

Resuming a Set Speed

Suppose you set your cruise control at a desired speed and then you apply the brake. This, of course, disengages the cruise control. But you don't need to reset it.

Once you're going about 25 mph (40 km/h) or more, you can move the cruise control switch briefly from on to resume/accelerate.

You'll go right back up to your chosen speed and stay there.

If you hold the switch at resume/accelerate the vehicle will keep going faster until you release the switch or apply the brake. So unless you want to go faster, don't hold the switch at resume/accelerate.

Increasing Speed While Using Cruise Control

There are two ways to go to a higher speed:

- Use the accelerator pedal to get to the higher speed. Press the set button at the end of the lever, then release the button and the accelerator pedal. You'll now cruise at the higher speed. If the accelerator pedal is held longer than 60 seconds, cruise control will turn off.
- Move the cruise switch from on to resume/accelerate. Hold it there until you get up to the speed you want, and then release the switch. To increase your speed in very small amounts, move the switch briefly to resume/accelerate. Each time you do this, your vehicle will go about 1 mph (1.6 km/h) faster.

Downloaded from www.Manualslib.com manuals search engine

Reducing Speed While Using Cruise Control

- Press in the button at the end of the lever until you reach the lower speed you want, then release it.
- To slow down in very small amounts, briefly press the set button. Each time you do this, you'll go about 1 mph (1.6 km/h) slower.

Passing Another Vehicle While Using Cruise Control

Use the accelerator pedal to increase your speed. When you take your foot off the pedal, your vehicle will slow down to the cruise control speed you set earlier.

Using Cruise Control on Hills

How well your cruise control will work on hills depends upon your speed, load and the steepness of the hills. When going up steep hills, you may want to step on the accelerator pedal to maintain your speed. When going downhill, you may have to brake or shift to a lower gear to keep your speed down. Of course, applying the brake takes you out of cruise control. Many drivers find this to be too much trouble and don't use cruise control on steep hills.

Ending Cruise Control

There are four ways to turn off the cruise control:

- Step lightly on the brake pedal,
- move the cruise control switch to off, or
- shift the transmission to NEUTRAL (N).
- If road conditions cause the traction control system to activate, cruise control will turn off.
- If the accelerator pedal is held for 60 seconds or longer, cruise control will turn off.

Erasing Speed Memory

When you turn off the cruise control or the ignition, your cruise control set speed memory is erased.

Downloaded from www.Manualslib.com manuals search engine

Exterior Lamps

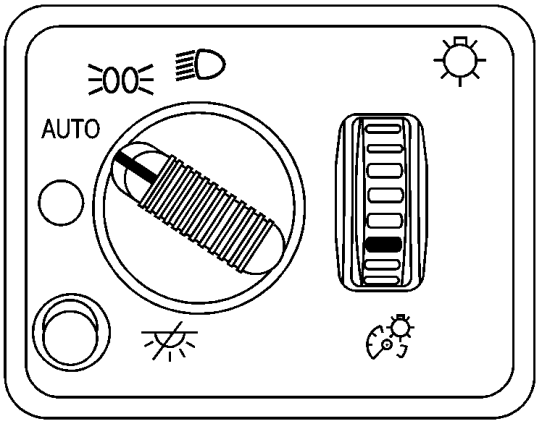

The control on the driver's side of your instrument panel operates the exterior lamps.

The exterior lamp control has four positions:

(Off): Turn the knob to this position and release it to turn off all exterior lamps including the DRLs. To turn any lamps back on when in the off mode, turn the knob to the desired lamp mode. To return to the AUTO mode, turn the knob to the off position and release it. The off mode will also cancel and the lamps will return to the AUTO when the vehicle is turned off. This mode is not available for vehicles first sold in Canada.

AUTO: Turn the control to this position to put the system into automatic headlamp mode. The Daytime Running Lamps (DRL) will also be activated if it is light enough outside.

(Parking Lamps): Turn the control to this position to turn on the parking lamps, together with the following:

- Parking Lamps
- Sidemarker Lamps
- Taillamps
- License Plate Lamps
- Roof Marker Lamps
- Instrument Panel Lights

(Headlamps): Turn the control to this position to turn on the headlamps, together with the previously listed lamps and lights.

When the vehicle is turned off and the headlamps are in AUTO, the headlamps may automatically remain on for a set time. You can change this delay time using the DIC. See *Driver Information Center (DIC) on page 3-44*.

You can switch your headlamps from low to high-beam by pushing the turn signal/multifunction lever toward the instrument panel.

Downloaded from www.Manualslib.com manuals search engine

Automatic Headlamp System

When it is dark enough outside and the headlamp switch is in AUTO, your automatic headlamp system will turn on your headlamps at the normal brightness along with other lamps such as the taillamps, sidemarker, parking lamps, roof marker lamps and the instrument panel lights. The radio lights will also be dim.

To turn off the automatic headlamp system, turn the exterior lamps switch to the off position and then release.

Your vehicle has a light sensor located on the top of the instrument panel. Be sure it is not covered, or the system will be on whenever the ignition is on.

The system may also turn on your headlamps when driving through a parking garage, heavy overcast weather or a tunnel. This is normal.

There is a delay in the transition between the daytime and nighttime operation of the Daytime Running Lamps (DRL) and the automatic headlamp systems so that driving under bridges or bright overhead street lights does not affect the system. The DRL and automatic headlamp system will only be affected when the light sensor sees a change in lighting lasting longer than the delay.

If you start your vehicle in a dark garage, the automatic headlamp system will come on immediately. Once you leave the garage, it will take approximately one minute for the automatic headlamp system to change to DRL if it is light outside. During that delay, your instrument panel cluster may not be as bright as usual. Make sure your instrument panel brightness control is in the full bright position. See “Instrument Panel Brightness” under *Interior Lamps on page 3-16*.

Lamps On Reminder

If a door is open, a reminder chime will sound when your headlamps or parking lamps are manually turned on and your key is out of the ignition. To turn off the chime, turn the headlamp switch to off or AUTO and then back on. In the automatic mode, the headlamps turn off once the ignition is in LOCK and the headlamps on at exit delay ends (if enabled in the DIC).

Downloaded from www.Manualslib.com manuals search engine

Daytime Running Lamps

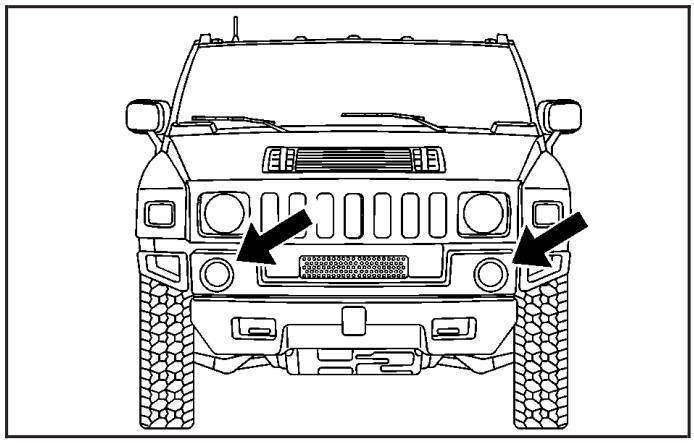

Daytime Running Lamps (DRL) can make it easier for others to see the front of your vehicle during the day. DRL can be helpful in many different driving conditions, but they can be especially helpful in the short periods after dawn and before sunset. Fully functional daytime running lamps are required on all vehicles first sold in Canada.

The DRL system will come on when the following conditions are met:

- The ignition is on,
- the exterior lamps control is in AUTO,
- the transmission is not in PARK (P), and
- the light sensor determines it is daytime.

When the DRL are on, only your DRL lamps will be on. The taillamps, sidemarker and other lamps won't be on. The instrument panel won't be lit up either.

When it begins to get dark, the automatic headlamp system will switch from DRL to the headlamps.

As with any vehicle, you should turn on the regular headlamp system when you need it.

Downloaded from www.Manualslib.com manuals search engine

Off-Road Lamps

Notice: **If you drive your vehicle through an automatic car wash that does not have enough clearance for any roof-mounted accessories (such as off-road lamps or a roof basket) on your vehicle, you can damage your vehicle. To avoid damaging your vehicle in a car wash, remove any roof-mounted accessories if you can, and do not use an automatic car wash while roof-mounted accessories are on your vehicle. See *Cleaning the Outside of Your Vehicle on page 5-95* for more information.**

The off-road lamps, if equipped, are designed to enhance the appearance of your vehicle and to provide auxiliary lighting when your vehicle is used off road. The safety characteristics of these lamps are limited and they are not intended to be used in conjunction with, or in place of, existing vehicle lighting. The lamps are not to be used on any public street or highway and are to be covered when not in use. Check your state and local laws before installing or using any auxiliary lighting. In some states it may be necessary to remove the roof lamps when operating the vehicle on the highway.

The button for the off-road lamps is located in the overhead console.

To use the lamps, be sure the engine is running. Remove the covers form the lamps and press the button to turn them on. Press the button again to turn them off. An indicator light will glow near the button when the lamps are on.

Notice: **Turning on the off-road lamps before removing the lamp covers could damage the off-road lamps and the covers. Always remove the covers before turning on the off-road lamps.**

The off-road lamps will remain on even after the ignition is turned off. The off-road lamps button must be pressed to turn them off.

Interior Lamps

Instrument Panel Brightness

The thumbwheel for this feature is located next to the exterior lamps control.

(Instrument Panel Lights): Turn the thumbwheel up or down to brighten or dim the instrument panel lights and the radio display. This will only work if the headlamps or parking lamps are on.

To turn on the dome lamps, with the vehicle doors closed, turn the thumbwheel all the way up.

Downloaded from www.Manualslib.com manuals search engine

Dome Lamps

The dome lamps will come on when you open a door and will turn off when all doors are closed.

You can also turn the dome lamps on by turning the thumbwheel, located next to the exterior lamp control, all the way up. In this position, the dome lamps will remain on whether a door is opened or closed.

(Dome Override): Press this button, located below the exterior lamp control, to turn dome lamps off even while a door is opened. To return the lamps to automatic operation, press the button again and it will return to the out position. In this position, the dome lamps will come on when you open a door.

Entry/Exit Lighting

Your vehicle is equipped with an illuminated entry/exit feature.

When a door is opened or the key is removed from the ignition, the dome lamps will come on if the dome override button is in the out position.

Reading Lamps

Your vehicle has reading lamps located in the overhead console. Press the button located next to the lamp to turn it on. The lamps can be adjusted to point in the direction you want.

Press the button again to turn the lamp off.

These lamps will also come on with the dome lamps.

Battery Run-Down Protection

This feature shuts off the dome lamps if they are left on for more than 10 minutes when the ignition is in lock. This will keep your battery from running down.

Downloaded from www.Manualslib.com manuals search engine

Accessory Power Outlets

Your vehicle may be equipped with up to five accessory power outlets. The two front outlets, if equipped, are located under the OnStar® buttons on the instrument panel behind hinged doors.

The two middle outlets, if equipped, are located on the back of the center console.

There may also be an outlet located in the rear of the vehicle near the liftgate. Flip the cover open to use the outlet. Close the cover when the outlet is not in use.

Notice: **Adding any electrical equipment to your vehicle may damage it or keep other components from working as they should. The repairs would not be covered by your warranty. Check with your dealer before adding electrical equipment.**

Certain power accessory plugs may not be compatible to the accessory power outlets and could result in blown vehicle or adapter fuses. If you experience a problem, see your dealer for additional information on the accessory power plugs.

Notice: **Improper use of the power outlet can cause damage not covered by your warranty. Do not hang any type of accessory or accessory bracket from the plug because the power outlets are designed for accessory power plugs only.**

Ashtrays and Cigarette Lighter

If your vehicle has an ashtray, it is removable and fits into the front cupholder. Pull up on the ashtray door to open it.

Notice: **If you put papers or other flammable items in the ashtray, hot cigarettes or other smoking materials could ignite them and possibly damage your vehicle. Never put flammable items in the ashtray.**

To remove the ashtray, pull it out from the console. To reinstall the ashtray, slide it back to the original position.

To use the cigarette lighter, if equipped, push it in all the way, and let go. When it's ready, it will pop back out by itself.

Notice: **Holding a cigarette lighter in while it is heating will not allow the lighter to back away from the heating element when it is hot. Damage from overheating may occur to the lighter or heating element, or a fuse could be blown. Do not hold a cigarette lighter in while it is heating.**

Downloaded from www.Manualslib.com manuals search engine

Climate Controls

Automatic Climate Control System

With this system, you can control the heating, cooling and ventilation in your vehicle.

You can select different climate control settings for the driver and passengers.

Driver's Side Temperature Knob

The driver's side knob is used to adjust the temperature of the air coming through the system on the driver's side. The temperature can be adjusted even if the system is turned off. This is possible since outside air will always flow through the system as the vehicle is moving forward unless it is set to recirculation mode. See "Recirculation" later in this section.

Turn the knob counterclockwise or clockwise to lower or increase the cabin temperature. The display will show the temperature setting decreasing or increasing and an arrow pointing to the driver will be displayed under and to the left of the temperature setting.

Passenger's Side Temperature Knob

The passenger's side knob can be used to change the temperature of the air coming through the system on the passenger's side of the vehicle. The temperature can be adjusted even if the system is turned off. This is possible since outside air will always flow through the system as the vehicle is moving forward unless it is set to recirculation mode. See "Recirculation" later in this section.

Downloaded from www.Manualslib.com manuals search engine

Turn the knob counterclockwise or clockwise to lower or increase the cabin temperature. The display will show the temperature setting decreasing or increasing and an arrow pointing to the passenger will be displayed under and to the right of the temperature setting.

The passenger's temperature setting can be set to match the driver's temperature setting by pressing and holding the AUTO button for four seconds. Both the driver and passenger arrows will be displayed.

Automatic Operation

AUTO (Automatic): When automatic operation is active the system will control the inside temperature, the air delivery, and the fan speed.

Use the steps below to place the entire system in automatic mode:

1. Press the AUTO button.

   When AUTO is selected, the display will change to show the current driver's set temperature, delivery mode and fan speed. Press the AUTO button again within five seconds to display the passenger's set temperature.

   If the driver and passenger's temperature settings are not the same, the opposite side temperature setting will be displayed for an additional five seconds. To make the passenger's temperature the same as the driver's press and hold the AUTO button for about four seconds.

   When auto is selected, the air conditioning operation and air inlet will be automatically controlled. The air conditioning compressor will run when the outside temperature is over about 40°F (4°C). The air inlet will normally be set to outside air. If it's hot outside, the air inlet may automatically switch to recirculate inside air to help quickly cool down your vehicle. The light on the button will illuminate in recirculation.

2. Set the driver's and passenger's temperature.

   To find your comfort setting, start with a 74°F (23°C) temperature setting and allow about 20 minutes for the system to regulate. Turn the driver's or passenger's side temperature knob to adjust the temperature setting as necessary. If you choose the temperature setting of 60°F (15°C) the system will remain at the maximum cooling setting. If you choose the temperature setting of 90°F (32°C) the system will remain at the maximum heat setting. Choosing either maximum setting will not cause the vehicle to heat or cool any faster.

Downloaded from www.Manualslib.com manuals search engine

Be careful not to cover the sensor located on the top of the instrument panel near the windshield. This sensor regulates air temperature based on sun load, and also turns on your headlamps.

To avoid blowing cold air in cold weather, the system will delay turning on the fan until warm air is available. The length of delay depends on the engine coolant temperature. Pressing the fan switch will override this delay and change the fan to a selected speed.

(Off): Press this button to turn off the entire climate control system. Outside air will still enter the vehicle, and will be directed to the floor. This direction can be changed by pressing the mode button. The temperature can also be adjusted using either temperature knob. Press the up or down arrows on the fan switch, the defrost button, the AUTO button, or the air conditioning button to turn the system on when it is off.

Manual Operation

You may manually adjust the air delivery mode or fan speed.

(Fan): The switch with the fan symbol allows you to manually adjust the fan speed. Press the up arrow to increase fan speed and the down arrow to decrease fan speed.

Pressing this button when the system is off will turn the system on.

(Mode): Press this button to manually change the direction of the airflow in your vehicle; keep pressing the button until the desired mode appears on the display.

If you press the mode button to select an air delivery mode, the display will change to show you the selected air mode delivery. The display will then show the current status of the system. When the system is turned off, the display will go blank after displaying the current status of the system.

(Panel): This setting will deliver air to the instrument panel outlets.

(Bi-Level): This setting will deliver warmer air to the floor and cooler air to the instrument panel outlets.

(Floor): This setting will deliver air to the floor outlets.

(Defog): See “Defogging and Defrosting” later in this section.

Downloaded from www.Manualslib.com manuals search engine

(Recirculation): Press this button to limit the amount of outside air entering your vehicle. The light on the recirculation button will glow. This is helpful when you are trying to limit odors entering your vehicle and for maximum air conditioning performance in hot weather. Press this button again to allow outside air to enter the vehicle. The light on the recirculation button will go off.

Pressing this button also cancels the auto recirculation feature. To resume the auto recirculation function, press the AUTO button. Each time the vehicle is started, the system will revert to the auto recirculation function.

If you select recirculation while in defrost, defog or floor, the light in the button will flash and then go out to let you know that this is not allowed. This is normal and helps to prevent fogging.

When the weather is cool or damp, operating the system in recirculation for extended periods of time may cause fogging of the vehicle's windows. To clear the fog, select either defog or front defrost.

You may also notice that the A/C compressor will run while in recirculation mode. This is normal and helps to prevent fogging.

(Off): Press this button to turn off the entire climate control system. Outside air will still enter the vehicle, and will be directed to the floor. This direction can be changed by pressing the mode button. The temperature can also be adjusted using either temperature knob. Press the up or down arrows on the fan switch, the defrost button, the AUTO button, or the air conditioning button to turn the system on when it is off.

Display

If you press the MODE button to select an air delivery mode, the display will change to show you the selected air delivery mode. After ten seconds, the display will change to show the driver temperature setting and the selected mode.

If you press the up or down arrows on the fan switch, the display will change to show the selected fan speed. After ten seconds, the display will change to show the driver temperature setting and the selected mode.

Whenever you press AUTO, the display will change to show the following:

- the current driver's set temperature and an arrow for five seconds,
- the current passenger's set temperature setting and an arrow for five seconds and
- the automatic air delivery mode and fan speed.

Downloaded from www.Manualslib.com manuals search engine

If the driver's and passenger's temperature settings are the same when AUTO is pressed, the temperature setting and both arrows will be displayed for five seconds along with the automatic air delivery mode and fan speed. After the five second update, the display will change to show the temperature setting, both arrows and AUTO.

Air Conditioning

(Air Conditioning): Press this button to turn the air conditioning (A/C) compressor on and off. The snowflake symbol will appear on the display when the A/C is on.

Pressing this button when the outside temperature is too cool for air conditioning to be effective will make the snowflake symbol flash three times and then turn off to let you know that the air conditioning mode is not available. If the air conditioning is on and the outside temperature drops below a temperature which is too cool for air conditioning to be effective, the snowflake symbol will turn off to let you know that the air conditioning mode has been canceled.

(Air Conditioning Off): On some vehicles, when you turn the air conditioning off, this symbol will appear on the display. If your vehicle does not have this symbol, the snowflake symbol will turn off to let you know the air conditioning is off.

When air conditioning is selected or in AUTO mode, the system will run the air conditioning automatically to cool and dehumidify the air entering the vehicle. If you select A/C off while in front defrost, defog or recirculation, the A/C snowflake symbol will turn off, but the A/C compressor will still run to help prevent fogging.

On hot days, open the windows long enough to let hot inside air escape. This reduces the time it takes for your vehicle to cool down. Then keep your windows closed for the air conditioner to work its best.

On cool, but sunny days while using manual operation of the automatic system, use bi-level to deliver warm air to the floor and cooler air to the instrument panel outlets. To warm or cool the air delivered, turn the temperature knob to the desired setting.

In AUTO mode the system will cool and dehumidify the air inside the vehicle. Also while in AUTO mode, the system will maximize its performance by using recirculation as necessary.

Downloaded from www.Manualslib.com manuals search engine

Heating

On cold days when using manual operation of the automatic system, choose floor mode to deliver air to the floor outlets. To warm or cool the air delivered, turn the temperature knob to the desired setting.

If you want to use the automatic mode, press AUTO and adjust the temperature by turning the temperature knob.

The heater works best if you keep the windows closed while using it.

Defogging and Defrosting

You can use either defog or front defrost to clear fog or frost from your windshield. Use the defog mode to clear the windows of fog or moisture. Use the front defrost button to defrost the front windshield.

(Defog): Use this setting to clear the windows of fog or moisture. Press the mode button to select this setting. This setting will deliver air to the floor and windshield outlets.

(Front Defrost): Press the front defrost button to defrost the windshield. The system will automatically control the fan speed if you select defrost from AUTO mode. If the outside temperature is 40°F (4°C) or warmer, your air conditioning compressor will automatically run to help dehumidify the air and dry the windshield.

Rear Window Defogger

If your vehicle has this feature, the lines you see on the rear window warm the glass. The rear window defogger uses a warming grid to remove fog from the rear window.

(Rear): Press this button to turn the rear window defogger on or off. An indicator light in the button will come on to let you know that the rear window defogger is activated.

The rear window defogger will turn off about 10 minutes after the button is pressed. If you need additional warming time, press the button again.

If your vehicle is equipped with heated mirrors this button will activate them.

Notice: **Using a razor blade or sharp object to clear the inside rear window may damage the rear window defogger. Repairs would not be covered by your warranty. Do not clear the inside of the rear window with sharp objects.**

Downloaded from www.Manualslib.com manuals search engine

Outlet Adjustment

Your vehicle has air outlets that allow you to adjust the direction and amount of airflow inside the vehicle. Push the knob in the center of the outlet up, down, left or right to move the outlet in the direction you would like. Turn the knob in the center of the outlet so the louvers open or close to increase or decrease airflow.

Operation Tips

- Keep the hood and front air inlets free of ice, snow, or any other obstruction (such as leaves). The heater and defroster will work far better, reducing the chance of fogging the inside of your windows.
- Keep the air path under the front seats clear of objects. This helps air to circulate throughout your vehicle.
- Adding outside equipment to the front of your vehicle, such as hood-air deflectors, etc., may affect the performance of the heating and air conditioning system. Check with your dealer before adding equipment to the outside of your vehicle.

Climate Controls Personalization

You can store and recall the climate control settings for temperature, air delivery mode and fan speed for two different drivers. The personal choice settings recalled are determined by the transmitter used to enter the vehicle.

After the button with the unlock symbol on a remote keyless entry transmitter is pressed, the climate control will adjust to the last settings of the identified driver. The settings can also be changed by pressing one of the memory buttons (1 or 2) located on the driver's door. When adjustments are made, the new settings are automatically saved for that driver.

Downloaded from www.Manualslib.com manuals search engine

Warning Lights, Gages, and Indicators

This part describes the warning lights and gages on your vehicle. The pictures will help you locate them.

Warning lights and gages can signal that something is wrong before it becomes serious enough to cause an expensive repair or replacement. Paying attention to your warning lights and gages could also save you or others from injury.

Warning lights come on when there may be or is a problem with one of your vehicle's functions. As you will see in the details on the next few pages, some warning lights come on briefly when you start the engine just to let you know they're working. If you are familiar with this section, you should not be alarmed when this happens.

Gages can indicate when there may be or is a problem with one of your vehicle's functions. Often gages and warning lights work together to let you know when there's a problem with your vehicle.

When one of the warning lights comes on and stays on when you are driving, or when one of the gages shows there may be a problem, check the section that tells you what to do about it. Please follow this manual's advice. Waiting to do repairs can be costly – and even dangerous. So please get to know your warning lights and gages. They're a big help.

Your vehicle also has a message center that works along with warning lights and gages. See *DIC Warnings and Messages on page 3-56*.

Downloaded from www.Manualslib.com manuals search engine

Instrument Panel Cluster

Your instrument cluster is designed to let you know at a glance how your vehicle is running. You'll know how fast you're going, about how much fuel you have and many other things you'll need to know to drive safely and economically.

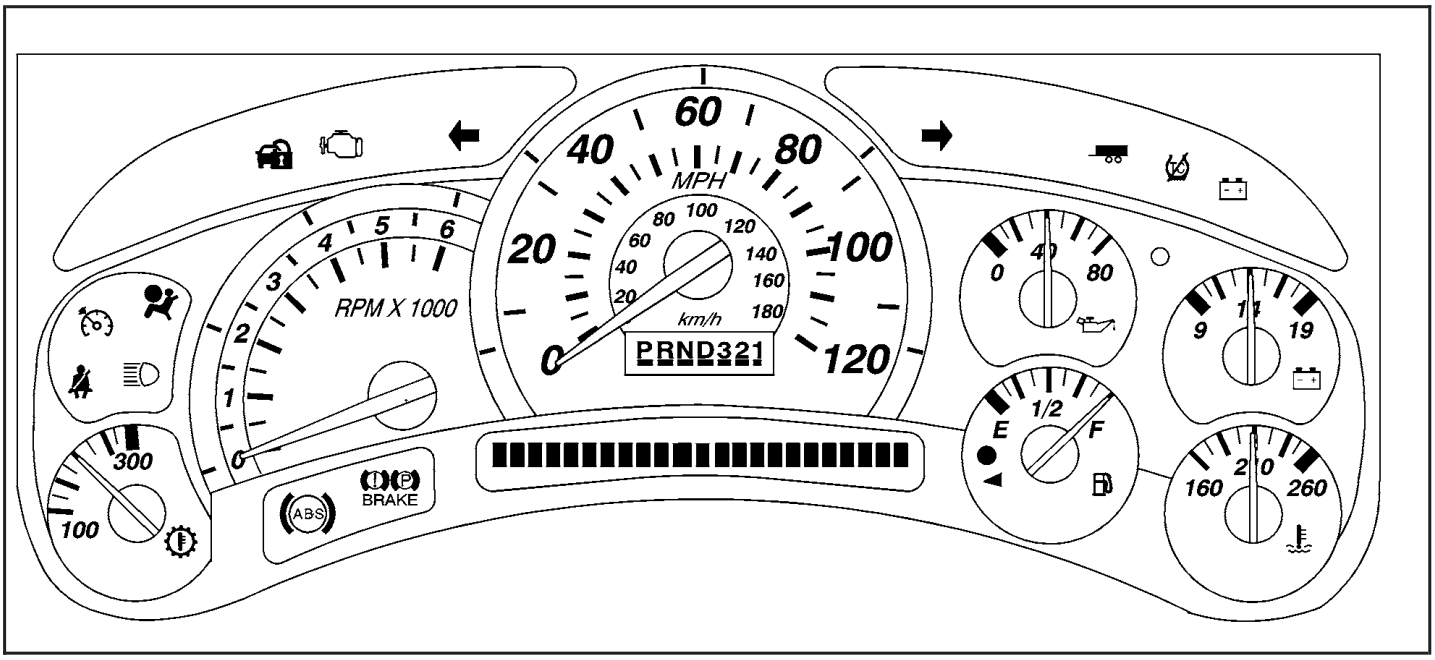

United States version shown, Canada similar

Downloaded from www.Manualslib.com manuals search engine

Speedometer and Odometer

Your speedometer lets you see your speed in both miles per hour (mph) and kilometers per hour (km/h).

Your vehicle's odometer works together with the driver information center. You can set a personal trip and business trip odometer. See "Trip Information" under *DIC Operation and Displays on page 3-44*.

The odometer mileage can be checked without the vehicle running. Simply press the trip stem on the instrument panel cluster.

If your vehicle ever needs a new odometer installed, the new one will be set to the correct mileage total of the old odometer.

Tachometer

Your tachometer displays the engine speed in revolutions per minute (rpm).

Notice: **If you operate the engine with the tachometer in the shaded warning area, your vehicle could be damaged, and the damages would not be covered by your warranty. Do not operate the engine with the tachometer in the shaded warning area.**

Safety Belt Reminder Light

When the key is turned to RUN or START, a chime will come on for several seconds to remind people to fasten their safety belts, unless the driver's safety belt is already buckled.

The safety belt light will also come on and stay on for several seconds, then it will flash for several more.

If the driver's belt is already buckled, neither the chime nor the light will come on.

Air Bag Readiness Light

There is an air bag readiness light on the instrument panel, which shows the air bag symbol. The system checks the air bag's electrical system for malfunctions. The light tells you if there is an electrical problem. The system check includes the air bag sensors, the air bag modules, the wiring and the crash sensing and diagnostic module. For more information on the air bag system, see *Air Bag System on page 1-61*.

Downloaded from www.Manualslib.com manuals search engine

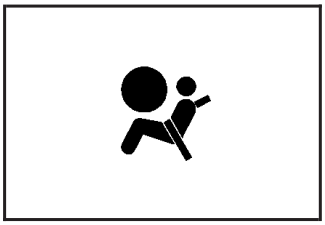

This light will come on when you start your vehicle, and it will flash for a few seconds. Then the light should go out. This means the system is ready.

If the air bag readiness light stays on after you start the vehicle or comes on when you are driving, your air bag system may not work properly. Have your vehicle serviced right away.

⚠ CAUTION:

If the air bag readiness light stays on after you start your vehicle, it means the air bag system may not be working properly. The air bags in your vehicle may not inflate in a crash, or they could even inflate without a crash. To help avoid injury to yourself or others, have your vehicle serviced right away if the air bag readiness light stays on after you start your vehicle.

The air bag readiness light should flash for a few seconds when you turn the ignition key to RUN. If the light doesn't come on then, have it fixed so it will be ready to warn you if there is a problem.

Downloaded from www.Manualslib.com manuals search engine

Air Bag Off Light

When you turn the right front passenger's air bag off, this light will come on and stay on to remind you that the air bag has been turned off. This light will go off when you turn the air bag back on again. See *Air Bag Off Switch on page 1-68*. for more on this, including important safety information.

United States

Canada

Downloaded from www.Manualslib.com manuals search engine

⚠ CAUTION:

If the right front passenger's air bag is turned off for a person who isn't in a risk group identified by the national government, that person won't have the extra protection of an air bag. In a crash, the air bag wouldn't be able to inflate and help protect the person sitting there. Don't turn off the passenger's air bag unless the person sitting there is in a risk group. See ″Air Bag Off Switch″ in the Index for more on this, including important safety information.

⚠ CAUTION:

If the air bag readiness light ever comes on when you have turned off the air bag, it means that something may be wrong with the air bag system. The right front passenger's air bag could inflate even though the switch is off. If this ever happens, don't let anyone whom the national government has identified as a member of a passenger air bag risk group sit in the right front passenger's position (for example, don't secure a rear-facing child restraint in the right front seat) until you have your vehicle serviced.

Downloaded from www.Manualslib.com manuals search engine

Charging System Light

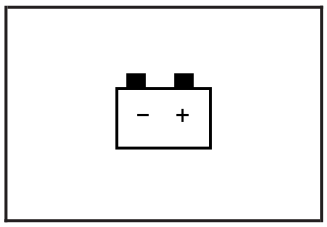

The charging system light will come on briefly when you turn on the ignition, but the engine is not running, as a check to show you it is working.

It should go out once the engine is running. If it stays on, or comes on while you are driving, you may have a problem with the charging system. It could indicate that you have problems with a generator drive belt, or another electrical problem. Have it checked right away. Driving while this light is on could drain your battery.

When this light comes on the DIC will also display the battery not charging message. See *DIC Warnings and Messages on page 3-56*.

If you must drive a short distance with the light on, be certain to turn off all your accessories, such as the radio and air conditioner.

Voltmeter Gage

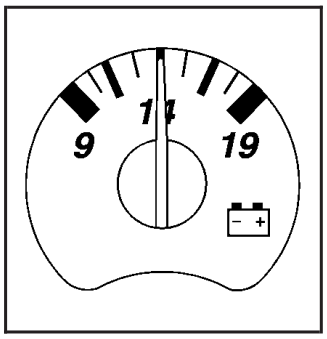

When your engine is not running, but the ignition is in RUN, this gage shows your battery's state of charge in DC volts.

When the engine is running, the gage shows the condition of the charging system. Readings between the low and high warning zones indicate the normal operating range.

Readings in the low warning zone may occur when a large number of electrical accessories are operating in the vehicle and the engine is left at an idle for an extended period. This condition is normal since the charging system is not able to provide full power at engine idle. As engine speeds are increased, this condition should correct itself as higher engine speeds allow the charging system to create maximum power.

Downloaded from www.Manualslib.com manuals search engine

You can only drive for a short time with the reading in either warning zone. If you must drive, turn off all unnecessary accessories.

Readings in either warning zone indicate a possible problem in the electrical system. Have the vehicle serviced as soon as possible.

Brake System Warning Light

With the ignition on, the brake system warning light will flash when you set the parking brake. The light will flash if the parking brake doesn't release fully. If you try to drive with the parking brake engaged, a chime will sound when the vehicle speed is greater than 3 mph (5 km/h).

Your vehicle's hydraulic brake system is divided into two parts. If one part isn't working, the other part can still work and stop you. For good braking, though, you need both parts working well.

If the warning light comes on and a chime sounds there could be a brake problem. Have your brake system inspected right away.

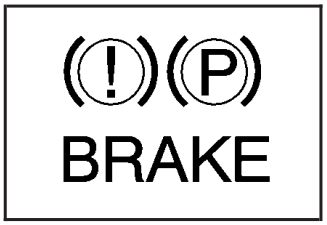

United States

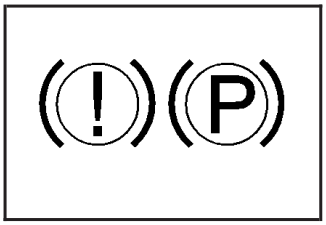

Canada

This light should come on briefly when you turn the ignition key to RUN. If it doesn't come on then, have it fixed so it will be ready to warn you if there's a problem.

Downloaded from www.Manualslib.com manuals search engine

If the light comes on while you are driving, pull off the road and stop carefully. You may notice that the pedal is harder to push. Or, the pedal may go closer to the floor. It may take longer to stop. If the light is still on, have the vehicle towed for service. See *Towing Your Vehicle on page 4-65*.

⚠ CAUTION:

Your brake system may not be working properly if the brake system warning light is on. Driving with the brake system warning light on can lead to an accident. If the light is still on after you have pulled off the road and stopped carefully, have the vehicle towed for service.

Anti-Lock Brake System Warning Light

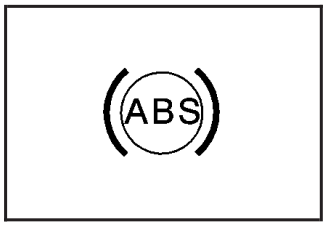

With the anti-lock brake system, this light will come on when you start your engine and may stay on for several seconds.

That's normal. If the light doesn't come on then, have it fixed so it will be ready to warn you if there is a problem.

If the light stays on, or comes on when you're driving, your vehicle needs service. You will also hear a chime sound when the light is on steady. If the regular brake system warning light isn't on, you still have brakes, but you don't have anti-lock brakes. If the regular brake system warning light is also on you don't have anti-lock brakes and there's a problem with your regular brakes. In addition to both lights, you will also hear a chime sound on the first occurrence of a problem and each time the vehicle is shut off and then restarted. See *Brake System Warning Light on page 3-33*.

Downloaded from www.Manualslib.com manuals search engine

Traction Off Light

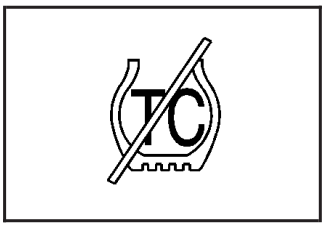

The traction off light will come on when a traction control system or anti-lock brake system problem has been detected. The vehicle may need service.

When this light is on, the system will not limit wheel spin. Adjust your driving accordingly. See *Traction Control System (TCS) on page 4-9*.

If the Traction Control System (TCS) detects that the vehicle's brake's are overheating, the TCS will shut off and the traction off light will come on. When the brakes cool off, the TCS will turn back on automatically and the traction off light will go out.

Engine Coolant Temperature Gage

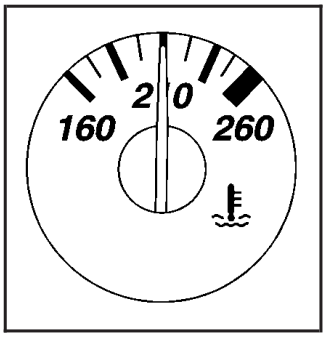

United States

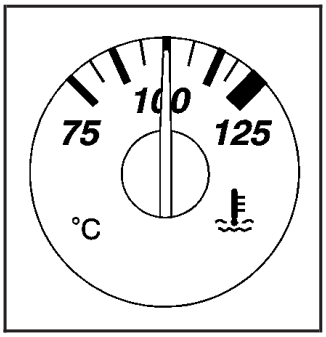

Canada

This gage shows the engine coolant temperature.

It also provides an indicator of how hard your vehicle is working. During a majority of the operation, the gage will read 210°F (100°C) or less. If you are pulling a load or going up hills, it is normal for the temperature to fluctuate and approach the 250°F (122°C) mark. If the gage reaches the 260°F (125°C) mark, it indicates that the cooling system is working beyond its capacity.

See *Engine Overheating on page 5-27*.

Downloaded from www.Manualslib.com manuals search engine

Transmission Temperature Gage

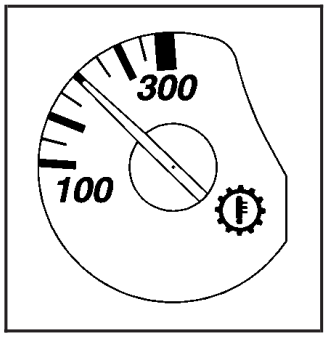

United States

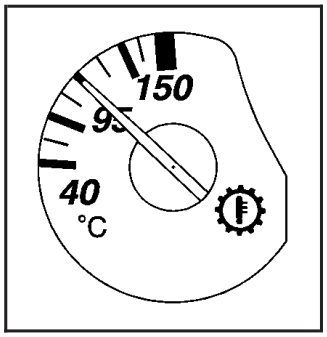

Canada

Your vehicle is equipped with a transmission temperature gage.

When your ignition is on, the gage shows the temperature of the transmission fluid. The normal operating range is from 100°F (38°C) to about 265°F (130°C).

At approximately 265°F (130°C), the DIC will display a TRANSMISSION HOT message and the transmission will enter a transmission protection mode. When the transmission enters the protection mode, you may notice a change in the transmission shifting patterns. The transmission will return to normal shifting patterns when the transmission fluid temperature falls below 260°F (127°C).

See *Driver Information Center (DIC) on page 3-44* for further information.

Downloaded from www.Manualslib.com manuals search engine

If the transmission fluid reaches temperatures of approximately 275°F (135°C) or greater, the DIC will display a TRANS HOT IDLE ENGINE warning message and a chime will sound. Pull the vehicle off the roadway when it is safe to do so. Set the parking brake, place the transmission in PARK (P) and allow the engine to idle until the transmission temperature falls below 260°F (127°C). If the transmission continues to operate above 265°F (130°C), please contact your nearest dealer or the GM Roadside Assistance Center.

Notice: **If you drive your vehicle with the transmission temperature gage above normal operating range, you can damage the transmission. This could lead to costly repairs that would not be covered by your warranty. Do not drive your vehicle while the transmission temperature gage reading is above normal. See your dealer for service.**

The following situations can cause the transmission to operate at higher temperatures:

- Towing a trailer,
- hot outside air temperatures,
- hauling a large or heavy load,
- low transmission fluid level,
- high transmission fluid level,
- restricted air flow to the radiator.

A temporary solution to hotter transmission operating temperatures may be to let the transmission cool down. If the transmission is operated at higher temperatures on a frequent basis, see *Scheduled Maintenance on page 6-4* for the proper transmission maintenance intervals.

Downloaded from www.Manualslib.com manuals search engine

Malfunction Indicator Lamp

Check Engine Light

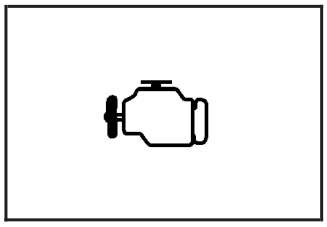

Your vehicle is equipped with a computer which monitors operation of the fuel, ignition and emission control systems.

This system is called OBD II (On-Board Diagnostics-Second Generation) and is intended to assure that emissions are at acceptable levels for the life of the vehicle, helping to produce a cleaner environment. The check engine light comes on to indicate that there is a problem and service is required. Malfunctions often will be indicated by the system before any problem is apparent. This may prevent more serious damage to your vehicle. This system is also designed to assist your service technician in correctly diagnosing any malfunction.

Notice: **If you keep driving your vehicle with this light on, after a while, your emission controls may not work as well, your fuel economy may not be as good and your engine may not run as smoothly. This could lead to costly repairs that may not be covered by your warranty.**

Notice: **Modifications made to the engine, transmission, exhaust, intake or fuel system of your vehicle or the replacement of the original tires with other than those of the same Tire Performance Criteria (TPC) can affect your vehicle's emission controls and may cause this light to come on. Modifications to these systems could lead to costly repairs not covered by your warranty. This may also result in a failure to pass a required Emission Inspection/Maintenance test.**

Downloaded from www.Manualslib.com manuals search engine

This light should come on, as a check to show you it is working, when the ignition is on and the engine is not running. If the light does not come on, have it repaired. This light will also come on during a malfunction in one of two ways:

- **Light Flashing** — A misfire condition has been detected. A misfire increases vehicle emissions and may damage the emission control system on your vehicle. Diagnosis and service may be required.
- **Light On Steady** — An emission control system malfunction has been detected on your vehicle. Diagnosis and service may be required.

If the Light is Flashing

The following may prevent more serious damage to your vehicle:

- Reducing vehicle speed.
- Avoiding hard accelerations.
- Avoiding steep uphill grades.
- If you are towing a trailer, reduce the amount of cargo being hauled as soon as it is possible.

If the light stops flashing and remains on steady, see “If the Light Is On Steady” following.

If the light continues to flash, when it is safe to do so, *stop the vehicle.* Find a safe place to park your vehicle. Turn the key off, wait at least 10 seconds and restart the engine. If the light remains on steady, see “If the Light Is On Steady” following. If the light is still flashing, follow the previous steps, and see your dealer for service as soon as possible.

If the Light Is On Steady

You may be able to correct the emission system malfunction by considering the following:

Did you recently put fuel into your vehicle?

If so, reinstall the fuel cap, making sure to fully install the cap. See *Filling Your Tank on page 5-7*. The diagnostic system can determine if the fuel cap has been left off or improperly installed. A loose or missing fuel cap will allow fuel to evaporate into the atmosphere. A few driving trips with the cap properly installed should turn the light off.

Downloaded from www.Manualslib.com manuals search engine

Did you just drive through a deep puddle of water?

If so, your electrical system may be wet. The condition will usually be corrected when the electrical system dries out. A few driving trips should turn the light off.

Have you recently changed brands of fuel?

If so, be sure to fuel your vehicle with quality fuel. See *Gasoline Octane on page 5-5*. Poor fuel quality will cause your engine not to run as efficiently as designed. You may notice this as stalling after start-up, stalling when you put the vehicle into gear, misfiring, hesitation on acceleration or stumbling on acceleration. (These conditions may go away once the engine is warmed up.) This will be detected by the system and cause the light to turn on.

If you experience one or more of these conditions, change the fuel brand you use. It will require at least one full tank of the proper fuel to turn the light off.

If none of the above steps have made the light turn off, your dealer can check the vehicle. Your dealer has the proper test equipment and diagnostic tools to fix any mechanical or electrical problems that may have developed.

Emissions Inspection and Maintenance Programs

Some state/provincial and local governments have or may begin programs to inspect the emission control equipment on your vehicle. Failure to pass this inspection could prevent you from getting a vehicle registration.

Here are some things you need to know to help your vehicle pass an inspection:

Your vehicle will not pass this inspection if the check engine light is on or not working properly.

Your vehicle will not pass this inspection if the OBD (on-board diagnostic) system determines that critical emission control systems have not been completely diagnosed by the system. The vehicle would be considered not ready for inspection. This can happen if you have recently replaced your battery or if your battery has run down. The diagnostic system is designed to evaluate critical emission control systems during normal driving. This may take several days of routine driving. If you have done this and your vehicle still does not pass the inspection for lack of OBD system readiness, your GM dealer can prepare the vehicle for inspection.

Downloaded from www.Manualslib.com manuals search engine

Oil Pressure Gage

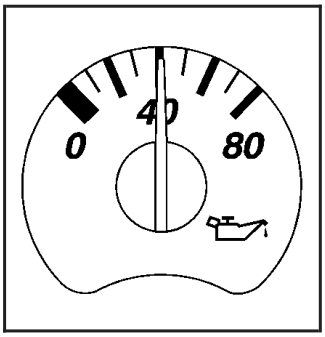

United States

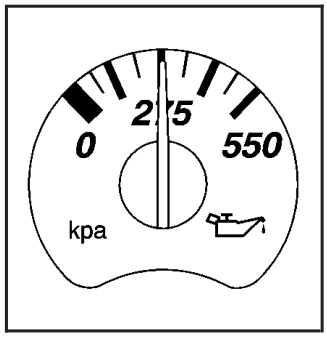

Canada

The oil pressure gage shows the engine oil pressure in psi (pounds per square inch) when the engine is running. Canadian vehicles indicate pressure in kPa (kilopascals).

Oil pressure may vary with engine speed, outside temperature and oil viscosity, but readings above the low pressure zone indicate the normal operating range.

A reading in the low pressure zone may be caused by a dangerously low oil level or some other problem causing low oil pressure. Check your oil as soon as possible. See *Engine Oil on page 5-14*.

⚠ CAUTION:

Do not keep driving if the oil pressure is low. If you do, your engine can become so hot that it catches fire. You or others could be burned. Check your oil as soon as possible and have your vehicle serviced.

Notice: **Lack of proper engine oil maintenance may damage the engine. The repairs would not be covered by your warranty. Always follow the maintenance schedule in this manual for changing engine oil.**

Downloaded from www.Manualslib.com manuals search engine

Security Light

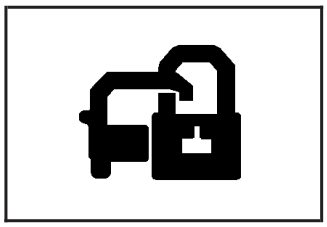

This light will come on briefly when you turn the key toward START. The light will stay on until the engine starts.

If the light flashes, the Passlock® system has entered a tamper mode. If the vehicle fails to start, see *Passlock® on page 2-18*.

If the light comes on continuously while driving and stays on, there may be a problem with the Passlock® system. Your vehicle will not be protected by Passlock®, and you should see your dealer.

Also, see *Content Theft-Deterrent on page 2-16* for additional information regarding the security light.

Cruise Control Light

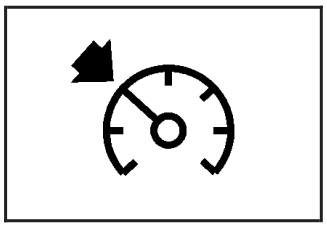

The cruise light comes on whenever you set your cruise control. See “Cruise Control” under *Turn Signal/Multifunction Lever on page 3-6*.

Tow/Haul Mode Light

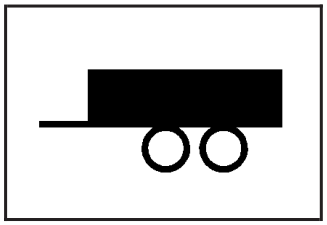

This light is displayed when the tow/haul mode has been activated.

For more information, see “Tow/Haul Mode” under *Towing a Trailer on page 4-75*.

Downloaded from www.Manualslib.com manuals search engine

Fuel Gage

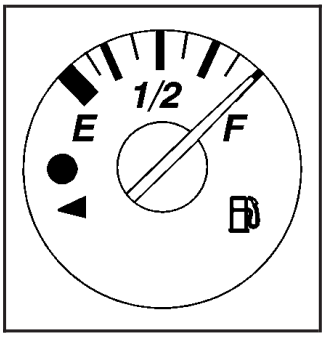

United States

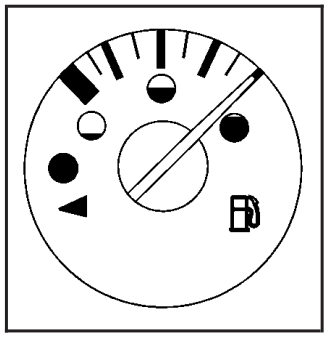

Canada

When the ignition is on, the fuel gage tells you about how much fuel you have left in your tank.

The gage will first indicate empty before you are out of fuel, and you should get more fuel as soon as possible.

Here are some situations you may experience with your fuel gage. None of these indicate a problem with the fuel gage.

- At the gas station, the fuel pump shuts off before the gage reads full.
- It takes a little more or less fuel to fill up than the fuel gage indicated. For example, the gage may have indicated the tank was half full, but it actually took a little more or less than half the tank's capacity to fill the tank.
- The gage goes back to empty when you turn off the ignition.

Low Fuel Warning Light

The light next to the fuel gage will come on briefly when you are starting the engine.

This light comes on when the fuel tank is low on fuel. To turn it off, add fuel to the fuel tank. See *Fuel on page 5-5*.

Downloaded from www.Manualslib.com manuals search engine

Driver Information Center (DIC)

The DIC display is located on the instrument panel cluster above the steering column. The DIC can display information such as the trip odometer, fuel economy and personalization features.

A (Trip Information): Press this button to scroll through the odometer, personal trip odometer, business trip odometer, hourmeter, annual log and the timer.

B (Fuel Information): Press this button to scroll through the current range, average fuel economy, instant fuel economy and engine oil life.

C (Personalization): Press this button to change personal settings of various features for your vehicle.

D (Select): Press this button to reset certain functions and turn off or acknowledge messages on the DIC.

DIC Operation and Displays

The DIC comes on when the ignition is on. After a short delay the DIC will display the current driver (1 or 2) and the information that was last displayed before the engine was turned off.

If a problem is detected, a warning message will appear on the display. Pressing any of the four buttons will acknowledge (clear) most current warnings or service messages. Some warnings that cannot be acknowledged (cleared) are: ENGINE OVERHEATED, OIL PRESSURE LOW, REDUCED ENGINE POWER, TRANS HOT IDLE ENGINE. These warnings must be dealt with immediately and therefore cannot be cleared until the problem has been corrected.

The DIC has different modes which can be accessed by pressing the four buttons on the DIC. These buttons are trip information, fuel information, personalization and select. The button functions are detailed in the following.

Downloaded from www.Manualslib.com manuals search engine

Trip Information Button

Press the trip information button to scroll through the ODOMETER, PERSONAL TRIP ON/OFF, BUSINESS TRIP ON/OFF, HOURMETER, ANNUAL LOG and TIMER. If the personal trip and/or the business trip are set to ON, you will also be able to scroll through more messages. See “Personal Trip” and “Business Trip” next for more information.

Personal Trip

Turn PERSONAL TRIP on or off by pressing the select button. When it is on, you will also be able to scroll through the following by pressing the trip information button:

- PERSONAL: XXXXXX.X MI — This shows the current distance traveled since the last reset for the personal trip odometer in either miles or kilometers.
- PERSONAL: XXXX.X GAL — This shows the amount of fuel used for the personal trip.
- PERSONAL: XX.X MPG— This shows how many miles per gallon of fuel your vehicle is getting for the personal trip based on current and past driving conditions.
- PERSONAL: AVG MPH — This shows the vehicle’s average speed for the personal trip.
- PERSONAL: % ANNUAL — This shows the ratio of personal trip miles to annual miles as a percent.

Business Trip

Turn Business TRIP on or off by pressing the select button. When it is on, you will also be able to scroll through the following by pressing the trip information button:

- BUSINESS: XXXXXX.X MI — This shows the current distance traveled since the last reset for the business trip odometer in either miles or kilometers.
- BUSINESS: XXXX.X GAL — This shows the amount of fuel used for the business trip.
- BUSINESS: XX.X MPG — This shows the amount of fuel used for the business trip.
- BUSINESS: AVG MPH — This shows the vehicle’s average speed for the business trip.
- BUSINESS: % ANNUAL — This shows the ratio of business trip miles to annual miles as a percent.

Downloaded from www.Manualslib.com manuals search engine

To reset the personal or business trip information, do the following: press and hold the select button for two seconds while in one of the personal or business trip modes. This will reset all of the information for the personal or business trip.

You can also reset the PERSONAL: XX MI, or BUSINESS: XX MI while they are displayed by pressing the reset stem on the cluster. If you press and hold the reset stem or select button for four seconds, the display will show the distance traveled since the last ignition cycle for the personal or business trip.

Odometer

Press the trip information button until ODOMETER appears on the display. This shows the total distance the vehicle has been driven in either miles or kilometers. Pressing the reset stem located on the instrument cluster with the vehicle off will also display the odometer.

Hourmeter

Press the trip information button to scroll to the hourmeter. The hourmeter shows the total number of hours the engine has run. Pressing and holding the reset stem for about four seconds on the instrument cluster will also display the hourmeter after the odometer is displayed when the vehicle is off.

Annual Log

Press the trip information button to scroll to the annual log. The annual log shows the mileage accumulated since it was last reset. To reset the annual log, press and hold the select button for two seconds.

Timer

The DIC can be used as a timer. Press the select button while TIMER is displayed to start the timer. The display will show the amount of time that has passed since the timer was last reset (not including time the ignition is off). Time will continue to be counted as long as the ignition is on, even if another display is being shown on the DIC. The timer will record up to 99 hours, 59 minutes and 59 seconds (99:59:59) after which the display will roll back to zero.

To stop the counting of time, press the select button briefly while TIMER is displayed.

To reset the timer to zero, press and hold the select button while TIMER is displayed.

Downloaded from www.Manualslib.com manuals search engine

Fuel Information Button

Use the fuel information button to scroll through the range, average fuel economy, instant fuel economy and the GM Oil Life System.

Fuel Range

Press the fuel information button until RANGE appears to display the remaining distance you can drive without refueling. It's based on fuel economy and the fuel remaining in the tank. The display will show LOW if the fuel level is low.

The fuel economy data used to determine fuel range is an average of recent driving conditions. As your driving conditions change, this data is gradually updated. Fuel range cannot be reset.

Average Fuel Economy

Press the fuel information button until AVG ECON appears in the display. Average fuel economy is how many miles per gallon your vehicle is getting based on current and past driving conditions.

Press and hold the select button for two seconds while AVG ECON is displayed to reset the average fuel economy. Average fuel economy will then be calculated starting from that point. If the average fuel economy is not reset, it will be continually updated each time you drive.

Instant Fuel Economy

Press the fuel information button until INST ECON appears in the display. Instant fuel economy is how many miles per gallon your vehicle is getting at the particular moment in time. The instant fuel economy cannot be reset.

Downloaded from www.Manualslib.com manuals search engine

GM Oil Life System

Press the fuel information button until ENGINE OIL LIFE appears in the display. The GM Oil Life System shows an estimate of the oil's remaining useful life. It will show 100% when the system is reset after an oil change. It will alert you to change your oil on a schedule consistent with your driving conditions.

Always reset the engine oil life after an oil change. To reset the Oil Life System use the fuel button to reach the ENGINE OIL LIFE screen and then press and hold the select button for five seconds while ENGINE OIL LIFE is displayed. OIL LIFE RESET will appear on the display for 10 seconds to let you know the system is reset.

The DIC does not replace the need to maintain your vehicle as recommended in the Maintenance Schedule in this manual. Also, the oil change reminder will not detect dusty conditions or engine malfunctions that may affect the oil. Also, the oil change reminder does not measure how much oil you have in your engine. So, be sure to check your oil level often. See *Engine Oil on page 5-14*.

Personalization Button

You can program certain features to a preferred setting for up to two people. Press the personalization button to scroll through the following personalization features. All of the personalization options may not be available on your vehicle. Only the options available will be displayed on your DIC.

- AUTOMATIC LOCKING
- AUTOMATIC UNLOCKING
- DELAYED LOCKING
- REMOTE LOCK FEEDBACK
- ALARM WARNING TYPE
- REMOTE UNLOCK FEEDBACK
- HEADLAMPS ON AT EXIT
- PERIMETER LIGHTING
- SEAT POSITION RECALL
- EASY EXIT DRIVER SEAT
- CURB VIEW ASSIST
- DISPLAY LANGUAGE
- DISPLAY UNITS (ENG/MET)

Downloaded from www.Manualslib.com manuals search engine

The default options for the above features were set when your vehicle left the factory. The default options are noted in the text following, but may have been changed from their default state since then.

The driver's preferences can be recalled by pressing the unlock button on the remote keyless entry transmitter labeled 1 or 2 or by pressing the appropriate memory button 1 or 2 located on the driver's door.

Alarm Warning Type

Press the personalization button until ALARM WARNING TYPE appears in the display. To select your personalization for alarm warning type, press the select button while ALARM WARNING TYPE is displayed on the DIC. Pressing the select button will scroll through the following choices:

ALARM WARNING: BOTH (default): The headlamps will flash and the horn will chirp when the alarm is active.

ALARM WARNING: OFF: There will be no alarm warning on activation.

ALARM WARNING: HORN: The horn will chirp when the alarm is active.

ALARM WARNING: LAMPS: The headlamps will flash when the alarm is active.

Choose one of the four options and press the personalization button while your choice is displayed on the DIC to select it and move on to the next feature. For more information on alarm warning type see *Content Theft-Deterrent on page 2-16*.

Automatic Locking

Press the personalization button until AUTOMATIC LOCKING appears in the display. To select your personalization for automatic locking, press the select button while AUTOMATIC LOCKING is displayed on the DIC. Pressing the select button will scroll through the following choices:

LOCK DOORS MANUALLY: The doors will not be locked automatically.

LOCK DOORS WITH SPEED: The doors will lock when the vehicle speed is above 8 mph (13 km/h) for three seconds.

Downloaded from www.Manualslib.com manuals search engine

LOCK DOORS OUT OF PARK (default): The doors will lock when the vehicle is shifted out of PARK (P).

Choose one of the three options and press the personalization button while it is displayed on the DIC to select it and move on to the next feature. For more information on automatic door locks see *Programmable Automatic Door Locks on page 2-9*.

Automatic Unlocking

Press the personalization button until AUTOMATIC UNLOCKING appears in the display. To select your personalization for automatic unlocking, press the select button while AUTOMATIC UNLOCKING is displayed on the DIC. Pressing the select button will scroll through the following choices:

UNLOCK ALL IN PARK (default): All of the doors will unlock when the vehicle is shifted into PARK (P).

UNLOCK ALL AT KEY OUT: All of the doors will unlock when the key is taken out of the ignition.

UNLOCK DOORS MANUALLY: The doors will not be unlocked automatically.

UNLOCK DRIVER IN PARK: The driver's door will be unlocked when the vehicle is shifted into PARK (P).

Choose one of the four options and press the personalization button while it is displayed on the DIC to select it and move on to the next feature. For more information on automatic door locks see *Programmable Automatic Door Locks on page 2-9*.

Delayed Locking

If your DIC does not have this feature, you can still program the delayed locking feature. See *Delayed Locking on page 2-9* for more information.

When locking the doors with the power lock switch or the keyless entry transmitter and a door or the liftgate is open, the delayed locking feature will delay locking the doors and tailgate until five seconds after the last door is closed.

Press the personalization button until DELAYED LOCKING appears in the display. To select your personalization for delayed locking, press the select button while DELAYED LOCKING is displayed on the DIC. Pressing the select button will scroll through the following choices:

DELAYED LOCKING ON: The doors will not lock until five seconds after the last door or the liftgate is closed. You will hear three chimes to signal that the delayed locking feature is in use. You can temporarily override delayed locking by pressing the lock button on the door or keyless entry transmitter a second time.

Downloaded from www.Manualslib.com manuals search engine

DELAYED LOCKING OFF: The doors will lock immediately when pressing the power lock switch or the lock button on the keyless entry transmitter.

Choose one of the two options and press the personalization button while it is displayed on the DIC to select it and move on to the next feature. For more information on automatic door locks see *Programmable Automatic Door Locks on page 2-9*.

This feature will not operate if the key is in the ignition.

Seat Position Recall

Press the personalization button until SEAT POSITION RECALL appears in the display. To select your personalization for seat position recall, press the select button while SEAT POSITION RECALL is displayed on the DIC. Pressing the select button will scroll through the following choices:

SEAT POSITION RECALL OFF (default): The memory seat position you saved will only be recalled when the memory button 1 or 2 is pressed.

SEAT POSITION RECALL AT KEY IN: The memory seat position you saved will be recalled when you put the key in the ignition.

SEAT POSITION RECALL ON REMOTE: The memory seat position you saved will be recalled when you unlock the vehicle with the remote keyless entry transmitter.

Choose one of the three options and press the personalization button while it is displayed on the DIC to select it and move on to the next feature. For more information on seat position recall see *Memory Seat on page 2-51*.

Perimeter Lighting

Press the personalization button until PERIMETER LIGHTING appears in the display. To select your personalization for perimeter lighting, press the select button while PERIMETER LIGHTING is displayed on the DIC. Pressing the select button will scroll through the following choices:

PERIMETER LIGHTING ON (default): The headlamps and back-up lamps will come on for 40 seconds, if it is dark enough outside, when you unlock the vehicle with the remote keyless entry transmitter.

Downloaded from www.Manualslib.com manuals search engine

PERIMETER LIGHTING OFF: The perimeter lights will not come on when you unlock the vehicle with the remote keyless entry transmitter.

Choose one of the two options and press the personalization button while it is displayed on the DIC to select it and move on to the next feature.

Remote Lock Feedback

Press the personalization button until REMOTE LOCK FEEDBACK appears in the display. To select your personalization for the feedback you will receive when locking the vehicle with the remote keyless entry transmitter, press the select button while REMOTE LOCK FEEDBACK is displayed on the DIC. Pressing the select button will scroll through the following choices:

LOCK FEEDBACK: BOTH (default): The parking lamps will flash each time you press the button with the lock symbol on the remote keyless entry transmitter and the horn will chirp the second time you press the lock button.

LOCK FEEDBACK: OFF: There will be no feedback when locking the vehicle.

LOCK FEEDBACK: HORN: The horn will chirp the second time you press the button with the lock symbol on the remote keyless entry transmitter.

LOCK FEEDBACK: LAMPS: The parking lamps will flash each time you press the button with the lock symbol on the remote keyless entry transmitter.

Choose one of the four options and press the personalization button while it is displayed on the DIC to select it and move on to the next feature.

Remote Unlock Feedback

Press the personalization button until REMOTE UNLOCK FEEDBACK appears in the display. To select your personalization for the feedback you will receive when unlocking the vehicle with the remote keyless entry transmitter, press the select button while REMOTE UNLOCK FEEDBACK is displayed on the DIC. Pressing the select button will scroll through the following choices:

UNLOCK FEEDBACK: LAMPS (default): The parking lamps will flash each time you press the button with the unlock symbol on the remote keyless entry transmitter.

Downloaded from www.Manualslib.com manuals search engine

UNLOCK FEEDBACK: BOTH: The parking lamps will flash each time you press the button with the unlock symbol on the remote keyless entry transmitter and the horn will chirp the second time you press the unlock button.

UNLOCK FEEDBACK: OFF: There will be no feedback when unlocking the vehicle.

UNLOCK FEEDBACK: HORN: The horn will chirp the second time you press the button with the unlock symbol on the remote keyless entry transmitter.

Choose one of the four options and press the personalization button while it is displayed on the DIC to select it and move on to the next feature.

Headlamps on at Exit

Press the personalization button until HEADLAMPS ON AT EXIT appears in the display. To select your personalization for how long the headlamps will stay on when you turn off the vehicle, press the select button while HEADLAMPS ON AT EXIT is displayed on the DIC. Pressing the select button will scroll through the following choices:

- HEADLAMP DELAY: 10 SEC (default)
- HEADLAMP DELAY: 20 SEC
- HEADLAMP DELAY: 40 SEC
- HEADLAMP DELAY: 60 SEC
- HEADLAMP DELAY: 120 SEC
- HEADLAMP DELAY: 180 SEC
- HEADLAMP DELAY OFF

The amount of time you choose will be the amount of time that the headlamps stay on after you turn off the vehicle. If you choose off, the headlamps will turn off as soon as you turn off the vehicle.

Choose one of the seven options and press the personalization button while it is displayed on the DIC to select it and move on to the next feature.

Curb View Assist

Press the personalization button until CURB VIEW ASSIST appears in the display. To select your personalization for curb view assist, press the select button while CURB VIEW ASSIST is displayed on the DIC. Pressing the select button will scroll through the following choices:

CURB VIEW: OFF (default): Neither outside mirror will be tilted down when the vehicle is shifted into REVERSE (R).

Downloaded from www.Manualslib.com manuals search engine

CURB VIEW: PASSENGER: The passenger's outside mirror will be tilted down when the vehicle is shifted into REVERSE (R).

CURB VIEW: DRIVER: The driver's outside mirror will be tilted down when the vehicle is shifted into REVERSE (R).

CURB VIEW: BOTH: The driver's and passenger's outside mirror will be tilted down when the vehicle is shifted into REVERSE (R).

Choose one of the four options and press the personalization button while it is displayed on the DIC to select it and move on to the next feature. For more information on tilt mirror in reverse see *Outside Automatic Dimming Mirror with Curb View Assist on page 2-39*.

Easy Exit Driver Seat

Press the personalization button until EASY EXIT DRIVER SEAT appears in the display. To select your personalization for seat position exit, press the select button while EASY EXIT DRIVER SEAT is displayed on the DIC. Pressing the select button will scroll through the following choices:

EASY EXIT SEAT: OFF (default): No seat exit recall will occur.

EASY EXIT SEAT: ON: The driver's seat will move to the exit position when the key is removed from the ignition.

Choose one of the two options and press the personalization button while it is displayed on the DIC to select it and move on to the next feature. For more information on seat position exit see *Memory Seat on page 2-51*.

Downloaded from www.Manualslib.com manuals search engine

Display Units (ENG/MET)

Press the personalization button until DISPLAY UNITS appears in the display. To select English or metric, press the select button while DISPLAY UNITS is displayed on the DIC. Pressing the select button will scroll through the following choices:

- UNITS: ENGLISH
- UNITS: METRIC

If you choose English, all information will be displayed in English units. For example, distance in miles and fuel economy in miles per gallon.

Choose one of the two options and press the personalization button while it is displayed on the DIC to select it and end out of the personalization options.

Display Language

To select your personalization for display language, press the select button while DISPLAY LANGUAGE is displayed on the DIC. Pressing the select button will scroll through the following languages:

- English
- French
- Spanish

Choose one of the three options and press the personalization button while it is displayed on the DIC to select it.

If you accidentally choose a language that you don't want or understand, press and hold the personalization button and the trip information button at the same time. The DIC will begin scrolling through the languages in their particular language. English will be in English, French will be in French and so on. When you see the language that you would like, release both buttons. The DIC will then display the information in the language you chose.

You can also scroll through the different languages by pressing and holding the trip reset stem for four seconds, as long as you are in the odometer mode.

Select Button

The select button is used to reset certain functions and turn off or acknowledge messages on the DIC display. The select button also toggles through the options available in each personalization menu. For example, this button will reset the trip odometers, turn off the FUEL LEVEL LOW message, and toggle through the languages you can select the DIC to display information in.

Downloaded from www.Manualslib.com manuals search engine

DIC Warnings and Messages

Warning messages are displayed on the DIC to notify the driver that the status of the vehicle has changed and that some action may be needed by the driver to correct the condition. If there is more than one message that needs to be displayed they will appear one after another. Some messages may not require immediate action but you should press the select button to acknowledge that you received the message and clear it from the display. Some messages cannot be cleared from the display because they are more urgent; these messages require action before they can be removed from the DIC display. The following are the possible messages that can be displayed and some information about them.

CHANGE ENGINE OIL

This message is displayed when the engine oil needs to be changed and service is required for your vehicle. See *Scheduled Maintenance on page 6-4* and *Engine Oil on page 5-14* for more information. Also see “GM Oil Life System” previously in this section for information on how to reset the message. This message will clear itself after 10 seconds until the next ignition cycle.

CHECK OIL LEVEL

If the oil level in the vehicle is low, this message will appear on the DIC. Check the oil level and correct it as necessary. You may need to let the vehicle cool or warm up and cycle the ignition to be sure this message will clear. Once the problem is corrected, pressing the select button will clear this message from the DIC display. This message will clear itself after 10 seconds until the next ignition cycle.

OIL LIFE RESET

This message will appear on the display for about 10 seconds after resetting the change engine oil message.

OIL PRESSURE LOW

If low oil pressure levels occur, this message will be displayed on the DIC and a chime will sound. Stop the vehicle as soon as safely possible and do not operate it until the cause of the low oil pressure has been corrected. Check your oil as soon as possible and have your vehicle serviced.

Downloaded from www.Manualslib.com manuals search engine

ENGINE COOLANT HOT

If the cooling system temperature gets hot, this message will appear in the DIC. Stop the vehicle and let the engine idle in PARK (P) to allow the coolant to reach a safe temperature. This message will clear when the coolant temperature drops to a safe operating temperature. Pressing the select button will clear it from the DIC display.

LOW COOLANT LEVEL

If your vehicle has a low coolant sensor and the engine coolant level is low, this message will appear on the DIC. Adding coolant will clear the message. This message will clear itself after 10 seconds until the next ignition cycle.

ENGINE OVERHEATED

If the engine cooling system reaches unsafe temperatures for operation, this message will appear in the DIC and you will hear a chime. Stop and turn off the vehicle as soon as it is safe to do so to avoid severe damage. This message will clear when the engine has cooled to a safe operating temperature.

REDUCED ENGINE POWER

This message is displayed when the cooling system temperature gets too hot and the engine further enters the engine coolant protection mode.

See *Engine Overheating on page 5-27* for further information.

You may also see this message when the vehicle determines a problem with the electronic throttle control. See your dealer for service.

BATTERY NOT CHARGING

If the battery is not charging during operation, this message will appear on the DIC. Driving with this problem could drain your battery. Have the electrical system checked as soon as possible. Pressing the select button will clear it from the DIC display.

Downloaded from www.Manualslib.com manuals search engine

SERVICE AIR BAG

If there is a problem with the air bag system, this message will be displayed on the DIC. Have a qualified technician inspect the system for problems. Pressing the select button will clear it from the DIC display.

SERVICE BRAKE SYSTEM

If a problem occurs with the brake system, this message will appear on the DIC. If this message appears, stop as soon as possible and turn off the vehicle. Restart the vehicle and check for the message on the DIC display. If the message is still displayed, or appears again when you begin driving, the brake system needs service. Pressing the select button will clear it from the DIC display.

SERVICE 4WD

If a problem occurs with the all–wheel drive system, this message will appear on the DIC. If this message appears, stop as soon as possible and turn off the vehicle. Restart the vehicle and check for the message on the DIC display. If the message is still displayed, or appears again when you begin driving, the four wheel drive system needs service. Pressing the select button will clear it from the DIC display.

SERVICE AIR SUSPENSION

If a problem occurs with the suspension system, this message will appear on the DIC. If this message appears, stop as soon as possible and turn off the vehicle. Restart the vehicle and check for the message on the DIC display. If the message is still displayed, or appears again when you begin driving, the air suspension system needs service.

TURN SIGNAL ON

If a turn signal is left on for 3/4 of a mile (1.2 km), this message will appear on the display and you will hear a chime. Move the turn signal/multifunction lever to the off position. Pressing the select button will clear it from the DIC display.

FUEL LEVEL LOW

If the fuel level is low, this message will appear on the DIC and you will hear a chime. Refuel as soon as possible. Pressing the select button will acknowledge this message immediately and clear it from the DIC display. It will also clear itself after 10 seconds. The low fuel light near the fuel gage will still remain on in either case.

Downloaded from www.Manualslib.com manuals search engine

TIGHTEN FUEL CAP

If the vehicle's fuel cap is not tightened properly this message may appear along with the check engine light on the instrument panel. See *Malfunction Indicator Lamp on page 3-38*. Reinstall the fuel cap, making sure to fully install the cap. See *Filling Your Tank on page 5-7*. The diagnostic system can determine if the fuel cap has been left off or improperly installed. A loose or missing fuel cap will allow fuel to evaporate into the atmosphere. A few driving trips with the cap properly installed should turn the light and message off.

CHECK WASHER FLUID

If the washer fluid level is low, this message will appear on the DIC. Adding washer fluid will clear the message. Pressing the select button will clear it from the DIC display. This message will clear itself after 10 seconds until the next ignition cycle.

TRACTION ACTIVE

When the traction control system has detected that any of the vehicle's wheels are slipping, the traction control system will activate and this message will appear on the DIC. See *Traction Control System (TCS) on page 4-9* for more information.

TRANSMISSION HOT

If the transmission fluid temperature becomes high, the message center will display this message.

When the transmission enters the protection mode, you may notice a change in the transmission shifting patterns. When the transmission fluid temperature returns to normal, the display will turn off and the transmission shifting patterns will return to normal.

Notice: **If you drive your vehicle while the transmission fluid is overheating and the transmission temperature warning is displayed on the instrument panel cluster and/or DIC, you can damage the transmission. This could lead to costly repairs that would not be covered by your warranty. Do not drive your vehicle with overheated transmission fluid or while transmission temperature warning is displayed.**

Downloaded from www.Manualslib.com manuals search engine

The following situations can cause the transmission to operate at higher temperatures:

- Towing a trailer
- Hot outside air temperatures
- Hauling a large or heavy load
- Low transmission fluid level
- High transmission fluid level
- Restricted air flow to the radiator and the auxiliary transmission oil cooler (if equipped).

A temporary solution to hotter transmission operating temperatures may be to let the transmission cool down. If the transmission is operated at higher temperatures on a frequent basis, see *Scheduled Maintenance on page 6-4* for the proper transmission maintenance intervals.

TRANS HOT IDLE ENGINE

If the transmission fluid gets hot, this message will appear on the DIC along with a continuous chime. Driving with the transmission fluid temperature high can cause damage to the vehicle. Stop the vehicle and let it idle to allow the transmission to cool. This message will clear and the chime will stop when the fluid temperature reaches a safe level.

DRIVER DOOR AJAR

If the driver's door is not fully closed and the vehicle is in a drive gear, this message will appear on the display and you will hear a chime. Stop and turn off the vehicle, check the door for obstacles, and close the door again. Check to see if the message still appears on the DIC. Pressing the select button will clear it from the DIC display.

Downloaded from www.Manualslib.com manuals search engine

PASSENGER DOOR AJAR

If the passenger's door is not fully closed and the vehicle is in a drive gear, this message will appear on the display and you will hear a chime. Stop and turn off the vehicle, check the door for obstacles, and close the door again. Check to see if the message still appears on the DIC. Pressing the select button will clear it from the DIC display.

LEFT REAR DOOR AJAR

If the driver's side rear door is not fully closed and the vehicle is in a drive gear, this message will appear on the display and you will hear a chime. Stop and turn off the vehicle, check the door for obstacles, and close the door again. Check to see if the message still appears on the DIC. Pressing the select button will clear it from the DIC display.

RIGHT REAR DOOR AJAR

If the passenger's side rear door is not fully closed and the vehicle is in a drive gear, this message will appear on the display and you will hear a chime. Stop and turn off the vehicle, check the door for obstacles, and close the door again. Check to see if the message still appears on the DIC. Pressing the select button will clear it from the DIC display.

REAR ACCESS OPEN

If the liftgate is open while the ignition is in RUN, this message will appear on the DIC and you will hear a chime. Turn off the vehicle and check the liftgate. Restart the vehicle and check for the message on the DIC display. Pressing the select button will clear it from the DIC display.

REPLACE LIFTGATE FUSE

This message will be displayed if the liftgate lock malfunctions and/or the liftgate fuse blows. For more information on fuses, see *Fuses and Circuit Breakers on page 5-102*.

If the message returns after replacing the fuse, see you dealer for service.

KEYFOB X BATTERY LOW

If a remote keyless entry transmitter battery is low, this message will appear on the DIC. The battery needs to be replaced in the transmitter. Pressing the select button will clear it from the DIC display.

Downloaded from www.Manualslib.com manuals search engine

Audio System(s)

Notice: **Before you add any sound equipment to your vehicle – like a tape player, CB radio, mobile telephone or two-way radio – be sure you can add what you want. If you can, it's very important to do it properly. Added sound equipment may interfere with the operation of your vehicle's engine, radio or other systems, and even damage them. Your vehicle's systems may interfere with the operation of sound equipment that has been added improperly.**

So, before adding sound equipment, check with your dealer and be sure to check federal rules covering mobile radio and telephone units.

Your audio system has been designed to operate easily and to give years of listening pleasure. You will get the most enjoyment out of it if you acquaint yourself with it first. Figure out which radio you have in your vehicle, find out what your audio system can do and how to operate all of its controls to be sure you're getting the most out of the advanced engineering that went into it.

Your vehicle has a feature called Retained Accessory Power (RAP). With RAP, you can play your audio system even after the ignition is turned off. See "Retained Accessory Power (RAP)" under *Ignition Positions on page 2-19*.

Setting the Time

Your radio may have a button marked with an H or HR to represent hours and an M or MN to represent minutes.

Press and hold the hour button until the correct hour appears on the display. Press and hold the minute button until the correct minute appears on the display. The time may be set with the ignition on or off.

To synchronize the time with an FM station broadcasting Radio Data System (RDS) information, press and hold the hour and minute buttons at the same time until RDS TIME appears on the display. To accept this time, press and hold the hour and minute buttons, at the same time, for another 2 seconds. If the time is not available from the station, NO UPDAT will appear on the display.

RDS time is broadcast once a minute. Once you have tuned to an RDS broadcast station, it may take a few minutes for your time to update.

Downloaded from www.Manualslib.com manuals search engine

Radio with Cassette and CD

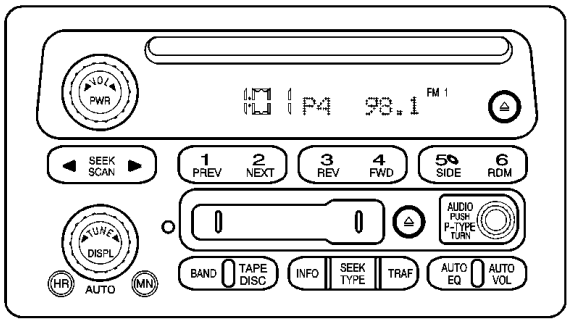

Playing the Radio

PWR (Power): Press this knob to turn the system on and off.

VOL (Volume): Turn this knob to increase or to decrease volume.

AUTO VOL (Automatic Volume): With automatic volume, your audio system will adjust automatically to make up for road and wind noise as you drive by increasing the volume as vehicle speed increases.

Set the volume at the desired level. Press this button to select LOW, MEDIUM, or HIGH. AVOL will appear on the display. Each higher setting will provide more volume compensation as vehicle speed increases. To turn automatic volume off, press this button until AVOL OFF appears on the display.

DISPL (Display): Press this knob to switch the display between the radio station frequency and the time. Time display is available with the ignition turned off.

For RDS, press the DISPL knob to change what appears on the display while using RDS. The display options are station name, RDS station frequency, PTY, and the name of the program (if available).

To change the default on the display, press the DISPL knob until you see the display you want, then hold the knob for two seconds. The radio will produce one beep and the selected display will now be the default.

Downloaded from www.Manualslib.com manuals search engine

Finding a Station

BAND: Press this button to switch between FM1, FM2, AM. The display will show your selection.

TUNE: Turn this knob to select radio stations.

◀ **SEEK** ▶ **:** Press the right or the left arrow to go to the next or to the previous station and stay there.

The radio will seek only to stations that are in the selected band and only to those with a strong signal.

◀ **PSCAN** ▶ **:** Press and hold either arrow for more than two seconds. SCAN will appear on the display and you will hear a beep. The radio will go to a station, play for a few seconds, then go on to the next station. Press either arrow again to stop scanning.

To scan preset stations, press and hold either arrow for more than four seconds. PSCN will appear on the display and you will hear two beeps. The radio will go to the first preset station, play for a few seconds, then go on to the next preset station. Press either arrow again or one of the pushbuttons to stop scanning.

The radio will scan only to stations that are in the selected band and only to those with a strong signal.

Setting Preset Stations

The six numbered pushbuttons let you return to your favorite stations. You can set up to 30 stations (six FM1, six FM2, and six AM), by performing the following steps:

1. Turn the radio on.
2. Press BAND to select FM1, FM2, AM.
3. Tune in the desired station.
4. Press AUTO EQ to select the equalization.
5. Press and hold one of the six numbered pushbuttons until you hear a beep. Whenever you press that numbered pushbutton, the station you set will return and the equalization that you selected will be automatically stored for that pushbutton.
6. Repeat the steps for each pushbutton.

Downloaded from www.Manualslib.com manuals search engine

Setting the Tone (Bass/Treble)

AUDIO: Push and release the AUDIO knob until BASS or TREB appears on the display. Turn the knob to increase or to decrease. The display will show the bass or treble level. If a station is weak or noisy, you may want to decrease the treble.

To adjust the bass and treble to the middle position, push and hold the AUDIO knob. The radio will produce one beep and adjust the display level to the middle position.

To adjust all tone and speaker controls to the middle position, push and hold the AUDIO knob when no tone or speaker control is displayed. ALL will appear on the display, you will hear a beep, and the display level will be adjusted to the middle position.

AUTO EQ (Automatic Equalization): Press this button to select customized equalization settings.

The radio will save separate AUTO EQ settings for each preset and source.

If you radio is equipped with the Bose audio system, your equalization settings are either CUSTOM or TALK.

Adjusting the Speakers (Balance/Fade)

AUDIO: To adjust the balance between the right and the left speakers, push and release the AUDIO knob until BAL appears on the display. Turn the knob to move the sound toward the right or the left speakers.

To adjust the fade between the front and the rear speakers, push and release the AUDIO knob until FADE appears on the display. Turn the knob to move the sound toward the front or the rear speakers.

To adjust the balance and fade to the middle position, push the AUDIO knob then push it again and hold it until the radio produces one beep. The balance and fade will be adjusted to the middle position and the display will show the speaker balance.

To adjust all tone and speaker controls to the middle position, push and hold the AUDIO knob when no tone or speaker control is displayed. ALL will appear on the display, you will hear a beep, and the display level will be adjusted to the middle position.

Downloaded from www.Manualslib.com manuals search engine

Radio Data System (RDS)

Your audio system is equipped with a Radio Data System (RDS). RDS features are available for use only on FM stations that broadcast RDS information.

With RDS, your radio can do the following:

- Seek to stations broadcasting the selected type of programming
- Receive announcements concerning local and national emergencies
- Display messages from radio stations
- Seek to stations with traffic announcements

This system relies upon receiving specific information from these stations and will only work when the information is available. In rare cases, a radio station may broadcast incorrect information that will cause the radio features to work improperly. If this happens, contact the radio station.

While you are tuned to an RDS station, the station name or the call letters will appear on the display instead of the frequency. RDS stations may also provide the time of day, a program type (PTY) for current programming, and the name of the program being broadcast.

Finding a Program Type (PTY) Station

To select and find a desired PTY perform the following:

1. Turn the P-TYPE knob to activate program type select mode. TYPE and a PTY will appear on the display.
2. Turn the P-TYPE knob to select a PTY.
3. Once the desired PTY is displayed, press the SEEK TYPE button or either SEEK arrow to take you to the PTY's first station.
4. If you want to go to another station within that PTY and the PTY is displayed, press the SEEK TYPE button once. If the PTY is not displayed, press the SEEK TYPE button twice to display the PTY and then to go to another station.
5. Press the P-TYPE knob to exit program type select mode.

   If PTY times out and is no longer on the display, go back to Step 1.

If both PTY and TRAF are on, the radio will search for stations with the selected PTY and traffic announcements.

If the radio cannot find the desired program type, NONE will appear on the display and the radio will return to the last station you were listening to.

Downloaded from www.Manualslib.com manuals search engine

SCAN: You can scan the stations within a PTY by performing the following:

1. Turn the P-TYPE knob to activate program type select mode. TYPE and a PTY will appear on the display.
2. Turn the P-TYPE knob to select a PTY.
3. Once the desired PTY is displayed, press either SCAN arrow, and the radio will begin scanning the stations in the PTY.
4. Press either SCAN arrow to stop at a station.

If both PTY and TRAF are on, the radio will scan for stations with the selected PTY and traffic announcements.

BAND (Alternate Frequency): Alternate frequency allows the radio to switch to a stronger station with the same program type. To turn alternate frequency on, press and hold BAND for two seconds. AF ON will appear on the display. The radio may switch to stronger stations.

To turn alternate frequency off, press and hold BAND again for two seconds. AF OFF will appear on the display. The radio will not switch to other stations.

Setting Preset PTYs (RDS Only)

The six numbered pushbuttons let you return to your favorite PTYs. These buttons have factory PTY presets. You can set up to 12 PTYs (six FM1 and six FM2) by performing the following steps:

1. Press BAND to select FM1 or FM2.
2. Turn the P-TYPE knob to activate program type select mode. TYPE and a PTY will appear on the display.
3. Turn the P-TYPE knob to select a PTY.
4. Press and hold one of the six numbered pushbuttons until you hear a beep. Whenever you press that numbered pushbutton, the PTY you set will return.
5. Repeat the steps for each pushbutton.

Downloaded from www.Manualslib.com manuals search engine

RDS Messages

ALERT!: Alert warns of local or national emergencies. When an alert announcement comes on the current radio station, ALERT! will appear on the display. You will hear the announcement, even if the volume is muted or a cassette tape or compact disc is playing. If a cassette tape or CD is playing, play will stop during the announcement. You will not be able to turn off alert announcements.

ALERT! will not be affected by tests of the emergency broadcast system. This feature is not supported by all RDS stations.

INFO (Information): If the current station has a message, the information symbol will appear on the display. Press this button to see the message. The message may display the artist, song title, call in phone numbers, etc.

If the whole message is not displayed, parts of the message will appear every three seconds. To scroll through the message at your own speed, press the INFO button repeatedly. A new group of words will appear on the display with each press. Once the complete message has been displayed, the information symbol will disappear from the display until another new message is received. The old message can be displayed by pressing the INFO button. You can view an old message until a new message is received or a different station is tuned to.

When a message is not available from a station, NO INFO will appear on the display.

TRAF (Traffic): If TRAF appears on the display, the tuned station broadcasts traffic announcements and when a traffic announcement comes on the tuned radio station you will hear it.

If the current tuned station does not broadcast traffic announcements, press this button and the radio will seek to a station that does. When the radio finds a station that broadcasts traffic announcements, the radio will stop and TRAF will be displayed. When a traffic announcement comes on the tuned radio station you will hear it. If no station is found, NO TRAFFIC will appear on the display.

If TRAF is on the display you can press the TRAF button to turn off the traffic announcements.

Your radio will play the traffic announcement even if the volume is low. Your radio will interrupt the play of a cassette tape or a CD if the last tuned station broadcasts traffic announcements.

Downloaded from www.Manualslib.com manuals search engine

Radio Messages

CAL ERR (Calibration Error): Your audio system has been calibrated for your vehicle from the factory. If CAL ERR appears on the display, it means that your radio has not been configured properly for the vehicle and must be returned to the dealer for service.

LOCKED: This message is displayed when the THEFTLOCK® system has locked up. You must return to the dealer for service.

Playing a Cassette Tape

Your tape player is built to work best with tapes that are up to 30 to 45 minutes long on each side. Tapes longer than that are so thin they may not work well in this player. The longer side with the tape visible should face to the right. If the ignition is on, but the radio is off, the tape can be inserted and will begin playing. A tape symbol is shown on the display whenever a tape is inserted. If you hear nothing or hear a garbled sound, the tape may not be in squarely. Press the eject button to remove the tape and start over.

While the tape is playing, use the VOL, AUDIO, and SEEK controls just as you do for the radio. TAPE will appear on the display and an arrow showing which side of the tape is playing. The tape player automatically begins playing the other side when it reaches the end of the tape.

If you want to insert a tape while the ignition is off, first press the eject button or the DISPL knob. Cassette tape adapter kits for portable CD players will work in your cassette tape player.

Your tape bias is set automatically when a metal or chrome tape is inserted.

If an error appears on the display, see “Cassette Tape Messages” later in this section.

1 PREV (Previous): Your tape must have at least three seconds of silence between each selection for previous to work. Press this pushbutton to go to the previous selection on the tape if the current selection has been playing for less than three seconds. If pressed when the current selection has been playing from 3 to 13 seconds, it will go to the beginning of the previous selection or the beginning of the current selection, depending upon the position on the tape. If pressed when the current selection has been playing for more than 13 seconds, it will go to the beginning of the current selection.

SEEK and a negative number will appear on the display while the cassette player is in the previous mode. Pressing this pushbutton multiple times will increase the number of selections to be searched back, up to -9.

Downloaded from www.Manualslib.com manuals search engine

2 NEXT: Your tape must have at least three seconds of silence between each selection for next to work. Press this pushbutton to go to the next selection on the tape. If you press the pushbutton more than once, the player will continue moving forward through the tape. SEEK and a positive number will appear on the display.

3 REV (Reverse): Press this pushbutton to reverse the tape rapidly. Press it again to return to playing speed. The radio will play while the tape reverses. The station frequency and REV will appear on the display. You may select stations during reverse operation by using TUNE and SEEK.

4 FWD (Forward): Press this pushbutton to advance the tape rapidly. Press this pushbutton again to return to playing speed. The radio will play while the tape advances. The station frequency and FWD will appear on the display. You may select stations during forward operation by using TUNE and SEEK.

5 SIDE: Press this pushbutton to play the other side of the tape.

◀ **SEEK** ▶ **:** The right arrow is the same as the NEXT pushbutton, and the left arrow is the same as the PREV pushbutton. If you hold either arrow or press it more than once, the player will continue moving forward or backward through the tape. SEEK and a positive or negative number will appear on the display.

◀ **PSCAN** ▶ **:** Press and hold either PSCAN arrow for more than two seconds until PSCAN appears on the display and you hear a beep. The radio will go to the next selection, play for 10 seconds, then go on to the next selection. Press either SCAN arrow again, to stop scanning. Your tape must have at least three seconds of silence between each selection for scan to work.

BAND: Press this button to listen to the radio when a cassette tape or CD is playing. The inactive tape or CD will remain safely inside the radio for future listening.

TAPE DISC: Press this button to play a cassette tape or CD when listening to the radio. The inactive tape or CD will remain safely inside the radio for future listening.

⏏ **(Eject):** Press this button to stop a tape when it is playing or to eject a tape when it is not playing. Eject may be activated with the radio off. Cassette tapes may be loaded with the radio off if this button is pressed first.

Downloaded from www.Manualslib.com manuals search engine

Cassette Tape Messages

CHK TAPE (Check Tape): If CHK TAPE appears on the display, the tape will not play because of one of the following errors:

- The tape is tight and the player cannot turn the tape hubs. Remove the tape. Hold the tape with the open end down and try to turn the right hub counterclockwise with a pencil. Turn the tape over and repeat. If the hubs do not turn easily, your tape may be damaged and should not be used in the player. Try a new tape to make sure your player is working properly.
- The tape is broken. Try a new tape.
- The tape is wrapped around the tape head. Attempt to get the cassette out. Try a new tape.

CLEAN: If this message appears on the display, the cassette tape player needs to be cleaned. It will still play tapes, but you should clean it as soon as possible to prevent damage to the tapes and player. See *Care of Your Cassette Tape Player on page 3-90*.

If the cassette tape is not playing correctly, for any other reason, try a known good CD.

If any error occurs repeatedly or if an error cannot be corrected, contact your dealer. If your radio displays an error message, write it down and provide it to your dealer when reporting the problem.

CD Adapter Kits

It is possible to use a portable CD player with your cassette tape player after activating the bypass feature on your tape player.

To activate the bypass feature, perform the following steps:

1. Turn the ignition on.
2. Turn the radio off.
3. Press and hold the TAPE DISC button for five seconds. READY will appear on the display and the tape symbol on the display will flash, indicating the feature is active.
4. Insert the adapter into the cassette tape slot. It will power up the radio and begin playing.

The override feature will remain active until the eject button is pressed.

Downloaded from www.Manualslib.com manuals search engine

Playing a CD

Insert a CD partway into the slot, label side up. The player will pull it in and the CD should begin playing. The CD symbol will appear on the display. If you want to insert a CD with the ignition off, first press the eject button or the DISPL knob.

If you turn off the ignition or radio with the CD in the player, it will stay in the player. When you turn on the ignition or the radio, the CD will start playing, where it stopped, if it was the last selected audio source.

As each new track starts to play, the track number will appear on the display.

If playing a CD-R the sound quality may be reduced due to CD-R quality, the method of recording, the quality of the music that has been recorded, and the way the CD-R has been handled. You may experience an increase in skipping, difficulty in finding tracks, and/or difficulty in loading and ejecting. If these problems occur try a known good CD.

Do not add paper labels to CDs, they could get caught in the CD player.

Do not play 3 inch CDs without a standard adapter CD.

If an error appears on the display, see “CD Messages” later in this section.

1 PREV (Previous): Press this pushbutton to go to the beginning of the current track if it has been playing for more than eight seconds. TRACK and the track number will appear on the display. If you hold this pushbutton or press it more than once, the player will continue moving backward through the CD.

2 NEXT: Press this pushbutton to go to the next track. TRACK and the track number will appear on the display. If you hold this pushbutton or press it more than once, the player will continue moving forward through the CD.

3 REV (Reverse): Press and hold this pushbutton to reverse quickly within a track. Press and hold this pushbutton for less than two seconds to reverse at six times the normal playing speed. Press and hold it for more than two seconds to reverse at 17 times the normal playing speed. Release the pushbutton to play the passage. ET and the elapsed time of the track will appear on the display.

Downloaded from www.Manualslib.com manuals search engine

4 FWD (Forward): Press and hold this pushbutton to advance quickly within a track. Press and hold this pushbutton for less than two seconds to advance at six times the normal playing speed. Press and hold it for more than two seconds to advance at 17 times the normal playing speed. Release the pushbutton to play the passage. ET and the elapsed time of the track will appear on the display.

6 RDM (Random): Press this pushbutton to hear the tracks in random, rather than sequential, order. RDM ON will appear on the display. RDM T and the track number will appear on the display when each track starts to play. Press this pushbutton again to turn off random play. RDM OFF will appear on the display.

◀ SEEK ▶ : Press the left arrow to go to the start of the current or to the previous track. Press the right arrow to go to the start of the next track. If you hold either arrow or press it more than once, the player will continue moving backward or forward through the CD.

◀ PSCAN ▶ : Press and hold either SCAN arrow for more than two seconds until SCAN appears on the display and you hear a beep. The radio will go to the next track, play for 10 seconds, then go on to the next track. Press either SCAN arrow again, to stop scanning.

DISPL (Display): Press this knob to see how long the current track has been playing. ET and the elapsed time will appear on the display. To change the default on the display (track or elapsed time), press the knob until you see the display you want, then hold the knob for two seconds. The radio will produce one beep and the selected display will now be the default.

BAND: Press this button to listen to the radio when a cassette tape or CD is playing. The inactive tape or CD will remain safely inside the radio for future listening.

TAPE DISC: Press this button to play a cassette tape or CD when listening to the radio. The inactive tape or CD will remain safely inside the radio for future listening.

⏏ (Eject): Press this button to stop a CD when it is playing or to eject a CD when it is not playing. Eject may be activated with either the ignition or radio off. CDs may be loaded with the radio and ignition off if this button is pressed first.

Downloaded from www.Manualslib.com manuals search engine

CD Messages

If the CD comes out, it could be for one of the following reasons:

- It is very hot. When the temperature returns to normal, the CD should play.
- You are driving on a very rough road. When the road becomes smooth, the CD should play.
- The CD is dirty, scratched, wet, or upside down.
- The air is very humid. If so, wait about an hour and try again.
- There may have been a problem while burning the CD.
- The label may be caught in the CD player.

If the CD is not playing correctly, for any other reason, try a known good CD.

If any error occurs repeatedly or if an error cannot be corrected, contact your dealer. If your radio displays an error message, write it down and provide it to your dealer when reporting the problem.

Radio with Six-Disc CD

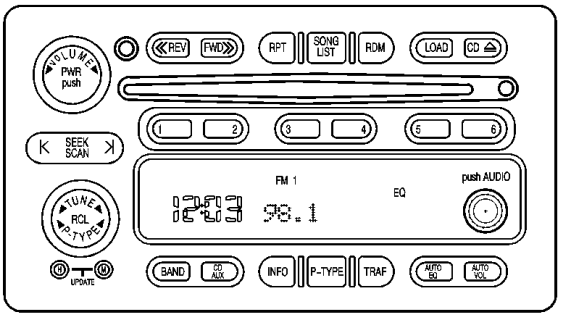

Playing the Radio

PWR (Power): Push this knob to turn the system on and off.

VOLUME: Turn this knob to increase or to decrease volume.

AUTO VOL (Automatic Volume): With automatic volume, your audio system will adjust automatically to make up for road and wind noise as you drive by increasing the volume as vehicle speed increases.

Downloaded from www.Manualslib.com manuals search engine

Set the volume at the desired level. Press this button to select LOW, MEDIUM, or HIGH. AVOL will appear on the display. Each higher setting will provide more volume compensation as vehicle speed increases. To turn automatic volume off, press this button until AVOL OFF appears on the display.

RCL (Recall): Press this knob to switch the display between the radio station frequency and the time. Press this knob with the ignition off to display the time.

To change the default on the display, press the RCL knob until you see the display you want, then hold the knob until the display flashes. The selected display will now be the default.

Finding a Station

BAND: Press this button to switch between FM1, FM2, or AM. The display will show your selection.

TUNE: Turn this knob to select radio stations.

⊢ SEEK ⊣ : Press the right or the left arrow to go to the next or to the previous station and stay there.

The radio will seek only to stations that are in the selected band and only to those with a strong signal.

⊢ SCAN ⊣ : Press and hold either SCAN arrow for two seconds until SC appears on the display and you hear a beep. The radio will go to a station, play for a few seconds, then go on to the next station. Press either SCAN arrow again to stop scanning.

To scan preset stations, press and hold either SCAN arrow for more than four seconds. PRESET SCAN will appear on the display and you will hear a double beep. The radio will go to a preset station stored on your pushbuttons, play for a few seconds, then go on to the next preset station. Press either SCAN arrow again to stop scanning presets.

The radio will scan only to stations that are in the selected band and only to those with a strong signal.

Downloaded from www.Manualslib.com manuals search engine

Setting Preset Stations

The six numbered pushbuttons let you return to your favorite stations. You can set up to 18 stations (six FM1, six FM2, and six AM), by performing the following steps:

1. Turn the radio on.
2. Press BAND to select FM1, FM2, or AM.
3. Tune in the desired station.
4. Press AUTO EQ to select the equalization.
5. Press and hold one of the six numbered pushbuttons until you hear a beep. Whenever you press that numbered pushbutton, the station you set will return and the equalization that you selected will be automatically stored for that pushbutton.
6. Repeat the steps for each pushbutton.

Setting the Tone (Bass/Treble)

AUDIO: Push and release the AUDIO knob until BASS, MID, or TREB appears on the display. Turn the knob to increase or to decrease. The display will show the bass, midrange, or treble level. If a station is weak or noisy, you may want to decrease the treble.

To adjust the bass, midrange, and treble to the middle position, push the AUDIO knob. The radio will produce one beep and adjust the display level to the middle position.

To adjust all tone and speaker controls to the middle position, push and hold the AUDIO knob when no tone or speaker control is displayed. CENTERED will appear on the display and you will hear a beep.

AUTO EQ (Automatic Equalization): Press this button to select customized equalization settings.

The radio will save separate AUTO EQ settings for each preset and source.

If you radio is equipped with the Bose audio system, your equalization settings are either CUSTOM or TALK.

Downloaded from www.Manualslib.com manuals search engine

Adjusting the Speakers (Balance/Fade)

AUDIO: To adjust the balance between the right and the left speakers, push and release the AUDIO knob until BAL appears on the display. Turn the knob to move the sound toward the right or the left speakers.

To adjust the fade between the front and the rear speakers, push and release the AUDIO knob until FADE appears on the display. Turn the knob to move the sound toward the front or the rear speakers.

To adjust the balance and fade to the middle position, push and hold the AUDIO knob. The radio will produce one beep and adjust the display level to the middle position.

To adjust all tone and speaker controls to the middle position, push and hold the AUDIO knob when no tone or speaker control is displayed. CENTERED will appear on the display and you will hear a beep.

Radio Data System (RDS)

Your audio system is equipped with a Radio Data System (RDS). RDS features are available for use only on FM stations that broadcast RDS information.

With RDS, your radio can do the following:

- Seek to stations broadcasting the selected type of programming
- Receive announcements concerning local and national emergencies
- Display messages from radio stations
- Seek to stations with traffic announcements

This system relies upon receiving specific information from these stations and will only work when the information is available. In rare cases, a radio station may broadcast incorrect information that will cause the radio features to work improperly. If this happens, contact the radio station.

While you are tuned to an RDS station, the station name or the call letters will appear on the display instead of the frequency. RDS stations may also provide the time of day, a program type (PTY) for current programming, and the name of the program being broadcast.

Downloaded from www.Manualslib.com manuals search engine

Finding a Program Type (PTY) Station

To select and find a desired PTY perform the following:

1. Press the P-TYPE button to activate program type select mode. P-TYPE and the last selected PTY will appear on the display.
2. Turn the P-TYPE knob to select a PTY.
3. Once the desired PTY is displayed, press either SEEK arrow to select the PTY and take you to the PTY's first station.
4. If you want to go to another station within that PTY and the PTY is displayed, press either SEEK arrow once. If the PTY is not displayed, press either SEEK arrow twice to display the PTY and then to go to another station.
5. Press P-TYPE to exit program type select mode.

   If PTY times out and is no longer on the display, go back to Step 1.

If both P-TYPE and TRAF are on, the radio will search for stations with the selected PTY and traffic announcements.

To use the PTY interrupt feature, press and hold the P-TYPE button until you hear a beep on the PTY you want to interrupt with. When selected, an asterisk will appear beside that PTY on the display. You may select multiple interrupts if desired. When you are listening to a CD, the last selected RDS station will interrupt play if that selected program type format is broadcast.

SCAN: You can scan the stations within a PTY by performing the following:

1. Press the P-TYPE button to activate program type select mode. P-TYPE and the last selected PTY will appear on the display.
2. Turn the P-TYPE knob to select a PTY.
3. Once the desired PTY is displayed, press and hold either SCAN arrow, and the radio will begin scanning the stations in the PTY.
4. Press either SCAN arrow to stop at a station.

If both P-TYPE and TRAF are on, the radio will scan for stations with the selected PTY and traffic announcements.

Downloaded from www.Manualslib.com manuals search engine

BAND (Alternate Frequency): Alternate frequency allows the radio to switch to a stronger station with the same program type. To turn alternate frequency on, press and hold BAND for two seconds. AF ON will appear on the display. The radio may switch to stronger stations.

To turn alternate frequency off, press and hold BAND again for two seconds. AF OFF will appear on the display. The radio will not switch to other stations.

Setting Preset PTYs

The six numbered pushbuttons let you return to your favorite PTYs. These buttons have factory PTY presets. You can set up to 12 PTYs (six FM1 and six FM2) by performing the following steps:

1. Press BAND to select FM1 or FM2.
2. Press the P-TYPE button to activate program type select mode. P-TYPE and the last selected PTY will appear on the display.
3. Turn the P-TYPE knob to select a PTY.
4. Press and hold one of the six numbered pushbuttons until you hear a beep. Whenever you press that numbered pushbutton, the PTY you set will return.
5. Repeat the steps for each pushbutton.

RDS Messages

ALERT!: Alert warns of local or national emergencies. When an alert announcement comes on the current radio station, ALERT! will appear on the display. You will hear the announcement, even if the volume is muted or a CD is playing. If a CD is playing, play will stop during the announcement. You will not be able to turn off alert announcements.

ALERT! will not be affected by tests of the emergency broadcast system. This feature is not supported by all RDS stations.

INFO (Information): If the current station has a message, INFO will appear on the display. Press this button to see the message. The message may display the artist, song title, call in phone numbers, etc.

If the whole message is not displayed, parts of the message will appear every three seconds. To scroll through the message at your own speed, press the INFO button repeatedly. A new group of words will appear on the display with each press. Once the complete message has been displayed, INFO will disappear from the display until another new message is received. The old message can be displayed by pressing the INFO button. You can view an old message until a new message is received or a different station is tuned to.

Downloaded from www.Manualslib.com manuals search engine

TRAF (Traffic): If TRAF appears on the display, the tuned station broadcasts traffic announcements. To receive the traffic announcement from the tuned station, press this button. Brackets will be displayed around TRAF and when a traffic announcement comes on the tuned radio station you will hear it.

If the current tuned station does not broadcast traffic announcements, press this button and the radio will seek to a station that does. When the radio finds a station that broadcasts traffic announcements, the radio will stop and brackets will be displayed around TRAF. When a traffic announcement comes on the tuned radio station you will hear it. If no station is found, NO TRAFFIC will appear on the display.

If the brackets are on the display and TRAF is not, you can then press the TRAF button to remove the brackets or use the TUNE knob or the SEEK arrows to go to a station that supports traffic announcements. If no station is found, NO TRAFFIC will appear on the display.

Your radio will also interrupt the play of a CD if the last tuned station broadcasts traffic announcements and the brackets are displayed.

Playing a CD

The CD player can play the smaller 8 cm single CDs with an adapter ring. Full-size CDs and the smaller CDs are loaded in the same manner.

If playing a CD-R the sound quality may be reduced due to CD-R quality, the method of recording, the quality of the music that has been recorded, and the way the CD-R has been handled. You may experience an increase in skipping, difficulty in finding tracks, and/or difficulty in loading and ejecting. If these problems occur try a known good CD.

Do not add paper labels to CDs, they could get caught in the CD player.

Do not play 3 inch CDs without a standard adapter CD.

If an error appears on the display, see “CD Messages” later in this section.

Downloaded from www.Manualslib.com manuals search engine

LOAD CD ⏏ : Press the LOAD side of this button to load CDs into the CD player. This CD player will hold up to six CDs.

To insert one CD, do the following:

1. Turn the ignition on.
2. Press and release the LOAD side of the LOAD CD button.
3. Wait for the light, located to the right of the slot, to turn green.
4. Load a CD. Insert the CD partway into the slot, label side up. The player will pull the CD in.

When a CD is inserted, the CD symbol will appear on the display. If you select an equalization setting for your CD, it will be activated each time you play a CD.

The CD will begin to play automatically.

As each new track starts to play, the track number will appear on the display.

To insert multiple CDs, do the following:

1. Turn the ignition on.
2. Press and hold the LOAD side of the LOAD CD button for two seconds.

   You will hear a beep and the light, located to the right of the slot, will begin to flash and LOAD ALL will appear on the display.
3. Once the light stops flashing and turns green, load a CD. Insert the CD partway into the slot, label side up. The player will pull the CD in.

   Once the CD is loaded, the light will begin flashing again. Once the light stops flashing and turns green you can load another CD. The CD player takes up to six CDs. Do not try to load more than six.

To load more than one CD but less than six, complete Steps 1 through 3. When you have finished loading CDs, with the radio on or off, press the LOAD side of the LOAD CD button to cancel the loading function. The radio will begin to play the last CD loaded.

When a CD is inserted, the CD symbol will appear on the display. If more than one CD has been loaded, a number for each CD will be displayed. If you select an equalization setting for your CD, it will be activated each time you play a CD.

The last CD loaded will begin to play automatically.

As each new track starts to play, the track number will appear on the display.

Downloaded from www.Manualslib.com manuals search engine

Playing a Specific Loaded CD

For every CD loaded, a number will appear on the display. To play a specific CD, first press the CD AUX button, then press the numbered pushbutton that corresponds to the CD you want to play. A small bar will appear under the CD number that is playing, and the track number will appear on the display.

If an error appears on the radio display, see “CD Messages” later in this section.

LOAD CD ⏏ (Eject): Press the CD eject side of this button to eject a single CD or multiple CDs. To eject the CD that is currently playing, press and release this button. To eject multiple CDs, press and hold this button for two seconds. You will hear a beep and the light will flash to let you know when a CD is being ejected.

REMOVE CD will appear on the display. You can now remove the CD. If the CD is not removed, after 25 seconds, the CD will be automatically pulled back into the receiver. If you try to push the CD back into the receiver, before the 25 second time period is complete, the receiver will sense an error and will try to eject the CD several times before stopping.

Do not repeatedly press the CD eject button to eject a CD after you have tried to push it in manually. The receivers 25-second eject timer will reset at each press of eject, which will cause the receiver to not eject the CD until the 25-second time period has elapsed.

Once the player stops and the CD is ejected, remove the CD. After removing the CD, press the PWR knob off and then on again. This will clear the CD-sensing feature and enable CDs to be loaded into the player again.

≪ REV (Reverse): Press and hold this button to reverse quickly within a track. You will hear sound at a reduced volume. Release the button to play the passage. The elapsed time of the track will appear on the display.

FWD ≫ (Forward): Press and hold this button to advance quickly within a track. You will hear sound at a reduced volume. Release the button to play the passage. The elapsed time of the track will appear on the display.

Downloaded from www.Manualslib.com manuals search engine

RPT (Repeat): With repeat, you can repeat one track or an entire CD. To use repeat, do the following:

- To repeat the track you are listening to, press and release the RPT button. RPT will appear on the display. Press RPT again to turn off repeat play.
- To repeat the CD you are listening to, press and hold the RPT button for two seconds. RPT will appear on the display. Press RPT again to turn off repeat play.

RDM (Random): With random, you can listen to the tracks in random, rather than sequential, order, on one CD or on all of the CDs. To use random, do one of the following:

- To play the tracks on the CD you are listening to in random order, press and release the RDM button. RANDOM ONE will appear on the display. Press RDM again to turn off random play.
- To play the tracks on all of the CDs that are loaded in random order, press and hold RDM for more than two seconds. You will hear a beep and RANDOM ALL will appear on the display. Press RDM again to turn off random play.

AUTO EQ (Automatic Equalization): Press AUTO EQ to select the equalization setting while playing a CD. The equalization will be automatically set whenever you play a CD. For more information on AUTO EQ, see "AUTO EQ" listed previously in this section.

⊢ SEEK ⊣ : Press the left arrow to go to the start of the current track, if more than ten seconds have passed. Press the right arrow to go to the next track. If you hold either arrow or press it more than once, the player will continue moving backward or forward through the CD.

⊢ SCAN ⊣ : To scan one CD, press and hold either SCAN arrow for more than two seconds until SCAN appears on the display and you hear a beep. The radio will go to the next track, play for 10 seconds, then go on to the next track. Press either SCAN arrow again, to stop scanning.

To scan all loaded CDs, press and hold either SCAN arrow for more than four seconds until CD SCAN appears on the display and you hear a beep. The radio will go to the next track, play for 10 seconds, then go on to the next track. Press either SCAN arrow again, to stop scanning.

Downloaded from www.Manualslib.com manuals search engine

RCL (Recall): Press this knob to see how long the current track has been playing. To change the default on the display (track or elapsed time), press the knob until you see the display you want, then hold the knob until the display flashes. The selected display will now be the default.

BAND: Press this button to listen to the radio when a CD(s) is playing.

Using Song List Mode

The six-disc CD changer has a feature called song list. This feature is capable of saving 20 track selections.

To save tracks into the song list feature, perform the following steps:

1. Turn the CD player on and load it with at least one CD. See “LOAD CD” listed previously in this section for more information.
2. Check to see that the CD changer is not in song list mode. S-LIST should not appear on the display. If S-LIST is present, press the SONG LIST button to turn it off.
3. Select the desired CD by pressing the numbered pushbutton and then use the SEEK SCAN right arrow button to locate the track that you want to save. The track will begin to play.
4. Press and hold the SONG LIST button to save the track into memory. When SONG LIST is pressed a beep will be heard immediately. After two seconds of continuously pressing SONG LIST, two beeps will sound to confirm that the track has been saved.
5. Repeat Steps 3 and 4 for saving other selections.

S-LIST FULL will appear on the display if you try to save more than 20 selections.

To play the song list, press the SONG LIST button. One beep will be heard and S-LIST will appear on the display. The recorded tracks will begin to play in the order that they were saved.

You may seek through the song list by using the SEEK SCAN arrows. Seeking past the last saved track will return you to the first saved track.

Downloaded from www.Manualslib.com manuals search engine

To delete tracks from the song list, perform the following steps:

1. Turn the CD player on.
2. Press the SONG LIST button to turn song list on. S-LIST will appear on the display.
3. Press either SEEK SCAN arrow to select the desired track to be deleted.
4. Press and hold the SONG LIST button for two seconds. When SONG LIST is pressed a beep will be heard immediately. After two seconds of continuously pressing the SONG LIST button, two beeps will be heard to confirm that the track has been deleted.

After a track has been deleted, the remaining tracks are moved up the list. When another track is added to the song list, the track will be added to the end of the list.

To delete the entire song list, perform the following steps:

1. Turn the CD player on.
2. Press the SONG LIST button to turn song list on. S-LIST will appear on the display.
3. Press and hold the SONG LIST button for more than four seconds. A beep will be heard, followed by two beeps after two seconds and a final beep will be heard after four seconds. S-LIST EMPTY will appear on the display indicating that the song list has been deleted.

If a CD is ejected, and the song list contains saved tracks from that CD, those tracks are automatically deleted from the song list. Any tracks saved to the song list again are added to the bottom of the list.

To end song list mode, press the SONG LIST button. One beep will be heard and S-LIST will be removed from the display.

Downloaded from www.Manualslib.com manuals search engine

CD Messages

CHECK CD: If this message appears on the display, it could be for one of the following reasons:

- It is very hot. When the temperature returns to normal, the CD should play.
- You are driving on a very rough road. When the road becomes smooth, the CD should play.
- The CD is dirty, scratched, wet, or upside down.
- The air is very humid. If so, wait about an hour and try again.
- There may have been a problem while burning the CD.
- The label may be caught in the CD player.

If the CD is not playing correctly, for any other reason, try a known good CD.

If any error occurs repeatedly or if an error cannot be corrected, contact your dealer. If your radio displays an error message, write it down and provide it to your dealer when reporting the problem.

Navigation/Radio System

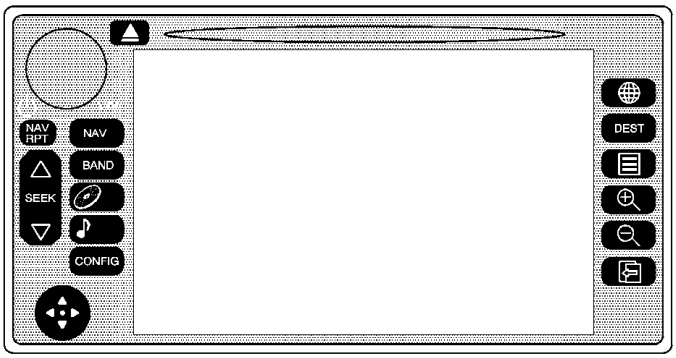

Navigation/Radio Display and Controls

Your vehicle may be equipped with a navigation radio system that includes Radio Data System (RDS) with program type (PTY) selections that will seek out the kind of music you want to listen to and XM™ Satellite Radio Service capabilities (48 contiguous US states, if equipped). The radio system can also communicate with your navigation system to broadcast announcements on traffic, weather, and emergency alert communications. For information on how to use this system, see the “Navigation System” manual.

Downloaded from www.Manualslib.com manuals search engine

Rear Seat Audio (RSA)

This feature allows rear seat passengers to listen to any of the audio sources: radio, cassette tapes, or CDs, depending on your vehicles options. However, the rear seat passengers can only control the music sources that the front seat passengers are not listening to. For example, rear seat passengers may listen to a cassette tape through headphones while the driver listens to the radio through the front speakers. The rear seat passengers have control of the volume for each set of headphones. The front seat audio controls always override the RSA controls.

Rear Seat Audio Controls

The following functions are controlled by the RSA system buttons:

⏻ **(Power):** Press this button to turn the rear seat audio system on or off. The rear speakers will be muted when the power is turned on unless your vehicle is equipped with the Bose® audio system. You may operate the rear seat audio functions even when the primary radio power is off.

Downloaded from www.Manualslib.com manuals search engine

(Volume): Turn the knob to increase or to decrease volume. The left knob controls the left headphone and the right knob controls the right headphone.

SRC (Source): Press this button to select an audio source: radio, cassette tape, or CD, depending on your vehicles options.

▽ **SEEK** △**:** While listening to FM1, FM2, or AM, press the up or the down arrow to tune to the next or to the previous station and stay there. If the front radio is in use, you cannot seek through different stations.

While listening to a cassette tape, press the up or the down arrow to hear the next or the previous selection. If the cassette tape on the front radio is in use, you cannot seek through different selections on a tape.

While listening to a CD, press the up arrow to hear the next track on the CD. Press the down arrow to go back to the start of the current track if more than eight seconds have played. If the CD player on the front radio is in use, you cannot seek through different tracks.

PROG (Program): The front passengers must be listening to something different for each of these functions to work:

- Press this button to go to the preset radio stations set on the pushbuttons on the main radio.
- When a cassette tape is playing, press this button to go to the other side of the tape.
- When a CD is playing in the radio, press this button to go back to the beginning of the CD.
- When a CD is playing in the CD changer, press this button to select the next CD.

Theft-Deterrent Feature

THEFTLOCK® is designed to discourage theft of your radio. The feature works automatically by learning a portion of the Vehicle Identification Number (VIN). If the radio is moved to a different vehicle, it will not operate and LOCKED will appear on the display.

When the radio and vehicle are turned off, the blinking red light indicates that THEFTLOCK® is armed.

With THEFTLOCK® activated, your radio will not operate if stolen.

Downloaded from www.Manualslib.com manuals search engine

Audio Steering Wheel Controls

You can control certain radio functions using the buttons on your steering wheel.

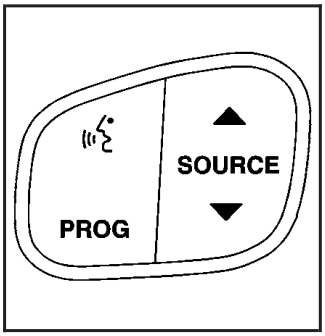

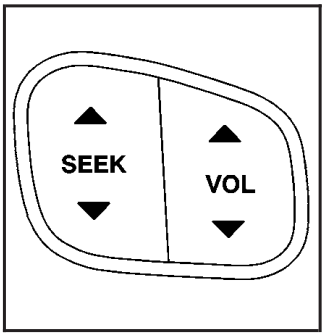

(OnStar/Voice Recognition): You can press this button to interact with the OnStar® system. See the OnStar® manual provided with your vehicle for more information.

PROG (Program): Press this button to play a station you have programmed on the radio preset buttons on the selected band.

If a cassette tape is playing, press this button to play the other side of the tape.

If a CD is playing in the CD changer, press this button to go to the next available CD.

▲ **SOURCE** ▼**:** Press this button to select FM1, FM2, AM or a cassette tape or CD. The cassette or CD must be loaded to play. Available loaded sources are shown on the display as a tape or a CD symbol.

▲ **SEEK** ▼**:** Press the up or the down arrow to seek to the next or to the previous radio station and stay there.

If a cassette tape or CD is playing, the player will advance with the up arrow and reverse with the down arrow.

▲ **VOL**▼ **(Volume):** Press the up or the down arrow to increase or to decrease volume.

Downloaded from www.Manualslib.com manuals search engine

Radio Reception

AM

The range for most AM stations is greater than for FM, especially at night. The longer range, however, can cause stations to interfere with each other. AM can pick up noise from things like storms and power lines. Try reducing the treble to reduce this noise.

FM

FM stereo will give you the best sound, but FM signals will reach only about 10 to 40 miles (16 to 65 km). Tall buildings or hills can interfere with FM signals, causing the sound to come and go.

Care of Your Cassette Tape Player

A tape player that is not cleaned regularly can cause reduced sound quality, ruined cassettes, or a damaged mechanism. Cassette tapes should be stored in their cases away from contaminants, direct sunlight, and extreme heat. If they are not, they may not operate properly or may cause failure of the tape player.

Your tape player should be cleaned regularly after every 50 hours of use. Your radio may display CLEAN to indicate that you have used your tape player for 50 hours without resetting the tape clean timer. If this message appears on the display, your cassette tape player needs to be cleaned. It will still play tapes, but you should clean it as soon as possible to prevent damage to your tapes and player. If you notice a reduction in sound quality, try a known good cassette to see if the tape or the tape player is at fault. If this other cassette has no improvement in sound quality, clean the tape player.

For best results, use a scrubbing action, non-abrasive cleaning cassette with pads which scrub the tape head as the hubs of the cleaner cassette turn. The recommended cleaning cassette is available through your dealer.

Downloaded from www.Manualslib.com manuals search engine

When cleaning the cassette tape player with the recommended non-abrasive cleaning cassette, it is possible that the cassette may eject, because the cut tape detection feature on your radio may recognize it as a broken tape, in error. To prevent the cleaning cassette from being ejected, use the following steps:

1. Turn the ignition on.
2. Turn the radio off.
3. Press and hold the TAPE DISC button for five seconds. READY will appear on the display and the cassette symbol will flash for five seconds.
4. Insert the scrubbing action cleaning cassette.
5. Eject the cleaning cassette after the manufacturer's recommended cleaning time.

When the cleaning cassette has been ejected, the cut tape detection feature is active again.

You may also choose a non-scrubbing action, wet-type cleaner which uses a cassette with a fabric belt to clean the tape head. This type of cleaning cassette will not eject on its own. A non-scrubbing action cleaner may not clean as thoroughly as the scrubbing type cleaner. The use of a non-scrubbing action, dry-type cleaning cassette is not recommended.

After you clean the player, press and hold the eject button for five seconds to reset the CLEAN indicator. The radio will display --- or CLEANED to show the indicator was reset.

Cassettes are subject to wear and the sound quality may degrade over time. Always make sure the cassette tape is in good condition before you have your tape player serviced.

Downloaded from www.Manualslib.com manuals search engine

Care of Your CDs and DVDs

Handle discs carefully. Store them in their original cases or other protective cases and away from direct sunlight and dust. If the surface of a disc is soiled, dampen a clean, soft cloth in a mild, neutral detergent solution and clean it, wiping from the center to the edge.

Be sure never to touch the side without writing when handling discs. Pick up discs by grasping the outer edges or the edge of the hole and the outer edge.

Care of Your CD and DVD Player

The use of CD lens cleaners for CDs is not advised, due to the risk of contaminating the lens of the CD optics with lubricants internal to the CD mechanism.

Cleaning the Video Screen

Pour some isopropyl or rubbing alcohol on a clean cloth and gently wipe the video screen. Do not spray directly onto the screen and do not press too hard or too long on the video screen.

Fixed Mast Antenna

The fixed mast antenna can withstand most car washes without being damaged. If the mast should ever become slightly bent, you can straighten it out by hand. If the mast is badly bent, you should replace it.

Check occasionally to be sure the mast is still tightened.

Chime Level Adjustment

The volume level of the vehicle's chimes can be controlled by the radio. To change the volume level, press and hold pushbutton 6 with the ignition on and the radio power off. The chime volume level will change from the normal level to loud, and LOUD will appear on the display. To change back to the default or normal setting, press and hold pushbutton 6 again. The chime level will change from the loud level to normal, and NORMAL will appear on the display.

Downloaded from www.Manualslib.com manuals search engine

Section 4 Driving Your Vehicle

Your Driving, the Road, and Your Vehicle 4-2
Defensive Driving 4-2
Drunken Driving 4-3
Control of a Vehicle 4-6
Braking 4-6
Traction Control System (TCS) 4-9
Locking Rear Axle 4-11
Steering 4-12
Off-Road Recovery 4-14
Passing 4-14
Loss of Control 4-16
Off-Road Driving 4-17
Driving at Night 4-41
Driving in Rain and on Wet Roads 4-43
City Driving 4-46
Freeway Driving 4-47
Before Leaving on a Long Trip 4-48
Highway Hypnosis 4-49
Hill and Mountain Roads 4-50
Winter Driving 4-52
If You Are Stuck: In Sand, Mud, Ice or Snow ...4-56

Towing 4-65
Towing Your Vehicle 4-65
Recreational Vehicle Towing 4-65
Loading Your Vehicle 4-67
Selectable Extended Rear Ride Height 4-73
Electronically Controlled Air Suspension System 4-74
Trailer Recommendations 4-75
Towing a Trailer 4-75

Downloaded from www.Manualslib.com manuals search engine

Your Driving, the Road, and Your Vehicle

Defensive Driving

The best advice anyone can give about driving is: Drive defensively.

Please start with a very important safety device in your vehicle: Buckle up. See *Safety Belts: They Are for Everyone on page 1-16*.

Defensive driving really means “be ready for anything.” On city streets, rural roads or freeways, it means “always expect the unexpected.”

Assume that pedestrians or other drivers are going to be careless and make mistakes. Anticipate what they might do. Be ready for their mistakes.

Rear-end collisions are about the most preventable of accidents. Yet they are common. Allow enough following distance. It is the best defensive driving maneuver, in both city and rural driving. You never know when the vehicle in front of you is going to brake or turn suddenly.

Defensive driving requires that a driver concentrate on the driving task. Anything that distracts from the driving task — such as concentrating on a cellular telephone call, reading, or reaching for something on the floor — makes proper defensive driving more difficult and can even cause a collision, with resulting injury. Ask a passenger to help do things like this, or pull off the road in a safe place to do them yourself. These simple defensive driving techniques could save your life.

Downloaded from www.Manualslib.com manuals search engine

Drunken Driving

Death and injury associated with drinking and driving is a national tragedy. It is the number one contributor to the highway death toll, claiming thousands of victims every year.

Alcohol affects four things that anyone needs to drive a vehicle:

- Judgment
- Muscular Coordination
- Vision
- Attentiveness.

Police records show that almost half of all motor vehicle-related deaths involve alcohol. In most cases, these deaths are the result of someone who was drinking and driving. In recent years, more than 16,000 annual motor vehicle-related deaths have been associated with the use of alcohol, with more than 300,000 people injured.

Many adults — by some estimates, nearly half the adult population — choose never to drink alcohol, so they never drive after drinking. For persons under 21, it is against the law in every U.S. state to drink alcohol. There are good medical, psychological and developmental reasons for these laws.

The obvious way to eliminate the leading highway safety problem is for people never to drink alcohol and then drive. But what if people do? How much is “too much” if someone plans to drive? It is a lot less than many might think. Although it depends on each person and situation, here is some general information on the problem.

The Blood Alcohol Concentration (BAC) of someone who is drinking depends upon four things:

- The amount of alcohol consumed
- The drinker’s body weight
- The amount of food that is consumed before and during drinking
- The length of time it has taken the drinker to consume the alcohol.

Downloaded from www.Manualslib.com manuals search engine

According to the American Medical Association, a 180 lb (82 kg) person who drinks three 12 ounce (355 ml) bottles of beer in an hour will end up with a BAC of about 0.06 percent. The person would reach the same BAC by drinking three 4 ounce (120 ml) glasses of wine or three mixed drinks if each had 1-1/2 ounces (45 ml) of liquors like whiskey, gin or vodka.

It is the amount of alcohol that counts. For example, if the same person drank three double martinis (3 ounces or 90 ml of liquor each) within an hour, the person's BAC would be close to 0.12 percent. A person who consumes food just before or during drinking will have a somewhat lower BAC level.

There is a gender difference, too. Women generally have a lower relative percentage of body water than men. Since alcohol is carried in body water, this means that a woman generally will reach a higher BAC level than a man of her same body weight will when each has the same number of drinks.

The law in an increasing number of U.S. states, and throughout Canada, sets the legal limit at 0.08 percent. In some other countries, the limit is even lower. For example, it is 0.05 percent in both France and Germany. The BAC limit for all commercial drivers in the United States is 0.04 percent.

The BAC will be over 0.10 percent after three to six drinks (in one hour). Of course, as we have seen, it depends on how much alcohol is in the drinks, and how quickly the person drinks them.

Downloaded from www.Manualslib.com manuals search engine

But the ability to drive is affected well below a BAC of 0.10 percent. Research shows that the driving skills of many people are impaired at a BAC approaching 0.05 percent, and that the effects are worse at night. All drivers are impaired at BAC levels above 0.05 percent. Statistics show that the chance of being in a collision increases sharply for drivers who have a BAC of 0.05 percent or above. A driver with a BAC level of 0.06 percent has doubled his or her chance of having a collision. At a BAC level of 0.10 percent, the chance of this driver having a collision is 12 times greater; at a level of 0.15 percent, the chance is 25 times greater!

The body takes about an hour to rid itself of the alcohol in one drink. No amount of coffee or number of cold showers will speed that up. “I will be careful” is not the right answer. What if there is an emergency, a need to take sudden action, as when a child darts into the street? A person with even a moderate BAC might not be able to react quickly enough to avoid the collision.

There is something else about drinking and driving that many people do not know. Medical research shows that alcohol in a person’s system can make crash injuries worse, especially injuries to the brain, spinal cord or heart. This means that when anyone who has been drinking — driver or passenger — is in a crash, that person’s chance of being killed or permanently disabled is higher than if the person had not been drinking.

⚠ CAUTION:

Drinking and then driving is very dangerous. Your reflexes, perceptions, attentiveness and judgment can be affected by even a small amount of alcohol. You can have a serious — or even fatal — collision if you drive after drinking. Please do not drink and drive or ride with a driver who has been drinking. Ride home in a cab; or if you are with a group, designate a driver who will not drink.

Downloaded from www.Manualslib.com manuals search engine

Control of a Vehicle

You have three systems that make your vehicle go where you want it to go. They are the brakes, the steering and the accelerator. All three systems have to do their work at the places where the tires meet the road.

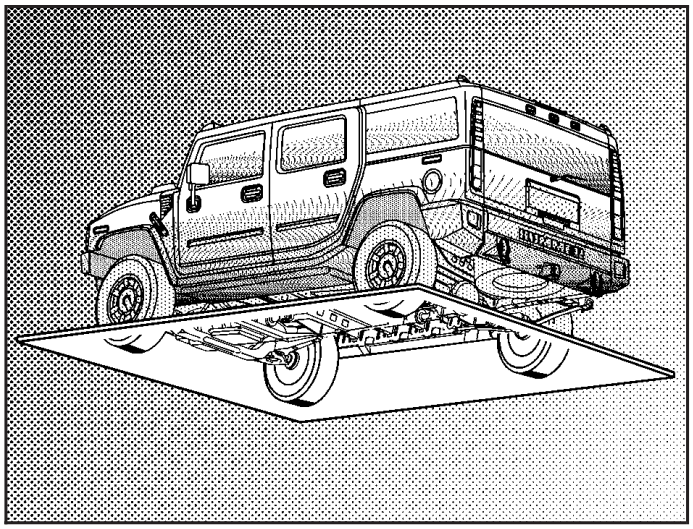

Sometimes, as when you are driving on snow or ice, it is easy to ask more of those control systems than the tires and road can provide. That means you can lose control of your vehicle. Also see *Traction Control System (TCS) on page 4-9*.

Braking

Braking action involves *perception time* and *reaction time.*

First, you have to decide to push on the brake pedal. That is *perception time.* Then you have to bring up your foot and do it. That is *reaction time.*

Average *reaction time* is about 3/4 of a second. But that is only an average. It might be less with one driver and as long as two or three seconds or more with another. Age, physical condition, alertness, coordination and eyesight all play a part. So do alcohol, drugs and frustration. But even in 3/4 of a second, a vehicle moving at 60 mph (100 km/h) travels 66 feet (20 m). That could be a lot of distance in an emergency, so keeping enough space between your vehicle and others is important.

And, of course, actual stopping distances vary greatly with the surface of the road (whether it is pavement or gravel); the condition of the road (wet, dry, icy); tire tread; the condition of your brakes; the weight of the vehicle and the amount of brake force applied.

Downloaded from www.Manualslib.com manuals search engine

Avoid needless heavy braking. Some people drive in spurts — heavy acceleration followed by heavy braking — rather than keeping pace with traffic. This is a mistake. Your brakes may not have time to cool between hard stops. Your brakes will wear out much faster if you do a lot of heavy braking. If you keep pace with the traffic and allow realistic following distances, you will eliminate a lot of unnecessary braking. That means better braking and longer brake life.

If your engine ever stops while you are driving, brake normally but do not pump your brakes. If you do, the pedal may get harder to push down. If your engine stops, you will still have some power brake assist. But you will use it when you brake. Once the power assist is used up, it may take longer to stop and the brake pedal will be harder to push.

Anti-lock Brake System (ABS)

Your vehicle has anti-lock brakes. ABS is an advanced electronic braking system that will help prevent a braking skid.

When you start your engine and begin to drive away, your anti-lock brake system will check itself. You may hear a momentary motor or clicking noise while this test is going on. This is normal.

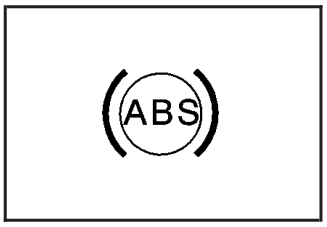

If there is a problem with the anti-lock brake system, this warning light will stay on. See *Anti-Lock Brake System Warning Light on page 3-34*.

Downloaded from www.Manualslib.com manuals search engine

Let us say the road is wet and you are driving safely. Suddenly, an animal jumps out in front of you. You slam on the brakes and continue braking. Here is what happens with ABS:

A computer senses that wheels are slowing down. If one of the wheels is about to stop rolling, the computer will separately work the brakes at each front wheel and at both rear wheels.

The anti-lock system can change the brake pressure faster than any driver could. The computer is programmed to make the most of available tire and road conditions. This can help you steer around the obstacle while braking hard.

As you brake, your computer keeps receiving updates on wheel speed and controls braking pressure accordingly.

Downloaded from www.Manualslib.com manuals search engine

Remember: Anti-lock does not change the time you need to get your foot up to the brake pedal or always decrease stopping distance. If you get too close to the vehicle in front of you, you will not have time to apply your brakes if that vehicle suddenly slows or stops. Always leave enough room up ahead to stop, even though you have anti-lock brakes.

Using Anti-Lock

Do not pump the brakes. Just hold the brake pedal down firmly and let anti-lock work for you. You may feel the brakes vibrate, or you may notice some noise, but this is normal.

Braking in Emergencies

With anti-lock, you can steer and brake at the same time. In many emergencies, steering can help you more than even the very best braking.

Traction Control System (TCS)

Your vehicle has a Traction Control System (TCS) that limits wheel spin. This is especially useful in slippery road conditions. The system operates only if it senses that any of the wheels are spinning or beginning to lose traction. When this happens, the system applies the brakes to limit wheel spin.

The Traction Control System may operate on dry roads under some conditions. When this happens, you may notice a reduction in acceleration or a pumping sound. This is normal and doesn't mean there's a problem with your vehicle. Examples of these conditions include hard acceleration in a turn, an abrupt upshift or downshift of the transmission or driving on rough roads.

If your vehicle is in cruise control when the TCS begins to limit wheel spin, the cruise control will automatically disengage. When road conditions allow you to safely use it again, you may re-engage the cruise control. See "Cruise Control" under *Turn Signal/Multifunction Lever on page 3-6*.

Downloaded from www.Manualslib.com manuals search engine

Another feature of this system is the Traction Control 2 (TC2) mode. TC2 should be selected for improved traction and system performance when the vehicle is on loose surfaces such as deep sand or mud.

To enter this mode, press the TC2 button located on the instrument panel to the right of the steering wheel.

TC2 only operates in the following transfer case modes:

- 4HI Lock
- 4LO Lock
- 4LO Lock and Rear Axle Lock

See *Locking Rear Axle on page 4-11* for more information on the rear axle lock.

It will not operate in 4HI. If the TC2 button is pressed while in 4HI, the light will flash for about 15 seconds and then go out. The light should also come on briefly when you turn the ignition key to RUN; if it doesn't see your dealer for service.

If you restart your engine, the system reverts to the standard TCS mode.

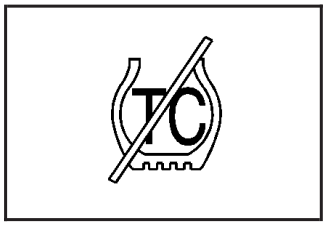

The traction off light will come on when a Traction Control System or Anti-Lock Brake System problem has been detected and the vehicle needs service. See *Traction Off Light on page 3-35*.

When the traction off light is on, adjust your driving accordingly.

The traction control system, as delivered from the factory, will automatically come on whenever you start your vehicle.

Downloaded from www.Manualslib.com manuals search engine

Locking Rear Axle

The locking rear axle can give your vehicle additional traction from the rear wheels when traveling in off-road situations such as mud, snow, sand, steep hills and uneven terrain.

The button used to turn this feature on or off is located above the transfer case buttons to the right of the steering wheel.

To lock the rear axle, do the following:

1. Place the transfer case in the 4LO Lock mode. This is the only mode which will allow the rear axle to lock. See *All-Wheel Drive on page 2-25* for more information regarding the transfer case and 4LO Lock mode.
2. Press the button with the vehicle stopped or moving less than 2 mph (3 km/h).

You must wait for the light in the button to stop flashing and remain illuminated before the rear axle is locked.

Notice: **If you try to lock the rear axle while your vehicle is stuck and the tires are spinning, you could damage your vehicle's drivetrain. The repairs would not be covered by your warranty. Always lock the rear axle before attempting situations and/or navigating terrain which could possibly cause the vehicle to become stuck.**

The locking rear axle will be disengaged when the vehicle's speed is greater than 20 mph (32 km/h), if the vehicle's battery is low and/or the transfer case is shifted out of 4LO Lock mode.

Notice: **If you lock the rear axle while driving on pavement, you could damage your vehicle's drivetrain. The repairs would not be covered by your warranty. Do not use the locking rear axle on pavement. If you need four-wheel drive when traveling on pavement, use only 4HI.**

Downloaded from www.Manualslib.com manuals search engine

Steering

Power Steering

If you lose power steering assist because the engine stops or the system is not functioning, you can steer but it will take much more effort.

Steering Tips

Driving on Curves

It is important to take curves at a reasonable speed.

A lot of the “driver lost control” accidents mentioned on the news happen on curves. Here is why:

Experienced driver or beginner, each of us is subject to the same laws of physics when driving on curves. The traction of the tires against the road surface makes it possible for the vehicle to change its path when you turn the front wheels. If there is no traction, inertia will keep the vehicle going in the same direction. If you have ever tried to steer a vehicle on wet ice, you will understand this.

The traction you can get in a curve depends on the condition of your tires and the road surface, the angle at which the curve is banked, and your speed. While you are in a curve, speed is the one factor you can control.

Suppose you are steering through a sharp curve. Then you suddenly accelerate. Both control systems — steering and acceleration — have to do their work where the tires meet the road. Adding the sudden acceleration can demand too much of those places. You can lose control. See *Traction Control System (TCS) on page 4-9*.

What should you do if this ever happens? Ease up on the accelerator pedal, steer the vehicle the way you want it to go, and slow down.

Speed limit signs near curves warn that you should adjust your speed. Of course, the posted speeds are based on good weather and road conditions. Under less favorable conditions you will want to go slower.

If you need to reduce your speed as you approach a curve, do it before you enter the curve, while your front wheels are straight ahead.

Try to adjust your speed so you can “drive” through the curve. Maintain a reasonable, steady speed. Wait to accelerate until you are out of the curve, and then accelerate gently into the straightaway.

Downloaded from www.Manualslib.com manuals search engine

Steering in Emergencies

There are times when steering can be more effective than braking. For example, you come over a hill and find a truck stopped in your lane, or a car suddenly pulls out from nowhere, or a child darts out from between parked cars and stops right in front of you. You can avoid these problems by braking — if you can stop in time. But sometimes you can not; there is not room. That is the time for evasive action — steering around the problem.

Your vehicle can perform very well in emergencies like these. First apply your brakes. See *Braking on page 4-6*. It is better to remove as much speed as you can from a possible collision. Then steer around the problem, to the left or right depending on the space available.

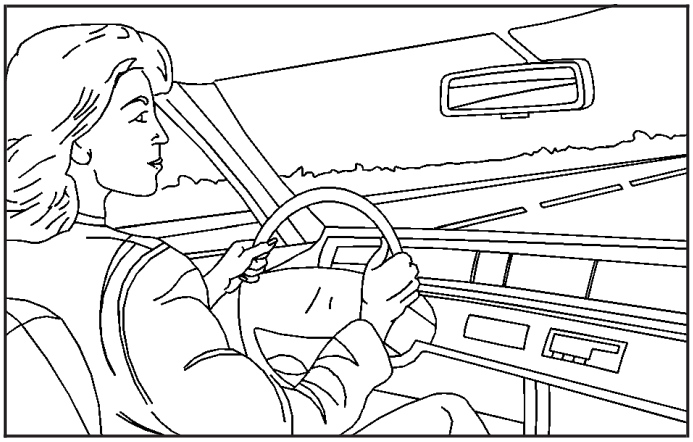

An emergency like this requires close attention and a quick decision. If you are holding the steering wheel at the recommended 9 and 3 o'clock positions, you can turn it a full 180 degrees very quickly without removing either hand. But you have to act fast, steer quickly, and just as quickly straighten the wheel once you have avoided the object.

The fact that such emergency situations are always possible is a good reason to practice defensive driving at all times and wear safety belts properly.

Downloaded from www.Manualslib.com manuals search engine

Off-Road Recovery

You may find that your right wheels have dropped off the edge of a road onto the shoulder while you are driving.

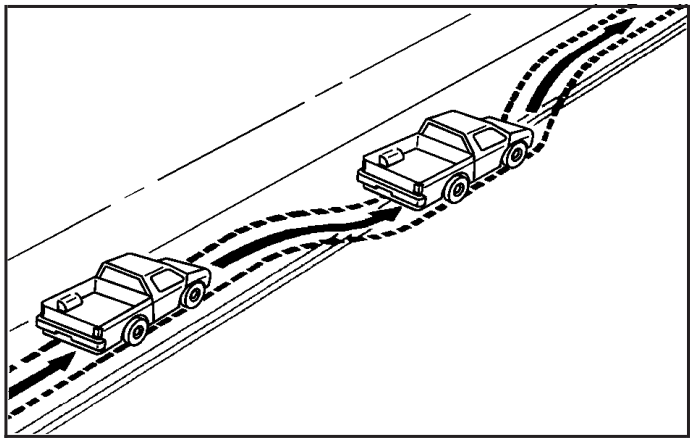

If the level of the shoulder is only slightly below the pavement, recovery should be fairly easy. Ease off the accelerator and then, if there is nothing in the way, steer so that your vehicle straddles the edge of the pavement. You can turn the steering wheel up to one-quarter turn until the right front tire contacts the pavement edge. Then turn your steering wheel to go straight down the roadway.

Passing

The driver of a vehicle about to pass another on a two-lane highway waits for just the right moment, accelerates, moves around the vehicle ahead, then goes back into the right lane again. A simple maneuver?

Not necessarily! Passing another vehicle on a two-lane highway is a potentially dangerous move, since the passing vehicle occupies the same lane as oncoming traffic for several seconds. A miscalculation, an error in judgment, or a brief surrender to frustration or anger can suddenly put the passing driver face to face with the worst of all traffic accidents — the head-on collision.

So here are some tips for passing:

- “Drive ahead.” Look down the road, to the sides and to crossroads for situations that might affect your passing patterns. If you have any doubt whatsoever about making a successful pass, wait for a better time.
- Watch for traffic signs, pavement markings and lines. If you can see a sign up ahead that might indicate a turn or an intersection, delay your pass. A broken center line usually indicates it is all right to pass (providing the road ahead is clear). Never cross a solid line on your side of the lane or a double solid line, even if the road seems empty of approaching traffic.

Downloaded from www.Manualslib.com manuals search engine

- Do not get too close to the vehicle you want to pass while you are awaiting an opportunity. For one thing, following too closely reduces your area of vision, especially if you are following a larger vehicle. Also, you will not have adequate space if the vehicle ahead suddenly slows or stops. Keep back a reasonable distance.
- When it looks like a chance to pass is coming up, start to accelerate but stay in the right lane and do not get too close. Time your move so you will be increasing speed as the time comes to move into the other lane. If the way is clear to pass, you will have a “running start” that more than makes up for the distance you would lose by dropping back. And if something happens to cause you to cancel your pass, you need only slow down and drop back again and wait for another opportunity.
- If other vehicles are lined up to pass a slow vehicle, wait your turn. But take care that someone is not trying to pass you as you pull out to pass the slow vehicle. Remember to glance over your shoulder and check the blind spot.
- Check your mirrors, glance over your shoulder and start your left lane change signal before moving out of the right lane to pass. When you are far enough ahead of the passed vehicle to see its front in your inside mirror, activate your right lane change signal and move back into the right lane. (Remember that if your right outside mirror is convex, the vehicle you just passed may seem to be farther away from you than it really is.)
- Try not to pass more than one vehicle at a time on two-lane roads. Reconsider before passing the next vehicle.
- Do not overtake a slowly moving vehicle too rapidly. Even though the brake lamps are not flashing, it may be slowing down or starting to turn.
- If you are being passed, make it easy for the following driver to get ahead of you. Perhaps you can ease a little to the right.

Downloaded from www.Manualslib.com manuals search engine

Loss of Control

Let us review what driving experts say about what happens when the three control systems (brakes, steering and acceleration) do not have enough friction where the tires meet the road to do what the driver has asked.

In any emergency, do not give up. Keep trying to steer and constantly seek an escape route or area of less danger.

Skidding

In a skid, a driver can lose control of the vehicle. Defensive drivers avoid most skids by taking reasonable care suited to existing conditions, and by not "overdriving" those conditions. But skids are always possible.

The three types of skids correspond to your vehicle's three control systems. In the braking skid, your wheels are not rolling. In the steering or cornering skid, too much speed or steering in a curve causes tires to slip and lose cornering force. And in the acceleration skid, too much throttle causes the driving wheels to spin.

A cornering skid is best handled by easing your foot off the accelerator pedal.

If your vehicle starts to slide, ease your foot off the accelerator pedal and quickly steer the way you want the vehicle to go. If you start steering quickly enough, your vehicle may straighten out. Always be ready for a second skid if it occurs.

Of course, traction is reduced when water, snow, ice, gravel or other material is on the road. For safety, you will want to slow down and adjust your driving to these conditions. It is important to slow down on slippery surfaces because stopping distance will be longer and vehicle control more limited.

While driving on a surface with reduced traction, try your best to avoid sudden steering, acceleration or braking (including engine braking by shifting to a lower gear). Any sudden changes could cause the tires to slide. You may not realize the surface is slippery until your vehicle is skidding. Learn to recognize warning clues — such as enough water, ice or packed snow on the road to make a "mirrored surface" — and slow down when you have any doubt.

Remember: Any anti-lock brake system (ABS) helps avoid only the braking skid.

Downloaded from www.Manualslib.com manuals search engine

Off-Road Driving

This off-road guide is meant to provide advice for when you drive your vehicle off paved roads. Also, see *Braking on page 4-6*.

Off-road driving can be great fun. But it does have some definite hazards. The greatest of these is the terrain itself.

“Off-roading” means you have left the great North American road system behind. Traffic lanes are not marked. Curves are not banked. There are no road signs. Surfaces can be slippery, rough, uphill or downhill. In short, you have gone right back to nature.

Off-road driving involves some new skills. And that is why it is very important that you read this guide. You will find many driving tips and suggestions. These will help make your off-road driving safer and more enjoyable.

Before You Go Off-Roading

There are some things to do before you go out. For example, be sure to have all necessary maintenance and service work done. Check to make sure all underbody shields are properly attached. Make sure any equipment you may need (first aid kit, cell phone, flashlight, etc.) is securely stored in the vehicle. Be sure you read all the information about your four-wheel-drive vehicle in this manual. Is there enough fuel? Is the spare tire fully inflated? Are the fluid levels up where they should be? What are the local laws that apply to off-roading where you will be driving? If you do not know, you should check with law enforcement people in the area. Will you be on someone’s private land? If so, be sure to get the necessary permission.

Downloaded from www.Manualslib.com manuals search engine

Your vehicle may be equipped with removable side steps.

Remove the steps prior to off roading to give your vehicle more ground clearance and to prevent damage to the vehicle from the side steps dragging and/or catching on obstacles.

Notice: **Do not drive off road with the side steps attached to your vehicle. You can damage the side steps and/or your vehicle's frame if they get caught or drag against an obstacle. This damage would not be covered by your vehicle's warranty. Always remove the side steps prior to any off road driving.**

"U" Type Assist Steps

The following instructions show how to install the optional "U" steps. If you want to remove them, just reverse the instructions:

1. Start with the side step brackets pointing up and away from you. Or just make sure the HUMMER logo faces up.
2. For the front step, use the first and third brackets on the vehicle from the front tire. For the rear step, use the first and third brackets on the vehicle from the rear tire.

   You will notice that the side steps have pins on both sides of the step brackets. This is because the steps are interchangeable between front/back and the driver/passenger sides of the vehicle. Use the pins as follows:

   - **Driver Side:** Look at the side step with the HUMMER logo facing you. You will use the pins which are on the right side of each side step bracket. This works for the front or rear of the vehicle.
   - **Passenger Side:** Look at the side step with the HUMMER logo facing you. You will use the pins which are on the left side of each side step bracket. This works for the front or rear of the vehicle.

Downloaded from www.Manualslib.com manuals search engine

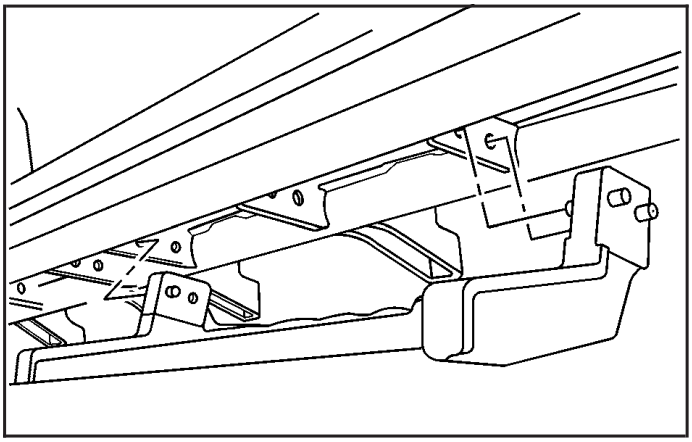

3. Guide the pins on the side step brackets into the holes in the vehicle's rocker panel protector brackets. If you have difficulty doing this, it may help to have someone hold up the step while you guide the pins into the holes.

   You will be guiding three pins into the holes with the fourth hole in the vehicle's rocker panel protector brackets empty until the next step.

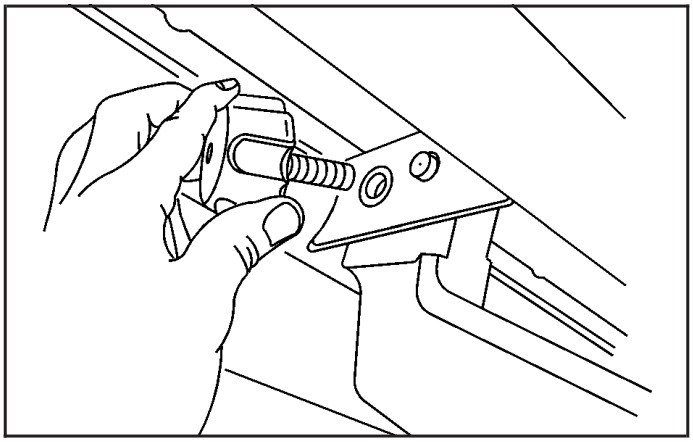

4. Thread the knob through the remaining hole — first into the rocker panel protector and then into the threaded hole in the assist step bracket.

   If you thread the knob into the step and then the rocker panel protector, you may think the step is secure. It will fall out this way. To be sure the step is secure, try moving the step left and right after installing the knob.

Notice: **Threading the knob into the step and then into the rocker panel will not secure the assist step. The step could fall off the vehicle and be damaged. Always thread the knob through the rocker panel first.**

Downloaded from www.Manualslib.com manuals search engine

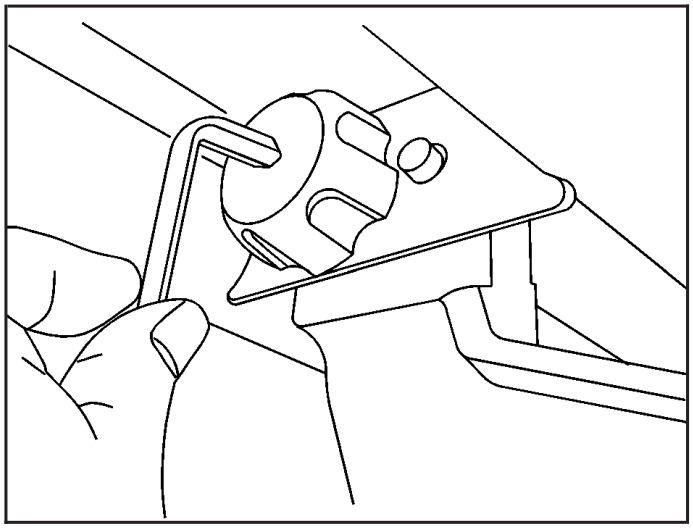

5. Hand-tighten the knob by turning it clockwise until it is seated against the rocker panel protector bracket and then tighten it to 10 lb ft (13.5 N•m) with a wrench as shown.

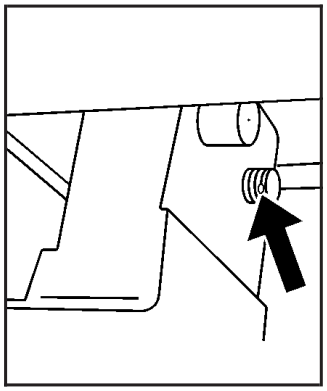

6. Once the knob is torqued, install the cotter pin through the hole (see arrow) in the end of the knob's threaded shaft.

This will help prevent the knob from coming completely loose and falling out.

Downloaded from www.Manualslib.com manuals search engine

Tubular Assist Steps

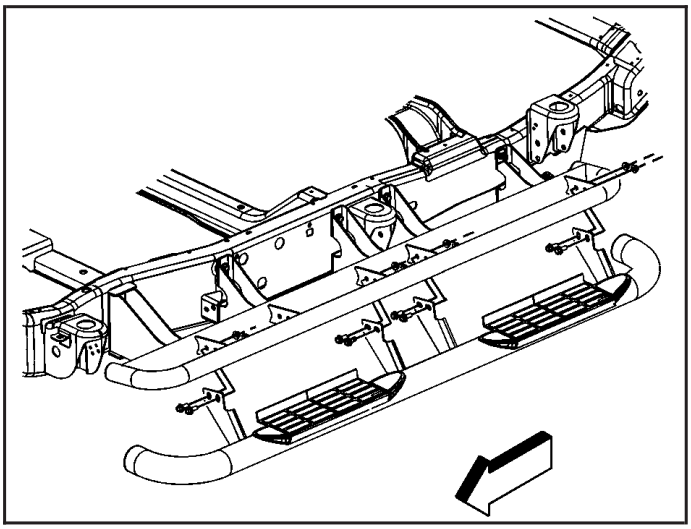

The driver's side of the vehicle is shown with the body removed for clarity. To remove a step:

1. Remove the nuts and bolts attaching the step to the vehicle.
2. Remove the step from the vehicle.

To install a step:

1. Before installing the bolts:
   - Remove all traces of the original adhesive patch.
   - Clean the threads of the bolts with denatured alcohol or equivalent and allow threads to dry.
   - Apply Threadlocker (GM Part No. 12345382, in Canada 10953489) or equivalent.
2. Install the assist step to the vehicle. You may need someone to assist you in the installation.
3. Install the nuts and bolts for the two inner brackets first, but do not tighten them.
4. Using a level, make sure the step is level in relationship to the vehicle. Then, tighten the inner bracket nuts and bolts.
5. Install the other nuts and bolts. Tighten all nuts and bolts to 39 lb ft (50 N•m).

Downloaded from www.Manualslib.com manuals search engine

Loading Your Vehicle for Off-Road Driving

There are some important things to remember about how to load your vehicle.

- The heaviest things should be on the load floor and forward of your rear axle. Put heavier items in the rear area, as far forward as you can.
- Be sure the load is secured properly, so driving on the off-road terrain does not toss things around.

⚠ CAUTION:

- **Cargo on the load floor piled higher than the seatbacks can be thrown forward during a sudden stop. You or your passengers could be injured. Keep cargo below the top of the seatbacks.**

CAUTION: (Continued)

CAUTION: (Continued)

- **Unsecured cargo on the load floor can be tossed about when driving over rough terrain. You or your passengers can be struck by flying objects. Secure the cargo properly.**
- **Heavy loads on the roof raise the vehicle's center of gravity, making it more likely to roll over. You can be seriously or fatally injured if the vehicle rolls over. Put heavy loads inside the cargo area, not on the roof. Keep cargo in the cargo area as far forward and low as possible.**

You will find other important information in this manual. See *Loading Your Vehicle on page 4-67* and *Tires on page 5-60*.

Downloaded from www.Manualslib.com manuals search engine

Environmental Concerns

Off-road driving can provide wholesome and satisfying recreation. However, it also raises environmental concerns. We recognize these concerns and urge every off-roader to follow these basic rules for protecting the environment:

- Always use established trails, roads and areas that have been specially set aside for public off-road recreational driving; obey all posted regulations.
- Avoid any driving practice that could damage the environment — shrubs, flowers, trees, grasses — or disturb wildlife (this includes wheel-spinning, breaking down trees or unnecessary driving through streams or over soft ground).
- Always carry a litter bag — make sure all refuse is removed from any campsite before leaving.
- Take extreme care with open fires (where permitted), camp stoves and lanterns.
- Never park your vehicle over dry grass or other combustible materials that could catch fire from the heat of the vehicle's exhaust system.

Traveling to Remote Areas

It makes sense to plan your trip, especially when going to a remote area. Know the terrain and plan your route. You are much less likely to get bad surprises. Get accurate maps of trails and terrain. Try to learn of any blocked or closed roads.

It is also a good idea to travel with at least one other vehicle. If something happens to one of them, the other can help quickly.

Does your vehicle have a winch? If so, be sure to read the winch instructions. In a remote area, a winch can be handy if you get stuck. But you will want to know how to use it properly.

Downloaded from www.Manualslib.com manuals search engine

High Mobility Characteristics

The HUMMER H2 has a 10 inch (25.4 cm) running groung clearance (A) and a 9 inch (22.8 cm) axle to ground clearance (B) while maintaining a low silhouette and a low center of gravity.

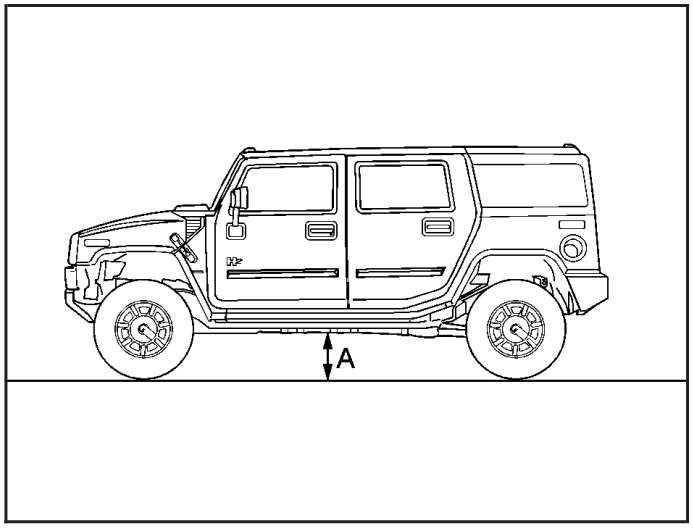

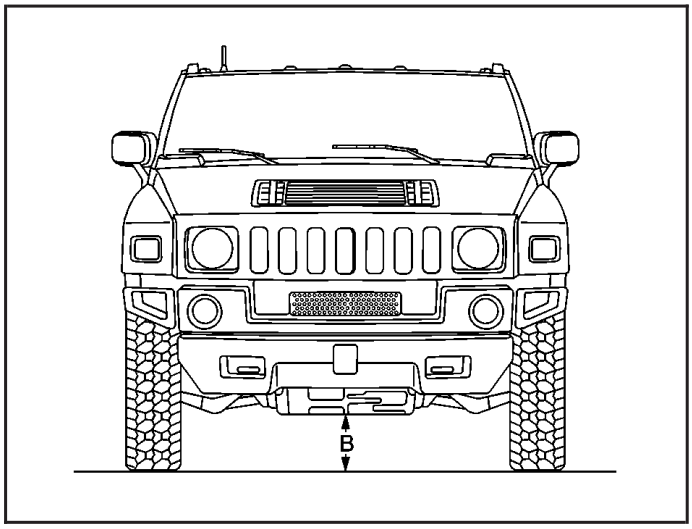

Downloaded from www.Manualslib.com manuals search engine

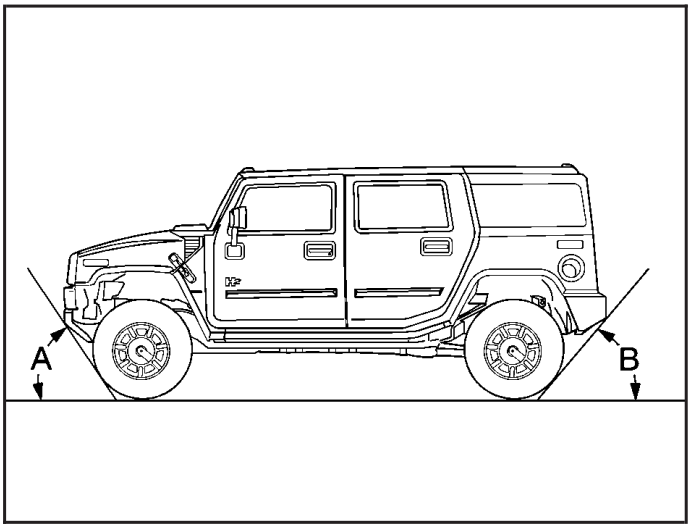

The HUMMER H2 has an approximate approach angle (A) of 42° and a departure angle (B) of 37°, depending on suspension packages.

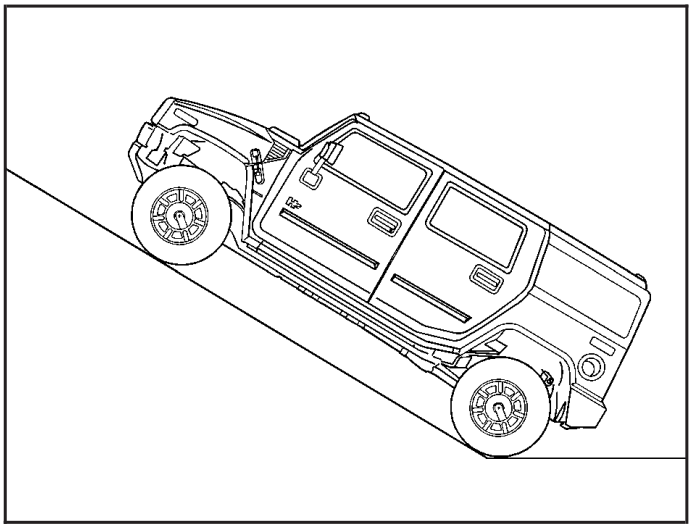

Design specifications required a minimum gradeability of 60% (31°) slope, with the vehicle fully loaded, on high friction surfaces at 6 mph (9.7 km/h). The vehicle is expected to traverse this grade only for short durations. Never stop and idle the vehicle or park it on this grade.

Downloaded from www.Manualslib.com manuals search engine

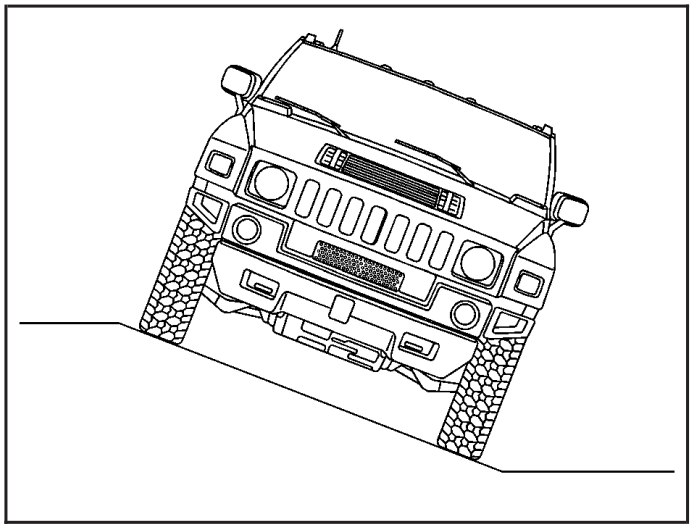

Also, specifications required that the HUMMER H2 be able to traverse a 40% (22°) side slope at 6 mph (9.7 km/h) while fully loaded on high friction surfaces.

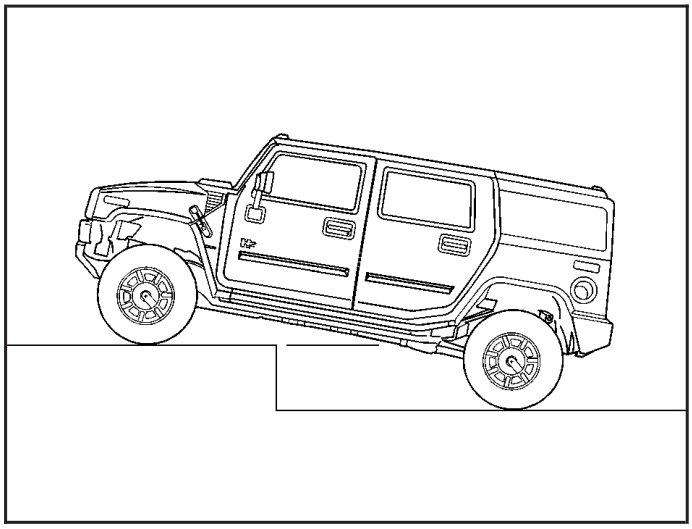

The HUMMER H2 can climb a 16 inch (40.6 cm) vertical step. Step climbing is best done by approaching the step at an angle rather than straight on.

Downloaded from www.Manualslib.com manuals search engine

Brake and Throttle Operation Techniques for Off-Road Driving

For logs, walls, rocks, severe ditches, hills, sand, etc.

1. Bring the vehicle to a complete stop. Do not overspeed the engine.
2. Select the proper transmission and transfer case gear range; usually FIRST (1) gear, 4LO LOCK for such obstacles.
3. If wheel spin is experienced, maintain steady throttle, with your foot off the brake pedal, to allow the TCS to control the wheel spin. TCS will not operate if the brakes are applied, even slightly.
4. If wheel spin can not be controlled by the system, fully press the brake pedal with your left foot so all wheel spin is halted.
5. Back away from the obstacle such that a new approach can be tried.
6. As the first wheel crosses the obstacle, be prepared to modulate the brake and throttle to maintain control and avoid tire drop-off from obstacles. Repeat the controlled process for the other wheels.

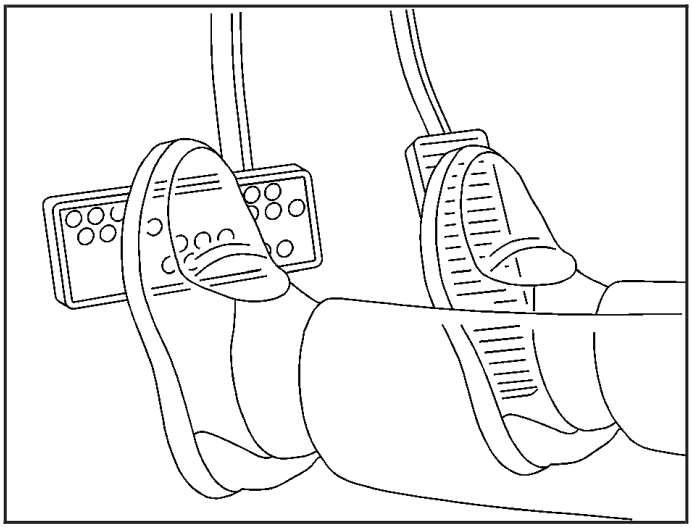

For mounds, washouts, loose up-hill slopes, ditches, etc.

Downloaded from www.Manualslib.com manuals search engine

When wheel spin occurs as the vehicle is moving, the driver may notice a slight shaking or shuddering of the vehicle. This should be stopped as soon as possible to prevent damage to vehicle components. This is the indication that a loss of traction is occuring on this terrain. The operator should:

1. Reduce throttle, brake wheels.
2. Assess the terrain properly and adjust vehicle speed and gear ranges accordingly: 4HI position for higher speeds and 4LO LOCK for more torque and lower speeds. Transmission FIRST (1) gear is generally recommended.
3. Apply slight pressure to the brake when the shaking or shuddering sensation is felt, keeping the vehicle moving in a controlled manner.
4. Be prepared to modulate the brake and throttle through the adverse terrain.

Getting Familiar with Off-Road Driving

It is a good idea to practice in an area that is safe and close to home before you go into the wilderness. Off-road driving does require some new and different skills. Here is what we mean.

Tune your senses to different kinds of signals. Your eyes, for example, need to constantly sweep the terrain for unexpected obstacles. Your ears need to listen for unusual tire or engine sounds. With your arms, hands, feet and body, you will need to respond to vibrations and vehicle bounce.

Controlling your vehicle is the key to successful off-road driving. One of the best ways to control your vehicle is to control your speed. Here are some things to keep in mind. At higher speeds:

- you approach things faster and you have less time to scan the terrain for obstacles.
- you have less time to react.
- you have more vehicle bounce when you drive over obstacles.
- you will need more distance for braking, especially since you are on an unpaved surface.

⚠ CAUTION:

When you are driving off-road, bouncing and quick changes in direction can easily throw you out of position. This could cause you to lose control and crash. So, whether you're driving on or off the road, you and your passengers should wear safety belts.

Downloaded from www.Manualslib.com manuals search engine

Scanning the Terrain

Off-road driving can take you over many different kinds of terrain. You need to be familiar with the terrain and its many different features. Here are some things to consider.

Surface Conditions: Off-roading can take you over hard-packed dirt, gravel, rocks, grass, sand, mud, snow or ice. Each of these surfaces affects the steering, acceleration and braking of your vehicle in different ways. Depending upon the kind of surface you are on, you may experience slipping, sliding, wheel spinning, delayed acceleration, poor traction and longer braking distances.

Surface Obstacles: Unseen or hidden obstacles can be hazardous. A rock, log, hole, rut or bump can startle you if you are not prepared for them. Often these obstacles are hidden by grass, bushes, snow or even the rise and fall of the terrain itself. Here are some things to consider:

- Is the path ahead clear?
- Will the surface texture change abruptly up ahead?
- Does the travel take you uphill or downhill? (There is more discussion of these subjects later.)
- Will you have to stop suddenly or change direction quickly?

When you drive over obstacles or rough terrain, keep a firm grip on the steering wheel. Ruts, troughs or other surface features can jerk the wheel out of your hands if you are not prepared.

When possible, it is a good practice to survey the landscape ahead on foot prior to driving to observe hidden obstacles.

When you drive over bumps, rocks, or other obstacles, your wheels can leave the ground. If this happens, even with one or two wheels, you can not control the vehicle as well or at all.

Because you will be on an unpaved surface, it is especially important to avoid sudden acceleration, sudden turns or sudden braking.

In a way, off-road driving requires a different kind of alertness from driving on paved roads and highways. There are no road signs, posted speed limits or signal lights. You have to use your own good judgment about what is safe and what is not.

Drinking and driving can be very dangerous on any road. And this is certainly true for off-road driving. At the very time you need special alertness and driving skills, your reflexes, perceptions and judgment can be affected by even a small amount of alcohol. You could have a serious — or even fatal — accident if you drink and drive or ride with a driver who has been drinking. See *Drunken Driving on page 4-3*.

Downloaded from www.Manualslib.com manuals search engine

Crossing Obstacles

Approach Angle — a Key to Mobility. If you encounter a large dip in the terrain, do not enter straight on; enter at an angle — 15° minimum approach (A), 75° maximum approach angle (B). For very large dips, ditches or small washes, coast in, using the engine as a brake (transmission and transfer case lowest gears). Then, use the low ranges in the transmission and transfer case to power out.

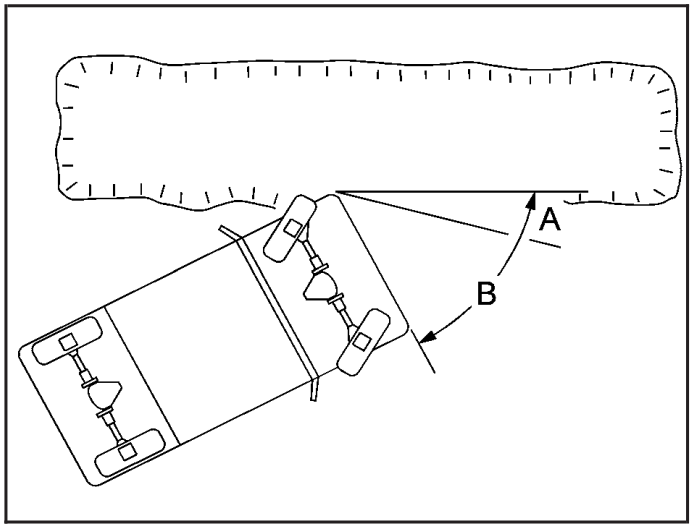

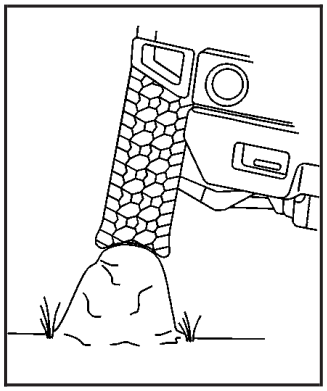

Roll Your Tires Over Large Rocks. Do not straddle large rocks; drive over them, letting the tire envelop the rock. The tread of the tire is thicker and tougher than the sidewall of the tire and is more resilient to impact than underbody components.

Downloaded from www.Manualslib.com manuals search engine

Log Crossing. Using the proper technique, the HUMMER H2 will cross logs up to 10 inches (25.4 cm) in diameter. Approach the log at approximately a 15° angle (A) with the transmission in FIRST (1) and the transfer case in 4LO LOCK and “walk” the HUMMER H2 over, one tire at a time. As with all obstacles, face your tires perpendicular to the object for best traction and tire life. It may be necessary to modulate your brake pedal and accelerator to avoid spin-out. Ease the vehicle down from the log with your brake.

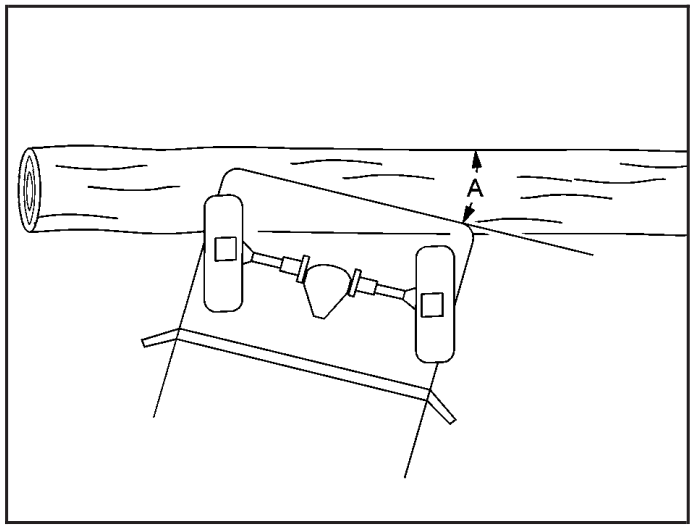

Driving on Off-Road Hills

Off-road driving often takes you up, down or across a hill. Driving safely on hills requires good judgment and an understanding of what your vehicle can and can not do. There are some hills that simply can not be driven, no matter how well built the vehicle.

⚠ CAUTION:

Many hills are simply too steep for any vehicle. If you drive up them, you will stall. If you drive down them, you can not control your speed. If you drive across them, you will roll over. You could be seriously injured or killed. If you have any doubt about the steepness, do not drive the hill.

Downloaded from www.Manualslib.com manuals search engine

Approaching a Hill

When you approach a hill, you need to decide if it is one of those hills that is just too steep to climb, descend or cross. Steepness can be hard to judge. On a very small hill, for example, there may be a smooth, constant incline with only a small change in elevation where you can easily see all the way to the top. On a large hill, the incline may get steeper as you near the top, but you may not see this because the crest of the hill is hidden by bushes, grass or shrubs.

Here are some other things to consider as you approach a hill.

- Is there a constant incline, or does the hill get sharply steeper in places?
- Is there good traction on the hillside, or will the surface cause tire slipping?
- Is there a straight path up or down the hill so you will not have to make turning maneuvers?
- Are there obstructions on the hill that can block your path (boulders, trees, logs or ruts)?
- What is beyond the hill? Is there a cliff, an embankment, a drop-off, a fence? Get out and walk the hill if you do not know. It is the smart way to find out.
- Is the hill simply too rough? Steep hills often have ruts, gullies, troughs and exposed rocks because they are more susceptible to the effects of erosion.

Driving Uphill

Once you decide you can safely drive up the hill, you need to take some special steps.

- Use transmission and transfer case low gear and get a firm grip on the steering wheel.
- Get a smooth start up the hill and try to maintain your speed. Do not use more power than you need, because you do not want your wheels to start spinning or sliding.
- Let the traction system work to control any wheel slippage. TC2 is designed to allow moderate wheel spin with some capability to dig in and power up the hill.

Downloaded from www.Manualslib.com manuals search engine

- Do not continue if the vehicle shudders or exhibits suspension hopping. This can cause damage to the driveline or suspension components. Improper driving technique is not covered by your vehicle warranty
- Try to drive straight up the hill if at all possible. If the path twists and turns, you might want to find another route.

⚠ CAUTION:

Turning or driving across steep hills can be dangerous. You could lose traction, slide sideways, and possibly roll over. You could be seriously injured or killed. When driving up hills, always try to go straight up.

- Ease up on your speed as you approach the top of the hill.
- Attach a flag to the vehicle to make you more visible to approaching traffic on trails or hills.
- Sound the horn as you approach the top of the hill to let opposing traffic know you are there.
- Use your headlamps even during the day. They make you more visible to oncoming traffic.

⚠ CAUTION:

Driving to the top (crest) of a hill at full speed can cause an accident. There could be a drop-off, embankment, cliff, or even another vehicle. You could be seriously injured or killed. As you near the top of a hill, slow down and stay alert.

Downloaded from www.Manualslib.com manuals search engine

Q: What should I do if my vehicle stalls, or is about to stall, and I can not make it up the hill?

A: If this happens, there are some things you should do, and there are some things you must not do. First, here is what you *should* do:

- Push the brake pedal to stop the vehicle and keep it from rolling backwards. Also, apply the parking brake.
- If your engine is still running, shift the transmission to REVERSE (R), release the parking brake, and slowly back down the hill in REVERSE (R).
- If your engine has stopped running, you will need to restart it. With the brake pedal pressed and the parking brake still applied, shift the transmission to PARK (P) and restart the engine. Then, shift to REVERSE (R), release the parking brake, and slowly back down the hill as straight as possible in REVERSE (R).
- As you are backing down the hill, put your left hand on the steering wheel at the 12 o'clock position. This way, you will be able to tell if your wheels are straight and maneuver as you back down. It is best that you back down the hill with your wheels straight rather than in the left or right direction. Turning the wheel too far to the left or right will increase the possibility of a rollover.

Here are some things you *must not* do if you stall, or are about to stall, when going up a hill.

- Never attempt to prevent a stall by shifting into NEUTRAL (N) to "rev-up" the engine and regain forward momentum. This will not work. Your vehicle will roll backwards very quickly and you could go out of control.

  Instead, apply the regular brake to stop the vehicle. Then apply the parking brake. Shift to REVERSE (R), release the parking brake, and slowly back straight down.
- Never attempt to turn around if you are about to stall when going up a hill. If the hill is steep enough to stall your vehicle, it is steep enough to cause you to roll over if you turn around. If you can not make it up the hill, you must back straight down the hill.

Downloaded from www.Manualslib.com manuals search engine

Q: Suppose, after stalling, I try to back down the hill and decide I just can not do it. What should I do?

A: Set the parking brake, put your transmission in PARK (P) and turn off the engine. Leave the vehicle and go get some help. Exit on the uphill side and stay clear of the path the vehicle would take if it rolled downhill. Do not shift the transfer case to NEUTRAL when you leave the vehicle. Leave it in some gear.

⚠ CAUTION:

Shifting the transfer case to NEUTRAL can cause your vehicle to roll even if the transmission is in PARK (P). This is because the NEUTRAL position on the transfer case overrides the transmission. You or someone else could be injured. If you are going to leave your vehicle, set the parking brake and shift the transmission to PARK (P). But do not shift the transfer case to NEUTRAL. Leave the transfer case in the 4 HI, 4 HI Lock or 4 LO Lock position.

Driving Downhill

When off-roading takes you downhill, you will want to consider a number of things:

- How steep is the downhill? Will I be able to maintain vehicle control?
- What is the surface like? Smooth? Rough? Slippery? Hard-packed dirt? Gravel?
- Are there hidden surface obstacles? Ruts? Logs? Boulders?
- What is at the bottom of the hill? Is there a hidden creek bank or even a river bottom with large rocks?

If you decide you can go down a hill safely, then try to keep your vehicle headed straight down, and use a low gear. This way, engine drag can help your brakes and they will not have to do all the work. Descend slowly, keeping your vehicle under control at all times.

⚠ CAUTION:

Heavy braking when going down a hill can cause your brakes to overheat and fade. This could cause loss of control and a serious accident. Apply the brakes lightly when descending a hill and use a low gear to keep vehicle speed under control.

Downloaded from www.Manualslib.com manuals search engine

Q: Are there some things I should not do when driving down a hill?

A: Yes! These are important because if you ignore them you could lose control and have a serious accident.

- When driving downhill, avoid turns that take you across the incline of the hill. A hill that is not too steep to drive down may be too steep to drive across. You could roll over if you do not drive straight down.
- Never go downhill with the transmission in NEUTRAL (N). This is called “free-wheeling.” Your brakes will have to do all the work and could overheat and fade.

Q: Am I likely to stall when going downhill?

A: It is much more likely to happen going uphill. But if it happens going downhill, here is what to do.

- Stop your vehicle by applying the regular brakes. Apply the parking brake.
- Shift to PARK (P) and, while still braking, restart the engine.
- Shift back to a low gear, release the parking brake, and drive straight down.
- If the engine will not start, get out and get help.

Driving Across an Incline

Sooner or later, an off-road trail will probably go across the incline of a hill. If this happens, you have to decide whether to try to drive across the incline. Here are some things to consider:

- A hill that can be driven straight up or down may be too steep to drive across. When you go straight up or down a hill, the length of the wheel base (the distance from the front wheels to the rear wheels) reduces the likelihood the vehicle will tumble end over end. But when you drive across an incline, the much more narrow track width (the distance between the left and right wheels) may not prevent the vehicle from tilting and rolling over. Also, driving across an incline puts more weight on the downhill wheels. This could cause a downhill slide or a rollover.

Downloaded from www.Manualslib.com manuals search engine

- Surface conditions can be a problem when you drive across a hill. Loose gravel, muddy spots, or even wet grass can cause your tires to slip sideways, downhill. If the vehicle slips sideways, it can hit something that will trip it (a rock, a rut, etc.) and roll over.
- Hidden obstacles can make the steepness of the incline even worse. If you drive across a rock with the uphill wheels, or if the downhill wheels drop into a rut or depression, your vehicle can tilt even more.

For reasons like these, you need to decide carefully whether to try to drive across an incline. Just because the trail goes across the incline does not mean you have to drive it. The last vehicle to try it might have rolled over.

⚠ CAUTION:

Driving across an incline that is too steep will make your vehicle roll over. You could be seriously injured or killed. If you have any doubt about the steepness of the incline, do not drive across it. Find another route instead.

Q: What if I am driving across an incline that is not too steep, but I hit some loose gravel and start to slide downhill. What should I do?

A: If you feel your vehicle starting to slide sideways, turn downhill. This should help straighten out the vehicle and prevent the side slipping. However, a much better way to prevent this is to get out and "walk the course" so you know what the surface is like before you drive it.

Downloaded from www.Manualslib.com manuals search engine

Stalling on an Incline

If your vehicle stalls when you are crossing an incline, be sure you (and your passengers) get out on the uphill side, even if the door there is harder to open. If you get out on the downhill side and the vehicle starts to roll over, you will be right in its path.

If you have to walk down the slope, stay out of the path the vehicle will take if it does roll over.

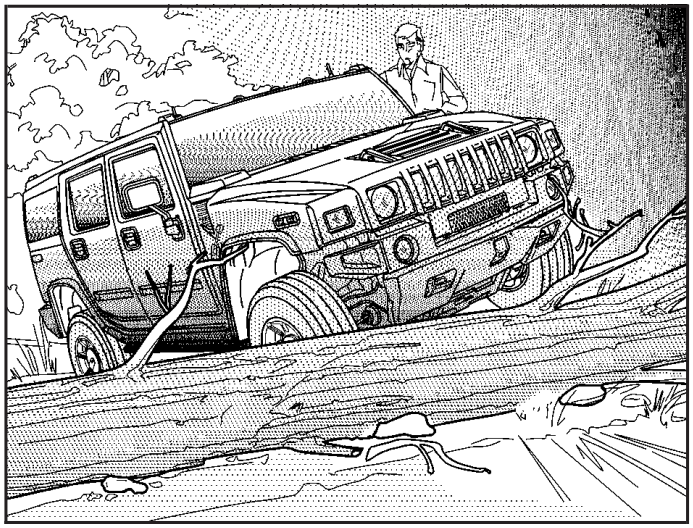

⚠ CAUTION:

Getting out on the downhill (low) side of a vehicle stopped across an incline is dangerous. If the vehicle rolls over, you could be crushed or killed. Always get out on the uphill (high) side of the vehicle and stay well clear of the rollover path.

Downloaded from www.Manualslib.com manuals search engine

Driving in Mud, Sand, Snow or Ice

When you drive in mud, snow or sand, your wheels will not get good traction. You can not accelerate as quickly, turning is more difficult, and you will need longer braking distances.

It is best to use a low gear when you are in mud — the deeper the mud, the lower the gear. In really deep mud, the idea is to keep your vehicle moving so you do not get stuck. Be careful to keep mud from building up and washing onto the engine cooling system.

When you drive on sand, you will sense a change in wheel traction. But it will depend upon how loosely packed the sand is. On loosely packed sand (as on beaches or sand dunes) your tires will tend to sink into the sand. This has an effect on steering, accelerating and braking. Drive at a reduced speed and avoid sharp turns or abrupt maneuvers.

Hard packed snow and ice offer the worst tire traction. On these surfaces, it is very easy to lose control. On wet ice, for example, the traction is so poor that you will have difficulty accelerating. And if you do get moving, poor steering and difficult braking can cause you to slide out of control.

⚠ CAUTION:

Driving on frozen lakes, ponds or rivers can be dangerous. Underwater springs, currents under the ice, or sudden thaws can weaken the ice. Your vehicle could fall through the ice and you and your passengers could drown. Drive your vehicle on safe surfaces only.

Downloaded from www.Manualslib.com manuals search engine

Driving in Water

Heavy rain can mean flash flooding, and flood waters demand extreme caution.

Find out how deep the water is before you drive through it. If it is deep enough to cover your wheel hubs, axles or exhaust pipe, do not try it — you probably will not get through. Also, water that deep can damage your axle and other vehicle parts. Your vehicle is capable of depths up to 20 inches. Know how to judge whether the water is deeper than this before proceeding into it.

If the water is not too deep, drive slowly through it. At faster speeds, water splashes on your ignition system and your vehicle can stall. Stalling can also occur if you get your tailpipe under water. And, as long as your tailpipe is under water, you will never be able to start your engine. When you go through water, remember that when your brakes get wet, it may take you longer to stop.

⚠ CAUTION:

Driving through rushing water can be dangerous. Deep water can sweep your vehicle downstream and you and your passengers could drown. If it is only shallow water, it can still wash away the ground from under your tires, and you could lose traction and roll the vehicle over. Do not drive through rushing water.

See *Driving in Rain and on Wet Roads on page 4-43* for more information on driving through water.

Downloaded from www.Manualslib.com manuals search engine

After Off-Road Driving

Remove any brush or debris that has collected on the underbody, chassis or under the hood. These accumulations can be a fire hazard.

After operation in mud or sand, have the brake linings cleaned and checked. These substances can cause glazing and uneven braking. Check the engine and oil coolers for mud accumulation. Thoroughly and carefully clean these devices to allow proper cooling. Check the body structure, steering, suspension, wheels, tires and exhaust system for damage. Also, check the fuel lines and cooling system for any leakage.

Your vehicle will require more frequent service due to off-road use. Refer to the Maintenance Schedule for additional information.

Driving at Night

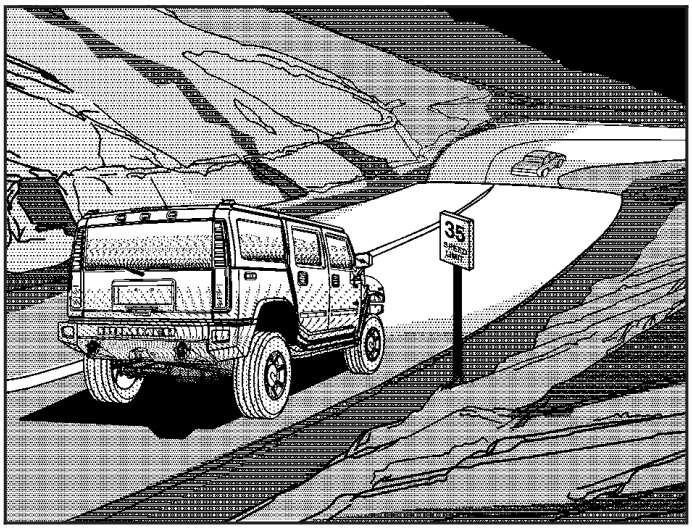

Night driving is more dangerous than day driving. One reason is that some drivers are likely to be impaired — by alcohol or drugs, with night vision problems, or by fatigue.

Downloaded from www.Manualslib.com manuals search engine

Here are some tips on night driving.

- Drive defensively.
- Do not drink and drive.
- Adjust your inside rearview mirror to reduce the glare from headlamps behind you.
- Since you can not see as well, you may need to slow down and keep more space between you and other vehicles.
- Slow down, especially on higher speed roads. Your headlamps can light up only so much road ahead.
- In remote areas, watch for animals.
- If you are tired, pull off the road in a safe place and rest.

No one can see as well at night as in the daytime. But as we get older these differences increase. A 50-year-old driver may require at least twice as much light to see the same thing at night as a 20-year-old.

What you do in the daytime can also affect your night vision. For example, if you spend the day in bright sunshine you are wise to wear sunglasses. Your eyes will have less trouble adjusting to night. But if you are driving, do not wear sunglasses at night. They may cut down on glare from headlamps, but they also make a lot of things invisible.

You can be temporarily blinded by approaching headlamps. It can take a second or two, or even several seconds, for your eyes to re-adjust to the dark. When you are faced with severe glare (as from a driver who does not lower the high beams, or a vehicle with misaimed headlamps), slow down a little. Avoid staring directly into the approaching headlamps.

Keep your windshield and all the glass on your vehicle clean — inside and out. Glare at night is made much worse by dirt on the glass. Even the inside of the glass can build up a film caused by dust. Dirty glass makes lights dazzle and flash more than clean glass would, making the pupils of your eyes contract repeatedly.

Remember that your headlamps light up far less of a roadway when you are in a turn or curve. Keep your eyes moving; that way, it is easier to pick out dimly lighted objects. Just as your headlamps should be checked regularly for proper aim, so should your eyes be examined regularly. Some drivers suffer from night blindness — the inability to see in dim light — and are not even aware of it.

Downloaded from www.Manualslib.com manuals search engine

Driving in Rain and on Wet Roads

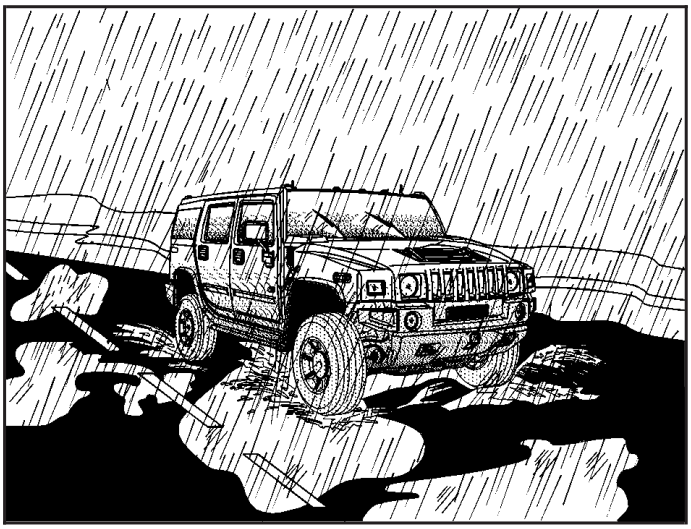

Rain and wet roads can mean driving trouble. On a wet road, you can not stop, accelerate or turn as well because your tire-to-road traction is not as good as on dry roads.

And, if your tires do not have much tread left, you will get even less traction. It is always wise to go slower and be cautious if rain starts to fall while you are driving. The surface may get wet suddenly when your reflexes are tuned for driving on dry pavement.

The heavier the rain, the harder it is to see. Even if your windshield wiper blades are in good shape, a heavy rain can make it harder to see road signs and traffic signals, pavement markings, the edge of the road and even people walking.

It is wise to keep your wiping equipment in good shape and keep your windshield washer tank filled with washer fluid. Replace your windshield wiper inserts when they show signs of streaking or missing areas on the windshield, or when strips of rubber start to separate from the inserts.

Downloaded from www.Manualslib.com manuals search engine

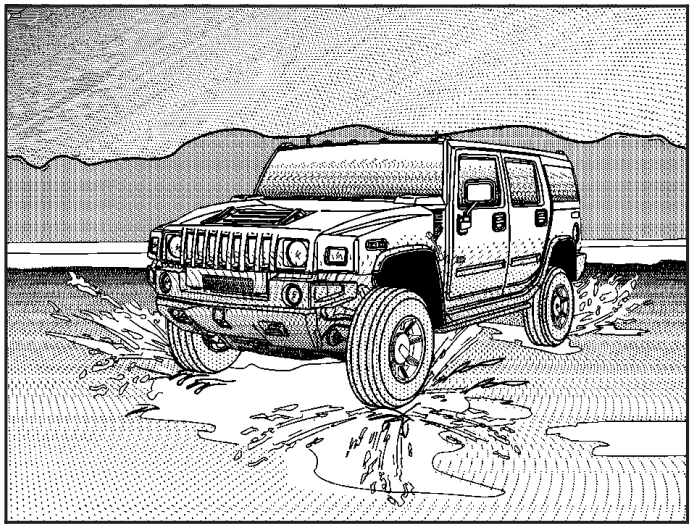

Driving too fast through large water puddles or even going through some car washes can cause problems, too. The water may affect your brakes. Try to avoid puddles. But if you can not, try to slow down before you hit them.

⚠ CAUTION:

Wet brakes can cause accidents. They will not work as well in a quick stop and may cause pulling to one side. You could lose control of the vehicle.

After driving through a large puddle of water or a car wash, apply your brake pedal lightly until your brakes work normally.

Downloaded from www.Manualslib.com manuals search engine

Hydroplaning

Hydroplaning is dangerous. So much water can build up under your tires that they can actually ride on the water. This can happen if the road is wet enough and you are going fast enough. When your vehicle is hydroplaning, it has little or no contact with the road.

Hydroplaning does not happen often. But it can if your tires do not have much tread or if the pressure in one or more is low. It can happen if a lot of water is standing on the road. If you can see reflections from trees, telephone poles or other vehicles, and raindrops “dimple” the water’s surface, there could be hydroplaning.

Hydroplaning usually happens at higher speeds. There just is not a hard and fast rule about hydroplaning. The best advice is to slow down when it is raining.

Driving Through Deep Standing Water

Notice: **If you drive too quickly through deep puddles or standing water, water can come in through your engine’s air intake and badly damage your engine. Never drive through water that is slightly lower than the underbody of your vehicle. If you can not avoid deep puddles or standing water, drive through them very slowly.**

Driving Through Flowing Water

⚠ CAUTION:

Flowing or rushing water creates strong forces. If you try to drive through flowing water, as you might at a low water crossing, your vehicle can be carried away. As little as six inches of flowing water can carry away a smaller vehicle. If this happens, you and other vehicle occupants could drown. Do not ignore police warning signs, and otherwise be very cautious about trying to drive through flowing water.

Some Other Rainy Weather Tips

- Besides slowing down, allow some extra following distance. And be especially careful when you pass another vehicle. Allow yourself more clear room ahead, and be prepared to have your view restricted by road spray.
- Have good tires with proper tread depth. See *Tires on page 5-60*.

Downloaded from www.Manualslib.com manuals search engine

City Driving

One of the biggest problems with city streets is the amount of traffic on them. You will want to watch out for what the other drivers are doing and pay attention to traffic signals.

Here are ways to increase your safety in city driving:

- Know the best way to get to where you are going. Get a city map and plan your trip into an unknown part of the city just as you would for a cross-country trip.
- Try to use the freeways that rim and crisscross most large cities. You will save time and energy. See *Freeway Driving on page 4-47*.
- Treat a green light as a warning signal. A traffic light is there because the corner is busy enough to need it. When a light turns green, and just before you start to move, check both ways for vehicles that have not cleared the intersection or may be running the red light.

Downloaded from www.Manualslib.com manuals search engine

Freeway Driving

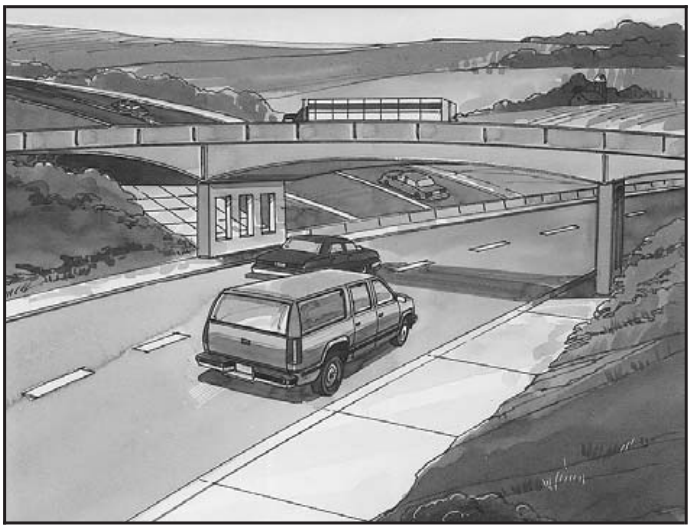

Mile for mile, freeways (also called thruways, parkways, expressways, turnpikes or superhighways) are the safest of all roads. But they have their own special rules.

The most important advice on freeway driving is: Keep up with traffic and keep to the right. Drive at the same speed most of the other drivers are driving. Too-fast or too-slow driving breaks a smooth traffic flow. Treat the left lane on a freeway as a passing lane.

At the entrance, there is usually a ramp that leads to the freeway. If you have a clear view of the freeway as you drive along the entrance ramp, you should begin to check traffic. Try to determine where you expect to blend with the flow. Try to merge into the gap at close to the prevailing speed. Switch on your turn signal, check your mirrors and glance over your shoulder as often as necessary. Try to blend smoothly with the traffic flow.

Once you are on the freeway, adjust your speed to the posted limit or to the prevailing rate if it is slower. Stay in the right lane unless you want to pass.

Before changing lanes, check your mirrors. Then use your turn signal.

Just before you leave the lane, glance quickly over your shoulder to make sure there is not another vehicle in your “blind” spot.

Downloaded from www.Manualslib.com manuals search engine

Once you are moving on the freeway, make certain you allow a reasonable following distance. Expect to move slightly slower at night.

When you want to leave the freeway, move to the proper lane well in advance. If you miss your exit, do not, under any circumstances, stop and back up. Drive on to the next exit.

The exit ramp can be curved, sometimes quite sharply. The exit speed is usually posted.

Reduce your speed according to your speedometer, not to your sense of motion. After driving for any distance at higher speeds, you may tend to think you are going slower than you actually are.

Before Leaving on a Long Trip

Make sure you are ready. Try to be well rested. If you must start when you are not fresh — such as after a day's work — do not plan to make too many miles that first part of the journey. Wear comfortable clothing and shoes you can easily drive in.

Is your vehicle ready for a long trip? If you keep it serviced and maintained, it is ready to go. If it needs service, have it done before starting out. Of course, you will find experienced and able service experts in GM dealerships all across North America. They will be ready and willing to help if you need it.

Downloaded from www.Manualslib.com manuals search engine

Here are some things you can check before a trip:

- *Windshield Washer Fluid:* Is the reservoir full? Are all windows clean inside and outside?
- *Wiper Blades:* Are they in good shape?
- *Fuel, Engine Oil, Other Fluids:* Have you checked all levels?
- *Lamps:* Are they all working? Are the lenses clean?
- *Tires:* They are vitally important to a safe, trouble-free trip. Is the tread good enough for long-distance driving? Are the tires all inflated to the recommended pressure?
- *Weather Forecasts:* What is the weather outlook along your route? Should you delay your trip a short time to avoid a major storm system?
- *Maps:* Do you have up-to-date maps?

Highway Hypnosis

Is there actually such a condition as “highway hypnosis”? Or is it just plain falling asleep at the wheel? Call it highway hypnosis, lack of awareness, or whatever.

There is something about an easy stretch of road with the same scenery, along with the hum of the tires on the road, the drone of the engine, and the rush of the wind against the vehicle that can make you sleepy. Do not let it happen to you! If it does, your vehicle can leave the road in *less than a second,* and you could crash and be injured.

What can you do about highway hypnosis? First, be aware that it can happen.

Then here are some tips:

- Make sure your vehicle is well ventilated, with a comfortably cool interior.
- Keep your eyes moving. Scan the road ahead and to the sides. Check your mirrors and your instruments frequently.
- If you get sleepy, pull off the road into a rest, service or parking area and take a nap, get some exercise, or both. For safety, treat drowsiness on the highway as an emergency.

Downloaded from www.Manualslib.com manuals search engine

Hill and Mountain Roads

Driving on steep hills or mountains is different from driving in flat or rolling terrain.

If you drive regularly in steep country, or if you are planning to visit there, here are some tips that can make your trips safer and more enjoyable. See *Off-Road Driving on page 4-17* for information about driving off-road.

- Keep your vehicle in good shape. Check all fluid levels and also the brakes, tires, cooling system and transmission. These parts can work hard on mountain roads.
- Know how to go down hills. The most important thing to know is this: let your engine do some of the slowing down. Shift to a lower gear when you go down a steep or long hill.

⚠ CAUTION:

If you do not shift down, your brakes could get so hot that they would not work well. You would then have poor braking or even none going down a hill. You could crash. Shift down to let your engine assist your brakes on a steep downhill slope.

Downloaded from www.Manualslib.com manuals search engine

⚠ CAUTION:

Coasting downhill in NEUTRAL (N) or with the ignition off is dangerous. Your brakes will have to do all the work of slowing down. They could get so hot that they would not work well. You would then have poor braking or even none going down a hill. You could crash. Always have your engine running and your vehicle in gear when you go downhill.

- Know how to go uphill. You may want to shift down to a lower gear. The lower gears help cool your engine and transmission, and you can climb the hill better.
- Stay in your own lane when driving on two-lane roads in hills or mountains. Do not swing wide or cut across the center of the road. Drive at speeds that let you stay in your own lane.
- As you go over the top of a hill, be alert. There could be something in your lane, like a stalled car or an accident.
- You may see highway signs on mountains that warn of special problems. Examples are long grades, passing or no-passing zones, a falling rocks area or winding roads. Be alert to these and take appropriate action.

Downloaded from www.Manualslib.com manuals search engine

Winter Driving

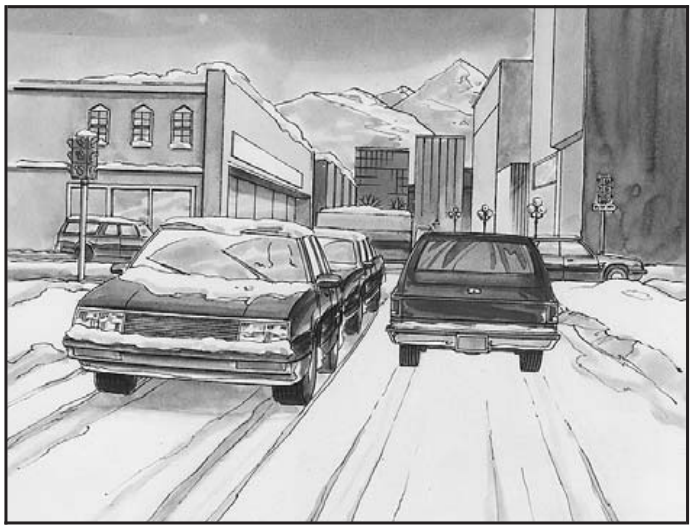

Here are some tips for winter driving:

- Have your vehicle in good shape for winter.
- You may want to put winter emergency supplies in your vehicle.

Also see *Tires on page 5-60*.

Include an ice scraper, a small brush or broom, a supply of windshield washer fluid, a rag, some winter outer clothing, a small shovel, a flashlight, a red cloth and a couple of reflective warning triangles. And, if you will be driving under severe conditions, include a small bag of sand, a piece of old carpet or a couple of burlap bags to help provide traction. Be sure you properly secure these items in your vehicle.

Driving on Snow or Ice

Most of the time, those places where your tires meet the road probably have good traction.

However, if there is snow or ice between your tires and the road, you can have a very slippery situation. You will have a lot less traction or “grip” and will need to be very careful.

Downloaded from www.Manualslib.com manuals search engine

What is the worst time for this? “Wet ice.” Very cold snow or ice can be slick and hard to drive on. But wet ice can be even more trouble because it may offer the least traction of all. You can get wet ice when it is about freezing (32°F; 0°C) and freezing rain begins to fall. Try to avoid driving on wet ice until salt and sand crews can get there.

Whatever the condition — smooth ice, packed, blowing or loose snow — drive with caution.

Your Traction Control System will help you to maintain control of the vehicle when you accelerate on a slippery road. If you are driving in deep snow, turn your traction system to the TC2 mode. It will improve your ability to accelerate. See *If You Are Stuck: In Sand, Mud, Ice or Snow on page 4-56*. Even though your vehicle has a traction system, you will want to slow down and adjust your driving to the road conditions. See *Traction Control System (TCS) on page 4-9*.

Your anti-lock brakes improve your vehicle’s stability when you make a hard stop on a slippery road. Even though you have an anti-lock braking system, you will want to begin stopping sooner than you would on dry pavement. See *Braking on page 4-6*.

- Allow greater following distance on any slippery road.
- Watch for slippery spots. The road might be fine until you hit a spot that is covered with ice. On an otherwise clear road, ice patches may appear in shaded areas where the sun can not reach: around clumps of trees, behind buildings or under bridges. Sometimes the surface of a curve or an overpass may remain icy when the surrounding roads are clear. If you see a patch of ice ahead of you, brake before you are on it. Try not to brake while you’re actually on the ice, and avoid sudden steering maneuvers.

Downloaded from www.Manualslib.com manuals search engine

If You Are Caught in a Blizzard

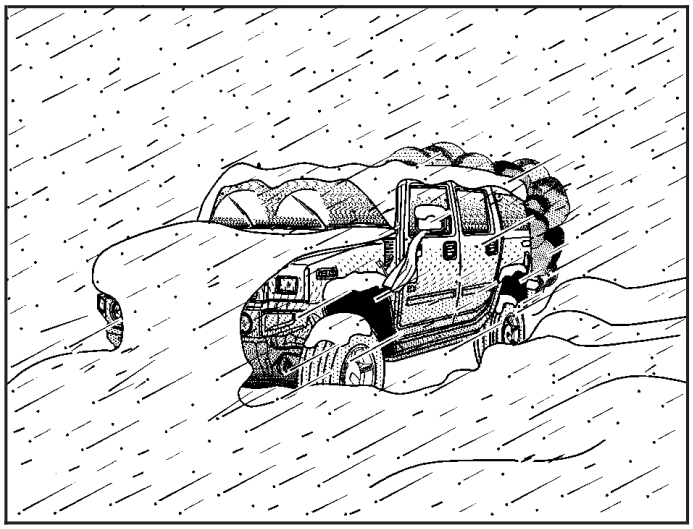

If you are stopped by heavy snow, you could be in a serious situation. You should probably stay with your vehicle unless you know for sure that you are near help and you can hike through the snow. Here are some things to do to summon help and keep yourself and your passengers safe:

- Turn on your hazard flashers.
- Tie a red cloth to your vehicle to alert police that you have been stopped by the snow.
- Put on extra clothing or wrap a blanket around you. If you have no blankets or extra clothing, make body insulators from newspapers, burlap bags, rags, floor mats — anything you can wrap around yourself or tuck under your clothing to keep warm.

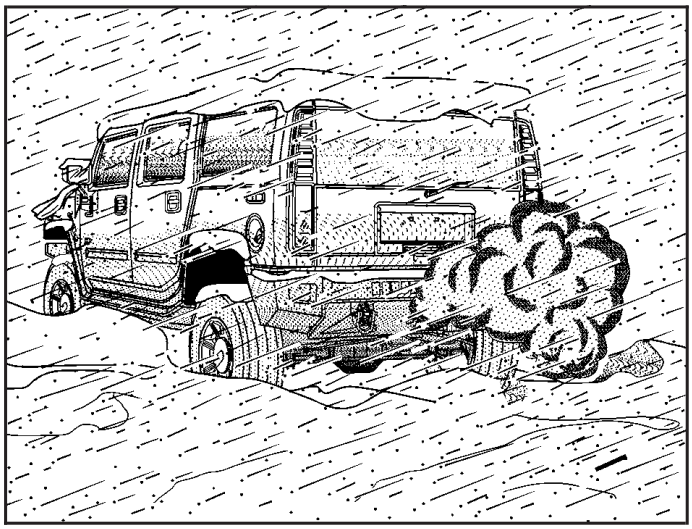

You can run the engine to keep warm, but be careful.

Downloaded from www.Manualslib.com manuals search engine

⚠ CAUTION:

Snow can trap exhaust gases under your vehicle. This can cause deadly CO (carbon monoxide) gas to get inside. CO could overcome you and kill you. You can not see it or smell it, so you might not know it is in your vehicle. Clear away snow from around the base of your vehicle, especially any that is blocking your exhaust pipe. And check around again from time to time to be sure snow does not collect there.

Open a window just a little on the side of the vehicle that is away from the wind. This will help keep CO out.

Run your engine only as long as you must. This saves fuel. When you run the engine, make it go a little faster than just idle. That is, push the accelerator slightly. This uses less fuel for the heat that you get and it keeps the battery charged. You will need a well-charged battery to restart the vehicle, and possibly for signaling later on with your headlamps. Let the heater run for a while.

Then, shut the engine off and close the window almost all the way to preserve the heat. Start the engine again and repeat this only when you feel really uncomfortable from the cold. But do it as little as possible. Preserve the fuel as long as you can. To help keep warm, you can get out of the vehicle and do some fairly vigorous exercises every half hour or so until help comes.

Downloaded from www.Manualslib.com manuals search engine

If You Are Stuck: In Sand, Mud, Ice or Snow

In order to free your vehicle when it is stuck, you will need to spin the wheels, but you do not want to spin your wheels too fast. The method known as "rocking" can help you get out when you are stuck, but you must use caution.

⚠ CAUTION:

If you let your tires spin at high speed, they can explode, and you or others could be injured. And, the transmission or other parts of the vehicle can overheat. That could cause an engine compartment fire or other damage. When you are stuck, spin the wheels as little as possible. Do not spin the wheels above 35 mph (55 km/h) as shown on the speedometer.

Notice: **Spinning your wheels can destroy parts of your vehicle as well as the tires. If you spin the wheels too fast while shifting your transmission back and forth, you can destroy your transmission.**

For more information about using tire chains on your vehicle, see *Tire Chains on page 5-75*.

Rocking Your Vehicle To Get It Out

First, turn your steering wheel left and right. That will clear the area around your front wheels. Your vehicle has a Traction Control System that will activate when the system senses that the wheels are spinning. See *Traction Control System (TCS) on page 4-9* for more information. Then, with the wheels straight ahead, shift back and forth between REVERSE (R) and a forward gear, spinning the wheels as little as possible. Release the accelerator pedal while you shift, and press lightly on the accelerator pedal when the transmission is in gear. By slowly spinning your wheels in the forward and reverse directions, you will cause a rocking motion that may free your vehicle. If that does not get you out after a few tries, you may need to be towed out. Or, you can use your recovery loops. If you do need to be towed out, see *Towing Your Vehicle on page 4-65*.

Downloaded from www.Manualslib.com manuals search engine

Using the Recovery Loops

Front of Vehicle

Rear of Vehicle

Your vehicle may be equipped with recovery loops at the front and rear of your vehicle. You may need to use them if you are stuck off-road and need to be pulled to some place where you can continue driving.

Downloaded from www.Manualslib.com manuals search engine

⚠ CAUTION:

These loops, when used, are under a lot of force. Keep people away from the vicinity of the loops and any chains or cables during use. Always pull the vehicle straight out. Never pull on the loops at a sideways angle. The loops could break off and you or others could be injured from the chain or cable snapping back.

Notice: **Never use the recovery loops to tow the vehicle. Your vehicle could be damaged and it would not be covered by warranty.**

Downloaded from www.Manualslib.com manuals search engine

First Aid Kit and Tool Kit

Your vehicle may have a first aid kit and/or a tool kit located in the storage bin behind the spare tire. They are held in place with a hook and loop fastener strap.

If your vehicle has the tool kit, the kit includes a flashlight, a tire pressure gage and a multi-purpose tool set.

Downloaded from www.Manualslib.com manuals search engine

The tire pressure gage has a reset button in the gage stem. After taking a pressure reading, press the button to reset the gage to zero.

Front Receiver

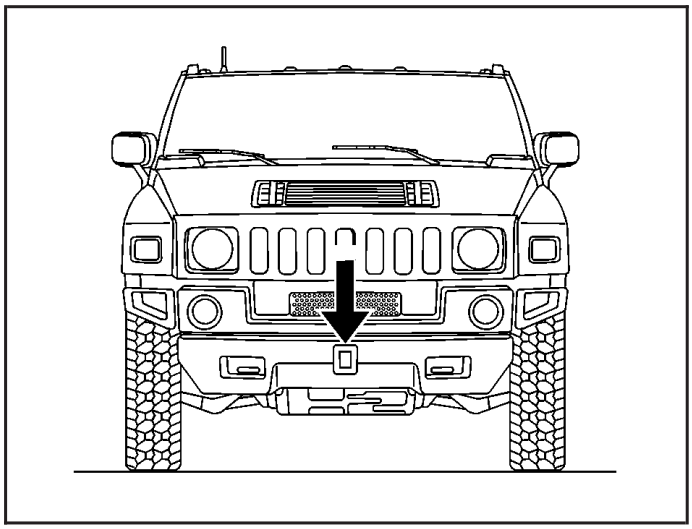

Your vehicle is equipped with a front receiver.

You can use the receiver with a power winch platform (described later in this section), receiver extension or with other accessories.

Never use the front receiver to tow a trailer.

You can use the front receiver to tow your vehicle behind another. See *Recreational Vehicle Towing on page 4-65*.

Downloaded from www.Manualslib.com manuals search engine

Receiver Extension (If Equipped)

Use the receiver extension with the front receiver and various light-duty accessories such as bike racks.

Notice: **Do not attach accessories or cargo that weigh more than 240 lbs. (108 kg) to the receiver extension. You could damage the receiver extension and/or your vehicle's frame components.**

The receiver extension was not intended for heavy-duty use, such as trailer towing, winching or vehicle recovery.

To use the front receiver with the receiver extension, do the following:

1. Locate the receiver extension (A) in the rear of the vehicle where it is attached to the spare tire mounting plate.
2. Loosen the wing nuts (B) holding the extension to the spare tire plate and remove it.
3. The extension attaches to the front receiver exactly as the power winch platform does. See "Power Winch Platform" following in this section.
4. Attach the accessory you will be using to the receiver extension.

Downloaded from www.Manualslib.com manuals search engine

Power Winch Platform (If Equipped)

You can use the power winch platform with an aftermarket winch. Connect the winch to the platform and wiring to the vehicle following the winch manufacturer's guidelines.

1. Slide the winch platform into the front receiver of your vehicle. To secure it, follow the next step. You will be using the locking pin (if equipped) stored with the jack/tool kit. See *Changing a Flat Tire on page 5-79* for more information on location.

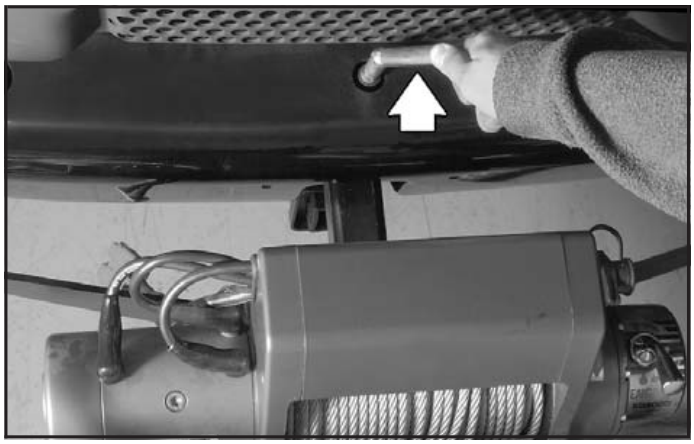

2. Slide the pin down through the hole in the front bumper and into the receiver.

If you look under the receiver, you will see the locking portion (clip) of the pin coming through the bottom hole in the receiver.

3. Turn the clip so that it is perpendicular to the pin. Pin is shown off the vehicle for clarity.

Downloaded from www.Manualslib.com manuals search engine

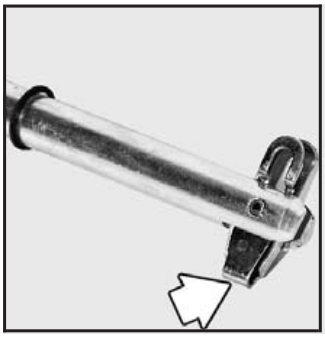

4. Push the clip so it locks in place. Pin is shown off the vehicle for clarity.

5. With the clip locked and the pin secure, your setup should look like this if you look under the receiver. The pin is now secure and you will be able to use the winch.

To remove the winch platform, you must first unlock the clip so you can pull out the pin. To unlock the clip, squeeze the clip and turn it so it is in line with the rest of the pin. Remove the pin and slide the winch platform out from the receiver.

Notice: **Do not use the winch platform to winch at a tension of more than 9,000 lbs. (4 082 kg). This would damage your vehicle's frame. This damage would not be covered by your vehicle's warranty.**

Downloaded from www.Manualslib.com manuals search engine

If you are using a winch to pull out another vehicle, follow the winch manufacturer's guidelines and observe the following to prevent damage to your vehicle:

- If possible, have your vehicle anchored from the opposite side of the winch to a solid, immovable object.

  If winching from the front, use both of the rear recovery loops. If winching from the rear, use both of the front recovery loops.
- Put your transmission in NEUTRAL (N).
- Use your regular brakes to hold your vehicle in place and block the wheels to keep the vehicle from moving.

Notice: **Using a power winch with the transmission in gear to pull out another vehicle may damage the transmission. When operating a power winch, always leave the transmission in NEUTRAL (N).**

Notice: **Driving your vehicle through an automatic car wash with the winch installed, can cause damage to your vehicle and the car wash. Always remove the winch from your vehicle before using an automatic car wash. See *Cleaning the Outside of Your Vehicle on page 5-95* for more information.**

If you are using a winch to pull out your own vehicle, follow the winch manufacturer's guidelines for self recovery and observe the following to prevent damage to your vehicle:

- Do not self recover your vehicle by wrapping the winch cable around an object (such as a pulley block or tree) and attaching it back to your vehicle's recovery loops.
- Always attach the winch cable directly to a solid anchor directly in front of your vehicle to achieve a straight line pull.

Downloaded from www.Manualslib.com manuals search engine

Towing

Towing Your Vehicle

Consult your dealer or a professional towing service if you need to have your disabled vehicle towed. See *Roadside Assistance Program on page 7-5*.

If you want to tow your vehicle behind another vehicle for recreational purposes (such as behind a motorhome), see “Recreational Vehicle Towing” following.

Recreational Vehicle Towing

Recreational vehicle towing means towing your vehicle behind another vehicle – such as behind a motorhome. The two most common types of recreational vehicle towing are known as “dinghy towing” (towing your vehicle with all four wheels on the ground) and “dolly towing” (towing your vehicle with two wheels on the ground and two wheels up on a device known as a “dolly”).

With the proper preparation and equipment, many vehicles can be towed in these ways. See “Dinghy Towing” and “Dolly Towing,” following.

Here are some important things to consider before you do recreational vehicle towing:

- What’s the towing capacity of the towing vehicle? Be sure you read the tow vehicle manufacturer’s recommendations.
- How far will you tow? Some vehicles have restrictions on how far and how long they can tow.
- Do you have the proper towing equipment? See your dealer or trailering professional for additional advice and equipment recommendations.
- Is your vehicle ready to be towed? Just as you would prepare your vehicle for a long trip, you’ll want to make sure your vehicle is prepared to be towed. See *Before Leaving on a Long Trip on page 4-48*.

Downloaded from www.Manualslib.com manuals search engine

Dinghy Towing

Use the following procedure to tow your vehicle:

1. Shift the transmission to PARK (P).
2. Turn the engine off, but leave the ignition on.
3. Firmly set the parking brake.
4. Securely attach the vehicle being towed to the tow vehicle.
5. Shift the transfer case to NEUTRAL (N). See *All-Wheel Drive on page 2-25* for the proper procedure to select the NEUTRAL position for your vehicle.
6. Release the parking brake only after the vehicle being towed is firmly attached to the towing vehicle. You can use your vehicle's front mounted receiver with the proper accessories to tow it. See "Front Mounted Receiver" under *If You Are Stuck: In Sand, Mud, Ice or Snow on page 4-56*.
7. Turn the engine off and leave the steering column unlocked.

⚠ CAUTION:

Shifting an all-wheel-drive vehicle's transfer case into NEUTRAL can cause your vehicle to roll even if the transmission is in Park (P). You or others could be injured. Make sure the parking brake is firmly set before you shift the transfer case to NEUTRAL.

Dolly Towing

Your vehicle can not be dolly towed. If you must tow your vehicle behind another, use the dinghy towing procedure listed previously.

Notice: **Dolly towing your vehicle will damage drivetrain components. Do not dolly tow your vehicle.**

Downloaded from www.Manualslib.com manuals search engine

Loading Your Vehicle

It is very important to know how much weight your vehicle can carry. This weight is called the vehicle capacity weight and includes the weight of all occupants, cargo and all nonfactory-installed options. Two labels on your vehicle show how much weight it may properly carry, the Tire and Loading Information label and the Certification/Tire label.

⚠ CAUTION:

Do not load your vehicle any heavier than the GVWR, or either the maximum front or rear GAWR. If you do, parts on your vehicle can break, and it can change the way your vehicle handles. These could cause you to lose control and crash. Also, overloading can shorten the life of your vehicle.

Tire and Loading Information Label

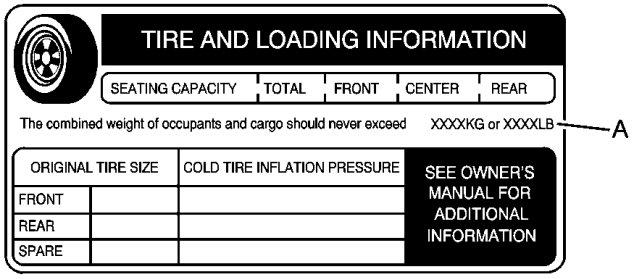

A. Vehicle Capacity Weight

The Tire and Loading Information label is attached to the center pillar, near the driver's door latch. Vehicles without a center pillar will have the Tire and Loading Information label attached to the driver's door edge. This label lists the number of people that can be in your vehicle and the total weight it can carry. This weight is called the vehicle capacity weight.

Downloaded from www.Manualslib.com manuals search engine

The Tire and Loading Information label also tells you the size and recommended inflation pressure for the original equipment tires on your vehicle. For more information on tires and inflation see *Tires on page 5-60* and *Inflation - Tire Pressure on page 5-68*.

If your vehicle does not have the Tire and Loading Information label, the Certification/Tire label shows the tire size and recommended inflation pressures needed to obtain the Gross Vehicle Weight Rating (GVWR) and the Gross Axle Weight Rating (GAWR) for the front and rear axles. See “Certification/Tire Label” later in this section.

Steps for Determining Correct Load Limit

1. Locate the statement “The combined weight of occupants and cargo should never exceed XXX pounds” on your vehicle placard.
2. Determine the combined weight of the driver and passengers that will be riding in your vehicle.
3. Subtract the combined weight of the driver and passengers from XXX kilograms or XXX pounds.
4. The resulting figure equals the available amount of cargo and luggage load capacity. For example, if the “XXX” amount equals 1400 lbs. and there will be five 150 lb. passengers in your vehicle, the amount of available cargo and luggage load capacity is 650 lbs. (1400 – 750 (5 x 150) = 650 lbs.).
5. Determine the combined weight of luggage and cargo being loaded on the vehicle. That weight may not safely exceed the available cargo and luggage load capacity calculated in Step 4.
6. If your vehicle will be towing a trailer, the load from your trailer will be transferred to your vehicle. Consult this manual to determine how this reduces the available cargo and luggage load capacity of your vehicle.

See *Towing a Trailer on page 4-75* for important information on towing a trailer, towing safety rules and trailering tips.

Downloaded from www.Manualslib.com manuals search engine

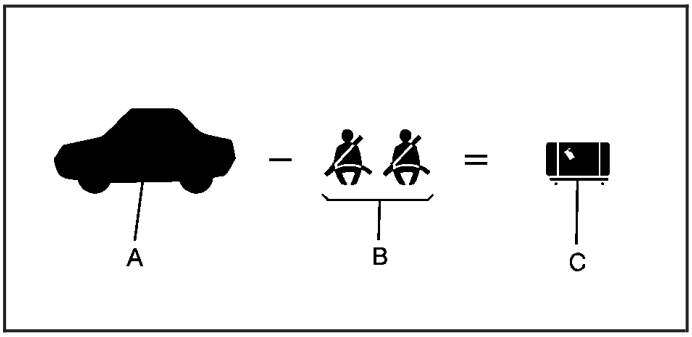

Example 1

Loading Your Vehicle

Item	Description	Total
A	Vehicle Capacity Weight for Example 1 =	1,000 lbs. (453 kg)
B	Subtract Occupant Weight 150 lbs. (68 kg) × 2 =	300 lbs. (136 kg)
C	Available Occupant and Cargo Weight =	700 lbs. (317 kg)

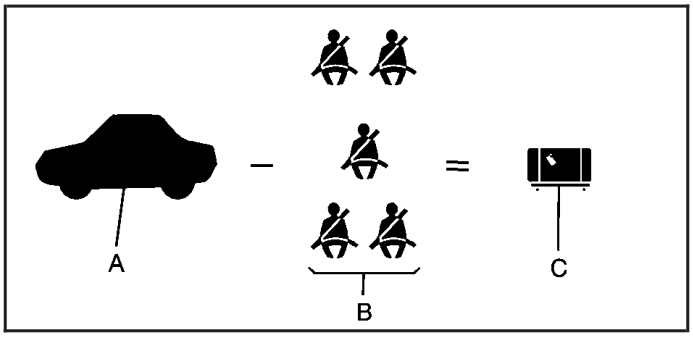

Example 2

Loading Your Vehicle

Item	Description	Total
A	Vehicle Capacity Weight for Example 2 =	1,000 lbs. (453 kg)
B	Subtract Occupant Weight 150 lbs. (68 kg) × 5 =	750 lbs. (340 kg)
C	Available Cargo Weight =	250 lbs. (113 kg)

Downloaded from www.Manualslib.com manuals search engine

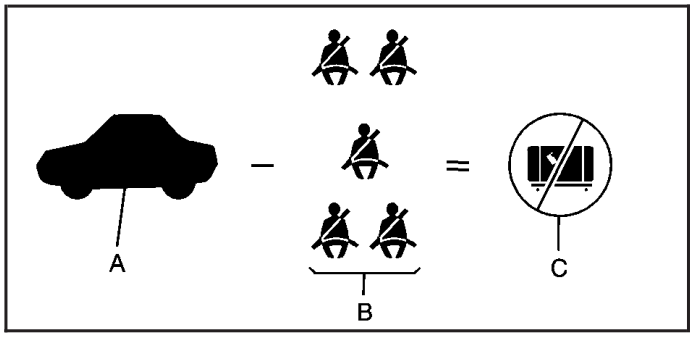

Example 3

Loading Your Vehicle

Item	Description	Total
A	Vehicle Capacity Weight for Example 3 =	1,000 lbs. (453 kg)
B	Subtract Occupant Weight 200 lbs. (91 kg) × 5 =	1,000 lbs. (453 kg)
C	Available Cargo Weight =	0 lbs. (0 kg)

Refer to your vehicle's tire and loading information label for specific information about your vehicle's capacity weight and seating positions. The combined weight of the driver, passengers and cargo should never exceed your vehicle's capacity weight.

Certification/Tire Label

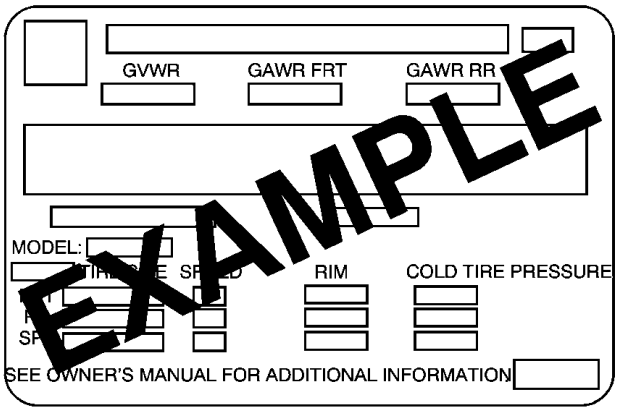

The Certification/Tire label is found on the rear edge of the driver's door.

The label shows the size of your original tires and the inflation pressures needed to obtain the gross weight capacity of your vehicle. This is called the GVWR (Gross Vehicle Weight Rating). The GVWR includes the weight of the vehicle, all occupants, fuel and cargo.

Downloaded from www.Manualslib.com manuals search engine

The Certification/Tire label also tells you the maximum weights for the front and rear axles, called Gross Axle Weight Rating (GAWR). To find out the actual loads on your front and rear axles, you need to go to a weigh station and weigh your vehicle. Your dealer can help you with this. Be sure to spread out your load equally on both sides of the centerline.

Never exceed the GVWR for your vehicle, or the GAWR for either the front or rear axle.

And, if you do have a heavy load, you should spread it out.

⚠ CAUTION:

Do not load your vehicle any heavier than the GVWR, or either the maximum front or rear GAWR. If you do, parts on your vehicle can

CAUTION: (Continued)

CAUTION: (Continued)

break, and it can change the way your vehicle handles. These could cause you to lose control and crash. Also, overloading can shorten the life of your vehicle.

Your warranty does not cover parts or components that fail because of overloading.

The label will help you decide how much cargo and installed equipment your truck can carry.

Downloaded from www.Manualslib.com manuals search engine

Using heavier suspension components to get added durability might not change your weight ratings. Ask your dealer to help you load your vehicle the right way.

If you put things inside your vehicle – like suitcases, tools, packages, or anything else – they go as fast as the vehicle goes. If you have to stop or turn quickly, or if there is a crash, they'll keep going.

⚠ CAUTION:

Things you put inside your vehicle can strike and injure people in a sudden stop or turn, or in a crash.

- **Put things in the cargo area of your vehicle. Try to spread the weight evenly.**
- **Never stack heavier things, like suitcases, inside the vehicle so that some of them are above the tops of the seats.**
- **Do not leave an unsecured child restraint in your vehicle.**
- **When you carry something inside the vehicle, secure it whenever you can.**
- **Do not leave a seat folded down unless you need to.**

There's also important loading information for off-road driving in this manual. See "Loading Your Vehicle for Off-Road Driving" under *Off-Road Driving on page 4-17*.

Add-On Equipment

When you carry removable items, you may need to put a limit on how many people you can carry inside your vehicle. Be sure to weigh your vehicle before you buy and install the new equipment.

Notice: **Overloading your vehicle may cause damage. Repairs would not be covered by your warranty. Do not overload your vehicle.**

Remember not to exceed the Gross Axle Weight Rating (GAWR) of the front or rear axle. See *Loading Your Vehicle on page 4-67*.

The Cargo Weight Rating (CWR) is the maximum weight of the load your vehicle can carry. It doesn't include the weight of the people inside. But you can figure about 150 lbs. (68 kg) for each seat.

The total cargo load must not be more than your vehicle's CWR.

Downloaded from www.Manualslib.com manuals search engine

Selectable Extended Rear Ride Height

If your vehicle has this feature it comes as part of the electronically controlled air suspension system.

The selectable rear ride height allows you to raise the rear of the vehicle about 2 inches (5 cm) over the normal ride height. This can be helpful when driving off-road where you may need more ground clearance to clear an obstacle.

The button that controls this feature is located on the instrument panel to the right of the steering wheel.

To use this feature, ensure that the following conditions are met:

- The engine must be running.
- All doors must be fully closed. The suspension will not raise or lower if a door is open.
- The vehicle speed must be less than 40 mph (64 km/h). The system will not activate otherwise.

Press the height control button to raise the rear of the vehicle.

A light in the button will begin to flash as the rear of the vehicle rises. Once the extended height has been reached (this may take up to a minute), the warning light will stop flashing and will stay lit while the vehicle is at the extended height.

To lower the vehicle to the normal ride height, press the button again. The light in the button will flash as the suspension lowers. When the light in the button stops flashing and goes out, the suspension has reached the normal ride height.

This feature will lower the vehicle to the normal height if vehicle speed exceeds 40 mph (64 km/h).

You may also want to use this feature when ascending, descending or cresting a steep hill as this can help prevent the rear bumper from dragging on the base of the hill or prevent the vehicle from grounding out (high centering) on the crest of the hill.

Do not use this feature when towing a trailer.

Downloaded from www.Manualslib.com manuals search engine

Electronically Controlled Air Suspension System

The electronically controlled air suspension, if equipped, keeps the rear of your vehicle level as you load and unload it. The system includes a compressor, two height sensor and two air springs supporting the vehicle.

The engine must be running for the system to operate and level the vehicle after loading or unloading. The system will suspend leveling if any of the doors and/or the liftgate are open. Once the doors are closed, system leveling will continue.

You may hear the compressor running when you load your vehicle, and periodically as the system adjusts the vehicle to the standard ride height. You may also hear the release of air similar to a hissing sound during suspension operation. This is normal.

Load leveling will not function normally with the inflator hose attached to the inflator outlet. Remove the inflater hose from the outlet when it is not in use. See *Accessory Inflator on page 5-76*.

Overload and Overheat Protection

Overload protection is designed to protect the air suspension system and is an indication to the driver that the vehicle is overloaded.

If the rear suspension remains at a low height, the rear axle load has exceeded GAWR (Gross Axle Weight Rating). When the overload protection mode is activated, the compressor operates for about 30 seconds to one minute without raising the vehicle depending on the amount of overload. This will continue each time the ignition is turned on until the rear axle load is reduced below GAWR.

If the total rear GAWR (Gross Axle Weight Rating) is reached, the suspension may be slightly less than level. This is normal and does not mean there is a problem with the air suspension.

If the system overheats, it will shut down and stop all leveling functions until the system cools down. During this time the SERVICE AIR SUSPENSION message will appear in the DIC. See *Driver Information Center (DIC) on page 3-44* for more information.

Downloaded from www.Manualslib.com manuals search engine

Trailer Recommendations

You must subtract your hitch loads from the Cargo Weight Rating (CWR). CWR is the maximum weight of the load your vehicle can carry. It doesn't include the weight of the people inside. But you can figure about 150 lbs. (68 kg) for each seat. The total cargo load must not be more than your vehicle's CWR.

Weigh your vehicle with the trailer attached, so that you won't go over the GVWR or GAWR. If you are using a weight-distributing hitch, weigh the vehicle without the spring bars in place.

You'll get the best performance if you spread out the weight of your load the right way, and if you choose the correct hitch and trailer brakes.

For more information, see *Towing a Trailer on page 4-75*.

Towing a Trailer

⚠ CAUTION:

If you do not use the correct equipment and drive properly, you can lose control when you pull a trailer. For example, if the trailer is too heavy, the brakes may not work well — or even at all. You and your passengers could be seriously injured. Pull a trailer only if you have followed all the steps in this section. Ask your dealer for advice and information about towing a trailer with your vehicle.

Notice: **Pulling a trailer improperly can damage your vehicle and result in costly repairs not covered by your warranty. To pull a trailer correctly, follow the advice in this part, and see your dealer for important information about towing a trailer with your vehicle.**

To identify the trailering capacity of your vehicle, you should read the information in "Weight of the Trailer" that appears later in this section.

Downloaded from www.Manualslib.com manuals search engine

If yours was built with trailering options, as many are, it's ready for heavier trailers. But trailering is different than just driving your vehicle by itself. Trailering means changes in handling, accelleration, braking, durability and fuel economy. Successful, safe trailering takes correct equipment, and it has to be used properly.

That's the reason for this part. In it are many time-tested, important trailering tips and safety rules. Many of these are important for your safety and that of your passengers. So please read this section carefully before you pull a trailer.

If You Do Decide To Pull A Trailer

If you do, here are some important points:

- There are many different laws, including speed limit restrictions, having to do with trailering. Make sure your rig will be legal, not only where you live but also where you'll be driving. A good source for this information can be state or provincial police.
- Consider using a sway control. See "Hitches" later in this section.
- Don't tow a trailer at all during the first 500 miles (800 km) your new vehicle is driven. Your engine, axle or other parts could be damaged.
- Then, during the first 500 miles (800 km) that you tow a trailer, don't drive over 50 mph (80 km/h) and don't make starts at full throttle. This helps your engine and other parts of your vehicle wear in at the heavier loads.
- You can tow in DRIVE (D). You may want to shift the transmission to THIRD (3) or, if necessary, a lower gear selection if the transmission shifts too often (e.g., under heavy loads and/or hilly conditions). See "Tow/Haul Mode" following.

Three important considerations have to do with weight:

- the weight of the trailer,
- the weight of the trailer tongue
- and the weight on your vehicle's tires.

Downloaded from www.Manualslib.com manuals search engine

Tow/Haul Mode

Tow/haul is designed to assist while your vehicle is pulling a large or heavy load or trailer. Tow/haul is most useful while pulling such a load in rolling terrain, in stop-and-go traffic, or when you need improved low-speed control, such as when parking. The purpose of the tow/haul mode is to do the following:

- Reduce the frequency and improve the predictability of transmission shifts when pulling a heavy trailer or a large or heavy load.
- Provide the same solid shift feel when pulling a heavy trailer or a large or heavy load as when the vehicle is unloaded.
- Improve control of vehicle speed while requiring less throttle pedal activity when pulling a heavy trailer or a large or heavy load.

Tow/haul is designed to be most effective when the vehicle and trailer combined weight is at least 75% of the vehicle's Gross Combination Weight Rating (GCWR). See "Weight of the Trailer" later in this section.

Press the button on the instrument panel to the right of the steering wheel to enable the tow/haul mode.

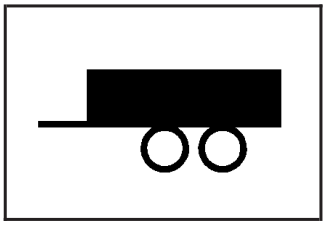

A light on the instrument panel will illuminate to indicate that tow/haul mode has been selected.

Press the button again to turn off tow/haul. The indicator light on the instrument panel will turn off. The vehicle will automatically turn off tow/haul every time it is started.

Driving with tow/haul activated without a heavy load or with no trailer will cause reduced fuel economy and unpleasant engine and transmission driving characteristics, but will not cause damage.

Downloaded from www.Manualslib.com manuals search engine

Weight of the Trailer

How heavy can a trailer safely be?

It depends on how you plan to use your rig. For example, speed, altitude, road grades, outside temperature and how much your vehicle is used to pull a trailer are all important. And, it can also depend on any special equipment that you have on your vehicle.

Use one of the following charts to determine how much your vehicle can weigh, based upon your vehicle model and options.

Maximum trailer weight is calculated assuming only the driver is in the tow vehicle and it has all the required trailering equipment. The weight of additional optional equipment, passengers and cargo in the tow vehicle must be subtracted from the maximum trailer weight.

Engine	Axle Ratio	*Maximum Trailer Weight	**GCWR
6000 V8	4.10	6,700 lbs. (3 039 kg)	13,500 lbs. (6 123 kg)
**The Gross Combination Weight Rating (GCWR) in the total allowable weight of the completely loaded vehicle and trailer including any passengers, cargo, equipment and conversions. The GCWR for your vehicle should not be exceeded.			

You can ask your dealer for our trailering information or advice, or you can write us at the address listed in your Warranty and Owner Assistance Information Booklet.

In Canada, write to:

General Motors of Canada Limited
Customer Communication Centre, 163-005
1908 Colonel Sam Drive
Oshawa, Ontario L1H 8P7

Downloaded from www.Manualslib.com manuals search engine

Weight of the Trailer Tongue

The tongue load (A) of any trailer is an important weight to measure because it affects the total gross weight of your vehicle. The Gross Vehicle Weight (GVW) includes the curb weight of the vehicle, any cargo you may carry in it, and the people who will be riding in the vehicle. If you have a lot of options, equipment, passengers or cargo in your vehicle, it will reduce the tongue weight your vehicle can carry, which will also reduce the trailer weight your vehicle can tow. And if you will tow a trailer, you must add the tongue load to the GVW because your vehicle will be carrying that weight, too. See *Loading Your Vehicle on page 4-67* for more information about your vehicle's maximum load capacity.

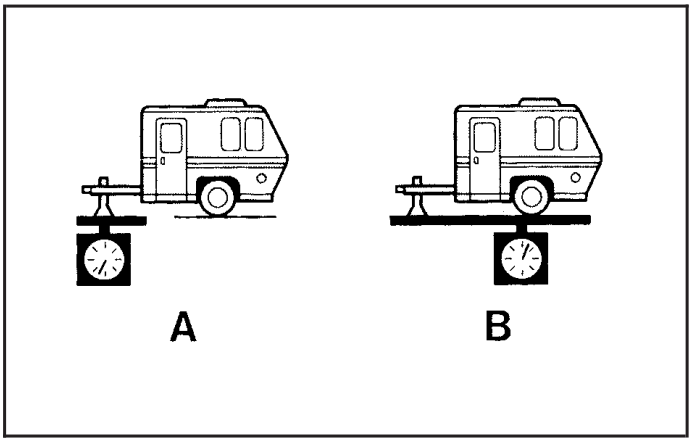

The trailer tongue weight (A) should be 10 percent to 15 percent of the total loaded trailer weight (B), up to a maximum of 500 lbs (227 kg) with a weight carrying hitch. The trailer tongue weight (A) should be 10 percent to 15 percent of the total loaded trailer weight (B), up to a maximum of 700 lbs (318 kg) with a weight distributing hitch.

Do not exceed the maximum allowable tongion the hitch ball closest to the vehicle. This will help reduce the effect of trailer tongue weight on the rear axle.

After you've loaded your trailer, weigh the trailer and then the tongue, separately, to see if the weights are proper. If they aren't, you may be able to get them right simply by moving some items around in the trailer.

Total Weight on Your Vehicle's Tires

Be sure your vehicle's tires are inflated to the upper limit for cold tires. You'll find these numbers on the Certification label at the rear edge of the driver's door or see *Loading Your Vehicle on page 4-67*. Then be sure you don't go over the GVW limit for your vehicle, or the GAWR, including the weight of the trailer tongue. If you use a weight distributing hitch, make sure you don't go over the rear axle limit before you apply the weight distribution spring bars.

Downloaded from www.Manualslib.com manuals search engine

Hitches

It's important to have the correct hitch equipment. Crosswinds, large trucks going by and rough roads are a few reasons why you'll need the right hitch.

Weight-distributing Hitches and Weight Carrying Hitches

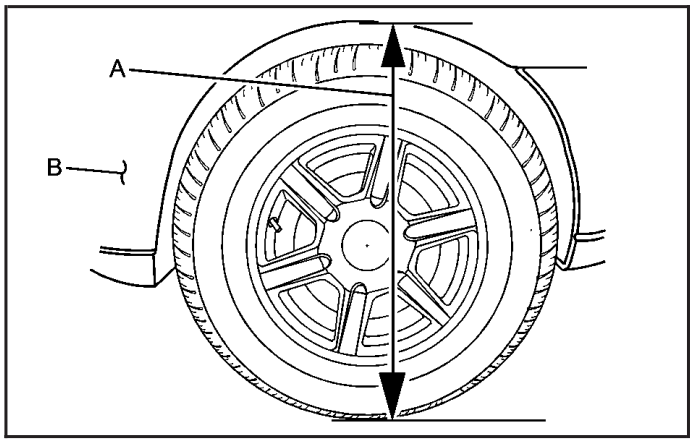

(A) Body-to-Ground Distance (B) Front of Vehicle

When using a weight-distributing hitch, the hitch must be adjusted so that the distance (A) remains the same both before and after coupling the trailer to the tow vehicle.

If you ll be pulling a trailer that, when loaded, will weigh more than 4,000 lbs. (1 814 kg) be sure to use a properly mounted weight-distributing hitch and sway control of the proper size. This equipment is very important for proper vehicle loading and good handling when driving. You should always use a sway control if your trailer will weigh more than these limits. You can ask a hitch dealer about sway controls.

Safety Chains

You should always attach chains between your vehicle and your trailer. Cross the safety chains under the tongue of the trailer to help prevent the tongue from contacting the road if it becomes separated from the hitch. Always leave just enough slack so you can turn with your rig. Never allow safety chains to drag on the ground.

Downloaded from www.Manualslib.com manuals search engine

Trailer Brakes

If your trailer weighs more than 2,000 lbs. (900 kg) loaded, then it needs its own brakes – and they must be adequate. Be sure to read and follow the instructions for the trailer brakes so you'll be able to install, adjust and maintain them properly.

Your trailer brake system can tap into the vehicle's hydraulic brake system only if:

- The trailer parts can withstand 3,000 psi (20 650 kPa) of pressure.
- The trailer's brake system will use less than 0.02 cubic inch (0.3 cc) of fluid from your vehicle's master cylinder. Otherwise, both braking systems won't work well. You could even lose your brakes.

If everything checks out this far, make the brake tap at the port on the master cylinder that sends the fluid to the rear brakes. But don't use copper tubing for this. If you do, it will bend and finally break off. Use steel brake tubing.

Driving with a Trailer

Towing a trailer requires a certain amount of experience. Before setting out for the open road, you'll want to get to know your rig. Acquaint yourself with the feel of handling and braking with the added weight of the trailer. And always keep in mind that the vehicle you are driving is now a good deal longer and not nearly as responsive as your vehicle is by itself.

Before you start, check all trailer hitch parts and attachments, safety chains, electrical connector, lamps, tires and mirror adjustment. If the trailer has electric brakes, start your vehicle and trailer moving and then apply the trailer brake controller by hand to be sure the brakes are working. This lets you check your electrical connection at the same time.

During your trip, check occasionally to be sure that the load is secure, and that the lamps and any trailer brakes are still working.

Downloaded from www.Manualslib.com manuals search engine

Following Distance

Stay at least twice as far behind the vehicle ahead as you would when driving your vehicle without a trailer. This can help you avoid situations that require heavy braking and sudden turns.

Passing

You'll need more passing distance up ahead when you're towing a trailer. And, because you're a good deal longer, you'll need to go much farther beyond the passed vehicle before you can return to your lane.

Backing Up

Hold the bottom of the steering wheel with one hand. Then, to move the trailer to the left, just move that hand to the left. To move the trailer to the right, move your hand to the right. Always back up slowly and, if possible, have someone guide you.

Making Turns

Notice: **Making very sharp turns while trailering could cause the trailer to come in contact with the vehicle. Your vehicle could be damaged. Avoid making very sharp turns while trailering.**

When you're turning with a trailer, make wider turns than normal. Do this so your trailer won't strike soft shoulders, curbs, road signs, trees or other objects. Avoid jerky or sudden maneuvers. Signal well in advance.

Turn Signals When Towing a Trailer

The arrows on your instrument panel will flash whenever you signal a turn or lane change. Properly hooked up, the trailer lamps will also flash, telling other drivers you're about to turn, change lanes or stop.

When towing a trailer, the arrows on your instrument panel will flash for turns even if the bulbs on the trailer are burned out. Thus, you may think drivers behind you are seeing your signal when they are not. It's important to check occasionally to be sure the trailer bulbs are still working.

Downloaded from www.Manualslib.com manuals search engine

Driving On Grades

Reduce speed and shift to a lower gear *before* you start down a long or steep downgrade. If you don't shift down, you might have to use your brakes so much that they would get hot and no longer work well.

You can tow in DRIVE (D). You may want to shift the transmission to THIRD (3) or, if necessary, a lower gear selection if the transmission shifts too often (e.g., under heavy loads and/or hilly conditions).

You may also want to activate the tow/haul mode if the transmission shifts too often. See "Tow/Haul Mode" earlier.

When towing at high altitude on steep uphill grades, consider the following: Engine coolant will boil at a lower temperature than at normal altitudes. If you turn your engine off immediately after towing at high altitude on steep uphill grades, your vehicle may show signs similar to engine overheating. To avoid this, let the engine run while parked (preferably on level ground) with the automatic transmission in PARK (P) for a few minutes before turning the engine off. If you do get the overheat warning, see *Engine Overheating on page 5-27*.

Parking on Hills

⚠ CAUTION:

You really should not park your vehicle, with a trailer attached, on a hill. If something goes wrong, your rig could start to move. People can be injured, and both your vehicle and the trailer can be damaged.

But if you ever have to park your rig on a hill, here's how to do it:

1. Apply your regular brakes, but don't shift into PARK (P) yet.
2. Have someone place chocks under the trailer wheels.
3. When the wheel chocks are in place, release the regular brakes until the chocks absorb the load.
4. Reapply the regular brakes. Then apply your parking brake and shift into PARK (P).
5. Release the regular brakes.

Downloaded from www.Manualslib.com manuals search engine

When You Are Ready to Leave After Parking on a Hill

1. Apply your regular brakes and hold the pedal down while you:
   - start your engine,
   - shift into a gear, and
   - release the parking brake.
2. Let up on the brake pedal.
3. Drive slowly until the trailer is clear of the chocks.
4. Stop and have someone pick up and store the chocks.

Maintenance When Trailer Towing

Your vehicle will need service more often when you're pulling a trailer. See the Maintenance Schedule for more on this. Things that are especially important in trailer operation are automatic transmission fluid (don't overfill), engine oil, axle lubricant, belts, cooling system and brake system. Each of these is covered in this manual, and the Index will help you find them quickly. If you're trailering, it's a good idea to review these sections before you start your trip.

Check periodically to see that all hitch nuts and bolts are tight.

Trailer Wiring Harness

Heavy-Duty Trailer Wiring Package

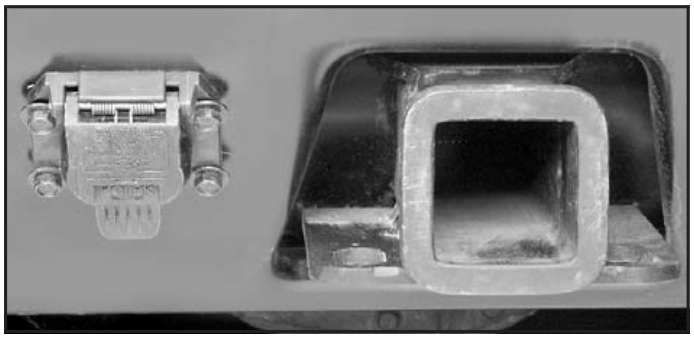

Your vehicle is equipped with a trailer towing harness. This harness with a seven-pin universal heavy-duty trailer connector is attached to a bracket on the hitch platform.

The Center High-Mounted Stoplamp (CHMSL) wire is tied next to the trailer wiring harness for use with a trailer.

Downloaded from www.Manualslib.com manuals search engine

The trailer towing harness contains the following trailer circuits:

- Yellow: Left Stop/Turn Signal
- Dark Green: Right Stop/Turn Signal
- Brown: Taillamps
- White: Ground
- Light Green: Back-up Lamps
- Light Blue: Center High-Mounted Stoplamp (CHMSL)
- Red: Battery Feed
- Dark Blue: Trailer Brake

A jumper harness for an electric trailer brake controller and a trailer battery feed fuse may be included with this trailering package. See “Instrument Panel Jumper Wiring Harness” later in this section.

If you need to tow a light-duty trailer with a standard four-way, round pin connector, an adapter may be included. See “Four-Wire Harness Adapter” later in this section.

Downloaded from www.Manualslib.com manuals search engine

Instrument Panel Jumper Wiring Harness

Notice: **If your vehicle has factory or dealer-installed HUMMER off-road lamps, the place where an electric trailer brake connection must be made is already in use. Do not attempt to double-up or "piggyback" the connection, because this could cause a failure or damage to your vehicle, the electric trailer brake system, or both. If you want to connect a trailer with electric brakes to your vehicle, see your dealer to disconnect the off-road lamps. Also, read *Add-On Electrical Equipment on page 5-101* for more information.**

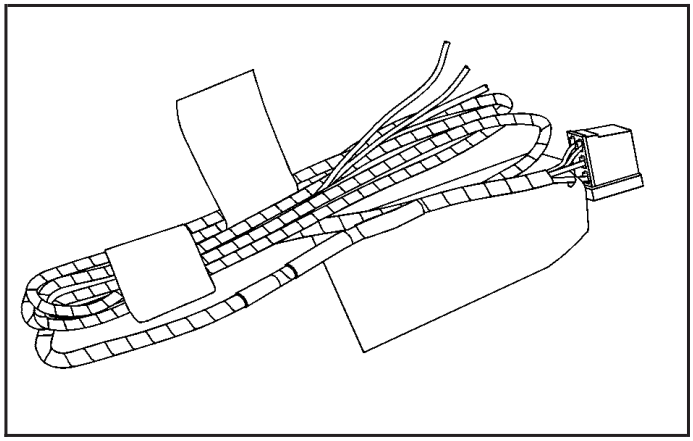

This harness may be included with your vehicle as part of the heavy-duty trailer wiring package.

⚠ CAUTION:

Be sure to use only the correct trailer brake harness, the one intended for use on your vehicle. If you use some other trailer brake harness, even if it seems to fit, your trailer brakes may not work at all. You could have a crash in which you or others could be injured. Use only the trailer brake harness intended for your vehicle. If it is no longer available to you, be sure to get a proper replacement from your dealer.

This harness is for an electric brake controller and includes a trailer battery feed fuse. It should be installed by your dealer or a qualified service center.

Downloaded from www.Manualslib.com manuals search engine

Four-Wire Harness Adapter

This adapter may be included with your vehicle as part of the heavy-duty trailer wiring package.

Use this adapter to connect a standard four-way round pin connector to the seven-wire harness on your vehicle.

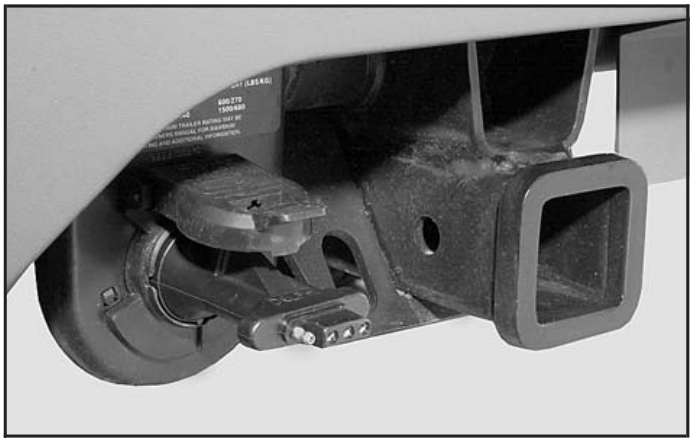

Connect the adapter with the tab pointing up. The flip cap on the vehicle's seven-wire harness will lock onto the tab (see arrow in the previous graphic) and help hold the adapter in place. Plug the four-way round pin connector onto the adapter.

Downloaded from www.Manualslib.com manuals search engine

NOTES

Downloaded from www.Manualslib.com manuals search engine

Section 5 Service and Appearance Care

Service 5-3
Doing Your Own Service Work 5-4
Adding Equipment to the Outside of Your Vehicle 5-5

Fuel 5-5
Gasoline Octane 5-5
Gasoline Specifications 5-5
California Fuel 5-6
Additives 5-6
Fuels in Foreign Countries 5-7
Filling Your Tank 5-7
Filling a Portable Fuel Container 5-9

Checking Things Under the Hood 5-10
Hood Release 5-10
Engine Compartment Overview 5-12
Engine Oil 5-14
Engine Air Cleaner/Filter 5-19
Automatic Transmission Fluid 5-21
Engine Coolant 5-24
Coolant Surge Tank Pressure Cap 5-27
Engine Overheating 5-27
Cooling System 5-30
Engine Fan Noise 5-35
Power Steering Fluid 5-36
Windshield Washer Fluid 5-37
Brakes 5-38
Battery 5-42
Jump Starting 5-43

All-Wheel Drive 5-48

Rear Axle 5-50

Front Axle 5-51

Bulb Replacement 5-52
Halogen Bulbs 5-52
Headlamps 5-52
Front Turn Signal and Parking Lamps 5-53
Sidemarker Lamps 5-54
Daytime Running Lamps 5-54
Roof Marker Lamps 5-55
Center High-Mounted Stoplamp (CHMSL) 5-57
Taillamps 5-57
Replacement Bulbs 5-58

Windshield Wiper Blade Replacement 5-59

Downloaded from www.Manualslib.com manuals search engine

Section 5 Service and Appearance Care

Tires 5-60
Inflation - Tire Pressure 5-68
Tire Inspection and Rotation 5-69
When It Is Time for New Tires 5-70
Buying New Tires 5-71
Uniform Tire Quality Grading 5-72
Wheel Alignment and Tire Balance 5-73
Wheel Replacement 5-74
Tire Chains 5-75
Accessory Inflator 5-76
If a Tire Goes Flat 5-78
Changing a Flat Tire 5-79
Spare Tire 5-92

Appearance Care 5-92
Cleaning the Inside of Your Vehicle 5-93
Care of Safety Belts 5-95
Weatherstrips 5-95
Cleaning the Outside of Your Vehicle 5-95
Sheet Metal Damage 5-98
Finish Damage 5-99
Underbody Maintenance 5-99
Chemical Paint Spotting 5-99
Vehicle Care/Appearance Materials 5-100

Vehicle Identification 5-101
Vehicle Identification Number (VIN) 5-101
Service Parts Identification Label 5-101

Electrical System 5-101
Add-On Electrical Equipment 5-101
Windshield Wiper Fuses 5-102
Power Windows and Other Power Options 5-102
Fuses and Circuit Breakers 5-102

Capacities and Specifications 5-111

Downloaded from www.Manualslib.com manuals search engine

Service

Your dealer knows your vehicle best and wants you to be happy with it. We hope you will go to your dealer for all your service needs. You will get genuine GM parts and GM-trained and supported service people.

We hope you will want to keep your GM vehicle all GM. Genuine GM parts have one of these marks:

ACDelco®

GM Parts®

GM® Goodwrench

GM® Accessories

California Proposition 65 Warning

Most motor vehicles, including this one, contain and/or emit chemicals known to the State of California to cause cancer and birth defects or other reproductive harm. Engine exhaust, many parts and systems (including some inside the vehicle), many fluids, and some component wear by-products contain and/or emit these chemicals.

Downloaded from www.Manualslib.com manuals search engine

Doing Your Own Service Work

If you want to do some of your own service work, you will want to use the proper service manual. It tells you much more about how to service your vehicle than this manual can. To order the proper service manual, see *Service Publications Ordering Information on page 7-11*.

Your vehicle may have an air bag system. If it does, see *Servicing Your Air Bag-Equipped Vehicle on page 1-72* before attempting to do your own service work.

You should keep a record with all parts receipts and list the mileage and the date of any service work you perform. See *Maintenance Record on page 6-16*.

⚠ CAUTION:

You can be injured and your vehicle could be damaged if you try to do service work on a vehicle without knowing enough about it.

- **Be sure you have sufficient knowledge, experience, the proper replacement parts and tools before you attempt any vehicle maintenance task.**
- **Be sure to use the proper nuts, bolts and other fasteners. “English” and “metric” fasteners can be easily confused. If you use the wrong fasteners, parts can later break or fall off. You could be hurt.**

Downloaded from www.Manualslib.com manuals search engine

Adding Equipment to the Outside of Your Vehicle

Things you might add to the outside of your vehicle can affect the airflow around it. This may cause wind noise and affect windshield washer performance. Check with your dealer before adding equipment to the outside of your vehicle.

Fuel

The 8th digit of your vehicle identification number (VIN) shows the code letter or number that identifies your engine. You will find the VIN at the top left of the instrument panel. See *Vehicle Identification Number (VIN) on page 5-101*.

Gasoline Octane

Use regular unleaded gasoline with a posted octane of 87 or higher. If the octane is less than 87, you may get a heavy knocking noise when you drive. If this occurs, use a gasoline rated at 87 octane or higher as soon as possible. Otherwise, you might damage your engine. A little pinging noise when you accelerate or drive uphill is considered normal. This does not indicate a problem exists or that a higher-octane fuel is necessary. If you are using 87 octane or higher-octane fuel and hear heavy knocking, your engine needs service.

Gasoline Specifications

It is recommended that gasoline meet specifications which were developed by automobile manufacturers around the world and contained in the World-Wide Fuel Charter which is available from the Alliance of Automobile Manufacturers at www.autoalliance.org. Gasoline meeting these specifications could provide improved driveability and emission control system performance compared to other gasoline.

Canada Only

In Canada, look for the "Auto Makers' Choice" label on the pump.

Downloaded from www.Manualslib.com manuals search engine

California Fuel

If your vehicle is certified to meet California Emission Standards (see the underhood emission control label), it is designed to operate on fuels that meet California specifications. If this fuel is not available in states adopting California emissions standards, your vehicle will operate satisfactorily on fuels meeting federal specifications, but emission control system performance may be affected. The malfunction indicator lamp may turn on (see *Malfunction Indicator Lamp on page 3-38*) and your vehicle may fail a smog-check test. If this occurs, return to your authorized GM dealer for diagnosis. If it is determined that the condition is caused by the type of fuel used, repairs may not be covered by your warranty.

Additives

To provide cleaner air, all gasolines in the United States are now required to contain additives that will help prevent engine and fuel system deposits from forming, allowing your emission control system to work properly. You should not have to add anything to your fuel. However, some gasolines contain only the minimum amount of additive required to meet U.S. Environmental Protection Agency regulations. General Motors recommends that you buy gasolines that are advertised to help keep fuel injectors and intake valves clean. If your vehicle experiences problems due to dirty injectors or valves, try a different brand of gasoline.

Gasolines containing oxygenates, such as ethers and ethanol, and reformulated gasolines may be available in your area to contribute to clean air. General Motors recommends that you use these gasolines, particularly if they comply with the specifications described earlier.

Notice: **Your vehicle was not designed for fuel that contains methanol. Do not use fuel containing methanol. It can corrode metal parts in your fuel system and also damage the plastic and rubber parts. That damage would not be covered under your warranty.**

Some gasolines that are not reformulated for low emissions may contain an octane-enhancing additive called methylcyclopentadienyl manganese tricarbonyl (MMT); ask the attendant where you buy gasoline whether the fuel contains MMT. General Motors does not recommend the use of such gasolines. Fuels containing MMT can reduce the life of spark plugs and the performance of the emission control system may be affected. The malfunction indicator lamp may turn on. If this occurs, return to your authorized GM dealer for service.

Downloaded from www.Manualslib.com manuals search engine

Fuels in Foreign Countries

If you plan on driving in another country outside the United States or Canada, the proper fuel may be hard to find. Never use leaded gasoline or any other fuel not recommended in the previous text on fuel. Costly repairs caused by use of improper fuel would not be covered by your warranty.

To check the fuel availability, ask an auto club, or contact a major oil company that does business in the country where you will be driving.

Filling Your Tank

⚠ CAUTION:

Fuel vapor burns violently and a fuel fire can cause bad injuries. To help avoid injuries to you and others, read and follow all the instructions on the pump island. Turn off your engine when you are refueling. Do not smoke if you are near fuel or refueling your vehicle. Keep sparks, flames and smoking materials away from fuel. Do not leave the fuel pump unattended when refueling your vehicle — this is against the law in some places. Keep children away from the fuel pump; never let children pump fuel.

Downloaded from www.Manualslib.com manuals search engine

The fuel cap is located on the driver's side of the vehicle.

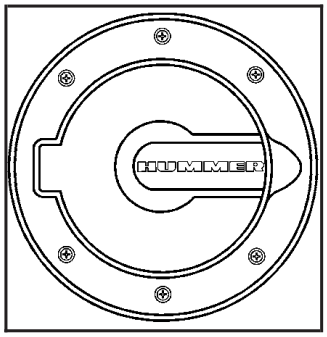

Some vehicles may be equipped with a fuel door. Open the door to access the fuel cap.

Some vehicles may be equipped with a locking fuel cap. Use the fuel cap key to unlock the fuel cap. If you ever need a replacement key, your dealer can help you get one.

Turn the fuel cap slowly to the left (counterclockwise) to remove it. While refueling, let the fuel cap hang by the tether, if it has one.

⚠ CAUTION:

If a fire starts while you are refueling, do not remove the nozzle. Shut off the flow of fuel by shutting off the pump or by notifying the station attendant. Leave the area immediately.

Downloaded from www.Manualslib.com manuals search engine

Be careful not to spill fuel. Don't top off or overfill your tank and wait a few seconds after you've finished pumping before you remove the nozzle. Clean any spilled fuel from painted surfaces as soon as possible. See *Cleaning the Outside of Your Vehicle on page 5-95*.

When you put the fuel cap back on, turn it to the right (clockwise) until you hear a clicking sound. Make sure you fully install the cap. The diagnostic system can determine if the fuel cap has been left off or improperly installed. this would allow fuel to evaporate into the atmosphere. See *Malfunction Indicator Lamp on page 3-38*.

Notice: **If you need a new fuel cap, be sure to get the right type. Your dealer can get one for you. If you get the wrong type, it may not fit properly. This may cause your malfunction indicator lamp to light and may damage your fuel tank and emissions system. See *Malfunction Indicator Lamp on page 3-38*.**

Filling a Portable Fuel Container

⚠ CAUTION:

Never fill a portable fuel container while it is in your vehicle. Static electricity discharge from the container can ignite the gasoline vapor. You can be badly burned and your vehicle damaged if this occurs. To help avoid injury to you and others:

- **Dispense gasoline only into approved containers.**
- **Do not fill a container while it is inside a vehicle, in a vehicle's trunk, pickup bed or on any surface other than the ground.**
- **Bring the fill nozzle in contact with the inside of the fill opening before operating the nozzle. Contact should be maintained until the filling is complete.**
- **Do not smoke while pumping gasoline.**

Downloaded from www.Manualslib.com manuals search engine

Checking Things Under the Hood

⚠ CAUTION:

Things that burn can get on hot engine parts and start a fire. These include liquids like fuel, oil, coolant, brake fluid, windshield washer and other fluids, and plastic or rubber. You or others could be burned. Be careful not to drop or spill things that will burn onto a hot engine.

Hood Release

To open the hood, do the following:

1. Release both hood side latches.

Downloaded from www.Manualslib.com manuals search engine

2. Pull the handle located inside the vehicle to the lower left of the steering wheel.

3. Then go to the front of the vehicle and pull the assist handles toward you to lift the hood.
4. Pull the hood open until it is supported by the cables.

Before closing the hood, be sure all filler caps are on properly. To close the hood, do the following:

1. Hold up the hood a few inches from the closed position and then let it go so that it has enough force to engage the hood latch.
2. Pull up on the assist handles to be sure that the hood is latched.
3. Latch both hood side latches.

Downloaded from www.Manualslib.com manuals search engine

Engine Compartment Overview

When you open the hood on the VORTEC™ 6000 V8 engine you will see the following:

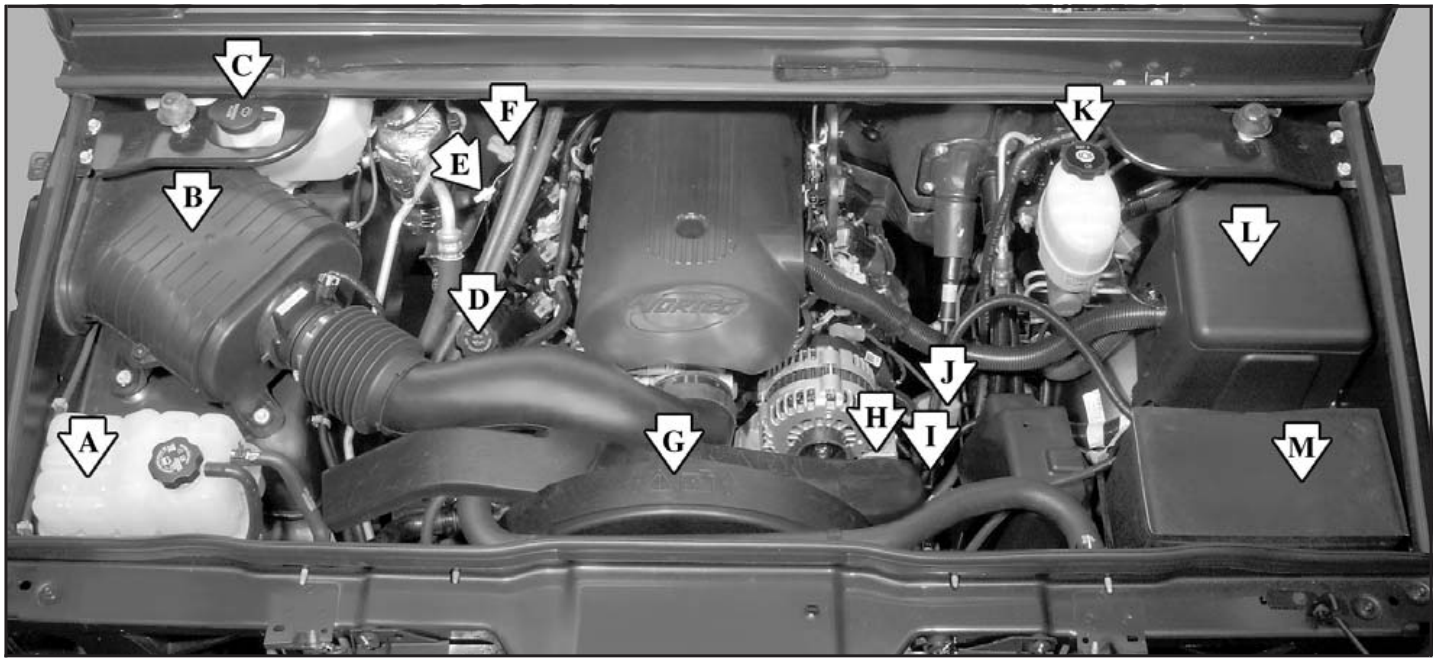

Downloaded from www.Manualslib.com manuals search engine

A. Coolant Surge Tank. See *Cooling System on page 5-30* and *Coolant Surge Tank Pressure Cap on page 5-27*.

B. Engine Air Cleaner/Filter. See *Engine Air Cleaner/Filter on page 5-19*.

C. Windshield Washer Fluid Reservoir. See *Windshield Washer Fluid on page 5-37*.

D. Engine Oil Fill. See *Engine Oil on page 5-14*.

E. Engine Oil Dipstick. See *Engine Oil on page 5-14*.

F. Automatic Transmission Dipstick. See *Automatic Transmission Fluid on page 5-21*.

G. Fan. See *Cooling System on page 5-30* and *Engine Fan Noise on page 5-35*.

H. Remote Negative (–) Terminal (GND). See *Jump Starting on page 5-43*.

I. Power Steering Fluid Reservoir (Out of View). See *Power Steering Fluid on page 5-36*.

J. Remote Positive (+) Terminal. See *Jump Starting on page 5-43*.

K. Brake Fluid Reservoir. See *Brakes on page 5-38*.

L. Underhood Fuse Block. See “Underhood Fuse Block” under *Fuses and Circuit Breakers on page 5-102*.

M. Battery. See *Battery on page 5-42*.

Before closing the hood, be sure all filler caps are on properly. Pull down the hood and close it firmly.

Downloaded from www.Manualslib.com manuals search engine

Engine Oil

If the CHECK OIL LEVEL message appears on the instrument cluster, it means you need to check your engine oil level right away.

For more information, see “CHECK OIL LEVEL” under *DIC Warnings and Messages on page 3-56*.

You should check your engine oil level regularly; this is an added reminder.

Checking Engine Oil

It is a good idea to check your engine oil every time you get fuel. In order to get an accurate reading, the oil must be warm and the vehicle must be on level ground.

The engine oil dipstick handle is a yellow loop. See *Engine Compartment Overview on page 5-12* for the location of the engine oil dipstick.

Turn off the engine and give the oil several minutes to drain back into the oil pan. If you don’t, the oil dipstick might not show the actual level.

Pull out the dipstick and clean it with a paper towel or cloth, then push it back in all the way. Remove it again, keeping the tip down, and check the level.

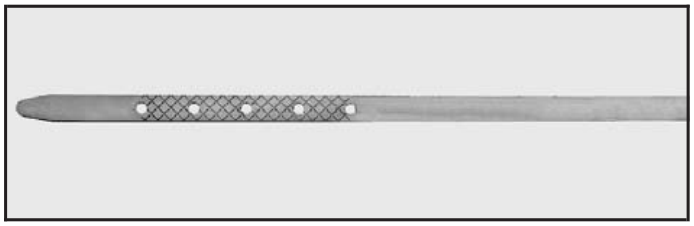

Downloaded from www.Manualslib.com manuals search engine

When to Add Engine Oil

If the oil is at or below the cross-hatched area at the tip of the dipstick, then you will need to add at least one quart of oil. But you must use the right kind. This section explains what kind of oil to use. For engine oil crankcase capacity, see *Capacities and Specifications on page 5-111*.

Notice: **Do not add too much oil. If your engine has so much oil that the oil level gets above the cross-hatched area that shows the proper operating range, your engine could be damaged.**

See *Engine Compartment Overview on page 5-12* for the location of the engine oil fill cap.

Be sure to add enough oil to put the level somewhere in the proper operating range. Push the dipstick all the way back in when you are through.

What Kind of Engine Oil to Use

Look for two things:

- GM6094M

  Your vehicle's engine requires oil meeting GM Standard GM6094M. You should look for and use only an oil that meets GM Standard GM6094M.

Downloaded from www.Manualslib.com manuals search engine

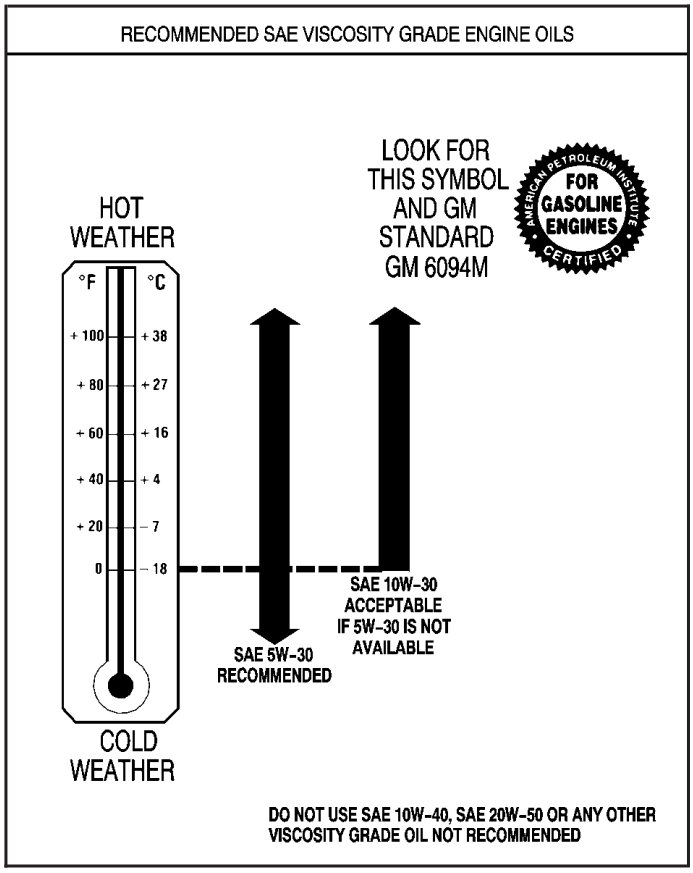

- SAE 5W-30

  As shown in the viscosity chart, SAE 5W-30 is best for your vehicle. However, if it is going to be 0°F (–18°C) or above and SAE 5W-30 is not available, you may use SAE 10W-30.

  These numbers on an oil container show its viscosity, or thickness. Do not use other viscosity oils such as SAE 20W-50.

Oils meeting these requirements should also have the starburst symbol on the container. This symbol indicates that the oil has been certified by the American Petroleum Institute (API).

You should look for this information on the oil container, and use *only* those oils that are identified as meeting GM Standard GM6094M and have the starburst symbol on the front of the oil container.

Downloaded from www.Manualslib.com manuals search engine

Notice: **Use only engine oil identified as meeting GM Standard GM6094M and showing the American Petroleum Institute Certified For Gasoline Engines starburst symbol. Failure to use the recommended oil can result in engine damage not covered by your warranty.**

GM Goodwrench® oil meets all the requirements for your vehicle.

If you are in an area of extreme cold, where the temperature falls below –20°F (–29°C), it is recommended that you use either an SAE 5W-30 synthetic oil or an SAE 0W-30 oil. Both will provide easier cold starting and better protection for your engine at extremely low temperatures.

Engine Oil Additives

Do not add anything to your oil. The recommended oils with the starburst symbol that meet GM Standard GM6094M are all you will need for good performance and engine protection.

When to Change Engine Oil (GM Oil Life System)

Your vehicle has a computer system that lets you know when to change the engine oil and filter. This is based on engine revolutions and engine temperature, and not on mileage. Based on driving conditions, the mileage at which an oil change will be indicated can vary considerably. For the oil life system to work properly, you must reset the system every time the oil is changed.

When the system has calculated that oil life has been diminished, it will indicate that an oil change is necessary. A CHANGE ENGINE OIL message will come on. Change your oil as soon as possible within the next two times you stop for fuel. It is possible that, if you are driving under the best conditions, the oil life system may not indicate that an oil change is necessary for over a year. However, your engine oil and filter must be changed at least once a year and at this time the system must be reset. Your dealer has GM-trained service people who will perform this work using genuine GM parts and reset the system. It is also important to check your oil regularly and keep it at the proper level.

If the system is ever reset accidentally, you must change your oil at 3,000 miles (5 000 km) since your last oil change. Remember to reset the oil life system whenever the oil is changed.

Downloaded from www.Manualslib.com manuals search engine

How to Reset the CHANGE ENGINE OIL Message

The GM Oil Life System calculates when to change your engine oil and filter based on vehicle use. Anytime your oil is changed, reset the system so it can calculate when the next oil change is required. If a situation occurs where you change your oil prior to a CHANGE ENGINE OIL message being turned on, reset the system.

To reset the CHANGE ENGINE OIL message, see “GM Oil Life System” under *DIC Operation and Displays on page 3-44* for vehicles equipped with the DIC, or do the following:

1. Turn the ignition key to RUN with the engine off.
2. Fully press and release the accelerator pedal slowly three times within five seconds.

   If the OIL LIFE RESET message flashes for 10 seconds, the system is resetting.
3. Turn the key to LOCK.

If the CHANGE ENGINE OIL message comes back on when you start your vehicle, the engine oil life system has not reset. Repeat the procedure. If it still does not reset, see your dealer for service.

What to Do with Used Oil

Used engine oil contains certain elements that may be unhealthy for your skin and could even cause cancer. Do not let used oil stay on your skin for very long. Clean your skin and nails with soap and water, or a good hand cleaner. Wash or properly dispose of clothing or rags containing used engine oil. See the manufacturer’s warnings about the use and disposal of oil products.

Used oil can be a threat to the environment. If you change your own oil, be sure to drain all the oil from the filter before disposal. Never dispose of oil by putting it in the trash, pouring it on the ground, into sewers, or into streams or bodies of water. Instead, recycle it by taking it to a place that collects used oil. If you have a problem properly disposing of your used oil, ask your dealer, a service station or a local recycling center for help.

Downloaded from www.Manualslib.com manuals search engine

Engine Air Cleaner/Filter

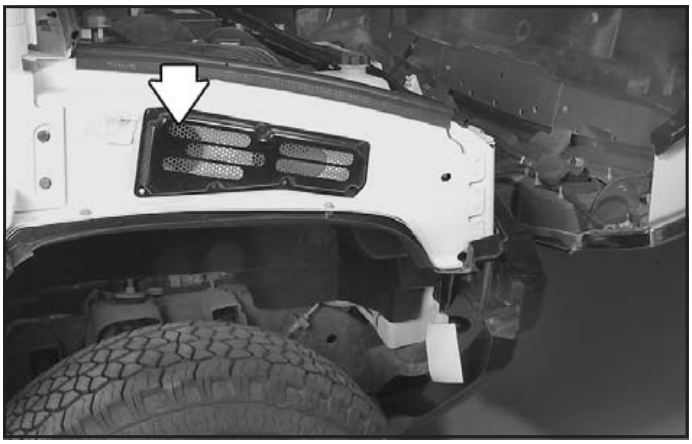

Notice: **If you spray water into the engine air cleaner/filter intake and water enters the engine air cleaner/filter housing, as shown in the illustration, you could damage your vehicle's engine. The repairs would not be covered by your warranty. Do not spray water into the engine air cleaner/filter intake and/or housing.**

The engine air cleaner/filter assembly is located in the engine compartment on the passenger's side of the vehicle. See *Engine Compartment Overview on page 5-12* for more information on location.

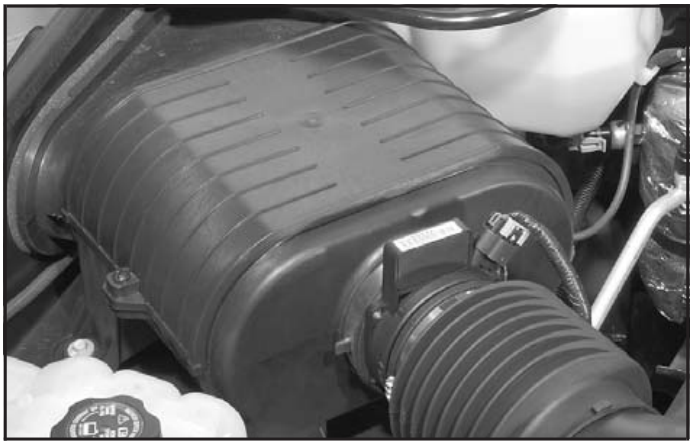

When to Inspect

Inspect the air cleaner/filter every 15,000 miles (25 000 km) and replace every 100,000 miles (161 000 km). If you are driving in dusty/dirty conditions, inspect the filter at each engine oil change and replace it earlier as required.

How to Inspect

To inspect the air cleaner/filter, remove it from the vehicle and lightly shake the it to release loose dust and dirt. If the air cleaner/filter remains caked with dirt, a new one is required.

Downloaded from www.Manualslib.com manuals search engine

To inspect or replace the air cleaner/filter, do the following:

1. Loosen the screws on the cover.

2. Lift the cover upward and set it aside.
3. Pull the air cleaner/filter up and out from the air cleaner housing. Care should be taken to dislodge as little dirt as possible.
4. Clean the air cleaner/filter sealing surface and the housing.
5. Reinstall the new air cleaner/filter.
6. Reinstall the cover and tighten the screws.

Refer to the Maintenance Schedule to determine when to replace the engine air cleaner/filter. See *Owner Checks and Services on page 6-9*.

⚠ CAUTION:

Operating the engine with the air cleaner/filter off can cause you or others to be burned. The air cleaner not only cleans the air, it helps to stop flame if the engine backfires. If it is not there and the engine backfires, you could be burned. Do not drive with it off, and be careful working on the engine with the air cleaner/filter off.

Notice: **If the air cleaner/filter is off, a backfire can cause a damaging engine fire. And, dirt can easily get into your engine, which will damage it. Always have the air cleaner/filter in place when you are driving.**

Downloaded from www.Manualslib.com manuals search engine

Automatic Transmission Fluid

When to Check and Change

A good time to check your automatic transmission fluid level is when the engine oil is changed.

Change both the fluid and filter every 50,000 miles (83 000 km) if the vehicle is mainly driven under one or more of these conditions:

- In heavy city traffic where the outside temperature regularly reaches 90°F (32°C) or higher.
- In hilly or mountainous terrain.
- When doing frequent trailer towing.
- Uses such as found in taxi, police or delivery service.

If you do not use your vehicle under any of these conditions, change the fluid and filter every 100,000 miles (166 000 km).

See *Scheduled Maintenance on page 6-4*.

How to Check

Because this operation can be a little difficult, you may choose to have this done at the dealership service department.

If you do it yourself, be sure to follow all the instructions here, or you could get a false reading on the dipstick.

Notice: **Too much or too little fluid can damage your transmission. Too much can mean that some of the fluid could come out and fall on hot engine part or exhaust system parts, starting a fire. Too little fluid could cause the transmission to overheat. Be sure to get an accurate reading if you check your transmission fluid.**

Wait at least 30 minutes before checking the transmission fluid level if you have been driving:

- When outside temperatures are above 90°F (32°C).
- At high speed for quite a while.
- In heavy traffic – especially in hot weather.
- While pulling a trailer.

To get the right reading, the fluid should be at normal operating temperature, which is 180°F to 200°F (82°C to 93°C).

Downloaded from www.Manualslib.com manuals search engine

Get the vehicle warmed up by driving about 15 miles (24 km) when outside temperatures are above 50°F (10°C). If it's colder than 50°F (10°C), drive the vehicle in THIRD (3) until the engine temperature gage moves and then remains steady for 10 minutes.

A cold fluid check can be made after the vehicle has been sitting for eight hours or more with the engine off, but this is used only as a reference. Let the engine run at idle for five minutes if outside temperatures are 50°F (10°C) or more. If it's colder than 50°F (10°C), you may have to idle the engine longer. Should the fluid level be low during this cold check, you *must* check the fluid hot before adding fluid. Checking the fluid hot will give you a more accurate reading of the fluid level.

Checking the Fluid Level

Prepare your vehicle as follows:

- Park your vehicle on a level place. Keep the engine running.
- With the parking brake applied, place the shift lever in PARK (P).
- With your foot on the brake pedal, move the shift lever through each gear range, pausing for about three seconds in each range. Then, position the shift lever in PARK (P).
- Let the engine run at idle for three minutes or more.

Then, without shutting off the engine, follow these steps:

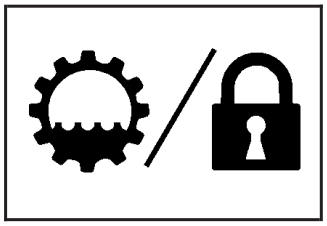

The transmission dipstick handle with the graphic is located at the rear of the engine compartment, on the passenger's side.

See *Engine Compartment Overview on page 5-12* for more information on location.

1. Flip the handle up and then pull out the dipstick and wipe it with a clean rag or paper towel.
2. Push it back in all the way, wait three seconds and then pull it back out again.

Downloaded from www.Manualslib.com manuals search engine

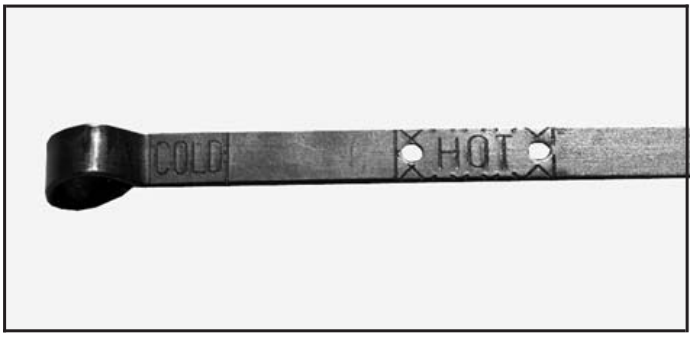

3. Check both sides of the dipstick, and read the lower level. The fluid level must be in the COLD area, below the cross-hatched area, for a cold check or in the HOT area or cross-hatched area for a hot check. Be sure to keep the dipstick pointed down to get an accurate reading.
4. If the fluid level is in the acceptable range, push the dipstick back in all the way; then flip the handle down to lock the dipstick in place.

How to Add Fluid

Refer to the Maintenance Schedule to determine what kind of transmission fluid to use. See *Recommended Fluids and Lubricants on page 6-12*.

Add fluid only after checking the transmission fluid while it is hot. (A cold check is used only as a reference.) If the fluid level is low, add only enough of the proper fluid to bring the level up to the HOT area for a hot check. It doesn't take much fluid, generally less than one pint (0.5 L). *Don't overfill.*

Notice: **We recommend you use only fluid labeled DEXRON® -III, because fluid with that label is made especially for your automatic transmission. Damage caused by fluid other than DEXRON® -III is not covered by your new vehicle warranty.**

- After adding fluid, recheck the fluid level as described under *How to Check*.
- When the correct fluid level is obtained, push the dipstick back in all the way; then flip the handle down to lock the dipstick in place.

Downloaded from www.Manualslib.com manuals search engine

Engine Coolant

The cooling system in your vehicle is filled with DEX-COOL® engine coolant. This coolant is designed to remain in your vehicle for 5 years or 150,000 miles (240 000 km), whichever occurs first, if you add only DEX-COOL® extended life coolant.

The following explains your cooling system and how to add coolant when it is low. If you have a problem with engine overheating, see *Engine Overheating on page 5-27*.

A 50/50 mixture of clean, drinkable water and DEX-COOL® coolant will:

- Give freezing protection down to –34°F (–37°C).
- Give boiling protection up to 265°F (129°C).
- Protect against rust and corrosion.
- Help keep the proper engine temperature.
- Let the warning lights and gages work as they should.

Notice: **Using coolant other than DEX-COOL® may cause premature engine, heater core or radiator corrosion. In addition, the engine coolant may require changing sooner, at 30,000 miles (50 000 km) or 24 months, whichever occurs first. Any repairs would not be covered by your warranty. Always use DEX-COOL®(silicate-free) coolant in your vehicle.**

What to Use

Use a mixture of one-half *clean, drinkable water* and one-half DEX-COOL® coolant which won't damage aluminum parts. If you use this coolant mixture, you don't need to add anything else.

Downloaded from www.Manualslib.com manuals search engine

⚠ CAUTION:

Adding only plain water to your cooling system can be dangerous. Plain water, or some other liquid such as alcohol, can boil before the proper coolant mixture will. Your vehicle's coolant warning system is set for the proper coolant mixture. With plain water or the wrong mixture, your engine could get too hot but you would not get the overheat warning. Your engine could catch fire and you or others could be burned. Use a 50/50 mixture of clean, drinkable water and DEX-COOL® coolant.

Notice: **If you use an improper coolant mixture, your engine could overheat and be badly damaged. The repair cost would not be covered by your warranty. Too much water in the mixture can freeze and crack the engine, radiator, heater core and other parts.**

If you have to add coolant more than four times a year, have your dealer check your cooling system.

Notice: **If you use the proper coolant, you do not have to add extra inhibitors or additives which claim to improve the system. These can be harmful.**

Downloaded from www.Manualslib.com manuals search engine

Checking Coolant

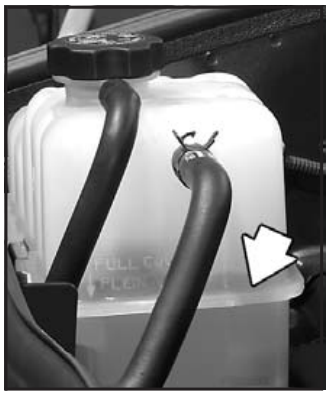

The coolant surge tank is located in the engine compartment on the passenger's side of the vehicle.

See *Engine Compartment Overview on page 5-12* for more information on location.

⚠ CAUTION:

Turning the surge tank pressure cap when the engine and radiator are hot can allow steam and scalding liquids to blow out and burn you badly. Never turn the surge tank pressure cap — even a little — when the engine and radiator are hot.

The vehicle must be on a level surface. When your engine is cold, the coolant level should be at the FULL COLD mark.

If your vehicle is equipped with the LOW COOLANT LEVEL message and it comes on and stays on, it means you're low on engine coolant.

See "Low Coolant Level" under *DIC Warnings and Messages on page 3-56*.

Downloaded from www.Manualslib.com manuals search engine

Adding Coolant

If you need more coolant, add the proper DEX-COOL® coolant mixture *at the surge tank*, but only when the engine is cool.

⚠ CAUTION:

You can be burned if you spill coolant on hot engine parts. Coolant contains ethylene glycol, and it will burn if the engine parts are hot enough. Do not spill coolant on a hot engine.

When replacing the pressure cap, make sure it is hand-tight.

Coolant Surge Tank Pressure Cap

The coolant surge tank pressure cap must be fully installed on the coolant surge tank. See *Engine Compartment Overview on page 5-12* for more information on location.

Notice: **If the pressure cap is not tightly installed, coolant loss and possible engine damage may occur. Be sure the cap is properly and tightly secured.**

Engine Overheating

You will find a coolant temperature gage on your vehicle's instrument panel. See *Engine Coolant Temperature Gage on page 3-35*. In addition, you will find an ENGINE COOLANT HOT, ENGINE OVERHEATED and a REDUCED ENGINE POWER message in the DIC on the instrument panel. See *DIC Warnings and Messages on page 3-56*.

Downloaded from www.Manualslib.com manuals search engine

Overheated Engine Protection Operating Mode

If an overheated engine condition exists and the REDUCED ENGINE POWER message is displayed, an overheat protection mode which alternates firing groups of cylinders helps prevent engine damage. In this mode, you will notice a loss in power and engine performance. This operating mode allows your vehicle to be driven to a safe place in an emergency. Driving extended miles (km) and/or towing a trailer in the overheat protection mode should be avoided.

Notice: **After driving in the overheated engine protection operating mode, to avoid engine damage, allow the engine to cool before attempting any repair. The engine oil will be severely degraded. Repair the cause of coolant loss, change the oil and reset the oil life system. See *Engine Oil on page 5-14*.**

If Steam Is Coming From Your Engine

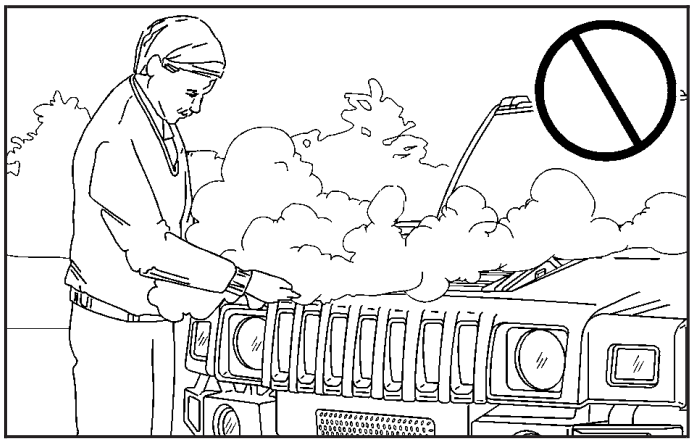

Downloaded from www.Manualslib.com manuals search engine

⚠ CAUTION:

Steam from an overheated engine can burn you badly, even if you just open the hood. Stay away from the engine if you see or hear steam coming from it. Just turn it off and get everyone away from the vehicle until it cools down. Wait until there is no sign of steam or coolant before you open the hood.

If you keep driving when your engine is overheated, the liquids in it can catch fire. You or others could be badly burned. Stop your engine if it overheats, and get out of the vehicle until the engine is cool.

See "Overheated Engine Protection Operating Mode" under *Engine Overheating on page 5-27* for information on driving to a safe place in an emergency.

Notice: **If your engine catches fire because you keep driving with no coolant, your vehicle can be badly damaged. The costly repairs would not be covered by your warranty. See "Overheated Engine Protection Operating Mode" under *Engine Overheating on page 5-27* for information on driving to a safe place in an emergency.**

If No Steam Is Coming From Your Engine

An overheat warning, along with a low coolant condition, can indicate a serious problem.

If you get an engine overheat, but see or hear no steam, the problem may not be too serious. Sometimes the engine can get a little too hot when you:

- Climb a long hill on a hot day.
- Stop after high-speed driving.
- Idle for long periods in traffic.
- Tow a trailer. See *Towing a Trailer on page 4-75*.

Downloaded from www.Manualslib.com manuals search engine

If you get the overheat warning with no sign of steam, try this for a minute or so:

1. Turn on your heater to full hot at the highest fan speed and open the window as necessary.
2. If you're in a traffic jam, shift to NEUTRAL (N); otherwise, shift to the highest gear while driving – DRIVE (D).

If you no longer have the overheat warning, you can drive. Just to be safe, drive slower for about 10 minutes. If the warning doesn't come back on, you can drive normally.

If the warning continues, pull over, stop, and park your vehicle right away.

If there's still no sign of steam, push down the accelerator until the engine speed is about twice as fast as normal idle speed for at least three minutes while you're parked. If you still have the warning, *turn off the engine and get everyone out of the vehicle* until it cools down. Also, see "Overheated Engine Protection Operating Mode" listed previously in this section.

You may decide not to lift the hood but to get service help right away.

Cooling System

When you decide it's safe to lift the hood, here's what you'll see:

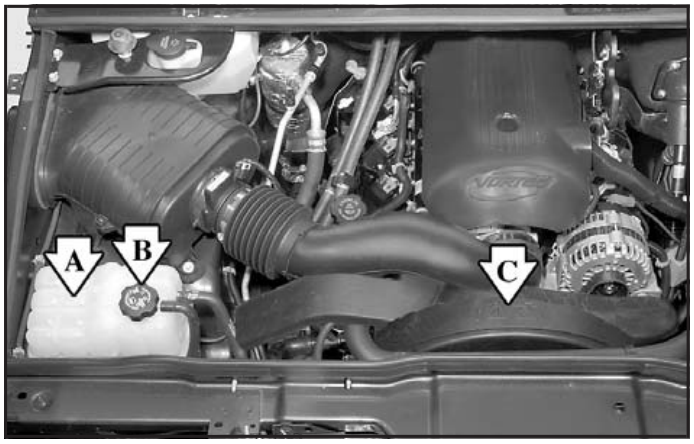

A. Coolant Surge Tank

B. Coolant Surge Tank Pressure Cap

C. Engine Fan

If the coolant inside the coolant surge tank is boiling, don't do anything else until it cools down. The vehicle should be parked on a level surface.

Downloaded from www.Manualslib.com manuals search engine

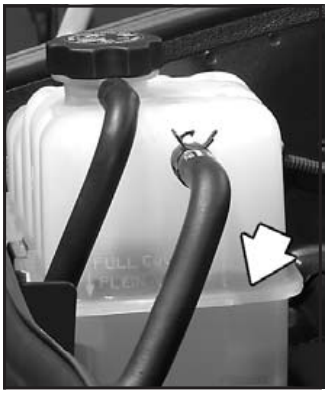

The coolant level should be at or above the FULL COLD mark. If it isn't, you may have a leak at the pressure cap or in the radiator hoses, heater hoses, radiator, water pump or somewhere else in the cooling system.

⚠ CAUTION:

Heater and radiator hoses, and other engine parts, can be very hot. Do not touch them. If you do, you can be burned.

Do not run the engine if there is a leak. If you run the engine, it could lose all coolant. That could cause an engine fire, and you could be burned. Get any leak fixed before you drive the vehicle.

If there seems to be no leak, start the engine again. The engine cooling fan speed should increase when idle speed is doubled by pushing the accelerator pedal down. If it doesn't, your vehicle needs service. Turn off the engine.

Notice: **Engine damage from running your engine without coolant is not covered by your warranty. See "Overheated Engine Protection Operating Mode" in the Index for information on driving to a safe place in an emergency.**

Notice: **Using coolant other than DEX-COOL® may cause premature engine, heater core or radiator corrosion. In addition, the engine coolant may require changing sooner, at 30,000 miles (50 000 km) or 24 months, whichever occurs first. Any repairs would not be covered by your warranty. Always use DEX-COOL®(silicate-free) coolant in your vehicle.**

Downloaded from www.Manualslib.com manuals search engine

How to Add Coolant to the Coolant Surge Tank

If you haven't found a problem yet, check to see if coolant is visible in the surge tank. If coolant is visible but the coolant level isn't at or above the FULL COLD mark, add a 50/50 mixture of *clean, drinkable water* and DEX-COOL® coolant at the coolant surge tank, but be sure the cooling system, including the coolant surge tank pressure cap, is cool before you do it. See *Engine Coolant on page 5-24* for more information.

If no coolant is visible in the surge tank, add coolant as follows:

⚠ CAUTION:

Steam and scalding liquids from a hot cooling system can blow out and burn you badly. They are under pressure, and if you turn the radiator pressure cap — even a little — they can

CAUTION: (Continued)

CAUTION: (Continued)

comeout at high speed. Never turn the cap when the cooling system, including the radiator pressure cap, is hot. Wait for the cooling system and radiator pressure cap to cool if you ever have to turn the pressure cap.

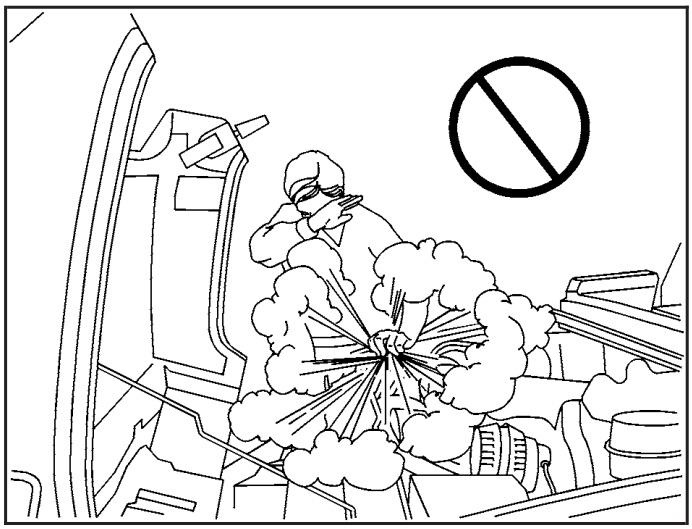

Downloaded from www.Manualslib.com manuals search engine

⚠ CAUTION:

Adding only plain water to your cooling system can be dangerous. Plain water, or some other liquid such as alcohol, can boil before the proper coolant mixture will. Yourvehicle's coolant warning system is set for the proper coolant mixture. With plain water or the wrong mixture, your engine could get too hot but you would not get the overheat warning. Your engine could catch fire and you or others could be burned. Use a 50/50 mixture of clean, drinkable water and DEX-COOL® coolant.

Notice: **In cold weather, water can freeze and crack the engine, radiator, heater core and other parts. Use the recommended coolant and the proper coolant mixture.**

⚠ CAUTION:

You can be burned if you spill coolant on hot engine parts. Coolant contains ethylene glycol and it will burn if the engine parts are hot enough. Do not spill coolant on a hot engine.

1. Park the vehicle on a level surface.

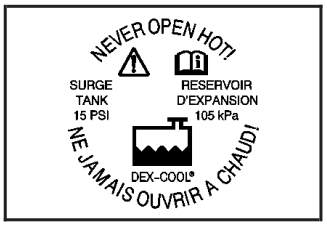

2. Locate the coolant surge tank pressure cap that has this label.

You can remove the coolant surge tank pressure capwhen the cooling system, including the coolant surge tank pressure cap and upper radiator hose, are no longer hot. Turn the pressure cap slowly counterclockwise (left) about one full turn. If you hear a hiss, wait for that to stop. A hiss means there is still some pressure left.

Downloaded from www.Manualslib.com manuals search engine

3. Then keep turning the pressure cap slowly, and remove it.

4. Then fill the coolant surge tank with the proper mixture, to the FULL COLD mark.

Downloaded from www.Manualslib.com manuals search engine

5. With the coolant surge tank pressure cap off, start the engine and let it run until you can feel the upper radiator hose getting hot. Watch out for the engine cooling fan.

   By this time, the coolant level inside the coolant surge tank may be lower. If the level is lower, add more of the proper mixture to the coolant surge tank until the level reaches FULL COLD mark.

6. Then replace the pressure cap. Be sure the pressure cap is hand-tight and fully seated.

Engine Fan Noise

Your vehicle has a clutched engine cooling fan. When the clutch is engaged, the fan spins faster to provide more air to cool the engine.

In most everyday driving conditions, the fan is spinning slower and the clutch is not fully engaged. This improves fuel economy and reduces fan noise. Under heavy vehicle loading, trailer towing and/or high outside temperatures, the fan speed increases as the clutch more fully engages. So you may hear an increase in fan noise. This is normal and should not be mistaken as the transmission slipping or making extra shifts. It is merely the cooling system functioning properly. The fan will slow down when additional cooling is not required and the clutch disengages.

You may also hear this fan noise when you start the engine. It will go away as the fan clutch partially disengages.

Downloaded from www.Manualslib.com manuals search engine

Power Steering Fluid

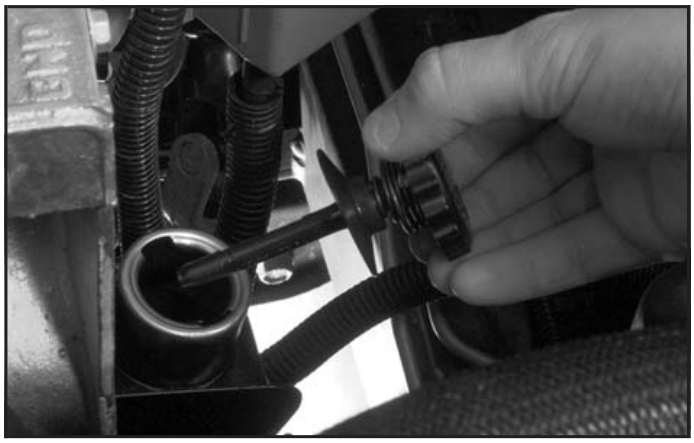

When to Check Power Steering Fluid

It is not necessary to regularly check power steering fluid unless you suspect there is a leak in the system or you hear an unusual noise. A fluid loss in this system could indicate a problem. Have the system inspected and repaired. See *Engine Compartment Overview on page 5-12* for reservoir location.

How to Check Power Steering Fluid

Turn the key off, let the engine compartment cool down,

Locate the cap with this symbol. See *Engine Compartment Overview on page 5-12* for more information on location.

Wipe the cap and the top of the reservoir clean, then unscrew the cap and wipe the dipstick with a clean rag. Replace the cap and completely tighten it. Then remove the cap again and look at the fluid level on the dipstick.

The level should be at the FULL COLD mark. If necessary, add only enough fluid to bring the level up to the mark.

Downloaded from www.Manualslib.com manuals search engine

What to Use

To determine what kind of fluid to use, see *Recommended Fluids and Lubricants on page 6-12*. Always use the proper fluid. Failure to use the proper fluid can cause leaks and damage hoses and seals.

Windshield Washer Fluid

What to Use

When you need windshield washer fluid, be sure to read the manufacturer's instructions before use. If you will be operating your vehicle in an area where the temperature may fall below freezing, use a fluid that has sufficient protection against freezing.

Adding Washer Fluid

Your vehicle has a low washer fluid message that comes on when the washer fluid is low. The message is displayed for 15 seconds at the start of each ignition cycle if the fluid is low. When the LOW WASHER FLUID message is displayed, you will need to add washer fluid to the windshield washer fluid reservoir.

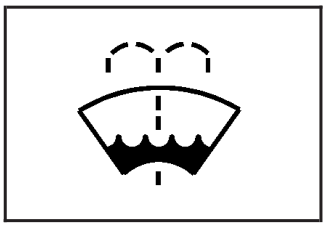

The windshield washer fluid reservoir is located in the engine compartment on the passenger's side of the vehicle. See *Engine Compartment Overview on page 5-12* for reservoir location.

Downloaded from www.Manualslib.com manuals search engine

Open the cap with the washer symbol on it. Add washer fluid until the tank is full.

Notice:

- **When using concentrated washer fluid, follow the manufacturer's instructions for adding water.**
- **Do not mix water with ready-to-use washer fluid. Water can cause the solution to freeze and damage your washer fluid tank and other parts of the washer system. Also, water does not clean as well as washer fluid.**
- **Fill your washer fluid tank only three-quarters full when it is very cold. This allows for expansion if freezing occurs, which could damage the tank if it is completely full.**
- **Do not use engine coolant (antifreeze) in your windshield washer. It can damage your washer system and paint.**

Brakes

Brake Fluid

Your brake master cylinder reservoir is filled with DOT-3 brake fluid. See *Engine Compartment Overview on page 5-12* for the location of the reservoir.

There are only two reasons why the brake fluid level in the reservoir might go down. The first is that the brake fluid goes down to an acceptable level during normal brake lining wear. When new linings are put in, the fluid level goes back up. The other reason is that fluid is leaking out of the brake system. If it is, you should have your brake system fixed, since a leak means that sooner or later your brakes will not work well, or will not work at all.

Downloaded from www.Manualslib.com manuals search engine

So, it is not a good idea to “top off” your brake fluid. Adding brake fluid will not correct a leak. If you add fluid when your linings are worn, then you will have too much fluid when you get new brake linings. You should add (or remove) brake fluid, as necessary, only when work is done on the brake hydraulic system.

⚠ CAUTION:

If you have too much brake fluid, it can spill on the engine. The fluid will burn if the engine is hot enough. You or others could be burned, and your vehicle could be damaged. Add brake fluid only when work is done on the brake hydraulic system. See “Checking Brake Fluid” in this section.

Refer to the Maintenance Schedule to determine when to check your brake fluid. See *Scheduled Maintenance on page 6-4*.

Checking Brake Fluid

You can check the brake fluid without taking off the cap.

Just look at the brake fluid reservoir. The fluid level should be above MIN. If it is not, have your brake system checked to see if there is a leak.

After work is done on the brake hydraulic system, make sure the level is above the MIN but not over the MAX mark.

Downloaded from www.Manualslib.com manuals search engine

What to Add

When you do need brake fluid, use only DOT-3 brake fluid. Use new brake fluid from a sealed container only. See *Recommended Fluids and Lubricants on page 6-12*.

Always clean the brake fluid reservoir cap and the area around the cap before removing it. This will help keep dirt from entering the reservoir.

⚠ CAUTION:

With the wrong kind of fluid in your brake system, your brakes may not work well, or they may not even work at all. This could cause a crash. Always use the proper brake fluid.

Notice:

- **Using the wrong fluid can badly damage brake system parts. For example, just a few drops of mineral-based oil, such as engine oil, in your brake system can damage brake system parts so badly that they will have to be replaced. Do not let someone put in the wrong kind of fluid.**
- **If you spill brake fluid on your vehicle's painted surfaces, the paint finish can be damaged. Be careful not to spill brake fluid on your vehicle. If you do, wash it off immediately. See *Appearance Care on page 5-92*.**

Downloaded from www.Manualslib.com manuals search engine

Brake Wear

Your vehicle has four-wheel disc brakes.

Disc brake pads have built-in wear indicators that make a high-pitched warning sound when the brake pads are worn and new pads are needed. The sound may come and go or be heard all the time your vehicle is moving (except when you are pushing on the brake pedal firmly).

⚠ CAUTION:

The brake wear warning sound means that soon your brakes will not work well. That could lead to an accident. When you hear the brake wear warning sound, have your vehicle serviced.

Notice: **Continuing to drive with worn-out brake pads could result in costly brake repair.**

Some driving conditions or climates may cause a brake squeal when the brakes are first applied or lightly applied. This does not mean something is wrong with your brakes.

Properly torqued wheel nuts are necessary to help prevent brake pulsation. When tires are rotated, inspect brake pads for wear and evenly tighten wheel nuts in the proper sequence to GM torque specifications.

Brake linings should always be replaced as complete axle sets.

Downloaded from www.Manualslib.com manuals search engine

Brake Pedal Travel

See your dealer if the brake pedal does not return to normal height, or if there is a rapid increase in pedal travel. This could be a sign of brake trouble.

Brake Adjustment

Every time you make a brake stop, your disc brakes adjust for wear.

Replacing Brake System Parts

The braking system on a vehicle is complex. Its many parts have to be of top quality and work well together if the vehicle is to have really good braking. Your vehicle was designed and tested with top-quality GM brake parts. When you replace parts of your braking system — for example, when your brake linings wear down and you need new ones put in — be sure you get new approved GM replacement parts. If you do not, your brakes may no longer work properly. For example, if someone puts in brake linings that are wrong for your vehicle, the balance between your front and rear brakes can change — for the worse. The braking performance you have come to expect can change in many other ways if someone puts in the wrong replacement brake parts.

Battery

Your new vehicle comes with a maintenance free ACDelco® battery. When it is time for a new battery, get one that has the replacement number shown on the original battery's label. We recommend an ACDelco® battery. See *Engine Compartment Overview on page 5-12* for battery location.

Warning: Battery posts, terminals and related accessories contain lead and lead compounds, chemicals known to the State of California to cause cancer and reproductive harm. Wash hands after handling.

Vehicle Storage

If you are not going to drive your vehicle for 25 days or more, remove the black, negative (–) cable from the battery. This will help keep your battery from running down.

Downloaded from www.Manualslib.com manuals search engine

⚠ CAUTION:

Batteries have acid that can burn you and gas that can explode. You can be badly hurt if you are not careful. See *Jump Starting on page 5-43* for tips on working around a battery without getting hurt.

Contact your dealer to learn how to prepare your vehicle for longer storage periods.

Also, for your audio system, see *Theft-Deterrent Feature on page 3-88*.

Jump Starting

If your battery has run down, you may want to use another vehicle and some jumper cables to start your vehicle. But please use the following steps to do it safely.

⚠ CAUTION:

Batteries can hurt you. They can be dangerous because:

- **They contain acid that can burn you.**
- **They contain gas that can explode or ignite.**
- **They contain enough electricity to burn you.**

If you do not follow these steps exactly, some or all of these things can hurt you.

Notice: **Ignoring these steps could result in costly damage to your vehicle that would not be covered by your warranty.**

Trying to start your vehicle by pushing or pulling it will not work, and it could damage your vehicle.

1. Check the other vehicle. It must have a 12-volt battery with a negative ground system.

Notice: **If the other vehicle's system is not a 12-volt system with a negative ground, both vehicles can be damaged. Only use vehicles with 12-volt systems with negative grounds to jump start your vehicle.**

Downloaded from www.Manualslib.com manuals search engine

2. Get the vehicles close enough so the jumper cables can reach, but be sure the vehicles aren't touching each other. If they are, it could cause a ground connection you don't want. You wouldn't be able to start your vehicle, and the bad grounding could damage the electrical systems.

   To avoid the possibility of the vehicles rolling, set the parking brake firmly on both vehicles involved in the jump start procedure. Put an automatic transmission in PARK (P) or a manual transmission in NEUTRAL before setting the parking brake.

Notice: **If you leave your radio or other accessories on during the jump starting procedure, they could be damaged. The repairs would not be covered by your warranty. Always turn off your radio and other accessories when jump starting your vehicle.**

3. Turn off the ignition on both vehicles. Unplug unnecessary accessories plugged into the cigarette lighter or accessory power outlets. Turn off the radio and all lamps that aren't needed. This will avoid sparks and help save both batteries. And it could save your radio!

4. Open the hoods and locate the positive (+) and negative (–) terminal locations of the other vehicle.

   Your vehicle has a remote positive (+) jump starting terminal and a remote negative (–) jump starting terminal. You should always use these remote terminals instead of the terminals on the battery.

The remote positive (+) terminal is located near the engine accessory drive bracket. On some vehicles, the terminal may be covered under under a red plastic cover. To access the remote positive (+) terminal, open the red plastic cover.

Downloaded from www.Manualslib.com manuals search engine

The remote negative (–) terminal is located on the engine accessory drive bracket and is marked GND.

See *Engine Compartment Overview on page 5-12* for more information on location.

⚠ CAUTION:

Using a match near a battery can cause battery gas to explode. People have been hurt doing this, and some have been blinded. Use a flashlight if you need more light.

Be sure the battery has enough water. You do not need to add water to the ACDelco® battery installed in your new vehicle. But if a battery has filler caps, be sure the right amount of fluid is there. If it is low, add water to take care of that first. If you do not, explosive gas could be present.

Battery fluid contains acid that can burn you. Do not get it on you. If you accidentally get it in your eyes or on your skin, flush the place with water and get medical help immediately.

Downloaded from www.Manualslib.com manuals search engine

5. Check that the jumper cables don't have loose or missing insulation. If they do, you could get a shock. The vehicles could be damaged too.

   Before you connect the cables, here are some basic things you should know. Positive (+) will go to positive (+) or to a remote positive terminal (+) if the vehicle has one. Negative (–) will go to a heavy, unpainted metal engine part or to a remote negative (–) terminal, if the vehicle has one.

   Don't connect positive (+) to negative (–) or you'll get a short that would damage the battery and maybe other parts too.

⚠ CAUTION:

Fans or other moving engine parts can injure you badly. Keep your hands away from moving parts once the engine is running.

6. Connect the red positive (+) cable to the positive (+) terminal of the dead battery. Use a remote positive (+) terminal if the vehicle has one.

7. Don't let the other end touch metal. Connect it to the positive (+) terminal of the good battery. Use a remote positive (+) terminal if the vehicle has one.

Downloaded from www.Manualslib.com manuals search engine

8. Now connect the black negative (–) cable to the negative (–) terminal of the good battery. Use a remote negative (–) terminal if the vehicle has one. Your vehicle's remote negative (–) terminal is marked GND.

Don't let the other end touch anything until the next step. The other end of the negative (–) cable doesn't go to the dead battery. It goes to a heavy, unpainted metal engine part or to a remote negative (–) terminal on the vehicle with the dead battery.

9. Connect the other end of the negative (–) cable at least 18 inches (45 cm) away from the dead battery, but not near engine parts that move.

The electrical connection is just as good there, and the chance of sparks getting back to the battery is much less.

10. Now start the vehicle with the good battery and run the engine for awhile.
11. Try to start the vehicle that had the dead battery. If it won't start after a few tries, it probably needs service.

Downloaded from www.Manualslib.com manuals search engine

Notice: **If the jumper cables are removed in the wrong order, electrical shorting may occur and damage the vehicle. The repairs would not be covered by your warranty. Remove the jumper cables in the correct order, making sure that the cables do not touch each other or other metal.**

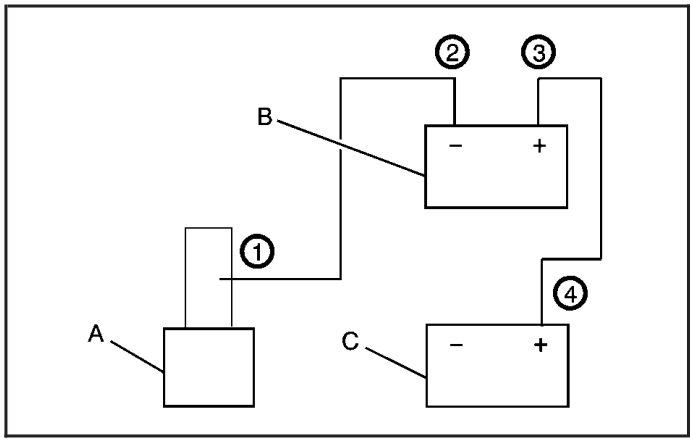

Jumper Cable Removal

A. Heavy, Unpainted Metal Engine Part or Remote Negative (–) Terminal.

B. Good Battery or Remote Positive (+) and Negative (–) Terminals.

C. Dead Battery or Remote Positive (+) Terminal.

To disconnect the jumper cables from both vehicles do the following:

1. Disconnect the black negative (–) cable from the vehicle that had the dead battery.
2. Disconnect the black negative (–) cable from the vehicle with the good battery.
3. Disconnect the red positive (+) cable from the vehicle with the good battery.
4. Disconnect the red positive (+) cable from the other vehicle.
5. Return the positive (+) remote terminal cover to its original position.

All-Wheel Drive

Transfer Case

It is not necessary to regularly check transfer case fluid unless you suspect there is a leak or you hear an unusual noise. A fluid loss could indicate a problem. Have it inspected and repaired.

Refer to the Maintenance Schedule to determine how often to change the lubricant. See *Scheduled Maintenance on page 6-4*.

Downloaded from www.Manualslib.com manuals search engine

How to Check Lubricant

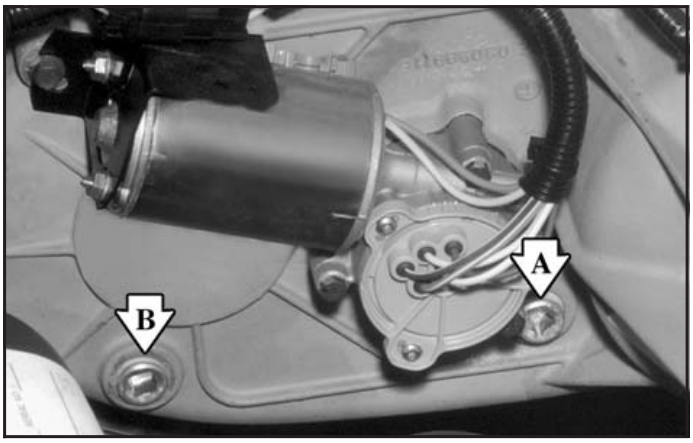

A. Filler Plug
B. Drain Plug

1. Remove the filler plug (A). The fluid level should be just below the bottom of the filler plug hole. To get an accurate reading, the vehicle should be on a level surface.
2. Add fluid if necessary.

   Refer to the Maintenance Schedule to determine what kind of lubricant to use. See *Recommended Fluids and Lubricants on page 6-12*.
3. Reinstall the filler plug. Use care not to overtighten the filler plug.

Downloaded from www.Manualslib.com manuals search engine

Rear Axle

When to Check Lubricant

It is not necessary to regularly check rear axle fluid unless you suspect there is a leak or you hear an unusual noise. A fluid loss could indicate a problem. Have it inspected and repaired.

How to Check Lubricant

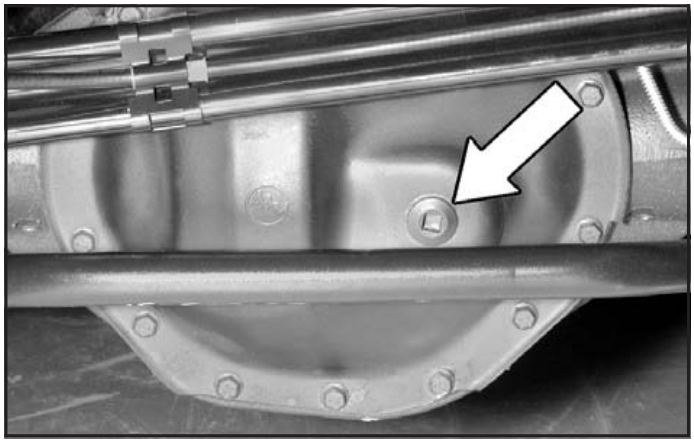

To get an accurate reading, the vehicle should be on a level surface.

When the differential is cold, the proper level is from 5/8 inch to 1 5/8 inch (15 mm to 40 mm) below the bottom of the filler plug hole. Add only enough fluid to reach the proper level.

What to Use

Refer to the Maintenance Schedule to determine what kind of lubricant to use. See *Recommended Fluids and Lubricants on page 6-12*.

Downloaded from www.Manualslib.com manuals search engine

Front Axle

When to Check and Change Lubricant

It is not necessary to regularly check front axle fluid unless you suspect there is a leak or you hear an unusual noise. A fluid loss could indicate a problem. Have it inspected and repaired.

How to Check Lubricant

To get an accurate reading, the vehicle should be on a level surface.

When the differential is cold, the proper level is from about 1/4 inch (6 mm) to about 3/8 inch (10 mm) below the filler plug hole.

What to Use

Refer to the Maintenance Schedule to determine what kind of lubricant to use. See *Recommended Fluids and Lubricants on page 6-12*.

Downloaded from www.Manualslib.com manuals search engine

Bulb Replacement

See *Replacement Bulbs on page 5-58* for the proper type of bulbs to use.

For any bulb changing procedure not listed in this section, contact your dealer.

Halogen Bulbs

⚠ CAUTION:

Halogen bulbs have pressurized gas inside and can burst if you drop or scratch the bulb. You or others could be injured. Be sure to read and follow the instructions on the bulb package.

Headlamps

1. Open the hood as described earlier under *Hood Release on page 5-10* and locate the affected headlamp on the inner front portion of the hood.

2. Turn the bulb/socket retainer (arrow) counterclockwise to unlock the bulb/socket. You may prefer to unplug the electrical connector before removing the bulb/socket. If so, complete Step 4 before doing this step.

3. Pull the bulb/socket straight out from the headlamp housing.

Downloaded from www.Manualslib.com manuals search engine

4. Unplug the electrical connector.

5. Push the new bulb/socket into the headlamp assembly making sure to align the splines on the bulb/socket with the splines in the headlamp housing. Use care not to touch the bulb with your fingers or hands.
6. Turn the bulb/socket retainer clockwise to lock the bulb/socket in place.
7. Plug in the electrical connector.

Front Turn Signal and Parking Lamps

1. Open the hood as described earlier under *Hood Release on page 5-10* and locate the affected lamp.

2. Turn the bulb socket counterclockwise and remove it from the lamp housing.

3. Pull the bulb from the bulb socket.
4. Put the new bulb into the bulb socket.
5. Put the bulb socket into the lamp housing and turn it clockwise until it locks.

Downloaded from www.Manualslib.com manuals search engine

Sidemarker Lamps

It is recommended that these components be replaced by your dealer.

Daytime Running Lamps

1. Locate the lamp assembly behind the front bumper. It is easiest to come in from the side of the vehicle through the wheel opening.

2. Turn the bulb socket counterclockwise and remove it from the lamp housing.
3. Remove the bulb from the bulb socket.
4. Put the new bulb into the bulb socket.
5. Put the bulb socket into the lamp housing and turn it clockwise until it locks.

Downloaded from www.Manualslib.com manuals search engine

Roof Marker Lamps

Corner Roof Marker Lamps

1. Remove the screw and lift off the lens.

2. Turn the socket counterclockwise to remove it and remove the old bulb.
3. Put a new bulb into the socket.
4. Reinstall the socket into the lens and turn it clockwise to lock it into place.
5. Hook the side of the lens with the hook end in the notch first and then tighten the screw.

Downloaded from www.Manualslib.com manuals search engine

Center Roof Marker Lamps

1. Push in on the notch with a flat tool and pull the lamp out.

2. Turn the bulb socket counterclockwise and remove it from the lamp housing.
3. Remove the bulb from the bulb socket.
4. Put the new bulb into the bulb socket.
5. Place the hook end of the lamp in place on one side and push the other end of the lamp down until it locks in place.

Downloaded from www.Manualslib.com manuals search engine

Center High-Mounted Stoplamp (CHMSL)

If your vehicle has this component and it needs replacement, it is recommended that it be replaced as a unit by your dealer.

Taillamps

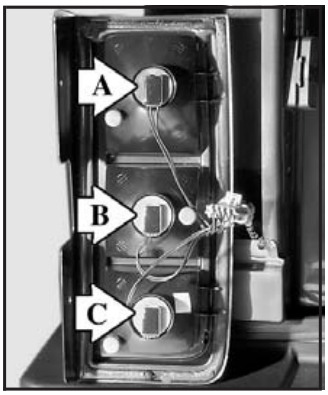

A. Stoplamp
B. Turn Signal Lamp
C. Back-Up Lamp

1. Open the liftgate.

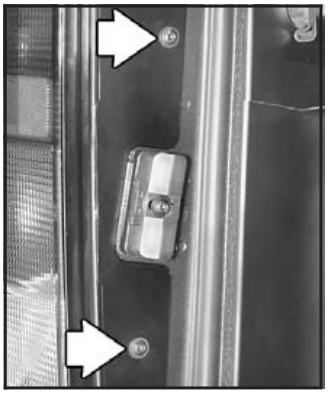

2. Remove the two screws from the rear lamp assembly and remove the rear lamp assembly.

3. Turn the bulb socket counterclockwise to remove it from the taillamp housing.

Downloaded from www.Manualslib.com manuals search engine

4. Pull the bulb straight out from the socket.

5. Press a new bulb into the socket, insert it into the taillamp housing and turn the socket counterclockwise until it is locked in place.
6. Reinstall the rear lamp assembly and tighten the screws.

Replacement Bulbs

Exterior Lamp	Bulb Number
Low-Beam and High-Beam Headlamps	9007
Daytime Running Lamps (DRL)	4114K
Front Turn Signal and Parking Lamps	4157K or 3157KX
Rear Taillamp and Stoplamp	3157
Rear Turn Lamp	3157
Back-up Lamp	4157 or 3157
Roof Marker Lamps	168

For replacement bulbs not listed here, please consult your dealer.

Downloaded from www.Manualslib.com manuals search engine

Windshield Wiper Blade Replacement

Windshield wiper blades should be inspected at least twice a year for wear and cracking. See *Scheduled Maintenance on page 6-4* for more information.

Replacement blades come in different types and are removed in different ways. For proper type and length, see *Normal Maintenance Replacement Parts on page 6-14*.

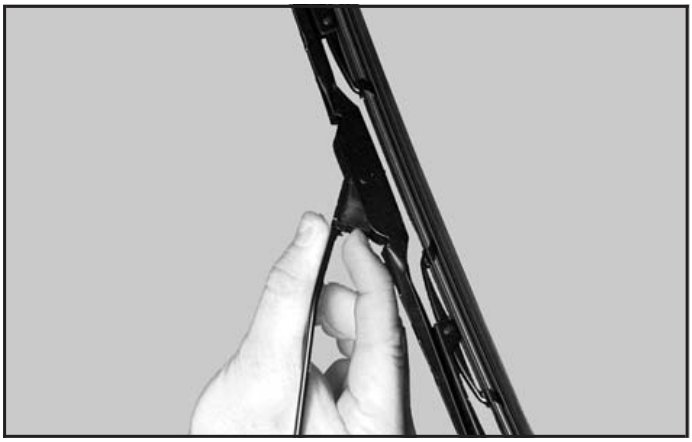

To replace the windshield wiper blade assembly do the following:

1. Lift the wiper arm and turn the blade until it is facing away from the windshield.
2. Push the release lever and slide the wiper assembly toward the driver's side of the vehicle.
3. Install a new blade by reversing Steps 1 and 2.

Downloaded from www.Manualslib.com manuals search engine

Tires

Your new vehicle comes with high-quality tires made by a leading tire manufacturer. If you ever have questions about your tire warranty and where to obtain service, see your GM Warranty booklet for details. For additional information refer to the tire manufacturer's booklet included with your vehicle's Owner's Manual.

⚠ CAUTION:

Poorly maintained and improperly used tires are dangerous.

- **Overloading your tires can cause overheating as a result of too much friction. You could have an air-out and a serious accident. See "Loading Your Vehicle" in the Index.**

CAUTION: (Continued)

CAUTION: (Continued)

- **Underinflated tires pose the same danger as overloaded tires. The resulting accident could cause serious injury. Check all tires frequently to maintain the recommended pressure. Tire pressure should be checked when your tires are cold.**
- **Overinflated tires are more likely to be cut, punctured or broken by a sudden impact — such as when you hit a pothole. Keep tires at the recommended pressure.**
- **Worn, old tires can cause accidents. If your tread is badly worn, or if your tires have been damaged, replace them.**

Tire Sidewall Labeling

Useful information about a tire is molded into the sidewall. The following illustrations are examples of a typical P-Metric and a LT-Metric tire sidewall.

Downloaded from www.Manualslib.com manuals search engine

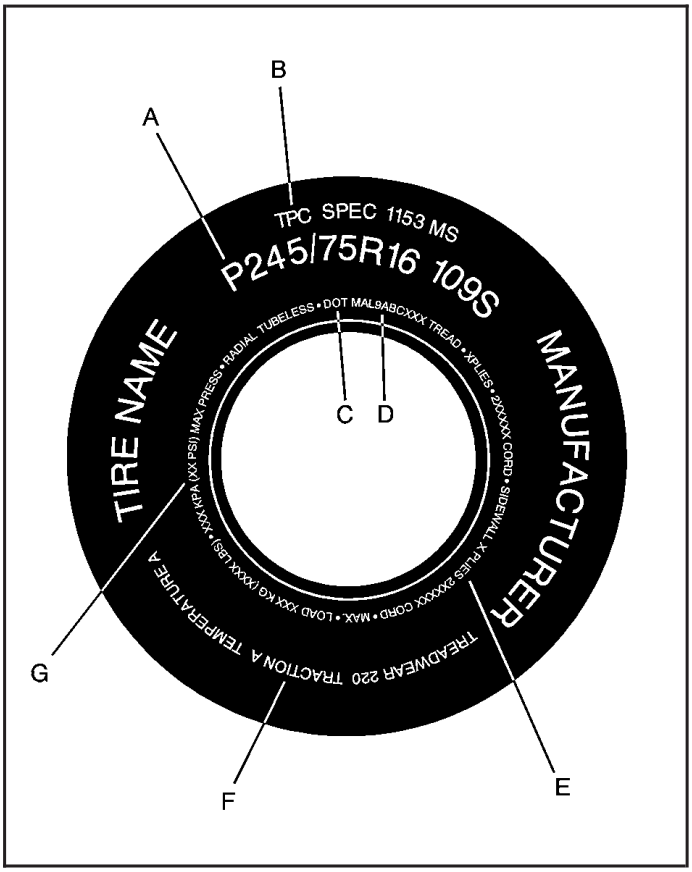

P-Metric Tire

(A) Tire Size Code: The tire size code is a combination of letters and numbers used to define a particular tire's width, height, aspect ratio, construction type and service description. See the "Tire Size Code" illustration later in this section for more detail.

(B) Tire Performance Criteria Specification (TPC Spec): Original equipment tires designed to GM's specific tire performance criteria have a TPC specification code molded onto the sidewall. GM's TPC specifications meet or exceed all federal safety guidelines.

(C) Department of Transportation (DOT): The Department of Transportation (DOT) code indicates that the tire is in compliance with the U.S. Department of Transportation Motor Vehicle Safety Standards.

(D) Tire Identification Number (TIN): The letters and numbers following DOT code are the Tire Identification Number (TIN). The TIN shows the manufacturer and plant code, tire size, and date the tire was manufactured. The TIN is molded onto both sides of the tire, although only one side may have the date of manufacture.

(E) Tire Ply Material: The type of cord and number of plies in the sidewall and under the tread.

Downloaded from www.Manualslib.com manuals search engine

(F) Uniform Tire Quality Grading (UTQG): Tire manufacturers are required to grade tires based on three performance factors: treadwear, traction and temperature resistance. For more information, see *Uniform Tire Quality Grading on page 5-72*.

(G) Maximum Cold Inflation Load Limit: Maximum load that can be carried and the maximum pressure needed to support that load. For information on recommended tire pressure see *Inflation - Tire Pressure on page 5-68* and *Loading Your Vehicle on page 4-67*.

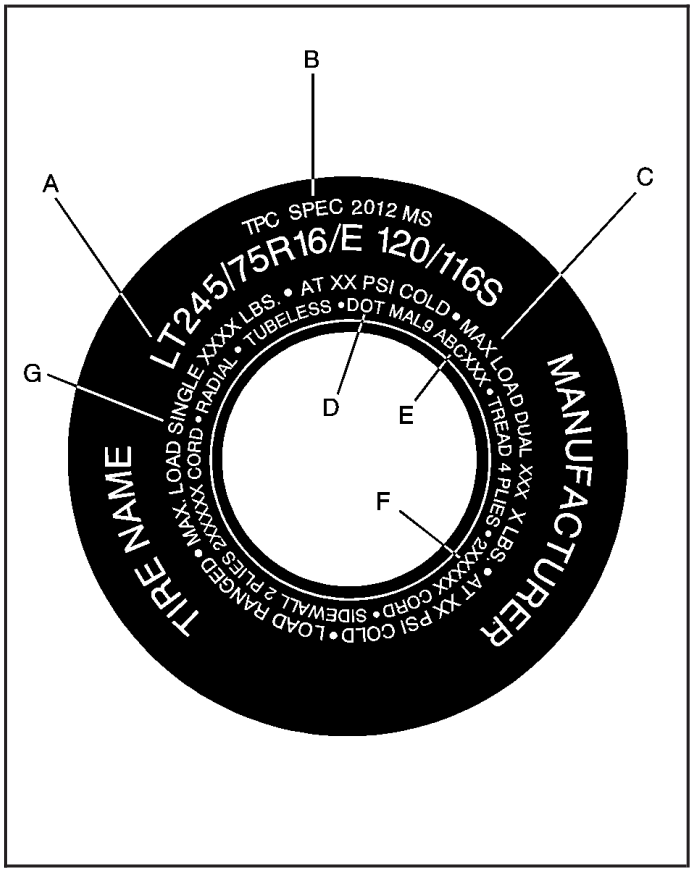

LT-Metric Tire

Downloaded from www.Manualslib.com manuals search engine

(A) Tire Size: The tire size code is a combination of letters and numbers used to define a particular tire's width, height, aspect ratio, construction type and service description. See the "Tire Size" illustration later in this section for more detail.

(B) Tire Performance Criteria Specification (TPC Spec): Original equipment tires designed to GM's specific tire performance criteria have a TPC specification code molded onto the sidewall. GM's TPC specifications meet or exceed all federal safety guidelines.

(C) Dual Tire Maximum Load: Maximum load that can be carried and the maximum pressure needed to support that load when used in a dual configuration. For information on recommended tire pressure see *Inflation - Tire Pressure on page 5-68* and *Loading Your Vehicle on page 4-67*.

(D) Department of Transportation (DOT): The Department of Transportation (DOT) code indicates that the tire is in compliance with the U.S. Department of Transportation Motor Vehicle Safety Standards.

(E) Tire Identification Number (TIN): The letters and numbers following DOT code are the Tire Identification Number (TIN). The TIN shows the manufacturer and plant code, tire size, and date the tire was manufactured. The TIN is molded onto both sides of the tire, although only one side may have the date of manufacture.

(F) Tire Ply Material: The type of cord and number of plies in the sidewall and under the tread.

(G) Single Tire Maximum Load: Maximum load that can be carried and the maximum pressure needed to support that load when used as a single. For information on recommended tire pressure see *Inflation - Tire Pressure on page 5-68* and *Loading Your Vehicle on page 4-67*.

Downloaded from www.Manualslib.com manuals search engine

Tire Size

The following examples show the different parts of a tire size.

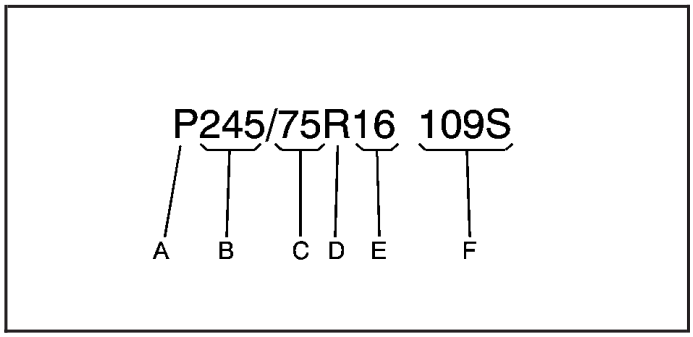

Passenger (P-Metric) Tire

(A) Passenger (P-Metric) Tire: The United States version of a metric tire sizing system. The letter “P” as the first character in the tire size means a passenger vehicle tire engineered to standards set by the U.S. Tire and Rim Association.

(B) Tire Width: The three-digit number indicates the tire section width in millimeters from sidewall to sidewall.

(C) Aspect Ratio: A two-digit number that indicates the tire height-to-width measurements. For example, if the tire size aspect ratio is “75,” as shown in item “C” of the illustration, it would mean that the tire’s sidewall is 75% as high as it is wide.

(D) Construction Code: A letter code is used to indicate the type of ply construction in the tire. The letter “R” means radial ply construction; the letter “D” means diagonal or bias ply construction; and the letter “B” means belted-bias ply construction.

(E) Rim Diameter: Diameter of the wheel in inches.

(F) Service Description: The service description indicates the load range and speed rating of a tire. The load index can range from 1 to 279. Speed ratings range from “A” to “Z”.

Downloaded from www.Manualslib.com manuals search engine

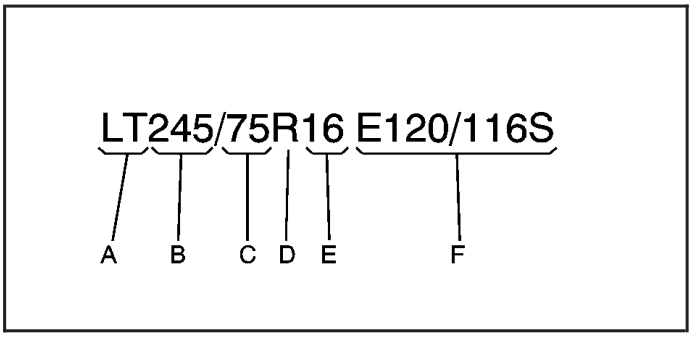

Light Truck (LT-Metric) Tire

(A) Light Truck (LT-Metric) Tire: The United States version of a metric tire sizing system. The letter “LT” as the first two characters in the tire size means a light truck tire engineered to standards set by the U. S. Tire and Rim Association.

(B) Tire Width: The three-digit number indicates the tire section width in millimeters from sidewall to sidewall.

(C) Aspect Ratio: A two-digit number that indicates the tire height-to-width measurements. For example, if the tire size aspect ratio is “75,” as shown in item “C” of the illustration, it would mean that the tire’s sidewall is 75% as high as it is wide.

(D) Construction Code: A letter code is used to indicate the type of ply construction in the tire. The letter “R” means radial ply construction; the letter “D” means diagonal or bias ply construction; and the letter “B” means belted-bias ply construction.

(E) Rim Diameter: Diameter of the wheel in inches.

(F) Service Description: The service description indicates the load range and speed rating of a tire. The load index can range from 1 to 279. Speed ratings range from “A” to “Z”. The light truck tire size example above shows dual or single tire configurations.

Tire Terminology and Definitions

Air Pressure: The amount of air inside the tire pressing outward on each square inch of the tire. Air pressure is expressed in pounds per square inch (psi) or kilopascal (kPa).

Accessory Weight: This means the combined weight of optional accessories. Some examples of optional accessories are, automatic transmission, power steering, power brakes, power windows, power seats, and air conditioning.

Downloaded from www.Manualslib.com manuals search engine

Aspect Ratio: The relationship of a tire's height to its width.

Belt: A rubber coated layer of cords that is located between the plies and the tread. Cords may be made from steel or other reinforcing materials.

Bead: The tire bead contains steel wires wrapped by steel cords that hold the tire onto the rim.

Bias Ply Tire: A pneumatic tire in which the plies are laid at alternate angles less than 90 degrees to the centerline of the tread.

Cold Inflation Pressure: The amount of air pressure in a tire, measured in pounds per square inch (psi) or kilopascals (kPa) before a tire has built up heat from driving. See *Inflation - Tire Pressure on page 5-68*.

Curb Weight: This means the weight of a motor vehicle with standard and optional equipment including the maximum capacity of fuel, oil and coolant, but without passengers and cargo.

DOT Markings: A code molded into the sidewall of a tire signifying that the tire is in compliance with the U.S. Department of Transportation motor vehicle safety standards. The DOT code includes the Tire Identification Number (TIN), an alphanumeric designator which can also identify the tire manufacturer, production plant, brand and date of production.

GVWR: Gross Vehicle Weight Rating, see *Loading Your Vehicle on page 4-67*.

GAWR FRT: Gross Axle Weight Rating for the front axle, see *Loading Your Vehicle on page 4-67*.

GAWR RR: Gross Axle Weight Rating for the rear axle, see *Loading Your Vehicle on page 4-67*.

Intended Outboard Sidewall: The side of an asymmetrical tire, that must always face outward when mounted on a vehicle.

Kilopascal (kPa): The metric unit for air pressure. There are 6.9 kPa's to one psi.

Light Truck (LT-Metric) Tire: A tire used on light duty trucks and some multipurpose passenger vehicles.

Load Index: An assigned number ranging from 1 to 279 that corresponds to the load carrying capacity of a tire.

Maximum Inflation Pressure: The maximum air pressure to which a cold tire may be inflated. The maximum air pressure is molded onto the sidewall.

Maximum Load Rating: The load rating for a tire at the maximum permissible inflation pressure for that tire.

Downloaded from www.Manualslib.com manuals search engine

Maximum Loaded Vehicle Weight: The sum of curb weight; accessory weight; vehicle capacity weight; and production options weight.

Normal Occupant Weight: The number of occupants a vehicle is designed to seat multiplied by 150 pounds (68 kg). See *Loading Your Vehicle on page 4-67*.

Occupant Distribution: Designated seating positions.

Outward Facing Sidewall: The side of a asymmetrical tire that has a particular side that faces outward when mounted on a vehicle. The side of the tire that contains a whitewall, bears white lettering or bears manufacturer, brand and or model name molding that is higher or deeper than the same moldings on the other sidewall of the tire.

Passenger (P-Metric) Tire: A tire used on passenger cars and some light duty trucks and multipurpose vehicles.

Recommended Inflation Pressure: Vehicle manufacturer's recommended tire inflation pressure and shown on the tire placard. See *Inflation - Tire Pressure on page 5-68* and *Loading Your Vehicle on page 4-67*.

Radial Ply tire: A pneumatic tire in which the ply cords that extend to the beads are laid at 90 degrees to the centerline of the tread.

Rim: A metal support for a tire and upon which the tire beads are seated.

Sidewall: The portion of a tire between the tread and the bead.

Speed Rating: An alphanumeric code assigned to a tire indicating the maximum speed at which a tire can operate.

Traction: The friction between the tire and the road surface. The amount of grip provided.

Tread: The portion of a tire that comes into contact with the road.

Treadwear Indicators: Narrow bands, sometimes called "wear bars," that show across the tread of a tire when only 2/32 inch of tread remains. See *When It Is Time for New Tires on page 5-70*.

UTQGS: Uniform Tire Quality Grading Standards, a tire information system that provides consumers with ratings for a tire's traction, temperature and treadwear. Ratings are determined by tire manufacturers using government testing procedures. The ratings are molded into the sidewall of the tire. See *Uniform Tire Quality Grading on page 5-72*.

Downloaded from www.Manualslib.com manuals search engine

Vehicle Capacity Weight: The number of designated seating positions multiplied by 150 lbs. (68 kg) plus the rated cargo load. See *Loading Your Vehicle on page 4-67*.

Vehicle Maximum Load on the Tire: Load on an individual tire due to curb weight, accessory weight, occupant weight and cargo weight.

Vehicle Placard: A label permanently attached to a vehicle showing the original equipment tire size and recommended inflation pressure. See *Loading Your Vehicle on page 4-67*.

Inflation - Tire Pressure

The Certification/Tire label or Tire and Loading Information label shows the correct inflation pressures for your tires when they're cold. "Cold" means your vehicle has been sitting for at least three hours or driven no more than 1 mile (1.6 km). See *Loading Your Vehicle on page 4-67*.

Notice: **Don't let anyone tell you that underinflation or overinflation is all right. It's not. If your tires don't have enough air (underinflation), you can get the following:**

- **Too much flexing**
- **Too much heat**
- **Tire overloading**
- **Bad wear**
- **Bad handling**
- **Bad fuel economy**

If your tires have too much air (overinflation), you can get the following:

- **Unusual wear**
- **Bad handling**
- **Rough ride**
- **Needless damage from road hazards**

Downloaded from www.Manualslib.com manuals search engine

When to Check

Check your tires once a month or more.

Also, check the tire pressure of the spare tire.

How to Check

Use a good quality pocket-type gage to check tire pressure. You can't tell if your tires are properly inflated simply by looking at them. Radial tires may look properly inflated even when they're underinflated.

Remove the valve cap from the tire valve stem. Press the tire gage firmly onto the valve to get a pressure measurement. If the cold tire inflation pressure is low, add air until you reach the recommended amount.

If you overfill the tire, release air by pushing on the metal stem in the center of the tire valve. Recheck the tire pressure with the tire gage.

Be sure to put the valve caps back on the valve stems. They help prevent leaks by keeping out dirt and moisture.

Tire Inspection and Rotation

Tires should be rotated every 5,000 to 8,000 miles (8 000 to 13 000 km).

Any time you notice unusual wear, rotate your tires as soon as possible and check wheel alignment. Also check for damaged tires or wheels. See *When It Is Time for New Tires on page 5-70* and *Wheel Replacement on page 5-74* for more information.

The purpose of regular rotation is to achieve more uniform wear for all tires on the vehicle. The first rotation is the most important. See *Scheduled Maintenance on page 6-4*, for scheduled rotation intervals.

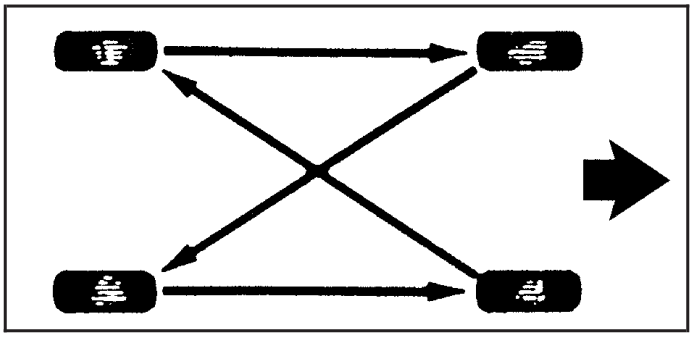

When rotating your tires, always use the correct rotation pattern shown here.

Downloaded from www.Manualslib.com manuals search engine

After the tires have been rotated, adjust the front and rear inflation pressures as shown on the Certification/Tire label or Tire and Loading Information label. See *Loading Your Vehicle on page 4-67*.
Make certain that all wheel nuts are properly tightened. See “Wheel Nut Torque” under *Capacities and Specifications on page 5-111*.

⚠ CAUTION:

Rust or dirt on a wheel, or on the parts to which it is fastened, can make wheel nuts become loose after a time. The wheel could come off and cause an accident. When you change a wheel, remove any rust or dirt from places where the wheel attaches to the vehicle. In an emergency, you can use a cloth or a paper towel to do this; but be sure to use a scraper or wire brush later, if you need to, to get all the rust or dirt off. See “Changing a Flat Tire” in the Index.

When It Is Time for New Tires

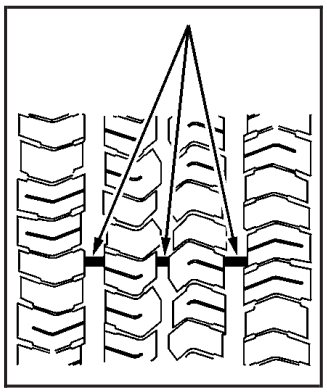

One way to tell when it’s time for new tires is to check the treadwear indicators, which will appear when your tires have only 1/16 inch (1.6 mm) or less of tread remaining. Some commercial truck tires may not have treadwear indicators.

Downloaded from www.Manualslib.com manuals search engine

You need a new tire if any of the following statements are true:

- You can see the indicators at three or more places around the tire.
- You can see cord or fabric showing through the tire's rubber.
- The tread or sidewall is cracked, cut or snagged deep enough to show cord or fabric.
- The tire has a bump, bulge or split.
- The tire has a puncture, cut or other damage that can't be repaired well because of the size or location of the damage.

Buying New Tires

To find out what kind and size of tires you need, look at the Certification/Tire label or the Tire and Loading Information label. For examples of these labels and their location on your vehicle, see *Loading Your Vehicle on page 4-67*.

The tires installed on your vehicle when it was new had a Tire Performance Criteria Specification (TPC Spec) number on each tire's sidewall. When you get new tires, General Motors recommends that you get tires with that same TPC Spec number. That way your vehicle will continue to have tires that are designed to give proper endurance, handling, speed rating, load range, traction, ride and other things during normal service on your vehicle. If your tires have an all-season tread design, the TPC number will be followed by an "MS" (for mud and snow).

If you ever replace your tires with those not having a TPC Spec number, make sure they are the same size, load range, speed rating and construction type (bias, bias-belted or radial) as your original tires.

⚠ CAUTION:

Mixing tires could cause you to lose control while driving. If you mix tires of different sizes or types (radial and bias-belted tires) the vehicle may not handle properly, and you could have a crash. Using tires of different sizes may also cause damage to your vehicle. Be sure to use the same size and type tires on all wheels.

Downloaded from www.Manualslib.com manuals search engine

⚠ CAUTION:

If you use bias-ply tires on your vehicle, the wheel rim flanges could develop cracks after many miles of driving. A tire and/or wheel could fail suddenly, causing a crash. Use only radial-ply tires with the wheels on your vehicle.

Uniform Tire Quality Grading

Quality grades can be found where applicable on the tire sidewall between tread shoulder and maximum section width. For example:

Treadwear 200 Traction AA Temperature A

The following information relates to the system developed by the United States National Highway Traffic Safety Administration, which grades tires by treadwear, traction and temperature performance. (This applies only to vehicles sold in the United States.) The grades are molded on the sidewalls of most passenger car tires. The Uniform Tire Quality Grading system does not apply to deep tread, winter-type snow tires, space-saver or temporary use spare tires, tires with nominal rim diameters of 10 to 12 inches (25 to 30 cm), or to some limited-production tires.

While the tires available on General Motors passenger cars and light trucks may vary with respect to these grades, they must also conform to federal safety requirements and additional General Motors Tire Performance Criteria (TPC) standards.

Treadwear

The treadwear grade is a comparative rating based on the wear rate of the tire when tested under controlled conditions on a specified government test course. For example, a tire graded 150 would wear one and a half (1.5) times as well on the government course as a tire graded 100. The relative performance of tires depends upon the actual conditions of their use, however, and may depart significantly from the norm due to variations in driving habits, service practices and differences in road characteristics and climate.

Downloaded from www.Manualslib.com manuals search engine

Traction – AA, A, B, C

The traction grades, from highest to lowest, are AA, A, B, and C. Those grades represent the tire's ability to stop on wet pavement as measured under controlled conditions on specified government test surfaces of asphalt and concrete. A tire marked C may have poor traction performance. Warning: The traction grade assigned to this tire is based on straight-ahead braking traction tests, and does not include acceleration, cornering, hydroplaning, or peak traction characteristics.

Temperature – A, B, C

The temperature grades are A (the highest), B, and C, representing the tire's resistance to the generation of heat and its ability to dissipate heat when tested under controlled conditions on a specified indoor laboratory test wheel. Sustained high temperature can cause the material of the tire to degenerate and reduce tire life, and excessive temperature can lead to sudden tire failure. The grade C corresponds to a level of performance which all passenger car tires must meet under the Federal Motor Vehicle Safety Standard No. 109. Grades B and A represent higher levels of performance on the laboratory test wheel than the minimum required by law.

Warning: The temperature grade for this tire is established for a tire that is properly inflated and not overloaded. Excessive speed, underinflation, or excessive loading, either separately or in combination, can cause heat buildup and possible tire failure.

Wheel Alignment and Tire Balance

The wheels on your vehicle were aligned and balanced carefully at the factory to give you the longest tire life and best overall performance.

Scheduled wheel alignment and wheel balancing are not needed. However, if you notice unusual tire wear or your vehicle pulling one way or the other, the alignment may need to be reset. If you notice your vehicle vibrating when driving on a smooth road, your wheels may need to be rebalanced.

Downloaded from www.Manualslib.com manuals search engine

Wheel Replacement

Replace any wheel that is bent, cracked or badly rusted or corroded. If wheel nuts keep coming loose, the wheel, wheel bolts and wheel nuts should be replaced. If the wheel leaks air, replace it (except some aluminum wheels, which can sometimes be repaired). See your dealer if any of these conditions exist.

Your dealer will know the kind of wheel you need.

Each new wheel should have the same load-carrying capacity, diameter, width, offset and be mounted the same way as the one it replaces.

If you need to replace any of your wheels, wheel bolts or wheel nuts, replace them only with new GM original equipment parts. This way, you will be sure to have the right wheel, wheel bolts and wheel nuts for your vehicle.

⚠ CAUTION:

Using the wrong replacement wheels, wheel bolts or wheel nuts on your vehicle can be dangerous. It could affect the braking and handling of your vehicle, make your tires lose air and make you lose control. You could have a collision in which you or others could be injured. Always use the correct wheel, wheel bolts and wheel nuts for replacement.

Notice: **The wrong wheel can also cause problems with bearing life, brake cooling, speedometer or odometer calibration, headlamp aim, bumper height, vehicle ground clearance and tire or tire chain clearance to the body and chassis.**

See *Changing a Flat Tire on page 5-79* for more information.

Downloaded from www.Manualslib.com manuals search engine

Used Replacement Wheels

⚠ CAUTION:

Putting a used wheel on your vehicle is dangerous. You can't know how it's been used or how far it's been driven. It could fail suddenly and cause a crash. If you have to replace a wheel, use a new GM original equipment wheel.

Tire Chains

Notice: **Use tire chains only where legal and only when you must. Use only SAE Class ″S″ type chains that are the proper size for your tires. Install them on the rear axle tires and tighten them as tightly as possible with the ends securely fastened. Drive slowly and follow the chain manufacturer's instructions. If you can hear the chains contacting your vehicle, stop and retighten them. If the contact continues, slow down until it stops. Driving too fast or spinning the wheels with chains on will damage your vehicle.**

Downloaded from www.Manualslib.com manuals search engine

Accessory Inflator

Your vehicle may be equipped with an accessory inflator system. You can inflate things like basketballs and bicycle tires. Also, you can use it to bring your tire pressure up to the proper pressure. The engine must be running and the gearshift lever must be in PARK (P) for the inflator to operate.

The accessory inflator is located in the rear compartment on the passenger's side of the vehicle.

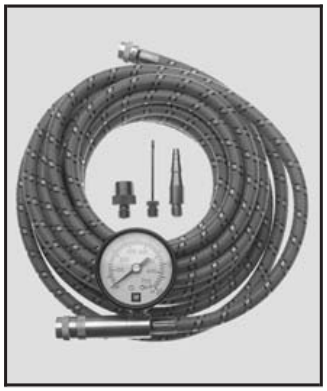

The accessory inflator kit is located in the spare tire cover pocket. The kit includes a hose and three nozzle adapters.

To use the accessory inflator, attach the appropriate nozzle adapter to the end of the hose if required. Then attach that end of the hose to the object you wish to inflate. Remove the dust cover and attach the hose to the outlet.

Downloaded from www.Manualslib.com manuals search engine

The accessory inflator hose also has a built-in air pressure gage. As soon as you start to inflate an object it will automatically read the current pressure.

Press and release the switch to turn the accessory inflator on. The indicator light will remain on while the inflator is running. Press and release the switch to turn the inflator off. Place the inflator kit tools and the hose in the pouch and store it back in the spare tire cover pocket.

If your vehicle is equipped with the air suspension system, load leveling will not function with the inflator hose attached to the inflator outlet.

⚠ CAUTION:

Inflating something too much can make it explode, and you or others could be injured. Be sure to read the inflator instructions, and inflate any object only to its recommended pressure.

Downloaded from www.Manualslib.com manuals search engine

If a Tire Goes Flat

It's unusual for a tire to "blowout" while you're driving, especially if you maintain your tires properly. If air goes out of a tire, it's much more likely to leak out slowly. But if you should ever have a "blowout," here are a few tips about what to expect and what to do:

If a front tire fails, the flat tire will create a drag that pulls the vehicle toward that side. Take your foot off the accelerator pedal and grip the steering wheel firmly. Steer to maintain lane position, and then gently brake to a stop well out of the traffic lane.

A rear blowout, particularly on a curve, acts much like a skid and may require the same correction you'd use in a skid. In any rear blowout, remove your foot from the accelerator pedal. Get the vehicle under control by steering the way you want the vehicle to go. It may be very bumpy and noisy, but you can still steer. Gently brake to a stop, well off the road if possible.

⚠ CAUTION:

Lifting a vehicle and getting under it to do maintenance or repairs is dangerous without the appropriate safety equipment and training. The jack provided with your vehicle is designed only for changing a flat tire. If it is used for anything else, you or others could be badly injured or killed if the vehicle slips off the jack. Use the jack provided with your vehicle only for changing a flat tire.

If a tire goes flat, the next part shows how to use your jacking equipment to change a flat tire safely.

Downloaded from www.Manualslib.com manuals search engine

Changing a Flat Tire

If a tire goes flat, avoid further tire and wheel damage by driving slowly to a level place. Turn on your hazard warning flashers.

⚠ CAUTION:

Changing a tire can be dangerous. The vehicle can slip off the jack and roll over or fall on you or other people. You and they could be badly injured or even killed. Find a level place to change your tire. To help prevent the vehicle from moving:

1. **Set the parking brake firmly.**
2. **Put the shift lever in PARK (P).**
3. **Turn off the engine and do not restart while the vehicle is raised.**

CAUTION: (Continued)

CAUTION: (Continued)

4. **Do not allow passengers to remain in the vehicle.**
5. **Put the wheel blocks at the front and rear of the tire farthest away from the one being changed. That would be the tire on the other side, at the opposite end of the vehicle.**

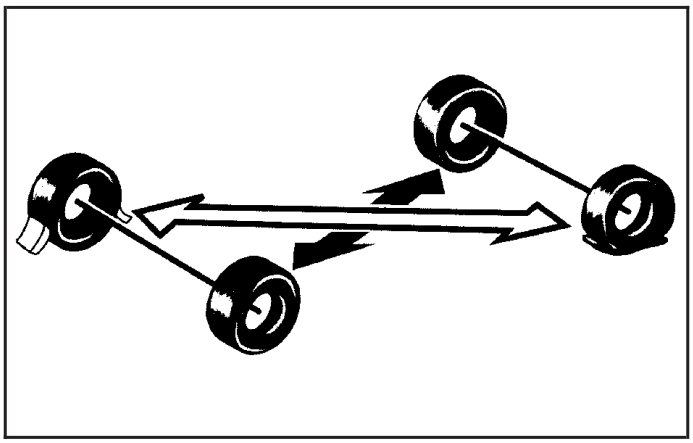

Downloaded from www.Manualslib.com manuals search engine

The following steps will tell you how to use the jack and change a tire.

Removing the Spare Tire and Tools

The equipment you'll need is behind and to the side of the driver's side second row seat. To remove the equipment, do the following:

1. Fold the driver's side second row seat down. See *60/40 Split Bench Seat on page 1-8*.

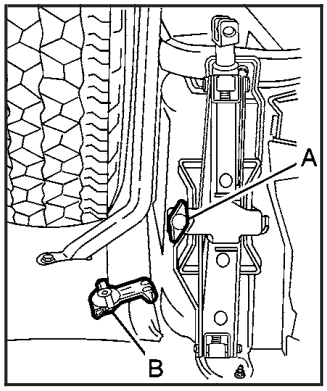

2. Turn the wingnut (A), which holds the jack, counterclockwise to release the jack.

3. Turn the wingnut (B), which holds the jack tool kit, counterclockwise to release it.

Open the tool bag and you will find the following tools which you will use to remove the spare tire and flat tire:

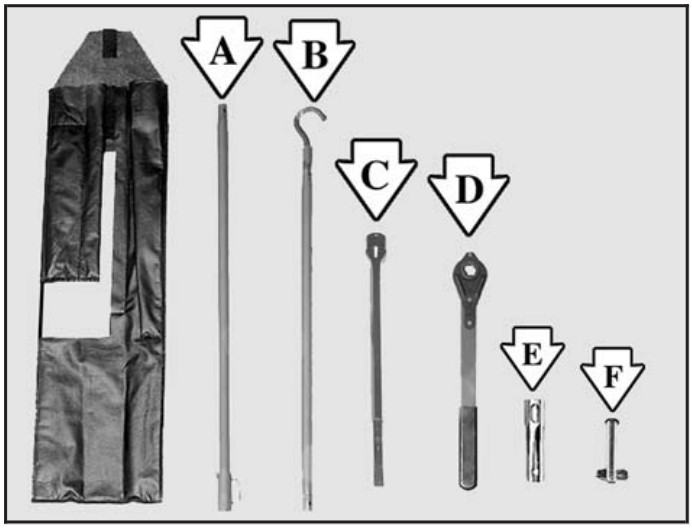

A. Jack Handle Extension (Used for Rear Flats Only)
B. Jack Handle
C. Wheel Wrench
D. Ratchet
E. Spanner Wrench
F. Locking Pin (If Equipped) Not used for tire changing procedure. See "Power Winch Platform" under *If You Are Stuck: In Sand, Mud, Ice or Snow on page 4-56*.

Downloaded from www.Manualslib.com manuals search engine

The spare tire and wheel blocks are stored in the rear cargo area. Remove the tire cover to get to them.

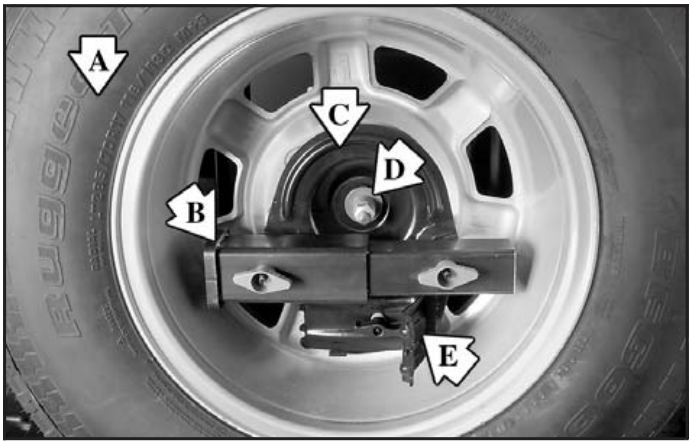

A. Spare or Flat Tire
B. Receiver Extension (If Equipped) Not used for tire changing procedure. See “Receiver Extension” under *If You Are Stuck: In Sand, Mud, Ice or Snow on page 4-56*.
C. Tire Retainer Plate
D. Nut
E. Wheel Blocks

Follow the instructions to remove the wheel blocks and spare tire:

1. Remove the wheel blocks from the tire retainer plate by turning the wingnut counterclockwise.

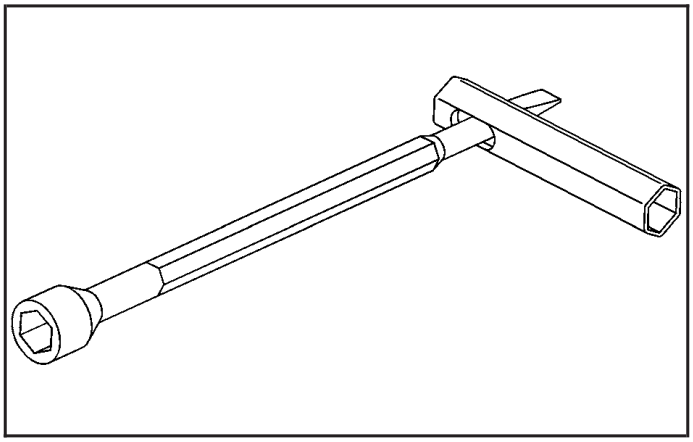

2. Place the flat end of the wheel wrench through the hole in the spanner wrench.

Downloaded from www.Manualslib.com manuals search engine

3. Place the end of the spanner wrench on the nut and then turn the wheel wrench counterclockwise to loosen the nut holding the tire to the carrier.

4. Pull off the tire retainer plate and set it aside. Remove the spare tire from the wheel carrier.
5. Put the spare tire near the flat tire.

Use the art and text following to finish changing a flat tire.

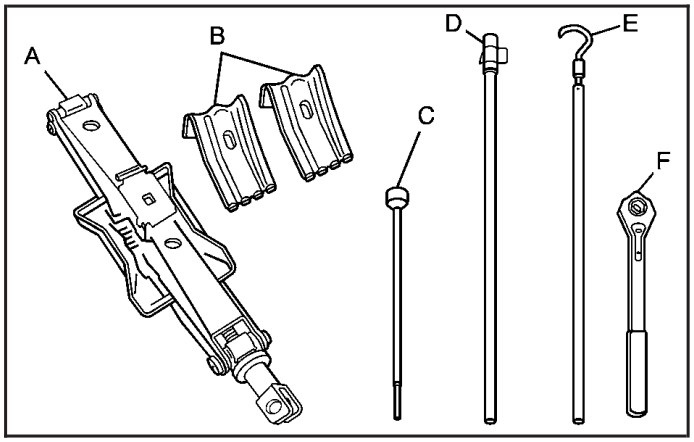

The tools you'll be using include the jack (A), the wheel blocks (B), the wheel wrench (C), jack handle extension (D), the jack handle (E) and the ratchet (F).

Before proceeding, be sure to set the wheel blocks (B) on the appropriate tire as shown previously.

Downloaded from www.Manualslib.com manuals search engine

Removing the Flat Tire and Installing the Spare Tire

1. To remove the center cap, place the flat end of the wheel wrench in the slot on the wheel and gently pry the center cap out.

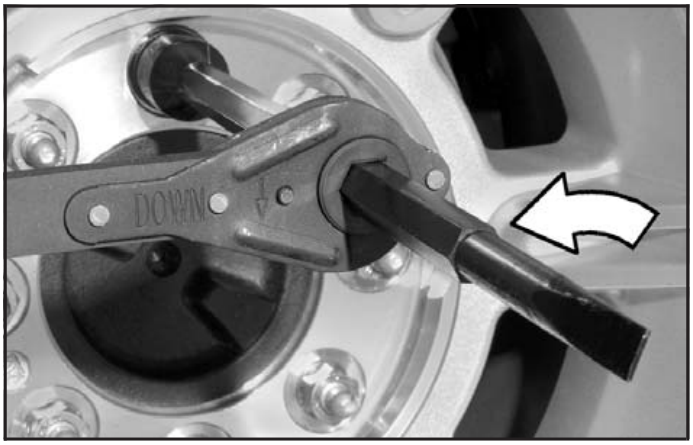

2. Slide the ratchet onto the wheel wrench with the DOWN mark facing you.
3. Turn the ratchet counterclockwise to loosen the wheel nuts. Don't remove them yet.

   You will now need to jack the vehicle up using the instructions following.
4. Assemble the jack and tools as follows:

   Front Flat Tire: Attach the jack handle (E) with the hook end connected to the u-hook/clevis on the jack (A). Slide the ratchet (F) onto the jack handle (E) with the UP mark facing you.

Downloaded from www.Manualslib.com manuals search engine

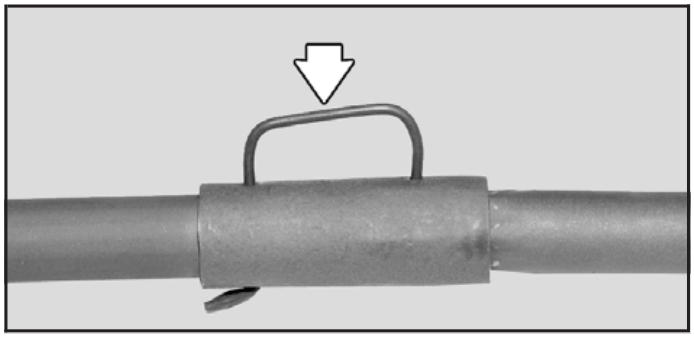

Rear Flat Tire: Attach the jack handle extension (D) to the jack handle (E) and then press the clip (arrow) so it engages. Then attach the jack handle (E) with the hook end connected to the u-hook/clevis on the jack (A). Slide the ratchet (F) onto the jack handle extension (D) with the UP mark facing you.

5. Turn the ratchet (F) clockwise to raise the jack head to the lifting point.

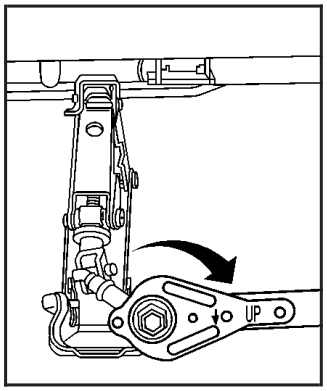

Front Position

Front Flat Tire: Position the jack under the vehicle on the frame behind the flat tire where the frame sections overlap. See the graphic following for an approximate measurement of the jack location on the frame.

Downloaded from www.Manualslib.com manuals search engine

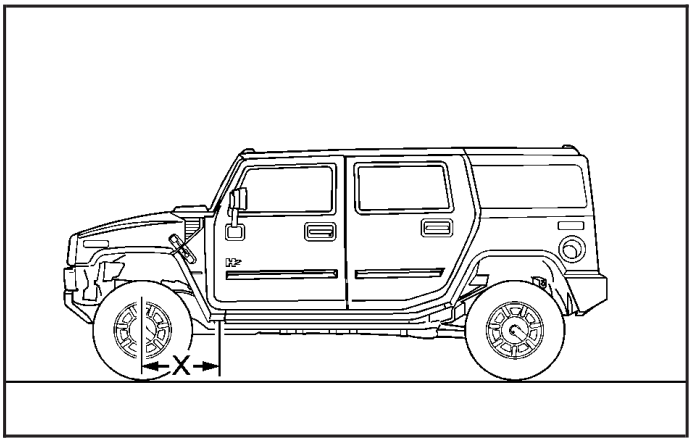

X= 28.5 inches (72.0 cm)

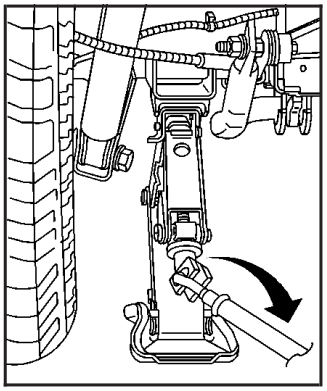

Rear Position

Rear Flat Tire: Place the jack under the curved rear axle pad. Make sure the jack head is positioned so that the rear axle pad is resting securely on the jack head.

⚠ CAUTION:

Getting under a vehicle when it is jacked up is dangerous. If the vehicle slips off the jack you could be badly injured or killed. Never get under a vehicle when it is supported only by a jack.

Downloaded from www.Manualslib.com manuals search engine

⚠ CAUTION:

Raising your vehicle with the jack improperly positioned can damage the vehicle and even make the vehicle fall. To help avoid personal injury and vehicle damage, be sure to fit the jack lift head into the proper location before raising the vehicle.

6. Turn the ratchet clockwise to raise the vehicle. Raise the vehicle far enough off the ground so there is enough room for the spare tire to clear the ground.

7. Remove all the wheel nuts and take off the flat tire.

Downloaded from www.Manualslib.com manuals search engine

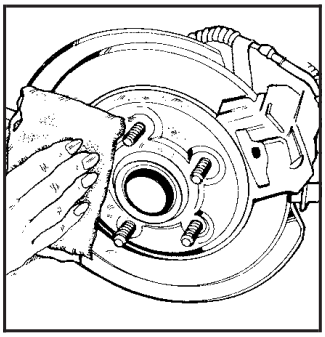

8. Remove any rust or dirt from the wheel bolts, mounting surfaces and spare wheel.

⚠ CAUTION:

Rust or dirt on the wheel, or on the parts to which it is fastened, can make the wheel nuts become loose after a time. The wheel could come off and cause an accident. When you change a wheel, remove any rust or dirt from the places where the wheel attaches to the vehicle. In an emergency, you can use a cloth or a paper towel to do this; but be sure to use a scraper or wire brush later, if you need to, to get all the rust or dirt off.

⚠ CAUTION:

Never use oil or grease on studs or nuts. If you do, the nuts might come loose. Your wheel could fall off, causing a serious accident.

Downloaded from www.Manualslib.com manuals search engine

9. After mounting the spare, put the wheel nuts back on with the rounded end of the nuts toward the wheel.

Tighten each wheel nut by hand. Then use the ratchet/wheel wrench to tighten the nuts, with the UP mark facing you, clockwise until the wheel is held against the hub. You will not be tightening the nuts fully yet.

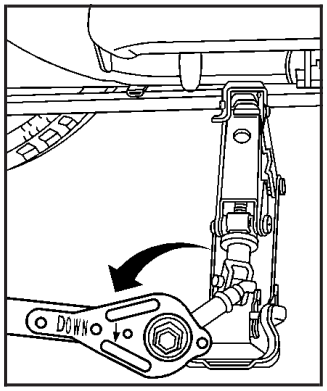

Front Position

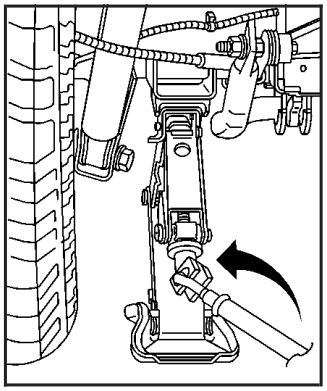

Rear Position

10. Lower the vehicle by turning the ratchet counterclockwise, with the DOWN mark facing you. Lower the jack completely.

Downloaded from www.Manualslib.com manuals search engine

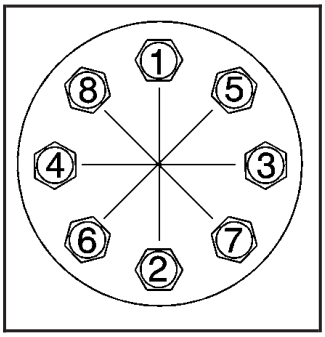

11. Tighten the nuts firmly in a crisscross sequence as shown by turning the ratchet clockwise, with the UP mark facing you.

⚠ CAUTION:

Incorrect wheel nuts or improperly tightened wheel nuts can cause the wheel to come loose and even come off. This could lead to an accident. Be sure to use the correct wheel nuts. If you have to replace them, be sure to get new GM original equipment wheel nuts. Stop somewhere as soon as you can and have the nuts tightened with a torque wrench to the proper torque specification. See "Capacities and Specifications" in the Index for wheel nut torque specification.

Notice: **Improperly tightened wheel nuts can lead to brake pulsation and rotor damage. To avoid expensive brake repairs, evenly tighten the wheel nuts in the proper sequence and to the proper torque specification. See "Capacities and Specifications" in the index for the wheel nut torque specification.**

12. When you install the wheel and tire, you must also reinstall the center cap. Place the cap on the wheel and tap it into place until it sits flush with the wheel.

Downloaded from www.Manualslib.com manuals search engine

Storing a Flat or Spare Tire and Tools

Use the art and text following to help you store the flat or spare tire and tools back in their proper spot when you are done.

Store the flat or spare tire back inside the vehicle on the spare tire mount.

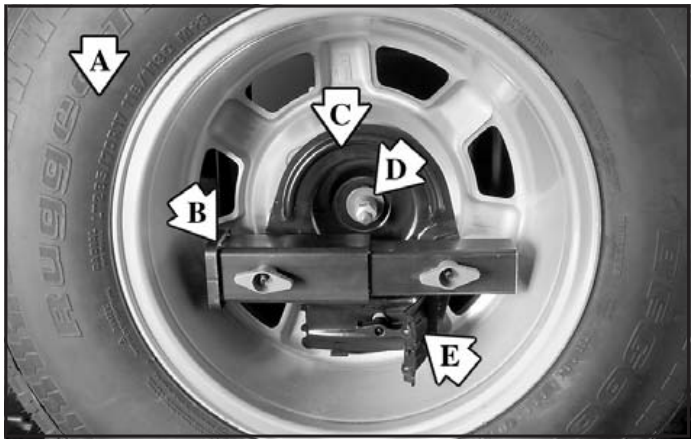

A. Spare or Flat Tire
B. Receiver Extension (If Equipped)
C. Tire Retainer Plate
D. Nut
E. Wheel Blocks

1. Slide the flat or spare tire (A) onto the tire carrier.
2. Slide the tire retainer plate (C) into the wheel opening. Be sure that the stud attached to the tire carrier passes through the hole in the tire retainer plate.
3. Tighten the nut (D) by hand until the tire retainer plate (C) is snug against the wheel.

Downloaded from www.Manualslib.com manuals search engine

Then use the ratchet and spanner to tighten the nut firmly. Try to move the tire back and forth slightly to be sure it is secure.

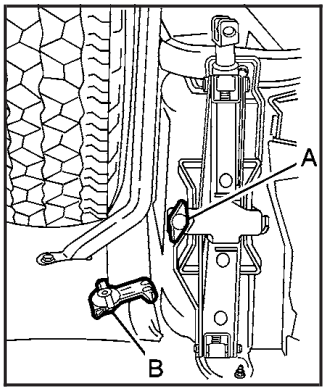

3. Tighten the wingnut (A) until the jack is securely fastened.

4. Reattach the wheel blocks (E) to the tire retainer plate (C) and tighten the wing nut.
5. Reinstall the tire cover onto the spare or flat tire.

Follow these instructions to store the jack and tools:

1. Lower the jack completely.
2. Place the jack in the mounting bracket.
4. Place the tools in the bag.
5. Slide the securing clip over the bag and secure the bag to the floor by tightening the wingnut (B) to the stud coming out of the floor.

   In order to reduce the potential of the jack squeaking or rattling, you will need to preload the jack so it fits tightly in the mounting bracket. To do this, turn the u-hook/clevis at the top of the jack clockwise until the jack is held tight in the mounting bracket.

Downloaded from www.Manualslib.com manuals search engine

Spare Tire

Your vehicle, when new, had a fully inflated spare tire. A spare tire may lose air over time, so check its inflation pressure regularly. See *Inflation - Tire Pressure on page 5-68* and *Loading Your Vehicle on page 4-67* for information regarding proper tire inflation and loading your vehicle. For instruction on how to remove, install or store a spare tire, see *Changing a Flat Tire on page 5-79*.

After installing the spare tire on your vehicle, you should stop as soon as possible and make sure the spare is correctly inflated. Have the damaged or flat road tire repaired or replaced as soon as you can and installed back onto your vehicle. This way, a spare tire will be available in case you need it again.

Your vehicle may have a different size spare tire than the road tires— those originally installed on your vehicle. This spare tires was developed for use on your vehicle, so it's all right to drive on it.

If your vehicle has a spare tire that does not match your vehicle's original road tires and wheels in size and type, do not include the spare in the tire rotation.

Appearance Care

Remember, cleaning products can be hazardous. Some are toxic. Others can burst into flames if you strike a match or get them on a hot part of the vehicle. Some are dangerous if you breathe their fumes in a closed space. When you use anything from a container to clean your vehicle, be sure to follow the manufacturer's warnings and instructions. And always open your doors or windows when you are cleaning the inside.

Never use these to clean your vehicle:

- Gasoline
- Benzene
- Naphtha
- Carbon Tetrachloride
- Acetone
- Paint Thinner
- Turpentine
- Lacquer Thinner
- Nail Polish Remover

They can all be hazardous — some more than others — and they can all damage your vehicle, too.

Downloaded from www.Manualslib.com manuals search engine

Do not use any of these unless this manual says you can. In many uses, these will damage your vehicle:

- Alcohol
- Laundry Soap
- Bleach
- Reducing Agents

Cleaning the Inside of Your Vehicle

Use a vacuum cleaner often to get rid of dust and loose dirt. Wipe vinyl, leather, plastic and painted surfaces with a clean, damp cloth.

Cleaning Fabric/Carpet

Your dealer has cleaners for the cleaning of fabric and carpet. They will clean normal spots and stains very well.

You and get GM-approved cleaning products from your dealer. See *Vehicle Care/Appearance Materials on page 5-100*.

Here are some cleaning tips:

- Always read the instructions on the cleaner label.
- Clean up stains as soon as you can — before they set.
- Carefully scrape off any excess stain.
- Use a clean cloth or sponge, and change to a clean area often. A soft brush may be used if stains are stubborn.
- If a ring forms on fabric after spot cleaning, clean the entire area immediately or it will set.

Cleaning Vinyl

Use warm water and a clean cloth.

- Rub with a clean, damp cloth to remove dirt. You may have to do this more than once.
- Things like tar, asphalt and shoe polish will stain if you don't get them off quickly. Use a clean cloth and vinyl cleaner. See your dealer for this product.

Cleaning Leather

Use a soft cloth with lukewarm water and a mild soap or saddle soap and wipe dry with a soft cloth. Then, let the leather dry naturally. Do not use heat to dry.

- For stubborn stains, use a leather cleaner.
- *Never* use oils, varnishes, solvent-based or abrasive cleaners, furniture polish or shoe polish on leather.
- Soiled or stained leather should be cleaned immediately. If dirt is allowed to work into the finish, it can harm the leather.

Downloaded from www.Manualslib.com manuals search engine

Cleaning the Top of the Instrument Panel

Use only mild soap and water to clean the top surfaces of the instrument panel. Sprays containing silicones or waxes may cause annoying reflections in the windshield and even make it difficult to see through the windshield under certain conditions.

Cleaning Interior Plastic Components

Use on a mild soap and water solution on a soft cloth or sponge. Commercial cleaners may affect the surface finish.

Cleaning Wood Panels

Use a clean cloth moistened in warm, soapy water (use mild dish washing soap). Dry the wood immediately with a clean cloth.

Cleaning the Speaker Covers

Vacuum around a speaker cover gently, so that the speaker won't be damaged. Clean spots with just water and mild soap.

Cleaning Glass Surfaces

Glass should be cleaned often. GM Glass Cleaner or a liquid household glass cleaner will remove normal tobacco smoke and dust films on interior glass. See *Vehicle Care/Appearance Materials on page 5-100*.

Notice: **If you use abrasive cleaners when cleaning glass surfaces on your vehicle, you could scratch the glass and/or cause damage to the rear window defogger and the integrated radio antenna. When cleaning the glass on your vehicle, use only a soft cloth and glass cleaner.**

Downloaded from www.Manualslib.com manuals search engine

Care of Safety Belts

Keep belts clean and dry.

⚠ CAUTION:

Do not bleach or dye safety belts. If you do, it may severely weaken them. In a crash, they might not be able to provide adequate protection. Clean safety belts only with mild soap and lukewarm water.

Weatherstrips

Silicone grease on weatherstrips will make them last longer, seal better, and not stick or squeak. Apply silicone grease with a clean cloth at least every six months. During very cold, damp weather more frequent application may be required. See *Recommended Fluids and Lubricants on page 6-12*.

Cleaning the Outside of Your Vehicle

The paint finish on your vehicle provides beauty, depth of color, gloss retention and durability.

Washing Your Vehicle

The best way to preserve your vehicle's finish is to keep it clean by washing it often with lukewarm or cold water.

Don't wash your vehicle in the direct rays of the sun. Use a car washing soap. Don't use strong soaps or chemical detergents. Be sure to rinse the vehicle well, removing all soap residue completely. You can get GM-approved cleaning products from your dealer. See *Vehicle Care/Appearance Materials on page 5-100*. Don't use cleaning agents that are petroleum based, or that contain acid or abrasives. All cleaning agents should be flushed promptly and not allowed to dry on the surface, or they could stain. Dry the finish with a soft, clean chamois or an all-cotton towel to avoid surface scratches and water spotting.

High pressure car washes may cause water to enter your vehicle.

Downloaded from www.Manualslib.com manuals search engine

The overall height, width, and underbody clearances of the HUMMER H2 are similar to current General Motors' full-size light duty trucks. This means a HUMMER H2 should fit in a standard car wash. But, if your vehicle has added accessories like roof-mounted lamps, roof basket, etc., it might not fit properly in a standard car wash.

Notice: **Certain add-on accessories can change the dimensions of your vehicle. If you've added items to the outside of your vehicle, it might not fit properly in a standard car wash. Your vehicle and the car wash could be damaged. To help prevent damage, know how accessories have changed the dimensions of your vehicle and check with the car wash manager before entering a car wash.**

Notice: **If you drive your vehicle through an automatic car wash that does not have enough clearance for any roof-mounted accessories (such as off-road lamps or a roof basket) on your vehicle, you can damage your vehicle. To avoid damaging your vehicle in a car wash, remove any roof-mounted accessories if you can, and do not use an automatic car wash while roof-mounted accessories are on your vehicle. See *Cleaning the Outside of Your Vehicle on page 5-95* for more information.**

Also, see *Luggage Carrier on page 2-46* and "Off-Road Lamps" under *Exterior Lamps on page 3-13*.

Cleaning Exterior Lamps/Lenses

Use only lukewarm or cold water, a soft cloth and a car washing soap to clean exterior lamps and lenses. Follow instructions under "Washing Your Vehicle."

Finish Care

Occasional waxing or mild polishing of your vehicle by hand may be necessary to remove residue from the paint finish. You can get GM-approved cleaning products from your dealer. See *Vehicle Care/Appearance Materials on page 5-100*.

If your vehicle has a "basecoat/clearcoat" paint finish. The clearcoat gives more depth and gloss to the colored basecoat. Always use waxes and polishes that are non-abrasive and made for a basecoat/clearcoat paint finish.

Notice: **Machine compounding or aggressive polishing on a basecoat/clearcoat paint finish may damage it. Use only non-abrasive waxes and polishes that are made for a basecoat/clearcoat paint finish on your vehicle.**

Downloaded from www.Manualslib.com manuals search engine

Foreign materials such as calcium chloride and other salts, ice melting agents, road oil and tar, tree sap, bird droppings, chemicals from industrial chimneys, etc., can damage your vehicle's finish if they remain on painted surfaces. Wash the vehicle as soon as possible. If necessary, use non-abrasive cleaners that are marked safe for painted surfaces to remove foreign matter.

Exterior painted surfaces are subject to aging, weather and chemical fallout that can take their toll over a period of years. You can help to keep the paint finish looking new by keeping your vehicle garaged or covered whenever possible.

Protecting Exterior Bright Metal Parts

Bright metal parts should be cleaned regularly to keep their luster. Washing with water is all that is usually needed. However, you may use chrome polish on chrome or stainless steel trim, if necessary.

Use special care with aluminum trim. To avoid damaging protective trim, never use auto or chrome polish, steam or caustic soap to clean aluminum. A coating of wax, rubbed to high polish, is recommended for all bright metal parts.

Cleaning the Windshield, Backglass and Wiper Blades

If the windshield is not clear after using the windshield washer, or if the wiper blade chatters when running, wax, sap or other material may be on the blade or windshield.

Clean the outside of the windshield with a full-strength glass cleaning liquid. The windshield is clean if beads do not form when you rinse it with water.

Grime from the windshield will stick to the wiper blades and affect their performance. Clean the blade by wiping vigorously with a cloth soaked in full-strength windshield washer solvent. Then rinse the blade with water.

Check the wiper blades and clean them as necessary; replace blades that look worn.

Downloaded from www.Manualslib.com manuals search engine

Cleaning Aluminum or Chrome-Plated Wheels

Your vehicle will have either aluminum or chrome-plated wheels.

Keep your wheels clean using a soft clean cloth with mild soap and water. Rinse with clean water. After rinsing thoroughly, dry with a soft clean towel. A wax may then be applied.

The surface of these wheels is similar to the painted surface of your vehicle. Do not use strong soaps, chemicals, abrasive polishes, abrasive cleaners, cleaners with acid, or abrasive cleaning brushes on them because you could damage the surface. Do not use chrome polish on aluminum wheels.

Use chrome polish only on chrome-plated wheels but avoid any painted surface of the wheel, and buff off immediately after application.

Do not take your vehicle through an automatic car wash that has silicone carbide tire cleaning brushes. These brushes can also damage the surface of these wheels.

Cleaning Tires

To clean your tires, use a stiff brush with tire cleaner.

Notice: **Using petroleum-based tire dressing products on your vehicle may damage the paint finish and/or tires. When applying a tire dressing, always wipe off any overspray from all painted surfaces on your vehicle.**

Sheet Metal Damage

If your vehicle is damaged and requires sheet metal repair or replacement, make sure the body repair shop applies anti-corrosion material to parts repaired or replaced to restore corrosion protection.

Original manufacturer replacement parts will provide the corrosion protection while maintaining the warranty.

Downloaded from www.Manualslib.com manuals search engine

Finish Damage

Any stone chips, fractures or deep scratches in the finish should be repaired right away. Bare metal will corrode quickly and may develop into major repair expense.

Minor chips and scratches can be repaired with touch-up materials avaliable from your dealer. Larger areas of finish damage can be corrected in your dealer's body and paint shop.

Underbody Maintenance

Chemicals used for ice and snow removal and dust control can collect on the underbody. If these are not removed, corrosion and rust can develop on the underbody parts such as fuel lines, frame, floor pan and exhaust system even though they have corrosion protection.

At least every spring, flush these materials from the underbody with plain water. Clean any areas where mud and debris can collect. Dirt packed in close areas of the frame should be loosened before being flushed. Your dealer or an underbody car washing system can do this for you.

Chemical Paint Spotting

Some weather and atmospheric conditions can create a chemical fallout. Airborne pollutants can fall upon and attack painted surfaces on your vehicle. This damage can take two forms: blotchy, ring-shaped discolorations, and small, irregular dark spots etched into the paint surface.

Although no defect in the paint job causes this, GM will repair, at no charge to the owner, the surfaces of new vehicles damaged by this fallout condition within 12 months or 12,000 miles (20 000 km) of purchase, whichever occurs first.

Downloaded from www.Manualslib.com manuals search engine

Vehicle Care/Appearance Materials

See your GM dealer for more information on purchasing the following products.

Description	Usage
Polishing Cloth Wax-Treated	Interior and exterior polishing cloth.
Tar and Road Oil Remover	Removes tar, road oil and asphalt.
Chrome Cleaner and Polish	Use on chrome or stainless steel.
White Sidewall Tire Cleaner	Removes soil and black marks from whitewalls.
Vinyl Cleaner	Cleans vinyl tops, upholstery and convertible tops.
Glass Cleaner	Removes dirt, grime, smoke and fingerprints.
Chrome and Wire Wheel Cleaner	Removes dirt and grime from chrome wheels and wire wheel covers.
Finish Enhancer	Removes dust, fingerprints, and surface contaminants. Spray on wipe off.
Swirl Remover Polish	Removes swirl marks, fine scratches and other light surface contamination.
Cleaner Wax	Removes light scratches and protects finish.
Foaming Tire Shine Low Gloss	Cleans, shines and protects in one easy step, no wiping necessary.
Wash Wax Concentrate	Medium foaming shampoo. Cleans and lightly waxes. Biodegradable and phosphate free.
Spot Lifter	Quickly and easily removes spots and stains from carpets, vinyl and cloth upholstery.
Odor Eliminator	Odorless spray odor eliminator used on fabrics, vinyl, leather and carpet.
See your General Motors parts department for these products. See *Recommended Fluids and Lubricants on page 6-12*.	

Downloaded from www.Manualslib.com manuals search engine

Vehicle Identification

Vehicle Identification Number (VIN)

This is the legal identifier for your vehicle. It appears on a plate in the front corner of the instrument panel, on the driver's side. You can see it if you look through the windshield from outside your vehicle. The VIN also appears on the Vehicle Certification and Service Parts labels and the certificates of title and registration.

Engine Identification

The 8th character in your VIN is the engine code. This code will help you identify your engine, specifications and replacement parts.

Service Parts Identification Label

You'll find this label located in the glove box. It's very helpful if you ever need to order parts. On this label is:

- your VIN,
- the model designation,
- paint information and
- a list of all production options and special equipment.

Be sure that this label is not removed from the vehicle.

Electrical System

Add-On Electrical Equipment

Notice: **Don't add anything electrical to your vehicle unless you check with your dealer first. Some electrical equipment can damage your vehicle and the damage wouldn't be covered by your warranty. Some add-on electrical equipment can keep other components from working as they should.**

Your vehicle has an air bag system. Before attempting to add anything electrical to your vehicle, see *Servicing Your Air Bag-Equipped Vehicle on page 1-72*.

Downloaded from www.Manualslib.com manuals search engine

Windshield Wiper Fuses

The windshield wiper motor is protected by an internal circuit breaker and a fuse. If the motor overheats due to heavy snow, etc., the wiper will stop until the motor cools. If the overload is caused by some electrical problem and not snow, etc., be sure to get it fixed.

Power Windows and Other Power Options

Circuit breakers protect the power windows and other power accessories. When the current load is too heavy, the circuit breaker opens and closes, protecting the circuit until the problem is fixed or goes away.

Fuses and Circuit Breakers

The wiring circuits in your vehicle are protected from short circuits by a combination of fuses, circuit breakers and fusible thermal links. This greatly reduces the chance of fires caused by electrical problems.

Look at the silver-colored band inside the fuse. If the band is broken or melted, replace the fuse. Be sure you replace a bad fuse with a new one of the identical size and rating.

If you ever have a problem on the road and don't have a spare fuse, you can borrow one that has the same amperage. Just pick some feature of your vehicle that you can get along without – like the radio or cigarette lighter – and use its fuse, if it is the correct amperage. Replace it as soon as you can.

Downloaded from www.Manualslib.com manuals search engine

Instrument Panel Fuse Block

The fuse block access door is located on the driver's side edge of the instrument panel. Pull off the cover to access the fuse block.

To remove fuses if you don't have a fuse extractor, hold the end of the fuse between your thumb and index finger and pull straight out.

You may have spare fuses located behind the fuse block access door. These can be used to replace a bad fuse. However, make sure it is of the correct amperage.

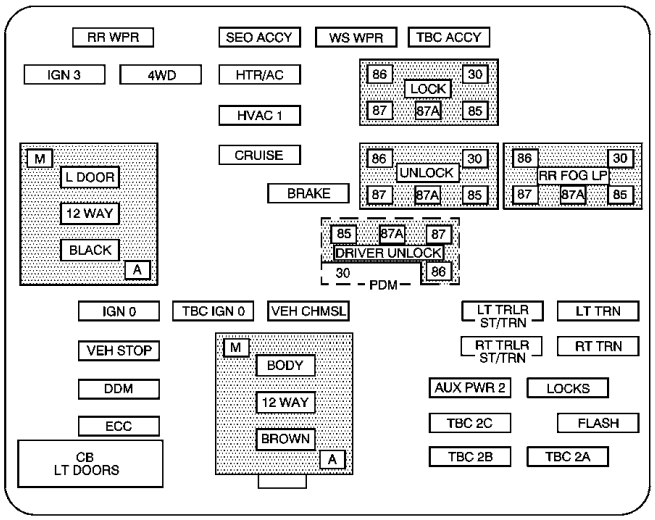

Fuses	Usage
RR Wiper	Rear Window Wiper Switch
SEO ACCY	Special Equipment Option Accessory
WS WPR	Windshield Wipers
TBC ACCY	Truck Body Controller Accessory
IGN 3	Rear Heated Seats Module
4WD	Four-Wheel Drive Switch, Air Suspension Switch/Module

Downloaded from www.Manualslib.com manuals search engine

Fuses	Usage
HTR A/C	Not Used
LOCK	Power Door Lock Relay (Lock Function)
HVAC 1	Inside Rearview Mirror, Climate Control System
L DOOR	Driver's Door Harness Connection
CRUISE	Cruise Control
UNLOCK	Power Door Lock Relay (Unlock Function)
RR FOG LP	Not Used
BRAKE	Brake Switch
DRIVER UNLOCK	Power Door Lock Relay (Driver's Door Unlock Function)
IGN 0	Brake Transmission Shift Interlock, Powertrain Control Module, Transmission
TBC IGN 0	Truck Body Controller
VEH CHMSL	Vehicle and Trailer High Mounted Stoplamp
LT TRLR ST/TRN	Left Turn Signal/Stop Trailer
LT TRN	Left Turn Signals and Sidemarkers

Fuses	Usage
VEH STOP	Vehicle Stoplamps, Brake Module, Electronic Throttle Control Module
RT TRLR ST/TRN	Right Turn Signal/Stop Trailer
RT TRN	Right Turn Signals and Sidemarkers
BODY	Harness Connector
DDM	Driver Door Module
AUX PWR 2	Instrument Panel Outlets, Rear Cargo Area Power Outlets
LOCKS	Rear Doors and Liftgate Power Lock Relay Feed
ECC	Liftgate
TBC 2C	Truck Body Controller
FLASH	Flasher Module
CB LT DOORS	Left Rear Power Window Circuit Breaker and Driver Door Module
TBC 2B	Truck Body Controller
TBC 2A	Truck Body Controller

Downloaded from www.Manualslib.com manuals search engine

Center Instrument Panel Fuse Block

The center instrument panel utility block is located underneath the instrument panel, to the left of the steering column.

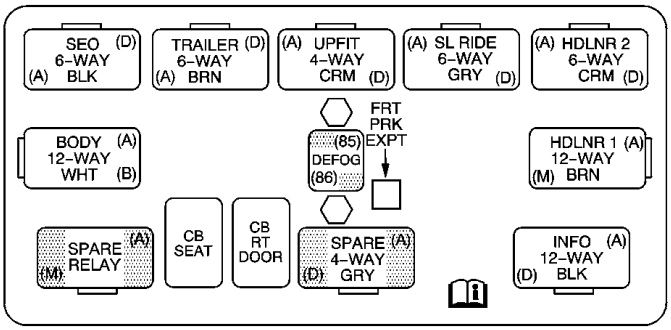

Device	Usage
SEO	Special Equipment Option/Off-road Lamps Harness Connector
TRAILER	Trailer Brake Wiring
UPFIT	Upfitter (Not Used)
SL RIDE	Ride Control (Not Used)
HDLR 2	Headliner Wiring Connector 2
BODY	Body Wiring Connector
DEFOG	Rear Defogger Relay
HDLNR 1	Headliner Wiring Connector 1
SPARE RELAY	Not Used
CB SEAT	Driver and Passenger Seat Module Circuit Breaker
CB RT DOOR	Rear Right Power Window, Passenger Door Module
SPARE	Not Used
INFO	Not Used

Downloaded from www.Manualslib.com manuals search engine

Underhood Fuse Block

The underhood fuse block in the engine compartment is located on the driver's side of the vehicle near the battery. Lift the cover for access to the fuse/relay block.

To remove fuses if you don't have a fuse extractor, hold the end of the fuse between your thumb and index finger and pull straight out.

See *Engine Compartment Overview on page 5-12* for more information on its location.

Downloaded from www.Manualslib.com manuals search engine

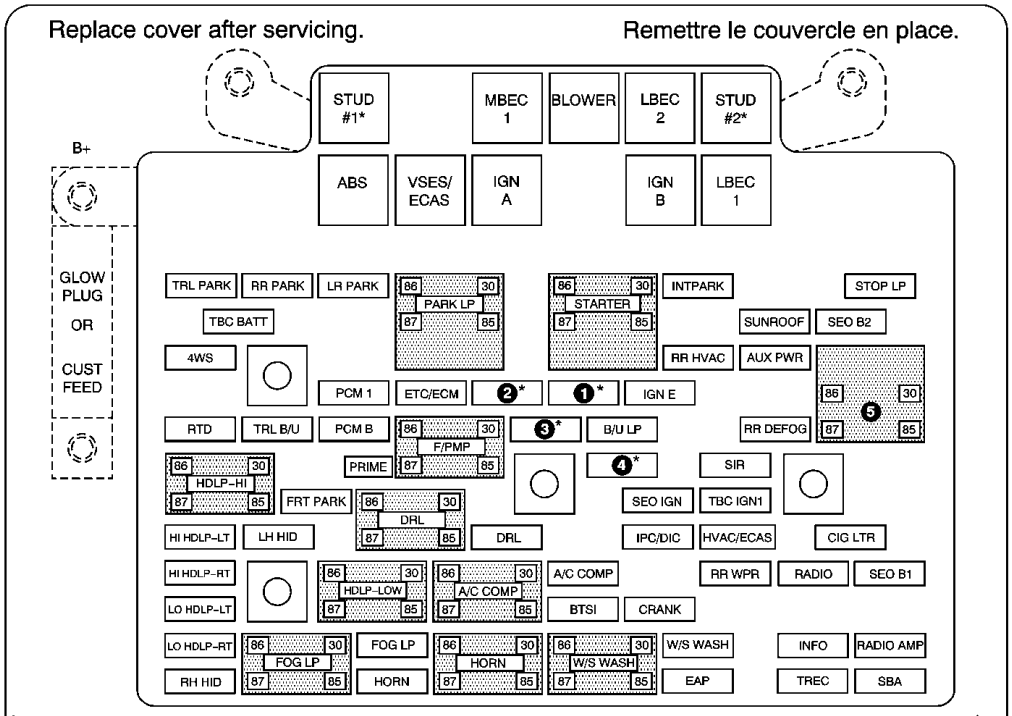

* NOTE: The function and amperage of these fuses are different for gas and diesel fueled engines. See Owners Manual for functions of studs #1 and #2.

FUNCTION/AMP–GAS
FONCTION/INTENSITÉ–ESSENCE

1. INJ 2/15A
2. INJ 1/15A
3. 02A/15A
4. 02B/15A
5. IGN 1

FUNCTION/AMP–DIESEL
FONCTION/INTENSITÉ–DIESEL

1. EDU/25A
2. ECMRPV/15A
3. FUEL HT/15A
4. ECMI/15A
5. EDU

* REMARQUE: La fonction et l'intensité de ces fusibles sont différentes pour les moteurs à essence et les moteurs diesel. Voir le Guide du propriétaire pour les fonctions des plots 1 et 2.

Downloaded from www.Manualslib.com manuals search engine

Fuses	Usage
GLOW PLUG	Not Used
CUST FEED	Gasoline Accessory Power
STUD #1	Accessory Power/Trailer Wiring
MBEC 1	Mid Bussed Electrical Center Power Feed, Front Seats, Right Doors
BLOWER	Front Climate Control Fan
LBEC 2	Left Bussed Electrical Center, Door Modules, Door Locks, Auxiliary Power Outlet—Rear Cargo Area and Instrument Panel
STUD #2	Accessory Power/Trailer Wiring Brake Feed
ABS	Anti-Lock Brakes
VSES/ECAS	Electronically Controlled Air Suspension
IGN A	Ignition Switch
IGN B	Ignition Switch

Fuses	Usage
LBEC 1	Left Bussed Electrical Center, Left Doors, Truck Body Controller, Flasher Module
TRL PARK	Parking Lamps Trailer Wiring
RR PARK	Right Rear Parking and Sidemarker Lamps
LR PARK	Left Rear Parking and Sidemarker Lamps
PARK LP	Parking Lamps Relay
STARTER	Starter Relay
INTPARK	Roof Marker Lamps
STOP LP	Stoplamps
TBC BATT	Truck Body Controller Battery Feed
SUNROOF	Sunroof
SEO B2	Off-Road Lamps
4WS	Vent Solenoid Canister
RR HVAC	Not Used
AUX PWR	Auxiliary Power Outlet — Console

Downloaded from www.Manualslib.com manuals search engine

Fuses	Usage
IGN 1	PCM Ignition
PCM 1	Powertrain Control Module
ETC/ECM	Electronic Throttle Control, Electronic Brake Controller
INJ 1	Ignition Coil, Fuel Injectors-Bank 1
INJ 2	Ignition Coil, Fuel Injectors-Bank 2
IGN E	Instrument Panel Cluster, Air Conditioning Relay, Turn Signal/Hazard Switch, Starter Relay, Electronic Brake Controller TC2 Mode Switch
RTD	Electronic Brake Controller Battery Feed
TRL B/U	Backup Lamps Trailer Wiring
PCM B	Powertrain Control Module, Fuel Pump
F/PMP	Fuel Pump (Relay)
02A	Oxygen Sensors
B/U LP	Back-up Lamps, Automatic Transmission Shift Lock Control System

Fuses	Usage
RR DEFOG	Rear Window Defogger
HDLP-HI	Headlamp High Beam Relay
PRIME	Not Used
O2B	Oxygen Sensors
SIR	Supplemental Inflatable Restraint System
FRT PARK	Front Parking Lamps, Sidemarker Lamps
DRL	Daytime Running Lamps (Relay)
SEO IGN	Rear Defog Relay
TBC IGN1	Truck Body Controller Ignition
HI HDLP-LT	High Beam Headlamp-Left
LH HID	Not Used
DRL	Daytime Running Lamps
IPC/DIC	Instrument Panel Cluster/Driver Information Center
HVAC/ECAS	Climate Control Controller/Electronically Controlled Air Suspension
CIG LTR	Cigarette Lighter

Downloaded from www.Manualslib.com manuals search engine

Fuses	Usage
HI HDLP-RT	High Beam Headlamp-Right
HDLP-LOW	Headlamp Low Beam Relay
A/C COMP	Air Conditioning Compressor Relay
A/C COMP	Air Conditioning Compressor
RR WPR	Rear Wiper/Washer
RADIO	Audio System
SEO B1	Mid Bussed Electrical Center, HomeLink, Rear Heated Seats
LO HDLP-LT	Headlamp Low Beam-Left
BTSI	Brake Transmission Shift Interlock System
CRANK	Starting System
LO HDLP-RT	Headlamp Low Beam-Right

Fuses	Usage
FOG LP	Not Used
FOG LP	Not Used
HORN	Horn Relay
W/S WASH	Windshield and Rear Window Washer Pump Relay
W/S WASH	Windshield and Rear Window Washer Pump
INFO	OnStar
RADIO AMP	Radio Amplifier
RH HID	Not Used
HORN	Horn
EAP	Not Used
TREC	All-Wheel Drive Module
SBA	Not Used

Downloaded from www.Manualslib.com manuals search engine

Capacities and Specifications

Please refer to *Recommended Fluids and Lubricants on page 6-12* for more information. All capacities are approximate.

Engine Specifications

Engine	VIN Code	Spark Plug Gap
VORTEC™ 6000 V8	U	0.040 inches (1.01 mm)

Capacities and Specifications

Application	Capacities	
	English	Metric
Cooling System	13.0 quarts	12.7 L
After refill, the level must be rechecked. See *Cooling System on page 5-30*.		
Engine Oil with Filter	6.0 quarts	5.7 L
After refill, the level must be rechecked. Add enough engine oil so that the fluid is within the proper operating range. See *Engine Oil on page 5-14*.		
Fuel Tank	32.0 gallons	121.0 L
Air Conditioning Refrigerant R-134a	1.6 lbs.	0.7 kg

Wheels and Tires

Application	Description	Torque
Wheel Nuts	8 bolts (14 mm)	140 lb ft (190 N•m)
Tire Pressure	See the Certification/Tire label on the rear edge of the driver's door.	

Downloaded from www.Manualslib.com manuals search engine

NOTES

Downloaded from www.Manualslib.com manuals search engine

Section 6 Maintenance Schedule

Maintenance Schedule 6-2
Introduction 6-2
Maintenance Requirements 6-2
Your Vehicle and the Environment 6-2
Using Your Maintenance Schedule 6-3
Scheduled Maintenance 6-4
Additional Required Services 6-6
Maintenance Footnotes 6-8
Owner Checks and Services 6-9
At Each Fuel Fill 6-9
At Least Once a Month 6-10
At Least Once a Year 6-10
Recommended Fluids and Lubricants 6-12
Normal Maintenance Replacement Parts 6-14
Engine Drive Belt Routing 6-15
Maintenance Record 6-16

Downloaded from www.Manualslib.com manuals search engine

Maintenance Schedule

Introduction

Important: Keep engine oil at the proper level and change as recommended.

Have you purchased the GM Protection Plan? The Plan supplements your new vehicle warranties. See your Warranty and Owner Assistance booklet or your dealer for details.

Maintenance Requirements

Notice: **Maintenance intervals, checks, inspections, replacement parts and recommended fluids and lubricants as prescribed in this manual are necessary to keep your vehicle in good working condition. Any damage caused by failure to follow scheduled maintenance may not be covered by warranty.**

Your Vehicle and the Environment

Proper vehicle maintenance not only helps to keep your vehicle in good working condition, but also helps the environment. All recommended maintenance is important. Improper vehicle maintenance can even affect the quality of the air we breathe. Improper fluid levels or the wrong tire inflation can increase the level of emissions from your vehicle. To help protect our environment, and to keep your vehicle in good condition, be sure to maintain your vehicle properly.

Downloaded from www.Manualslib.com manuals search engine

Using Your Maintenance Schedule

We at General Motors want to help you keep your vehicle in good working condition. But we do not know exactly how you will drive it. You may drive very short distances only a few times a week. Or you may drive long distances all the time in very hot, dusty weather. You may use your vehicle in making deliveries. Or you may drive it to work, to do errands or in many other ways.

Because of all the different ways people use their vehicles, maintenance needs vary. You may need more frequent checks and replacements. So please read the following and note how you drive. If you have any questions on how to keep your vehicle in good condition, see your GM Goodwrench dealer.

This schedule is for vehicles that:

- carry passengers and cargo within recommended limits. You will find these limits on the tire and loading information label. See *Loading Your Vehicle on page 4-67*.
- are driven on reasonable road surfaces within legal driving limits.
- are driven off-road in the recommended manner. See *Off-Road Driving on page 4-17*.
- use the recommended fuel. See *Gasoline Octane on page 5-5*.

The services in *Scheduled Maintenance on page 6-4* should be performed when indicated. See *Additional Required Services on page 6-6* and *Maintenance Footnotes on page 6-8* for further information.

⚠ CAUTION:

Performing maintenance work on a vehicle can be dangerous. In trying to do some jobs, you can be seriously injured. Do your own maintenance work only if you have the required know-how and the proper tools and equipment for the job. If you have any doubt, see your GM Goodwrench dealer to have a qualified technician do the work.

Downloaded from www.Manualslib.com manuals search engine

Some maintenance services can be complex. So, unless you are technically qualified and have the necessary equipment, you should have your GM Goodwrench dealer do these jobs.

When you go to your GM Goodwrench dealer for your service needs, you will know that GM-trained and supported service technicians will perform the work using genuine GM parts.

If you want to get service information, see *Service Publications Ordering Information on page 7-11*.

Owner Checks and Services on page 6-9 tells you what should be checked, when to check it and what you can easily do to help keep your vehicle in good condition.

The proper replacement parts, fluids and lubricants to use are listed in *Recommended Fluids and Lubricants on page 6-12* and *Normal Maintenance Replacement Parts on page 6-14*. When your vehicle is serviced, make sure these are used. All parts should be replaced and all necessary repairs done before you or anyone else drives the vehicle. We recommend the use of genuine GM parts.

Scheduled Maintenance

When the CHANGE ENGINE OIL light in the Driver Information Center (DIC) comes on, it means that service is required for your vehicle. Have your vehicle serviced as soon as possible within the next 600 miles (1 000 km). It is possible that, if you are driving under the best conditions, the engine oil life system may not indicate that vehicle service is necessary for over a year. However, your engine oil and filter must be changed at least once a year and at this time the system must be reset. Your GM Goodwrench dealer has GM-trained service technicians who will perform this work using genuine GM parts and reset the system.

If the engine oil life system is ever reset accidentally, you must service your vehicle within 3,000 miles (5 000 km) since your last service. Remember to reset the oil life system whenever the oil is changed. See *Engine Oil on page 5-14* for information on the Engine Oil Life System and resetting the system.

Downloaded from www.Manualslib.com manuals search engine

When the CHANGE ENGINE OIL light appears, certain services, checks and inspections are required. Required services are described in the following for “Maintenance I” and “Maintenance II.” Generally, it is recommended that your first service be Maintenance I, your second service be Maintenance II and that you alternate Maintenance I and Maintenance II thereafter. However, in some cases, Maintenance II may be required more often.

Maintenance I — Use Maintenance I if the CHANGE ENGINE OIL light comes on within ten months since vehicle was purchased or Maintenance II was performed.

Maintenance II — Use Maintenance II if the previous service performed was Maintenance I. Always use Maintenance II whenever the light comes on ten months or more since the last service or if the light has not come on at all for one year.

Scheduled Maintenance

Service	Maintenance I	Maintenance II
Change engine oil and filter. Reset oil life system. See *Engine Oil on page 5-14*. *An Emission Control Service.*	•	•
Lubricate chassis components. *See footnote #.*	•	•
Visually check for any leaks or damage. *See footnote (j).*	•	•
Inspect engine air cleaner filter. If necessary, replace filter. See *Engine Air Cleaner/Filter on page 5-19*. *An Emission Control Service. See footnote †.*	•	•
Rotate tires and check inflation pressures and wear. See *Tires on page 5-60*.	•	•
Inspect brake system. *See footnote (a).*	•	•
Check engine coolant and windshield washer fluid levels and add fluid as needed.	•	•
Perform any needed additional services. See “Additional Required Services” in this section.	•	•

Downloaded from www.Manualslib.com manuals search engine

Scheduled Maintenance (cont'd)

Service	Maintenance I	Maintenance II
Inspect suspension and steering components. *See footnote (b).*		•
Inspect engine cooling system. *See footnote (c).*		•
Inspect wiper blades. *See footnote (d).*		•
Inspect restraint system components. *See footnote (e).*		•
Lubricate body components. *See footnote (f).*		•
Check transmission fluid level and add fluid as needed.		•

Additional Required Services

The following services should be performed at the first maintenance service (I or II) after the indicated miles (kilometers) shown for each item.

Additional Required Services

Service and Miles (Kilometers)	25,000 (41 500)	50,000 (83 000)	75,000 (125 000)	100,000 (166 000)	125,000 (207 500)	150,000 (240 000)
Inspect fuel system for damage or leaks.	•	•	•	•	•	•
Inspect exhaust system for loose or damaged components.	•	•	•	•	•	•
Change automatic transmission fluid and filter (severe service). *See footnote (h).*		•		•		•

Downloaded from www.Manualslib.com manuals search engine

Additional Required Services (cont'd)

Service and Miles (Kilometers)	25,000 (41 500)	50,000 (83 000)	75,000 (125 000)	100,000 (166 000)	125,000 (207 500)	150,000 (240 000)
Change automatic transmission fluid and filter (normal service).				•		
Change transfer case fluid. *See footnote (g).*		•		•		•
Replace engine air cleaner filter. See *Engine Air Cleaner/Filter on page 5-19*. *An Emission Control Service.*				•		
Replace spark plugs and inspect spark plug wires. *An Emission Control Service.*				•		
Engine cooling system service (or every 5 years, whichever occurs first). *An Emission Control Service. See footnote (i).*						•
Inspect engine accessory drive belt. *An Emission Control Service.*						•

Downloaded from www.Manualslib.com manuals search engine

Maintenance Footnotes

† *The U.S. Environmental Protection Agency or the California Air Resources Board has determined that the failure to perform this maintenance item will not nullify the emission warranty or limit recall liability prior to the completion of the vehicle's useful life. We, however, urge that all recommended maintenance services be performed at the indicated intervals and the maintenance be recorded.*

Lubricate the front suspension, ball joints, steering linkage, transmission shift linkage and parking brake cable guides. Ball joints should not be lubricated unless their temperature is 10°F (-12°C) or higher, or they could be damaged.

(a) *Visually inspect brake lines and hoses for proper hook-up, binding, leaks, cracks, chafing, etc. Inspect disc brake pads for wear and rotors for surface condition. Inspect other brake parts, including calipers, parking brake, etc.*

(b) *Visually inspect front and rear suspension and steering system for damaged, loose or missing parts, signs of wear or lack of lubrication. Inspect power steering lines and hoses for proper hook-up, binding, leaks, cracks, chafing, etc. Visually check constant velocity joints, rubber boots and axle seals for leaks.*

(c) *Visually inspect hoses and have them replaced if they are cracked, swollen or deteriorated. Inspect all pipes, fittings and clamps; replace with genuine GM parts as needed. To help ensure proper operation, a pressure test of the cooling system and pressure cap and cleaning the outside of the radiator and air conditioning condenser is recommended at least once a year.*

(d) *Visually inspect wiper blades for wear or cracking. Replace blade inserts that appear worn or damaged or that streak or miss areas of the windshield.*

(e) *Make sure the safety belt reminder light and all your belts, buckles, latch plates, retractors and anchorages are working properly. Look for any other loose or damaged safety belt system parts. If you see anything that might keep a safety belt system from doing its job, have it repaired. Have any torn or frayed safety belts replaced. Also look for any opened or broken air bag coverings, and have them repaired or replaced. (The air bag system does not need regular maintenance.)*

(f) *Lubricate all key lock cylinders, hood latch assembly, secondary latch, pivots, spring anchor, release pawl, rear compartment hinges, outer liftgate handle pivot points, rear door detent link, roller mechanism, liftgate handle pivot points, latch bolt, fuel door hinge, cargo door hinge, locks and folding seat hardware. More frequent lubrication may be required when exposed to a corrosive environment. Applying silicone grease on weatherstrips with a clean cloth will make them last longer, seal better and not stick or squeak.*

Downloaded from www.Manualslib.com manuals search engine

(g) *Add fluid as needed. (A fluid loss could indicate a problem; repair as needed.) Check vent hose at transfer case for kinks and proper installation.*

(h) *Change automatic transmission fluid and filter if the vehicle is mainly driven under one or more of these conditions:*

- *In heavy city traffic where the outside temperature regularly reaches 90°F (32°C) or higher.*
- *In hilly or mountainous terrain.*
- *When doing frequent trailer towing.*
- *Uses such as found in taxi, police or delivery service.*

(i) *Drain, flush and refill cooling system. See Engine Coolant on page 5-24* for what to use. Inspect hoses. Clean radiator, condenser, pressure cap and filler neck. Pressure test the cooling system and pressure cap.

(j) *A fluid loss in any vehicle system could indicate a problem. Have the system inspected and repaired and the fluid level checked. Add fluid if needed.*

Owner Checks and Services

These owner checks and services should be performed at the intervals specified to help ensure the safety, dependability and emission control performance of your vehicle. Your GM Goodwrench dealer can assist you with these checks and services.

Be sure any necessary repairs are completed at once. Whenever any fluids or lubricants are added to your vehicle, make sure they are the proper ones, as shown in *Recommended Fluids and Lubricants on page 6-12*.

At Each Fuel Fill

It is important to perform these underhood checks at each fuel fill.

Engine Oil Level Check

Check the engine oil level and add the proper oil if necessary. See *Engine Oil on page 5-14* for further details.

Notice: **It is important to check your oil regularly and keep it at the proper level. Failure to keep your engine oil at the proper level can cause damage to your engine not covered by your warranty.**

Downloaded from www.Manualslib.com manuals search engine

Engine Coolant Level Check

Check the engine coolant level and add DEX-COOL® coolant mixture if necessary. See *Engine Coolant on page 5-24* for further details.

Windshield Washer Fluid Level Check

Check the windshield washer fluid level in the windshield washer tank and add the proper fluid if necessary.

At Least Once a Month

Tire Inflation Check

Visually inspect your tires and make sure tires are inflated to the correct pressures. Do not forget to check your spare tire. See *Tires on page 5-60* for further details. Check to make sure the spare tire is stored securely. Push, pull and then try to rotate or turn the spare tire. If it moves, tighten it. See *Changing a Flat Tire on page 5-79*.

At Least Once a Year

Starter Switch Check

⚠ CAUTION:

When you are doing this inspection, the vehicle could move suddenly. If the vehicle moves, you or others could be injured.

1. Before you start, be sure you have enough room around the vehicle.
2. Firmly apply both the parking brake and the regular brake. See *Parking Brake on page 2-29* if necessary.

   Do not use the accelerator pedal, and be ready to turn off the engine immediately if it starts.
3. Try to start the engine in each gear. The starter should work only in PARK (P) or NEUTRAL (N). If the starter works in any other position, contact your GM Goodwrench dealer for service.

Downloaded from www.Manualslib.com manuals search engine

Automatic Transmission Shift Lock Control System Check

⚠ CAUTION:

When you are doing this inspection, the vehicle could move suddenly. If the vehicle moves, you or others could be injured.

1. Before you start, be sure you have enough room around the vehicle. It should be parked on a level surface.
2. Firmly apply the parking brake. See *Parking Brake on page 2-29* if necessary.

   Be ready to apply the regular brake immediately if the vehicle begins to move.
3. With the engine off, turn the key to the RUN position, but do not start the engine. Without applying the regular brake, try to move the shift lever out of PARK (P) with normal effort. If the shift lever moves out of PARK (P), contact your GM Goodwrench dealer for service.

Ignition Transmission Lock Check

While parked, and with the parking brake set, try to turn the ignition key to LOCK in each shift lever position.

- The key should turn to LOCK only when the shift lever is in PARK (P).
- The key should come out only in LOCK.

Contact your GM Goodwrench dealer if service is required.

Parking Brake and Automatic Transmission Park (P) Mechanism Check

⚠ CAUTION:

When you are doing this check, your vehicle could begin to move. You or others could be injured and property could be damaged. Make sure there is room in front of your vehicle in case it begins to roll. Be ready to apply the regular brake at once should the vehicle begin to move.

Downloaded from www.Manualslib.com manuals search engine

Park on a fairly steep hill, with the vehicle facing downhill. Keeping your foot on the regular brake, set the parking brake.

- To check the parking brake's holding ability: With the engine running and transmission in NEUTRAL (N), slowly remove foot pressure from the regular brake pedal. Do this until the vehicle is held by the parking brake only.
- To check the PARK (P) mechanism's holding ability: With the engine running, shift to PARK (P). Then release the parking brake followed by the regular brake.

Contact your GM Goodwrench dealer if service is required.

Underbody Flushing Service

At least every spring, use plain water to flush any corrosive materials from the underbody. Take care to clean thoroughly any areas where mud and other debris can collect.

Recommended Fluids and Lubricants

Fluids and lubricants identified below by name, part number or specification may be obtained from your GM Goodwrench dealer.

Usage	Fluid/Lubricant
Engine Oil	Engine oil which meets GM Standard GM6094M and displays the American Petroleum Institute Certified for Gasoline Engines starburst symbol. To determine the proper viscosity for your vehicle's engine, see *Engine Oil on page 5-14*.
Engine Coolant	50/50 mixture of clean, drinkable water and use only DEX-COOL® Coolant. See *Engine Coolant on page 5-24*.
Hydraulic Brake System	Delco Supreme 11 Brake Fluid or equivalent DOT-3 brake fluid.
Windshield Washer Solvent	GM Optikleen® Washer Solvent.
Power Steering System	GM Power Steering Fluid (GM Part No. U.S. 89021184, in Canada 89021186).

Downloaded from www.Manualslib.com manuals search engine

Usage	Fluid/Lubricant
Automatic Transmission	DEXRON®-III Automatic Transmission Fluid.
Key Lock Cylinders	Multi-Purpose Lubricant, Superlube (GM Part No. U.S. 12346241, in Canada 10953474).
Chassis Lubrication	Chassis Lubricant (GM Part No. U.S. 12377985, in Canada 88901242) or lubricant meeting requirements of NLGI #2, Category LB or GC-LB.
Front and Rear Axle	SAE 75W-90 Synthetic Axle Lubricant (GM Part No. U.S. 12378261, in Canada 10953455) meeting GM Specification 9986115.
Transfer Case	DEXRON®-III Automatic Transmission Fluid.

Usage	Fluid/Lubricant
Front Axle Propshaft Spline	Spline Lubricant, Special Lubricant (GM Part No. U.S. 12345879, in Canada 10953511) or lubricant meeting requirements of GM 9985830.
Hood Hinges	Multi-Purpose Lubricant, Superlube (GM Part No. U.S. 12346241, in Canada 10953474).
Outer Tailgate Handle Pivot Points	Multi-Purpose Lubricant, Superlube (GM Part No. U.S. 12346241, in Canada 10953474).
Weatherstrip Conditioning	Dielectric Silicone Grease (GM Part No. U.S. 12345579, in Canada 992887).
Weatherstrip Squeaks	Synthetic Grease with Teflon, Superlube (GM Part No. U.S. 12371287, in Canada 10953437).

Downloaded from www.Manualslib.com manuals search engine

Normal Maintenance Replacement Parts

Replacement parts identified below by name, part number or specification can be obtained from your dealer.

Part	ACDelco® Part No.	GM Part No.
Engine Oil Filter	PF44	25010633
Engine Air Cleaner/Filter	—	88944151
Spark Plugs	41–985	12571164
Fuel Filter	GF626	25121792
Windsheield Wiper Blades 17.0 inches (43.0 cm)	—	15706394
Rear Wiper Blades 11.0 inches (28.0 cm)	—	15174476

Downloaded from www.Manualslib.com manuals search engine

Engine Drive Belt Routing

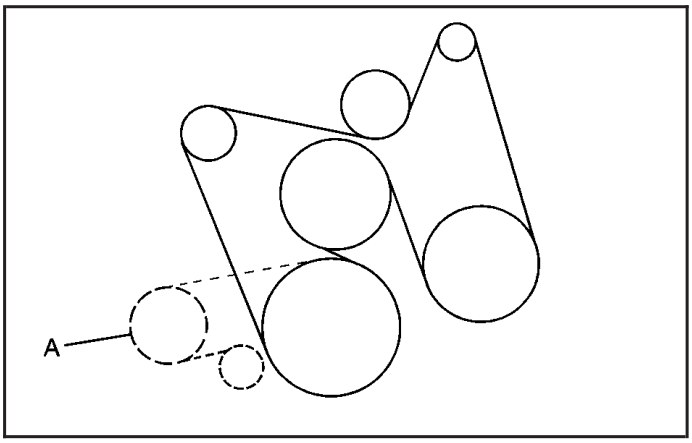

(A) Air Conditioning Compressor

Downloaded from www.Manualslib.com manuals search engine

Maintenance Record

After the scheduled services are performed, record the date, odometer reading, who performed the service and the type of services performed in the boxes provided. See *Maintenance Requirements on page 6-2* in this section. Any additional information from *Owner Checks and Services on page 6-9* can be added on the following record pages. Also, you should retain all maintenance receipts.

Maintenance Record

Date	Odometer Reading	Serviced By	Maintenance I or Maintenance II	Services Performed

Downloaded from www.Manualslib.com manuals search engine

Maintenance Record (cont'd)

Date	Odometer Reading	Serviced By	Maintenance I or Maintenance II	Services Performed

Downloaded from www.Manualslib.com manuals search engine

Maintenance Record (cont'd)

Date	Odometer Reading	Serviced By	Maintenance I or Maintenance II	Services Performed

Downloaded from www.Manualslib.com manuals search engine

Section 7 Customer Assistance and Information

Customer Assistance and Information 7-2
Customer Satisfaction Procedure 7-2
Online Owner Center 7-3
Customer Assistance for Text Telephone (TTY) Users 7-4
Customer Assistance Offices 7-4
GM Mobility Program for Persons with Disabilities 7-5
Roadside Assistance Program 7-5
Courtesy Transportation 7-7
Vehicle Data Collection and Event Data Records 7-9
Reporting Safety Defects 7-10
Reporting Safety Defects to the United States Government 7-10
Reporting Safety Defects to the Canadian Government 7-10
Reporting Safety Defects to General Motors 7-10
Service Publications Ordering Information 7-11

Downloaded from www.Manualslib.com manuals search engine

Customer Assistance and Information

Customer Satisfaction Procedure

Your satisfaction and goodwill are important to your dealer and to HUMMER. Normally, any concerns with the sales transaction or the operation of your vehicle will be resolved by your dealer's sales or service departments. Sometimes, however, despite the best intentions of all concerned, misunderstandings can occur. If your concern has not been resolved to your satisfaction, the following steps should be taken:

STEP ONE: Discuss your concern with a member of dealership management. Normally, concerns can be quickly resolved at that level. If the matter has already been reviewed with the sales, service or parts manager, contact the owner of the dealership or the general manager.

STEP TWO: If after contacting a member of dealership management, it appears your concern cannot be resolved by the dealership without further help, contact the HUMMER Consumer Relations Manager by calling 1-866-HUMMER6 (486-6376), Customer Assistance prompt. In Canada, contact GM of Canada Customer Communication Centre in Oshawa by calling 1-800-263-3777 (English) or 1-800-263-7854 (French).

We encourage you to call the toll-free number in order to give your inquiry prompt attention. Please have the following information available to give the Customer Assistance Representative:

- Vehicle Identification Number (This is available from the vehicle registration or title, or the plate at the top left of the instrument panel and visible through the windshield.)
- Dealership name and location
- Vehicle delivery date and present mileage

When contacting HUMMER, please remember that your concern will likely be resolved at a dealer's facility. That is why we suggest you follow Step One first if you have a concern.

STEP THREE: Both General Motors and your dealer are committed to making sure you are completely satisfied with your new vehicle. However, if you continue to remain unsatisfied after following the procedure outlined in Steps One and Two, you should file with the BBB Auto Line Program to enforce any additional rights you may have. Canadian owners refer to your Warranty and Owner Assistance Information booklet for information on the Canadian Motor Vehicle Arbitration Plan (CAMVAP).

Downloaded from www.Manualslib.com manuals search engine

The BBB Auto Line Program is an out of court program administered by the Council of Better Business Bureaus to settle automotive disputes regarding vehicle repairs or the interpretation of the New Vehicle Limited Warranty. Although you may be required to resort to this informal dispute resolution program prior to filing a court action, use of the program is free of charge and your case will generally be heard within 40 days. If you do not agree with the decision given in your case, you may reject it and proceed with any other venue for relief available to you.

You may contact the BBB Auto Line Program using the toll-free telephone number or write them at the following address:

BBB Auto Line Program
Council of Better Business Bureaus, Inc.
4200 Wilson Boulevard

Suite 800

Arlington, VA 22203-1804

Telephone: 1-800- 955-5100

This program is available in all 50 states and the District of Columbia. Eligibility is limited by vehicle age, mileage and other factors. General Motors reserves the right to change eligibility limitations and/or discontinue its participation in this program.

Online Owner Center

The Owner Center is a resource for your GM ownership needs. You can find your specific vehicle information all in one place.

The Owner Center allows you to:

- Get e-mail service reminders.
- Access information about your specific vehicle, including tips and videos and an electronic version of this owner's manual. (United States only)
- Keep track of your vehicle's service history and maintenance schedule.
- Find GM dealers for service nationwide.
- Receive special promotions and privileges only available to members. (United States only)

Refer to the web for updated information.

To register your vehicle, visit www.MyGMLink.com. (United States) or My GM Canada within www.gmcanada.com (Canada).

Downloaded from www.Manualslib.com manuals search engine

Customer Assistance for Text Telephone (TTY) Users

To assist customers who are deaf, hard of hearing, or speech-impaired and who use Text Telephones (TTYs), HUMMER has TTY equipment available at its Customer Assistance Center. Any TTY user can communicate with HUMMER by dialing: 1-800-833-6537. (TTY users in Canada can dial 1-800-263-3830.)

Customer Assistance Offices

HUMMER encourages customers to call the toll-free number for assistance. If a U.S. customer wishes to write to HUMMER, the letter should be addressed to HUMMER's Customer Assistance Center.

United States – Customer Assistance

HUMMER Customer Assistance Center
P.O. Box 33171
Detroit, MI 48232-5177

1-866-HUMMER6 (486-6376)
1-800-833-6537 (For Text Telephone devices (TTYs))
Roadside Assistance: 1-866-HUMMER6 (486-6376)
Fax Number: 313-381-0022

From Puerto Rico:
1-800-496-9992 (English)
1-800-496-9993 (Spanish)
Fax Number: 313-381-0022

From U.S. Virgin Islands:
1-800-496-9994
Fax Number: 313-381-0022

Canada – Customer Assistance

General Motors of Canada Limited
Customer Communication Centre, 163-005
1908 Colonel Sam Drive
Oshawa, Ontario L1H 8P7

1-800-263-3777 (English)
1-800-263-7854 (French)
1-800-263-3830 (For Text Telephone devices (TTYs))
Roadside Assistance: 1-800-268-6800

Overseas – Customer Assistance

Please contact the local General Motors Business Unit.

Mexico, Central America and Caribbean Islands/Countries (Except Puerto Rico and U.S. Virgin Islands) – Customer Assistance

General Motors de Mexico, S. de R.L. de C.V.
Customer Assistance Center
Paseo de la Reforma # 2740
Col. Lomas de Bezares
C.P. 11910, Mexico, D.F.
01-800-508-0000
Long Distance: 011-52-53 29 0 800

Downloaded from www.Manualslib.com manuals search engine

GM Mobility Program for Persons with Disabilities

This program, available to qualified applicants, can reimburse you up to $1,000 toward eligible aftermarket driver or passenger adaptive equipment you may require for your vehicle (hand controls, wheelchair/scooter lifts, etc.).

This program can also provide you with free resource information, such as area driver assessment centers and mobility equipment installers. The offer is available for a limited period of time from the date of vehicle purchase/lease. For more details, or to determine your vehicle's eligibility, see your GM dealer or call the GM Mobility Assistance Center at 1-800-323-9935. Text telephone (TTY) users, call 1-800-833-9935.

GM of Canada also has a Mobility Program. Call 1-800-GM-DRIVE (463-7483) for details. All TTY users call 1-800-263-3830.

Roadside Assistance Program

Security While You Travel

1-866-HUMMER6 (486-6376)

As the proud owner of a new HUMMER vehicle, you are automatically enrolled in the HUMMER Roadside Assistance program. This value-added service is intended to provide you with peace of mind as you drive in the city or travel the open road. HUMMER's Roadside Assistance toll-free number is staffed by courteous and capable Roadside Assistance Representatives who are available 24 hours a day, 365 days a year.

We will provide the following services during the Bumper-to-Bumper warranty period, at no expense to you:

- **Fuel Delivery:** Delivery of enough fuel ($5 maximum) for the customer to get to the nearest service station.
- **Lock-out Service (identification required):** Replacement keys or locksmith service will be covered at no charge if you are unable to gain entry into your vehicle. Delivery of the replacement key will be covered within 10 miles.

Downloaded from www.Manualslib.com manuals search engine

- **Emergency Tow:** Tow to the nearest dealership for warranty service or in the event of a vehicle-disabling accident. Assistance when the vehicle is mired in sand, mud or snow.
- **Flat Tire Change:** Installation of a spare tire will be covered at no charge. (The customer is responsible for the repair or replacement of the tire if not covered by a warrantable failure.)
- **Jump Start:** No-start occurrences which require a battery jump start will be covered at no charge.
- **Dealer Locator Service**
- **Trip Routing:** Your Roadside Assistance Representative can provide you with specific information regarding this feature.
- **Trip Interruption Expense Benefits:** Your Roadside Assistance Representative can provide you with specific information regarding this feature.

In many instances, mechanical failures are covered under HUMMER's Bumper-to-Bumper warranty. However, when other services are utilized, our Roadside Assistance Representatives will explain any payment obligations you might incur.

For prompt and efficient assistance when calling, please provide the following to the Roadside Assistance Representative:

- Your name, home address, and home telephone number
- Telephone number of your location
- Location of the vehicle
- Model, year, color, and license plate number
- Mileage, Vehicle Identification Number and delivery date of the vehicle
- Description of the problem

While we hope you never have the occasion to use our service, it is added security while traveling for you and your family. Remember, we are only a phone call away. HUMMER Roadside Assistance: 1-866-HUMMER6 (486-6376), text telephone (TTY) users, call 1-888-889-2438.

HUMMER reserves the right to limit services or reimbursement to an owner or driver when, in HUMMER's judgement, the claims become excessive in frequency or type of occurrence.

Roadside Assistance is not part of or included in the coverage provided by the New Vehicle Limited Warranty. HUMMER reserves the right to make any changes or discontinue the Roadside Assistance program at any time without notification.

Downloaded from www.Manualslib.com manuals search engine

Canadian Roadside Assistance

Vehicles purchased in Canada have an extensive roadside assistance program accessible from anywhere in Canada or the United States. Please refer to the Warranty and Owner Assistance Information book.

Courtesy Transportation

HUMMER has always exemplified quality and value in its offering of motor vehicles. To enhance your ownership experience, we and our participating dealers are proud to offer Courtesy Transportation, a customer support program for new vehicles.

The Courtesy Transportation program is offered to retail purchase/lease customers in conjunction with the Bumper-to-Bumper coverage provided by the New Vehicle Limited Warranty. Several transportation options are available when warranty repairs are required. This will reduce your inconvenience during warranty repairs.

Plan Ahead When Possible

When your vehicle requires warranty service, you should contact your dealer and request an appointment. By scheduling a service appointment and advising your service consultant of your transportation needs, your dealer can help minimize your inconvenience.

If your vehicle cannot be scheduled into the service department immediately, keep driving it until it can be scheduled for service, unless, of course, the problem is safety-related. If it is, please call your dealership, let them know this, and ask for instructions.

If the dealer requests that you simply drop the vehicle off for service, you are urged to do so as early in the work day as possible to allow for same day repair.

Transportation Options

Warranty service can generally be completed while you wait. However, if you are unable to wait, HUMMER helps minimize your inconvenience by providing several transportation options. Depending on the circumstances, your dealer can offer you one of the following:

Shuttle Service

Participating dealers can provide you with shuttle service to get you to your destination with minimal interruption of your daily schedule. This includes a one way or round trip shuttle ride to a destination up to 10 miles from the dealership.

Downloaded from www.Manualslib.com manuals search engine

Public Transportation or Fuel Reimbursement

If your vehicle requires overnight warranty repairs, reimbursement (five days maximum) may be available for the use of public transportation such as taxi or bus. In addition, should you arrange transportation through a friend or relative, reimbursement for reasonable fuel expenses (five day maximum) may be available. Claim amounts should reflect actual costs and be supported by original receipts.

Courtesy Rental Vehicle

Your dealer may arrange to provide you with a courtesy rental vehicle or reimburse you for a rental vehicle you obtained if your vehicle is kept for a warranty repair. Reimbursement will be limited to a maximum of $40 a day and must be supported by receipts. This requires that you sign and complete a rental agreement and meet state, local and rental vehicle provider requirements. Requirements vary and may include minimum age requirements, insurance coverage, credit card, etc. You are responsible for fuel usage charges and may also be responsible for taxes, levies, usage fees, excessive mileage or rental usage beyond the completion of the repair.

Generally it is not possible to provide a like-vehicle as a courtesy rental.

Additional Program Information

Courtesy Transportation is available during the Bumper-to-Bumper warranty coverage period, but it *is not* part of the New Vehicle Limited Warranty. A separate booklet entitled *Warranty and Owner Assistance Information* furnished with each new vehicle provides detailed warranty coverage information.

Courtesy Transportation is available only at participating dealers and all program options, such as shuttle service, may not be available at every dealer. Please contact your dealer for specific information about availability. All Courtesy Transportation arrangements will be administered by appropriate dealer personnel.

Canadian Vehicles: For warranty repairs during the Complete Vehicle Coverage period of the General Motors of Canada New Vehicle Limited Warranty, alternative transportation may be available under the Courtesy Transportation Program. Please consult your dealer for details.

General Motors reserves the right to unilaterally modify, change or discontinue Courtesy Transportation at any time and to resolve all questions of claim eligibility pursuant to the terms and conditions described herein at its sole discretion.

Downloaded from www.Manualslib.com manuals search engine

Vehicle Data Collection and Event Data Records

Your vehicle, like other modern motor vehicles, has a number of sophisticated computer systems that monitor and control several aspects of the vehicle's performance. Your vehicle uses on-board vehicle computers to monitor emission control components to optimize fuel economy, to monitor conditions for air bag deployment and, if so equipped, to provide anti-lock braking and to help the driver control the vehicle in difficult driving situations. Some information may be stored during regular operations to facilitate repair of detected malfunctions; other information is stored only in a crash or near crash event by computer systems commonly called event data recorders (EDR).

In a crash or near crash event, computer systems, such as the Air Bag Sensing and Diagnostic Module (SDM) in your vehicle may record information about the condition of the vehicle and how it was operated, such as engine speed, brake applications, throttle position, vehicle speed, safety belt usage, air bag readiness, air bag performance data, and the severity of a collision. This information has been used to improve vehicle crash performance and may be used to improve crash performance of future vehicles and driving safety. Unlike the data recorders on many airplanes, these on-board systems do not record sounds, such as conversation of vehicle occupants.

To read this information, special equipment is needed and access to the vehicle or the SDM is required. GM will not access information about a crash event or share it with others other than

- with the consent of the vehicle owner or, if the vehicle is leased, with the consent of the lessee,
- in response to an official request of police or similar government office,
- as part of GM's defense of litigation through the discovery process, or
- as required by law.

In addition, once GM collects or receives data, GM may

- use the data for GM research needs,
- make it available for research where appropriate confidentiality is to be maintained and need is shown, or
- share summary data which is not tied to a specific vehicle with non-GM organizations for research purposes.

Others, such as law enforcement, may have access to the special equipment that can read the information if they have access to the vehicle or SDM.

If your vehicle is equipped with OnStar®, please check the OnStar® subscription service agreement or manual for information on its operations and data collection.

Downloaded from www.Manualslib.com manuals search engine

Reporting Safety Defects

Reporting Safety Defects to the United States Government

If you believe that your vehicle has a defect which could cause a crash or could cause injury or death, you should immediately inform the National Highway Traffic Safety Administration (NHTSA), in addition to notifying General Motors.

If NHTSA receives similar complaints, it may open an investigation, and if it finds that a safety defect exists in a group of vehicles, it may order a recall and remedy campaign. However, NHTSA cannot become involved in individual problems between you, your dealer or General Motors.

To contact NHTSA, you may either call the Auto Safety Hotline toll-free at 1-800-424-9393 (or 366-0123 in the Washington, D.C. area) or write to:

NHTSA, U.S. Department of Transportation
Washington, D.C. 20590

You can also obtain other information about motor vehicle safety from the hotline.

Reporting Safety Defects to the Canadian Government

If you live in Canada, and you believe that your vehicle has a safety defect, you should immediately notify Transport Canada, in addition to notifying General Motors of Canada Limited. You may write to:

Transport Canada
330 Sparks Street
Tower C
Ottawa, Ontario K1A 0N5

Reporting Safety Defects to General Motors

In addition to notifying NHTSA (or Transport Canada) in a situation like this, we certainly hope you'll notify us. Please call us at 1-866-HUMMER6 (486-6376), or write:

HUMMER Customer Assistance Center
P.O. Box 33177
Detroit, MI 48232-5177

In Canada, please call us at 1-800-263-3777 (English) or 1-800-263-7854 (French). Or, write:

General Motors of Canada Limited
Customer Communication Centre 163-005
1908 Colonel Sam Drive
Oshawa, Ontario L1H 8P7

Downloaded from www.Manualslib.com manuals search engine

Service Publications Ordering Information

Service Manuals

Service Manuals have the diagnosis and repair information on engines, transmission, axle, suspension, brakes, electrical, steering, body, etc.

RETAIL SELL PRICE: $120.00

Transmission, Transaxle, Transfer Case Unit Repair Manual

This manual provides information on unit repair service procedures, adjustments, and specifications for GM transmissions, transaxles, and transfer cases.

RETAIL SELL PRICE: $50.00

Service Bulletins

Service Bulletins give technical service information needed to knowledgeably service General Motors cars and trucks. Each bulletin contains instructions to assist in the diagnosis and service of your vehicle.

In Canada, information pertaining to Product Service Bulletins can be obtained by contacting your General Motors dealer or by calling 1-800-GM-DRIVE (1-800-463-7483).

Owner's Information

Owner publications are written specifically for owners and intended to provide basic operational information about the vehicle. The owner's manual will include the Maintenance Schedule for all models.

In-Portfolio: Includes a Portfolio, Owner's Manual, and Warranty Booklet.

RETAIL SELL PRICE: $35.00

Without Portfolio: Owner's Manual only.

RETAIL SELL PRICE: $25.00

Downloaded from www.Manualslib.com manuals search engine

Current and Past Model Order Forms

Service Publications are available for current and past model GM vehicles. To request an order form, please specify year and model name of the vehicle.

ORDER TOLL FREE: 1-800-551-4123
Monday-Friday 8:00 AM - 6:00 PM
Eastern Time

For Credit Card Orders Only
(VISA-MasterCard-Discover), visit Helm, Inc. on the World Wide Web at: www.helminc.com

Or you can write to:

Helm, Incorporated
P. O. Box 07130
Detroit, MI 48207

Prices are subject to change without notice and without incurring obligation. Allow ample time for delivery.

Note to Canadian Customers: All listed prices are quoted in U.S. funds. Canadian residents are to make checks payable in U.S. funds.

Downloaded from www.Manualslib.com manuals search engine

A

Accessory Inflator 5-76
Accessory Power Outlets 3-18
Adding Equipment to Your Air Bag-Equipped
  Vehicle 1-73
Adding Washer Fluid 5-37
Additional Program Information 7-8
Additives, Fuel 5-6
Add-On Electrical Equipment 5-101
Add-On Equipment 4-72
Adjusting the Speakers (Balance/Fade) 3-65, 3-77
After Off-Road Driving 4-41
Air Bag
  Off Light 3-30
  Readiness Light 3-28
Air Bag System 1-61
  Adding Equipment to Your Air Bag-Equipped
    Vehicle 1-73
  Air Bag Off Switch 1-68
  How Does an Air Bag Restrain? 1-65
  Servicing Your Air Bag-Equipped Vehicle 1-72
  What Makes an Air Bag Inflate? 1-65
  What Will You See After an Air Bag Inflates? 1-66
  When Should an Air Bag Inflate? 1-65
  Where Are the Air Bags? 1-63
Air Cleaner/Filter, Engine 5-19
Air Conditioning 3-23
Air Suspension 4-74
Airbag Sensing and Diagnostic Module (SDM) 7-9
All-Wheel Drive 5-48
All-Wheel Drive (AWD) System 2-25
AM 3-90
Antenna, Fixed Mast 3-92
Anti-lock Brake System (ABS) 4-7
Anti-Lock Brake, System Warning Light 3-34
Appearance Care 5-92
  Care of Safety Belts 5-95
  Chemical Paint Spotting 5-99
  Cleaning the Inside of Your Vehicle 5-93
  Cleaning the Outside of Your Vehicle 5-95
  Finish Damage 5-99
  Sheet Metal Damage 5-98
  Underbody Maintenance 5-99
  Vehicle Care/Appearance Materials 5-100
  Weatherstrips 5-95
Approaching a Hill 4-32
Ashtrays 3-18
Audio System(s) 3-62
  Audio Steering Wheel Controls 3-89
  Care of Your Cassette Tape Player 3-90
  Care of Your CD Player 3-92
  Care of Your CDs 3-92
  Chime Level Adjustment 3-92
  Fixed Mast Antenna 3-92
  Navigation/Radio System 3-86
  Radio with Cassette and CD 3-63
  Radio with Six-Disc CD 3-74
  Rear Seat Audio (RSA) 3-87
  Setting the Time 3-62

Downloaded from www.Manualslib.com manuals search engine

Audio System(s) (cont.)
Theft-Deterrent Feature 3-88
Understanding Radio Reception 3-90
Automatic Climate Control System 3-19
Automatic Dimming Mirror Operation 2-35
Automatic Headlamp System 3-14
Automatic Transmission
Fluid 5-21
Operation 2-22

B

Backing Up 4-82
Battery 5-42
BATTERY NOT CHARGING 3-57
Battery Replacement 2-5
Battery Run-Down Protection 3-17
Before Leaving on a Long Trip 4-48
Before You Go Off-Roading 4-17
Bench Seat, Split (60/40) 1-8
Brake
Parking 2-29
System Warning Light 3-33
Brake Adjustment 5-42
Brake and Throttle Operation Techniques for
Off-Road Driving 4-27
Brake Fluid 5-38
Brake Pedal Travel 5-42
Brake Wear 5-41
Brakes 5-38
Braking 4-6
Braking in Emergencies 4-9
Break-In, New Vehicle 2-18
Bulb Replacement 5-52
Center High-Mounted Stoplamp (CHMSL) 5-57
Daytime Running Lamps 5-54
Front Turn Signal and Parking Lamps 5-53
Halogen Bulbs 5-52
Headlamps 5-52
Replacement Bulbs 5-58
Roof Marker Lamps 5-55
Sidemarker Lamps 5-54
Taillamps 5-57
Buying New Tires 5-71

C

California Fuel 5-6
Canada – Customer Assistance 7-4
Canadian Owners ii
Canadian Roadside Assistance 7-7
Capacities and Specifications 5-111
Carbon Monoxide 4-52, 4-75, 2-13, 2-33
Care of
Safety Belts 5-95
Your Cassette Tape Player 3-90

Downloaded from www.Manualslib.com manuals search engine

Care of (cont.)
Your CD Player 3-92
Your CDs 3-92
Cargo Area Door Lock Switch 2-8
Cargo Tie Downs 2-49
Cassette Tape Messages 3-71
CD Adapter Kits 3-71
CD Messages 3-74, 3-86
Center Console Storage Area 2-46
Center High-Mounted Stoplamp (CHMSL) 5-57
Center Instrument Panel Fuse Block 5-105
Center Overhead Console 2-46
Center Roof Marker Lamps 5-56
Chains, Tire 5-75
CHANGE ENGINE OIL 3-56
Charging System Light 3-32
Check Engine Light 3-38
CHECK OIL LEVEL 3-56
CHECK WASHER FLUID 3-59
Checking Brake Fluid 5-39
Checking Coolant 5-26
Checking Engine Oil 5-14
Checking Things Under the Hood 5-10
Checking Your Restraint Systems 1-73
Chemical Paint Spotting 5-99
Child Restraints
Child Restraint Systems 1-44
Infants and Young Children 1-40
Lower Anchorages and Top Tethers for Children (LATCH System) 1-50
Child Restraints (cont.)
Older Children 1-38
Securing a Child Restraint Designed for the LATCH System 1-52
Securing a Child Restraint in a Rear Seat Position 1-53
Securing a Child Restraint in the Right Front Seat Position 1-55
Top Strap 1-48
Top Strap Anchor Location 1-49
Where to Put the Restraint 1-47
Chime Level Adjustment 3-92
Cigarette Lighter 3-18
Cleaning
Inside of Your Vehicle 5-93
Outside of Your Vehicle 5-95
Underbody Maintenance 5-99
Weatherstrips 5-95
Cleaning Aluminum or Chrome-Plated Wheels 5-98
Cleaning Exterior Lamps/Lenses 5-96
Cleaning Fabric/Carpet 5-93
Cleaning Glass Surfaces 5-94
Cleaning Interior Plastic Components 5-94
Cleaning Leather 5-93
Cleaning the Mirror 2-37
Cleaning the Speaker Covers 5-94
Cleaning the Top of the Instrument Panel 5-94
Cleaning the Video Screen 3-92

Downloaded from www.Manualslib.com manuals search engine

Cleaning the Windshield, Backglass and Wiper Blades 5-97
Cleaning Tires 5-98
Cleaning Vinyl 5-93
Cleaning Wood Panels 5-94
Climate Control System
Automatic 3-19
Climate Controls Personalization 3-25
Outlet Adjustment 3-25
Compass Calibration 2-35
Compass Operation 2-35
Compass Variance 2-36
Content Theft-Deferrent 2-16
Control of a Vehicle 4-6
Coolant
Engine Temperature Gage 3-35
Heater, Engine 2-21
Surge Tank Pressure Cap 5-27
Cooling System 5-30
Corner Roof Marker Lamps 5-55
Crossing Obstacles 4-30
Cruise Control 3-9
Cruise Control Light 3-42
Current and Past Model Order Forms 7-12
Customer Assistance Information
Courtesy Transportation 7-7
Customer Assistance for Text Telephone (TTY) Users 7-4
Customer Assistance Offices 7-4
Customer Assistance Information (cont.)
Customer Satisfaction Procedure 7-2
GM Mobility Program for Persons with Disabilities 7-5
Reporting Safety Defects to General Motors 7-10
Reporting Safety Defects to the Canadian Government 7-10
Reporting Safety Defects to the United States Government 7-10
Roadside Assistance Program 7-5
Service Publications Ordering Information 7-11

D

Daytime Running Lamps 3-15
Defensive Driving 4-2
Defogging and Defrosting 3-24
Delayed Locking 2-9
Dinghy Towing 4-66
Doing Your Own Service Work 5-4
Dolly Towing 4-66
Dome Lamps 3-17
Door
Delayed Locking 2-9
Locks 2-7
Power Door Locks 2-8
Programmable Automatic Door Locks 2-9
Rear Door Security Locks 2-11

Downloaded from www.Manualslib.com manuals search engine

Driver
Position, Safety Belt 1-22
DRIVER DOOR AJAR 3-60
Driver Information Center (DIC) 3-44
DIC Operation and Displays 3-44
DIC Warnings and Messages 3-56
Driving
At Night 4-41
City 4-46
Defensive 4-2
Drunken 4-3
Freeway 4-47
Hill and Mountain Roads 4-50
In Rain and on Wet Roads 4-43
Off-Road 4-17
Winter 4-52
Driving Across an Incline 4-36
Driving Downhill 4-35
Driving in Mud, Sand, Snow or Ice 4-39
Driving in Water 4-40
Driving On Grades 4-83
Driving on Off-Road Hills 4-31
Driving on Snow or Ice 4-52
Driving Through Deep Standing Water 4-45
Driving Through Flowing Water 4-45
Driving Uphill 4-32
Driving with a Trailer 4-81

E

Easy Exit Seat 2-53
Electrical System
Add-On Equipment 5-101
Fuses and Circuit Breakers 5-102
Power Windows and Other Power Options 5-102
Windshield Wiper Fuses 5-102
Electronically Controlled Air Suspension System 4-74
Emissions Inspection and Maintenance
Programs 3-40
Engine
Air Cleaner/Filter 5-19
Battery 5-42
Check and Service Engine Soon Light 3-38
Coolant 5-24
Coolant Heater 2-21
Coolant Temperature Gage 3-35
Drive Belt Routing 6-15
Engine Compartment Overview 5-12
Exhaust 2-33
Fan Noise 5-35
Oil 5-14
Overheating 5-27
Starting 2-20
ENGINE COOLANT HOT 3-57
Engine Oil Additives 5-17

Downloaded from www.Manualslib.com manuals search engine

ENGINE OVERHEATED 3-57
Entering or Exiting the Third Row Seats 1-7
Entry/Exit Lighting 3-17
Environmental Concerns 4-23
Erasing HomeLink® Buttons 2-45
Event Data Records (EDR) 7-9
Extender, Safety Belt 1-37
Exterior Lamps 3-13

F

Filter
  Engine Air Cleaner 5-19
Finding a Program Type (PTY) Station 3-66, 3-78
Finding a Station 3-64, 3-75
Finish Care 5-96
Finish Damage 5-99
First Aid Kit and Tool Kit 4-59
Fixed Mast Antenna 3-92
Flash-to-Pass 3-7
Flat Tire 5-78
Flat Tire, Changing 5-79
Fluid
  Automatic Transmission 5-21
  Power Steering 5-36
  Windshield Washer 5-37
FM 3-90
Folding the Seatback 1-10
Folding the Seatbacks 1-8
Following Distance 4-82
Front Axle 5-51
Front Receiver 4-60
Fuel 5-5
  Additives 5-6
  California Fuel 5-6
  Filling a Portable Fuel Container 5-9
  Filling Your Tank 5-7
  Fuels in Foreign Countries 5-7
  Gage 3-43
  Gasoline Octane 5-5
  Gasoline Specifications 5-5
  Low Warning Light 3-43
Fuel Information Button 3-47
FUEL LEVEL LOW 3-58
Fuses
  Fuses and Circuit Breakers 5-102
  Windshield Wiper 5-102

G

Gage
  Engine Coolant Temperature 3-35
  Fuel 3-43
  Oil Pressure 3-41
  Speedometer 3-28
  Tachometer 3-28
  Transmission Temperature 3-36
  Voltmeter Gage 3-32

Downloaded from www.Manualslib.com manuals search engine

Garage Door Opener 2-42
Gasoline
  Octane 5-5
  Specifications 5-5
Gate Operator and Canadian Programming 2-44
Getting Familiar with Off-Road Driving 4-28
Glove Box 2-45
GM Mobility Program for Persons with
  Disabilities 7-5

H

Hazard Warning Flashers 3-4
Head Restraints 1-6
Headlamp High/Low-Beam Changer 3-7
Headlamps 5-52
  Bulb Replacement 5-52
  Daytime Running Lamps 5-54
  Front Turn Signal and Parking Lamps 5-53
  Halogen Bulbs 5-52
  Roof Marker Lamps 5-55
  Sidemarker Lamps 5-54
Heated Seats 1-4
Heating 3-24
High Mobility Characteristics 4-24
Highway Hypnosis 4-49
Hill and Mountain Roads 4-50
Hitches 4-80
HomeLink® Transmitter 2-42
HomeLink® Transmitter, Programming 2-42
Hood
  Checking Things Under 5-10
  Release 5-10
Horn 3-5
How to Add Coolant to the Coolant Surge Tank 5-32
How to Add Fluid 5-23
How to Check Lubricant 5-50
How to Check Power Steering Fluid 5-36
How to Use This Manual ii
How to Wear Safety Belts Properly 1-21
Hydroplaning 4-45

I

If No Steam Is Coming From Your Engine 5-29
If Steam Is Coming From Your Engine 5-28
If the Light is Flashing 3-39
If the Light Is On Steady 3-39
If You Are Caught in a Blizzard 4-54
If You Are Stuck in Sand, Mud, Ice or Snow 4-56
If You Do Decide To Pull A Trailer 4-76
Ignition Positions 2-19
Illuminated Visor Vanity Mirrors 2-16
Infants and Young Children, Restraints 1-40
Inflation - Tire Pressure 5-68

Downloaded from www.Manualslib.com manuals search engine

Instrument Panel
Cluster 3-27
Overview 3-2
Instrument Panel Brightness 3-16
Instrument Panel Fuse Block 5-103
Interior Lamps 3-16

J

Jump Starting 5-43

K

KEYFOB X BATTERY LOW 3-61
Keyless Entry System 2-3
Keys 2-2

L

Lamps
Exterior 3-13
Interior 3-16
Lamps On Reminder 3-14
Lap-Shoulder Belt 1-22
LATCH System
Child Restraints 1-50
Securing a Child Restraint Designed for the LATCH System 1-52
Leaving Your Vehicle With the Engine Running ... 2-31
LEFT REAR DOOR AJAR 3-61
Liftgate 2-13
Light
Air Bag Off 3-30
Air Bag Readiness 3-28
Anti-Lock Brake System Warning 3-34
Brake System Warning 3-33
Charging System 3-32
Cruise Control 3-42
Low Fuel Warning 3-43
Malfunction Indicator 3-38
Safety Belt Reminder 3-28
Security 3-42
Tow/Haul Mode 3-42
Traction Off 3-35
Loading Your Vehicle 4-67
Loading Your Vehicle for Off-Road Driving 4-22
Locking Rear Axle 4-11
Lockout Protection 2-12
Locks
Delayed Locking 2-9
Door 2-7
Lockout Protection 2-12
Power Door 2-8
Programmable Automatic Door Locks 2-9
Rear Door Security Locks 2-11
Loss of Control 4-16
LOW COOLANT LEVEL 3-57

Downloaded from www.Manualslib.com manuals search engine

Low Fuel Warning Light 3-43
Luggage Carrier 2-46
Lumbar
  Power Controls 1-3

M

Maintenance Schedule
  Additional Required Services 6-6
  At Each Fuel Fill 6-9
  At Least Once a Month 6-10
  At Least Once a Year 6-10
  Introduction 6-2
  Maintenance Footnotes 6-8
  Maintenance Record 6-16
  Maintenance Requirements 6-2
  Normal Maintenance Replacement Parts 6-14
  Owner Checks and Services 6-9
  Recommended Fluids and Lubricants 6-12
  Scheduled Maintenance 6-4
  Using Your 6-3
  Your Vehicle and the Environment 6-2
Maintenance When Trailer Towing 4-84
Making Turns 4-82
Malfunction Indicator Light 3-38
Matching Transmitter(s) to Your Vehicle 2-5
Memory Seat 2-51
Message
  DIC Warnings and Messages 3-56
Mexico, Central America and Caribbean Islands/
  Countries (Except Puerto Rico and U.S. Virgin
  Islands) – Customer Assistance 7-4
Mirrors
  Automatic Dimming Rearview with Compass
    and Temperature Display 2-34
  Outside Automatic Dimming Mirror with Curb
    View Assist 2-39
  Outside Convex Mirror 2-38
  Outside Heated Mirrors 2-39
  Outside Power Mirrors 2-37
MyGMLink.com 7-3

N

Navigation/Radio System 3-86
New Vehicle Break-In 2-18
Normal Maintenance Replacement Parts 6-14

O

Odometer 3-28
Off-Road Driving 4-17
Off-Road Lamps 3-16

Downloaded from www.Manualslib.com manuals search engine

Off-Road Recovery 4-14
Oil
  Engine 5-14
  Pressure Gage 3-41
OIL LIFE RESET 3-56
OIL PRESSURE LOW 3-56
Older Children, Restraints 1-38
Online Owner Center 7-3
OnStar® Personal Calling 2-41
OnStar® Services 2-40
OnStar® Steering Wheel Controls 2-41
OnStar® System 2-40
Other Warning Devices 3-5
Outlet Adjustment 3-25
Outside
  Automatic Dimming Mirror with Curb View
    Assist 2-39
  Convex Mirror 2-38
  Heated Mirrors 2-39
  Power Mirrors 2-37
Overheated Engine Protection Operating Mode ... 5-28
Overload and Overheat Protection 4-74
Overseas – Customer Assistance 7-4
Owner Checks and Services 6-9
Owners, Canadian ii
Owner's Information 7-11

P

Park (P)
  Shifting Into 2-30
  Shifting Out of 2-32
Parking
  Brake 2-29
  Over Things That Burn 2-32
Parking on Hills 4-83
PASSENGER DOOR AJAR 3-61
Passing 4-14, 4-82
Passlock® 2-18
Personalization Button 3-48
Personalization, Climate Controls 3-25
Plan Ahead When Possible 7-7
Playing a Cassette Tape 3-69
Playing a CD 3-72, 3-80
Playing a Specific Loaded CD 3-82
Playing the Radio 3-63, 3-74
Power
  Accessory Outlets 3-18
  Door Locks 2-8
  Electrical System 5-102
  Lumbar Controls 1-3
  Seat 1-2
  Steering Fluid 5-36
  Windows 2-15

Downloaded from www.Manualslib.com manuals search engine

Power Steering 4-12
Power Winch Platform (If Equipped) 4-62
Programmable Automatic Door Locks 2-9
Programming the HomeLink® Transmitter 2-42

Q

Questions and Answers About Safety Belts 1-21

R

Radio Data System (RDS) 3-66, 3-77
Radio Messages 3-69
Radios 3-62
  Care of Your Cassette Tape Player 3-90
  Care of Your CD Player 3-92
  Care of Your CDs 3-92
  Navigation/Radio System 3-86
  Radio with Cassette and CD 3-63
  Radio with Six-Disc CD 3-74
  Rear Seat Audio 3-87
  Setting the Time 3-62
  Theft-Deterrent 3-88
  Understanding Reception 3-90
RDS Messages 3-68, 3-79
Reading Lamps 3-17
REAR ACCESS OPEN 3-61
Rear Axle 5-50
  Locking 4-11
Rear Door Security Locks 2-11
Rear Heated Seats 1-8
Rear Safety Belt Comfort Guides 1-34
Rear Seat Armrest 2-49
Rear Seat Audio Controls 3-87
Rear Seat Audio (RSA) 3-87
Rear Seat Operation 1-7
Rear Seat Passengers, Safety Belts 1-30
Rear Window Defogger 3-24
Rearview Mirror, Automatic Dimming with
  Compass and Temperature Display 2-34
Reclining Seatbacks 1-5
Recommended Fluids and Lubricants 6-12
Recreational Vehicle Towing 4-65
REDUCED ENGINE POWER 3-57
Remote Keyless Entry System 2-3
Remote Keyless Entry System, Operation 2-4
Removing the Flat Tire and Installing the
  Spare Tire 5-83
Removing the Seat 1-13
Removing the Spare Tire and Tools 5-80
REPLACE LIFTGATE FUSE 3-61

Downloaded from www.Manualslib.com manuals search engine

Replacement Bulbs 5-58
Replacing Brake System Parts 5-42
Replacing Restraint System Parts After a Crash 1-74
Replacing the Seat 1-15
Reporting Safety Defects
  Canadian Government 7-10
  General Motors 7-10
  United States Government 7-10
Reprogramming a Single HomeLink® Button 2-45
Resetting Defaults 2-45
Restraint Systems
  Checking 1-73
  Replacing Parts 1-74
Resynchronization 2-6
Retained Accessory Power (RAP) 2-19
Returning the Seat to an Upright Position 1-12
Returning the Seats to an Upright Position 1-9
Ride Height, Selectable Extended Rear Ride 4-73
Right Front Passenger Position, Safety Belts 1-30
RIGHT REAR DOOR AJAR 3-61
Roadside Assistance Program 7-5
Rocking Your Vehicle To Get It Out 4-56
Routing, Engine Drive Belt 6-15
Running Your Engine While You Are Parked 2-33

S

Safety Belt
  Reminder Light 3-28
Safety Belts
  Care of 5-95
  Driver Position 1-22
  How to Wear Safety Belts Properly 1-21
  Questions and Answers About Safety Belts 1-21
  Rear Safety Belt Comfort Guides for Children
    and Small Adults 1-34
  Rear Seat Passengers 1-30
  Right Front Passenger Position 1-30
  Safety Belt Extender 1-37
  Safety Belt Use During Pregnancy 1-29
  Safety Belts Are for Everyone 1-16
Safety Chains 4-80
Safety Warnings and Symbols iii
Scanning the Terrain 4-29
Scheduled Maintenance 6-4
Seats
  60/40 Split Bench Seat 1-8
  Head Restraints 1-6
  Heated Seats 1-4
  Heated Seats, Rear 1-8

Downloaded from www.Manualslib.com manuals search engine

Seats (cont.)
Memory 2-51
Power Lumbar 1-3
Power Seats 1-2
Rear Seat Operation 1-7
Reclining Seatbacks 1-5
Third Row Seat 1-10
Securing a Child Restraint
Designed for the LATCH System 1-52
Rear Seat Position 1-53
Right Front Seat Position 1-55
Security Light 3-42
Security While You Travel 7-5
Select Button 3-55
Selectable Extended Rear Ride Height 4-73
Service 5-3
Adding Equipment to the Outside of Your Vehicle 5-5
Doing Your Own Work 5-4
Engine Soon Light 3-38
Publications Ordering Information 7-11
SERVICE 4WD 3-58
SERVICE AIR BAG 3-58
SERVICE AIR SUSPENSION 3-58
SERVICE BRAKE SYSTEM 3-58
Service Bulletins 7-11
Service Manuals 7-11
Servicing Your Air Bag-Equipped Vehicle 1-72
Setting Preset PTYs 3-79
Setting Preset PTYs (RDS Only) 3-67
Setting Preset Stations 3-64, 3-76
Setting the Time 3-62
Setting the Tone (Bass/Treble) 3-65, 3-76
Sheet Metal Damage 5-98
Shifting Into Park (P) 2-30
Shifting Out of Park (P) 2-32
Skidding 4-16
Some Other Rainy Weather Tips 4-45
Spare Tire 5-92
Specifications, Capacities 5-111
Speedometer 3-28
Split Bench Seat (60/40) 1-8
Stalling on an Incline 4-38
Starting Your Engine 2-20
Steering 4-12
Steering in Emergencies 4-13
Steering Tips 4-12
Steering Wheel Controls, Audio 3-89
Steering Wheel, Tilt Wheel 3-5
Storage Areas
Center Console Storage Area 2-46
Center Overhead Console 2-46
Glove Box 2-45
Luggage Carrier 2-46
Rear Seat Armrest 2-49
Storing a Flat or Spare Tire and Tools 5-90
Stuck in Sand, Mud, Ice or Snow 4-56
Sun Visors 2-16

Downloaded from www.Manualslib.com manuals search engine

Sunroof 2-50
Suspension 4-74

T

Tachometer 3-28
Taillamps 5-57
Temperature Display 2-35
Testing the Alarm 2-17
Theft-Deterrent, Radio 3-88
Theft-Deterrent Systems 2-16
  Content Theft-Deterrent 2-16
  Passlock® 2-18
Third Row Seat 1-10
TIGHTEN FUEL CAP 3-59
Tilt Wheel 3-5
Tilting the Seat 1-11
Tire Sidewall Labeling 5-60
Tire Size 5-64
Tire Terminology and Definitions 5-65
Tires 5-60
  Buying New Tires 5-71
  Chains 5-75
  Changing a Flat Tire 5-79
  If a Tire Goes Flat 5-78
  Inflation - Tire Pressure 5-68
  Inspection and Rotation 5-69
  Spare Tire 5-92
  Uniform Tire Quality Grading 5-72
Tires (cont.)
  Wheel Alignment and Tire Balance 5-73
  Wheel Replacement 5-74
  When It Is Time for New Tires 5-70
To Use the Engine Coolant Heater 2-21
Top Strap 1-48
Top Strap Anchor Location 1-49
Torque Lock 2-32
Total Weight on Your Vehicle's Tires 4-79
Tow/Haul Mode 2-25
Tow/Haul Mode Light 3-42
Towing
  Recreational Vehicle 4-65
  Towing a Trailer 4-75
  Your Vehicle 4-65
Traction
  Control System (TCS) 4-9
  Off Light 3-35
TRACTION ACTIVE 3-59
Trailer Recommendations 4-75
Trailer Brakes 4-81
Trailer Wiring Harness 4-84
TRANS HOT IDLE ENGINE 3-60
Transfer Case 5-48
Transfer Case Buttons 2-25
Transmission
  Fluid, Automatic 5-21
  Temperature Gage 3-36

Downloaded from www.Manualslib.com manuals search engine

TRANSMISSION HOT 3-59
Transmission Operation, Automatic 2-22
Transmission, Transaxle, Transfer Case Unit
  Repair Manual 7-11
Transportation Options 7-7
Traveling to Remote Areas 4-23
Trip Information Button 3-45
Turn and Lane Change Signals 3-6
TURN SIGNAL ON 3-58
Turn Signal/Multifunction Lever 3-6
Turn Signals When Towing a Trailer 4-82

U

Underhood Fuse Block 5-106
Understanding Radio Reception 3-90
Unfolding the Seatback 1-10
Uniform Tire Quality Grading 5-72
United States – Customer Assistance 7-4
Used Replacement Wheels 5-75
Using HomeLink® 2-44
Using Song List Mode 3-84
Using the Recovery Loops 4-57

V

Vehicle
  Control 4-6
  Damage Warnings iv
Vehicle (cont.)
  Loading 4-67
  Symbols iv
Vehicle Data Collection and Event Data Records 7-9
Vehicle Identification
  Number (VIN) 5-101
  Service Parts Identification Label 5-101
Vehicle Personalization
  Memory Seat 2-51
Vehicle Storage 5-42
Ventilation Adjustment 3-25
Visors 2-16
Voltmeter Gage 3-32

W

Warning Lights, Gages and Indicators 3-26
Warnings
  DIC Warnings and Messages 3-56
  Hazard Warning Flashers 3-4
  Other Warning Devices 3-5
  Safety and Symbols iii
  Vehicle Damage iv
Washing Your Vehicle 5-95
Weight of the Trailer 4-78
Weight of the Trailer Tongue 4-79
What Kind of Engine Oil to Use 5-15
What to Do with Used Oil 5-18

Downloaded from www.Manualslib.com manuals search engine

Wheels
Alignment and Tire Balance 5-73
Replacement 5-74
When to Add Engine Oil 5-15
When to Change Engine Oil (GM Oil Life System) 5-17
When to Check Lubricant 5-50
When to Check Power Steering Fluid 5-36
When You Are Ready to Leave After Parking on a Hill 4-84
Where to Put the Restraint 1-47
Why Safety Belts Work 1-18
Windows 2-14
Power 2-15
Windshield Washer 3-8
Fluid 5-37
Windshield Wiper
Blade Replacement 5-59
Fuses 5-102
Windshield Wipers 3-8
Winter Driving 4-52

Y

Your Vehicle and the Environment 6-2

Downloaded from www.Manualslib.com manuals search engine