chevrolet.com (U.S.)
chevrolet.gm.ca (Canada)
chevrolet.com.mx (Mexico)

2015

Silverado

2015 Chevrolet Silverado Owner Manual

In Brief 1-1
Instrument Panel 1-2
Initial Drive Information 1-5
Vehicle Features 1-22
Performance and Maintenance 1-28

Keys, Doors, and Windows 2-1
Keys and Locks 2-1
Doors 2-10
Vehicle Security 2-11
Exterior Mirrors 2-14
Interior Mirrors 2-19
Windows 2-19
Roof 2-23

Seats and Restraints 3-1
Head Restraints 3-2
Front Seats 3-3
Rear Seats 3-10
Safety Belts 3-12
Airbag System 3-20
Child Restraints 3-36

Storage 4-1
Storage Compartments 4-1
Additional Storage Features ... 4-4

Instruments and Controls 5-1
Controls 5-2
Warning Lights, Gauges, and Indicators 5-9
Information Displays 5-30
Vehicle Messages 5-35
Vehicle Personalization 5-47
Universal Remote System 5-54

Lighting 6-1
Exterior Lighting 6-1
Interior Lighting 6-6
Lighting Features 6-8

Infotainment System 7-1
Introduction 7-1
Radio 7-8
Audio Players 7-15
OnStar System 7-22
Voice Recognition 7-24
Phone 7-31
Settings 7-48
Trademarks and License Agreements 7-50

Climate Controls 8-1
Climate Control Systems 8-1
Air Vents 8-8
Maintenance 8-9

Driving and Operating 9-1
Driving Information 9-2
Starting and Operating 9-23
Engine Exhaust 9-33
Automatic Transmission 9-34
Manual Transmission 9-40
Drive Systems 9-42
Brakes 9-50
Ride Control Systems 9-54
Cruise Control 9-57
Driver Assistance Systems ... 9-60
Fuel 9-67
Trailer Towing 9-73
Conversions and Add-Ons 9-100

2015 Chevrolet Silverado Owner Manual

Vehicle Care 10-1
General Information 10-3
Vehicle Checks 10-4
Headlamp Aiming 10-39
Bulb Replacement 10-40
Electrical System 10-44
Wheels and Tires 10-53
Jump Starting 10-91
Towing the Vehicle 10-95
Appearance Care 10-100

Service and Maintenance ... 11-1
General Information 11-1
Maintenance Schedule 11-3
Special Application Services 11-8
Additional Maintenance and Care 11-9
Recommended Fluids, Lubricants, and Parts 11-12
Maintenance Records 11-16

Technical Data 12-1
Vehicle Identification 12-1
Vehicle Data 12-2

Customer Information 13-1
Customer Information 13-1
Reporting Safety Defects 13-12
Vehicle Data Recording and Privacy 13-14

OnStar 14-1
OnStar Overview 14-1
OnStar Services 14-2
OnStar Additional Information 14-6

Index i-1

The names, logos, emblems, slogans, vehicle model names, and vehicle body designs appearing in this manual including, but not limited to, GM, the GM logo, CHEVROLET, the CHEVROLET Emblem, SILVERADO, and Z71 are trademarks and/or service marks of General Motors LLC, its subsidiaries, affiliates, or licensors.

For vehicles first sold in Canada, substitute the name “General Motors of Canada Limited” for Chevrolet Motor Division wherever it appears in this manual.

This manual describes features that may or may not be on the vehicle because of optional equipment that was not purchased on the vehicle, model variants, country specifications, features/applications that may not be available in your region, or changes subsequent to the printing of this owner manual.

If the vehicle has the Duramax® diesel engine, see the Duramax diesel supplement for additional and specific information on this engine.

If the vehicle has the bi-fuel engine, see the Silverado/Sierra Bi-Fuel supplement for additional and specific information on this engine.

Refer to the purchase documentation relating to your specific vehicle to confirm the features.

Keep this manual in the vehicle for quick reference.

Canadian Vehicle Owners

Propriétaires Canadiens

A French language manual can be obtained from your dealer, at www.helminc.com, or from:

On peut obtenir un exemplaire de ce guide en français auprès du concessionnaire ou à l'adresse savant:

Helm, Incorporated
Attention: Customer Service
47911 Halyard Drive
Plymouth, MI 48170

Using this Manual

To quickly locate information about the vehicle, use the Index in the back of the manual. It is an alphabetical list of what is in the manual and the page number where it can be found.

Litho in U.S.A.
Part No. 23208669 B Second Printing

©2014 General Motors LLC. All Rights Reserved.

Danger, Warnings, and Cautions

Warning messages found on vehicle labels and in this manual describe hazards and what to do to avoid or reduce them.

⚠ Danger
Danger indicates a hazard with a high level of risk which will result in serious injury or death.

⚠ Warning
Warning indicates a hazard that could result in injury or death.

⚠ Caution
Caution indicates a hazard that could result in property or vehicle damage.

A circle with a slash through it is a safety symbol which means “Do Not,” “Do not do this,” or “Do not let this happen.”

Symbols

The vehicle has components and labels that use symbols instead of text. Symbols are shown along with the text describing the operation or information relating to a specific component, control, message, gauge, or indicator.

: This symbol is shown when you need to see your owner manual for additional instructions or information.

: This symbol is shown when you need to see a service manual for additional instructions or information.

Vehicle Symbol Chart

Here are some additional symbols that may be found on the vehicle and what they mean. For more information on the symbol, refer to the Index.

: Adjustable Pedals

: Airbag Readiness Light

: Antilock Brake System (ABS)

: Audio Steering Wheel Controls or OnStar® (if equipped)

: Brake System Warning Light

: Charging System

: Cruise Control

: Engine Coolant Temperature

: Exterior Lamps

: Fog Lamps

: Fuel Gauge

: Fuses

: Headlamp High/Low-Beam Changer

: Heated Steering Wheel

: LATCH System Child Restraints

: Malfunction Indicator Lamp

: Oil Pressure

: Outside Power Foldaway Mirrors

: Power

: Remote Vehicle Start

: Safety Belt Reminders

: Tire Pressure Monitor

: Tow/Haul Mode

: Traction Control/StabiliTrak®

: Windshield Washer Fluid

✍ NOTES

In Brief

Instrument Panel
Instrument Panel 1-2

Initial Drive Information
Initial Drive Information 1-5
Remote Keyless Entry (RKE) System 1-5
Remote Vehicle Start 1-5
Door Locks 1-6
Windows 1-6
Seat Adjustment 1-8
Memory Features 1-10
Heated and Cooled Front Seats 1-11
Head Restraint Adjustment 1-11
Safety Belts 1-11
Passenger Sensing System 1-12
Mirror Adjustment 1-12
Steering Wheel Adjustment 1-14
Throttle and Brake Pedal Adjustment 1-14
Interior Lighting 1-15
Exterior Lighting 1-16
Windshield Wiper/Washer 1-17
Climate Controls 1-18
Transmission 1-20
Four-Wheel Drive 1-21

Vehicle Features
Infotainment System 1-22
Radio(s) 1-22
Satellite Radio 1-23
Portable Audio Devices 1-23
Bluetooth® 1-24
Steering Wheel Controls 1-24
Cruise Control 1-25
Driver Information Center (DIC) 1-25
Forward Collision Alert (FCA) System 1-26
Lane Departure Warning (LDW) 1-26
Rear Vision Camera (RVC) 1-26
Parking Assist 1-26
Power Outlets 1-27
Universal Remote System . . . 1-27
Sunroof 1-27

Performance and Maintenance
Traction Control/Electronic Stability Control 1-28
Tire Pressure Monitor 1-29
Engine Oil Life System 1-29
E85 or FlexFuel 1-30
Driving for Better Fuel Economy 1-30
Roadside Assistance Program 1-30
OnStar® 1-31

Instrument Panel

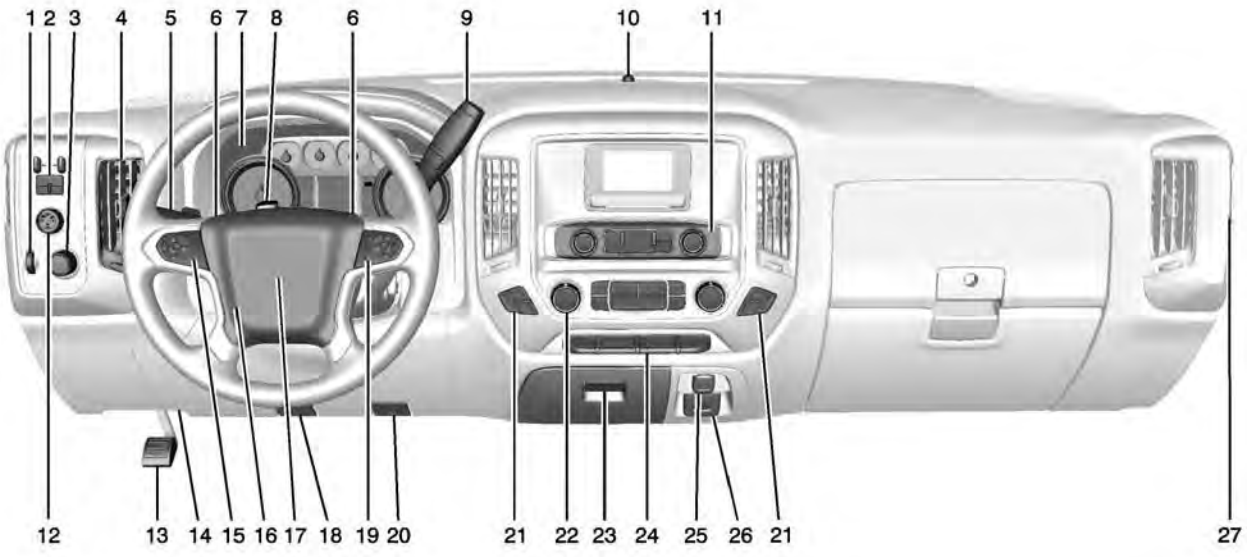

Base Shown, Uplevel Similar

1. *Instrument Panel Illumination Control on page 6-6*.
2. Integrated Trailer Brake Control (ITBC) System (If Equipped). See *Towing Equipment on page 9-90*.
3. *Exterior Lamp Controls on page 6-1*.

   Fog Lamps on page 6-5 (If Equipped).
4. *Air Vents on page 8-8*.
5. Turn Signal Lever. See *Turn and Lane-Change Signals on page 6-4*.

   Windshield Wiper/Washer on page 5-4.
6. Favorite Switches (Out of View). See *Steering Wheel Controls on page 5-3*.

   Volume Switches (Out of View). See *Steering Wheel Controls on page 5-3*.
7. *Instrument Cluster on page 5-10*.
8. *Hazard Warning Flashers on page 6-4*.
9. Shift Lever. See *Automatic Transmission on page 9-34*.

   Tow/Haul Selector Button (If Equipped). See *Tow/Haul Mode on page 9-39*.

   Range Selection Mode (If Equipped). See *Manual Mode on page 9-37*.
10. Light Sensor. See *Automatic Headlamp System on page 6-3*.
11. *Infotainment on page 7-1*.
12. Electronic Transfer Case Control (If Equipped). See *Four-Wheel Drive on page 9-42*.

    Card Holder (If Equipped). See *Instrument Panel Storage on page 4-1*.
13. *Parking Brake on page 9-51*.
14. Data Link Connector (DLC) (Out of View). See *Malfunction Indicator Lamp on page 5-21*.
15. *Cruise Control on page 9-57*.

    Forward Collision Alert (FCA) System on page 9-63 (If Equipped).
16. *Steering Wheel Adjustment on page 5-2* (Out of View).
17. *Horn on page 5-4*.
18. Hood Release. See *Hood on page 10-5*.
19. *Steering Wheel Controls on page 5-3* (If Equipped).

    Driver Information Center (DIC) Controls (If Equipped). See *Driver Information Center (DIC) (Base Level) on page 5-30* or *Driver Information Center (DIC) (Uplevel) on page 5-32*.
20. Parking Brake Release (Manual Transmission Only, If Equipped). See *Parking Brake on page 9-51*
21. *Heated and Cooled Front Seats on page 3-9* (If Equipped).

22. *Climate Control Systems (with Heater Only) on page 8-1* or *Climate Control Systems (with Air Conditioning) on page 8-3* (If Equipped).

    Dual Automatic Climate Control System on page 8-5 (If Equipped).

23. *Instrument Panel Storage on page 4-1* (If Equipped).

24. *Traction Control/Electronic Stability Control on page 9-54*.

    Pedal Adjust Switch (If Equipped). See *Adjustable Throttle and Brake Pedal on page 9-23*.

    Cargo Lamp on page 6-6.

    Parking Assist Button (If Equipped). See *Assistance Systems for Parking or Backing on page 9-60*.

    Lane Departure Warning (LDW) on page 9-66 (If Equipped).

    Hill Descent Control Switch (If Equipped). See *Hill Descent Control (HDC) on page 9-56*.

    Exhaust Brake (If Equipped). See “Exhaust Brake” in the Duramax diesel supplement.

    Power Take Off (PTO) Button (If Equipped). See the Duramax diesel supplement.

    Auxiliary Button (If Equipped). See *Add-On Electrical Equipment on page 9-100*.

25. *Power Outlets on page 5-6* (If Equipped).

26. Power Outlet 110 Volt Alternating Current (If Equipped). See *Power Outlets on page 5-6*.

27. Passenger Airbag On-Off Switch (If Equipped) (Out of View). See *Airbag On-Off Switch on page 3-27*.

Initial Drive Information

This section provides a brief overview about some of the important features that may or may not be on your specific vehicle.

For more detailed information, refer to each of the features which can be found later in this owner manual.

Remote Keyless Entry (RKE) System

The RKE transmitter functions may work from up to 60 m (197 ft) away from the vehicle.

: Press to unlock the driver door. Press again within three seconds to unlock all remaining doors.

: Press to lock all doors. Lock and unlock feedback can be personalized. See *Vehicle Personalization on page 5-47*.

: Press and release one time to initiate vehicle locator. Press and hold for at least three seconds to sound the panic alarm. Press again to cancel the panic alarm.

See *Keys on page 2-1* and *Remote Keyless Entry (RKE) System Operation on page 2-4*.

Remote Vehicle Start

If equipped, the engine can be started from outside of the vehicle.

Starting the Vehicle

1. Aim the RKE transmitter at the vehicle.
2. Press and release .
3. Immediately, press and hold for at least four seconds or until the turn signal lamps flash.

When the vehicle starts, the parking lamps will turn on and remain on as long as the engine is running. The doors will be locked and the climate control system may come on.

The engine will continue to run for 10 minutes. Repeat the steps for a 10-minute time extension. Remote start can be extended only once.

Canceling a Remote Start

To cancel a remote start, do one of the following:

- Aim the RKE transmitter at the vehicle and press and hold until the parking lamps turn off.
- Turn on the hazard warning flashers.
- Turn the vehicle on and then off.

See *Remote Vehicle Start on page 2-6*.

Door Locks

There are several ways to lock and unlock the vehicle.

From outside, use the Remote Keyless Entry (RKE) transmitter or the key in the driver door.

From inside, use the power door locks or push down or pull up on the manual door locks.

From inside, pull the door handle once to unlock the door. Pull again to open the door.

Power Door Locks

Crew/Double Cab Premium Trim Shown, Other Models Similar

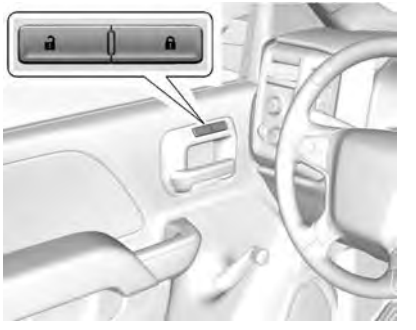

Base Trim

If equipped with power door locks:

: Press to lock the doors.

: Press to unlock the doors.

See *Door Locks on page 2-7* and *Power Door Locks on page 2-8*.

Windows

Manual Windows

If equipped, turn the hand crank on each door to manually raise or lower the windows.

Power Windows

Crew/Double Cab Premium Trim Shown, Other Models Similar

If equipped, the driver door has a switch to control all windows. Each passenger door has a switch to control that window. The power windows work when the ignition is in ON/RUN or ACC/ACCESSORY, or when Retained Accessory Power (RAP) is active. See *Retained Accessory Power (RAP) on page 9-28*.

Press the switch to lower the window. Pull the switch up to raise it. See *Windows on page 2-19* and *Power Windows on page 2-20*.

Express Windows

If equipped, the express window feature allows the windows to be raised or lowered without holding the switch.

To use express-down, press the switch down fully and release.

The driver window may have the express-up feature. Pull the switch up fully and release to activate.

Power Sliding Rear Window

If equipped, the power sliding rear window works when the ignition has been turned to ACC/ACCESSORY or ON/RUN, or when Retained Accessory Power (RAP) is active. See *Retained Accessory Power (RAP) on page 9-28*.

- Press the switch to open the window.
- Pull down on the switch to close the window.

The power sliding rear window cannot be operated manually. See “Power Sliding Rear Window” in *Rear Windows on page 2-22*.

Seat Adjustment

Manual Seats

To adjust a manual seat:

1. Pull the handle at the front of the seat.
2. Slide the seat to the desired position and release the handle.
3. Try to move the seat back and forth to be sure it is locked in place.

See *Seat Adjustment on page 3-3*.

Power Seats

To adjust a power seat, if equipped:

- Move the seat forward or rearward by sliding the control forward or rearward.
- If equipped, raise or lower the front part of the seat cushion by moving the front of the control up or down.
- If equipped, raise or lower the seat by moving the rear of the control up or down.

See *Power Seat Adjustment on page 3-4*.

Lumbar Adjustment

Manual Lumbar

If equipped, move the lever up or down repeatedly to increase or decrease lumbar support.

See *Lumbar Adjustment on page 3-4*.

Power Lumbar

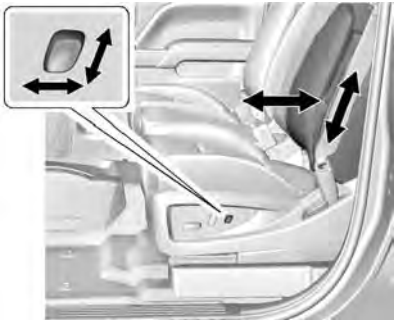

To adjust the power lumbar support, if equipped:

- Press and hold the control forward to increase or rearward to decrease upper and lower lumbar support at the same time.
- If equipped, press and hold the control up to increase upper lumbar support and decrease lower lumbar support.

  Press and hold the control down to increase lower lumbar support and decrease upper lumbar support.

See *Lumbar Adjustment on page 3-4*.

Reclining Seatbacks

Manual Reclining Seatbacks

To adjust a manual seatback:

1. Lift the lever.

   The seatback will automatically fold forward.

2. To recline, move the seatback rearward to the desired position, then release the lever to lock the seatback in place.
3. Push and pull on the seatback to make sure it is locked.

To return the seatback to the upright position:

1. Lift the lever fully without applying pressure to the seatback, and the seatback will return to the upright position.
2. Push and pull on the seatback to make sure it is locked.

See *Reclining Seatbacks on page 3-5*.

Power Reclining Seatbacks

To recline a power seatback, if equipped:

- Tilt the top of the control rearward to recline.
- Tilt the top of the control forward to raise.

See *Reclining Seatbacks on page 3-5*.

Memory Features

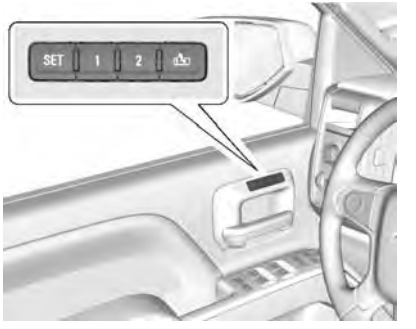

Crew/Double Cab Shown, Other Models Similar

If equipped, the SET, "1," "2," and (Exit) buttons on the driver door are used to manually save and recall memory settings for the driver seat, outside mirrors, and adjustable pedals (if equipped).

See *Memory Seats on page 3-7* and *Vehicle Personalization on page 5-47*.

Heated and Cooled Front Seats

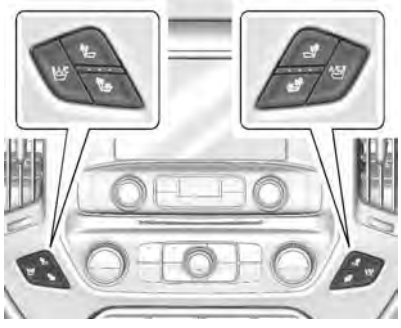

Heated and Cooled Seat Buttons Shown, Heated Seat Buttons Similar

If equipped, the buttons are on the center stack. To operate, the engine must be running.

Press to heat the driver or passenger seatback only.

Press to heat the driver or passenger seat cushion and seatback.

Press A/C to cool the driver or passenger seat.

See *Heated and Cooled Front Seats on page 3-9*.

Head Restraint Adjustment

Do not drive until the head restraints for all occupants are installed and adjusted properly.

To achieve a comfortable seating position, change the seatback recline angle as little as necessary while keeping the seat and the head restraint height in the proper position.

See *Head Restraints on page 3-2* and *Seat Adjustment on page 3-3*.

Safety Belts

Refer to the following sections for important information on how to use safety belts properly.

- *Safety Belts on page 3-12*.
- *How to Wear Safety Belts Properly on page 3-13*.
- *Lap-Shoulder Belt on page 3-14*.
- *Lower Anchors and Tethers for Children (LATCH System) on page 3-44*.

Passenger Sensing System

The passenger sensing system, if equipped, turns off the front outboard passenger frontal airbag under certain conditions. No other airbag is affected by the passenger sensing system.

If the vehicle has one of the indicators pictured in the following illustrations, then the vehicle has a passenger sensing system for the front outboard passenger position unless there is an airbag off switch on the instrument panel endcap.

If there is an airbag off switch, the vehicle does not have a passenger sensing system. See *Airbag On-Off Switch on page 3-27* for more information.

The passenger airbag status indicator will be visible on the overhead console when the vehicle is started.

United States

Canada and Mexico

See *Passenger Sensing System on page 3-29* for important information.

Mirror Adjustment

Using hood-mounted air deflectors and add-on convex mirror attachments could decrease mirror performance.

Exterior Mirrors

Manual Mirrors

If equipped, adjust manual mirrors by moving them up and down or left to right to see a little of the side of the vehicle and to have a clear view behind the vehicle.

See *Manual Mirrors on page 2-14*.

Power Mirrors

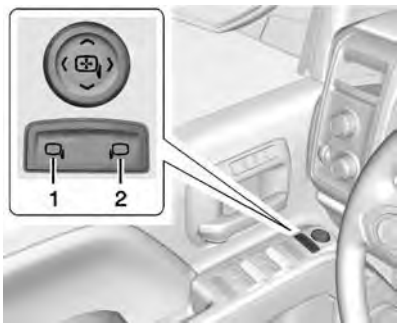

Base Power Mirrors

If equipped with power mirrors:

1. Press (1) or (2) to select the driver or passenger side mirror.

2. Press one of the four arrows on the control pad to move the mirror up, down, right, or left.
3. Adjust each outside mirror so that a little of the vehicle and the area behind it can be seen.
4. Keep the selector switch in the center position when not adjusting either outside mirror.

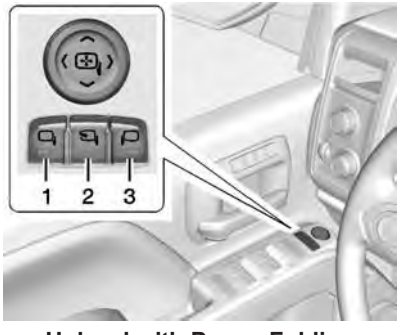

Uplevel with Power Folding Mirrors

1. Press (1) or (3) to select the driver or passenger side mirror.
2. Press the arrows on the control pad while the indicator light on the (1) or (3) button is illuminated, to move the mirror up, down, right, or left.
3. Adjust each outside mirror so that a little of the vehicle and the area behind it can be seen.
4. Press either (1) or (3) again to deselect the mirror.

See *Power Mirrors on page 2-15*.

If equipped with power folding mirrors:

1. Press (2) to fold the mirrors out to the driving position.
2. Press (2) again to fold the mirrors in to the folded position.

See *Folding Mirrors on page 2-16*.

The mirrors may also include a memory function that works with the memory seats. See *Memory Seats on page 3-7*.

Interior Mirror

Adjustment

Adjust the mirror for a clear view of the area behind the vehicle.

Manual Dimming Rearview Mirror

If equipped, push the tab forward for daytime use and pull it for nighttime use to avoid glare from the headlamps from behind. See *Manual Rearview Mirror on page 2-19*.

Automatic Dimming Rearview Mirror

If equipped, the mirror will automatically reduce the glare of the headlamps from behind. The dimming feature comes on when the vehicle is started.

See *Automatic Dimming Rearview Mirror on page 2-19*.

Steering Wheel Adjustment

To adjust the steering wheel:

1. Hold the steering wheel and pull the lever.
2. Move the steering wheel up or down.
3. Release the lever to lock the wheel in place.

Tilt and Telescoping Steering Wheel

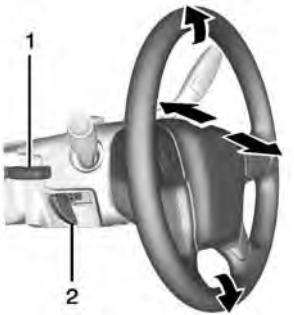

To adjust the tilt and telescoping steering wheel, if equipped:

1. Push the lever (1) down to move the steering wheel forward or rearward. Lift the lever up to lock the wheel in place.

   The ignition may need to be set to the ACC/ACCESSORY or ON/RUN position to disengage the tilt and telescoping steering column and allow easier adjustment.
2. Pull the lever (2) toward you to move the steering wheel up or down, then release the lever to lock the wheel in place.

Do not adjust the steering wheel while driving.

Throttle and Brake Pedal Adjustment

If equipped, the position of the throttle and brake pedals can be changed.

The switch used to adjust the pedals is on the center stack, below the climate controls.

Lift the switch up to move the pedals closer to your body. Press the switch down to move the pedals away.

See *Adjustable Throttle and Brake Pedal on page 9-23*.

Interior Lighting

Dome Lamps

There are dome lamps in the overhead console and the headliner, if equipped.

To change the dome lamp settings, press the following:

OFF: Turns the lamps off, even when a door is open.

DOOR: The lamps come on automatically when a door is opened.

ON: Turns all dome lamps on.

Reading Lamps

There are reading lamps in the overhead console and the headliner, if equipped. To operate, the ignition must be in the ACC/ACCESSORY or ON/RUN position or using Retained Accessory Power (RAP).

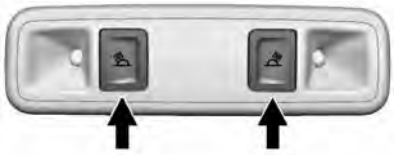

Press ⚟ or ⚟ next to each reading lamp to turn it on or off.

For more information about interior lighting, see *Instrument Panel Illumination Control on page 6-6*.

Exterior Lighting

The exterior lamp control is on the instrument panel to the left of the steering wheel.

⏻ **:** Turns off the automatic headlamps and Daytime Running Lamps (DRL). Turn the headlamp control to the off position again to turn the automatic headlamps or DRL back on.

For vehicles first sold in Canada, off will only work when the vehicle is in P (Park).

AUTO: Automatically turns on the headlamps, parking lamps, taillamps, instrument panel lights, roof marker lamps (if equipped), front/rear sidemarker lamps, and license plate lamps.

: Turns on the parking lamps including all lamps, except the headlamps.

: Turns on the headlamps together with the parking lamps and instrument panel lights.

See:

- *Exterior Lamp Controls on page 6-1*.
- *Daytime Running Lamps (DRL) on page 6-3*.
- *Fog Lamps on page 6-5*.

Windshield Wiper/Washer

The windshield wiper control is on the turn signal lever.

The windshield wipers are controlled by turning the band with on it.

: Fast wipes.

: Slow wipes.

INT: Turn the band up for more frequent wipes or down for less frequent wipes.

OFF: Turns the windshield wipers off.

: For a single wipe, turn to , then release. For several wipes, hold the band on longer.

: Push the paddle at the top of the lever to spray washer fluid on the windshield.

See *Windshield Wiper/Washer on page 5-4*.

Climate Controls

These systems control the heating, cooling, and ventilation.

Climate Control System (with Heater Only)

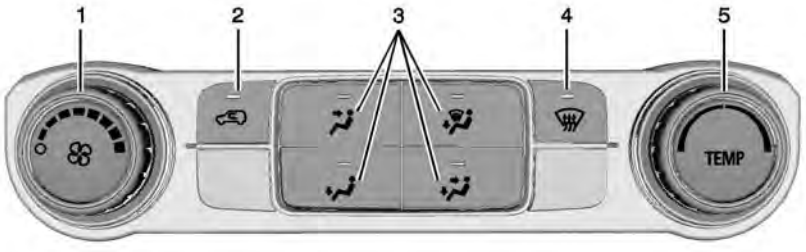

1. Fan Control
2. Air Recirculation
3. Air Delivery Mode Control
4. Defrost
5. TEMP (Temperature Control)

Climate Control System (with Air Conditioning)

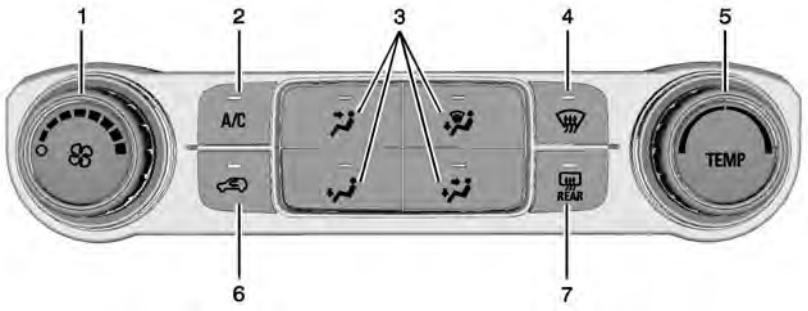

1. Fan Control
2. A/C (Air Conditioning)
3. Air Delivery Mode Control
4. Defrost
5. TEMP (Temperature Control)
6. Air Recirculation
7. REAR Rear Window Defogger (If Equipped)

   Outside Heated Mirror (If Equipped)

   Outside Air (If Equipped)

Dual Automatic Climate Control System

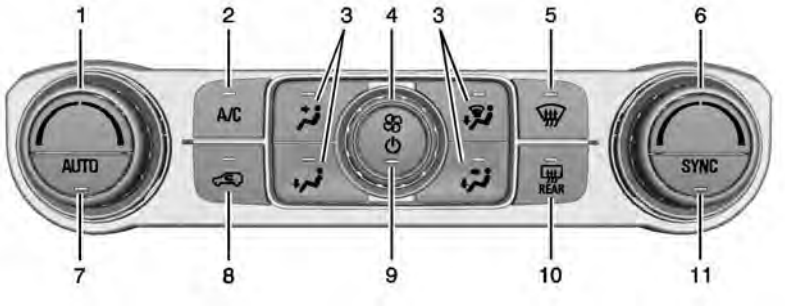

1. Driver Temperature Control
2. A/C (Air Conditioning)
3. Air Delivery Mode Controls
4. Fan Control
5. Defrost
6. Passenger Temperature Control
7. AUTO (Automatic Operation)
8. Air Recirculation
9. Power Button
10. Rear Window Defogger
11. SYNC (Synchronized Temperature)

See *Climate Control Systems (with Heater Only) on page 8-1* or *Climate Control Systems (with Air Conditioning) on page 8-3* or *Dual Automatic Climate Control System on page 8-5* (If Equipped).

Transmission

Range Selection Mode

The Range Selection Mode switch, if equipped, is on the automatic transmission shift lever.

To enable:

1. Move the shift lever to the M (Manual Mode) position. The current range will display next to the M. This is the highest attainable range with all lower gears accessible. As an example, when 5 (Fifth) gear is selected, 1 (First) through 5 (Fifth) gears are available.

2. Press the plus/minus buttons on the shift lever to select the desired range of gears for current driving conditions. See *Manual Mode on page 9-37*.

While using Range Selection Mode, cruise control and the Tow/Haul Mode can be used.

Grade Braking is not available when Range Selection Mode is active. See *Tow/Haul Mode on page 9-39*.

Four-Wheel Drive

If the vehicle has Four-Wheel Drive, the engine's driving power can be sent to all four wheels for extra traction.

Transfer Case Controls

The vehicle will have one of these three styles of transfer case controls. Use these controls to shift into and out of the different four-wheel drive modes.

Manual Transfer Case

This transfer case shift lever is on the floor to the right of the driver.

Electronic Transfer Case

This transfer case knob is to the left of the steering column.

Automatic Transfer Case

This transfer case knob is to the left of the steering column.

The different drive options that may be available are described following.

2 ↑ (Two-Wheel Drive High): This setting is used for driving in most street and highway situations.

AUTO (Automatic Four-Wheel Drive): This setting is ideal for use when road surface traction conditions are variable.

Do not use AUTO mode to park on a steep grade with poor traction such as ice, snow, mud or gravel. In AUTO mode only the rear wheels will hold the vehicle from sliding when parked. If parking on a steep grade, use 4 ↑ to keep all four wheels engaged.

4 ↑ (Four-Wheel Drive High): Use this setting when extra traction is needed, such as on snowy or icy roads or in most off-road situations.

N (Neutral): Shift to this setting only when towing the vehicle. See *Recreational Vehicle Towing on page 10-95* or *Trailer Towing on page 9-76*.

4 ↓ (Four-Wheel Drive Low): This setting sends maximum power to all four wheels. Choose 4↓ when driving in deep sand, mud, or snow, and while climbing or descending steep hills.

See *Four-Wheel Drive on page 9-42*.

Vehicle Features

Infotainment System

The base radio and base radio with connectivity information is included in this manual. See the infotainment manual for information on the uplevel radios, audio players, phone, navigation system, Rear Seat Entertainment (RSE), and voice or speech recognition, if equipped.

Radio(s)

⏻ : Press to turn the system on. Press and hold to turn it off. When on, press to mute; press again to unmute. Turn to increase or decrease the volume.

RADIO: Press to choose between FM, AM, and SiriusXM®, if equipped.

MEDIA: Press to change the audio source between CD, USB, SD card, AUX, and Bluetooth® Audio, if equipped.

⌂ **:** Press to go to the Home Page.

MENU: Press to select a menu.

⏮ **:** Press to seek the previous station or track.

⏭ **:** Press to seek the next station or track.

See *Overview on page 7-3* about these and other radio features.

Storing Radio Station Presets

Up to 25 preset stations from all bands can be stored in the favorite lists in any order. Up to five stations can be stored in each favorite page and the number of favorite pages can be set.

To store the station to a position in the list, while on the active source main page, such as AM, FM, or SiriusXM (if equipped), press and hold a favorites/soft key button on the faceplate.

See "Storing Radio Station Presets" under *AM-FM Radio on page 7-8*.

Setting the Clock

See *Clock on page 5-5*.

Satellite Radio

Vehicles with a SiriusXM® satellite radio tuner and a valid SiriusXM satellite radio subscription can receive SiriusXM programming.

SiriusXM Satellite Radio Service

SiriusXM is a satellite radio service based in the 48 contiguous United States and 10 Canadian provinces. SiriusXM satellite radio has a wide variety of programming and commercial-free music, coast to coast, and in digital-quality sound. A fee is required to receive the SiriusXM service.

For more information refer to:

- www.siriusxm.com or call 1-866-635-2349 (U.S.).
- www.xmradio.ca or call 1-877-209-0079 (Canada).

See *Satellite Radio on page 7-10*.

Portable Audio Devices

This vehicle may have a 3.5 mm (1/8 in) auxiliary input jack, SD card reader, and USB ports in the center console or armrest. There may be a USB port in the upper glove box. External devices such as iPods®, laptop computers, MP3 players, CD changers, and USB storage devices may be connected, depending on the audio system.

See *USB Port on page 7-18*, *SD Card Reader on page 7-20*, and *Auxiliary Jack on page 7-21*.

Bluetooth®

The Bluetooth® system allows users with a Bluetooth-enabled cell phone to make and receive hands-free calls using the vehicle audio system and controls.

The Bluetooth-enabled cell phone must be paired with the in-vehicle Bluetooth system before it can be used in the vehicle. Not all phones will support all functions.

See *Bluetooth (Overview) on page 7-31* or *Bluetooth (Infotainment Controls - Base Connected Radio) on page 7-42* or *Bluetooth (Voice Recognition - Base Connected Radio) on page 7-46* or *Bluetooth (Infotainment Controls - Base Radio) on page 7-32* or *Bluetooth (Voice Recognition - Base Radio) on page 7-37*.

Steering Wheel Controls

If equipped, some audio controls can be adjusted at the steering wheel.

: If equipped with OnStar® or a Bluetooth® system, press to interact with those systems. See *OnStar Overview on page 14-1*, *Bluetooth (Overview) on page 7-31* or *Bluetooth (Infotainment Controls - Base Connected Radio) on page 7-42* or *Bluetooth (Voice Recognition - Base Connected Radio) on page 7-46* or *Bluetooth (Infotainment Controls - Base Radio) on page 7-32* or *Bluetooth (Voice Recognition - Base Radio) on page 7-37*, or “Bluetooth (Overview)” in the infotainment manual.

: Press to reject an incoming call, or end a current call. Press to mute or unmute the infotainment system when not on a call.

◁ **or** ▷ **:** Press to go to the previous or next menu option.

△ **or** ▽ **:** Press to go to the next or previous selection.

✓ **:** Press to select a highlighted menu option.

The favorite and volume switches are on the back of the steering wheel.

1. Favorite: When on a radio source, press to select the next or previous favorite. When on a media source, press to select the next or previous track.
2. Volume: Press to increase or decrease the volume.

See *Steering Wheel Controls on page 5-3*.

Cruise Control

: Press to turn the system on or off. The indicator light is white when cruise control is on and turns off when cruise control is off.

+RES: If there is a set speed in memory, press briefly to resume to that speed or press and hold to accelerate. If cruise control is already active, use to increase vehicle speed.

SET−: Press briefly to set the speed and activate cruise control. If cruise control is already active, use to decrease vehicle speed.

: Press to disengage cruise control without erasing the set speed from memory.

See *Cruise Control on page 9-57*.

Driver Information Center (DIC)

The DIC display is in the instrument cluster. It shows the status of many vehicle systems.

If the vehicle has the base level instrument cluster, the trip odometer reset stem is used to operate the DIC.

If the vehicle has the uplevel instrument cluster, the right steering wheel controls are used to operate the DIC.

△ **or** ▽ **:** Press to move up or down in a list.

◁ **or** ▷ **:** Press to move between the interactive display zones in the cluster.

✓ **:** Press to open a menu or select a menu item. Press and hold to reset values on certain screens.

See *Driver Information Center (DIC) (Base Level) on page 5-30* or *Driver Information Center (DIC) (Uplevel) on page 5-32*.

Forward Collision Alert (FCA) System

If equipped, FCA may help avoid or reduce the harm caused by front-end crashes. FCA provides a green indicator, , when a vehicle is detected ahead. This indicator displays amber if you follow a vehicle much too closely. When approaching a vehicle ahead too quickly, FCA provides a flashing red alert on the windshield and rapidly beeps or pulses the driver seat.

See *Forward Collision Alert (FCA) System on page 9-63*.

Lane Departure Warning (LDW)

If equipped, LDW may help avoid unintentional lane departures at speeds of 56 km/h (35 mph) or greater. LDW uses a camera sensor to detect the lane markings. The LDW light, , is green if a lane marking is detected. If the vehicle departs the lane, the light will change to amber and flash. In addition, the driver seat will pulse or beeps will sound.

See *Lane Departure Warning (LDW) on page 9-66*.

Rear Vision Camera (RVC)

If equipped, the RVC displays a view of the area behind the vehicle, on the center stack display, when the vehicle is shifted into R (Reverse).

See *Assistance Systems for Parking or Backing on page 9-60*.

Parking Assist

If equipped, Rear Parking Assist (RPA) uses sensors on the rear bumper to assist with parking and avoiding objects while in R (Reverse). It operates at speeds less than 8 km/h (5 mph). RPA may display a warning triangle on the Rear Vision Camera screen and a graphic on the instrument cluster to

provide the object distance. In addition, multiple beeps or seat pulses may occur if very close to an object.

The vehicle may also have the Front Parking Assist system.

See *Assistance Systems for Parking or Backing on page 9-60*.

Power Outlets

Accessory power outlets can be used to plug in electrical equipment, such as a cell phone, MP3 player, etc.

The vehicle may have up to four accessory power outlets.

Vehicles with a Center Console

- One or two in front of the cupholders on the center console.
- One inside the center console.
- One on the rear of the center console.

Vehicles with Bench Seats

- One on the center stack below the climate control system.
- One or two in the storage area on the bench seat.

Lift the cover to access and replace when not in use.

See *Power Outlets on page 5-6*.

Universal Remote System

If equipped with the Universal Remote system, these buttons will be in the front overhead console.

This system provides a way to replace up to three remote control transmitters used to activate devices such as garage door openers, security systems, and home automation devices.

See *Universal Remote System on page 5-54*.

Sunroof

If equipped, the sunroof only operates when the ignition is in ACC/ACCESSORY or ON/RUN, or when Retained Accessory Power (RAP) is active. See *Retained Accessory Power (RAP) on page 9-28*.

Vent: From the closed position, press the rear of the TILT switch to vent the sunroof.

Manual-Open/Manual-Close: To open the sunroof, press and hold the rear of the SLIDE switch until the sunroof reaches the desired position. Press and hold the front of the SLIDE switch to close it.

Express-Open/Express-Close: To express-open the sunroof, fully press and release the rear of the SLIDE switch until the sunroof reaches the desired position. To express-close the sunroof, fully press and release the front of the SLIDE switch. Press the switch again to stop it.

When the sunroof is opened, an air deflector will automatically raise. The air deflector will retract when the sunroof is closed.

The sunroof also has a sunshade that can be pulled forward to block the rays of the sun. Open and close the sunshade manually.

If an object is in the path of the sunroof while it is closing, the anti-pinch feature will detect the object and stop the sunroof.

See *Sunroof on page 2-23*.

Performance and Maintenance

Traction Control/ Electronic Stability Control

The vehicle has a traction control system that limits wheel spin and the StabiliTrak system that assists with directional control of the vehicle in difficult driving conditions. Both systems come on automatically when the vehicle is started and begins to move.

- To turn off traction control, press and release OFF on the center stack. The traction off light displays in the instrument cluster. The appropriate Driver Information Center (DIC) message displays. See *Ride Control System Messages on page 5-40*.

- To turn off both traction control and StabiliTrak, press and hold OFF until and OFF illuminate in the instrument cluster and the appropriate DIC message displays. See *Ride Control System Messages on page 5-40*.
- Press and release OFF again to turn on both systems.
- StabiliTrak will automatically turn on if the vehicle exceeds 56 km/h (35 mph). Traction control will remain off.

See *Traction Control/Electronic Stability Control on page 9-54*.

Tire Pressure Monitor

This vehicle may have a Tire Pressure Monitor System (TPMS).

The low tire pressure warning light alerts to a significant loss in pressure of one of the vehicle's tires. If the warning light comes on, stop as soon as possible and inflate the tires to the recommended pressure shown on the Tire and Loading Information label. See *Vehicle Load Limits on page 9-15*. The warning light will remain on until the tire pressure is corrected.

The low tire pressure warning light may come on in cool weather when the vehicle is first started, and then turn off as the vehicle is driven. This may be an early indicator that the tire pressures are getting low and the tires need to be inflated to the proper pressure.

The TPMS does not replace normal monthly tire maintenance. Maintain the correct tire pressures.

See *Tire Pressure Monitor System on page 10-64*.

Engine Oil Life System

The engine oil life system calculates engine oil life based on vehicle use and, on most vehicles, displays a DIC message when it is necessary to change the engine oil and filter. The oil life system should be reset to 100% only following an oil change.

Resetting the Oil Life System

To reset the engine oil life system:

1. Display OIL LIFE REMAINING on the DIC. See *Driver Information Center (DIC) (Base Level) on page 5-30* or *Driver Information Center (DIC) (Uplevel) on page 5-32*. If the vehicle does not have DIC buttons, the vehicle must be in P (Park) to access this display.
2. Press and hold the ✓ button on the DIC, or the trip odometer reset stem if the vehicle does not have DIC buttons, for several seconds. The oil life will change to 100%.

The oil life system can also be reset as follows:

1. Turn the ignition to ON/RUN with the engine off.
2. Fully press the accelerator pedal slowly three times within five seconds.
3. Display OIL LIFE REMAINING on the DIC. If the display shows 100%, the system is reset.

See *Engine Oil Life System on page 10-14*.

E85 or FlexFuel

Vehicles with a yellow fuel cap can use either unleaded gasoline or ethanol fuel containing up to 85% ethanol (E85). See *E85 or FlexFuel on page 9-69*. For all other vehicles, use only the unleaded gasoline described under *Fuel on page 9-67*.

Driving for Better Fuel Economy

Driving habits can affect fuel mileage. Here are some driving tips to get the best fuel economy possible.

- Avoid fast starts and accelerate smoothly.
- Brake gradually and avoid abrupt stops.
- Avoid idling the engine for long periods of time.
- When road and weather conditions are appropriate, use cruise control.
- Always follow posted speed limits or drive more slowly when conditions require.
- Keep vehicle tires properly inflated.
- Combine several trips into a single trip.
- Replace the vehicle's tires with the same TPC Spec number molded into the tire's sidewall near the size.
- Follow recommended scheduled maintenance.

Roadside Assistance Program

U.S.: 1-800-243-8872

TTY Users (U.S. Only): 1-888-889-2438

Canada: 1-800-268-6800

New Chevrolet owners are automatically enrolled in the Roadside Assistance Program.

See *Roadside Assistance Program on page 13-5*.

OnStar®

This vehicle may be equipped with a comprehensive, in-vehicle system that can connect to a live OnStar Advisor for Emergency, Security, Navigation, Connection, and Diagnostic Services. OnStar services may require a paid subscription. See *OnStar Overview on page 14-1*.

✍ NOTES

Keys, Doors, and Windows

Keys and Locks
Keys 2-1
Remote Keyless Entry (RKE) System 2-4
Remote Keyless Entry (RKE) System Operation 2-4
Remote Vehicle Start 2-6
Door Locks 2-7
Power Door Locks 2-8
Delayed Locking 2-9
Automatic Door Locks 2-9
Lockout Protection 2-9
Safety Locks 2-9

Doors
Tailgate 2-10

Vehicle Security
Vehicle Security 2-11
Vehicle Alarm System 2-11
Immobilizer 2-12
Immobilizer Operation 2-13

Exterior Mirrors
Convex Mirrors 2-14
Manual Mirrors 2-14
Trailer-Tow Mirrors 2-14
Power Mirrors 2-15
Folding Mirrors 2-16
Heated Mirrors 2-17
Automatic Dimming Mirror . . . 2-17
Blind Spot Mirrors 2-17
Reverse Tilt Mirrors 2-18

Interior Mirrors
Interior Rearview Mirrors 2-19
Manual Rearview Mirror 2-19
Automatic Dimming Rearview Mirror 2-19

Windows
Windows 2-19
Manual Windows 2-20
Power Windows 2-20
Rear Windows 2-22
Sun Visors 2-23

Roof
Sunroof 2-23

Keys and Locks

Keys

⚠ Warning

Leaving children in a vehicle with the ignition key is dangerous and children or others could be seriously injured or killed. They could operate the power windows or other controls or make the vehicle move. The windows will function with the keys in the ignition, and children or others could be caught in the path of a closing window. Do not leave children in a vehicle with the ignition key.

⚠ Warning

If the key is unintentionally rotated while the vehicle is running, the ignition could be moved out of the RUN position. This could be caused by heavy items hanging from the key ring, or by large or long items attached to the key ring that could be contacted by the driver or steering wheel. If the ignition moves out of the RUN position,

(Continued)

Warning (Continued)

the engine will shut off, braking and steering power assist may be impacted, and airbags may not deploy. To reduce the risk of unintentional rotation of the ignition key, do not change the way the ignition key and Remote Keyless Entry (RKE) transmitter, if equipped, are connected to the provided key rings.

The ignition key and key rings, and RKE transmitter, if equipped, are designed to work together as a system to reduce the risk of unintentionally moving the key out of the RUN position. The ignition key has a small hole to allow attachment of the provided key ring. It is important that any replacement ignition keys have a small hole. See your dealer if a replacement key is required.

The combination and size of the rings that came with your keys were specifically selected for your vehicle. The rings are connected to the key like two links of a chain to reduce the risk of unintentionally moving the key out of the RUN position. Do not add any additional items to the ring attached to the ignition key. Attach additional items only to the second ring, and limit added items to a few essential keys or small, light items no larger than an RKE transmitter.

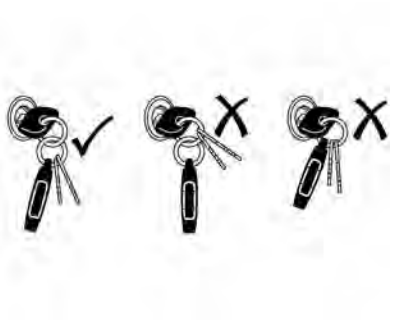

The key is used for the ignition and all door locks.

Programming Keys

Follow these procedures to program up to eight keys to the vehicle.

Programming with a Recognized Key

To program a new key:

1. Insert the original, already programmed key in the ignition and turn the key to the ON/RUN position.
2. Turn the key to LOCK/OFF, and remove the key.
3. Insert the new key to be programmed and turn it to the ON/RUN position within five seconds.

   The security light will turn off once the key has been programmed.
4. Repeat Steps 1–3 if additional keys are to be programmed.

If a key is lost or damaged, see your dealer to have a new key made.

Programming without a Recognized Key

Program a new key to the vehicle when a recognized key is not available. Canadian regulations require that owners see their dealer.

If there are no currently recognized keys available, follow this procedure to program the first key.

This procedure will take approximately 30 minutes to complete for the first key. The vehicle must be off and all of the keys you wish to program must be with you.

1. Insert the new vehicle key into the ignition.
2. Turn to ON/RUN. The security light will come on.
3. Wait 10 minutes until the security light turns off.
4. Turn the ignition to LOCK/OFF.
5. Repeat Steps 2–4 two more times. After the third time, turn to ON/RUN; the key is learned and all previously known keys will no longer work with the vehicle.

Remaining keys can be learned by following the procedure in “Programming with a Recognized Key.”

The key has a bar-coded key tag that the dealer or qualified locksmith can use to make new keys. Store this information in a safe place, not in the vehicle.

See your dealer if a replacement key or additional key is needed.

If it becomes difficult to turn a key, inspect the key blade for debris. Periodically clean with a brush or pick.

With an active OnStar subscription, an OnStar Advisor may remotely unlock the vehicle. See *OnStar Overview on page 14-1*.

Remote Keyless Entry (RKE) System

See *Radio Frequency Statement on page 13-12*.

If there is a decrease in the RKE operating range:

- Check the distance. The transmitter may be too far from the vehicle.
- Check the location. Other vehicles or objects may be blocking the signal.
- Check the transmitter's battery. See “Battery Replacement” later in this section.
- If the transmitter is still not working correctly, see your dealer or a qualified technician for service.

Remote Keyless Entry (RKE) System Operation

The RKE transmitter functions may work up to 60 m (197 ft) away from the vehicle.

Other conditions can affect the performance of the transmitter. See *Remote Keyless Entry (RKE) System on page 2-4*.

With Remote Start (without Remote Start Similar)

(Remote Vehicle Start): If equipped, is used to start the engine from outside the vehicle using the RKE transmitter. See *Remote Vehicle Start on page 2-6*.

(Lock): Press to lock all doors.

If enabled through the Driver Information Center (DIC), the turn signal lamps flash once to indicate locking has occurred. If enabled through the DIC, the horn chirps when is pressed again within three seconds. See *Vehicle Personalization on page 5-47*.

Pressing arms the alarm system. See *Vehicle Alarm System on page 2-11*.

If equipped with auto mirror folding, pressing and holding for one second will fold the mirrors. The auto mirror folding feature will not operate unless it is enabled. See *Vehicle Personalization on page 5-47*.

(Unlock): Press once to unlock only the driver door. If is pressed again within three seconds, all remaining doors unlock. The interior lamps may come on and stay on for 20 seconds or until the ignition is turned on.

If enabled through the DIC, the turn signal lamps flash twice to indicate unlocking has occurred. See *Vehicle Personalization on page 5-47*. If enabled through the DIC, the exterior lamps may turn on. See *Vehicle Personalization on page 5-47*.

If equipped, memory seat positions may be recalled when unlocking the vehicle if enabled. See *Vehicle Personalization on page 5-47* and *Memory Seats on page 3-7*.

Pressing on the RKE transmitter disarms the alarm system. See *Vehicle Alarm System on page 2-11*.

If equipped with auto mirror folding, pressing and holding for one second will unfold the mirrors. The auto mirror folding feature will not operate unless it is enabled. See *Vehicle Personalization on page 5-47*.

On some models, press, release and then press and hold to open all of the windows. Pressing the button again will stop the windows.

(Vehicle Locator/Panic Alarm): Press and release one time to initiate vehicle locator. The turn signal lamps flash and the horn sounds three times.

Press and hold for at least three seconds to sound the panic alarm. The turn signal lamps flash and the horn sounds repeatedly for 30 seconds. The alarm turns off when the ignition is moved to ON/RUN or is pressed again. The ignition must be in LOCK/OFF for the panic alarm to work.

Programming Transmitters to the Vehicle

Only RKE transmitters programmed to this vehicle will work. If a transmitter is lost or stolen, a replacement can be purchased and programmed through your dealer. Each vehicle can have up to eight transmitters programmed to it. See your dealer for transmitter programming.

Battery Replacement

Replace the battery in the transmitter soon if the REPLACE BATTERY IN REMOTE KEY message displays in the DIC.

Caution

When replacing the battery, do not touch any of the circuitry on the transmitter. Static from your body could damage the transmitter.

To replace the battery:

1. Separate and remove the back cover of the transmitter with a flat, thin object, such as a coin.

2. Press and slide the battery down toward the pocket of the transmitter in the direction of the key ring. Do not use a metal object.
3. Remove the battery.
4. Insert the new battery, positive side facing up. Replace with a CR2032 or equivalent battery.
5. Push together the transmitter back cover top side first, and then the bottom toward the key ring.

Remote Vehicle Start

If equipped with the remote start feature, the climate control system will come on when the vehicle is started remotely, depending on the outside temperature.

The rear defog and heated and cooled seats, if equipped, may also come on. See *Heated and Cooled Front Seats on page 3-9* and *Vehicle Personalization on page 5-47*.

Laws in some communities may restrict the use of remote starters. Check local regulations for any requirements on remote starting of vehicles.

Do not use remote start if the vehicle is low on fuel.

The vehicle cannot be remote started if:

- The key is in the ignition.
- The hood is not closed.

- There is an emission control system malfunction and the malfunction indicator lamp is on.

The engine will turn off during a remote vehicle start if:

- The coolant temperature gets too high.
- The oil pressure gets low.

The RKE transmitter range may be reduced while the vehicle is running.

Other conditions can affect the performance of the transmitter. See *Remote Keyless Entry (RKE) System on page 2-4* or *Vehicle Personalization on page 5-47*.

Starting the Engine Using Remote Start

1. Press and release 🔒.
2. Immediately press and hold ⟲ until the turn signal lamps flash or for at least four seconds.

   When the vehicle starts, the parking lamps will turn on. The doors will be locked and the climate control system may come on.

   The engine will continue to run for 10 minutes. Repeat the Steps for 1 and 2 for a 10-minute time extension.

Place the ignition in ON/RUN/START to operate the vehicle.

Extending Engine Run Time

The engine run time can be extended by 10 minutes, for a total of 20 minutes, if during the first 10 minutes Steps 1 and 2 are repeated while the engine is still running.

A maximum of two remote starts, or a single start with an extension, is allowed between ignition cycles.

The vehicle's ignition must be turned on and then back off to use remote start again.

Canceling a Remote Start

To cancel a remote start, do one of the following:

- Press and hold ⟲ until the parking lamps turn off.
- Turn on the hazard warning flashers.
- Turn the ignition on and then off.

Door Locks

⚠ Warning

Unlocked doors can be dangerous.

- Passengers, especially children, can easily open the doors and fall out of a moving vehicle. When a door is locked, the handle will not open it. The chance of being thrown out of the vehicle in a crash is increased if the doors are not locked. So, all

(Continued)

Warning (Continued)

passengers should wear safety belts properly and the doors should be locked whenever the vehicle is driven.

- Young children who get into unlocked vehicles may be unable to get out. A child can be overcome by extreme heat and can suffer permanent injuries or even death from heat stroke. Always lock the vehicle whenever leaving it.
- Outsiders can easily enter through an unlocked door when you slow down or stop the vehicle. Locking the doors can help prevent this from happening.

There are several ways to lock and unlock the vehicle.

From outside, use the Remote Keyless Entry (RKE) transmitter or the key in the driver door.

From inside, use the power door locks or manual door locks. To lock or unlock the door with the manual locks, push down or pull up on the manual lock knob.

From inside, pull the door handle once to unlock the door. Pull the handle again to open the door.

See *Vehicle Alarm System on page 2-11*.

Power Door Locks

Crew/Double Cab Premium Trim Shown, Other Models Similar

Base Trim

If equipped with power door locks:

🔒 : Press to lock the doors.

🔓 : Press to unlock the doors.

Delayed Locking

If equipped, when locking the doors with the power lock switch and a door open, the doors will lock five seconds after the last door is closed. Three chimes signal that delayed locking is in use.

Pressing the power lock switch twice overrides the delayed locking feature and immediately locks all doors.

This feature will not operate if the key is in the ignition.

Turn delayed locking on or off using vehicle personalization. See *Vehicle Personalization on page 5-47*.

Automatic Door Locks

The doors will lock automatically when all doors are closed, the ignition is on, and the shift lever is moved out of P (Park) for automatic transmissions and vehicle speed is above 13 km/h (8 mph) for manual transmissions.

To unlock the doors:

- Press 🔓 on a door.
- Shift the transmission into P (Park) for an automatic transmission.
- Remove the key from the ignition for a manual transmission.

Automatic door unlocking can be programmed through the Driver Information Center (DIC). See *Vehicle Personalization on page 5-47*.

Lockout Protection

When locking is requested with the driver door open and the key in the ignition, all the doors will lock and then the driver door will unlock.

This can be manually overridden by pressing and holding 🔒 on the power door lock switch.

Safety Locks

The rear door safety locks prevent passengers from opening the rear doors from inside the vehicle.

Crew/Double Cab Premium Shown, Others Similar

Press 🔒 to activate the safety locks on the rear doors. The indicator light comes on when activated. The vehicle must be on, in ACC/ACCESSORY, or in Retained Accessory Power (RAP). See *Retained Accessory Power (RAP) on page 9-28*.

If the indicator light flashes, the feature may not be working properly.

Doors

Tailgate

⚠ Warning

It is extremely dangerous to ride on the tailgate, even when the vehicle is operated at low speeds. People riding on the tailgate can easily lose their balance and fall in response to vehicle maneuvers. Falling from a moving vehicle may result in serious injuries or death. Do not allow people to ride on the tailgate. Be sure everyone in your vehicle is in a seat and using a safety belt properly.

On vehicles with a lock on the tailgate, use the key to lock or unlock the tailgate.

Open the tailgate by lifting up on its handle while pulling the tailgate down.

To shut the tailgate, firmly push it upward until it latches.

After closing the tailgate, pull it back to be sure it latches securely.

Tailgate Removal

The tailgate can be removed to allow for different loading situations. Assistance may be needed with the removal to avoid damage to the vehicle.

On vehicles with a Rear Vision Camera, it must be disconnected before removing the tailgate. See *Driver Assistance Systems on page 9-60*.

To remove the tailgate:

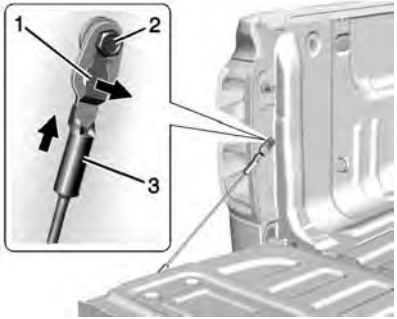

1. Raise the tailgate and support it firmly. Pull out and hold the cable retaining clip (1). Push the cable (3) up and off of the bolt (2). Repeat on the other side.
2. With the tailgate about halfway open, lift the right edge of the tailgate from the lower pivot.

   On vehicles with the tailgate assist feature, raise the tailgate nearly all the way to the closed position prior to removing the left edge.
3. Move the tailgate to the right and away to release the left edge.

Reverse this procedure to reinstall the tailgate. Make sure the tailgate is secure.

Vehicle Security

This vehicle has theft-deterrent features; however, they do not make the vehicle impossible to steal.

Vehicle Alarm System

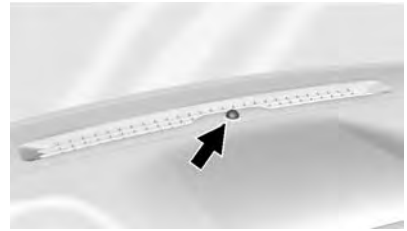

If equipped with the anti-theft alarm system, the indicator light, on the instrument panel near the windshield, indicates the status of the system.

Off: Alarm system is disarmed.

On Solid: Vehicle is secured during the delay to arm the system.

Fast Flash: Vehicle is unsecured. A door or the hood is open.

Slow Flash: Alarm system is armed.

Arming the Alarm System

1. Turn off the vehicle.
2. Lock the vehicle with one of the following:
   - Use the Remote Keyless Entry (RKE) transmitter.
   - With a door open, press 🔒 on the interior of the door.
3. After 30 seconds the alarm system will arm, and the indicator light will begin to slowly flash indicating the alarm system is operating. Pressing 🔒 on the RKE transmitter a second time will bypass the 30-second delay and immediately arm the alarm system.

The theft-deterrent alarm system will not arm if the doors are locked with the key.

If the driver door is opened without first unlocking the RKE transmitter, the horn will chirp and the lights will flash to indicate pre-alarm. If the vehicle is not started, or the door is not unlocked by pressing 🔓 on the RKE transmitter during the 10-second pre-alarm, the alarm will be activated.

If a door or the hood is opened without first disarming the system, the turn signals will flash and the horn will sound for about 30 seconds. The alarm system will then re-arm to monitor for the next unauthorized event.

Disarming the Alarm System

To disarm the alarm system or turn off the alarm if it has been activated:

- Press 🔓 on the RKE transmitter.
- Start the vehicle.

To avoid setting off the alarm by accident:

- Lock the vehicle after all occupants have left the vehicle and all doors are closed.
- Always unlock a door with the RKE transmitter.

Unlocking the driver door with the key will not disarm the system or turn off the alarm.

How to Detect a Tamper Condition

If 🔓 is pressed on the RKE transmitter and the horn chirps three times, an alarm occurred previously while the alarm system was armed.

Immobilizer

See *Radio Frequency Statement on page 13-12*.

Immobilizer Operation

This vehicle has a passive theft-deterrent system.

The system does not have to be manually armed or disarmed.

The vehicle is automatically immobilized when the vehicle is turned off.

The system is automatically disarmed when the key is turned to ON/RUN, ACC/ACCESSORY, or START from the LOCK/OFF position.

The security light, in the instrument cluster, comes on if there is a problem with arming or disarming the theft-deterrent system.

When trying to start the vehicle, the security light comes on briefly when the ignition is turned on.

If the engine does not start and the security light stays on, there is a problem with the system. Turn the ignition off and try again.

If the engine still does not start, and the key appears to be undamaged, try another ignition key. It may be necessary to check the fuse. See *Fuses on page 10-44*. If the engine still does not start with the other key, the vehicle needs service. If the vehicle does start, the first key may be faulty. See your dealer.

It is possible for the immobilizer system to learn new or replacement keys. Up to eight keys can be programmed for the vehicle. To program additional keys, see *Keys on page 2-1*. To program additional transmitters, see *Remote Keyless Entry (RKE) System Operation on page 2-4*.

Do not leave the key or device that disarms or deactivates the vehicle theft system in the vehicle.

See your dealer to get a new key blank cut exactly as the ignition key that operates the system.

Exterior Mirrors

Convex Mirrors

⚠ Warning

A convex mirror can make things, like other vehicles, look farther away than they really are. If you cut too sharply into the right lane, you could hit a vehicle on the right. Check the inside mirror or glance over your shoulder before changing lanes.

The passenger side mirror is convex shaped. A convex mirror's surface is curved so more can be seen from the driver seat.

Manual Mirrors

If equipped, adjust manual mirrors by moving the mirror up and down or left to right to see a little of the side of the vehicle and to have a clear view behind the vehicle.

Using hood-mounted air deflectors and add-on convex mirror attachments could decrease mirror performance.

Trailer-Tow Mirrors

If equipped, adjust trailer-tow mirrors for a clear view of the area behind you. Manually pull out the mirror head to extend it for better visibility when towing a trailer.

The lower portion of the mirror is convex. A convex mirror's surface is curved to see more from the driver seat. The convex mirror can be adjusted manually to the driver preferred position for better vision.

The mirror may have a turn signal arrow that flashes in the direction of the turn or lane change.

If equipped, the mirror housing may have auxiliary cargo and clearance lamps. See *Cargo Lamp on page 6-6* and *Exterior Lamp Controls on page 6-1*.

Power Mirrors

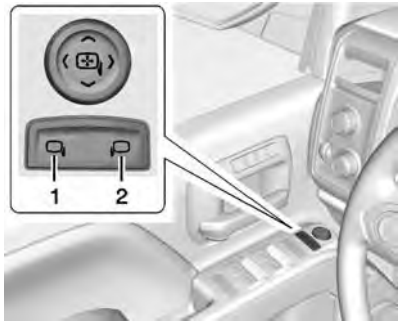

Base Power Mirrors

If equipped with power mirrors:

1. Press (1) or (2) to select the driver or passenger side mirror.
2. Press one of the four arrows on the control pad to move the mirror in the desired direction.
3. Adjust each outside mirror so that a little of the vehicle and the area behind it can be seen.
4. Move the selector switch to the center position when not adjusting either outside mirror.

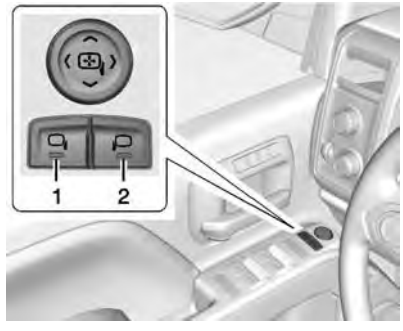

Crew/Double Cab Premium Shown, Other Models Similar

1. Press (1) or (2) to select the driver or passenger side mirror.
2. Press one of the four arrows on the control pad while the indicator light on button (1) or (2) is illuminated, to move the mirror in the desired direction.
3. Adjust each outside mirror so that a little of the vehicle and the area behind it can be seen.
4. Press either (1) or (2) again to deselect the mirror.

If you do not deselect the mirror, the feature will turn off after about one minute.

If equipped, the mirrors may include a memory function that works with the memory seats. See *Memory Seats on page 3-7*.

Folding Mirrors

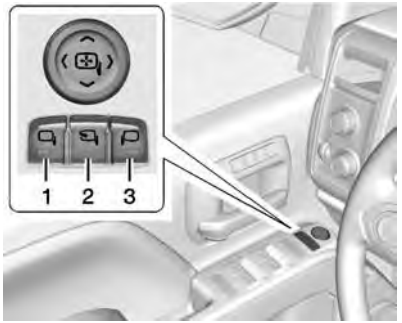

Crew/Double Cab Premium Shown, Other Models Similar

Power Folding

If equipped with power folding mirrors:

1. Press (2) to fold the mirrors out to the driving position.
2. Press (2) again to fold the mirrors in to the folded position.

The mirrors may also include a memory function that works with the memory seats. See *Memory Seats on page 3-7*.

Resetting the Power Folding Mirrors

Reset the power folding mirrors if:

- The mirrors are accidentally obstructed while folding.
- They are accidentally manually folded/unfolded.
- The mirrors will not stay in the unfolded position.
- The mirrors vibrate at normal driving speeds.

Fold and unfold the mirrors three times using the mirror controls to reset them to their normal position. A popping noise may be heard. This sound is normal after a manual folding operation.

Manual Folding

If equipped, push the mirror toward the vehicle to fold. Push the mirror outward to return to its original position.

Manually fold the mirrors inward to prevent damage when going through an automatic car wash.

Auto Mirror Folding

If equipped, with the ignition off, press and hold 🔒 on the RKE transmitter for approximately one second to automatically fold the exterior mirrors. Press and hold 🔓 on the RKE transmitter for approximately one second to unfold. See *Remote Keyless Entry (RKE) System Operation on page 2-4*.

This feature is turned on or off through vehicle personalization. See *Vehicle Personalization on page 5-47*.

Turn Signal Indicator

If equipped, indicator lights on the mirror flash in the direction of the turn or lane change.

Heated Mirrors

(Rear Window Defogger):
If equipped, the rear window defogger also heats the side mirrors.

(Heated Side Mirrors):
If equipped, press to turn the heated mirrors on or off.

If the vehicle has trailer-tow mirrors, only the upper glass of the mirror is heated. The lower convex part of the towing mirrors is not heated.

See “Rear Window Defogger” under *Climate Control Systems (with Heater Only) on page 8-1* or *Climate Control Systems (with Air Conditioning) on page 8-3* or *Dual Automatic Climate Control System on page 8-5*.

Automatic Dimming Mirror

If equipped, the driver outside mirror automatically adjusts for the glare of the headlamps from behind. This feature comes on when the vehicle is started.

Blind Spot Mirrors

If equipped, there is a small convex mirror built into the upper and outer corner of the driver outside rearview mirror. It can show objects that may be in the vehicle's blind zone.

Driving with the Blind Spot Mirror

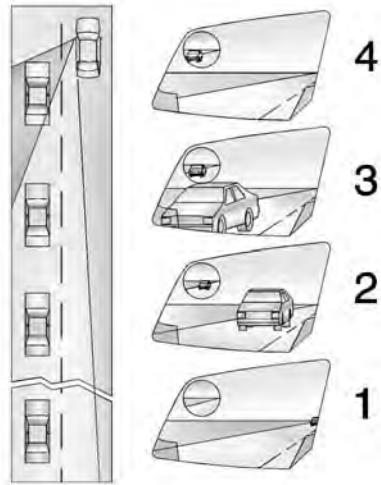

Actual Mirror View

1. When the approaching vehicle is a long distance away, the image in the main mirror is small and near the inboard edge of the mirror.
2. As the vehicle gets closer, the image in the main mirror gets larger and moves outboard.
3. As the vehicle enters the blind zone, the image transitions from the main mirror to the blind spot mirror.
4. When the vehicle is in the blind zone, the image only appears in the blind spot mirror.

Using the Outside Mirror with the Blind Spot Mirror

1. Set the main mirror so that the side of the vehicle can just be seen and the blind spot mirror has an unobstructed view.
2. When checking for traffic or before changing a lane, look at the main driver/passenger side mirror to observe traffic in the adjacent lane, behind your vehicle. Check the blind spot mirror for a vehicle in the blind zone. Then, glance over your shoulder to double check before moving slowly into the adjacent lane.

Reverse Tilt Mirrors

If equipped with memory seats, the passenger and/or driver mirror tilts to a preselected position when the vehicle is in R (Reverse). This allows the curb to be seen when parallel parking.

The mirror(s) return to the original position when:

- The vehicle is shifted out of R (Reverse), or remains in R (Reverse) for about 30 seconds.
- The ignition is turned off.
- The vehicle is driven in R (Reverse) above a set speed.

To turn this feature on or off, see *Vehicle Personalization on page 5-47*.

Interior Mirrors

Interior Rearview Mirrors

Adjust the rearview mirror for a clear view of the area behind your vehicle.

If equipped with OnStar, the vehicle may have three control buttons at the bottom of the mirror. See your dealer for more information about OnStar and how to subscribe to it. See *OnStar Overview on page 14-1*.

Do not spray glass cleaner directly on the mirror. Use a soft towel dampened with water.

Manual Rearview Mirror

If equipped, push the tab forward for daytime use and pull it rearward for nighttime use to avoid glare from the headlamps from behind.

Automatic Dimming Rearview Mirror

If equipped, the mirror will automatically reduce the glare of the headlamps from behind. The dimming feature comes on each time the vehicle is started.

Windows

⚠ Warning

Never leave a child, a helpless adult, or a pet alone in a vehicle, especially with the windows closed in warm or hot weather. They can be overcome by the extreme heat and suffer permanent injuries or even death from heat stroke.

The vehicle aerodynamics are designed to improve fuel economy performance. This may result in a pulsing sound when either rear window is down and the front windows are up. To reduce the sound, open either a front window or the sunroof, if equipped.

Manual Windows

If equipped, turn the hand crank on each door to manually raise or lower the manual windows.

Power Windows

⚠ Warning

Children could be seriously injured or killed if caught in the path of a closing window. Never leave keys in a vehicle with children. When there are children in the rear seat, use the window lockout button to prevent operation of the windows. See *Keys on page 2-1*.

Crew/Double Cab Premium Trim Shown, Other Models Similar

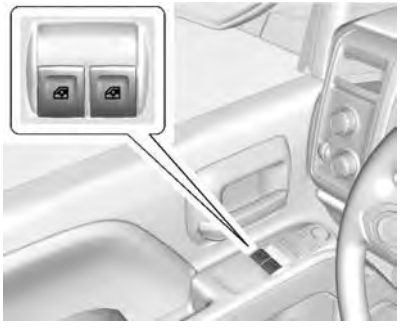

Regular Cab Uplevel Shown, Other Models Similar

If equipped, the driver door has a switch to control all windows. Each passenger door has a switch to control that window.

The power windows:

- Can be operated with the ignition in ON/RUN or ACC/ACCESSORY.
- Can be operated in Retained Accessory Power (RAP). See *Retained Accessory Power (RAP) on page 9-28*.

- Will stop operation when any door is opened.

Press the switch down to lower the window, and pull up the front of the switch to raise the window.

Express-Down Windows

If equipped, the express-down feature allows the window to be lowered without holding the switch. Press the window switch down fully and release it to activate the express-down feature. The express-down feature can be canceled at any time by briefly pressing the switch.

Express-Up Window

If equipped, the driver window express-up feature allows the window to be raised without holding the switch. Pull the window switch up fully and release it to activate the express-up feature. The express-up feature can be canceled at any time by briefly pulling the switch.

Programming the Power Windows

If the battery on the vehicle has been recharged or disconnected, or is not working, the driver power window will need to be reprogrammed for the express-up feature to work.

To reprogram the power windows:

1. Close all doors.
2. Place the ignition in ACC/ACCESSORY or ON/RUN/START.
3. From any open position, pull the power window switch up until the window is fully closed.
4. Hold the switch up for approximately two seconds after the window is fully closed.

The window is now reprogrammed.

Express Window Anti-Pinch Feature

If any object is in the path of the window when express-up is active, the window stops at the obstacle and auto-reverses to a preset factory position. Weather conditions such as severe icing also cause the window to auto-reverse. The window returns to normal operation once the obstacle or condition is removed.

Express Window Anti-Pinch Override

⚠ Warning

If express override is activated, the window will not reverse automatically. You or others could be injured and the window could be damaged. Before you use express override, make sure that all people and obstructions are clear of the window path.

The anti-pinch feature can be overridden in a supervised mode. Hold the window switch in the partially or fully pulled up position. The window rises for as long as the switch is held. Once the switch is released, the express mode is reactivated.

In this mode, the window can still close on an object in its path. Use care when using the override mode.

Window Lockout

Crew/Double Cab Premium Shown, Other Models Similar

(Window Lockout): The driver door power window switch has a lockout feature. This feature prevents the rear windows from operating, except from the driver position. Press the switch to engage or disengage the lockout feature. An indicator light on the switch will come on when the lockout feature is engaged, and will go off when disengaged.

Rear Windows

Power Sliding Rear Window

If equipped, the power sliding rear window works when the ignition has been turned to ACC/ACCESSORY or ON/RUN, or when Retained Accessory Power (RAP) is active. See *Retained Accessory Power (RAP) on page 9-28*.

- Press the switch to open the window.
- Pull the switch to close the window.

The power sliding rear window cannot be operated manually.

Sun Visors

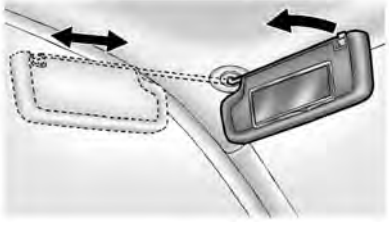

Pull the sun visor down to block glare. Detach the sun visor from the center mount to pivot to the side window or, if equipped, extend along the rod.

Roof

Sunroof

If equipped, the sunroof operates when the ignition is in ACC/ACCESSORY or ON/RUN, or when Retained Accessory Power (RAP) is active. See *Retained Accessory Power (RAP) on page 9-28*.

Vent: From the closed position, press the rear of the TILT switch to vent the sunroof.

Manual-Open/Manual-Close: To open the sunroof, press and hold the rear of the SLIDE switch until the sunroof reaches the desired position. Press and hold the front of the SLIDE switch to close it

Express-Open/Express-Close: To express-open the sunroof, fully press and release the rear of the SLIDE switch until the sunroof reaches the desired position. To express-close the sunroof, fully press and release the front of the SLIDE switch. Press the switch again to stop it.

When the sunroof is opened, an air deflector will automatically raise. The air deflector will retract when the sunroof is closed.

The sunroof also has a sunshade, which can be pulled forward to block sun rays. The sunshade must be opened and closed manually.

If an object is in the path of the sunroof while it is closing, the anti-pinch feature will detect the object and stop the sunroof.

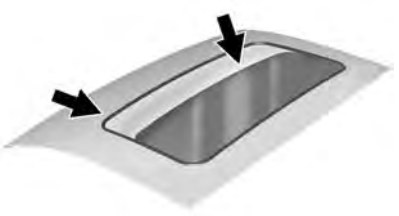

Dirt and debris may collect on the sunroof seal or in the track. This could cause an issue with sunroof operation or noise. It could also plug the water drainage system. Periodically open the sunroof and remove any obstacles or loose debris. Wipe the sunroof seal and roof sealing area using a clean cloth, mild soap, and water. Do not remove grease from the sunroof tracks.

If water is seen dripping into the water drainage system, this is normal.

Seats and Restraints

Head Restraints
Head Restraints 3-2

Front Seats
Seat Adjustment 3-3
Center Seat 3-3
Power Seat Adjustment 3-4
Lumbar Adjustment 3-4
Reclining Seatbacks 3-5
Memory Seats 3-7
Heated and Cooled Front Seats 3-9

Rear Seats
Rear Seats (Double Cab Full Bench) 3-10
Rear Seats (Split Bench) 3-11

Safety Belts
Safety Belts 3-12
How to Wear Safety Belts Properly 3-13
Lap-Shoulder Belt 3-14
Safety Belt Use During Pregnancy 3-18
Lap Belt 3-18
Safety Belt Extender 3-19
Safety System Check 3-19
Safety Belt Care 3-19
Replacing Safety Belt System Parts after a Crash 3-20

Airbag System
Airbag System 3-20
Where Are the Airbags? 3-22
When Should an Airbag Inflate? 3-24
What Makes an Airbag Inflate? 3-25
How Does an Airbag Restrain? 3-26
What Will You See after an Airbag Inflates? 3-26
Airbag On-Off Switch 3-27
Passenger Sensing System 3-29
Servicing the Airbag-Equipped Vehicle 3-34
Adding Equipment to the Airbag-Equipped Vehicle . . . 3-34
Airbag System Check 3-35
Replacing Airbag System Parts after a Crash 3-36

Child Restraints
Older Children 3-36
Infants and Young Children 3-38
Child Restraint Systems 3-41
Where to Put the Restraint . . . 3-43
Lower Anchors and Tethers for Children (LATCH System) 3-44
Replacing LATCH System Parts After a Crash 3-57
Securing Child Restraints (Center Front Seat) 3-57
Securing Child Restraints (Rear Seat) 3-57
Securing Child Restraints (Front Passenger Seat) 3-61

Head Restraints

Front Seats

The vehicle's front seats have adjustable head restraints in the outboard seating positions.

⚠ Warning

With head restraints that are not installed and adjusted properly, there is a greater chance that occupants will suffer a neck/spinal injury in a crash. Do not drive until the head restraints for all occupants are installed and adjusted properly.

Adjust the head restraint so that the top of the restraint is at the same height as the top of the occupant's head. This position reduces the chance of a neck injury in a crash.

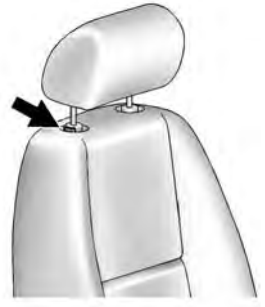

The height of the head restraint can be adjusted. Pull the head restraint up to raise it. Try to move the head restraint to make sure that it is locked in place.

To lower the head restraint, press the button, located on the top of the seatback, and push the restraint down. Try to move the head restraint after the button is released to make sure that it is locked in place.

On some models, the head restraints adjust forward and rearward. To adjust the head

restraint forward, grasp the head restraint and pull forward to the desired locking position. To adjust the head restraint rearward, grasp the head restraint and pull forward fully until the mechanism releases and allows the head restraint to return to the full rear position.

The front seat outboard head restraints are not removable.

Rear Seats

The rear seat has adjustable headrests in the outboard seating positions.

The height of the headrest can be adjusted. Pull the headrest up to raise it. To lower the headrest, push the headrest down.

If you are installing a child restraint in the rear seat, see “Securing a Child Restraint Designed for the LATCH System” under *Lower Anchors and Tethers for Children (LATCH System) on page 3-44*.

Front Seats

Seat Adjustment

⚠ Warning

You can lose control of the vehicle if you try to adjust a driver seat while the vehicle is moving. Adjust the driver seat only when the vehicle is not moving.

To adjust a manual seat:

1. Pull the handle at the front of the seat.
2. Slide the seat to the desired position and release the handle.
3. Try to move the seat back and forth to be sure it is locked in place.

To adjust the seatback, see *Reclining Seatbacks on page 3-5*.

To adjust the lumbar support, see *Lumbar Adjustment on page 3-4*.

Center Seat

If equipped, the center front seatback doubles as an armrest and cupholder/storage area for the driver and passenger when the center front seat is not used. Do not use it as a seating position when the seatback is folded down.

Power Seat Adjustment

To adjust a power seat, if equipped:

- Move the seat forward or rearward by sliding the control forward or rearward.
- If equipped, raise or lower the front part of the seat cushion by moving the front of the control up or down.
- If equipped, raise or lower the seat by moving the rear of the control up or down.

To adjust the seatback, see *Reclining Seatbacks on page 3-5*.

To adjust the lumbar support, see *Lumbar Adjustment on page 3-4*.

Some vehicles are equipped with a feature that activates a vibrating pulse alert in the driver seat to help the driver avoid crashes. See *Driver Assistance Systems on page 9-60*.

Lumbar Adjustment

Manual Lumbar

If equipped, move the lever up or down repeatedly to increase or decrease lumbar support.

Power Lumbar

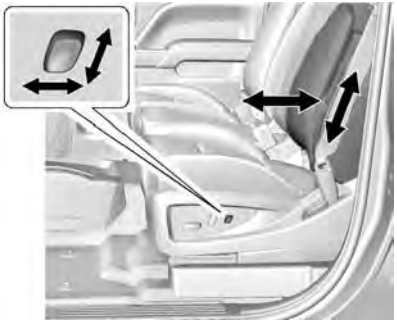

To adjust the power lumbar support, if equipped:

- Press and hold the control forward to increase or rearward to decrease upper and lower lumbar support at the same time.
- If equipped, press and hold the control up to increase upper lumbar support and decrease lower lumbar support.

  Press and hold the control down to increase lower lumbar support and decrease upper lumbar support.

Reclining Seatbacks

⚠ Warning

Sitting in a reclined position when the vehicle is in motion can be dangerous. Even when buckled up, the safety belts cannot do their job.

The shoulder belt will not be against your body. Instead, it will be in front of you. In a crash, you could go into it, receiving neck or other injuries.

The lap belt could go up over your abdomen. The belt forces would be there, not at your pelvic bones. This could cause serious internal injuries.

(Continued)

Warning (Continued)

For proper protection when the vehicle is in motion, have the seatback upright. Then sit well back in the seat and wear the safety belt properly.

Do not have a seatback reclined if the vehicle is moving.

Manual Reclining Seatbacks

⚠ Warning

If either seatback is not locked, it could move forward in a sudden stop or crash. That could cause injury to the person sitting there. Always push and pull on the seatbacks to be sure they are locked.

To adjust a manual seatback:

1. Lift the lever.

   The seatback will automatically fold forward.
2. To recline, move the seatback rearward to the desired position, then release the lever to lock the seatback in place.
3. Push and pull on the seatback to make sure it is locked.

To return the seatback to the upright position:

1. Lift the lever fully without applying pressure to the seatback, and the seatback will return to the upright position.
2. Push and pull on the seatback to make sure it is locked.

Power Reclining Seatbacks

To recline a power seatback, if equipped:

- Tilt the top of the control rearward to recline.
- Tilt the top of the control forward to raise.

Memory Seats

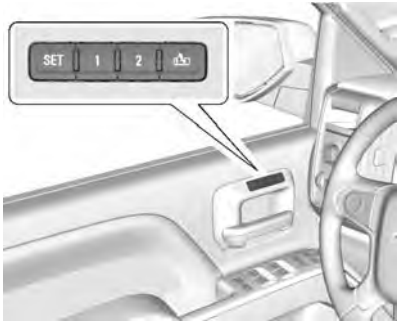

Crew/Double Cab Shown, Other Models Similar

If memory equipped, the SET, "1," "2," and (Exit) buttons on the driver door are used to manually save and recall memory settings for the driver seat, outside mirrors, and adjustable pedals (if equipped).

Storing Memory Positions

To save positions to the “1” and “2” buttons:

1. Adjust the driver seat, outside mirrors, and adjustable pedals (if equipped) to the desired driving positions.
2. Press and release SET. A beep will sound.
3. Immediately press and hold “1” until two beeps sound.
4. Repeat Steps 1 through 3 for a second driver using “2.”

To save positions to the (Exit) button and easy exit features:

1. Adjust the driver seat, adjustable pedals (if equipped), and the outside mirrors on some vehicles to the desired positions for getting out of the vehicle.
2. Press and release SET. A beep will sound.
3. Immediately press and hold until two beeps sound.

Manually Recalling Memory Positions

If the vehicle is OFF or not in P (Park), press and hold "1," "2," or to manually recall the previously stored memory positions. Releasing "1,” "2," or before the stored positions are reached stops the recall.

If the vehicle is ON and in P (Park), press and release “1,” “2,” or to manually recall the previously stored memory positions. Placing the ignition in OFF/LOCK before the stored positions are reached stops the recall.

Automatically Recalling Memory Positions (Auto Memory Recall)

The Auto (Automatic) Memory Recall feature automatically recalls the current driver’s previously stored “1” or “2” position when entering the vehicle.

If the Auto Memory Recall feature is enabled in the vehicle personalization menu, memory “1” or “2” positions are recalled in the following ways:

- Press 🔓 on the RKE transmitter and open the driver door.
- Press 🔓 on the RKE transmitter when the driver door is already open.

See *Vehicle Personalization on page 5-47*.

To stop recall movement, press one of the memory, power mirror or power seat controls; or press the adjustable pedal control (if equipped).

RKE Transmitters are not labeled with a number. If your memory seat position is stored to "1" or "2" but this position is not automatically recalling, then change the stored position or switch RKE transmitters with the other driver.

Easy Exit Recall

If programmed on in the vehicle personalization menu, the easy exit feature automatically moves the driver seat, adjustable pedals (if equipped), and outside mirrors on some vehicles to the memory positions saved to the (Exit) button. See “Storing Memory Positions” listed previously. See also *Vehicle Personalization on page 5-47*.

Easy exit recall automatically activates when one of the following occurs:

- The vehicle is turned off and the driver door is opened within a short time.
- The vehicle is turned off with the driver door open.

Obstructions

If something has blocked the driver seat and/or adjustable pedals while recalling a memory position, the recall may stop. Remove the obstruction. Then do one of the following:

- If manually recalling the position, press and hold the appropriate manual control for the memory item that is not recalling for two seconds. Try recalling again by pressing the appropriate memory button.
- If automatically recalling the position, press and hold the appropriate manual control for the memory item that is not recalling for two seconds. Try recalling again by opening the driver door and pressing 🔓 on the RKE transmitter.
- If recalling the exit position, press and hold the appropriate manual control for the exit feature not recalling for two seconds. Then try recalling the exit position again.

If the memory position is still not recalling, see your dealer for service.

Heated and Cooled Front Seats

⚠ Warning

If you cannot feel temperature change or pain to the skin, the seat heater may cause burns. To reduce the risk of burns, people with such a condition should use care when using the seat heater, especially for long periods of time. Do not place anything on the seat that insulates against heat, such as a blanket, cushion, cover, or similar item. This may cause the seat heater to overheat. An overheated seat heater may cause a burn or may damage the seat.

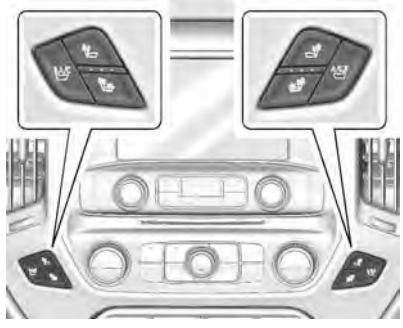

Heated and Cooled Seat Buttons Shown, Heated Seat Buttons Similar

If equipped, the buttons are on the center stack. To operate, the engine must be running.

Press to heat the driver or passenger seatback only.

Press to heat the driver or passenger seat cushion and seatback.

Press A/C to cool the driver or passenger seat.

The indicator light on the button comes on when this feature is on.

Press the button once for the highest setting. With each press of the button, the seat will change to the next lower setting, and then to the off setting. The indicator lights next to the buttons indicate three for the highest setting and one for the lowest. If the heated seats are on high for an extended time, their level may automatically be lowered.

Remote Start Auto Heated and Cooled Seats

During a remote start, the heated or cooled seats can be turned on automatically. When it is cold outside, the heated seats turn on, and when it is hot outside the cooled seats turn on. The heated or cooled seats are canceled when the ignition is turned on. Press the heated or cooled seat button to use the heated or cooled seats after the vehicle is started.

The heated or cooled seat indicator lights do not turn on during a remote start.

The temperature performance of an unoccupied seat may be reduced. This is normal.

The heated or cooled seats will not turn on during a remote start unless they are enabled in the vehicle personalization menu. See *Remote Vehicle Start on page 2-6* and *Vehicle Personalization on page 5-47*.

Rear Seats

Rear Seats (Double Cab Full Bench)

Folding the Rear Seat

⚠ Caution

Folding a rear seat with the safety belts still fastened may cause damage to the seat or the safety belts. Always unbuckle the safety belts and return them to their normal stowed position before folding a rear seat.

To fold the seat:

1. Pull up on the front of the seat cushion while pulling down on the release strap loop under the seat cushion.
2. Pull the seat cushion up until it latches with the seatback.
3. Pull forward on the seat cushion to make sure it is locked in place.

To unfold the seat:

1. Push the seat cushion rearward while pulling the release strap loop under the seat cushion. Pull the seat cushion down until it latches.
2. Pull up on the seat cushion to make sure it is locked in place.

   Make sure the safety belts are not twisted or caught in the seat cushion.

⚠ Warning

A safety belt that is improperly routed, not properly attached, or twisted will not provide the protection needed in a crash. The person wearing the belt could be seriously injured. After raising the rear seatback, always check to be sure that the safety belts are properly routed and attached, and are not twisted.

Rear Seats (Split Bench)

Folding Rear Seat

Either side of the rear seat can be folded for added cargo space.

⚠ Caution

Folding a rear seat with the safety belts still fastened may cause damage to the seat or the safety belts. Always unbuckle the safety belts and return them to their normal stowed position before folding a rear seat.

Make sure that nothing is on the seat cushion.

To fold the seat, slowly pull the seat cushion up.

To return the seat to the normal seating position, slowly pull the seat cushion down.

Make sure the safety belts are not twisted or caught in the seat cushion.

⚠ Warning

A safety belt that is improperly routed, not properly attached, or twisted will not provide the protection needed in a crash. The person wearing the belt could be seriously injured. After raising the rear seatback, always check to be sure that the safety belts are properly routed and attached, and are not twisted.

Safety Belts

This section of the manual describes how to use safety belts properly. It also describes some things not to do with safety belts.

⚠ Warning

Do not let anyone ride where a safety belt cannot be worn properly. In a crash, if you or your passenger(s) are not wearing safety belts, injuries can be much worse than if you are wearing safety belts. You can be seriously injured or killed by hitting things inside the vehicle harder or by being ejected from the vehicle. In addition, anyone who is not buckled up can strike other passengers in the vehicle.

It is extremely dangerous to ride in a cargo area, inside or outside of a vehicle. In a collision, passengers riding in these areas

(Continued)

Warning (Continued)

are more likely to be seriously injured or killed. Do not allow passengers to ride in any area of the vehicle that is not equipped with seats and safety belts.

Always wear a safety belt, and check that all passenger(s) are restrained properly too.

This vehicle has indicators as a reminder to buckle the safety belts. See *Safety Belt Reminders on page 5-17*.

This vehicle may have the Safety Belt Assurance System, which may prevent the vehicle from shifting out of P (Park). See *Safety Belt Messages on page 5-42*.

Why Safety Belts Work

When riding in a vehicle, you travel as fast as the vehicle does. If the vehicle stops suddenly, you keep going until something stops you. It could be the windshield, the instrument panel, or the safety belts!

When you wear a safety belt, you and the vehicle slow down together. There is more time to stop because you stop over a longer distance and, when worn properly, your strongest bones take the forces from the safety belts. That is why wearing safety belts makes such good sense.

Questions and Answers About Safety Belts

Q: Will I be trapped in the vehicle after a crash if I am wearing a safety belt?

A: You *could* be — whether you are wearing a safety belt or not. Your chance of being conscious during and after a crash, so you *can* unbuckle and get out, is *much* greater if you are belted.

Q: If my vehicle has airbags, why should I have to wear safety belts?

A: Airbags are supplemental systems only; so they work *with* safety belts — not instead of them. Whether or not an airbag is provided, all occupants still have to buckle up to get the most protection.

Also, in nearly all states and in all Canadian provinces, the law requires wearing safety belts.

How to Wear Safety Belts Properly

This section is only for people of adult size.

There are special things to know about safety belts and children. And there are different rules for smaller children and infants. If a child will be riding in the vehicle, see *Older Children on page 3-36* or *Infants and Young Children on page 3-38*. Follow those rules for everyone's protection.

It is very important for all occupants to buckle up. Statistics show that unbelted people are hurt more often in crashes than those who are wearing safety belts.

There are important things to know about wearing a safety belt properly.

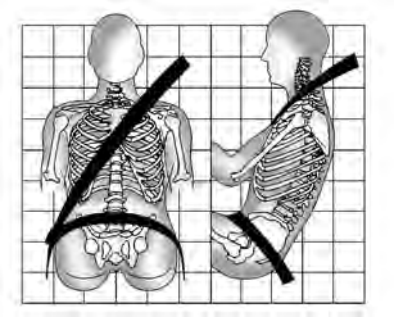

- Sit up straight and always keep your feet on the floor in front of you.
- Always use the correct buckle for your seating position.
- Wear the lap part of the belt low and snug on the hips, just touching the thighs. In a crash, this applies force to the strong pelvic bones and you would be less likely to slide under the lap belt. If you slid under it, the belt would apply force on your abdomen. This could cause serious or even fatal injuries.
- Wear the shoulder belt over the shoulder and across the chest. These parts of the body are best able to take belt restraining forces. The shoulder belt locks if there is a sudden stop or crash.

⚠ Warning

You can be seriously injured, or even killed, by not wearing your safety belt properly.

- Never allow the lap or shoulder belt to become loose or twisted.
- Never wear the shoulder belt under both arms or behind your back.
- Never route the lap or shoulder belt over an armrest.

Lap-Shoulder Belt

If the vehicle is a regular cab, then all seating positions in the vehicle have a lap-shoulder belt. If the vehicle is a double or crew cab, then all seating positions in the vehicle have a lap-shoulder belt except for the center front passenger position (if equipped), which has a lap belt. See *Lap Belt on page 3-18* for more information.

The following instructions explain how to wear a lap-shoulder belt properly.

1. Adjust the seat, if the seat is adjustable, so you can sit up straight. To see how, see “Seats” in the Index.

2. Pick up the latch plate and pull the belt across you. Do not let it get twisted.

   The lap-shoulder belt may lock if you pull the belt across you very quickly. If this happens, let the belt go back slightly to unlock it. Then pull the belt across you more slowly.

   If the shoulder portion of a passenger belt is pulled out all the way, the child restraint locking feature may be engaged. If this happens, let the belt go back all the way and start again.

   Engaging the child restraint locking feature may affect the passenger sensing system, if equipped. See *Passenger Sensing System on page 3-29* for more information.

   For the driver and front outboard seating positions on light duty vehicles and the center seating position (if equipped) on crew cab and double cab models, if the webbing locks in the latch plate before it reaches the buckle, tilt the latch plate flat to unlock.

3. Push the latch plate into the buckle until it clicks.

   Pull up on the latch plate to make sure it is secure. If the belt is not long enough, see *Safety Belt Extender on page 3-19*.

   Position the release button on the buckle so that the safety belt could be quickly unbuckled if necessary.

4. If equipped with a shoulder belt height adjuster, move it to the height that is right for you. See “Shoulder Belt Height Adjuster” later in this section for instructions on use and important safety information.

5. To make the lap part tight, pull up on the shoulder belt.

To unlatch the belt, push the button on the buckle. The belt should return to its stowed position.

Before a door is closed, be sure the safety belt is out of the way. If a door is slammed against a safety belt, damage can occur to both the safety belt and the vehicle.

Shoulder Belt Height Adjuster

The vehicle has a shoulder belt height adjuster for the driver and front outboard passenger.

Adjust the height so the shoulder portion of the belt is on the shoulder and not falling off of it. The belt should be close to, but not contacting, the neck. Improper shoulder belt height adjustment could reduce the effectiveness of the safety belt in a crash. See *How to Wear Safety Belts Properly on page 3-13*.

Push down on the release button to move the height adjuster to the desired position.

Move the adjuster up by pushing up on the shoulder belt guide.

After the adjuster is set to the desired position, try to move it down without pushing the release button to make sure it has locked into position.

Safety Belt Pretensioners

This vehicle has safety belt pretensioners for front outboard occupants. Although the safety belt pretensioners cannot be seen, they are part of the safety belt assembly. They can help tighten the safety belts during the early stages of a moderate to severe frontal, near frontal, or rear crash if the threshold conditions for pretensioner activation are met. And, if your vehicle has side impact airbags, safety belt pretensioners can help tighten the safety belts in a side crash. If the vehicle has rollover roof-rail airbags, safety belt pretensioners can help tighten the safety belts in a rollover event.

Pretensioners work only once. If the pretensioners activate in a crash, they will need to be replaced, and the vehicle's safety belt system will probably need other new parts. See *Replacing Safety Belt System Parts after a Crash on page 3-20*.

Rear Safety Belt Comfort Guides

⚠ Warning

A safety belt that is not properly worn may not provide the protection needed in a crash. The person wearing the belt could be seriously injured. The shoulder belt should go over the shoulder and across the chest. These parts of the body are best able to take belt restraining forces.

Rear safety belt comfort guides may provide added safety belt comfort for older children who have outgrown booster seats and for some adults. When installed on a shoulder belt, the comfort guide positions the shoulder belt away from the neck and head.

Adjustable comfort guides are available through your dealer for the rear outboard seating positions. Instructions are included with the guide.

Safety Belt Use During Pregnancy

Safety belts work for everyone, including pregnant women. Like all occupants, they are more likely to be seriously injured if they do not wear safety belts.

A pregnant woman should wear a lap-shoulder belt, and the lap portion should be worn as low as possible, below the rounding, throughout the pregnancy.

The best way to protect the fetus is to protect the mother. When a safety belt is worn properly, it is more likely that the fetus will not be hurt in a crash. For pregnant women, as for anyone, the key to making safety belts effective is wearing them properly.

Lap Belt

This section is only for the lap belt. To learn how to wear a lap-shoulder belt, see *Lap-Shoulder Belt on page 3-14*.

The vehicle may have a center seating position with a lap safety belt. The lap safety belt does not have a retractor.

To make the belt longer, tilt the latch plate and pull it along the belt.

Buckle, position, and release it the same way as the lap part of a lap-shoulder belt.

To make the belt shorter, pull its free end as shown until the belt is snug.

If the belt is not long enough, see *Safety Belt Extender on page 3-19*.

Make sure the release button on the buckle is positioned so you would be able to unbuckle the safety belt quickly if necessary.

Safety Belt Extender

If the vehicle's safety belt will fasten around you, you should use it.

But if a safety belt is not long enough, your dealer will order you an extender. When you go in to order it, take the heaviest coat you will wear, so the extender will be long enough for you. To help avoid personal injury, do not let someone else use it, and use it only for the seat it is made to fit. The extender has been designed for adults. Never use it for securing child seats. To wear it, attach it to the regular safety belt. See the instruction sheet that comes with the extender.

Safety System Check

Now and then, check that the safety belt reminder light, safety belts, buckles, latch plates, retractors, and anchorages are all working properly. Look for any other loose or damaged safety belt system parts that might keep a safety belt system from doing its job. See your dealer to have it repaired. Torn or frayed safety belts may not protect you in a crash. They can rip apart under impact forces. If a belt is torn or frayed, get a new one right away.

Make sure the safety belt reminder light is working. See *Safety Belt Reminders on page 5-17*.

Keep safety belts clean and dry. See *Safety Belt Care on page 3-19*.

Safety Belt Care

Keep belts clean and dry.

⚠ Warning

Do not bleach or dye safety belts. It may severely weaken them. In a crash, they might not be able to provide adequate protection. Clean safety belts only with mild soap and lukewarm water.

Replacing Safety Belt System Parts after a Crash

⚠ Warning

A crash can damage the safety belt system in the vehicle.
A damaged safety belt system may not properly protect the person using it, resulting in serious injury or even death in a crash. To help make sure the safety belt systems are working properly after a crash, have them inspected and any necessary replacements made as soon as possible.

After a minor crash, replacement of safety belts may not be necessary. But the safety belt assemblies that were used during any crash may have been stressed or damaged. See your dealer to have the safety belt assemblies inspected or replaced.

New parts and repairs may be necessary even if the safety belt system was not being used at the time of the crash.

Have the safety belt pretensioners checked if the vehicle has been in a crash, or if the airbag readiness light stays on after you start the vehicle or while you are driving. See *Airbag Readiness Light on page 5-18*.

Airbag System

The vehicle has the following airbags:

- A frontal airbag for the driver.
- A frontal airbag for the front outboard passenger.

The vehicle may have the following airbags:

- A seat-mounted side impact airbag for the driver.
- A seat-mounted side impact airbag for the front outboard passenger.
- A roof-rail airbag for the driver and the passenger seated directly behind the driver.
- A roof-rail airbag for the front outboard passenger and the person seated directly behind the front outboard passenger.

All of the airbags in the vehicle will have the word AIRBAG on the trim or on a label near the deployment opening.

For frontal airbags, the word AIRBAG is on the center of the steering wheel for the driver and on the instrument panel for the front outboard passenger.

For seat-mounted side impact airbags, the word AIRBAG is on the seatback closest to the door.

For roof-rail airbags, the word AIRBAG is on the ceiling or trim.

Airbags are designed to supplement the protection provided by safety belts. Even though today's airbags are also designed to help reduce the risk of injury from the force of an inflating bag, all airbags must inflate very quickly to do their job.

Here are the most important things to know about the airbag system:

⚠ Warning

You can be severely injured or killed in a crash if you are not wearing your safety belt, even with airbags. Airbags are designed to work with safety belts, not replace them. Also, airbags are not designed to inflate in every crash. In some crashes safety belts are the only restraint. See *When Should an Airbag Inflate? on page 3-24*.

Wearing your safety belt during a crash helps reduce the chance of hitting things inside the vehicle or being ejected from it. Airbags are “supplemental restraints” to the safety belts. Everyone in the vehicle should wear a safety belt properly, whether or not there is an airbag for that person.

⚠ Warning

Because airbags inflate with great force and faster than the blink of an eye, anyone who is up against, or very close to any airbag when it inflates can be seriously injured or killed. Do not sit unnecessarily close to any airbag, as you would be if sitting on the edge of the seat or leaning forward. Safety belts help keep you in position before and during a crash. Always wear a safety belt, even with airbags. The driver should sit as far back as possible while still maintaining control of the vehicle.

Occupants should not lean on or sleep against the door or side windows in seating positions with seat-mounted side impact airbags and/or roof-rail airbags.

⚠ Warning

Children who are up against, or very close to, any airbag when it inflates can be seriously injured or killed. Always secure children properly in the vehicle. To read how, see *Older Children on page 3-36* or *Infants and Young Children on page 3-38*.

There is an airbag readiness light on the instrument cluster, which shows the airbag symbol.

The system checks the airbag electrical system for malfunctions. The light tells you if there is an electrical problem. See *Airbag Readiness Light on page 5-18* for more information.

Where Are the Airbags?

The driver frontal airbag is in the center of the steering wheel.

The front outboard passenger frontal airbag is in the passenger side instrument panel.

Driver Side Shown, Passenger Side Similar

If the vehicle has seat-mounted side impact airbags for the driver and front outboard passenger, they are in the side of the seatbacks closest to the door.

Driver Side Crew Cab Shown, Passenger Side Double and Regular Cabs Similar

If the vehicle has roof-rail airbags for the driver, front outboard passenger, and second row outboard passengers, they are in the ceiling above the side windows.

⚠ Warning

If something is between an occupant and an airbag, the airbag might not inflate properly

(Continued)

Warning (Continued)

or it might force the object into that person causing severe injury or even death. The path of an inflating airbag must be kept clear. Do not put anything between an occupant and an airbag, and do not attach or put anything on the steering wheel hub or on or near any other airbag covering.

Do not use seat accessories that block the inflation path of a seat-mounted side impact airbag.

Never secure anything to the roof of a vehicle with roof-rail airbags by routing a rope or tie-down through any door or window opening. If you do, the path of an inflating roof-rail airbag will be blocked.

When Should an Airbag Inflate?

This vehicle is equipped with airbags. See *Airbag System on page 3-20*. Airbags are designed to inflate if the impact exceeds the specific airbag system's deployment threshold. Deployment thresholds are used to predict how severe a crash is likely to be in time for the airbags to inflate and help restrain the occupants. The vehicle has electronic sensors which help the airbag system determine the severity of the impact. Deployment thresholds can vary with specific vehicle design.

Frontal airbags are designed to inflate in moderate to severe frontal or near frontal crashes to help reduce the potential for severe injuries, mainly to the driver's or front outboard passenger's head and chest.

Whether the frontal airbags will or should inflate is not based primarily on how fast the vehicle is traveling. It depends on what is hit, the direction of the impact, and how quickly the vehicle slows down.

Frontal airbags may inflate at different crash speeds depending on whether the vehicle hits an object straight on or at an angle, and whether the object is fixed or moving, rigid or deformable, narrow or wide.

Frontal airbags are not intended to inflate during vehicle rollovers, in rear impacts, or in many side impacts.

In addition, if the GVWR (Gross Vehicle Weight Rating) is at or below 3 855 kg (8,500 lb), the vehicle has advanced technology frontal airbags. You can find the GVWR on the Certification/Tire label on the center pillar of the vehicle. See *Vehicle Load Limits on page 9-15* for more information.

Advanced technology frontal airbags adjust the restraint according to crash severity. Vehicles with advanced technology frontal airbags have a seat position sensor that enables the sensing system to monitor the position of the driver seat. The seat position sensor provides information that is used to adjust the deployment of the driver frontal airbag.

If the GVWR is at or below 4 536 kg (10,000 lb), the vehicle has seat-mounted side impact airbags. Vehicles with a GVWR above 4 536 kg (10,000 lb) may or may not have seat-mounted side impact airbags. Seat-mounted side impact airbags, if equipped, are designed to inflate in moderate to severe side crashes depending on the location of the impact. Seat-mounted side impact airbags are not designed to inflate in frontal impacts, near frontal impacts, rollovers, or rear impacts. A seat-mounted side impact airbag is designed to inflate on the side of the vehicle that is struck.

Vehicles with a GVWR at or below 3 855 kg (8,500 lb) have roof-rail airbags. These roof-rail airbags are designed to inflate in moderate to

severe side crashes depending on the location of the impact. In addition, these roof-rail airbags are designed to inflate during a rollover or in a severe frontal impact. The roof-rail airbags are not designed to inflate in rear impacts. Both roof-rail airbags will inflate when either side of the vehicle is struck or if the sensing system predicts that the vehicle is about to roll over on its side, or in a severe frontal impact.

Vehicles with a GVWR above 3 855 kg (8,500 lb) up to and including 4 536 kg (10,000 lb) also have roof-rail airbags. These roof-rail airbags are designed to inflate in moderate to severe side crashes depending on the location of the impact. Both roof-rail airbags will inflate when either side of the vehicle is struck. In addition, these roof-rail airbags are designed to inflate in a severe frontal impact. The roof-rail airbags are also rollover capable except on models sold as an incomplete vehicle with the pickup box removed. If the roof-rail airbags are rollover capable, both roof-rail airbags will also inflate if the sensing system predicts that the vehicle is about to roll over on its side. The roof-rail airbags are not designed to inflate in rear impacts.

Vehicles with a GVWR above 4 536 kg (10,000 lb) may or may not be equipped with roof-rail airbags. These roof-rail airbags, if equipped, are designed to inflate in moderate to severe side crashes depending on the location of the impact. Both roof-rail airbags will inflate when either side of the vehicle is struck. In addition, these roof-rail airbags are designed to inflate in a severe frontal impact. If the vehicle has single rear wheels and has a factory-installed pickup box and roof-rail airbags, the roof-rail airbags are rollover capable. If the vehicle has dual rear wheels, or is sold as an incomplete vehicle, as a chassis cab, or with the pickup box removed, and has roof-rail airbags, the roof-rail airbags are not rollover capable. If the airbags are rollover capable, both roof-rail airbags will also inflate if the sensing system predicts that the vehicle is about to roll over on its side. The roof-rail airbags are not designed to inflate in rear impacts.

In any particular crash, no one can say whether an airbag should have inflated simply because of the vehicle damage or repair costs.

What Makes an Airbag Inflate?

In a deployment event, the sensing system sends an electrical signal triggering a release of gas from the inflator. Gas from the inflator fills the airbag causing the bag to break out of the cover. The inflator, the airbag, and related hardware are all part of the airbag module.

For airbag locations, see *Where Are the Airbags? on page 3-22*.

How Does an Airbag Restrain?

In moderate to severe frontal or near frontal collisions, even belted occupants can contact the steering wheel or the instrument panel. In moderate to severe side collisions, even belted occupants can contact the inside of the vehicle.

Airbags supplement the protection provided by safety belts by distributing the force of the impact more evenly over the occupant's body.

Rollover capable roof-rail airbags are designed to help contain the head and chest of occupants in the outboard seating positions in the first and second rows. The rollover capable roof-rail airbags are designed to help reduce the risk of full or partial ejection in rollover events, although no system can prevent all such ejections.

But airbags would not help in many types of collisions, primarily because the occupant's motion is not toward those airbags. See *When Should an Airbag Inflate? on page 3-24*.

Airbags should never be regarded as anything more than a supplement to safety belts.

What Will You See after an Airbag Inflates?

After the frontal airbags and seat-mounted side impact airbags inflate, they quickly deflate, so quickly that some people may not even realize an airbag inflated. Roof-rail airbags may still be at least partially inflated for some time after they inflate. Some components of the airbag module may be hot for several minutes. For location of the airbags, see *Where Are the Airbags? on page 3-22*.

The parts of the airbag that come into contact with you may be warm, but not too hot to touch. There may be some smoke and dust coming from the vents in the deflated airbags. Airbag inflation does not prevent the driver from seeing out of the windshield or being able to steer the vehicle, nor does it prevent people from leaving the vehicle.

⚠ Warning

When an airbag inflates, there may be dust in the air. This dust could cause breathing problems for people with a history of asthma or other breathing trouble. To avoid this, everyone in the vehicle should get out as soon as it is safe to do so. If you have breathing problems but cannot get out of the vehicle after an airbag inflates, then get fresh air by opening a window or a door. If you experience breathing problems following an airbag deployment, you should seek medical attention.

The vehicle has a feature that may automatically unlock the doors, turn on the interior lamps and hazard warning flashers, and shut off the fuel system after the airbags inflate. The feature may also activate, without airbag inflation, after an event that exceeds a predetermined threshold. You can lock the doors, and turn off the interior lamps, and turn off the hazard warning flashers by using the controls for those features.

⚠ Warning

A crash severe enough to inflate the airbags may have also damaged important functions in the vehicle, such as the fuel system, brake and steering systems, etc. Even if the vehicle appears to be drivable after a moderate crash, there may be

(Continued)

Warning (Continued)

concealed damage that could make it difficult to safely operate the vehicle.

Use caution if you should attempt to restart the engine after a crash has occurred.

In many crashes severe enough to inflate the airbag, windshields are broken by vehicle deformation. Additional windshield breakage may also occur from the front outboard passenger airbag.

- Airbags are designed to inflate only once. After an airbag inflates, you will need some new parts for the airbag system. If you do not get them, the airbag system will not be there to help protect you in another crash. A new system will include airbag modules and possibly other parts. The service manual for the vehicle covers the need to replace other parts.
- The vehicle has a crash sensing and diagnostic module which records information after a crash. See *Vehicle Data Recording and Privacy on page 13-14* and *Event Data Recorders on page 13-14*.
- Let only qualified technicians work on the airbag systems. Improper service can mean that an airbag system will not work properly. See your dealer for service.

Airbag On-Off Switch

If the passenger side instrument panel endcap has the switch pictured in the following illustration, the vehicle has an airbag on-off switch that you can use to manually turn on or off the front outboard passenger frontal airbag. See *Instrument Panel on page 1-2*.

If the vehicle does not have an airbag on-off switch, it may have a passenger sensing system. See *Passenger Sensing System on page 3-29*.

This switch should only be turned to the off position if the person in the front outboard passenger position is a member of a passenger risk group identified by the national government as follows:

Infant. An infant (less than 1 year old) must ride in the front seat because:

- *My vehicle has no rear seat;*
- *My vehicle has a rear seat too small to accommodate a rear-facing infant seat; or*
- *The infant has a medical condition which, according to the infant's physician, makes it necessary for the infant to ride in the front seat so that the driver can constantly monitor the child's condition.*

Child age 1 to 12. A child age 1 to 12 must ride in the front seat because:

- *My vehicle has no rear seat;*
- *Although children ages 1 to 12 ride in the rear seat(s) whenever possible, children ages 1 to 12 sometimes must ride in the front because no space is available in the rear seat(s) of my vehicle; or*
- *The child has a medical condition which, according to the child's physician, makes it necessary for the child to ride in the front seat so that the driver can constantly monitor the child's condition.*

Medical Condition. A passenger has a medical condition which, according to his or her physician:

- *Causes the passenger airbag to pose a special risk for the passenger; and*
- *Makes the potential harm from the passenger airbag in a crash greater than the potential harm from turning off the airbag and allowing the passenger, even if belted, to hit the instrument panel or windshield in a crash.*

⚠ Warning

If the front outboard passenger frontal airbag is turned off for a person who is not in a risk group identified by the national government, that person will not have the extra protection of an airbag. In a crash, the airbag will not be able to inflate and help protect the person sitting there.

(Continued)

Warning (Continued)

Do not turn off the front outboard passenger frontal airbag unless the person sitting there is in a risk group.

To turn off the front outboard passenger frontal airbag, insert the ignition key into the switch, push in, and move the switch to the off position.

The word OFF or the off symbol will come on in the passenger airbag status indicator located in the overhead console to let you know that the front outboard passenger frontal airbag is off, after the system check is completed. The airbag off light will come on and stay on to let you know that the front outboard passenger frontal airbag is off. See *Airbag On-Off Light on page 5-18*.

⚠ Warning

If the airbag readiness light ever comes on and stays on, it means that something may be wrong with the airbag system. For example, the front outboard passenger frontal airbag could inflate even though the airbag on-off switch is turned off.

To help avoid injury to yourself or others, have the vehicle serviced right away. See *Airbag Readiness Light on page 5-18* for more information, including important safety information.

To turn the front outboard passenger frontal airbag on again, insert the ignition key into the switch, push in, and move the switch to the on position.

The front outboard passenger frontal airbag is now enabled (may inflate). See *Airbag On-Off Light on page 5-18*.

Passenger Sensing System

If the vehicle has one of the following indicators, then the vehicle has a passenger sensing system for the front outboard passenger position, unless there is an airbag on-off switch on the instrument

panel endcap. If there is an airbag on-off switch, the vehicle does not have a passenger sensing system. See *Airbag On-Off Switch on page 3-27* for more information.

The passenger airbag status indicator will light on the overhead console when the vehicle is started.

United States

Canada and Mexico

The words ON and OFF, or the symbol for on and off, will be visible during the system check. When the system check is complete, either the word ON or OFF, or the symbol for on or off, will be visible. See *Passenger Airbag Status Indicator on page 5-20*.

The passenger sensing system turns off the front outboard passenger frontal airbag under certain conditions. No other airbag is affected by the passenger sensing system.

The passenger sensing system works with sensors that are part of the front outboard passenger seat and safety belt. The sensors are designed to detect the presence of a properly seated occupant and determine if the front outboard passenger frontal airbag should be allowed to inflate or not.

According to accident statistics, children are safer when properly secured in a rear seat in the correct child restraint for their weight and size.

Whenever possible, children age 12 and under should be secured in a rear seating position.

Never put a rear-facing child seat in the front. This is because the risk to the rear-facing child is so great, if the airbag deploys.

⚠ Warning

A child in a rear-facing child restraint can be seriously injured or killed if the passenger frontal airbag inflates. This is because the back of the rear-facing child restraint would be very close to the inflating airbag. A child in a forward-facing child restraint can be seriously injured or killed if the passenger frontal airbag inflates and the passenger seat is in a forward position.

Even if the passenger sensing system has turned off the passenger frontal airbag, no system is fail-safe. No one can guarantee that an airbag will not

(Continued)

Warning (Continued)

inflate under some unusual circumstance, even though the airbag is off.

Secure rear-facing child restraints in a rear seat, even if the airbag is off. If you secure a forward-facing child restraint in the front outboard passenger seat, always move the seat as far back as it will go. It is better to secure the child restraint in a rear seat.

If the vehicle does not have a rear seat that will accommodate a rear-facing child restraint, a rear-facing child restraint should not be installed in the vehicle, even if the airbag is off.

The passenger sensing system is designed to turn off the front outboard passenger frontal airbag if:

- The front outboard passenger seat is unoccupied.
- The system determines an infant is present in a child restraint.
- A front outboard passenger takes his/her weight off of the seat for a period of time.
- There is a critical problem with the airbag system or the passenger sensing system.

When the passenger sensing system has turned off the front outboard passenger frontal airbag, the off indicator will light and stay lit as a reminder that the airbag is off. See *Passenger Airbag Status Indicator on page 5-20*.

The passenger sensing system is designed to turn on the front outboard passenger frontal airbag anytime the system senses that a person of adult size is sitting properly in the front outboard passenger seat.

When the passenger sensing system has allowed the airbag to be enabled, the on indicator will light and stay lit as a reminder that the airbag is active.

For some children, including children in child restraints, and for very small adults, the passenger sensing system may or may not turn off the front outboard passenger frontal airbag, depending upon the person's seating posture and body build. Everyone in the vehicle who has outgrown child restraints should wear a safety belt properly — whether or not there is an airbag for that person.

⚠ Warning

If the airbag readiness light ever comes on and stays on, it means that something may be wrong with the airbag system. To help avoid injury to yourself or others, have the vehicle serviced right away. See *Airbag Readiness Light on page 5-18* for more information, including important safety information.

If the On Indicator Is Lit for a Child Restraint

The passenger sensing system is designed to turn off the front outboard passenger frontal airbag if the system determines that an infant is present in a child restraint. If a child restraint has been installed and the on indicator is lit:

1. Turn the vehicle off.
2. Remove the child restraint from the vehicle.
3. Remove any additional items from the seat such as blankets, cushions, seat covers, seat heaters, or seat massagers.
4. Reinstall the child restraint following the directions provided by the child restraint manufacturer and refer to *Securing Child Restraints (Center Front Seat) on page 3-57* or *Securing Child Restraints (Rear Seat) on page 3-57* or *Securing Child Restraints (Front Passenger Seat) on page 3-61*. Even if the child restraint is equipped with a safety belt lock-off, make sure the safety belt retractor is locked by pulling the shoulder belt all the way out of the retractor before tightening the safety belt. When the retractor lock is set, the belt can be tightened but not pulled out of the retractor.
5. If, after reinstalling the child restraint and restarting the vehicle, the on indicator is still lit, turn the vehicle off. Then slightly recline the vehicle seatback and adjust the seat cushion, if adjustable, to make sure that the vehicle seatback is not pushing the child restraint into the seat cushion.

   Also make sure the child restraint is not trapped under the vehicle head restraint. If this happens, adjust the head restraint. See *Head Restraints on page 3-2*.
6. Restart the vehicle.

The passenger sensing system may or may not turn off the airbag for a child in a child restraint depending upon the child's size. It is better to secure the child restraint in a rear seat.

If the Off Indicator Is Lit for an Adult-Sized Occupant

If a person of adult size is sitting in the front outboard passenger seat, but the off indicator is lit, it could be because that person is not sitting

properly in the seat or that the child restraint locking feature is engaged. If this happens, use the following steps to allow the system to detect that person and enable the front outboard passenger frontal airbag:

1. Turn the vehicle off.
2. Remove any additional material from the seat, such as blankets, cushions, seat covers, seat heaters, or seat massagers.
3. Place the seatback in the fully upright position.
4. Have the person sit upright in the seat, centered on the seat cushion, with legs comfortably extended.
5. If the shoulder portion of the belt is pulled out all the way, the child restraint locking feature will be engaged. This may unintentionally cause the passenger sensing system to turn the airbag off for some adult-sized occupants. If this happens, unbuckle the belt, let the belt go back all the way, and then buckle the belt again without pulling the belt out all the way.
6. Restart the vehicle and have the person remain in this position for two to three minutes after the on indicator is lit.

⚠ Warning

If the front outboard passenger airbag is turned off for an adult-sized occupant, the airbag will not be able to inflate and help protect that person in a crash, resulting in an increased risk of

(Continued)

Warning (Continued)

serious injury or even death. An adult-sized occupant should not ride in the front outboard passenger seat, if the passenger airbag off indicator is lit.

Additional Factors Affecting System Operation

Safety belts help keep the passenger in position on the seat during vehicle maneuvers and braking, which helps the passenger sensing system maintain the passenger airbag status. See “Safety Belts” and “Child Restraints” in the Index for additional information about the importance of proper restraint use.

A thick layer of additional material, such as a blanket or cushion, or aftermarket equipment such as seat covers, seat heaters, and seat massagers can affect how well the passenger sensing system

operates. We recommend that you not use seat covers or other aftermarket equipment except when approved by GM for your specific vehicle. See *Adding Equipment to the Airbag-Equipped Vehicle on page 3-34* for more information about modifications that can affect how the system operates.

The on indicator may be lit if an object, such as a briefcase, handbag, grocery bag, laptop, or other electronic device, is put on an unoccupied seat. If this is not desired, remove the object from the seat.

⚠ Warning

Stowing of articles under the passenger seat or between the passenger seat cushion and seatback may interfere with the proper operation of the passenger sensing system.

Servicing the Airbag-Equipped Vehicle

Airbags affect how the vehicle should be serviced. There are parts of the airbag system in several places around the vehicle. Your dealer and the service manual have information about servicing the vehicle and the airbag system. To purchase a service manual, see *Service Publications Ordering Information on page 13-11*.

⚠ Warning

For up to 10 seconds after the vehicle is turned off and the battery is disconnected, an airbag can still inflate during improper service. You can be injured if you are close to an airbag when it inflates. Avoid yellow connectors. They are probably part of the airbag system. Be sure to follow

(Continued)

Warning (Continued)

proper service procedures, and make sure the person performing work for you is qualified to do so.

Adding Equipment to the Airbag-Equipped Vehicle

Adding accessories that change the vehicle's frame, bumper system, height, front end, or side sheet metal, may keep the airbag system from working properly. The operation of the airbag system can also be affected by changing or moving any parts of the front seats, safety belts, the airbag sensing and diagnostic module, steering wheel, instrument panel, roof-rail airbag modules, ceiling headliner or pillar garnish trim, overhead console, front sensors, side impact sensors, or airbag wiring.

Your dealer and the service manual have information about the location of the airbag sensors, sensing and diagnostic module, and airbag wiring.

In addition, the vehicle may have a passenger sensing system for the front outboard passenger position, which includes sensors that are part of the passenger seat. The passenger sensing system may not operate properly if the original seat trim is replaced with non-GM covers, upholstery, or trim; or with GM covers, upholstery, or trim designed for a different vehicle. Any object, such as an aftermarket seat heater or a comfort-enhancing pad or device, installed under or on top of the seat fabric, could also interfere with the operation of the passenger sensing system. This could either prevent proper deployment of the passenger airbag(s) or prevent the passenger sensing system from properly turning off the passenger airbag(s). See *Passenger Sensing System on page 3-29*.

If the vehicle has rollover roof-rail airbags, see *Different Size Tires and Wheels on page 10-74* for additional important information.

If a snow plow is added to the vehicle, the airbags should still work properly. The airbag systems were designed to work properly under a wide range of conditions, including snow plowing with vehicles that have the optional snow plow prep package (RPO VYU). Do not change or defeat the snow plow's “tripping mechanism.” If you do, it can damage the snow plow and the vehicle, and may cause an airbag deployment.

If you have to modify your vehicle because you have a disability and you have questions about whether the modifications will affect the vehicle's airbag system, or if you have questions about whether the airbag system will be affected if the vehicle is modified for any other reason, call Customer Assistance. See *Customer Assistance Offices on page 13-3*.

Airbag System Check

The airbag system does not need regularly scheduled maintenance or replacement. Make sure the airbag readiness light is working. See *Airbag Readiness Light on page 5-18*.

⚠ Caution

If an airbag covering is damaged, opened, or broken, the airbag may not work properly. Do not open or break the airbag coverings. If there are any opened or broken airbag coverings, have the airbag covering and/or airbag module replaced. For the location of the airbags, see *Where Are the Airbags? on page 3-22*. See your dealer for service.

Replacing Airbag System Parts after a Crash

⚠ Warning

A crash can damage the airbag systems in the vehicle.
A damaged airbag system may not work properly and may not protect you and your passenger(s) in a crash, resulting in serious injury or even death. To help make sure the airbag systems are working properly after a crash, have them inspected and any necessary replacements made as soon as possible.

If an airbag inflates, you will need to replace airbag system parts. See your dealer for service.

If the airbag readiness light stays on after the vehicle is started or comes on when you are driving, the airbag system may not work properly. Have the vehicle serviced right away. See *Airbag Readiness Light on page 5-18*.

Child Restraints

Older Children

Older children who have outgrown booster seats should wear the vehicle safety belts.

The manufacturer instructions that come with the booster seat state the weight and height limitations for that booster. Use a booster seat with a lap-shoulder belt until the child passes the fit test below:

- Sit all the way back on the seat. Do the knees bend at the seat edge? If yes, continue. If no, return to the booster seat.
- Buckle the lap-shoulder belt. Does the shoulder belt rest on the shoulder? If yes, continue. If no, try using the rear safety belt comfort guide, if available. See “Rear Safety Belt Comfort Guides” under *Lap-Shoulder Belt on page 3-14*. If a comfort guide is not available, or if the shoulder belt still does not rest on the shoulder, then return to the booster seat.
- Does the lap belt fit low and snug on the hips, touching the thighs? If yes, continue. If no, return to the booster seat.
- Can proper safety belt fit be maintained for the length of the trip? If yes, continue. If no, return to the booster seat.

  If you have the choice, a child should sit in a position with a lap-shoulder belt and get the additional restraint a shoulder belt can provide.

Q: What is the proper way to wear safety belts?

A: An older child should wear a lap-shoulder belt and get the additional restraint a shoulder belt can provide. The shoulder belt should not cross the face or neck. The lap belt should fit snugly below the hips, just touching the top of the thighs. This applies belt force to the child's pelvic bones in a crash. It should never be worn over the abdomen, which could cause severe or even fatal internal injuries in a crash.

Also see “Rear Safety Belt Comfort Guides” under *Lap-Shoulder Belt on page 3-14*.

According to accident statistics, children are safer when properly restrained in a rear seating position.

In a crash, children who are not buckled up can strike other people who are buckled up, or can be thrown out of the vehicle. Older children need to use safety belts properly.

⚠ Warning

Never allow more than one child to wear the same safety belt. The safety belt cannot properly spread the impact forces. In a crash, they can be crushed together and seriously injured. A safety belt must be used by only one person at a time.

⚠ Warning

Never allow a child to wear the safety belt with the shoulder belt behind their back. A child can be seriously injured by not wearing the lap-shoulder belt properly. In a crash, the child would not be restrained by the shoulder belt. The child could move too far forward increasing the chance of head and neck injury. The child might also slide under the lap

(Continued)

Warning (Continued)

belt. The belt force would then be applied right on the abdomen. That could cause serious or fatal injuries. The shoulder belt should go over the shoulder and across the chest.

Infants and Young Children

Everyone in a vehicle needs protection! This includes infants and all other children. Neither the distance traveled nor the age and size of the traveler changes the need, for everyone, to use safety restraints. In fact, the law in every state in the United States and in every Canadian province says children up to some age must be restrained while in a vehicle.

⚠ Warning

Children can be seriously injured or strangled if a shoulder belt is wrapped around their neck. The shoulder belt can tighten but cannot be loosened if it is locked. The shoulder belt locks when it is pulled all the way out of the retractor. It unlocks when the shoulder belt is allowed to go all

(Continued)

Warning (Continued)

the way back into the retractor, but it cannot do this if it is wrapped around a child's neck. If the shoulder belt is locked and tightened around a child's neck, the only way to loosen the belt is to cut it.

Never leave children unattended in a vehicle and never allow children to play with the safety belts.

Every time infants and young children ride in vehicles, they should have the protection provided by appropriate child restraints. Neither the vehicle's safety belt system nor its airbag system is designed for them.

Children who are not restrained properly can strike other people, or can be thrown out of the vehicle.

⚠ Warning

Never hold an infant or a child while riding in a vehicle. Due to crash forces, an infant or a child will become so heavy it is not possible to hold it during a crash. For example, in a crash at only 40 km/h (25 mph), a 5.5 kg (12 lb) infant will suddenly become a 110 kg (240 lb) force on a person's arms. An infant should be secured in an appropriate restraint.

⚠ Warning

Children who are up against, or very close to, any airbag when it inflates can be seriously injured or killed. Never put a rear-facing child restraint in the front outboard seat. Secure a rear-facing child restraint in a rear seat. It is also better to secure a forward-facing child restraint in a rear seat. If you must secure a forward-facing child restraint in

(Continued)

Warning (Continued)

the front outboard seat, always move the front passenger seat as far back as it will go.

Q: What are the different types of add-on child restraints?

A: Add-on child restraints, which are purchased by the vehicle owner, are available in four basic types. Selection of a particular restraint should take into consideration not only the child's weight, height, and age but also whether or not the restraint will be compatible with the motor vehicle in which it will be used.

For most basic types of child restraints, there are many different models available. When purchasing a child restraint, be sure it is designed to be used in a motor vehicle. If it is, the restraint will have a label saying that it meets federal motor vehicle safety standards.

The restraint manufacturer instructions that come with the restraint state the weight and height limitations for a particular child restraint. In addition, there are many kinds of restraints available for children with special needs.

⚠ Warning

To reduce the risk of neck and head injury during a crash, infants need complete support. In a crash, if an infant is in a rear-facing child restraint, the crash forces can be distributed across the strongest part of an infant's body, the back and shoulders. Infants should always be secured in rear-facing child restraints.

⚠ Warning

A young child's hip bones are still so small that the vehicle's regular safety belt may not remain low on the hip bones, as it should. Instead, it may settle up around the child's abdomen. In a crash, the belt would apply force on a body area that is unprotected by

(Continued)

Warning (Continued)

any bony structure. This alone could cause serious or fatal injuries. To reduce the risk of serious or fatal injuries during a crash, young children should always be secured in appropriate child restraints.

Child Restraint Systems

Rear-Facing Infant Seat

A rear-facing infant seat provides restraint with the seating surface against the back of the infant.

The harness system holds the infant in place and, in a crash, acts to keep the infant positioned in the restraint.

Forward-Facing Child Seat

A forward-facing child seat provides restraint for the child's body with the harness.

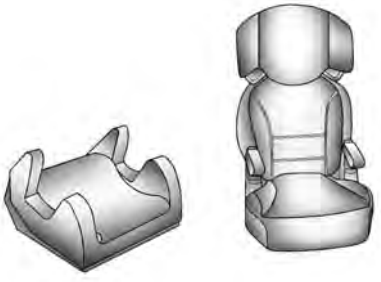

Booster Seats

A booster seat is a child restraint designed to improve the fit of the vehicle's safety belt system.
A booster seat can also help a child to see out the window.

Securing an Add-On Child Restraint in the Vehicle

⚠ Warning

A child can be seriously injured or killed in a crash if the child restraint is not properly secured in the vehicle. Secure the child restraint properly in the vehicle using the vehicle safety belt or LATCH system, following the instructions that came with that child restraint and the instructions in this manual.

To help reduce the chance of injury, the child restraint must be secured in the vehicle. Child restraint systems must be secured in vehicle seats by lap belts or the lap belt portion of a lap-shoulder belt, or by the LATCH system. See *Lower Anchors and Tethers for Children (LATCH System) on page 3-44*.

Children can be endangered in a crash if the child restraint is not properly secured in the vehicle.

When securing an add-on child restraint, refer to the instructions that come with the restraint which may be on the restraint itself or in a booklet, or both, and to this manual. The child restraint instructions are important, so if they are not available, obtain a replacement copy from the manufacturer.

Keep in mind that an unsecured child restraint can move around in a collision or sudden stop and injure people in the vehicle. Be sure to properly secure any child restraint in the vehicle — even when no child is in it.

In some areas of the United States and Canada, Certified Child Passenger Safety Technicians (CPSTs) are available to inspect and demonstrate how to correctly use and install child restraints. In the U.S., refer to the National Highway Traffic Safety

Administration (NHTSA) website to locate the nearest child safety seat inspection station. For CPST availability in Canada, check with Transport Canada or the Provincial Ministry of Transportation office.

Securing the Child Within the Child Restraint

⚠ Warning

A child can be seriously injured or killed in a crash if the child is not properly secured in the child restraint. Secure the child properly following the instructions that came with that child restraint.

Where to Put the Restraint

According to accident statistics, children and infants are safer when properly restrained in a child restraint system or infant restraint system secured in a rear seating position.

Whenever possible, children age 12 and under should be secured in a rear seating position.

If a child restraint is secured in the front outboard passenger seat, and the vehicle has a switch on the passenger side instrument panel endcap to manually turn off the front outboard passenger airbag, see *Airbag On-Off Switch on page 3-27* and *Securing Child Restraints (Center Front Seat) on page 3-57* or *Securing Child Restraints (Rear Seat) on page 3-57* or *Securing Child Restraints (Front Passenger Seat) on page 3-61* for more information, including important safety information.

Never put a rear-facing child seat in the front. This is because the risk to the rear-facing child is so great, if the airbag deploys.

⚠ Warning

A child in a rear-facing child restraint can be seriously injured or killed if the front outboard passenger frontal airbag inflates. This is because the back of the rear-facing child restraint would be very close to the inflating airbag. A child in a forward-facing child restraint can be seriously injured or killed if the front outboard passenger frontal airbag inflates and the passenger seat is in a forward position.

Even if the passenger sensing system or airbag switch has turned off the front outboard passenger frontal airbag, no system is fail-safe. No one can guarantee that an airbag will not deploy under some unusual circumstance, even though it is turned off.

(Continued)

Warning (Continued)

Secure rear-facing child restraints in a rear seat, even if the airbag is off. If you secure a forward-facing child restraint in the front outboard passenger seat, always move the front outboard passenger seat as far back as it will go. It is better to secure the child restraint in a rear seat.

⚠ Warning

A child in a child restraint in the center front seat can be badly injured or killed by the frontal airbags if they inflate. Never secure a child restraint in the center front seat. It is always better to secure a child restraint in a rear seat.

Do not use child restraints in the center front seat position.

When securing a child restraint in a rear seating position, study the instructions that came with your child restraint to make sure it is compatible with this vehicle.

Child restraints and booster seats vary considerably in size, and some may fit in certain seating positions better than others. Always make sure the child restraint is properly secured.

Depending on where you place the child restraint and the size of the child restraint, you may not be able to access adjacent safety belt assemblies or LATCH anchors for additional passengers or child restraints. Adjacent seating positions should not be used if the child restraint prevents access to or interferes with the routing of the safety belt.

If the vehicle does not have a rear seat that will accommodate a rear-facing child restraint, a rear-facing child restraint should not be installed in the vehicle, even if the airbag is off.

Wherever a child restraint is installed, be sure to secure the child restraint properly.

Keep in mind that an unsecured child restraint can move around in a collision or sudden stop and injure people in the vehicle. Be sure to properly secure any child restraint in your vehicle — even when no child is in it.

Lower Anchors and Tethers for Children (LATCH System)

The LATCH system secures a child restraint during driving or in a crash. LATCH attachments on the child restraint are used to attach the child restraint to the anchors in the vehicle. The LATCH system is designed to make installation of a child restraint easier.

In order to use the LATCH system in your vehicle, you need a child restraint that has LATCH attachments. LATCH-compatible rear-facing and forward-facing child seats can be properly installed using either the LATCH anchors or the vehicle's safety belts. Do not use both the safety belts and the LATCH anchorage system to secure a rear-facing or forward-facing child seat.

Booster seats use the vehicle's safety belts to secure the child in the booster seat. If the manufacturer recommends that the booster seat be secured with the LATCH system, this can be done as long as the booster seat can be positioned properly and there is no interference with the proper positioning of the lap-shoulder belt on the child.

Make sure to follow the instructions that came with the child restraint, and also the instructions in this manual.

When installing a child restraint with a top tether, you must also use either the lower anchors or the safety belts to properly secure the child restraint. A child restraint must never be installed using only the top tether and anchor.

The LATCH anchorage system can be used until the combined weight of the child plus the child restraint is 29.5 kg (65 lbs). Use the safety belt alone instead of the LATCH anchorage system once the combined weight is more than 29.5 kg (65 lbs).

The following explains how to attach a child restraint with these attachments in the vehicle.

Not all vehicle seating positions or child restraints have lower anchors and attachments or top tether anchors and attachments.

Lower Anchors

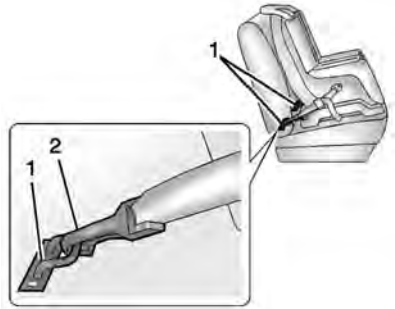

Lower anchors (1) are metal bars built into the vehicle. There are two lower anchors for each LATCH seating position that will accommodate a child restraint with lower attachments (2).

Top Tether Anchor

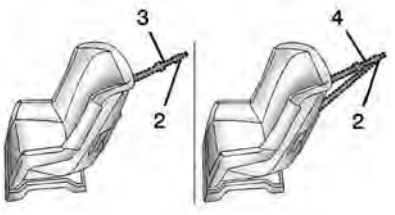

A top tether (3, 4) anchors the top of the child restraint to the vehicle. A top tether anchor is built into the vehicle. The top tether attachment (2) on the child restraint connects to the top tether anchor in the vehicle in order to reduce the forward movement and rotation of the child restraint during driving or in a crash.

The child restraint may have a single tether (3) or a dual tether (4). Either will have a single attachment (2) to secure the top tether to the anchor.

Some child restraints that have a top tether are designed for use with or without the top tether being attached. Others require the top tether always to be attached. In Canada, the law requires that forward-facing child restraints have a top tether, and that the tether be attached. Be sure to read and follow the instructions for your child restraint.

Lower Anchor and Top Tether Anchor Locations

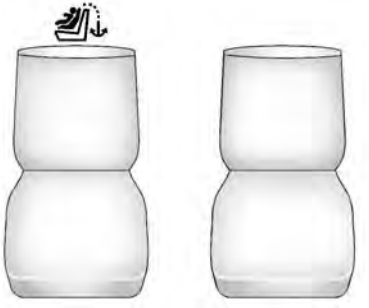

Regular Cab — Two-Passenger Front Seat

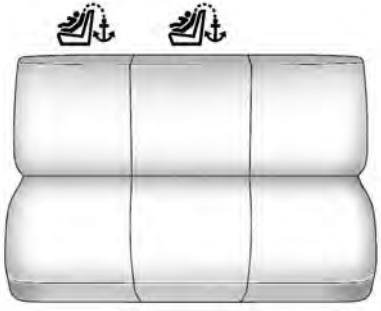

Regular Cab — Three-Passenger Front Seat

(Top Tether Anchor): Seating positions with top tether anchors.

Do not install a child restraint in the center front seating position. See *Securing Child Restraints (Center Front Seat) on page 3-57* or *Securing Child Restraints (Rear Seat) on page 3-57* or *Securing Child Restraints (Front Passenger Seat) on page 3-61* for more information.

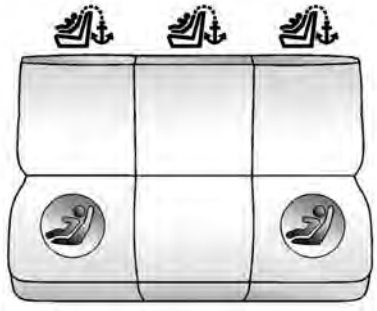

Crew and Double Cab Rear Seat

(Top Tether Anchor): Seating positions with top tether anchors.

(Lower Anchor): Seating positions with two lower anchors.

To assist in locating the lower anchors on crew cab models, each seating position with lower anchors has two labels near the crease between the seatback and the seat cushion.

For double cab models, the rear outboard seating positions have exposed metal lower anchors in the crease between the seatback and the seat cushion.

For regular cab models, there is an anchor symbol on the cover to assist you in locating the top tether anchors.

Do not install a child restraint in the center seating position. See *Securing Child Restraints (Center Front Seat) on page 3-57* or *Securing Child Restraints (Rear Seat) on page 3-57* or *Securing Child Restraints (Front Passenger Seat) on page 3-61* for more information.

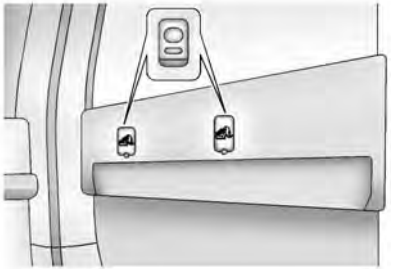

Regular Cab

For regular cab models, the top tether anchors are under covers on the back panel behind the passenger seat. Remove the trim plug to access the anchor. Be sure to use an anchor on the same side of the vehicle as the seating position where the child restraint will be placed.

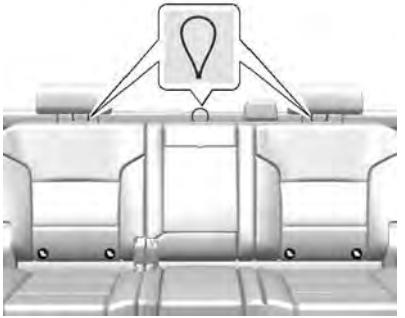

Crew Cab Shown, Double Cab Similar

For crew and double cab models, the top tether anchors are the loops near the top of the seatback for each rear seating position. These loops will be used to route the top tether through, as well as to secure the top tether to the vehicle. Be sure to use the anchor (loop) on the same side of the vehicle as the seating position where the child restraint will be placed.

Be sure to read the following instructions to properly install a child restraint using these loops.

Do not secure a child restraint in a position without a top tether anchor if a national or local law requires that the top tether be attached, or if the instructions that come with the child restraint say that the top tether must be attached.

According to accident statistics, children and infants are safer when properly restrained in a child restraint system or infant restraint system secured in a rear seating position. See *Where to Put the Restraint on page 3-43* for additional information.

Securing a Child Restraint Designed for the LATCH System

⚠ Warning

If a LATCH-type child restraint is not attached to anchors or with the safety belt, the child restraint will not be able to protect the child correctly. In a crash, the child could be seriously injured or killed. Install a LATCH-type child restraint properly using the anchors, or use the vehicle safety belts to secure the restraint, following the instructions that came with the child restraint and the instructions in this manual.

⚠ Warning

Do not attach more than one child restraint to a single anchor, except for the center top tether anchors in the crew and double cabs. Attaching more than one child restraint to a single anchor could cause the anchor or attachment to come loose or even break during a crash. A child or others could be injured. To reduce the risk of serious or fatal injuries during a crash, attach only one child restraint per anchor.

⚠ Warning

Children can be seriously injured or strangled if a shoulder belt is wrapped around their neck. The shoulder belt can tighten but cannot be loosened if it is locked. The shoulder belt locks when it is

(Continued)

Warning (Continued)

pulled all the way out of the retractor. It unlocks when the shoulder belt is allowed to go all the way back into the retractor, but it cannot do this if it is wrapped around a child's neck. If the shoulder belt is locked and tightened around a child's neck, the only way to loosen the belt is to cut it.

Buckle any unused safety belts behind the child restraint so children cannot reach them. Pull the shoulder belt all the way out of the retractor to set the lock, and tighten the belt behind the child restraint after the child restraint has been installed.

⚠ Caution

Do not let the LATCH attachments rub against the vehicle's safety belts. This may damage these parts. If necessary, move buckled safety belts to avoid rubbing the LATCH attachments.

Do not fold the empty rear seat with a safety belt buckled. This could damage the safety belt or the seat. Unbuckle and return the safety belt to its stowed position, before folding the seat.

If you need to secure more than one child restraint in the rear seat, see *Where to Put the Restraint on page 3-43*.

This system is designed to make installation of child restraints easier. When using lower anchors, do not use the vehicle's safety belts. Instead use the vehicle's anchors and child restraint attachments to secure the restraints. Some restraints also use another vehicle anchor to secure a top tether.

Regular Cab Models

1. For models without a rear seat, forward-facing child restraints should only be installed in the right front seating position with safety belts and a top tether. See *Securing Child Restraints (Center Front Seat) on page 3-57* or *Securing Child Restraints (Rear Seat) on page 3-57* or *Securing Child Restraints (Front Passenger Seat) on page 3-61*.

If the child restraint manufacturer recommends that the top tether be attached, attach and tighten the top tether to the top tether anchor, if your vehicle has one. Refer to the child restraint instructions and the following steps:

1.1. Fold the passenger seatback forward to access the top tether anchor. See *Reclining Seatbacks on page 3-5*.

1.2. Find the top tether anchor.

1.3. Remove the cover to expose the anchor.

1.4. Route, attach, and tighten the top tether according to your child restraint instructions and the following instructions:

If the position you are using has an adjustable head restraint and you are using a dual tether, route the tether around the head restraint.

If the position you are using has an adjustable head restraint and you are using a single tether, raise the head restraint and route the tether under the head restraint and in between the head restraint posts.

2. Secure the child restraint in the right front seating position with the vehicle safety belts. See *Securing Child Restraints (Center Front Seat) on page 3-57* or *Securing Child Restraints (Rear Seat) on page 3-57* or *Securing Child Restraints (Front Passenger Seat) on page 3-61*.
3. Before placing a child in the child restraint, make sure it is securely held in place. To check, grasp the child restraint at the safety belt path and attempt to move it side to side and back and forth. There should be no more than 2.5 cm (1 in) of movement for proper installation.

Crew Cab Models

1. Attach and tighten the lower attachments to the lower anchors. If the child restraint does not have lower attachments or the desired seating position does not have lower anchors, secure the child restraint with the top tether and the safety belts. Refer to your child restraint manufacturer's instructions and the instructions in this manual.
   1.1. Find the lower anchors for the desired seating position.
   1.2. Put the child restraint on the seat.
   1.3. Attach and tighten the lower attachments on the child restraint to the lower anchors.
2. For forward-facing child restraints, attach and tighten the top tether to the top tether anchor (loop), if your vehicle has one. Follow the child restraint instructions the vehicle LATCH anchor weight limits described at the beginning of this section, and the following steps:

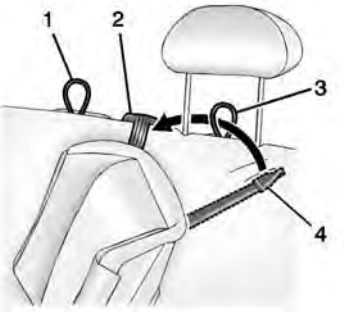

Example — Rear Driver Side Position

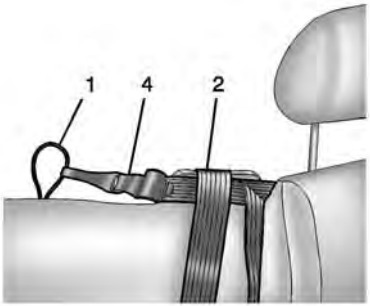

Example — Rear Driver Side Position

2.1. For a top tether in the rear driver side position:

2.1.1. Raise the headrest.

2.1.2. Route the top tether (4) between the headrest posts, through the loop (3), behind the inboard headrest post, and under the center shoulder belt (2).

2.1.3. Then attach the top tether (4) to the top tether anchor (loop) (1) at the center rear seating position.

2.2. For a top tether in the rear center position:

2.2.1. Route the top tether (4) through the center loop (1), and behind the passenger side headrest post.

2.2.2. Then attach the top tether (4) to the top tether anchor (loop) at the rear passenger side seating position.

2.3. For a top tether in the rear passenger position:

2.3.1. Raise the headrest.

2.3.2. Route the top tether (4) between the headrest posts, through the loop on the passenger side and behind the inboard headrest post.

2.3.3. Then attach the top tether (4) to the top tether anchor (loop) (1) at the center rear seating position.

3. Tighten the top tether per the child restraint manufacturer's instructions.

When the top tether is properly tightened, the anchor (loop) may bend. This is normal and will not damage the vehicle.

If child restraints are installed in both outboard positions, both top tethers can be attached to the center loop. Top tethers can be attached for child restraints in all three rear seating positions at the same time, following the routing instructions above.

4. Before placing a child in the child restraint, make sure it is securely held in place. To check, grasp the child restraint at the LATCH path and attempt to move it side to side and back and forth. There should be no more than 2.5 cm (1 in) of movement for proper installation.

Double Cab Models

1. Remove the headrest prior to installing a forward-facing child restraint in an outboard rear seating position. See “Headrest Removal and Reinstallation” at the end of this section.
2. Attach and tighten the lower attachments to the lower anchors. If the child restraint does not have lower attachments or the desired seating position does not have lower anchors, secure the child restraint with the top tether and the safety belts. Refer to your child restraint manufacturer’s instructions and the instructions in this manual.
   2.1. Find the lower anchors for the desired seating position.
   2.2. Put the child restraint on the seat.
   2.3. Attach and tighten the lower attachments on the child restraint to the lower anchors.
3. For forward-facing child restraints, attach and tighten the top tether to the top tether anchor (loop). Follow the child restraint instructions, the vehicle LATCH anchor weight limits described at the beginning of this section, and the following steps:

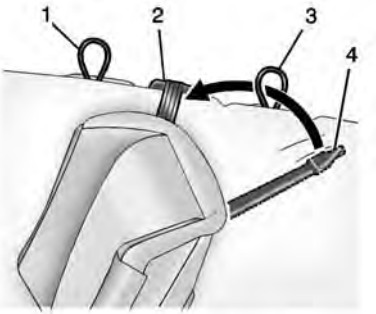

Example — Rear Driver Side Position

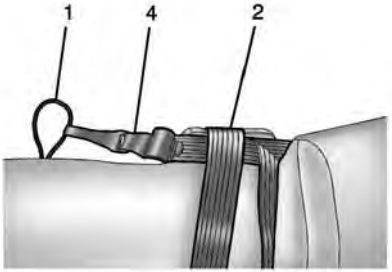

Example — Rear Driver Side Position

3.1. For a top tether in the rear driver side position:

3.1.1. Remove the headrest.

3.1.2. Route the top tether (4) through the loop (3) on the driver side under the center shoulder belt (2).

3.1.3. Then attach the top tether (4) to the top tether anchor (loop) (1) at the center rear seating position.

3.2. For a top tether in the rear center position:

3.2.1. Route the top tether (4) through the center loop (1), and behind the passenger side headrest post.

3.2.2. Then attach the top tether (4) to the top tether anchor (loop) at the rear passenger side seating position.

3.3. For a top tether in the rear passenger position:

3.3.1. Remove the headrest.

3.3.2. Route the top tether (4) through the loop on the passenger side.

3.3.3. Then attach the top tether (4) to the top tether anchor (loop) (1) at the center rear seating position.

4. Tighten the top tether per the child restraint manufacturer's instructions.

When the top tether is properly tightened, the anchor (loop) may bend. This is normal and will not damage the vehicle.

If child restraints are installed in both outboard positions, both top tethers can be attached to the center loop. Top tethers can be attached for child restraints in all three rear seating positions at the same time, following the routing instructions above.

5. Before placing a child in the child restraint, make sure it is securely held in place. To check, grasp the child restraint at the LATCH path and attempt to move it side to side and back and forth. There should be no more than 2.5 cm (1 in) of movement for proper installation.

Headrest Removal and Reinstallation

Crew Cab Models

For outboard rear seating positions, if the child restraint cannot be installed properly with the headrest in place, the headrest may be removed. See your dealer for assistance with removal.

Store the removed headrests in a secure place. Reinstall the headrest before the seating position is moved.

To reinstall the headrest:

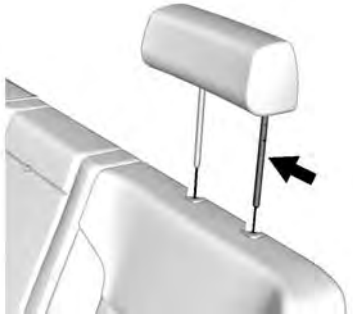

1. Insert the headrest posts into the holes in the top of the seatback with the longer chrome plated post toward the driver side of the vehicle.
2. Push the headrest all the way down until it contacts the top of the seatback.

Double Cab Models

The rear outboard headrests should be removed when installing forward-facing child restraints.

To remove the headrest:

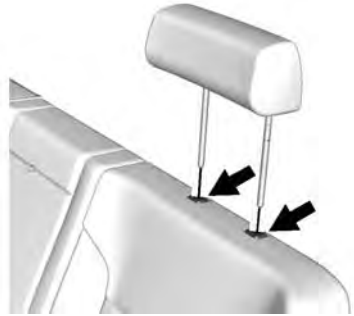

1. Press both buttons on the headrest posts and pull up on the headrest.
2. Store the headrest in a secure place.
3. When the child restraint is removed, reinstall the headrest before the seating position is used.

To reinstall the headrest:

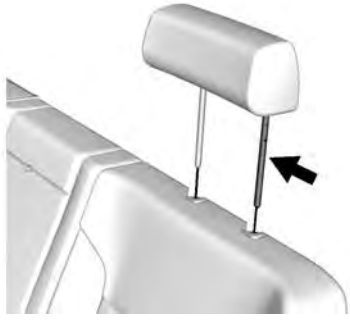

1. Insert the headrest posts into the holes in the top of the seatback with the longer chrome plated post toward the driver side of the vehicle.
2. Push the headrest all the way down until it contacts the top of the seatback.

Replacing LATCH System Parts After a Crash

⚠ Warning

A crash can damage the LATCH system in the vehicle. A damaged LATCH system may not properly secure the child restraint, resulting in serious injury or even death in a crash. To help make sure the LATCH system is working properly after a crash, see your dealer to have the system inspected and any necessary replacements made as soon as possible.

If the vehicle has the LATCH system and it was being used during a crash, new LATCH system parts may be needed.

New parts and repairs may be necessary even if the LATCH system was not being used at the time of the crash.

Securing Child Restraints (Center Front Seat)

⚠ Warning

A child in a child restraint in the center front seat can be badly injured or killed by the frontal airbags if they inflate. Never secure a child restraint in the center front seat. It is always better to secure a child restraint in a rear seat.

Do not use child restraints in the center front seat position.

Securing Child Restraints (Rear Seat)

When securing a child restraint in a rear seating position, study the instructions that came with the child restraint to make sure it is compatible with this vehicle.

If the child restraint has the LATCH system, see *Lower Anchors and Tethers for Children (LATCH System) on page 3-44* for how and where to install the child restraint using LATCH. If a child restraint is secured in the vehicle using a safety belt and it uses a top tether, see *Lower Anchors and Tethers for Children (LATCH System) on page 3-44* for top tether anchor locations.

Do not secure a child seat in a position without a top tether anchor if a national or local law requires that the top tether be anchored, or if the instructions that come with the child restraint say that the top strap must be anchored.

In Canada, the law requires that forward-facing child restraints have a top tether, and that the tether be attached.

If the child restraint or vehicle seat position does not have the LATCH system, you will be using the safety belt to secure the child restraint in this position. Be sure to follow the instructions that came with the child restraint. Secure the child in the child restraint when and as the instructions say.

If more than one child restraint needs to be installed in the rear seat, be sure to read *Where to Put the Restraint on page 3-43*.

Double Cab

1. Remove the headrest prior to installing a forward-facing child restraint in an outboard rear seating position. See “Headrest Removal and Reinstallation” under *Lower Anchors and Tethers for Children (LATCH System) on page 3-44*.
2. Put the child restraint on the seat.
3. Pick up the latch plate, and run the lap and shoulder portions of the vehicle's safety belt through or around the restraint. The child restraint instructions will show you how.

4. Push the latch plate into the buckle until it clicks.

   Position the release button on the buckle so that the safety belt could be quickly unbuckled if necessary.

5. Pull the shoulder belt all the way out of the retractor to set the lock. When the retractor lock is set, the belt can be tightened but not pulled out of the retractor.

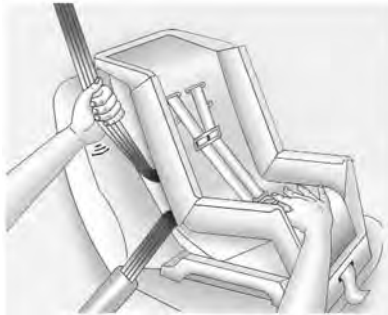

6. To tighten the belt, push down on the child restraint, pull the shoulder portion of the belt to tighten the lap portion of the belt, and feed the shoulder belt back into the retractor. When installing a forward-facing child restraint, it may be helpful to use your knee to push down on the child restraint as you tighten the belt.

   Try to pull the belt out of the retractor to make sure the retractor is locked. If the retractor is not locked, repeat Steps 4 and 5.

7. For forward-facing child restraints, attach and tighten the top tether to the top tether anchor (loop). Refer to the child restraint instructions, the vehicle LATCH anchor weight limits and instructions listed in *Lower Anchors and Tethers for Children (LATCH System) on page 3-44*.

8. Before placing a child in the child restraint, make sure it is securely held in place. To check, grasp the child restraint at the safety belt path and attempt to move it side to side and back and forth. When the child restraint is properly installed, there should be no more than 2.5 cm (1 in) of movement.

To remove the child restraint, unbuckle the vehicle safety belt and let it return to the stowed position. If the top tether is attached to a top tether anchor, disconnect it. Reinstall the headrest before the seating position is used.

See “Headrest Removal and Reinstallation” under *Lower Anchors and Tethers for Children (LATCH System) on page 3-44* for additional information on installing the headrest properly.

Crew Cab

1. Put the child restraint on the seat.
2. Pick up the latch plate, and run the lap and shoulder portions of the vehicle's safety belt through or around the restraint. The child restraint instructions will show you how.

3. Push the latch plate into the buckle until it clicks.

   Position the release button on the buckle so that the safety belt could be quickly unbuckled if necessary.

4. Pull the shoulder belt all the way out of the retractor to set the lock. When the retractor lock is set, the belt can be tightened but not pulled out of the retractor.

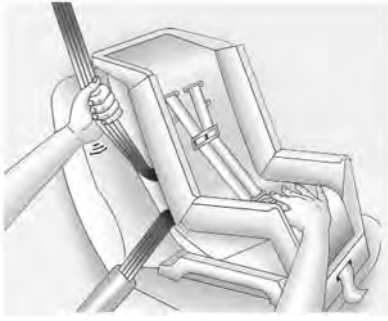

5. To tighten the belt, push down on the child restraint, pull the shoulder portion of the belt to tighten the lap portion of the belt, and feed the shoulder belt back into the retractor. When installing a forward-facing child restraint, it may be helpful to use your knee to push down on the child restraint as you tighten the belt.

   Try to pull the belt out of the retractor to make sure the retractor is locked. If the retractor is not locked, repeat Steps 4 and 5.

6. If the child restraint has a top tether, follow the child restraint manufacturer's instructions regarding the use of the top tether. See *Lower Anchors and Tethers for Children (LATCH System) on page 3-44* for more information on using the top tether anchors.

7. Before placing a child in the child restraint, make sure it is securely held in place. To check, grasp the child restraint at the safety belt path and attempt to move it side to side and back and forth. When the child restraint is properly installed, there should be no more than 2.5 cm (1 in) of movement.

To remove the child restraint, unbuckle the vehicle safety belt and let it return to the stowed position. If the top tether is attached to a top tether anchor, disconnect it.

For outboard rear seating positions, if the child restraint cannot be installed properly with the headrest in place, the headrest may be removed. See your dealer for assistance with removal, and store the removed headrest in a secure place. When the child restraint is removed, reinstall the headrest before the seating position is used. For reinstallation instructions, see “Headrest Removal and Reinstallation” under *Lower Anchors and Tethers for Children (LATCH System) on page 3-44*.

Securing Child Restraints (Front Passenger Seat)

With Passenger Sensing System

This vehicle has airbags. A rear seat is a safer place to secure a forward-facing child restraint. See *Where to Put the Restraint on page 3-43*.

In addition, the vehicle may have a passenger sensing system which is designed to turn off the front outboard passenger frontal airbag under certain conditions. See *Passenger Sensing System on page 3-29* and *Passenger Airbag Status Indicator on page 5-20* for more information on this, including important safety information.

Never put a rear-facing child seat in the front. This is because the risk to the rear-facing child is so great, if the airbag deploys.

⚠ Warning

A child in a rear-facing child restraint can be seriously injured or killed if the front outboard passenger airbag inflates. This is because the back of the rear-facing child restraint would be very close to the inflating airbag. A child in a forward-facing child restraint can be seriously

(Continued)

Warning (Continued)

injured or killed if the front outboard passenger airbag inflates and the passenger seat is in a forward position.

The vehicle may have a passenger sensing system which is designed to turn off the front outboard passenger frontal airbag under certain conditions.

Even if the passenger sensing system, if equipped, has turned off the front outboard passenger frontal airbag, no system is fail-safe. No one can guarantee that an airbag will not deploy under some unusual circumstance, even though it is turned off.

Secure rear-facing child restraints in a rear seat, even if the airbag is off. If you secure a forward-facing child restraint in

(Continued)

Warning (Continued)

the front outboard seat, always move the front passenger seat as far back as it will go. It is better to secure the child restraint in a rear seat.

See *Passenger Sensing System on page 3-29* for additional information.

If the vehicle does not have a rear seat that will accommodate a rear-facing child restraint, a rear-facing child restraint should not be installed in the vehicle, even if the airbag is off.

If a child restraint uses a top tether, see *Lower Anchors and Tethers for Children (LATCH System) on page 3-44* for top tether anchor locations.

Do not secure a child seat in a position without a top tether anchor if a national or local law requires that the top tether be anchored, or if

the instructions that come with the child restraint say that the top strap must be anchored.

In Canada, the law requires that forward-facing child restraints have a top tether, and that the tether be attached.

When using the lap-shoulder belt to secure the child restraint in this position, follow the instructions that came with the child restraint and the following instructions:

1. Move the seat as far back as it will go before securing the forward-facing child restraint.

   When the passenger sensing system, if equipped, has turned off the front outboard passenger frontal airbag, the off indicator in the passenger airbag status indicator should light and stay lit when you start the vehicle. See *Passenger Airbag Status Indicator on page 5-20*.

2. Put the child restraint on the seat.

3. Pick up the latch plate, and run the lap and shoulder portions of the vehicle's safety belt through or around the restraint. The child restraint instructions will show you how.

   Tilt the latch plate to adjust the belt, if needed.

4. Push the latch plate into the buckle until it clicks.

   Position the release button so that the safety belt could be quickly unbuckled if necessary.

5. Pull the shoulder belt all the way out of the retractor to set the lock. When the retractor lock is set, the belt can be tightened but not pulled out of the retractor.

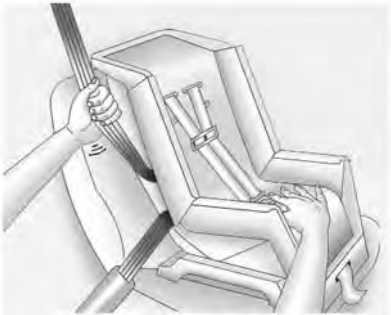

6. To tighten the belt, push down on the child restraint, pull the shoulder portion of the belt to tighten the lap portion of the belt, and feed the shoulder belt back into the retractor. When installing a forward-facing child restraint, it may be helpful to use your knee to push down on the child restraint as you tighten the belt.

   Try to pull the belt out of the retractor to make sure the retractor is locked. If the retractor is not locked, repeat Steps 5 and 6.

7. If the vehicle does not have a rear seat and the child restraint has a top tether, follow the child restraint manufacturer's instructions regarding the use of the top tether. See *Lower Anchors and Tethers for Children (LATCH System) on page 3-44* for more information on using the top tether anchors.

8. Before placing a child in the child restraint, make sure it is securely held in place. To check, grasp the child restraint at the safety belt path and attempt to move it side to side and back and forth. When the child restraint is properly installed, there should be no more than 2.5 cm (1 in) of movement.

If the vehicle is equipped with a passenger sensing system, and when the passenger sensing system has turned off the front outboard passenger frontal airbag, the off indicator in the passenger airbag status indicator should light and stay lit when the vehicle is started.

If a child restraint has been installed and the on indicator is lit, see “If the On Indicator Is Lit for a Child Restraint” under *Passenger Sensing System on page 3-29* for more information.

To remove the child restraint, unbuckle the vehicle safety belt and let it return to the stowed position. If the top tether is attached to a top tether anchor, disconnect it.

With Airbag On-Off Switch

This vehicle has airbags. A rear seat is a safer place to secure a forward-facing child restraint. See *Where to Put the Restraint on page 3-43*.

There may be a switch on the instrument panel endcap that you can use to turn off the front outboard passenger frontal airbag. See *Airbag On-Off Switch on page 3-27* for more information, including important safety information.

Never put a rear-facing child seat in the front. This is because the risk to the rear-facing child is so great, if the airbag deploys.

⚠ Warning

A child in a rear-facing child restraint can be seriously injured or killed if the front outboard passenger airbag inflates. This is because the back of the rear-facing child restraint would be very close to the inflating airbag. A child in a forward-facing child restraint can be seriously injured or killed if the front outboard passenger airbag inflates and the passenger seat is in a forward position.

Even if the airbag switch has turned off the front outboard passenger frontal airbag, no system is fail-safe. No one can guarantee that an airbag will not

(Continued)

Warning (Continued)

deploy under some unusual circumstance, even though it is turned off.

Secure rear-facing child restraints in a rear seat, even if the airbag is off. If you secure a forward-facing child restraint in the front outboard seat, always move the front passenger seat as far back as it will go. It is better to secure the child restraint in a rear seat.

⚠ Warning

If the airbag readiness light ever comes on and stays on, it means that something may be wrong with the airbag system. For example, the front outboard

(Continued)

Warning (Continued)

passenger frontal airbag could inflate even though the airbag on-off switch is turned off.

To help avoid injury to yourself or others, have the vehicle serviced right away. See *Airbag Readiness Light on page 5-18* for more information, including important safety information.

If the vehicle does not have a rear seat that will accommodate a rear-facing child restraint, a rear-facing child restraint should not be installed in the vehicle, even if the airbag is off.

If a child restraint uses a top tether, see *Lower Anchors and Tethers for Children (LATCH System) on page 3-44* for top tether anchor locations.

Do not secure a child restraint in a position without a top tether anchor if a national or local law requires that the top tether be anchored, or if the instructions that come with the child restraint say that the top strap must be anchored.

In Canada, the law requires that forward-facing child restraints have a top tether, and that the tether be attached.

When using the lap-shoulder belt to secure the child restraint in this position, follow the instructions that came with the child restraint and the following instructions:

1. Move the seat as far back as it will go before securing the forward-facing child restraint.

   When the airbag off switch (if equipped) has turned off the front outboard passenger frontal airbag, the off indicator in the airbag off light should light and stay lit when you start the vehicle. See *Airbag On-Off Light on page 5-18*.

2. Put the child restraint on the seat.

3. Pick up the latch plate, and run the lap and shoulder portions of the vehicle's safety belt through or around the restraint. The child restraint instructions will show you how.

   Tilt the latch plate to adjust the belt, if needed.

4. Push the latch plate into the buckle until it clicks.

   Position the release button so that the safety belt could be quickly unbuckled if necessary.

5. Pull the shoulder belt all the way out of the retractor to set the lock. When the retractor lock is set, the belt can be tightened but not pulled out of the retractor.

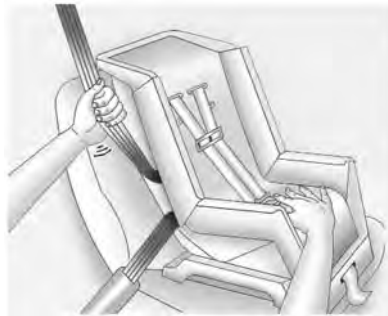

6. To tighten the belt, push down on the child restraint, pull the shoulder portion of the belt to tighten the lap portion of the belt, and feed the shoulder belt back into the retractor. When installing a forward-facing child restraint, it may be helpful to use your knee to push down on the child restraint as you tighten the belt.

   Try to pull the belt out of the retractor to make sure the retractor is locked. If the retractor is not locked, repeat Steps 5 and 6.

7. If your vehicle does not have a rear seat and your child restraint has a top tether, follow the child restraint manufacturer's instructions regarding the use of the top tether. See *Lower Anchors and Tethers for Children (LATCH System) on page 3-44*.
8. Before placing a child in the child restraint, make sure it is securely held in place. To check, grasp the child restraint at the safety belt path and attempt to move it side to side and back and forth. When the child restraint is properly installed, there should be no more than 2.5 cm (1 in) of movement.

To remove the child restraint, unbuckle the vehicle safety belt and let it return to the stowed position. If the top tether is attached to a top tether anchor, disconnect it.

If you turned the airbag off with the switch (if equipped), turn on the front outboard passenger airbag when you remove the child restraint from the vehicle unless the person who will be sitting there is a member of a passenger airbag risk group. See *Airbag On-Off Switch on page 3-27* for more information, including important safety information.

Heavy-Duty Crew Cab Only

This vehicle has airbags. A rear seat is a safer place to secure a forward-facing child restraint. See *Where to Put the Restraint on page 3-43*.

Never put a rear-facing child seat in the front. This is because the risk to the rear-facing child is so great, if the airbag deploys.

⚠ Warning

A child in a rear-facing child restraint can be seriously injured or killed if the front outboard passenger airbag inflates. This is because the back of the rear-facing child restraint would be very close to the inflating airbag. Always secure a rear-facing child restraint in a rear seat.

If the vehicle does not have a rear seat that will accommodate a rear-facing child restraint, a rear-facing child restraint should not be installed in the vehicle, even if the airbag is off.

If a child restraint uses a top tether, see *Lower Anchors and Tethers for Children (LATCH System) on page 3-44* for top tether anchor locations.

Do not secure a child seat in a position without a top tether anchor if a national or local law requires that the top tether be anchored, or if the instructions that come with the child restraint say that the top strap must be anchored.

In Canada, the law requires that forward-facing child restraints have a top tether, and that the tether be attached.

When using the lap-shoulder belt to secure the child restraint in this position, follow the instructions that came with the child restraint and the following instructions:

1. Move the seat as far back as it will go before securing the forward-facing child restraint.
2. Put the child restraint on the seat.
3. Pick up the latch plate, and run the lap and shoulder portions of the vehicle's safety belt through or around the restraint. The child restraint instructions will show you how.

4. Push the latch plate into the buckle until it clicks.

   Make sure the release button is positioned so you would be able to unbuckle the safety belt quickly if necessary.

5. Pull the shoulder belt all the way out of the retractor to set the lock. When the retractor lock is set, the belt can be tightened but not pulled out of the retractor.

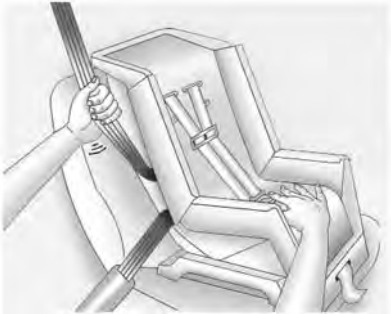

6. To tighten the belt, push down on the child restraint, pull the shoulder portion of the belt to tighten the lap portion of the belt, and feed the shoulder belt back into the retractor. When installing a forward-facing child restraint, it may be helpful to use your knee to push down on the child restraint as you tighten the belt.

   Try to pull the belt out of the retractor to make sure the retractor is locked. If the retractor is not locked, repeat Steps 5 and 6.

7. If your child restraint has a top tether, follow the child restraint manufacturer's instructions regarding the use of the top tether. See *Lower Anchors and Tethers for Children (LATCH System) on page 3-44* for more information on using the top tether anchors.

8. Before placing a child in the child restraint, make sure it is securely held in place. To check, grasp the child restraint at the safety belt path and attempt to move it side to side and back and forth. When the child restraint is properly installed, there should be no more than 2.5 cm (1 in) of movement.

To remove the child restraint, unbuckle the vehicle safety belt and let it return to the stowed position. If the top tether is attached to a top tether anchor, disconnect it.

Storage

Storage Compartments
Storage Compartments 4-1
Instrument Panel Storage 4-1
Glove Box 4-2
Cupholders 4-2
Sunglasses Storage 4-3
Center Console Storage 4-3
Floor Console Storage 4-4

Additional Storage Features
Cargo Tie-Downs 4-4

Storage Compartments

⚠ Warning

Do not store heavy or sharp objects in storage compartments. In a crash, these objects may cause the cover to open and could result in injury.

Instrument Panel Storage

If equipped, there is storage under the climate control system.

To access, pull down on the handle.

Card Holder

If equipped, there is a card holder on the front instrument panel to the left of the steering wheel.

Glove Box

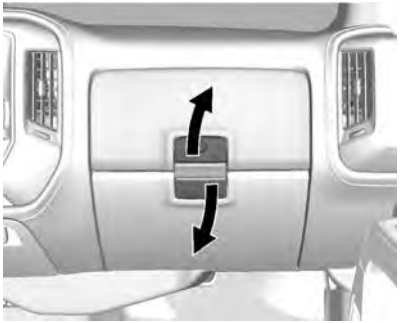

To access the upper glove box, unlock with the key and pull up on the handle.

If equipped, there is a USB port in the upper glove box.

To access the lower glove box, pull down on the handle.

Cupholders

Front

Base

There may be cupholders on the center front seat console armrest.

Uplevel

If equipped, the cupholder in the center console is removable and can be repositioned. Lift the cupholder from the sides to remove it.

Insert the cupholder between the guides on the console and push down to secure it.

Rear

If equipped, pull the rear seat armrest down to access the cupholders.

Sunglasses Storage

If equipped, sunglasses storage is on the overhead console. Press the fixed button on the cover and release to access.

Center Console Storage

Bench Seat

If equipped, pull the front center seat armrest down to access the storage area with cupholders.

Press the button and lift to open. There is a removable divider.

If equipped, there are dual USB ports, an accessory power outlet, an auxiliary jack, and an SD card reader inside.

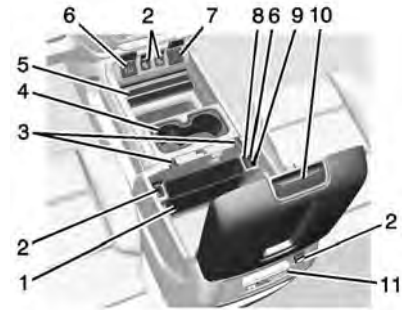

Bucket Seat

If equipped, the center console may have the following features:

1. Tote Compartment
2. Accessory Power Outlets
3. Power Cord Openings
4. Removable Cupholders
5. Device Holder
6. USB Ports
7. High Voltage Power Outlet (HVPO) (if equipped)
8. SD Card Reader

9. Auxiliary Input Jack
10. Latch
11. Rear Seat Audio (RSA)

Press the latch (10) and lift the armrest to access the main storage compartment.

There is an open storage compartment on the rear of the center console.

See *Cupholders on page 4-2*, *Power Outlets on page 5-6*, *USB Port on page 7-18*, *Auxiliary Jack on page 7-21*, and *SD Card Reader on page 7-20*. If equipped with the uplevel radio, see “Audio Players” in the infotainment manual.

Floor Console Storage

If equipped with front seat floor console storage, unlock with the ignition key, press the button, and lift to open.

Additional Storage Features

Cargo Tie-Downs

The vehicle may be equipped with cargo tie-downs.

Any of the nine holes inside the truck bed can be used for tie-downs.

The maximum load is 113 kg (250 lb) per tie-down.

⚠ Caution

The truck bed walls will collapse if the tie-downs are overloaded.

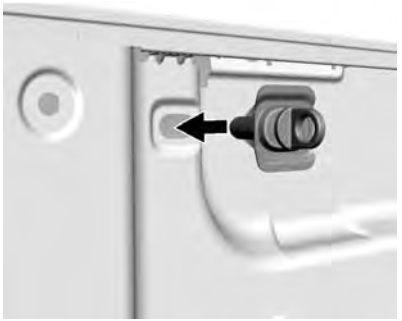

To install:

1. Insert a tie-down loop assembly until it is flush with the truck bed wall.
2. Turn the tie-down loop clockwise to tighten. The tie-down will be hard to turn until the toggle moves past the installation point on the toggle guide.
3. Fasten the tie-down firmly by hand only. Do not use tools.

To remove:

1. Remove the tie-down loop completely by turning counterclockwise while holding the backing plate against the truck bed wall.
2. Pull the backing plate away from the truck bed wall until a click is heard. This locks the toggle into position on the toggle guide.
3. Push the backing plate against the truck bed wall. This allows the toggle nut to spin.
4. Remove the backing plate, toggle guide, and toggle nut from the truck bed wall completely.
5. Reinstall the tie-down loop through the backing plate into the toggle nut for reuse.

✍ NOTES

Instruments and Controls

Controls

Steering Wheel Adjustment . . . 5-2
Steering Wheel Controls 5-3
Heated Steering Wheel 5-4
Horn 5-4
Windshield Wiper/Washer 5-4
Compass 5-5
Clock 5-5
Power Outlets 5-6

Warning Lights, Gauges, and Indicators

Warning Lights, Gauges, and Indicators 5-9
Instrument Cluster 5-10
Speedometer 5-13
Odometer 5-13
Trip Odometer 5-13
Tachometer 5-13
Fuel Gauge 5-14
Engine Oil Pressure Gauge 5-15
Engine Coolant Temperature Gauge 5-16
Voltmeter Gauge 5-16
Safety Belt Reminders 5-17
Airbag Readiness Light 5-18
Airbag On-Off Light 5-18
Passenger Airbag Status Indicator 5-20
Charging System Light 5-21
Malfunction Indicator Lamp 5-21
Brake System Warning Light 5-24
Antilock Brake System (ABS) Warning Light 5-25
Four-Wheel-Drive Light 5-25
Tow/Haul Mode Light 5-26
Hill Descent Control Light 5-26
Lane Departure Warning (LDW) Light 5-26
Vehicle Ahead Indicator 5-26
Traction Off Light 5-27
StabiliTrak® OFF Light 5-27
Traction Control System (TCS)/StabiliTrak® Light 5-27
Tire Pressure Light 5-28
Low Fuel Warning Light 5-28
Security Light 5-29
High-Beam On Light 5-29
Front Fog Lamp Light 5-29
Lamps On Reminder 5-29
Cruise Control Light 5-30

Information Displays

Driver Information Center (DIC) (Base Level) 5-30
Driver Information Center (DIC) (Uplevel) 5-32

Vehicle Messages

Vehicle Messages 5-35
Battery Voltage and Charging Messages 5-36
Brake System Messages 5-36
Compass Messages 5-37
Door Ajar Messages 5-37
Engine Cooling System Messages 5-37
Engine Oil Messages 5-38
Engine Power Messages 5-39
Fuel System Messages 5-39
Key and Lock Messages 5-39
Lamp Messages 5-39
Object Detection System Messages 5-40
Ride Control System Messages 5-40
Airbag System Messages 5-42

Safety Belt Messages 5-42
Security Messages 5-42
Steering System Messages 5-42
Tire Messages 5-43
Transmission Messages 5-44
Vehicle Reminder Messages 5-45
Vehicle Speed Messages 5-46
Washer Fluid Messages 5-46

Vehicle Personalization
Vehicle Personalization 5-47

Universal Remote System
Universal Remote System . . . 5-54
Universal Remote System Programming 5-54
Universal Remote System Operation 5-56

Controls

Steering Wheel Adjustment

To adjust the steering wheel:

1. Hold the steering wheel and pull the lever.
2. Move the steering wheel up or down.
3. Release the lever to lock the wheel in place.

Tilt and Telescoping Steering Wheel

To adjust the tilt and telescoping steering wheel, if equipped:

1. Push the lever (1) down to move the steering wheel forward or rearward. Lift the lever up to lock the wheel in place.

   The ignition may need to be set to the ACC/ACCESSORY or ON/RUN position to disengage the tilt and telescoping steering column and allow easier adjustment.

2. Pull the lever (2) toward you to move the steering wheel up or down, then release the lever to lock the wheel in place.

Do not adjust the steering wheel while driving.

Steering Wheel Controls

If equipped, some audio controls can be adjusted at the steering wheel.

(Talk): For vehicles with OnStar® or a Bluetooth® system, press to interact with those systems. See *OnStar Overview on page 14-1*, *Bluetooth (Overview) on page 7-31* or *Bluetooth (Infotainment Controls - Base Connected Radio) on page 7-42* or *Bluetooth (Voice Recognition - Base Connected Radio) on page 7-46* or *Bluetooth (Infotainment Controls - Base Radio) on page 7-32* or *Bluetooth (Voice Recognition - Base Radio) on page 7-37*, or "Bluetooth (Overview)" in the infotainment manual.

(Phone/Mute): Press to reject an incoming call or end a current call. Press to mute or unmute the infotainment system when not on a call.

◁ or ▷ (Previous/Next Menu): Press to go to the previous or next menu option.

△ or ▽ (Next/Previous Selection): Press to go to the next or previous selection.

✓ (Select): Press to select a highlighted menu option.

The favorite and volume switches are on the back of the steering wheel.

1. Favorite: When on a radio source, press to select the next or previous favorite. When on a media source, press to select the next or previous track.
2. Volume: Press to increase or decrease the volume.

Heated Steering Wheel

(Heated Steering Wheel, If Equipped): Press to turn it on or off. A light next to the button displays when the feature is turned on.

The steering wheel takes about three minutes to start heating.

Horn

To sound the horn, press on the steering wheel.

Windshield Wiper/Washer

The windshield wiper control is on the turn signal lever.

The windshield wipers are controlled by turning the band with on it.

(High Speed): Fast wipes.

(Low Speed): Slow wipes.

INT (Adjustable Interval Wipes): Turn the band up for more frequent wipes or down for less frequent wipes.

OFF: Turns the windshield wipers off.

(Mist): For a single wipe, turn to , then release. For several wipes, hold the band on longer.

Clear ice and snow from the wiper blades before using them. If frozen to the windshield, carefully loosen or thaw them. Damaged wiper blades should be replaced. See *Wiper Blade Replacement on page 10-38*.

Heavy snow or ice can overload the wiper motor. An internal circuit breaker to the motor will stop the motor until it cools down.

Wiper Parking

If the ignition is put in OFF while the wipers are on , , or INT, they will immediately stop.

If the windshield wiper lever is then moved to OFF before the driver door is opened or within 10 minutes, the wipers will restart and move to the base of the windshield.

If the ignition is put in OFF while the wipers are performing wipes due to windshield washing, the wipers continue to run until they reach the base of the windshield.

Windshield Washer

⚠ Warning

In freezing weather, do not use the washer until the windshield is warmed. Otherwise the washer fluid can form ice on the windshield, blocking your vision.

(Washer Fluid): Push the paddle marked with the windshield washer symbol at the top of the turn signal lever, to spray washer fluid and activate the wipers. The wipers will continue until the paddle is released or the maximum wash time is reached. When the paddle is released, additional wipes may occur depending on how long the windshield washer had been activated. See *Washer Fluid on page 10-29* for information on filling the windshield washer fluid reservoir.

Compass

The vehicle may have a compass display on the Driver Information Center (DIC). The compass receives its heading and other information from the Global Positioning System (GPS) antenna, StabiliTrak®, and vehicle speed information.

The compass system is designed to operate for a certain number of miles or degrees of turn before needing a signal from the GPS satellites. When the compass display shows CAL, drive the vehicle for a short distance in an open area where it can receive a GPS signal. The compass system will automatically determine when a GPS signal is restored and provide a heading again. See *Compass Messages on page 5-37* for the messages that may be displayed for the compass.

Clock

Setting the Time and Date with Faceplate Controls

To set the time or date:

1. Select SETTINGS from the Home Page, then select Time and Date.
2. Select the desired function.
3. Turn the MENU knob to increase or decrease the value.
4. Press the MENU knob to go to the next value. After the last value is selected, the system will update and return to the Settings menu. Press ◁ BACK to go to the last menu and save the changes.

Auto Set requires an OnStar subscription.

If auto timing is set, the time displayed on the clock may not update immediately when driving into a new time zone.

To set the clock display:

1. Select SETTINGS from the Home Page, then select Time and Date.
2. Select Clock Display.
3. Turn the MENU knob to Off or On.
4. Press the MENU knob to select.

Press ◁ BACK to go to the last menu and save the changes.

Setting the Time and Date with Touchscreen Controls

To set the time:

1. Press the SETTINGS screen button from the Home Page, then press Time and Date.
2. Press Set Time and press ∧ or ∨ to increase or decrease hours, minutes, and AM or PM. Press 12–24 Hr for 12 or 24 hour clock.
3. Press the ⬅ screen button to go back to the previous menu.

Auto Set requires an OnStar subscription.

If auto timing is set, the time displayed on the clock may not update immediately when driving into a new time zone.

To set the date:

1. Press the SETTINGS screen button from the Home Page, then press Time and Date.
2. Press Set Date and press ∧ or ∨ to increase or decrease month, day, or year.
3. Press the ⬅ screen button to go back to the previous menu.

To set the clock display:

1. Press the SETTINGS screen button and press Time and Date.
2. Press Clock Display and press OFF or ON to turn the clock display off or on.
3. Press the ⬅ screen button to go back to the previous menu.

Power Outlets

Accessory power outlets can be used to plug in electrical equipment, such as a cell phone, MP3 player, etc.

The vehicle may have up to four accessory power outlets.

Vehicles with a Center Console

- One or two in front of the cupholders on the center console.
- One inside the center console.
- One on the rear of the center console.

Vehicles with Bench Seats

- One on the center stack below the climate control system.
- One or two in the storage area on the bench seat.

Lift the cover to access and replace when not in use.

The power outlets on the center stack and in front of the cupholders are powered at all times. The power outlets inside the storage area and on the rear of the console are powered when the ignition is in ON/RUN or ACC/ACCESSORY, or when RAP is active.

⚠ Warning

Power is always supplied to the outlets. Do not leave electrical equipment plugged in when the vehicle is not in use because the vehicle could catch fire and cause injury or death.

⚠ Caution

Leaving electrical equipment plugged in for an extended period of time while the vehicle is off will drain the battery. Always unplug electrical equipment when not in

(Continued)

Caution (Continued)

use and do not plug in equipment that exceeds the maximum 15 amp rating.

Certain power accessory plugs may not be compatible with the accessory power outlet and could overload vehicle or adapter fuses. If a problem is experienced, see your dealer.

When adding electrical equipment, be sure to follow the proper installation instructions included with the equipment. See *Add-On Electrical Equipment on page 9-100*.

⚠ Caution

Hanging heavy equipment from the power outlet can cause damage not covered by the vehicle warranty. The power

(Continued)

Caution (Continued)

outlets are designed for accessory power plugs only, such as cell phone charge cords.

Power Outlet 110 Volt Alternating Current

Base Shown, Uplevel Similar

If equipped with this power outlet, it can be used to plug in electrical equipment that uses a maximum limit of 150 watts.

For vehicles with a center console, the 110 volt power outlet is in front of the cupholders in the center console.

For vehicles with bench seats, the 110 volt power outlet is on the center stack.

An indicator light on the outlet turns on to show it is in use. The light comes on when the ignition is in ON/RUN, equipment requiring less than 150 watts is plugged into the outlet, and no system fault is detected.

The indicator light does not come on when the ignition is in LOCK/OFF or if the equipment is not fully seated into the outlet.

If equipment is connected using more than 150 watts or a system fault is detected, a protection circuit shuts off the power supply and the indicator light turns off. To reset the circuit, unplug the item and plug it back in or turn the Retained Accessory Power (RAP) off and then back on. See *Retained Accessory Power (RAP) on page 9-28*.

The power outlet is not designed for the following, and may not work properly if they are plugged in:

- Equipment with high initial peak wattage, such as compressor-driven refrigerators and electric power tools.
- Other equipment requiring an extremely stable power supply, such as microcomputer-controlled electric blankets and touch sensor lamps.
- Medical equipment.

Warning Lights, Gauges, and Indicators

Warning lights and gauges can signal that something is wrong before it becomes serious enough to cause an expensive repair or replacement. Paying attention to the warning lights and gauges could prevent injury.

Warning lights come on when there could be a problem with a vehicle function. Some warning lights come on briefly when the engine is started to indicate they are working.

Gauges can indicate when there could be a problem with a vehicle function. Often gauges and warning lights work together to indicate a problem with the vehicle.

When one of the warning lights comes on and stays on while driving, or when one of the gauges shows there may be a problem, check the section that explains what to do. Waiting to do repairs can be costly and even dangerous.

Instrument Cluster

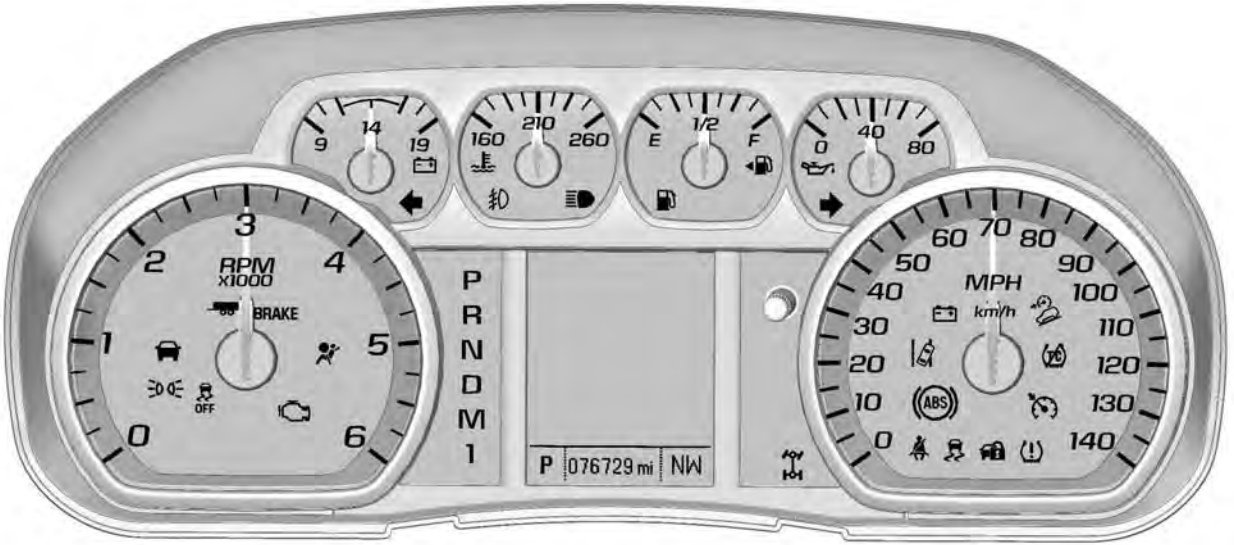

Base Cluster (English Shown, Metric Similar)

Uplevel Cluster (English Shown, Metric Similar)

Cluster Menu (Uplevel Cluster)

There is an interactive display area in the center of the instrument cluster.

Use the right steering wheel control to open and scroll through the different items and displays.

Press ◁ to access the cluster applications. Use △ or ▽ to scroll through the list of available applications. Not all applications will be available on all vehicles.

- Info App. This is where the selected Driver Information Center (DIC) displays can be viewed. See “Driver Information Center (DIC) (Uplevel)” in the Index.
- Audio
- Phone
- Navigation
- Settings

Audio

Press ✓ to select the Audio app, then press ▷ to enter the Audio menu. In the Audio menu browse for music, select from the favorites, or change the audio source. In the main view, use △ or ▽ to change the station or go to the next or previous track.

Phone

Press ✓ to select the Phone app, then press ▷ to enter the Phone menu. In the Phone menu, if there is no active phone call, view recent calls, scroll through contacts, select from the favorites, or change the phone source. If there is an active call, mute the phone or switch to handset operation.

Navigation

Press ✓ to select the Navigation app, then press ▷ to enter the Navigation menu. If there is no active route, you can resume the last route and turn the voice prompts on/off. If there is an active route, you can cancel the route.

Settings

Press ✓ to select the Settings app. Use △ or ▽ to scroll through items in the Settings menu.

Units: Press ▷ while Units is displayed to enter the Units menu. Choose English or metric units by pressing ✓ while the desired item is highlighted. A checkmark will be displayed next to the selected item.

Info Pages: Press ▷ while Info Pages is displayed to enter the Info Pages menu and select the items to be displayed in the Info app. See "Driver Information Center (DIC) (Uplevel)" in the Index.

Speed Warning: The Speed Warning display allows the driver to set a speed that they do not want to exceed. To set the Speed Warning, press ▷ when Speed Warning is displayed, or press ✓ on the main view to set the speed value. Press △ or ▽ to adjust the value. Press ✓ to set the speed. Once the speed is set, this feature can be turned off by pressing ✓ while viewing this page. If the selected speed limit is exceeded, a pop-up warning is displayed with a chime.

Software Information: Press ▷ while Software Information is highlighted to display open source software information.

Speedometer

The speedometer shows the vehicle's speed in either kilometers per hour (km/h) or miles per hour (mph).

Odometer

The odometer shows how far the vehicle has been driven, in either kilometers or miles.

Trip Odometer

The trip odometer shows how far the vehicle has been driven since the trip odometer was last reset.

The trip odometer is accessed and reset through the Driver Information Center (DIC). See *Driver Information Center (DIC) (Base Level) on page 5-30* or *Driver Information Center (DIC) (Uplevel) on page 5-32*.

Tachometer

The tachometer displays the engine speed in revolutions per minute (rpm).

⚠ Caution

If the engine is operated with the rpm's in the warning area at the high end of the tachometer, the vehicle could be damaged, and the damage would not be covered

(Continued)

Caution (Continued)

by the vehicle warranty. Do not operate the engine with the rpm's in the warning area.

Fuel Gauge

Metric

English

When the ignition is on, the fuel gauge indicates about how much fuel is left in the tank.

There is an arrow near the fuel gauge pointing to the side of the vehicle the fuel door is on.

When the indicator nears empty, the low fuel light comes on. There still is a little fuel left, but the vehicle should be refueled soon.

Here are four things that some owners ask about. None of these show a problem with the fuel gauge:

- At the service station, the fuel pump shuts off before the gauge reads full.
- It takes a little more or less fuel to fill up than the gauge indicated. For example, the gauge may have indicated the tank was half full, but it actually took a little more or less than half the tank's capacity to fill the tank.
- The gauge moves a little while turning a corner or speeding up.
- The gauge takes a few seconds to stabilize after the ignition is turned on, and goes back to empty when the ignition is turned off.

Engine Oil Pressure Gauge

Metric

English

The engine oil pressure gauge shows the engine oil pressure in kPa (kilopascals) or psi (pounds per square inch) when the engine is running.

Oil pressure can vary with engine speed, outside temperature and oil viscosity.

A reading outside the normal operating range can be caused by a dangerously low oil level or some other problem causing low oil pressure. Check the vehicle's oil as soon as possible. See “OIL PRESSURE LOW STOP ENGINE” under *Engine Oil Messages on page 5-38* and *Engine Oil on page 10-11*.

⚠ Caution

Lack of proper engine oil maintenance can damage the engine. Driving with the engine oil low can also damage the engine. The repairs would not be covered by the vehicle warranty. Check the oil level as soon as possible. Add oil if required, but if the oil level is within the operating range and the oil pressure is still low, have the vehicle serviced. Always follow the maintenance schedule for changing engine oil.

If the vehicle has a diesel engine, see the Duramax diesel supplement.

Engine Coolant Temperature Gauge

Metric

English

This gauge measures the temperature of the vehicle's engine coolant.

While driving under normal operating conditions, if the needle moves into the red warning area, the engine is too hot. Pull off the road, stop the vehicle, and turn off the engine as soon as possible.

Voltmeter Gauge

When the ignition is on, this gauge indicates the battery voltage.

When the engine is running, this gauge shows the condition of the charging system. The gauge can transition from a higher to lower or a lower to higher reading. This is normal. If the vehicle is operating outside the normal operating range, the charging system light comes on. See *Charging System Light on page 5-21* for more information.

The voltmeter gauge may also read lower when in fuel economy mode. This is normal.

Readings outside the normal operating range can also occur when a large number of electrical accessories are operating in the vehicle and the engine is left idling for an extended period. This condition is normal since the charging system is not able to provide full power at engine idle. As engine speeds are increased, this condition should correct itself as higher engine speeds allow the charging system to create maximum power.

The vehicle can only be driven for a short time with the readings outside the normal operating range. If the vehicle must be driven, turn off all accessories, such as the radio and air conditioner.

Readings outside the normal operating range indicate a possible problem in the electrical system. Have the vehicle serviced as soon as possible.

Safety Belt Reminders

Driver Safety Belt Reminder Light

There is a driver safety belt reminder light on the instrument cluster.

When the vehicle is started, this light flashes and a chime may come on to remind the driver to fasten their safety belt. Then the light stays on solid until the belt is buckled. This cycle may continue several times if the driver remains or becomes unbuckled while the vehicle is moving.

If the driver safety belt is buckled, neither the light nor the chime comes on.

Passenger Safety Belt Reminder Light

There may be a passenger safety belt reminder light near the passenger airbag status indicator. See *Passenger Sensing System on page 3-29*.

For vehicles equipped with the passenger safety belt reminder light, when the vehicle is started this light flashes and a chime may come on to remind passengers to fasten their safety belt. Then the light stays on solid until the belt is buckled. This

cycle continues several times if the passenger remains or becomes unbuckled while the vehicle is moving.

If the passenger safety belt is buckled, neither the chime nor the light comes on.

The front passenger safety belt reminder light and chime may turn on if an object is put on the seat such as a briefcase, handbag, grocery bag, laptop, or other electronic device. To turn off the reminder light and/or chime, remove the object from the seat or buckle the safety belt.

Airbag Readiness Light

This light shows if there is an electrical problem with the airbag system. The system check includes the airbag sensor(s), passenger sensing system (if equipped), the pretensioners, the airbag modules, the wiring, and the crash sensing and diagnostic module. For more information on the airbag system, see *Airbag System on page 3-20*.

The airbag readiness light comes on for several seconds when the vehicle is started. If the light does not come on then, have it fixed immediately.

⚠ Warning

If the airbag readiness light stays on after the vehicle is started or comes on while driving, it means the airbag system might not be working properly. The airbags in the vehicle might not inflate in a crash, or they could even inflate

(Continued)

Warning (Continued)

without a crash. To help avoid injury, have the vehicle serviced right away.

If there is a problem with the airbag system, a Driver Information Center (DIC) message may also come on. See *Airbag System Messages on page 5-42*.

Airbag On-Off Light

If the vehicle has an airbag on-off switch, it also has a passenger airbag status indicator located in the overhead console.

United States

Canada and Mexico

When the vehicle is started, the passenger airbag status indicator will light ON and OFF, or the symbol for on and off, will light for several seconds as a system check. Then, after several more seconds, the status indicator ON or OFF, or either the on or off symbol, will light to let you know the status of the front outboard passenger frontal airbag.

When the front outboard passenger frontal airbag is manually turned off using the airbag on-off switch on the instrument panel endcap, the OFF indicator light or the off symbol will come on and stay on as a reminder that the airbag has been turned off. This light will go off when the airbag has been turned on. See *Airbag On-Off Switch on page 3-27* for more information, including important safety information.

⚠ Warning

If the front outboard passenger frontal airbag is turned off for a person who is not in a risk group identified by the national government, that person will not

(Continued)

Warning (Continued)

have the extra protection of an airbag. In a crash, the airbag will not be able to inflate and help protect the person sitting there. Do not turn off the front outboard passenger frontal airbag unless the person sitting there is in a risk group identified by the national government. See *Airbag On-Off Switch on page 3-27* for more information, including important safety information.

⚠ Warning

If the airbag readiness light ever comes on and stays on, it means that something may be wrong with the airbag system. For example, the front outboard

(Continued)

Warning (Continued)

passenger frontal airbag could inflate even though the airbag on-off switch is turned off.

To help avoid injury to yourself or others, have the vehicle serviced right away. See *Airbag Readiness Light on page 5-18* for more information, including important safety information.

If the word ON or the on symbol is lit, it means that the front outboard passenger frontal airbag is enabled (may inflate). See *Airbag On-Off Switch on page 3-27* for more information, including important safety information.

If, after several seconds, both status indicator lights remain on, or if there are no lights at all, there may be a problem with the lights or the airbag on-off switch. See your dealer for service.

Passenger Airbag Status Indicator

If the vehicle has one of the following indicators, then the vehicle has a passenger sensing system for the front outboard passenger position unless there is an airbag on-off switch on the instrument panel endcap. If there is an airbag on-off switch, the vehicle does not have a passenger sensing system. See *Airbag On-Off Switch on page 3-27*.

The passenger airbag status indicator is on the overhead console. See *Passenger Sensing System on page 3-29* for important safety information.

United States

Canada and Mexico

When the vehicle is started, the passenger airbag status indicator will light ON and OFF, or the symbol for on and off, for several seconds as a system check. Then, after several more seconds, the status indicator will light either ON or OFF, or either the on or off symbol to let you know the status of the front outboard passenger frontal airbag.

If the word ON or the on symbol is lit on the passenger airbag status indicator, it means that the front outboard passenger frontal airbag is enabled (may inflate).

If the word OFF or the off symbol is lit on the airbag status indicator, it means that the passenger sensing system has turned off the front outboard passenger frontal airbag.

If, after several seconds, both status indicator lights remain on, or if there are no lights at all, there may be a problem with the lights or the passenger sensing system. See your dealer for service.

⚠ Warning

If the airbag readiness light ever comes on and stays on, it means that something may be wrong with the airbag system. To help avoid injury to yourself or others, have the vehicle serviced right away. See *Airbag Readiness*

(Continued)

Warning (Continued)

Light on page 5-18 for more information, including important safety information.

Charging System Light

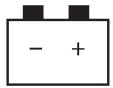

The charging system light comes on briefly when the ignition is turned on, but the engine is not running, as a check to show the light is working. It should go out when the engine is started.

If the light stays on, or comes on while driving, there may be a problem with the electrical charging system. Have it checked by your dealer. Driving while this light is on could drain the battery.

When this light comes on, or is flashing, the Driver Information Center (DIC) also displays a message.

See *Battery Voltage and Charging Messages on page 5-36*.

If a short distance must be driven with the light on, be sure to turn off all accessories, such as the radio and air conditioner.

Malfunction Indicator Lamp

A computer system called OBD II (On-Board Diagnostics-Second Generation) monitors the operation of the vehicle to ensure emissions are at acceptable levels, helping to maintain a clean environment. The malfunction indicator lamp comes on when the vehicle is placed in ON/RUN, as a check to show it is working. If it does not, have the vehicle serviced by your dealer. See *Ignition Positions on page 9-24*.

If the malfunction indicator lamp comes on while the engine is running, this indicates that the OBD II system has detected a problem and diagnosis and service might be required.

Malfunctions often are indicated by the system before any problem is apparent. Being aware of the light can prevent more serious damage to the vehicle. This system also assists the service technician in correctly diagnosing any malfunction.

⚠ Caution

If the vehicle is continually driven with this light on, the emission controls might not work as well,

(Continued)

Caution (Continued)

the vehicle fuel economy might not be as good, and the engine might not run as smoothly. This could lead to costly repairs that might not be covered by the vehicle warranty.

⚠ Caution

Modifications made to the engine, transmission, exhaust, intake, or fuel system of the vehicle or the replacement of the original tires with other than those of the same Tire Performance Criteria (TPC) can affect the vehicle's emission controls and can cause this light to come on. Modifications to these systems could lead to costly repairs not covered by the vehicle warranty. This could also result in a failure

(Continued)

Caution (Continued)

to pass a required Emission Inspection/Maintenance test. See *Accessories and Modifications on page 10-3*.

This light comes on during a malfunction in one of two ways:

Light Flashing: A misfire condition has been detected. A misfire increases vehicle emissions and could damage the emission control system on the vehicle. Diagnosis and service might be required.

To prevent more serious damage to the vehicle:

- Reduce vehicle speed.
- Avoid hard accelerations.
- Avoid steep uphill grades.
- If towing a trailer, reduce the amount of cargo being hauled as soon as it is possible.

If the light continues to flash, find a safe place to stop and park the vehicle. Turn the vehicle off, wait at least 10 seconds, and restart the engine. If the light is still flashing, follow the previous steps and see your dealer for service as soon as possible.

Light On Steady: An emission control system malfunction has been detected on the vehicle. Diagnosis and service might be required.

The following may correct an emission control system malfunction:

- Check that the fuel cap is fully installed. See *Filling the Tank on page 9-70*. The diagnostic system can determine if the fuel cap has been left off or improperly installed. A loose or missing fuel cap allows fuel to evaporate into the atmosphere. A few driving trips with the cap properly installed should turn the light off.
- Check that good quality fuel is used. Poor fuel quality causes the engine not to run as efficiently as designed and may cause stalling after start-up, stalling when the vehicle is changed into gear, misfiring, hesitation on acceleration, or stumbling on acceleration. These conditions might go away once the engine is warmed up.

If one or more of these conditions occurs, change the fuel brand used. It may require at least one full tank of the proper fuel to turn the light off.

See *Fuel on page 9-67*.

If none of the above have made the light turn off, your dealer can check the vehicle. The dealer has the proper test equipment and diagnostic tools to fix any mechanical or electrical problems that might have developed.

Emissions Inspection and Maintenance Programs

Depending on where you live, your vehicle may be required to participate in an emission control system inspection and maintenance program. For the inspection, the emission system test equipment will likely connect to the vehicle's Data Link Connector (DLC).

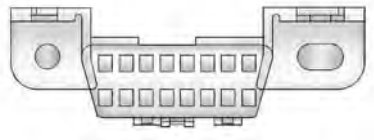

The DLC is under the instrument panel to the left of the steering wheel. See your dealer if assistance is needed.

The vehicle may not pass inspection if:

- The malfunction indicator lamp is on with the engine running, or if the light does not come on when

the ignition is turned to ON/RUN while the engine is off. See your dealer for assistance in verifying proper operation of the malfunction indicator lamp.

- The OBD II (On-Board Diagnostics) system determines that critical emission control systems have not been completely diagnosed. The vehicle would be considered not ready for inspection. This can happen if the 12-volt battery has recently been replaced or run down. The diagnostic system is designed to evaluate critical emission control systems during normal driving. This can take several days of routine driving. If this has been done and the vehicle still does not pass the inspection for lack of OBD II system readiness, your dealer can prepare the vehicle for inspection.

Brake System Warning Light

The vehicle brake system consists of two hydraulic circuits. If one circuit is not working, the remaining circuit can still work to stop the vehicle. For normal braking performance, both circuits need to be working.

If the warning light comes on, there is a brake problem. Have the brake system inspected right away.

Metric

BRAKE

English

This light should come on briefly when the engine is started. If it does not come on then, have it fixed so it will be ready to warn if there is a problem.

When the ignition is on, the brake system warning light also comes on when the parking brake is set. The light stays on if the parking brake does not fully release. If it stays on after the parking brake is fully released, it means the vehicle has a brake problem.

If the light comes on while driving, pull off the road and stop carefully. The pedal might be harder to push, or the pedal can go closer to the floor. It may take longer to stop. If the light is still on, have the vehicle towed for service. See *Towing the Vehicle on page 10-95*.

⚠ Warning

The brake system might not be working properly if the brake system warning light is on. Driving with the brake system warning light on can lead to a crash. If the light is still on after the vehicle has been pulled off

(Continued)

Warning (Continued)

the road and carefully stopped, have the vehicle towed for service.

Antilock Brake System (ABS) Warning Light

This light comes on briefly when the engine is started.

If the light does not come on, have it fixed so it will be ready to warn if there is a problem.

If the light comes on while driving, stop as soon as it is safely possible and turn off the vehicle. Then start the engine again to reset the system. If the ABS light stays on, or comes on again while driving, the vehicle needs service. A chime may also sound when the light comes on steady.

If the ABS light is the only light on, the vehicle has regular brakes, but the antilock brakes are not functioning.

If both the ABS and the brake system warning light are on, the vehicle's antilock brakes are not functioning and there is a problem with the regular brakes. See your dealer for service.

See *Brake System Warning Light on page 5-24* and *Brake System Messages on page 5-36*.

Four-Wheel-Drive Light

The four-wheel-drive light comes on when a vehicle with a manual transfer case is shifted into four-wheel drive and the front axle engages.

Some delay between the shifting and the light coming on is normal.

See *Four-Wheel Drive on page 9-42* for more information.

Tow/Haul Mode Light

For vehicles with the Tow/Haul Mode feature, this light comes on when the Tow/Haul Mode has been activated.

See *Tow/Haul Mode on page 9-39*.

Hill Descent Control Light

If equipped, the Hill Descent Control light comes on when the system is ready for use. When the light flashes, the system is active.

See *Hill Descent Control (HDC) on page 9-56*.

Lane Departure Warning (LDW) Light

If equipped, this light comes on briefly while starting the vehicle.

If it does not come on, have the vehicle serviced.

This light is green if LDW is on and ready to operate.

This light changes to amber and flashes to indicate that the lane marking has been crossed without using a turn signal in that direction.

See *Lane Departure Warning (LDW) on page 9-66*.

Vehicle Ahead Indicator

If equipped, this indicator will display green when a vehicle is detected ahead and amber when you are following a vehicle ahead much too closely.

See *Forward Collision Alert (FCA) System on page 9-63*.

Traction Off Light

This light comes on briefly while starting the engine. If it does not, have the vehicle serviced by your dealer. If the system is working normally, the indicator light then turns off.

The traction off light comes on when the Traction Control System (TCS) has been turned off by pressing and releasing the TCS/StabiliTrak button.

This light and the StabiliTrak OFF light come on when StabiliTrak is turned off.

If the TCS is off, wheel spin is not limited. Adjust driving accordingly.

See *Traction Control/Electronic Stability Control on page 9-54*.

StabiliTrak® OFF Light

This light comes on briefly while starting the engine. If it does not, have the vehicle serviced by your dealer.

This light comes on when the StabiliTrak system is turned off. If StabiliTrak is off, the Traction Control System (TCS) is also off.

If the StabiliTrak and TCS are off, the system does not assist in controlling the vehicle. Turn on the TCS and the StabiliTrak systems and the warning light turns off.

See *Traction Control/Electronic Stability Control on page 9-54*.

Traction Control System (TCS)/StabiliTrak® Light

This light comes on briefly when the engine is started.

If the light does not come on, have the vehicle serviced by your dealer. If the system is working normally, the indicator light turns off.

If the light is on and not flashing, the TCS and potentially the StabiliTrak system have been disabled. A DIC message may display. Check the DIC messages to determine which feature(s) is no longer functioning and whether the vehicle requires service.

If the indicator/warning light is on and flashing, the TCS and/or the StabiliTrak system is actively working.

See *Traction Control/Electronic Stability Control on page 9-54*.

Tire Pressure Light

For vehicles with the Tire Pressure Monitor System (TPMS), this light comes on briefly when the engine is started. It provides information about tire pressures and the TPMS.

When the Light Is On Steady

This indicates that one or more of the tires are significantly underinflated.

A Driver Information Center (DIC) tire pressure message may also display. See *Tire Messages on page 5-43*. Stop as soon as possible, and inflate the tires to the pressure value shown on the Tire and Loading Information label. See *Tire Pressure on page 10-62*.

When the Light Flashes First and Then Is On Steady

If the light flashes for about a minute and then stays on, there may be a problem with the TPMS. If the problem is not corrected, the light will come on at every ignition cycle. See *Tire Pressure Monitor Operation on page 10-65*.

Low Fuel Warning Light

This light is near the fuel gauge and comes on briefly when the ignition is turned on as a check to show it is working.

It also comes on when the fuel tank is low on fuel. The light turns off when fuel is added. If it does not, have the vehicle serviced.

Security Light

The security light should come on briefly as the engine is started. If it does not come on, have the vehicle serviced by your dealer. If the system is working normally, the indicator light turns off.

If the light stays on and the engine does not start, there could be a problem with the theft-deterrent system. See *Immobilizer Operation on page 2-13*.

High-Beam On Light

This light comes on when the high-beam headlamps are in use.

See *Headlamp High/Low-Beam Changer on page 6-2*.

Front Fog Lamp Light

For vehicles with fog lamps, this light comes on when the fog lamps are on.

The light goes out when the fog lamps are turned off. See *Fog Lamps on page 6-5* for more information.

Lamps On Reminder

This light comes on when the exterior lamps are in use. See *Exterior Lamp Controls on page 6-1*.

Cruise Control Light

For vehicles with cruise control, the cruise control light is white when the cruise control is on and ready, and turns green when the cruise control is set and active.

The light turns off when the cruise control is turned off. See *Cruise Control on page 9-57*.

Information Displays

Driver Information Center (DIC) (Base Level)

The DIC displays are shown in the center of the instrument cluster. The displays show the status of many vehicle systems. The trip odometer reset stem in the instrument cluster is used to access the DIC menu items.

DIC Menu Items

Turn the trip odometer reset stem to scroll through the following menu items:

- Digital Speedometer
- Trip
- Fuel Range
- Average Fuel Economy
- Tire Pressure
- Remaining Oil Life
- Transmission Fluid Temperature
- Trailer Brake
- Hourmeter
- Unit

Digital Speedometer

The speedometer shows how fast the vehicle is moving in either kilometers per hour (km/h) or miles per hour (mph). The speedometer cannot be reset.

Trip

Turn the trip odometer reset stem until TRIP displays. The current distance traveled, in either kilometers (km) or miles (mi), since the last reset for the trip odometer is shown. The trip odometer can be reset to zero by pressing and holding the trip odometer reset stem while the trip odometer is displayed.

Fuel Range

This display shows the approximate distance the vehicle can be driven without refueling. The fuel range estimate is based on an average of the vehicle's fuel economy over

recent driving history and the amount of fuel remaining in the fuel tank. Fuel range cannot be reset.

Average Fuel Economy

The Average Fuel Economy display shows the approximate average liters per 100 kilometers (L/100 km) or miles per gallon (mpg). This number reflects only the approximate average fuel economy that the vehicle has right now, and will change as driving conditions change. This number is based on the number of L/100 km (mpg) recorded since the last time this menu item was reset. Reset this display by pressing the trip odometer reset stem.

Tire Pressure

Turn the trip odometer reset stem until a vehicle with the approximate pressures of all four tires displays. Tire pressure is displayed in either kilopascal (kPa) or in pounds per square inch (psi).

See *Tire Pressure Monitor System on page 10-64* and *Tire Pressure Monitor Operation on page 10-65*.

Remaining Oil Life

Turn the trip odometer reset stem until REMAINING OIL LIFE displays. An estimate of the oil's remaining useful life is shown. REMAINING OIL LIFE 99% means 99% of the current oil life remains.

When the remaining oil life is low, the CHANGE ENGINE OIL SOON message will appear on the display. See *Engine Oil Messages on page 5-38*. The oil should be changed as soon as possible. See *Engine Oil on page 10-11*. In addition to the engine oil life system monitoring the oil life, additional maintenance is recommended in the Maintenance Schedule. See *Maintenance Schedule on page 11-3*.

The Oil Life display must be reset after each oil change. It will not reset itself. Do not reset the Oil Life display at any time other than when the oil has just been changed. It cannot be reset accurately until the next oil change. To reset the engine oil life system, see *Engine Oil Life System on page 10-14*.

Transmission Fluid Temperature

The temperature of the automatic transmission fluid displays in either degrees Celsius (°C) or degrees Fahrenheit (°F).

Trailer Brake

On vehicles with the Integrated Trailer Brake Control (ITBC) system, turn the trip odometer reset stem until TRAILER GAIN and TRAILER OUTPUT displays.

TRAILER GAIN shows the Trailer Gain setting. This setting can be adjusted from 0.0 to 10.0 with either a trailer connected or disconnected.

TRAILER OUTPUT shows the power output to the trailer anytime a trailer with electric brakes is connected. Output is displayed as a bar graph. Dashes may appear in the TRAILER OUTPUT display if a trailer is not connected.

Hourmeter

This display shows the total number of hours the engine has run.

Unit

This will change the displays on the instrument cluster and DIC to either metric or English (US) measurements. To change the units, press the trip odometer reset stem when UNITS is displayed to enter the Unit menu. Turn the trip odometer reset stem to switch between English and metric. Press the trip odometer reset stem when the desired setting is displayed.

Compass

The vehicle may have a compass in the Driver Information Center (DIC). See *Compass on page 5-5*.

Driver Information Center (DIC) (Uplevel)

The DIC displays are shown in the center of the instrument cluster in the Info app. See *Instrument Cluster on page 5-10*. The displays show the status of many vehicle systems. The controls for the DIC are on the right steering wheel control.

△ **or** ▽ **:** Press to move up or down in a list. In the main view, you can press up and down to move between different info app pages.

◁ **or** ▷ **:** Press to move between the interactive display zones in the cluster.

✓ **(Set/Reset):** Press to open a menu or select a menu item. Press and hold to reset values on certain screens.

DIC Info Page Options

The info pages on the DIC can be turned on or off through the Settings menu.

1. Press ◁ to access the cluster applications.
2. Press △ or ▽ to scroll to the Settings application.
3. Press ✓ to enter the Settings menu.
4. Scroll to Info Pages and press ▷.
5. Press △ or ▽ to move through the list of possible information displays.
6. Press ✓ while an item is highlighted to select or deselect that item. When an item is selected, a checkmark will appear next to it.

DIC Info Pages

The following is the list of all possible DIC info page displays. Some may not be available for your particular vehicle. Some items may not be turned on by default but can be turned on through the Settings app. See “DIC Info Page Options” earlier in this section.

Speed: Shows the vehicle speed in either kilometers per hour (km/h) or miles per hour (mph).

Trip A or Trip B: Shows the current distance traveled, in either kilometers (km) or miles (mi), since the trip odometer was last reset.

This also shows the approximate average liters per 100 kilometers (L/100 km) or miles per gallon (mpg). This number is calculated based on the number of L/100 km (mpg) recorded since the last time this menu item was reset. This number reflects only the approximate average fuel economy that the vehicle has right now, and will change as driving conditions change.

Press and hold ✓ while this display is active to reset the trip odometer and the average fuel economy. Trip A and Trip B can also be reset by pressing ▷ and choosing reset.

Fuel Range: Shows the approximate distance the vehicle can be driven without refueling. LOW will be displayed when the vehicle is low on fuel. The fuel range estimate is based on an average of the vehicle's fuel economy over recent driving history and the amount of fuel remaining in the fuel tank.

Oil Life: Shows an estimate of the oil's remaining useful life.
If REMAINING OIL LIFE 99% is displayed, that means 99% of the current oil life remains.

When the remaining oil life is low, the CHANGE ENGINE OIL SOON message will appear on the display. See *Engine Oil Messages on page 5-38*. The oil should be changed as soon as possible. See *Engine Oil on page 10-11*. In addition to the engine oil life system monitoring the oil life, additional maintenance is recommended in the Maintenance Schedule. See *Maintenance Schedule on page 11-3*.

The Oil Life display must be reset after each oil change. It will not reset itself. Do not to reset the Oil Life display at any time other than when the oil has just been changed. It cannot be reset accurately until the next oil change. To reset the engine oil life system, press and hold ✓ for several seconds while the Oil Life display is active. See *Engine Oil Life System on page 10-14*.

Tire Pressure: Shows the approximate pressures of all four tires. Tire pressure is displayed in either kilopascal (kPa) or in pounds per square inch (psi). If the pressure is low, the value for that tire is shown in amber. See *Tire Pressure Monitor System on page 10-64* and *Tire Pressure Monitor Operation on page 10-65*.

Fuel Economy: The center displays the approximate instantaneous fuel economy as a number and bar graph. Displayed above the bar graph is a running average of fuel economy for the most recently traveled selected distance. Displayed below the bar graph is the best average fuel economy that has been achieved for the selected distance. The selected distance is displayed at the top of the page as “last xxx mi/km.” Next to the odometer, the Active Fuel Management displays the number of cylinders the vehicle is running on. See *Active Fuel Management® on page 9-33*.

Press ▷ to select the distance or reset best value. Use △ and ▽ to choose the distance and press ✓. Press △ and ▽ to select “Reset Best Score.” Press ✓ to reset the best average fuel economy. After reset, the best value displays “-,-” until the selected distance has been traveled.

The display provides information on how current driving behavior affects the running average and how well recent driving compares to the best that has been achieved for the selected distance.

Timer: This display can be used as a timer. To start the timer, press ✓ while this display is active. The display will show the amount of time that has passed since the timer was last reset. To stop the timer, press ✓ briefly while this display is active and the timer is running.

To reset the timer to zero, press and hold ✓ while this display is active, or press ▷ and select reset.

Speed Limit (If Equipped): Shows sign information, which comes from a roadway database in the onboard navigation.

Engine Hours: Shows the total number of hours the engine has run.

Transmission Fluid Temperature: Shows the temperature of the automatic transmission fluid in either degrees Celsius (°C) or degrees Fahrenheit (°F).

Trailer Brake (If Equipped): On vehicles with the Integrated Trailer Brake Control (ITBC) system, the trailer brake display appears in the DIC.

TRAILER GAIN shows the trailer gain setting. This setting can be adjusted from 0.0 to 10.0 with either a trailer connected or disconnected.

OUTPUT shows the power output to the trailer anytime a trailer with electric brakes is connected. Output is displayed as a bar graph. Dashes may appear in the OUTPUT display if a trailer is not connected.

Off Road: Displays vehicle pitch and roll information, road wheel angle, and four-wheel drive (4WD) status.

Blank Page: Shows no information.

Vehicle Messages

Messages displayed on the DIC indicate the status of the vehicle or some action that may be needed to correct a condition. Multiple messages may appear one after another.

The messages that do not require immediate action can be acknowledged and cleared by pressing ✓ or the trip odometer reset stem on the base cluster.

The messages that require immediate action cannot be cleared until that action is performed.

All messages should be taken seriously and clearing the message does not correct the problem.

The following are the possible messages and some information about them.

If the vehicle has a diesel engine, see the Duramax diesel supplement.

Battery Voltage and Charging Messages

BATTERY LOW START VEHICLE

When the vehicle's battery is severely discharged, this message will display and four chimes will sound. Start the vehicle immediately. If the vehicle is not started and the battery continues to discharge, the climate controls, heated seats, and audio systems will shut off and the vehicle may require a jump start. These systems will function again after the vehicle is started.

BATTERY SAVER ACTIVE

This message displays when the battery voltage drops below expected levels and features are disabled. Turn off all unnecessary accessory features.

SERVICE BATTERY CHARGING SYSTEM

On some vehicles, this message displays if there is a problem with the battery charging system. Under certain conditions, the charging system light may also turn on in the instrument cluster. See *Charging System Light on page 5-21*. Driving with this problem could drain the battery. Turn off all unnecessary accessories. Have the electrical system checked as soon as possible. See your dealer.

TRANSPORT MODE ON

This message is displayed when the vehicle is in transport mode. Some features can be disabled while in this mode, including Remote Keyless Entry (RKE), remote start, and the vehicle alarm system. Take the vehicle to your dealer for service to turn transport mode off.

Brake System Messages

BRAKE FLUID LOW

This message is displayed when the brake fluid level is low. See *Brake Fluid on page 10-31*.

SERVICE BRAKE ASSIST

This message may be displayed when there is a problem with the brake boost assist system. When this message is displayed, the brake boost assist motor might be heard operating and you might notice pulsation in the brake pedal. This is normal under these conditions. Take the vehicle to your dealer for service.

SERVICE TRAILER BRAKE SYSTEM

On vehicles with the Integrated Trailer Brake Control (ITBC) system, this message displays and a chime may sound when there is a problem with the ITBC system.

When this message displays, power is no longer available to the trailer brakes.

As soon as it is safe to do so, carefully pull your vehicle over to the side of the road and turn the ignition off. Check the wiring connection to the trailer and turn the ignition back on. If this message still displays, either your vehicle or the trailer needs service. See your dealer.

See “Integrated Trailer Brake Control System” under *Towing Equipment on page 9-90* for more information.

Compass Messages

Dashes may be displayed if the vehicle temporarily loses communication with the Global Positioning System (GPS).

Door Ajar Messages

DOOR OPEN

This message displays and a chime may sound if a door is not fully closed. Stop and turn off the vehicle, check the door for obstructions, and close the door again. Check to see if the message still appears on the DIC.

HOOD OPEN

This message displays and a chime may sound if the hood is not fully closed. Stop and turn off the vehicle, check the hood for obstructions, and close the hood again. Check to see if the message still appears on the DIC.

Engine Cooling System Messages

A/C OFF DUE TO HIGH ENGINE TEMP

This message displays when the engine coolant becomes hotter than the normal operating temperature. See *Engine Coolant Temperature Gauge on page 5-16*. To avoid added strain on a hot engine, the air conditioning compressor automatically turns off. When the coolant temperature returns to normal, the air conditioning compressor turns back on. You can continue to drive your vehicle.

If this message continues to appear, have the system repaired by your dealer as soon as possible to avoid damage to the engine.

ENGINE OVERHEATING IDLE ENGINE

This message displays when the engine coolant temperature is too hot. Stop and allow the vehicle to idle until it cools down. See *Engine Coolant Temperature Gauge on page 5-16*.

When towing, use Tow/Haul mode to prevent damage to the engine or transmission. See *Tow/Haul Mode on page 9-39*.

ENGINE OVERHEATED STOP ENGINE

This message displays and a chime may sound if the engine cooling system reaches unsafe temperatures for operation. Stop and turn off the vehicle as soon as it is safe to do so to avoid severe damage. This message clears when the engine has cooled to a safe operating temperature.

Engine Oil Messages

CHANGE ENGINE OIL SOON

This message displays when the engine oil needs to be changed. When you change the engine oil, be sure to reset the CHANGE ENGINE OIL SOON message. See *Engine Oil Life System on page 10-14* for information on how to reset the message. See *Engine Oil on page 10-11* and *Maintenance Schedule on page 11-3*.

ENGINE OIL LOW ADD OIL

On some vehicles, this message displays when the engine oil level may be too low. Check the oil level before filling to the recommended level. If the oil is not low and this message remains on, take the vehicle to your dealer for service. See *Engine Oil on page 10-11*.

ENGINE OIL HOT IDLE ENGINE

This message displays when the engine oil becomes hotter than the normal operating temperature. Stop and allow the vehicle to idle until it cools down. See *Engine Coolant Temperature Gauge on page 5-16*.

OIL PRESSURE LOW STOP ENGINE

This message displays if low oil pressure levels occur. Stop the vehicle as soon as safely possible and do not operate it until the cause of the low oil pressure has been corrected. Check the oil as soon as possible and have the vehicle serviced by your dealer. See *Engine Oil on page 10-11*.

Engine Power Messages

ENGINE POWER IS REDUCED

This message displays and a chime may sound when the cooling system temperature gets too hot and the engine further enters the engine coolant protection mode. See *Engine Overheating on page 10-25* for more information.

This message also displays when the vehicle's engine power is reduced. Reduced engine power can affect the vehicle's ability to accelerate. If this message is on, but there is no reduction in performance, proceed to your destination. The performance may be reduced the next time the vehicle is driven. The vehicle may be driven at a reduced speed while this message is on, but acceleration and speed may be reduced. Anytime this message stays on, the vehicle should be taken to your dealer for service as soon as possible.

Fuel System Messages

FUEL LEVEL LOW

This message displays and a chime may sound if the fuel level is low. Refuel as soon as possible. See *Fuel Gauge on page 5-14* and *Fuel on page 9-67*.

TIGHTEN GAS CAP

This message may display along with the malfunction indicator lamp on the instrument cluster if the vehicle's fuel cap is not tightened properly. See *Malfunction Indicator Lamp on page 5-21*. Reinstall the fuel cap fully. See *Filling the Tank on page 9-70*. The diagnostic system can determine if the fuel cap has been left off or improperly installed. A loose or missing fuel cap allows fuel to evaporate into the atmosphere. A few driving trips with the cap properly installed should turn this light and message off.

Key and Lock Messages

REPLACE BATTERY IN REMOTE KEY

This message displays if a Remote Keyless Entry (RKE) transmitter battery is low. The battery needs to be replaced in the transmitter. See “Battery Replacement” under *Remote Keyless Entry (RKE) System Operation on page 2-4*.

Lamp Messages

TURN SIGNAL ON

This message displays and a chime sounds if a turn signal is left on for 1.2 km (0.75 mi). Move the turn signal lever to the off position.

Object Detection System Messages

FORWARD COLLISION ALERT OFF

This message displays when the Forward Collision Alert has been turned off.

FRONT CAMERA BLOCKED CLEAN WINDSHIELD

This message displays when the camera is blocked. Cleaning the outside of the windshield behind the rearview mirror may correct the issue. The Lane Departure Warning (LDW) system and Forward Collision Alert (FCA) will not operate.

LANE DEPARTURE WARNING UNAVAILABLE

This message displays when attempting to activate the Lane Departure Warning (LDW) system when it is temporarily unavailable. The LDW system does not need service.

This message could be due to the camera being blocked. Cleaning the outside of the windshield behind the rearview mirror may correct the issue.

PARK ASSIST OFF

This message displays when the Parking Assist system has been turned off or when there is a temporary condition causing the system to be disabled.

SERVICE FRONT CAMERA

If this message remains on after continued driving, the vehicle needs service. Do not use the Lane Departure Warning (LDW) and Forward Collision Alert (FCA) features. Take the vehicle to your dealer.

SERVICE PARKING ASSIST

This message displays if there is a problem with the Parking Assist system. Do not use this system to help you park. See your dealer for service.

Ride Control System Messages

SERVICE STABILITRAK

If this message displays, it means there may be a problem with the StabiliTrak system. If you see this message, try to reset the system. Stop; turn off the engine for at least 15 seconds; then start the engine again. If this message still comes on, it means there is a problem. You should see your dealer for service. The vehicle is safe to drive; however, you do not have the benefit of StabiliTrak, so reduce your speed and drive accordingly.

SERVICE TRACTION CONTROL

This message displays when there is a problem with the Traction Control System (TCS). When this message displays, the system will not limit wheel spin. Adjust your driving accordingly. See your dealer for service. See *Traction Control/ Electronic Stability Control on page 9-54*.

STABILITRAK INITIALIZING

This message may come on if the StabiliTrak system has not fully initialized because of road conditions or the incorrect tire size. When the StabiliTrak system is fully initialized, the message will turn off. See *Traction Control/Electronic Stability Control on page 9-54*. If this message continues to be displayed for multiple ignition cycles and on different road surfaces, see your dealer for service.

TRACTION CONTROL OFF

This message displays when the traction control has been turned off. See *Traction Control/Electronic Stability Control on page 9-54*.

TRACTION CONTROL ON

This message displays when the traction control is active. See *Traction Control/Electronic Stability Control on page 9-54*.

STABILITRAK OFF

This message displays when the StabiliTrak system has been turned off. Adjust your driving accordingly. To limit wheel spin and realize the full benefits of the stability enhancement system, you should normally leave StabiliTrak on. See *Traction Control/Electronic Stability Control on page 9-54*.

STABILITRAK OFF may also display when the stability control has been automatically disabled. The following conditions can cause this message to appear:

- The system is overheating, which could occur if StabiliTrak activates continuously for an extended period of time.
- The brake system warning light is on. See *Brake System Warning Light on page 5-24*.
- The stability system takes longer than usual to complete its diagnostic checks due to driving conditions.
- An engine or vehicle-related problem has been detected and the vehicle needs service. See your dealer.
- The transfer case is in Four-Wheel Drive Low.

The message turns off as soon as the conditions that caused the message to be displayed are no longer present.

Airbag System Messages

SERVICE AIRBAG

This message displays if there is a problem with the airbag system. Take the vehicle to your dealer for service.

Safety Belt Messages

SHIFTER LOCKED. BUCKLE SEATBELT

This message displays if the vehicle is equipped with the Safety Belt Assurance System and the driver and front outboard passenger, if present, safety belts are not buckled. The vehicle will not shift out of P (Park). Buckle the safety belt(s) to unlock the shift lever.

This system may not allow the vehicle to shift out of P (Park) if an object - such as a briefcase, handbag, grocery bag, laptop, or other electronic device - is on the front outboard passenger seat. If this happens, remove the object from the seat or buckle the safety belt.

If the driver or front outboard passenger unbuckles their safety belt while driving, the safety belt reminder chime and light(s) will come on. See *Safety Belt Reminders on page 5-17*.

SHIFTER UNLOCKED. BRAKE TO SHIFT

This message displays when the Safety Belt Assurance System times out and allows the vehicle to be shifted out of P (Park) after 30 seconds following brake apply. See “Safety Belts” and “Child Restraints” in the Index for information about the importance of proper restraint use.

This system may not function properly if the airbag readiness light is on. See *Airbag Readiness Light on page 5-18*.

Security Messages

SERVICE THEFT DETERRENT SYSTEM

This message displays when there is a problem with the theft-deterrent system. The vehicle may or may not restart, so you may want to take the vehicle to your dealer before turning off the engine. See *Immobilizer Operation on page 2-13*.

Steering System Messages

STEERING ASSIST IS REDUCED DRIVE WITH CARE

This message may display if a problem occurs with the electric power steering system. If this message appears, steering effort may be slightly higher than normal. The vehicle is still safe to drive. Use caution while in reduced assist mode. If this message is persistent

or appears repeatedly, take the vehicle to your dealer for service. See *Steering on page 9-4*.

SERVICE POWER STEERING

This message displays when there is a problem with electric power steering. Take the vehicle to your dealer for service. See *Steering on page 9-4*.

Tire Messages

SERVICE TIRE MONITOR SYSTEM

If equipped with the Tire Pressure Monitor System (TPMS), this message displays if a part on the system is not working properly. The tire pressure light also flashes and then remains on during the same ignition cycle. See *Tire Pressure Light on page 5-28*. Several conditions may cause this message to appear. See *Tire Pressure Monitor Operation on page 10-65*. If the warning comes on and stays on, there may be a problem with the TPMS. See your dealer.

TIRE LEARNING ACTIVE

If equipped with the Tire Pressure Monitor System (TPMS), this message displays when the system is relearning the tire positions on your vehicle. The tire positions must be relearned after rotating the tires or after replacing a tire or sensor. See *Tire Inspection on page 10-69*, *Tire Rotation on page 10-69*, *Tire Pressure Monitor System on page 10-64*, and *Tire Pressure on page 10-62*.

TIRE PRESSURE LOW ADD AIR TO TIRE

If equipped with the Tire Pressure Monitor System (TPMS), this message displays when the pressure in one or more of the vehicle's tires is low. This message also displays with a vehicle picture to indicate the location of the low tire. The low tire pressure warning light will also come on. See *Tire Pressure Light on page 5-28*. You can receive more than one tire pressure message at a time. If a tire pressure message appears on the DIC, stop as soon as you can. Have the tire pressures checked and set to those shown on the Tire and Loading Information label. See *Tires on page 10-53*, *Vehicle Load Limits on page 9-15*, and *Tire Pressure on page 10-62*. The DIC also shows the tire pressure values. See *Driver Information Center (DIC) (Base Level) on page 5-30* or *Driver Information Center (DIC) (Uplevel) on page 5-32*.

Transmission Messages

4WD OFF

If equipped with four-wheel drive, this message displays when the four-wheel-drive system is temporarily disabled due to an overheated condition. The vehicle will run in two-wheel drive when this message is present. Once the four-wheel-drive system cools down, the message turns off and the four-wheel-drive system returns to normal operation.

4WD SHIFT IN PROGRESS

This message will display while the four-wheel-drive system is shifting.

FOR 4WD LOW SHIFT TO NEUTRAL

If a four-wheel drive shift into 4↓ is requested, and the vehicle speed is correct, but the transmission is not in N (Neutral), this message will display until the transmission is shifted to N (Neutral).

FOR 4WD LOW SLOW TO XXX

If a four-wheel drive shift into 4↓ is requested, but the vehicle speed is too high, this message will display until the correct vehicle speed is reached.

GRADE BRAKING ACTIVE

This message displays when grade braking has been activated while driving on downhill grades. This message will only appear the first time the feature is activated in an ignition cycle. See *Tow/Haul Mode on page 9-39*, *Automatic Transmission on page 9-34*, and *Cruise Control on page 9-57*.

GRADE BRAKING OFF

This message displays when grade braking has been disabled with the Tow/Haul Mode button on the end of the shift lever. See *Tow/Haul Mode on page 9-39*, *Automatic Transmission on page 9-34*, and *Cruise Control on page 9-57*.

GRADE BRAKING ON

This message displays when grade braking has been enabled with the Tow/Haul Mode button on the end of the shift lever. See *Tow/Haul Mode on page 9-39*, *Automatic Transmission on page 9-34*, and *Cruise Control on page 9-57*.

SERVICE 4WD

If the vehicle has four-wheel drive, this message may display if a problem occurs with the four-wheel-drive system. If this message appears, stop as soon as possible and turn off the vehicle. Make sure the key is in the LOCK/OFF position for at least one minute, then restart the vehicle and check for the message on the DIC display. If the message is still displayed or appears again when you begin driving, the four-wheel-drive system needs service. See your dealer.

SHIFT DENIED

This message displays when the shift lever is in M (Manual Mode) and a transmission range has been selected that is unavailable at the current vehicle speed.

TO EXIT 4WD LOW SHIFT TO NEUTRAL

If a four-wheel drive shift out of 4↓ is requested, and the vehicle speed is correct, but the transmission is not in N (Neutral), this message will display until the transmission is shifted to N (Neutral).

TO EXIT 4WD LOW SLOW TO XXX

If a four-wheel drive shift out of 4↓ is requested, but the vehicle speed is too high, this message will display until the correct vehicle speed is reached.

TRANSMISSION HOT IDLE ENGINE

This message displays and a chime may sound if the transmission fluid in the vehicle gets hot. Driving with the transmission fluid temperature high can cause damage to the vehicle. Stop the vehicle and let it idle to allow the transmission to cool. This message clears and the chime stops when the fluid temperature reaches a safe level.

When towing, use Tow/Haul Mode to prevent damage to the engine or transmission. See *Tow/Haul Mode on page 9-39*.

VEHICLE IN 4WD LOW

This message will display if the vehicle is driven in 4↓ for about 10 minutes above 72 km/h (45 mph).

Vehicle Reminder Messages

CHECK TRAILER WIRING

On vehicles with the Integrated Trailer Brake Control (ITBC) system, this message may display and a chime may sound when one of the following conditions exists:

- A trailer with electric brakes becomes disconnected from the vehicle.
  - If the disconnect occurs while the vehicle is stopped, this message clears itself after a short time.
  - If the disconnect occurs while the vehicle is moving, this message stays on until the ignition is turned off.
- There is a short in the wiring to the electric trailer brakes.

When this message displays, power is no longer available to the trailer brakes.

As soon as it is safe to do so, carefully pull the vehicle over to the side of the road and turn the ignition off. Check the wiring connection to the trailer and turn the ignition back on. This message clears if the trailer is reconnected. This message also clears if you acknowledge it. If this message still displays, either the vehicle or the trailer needs service. See your dealer.

See “Integrated Trailer Brake Control System” under *Towing Equipment on page 9-90*.

ICE POSSIBLE DRIVE WITH CARE

This message displays when ice conditions are possible.

TRAILER CONNECTED

On vehicles with the Integrated Trailer Brake Control (ITBC) system, this message displays briefly when a trailer with electric or electric over hydraulic brakes is first connected to the vehicle.

This message clears itself after several seconds. This message also clears if you acknowledge it. After this message clears, the TRAILER GAIN and OUTPUT displays appear in the DIC.

See *Driver Information Center (DIC) (Base Level) on page 5-30* or *Driver Information Center (DIC) (Uplevel) on page 5-32* and “Integrated Trailer Brake Control System” under *Towing Equipment on page 9-90*.

Vehicle Speed Messages

REDUCE SPEED FOR HILL DESCENT CONTROL

This message displays when attempting to enable Hill Descent Control (HDC) when the vehicle speed is too high. See *Hill Descent Control (HDC) on page 9-56*.

Washer Fluid Messages

WASHER FLUID LOW ADD FLUID

This message displays when the windshield washer fluid is low. Fill the windshield washer fluid reservoir as soon as possible. See *Engine Compartment Overview on page 10-6* for the location of the windshield washer fluid reservoir. Also, see *Washer Fluid on page 10-29* for more information.

Vehicle Personalization

Use the audio system controls to access the personalization menus for customizing vehicle features.

The following are all possible personalization features. Depending on the vehicle, some may not be available.

Base Radio Audio System Controls

MENU: Press the center of the knob to enter menus and select menu items. Turn the knob to scroll through the menus.

◁ **BACK:** Press to return to the previous menu or exit.

Uplevel Radio Audio System Controls

1. Press the desired feature to display a list of available options.
2. Press to select the desired feature setting.
3. Press ◁ BACK on the faceplate or the ⬅ screen button to return to the previous menu or exit.

Turn the vehicle to ON/RUN to access the Settings menu, then select SETTINGS from the Home page on the infotainment system display.

Personalization Menus

The following list of menu items may be available:

- Time and Date
- Language (Language)
- Valet Mode
- Teen Driver
- Radio
- Vehicle
- Bluetooth
- Voice
- Display
- Rear Camera
- Return to Factory Settings
- Software Information

Detailed information for each menu follows.

Time and Date

Manually set the time and date. See *Clock on page 5-5*.

Language (Language)

Select Language, then select from the available language(s).

The selected language will display on the system, and voice recognition will reflect the selected language.

Valet Mode (If Equipped)

This will lock the infotainment system and steering wheel controls. It may also limit top speed, power, and access to vehicle storage locations (if equipped).

To enable valet mode:

1. Enter a four-digit code on the keypad.
2. Press Enter to go to the confirmation screen.
3. Re-enter the four-digit code.

Press LOCK or UNLOCK to lock or unlock the system. Press Back to go back to the previous menu.

Teen Driver (If Equipped)

Press and the following may display:

- View Report Card
- Manage Settings
- Change PIN
- Key Registration
- Clear All Teen Keys/PIN

View Report Card

This allows the driver's driving habits to be viewed. See *Teen Driver on page 7-48*.

Manage Settings

Press and the following may display:

- Audio Volume Limit
- Teen Driver Speed Limiter
- Teen Driver Speed Warning

Audio Volume Limit

This allows a maximum radio volume to be set.

Select Off or On.

Teen Driver Speed Limiter

If equipped, this allows the maximum speed limit of the vehicle to be set.

Select Off or On.

Teen Driver Speed Warning

This allows a warning to be set when a certain speed is exceeded.

Select Off or On.

Change PIN

This allows the Personal Identification Number (PIN) to be changed. See *Teen Driver on page 7-48*.

Key Registration

This allows the key to be registered. See "Register or Unregister a Key" in *Teen Driver on page 7-48*.

Clear All Teen Keys/PIN

This allows all Teen Driver keys and PIN to be cleared.

Select Continue or Cancel.

Radio

Press to display the Radio menu and the following may display:

- Manage Favorites
- Number of Favorites Shown
- Audible Touch Feedback
- Auto Volume
- Maximum Startup Volume
- Audio Cue Volume

Manage Favorites

This allows favorites to be edited. See “Manage Favorites” in “Radio Setup” under *Home Page on page 7-5* or “Manage Favorites” in “Settings” under “Radio” in the infotainment manual.

Number of Favorites Shown

Press to set the number of favorites to display.

Select the desired number or select Auto and the infotainment system will automatically adjust the number of favorites shown.

Audible Touch Feedback

This allows Audible Touch Feedback to be turned on or off.

Select Off or On.

Auto Volume

This feature adjusts the volume based on vehicle speed and ambient noise.

Select Off, Low, Medium-Low, Medium, Medium-High, or High.

Maximum Startup Volume

This feature sets the maximum startup volume. If the vehicle is started and the volume is greater than this level, the volume is adjusted to this level. To set the maximum startup volume, turn the MENU knob or press + or − to increase or decrease.

Audio Cue Volume

This feature sets the volume of audio files played at system startup and shutdown.

Select On, then press + or − to increase or decrease the volume.

Vehicle

Select and the following may display:

- Climate and Air Quality
- Collision/Detection Systems
- Comfort and Convenience
- Lighting
- Power Door Locks
- Remote Lock, Unlock, Start

Climate and Air Quality

Select and the following may display:

- Auto Fan Max Speed

Auto Fan Max Speed

This feature will set the maximum auto fan speed.

Select Low, Medium, or High.

Collision/Detection Systems

Select and the following may display:

- Alert Type
- Park Assist

Alert Type

This feature will set crash alerts to beeps or seat vibrations. This setting affects all crash alerts including Forward Collision, Lane Departure Warning, and Park Assist alerts.

Select Beeps or Safety Alert Seat.

Park Assist

If equipped, this feature can assist in backing up and parking the vehicle. See *Assistance Systems for Parking or Backing on page 9-60*.

Select Off, On, or On with Towbar.

Comfort and Convenience

Select and the following may display:

- Auto Memory Recall
- Easy Exit Options
- Chime Volume
- Reverse Tilt Mirror
- Auto Mirror Folding

Auto Memory Recall

This allows the feature to be turned on or off. See *Memory Seats on page 3-7*.

Select On or Off.

Easy Exit Options

This allows the feature to be turned on or off. See *Memory Seats on page 3-7*.

Select On or Off.

Chime Volume

This allows the selection of the chime volume level.

Turn the MENU knob or press + or − to adjust the volume.

Reverse Tilt Mirror

When on, the driver and/or passenger mirrors will tilt downward when the vehicle is shifted to R (Reverse) to improve visibility of the ground near the rear wheels.

Select Off, On - Driver and Passenger, On - Driver, or On - Passenger.

Auto Mirror Folding

When on, the outside rearview mirrors will automatically fold or unfold when the Remote Keyless Entry (RKE) transmitter lock or unlock button is pressed and held.

Select Off or On.

Lighting

Select and the following may display:

- Vehicle Locator Lights
- Exit Lighting

Vehicle Locator Lights

This feature will flash the exterior lamps when 🔓 on the Remote Keyless Entry (RKE) transmitter is pressed to locate the vehicle.

Select Off or On.

Exit Lighting

This allows the selection of how long the exterior lamps stay on when leaving the vehicle when it is dark outside.

Select Off, 30 Seconds, 60 Seconds, or 120 Seconds.

Power Door Locks

Select and the following may display:

- Auto Door Unlock
- Delayed Door Lock

Auto Door Unlock

This allows selection of which of the doors will automatically unlock when the vehicle is shifted into P (Park) with an automatic transmission or when the vehicle is turned off with a manual transmission.

Select Off, All Doors, or Driver Door.

Delayed Door Lock

When on, this feature will delay the locking of the doors. To override the delay, press the power door lock switch on the door.

Select Off or On.

Remote Lock, Unlock, Start

Select and the following may display:

- Remote Unlock Light Feedback
- Remote Lock Feedback
- Remote Door Unlock
- Remote Start Auto Cool Seats
- Remote Start Auto Heat Seats
- Passive Door Unlock
- Passive Door Lock
- Remote Left in Vehicle Alert

Remote Unlock Light Feedback

When on, the exterior lamps will flash when unlocking the vehicle with the RKE transmitter.

Select Off or Flash Lights.

Remote Lock Feedback

This allows selection of what type of feedback is given when locking the vehicle with the RKE transmitter.

Select Off, Lights and Horn, Lights Only, or Horn Only.

Remote Door Unlock

This allows selection of which doors will unlock when pressing 🔓 on the RKE transmitter.

Select All Doors or Driver Door.

Remote Start Auto Cool Seats

If equipped and turned on, this feature will turn the cooled seats on when using remote start on warm days.

Select Off or On.

Remote Start Auto Heat Seats

If equipped and turned on, this feature will turn the heated seats on when using remote start on cold days.

Select Off or On.

Passive Door Unlock

This allows the selection of what doors will unlock when using the button on the driver door to unlock the vehicle.

Select All Doors or Driver Door Only.

Passive Door Lock

This feature can be turned on or off, or can be used to select feedback when using the button on the driver door to lock the vehicle. See *Remote Keyless Entry (RKE) System Operation on page 2-4*.

Select Off, On with Horn Chirp, or On.

Remote Left in Vehicle Alert

This feature sounds an alert when the RKE transmitter is left in the vehicle.

Select Off or On.

Bluetooth

Select and the following may display:

- Pair New Device
- Device Management
- Ringtones
- Voice Mail Numbers

Pair New Device

Select to pair a new device. See “Pairing” in “Infotainment Controls” under *Bluetooth (Overview) on page 7-31* or *Bluetooth (Infotainment Controls - Base Connected Radio) on page 7-42* or *Bluetooth (Voice Recognition - Base Connected Radio) on page 7-46* or *Bluetooth (Infotainment Controls - Base Radio) on page 7-32* or *Bluetooth (Voice Recognition - Base Radio) on page 7-37* or “Pairing” in “Infotainment Controls” under “Bluetooth” in the infotainment manual.

Device Management

Select to connect to a different phone source, disconnect a phone, or delete a phone.

Ringtones

Press to change the ring tone for the specific phone. The phone does not need to be connected to change the ring tones.

Voice Mail Numbers

This feature displays the voice mail number for all connected phones. To change the voice mail number, select EDIT or press the EDIT button. Type a new number, then select SAVE or press the SAVE button.

Voice

Select and the following may display:

- Prompt Length
- Audio Feedback Speed

Prompt Length

This feature adjusts the voice prompt length.

Select Short or Long.

Audio Feedback Speed

This feature adjusts the audio feedback speed.

Select Slow, Medium, or Fast.

Display

Select and the following may display:

- Calibrate Touchscreen
- Turn Display Off

Calibrate Touchscreen

Select to calibrate the touchscreen, then follow the prompts.

Turn Display Off

Select to turn the display off. Press anywhere on the display area or any faceplate button to turn the display on.

Rear Camera

Select and the following may display:

- Guidance Lines
- Rear Park Assist Symbols

Guidance Lines

Select to turn Off or On. See *Assistance Systems for Parking or Backing on page 9-60*.

Rear Park Assist Symbols

Select to turn Off or On. See *Assistance Systems for Parking or Backing on page 9-60*.

Return to Factory Settings

Select and the following may display:

- Restore Vehicle Settings
- Clear All Private Data
- Restore Radio Settings

Restore Vehicle Settings

This allows selection of restoring vehicle settings.

Select Restore or Cancel.

Clear All Private Data

This allows selection to clear all private information from the vehicle.

Select Delete or Cancel.

Restore Radio Settings

This allows selection to restore radio settings.

Select Restore or Cancel.

Software Information

Select to view the infotainment system current software information.

Universal Remote System

See *Radio Frequency Statement on page 13-12*.

Universal Remote System Programming

If equipped, these buttons are in the overhead console.

This system can replace up to three remote control transmitters used to activate devices such as garage door openers, security systems, and home automation devices. These instructions refer to a garage door opener, but can be used for other devices.

Do not use the Universal Remote system with any garage door opener that does not have the stop and reverse feature. This includes any garage door opener model manufactured before April 1, 1982.

Read the instructions completely before programming the Universal Remote system. It may help to have another person assist with the programming process.

Keep the original hand-held transmitter for use in other vehicles as well as for future programming. Erase the programming when vehicle ownership is terminated. See “Erasing Universal Remote System Buttons” later in this section.

To program a garage door opener, park outside directly in line with and facing the garage door opener receiver. Clear all people and objects near the garage door.

Make sure the hand-held transmitter has a new battery for quick and accurate transmission of the radio-frequency signal.

Programming the Universal Remote System

For questions or help programming the Universal Remote system, call 1-800-355-3515 or see www.homelink.com.

Programming involves time-sensitive actions, and may time out causing the procedure to be repeated.

To program up to three devices:

1. Hold the end of the hand-held transmitter about 3 to 8 cm (1 to 3 in) away from the Universal Remote system buttons with the indicator light in view. The hand-held transmitter was supplied by the manufacturer of the garage door opener receiver.

2. At the same time, press and hold both the hand-held transmitter button and one of the three Universal Remote system buttons to be used to operate the garage door. Do not release either button until the indicator light goes from a slow to a rapid flashing light. Then release both buttons.

   Some garage door openers may require substitution of Step 2 with the procedure under “Radio Signals for Canada and Some Gate Operators” later in this section.

3. Press and hold the newly programmed Universal Remote system button for five seconds while watching the indicator light and garage door activation.

   - If the indicator light stays on continuously or the garage door moves when the button is pressed, then programming is complete. There is no need to complete Steps 4–6.
   - If the indicator light does not come on or the garage door does not move, a second button press may be required. For a second time, press and hold the newly programmed button for five seconds. If the light stays on or the garage door moves, programming is complete.
   - If the indicator light blinks rapidly for two seconds, then changes to a solid light and the garage door does not move, continue with programming Steps 4–6.

Learn or Smart Button

4. After completing Steps 1–3, locate the Learn or Smart button inside the garage on the garage door opener receiver. The name and color of the button may vary by manufacturer.
5. Press and release the Learn or Smart button. Step 6 must be completed within 30 seconds of pressing this button.
6. Inside the vehicle, press and hold the newly programmed Universal Remote system button for two seconds and then release it. If the garage door does not move or the lamp on the garage door opener receiver

does not flash, press and hold the same button a second time for two seconds, then release it. Again, if the door does not move or the garage door lamp does not flash, press and hold the same button a third time for two seconds, then release it.

The Universal Remote system should now activate the garage door.

Repeat the process for programming the two remaining buttons.

Radio Signals for Canada and Some Gate Operators

For questions or programming help, call 1-800-355-3515 or see www.homelink.com.

Canadian radio-frequency laws and some U.S. gate operators require transmitter signals to time out or quit after several seconds of transmission. This may not be long enough for the Universal Remote system to pick up the signal during programming.

If the programming did not work, replace Step 2 under “Programming the Universal Remote System” with the following:

Press and hold the Universal Remote system button while pressing and releasing the hand-held transmitter button every two seconds until the signal has been successfully accepted by the Universal Remote system. The Universal Remote system indicator light will flash slowly at first and then rapidly. Proceed with Step 3 under “Programming the Universal Remote System” to complete.

Universal Remote System Operation

Using the Universal Remote System

Press and hold the appropriate Universal Remote system button for at least one-half second. The indicator light will come on while the signal is being transmitted.

Erasing Universal Remote System Buttons

Erase all programmed buttons when vehicle ownership is terminated.

To erase:

1. Press and hold the two outside buttons until the indicator light begins to flash. This should take about 10 seconds.
2. Release both buttons.

Reprogramming a Single Universal Remote System Button

To reprogram any of the system buttons:

1. Press and hold any one of the buttons. Do not release the button.
2. The indicator light will begin to flash after 20 seconds. Without releasing the button, proceed with Step 1 under “Programming the Universal Remote System.”

✍ NOTES

Lighting

Exterior Lighting
Exterior Lamp Controls 6-1
Exterior Lamps Off Reminder 6-2
Headlamp High/Low-Beam Changer 6-2
Flash-to-Pass 6-3
Daytime Running Lamps (DRL) 6-3
Automatic Headlamp System 6-3
Hazard Warning Flashers 6-4
Turn and Lane-Change Signals 6-4
Fog Lamps 6-5
Auxiliary Roof-Mounted Lamp 6-5

Interior Lighting
Instrument Panel Illumination Control 6-6
Cargo Lamp 6-6
Dome Lamps 6-7
Reading Lamps 6-7

Lighting Features
Entry Lighting 6-8
Exit Lighting 6-8
Battery Load Management 6-8
Battery Power Protection 6-9

Exterior Lighting

Exterior Lamp Controls

The exterior lamp control is on the instrument panel to the left of the steering wheel.

⏻ **(Off):** Turns off the automatic headlamps and Daytime Running Lamps (DRL). Turn the headlamp control to the off position again to turn the automatic headlamps or DRL back on.

For vehicles first sold in Canada, off will only work when the vehicle is in P (Park).

AUTO (Automatic): Automatically turns on the headlamps, parking lamps, taillamps, instrument panel lights, roof marker lamps (if equipped), front/rear sidemarker lamps, and license plate lamps.

When the vehicle is turned off and the headlamps are in AUTO, the headlamps turn off. When the key is removed, they automatically turn on for a set time. The time of the delay can be changed using the DIC. See *Driver Information Center (DIC) (Base Level) on page 5-30* or *Driver Information Center (DIC) (Uplevel) on page 5-32*.

(Parking Lamps): Turns on the parking lamps including all lamps, except the headlamps.

(Headlamps): Turns on the headlamps together with the parking lamps and instrument panel lights.

When the headlamps are turned on while the vehicle is on, the headlamps turn off automatically 10 minutes after the ignition is turned off. When the headlamps are turned on while the vehicle is off, the headlamps will stay on for 10 minutes before turning off to prevent the battery from being drained. Turn the headlamp control off and then back to the headlamp on position to make the headlamps stay on for an additional 10 minutes. To keep the lamps on for more than 10 minutes, the ignition must be in the ACC/ACCESSORY or ON/RUN position.

(Fog Lamps) (If Equipped): Turns on the fog lamps. See *Fog Lamps on page 6-5.*

Exterior Lamps Off Reminder

A reminder chime sounds when the headlamps or parking lamps are manually turned on, the ignition is off, and a door is open. To disable the chime, turn the lamps off.

Headlamp High/ Low-Beam Changer

(Headlamp High/Low-Beam Changer): Push the turn signal lever toward the instrument panel to change the headlamps from low to high beam.

Pull the turn signal lever toward you and release it to return to low-beam headlamps.

When the high-beam headlamps are on, this indicator light on the instrument cluster will also be on.

Flash-to-Pass

This feature lets you use the high-beam headlamps to signal a driver in front of you that you want to pass. It works even if the headlamps are in the automatic position.

To use it, pull the turn signal lever toward you, then release it.

If the headlamps are in the automatic position or on low beam, the high-beam headlamps will turn on. They will stay on as long as you hold the lever toward you. The high-beam indicator on the instrument cluster will come on. Release the lever to return to normal operation.

Daytime Running Lamps (DRL)

DRL can make it easier for others to see the front of the vehicle during the day. Fully functional DRL are required on all vehicles first sold in Canada.

The DRL system comes on when the following conditions are met:

- The ignition is on.
- The exterior lamp control is in AUTO.
- The transmission is not in P (Park).
- The light sensor determines it is daytime.

When the DRL system is on, only the DRL are on. The taillamps, sidemarker lamps, instrument panel lights, and other lamps will not be on.

When it begins to get dark, the automatic headlamp system switches from DRL to the headlamps.

To turn off the DRL, turn the exterior lamp control to the off position and then release. For vehicles first sold in Canada, off will only work when the vehicle is in P (Park).

Automatic Headlamp System

When the exterior lamp control is set to AUTO and it is dark enough outside, the headlamps come on automatically.

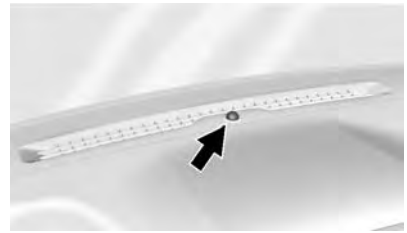

There is a light sensor on top of the instrument panel. Do not cover the sensor, otherwise the headlamps will come on when they are not needed.

The system may also turn on the headlamps when driving through a parking garage or tunnel.

When it is bright enough outside, the headlamps will turn off or may change to Daytime Running Lamps (DRL).

The automatic headlamp system turns off when the exterior lamp control is turned to ⏻ or the ignition is off.

Lights On with Wipers

If the windshield wipers are activated in daylight with the engine on, and the exterior lamp control is in AUTO, the headlamps, parking lamps, and other exterior lamps come on. The transition time for the lamps coming on varies based on wiper speed. When the wipers are not operating, these lamps turn off. Move the exterior lamp control to ⏻ or AUTO to disable this feature.

Hazard Warning Flashers

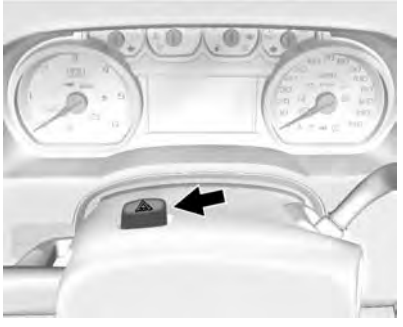

⚠ **(Hazard Warning Flashers):** Press this button to make the front and rear turn signal lamps flash on and off. Press again to turn the flashers off.

When the hazard warning flashers are on, the vehicle's turn signals will not work.

Turn and Lane-Change Signals

An arrow on the instrument cluster flashes in the direction of the turn or lane change.

Move the turn signal lever all the way up or down to signal a turn.

Raise or lower the lever for less than one second until the arrow starts to flash to signal a lane change. This causes the turn signals to automatically flash three times. It will flash six times if Tow/Haul Mode is active. Holding the turn signal lever for more than

one second will cause the turn signals to flash until the lever is released.

The lever returns to its starting position whenever it is released.

If after signaling a turn or a lane change the arrows flash rapidly or do not come on, a signal bulb could be burned out.

Replace any burned out bulbs. If a bulb is not burned out, check the fuse. See *Fuses on page 10-44*.

Turn Signal On Chime

If the turn signal is left on for more than 1.2 km (0.75 mi), a chime sounds at each flash of the turn signal. The message TURN SIGNAL ON will also appear in the Driver Information Center (DIC). To turn the chime and message off, move the turn signal lever to the off position.

Fog Lamps

If equipped, the control is on the center of the exterior lamp control, to the left of the steering column.

The ignition must be in the ON/RUN position for the fog lamps to come on.

(Fog Lamps): Press to turn the fog lamps on or off. A light will come on in the instrument cluster.

When the fog lamps are turned on, the parking lamps automatically turn on.

When the headlamps are changed to high beam, the fog lamps go off. When the high-beam headlamps are turned off, the fog lamps will come on again.

Some localities have laws that require the headlamps to be on with the fog lamps.

Auxiliary Roof-Mounted Lamp

If equipped, this button includes wiring provisions for a dealer or a qualified service center to install an auxiliary roof lamp.

This button is on the overhead console.

When the wiring is connected to an auxiliary roof-mounted lamp, pressing the bottom of the button will activate the lamp and illuminate an indicator light at the bottom of this button. Pressing the top of the button will turn off the roof-mounted lamp and indicator.

The emergency roof lamp circuit is fused at 30 amps, so the total current draw of the attached lamps should be less than this value. The attachment points for the roof lamp circuits are two blunt cut wires above the overhead console: a dark green with blue stripe switched power wire and a black ground wire.

For information on roof-mounted emergency lamp installation, see www.gmupfitter.com or contact your dealer.

If the vehicle has this button, the vehicle may have the snow plow prep package. See *Add-On Electrical Equipment on page 9-100*.

Interior Lighting

Instrument Panel Illumination Control

This feature controls the brightness of the steering wheel and instrument panel lights. The instrument panel illumination control is next to the exterior lamp control.

(Instrument Panel Illumination): Move the thumbwheel up or down to brighten or dim the lights.

Cargo Lamp

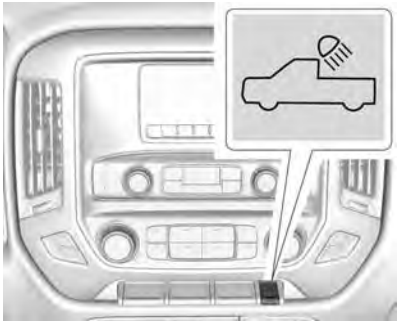

The cargo lamp provides more light in the cargo area or on the sides of the vehicle, if needed. The lights inside the pickup box and/or on the outside rearview mirrors also turn on, if equipped.

Press the switch down to turn the cargo lamp on or off. An indicator light will turn on when the lamp is turned on, if equipped. The shift lever must be in the P (Park) position to operate the cargo lamp.

The lights on the outside rearview mirrors turn on if the shift lever is in the R (Reverse), N (Neutral), or P (Park) position.

Dome Lamps

There are dome lamps in the overhead console and the headliner, if equipped.

To change the dome lamp settings, press the following:

OFF: Turns the lamps off, even when a door is open.

DOOR: The lamps come on automatically when a door is opened.

ON: Turns all dome lamps on.

Reading Lamps

There are reading lamps in the overhead console and the headliner, if equipped. To operate, the ignition must be in the ACC/ACCESSORY or ON/RUN position, or using Retained Accessory Power (RAP).

Press or next to each reading lamp to turn it on or off.

Lighting Features

Entry Lighting

The vehicle has an illuminated entry feature.

When a door is opened, the dome lamps and puddle lamps come on if the dome lamp control is in the DOOR position. If the dome lamp control is in the OFF position, the lamps do not come on.

The headlamps, parking lamps, taillamps, and back-up lamps turn on briefly at night, or in areas with limited lighting, when 🔓 is pressed on the Remote Keyless Entry (RKE) transmitter. After about 30 seconds the exterior lamps turn off. Entry lighting can be disabled manually by changing the ignition out of the OFF position, or by pressing the RKE transmitter 🔒 button.

This feature can be changed. See “Vehicle Locator Lights” under *Vehicle Personalization on page 5-47*.

Exit Lighting

The interior lamps, headlamps, parking lamps, back-up lamps, and license plate lamps come on when the key is removed from the ignition. The interior lamps turn off automatically in 20 seconds. The interior lamps do not come on if the dome lamp control is in the OFF position.

The exterior lamps turn off immediately by turning the exterior lamps control off.

This feature can be changed. See *Vehicle Personalization on page 5-47*.

Battery Load Management

The vehicle has Electric Power Management (EPM), which estimates the battery's temperature and state of charge. It then adjusts the voltage for best performance and extended life of the battery.

When the battery's state of charge is low, the voltage is raised slightly to quickly bring the charge back up. When the state of charge is high, the voltage is lowered slightly to prevent overcharging. The voltmeter gauge or the voltage display on the Driver Information Center (DIC), if equipped, may show the voltage moving up or down. This is normal. If there is a problem, an alert will be displayed.

The battery can be discharged at idle if the electrical loads are very high. This is true for all vehicles. This is because the generator (alternator) may not be spinning fast enough at idle to produce all the power that is needed for very high electrical loads.

A high electrical load occurs when several of the following are on, such as: headlamps, high beams, fog lamps, rear window defogger, climate control fan at high speed, heated seats, engine cooling fans, trailer loads, and loads plugged into accessory power outlets.

EPM works to prevent excessive discharge of the battery. It does this by balancing the generator's output and the vehicle's electrical needs. It can increase engine idle speed to generate more power, whenever needed. It can temporarily reduce the power demands of some accessories.

Normally, these actions occur in steps or levels, without being noticeable. In rare cases at the highest levels of corrective action, this action may be noticeable to the driver. If so, a DIC message might be displayed and it is recommended that the driver reduce the electrical loads as much as possible. See *Battery Voltage and Charging Messages on page 5-36*.

Battery Power Protection

This feature shuts off the dome and reading lamps, if they are left on for more than 10 minutes after the ignition is turned off. The cargo lamp shuts off after 20 minutes. This prevents the battery from running down.

✍ NOTES

Infotainment System

Introduction
Infotainment 7-1
Theft-Deterrent Feature 7-2
Overview 7-3
Home Page 7-5
Software Updates 7-8

Radio
AM-FM Radio 7-8
Satellite Radio 7-10
Radio Reception 7-10
Fixed Mast Antenna 7-11
Multi-Band Antenna 7-11
Pandora Internet Radio 7-11

Audio Players
CD Player 7-15
USB Port 7-18
SD Card Reader 7-20
Auxiliary Jack 7-21
Bluetooth Audio 7-21

OnStar System
OnStar System 7-22

Voice Recognition
Voice Recognition 7-24

Phone
Bluetooth (Overview) 7-31
Bluetooth (Infotainment Controls - Base Radio) 7-32
Bluetooth (Voice Recognition - Base Radio) 7-37
Bluetooth (Infotainment Controls - Base Connected Radio) 7-42
Bluetooth (Voice Recognition - Base Connected Radio) 7-46

Settings
Teen Driver 7-48

Trademarks and License Agreements
Trademarks and License Agreements 7-50

Introduction

Infotainment

Base radio information is included in this manual. See the infotainment manual for information on other available infotainment systems.

Read the following pages to become familiar with these features.

⚠ Warning

Taking your eyes off the road for too long or too often while using any infotainment feature can cause a crash. You or others could be injured or killed. Do not give extended attention to infotainment tasks while driving. Limit your glances at the vehicle displays and focus your attention on driving. Use voice commands whenever possible.

The infotainment system has built-in features intended to help avoid distraction by disabling some functions when driving. These functions may gray out when they are unavailable. Many infotainment features are also available through the instrument cluster and steering wheel controls.

Before driving:

- Become familiar with the operation, faceplate buttons, and screen buttons.
- Set up the audio by presetting favorite stations, setting the tone, and adjusting the speakers.
- Set up phone numbers in advance so they can be called easily by pressing a single button or by using a single voice command if equipped with Bluetooth phone capability.

See *Defensive Driving on page 9-3*.

To play the infotainment system with the ignition off, see *Retained Accessory Power (RAP) on page 9-28*.

Theft-Deterrent Feature

TheftLock® is designed to discourage theft of the vehicle's radio by learning a portion of the Vehicle Identification Number (VIN). The radio does not operate if it is stolen or moved to a different vehicle.

Overview

Infotainment System Overview

The infotainment system is controlled by using the buttons on the faceplate and steering wheel controls, if equipped. See *Steering Wheel Controls on page 5-3*.

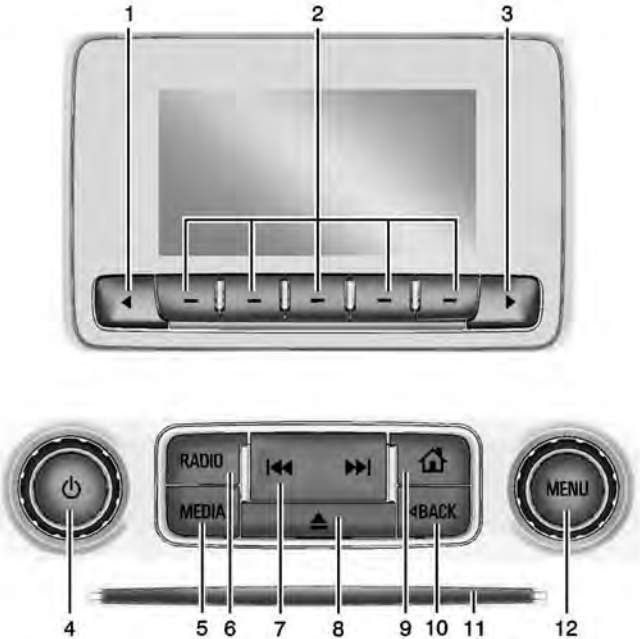

Radio with CD

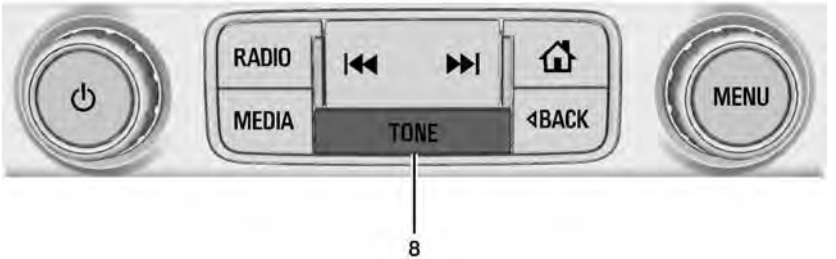

Radio with TONE

1. ◀ (Favorite Pages)
   - Press to scroll down through the favorite pages for each source.
2. Favorites/Soft Keys
   - Press to select favorite stations.
   - Press and hold to save favorite stations.
   - Press to select a screen button when displayed.
3. ▶ (Favorite Pages)
   - Press to scroll up through the favorite pages for each source.
4. ⏻ (Power/Volume)
   - Press to turn the audio on.
   - Press and hold to turn it off.
   - When on, press to mute the system. Press again to unmute.
   - Turn to increase or decrease the volume.
5. MEDIA
   - Press to change the audio source between CD, USB, SD card, AUX, and Bluetooth Audio, if equipped.
6. RADIO
   - Press to change the audio source between AM, FM, or SiriusXM, if equipped.
7. ⏮ or ⏭ (Seek)
   - **CD (If Equipped):** Press ⏮ to seek the beginning of the current or previous track. If the track has played for less than five seconds, it seeks the previous track. If longer than five seconds, the current track will start from the beginning. Press ⏭ to seek the next track.

- **AM, FM, or SiriusXM (If Equipped):** Press ⏮ or ⏭ to seek to the previous or next strong station.
- **CD (If Equipped):** Press and hold ⏮ to quickly reverse through a track. Release the button to return to playing speed. Press and hold ⏭ to fast forward through a track. Release the button to return to playing speed.

8. ⏏ (Eject) (If Equipped) or TONE (If Equipped)
   - Press ⏏ to eject the CD (if equipped).
   - Press TONE to open the Tone Settings menu (if equipped).
9. ⌂ (Home Page)
   - Press to go to the Home Page from any point in the system. See “Home Page” following.
10. ◁ BACK
    - Press to return to the previous screen in a menu.
11. CD Slot (If Equipped)
12. MENU
    - Press to access the menu for the current audio source.
    - Press to select the highlighted menu option.
    - Turn to scroll through a list.
    - Turn to manually select a station.

Home Page

Home Page Features

The infotainment system displays a Home Page that makes it easy to access all of the applications. Turn the MENU knob to highlight feature icons. Press the MENU knob to access the feature’s options.

Various functions are disabled when the vehicle is moving.

AUDIO: Select the AUDIO screen icon to display the active source page. The sources available are AM, FM, SiriusXM® (if equipped), CD (if equipped), USB/iPod, AUX Input, SD card reader (if equipped), and Bluetooth Audio (if equipped). See *AM-FM Radio on page 7-8*, *Satellite Radio on page 7-10*, *CD Player on page 7-15*, *Auxiliary Jack on page 7-21*, and *Bluetooth Audio on page 7-21*.

PHONE: Select the PHONE screen icon to display the Phone main page. See *Bluetooth (Overview) on page 7-31* or *Bluetooth (Infotainment Controls - Base Connected Radio) on page 7-42* or *Bluetooth (Voice Recognition - Base Connected Radio) on page 7-46* or *Bluetooth (Infotainment Controls - Base Radio) on page 7-32* or *Bluetooth (Voice Recognition - Base Radio) on page 7-37*.

NAV (Navigation, If Equipped): Select the NAV screen icon to display the OnStar Turn-by-Turn Navigation. See *OnStar Overview on page 14-1*, if equipped.

SETTINGS: Select the SETTINGS screen icon to display the Settings main page. See “Setting Radio Preferences” following.

Pandora (If Equipped)

Select the PANDORA icon to begin Pandora. See *Pandora Internet Radio on page 7-11*.

Setting Radio Preferences

Select the SETTINGS screen icon to display the Settings menu and the following may display:

Time and Date: See *Clock on page 5-5*.

Language (Current Language): This will set the display language in the radio and instrument cluster. Select to display a list of languages. Select ◁ BACK to go back to the previous menu.

Valet Mode:

Using the circular numeric keypad, enter a four-digit code:

1. Turn the MENU knob to highlight a number.
2. Press the MENU knob to select it. Do this for each one of the four digits. Select Enter to go to the confirmation screen.
3. Re-enter the four-digit code. Select LOCK to lock the system.
4. Enter the four-digit code to unlock the system.

   Select ◁ BACK to go back to the previous menu.

Radio: See “Radio Setup” later in this section.

Vehicle: See *Vehicle Personalization on page 5-47*.

Display: Press the MENU knob to turn the display on or off.

Return to Factory Settings: See “Return to Factory Settings” later in this section.

Software Information (If Equipped): Press the MENU knob to select Save Vehicle Info to USB. Press the MENU knob again to start downloading the vehicle information to the USB.

Radio Setup

Press the RADIO button and the following may display:

Manage Favorites:

- Turn the MENU knob and press to select a favorite.
  - To delete a favorite, press the button just below the DELETE screen button.
  - To move a favorite, press the MOVE screen button. Turn the MENU knob to select a new location, then press the DROP screen button to select the new location.
- Select ◁ BACK to go back to the previous menu.

Number of Favorites Shown: Select Auto and the system will automatically adjust the number of favorite pages when favorites are added and removed, or select a number from 5–25 to manually adjust the number of favorites shown.

Audible Touch Feedback (If Equipped): Select Audible Touch Feedback to turn feedback off or on.

Auto Volume (If Equipped): This feature adjusts the volume based on vehicle speed. The options are Off, Low, Medium-Low, Medium, Medium-High, or High. Select the desired volume.

Maximum Startup Volume: This feature sets the maximum startup volume. If the vehicle is started and the volume is greater than this level, the volume is adjusted to this level. To set the maximum startup volume, Turn the MENU knob to increase or decrease startup volume.

Rear Camera (If Equipped)

From the Rear Camera screen button, the following may display:

Park Assist Symbols (If Equipped): This feature will display symbols where objects are detected by the Rear Parking Assist system. Select Park Assist Symbols, then select Off or On.

See *Assistance Systems for Parking or Backing on page 9-60*.

Return to Factory Settings

Select Return to Factory Settings and the following may display:

Restore Vehicle Settings: This option will restore factory vehicle personalization settings. Select Restore Vehicle Settings. A screen displays stating all vehicle customization settings will be restored to the factory settings. Select Cancel or Confirm.

Clear All Private Data (If Equipped): This option clears all private information from the vehicle. Select Clear All Private Data. Select Cancel or Confirm.

Restore Radio Settings: This option will restore factory radio settings. Select Restore Radio Settings. A screen displays stating all personalized radio settings will be restored back to the factory settings. Select Cancel or Confirm.

English and Metric Unit Conversion

To change the display units between English and metric units, see *Driver Information Center (DIC) (Base Level) on page 5-30* or *Driver Information Center (DIC) (Uplevel) on page 5-32* or *Instrument Cluster on page 5-10*.

Software Updates

See the website for more information.

Website Information

In the U.S., see www.chevrolet.com

In Canada, see www.chevrolet.gm.ca

In Mexico, see www.chevrolet.com.mx

Radio

AM-FM Radio

Playing the Radio

While on the audio main page, press the RADIO button repeatedly to cycle through the available sources AM, FM, and SiriusXM® (if equipped) or press the MEDIA button repeatedly to cycle through the available sources Bluetooth® Audio (if equipped), CD, USB, SD, and AUX.

The steering wheel controls can also be used to adjust the volume. See *Steering Wheel Controls on page 5-3*.

AM, FM, or SiriusXM (If Equipped)

To select AM, FM, or SiriusXM (if equipped), press the RADIO button to toggle to the desired broadcast source.

Press the MENU knob and the following radio settings may display:

Tone Settings:

- **Bass, Midrange, and Treble:** Turn the MENU knob and highlight. Press the MENU knob to select. Turn the MENU knob to adjust.
- **Balance:** Turn the MENU knob to highlight. Press the MENU knob to select. Turn the MENU knob left for more sound from the left speakers or right for more sound from the right speakers. The middle position balances the sound between the left and right speakers.
- **Fade:** Turn the MENU knob to highlight. Press the MENU knob to select. Turn the MENU knob to the left for more sound from the front speakers and to the right for more sound from the rear speakers. The middle position balances the sound between the front and rear speakers.
- **DSP**: If equipped with a Bose Surround® sound system, it will have three DSP modes including:
  - Normal: Adjusts the audio to provide the best sound for all seating positions.
  - Driver: Adjusts the audio to provide the best sound for the driver.
  - Centerpoint: Creates a surround sound from nearly any audio source.
- **EQ (Equalizer)**: If equipped with a Bose sound system, turn the MENU knob to highlight. Turn the MENU knob to scroll through the options. Press the MENU knob to select. Press the ◁ BACK button to go to the previous menu.

Station List: Select to display a list of AM or FM stations. Press ◁ BACK to go to the previous menu.

Auto Volume: If equipped, this feature adjusts the volume based on the vehicle speed. Select the level between Off, Low, Medium-Low, Medium, Medium-High, and High. Press ◁ BACK to go to the previous menu.

EQ (Equalizer) Settings: In certain configurations, the available choices are Manual and Talk.

Options for SiriusXM Only

XM View: XM view allows the channel list to be viewed by channel name, artist playing on channel, or song playing on channel. Turn the MENU knob to highlight and press the MENU knob to select. Press ◁ BACK to go to the previous menu.

Channel List: Select to display a list of SiriusXM channels. Turn the MENU knob to highlight and press the MENU knob to select. Press ◁ BACK to go to the previous menu.

Also see the radio settings common for all sources earlier in this section.

Finding a Station

Seeking a Station

Press ⏮ or ⏭ to search for the previous or next strongest station.

Tuning a Station

Turn the MENU knob to manually find a station.

Storing Radio Station Presets

Up to 25 preset stations from all bands can be stored in the favorite lists in any order. Up to five stations can be stored in each favorite page and the number of favorites can be set.

AM, FM, or SiriusXM (If Equipped): While on the active source main page, such as AM, FM, or SiriusXM (if equipped), press and hold a favorites/soft key button on the faceplate.

Mixed-Audio Favorites

Media (if equipped) and Broadcast favorites can be stored.

To display the favorites page, press ◀ or ▶ on the radio faceplate.

To manage favorites, see “Manage Favorites” under *Home Page on page 7-5*.

Satellite Radio

SiriusXM® Satellite Radio Service

Vehicles with a SiriusXM satellite radio tuner and a valid SiriusXM satellite radio subscription can receive SiriusXM programming.

SiriusXM is a satellite radio service based in the 48 contiguous United States and 10 Canadian provinces. SiriusXM satellite radio has a wide variety of programming and commercial-free music, coast to coast, and in digital-quality sound. A service fee is required to receive the SiriusXM service.

See www.siriusxmradio.com or call 1-866-635-2349 (U.S.); or see www.xmradio.ca or call 1-877-209-0079 (Canada).

When SiriusXM is active, the channel name and number, category name, song title, and artist display on the screen.

Browsing SiriusXM Channels

To browse the SiriusXM channels:

1. Press the MENU knob.
2. Turn the MENU knob to highlight XM Channel List.
3. Turn the MENU knob to highlight the desired XM Channels.

Radio Reception

Frequency interference and static can occur during normal radio reception if items such as phone chargers, vehicle convenience accessories, and external electronic devices are plugged into the accessory power outlet. If there is

interference or static, unplug the item from the accessory power outlet.

FM

FM signals only reach about 16 to 65 km (10 to 40 mi). Although the radio has a built-in electronic circuit that automatically works to reduce interference, some static can occur, especially around tall buildings or hills, causing the sound to fade in and out.

AM

The range for most AM stations is greater than for FM, especially at night. The longer range can cause station frequencies to interfere with each other. Static can also occur when things like storms and power lines interfere with radio reception. When this happens, try reducing the treble on the radio.

SiriusXM Satellite Radio Service

If equipped, SiriusXM Satellite Radio Service provides digital radio reception. Tall buildings or hills can interfere with satellite radio signals, causing the sound to fade in and out. In addition, traveling or standing under heavy foliage, bridges, garages, or tunnels may cause loss of the SiriusXM signal for a period of time.

Cell Phone Usage

Cell phone usage, such as making or receiving phone calls, charging, or just having the phone on may cause static interference in the radio. Unplug the phone or turn it off if this happens.

Fixed Mast Antenna

The fixed mast antenna will go through most car washes as long as it is securely attached. If the antenna becomes slightly bent, straighten it out by hand. If it is badly bent, replace it.

Occasionally check that the antenna is tight at the base. If tightening is required, protect the paint from damage.

Multi-Band Antenna

The roof antenna is for OnStar®, SiriusXM® Satellite Radio, and GPS (Global Positioning System). Keep clear of obstructions for clear reception. If the vehicle has a sunroof, and it is open, reception can also be affected.

Pandora Internet Radio

If equipped, Pandora® is a free Internet radio service that streams personalized radio stations based on artists, tracks, genres, and comedians. Create stations using the Pandora website or Smartphone application, then use (thumbs up) or (thumbs down) to personalize

stations. To set up an account, or for more information, go to www.pandora.com. Pandora may not be available in Canada or Mexico.

A phone or tablet with Internet connection and the Pandora application installed is required. Personal cell phone data plans are used. Make sure the latest version is installed on the device.

Launching Pandora

Connect the iPhone to the USB port, or connect Android® or BlackBerry® through Bluetooth. See *Bluetooth (Overview) on page 7-31* or *Bluetooth (Infotainment Controls - Base Connected Radio) on page 7-42* or *Bluetooth (Voice Recognition - Base Connected Radio) on page 7-46* or *Bluetooth (Infotainment Controls - Base Radio) on page 7-32* or *Bluetooth (Voice Recognition - Base Radio) on page 7-37*. For first time use, set up the stations before connecting to the vehicle. The Pandora icon will be available on the Home Page.

When Pandora is chosen, the Pandora logo will populate on the screen and the system will display “Acquiring Pandora Radio Station.” Launch times can be significant.

Using the iPhone

1. Plug the device into the USB port. The phone screen must be unlocked.
2. Launch Pandora from the Home Page by selecting the Pandora icon.

If nothing happens when the available Pandora screen button is pressed, download the latest Pandora application and retry.

The login screen may display on the device.

Using an Android or BlackBerry Phone

The BlackBerry phone must be unlocked to launch Pandora service.

1. Pair the phone using Bluetooth.
2. Launch Pandora by selecting Pandora on the Home Page.

If nothing happens when the available Pandora screen button is selected, download the latest Pandora application and retry.

The login screen may display on the device.

Pandora Menus

Press the MENU knob.

Pandora has a menu with the following:

Tone Settings: Select to adjust the tone settings. See *AM-FM Radio on page 7-8*.

Bookmark Artist: Select to bookmark the artist.

Bookmark Song: Select to bookmark the song.

Auto Volume: This feature sets the auto volume based on the speed of the vehicle and noise in the vehicle. See *AM-FM Radio on page 7-8*.

Pandora Features

Pandora service has features to rate tracks, skip tracks, or change stations.

(Bookmarks): When selected during a track, a choice displays to bookmark the artist or track. This sends the bookmark to the Pandora account.

(Thumbs Down): When selected, Pandora stores this information, changes to the next track, and does not play this track on this station again. This helps Pandora choose which tracks should not play on this station. This feature is only available on user created stations.

(Thumbs Up): When selected, Pandora stores this information and is highlighted for the remainder of the track. This helps Pandora choose which tracks should play on this station.

(Next Track): When selected, Pandora changes to the next track.

▶ or ❚❚ (Play/Pause): Select to play or pause playback.

Pandora Skip Limit

Pandora limits the number of skips allowed on their service. When the skip limit is reached, or next arrow will not skip the currently playing track, but the feedback will be recorded.

Advertisement on Pandora

Pandora may display advertisements. The artist name and track title will not be displayed and the skip track button will not be available.

Pandora Troubleshooting

Unable to Connect Device to Vehicle

If the device is unable to connect to the USB or Bluetooth:

1. Turn the vehicle off.
2. Take the Remote Keyless Entry (RKE) transmitter at least 6 m (20 ft) away from the vehicle.
3. Wait about 30 seconds, and try to connect the device again. See *Bluetooth (Overview) on page 7-31* or *Bluetooth (Infotainment Controls - Base Connected Radio) on page 7-42* or *Bluetooth (Voice Recognition - Base Connected Radio) on page 7-46* or *Bluetooth (Infotainment Controls - Base Radio) on page 7-32* or *Bluetooth (Voice Recognition - Base Radio) on page 7-37*.

Unable to Start Pandora

If the device is unable to launch Pandora:

- Check that the latest version of Pandora is installed.
- Check that there is an active account logged into Pandora.
- Have at least one station created.
- For Android and BlackBerry devices, check that the device is paired with the vehicle, and whether the device displays in the Connected phone sources list under the Phone icon from the Home Page.
- For an iPhone, check that the USB cable is connected to the USB port and the screen is unlocked.
- Close Pandora on the device and launch again. Devices that allow multitasking may require an extra step to quit the Pandora application. See the cell phone manufacturer's user guide.

Thumbs Up or Thumbs Down Error

If there is an error trying to rate a track with the 👎 or 👍 buttons, the message “Thumbs Down Error” or “Thumbs Up Error” will display. Press OK to dismiss.

Loss of Audio

Loss of Pandora audio can happen in different ways:

- Weak or lost data connection.
- Device needs to be charged.
- Application needs to be relaunched.
- Connection between phone and radio lost.
- An iPhone is connected to both Bluetooth and the USB port.

  Playback can be resumed from a loss of audio by double tapping on the iPhone home button then scrolling through the icons to find an icon that allows a change of flow between Bluetooth and USB cable.

  Volume and song selection may be controlled using the Infotainment controls or on the phone/device. If Pandora is selected and nothing is heard, check the volume setting on both phone/device and the Infotainment system.

Common Pandora Messages

Pandora Error/Please Check Device: Not signed in or Pandora is down for maintenance.

No Stations Available: No stations are available on the Pandora server through the connected device.

Action Unavailable. Please Check Device Connection: A few conditions for loss of Internet connection are:

- The connected device loses its cellular connection.
- The device does not support Internet connectivity.
- The device is not in the vehicle.
- The Bluetooth signal is lost.

No skips remaining for this station or permitted during advertisements:

- The maximum Pandora skip limit has been reached according to the plan that was obtained.
- Skipping an advertisement was tried.

See www.pandora.com/help. If the service will not work, see a dealer for assistance.

Audio Players

CD Player

If the vehicle is equipped with a CD player, it can be used for CD and MP3 audio.

With the vehicle on, insert a disc into the slot, label side up. Press the MEDIA button to select CD as a source.

The system is capable of playing most:

- Audio CDs
- CD-R
- CD-RW
- MP3 or unprotected WMA formats

When playing any compatible recordable disc, the sound quality can be reduced due to disc quality, the method of recording, the quality of the music that has been recorded, or the way the disc has been handled.

There can be increased skipping, difficulty in finding tracks, and/or difficulty in loading and ejecting. If these problems occur, check the disc for damage or try a known good disc.

To avoid damage to the CD player:

- Do not use scratched or damaged discs.
- Do not apply labels to discs. The labels could get caught in the player.
- Insert only one disc at a time.
- Keep the loading slot free of foreign materials, liquids, and debris.
- Use a marking pen to label the top of the disc.

Loading and Ejecting Discs

To load a disc:

1. Turn the vehicle on.
2. Insert a disc into the slot, label side up. The player pulls it in the rest of the way. If the disc is

damaged or improperly loaded, there is an error and the disc ejects.

Playing an Audio CD

Press the MEDIA button on the faceplate until CD is selected.

On the CD main page, either a track number displays at the beginning of each track, or Song, Artist, and Album information displays when available.

Use the following screen controls to play the disc:

⏮ (Seek Previous/Fast Reverse): While on the CD main page:

- Press to seek to the beginning of the current or previous track. If the track has been playing for less than five seconds, it seeks to the previous track. If longer than five seconds, the current track starts from the beginning.
- Press and hold to fast reverse through a track. Release the button to return to playing speed. Elapsed time displays.

⏭ (Seek Next/Fast Forward): While on the CD main page:

- Press to seek to the next track.
- Press and hold to fast forward through a track. Release the button to return to playing speed. Elapsed time displays.

⏯ (Pause/Play): While on the CD main page, press to pause. Press again to resume.

🔀 (Shuffle): Press 🔀 to play the songs in random order. Press again to turn off.

If a Blu-ray Disc® or DVD disc is loaded into the disc player and the CD screen button is selected, a message comes on the screen to use the Video application. The Video application is only available on vehicles with Rear Seat Entertainment (RSE).

CD Menu

While on the CD main page, press the MENU knob to display the CD menu and the following may display:

Browse: Select to display the files or songs on the CD.

Tone Settings: Select to adjust Bass, Midrange, Treble, Balance, Fade, and EQ (Equalizer). See “Tone Settings” under *AM-FM Radio on page 7-8*.

Auto Volume: If equipped, this feature adjusts the volume based on the vehicle speed. Select the level between Off, Low, Medium-Low, Medium, Medium-High, and High. Press BACK to go to the previous menu.

DSP: If equipped, this feature adjusts the pre-defined settings. See “DSP” in *AM-FM Radio on page 7-8*.

EQ (Equalizer): If equipped, this feature adjusts the equalizer settings. See “EQ (Equalizer)” in *AM-FM Radio on page 7-8*.

Error Messages

If Disc Error displays and/or the disc comes out, it could be for one of the following reasons:

- The disc has an invalid or unknown format.
- The disc is very hot. Try the disc again when the temperature returns to normal.
- The road is very rough. Try the disc again when the road is smoother.
- The disc is dirty, scratched, wet, or upside down.
- The air is very humid. Try the disc again later.
- There was a problem while burning the disc.
- The label is caught in the CD player.

If Disc Player Error displays, it could be for one of the following reasons:

- The player temperature is too high.
- There are load or eject errors.

If the CD is not playing correctly for any other reason, try a known good CD.

If any error continues, contact your dealer.

Playing an MP3 CD

To play an MP3 CD, follow the same instructions as “Playing an Audio CD.”

The following guidelines must be met when creating an MP3 disc, otherwise the CD might not play:

- Sampling rate: 16 kHz, 22.05 kHz, 24 kHz, 32 kHz, 44.1 kHz, and 48 kHz.
- Bit rates supported: 8, 16, 24, 32, 40, 48, 56, 64, 80, 96, 112, 128, 144, 160, 192, 224, 256, and 320 kbps.
- Maximum number of folders: eight folders with 255 files per folder.
- Maximum of 1,000 files on a disc.
- Recorded on a CD-R or CD-RW.

Root Directory

The root directory is treated as a folder. All files contained directly under the root directory are accessed prior to any root directory folders.

Empty Folders

If a root directory or folder is empty or contains only folders, the player advances to the next folder in the file structure that contains a compressed audio file. The empty folder(s) are not displayed or numbered.

No Folder

When the CD only contains compressed audio files without any folders, all files are under the root folder.

USB Port

Playing from a USB

A USB mass storage device or Media Transfer Protocol (MTP) device can be connected to the USB port.

The vehicle may have USB ports in the center console, armrest, or one in the upper glove box. See *Center Console Storage on page 4-3* and *Glove Box on page 4-2*.

USB MP3 Player and USB Drives

- The USB MP3 players and USB drives connected must comply with the USB Mass Storage Class specification (USB MSC).
- Hard disk drives are not supported.
- Supported file system is FAT32.

To play a USB device:

- Connect the USB.
- Press the MEDIA button on the faceplate until the connected device is shown.

While the USB source is active, press the corresponding faceplate button for the icons on the screen to operate USB function:

- ⏮ (Seek Previous/Fast Reverse)
- ⏭ (Seek Next/Fast Forward)
- ⏯ (Play/Pause)
- ⤮ (Shuffle)

For information on how to use the screen icons, see “Playing an Audio CD.”

USB Menu

Press the MENU knob to display the USB menu and the following may display:

Browse: Select to display the files and folders on the USB device.

Tone Settings: Select to adjust Bass, Midrange, Treble, Balance, Fade, and EQ (Equalizer). See “Tone Settings” under “Playing an Audio CD” in *CD Player on page 7-15*.

Auto Volume: If equipped, see “Playing an Audio CD” in *CD Player on page 7-15*.

EQ (Equalizer): If equipped, this feature adjusts the equalizer settings. See “EQ (Equalizer) Settings” in *AM-FM Radio on page 7-8*.

Playing from an iPod®/iPad®/iPhone®

This feature supports the following devices:

- iPod nano® (1st, 2nd, 3rd, and 4th generation)
- iPod with video (5.0 and 5.5 generation)
- iPod classic® (6th generation)
- iPod touch® (1st and 2nd generation)
- iPad

- iPhone 3G, iPhone 3GS, iPhone 4

There may be problems with operation and function in the following situations:

- When connecting a device with a more recent version of the firmware installed than is supported by the infotainment system.
- When connecting a device on which firmware from other providers is installed.

To connect and control a device:

1. Connect one end of the standard USB cable to the device's dock connector.
2. Connect the other end to a USB port in the center console. See *Center Console Storage on page 4-3*.
3. Press the MEDIA button to select the source.

The music information displays on the radio's display and begins playing through the vehicle's audio system.

The device battery recharges automatically while the vehicle is on. When the vehicle is off while a device is connected using the USB cable, the device battery stops charging and the device will automatically turn off.

If the device is an unsupported model, it can still be listened to in the vehicle by connecting to the auxiliary input jack using a standard 3.5 mm (1/8 in) stereo cable.

Menu

Press the MENU knob to display the device Menu and the following may display:

Browse: Select to display the files or songs on the device. See "Browse Device Media" later in this section.

Tone Settings: Select to adjust Bass, Midrange, Treble, Balance, Fade, and EQ (Equalizer). See "Tone Settings" under "Playing an Audio CD" in *CD Player on page 7-15*.

Auto Volume: If equipped, see "Playing an Audio CD" in *CD Player on page 7-15*.

EQ (Equalizer): If equipped, this feature adjusts the Equalizer settings. See "EQ (Equalizer)" in *AM-FM Radio on page 7-8*.

Browse Device Media

Use the following to browse:

Playlists:

1. Turn the MENU knob to highlight and press to view the playlists stored on the device.
2. Turn the MENU knob to highlight and press to select a playlist name to view a list of all songs in the playlist.

3. Turn the MENU knob to highlight and press to select the song from the list to begin playback.

Artists:

1. Turn the MENU knob to highlight and press to view the artists stored on the device.
2. Turn the MENU knob to highlight and press to select an artist name to view a list of all albums by the artist.
3. Turn the MENU knob to highlight and press to select an album name to view a list of all songs on the album.
4. Turn the MENU knob to highlight and press to select the song from the list to begin playback.

Albums:

1. Turn the MENU knob to highlight and press to view the albums stored on the device.
2. Turn the MENU knob to highlight and press to select an album name to view a list of all songs on the album.
3. Turn the MENU knob to highlight and press to select the song from the list to begin playback.

Genres:

1. Turn the MENU knob to highlight and press to view the genres stored on the device.
2. Turn the MENU knob to highlight and press to select a genre name to view a list of artists of that genre.
3. Turn the MENU knob to highlight and press to select to view albums by that artist.
4. Turn the MENU knob to highlight and press to select an album to view songs.
5. Turn the MENU knob to highlight and press to select the song from the list to begin playback.

Songs:

1. Turn the MENU knob to highlight and press to view a list of all songs stored on the device.
2. Turn the MENU knob to highlight and press to select the song from the list to begin playback.

SD Card Reader

This vehicle may have an SD card reader in the center console or armrest. See *Center Console Storage on page 4-3*.

1. Plug the SD card into the reader.
2. Press the MEDIA button to select the SD device.

If an SD card has already been connected, but a different source is currently active, press the MEDIA screen button repeatedly to cycle through all of the available audio source screens, until the SD card screen is shown.

Playing Music from the SD Card

An SD card is played the same way a USB device is played. See *USB Port on page 7-18*.

Auxiliary Jack

This vehicle may have an AUX jack in the center console or armrest. See *Center Console Storage on page 4-3*.

Possible auxiliary audio sources include:

- Laptop computer
- Audio music player

This jack is not an audio output. Do not plug headphones into the auxiliary input jack. Auxiliary devices should be set up while the vehicle is in P (Park).

Connect a 3.5 mm (1/8 in) cable from the auxiliary device to the auxiliary input jack.

If an auxiliary device has already been connected, but a different source is currently active, press the MEDIA faceplate button repeatedly to scroll through all of the available audio source screens, until the AUX source screen is shown.

Playing from the AUX Jack

An auxiliary device is played through the audio system and controlled through the device itself.

AUX Menu

Press the MENU knob to display the AUX menu and the following may display:

Tone Settings: Select to adjust Bass, Midrange, Treble, Balance, Fade, and EQ (Equalizer). See “Tone Settings” under *AM-FM Radio on page 7-8*.

Auto Volume: If equipped, see “Playing an Audio CD.”

DSP: If equipped, this feature adjusts the pre-defined settings. See “DSP” in *AM-FM Radio on page 7-8*.

EQ (Equalizer): If equipped, this feature adjusts the pre-defined equalizer settings. See “EQ (Equalizer)” in *AM-FM Radio on page 7-8*.

Bluetooth Audio

If equipped, music may be played from a paired Bluetooth device. See “Pairing” in “Information Controls” under “Bluetooth” for help pairing a device.

Volume and song selection may be controlled by using the infotainment controls or the phone/device.
If Bluetooth Audio is selected and nothing is heard, check the volume setting on both the phone/device and the infotainment system.

Launch music by pressing the MEDIA screen button on the Home Page.

To play music via Bluetooth:

1. Power on the device, and pair to connect the device.
2. Once paired, go into the audio application from the Home Page or via the application tray. Select MEDIA until Bluetooth displays.

Bluetooth Audio Menu

Press the MENU screen button to display the Bluetooth Audio menu. The following may be available:

Tone: Turn the MENU knob to adjust the tone settings.

Press ◁ BACK to go back to the previous menu.

Manage Bluetooth Devices: Select to go to the Bluetooth page to add or delete devices.

When selecting Bluetooth Audio, the radio may not be able to launch the audio player on the connected device to start playing. When the vehicle is not moving, use the phone to begin playback.

All devices launch audio differently. When selecting Bluetooth Audio as a source, the radio may show as paused on the screen. Press play on the device or press ▶ to begin playback.

Some phones support sending Bluetooth music information to display on the radio. When the radio receives this information, it will check to see if any is available and display it. For more information about supported Bluetooth features, see www.gm.com/bluetooth.

OnStar System

An OnStar® subscriber has the ability to connect to the OnStar system (if equipped) and ask an OnStar Advisor to download a destination into the vehicle. OnStar will send address information and location coordinates of the destination into the vehicle.

To access from the Home Page, turn the MENU knob to highlight the OnStar icon. Press the MENU knob to access.

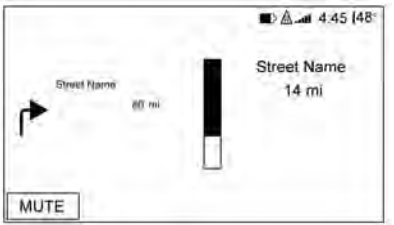

Press the button below the MUTE screen button to mute the navigation directions. The previous audio selection will play.

The MUTE screen button will change to UNMUTE. Press the button below UNMUTE to enable the navigation directions again.

OnStar Turn-by-Turn Navigation

Press the MENU knob to go to the Turn-by-Turn menu.

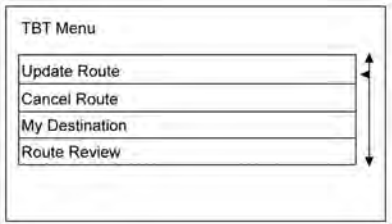

The following options are available:

- Update Route: only shows if the vehicle is off the route
- Cancel Route
- My Destination
- Route Preview
- Repeat

When the system is downloading a route, the only option available is Cancel Route. Once the route is downloaded, the additional list items display.

My Destination

If My Destination is selected, a special version of the Maneuver View displays. The Destination Address is shown in the Street Name field and the total distance to the destination is shown in the Distance to Maneuver View. Press the button below the DONE screen button to return to the Maneuver View.

Route Preview

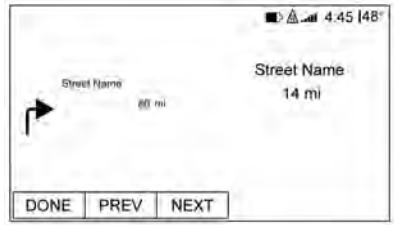

- If Route Preview is selected, a special version of the Maneuver View displays.
- Press the button below the NEXT screen button to display the next maneuver information, including distance between it and the previous maneuver.
- Press the button below the PREV screen button to display the previous maneuver information, including distance between it and the previous maneuver.

While on the current maneuver, the PREV screen button is hidden. If on the last maneuver, the NEXT screen button is hidden.

- Press the button below the DONE screen button to return to the Maneuver View.

Repeat

Press the button below the REPEAT screen button to go back to the Maneuver View. The audible maneuver prompt is repeated.

Canceling a Turn-by-Turn Route

Press the button below the Cancel Route screen button on the Turn-by-Turn menu. A screen displays to confirm the cancellation.

Voice Recognition

If equipped, voice recognition allows for hands-free operation within the audio and phone applications. This feature can be started by pressing either the button on the steering wheel or by selecting the on the screen display.

However, not all features within these areas are supported by voice commands. Generally, only complex tasks that require multiple manual interactions to complete are supported by voice commands.

For example, tasks that take more than one or two button presses such as selecting a song or artist to play from a media device would be supported by voice commands. Other tasks, like adjusting the volume or seeking up or down are audio features that are easily performed by pressing one or two buttons, and are not supported by voice commands.

In general there are flexible ways to speak commands for completing the tasks. Most of them, except destination entry and voice keypad, can be completed in a single command. If the task takes more than one command to complete, the first command would be to indicate the kind of task that is to be performed. The system replies with prompts that lead through a dialog to enter the necessary information.

Voice recognition can be used when the ignition is on or when Retained Accessory Power (RAP) is active. See *Retained Accessory Power (RAP) on page 9-28*.

Using Voice Recognition

Voice recognition becomes available once the system has been initialized. This begins when the ignition is turned on. Initialization may take a few moments.

1. Press on the steering wheel control to activate voice recognition, or select on the infotainment screen on the center stack.
   - If voice recognition is started from the steering wheel control, the instrument cluster displays the selections and visual dialog content.
   - If voice recognition is started from the infotainment screen, the selections and visual dialog content are displayed on both the center stack display and the instrument cluster display.
2. The audio system mutes and the system plays a prompt followed by a beep.
3. Wait until after the beep completes, then clearly speak one of the commands described in this section.

   Press to interrupt any voice recognition system prompt. For example, if the prompt seems to be taking too long to finish, press again and the beep should happen right away.

There are two voice prompt modes supported:

- Long verbal prompts: The longer prompts provide more information regarding the supported actions.
- Short prompts: The short prompts provide simple instructions about what can be stated.

If a command is not spoken, the voice recognition system says a help prompt.

Prompts and Screen Displays

While a voice recognition session is active, there will be corresponding buttons on screens displayed. Manual interaction in the voice recognition session is permitted. Interaction during a voice session may be completed entirely using voice commands, or some selections may expedite a session. If a selection is made using a manual control, the dialog will progress in the same way as if the selection was made through a voice command. Once the system is able to complete the task, or the session is terminated, the voice recognition dialog stops.

An example of this type of manual intervention is pressing on an entry of a displayed number list instead of speaking the number associated with the entry desired.

Canceling Voice Recognition

- Press the Home screen button to terminate the voice recognition session which was initiated by pressing on the infotainment screen on the center stack.
- Press or say “Cancel” or “Exit” to terminate the voice recognition session and display the screen from which voice recognition was initiated.
- Press on the steering wheel controls to terminate the voice session and display the screen from which voice recognition was initiated.

Helpful Hints for Speaking Commands

Voice recognition can understand commands that are either naturally stated in sentence form (English only), or direct commands that state the application and the task.

For languages that do not support natural language commands in sentence form, use the direct commands shown as examples on the display screen.

For best results:

- Listen for the prompt and wait for the beep before saying a command or reply.
- Say “Help” or look at the screen display for commands.
- Voice recognition system prompt can be interrupted during a prompt by pressing again.

  For example, if the prompt seems to be taking too long to finish, or if what is being prompted causes a need for an immediate reply, press again and wait for the beep.
- Speak the command naturally, not too fast, not too slow. Use direct commands without a lot of extra words.
- Usually Phone and Audio commands can be spoken in a single command.

  For example, “Call Dave Smith at work,” “Play” followed by the artist or song name, or “Tune” followed by the radio station number.

There is no need to memorize specific command words. Direct commands might be more clearly understood by the system. An example of a direct command would be “Call 555-1212.” Examples of these direct commands are displayed on most of the screens while a voice session is active.
If “Phone” or “Phone Commands,” is stated, the system understands that a phone call is requested and will respond with questions until enough details are gathered.

If the phone number has been saved with a name and a place, the direct command should include both, for example “Call Dave Smith at work.”

Using Voice Recognition for List Options

When a list is displayed, a voice prompt will ask to confirm or select an option from that list. A selection can be made by manually selecting the item, or by speaking the line number for the item to select.

When a screen contains a list, options may be available but not displayed. The list on a voice recognition screen functions the same as a list on other screens. Scrolling can be used to help display other entries from the list.

Manually scrolling or paging the list on a screen during a voice recognition session suspends the current voice recognition event and plays the prompt “Make your selection from the list using the manual controls or press the Back button to try again.”

If manual selection takes more than 15 seconds, the session terminates and prompts that it has timed out. The screen returns back to the screen where voice recognition was initiated.

The Back Command

Say “Back” or press the Back button to go to the previous screen.

If in voice recognition, and “Back” is stated all the way through to the initial screen, then “Back” is stated one more time, the voice recognition session will cancel.

Help

Say “Help” on any voice recognition screen and the help prompt for the screen is played. Additionally, a pop-up displays a text version of the help prompt. Depending on how voice recognition was initiated, the Help pop-up will either display on the instrument cluster or the infotainment screen. Press the Dismiss button to make the pop-up go away.

Pressing while the help prompt is playing will terminate the prompt and a beep will be heard. Doing this will stop the help prompt so that a voice command can be used.

Voice Recognition for the Radio

Select the screen button to launch audio voice recognition.
If the voice button is pressed in a radio screen, the voice commands for radio and media features are available.

“Switch to AM”: Switch bands to AM and tune to the last AM radio station.

“Switch to FM”: Switch bands to FM and tune to the last FM radio station.

“Switch to XM”: Switch bands to SiriusXM and tune to the last SiriusXM channel.

“Tune to <AM frequency> AM”: Tune to the radio station whose frequency is identified in the command (like “nine fifty”).

“Tune to <FM frequency> FM”: Tune to the radio station whose frequency is identified in the command (like “one o one point one”).

“Tune to XM <XM channel number>”: Tune to the SiriusXM radio station whose channel number is identified in the command.

“Tune to XM <XM channel name>”: Tune to the SiriusXM radio station whose channel name is identified in the command.

Voice Recognition for Audio My Media

If browsing My Media when the voice button is selected, the voice recognition commands for My Media features are available.

“Play Artist”: Begin a dialog to enter a specific Artist name.

“Play Artist <artist name>”: Begin playback of the media selection identified in the command.

“Play Album”: Begin a dialog to enter a specific album name.

“Play Album <album name>”: Begin playback of the identified album name in the command.

“Play Song”: Begin a dialog to enter a specific song name.

“Play Song <song name>”: Begin playback of the identified song name in the command.

“Play Genre”: Begin a dialog to enter a specific genre.

“Play Genre <genre name>”: Begin playback of the media selection identified in the command.

“Play Playlist”: Begin a dialog to enter a specific playlist name.

“Play Playlist <playlist name>”: Begin playback of the identified playlist in the command.

“Play <device name>”: Play music from a specific device identified by name. The device name is the name displayed on the screen when the device is first selected as an audio source.

“Play Chapter”: Begin a dialog to enter a specific name.

“Play Chapter <chapter name>”: Begin playback of the media selection identified in the command.

“Play Audiobook”: Begin a dialog to enter a specific name.

“Play Audiobook <audiobook name>”: Begin playback of the media selection identified in the command.

“Play CD Track <track number>”: Begin playback of the CD at the track identified in the command.

“Play Episode”: Begin a dialog to enter a specific name.

“Play Episode <episode name>”: Begin playback of the media selection identified in the command.

“Play Podcast”: Begin a dialog to enter a specific name.

“Play Podcast <podcast name>”: Begin playback of the media selection identified in the command.

“Play Video”: Begin a dialog to enter a specific name.

“Play Video <video name>”: Begin playback of the media selection identified in the command.

“My Media”: Begin a dialog to enter the desired media content.

Handling Large Amounts of Media Content

It is expected that large amounts of media content will be brought into the vehicle. It may be necessary to handle large amounts of media content in a different way than smaller amounts of media. The system may limit the options of voice recognition by not allowing selection of song titles by voice at the highest level if the number of songs exceeds the maximum limit.

Voice command option changes through media content limits are:

- Song files including other individual files of all media types such as audiobook chapters, podcast episodes, and videos.
- Album type folders including types such as albums and audiobooks.

There are no restrictions if the number of song files and albums is less than 4,000. When the number of song files connected to the system is between 4,000 and 8,000, the content cannot be accessed directly with one command like “Play <song name>.” The restriction is that the command “Play Song” must be spoken first; the system will then ask for the song name. The reply command would be to say the name of the song to play.

Similar limits exist for album content. If there are more than 4,000 albums, but less than 8,000, the content cannot be accessed directly with one command like, “Play <album name>.” The command “Play Album” must first be spoken; the system will then ask for the album name. The reply would be to say the name of the album to play.

Once the number of songs has exceeded approximately 8,000, there is no support for accessing the songs directly through voice commands. There will still be access to the media content by using commands for playlists, artists, and genres.

The access commands for playlists, artists, and genres are prohibited after the number of this type of media exceeds 4,000.

The system will provide feedback the first time voice recognition is initiated if it has become apparent that any of these limits are reached during a device initializing process.

Voice Recognition for the Phone

“Call <contact name>”: Initiate a call to an entered contact. The command may include location if the contact has location numbers stored.

“Call <contact name> At Home,” “At Work,” “On Mobile,” or “On Other”: Initiate a call to an entered contact and location at home, at work, on mobile device, or on another phone.

“Call <phone number>”: Initiate a call to a standard phone number seven or 10 digits in length, and also 911, 411, or 611.

“Pair Phone”: Begins the Bluetooth pairing process. Follow instructions on the radio display.

“Switch Phone”: Select a different phone for outgoing calls.

“Voice Keypad”: Begins a dialog to enter special numbers like international numbers. The numbers can be entered in groups of digits with each group of digits being repeated back by the system. If the group of digits is not correct, the command “Delete” will remove the last group of digits and allow them to be re-entered. Once the entire number has been entered, the command “Call” will start dialing the number.

“Voice Mail”: Initiate a call to voice mail numbers.

Voice Recognition for OnStar (If Equipped)

“OnStar”: Begin OnStar Voice Recognition.

Bluetooth Speech Recognition (If Equipped)

Voice Pass-Thru allows access to the speech recognition commands on the cell phone. See your cell phone manufacturer’s user guide to see if the cell phone supports this feature.

Activating this function will start the Bluetooth Speech Recognition on a connected phone.

The steering wheel controls are used to operate this function.

Press and hold to activate.
A voice session begins so that voice commands can be given to Siri® or many other controls provided by the cell phone.

Press ✓ to exit or press to close and return to the previous application prior to the start of Voice Pass-Thru.

Phone

Bluetooth (Overview)

Instructions for using the cell phone may differ between infotainment systems. The base radio and base radio with connectivity instructions are included in this manual. See the infotainment manual for instructions on the uplevel radios.

Bluetooth-capable systems can interact with many cell phones, allowing:

- Placement and receipt of calls in a hands-free mode.
- Sharing of the cell phone's address book or contact list with the vehicle.

To minimize driver distraction, before driving, and with the vehicle parked:

- Become familiar with the features of the cell phone. Organize the phone book and contact lists clearly and delete duplicate or rarely used entries. If possible, program speed dial or other shortcuts.
- Review the controls and operation of the infotainment system.
- Pair cell phone(s) to the vehicle. The system may not work with all cell phones. See "Pairing" in this section.
- If the cell phone has voice dialing capability, learn to use that feature to access the address book or contact list. See "Voice Pass-Thru" in this section.
- See "Storing and Deleting Phone Numbers" in this section.

⚠ Warning

When using a cell phone, it can be distracting to look too long or too often at the screen of the phone or the infotainment system.

(Continued)

Warning (Continued)

Taking your eyes off the road too long or too often could cause a crash resulting in injury or death. Focus your attention on driving.

Vehicles with a Bluetooth system can use a Bluetooth-capable cell phone with a Hands-Free Profile to make and receive phone calls. The infotainment system and voice recognition are used to control the system. The system can be used while in ON/RUN or ACC/ACCESSORY. The range of the Bluetooth system can be up to 9.1 m (30 ft). Not all phones support all functions and not all phones work with the Bluetooth system. See www.gm.com/bluetooth for more information about compatible phones.

Bluetooth Controls

Use the buttons on the instrument panel, faceplate, and the steering wheel to operate the Bluetooth system.

Steering Wheel Controls

(Press to Talk): Press to answer incoming calls, confirm system information, and start voice recognition.

(End Call): Press to end a call, reject a call, or cancel an operation. Press to mute or unmute the infotainment system.

Infotainment System Controls

For information about how to navigate the menu system using the infotainment controls, see *Overview on page 7-3*.

MENU: Turn to scroll through a list. Press to select the highlighted list option.

(Home Page): Press to go to the Home Page. See *Home Page on page 7-5*.

PHONE: Select to enter the phone main menu. See *Bluetooth (Overview) on page 7-31* or *Bluetooth (Infotainment Controls - Base Connected Radio) on page 7-42* or *Bluetooth (Voice Recognition - Base Connected Radio) on page 7-46* or *Bluetooth (Infotainment Controls - Base Radio) on page 7-32* or *Bluetooth (Voice Recognition - Base Radio) on page 7-37*.

Voice Recognition

The voice recognition system uses commands to control the system and dial phone numbers.

Noise: The system may not recognize voice commands if there is too much background noise, such as noise from open windows or loud talking inside the vehicle.

When to Speak: A tone sounds to indicate that the system is ready for a voice command. Wait for the tone and then speak.

How to Speak: Speak clearly in a calm and natural voice.

Audio System

When using the Bluetooth system, sound comes through the vehicle's front audio system speakers and overrides the audio system. Use the ⏻ knob during a call to change the volume level. The system maintains a minimum volume level.

Bluetooth Audio Quality

Turn off the Echo and Noise cancellation feature on your phone, if supported, for the best hands-free performance.

See www.gm.com/bluetooth.

Bluetooth (Infotainment Controls - Base Radio)

For information about how to navigate the menu system using the infotainment controls, see *Overview on page 7-3*.

Switching to Handset or Hands-Free Mode

To switch between handset mode and hands-free mode, use the OnStar command, “transfer call.”

Pairing

A Bluetooth-enabled cell phone must be paired to the Bluetooth system and then connected to the vehicle before it can be used. See your cell phone manufacturer's user guide for Bluetooth functions before pairing the cell phone. If a Bluetooth phone is not connected, calls can be made using OnStar Hands-Free Calling, if available. See *OnStar Overview on page 14-1*, if equipped.

Pairing Information

- Up to five cell phones can be paired to the Bluetooth system.
- The pairing process is disabled when the vehicle is moving.
- Pairing only needs to be completed once per phone, unless the pairing information on the cell phone changes or the cell phone is deleted from the system.
- Only one paired cell phone can be connected to the Bluetooth system at a time.
- If multiple paired cell phones are within range of the system, the system connects to the first available paired cell phone in the order that they were newly paired to the system. To connect to a different paired phone, see “Connecting to a Different Phone” later in this section.

Pairing a Phone or Device

1. From the Home Page, turn the MENU knob to access the PHONE screen button, then press the MENU knob to select the PHONE screen button. If a device has been previously paired, the main Phone menu will be shown. If no devices have been paired, Step 2 can be skipped.
2. Turn the MENU knob and press to select Manage Phones.
3. Press the button just below the PAIR screen button. A four-digit Personal Identification Number (PIN) appears on the display. The PIN is used in Step 5.
4. Start the pairing process on the cell phone to be paired to the vehicle. See the cell phone manufacturer's user guide for information on this process.
5. Locate the device named “Your Vehicle” in the list on the cell phone. Follow the instructions on the cell phone to enter the PIN provided in Step 3. If a six digit code is shown on the phone and the vehicle screen, confirm the codes are the same. The system recognizes the new connected phone after the pairing process is complete.

6. If the phone prompts to accept connection or allow phone book download, select Always Accept and Allow. The phone book may not be available if not accepted.
7. Repeat steps 1–6 to pair additional phones or devices.

Listing All Paired and Connected Phones

1. To list all paired devices, from the Home Page turn the MENU knob, then press to select the PHONE screen button.
2. Turn the MENU knob and press to select Manage Phones.

Deleting a Paired Phone

1. From the Home Page, turn the MENU knob, then press to select the PHONE screen button.
2. Turn the MENU knob and press to select Manage Phones.
3. Turn the MENU knob to highlight the phone to be deleted.
4. Press the button below the DELETE screen button to delete the highlighted device.
5. A confirmation screen is displayed. Press the button just below the DELETE screen button to confirm deletion.

Connecting to a Different Phone

1. From the Home Page, turn the MENU knob, then press to select the PHONE screen button.
2. Turn the MENU knob and press to select Manage Phones.
3. Turn the MENU knob to highlight the phone to be connected.
4. Press the button just below the CONNECT screen button to connect to the highlighted device.

Phone Menu

Once a phone is connected and selected, the following may display:

Recent Calls: Turn the MENU knob to highlight Recent Calls and press to select.

Contacts: Turn the MENU knob to highlight Contacts and press to select.

Keypad: Turn the MENU knob to highlight Keypad and press to select.

Active Call: Turn the MENU knob to highlight Active Call and press to select and display the active call screen.

Manage Phones: Turn the MENU knob to highlight Manage Phones and press to select.

Making a Call Using Contacts and Recent Calls

For cell phones that support the Contacts and Recent Calls feature, the Bluetooth system can use the contacts stored on your cell phone

to make calls. See your cell phone manufacturer's user guide or contact your wireless provider to find out if this feature is supported by your phone.

If the phone prompts to allow phone book download during the pairing process, select Always Accept and Allow. The phone book may not be available if not accepted.

When a cell phone supports the phone book feature, the Contacts and Recent Calls menus are automatically available.

The Contacts menu allows you to access the phone book stored in the cell phone to make a call.

The Recent Calls menu allows you to access the phone numbers from the Incoming Calls, Outgoing Calls, and Missed Calls menus on the cell phone to make a call.

To make a call using the Contacts menu:

1. From the Home Page, turn the MENU knob, then press to select the PHONE screen button.
2. Turn the MENU knob to highlight Contacts and press to select.
3. Turn the MENU knob to highlight the letter group and press to select.
4. Turn the MENU knob to highlight the contact and press to select.
5. Turn the MENU knob to highlight the desired number, then press the MENU knob to call the contact.

To make a call using the Recent Calls menu:

1. From the Home Page, turn the MENU knob, then press to select the PHONE screen button.
2. Turn the MENU knob to highlight Recent Calls and press to select.

   If necessary, select between Missed, Recent, and Sent calls by pressing the button below the appropriate screen button.
3. Turn the MENU knob to highlight the contact or the phone number.
4. Press the MENU knob to call the contact.

Making a Call Using the Keypad

To make a call:

1. From the Home Page, turn the MENU knob, then press to select the PHONE screen button.
2. Turn the MENU knob and press to select Keypad.
3. Turn the MENU knob to highlight the first digit and press to select. Continue this process through

the number. To call, press the button just below the CALL screen button.

Accepting or Declining a Call

When an incoming call is received, the infotainment system mutes and a ring tone is heard in the vehicle.

Accepting a Call

To accept a call, do one of the following:

- Press the button just below the ANSWER screen button.
- Press on the steering wheel controls.

Declining a Call

To decline a call, do one of the following:

- Press the button just below the IGNORE screen button.
- Press on the steering wheel controls.
- Do nothing.

Call Waiting

Call waiting must be supported on the Bluetooth phone and enabled by the wireless service carrier to work.

Accepting a Call Waiting Call

To accept a call waiting call, do one of the following:

- Press the button just below the SWITCH screen button.
- Press on the steering wheel controls.

Declining a Call Waiting Call

To decline a call waiting call, do one of the following:

- Press the button just below the IGNORE screen button.
- Press on the steering wheel controls.
- Do nothing.

Ending a Call

To end a call, do one of the following:

- Press the button just below the END screen button.
- Press on the steering wheel controls.

Dual Tone Multi-Frequency (DTMF) Tones

The in-vehicle Bluetooth system can send numbers during a call. This is used when calling a menu-driven phone system.

1. When a call is active, press the button just below the KEYPAD screen button.
2. Turn the MENU knob to highlight the first digit and press to select.

If not initially in the phone application, from the Home Page, turn the MENU knob, then press to select the PHONE screen button.

From the PHONE main menu, turn the MENU knob to highlight Active Call and press to select.

Bluetooth (Voice Recognition - Base Radio)

Using Voice Recognition

To use voice recognition, press on the steering wheel. Use the commands below for the various voice features. For additional information, say “Help” while you are in a voice recognition menu.

Pairing

Pairing a Phone

1. Press . The system responds “Ready,” followed by a tone.
2. Say “Bluetooth.”
3. Say “Pair.” The system responds with instructions and a four-digit Personal Identification Number (PIN). The PIN is used in Step 5.
4. Start the pairing process on the cell phone that you want to pair. For help with this process, see your cell phone manufacturer's user guide.
5. Locate the device named “Your Vehicle” in the list on the cell phone. Follow the instructions on the cell phone to enter the PIN provided in Step 3. The system may respond with a six digit code to be confirmed on the cell phone (instead of entering a four digit code), check that the same digits are shown on the cell phone and say "Yes" to confirm. Select Confirm on the cell phone as well. After the PIN is successfully entered, the system prompts you to provide a name for the paired cell phone. This name will be used to indicate which phones are paired and connected to the vehicle. The system responds with “<Phone name> has been successfully paired” after the pairing process is complete.
6. Repeat Steps 1−5 to pair additional phones.

Listing All Paired and Connected Phones

The system can list all cell phones paired to it. If a paired cell phone is also connected to the vehicle, the system responds with “is connected” after that phone name.

1. Press . The system responds “Ready,” followed by a tone.
2. Say “Bluetooth.”
3. Say “List.”

Deleting a Paired Phone

If the phone name to delete is unknown, see “Listing All Paired and Connected Phones.”

1. Press . The system responds “Ready,” followed by a tone.
2. Say “Bluetooth.”
3. Say “Delete.” The system asks for which phone to delete.

4. Say the name of the phone to delete.

Connecting to a Different Phone

To connect to a different cell phone, the Bluetooth system looks for the next available cell phone in the order in which all available cell phones were paired. This may need to be repeated depending on how many cell phones have been connected.

1. Press . The system responds "Ready," followed by a tone.
2. Say "Bluetooth."
3. Say "Change phone."
   - If another cell phone is found, the response will be "<Phone name> is now connected."

     This can be repeated to connect any of the up to five paired phones.
   - If another cell phone is not found, the original phone remains connected.

Storing and Deleting Phone Numbers

The following commands are used to delete and store phone numbers.

Store: This command will store a phone number, or a group of numbers as a name tag.

Digit Store: This command allows a phone number to be stored as a name tag by entering the digits one at a time.

Delete: This command is used to delete individual name tags.

Delete All Name Tags: This command deletes all stored name tags in the Hands-Free Calling Directory and the Destinations Directory.

Using the "Store" Command

1. Press . The system responds "Ready," followed by a tone.
2. Say "Store."
3. Say the entire phone number or a group of digits all at once with no pauses, then follow the directions given by the system to save a name tag for this number.

Using the "Digit Store" Command

If an unwanted number is recognized by the system, say "Correction" at any time to clear the last number.

To hear all of the digits recognized by the system, say "Verify" at any time.

1. Press . The system responds "Ready," followed by a tone.
2. Say "Digit Store."
3. Say each digit, one at a time. After each digit is entered, the system repeats back the digit it heard followed by a tone. After the last digit has been entered, say "Store," and then follow the directions given by the system to save a name tag for this number.

Using the “Delete” Command

1. Press . The system responds “Ready,” followed by a tone.
2. Say “Delete.”
3. Say the name tag you want to delete.

Using the “Delete All Name Tags” Command

This command deletes all stored name tags in the Hands-Free Calling Directory and the Destinations Directory.

To delete all name tags:

1. Press . The system responds “Ready,” followed by a tone.
2. Say “Delete all name tags.”

Listing Stored Numbers

The list command will list all the stored numbers and name tags.

Using the “List” Command

1. Press . The system responds “Ready,” followed by a tone.
2. Say “Directory.”
3. Say “Hands-Free Calling.”
4. Say “List.”

Making a Call

Calls can be made using the following commands.

Dial or Call: The dial or call command can be used interchangeably to dial a phone number or a stored name tag.

Digit Dial: This command allows a phone number to be dialed by entering the digits one at a time.

Re-dial: This command is used to dial the last number used on the cell phone.

Using the “Dial” or “Call” Command

1. Press . The system responds “Ready,” followed by a tone.
2. Say “Dial” or “Call.”
3. Say the entire number without pausing or say the name tag.

Once connected, the person called will be heard through the audio speakers.

Calling 911 Emergency (U.S. and Canada)

1. Press . The system responds “Ready,” followed by a tone.
2. Say “Dial” or “Call.”
3. Say “911.”
4. Say “Dial” or “Call.”

Calling 066 Emergency (Mexico)

1. Press . The system responds “Ready,” followed by a tone.
2. Say “Dial” or “Call.”
3. Say “066.”
4. Say “Dial” or “Call.”

Using the “Digit Dial” Command

The digit dial command allows a phone number to be dialed by entering the digits one at a time.

After each digit is entered, the system repeats back the digit it heard followed by a tone.

If an unwanted number is recognized by the system, say “Correction” at any time to clear the last number.

To hear all of the numbers recognized by the system, say “Verify” at any time.

1. Press . The system responds “Ready,” followed by a tone.
2. Say “Digit Dial.”
3. Say each digit, one at a time. After each digit is entered, the system repeats back the digit it heard followed by a tone. After the last digit has been entered, say “Dial.”

Once connected, the person called will be heard through the audio speakers.

Using the “Re-dial” Command

1. Press . The system responds “Ready,” followed by a tone.
2. After the tone, say “Re-dial.” The system dials the last number called from the connected cell phone.

Once connected, the person called will be heard through the audio speakers.

Receiving a Call

When an incoming call is received, the audio system mutes and a ring tone is heard in the vehicle.

- Press to answer the call.
- Press to ignore a call.

Call Waiting

Call waiting must be supported on the cell phone and enabled by the wireless service carrier.

- Press to answer an incoming call when another call is active. The original call is placed on hold.
- Press again to return to the original call.
- To ignore the incoming call, no action is required.
- Press to disconnect the current call and switch to the call on hold.

Three-Way Calling

Three-way calling must be supported on the cell phone and enabled by the wireless service carrier.

1. While on a call, press .
2. Say “Three-way call.”

3. Use the “Dial” or “Call” command to dial the number of the third party to be called.
4. Once the call is connected, press to link all callers together.

Ending a Call

Press to end a call.

Transferring a Call

Audio can be transferred between the Bluetooth system and the cell phone.

The cell phone must be paired and connected with the Bluetooth system before a call can be transferred. The connection process can take up to two minutes after the ignition is turned to ON/RUN.

To Transfer Audio from the Bluetooth System to a Cell Phone

During a call with the audio in the vehicle:

1. Press .
2. Say “Transfer Call.”

To Transfer Audio to the Bluetooth System from a Cell Phone

During a call with the audio on the cell phone, press . The audio transfers to the vehicle. If the audio does not transfer to the vehicle, use the audio transfer feature on the cell phone. See your cell phone manufacturer's user guide for more information.

Voice Pass-Thru

Voice pass-thru allows access to the voice recognition commands on the cell phone. See your cell phone manufacturer's user guide to see if the cell phone supports this feature.

To access contacts stored in the cell phone:

1. Press . The system responds “Ready,” followed by a tone.
2. Say “Bluetooth.”
3. Say “Voice.” The system responds “OK, accessing <phone name>.”

The cell phone's normal prompt messages will go through their cycle according to the phone's operating instructions.

Dual Tone Multi-Frequency (DTMF) Tones

The Bluetooth system can send numbers and the numbers stored as name tags during a call. You can use this feature when calling a menu-driven phone system. Account numbers can also be stored for use.

Sending a Number or Name Tag During a Call

1. Press . The system responds “Ready,” followed by a tone.
2. Say “Dial.”
3. Say the number or name tag to send.

Clearing the System

Unless information is deleted out of the in-vehicle Bluetooth system, it will be retained indefinitely. This includes all phone pairing information. For information on how to delete this information, see “Deleting a Paired Phone.”

Bluetooth (Infotainment Controls - Base Connected Radio)

For information about how to navigate the menu system using the infotainment controls, see *Overview on page 7-3*.

Switching to Handset or Hands-Free Mode

To switch between handset or hands-free mode, from the Home Page select the PHONE to display Call View.

- While the active call is hands-free, press the Handset screen button to switch to the handset mode. The screen button changes to Hands-Free once the Bluetooth device confirms it is operating as handset.
- While the active call is handset, select the Hands-Free screen button to switch to the hands-free mode. The screen button changes to Handset once the Bluetooth device confirms it is operating as hands-free.

Pairing

A Bluetooth-enabled cell phone must be paired to the Bluetooth system and then connected to the vehicle before it can be used. See your cell phone manufacturer's user guide for Bluetooth functions before pairing the cell phone. If a Bluetooth phone is not connected, calls can be made using OnStar Hands-Free Calling, if available. See *OnStar Overview on page 14-1*.

Pairing Information

- Up to 10 cell phones can be paired to the Bluetooth system.
- The pairing process is disabled when the vehicle is moving.
- Pairing only needs to be completed once per phone, unless the pairing information on the cell phone changes or the cell phone is deleted from the system.
- Only one paired cell phone can be connected to the Bluetooth system at a time.

- If multiple paired cell phones are within range of the system, the system connects to the most recently connected device. To connect to a different paired phone, see “Connecting to a Different Phone” after in this section.

Pairing a Phone or Device

1. From the Home Page, turn the MENU knob to access the PHONE screen button, then press the MENU knob to select the PHONE screen button. If a device has been previously paired, the main Phone menu will be shown. If no devices have been paired, Step 2 can be skipped.
2. Turn the MENU knob and press to select Manage Phones.
3. Press the button just below the PAIR/screen button. A four-digit Personal Identification Number (PIN) appears on the display. The PIN may be used in Step 5.
4. Start the pairing process on the cell phone to be paired to the vehicle. See the cell phone manufacturer's user guide for information on this process.
5. Locate “Chevrolet MyLink” on the display. Follow the instructions on the cell phone to enter the PIN provided in Step 3 or confirm the six-digit code shown on the display. After the PIN is successfully entered or the code is confirmed, the system responds with “<Device name> has been successfully paired” when the pairing process is complete.
6. If “Chevrolet MyLink” does not appear, turn the phone off or remove the phone battery and retry.
7. If the phone prompts to accept connection or allow phone book download, select always accept and allow. The phone book may not be available if not accepted.
8. Repeat Steps 1−7 to pair additional phones.

Listing All Paired and Connected Phones

1. To list all paired devices, from the Home Page turn the MENU knob, then press to select the PHONE screen button.
2. Turn the MENU knob and press to select Manage Phones.

Deleting a Paired Phone

1. From the Home Page, turn the MENU knob, then press to select the PHONE screen button.
2. Turn the MENU knob and press to select Manage Phones.
3. Turn the MENU knob to highlight the phone to be deleted.
4. Press the button below the DROP screen button to disconnect the highlighted device.

5. Press the button below the DELETE screen button to delete the highlighted device.
6. A confirmation screen is displayed. Press the button just below the DELETE screen button to confirm deletion.

Connecting to a Different Phone

1. From the Home Page, turn the MENU knob, then press to select the PHONE screen button.
2. Turn the MENU knob and press to select Manage Phones.
3. Turn the MENU knob to highlight the phone to be connected.
4. Press the button just below the CONNECT screen button to connect to the highlighted device.

Phone Menu

Once a phone is connected and selected, the following may display:

Recent Calls: Turn the MENU knob to highlight Recent Calls and press to select.

Contacts: Turn the MENU knob to highlight Contacts and press to select.

Keypad: Turn the MENU knob to highlight Keypad and press to select.

Active Call: Turn the MENU knob to highlight Active Call and press to select and display the active call screen.

Manage Phones: Turn the MENU knob to highlight Manage Phones and press to select.

Making a Call Using Contacts and Recent Calls

For cell phones that support the Contacts and Recent Calls feature, the Bluetooth system can use the contacts stored on your cell phone to make calls. See your cell phone manufacturer's user guide or contact your wireless provider to find out if this feature is supported by your phone.

If the phone prompts to allow phone book download during the pairing process, select Always Accept and Allow. The phone book may not be available if not accepted.

When a cell phone supports the phone book feature, the Contacts and Recent Calls menus are automatically available.

The Contacts menu allows you to access the phone book stored in the cell phone to make a call.

The Recent Calls menu allows you to access the phone numbers from the Incoming Calls, Outgoing Calls, and Missed Calls menus on the cell phone to make a call.

To make a call using the Contacts menu:

1. From the Home Page, turn the MENU knob, then press to select the PHONE screen button.
2. Turn the MENU knob to highlight Contacts and press to select.
3. Turn the MENU knob to highlight the contact and press to select.
4. Turn the MENU knob to highlight the desired number, then press the MENU knob to call the contact.

To make a call using the Recent Calls menu:

1. From the Home Page, turn the MENU knob, then press to select the PHONE screen button.
2. Turn the MENU knob to highlight Recent Calls and press to select.
   If necessary, select between Missed, Recent, and Sent calls by pressing the button below the appropriate screen button.
3. Turn the MENU knob to highlight the contact or the phone number.
4. Press the MENU knob to call the contact.

Making a Call Using the Keypad

To make a call:

1. From the Home Page, turn the MENU knob, then press to select the PHONE screen button.
2. Turn the MENU knob and press to select Keypad.
3. Turn the MENU knob to highlight the first digit and press to select. Continue this process through the number. To call, press the button just below the CALL screen button.

Accepting or Declining a Call

When an incoming call is received, the infotainment system mutes and a ring tone is heard in the vehicle.

Accepting a Call

To accept a call, do one of the following:

- Press the button just below the ANSWER screen button.
- Press on the steering wheel controls.

Declining a Call

To decline a call, do one of the following:

- Press the button just below the IGNORE screen button.
- Press on the steering wheel controls.
- Do nothing.

Call Waiting

Call waiting must be supported on the Bluetooth phone and enabled by the wireless service carrier to work.

Accepting a Call Waiting Call

To accept a call waiting call, do one of the following:

- Press the button just below the SWITCH screen button.
- Press on the steering wheel controls.

Declining a Call Waiting Call

To decline a call waiting call, do one of the following:

- Press the button just below the IGNORE screen button.
- Press on the steering wheel controls.
- Do nothing.

Ending a Call

To end a call, do one of the following:

- Press the button just below the END screen button.
- Press on the steering wheel controls.

Dual Tone Multi-Frequency (DTMF) Tones

The in-vehicle Bluetooth system can send numbers during a call. This is used when calling a menu-driven phone system.

1. When a call is active, press the button just below the KEYPAD screen button.
2. Turn the MENU knob to highlight the first digit and press to select.

If not initially in the phone application, from the Home Page, turn the MENU knob, then press to select the PHONE screen button. From the PHONE main menu, turn the MENU knob to highlight Active Call and press to select.

Bluetooth (Voice Recognition - Base Connected Radio)

Using Bluetooth Voice Recognition

To use voice recognition, press the button on the steering wheel. Use the commands below for the various voice features. For additional information, say “Help” while in a voice recognition menu. See *Voice Recognition on page 7-24* for help using voice recognition commands.

Making a Call

Calls can be made using the following commands.

Using the “Dial” or “Call” Command

To call a number:

1. Press . The system responds “Say a command or say help,” followed by a tone.
2. Say “Dial” or “Call” followed by the complete phone number.

Use the “Voice Keypad” command for international numbers or special numbers which include * or #.

Once connected, the person called will be heard through the audio speakers.

To call using a contact from your phone book:

1. Press . The system responds “Say a command or say help,” followed by a tone.
2. Say “Dial” or “Call” and then say the contact name. For example “Call Dave Smith at Work.”

Once connected, the person called will be heard through the audio speakers.

Calling 911 Emergency (U.S. and Canada)

1. Press . The system responds “Say a command or say help,” followed by a tone.
2. Say “Dial” or “Call.”
3. Say “911.”
4. Say “Dial” or “Call.”

Calling 066 Emergency (Mexico)

1. Press . The system responds “Say a command or say help,” followed by a tone.
2. Say “Dial” or “Call.”
3. Say “066.”
4. Say “Dial” or “Call.”

Once connected, the person called will be heard through the audio speakers.

Using the “Switch Phone” Command

1. Press . The system responds “Say a command or say help,” followed by a tone.
2. After the tone, say “Switch Phone.” The system displays a list of phones to select.

Using the “Voice Keypad” Command

1. Press . The system responds “Say a command or say help,” followed by a tone.
2. After the tone, say “Voice Keypad.” The system allows entry of special numbers and characters.

Using the “Voice mail” Command

1. Press . The system responds “Say a command or say help,” followed by a tone.
2. After the tone, say “Voice mail.” The system dials the voice mail number of the connected phone.

Clearing the System

Unless information is deleted out of the vehicle Bluetooth system, it will be retained. This includes phone pairing information. For directions on how to delete this information, see “Deleting a Paired Phone.”

Settings

Teen Driver

If equipped, Teen Driver allows keys to be programmed with customizable vehicle settings. It limits some vehicle features and prevents some systems, such as Park Assist, if equipped, from being turned off. It also displays a report card of the driving behavior when a Teen Driver key is used.

To activate or change the settings, select Teen Driver from the Settings menu. See *Vehicle Personalization on page 5-47*. If no keys are activated, the Teen Driver feature will not record any Report Card data.

A Personal Identification Number (PIN) must be created using the keypad. The PIN is required to:

- Register Keys.
- Change settings.
- Access or delete Report Card data or Teen Driver settings.

Register or Unregister a Key

Any of the vehicle keys can be registered as a Teen Driver key. Label the key to tell it apart from the other keys. A maximum of eight keys can be registered. There is one Report Card per vehicle.

After creating the PIN, to register or unregister the key(s):

1. Have the vehicle running.
2. For automatic transmissions, the vehicle must be in P (Park). For manual transmissions, the vehicle must be stopped with the parking brake set.
3. Select Teen Driver from the Settings menu.
4. Enter the PIN.
5. Select Key Registration.

The system will display instructions for registering or unregistering a key.

For Ignition keyed system:

- If the key is not registered, select Register and follow the instructions. A message displays to confirm successful registration.
- If the key is already registered, the option to unregister displays. If Unregister is selected, the key is no longer registered and a confirmation displays.

For Pushbutton start system:

Once Key Registration is selected, the system detects whether there is a transmitter key in the transmitter pocket, which is in the center console storage area or on the side of the steering wheel column. See *Remote Keyless Entry (RKE) System Operation on page 2-4*.

- If no transmitter key is detected, a message displays indicating to place the transmitter key in the transmitter pocket.
- If the transmitter key is in the pocket in the transmitter pocket, it will identify whether the transmitter key is registered or unregistered.
  - If the transmitter key is not registered, a message displays requesting confirmation to register. Select Register and follow the instructions. A message displays to confirm successful registration.
  - If the transmitter key is already registered, the option to unregister displays. If Unregister is selected, the transmitter key is no longer registered and a confirmation displays.

In vehicles with a Pushbutton start system, if a Teen Driver transmitter key and a non-Teen Driver transmitter key are both present at start up, the vehicle will recognize the non-Teen Driver transmitter key to start the vehicle. The Teen Driver settings will not be active.

Manage Settings

The PIN can be used to change these settings:

Audio Volume Limit: Allows a maximum radio volume to be set.

Teen Driver Speed Warning: Allows a warning to be set when a selected speed is exceeded.

Teen Driver Speed Limiter: If equipped, this allows the maximum speed limit of the vehicle to be set.

The following cannot be changed:

- The radio will mute when the driver safety belt is not fastened, and in some vehicles, when the safety belt of a front outboard passenger is not fastened.
- Other vehicle features, such as Park Assist, if equipped, cannot be turned off when the Teen Driver setting is in use.

Delete Report Card Data

The Report Card continues to save data for all trips until the data is deleted using the PIN.

To delete Report Card data:

- Select Reset from the Report Card screen.
- Select Clear All Teen Keys/PIN from the Teen Driver menu.

Forgotten PIN

See your dealer to reset the PIN.

Trademarks and License Agreements

FCC Information

See *Radio Frequency Statement on page 13-12*.

"Made for iPod" and "Made for iPhone" mean that an electronic accessory has been designed to connect specifically to iPod or iPhone and has been certified by the developer to meet Apple performance standards. Apple is not responsible for the operation of this device or its compliance with safety and regulatory standards. Please note that the use of this accessory with iPod or iPhone may affect wireless performance. iPhone®, iPod®, iPod classic®, iPod nano®, iPod shuffle®, and iPod touch® are trademarks of Apple Inc., registered in the U.S. and other countries.

Fees and Taxes: Subscription fee, taxes, one time activation fee, and other fees may apply. Subscription fee is consumer only. All fees and programming subject to change. Subscriptions subject to Customer Agreement available at www.siriusxm.com. SiriusXM® service only available in the 48 contiguous United States and Canada.

In Canada: Some deterioration of service may occur in extreme northern latitudes. This is beyond the control of SiriusXM® Satellite Radio.

Explicit Language Notice: Channels with frequent explicit language are indicated with an “XL” preceding the channel name. Channel blocking is available for SiriusXM Satellite Radio receivers by notifying SiriusXM:

- USA Customers — See www.siriusxm.com or call 1-866-635–2349.
- Canadian Customers — See www.xmradio.ca or call 1-877-209-0079.

It is prohibited to copy, decompile, disassemble, reverse engineer, hack, manipulate, or otherwise make available any technology or software incorporated in receivers compatible with the SiriusXM® Satellite Radio System or that support the SiriusXM website, the Online Service or any of its content. Furthermore, the AMBER voice compression software included in this product is protected by intellectual property rights including patent rights, copyrights, and trade secrets of Digital Voice Systems, Inc.

General Requirements:

1. A License Agreement from SiriusXM® is required for any product that incorporates SiriusXM Technology and/or for use of any of the SiriusXM marks to be manufactured, distributed, or marketed in the SiriusXM Service Area.
2. For products to be distributed, marketed, and/or sold in Canada, a separate agreement is required with Canadian Satellite Radio Inc. (operating as SiriusXM Canada).

Other Information

The Bluetooth® word mark and logos are owned by the Bluetooth® SIG, Inc. and any use of such marks by General Motors is under license. Other trademarks and trade names are those of their respective owners.

Schedule I: Gracenote EULA

Music recognition technology and related data are provided by Gracenote®. Gracenote is the industry standard in music recognition technology and related content delivery. For more information visit www.gracenote.com.

Music-related data from Gracenote, Inc., copyright © 2000 to present Gracenote. Gracenote Software, copyright © 2000 to present Gracenote. One or more patents owned by Gracenote may apply to this product and service. See the Gracenote website for a non-exhaustive list of applicable Gracenote patents. Gracenote, CDDB, MusicID, MediaVOCS, the

Gracenote logo and logotype, and the "Powered by Gracenote" logo are either registered trademarks or trademarks of Gracenote in the United States and/or other countries.

Gracenote Terms of Use

This application or device contains software from Gracenote, Inc. of Emeryville, California ("Gracenote"). The software from Gracenote (the "Gracenote Software") enables this application to do disc or file identification and obtain music-related information, including name, artist, track, and title information ("Gracenote Data") from online servers or embedded databases (collectively, "Gracenote Servers") and to perform other functions. You may use Gracenote Data only by means of the intended End-User functions of this application or device.

This application or device may contain content belonging to Gracenote's providers. If so, all of the restrictions set forth herein with respect to Gracenote Data shall also apply to such content and such content providers shall be entitled to all of the benefits and protections set forth herein that are available to Gracenote.

You agree that you will use Gracenote Data, the Gracenote Software, and Gracenote Servers for your own personal non-commercial use only. You agree not to assign, copy, transfer or transmit the Gracenote Software or any Gracenote Data to any third party. YOU AGREE NOT TO USE OR EXPLOIT GRACENOTE DATA, THE GRACENOTE SOFTWARE, OR GRACENOTE SERVERS, EXCEPT AS EXPRESSLY PERMITTED HEREIN.

You agree that your non-exclusive license to use the Gracenote Data, the Gracenote Software, and Gracenote Servers will terminate if you violate these restrictions. If your license terminates, you agree to cease any and all use of the Gracenote Data, the Gracenote Software, and Gracenote Servers. Gracenote reserves all rights in Gracenote Data, the Gracenote Software, and the Gracenote Servers, including all ownership rights. Under no circumstances will Gracenote become liable for any payment to you for any information that you provide. You agree that Gracenote may enforce its rights under this Agreement against you directly in its own name.

The Gracenote service uses a unique identifier to track queries for statistical purposes. The purpose of a randomly assigned numeric identifier is to allow the Gracenote service to count queries without knowing anything about who you are. For more information, see the web page for the Gracenote Privacy Policy for the Gracenote service.

The Gracenote Software and each item of Gracenote Data are licensed to you "AS IS." Gracenote makes no representations or warranties, express or implied, regarding the

accuracy of any Gracenote Data. Gracenote reserves the right to delete data from the Gracenote Servers or to change data categories for any cause that Gracenote deems sufficient. No warranty is made that the Gracenote Software or Gracenote Servers are error-free or that functioning of Gracenote Software or Gracenote Servers will be uninterrupted. Gracenote is not obligated to provide you with new enhanced or additional data types or categories that Gracenote may provide in the future and is free to discontinue its services at any time.

GRACENOTE DISCLAIMS ALL WARRANTIES EXPRESS OR IMPLIED, INCLUDING, BUT NOT LIMITED TO, IMPLIED WARRANTIES OF MERCHANTABILITY, FITNESS FOR A PARTICULAR PURPOSE, TITLE, AND NON-INFRINGEMENT. GRACENOTE DOES NOT WARRANT THE RESULTS THAT WILL BE OBTAINED BY YOUR USE OF THE GRACENOTE SOFTWARE OR ANY GRACENOTE SERVER. IN NO CASE WILL GRACENOTE BE LIABLE FOR ANY CONSEQUENTIAL OR INCIDENTAL DAMAGES OR FOR ANY LOST PROFITS OR LOST REVENUES.

© 2013. Gracenote, Inc. All Rights Reserved.

PANDORA

PANDORA, the PANDORA logo, and the Pandora trade dress are trademarks or registered trademarks of Pandora Media, Inc. Used with permission.

Unicode

Copyright © 1991-2013 Unicode, Inc. All rights reserved. Distributed under the Terms of Use in http://www.unicode.org/copyright.html.

Free Type Project

Portions of this software are copyright © 2013 The FreeType Project (http://www.freetype.org). All rights reserved.

iType

iType is a trademark of Monotype Imaging Inc. registered in the U.S. Patent & Trademark Office and may be registered in certain other jurisdictions.

Open Source SW

The open source code used in this device can be downloaded at the webpage shown in the information at the center stack display. Further information concerning the OSS licenses is shown in the center stack display.

QNX

Portions of this software are copyright © 2008-2013, QNX Software Systems. All rights reserved.

Part C – EULA

Copyright 2013, Software Systems GmbH & Co. KG. All Rights Reserved.

The product you have purchased ("Product") contains Software (Runtime Configuration No. 505962; "Software") which is distributed by or on behalf of the Product manufacturer "Manufacturer") under license from Software Systems Co. ("QSSC"). You may only use the Software in the Product and in compliance with the license terms below.

Subject to the terms and conditions of this License, QSSC hereby grants you a limited, non-exclusive, non-transferable license to use the Software in the Product for the purpose intended by the Manufacturer. If permitted by the Manufacturer, or by applicable law, you may make one backup copy of the Software as part of the Product software. QSSC and its licensors reserve all license+C31 rights not expressly granted herein, and retain all right, title and interest in and to all copies of the Software, including all intellectual property rights therein. Unless required by applicable law you may not reproduce, distribute or transfer, or de-compile, disassemble or otherwise attempt to unbundle, reverse engineer, modify or create derivative works of, the Software. You agree: (1) not to remove, cover or alter any proprietary notices, labels or marks in or on the Software, and to ensure that all copies bear any notice contained on the original; and (2) not to export the Product or the Software in contravention of applicable export control laws.

EXCEPT TO THE EXTENT OTHERWISE REQUIRED BY APPLICABLE LAW, QSSC AND ITS LICENSORS PROVIDE THE SOFTWARE ON AN "AS IS" BASIS, WITHOUT WARRANTIES OR CONDITIONS OF ANY KIND, EITHER EXPRESS OR IMPLIED INCLUDING, WITHOUT LIMITATION, ANY WARRANTIES OR CONDITIONS OF TITLE, NON-INFRINGEMENT, MERCHANTABILITY OR FITNESS FOR A PARTICULAR PURPOSE. ANY WARRANTIES OR OTHER PROVISIONS OFFERED BY THE MANUFACTURER OR ITS DISTRIBUTOR(S) THAT DIFFER FROM THIS LICENSE ARE OFFERED BY THE MANUFACTURER OR ITS DISTRIBUTOR(S) ALONE AND NOT BY QSSC, ITS AFFILIATES OR THEIR LICENSORS. YOU ASSUME ANY RISKS ASSOCIATED WITH YOUR USE OF THE SOFTWARE UNDER THIS LICENSE.

EXCEPT TO THE EXTENT OTHERWISE REQUIRED BY APPLICABLE LAW (SUCH AS IN THE CASE OF DELIBERATE OR GROSSLY NEGLIGENT ACTS), IN NO EVENT SHALL QSSC, ITS AFFILIATES OR THEIR LICENSORS BE LIABLE TO YOU

UNDER ANY LEGAL THEORY, WHETHER IN TORT (INCLUDING NEGLIGENCE), CONTRACT OR OTHERWISE, FOR DAMAGES, INCLUDING ANY DIRECT, INDIRECT, SPECIAL, INCIDENTAL, OR CONSEQUENTIAL DAMAGES OF ANY CHARACTER ARISING AS A RESULT OF THIS LICENSE OR OUT OF THE USE OR INABILITY TO USE THE PRODUCT (INCLUDING BUT NOT LIMITED TO DAMAGES FOR LOSS OF GOODWILL, WORK STOPPAGE, PRODUCT FAILURE OR MALFUNCTION, OR ANY AND ALL OTHER COMMERCIAL DAMAGES OR LOSSES), EVEN IF QSSC, ITS AFFILIATES OR THEIR LICENSORS HAVE BEEN ADVISED OF THE POSSIBILITY OF SUCH DAMAGES.

WMA

This product is protected by certain intellectual property rights of Microsoft. Use or distribution of such technology outside of this product is prohibited without a license from Microsoft.

For more information on the Software, including any open source software license terms (and available source code) as well as copyright attributions applicable to the Runtime Configuration indicated above, please contact the Manufacturer or contact QSSC at 175 Terence Matthews Crescent, Kanata, Ontario, Canada K2M 1W8 (licensing@qnx.com).

END USER NOTICE

The marks of companies displayed by this product to indicate business locations are the marks of their respective owners. The use of such marks in this product does not imply any sponsorship, approval, or endorsement by such companies of this product.

✍ NOTES

Climate Controls

Climate Control Systems
Climate Control Systems (with Heater Only) 8-1
Climate Control Systems (with Air Conditioning) 8-3
Dual Automatic Climate Control System 8-5

Air Vents
Air Vents 8-8

Maintenance
Passenger Compartment Air Filter 8-9
Service 8-10

Climate Control Systems

Climate Control Systems (with Heater Only)

With this system, the heating and ventilation can be controlled.

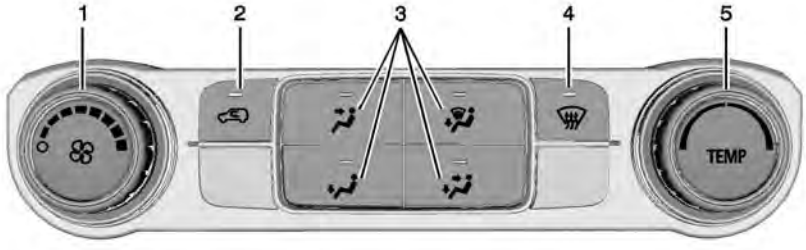

1. Fan Control
2. Air Recirculation
3. Air Delivery Mode Control
4. Defrost
5. TEMP (Temperature Control)

TEMP (Temperature Control): Turn clockwise or counterclockwise to increase or decrease the temperature inside the vehicle.

(Fan Control): Turn clockwise or counterclockwise to increase or decrease the fan speed. Turn the knob all the way counterclockwise to turn the fan off.

Air Delivery Mode Control: Press , , , or to change the direction of the airflow. An indicator light comes on in the selected mode button.

(Vent): Air is directed to the instrument panel outlets.

(Bi-Level): Air is divided between the instrument panel and floor outlets.

(Floor): Air is directed to the floor outlets, with some air directed to the windshield, side window, and second row floor outlets.

(Defog): This mode clears the windows of fog or moisture. Air is directed to the windshield, floor outlets, and side window vents.

(Defrost): Press to clear the windshield of fog or frost more quickly. Air is directed to the windshield and the side window vents. The system automatically forces outside air into the vehicle. Do not drive the vehicle until all the windows are clear.

See *Air Vents on page 8-8*.

(Recirculation): Press to turn on recirculation. An indicator light comes on. Air is recirculated to quickly cool the inside of the vehicle. It can also be used to help reduce outside air and odors that enter the vehicle.

Climate Control Systems (with Air Conditioning)

With this system the heating, cooling, and ventilation can be controlled.

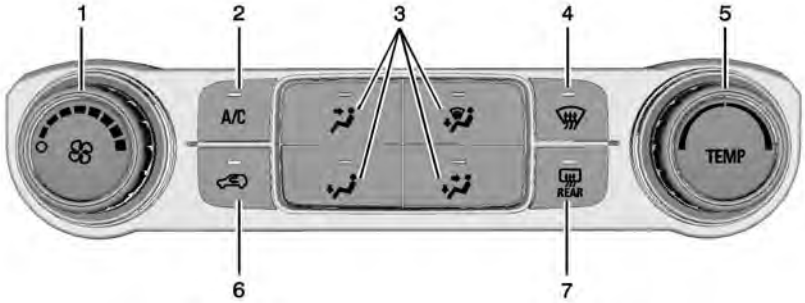

1. Fan Control
2. A/C (Air Conditioning)
3. Air Delivery Mode Control
4. Defrost
5. TEMP (Temperature Control)
6. Air Recirculation
7. REAR Rear Window Defogger (If Equipped)

   Outside Heated Mirror (If Equipped)

   Outside Air (If Equipped)

TEMP (Temperature Control): Turn clockwise or counterclockwise to increase or decrease the temperature inside the vehicle.

(Fan Control): Turn clockwise or counterclockwise to increase or decrease the fan speed. Turn the knob all the way counterclockwise to turn the fan off.

Air Delivery Mode Control: Press , , , or to change the direction of the airflow. An indicator light comes on in the selected mode button.

(Vent): Air is directed to the instrument panel outlets.

(Bi-Level): Air is divided between the instrument panel and floor outlets.

(Floor): Air is directed to the floor outlets, with some air directed to the windshield and side window outlets.

(Defog): This mode clears the windows of fog or moisture. Air is directed to the windshield, floor outlets, and side window vents.

(Defrost): Press to clear the windshield of fog or frost more quickly. Air is directed to the windshield and the side window vents. The system automatically forces outside air into the vehicle and the air conditioning compressor will run, unless the outside temperature is close to freezing.

Do not drive the vehicle until all the windows are clear.

See *Air Vents on page 8-8*.

(Recirculation): Press to turn on recirculation. An indicator light comes on. Air is recirculated to quickly cool the inside of the vehicle. It can also be used to help reduce outside air and odors that enter the vehicle.

(Outside Air, If Equipped): Press to turn the outside air mode on. An indicator light on the button comes on to show that outside is on. When selected, air from outside the vehicle circulates throughout the vehicle. The recirculation mode cannot be used with the outside air mode.

(Outside Heated Mirror, If Equipped): Press to turn the heated mirrors on or off. See *Heated Mirrors on page 2-17*.

A/C (Air Conditioning): Press to turn the air conditioning system on or off. An indicator light comes on to show that the air conditioning is enabled. If the fan is turned off, the air conditioner will not run. The A/C light will stay on even if the outside temperatures are below freezing.

Rear Window Defogger

(Rear Window Defogger, If Equipped): Press to turn the rear window defogger on or off. An indicator light on the button comes on to show that the rear window defogger is on.

The rear window defogger only works when the ignition is in ON/RUN. The defogger turns off if the ignition is turned to ACC/ACCESSORY or LOCK/OFF.

If equipped with heated outside mirrors, they turn on when the rear window defogger button is on. They help to clear fog or frost from the surface of the mirrors.

⚠ Caution

Using a razor blade or sharp object to clear the inside rear window can damage the rear window defogger. Repairs would not be covered by the vehicle warranty. Do not clear the inside rear window with sharp objects.

Dual Automatic Climate Control System

With this system the heating, cooling, and ventilation in the vehicle can be controlled.

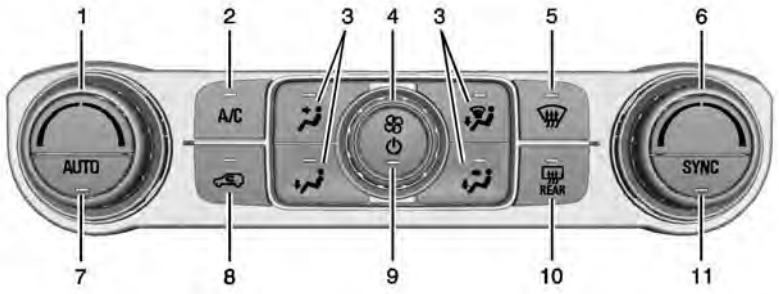

1. Driver Temperature Control
2. A/C (Air Conditioning)
3. Air Delivery Mode Controls
4. Fan Control
5. Defrost
6. Passenger Temperature Control
7. AUTO (Automatic Operation)
8. Air Recirculation
9. Power Button
10. Rear Window Defogger
11. SYNC (Synchronized Temperature)

Automatic Operation

The system automatically controls the fan speed, air delivery, air conditioning, and recirculation in order to heat or cool the vehicle to the desired temperature.

When the indicator light is on, the system is in full automatic operation. If the air delivery mode or fan setting is manually adjusted, the auto indicator turns off and displays will show the selected settings.

To place the system in automatic mode:

1. Press AUTO.
2. Set the driver and passenger temperature.

   To find your comfort setting, start with 22°C (72°F) and allow the system time to stabilize. Then adjust the temperature as needed for best comfort.

To improve fuel efficiency and to cool the vehicle faster, recirculation may be automatically selected in warm weather.

The recirculation light will not come on when automatically controlled.

Press to manually select recirculation; press it again to select outside air.

Do not cover the solar sensor on the top of the instrument panel near the windshield. This sensor regulates air temperature based on sun load. See “Sensors” later in this section.

Manual Operation

(On/Off): Press to turn the climate control system on or off. Outside air still enters the vehicle, and is directed to the floor. This direction can be changed by pressing the air delivery mode.

(Fan Control): Turn clockwise or counterclockwise to increase or decrease the fan speed. Press the knob to turn the fan off.

Press AUTO to return to automatic operation.

Driver and Passenger Temperature Control: The temperature can be adjusted separately for the driver and passenger.

Turn the knob clockwise or counterclockwise to increase or decrease the driver or passenger temperature setting.

SYNC (Synchronized Temperature): Press to link the passenger temperature setting to the driver setting. The SYNC indicator light will turn on. When the passenger setting is adjusted, the SYNC indicator light is off.

The driver side or passenger side temperature display shows the temperature setting increasing or decreasing.

Air Delivery Mode Control: Press , , , or to change the direction of the airflow. An indicator light comes on in the selected mode button.

Changing the mode cancels the automatic operation and the system goes into manual mode. Press AUTO to return to automatic operation.

(Vent): Air is directed to the instrument panel outlets.

(Bi-Level): Air is divided between the instrument panel and floor outlets. Some air is directed toward the windshield and side window outlets.

(Floor): Air is directed to the floor outlets, with some to the windshield, side window outlets, and second row floor outlets.

(Defog): This mode clears the windows of fog or moisture. Air is directed to the windshield, floor outlets, and side window vents. The system automatically forces outside air into the vehicle and the air conditioning compressor will run, unless the outside temperature is close to freezing.

(Defrost): Press to clear the windshield of fog or frost more quickly. Air is directed to the windshield and the side window vents. The air conditioning compressor also comes on, unless the outside temperature is below freezing.

Do not drive the vehicle until all windows are clear.

See *Air Vents on page 8-8*.

A/C (Air Conditioning): Press to turn the air conditioning system on or off. An indicator light comes on to show that the air conditioning is enabled. If the fan is turned off, the air conditioner will not run. The A/C light will stay on even if the outside temperatures are below freezing.

(Recirculation): Press to turn on recirculation. An indicator light comes on. Air is recirculated to quickly cool the inside of the vehicle. It can also be used to help reduce outside air and odors that enter the vehicle. The air conditioning compressor also comes on when this mode is activated.

Rear Window Defogger

The rear window defogger uses a warming grid to remove fog from the rear window.

REAR **(Rear Window Defogger):** Press to turn the rear window defogger on or off. An indicator light on the button comes on to show that the rear window defogger is on.

The rear window defogger only works when the ignition is in ON/RUN. The defogger turns off if the ignition is turned to ACC/ACCESSORY or LOCK/OFF.

⚠ Caution

Using a razor blade or sharp object to clear the inside rear window can damage the rear window defogger. Repairs would not be covered by the vehicle warranty. Do not clear the inside rear window with sharp objects.

Heated Mirror: If equipped with heated outside rearview mirrors, the mirrors heat to help clear fog or frost from the surface of the mirror when the rear window defog button is pressed. See *Heated Mirrors on page 2-17*.

Sensors

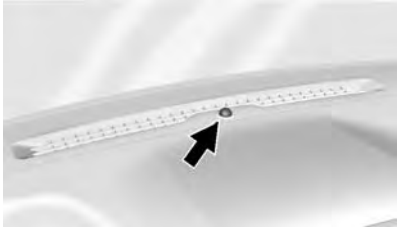

The solar sensor, located in the defrost grille in the middle of the instrument panel, monitors the solar heat. Do not cover the solar sensor or the system will not work properly.

There is also an exterior temperature sensor behind the front grille. This sensor reads the outside air temperature and helps maintain the temperature inside the vehicle. Any cover on the front of the vehicle including a snow plow, could cause a false reading in the displayed temperature.

The climate control system uses the information from these sensors to maintain comfort settings by adjusting the outlet temperature, fan speed, and the air delivery mode. The system may also supply cooler air to the side of the vehicle facing the sun. The recirculation mode will also be used as needed to maintain cool outlet temperatures.

Air Vents

Use the air vents in the center and on the side of the instrument panel to direct airflow. Use the thumbwheels near the air vents to open or close off the airflow.

Air vents blow warm air on the side windows in cold weather. If Floor, Defog, or Defrost modes are selected, a small amount of air will come from the vents close to the window. If the airflow is shut off using the thumbwheels, warm air will be directed to the other instrument panel vents. This is normal operation.

Use the thumbwheels to turn vent airflow on or off based on the mode selected.

Operation Tips

- Clear away any ice, snow, or leaves from air inlets at the base of the windshield that could block the flow of air into the vehicle.
- Keep the path under the front seats clear of objects to help circulate the air inside of the vehicle more effectively.
- Use of non-GM approved hood deflectors can adversely affect the performance of the system. Check with your dealer before adding equipment to the outside of the vehicle.

Maintenance

Passenger Compartment Air Filter

The filter reduces the dust, pollen, and other airborne irritants from outside air that is pulled into the vehicle.

The filter should be replaced as part of routine scheduled maintenance. See *Maintenance Schedule on page 11-3*. To find out what type of filter to use, see *Maintenance Replacement Parts on page 11-15*.

1. Open the lower glove box door completely.
2. Remove the four screws from around the lower glove box. The door does not need to be removed to access the screws.

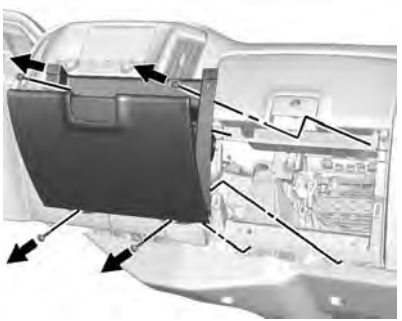

3. Close the lower glove box door and pull it from its frame to remove the entire unit.

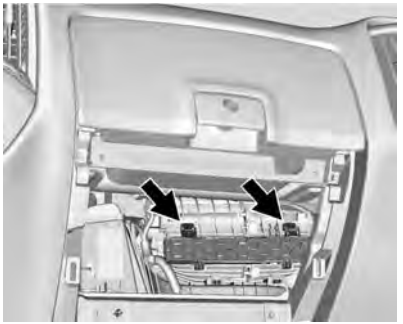

4. Release the two tabs holding the service door. Open the service door and remove the old filter.
5. Install the new air filter.
6. Close the service door and secure the tabs.
7. Reverse the steps to reinstall the glove box.

See your dealer if additional assistance is needed.

Service

All vehicles have a label underhood that identifies the refrigerant used in the vehicle. The refrigerant system should only be serviced by trained and certified technicians. The air conditioning evaporator should never be repaired or replaced by one from a salvage vehicle.
It should only be replaced by a new evaporator to ensure proper and safe operation.

During service, all refrigerants should be reclaimed with proper equipment. Venting refrigerants directly to the atmosphere is harmful to the environment and may also create unsafe conditions based on inhalation, combustion, frostbite, or other health-based concerns.

Driving and Operating

Driving Information
Distracted Driving 9-2
Defensive Driving 9-3
Drunk Driving 9-3
Control of a Vehicle 9-3
Braking 9-3
Steering 9-4
Off-Road Recovery 9-5
Loss of Control 9-5
Off-Road Driving 9-6
Driving on Wet Roads 9-11
Hill and Mountain Roads 9-11
Winter Driving 9-12
If the Vehicle Is Stuck 9-14
Vehicle Load Limits 9-15
Truck-Camper Loading Information 9-21

Starting and Operating
New Vehicle Break-In 9-23
Adjustable Throttle and Brake Pedal 9-23
Ignition Positions 9-24
Starting the Engine 9-26
Fast Idle System 9-27
Retained Accessory Power (RAP) 9-28
Engine Coolant Heater 9-29
Shifting Into Park 9-30
Shifting out of Park 9-31
Parking (Manual Transmission) 9-32
Parking over Things That Burn 9-32
Active Fuel Management® . . . 9-33

Engine Exhaust
Engine Exhaust 9-33
Running the Vehicle While Parked 9-34

Automatic Transmission
Automatic Transmission 9-34
Manual Mode 9-37
Tow/Haul Mode 9-39

Manual Transmission
Manual Transmission 9-40

Drive Systems
Four-Wheel Drive 9-42

Brakes
Antilock Brake System (ABS) 9-50
Parking Brake 9-51
Brake Assist 9-53
Hill Start Assist (HSA) 9-53

Ride Control Systems
Traction Control/Electronic Stability Control 9-54
Hill Descent Control (HDC) 9-56
Locking Rear Axle 9-56

Cruise Control
Cruise Control 9-57

Driver Assistance Systems
Driver Assistance Systems 9-60
Assistance Systems for Parking or Backing 9-60
Assistance Systems for Driving 9-63
Forward Collision Alert (FCA) System 9-63
Lane Departure Warning (LDW) 9-66

Fuel
Fuel 9-67
California Fuel Requirements 9-69
Fuels in Foreign Countries . . . 9-69
Fuel Additives 9-69
E85 or FlexFuel 9-69
Filling the Tank 9-70
Filling a Portable Fuel Container 9-72

Trailer Towing
General Towing Information 9-73
Driving Characteristics and Towing Tips 9-73
Trailer Towing 9-76
Towing Equipment 9-90
Trailer Sway Control (TSC) 9-100

Conversions and Add-Ons
Add-On Electrical Equipment 9-100
Adding a Snow Plow or Similar Equipment 9-101
Pickup Conversion to Chassis Cab 9-104

Driving Information

Distracted Driving

Distraction comes in many forms and can take your focus from the task of driving. Exercise good judgment and do not let other activities divert your attention away from the road. Many local governments have enacted laws regarding driver distraction. Become familiar with the local laws in your area.

To avoid distracted driving, always keep your eyes on the road, hands on the wheel, and mind on the drive.

- Do not use a phone in demanding driving situations. Use a hands-free method to place or receive necessary phone calls.
- Watch the road. Do not read, take notes, or look up information on phones or other electronic devices.
- Designate a front seat passenger to handle potential distractions.
- Become familiar with vehicle features before driving, such as programming favorite radio stations and adjusting climate control and seat settings. Program all trip information into any navigation device prior to driving.
- Wait until the vehicle is parked to retrieve items that have fallen to the floor.
- Stop or park the vehicle to tend to children.
- Keep pets in an appropriate carrier or restraint.
- Avoid stressful conversations while driving, whether with a passenger or on a cell phone.

⚠ Warning

Taking your eyes off the road too long or too often could cause a crash resulting in injury or death. Focus your attention on driving.

Refer to the infotainment section for more information on using that system and the navigation system, if equipped, including pairing and using a cell phone.

Defensive Driving

Defensive driving means “always expect the unexpected.” The first step in driving defensively is to wear the safety belt. See *Safety Belts on page 3-12*.

- Assume that other road users (pedestrians, bicyclists, and other drivers) are going to be careless and make mistakes. Anticipate what they might do and be ready.
- Allow enough following distance between you and the driver in front of you.
- Focus on the task of driving.

Drunk Driving

Death and injury associated with drinking and driving is a global tragedy.

⚠ Warning

Drinking and then driving is very dangerous. Your reflexes, perceptions, attentiveness, and judgment can be affected by even a small amount of alcohol. You can have a serious — or even fatal — collision if you drive after drinking.

Do not drink and drive or ride with a driver who has been drinking. Ride home in a cab; or if you are with a group, designate a driver who will not drink.

Control of a Vehicle

Braking, steering, and accelerating are important factors in helping to control a vehicle while driving.

Braking

Braking action involves perception time and reaction time. Deciding to push the brake pedal is perception time. Actually doing it is reaction time.

Average driver reaction time is about three-quarters of a second. In that time, a vehicle moving at 100 km/h (60 mph) travels 20 m (66 ft), which could be a lot of distance in an emergency.

Helpful braking tips to keep in mind include:

- Keep enough distance between you and the vehicle in front of you.
- Avoid needless heavy braking.
- Keep pace with traffic.

If the engine ever stops while the vehicle is being driven, brake normally but do not pump the brakes. Doing so could make the pedal harder to push down. If the engine stops, there will be some power brake assist but it will be used when the brake is applied. Once the power assist is used up, it can take longer to stop and the brake pedal will be harder to push.

Steering

Electric Power Steering (1500 Series)

If the vehicle has electric power steering, it does not have power steering fluid. Regular maintenance is not required.

If power steering assist is lost due to a system malfunction, the vehicle can be steered, but may require increased effort. See your dealer if there is a problem.

If the steering wheel is turned until it reaches the end of its travel, and is held in that position for an extended period of time, power steering assist may be reduced.

If the steering assist is used for an extended period of time, power assist may be reduced.

Normal use of the power steering assist should return when the system cools down.

See specific vehicle steering messages under *Steering System Messages on page 5-42*.

Hydraulic Power Steering (2500/3500 Series)

If the vehicle has hydraulic power steering, it may require maintenance. See *Power Steering Fluid (1500 Series) on page 10-28* or *Power Steering Fluid (2500/3500 Series) on page 10-28*.

If power steering assist is lost because the engine stops or a system malfunctions, the vehicle can be steered but may require increased effort.

See your dealer if there is a problem.

⚠ Caution

If the steering wheel is turned until it reaches the end of its travel, and is held in that position for more than 15 seconds, damage may occur to the power steering system and there may be loss of power steering assist.

Curve Tips

- Take curves at a reasonable speed.
- Reduce speed before entering a curve.

- Maintain a reasonable steady speed through the curve.
- Wait until the vehicle is out of the curve before accelerating gently into the straightaway.

Steering in Emergencies

- There are some situations when steering around a problem may be more effective than braking.
- Holding both sides of the steering wheel allows you to turn 180 degrees without removing a hand.
- Antilock Brake System (ABS) allows steering while braking.

Off-Road Recovery

The vehicle's right wheels can drop off the edge of a road onto the shoulder while driving. Follow these tips:

1. Ease off the accelerator and then, if there is nothing in the way, steer the vehicle so that it straddles the edge of the pavement.
2. Turn the steering wheel about one-eighth of a turn, until the right front tire contacts the pavement edge.
3. Turn the steering wheel to go straight down the roadway.

Loss of Control

Skidding

There are three types of skids that correspond to the vehicle's three control systems:

- Braking Skid — wheels are not rolling.
- Steering or Cornering Skid — too much speed or steering in a curve causes tires to slip and lose cornering force.
- Acceleration Skid — too much throttle causes the driving wheels to spin.

Defensive drivers avoid most skids by taking reasonable care suited to existing conditions, and by not overdriving those conditions. But skids are always possible.

If the vehicle starts to slide, follow these suggestions:

- Ease your foot off the accelerator pedal and steer the way you want the vehicle to go. The vehicle may straighten out. Be ready for a second skid if it occurs.
- Slow down and adjust your driving according to weather conditions. Stopping distance can be longer and vehicle control can be affected when traction is reduced by water, snow, ice, gravel, or other material on the road. Learn to recognize warning clues — such as enough water, ice, or packed snow on the road to make a mirrored surface — and slow down when you have any doubt.
- Try to avoid sudden steering, acceleration, or braking, including reducing vehicle speed by shifting to a lower gear. Any sudden changes could cause the tires to slide.

Remember: Antilock brakes help avoid only the braking skid.

Off-Road Driving

Four-wheel-drive vehicles can be used for off-road driving. Vehicles without four-wheel drive and vehicles not equipped with All Terrain (AT) or On-Off Road (OOR) tires must not be driven off-road except on a level, solid surface. For contact information about the original equipment tires, see the warranty manual.

One of the best ways for successful off-road driving is to control the speed.

⚠ Warning

When driving off-road, bouncing and quick changes in direction can easily throw you out of position. This could cause you to lose control and crash. You and your passengers should always wear safety belts.

Before Driving Off-Road

- Have all necessary maintenance and service work completed.
- Fuel the vehicle, fill fluid levels, and check inflation pressure in all tires, including the spare, if equipped.
- Read all the information about four-wheel-drive vehicles in this manual.
- Remove any underbody air deflector, if equipped. Re-attach the air deflector after off-road driving.
- See *Hill Descent Control (HDC) on page 9-56*
- Know the local laws that apply to off-road driving.

To gain more ground clearance if needed, it may be necessary to remove the front fascia lower air dam. However, driving without the air dam reduces fuel economy.

⚠ Caution

Operating the vehicle for extended periods without the front fascia lower air dam installed can cause improper air flow to the engine. Re-attach the front fascia air dam after off-road driving.

Loading the Vehicle for Off-Road Driving

⚠ Warning

- Unsecured cargo on the load floor can be tossed about when driving over rough terrain. You or your passengers can be struck by flying objects. Secure the cargo properly.

(Continued)

Warning (Continued)

- Keep cargo in the cargo area as far forward and as low as possible. The heaviest things should be on the floor, forward of the rear axle.
- Heavy loads on the roof raise the vehicle's center of gravity, making it more likely to roll over. You can be seriously or fatally injured if the vehicle rolls over. Put heavy loads inside the cargo area, not on the roof.

For more information about loading the vehicle, see *Vehicle Load Limits on page 9-15* and *Tires on page 10-53*.

Environmental Concerns

- Always use established trails, roads, and areas that have been set aside for public off-road recreational driving and obey all posted regulations.
- Do not damage shrubs, flowers, trees, or grasses or disturb wildlife.
- Do not park over things that burn. See *Parking over Things That Burn on page 9-32*.

Driving on Hills

Driving safely on hills requires good judgment and an understanding of what the vehicle can and cannot do.

⚠ Warning

Many hills are simply too steep for any vehicle. Driving up hills can cause the vehicle to stall. Driving down hills can cause loss of control. Driving across hills can cause a rollover. You could be injured or killed. Do not drive on steep hills.

Before driving on a hill, assess the steepness, traction, and obstructions. If the terrain ahead

cannot be seen, get out of the vehicle and walk the hill before driving further.

When driving on hills:

- Use a low gear and keep a firm grip on the steering wheel.
- Maintain a slow speed.
- When possible, drive straight up or down the hill.
- Slow down when approaching the top of the hill.
- Use headlamps even during the day to make the vehicle more visible.

⚠ Warning

Driving to the top of a hill at high speed can cause an accident. There could be a drop-off, embankment, cliff, or even another vehicle. You could be seriously injured or killed. As you near the top of a hill, slow down and stay alert.

- Never go downhill forward or backward with either the transmission or transfer case in N (Neutral). The brakes could overheat and you could lose control.

⚠ Warning

If the vehicle has the two-speed automatic transfer case, shifting the transfer case to N (Neutral) can cause your vehicle to roll even if the transmission is in P (Park). This is because the N (Neutral) position on the transfer case overrides the transmission. You or someone else could be injured. If leaving the vehicle, set the parking brake and shift the transmission to P (Park). Shift the transfer case to any position but N (Neutral).

- When driving down a hill, keep the vehicle headed straight down. Use a low gear because the engine will work with the brakes to slow the vehicle and help keep the vehicle under control.

⚠ Warning

Heavy braking when going down a hill can cause your brakes to overheat and fade. This could cause loss of control and you or others could be injured or killed. Apply the brakes lightly when descending a hill and use a low gear to keep vehicle speed under control.

If the vehicle stalls on a hill:

1. Apply the brakes to stop the vehicle, and then apply the parking brake.

2. Shift into P (Park) and then restart the engine.
   - If driving uphill when the vehicle stalls, shift to R (Reverse), release the parking brake, and back straight down.
   - Never try to turn the vehicle around. If the hill is steep enough to stall the vehicle, it is steep enough to cause it to roll over.
   - If you cannot make it up the hill, back straight down the hill.
   - Never back down a hill in N (Neutral) using only the brake. The vehicle can roll backward quickly and you could lose control.
   - If driving downhill when the vehicle stalls, shift to a lower gear, release the parking brake, and drive straight down the hill.
3. If the vehicle cannot be restarted after stalling, set the parking brake, shift into P (Park), and turn the vehicle off.
   3.1. Leave the vehicle and seek help.
   3.2. Stay clear of the path the vehicle would take if it rolled downhill.

- Avoid turns that take the vehicle across the incline of the hill. A hill that can be driven straight up or down might be too steep to drive across. Driving across an incline puts more weight on the downhill wheels, which could cause a downhill slide or a rollover.
- Surface conditions can be a problem. Loose gravel, muddy spots, or even wet grass can cause the tires to slip sideways, downhill. If the vehicle slips sideways, it can hit something that will trip it — a rock, a rut, etc. — and roll over.
- Hidden obstacles can make the steepness of the incline more severe. If a rock is driven across with the uphill wheels, or if the downhill wheels drop into a rut or depression, the vehicle can tilt even more.
- If an incline must be driven across, and the vehicle starts to slide, turn downhill. This should help straighten out the vehicle and prevent the side slipping.

⚠ Warning

Getting out of the vehicle on the downhill side when stopped across an incline is dangerous. If the vehicle rolls over, you could be crushed or killed. Always get out on the uphill side of the vehicle and stay well clear of the rollover path.

Driving in Mud, Sand, Snow, or Ice

Use a low gear when driving in mud — the deeper the mud, the lower the gear. Keep the vehicle moving to avoid getting stuck.

Traction changes when driving on sand. On loose sand, such as on beaches or sand dunes, the tires tend to sink into the sand. This affects steering, accelerating, and braking. Drive at a reduced speed and avoid sharp turns or abrupt maneuvers.

Traction is reduced on hard packed snow and ice and it is easy to lose control. Reduce vehicle speed when driving on hard packed snow and ice.

⚠ Warning

Driving on frozen lakes, ponds, or rivers can be dangerous. Ice conditions vary greatly and the

(Continued)

Warning (Continued)

vehicle could fall through the ice; you and your passengers could drown. Drive your vehicle on safe surfaces only.

Driving in Water

⚠ Warning

Driving through rushing water can be dangerous. Deep water can sweep your vehicle downstream and you and your passengers could drown. If it is only shallow water, it can still wash away the ground from under your tires. Traction could be lost, and the vehicle could roll over. Do not drive through rushing water.

⚠ Caution

Do not drive through standing water if it is deep enough to cover the wheel hubs, axles, or exhaust pipe. Deep water can damage the axle and other vehicle parts.

If the standing water is not too deep, drive slowly through it. At faster speeds, water splashes and the vehicle can stall. When going through water, the brakes get wet and it may take longer to stop. See “Driving on Wet Roads” later in this section.

After Off-Road Driving

Remove any brush or debris that has collected on the underbody or chassis, or under the hood. These accumulations can be a fire hazard.

After operation in mud or sand, have the brake linings cleaned and checked. These substances can cause glazing and uneven braking. Check the body structure, steering,

suspension, wheels, tires, and exhaust system for damage and check the fuel lines and cooling system for any leakage.

More frequent maintenance service is required. See the *Maintenance Schedule on page 11-3*.

Driving on Wet Roads

Rain and wet roads can reduce vehicle traction and affect your ability to stop and accelerate. Always drive slower in these types of driving conditions and avoid driving through large puddles and deep-standing or flowing water.

⚠ Warning

Wet brakes can cause crashes. They might not work as well in a quick stop and could cause pulling to one side. You could lose control of the vehicle.

(Continued)

Warning (Continued)

After driving through a large puddle of water or a car/vehicle wash, lightly apply the brake pedal until the brakes work normally.

Flowing or rushing water creates strong forces. Driving through flowing water could cause the vehicle to be carried away. If this happens, you and other vehicle occupants could drown. Do not ignore police warnings and be very cautious about trying to drive through flowing water.

Hydroplaning

Hydroplaning is dangerous. Water can build up under the vehicle's tires so they actually ride on the water. This can happen if the road is wet enough and you are going fast enough. When the vehicle is hydroplaning, it has little or no contact with the road.

There is no hard and fast rule about hydroplaning. The best advice is to slow down when the road is wet.

Other Rainy Weather Tips

Besides slowing down, other wet weather driving tips include:

- Allow extra following distance.
- Pass with caution.
- Keep windshield wiping equipment in good shape.
- Keep the windshield washer fluid reservoir filled.
- Have good tires with proper tread depth. See *Tires on page 10-53*.
- Turn off cruise control.

Hill and Mountain Roads

Driving on steep hills or through mountains is different than driving on flat or rolling terrain. Tips for driving in these conditions include:

- Keep the vehicle serviced and in good shape.

- Check all fluid levels and brakes, tires, cooling system, and transmission.
- Shift to a lower gear when going down steep or long hills.

⚠ Warning

Using the brakes to slow the vehicle on a long downhill slope can cause brake overheating, can reduce brake performance, and could result in a loss of braking. Shift the transmission to a lower gear to let the engine assist the brakes on a steep downhill slope.

⚠ Warning

Coasting downhill in N (Neutral) or with the ignition off is dangerous. This can cause overheating of the brakes and

(Continued)

Warning (Continued)

loss of steering. Always have the engine running and the vehicle in gear.

- Stay in your own lane. Do not swing wide or cut across the center of the road. Drive at speeds that let you stay in your own lane.
- Be alert on top of hills; something could be in your lane (stalled car, accident).
- Pay attention to special road signs (falling rocks area, winding roads, long grades, passing or no-passing zones) and take appropriate action.

Winter Driving

Driving on Snow or Ice

Drive carefully when there is snow or ice between the tires and the road, creating less traction or grip. Wet ice can occur at about 0°C (32° F) when freezing rain begins to fall, resulting in even less traction. Avoid driving on wet ice or in freezing rain until roads can be treated with salt or sand.

Drive with caution, whatever the condition. Accelerate gently so traction is not lost. Accelerating too quickly causes the wheels to spin and makes the surface under the tires slick, so there is even less traction.

Traction Control should be turned on. See *Traction Control/Electronic Stability Control on page 9-54*.

The Antilock Brake System (ABS) improves vehicle stability during hard stops on slippery roads, but apply the brakes sooner than when on dry pavement. See *Antilock Brake System (ABS) on page 9-50*.

Allow greater following distance on any slippery road and watch for slippery spots. Icy patches can occur on otherwise clear roads in shaded areas. The surface of a

curve or an overpass can remain icy when the surrounding roads are clear. Avoid sudden steering maneuvers and braking while on ice.

Turn off cruise control on slippery surfaces.

Blizzard Conditions

Being stuck in snow can be a serious situation. Stay with the vehicle unless there is help nearby. If possible, use Roadside Assistance. See *Roadside Assistance Program on page 13-5*. To get help and keep everyone in the vehicle safe:

- Turn on the hazard warning flashers.
- Tie a red cloth to an outside mirror.

⚠ Warning

Snow can trap engine exhaust under the vehicle. This may cause exhaust gases to get inside. Engine exhaust contains carbon monoxide (CO) which cannot be seen or smelled. It can cause unconsciousness and even death.

If the vehicle is stuck in the snow:

- Clear away snow from around the base of your vehicle, especially any that is blocking the exhaust pipe.
- Check again from time to time to be sure snow does not collect there.
- Open a window about 5 cm (2 in) on the side of the vehicle that is away from the wind to bring in fresh air.

(Continued)

Warning (Continued)

- Fully open the air outlets on or under the instrument panel.
- Adjust the climate control system to a setting that circulates the air inside the vehicle and set the fan speed to the highest setting. See “Climate Control Systems”.

For more information about carbon monoxide, see *Engine Exhaust on page 9-33*.

To save fuel, run the engine for only short periods as needed to warm the vehicle and then shut the engine off and close the window most of the way to save heat. Repeat this until help arrives but only when you feel really uncomfortable from the cold. Moving about to keep warm also helps.

If it takes some time for help to arrive, now and then when you run the engine, push the accelerator pedal slightly so the engine runs faster than the idle speed. This keeps the battery charged to restart the vehicle and to signal for help with the headlamps. Do this as little as possible to save fuel.

If the Vehicle Is Stuck

Slowly and cautiously spin the wheels to free the vehicle when stuck in sand, mud, ice, or snow. See “Rocking the Vehicle to Get It Out” later in this section.

The Traction Control System (TCS) can often help to free a stuck vehicle. See *Traction Control/ Electronic Stability Control on page 9-54*. If TCS cannot free the vehicle, see “Rocking the Vehicle to Get it Out” following.

⚠ Warning

If the vehicle's tires spin at high speed, they can explode, and you or others could be injured. The vehicle can overheat, causing an engine compartment fire or other damage. Spin the wheels as little as possible and avoid going above 56 km/h (35 mph).

For information about using tire chains on the vehicle, see *Tire Chains on page 10-78*.

Rocking the Vehicle to Get It Out

Turn the steering wheel left and right to clear the area around the front wheels. For four-wheel-drive vehicles, shift into Four-Wheel Drive High. Turn the TCS off. Shift back and forth between R (Reverse) and a forward gear, spinning the wheels as little as possible. To prevent transmission wear, wait until the wheels stop spinning before shifting gears. Slowly spinning the wheels in the forward and reverse directions causes a rocking motion that could free the vehicle. If that does not get the vehicle out after a few tries, it might need to be towed out. See *Towing the Vehicle on page 10-95*. Recovery hooks can be used, if the vehicle has them.

Recovery Hooks

⚠ Warning

Never pull on recovery hooks from the side. The hooks could break and you and others could be injured. When using recovery hooks, always pull the vehicle from the front.

⚠ Caution

Do not drive through standing water if it is deep enough to cover the wheel hubs, axles, or exhaust pipe. Deep water can damage the axle and other vehicle parts.

There are recovery hooks at the front of the vehicle. Use them if the vehicle is stuck off-road and needs to be pulled some place to continue driving.

Vehicle Load Limits

It is very important to know how much weight the vehicle can carry. This weight is called the vehicle capacity weight and includes the weight of all occupants, cargo, and all nonfactory-installed options. Two labels on the vehicle show how much weight it was designed to carry: the Tire and Loading Information label and the Certification/Tire label.

⚠ Warning

Do not load the vehicle any heavier than the Gross Vehicle Weight Rating (GVWR), or either the maximum front or rear Gross Axle Weight Rating (GAWR). This can cause systems to break and change the way the

(Continued)

Warning (Continued)

vehicle handles. This could cause loss of control and a crash. Overloading can also shorten the life of the vehicle.

Tire and Loading Information Label

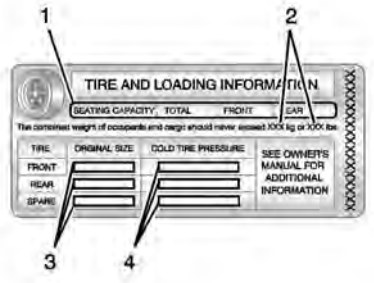

Label Example

A vehicle-specific Tire and Loading Information label is attached to the center pillar (B-pillar). With the driver door

open, you will find the label attached below the door lock post (striker). The Tire and Loading Information label shows the number of occupant seating positions (1), and the maximum vehicle capacity weight (2) in kilograms and pounds.

The Tire and Loading Information label also shows the size of the original equipment tires (3) and the recommended cold tire inflation pressures (4). For more information on tires and inflation see *Tires on page 10-53* and *Tire Pressure on page 10-62*.

There is also important loading information on the vehicle Certification/Tire label. It tells you the Gross Vehicle Weight Rating (GVWR) and the Gross Axle Weight Rating (GAWR) for the front and rear axles. See “Certification/Tire Label” later in this section.

“Steps for Determining Correct Load Limit–

1. Locate the statement "The combined weight of occupants and cargo should never exceed XXX kg or XXX lbs." on your vehicle’s placard.
2. Determine the combined weight of the driver and passengers that will be riding in your vehicle.
3. Subtract the combined weight of the driver and passengers from XXX kg or XXX lbs.
4. The resulting figure equals the available amount of cargo and luggage load capacity. For example, if the "XXX" amount equals 1400 lbs. and there will be five 150 lb passengers in your vehicle, the amount of available cargo and luggage load capacity is 650 lbs. (1400-750 (5 x 150) = 650 lbs.)
5. Determine the combined weight of luggage and cargo being loaded on the vehicle. That weight may not safely exceed the available cargo and luggage load capacity calculated in Step 4.
6. If your vehicle will be towing a trailer, load from your trailer will be transferred to your vehicle. Consult this manual to determine how this reduces the available cargo and luggage load capacity of your vehicle.”

See *Trailer Towing on page 9-76* for important information on towing a trailer, towing safety rules, and trailering tips.

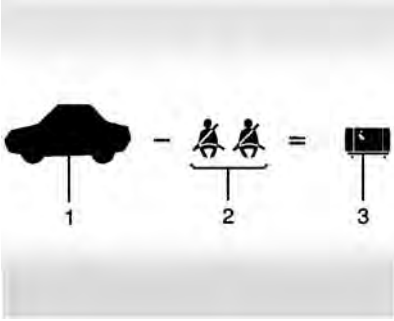

Example 1

1. Vehicle Capacity Weight for Example 1 = (453 kg) (1,000 lb)
2. Subtract Occupant Weight @ 68 kg (150 lb) × 2 = 136 kg (300 lb)
3. Available Occupant and Cargo Weight = 317 kg (700 lb)

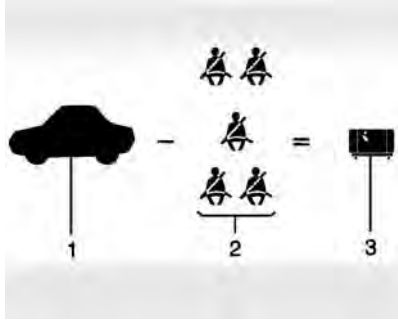

Example 2

1. Vehicle Capacity Weight for Example 2 = 453 kg (1,000 lb)
2. Subtract Occupant Weight @ 68 kg (150 lb) × 5 = 340 kg (750 lb)
3. Available Cargo Weight = 113 kg (250 lb)

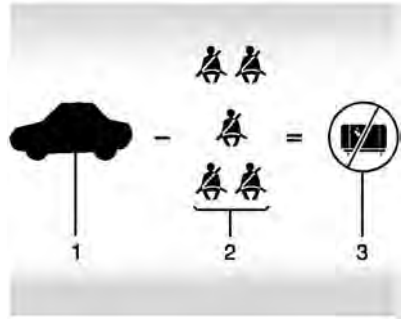

Example 3

1. Vehicle Capacity Weight for Example 3 = 453 kg (1,000 lb)
2. Subtract Occupant Weight @ 91 kg (200 lb) × 5 = 453 kg (1,000 lb)
3. Available Cargo Weight = 0 kg (0 lb)

Refer to the Tire and Loading Information label for specific information about the vehicle's capacity weight and seating positions. The combined weight

of the driver, passengers, and cargo should never exceed the vehicle's capacity weight.

Certification/Tire Label

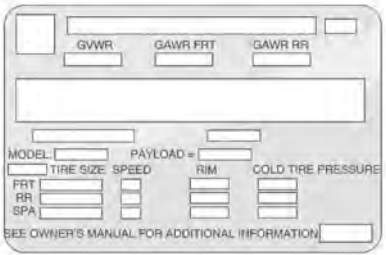

A vehicle-specific Certification/Tire label is label is attached to the center pillar (B-pillar). The label shows the size of the vehicle's original tires and the inflation pressures needed to obtain the gross weight capacity of the vehicle. This is called Gross Vehicle Weight Rating (GVWR). The GVWR includes the weight of the vehicle, all occupants, fuel, and cargo.

The Certification/Tire label also tells you the maximum weights for the front and rear axles, called Gross Axle Weight Rating (GAWR). To find out the actual loads on the front and rear axles, you need to go to a weigh station and weigh the vehicle. Your dealer can help you with this. Be sure to spread out the load equally on both sides of the centerline.

Never exceed the GVWR for the vehicle, or the GAWR for either the front or rear axle.

The Certification/Tire label also contains important information about the Front Axle Reserve Capacity. See *Adding a Snow Plow or Similar Equipment on page 9-101*.

⚠ Warning

In the case of a sudden stop or collision, things carried in the bed of your truck could shift forward and come into the passenger area, injuring you and others. If you put things in the bed of your truck, you should make sure they are properly secured.

⚠ Warning

Do not load the vehicle any heavier than the Gross Vehicle Weight Rating (GVWR), or either the maximum front or rear Gross Axle Weight Rating (GAWR). This can cause systems to break and change the way the vehicle handles. This could

(Continued)

Warning (Continued)

cause loss of control and a crash. Overloading can also shorten the life of the vehicle.

⚠ Caution

Overloading the vehicle may cause damage. Repairs would not be covered by the vehicle warranty. Do not overload the vehicle.

Using heavier suspension components to get added durability might not change the weight ratings. Ask your dealer to help load the vehicle the right way.

If you put things inside the vehicle — like suitcases, tools, packages, or anything else — they go as fast as the vehicle goes. If you have to stop or turn quickly, or if there is a crash, they will keep going.

⚠ Warning

Things you put inside the vehicle can strike and injure people in a sudden stop or turn, or in a crash.

- Put things in the cargo area of the vehicle. Try to spread the weight evenly.
- Never stack heavier things, like suitcases, inside the vehicle so that some of them are above the tops of the seats.
- Do not leave an unsecured child restraint in the vehicle.

(Continued)

Warning (Continued)

- When you carry something inside the vehicle, secure it whenever you can.
- Do not leave a seat folded down unless you need to.

There is also important loading information for off-road driving in this manual. See “Loading the Vehicle for Off-Road Driving“ under *Off-Road Driving on page 9-6*.

Two-Tiered Loading

Depending on the model of the pickup, an upper load platform can be created by positioning three or four 5 cm (2 in) by 15 cm (6 in) wooden planks across the width of the pickup box. The planks must be inserted in the pickup box depressions.

When using this upper load platform, be sure the load is securely tied down to prevent it from shifting. The load's center of gravity should be positioned in a zone over the rear axle. The zone is located in the area between the front of each wheel well and the rear of each wheel well. The center of gravity height must not extend above the top of the pickup box flareboard.

Any load that extends beyond the vehicle's taillamp area must be properly marked according to local laws and regulations.

Remember not to exceed the Gross Axle Weight Rating (GAWR) of the front or rear axle.

Add-On Equipment

When carrying removable items, a limit on how many people carried inside the vehicle may be necessary. Be sure to weigh the vehicle before buying and installing the new equipment.

⚠ Caution

Overloading the vehicle may cause damage. Repairs would not be covered by the vehicle warranty. Do not overload the vehicle.

Remember not to exceed the Gross Axle Weight Rating (GAWR) of the front or rear axle.

* Equipment	Maximum Weight
Ladder Rack and Cargo	340 kg (750 lb)
Cross Toolbox and Cargo	181 kg (400 lb)
Side Boxes and Cargo	113 kg per side (250 lb per side)
* The combined weight for all rail-mounted equipment should not exceed 454 kg (1,000 lb).	

Loading Points

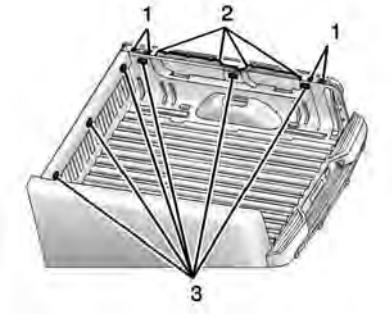

1. Primary Load Points
2. Secondary Load Areas
3. GM Approved Accessory Mounting Points

Structural members (1) and (2) are included in the pickup box design. Additional accessories should use these load points. Depending on the accessory design, use a spacer under the accessory at the load points to remove gap. The holes for GM approved accessories (3) are not intended for aftermarket equipment. See www.gmupfitter.com for additional pickup box load bearing structural information.

Truck-Camper Loading Information

A vehicle-specific Truck-Camper Loading Information label is attached to the inside of the vehicle's glove box. This label indicates if a slide-in camper can be carried, how much of a load the vehicle can carry, and how to correctly spread out the load. It will help to match the right slide-in camper to the vehicle.

Your dealer can help make a good vehicle-camper match and help determine the Cargo Weight Rating (CWR).

When installing and loading a slide-in camper, check the manufacturer's instructions.

When carrying a slide-in camper, the total cargo load of the vehicle is the weight of the camper plus:

- Everything added to the camper after it left the factory.
- Everything in the camper.
- All the people inside.

The CWR is the maximum weight of the load the vehicle can carry. It does not include the weight of the people inside. But, use about 68 kg (150 lb) for each seat.

The total cargo load must not be more than the vehicle's CWR.

Refer to the Truck-Camper Loading Information label in the glove box for dimensions A and B as shown in the following illustration.

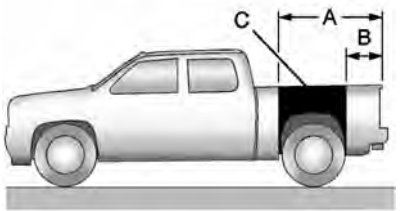

Use the rear edge of the load floor for measurement purposes. The recommended location for the cargo center of gravity is at point C for the CWR. It is the point where the mass of a body is concentrated and, if suspended at that point, would balance the front and rear.

Here is an example of proper truck and camper match:

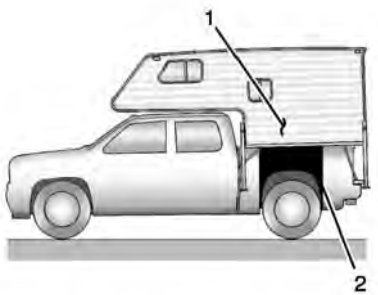

1. Camper Center of Gravity
2. Recommended Center of Gravity Location Zone

When the truck is used to carry a slide-in camper, the total cargo load of the truck consists of the manufacturer's camper weight figure, the weight of installed additional camper equipment not included in the manufacturer's camper weight figure, the weight of camper cargo, and the weight of passengers in the camper. The total cargo load should not exceed the truck's cargo weight rating, and the camper's center of gravity (1) should fall within the truck's recommended center of gravity zone (2) when installed.

Any accessories or other equipment that are added to the vehicle must be weighed. Then, subtract this extra weight from the CWR. This extra weight may shorten the center of gravity zone of the vehicle.

If the slide-in camper and its load weighs less than the CWR, the center of gravity zone for the vehicle may be larger.

Secure loose items to prevent weight shifts that could affect the balance of the vehicle. When the truck-camper is loaded, drive to a scale and weigh on the front and on the rear wheels separately to determine axle loads. Individual axle loads

should not exceed either of the gross axle weight ratings (GAWR). The total axle loads should not exceed the vehicle's gross vehicle weight rating (GVWR). These ratings are given on the Certification/Tire label attached to the B-pillar. See “Certification/Tire Label” under *Vehicle Load Limits on page 9-15*. If weight ratings are exceeded, move or remove items to bring all weights below the ratings.

See your dealer for more information on curb weights, cargo weights, Cargo Weight Rating, and the correct center of gravity zone.

Starting and Operating

New Vehicle Break-In

⚠ Caution

The vehicle does not need an elaborate break-in. But it will perform better in the long run if you follow these guidelines:

- Keep the vehicle speed at 88 km/h (55 mph) or less for the first 805 km (500 mi).
- Do not drive at any one constant speed, fast or slow, for the first 805 km (500 mi). Do not make full-throttle starts. Avoid downshifting to brake or slow the vehicle.
- Avoid making hard stops for the first 322 km (200 mi) or so. During this time the new brake linings are not yet

(Continued)

Caution (Continued)

broken in. Hard stops with new linings can mean premature wear and earlier replacement. Follow this breaking-in guideline every time you get new brake linings.

- Do not tow a trailer during break-in. See *Trailer Towing on page 9-76* for the trailer towing capabilities of the vehicle and more information.

Following break-in, engine speed and load can be gradually increased.

Adjustable Throttle and Brake Pedal

If equipped, the position of the throttle and brake pedals can be changed.

No adjustment to the pedals can be made when the vehicle is in R (Reverse) or while using cruise control.

The switch used to adjust the pedals is on the center stack, below the climate controls.

Lift the switch up to move the pedals closer to your body. Press the switch down to move the pedals away.

Before you start driving, fully press the brake pedal to confirm the adjustment is right for you. While driving, make only small adjustments.

The vehicle may have a memory function, which lets pedal settings be saved and recalled. See *Memory Seats on page 3-7*.

Ignition Positions

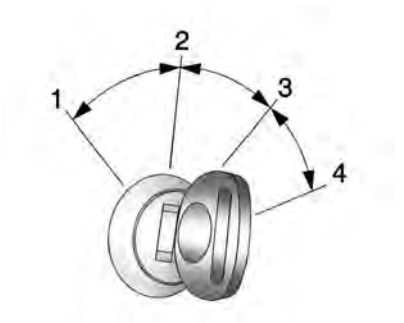

The ignition switch has four different positions.

To shift out of P (Park), the ignition must be in ON/RUN or ACC/ACCESSORY and the regular brake pedal must be applied.

1 (STOPPING THE ENGINE/LOCK/OFF): When the vehicle is stopped, turn the ignition switch to LOCK/OFF to turn the engine off. Retained Accessory Power (RAP) will remain active. See *Retained Accessory Power (RAP) on page 9-28*.

This position locks the ignition and steering wheel. It also locks the transmission on automatic transmission vehicles. The key can be removed in LOCK/OFF.

The steering can bind with the wheels turned off center. If this happens, move the steering wheel from right to left while turning the key to ACC/ACCESSORY. If this does not work, then the vehicle needs service.

Do not turn the engine off when the vehicle is moving. This will cause a loss of power assist in the brake and steering systems and disable the airbags.

If the vehicle must be shut off in an emergency:

1. Brake using a firm and steady pressure. Do not pump the brakes repeatedly. This may deplete power assist, requiring increased brake pedal force.
2. Shift the vehicle to neutral. This can be done while the vehicle is moving. After shifting to neutral, continue to firmly apply the brakes and steer the vehicle to a safe location.
3. Come to a complete stop. Shift to P (Park) with an automatic transmission, or Neutral with a manual transmission. Turn the ignition to LOCK/OFF.
4. Set the parking brake. See *Parking Brake on page 9-51*.

⚠ Warning

Turning off the vehicle while moving may cause loss of power assist in the brake and steering systems and disable the airbags. While driving, only shut the vehicle off in an emergency.

If the vehicle cannot be pulled over, and must be shut off while driving, turn the ignition to ACC/ ACCESSORY.

On vehicles with an automatic transmission, the shift lever must be in P (Park) to turn the ignition switch to LOCK/OFF.

⚠ Caution

Using a tool to force the key to turn in the ignition could cause damage to the switch or break the key. Use the correct key, make sure it is all the way in, and turn it

(Continued)

Caution (Continued)

only with your hand. If the key cannot be turned by hand, see your dealer.

2 (ACC/ACCESSORY): This position lets things like the radio and the windshield wipers operate while the engine is off. It also unlocks the steering wheel. Use this position if the vehicle must be pushed or towed.

3 (ON/RUN): This position can be used to operate the electrical accessories and to display some instrument cluster warning and indicator lights. This position can also be used for service and diagnostics, and to verify the proper operation of the malfunction indicator lamp as may be required for emission inspection purposes. The switch stays in this position when the engine is running.

The transmission is also unlocked in this position on automatic transmission vehicles.

If the key is left in the ACC/ACCESSORY or ON/RUN position with the engine off, the battery could be drained. The vehicle may not start if the battery is allowed to drain for an extended period of time.

4 (START): This is the position that starts the engine. When the engine starts, release the key. The ignition switch returns to ON/RUN for driving.

A warning tone will sound when the driver door is opened, the ignition is in ACC/ACCESSORY or LOCK/OFF, and the key is in the ignition.

Starting the Engine

If the vehicle has a diesel engine, see the Duramax diesel supplement.

⚠ Caution

If you add electrical parts or accessories, you could change the way the engine operates. Any resulting damage would not be covered by the vehicle warranty. See *Add-On Electrical Equipment on page 9-100*.

⚠ Caution

If the steering wheel is turned until it reaches the end of its travel, and is held in that position while starting the vehicle, damage may occur to the hydraulic power steering system and there may be loss of power steering assist.

Place the transmission in the proper gear.

Automatic Transmission

Move the shift lever to P (Park) or N (Neutral). To restart the engine when the vehicle is already moving, use N (Neutral) only.

⚠ Caution

Do not try to shift to P (Park) if the vehicle is moving. If you do, you could damage the transmission. Shift to P (Park) only when the vehicle is stopped.

Manual Transmission

The shift lever should be in Neutral and the parking brake engaged. Hold the clutch pedal down to the floor and start the engine.

Starting Procedure

1. With your foot off the accelerator pedal, turn the ignition key to START. When the engine starts, let go of the key. The idle speed will go down as the engine gets warm. Do not race the engine immediately after starting it. Operate the engine and transmission gently to allow the oil to warm up and lubricate all moving parts.

   When the low fuel warning light is on and the FUEL LEVEL LOW message is displayed in the Driver Information Center (DIC), hold the ignition switch in the START position to continue engine cranking.

⚠ Caution

Cranking the engine for long periods of time, by returning the ignition to the START position immediately after cranking has

(Continued)

Caution (Continued)

ended, can overheat and damage the cranking motor, and drain the battery. Wait at least 15 seconds between each try, to let the cranking motor cool down.

2. If the engine does not start after five to 10 seconds, especially in very cold weather (below −18° C or 0°F), it could be flooded with too much gasoline. Try pushing the accelerator pedal all the way to the floor and holding it there while holding the key in START for up to 15 seconds. Wait at least 15 seconds between each try, to allow the cranking motor to cool down. When the engine starts, let go of the key and accelerator. If the vehicle starts briefly but then stops again, do the same thing. This clears the extra gasoline from the engine. Do not race the engine immediately after starting it. Operate the engine and transmission gently until the oil warms up and lubricates all moving parts.

Fast Idle System

If equipped, this feature is available only with cruise control. The manual fast idle switch is operated using the cruise control buttons on the left side of the steering wheel.

This system can be used to increase engine idle speed whenever the following conditions are met:

- The parking brake is set.
- The brake pedal is not pressed.
- The vehicle must not be moving and the accelerator must not be pressed.

To control the fast idle:

- To enable the Fast Idle System, press and release the cruise control on/off button and ensure that the switch indicator light is lit.
- Press and release the cruise control SET- button. Engine speed will be held at approximately 1200 rpm.

One of the following actions will turn off the fast idle:

- Pressing the brake.
- Selecting the cruise control cancel button.
- Releasing the parking brake.
- Moving the transmission shift lever out of P (Park) or N (Neutral).
- Selecting the cruise control on/off button when it was previously on.
- Pressing the cruise control SET- button a second time.
- Pressing the accelerator more than one-quarter of the way down.
- Turning the ignition switch to the LOCK/OFF position.

Retained Accessory Power (RAP)

The following vehicle accessories can be used for up to 10 minutes after the engine is turned off:

- Audio System
- Power Windows
- OnStar System (if equipped)
- Sunroof (if equipped)

These features work when the key is in ON/RUN or ACC/ACCESSORY. Once the key is turned from ON/RUN to LOCK/OFF, the windows and sunroof continue to work up to 10 minutes or until any door is opened. The radio continues to work for up to 10 minutes or until the driver door is opened.

Accessory Power Outlets (APOs)

The vehicle may have APOs in several locations. See *Power Outlets on page 5-6*.

The APOs in the console or center seat position are powered by RAP. They will continue to work for up to 10 minutes after the key is turned from ON/RUN to LOCK/OFF, or until the driver door is opened.

The APOs on the center stack come from the factory powered directly from the vehicle battery, and supply accessory power at all times, regardless of ignition key position.

If electronic items are left plugged into these APOs for long periods of time with the vehicle off, the vehicle battery could be drained. The vehicle may not start if the battery is allowed to drain for an extended period of time.

Engine Coolant Heater

The engine heater can provide easier starting and better fuel economy during engine warm-up in cold weather conditions at or below −18°C (0°F). Vehicles with an engine heater should be plugged in at least four hours before starting. An internal thermostat in the plug-end of the cord may exist, which will prevent engine coolant heater operation at temperatures above −18°C (0°F).

If the vehicle has a diesel engine, see the Duramax diesel supplement.

To Use the Engine Coolant Heater

1. Turn off the engine.
2. Open the hood and unwrap the electrical cord. The cord is secured to the driver side fender with a clip, next to the engine compartment fuse block. Carefully remove the wire tie that bundles the electrical plug. Do not cut the electrical cord.

   Check the heater cord for damage. If it is damaged, do not use it. See your dealer for a replacement. Inspect the cord for damage yearly.
3. Plug the cord into a normal, grounded 110-volt AC outlet.

⚠ Warning

Improper use of the heater cord or an extension cord can damage the cord and may result in overheating and fire.

- Plug the cord into a three-prong electrical utility receptacle that is protected by a ground fault detection function. An ungrounded outlet could cause an electric shock.
- Use a weatherproof, heavy-duty, 15 amp-rated extension cord if needed. Failure to use the recommended extension cord in good operating condition, or using a damaged heater or extension cord, could make it

(Continued)

Warning (Continued)

overheat and cause a fire, property damage, electric shock, and injury.

- Do not operate the vehicle with the heater cord permanently attached to the vehicle. Possible heater cord and thermostat damage could occur.
- While in use, do not let the heater cord touch vehicle parts or sharp edges. Never close the hood on the heater cord.
- Before starting the vehicle, unplug the cord, reattach the cover to the plug, and securely fasten the cord. Keep the cord away from any moving parts.

4. Before starting the engine, be sure to unplug and store the cord as it was before to keep it away from moving engine parts. If you do not, it could be damaged.

The length of time the heater should remain plugged in depends on several factors. Ask a dealer in the area where you will be parking the vehicle for the best advice on this.

Shifting Into Park

⚠ Warning

It can be dangerous to get out of the vehicle if the shift lever is not fully in P (Park) with the parking brake firmly set. The vehicle can roll. If you have left the engine running, the vehicle can move suddenly. You or others could be injured. To be sure the vehicle will not move, even when you are on fairly level ground, use the steps that follow. With four-wheel drive, if the transfer case is in N (Neutral), the vehicle will be

(Continued)

Warning (Continued)

free to roll, even if the shift lever is in P (Park). Be sure the transfer case is in a drive gear. If towing a trailer, see *Driving Characteristics and Towing Tips on page 9-73*.

1. Hold the brake pedal down, then set the parking brake.

   See *Parking Brake on page 9-51*.

2. Move the shift lever into the P (Park) position by pulling the shift lever toward you and moving it up as far as it will go.
3. Be sure the transfer case (if equipped) is in a drive gear — not in N (Neutral).
4. Turn the ignition key to LOCK/OFF.
5. Remove the key and take it with you. If you can leave the vehicle with the ignition key in your hand, the vehicle is in P (Park).

Leaving the Vehicle with the Engine Running

⚠ Warning

It can be dangerous to leave the vehicle with the engine running. The vehicle could move suddenly if the shift lever is not fully in P (Park) with the parking brake firmly set.

If you have four-wheel drive and the transfer case is in N (Neutral), the vehicle will be free to roll, even if the shift lever is in P (Park). So be sure the transfer case is in a drive gear — not in N (Neutral).

And, if you leave the vehicle with the engine running, it could overheat and even catch fire. You or others could be injured. Do not leave the vehicle with the engine running unless you have to.

If you have to leave the vehicle with the engine running, be sure the vehicle is in P (Park) and the parking brake is firmly set before you leave it. After you move the shift lever into P (Park), hold the regular brake pedal down. Then, see if you can move the shift lever away from P (Park) without first pulling it toward you. If you can, it means that the shift lever was not fully locked into P (Park).

Torque Lock

If you are parking on a hill and you do not shift the transmission into P (Park) properly, the weight of the vehicle may put too much force on the parking pawl in the transmission. You may find it difficult to pull the shift lever out of P (Park). This is called torque lock. To prevent torque lock, set the parking brake and then shift into P (Park) properly before you leave the driver seat. To find out how, see *Shifting Into Park on page 9-30*.

When you are ready to drive, move the shift lever out of P (Park) before you release the parking brake.

If torque lock does occur, you may need to have another vehicle push yours a little uphill to take some of the pressure from the parking pawl in the transmission. You will then be able to pull the shift lever out of P (Park).

Shifting out of Park

This vehicle is equipped with an electronic shift lock release system. The shift lock release is designed to:

- Prevent ignition key removal unless the shift lever is in P (Park).
- Prevent movement of the shift lever out of P (Park), unless the ignition is in ON/RUN and the regular brake pedal is applied.

The shift lock release is always functional except in the case of an uncharged or low voltage (less than 9 volt) battery.

If the vehicle has an uncharged battery or a battery with low voltage, try charging or jump starting the battery. See *Jump Starting on page 10-91*.

To shift out of P (Park):

1. Apply the brake pedal.
2. Move the shift lever to the desired position.

If you still are unable to shift out of P (Park):

1. Ease the pressure on the shift lever.
2. While holding down the brake pedal, press the shift lever all the way into P (Park).
3. Move the shift lever to the desired position.

If you are still having a problem shifting, then have the vehicle serviced soon.

This vehicle may have the Safety Belt Assurance System, which may prevent the vehicle from shifting out of P (Park). See *Safety Belt Messages on page 5-42*.

Parking (Manual Transmission)

If the vehicle has a manual transmission, before you get out of the vehicle, move the shift lever into R (Reverse), and firmly apply the parking brake. Once the shift lever has been placed into R (Reverse) with the clutch pedal pressed in, turn the ignition key to LOCK/OFF, remove the key and release the clutch.

If you are parking on a hill, or if the vehicle is pulling a trailer, see *Driving Characteristics and Towing Tips on page 9-73*.

Parking over Things That Burn

⚠ Warning

Things that can burn could touch hot exhaust parts under the vehicle and ignite. Do not park over papers, leaves, dry grass, or other things that can burn.

Active Fuel Management®

Vehicles with a V8 or V6 gasoline engine may have Active Fuel Management. This system allows the engine to operate on either all of its cylinders, or in V4 mode, depending on the driving conditions.

When less power is required, such as cruising at a constant vehicle speed, the system will operate in the V4 mode, allowing the vehicle to achieve better fuel economy. When greater power demands are required, such as accelerating from a stop, passing, or merging onto a freeway, the system will maintain full-cylinder operation.

If the vehicle has an Active Fuel Management indicator, see *Driver Information Center (DIC) (Base Level) on page 5-30* or *Driver Information Center (DIC) (Uplevel) on page 5-32* for more information on using this display.

Engine Exhaust

⚠ Warning

Engine exhaust contains carbon monoxide (CO) which cannot be seen or smelled. Exposure to CO can cause unconsciousness and even death.

Exhaust may enter the vehicle if:

- The vehicle idles in areas with poor ventilation (parking garages, tunnels, deep snow that may block underbody airflow or tail pipes).
- The exhaust smells or sounds strange or different.
- The exhaust system leaks due to corrosion or damage.
- The vehicle exhaust system has been modified, damaged, or improperly repaired.

(Continued)

Warning (Continued)

- There are holes or openings in the vehicle body from damage or aftermarket modifications that are not completely sealed.

If unusual fumes are detected or if it is suspected that exhaust is coming into the vehicle:

- Drive it only with the windows completely down.
- Have the vehicle repaired immediately.

Never park the vehicle with the engine running in an enclosed area such as a garage or a building that has no fresh air ventilation.

Running the Vehicle While Parked

It is better not to park with the engine running.

If the vehicle is left with the engine running, follow the proper steps to be sure the vehicle will not move. See *Shifting Into Park on page 9-30* and *Engine Exhaust on page 9-33*. If the vehicle has a manual transmission, see *Parking (Manual Transmission) on page 9-32*.

If parking on a hill and pulling a trailer, see *Driving Characteristics and Towing Tips on page 9-73*.

Automatic Transmission

If equipped, there is an electronic shift lever position indicator within the instrument cluster. This display comes on when the ignition key is turned to the ON/RUN position.

There are several different positions for the shift lever.

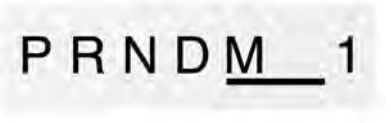

Heavy-Duty 6-Speed Automatic Transmission Shown, Others Similar

See “Range Selection Mode” under *Manual Mode on page 9-37*.

P (Park): This position locks the rear wheels. It is the best position to use when starting the engine because the vehicle cannot move easily. When parked on a hill, especially when the vehicle has a heavy load, you might notice an increase in the effort to shift out of P (Park). See “Torque Lock” under *Shifting Into Park on page 9-30*.

⚠ Warning

It is dangerous to get out of the vehicle if the shift lever is not fully in P (Park) with the parking brake firmly set. The vehicle can roll.

Do not leave the vehicle when the engine is running. If you have left the engine running, the vehicle can move suddenly. You or others could be injured. To be sure the vehicle will not move, even when you are on fairly level ground, always set the parking brake and move the shift lever to P (Park). See *Shifting Into Park on page 9-30* and *Driving Characteristics and Towing Tips on page 9-73*.

⚠ Warning

If you have four-wheel drive, the vehicle will be free to roll — even if the shift lever is in P (Park) — if the transfer case is in N (Neutral). So, be sure the transfer case is in a drive gear, Two-Wheel Drive High or Four-Wheel Drive High or Four-Wheel Drive Low — not in N (Neutral). See *Shifting Into Park on page 9-30*.

R (Reverse): Use this gear to back up.

⚠ Caution

Shifting to R (Reverse) while the vehicle is moving forward could damage the transmission. The repairs would not be covered by the vehicle warranty. Shift to R (Reverse) only after the vehicle is stopped.

To rock the vehicle back and forth to get out of snow, ice, or sand without damaging the transmission, see *If the Vehicle Is Stuck on page 9-14*.

N (Neutral): In this position, the engine does not connect with the wheels. To restart when you are already moving, use N (Neutral) only. Also, use N (Neutral) when the vehicle is being towed.

⚠ Warning

Shifting into a drive gear while the engine is running at high speed is dangerous. Unless your foot is firmly on the brake pedal, the vehicle could move very rapidly. You could lose control and hit people or objects. Do not shift into a drive gear while the engine is running at high speed.

⚠ Caution

Shifting out of P (Park) or N (Neutral) with the engine running at high speed may damage the transmission. The repairs would not be covered by the vehicle warranty. Be sure the engine is not running at high speed when shifting the vehicle.

D (Drive): This position is for normal driving. It provides the best fuel economy. If you need more power for passing, and you are:

- Going less than about 55 km/h (35 mph), push the accelerator pedal about halfway down.
- Going about 55 km/h (35 mph) or more, push the accelerator all the way down.

  By doing this, the vehicle shifts down to the next gear and has more power.

Use D (Drive) and Tow/Haul Mode when towing a trailer, carrying a heavy load, driving on steep hills, or driving off-road. Shift the transmission to a lower gear selection if the transmission shifts too often.

Downshifting the transmission in slippery road conditions could result in skidding. See “Skidding” under *Loss of Control on page 9-5*.

The vehicle has a shift stabilization feature that adjusts the transmission shifting to the current driving conditions in order to reduce rapid upshifts and downshifts. This shift stabilization feature is designed to determine, before making an upshift, if the engine is able to maintain vehicle speed by analyzing things such as vehicle speed, throttle position, and vehicle load. If the shift stabilization feature determines that a current vehicle speed cannot be maintained, the transmission does not upshift and instead holds the current gear.

In some cases, this could appear to be a delayed shift, however the transmission is operating normally.

The transmission uses adaptive shift controls. The adaptive shift control process continually compares key shift parameters to pre-programmed ideal shifts stored in the transmission’s computer. The transmission constantly makes adjustments to improve vehicle performance according to how the vehicle is being used, such as with a heavy load or when the temperature changes. During this adaptive shift control process, shifting might feel different as the transmission determines the best settings.

When temperatures are very cold, the transmission's gear shifting could be delayed providing more stable shifts until the engine warms up. Shifts could be more noticeable with a cold transmission. This difference in shifting is normal.

M (Manual Mode): This position allows selection of a range of gears appropriate for current driving conditions. If equipped, see “Range Selection Mode” under *Manual Mode on page 9-37*.

⚠ Caution

Spinning the tires or holding the vehicle in one place on a hill using only the accelerator pedal may damage the transmission. The repair will not be covered by the vehicle warranty. If you are stuck, do not spin the tires. When stopping on a hill, use the brakes to hold the vehicle in place.

Normal Mode Grade Braking

If equipped with a gasoline engine and an automatic transmission, Normal Mode Grade Braking is enabled when the vehicle is started, but is not enabled in Range Selection Mode. It assists in maintaining desired vehicle speeds

when driving on downhill grades by using the engine and transmission to slow the vehicle. The first time the system engages for each ignition key cycle, a DIC message will be displayed. See *Transmission Messages on page 5-44*.

To disable or enable Normal Mode Grade Braking within the current ignition key cycle, press and hold the Tow/Haul button for five seconds. When the button is released, the requested mode change is made. A DIC message displays. See *Transmission Messages on page 5-44*.

For other forms of grade braking, see *Tow/Haul Mode on page 9-39* and *Cruise Control on page 9-57*.

Kickdown Mode

The accelerator pedal provides an additional downshift after pressing through the kickdown feature.

It requires extra pedal pressure near the end of its travel to engage.

Manual Mode

Range Selection Mode

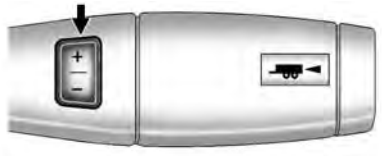

If equipped, Range Selection Mode helps control the vehicle's transmission and vehicle speed while driving downhill or towing a trailer by letting you select a desired range of gears.

To use this feature:

1. Move the shift lever to M (Manual Mode).
2. Tap the plus/minus buttons on the shift lever to select the desired range of gears for current driving conditions.

With an 8–speed automatic transmission, hold the plus/minus buttons on the shift lever to select the highest or lowest range available for the current vehicle speed.

When the shift lever is moved from D (Drive) to M (Manual Mode), a number displays next to the M, indicating the current transmission range.

This number is the highest gear that the transmission will command while operating in M (Manual Mode). All gears below that number are available. As driving conditions change, the transmission can automatically shift to lower gears. For example, when M5 is selected, 1 (First) through 5 (Fifth) gears are automatically shifted by the transmission, but 6 (Sixth) cannot be used until the plus/minus button on the shift lever is used to change to the range.

In vehicles with gasoline engines, when the shift lever is moved from D (Drive) to M (Manual Mode), a downshift may occur. The gear that the transmission is operating in when the shift lever is moved from D (Drive) to M (Manual Mode) determines if a downshift occurs. See the following chart.

6–Speed Automatic Transmission

Gear before shifting from D (Drive) to M (Manual Mode)	6th	5th	4th	3rd	2nd	1st
Range after shifting from D (Drive) to M (Manual Mode)	M4	M4	M3	M2	M2	M1

8–Speed Automatic Transmission

Gear before shifting from D (Drive) to M (Manual Mode)	8th	7th	6th	5th	4th	3rd	2nd	1st
Range after shifting from D (Drive) to M (Manual Mode) – Tow/Haul not engaged	M6	M6	M5	M4	M3	M3	M2	M1
Range after shifting from D (Drive) to M (Manual Mode) – Tow/Haul engaged	M6	M5	M4	M3	M3	M3	M2	M1

Grade Braking is not available when Range Selection Mode is active. See *Tow/Haul Mode on page 9-39*.

While using Range Selection Mode, cruise control and the Tow/Haul Mode can be used.

If the vehicle has an exhaust brake, it can also be used, but will not automatically downshift the transmission. See “Exhaust Brake” in the Duramax diesel supplement.

⚠ Caution

Spinning the tires or holding the vehicle in one place on a hill using only the accelerator pedal may damage the transmission. The repair will not be covered by the vehicle warranty. If you are stuck, do not spin the tires. When stopping on a hill, use the brakes to hold the vehicle in place.

Low Traction Mode

If equipped, Low Traction Mode assists in vehicle acceleration when road conditions are slippery, such as with ice or snow. While the vehicle is at a stop, select M2 using Range Selection Mode. This will limit torque to the wheels and help to prevent the tires from spinning.

Tow/Haul Mode

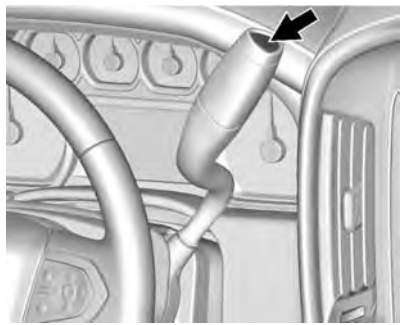

Vehicles with an automatic transmission have a Tow/Haul Mode. The Tow/Haul Mode adjusts the transmission shift pattern to reduce shift cycling. This provides increased performance, vehicle control, and enhanced transmission and engine cooling when driving down steep hills or mountain grades, towing, or hauling heavy loads.

The selector button is on the end of the shift lever. Turn the Tow/Haul Mode on and off by pressing the button. When the Tow/Haul Mode is enabled, a light on the instrument cluster will come on.

See *Tow/Haul Mode Light on page 5-26* and *Hill and Mountain Roads on page 9-11*.

Also see “Tow/Haul Mode” under *Towing Equipment on page 9-90*.

Tow/Haul Mode Grade Braking

Tow/Haul Mode Grade Braking is only enabled while the Tow/Haul Mode is selected and the vehicle is not in the Range Selection Mode. See “Tow/Haul Mode” listed previously and *Manual Mode on page 9-37*. Tow/Haul Mode Grade Braking assists in maintaining desired vehicle speeds when driving on downhill grades by using the engine and transmission to slow the vehicle.

On vehicles with a gasoline engine, to disable or enable Tow/Haul Grade Braking within the current ignition key cycle, press and hold the Tow/Haul button for five seconds. When the button is released, the requested mode change is made. A DIC message is displayed. See *Transmission Messages on page 5-44*.

On vehicles with a diesel engine, Tow/Haul Mode Grade Braking can be enabled or disabled by pressing the Tow/Haul Mode button. Use the exhaust brake and Tow/Haul Mode for maximum grade braking.

See *Towing Equipment on page 9-90*.

For other forms of grade braking, see *Automatic Transmission on page 9-34* and *Cruise Control on page 9-57*.

Manual Transmission

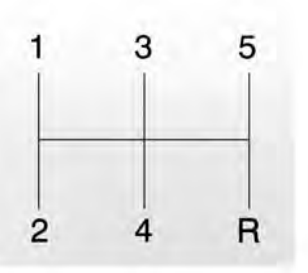

If equipped with a manual transmission, this is the shift pattern.

To operate the manual transmission:

1 (First): Press the clutch pedal and shift into 1 (First). Then, slowly let up on the clutch pedal as you slowly press down on the accelerator pedal.

You can shift into 1 (First) when you are going less than 30 km/h (20 mph). If you have come to a complete stop and it is hard to shift into 1 (First), put the shift lever in Neutral and let up on the clutch. Then press the clutch pedal back down and shift into 1 (First).

2 (Second): Press the clutch pedal as you let up on the accelerator pedal and shift into 2 (Second). Then, slowly let up on the clutch pedal as you press the accelerator pedal.

3 (Third), 4 (Fourth), and 5 (Fifth): Shift into 3 (Third), 4 (Fourth), and 5 (Fifth) the same way you do for 2 (Second). Slowly let up on the clutch pedal as you press the accelerator pedal.

To stop, let up on the accelerator pedal and press the brake pedal. Just before the vehicle stops, press the clutch pedal and the brake pedal, and shift to Neutral.

Neutral: Use this position when you start or idle the engine.

R (Reverse): To back up, press the clutch pedal. After the vehicle stops, shift into R (Reverse). Slowly let up on the clutch pedal as you press the accelerator pedal. If it is hard to shift, let the shift lever return to Neutral and release the clutch pedal. Then press the clutch again and shift into R (Reverse). Do not attempt to shift into 5 (Fifth) prior to shifting into R (Reverse). The transmission has a lock out feature, which prevents a 5 (Fifth) gear to R (Reverse) gear shift.

⚠ Caution

Shifting to R (Reverse) while the vehicle is moving forward could damage the transmission. The repairs would not be covered by the vehicle warranty. Shift to R (Reverse) only after the vehicle is stopped.

Use R (Reverse), along with the parking brake, for parking the vehicle.

Shift Speeds

⚠ Warning

If you skip a gear when downshifting, you could lose control of the vehicle. You could injure yourself or others. Do not shift down more than one gear at a time when downshifting.

Drive Systems

Four-Wheel Drive

If equipped, four-wheel drive engages the front axle for extra traction. Read the appropriate section for transfer case operation before using.

⚠ Caution

Driving on clean, dry pavement in four-wheel drive for an extended period of time may cause premature wear on the system. The damage would not be covered by the vehicle warranty.

Driving on clean, dry pavement in four-wheel drive may:

- Cause a vibration to be felt in the steering system.
- Cause tires to wear faster.
- Make the transfer case harder to shift, and cause it to run noisier.

⚠ Warning

Shifting the transfer case to N (Neutral) can cause the vehicle to roll even if the transmission is in P (Park). You or someone else could be seriously injured. Be sure to set the parking brake before placing the transfer case in N (Neutral). See *Parking Brake on page 9-51*.

⚠ Caution

Extended high-speed operation in 4 ↓ may damage or shorten the life of the drivetrain.

Engagement noise and bump when shifting between 4 ↓ and 4 ↑ or from N (Neutral), with the engine running, is normal.

Shifting into 4 ↓ will turn Traction Control and StabiliTrak® off. See *Traction Control/Electronic Stability Control on page 9-54*.

Manual Transfer Case

Move the lever to shift into and out of four-wheel drive.

An indicator light comes on when four-wheel drive is engaged. See *Four-Wheel-Drive Light on page 5-25*.

N (Neutral): Use only when the vehicle needs to be towed. See *Recreational Vehicle Towing on page 10-95* or *Towing the Vehicle on page 10-95*.

2 ↑ (Two-Wheel Drive High): Use this setting for driving on most streets and highways. The front axle is not engaged. This setting provides the best fuel economy.

4 ↓ (Four-Wheel Drive Low): This setting also engages the front axle and delivers extra torque. Choose 4 ↓ if driving off-road in deep sand, deep mud, or deep snow, and while climbing or descending steep hills. When engaged, keep vehicle speed below 72 km/h (45 mph).

4 ↑ (Four-Wheel Drive High): Use this setting when extra traction is needed. The front axle engages and helps when driving on snowy or icy roads, when off-roading, or when plowing snow.

The vehicle can be shifted between 2 ↑ and 4 ↑ while the vehicle is moving. In extremely cold weather, it may be necessary to stop or slow the vehicle to shift into 4 ↑.

Using the Manual Transfer Case

- Use quick motions to shift into or out of 4 ↓ or N (Neutral).
- Shifting may be harder when the vehicle is cold, but will return to normal once warmed up.
- Four-wheel drive reduces fuel economy.

Shifting from 2 ↑ to 4 ↑

- Shifts can be made at any vehicle speed.
- Shift in one continuous motion.
- Shifting while the vehicle is in motion may require that moderate force be applied to the shift lever before 4 ↑ can be engaged, especially in cold weather.
- In extremely cold weather, it may be necessary to slow or stop the vehicle to shift.
- While in 4 ↑, the vehicle can be driven at any posted legal speed limit.

Shifting In or Out of 4 ↓

> **⚠ Caution**
>
> Shifting the transfer case into 4 ↓ while moving at speeds faster than 5 km/h (3 mph) may cause premature wear to the transfer case, and may cause the gears to grind.

1. If possible, shift with the vehicle moving 5 km/h (3 mph) or less.
2. Shift the transmission into N (Neutral).
3. Shift the transfer case shift lever in one continuous motion.
4. Shifting with the vehicle at a stop may be more difficult. It is possible that the shift will not complete and the transfer case will remain in N (Neutral). This is normal. To complete the shift, with the engine running, shift the transmission to D (Drive) and back to N (Neutral), and reattempt the transfer case shift.

Shifting In or Out of Neutral

1. Have the engine running.
2. Set the parking brake. Press and hold the brake pedal. See *Parking Brake on page 9-51*.
3. Place the transmission into N (Neutral).
4. Shift the transfer case lever in one continuous motion into or out of N (Neutral).

Electronic Transfer Case

Use the transfer case knob, next to the steering wheel, to shift into and out of four-wheel drive for extra traction.

Indicator lights on the knob show which setting the transfer case is in. The N (Neutral) indicator is on the face of the knob. The indicator lights display briefly when the ignition is turned on, and one will stay on. If the lights display momentarily when the ignition is in ON/RUN, but none stay on, the knob may have

been turned while the vehicle was off. To see the indicator, turn the knob to another position so that it matches the actual transfer case setting. If no lights display, take the vehicle to your dealer for service. An indicator light flashes while shifting and until the shift is complete.

If the transfer case cannot complete a requested shift, it will return to the last chosen setting. Turn the control back to the previous setting to see the indicator light.

⚠ Caution

Shifting the transmission into gear before the requested mode indicator light has stopped flashing could damage the transfer case.

The settings are:

N (Neutral): Use only when the vehicle needs to be towed. See *Recreational Vehicle Towing on page 10-95* or *Towing the Vehicle on page 10-95*.

2 ↑ (Two-Wheel Drive High): Use for driving on most streets and highways. The front axle is not engaged. This setting provides the best fuel economy.

4 ↓ (Four-Wheel Drive Low): This setting engages the front axle and delivers extra torque. Choose 4 ↓ if driving off-road in deep sand, deep mud, or deep snow, and while climbing or descending steep hills. When engaged, keep vehicle speed below 72 km/h (45 mph).

Shifting into 4 ↓ will turn Traction Control and StabiliTrak off. See *Traction Control/Electronic Stability Control on page 9-54*.

4 ↑ (Four-Wheel Drive High): Use when extra traction is needed. The front axle engages and helps when driving on snowy or icy roads, when off-roading, or when plowing snow. The vehicle can be shifted from 2 ↑ to 4 ↑ while the vehicle is moving.

Shifting Into 4 ↑

Turn the knob to 4 ↑ at any speed up to 121 km/h (75 mph), except from 4 ↓. The indicator light will flash while shifting and will remain on the selected setting.

Shifting Into 2 ↑

Turn the knob to 2 ↑ at any speed, except when shifting from 4 ↓.

Shifting Into 4 ↓

When 4 ↓ is engaged, vehicle speed should be kept below 72 km/h (45 mph).

1. The ignition must be in ON/RUN and the vehicle must be stopped or moving less than 5 km/h (3 mph) with the transmission in N (Neutral). It is best for the vehicle to be moving 1.6 to 3.2 km/h (1 to 2 mph).
2. Turn the knob to 4 ↓. Wait for the 4 ↓ indicator light to stop flashing before shifting the transmission into gear.

If the transmission is in gear and/or moving more than 5 km/h (3 mph), the 4 ↓ indicator light will flash for 30 seconds and not complete the shift. After 30 seconds the transfer case will shift to 4 ↑. Turn the knob to 4 ↑ to see the indicator. With the vehicle moving less than 5 km/h (3 mph), and the transmission in N (Neutral), attempt the shift again.

Shifting Out of 4 ↓

1. To shift out of 4 ↓ the vehicle must be stopped or moving less than 5 km/h (3 mph) with the transmission in N (Neutral) and the ignition in ON/RUN. It is best for the vehicle to be moving 1.6 to 3.2 km/h (1 to 2 mph).
2. Turn the knob to 4 ↑ or 2 ↑. Wait for the 4 ↑ or 2 ↑ indicator light to stop flashing before shifting the transmission into gear.

If the transmission is in gear and/or moving more than 5 km/h (3 mph), the 4 ↑ or 2 ↑ indicator light will flash for 30 seconds, but will not complete the shift. With the vehicle moving less than 5 km/h (3 mph), and the transmission in N (Neutral), attempt the shift again.

Shifting Into N (Neutral)

To shift:

1. Park the vehicle on a level surface.
2. Set the parking brake and press and hold the brake pedal. See *Parking Brake on page 9-51*.
3. Start the vehicle or turn the ignition to ON/RUN.
4. Shift the transmission to N (Neutral).
5. Shift the transfer case to 2 ↑.
6. Turn the transfer case knob clockwise to N (Neutral) until it stops and hold it there until the N (Neutral) light starts blinking. This will take at least 10 seconds. Then slowly release the dial to the 4 ↓ position. The N (Neutral) light will come on when the transfer case shift to N (Neutral) is complete.
7. With the engine running, verify that the transfer case is in N (Neutral) by shifting the transmission to R (Reverse), then to D (Drive). There should be no movement of the vehicle while shifting the transmission.

8. Turn the engine off, and the ignition to ACC/ACCESSORY.
9. Place the transmission shift lever in P (Park). See *Recreational Vehicle Towing on page 10-95*.
10. Turn the ignition to LOCK/OFF.

Shifting Out of N (Neutral)

To shift:

1. Set the parking brake and apply the brake pedal.
2. Turn the ignition to ON/RUN with the engine off.
3. Shift the transmission to N (Neutral).
4. Turn the transfer case knob to 2 ↑.

   After the transfer case has shifted out of N (Neutral), the N (Neutral) light will go out.
5. Release the parking brake.

> **⚠ Caution**
>
> Shifting the transmission into gear before the requested mode indicator light has stopped flashing could damage the transfer case.

6. Start the engine and shift the transmission to the desired gear.

Automatic Transfer Case

Use the transfer case knob next to the steering wheel to shift into and out of four-wheel drive.

Indicator lights display which setting the transfer case is in. N (Neutral) is indicated on the knob. The indicator lights will display briefly when the ignition is turned on and one will stay on. If the lights display momentarily when the ignition is in ON/RUN, but none stay on, the knob may have been turned while the vehicle was off. To see the

indicator, turn the knob to another position so that it matches the actual transfer case setting. If no lights display, take the vehicle to your dealer for service. An indicator light flashes while shifting the transfer case and remains illuminated when the shift is complete.

If the transfer case cannot make a requested shift, it will return to the last chosen setting. Turn the knob back to the previous transfer case setting to see the indicator.

The settings are:

N (Neutral): Use only when the vehicle needs to be towed. See *Recreational Vehicle Towing on page 10-95* or *Towing the Vehicle on page 10-95*.

2 ↑ (Two-Wheel Drive High): Use for driving on most streets and highways. The front axle is not engaged. This setting provides the best fuel economy.

AUTO (Automatic Four-Wheel Drive): Use when road surface traction conditions are variable. When driving in AUTO, the front axle is engaged, and the vehicle's power is sent to the front and rear wheels automatically based on driving conditions. This setting provides slightly lower fuel economy than 2 ↑.

Do not use AUTO mode to park on a steep grade with poor traction such as ice, snow, mud, or gravel. In AUTO mode only the rear wheels will hold the vehicle from sliding when parked. If parking on a steep grade, use 4 ↑ to keep all four wheels engaged.

4 ↑ (Four-Wheel Drive High): Use this position when extra traction is needed, such as when driving on snowy or icy roads, when off-roading, or when plowing snow.

4 ↓ (Four-Wheel Drive Low): This setting engages the front axle and delivers extra torque. Choose 4 ↓ when driving off-road in deep sand, deep mud, or deep snow, and while climbing or descending steep hills.

Shifting into 4 ↓ will turn Traction Control and StabiliTrak off. See *Traction Control/Electronic Stability Control on page 9-54*.

Shifting Into 4 ↑ or AUTO

Turn the knob to the 4 ↑ or AUTO position at any speed, except from 4 ↓. The indicator light will flash while shifting and will remain on when the shift is completed.

Shifting Into 2 ↑

Turn the knob to 2 ↑ at any speed, except when shifting from 4 ↓. The indicator light will flash while shifting and will remain on when the shift is completed.

Shifting Into 4 ↓

When 4 ↓ is engaged, keep vehicle speed below 72 km/h (45 mph).

To shift:

1. The ignition must be in ON/RUN and the vehicle must be stopped or moving less than 5 km/h (3 mph) with the transmission in N (Neutral). It is best for the vehicle to be moving 1.6 to 3.2 km/h (1 to 2 mph).
2. Turn the knob to 4 ↓. Wait for the 4 ↓ indicator light to stop flashing before shifting the transmission into gear.

> **⚠ Caution**
>
> Shifting the transmission into gear before the requested mode indicator light has stopped flashing could damage the transfer case.

If the transmission is in gear and/or moving more than 5 km/h (3 mph), the 4 ↓ indicator light will flash for 30 seconds and not complete the shift. After 30 seconds the transfer case will shift to 4 ↑. Turn the knob to 4 ↑ to display the indicator. With the vehicle moving less than 5 km/h (3 mph), and the transmission in N (Neutral), attempt the shift again.

Shifting Out of 4 ↓

To shift:

1. The vehicle must be stopped or moving less than 5 km/h (3 mph) with the transmission in N (Neutral) and the ignition in ON/RUN. It is best for the vehicle to be moving 1.6 to 3.2 km/h (1 to 2 mph).
2. Turn the knob to 4 ↑, AUTO, or 2 ↑. Wait for the 4 ↑, AUTO, or 2 ↑ indicator light to stop flashing before shifting the transmission into gear.

> **⚠ Caution**
>
> Shifting the transmission into gear before the requested mode indicator light has stopped flashing could damage the transfer case.

If the transmission is in gear and/or moving more than 5 km/h (3 mph), the 4 ↑, AUTO, or 2 ↑ indicator light will flash for 30 seconds but will not complete the shift. With the vehicle moving less than 5 km/h (3 mph), and the transmission in N (Neutral), attempt the shift again.

Shifting Into N (Neutral)

To shift into N (Neutral):

1. Park the vehicle on a level surface.
2. Set the parking brake and press and hold the brake pedal. See *Parking Brake on page 9-51*.
3. Start the vehicle or turn the ignition to ON/RUN.

4. Shift the transmission to N (Neutral).
5. Shift the transfer case to 2 ↑.
6. Turn the transfer case knob clockwise to N (Neutral) until it stops and hold it there until the N (Neutral) light starts blinking. This will take at least 10 seconds. Then slowly release the dial to the 4 ↓ position. The N (Neutral) light will come on when the transfer case shift to N (Neutral) is complete.
7. With the engine running, verify that the transfer case is in N (Neutral) by shifting the transmission to R (Reverse), then shift the transmission to D (Drive). There should be no movement of the vehicle while shifting the transmission.
8. Turn the engine off, and the ignition to ACC/ACCESSORY.
9. Place the transmission shift lever in P (Park). See *Recreational Vehicle Towing on page 10-95*.
10. Turn the ignition to LOCK/OFF.

Shifting Out of N (Neutral)

To shift out of N (Neutral):

1. Set the parking brake and apply the brake pedal.
2. Turn the ignition to ON/RUN with the engine off.
3. Shift the transmission to N (Neutral).
4. Turn the transfer case knob to the desired setting.

   After the transfer case has shifted out of N (Neutral), the N (Neutral) light will go out.
5. Release the parking brake.
6. Start the engine and shift the transmission to the desired gear.

Brakes

Antilock Brake System (ABS)

This vehicle has ABS, an advanced electronic braking system that helps prevent a braking skid.

When the vehicle begins to drive away, ABS checks itself.
A momentary motor or clicking noise might be heard while this test is going on, and it might even be noticed that the brake pedal moves a little. This is normal.

If there is a problem with ABS, this warning light stays on. See *Antilock Brake System (ABS) Warning Light on page 5-25*.

If driving safely on a wet road and it becomes necessary to slam on the brakes and continue braking to avoid a sudden obstacle, a computer senses the wheels are slowing down. If one of the wheels is about to stop rolling, the computer will separately work the brakes at each wheel.

ABS can change the brake pressure to each wheel, as required, faster than any driver could. This can help you steer around the obstacle while braking hard.

As the brakes are applied, the computer keeps receiving updates on wheel speed and controls braking pressure accordingly.

Remember: ABS does not change the time needed to get a foot up to the brake pedal or always decrease stopping distance. If you get too close to the vehicle in front of you, there will not be enough time to apply the brakes if that vehicle suddenly slows or stops. Always leave enough room up ahead to stop, even with ABS.

Using ABS

Do not pump the brakes. Just hold the brake pedal down firmly and let ABS work. You may hear the ABS pump or motor operating and feel the brake pedal pulsate. This is normal.

Braking in Emergencies

ABS allows you to steer and brake at the same time. In many emergencies, steering can help more than even the very best braking.

Parking Brake

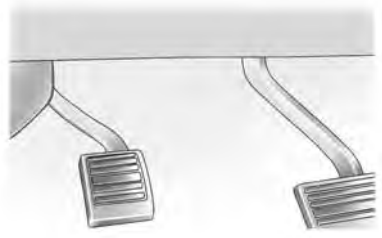

For vehicles without a release handle, set the parking brake by holding the regular brake pedal down, then pushing down the parking brake pedal.

If the ignition is on, the brake system warning light will come on. See *Brake System Warning Light on page 5-24*.

⚠ Caution

Driving with the parking brake on can overheat the brake system and cause premature wear or damage to brake system parts. Make sure that the parking brake is fully released and the brake warning light is off before driving.

To release the parking brake, hold the regular brake pedal down, then push down momentarily on the parking brake pedal until you feel the pedal release. Slowly pull your foot up off the parking brake pedal. If the parking brake is not released when you begin to drive, the brake system warning light will flash and a chime will sound warning you that the parking brake is still on.

If you are towing a trailer and are parking on a hill, see *Driving Characteristics and Towing Tips on page 9-73*.

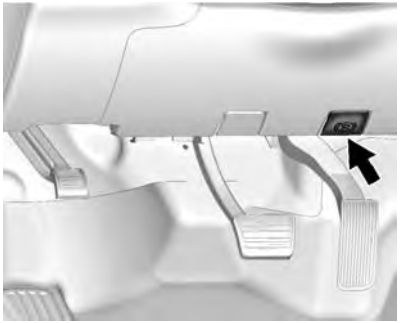

For vehicles with a release handle, set the parking brake by holding the regular brake pedal down, then pushing down the parking brake pedal.

If the ignition is on, the brake system warning light will come on. See *Brake System Warning Light on page 5-24*.

A chime sounds and the warning light flashes when the parking brake is applied and the vehicle is moving at least 8 km/h (5 mph).

To release the parking brake, hold the regular brake pedal down. Then pull the bottom edge of the lever with the parking brake symbol, located to the right of the steering column.

If the ignition is on when the parking brake is released, the brake system warning light goes off.

⚠ Caution

Driving with the parking brake on can overheat the brake system and cause premature wear or damage to brake system parts. Make sure that the parking brake is fully released and the brake warning light is off before driving.

If you are towing a trailer and are parking on any hill, see *Driving Characteristics and Towing Tips on page 9-73*.

Brake Assist

The Brake Assist feature is designed to assist the driver in stopping or decreasing vehicle speed in emergency driving conditions. This feature uses the stability system hydraulic brake control module to supplement the power brake system under conditions where the driver has quickly and forcefully applied the brake pedal in an attempt to quickly stop or slow down the vehicle. The stability system hydraulic brake control module increases brake pressure at each corner of the vehicle until the ABS activates. Minor brake pedal pulsation or pedal movement during this time is normal and the driver should continue to apply the brake pedal as the driving situation dictates The Brake Assist feature will automatically disengage when the brake pedal is released or brake pedal pressure is quickly decreased.

Hill Start Assist (HSA)

This vehicle has an HSA feature, which may be useful when the vehicle is stopped on a grade. This feature is designed to prevent the vehicle from rolling, either forward or rearward, during vehicle drive off. After you completely stop and hold the vehicle in a complete standstill on a grade, HSA will automatically activate. During the transition period between when you release the brake pedal and start to accelerate to drive off on a grade, HSA holds the braking pressure for a maximum of two seconds to ensure that there is no rolling. The brakes will automatically release when the accelerator pedal is applied within the two-second window. If the vehicle is equipped with the Integrated Trailer Brake Control (ITBC) system, HSA may also apply the trailer brakes. It will not activate if the vehicle is in a drive gear and facing downhill or if the vehicle is facing uphill and in R (Reverse). There may be situations on minor hills (less than 5% grade) with a loaded vehicle or while pulling a trailer where HSA may activate.

If you release the brake pedal and then reapply the brake pedal while HSA is activated, the brake pedal typically feels firmer with less pedal travel.

Ride Control Systems

Traction Control/ Electronic Stability Control

System Operation

The vehicle has a Traction Control System (TCS) and StabiliTrak®, an electronic stability control system. These systems help limit wheel spin and assist the driver in maintaining control, especially on slippery road conditions.

TCS activates if it senses any of the drive wheels are spinning or beginning to lose traction. When this happens, TCS applies the brakes to the spinning wheels and reduces engine power to limit wheel spin.

StabiliTrak activates when the vehicle senses a difference between the intended path and the direction the vehicle is actually traveling. StabiliTrak selectively applies braking pressure to any one of the vehicle wheel brakes to assist the driver in keeping the vehicle on the intended path. Trailer Sway Control (TSC) is also on automatically when the vehicle is started. See *Trailer Sway Control (TSC) on page 9-100*.

If cruise control is being used and traction control or StabiliTrak begins to limit wheel spin, cruise control will disengage. Cruise control may be turned back on when road conditions allow.

Both systems come on automatically when the vehicle is started and begins to move. The systems may be heard or felt while they are operating or while performing diagnostic checks. This is normal and does not mean there is a problem with the vehicle.

It is recommended to leave both systems on for normal driving conditions, but it may be necessary to turn TCS off if the vehicle gets stuck in sand, mud, ice, or snow. See *If the Vehicle Is Stuck on page 9-14* and “Turning the Systems Off and On” later in this section.

When the transfer case (if equipped) is in Four-Wheel Drive Low, the stability system is automatically disabled, OFF comes on, and the appropriate message will appear on the DIC. Both traction control and StabiliTrak are automatically disabled in this condition.

The indicator light for both systems is in the instrument cluster. This light will:

- Flash when TCS is limiting wheel spin.
- Flash when StabiliTrak is activated.

- Turn on and stay on when either system is not working.

If either system fails to turn on or to activate, a message displays in the Driver Information Center (DIC), and comes on and stays on to indicate that the system is inactive and is not assisting the driver in maintaining control. The vehicle is safe to drive, but driving should be adjusted accordingly.

If comes on and stays on:

1. Stop the vehicle.
2. Turn the engine off and wait 15 seconds.
3. Start the engine.

Drive the vehicle. If comes on and stays on, the vehicle may need more time to diagnose the problem. If the condition persists, see your dealer.

Turning the Systems Off and On

The button for TCS and StabiliTrak is on the center stack.

⚠ Caution

Do not repeatedly brake or accelerate heavily when TCS is off. The vehicle driveline could be damaged.

To turn off only TCS, press and release the button. The traction off light displays in the instrument cluster. The appropriate message will display in the DIC. See *Ride Control System Messages on page 5-40*. To turn TCS on again, press and release the button. The traction off light displayed in the instrument cluster will turn off.

If TCS is limiting wheel spin when the button is pressed, the system will not turn off until the wheels stop spinning.

To turn off both TCS and StabiliTrak, press and hold the button until the traction off light and the StabiliTrak OFF light come on and stay on in the instrument cluster, then release. The appropriate message will display in the DIC. See *Ride Control System Messages on page 5-40*.

To turn TCS and StabiliTrak on again, press and release the button. The traction off light and the StabiliTrak OFF light in the instrument cluster turn off.

StabiliTrak will automatically turn on if the vehicle exceeds 56 km/h (35 mph). Traction control will remain off.

The vehicle has a Trailer Sway Control (TSC) feature and a Hill Start Assist (HSA) feature. See *Trailer Sway Control (TSC) on page 9-100* or *Hill Start Assist (HSA) on page 9-53*.

Adding accessories can affect the vehicle performance. See *Accessories and Modifications on page 10-3*.

Hill Descent Control (HDC)

If equipped, HDC can be used when driving downhill. It sets and maintains vehicle speed while descending a very steep incline in a forward or reverse gear.

The HDC switch is on the center stack, below the climate controls.

Press to enable or disable HDC. Vehicle speed must be below 50 km/h (31 mph).

The HDC light displays on the instrument cluster when enabled.

HDC can maintain vehicle speeds between 3 and 22 km/h (2 and 14 mph) on an incline greater than or equal to a 10% grade. A blinking HDC light indicates the system is actively applying the brakes to maintain vehicle speed.

When HDC is activated, the initial HDC speed is set to the current driving speed. It can be increased or decreased by applying the accelerator or brake pedal. This adjusted speed becomes the new set speed.

HDC will remain enabled between 22 and 60 km/h (14 and 37 mph); however vehicle speed cannot be set or maintained in this range. It will automatically disable if the vehicle speed is above 80 km/h (50 mph) or above 60 km/h (37 mph) for at least 30 seconds. must be pressed again to re-enable HDC.

When enabled, if the vehicle is at a speed above 22 km/h (14 mph) and less than 60 km/h (37 mph), a DIC message will display. See *Vehicle Speed Messages on page 5-46*.

Locking Rear Axle

Vehicles with a locking rear axle can give more traction on snow, mud, ice, sand, or gravel. It works like a standard axle most of the time, but when traction is low, this feature will allow the rear wheel with the most traction to move the vehicle.

Cruise Control

⚠ Warning

Cruise control can be dangerous where you cannot drive safely at a steady speed. Do not use cruise control on winding roads or in heavy traffic.

Cruise control can be dangerous on slippery roads. On such roads, fast changes in tire traction can cause excessive wheel slip, and you could lose control. Do not use cruise control on slippery roads.

With cruise control a speed of about 40 km/h (25 mph) or more can be maintained without keeping your foot on the accelerator. Cruise control does not work at speeds below about 40 km/h (25 mph).

If equipped with an Allison or Hydra-Matic 6-speed automatic transmission, see “Tow/Haul Mode Grade Braking” under *Tow/Haul Mode on page 9-39* for an explanation of how cruise control interacts with the Range Selection Mode, Tow/Haul Mode, and Grade Braking systems.

If the cruise control is being used and the Traction Control system (TCS) or StabiliTrak begins to limit wheel spin, the cruise control will automatically disengage. See *Traction Control/Electronic Stability Control on page 9-54*. When road conditions allow you to safely use it again, cruise control can be turned back on.

If the brakes are applied, cruise control disengages.

(On/Off): Press to turn the system on or off. The indicator light is white when cruise control is on and turns off when cruise control is off.

+RES (Resume/Accelerate): If there is a set speed in memory, press briefly to resume to that speed or press and hold to accelerate. If cruise control is already active, use to increase vehicle speed.

SET− (Set/Coast): Press briefly to set the speed and activate cruise control. If cruise control is already active, use to decrease vehicle speed.

(Cancel): Press to disengage cruise control without erasing the set speed from memory.

Setting Cruise Control

If is on when not in use, SET− or +RES could get pressed and go into cruise when not desired. Keep off when cruise is not being used.

1. Press to turn the cruise system on.
2. Get up to the desired speed.
3. Press and release SET−.
4. Remove foot from the accelerator.

The cruise control indicator on the instrument cluster turns green after cruise control has been set to the desired speed. See *Instrument Cluster on page 5-10*.

Resuming a Set Speed

If the cruise control is set at a desired speed and then the brakes are applied or is pressed, the cruise control is disengaged without erasing the set speed from memory.

Once the vehicle speed reaches about 40 km/h (25 mph) or more, briefly press the +RES button. The vehicle returns to the previous set speed.

Increasing Speed While Using Cruise Control

If the cruise control system is already activated:

- Press and hold the +RES button until the desired speed is reached, then release it.
- To increase vehicle speed in small increments, briefly press the +RES button. For each press, the vehicle goes about 1.6 km/h (1 mph) faster.

The speedometer reading can be displayed in either English or metric units. See *Instrument Cluster on page 5-10*. The increment value used depends on the units displayed.

Reducing Speed While Using Cruise Control

If the cruise control system is already activated:

- Press and hold the SET– until the desired lower speed is reached, then release it.
- To slow down in small increments, briefly press the SET– button. For each press, the vehicle goes about 1.6 km/h (1 mph) slower.

The speedometer reading can be displayed in either English or metric units. See *Instrument Cluster on page 5-10*. The increment value used depends on the units displayed.

Passing Another Vehicle While Using Cruise Control

Use the accelerator pedal to increase the vehicle speed. When you take your foot off the pedal, the vehicle will slow down to the previous set cruise speed. While pressing the accelerator pedal or shortly following the release to override cruise control, briefly pressing the SET– button will result in cruise control set to the current vehicle speed.

Using Cruise Control on Hills

How well the cruise control works on hills depends on the vehicle speed, the load, and the steepness of the hills. When going up steep hills, pressing the accelerator pedal may be necessary to maintain vehicle speed.

While going downhill:

- Vehicles with a 6-speed automatic transmission and a gasoline engine have Cruise Grade Braking to help maintain driver selected speed.

  Cruise Grade Braking is enabled when the vehicle is started and cruise control is active. It is not enabled in Range Selection Mode. It assists in maintaining driver selected speed when driving on downhill grades by using the engine and transmission to slow the vehicle.

  To disable and enable Cruise Grade Braking for the current ignition key cycle, press and hold the Tow/Haul button for five seconds. A DIC message displays. See *Transmission Messages on page 5-44*.

- Vehicles with a diesel engine have Cruise Grade Braking enabled when Tow/Haul Mode is on, the exhaust brake is on, or both are on.

For other forms of Grade Braking, see *Automatic Transmission on page 9-34* ,*Tow/Haul Mode on page 9-39*, and *Hill Descent Control (HDC) on page 9-56*.

Ending Cruise Control

There are four ways to end cruise control:

- Step lightly on the brake pedal.
- Press .
- Shift the transmission to N (Neutral).
- To turn off cruise control, press .

Erasing Speed Memory

The cruise control set speed is erased from memory if is pressed or the ignition is turned off.

Driver Assistance Systems

This vehicle may have features that work together to help avoid crashes or reduce crash damage while driving, backing, and parking. Read this entire section before using these systems.

⚠ Warning

Do not rely on the Driver Assistance Systems. These systems do not replace the need for paying attention and driving safely. You may not hear or feel alerts or warnings provided by these systems. Failure to use proper care when driving may result in injury, death, or vehicle damage. See *Defensive Driving on page 9-3*.

(Continued)

Warning (Continued)

Under many conditions, these systems will not:

- Detect children, pedestrians, bicyclists, or animals.
- Detect vehicles or objects outside the area monitored by the system.
- Work at all driving speeds.
- Warn you or provide you with enough time to avoid a crash.
- Work under poor visibility or bad weather conditions.
- Work if the detection sensor is not cleaned or is covered by ice, snow, mud, or dirt.

Complete attention is always required while driving, and you should be ready to take action and apply the brakes and/or steer the vehicle to avoid crashes.

Audible or Safety Alert Seat

Some driver assistance features alert the driver of obstacles by beeping. To change the volume of the warning chime, see “Comfort and Convenience” under *Vehicle Personalization on page 5-47*.

If equipped with the Safety Alert Seat, the driver seat cushion may provide a vibrating pulse alert instead of beeping. To change this, see “Collision/Detection Systems” under *Vehicle Personalization on page 5-47*.

Assistance Systems for Parking or Backing

If equipped, the Rear Vision Camera (RVC), Rear Parking Assist (RPA), and Front Park Assist (FPA) may help the driver park or avoid objects. Always check around the vehicle when parking or backing.

The RVC and RPA will not work properly if the tailgate is down. If the tailgate is down, do not use these systems.

Rear Vision Camera (RVC)

When the vehicle is shifted into R (Reverse), the RVC displays an image of the area behind the vehicle in the center stack display. The previous screen displays when the vehicle is shifted out of R (Reverse) after a short delay. To return to the previous screen sooner, press a button on the infotainment system, shift into P (Park), or reach a vehicle speed of 8 km/h (5 mph).

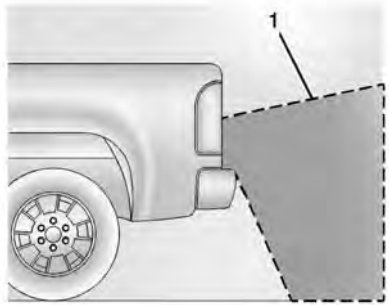

1. View Displayed by the Camera

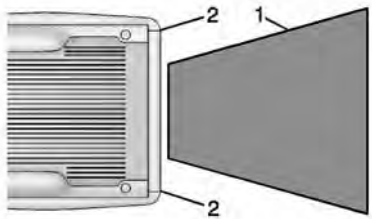

1. View Displayed by the Camera
2. Corners of the Rear Bumper

Displayed images may be farther or closer than they appear. The area displayed is limited and objects that are close to either corner of the bumper or under the bumper do not display.

A warning triangle may display on the RVC screen to show where the RPA has detected an object. This triangle changes from amber to red and increases in size the closer the object.

⚠ Warning

The RVC system does not display children, pedestrians, bicyclists, crossing traffic, animals, or any other object located outside the camera's field of view, below the bumper, or under the vehicle. Perceived distances may be different from actual distances. Do not back the vehicle using only the RVC screen. Failure to use proper care before backing

(Continued)

Warning (Continued)

may result in injury, death, or vehicle damage. Always check behind and around the vehicle before backing.

Parking Assist

With RPA, and if equipped with FPA, as the vehicle moves at speeds of less than 8 km/h (5 mph) the sensors on the bumpers may detect objects up to 2.5 m (8 ft) behind and 1.2 m (4 ft) in front of the vehicle within a zone 25 cm (10 in) high off the ground and below bumper level. These detection distances may be shorter during warmer or humid weather. Blocked sensors will not detect objects and can also cause false detections. Keep the sensors clean of mud, dirt, snow, ice, and slush; and clean sensors after a car wash in freezing temperatures.

⚠ Warning

The parking assist system does not detect children, pedestrians, bicyclists, animals, or objects located below the bumper or that are too close or too far from the vehicle. It is not available at speeds greater than 8 km/h (5 mph). To prevent injury, death, or vehicle damage, even with parking assist, always check the area around the vehicle and check all mirrors before moving forward or backing.

The instrument cluster may have a parking assist display with bars that show “distance to object” and object location information for RPA, and on some vehicles, for FPA. As the object gets closer, more bars light up and the bars change color from yellow to amber to red.

When an object is first detected in the rear, one beep will be heard from the rear, or both sides of the Safety Alert Seat will pulse two times. When an object is very close (<0.6 m (2 ft) in the vehicle rear, or <0.3 m (1 ft) in the vehicle front), a continuous beep will sound from

the front or rear, or both sides of the Safety Alert Seat will pulse five times. Beeps for FPA are higher pitched than for RPA.

Turning the Features On or Off

The button on the center stack is used to turn on or off the Front and Rear Parking Assist. The indicator light in the button comes on when the features are on and turns off when the features have been disabled.

Front and Rear Parking Assist can be turned off, on, or on with towbar through vehicle personalization. See “Park Assist” under *Vehicle Personalization on page 5-47*. If the parking assist is turned off through vehicle personalization, the parking assist button on the center stack will be disabled. To turn the parking assist on again, select On in the vehicle personalization menu. The On with Towbar setting allows for the parking assist to work properly with a small item attached to the trailer hitch. Turn off parking assist when towing a trailer.

To turn the rear parking assist symbols or guidance lines, see “Rear Camera” under *Vehicle Personalization on page 5-47*.

Disconnecting the Rear Vision Camera (RVC)

The RVC must be disconnected if the tailgate needs to be removed.

The RVC is disconnected by removing the connector from the electrical junction block mounted on the left side of the cross member of the vehicle frame. After disconnecting, the cap mounted next to the camera connector must be relocated so that the open terminals on the junction block are covered.

Assistance Systems for Driving

If equipped, when driving the vehicle, Forward Collision Alert (FCA) and Lane Departure Warning (LDW) can help to avoid a crash or reduce crash damage.

Forward Collision Alert (FCA) System

If equipped, the FCA system may help to avoid or reduce the harm caused by front-end crashes. When approaching a vehicle ahead too quickly, FCA provides a red flashing alert on the windshield and rapidly beeps or pulses the driver seat. FCA also lights an amber visual alert if following another vehicle much too closely.

FCA detects vehicles within a distance of approximately 60 m (197 ft) and operates at speeds above 40 km/h (25 mph).

⚠ Warning

FCA is a warning system and does not apply the brakes. When approaching a slower-moving or stopped vehicle ahead too rapidly, or when following a vehicle too closely, FCA may not provide a warning with enough time to help avoid a crash. FCA does not warn of pedestrians, animals, signs, guardrails, bridges, construction barrels, or other objects. Be ready to take action and apply the brakes. For more information, see *Defensive Driving on page 9-3*.

FCA can be disabled with the FCA steering wheel control.

Detecting the Vehicle Ahead

FCA warnings will not occur unless the FCA system detects a vehicle ahead. When a vehicle is detected, the vehicle-ahead indicator will display green. Vehicles may not be detected on curves, highway exit ramps, or hills; or due to poor visibility. FCA will not detect another vehicle ahead until it is completely in the driving lane.

⚠ Warning

FCA does not provide a warning to help avoid a crash, unless it detects a vehicle. FCA may not detect a vehicle ahead if the FCA sensor is blocked by dirt, snow, or ice, or if the windshield is damaged. It may also not detect a vehicle on winding or hilly roads, or in conditions that can limit visibility such as fog, rain, or snow, or if the headlamps or windshield are not cleaned or in proper condition. Keep the windshield, headlamps, and FCA sensors clean and in good repair.

Collision Alert

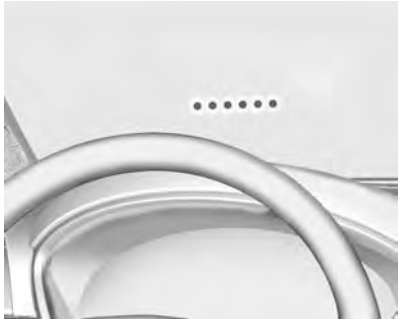

When your vehicle approaches another detected vehicle too rapidly, the red FCA display will flash on the windshield. Also, eight rapid high-pitched beeps will sound from the front, or both sides of the Safety Alert Seat will pulse five times.

When this Collision Alert occurs, the brake system may prepare for driver braking to occur more rapidly which can cause a brief, mild deceleration. Continue to apply the brake pedal as needed. Cruise control may be disengaged when the Collision Alert occurs.

Tailgating Alert

The vehicle ahead indicator will display amber when you are following a detected vehicle ahead much too closely.

Selecting the Alert Timing

The Collision Alert control is on the steering wheel. Press to set the FCA timing to Far, Medium, Near, or Off. The first button press shows the current setting on the DIC. Additional button presses will change this setting. The chosen setting will remain until it is changed and will affect the timing of both the Collision Alert and the Tailgating Alert features. The timing of both alerts will vary based on vehicle speed. The faster the vehicle speed, the farther away the alert will occur.

Consider traffic and weather conditions when selecting the alert timing. The range of selectable alert timing may not be appropriate for all drivers and driving conditions.

Unnecessary Alerts

FCA may provide unnecessary alerts for turning vehicles, vehicles in other lanes, objects that are not vehicles, or shadows. These alerts are normal operation and the vehicle does not need service.

Cleaning the System

If the FCA system does not seem to operate properly, cleaning the outside of the windshield in front of the rearview mirror, and cleaning the front of the vehicle where radar sensors are located, may correct the issue.

Lane Departure Warning (LDW)

If equipped, LDW may help avoid crashes due to unintentional lane departures. It may provide an alert if the vehicle is crossing a lane marking without using a turn signal in that direction. LDW uses a camera sensor to detect the lane markings at speeds of 56 km/h (35 mph) or greater.

⚠ Warning

The LDW system does not steer the vehicle. The LDW system may not:

- Provide enough time to avoid a crash.
- Detect lane markings under poor weather or visibility conditions. This can occur if the windshield or headlamps are blocked by dirt, snow, or ice; if they are not in

(Continued)

Warning (Continued)

proper condition; or if the sun shines directly into the camera.

- Detect road edges.
- Detect lanes on winding or hilly roads.

If LDW only detects lane markings on one side of the road, it will only warn you when departing the lane on the side where it has detected a lane marking. Always keep your attention on the road and maintain proper vehicle position within the lane, or vehicle damage, injury, or death could occur. Always keep the windshield, headlamps, and camera sensors clean and in good repair. Do not use LDW in bad weather conditions.

How the System Works

The LDW camera sensor is on the windshield ahead of the rearview mirror.

To turn LDW on and off, press on the center stack. The control indicator will light when LDW is on.

When LDW is on, is green if LDW is available to warn of a lane departure. If the vehicle crosses a detected lane marking without using the turn signal in that direction, changes to amber and flashes. Additionally, there will be three beeps, or the driver seat will pulse three times on the right or left, depending on the lane departure direction.

When the System Does Not Seem to Work Properly

The system may not detect lanes as well when there are:

- Close vehicles ahead.
- Sudden lighting changes, such as when driving through tunnels.
- Banked roads.

If the LDW system is not functioning properly when lane markings are clearly visible, cleaning the windshield may help.

LDW alerts may occur due to tar marks, shadows, cracks in the road, temporary or construction lane markings, or other road imperfections. This is normal system operation; the vehicle does not need service. Turn LDW off if these conditions continue.

Fuel

For diesel engine vehicles, see “Fuel for Diesel Engines” in the Duramax diesel supplement.

Use of the recommended fuel is an important part of the proper maintenance of this vehicle. When driving in the U.S. and Canada, to help keep the engine clean and maintain optimum vehicle performance, we recommend using TOP TIER Detergent Gasolines. See www.toptiergas.com for a list of TOP TIER Detergent Gasolines.

TOP TIER™
Detergent Gasoline

CATEGORIE SUPERIEURE™
Essences Détergentes

If the vehicle has a yellow fuel cap, E85 or FlexFuel can be used in the vehicle. See *E85 or FlexFuel on page 9-69*.

For all vehicles except those with the 6.2L V8 engine, use regular unleaded gasoline meeting ASTM specification D4814 with a posted octane rating of 87 or higher. Do not use gasoline with an octane rating below 87, as it may cause engine damage and will lower fuel economy.

If the vehicle has the 6.2L V8 engine (VIN Code J), use premium unleaded gasoline meeting ASTM specification D4814 with a posted octane rating of 91 or higher. Regular unleaded gasoline rated at 87 octane or higher can be used, but acceleration and fuel economy will be reduced, and an audible knocking noise may be heard. If this occurs, use a gasoline rated at 91 octane or higher as soon as possible. Otherwise, the engine could be damaged. If heavy knocking is heard when using gasoline with a 91 octane rating or higher, the engine needs service.

Use of Seasonal Fuels

Use summer and winter fuels in the appropriate season. The fuels industry automatically modifies the fuel for the appropriate season. If fuel is left in the vehicle tank for long periods of time, driving or starting could be affected. Drive the vehicle until the fuel is at one-half tank or less, then refuel with the current seasonal fuel.

Prohibited Fuels

Gasolines containing oxygenates such as ethers and ethanol, as well as reformulated gasolines, are available in some cities. If these gasolines comply with the previously described specification, then they are acceptable to use. However, E85 (85% ethanol) and other fuels containing more than 15% ethanol must be used only in FlexFuel vehicles.

⚠ Caution

Do not use fuel containing methanol. It can corrode metal parts in the fuel system and also damage plastic and rubber parts. That damage would not be covered under the vehicle warranty.

Some gasolines, mainly high octane racing gasolines, can contain an octane-enhancing additive called methylcyclopentadienyl manganese tricarbonyl (MMT). Do not use gasolines and/or fuel additives with MMT as they can reduce spark plug life and affect emission control system performance. The malfunction indicator lamp may turn on. If this occurs, see your dealer for service.

California Fuel Requirements

If the vehicle is certified to meet California Emissions Standards, it is designed to operate on fuels that meet California specifications. See the underhood emission control label. If this fuel is not available in states adopting California Emissions Standards, the vehicle will operate satisfactorily on fuels meeting federal specifications, but emission control system performance might be affected. The malfunction indicator lamp could turn on and the vehicle may not pass a smog-check test. See *Malfunction Indicator Lamp on page 5-21*. If this occurs, return to your authorized dealer for diagnosis. If it is determined that the condition is caused by the type of fuel used, repairs may not be covered by the vehicle warranty.

Fuels in Foreign Countries

If planning to drive in countries outside the U.S. or Canada, the proper fuel might be hard to find. Check regional auto club or fuel retail brand websites for availability in the country where driving. Never use leaded gasoline, fuel containing methanol, manganese, or any other fuel not recommended. Costly repairs caused by use of improper fuel would not be covered by the vehicle warranty.

Fuel Additives

To keep fuel systems clean, TOP TIER Detergent Gasoline is recommended. See *Fuel on page 9-67*.

If TOP TIER Detergent Gasoline is not available, one bottle of Fuel System Treatment PLUS added to the fuel tank at every engine oil change can help. Fuel System Treatment PLUS is the only gasoline additive recommended by General Motors. It is available at your dealer.

Do not use additives with E85 or FlexFuel.

E85 or FlexFuel

Vehicles with a yellow fuel cap can use either unleaded gasoline or fuel containing up to 85% ethanol (E85). All other vehicles should use only the unleaded gasoline as described in *Fuel on page 9-67*.

The use of E85 or FlexFuel is encouraged when the vehicle is designed to use it. E85 or FlexFuel is made from renewable sources.

To help locate fuel stations that carry E85 or FlexFuel, the U.S. Department of Energy has an alternative fuels website. See www.afdc.energy.gov/afdc/locator/stations.

E85 or FlexFuel should meet ASTM Specification D 5798 or CAN/CGSB–3.512 in Canada. Do not use the fuel if the ethanol content is greater than 85%. Fuel mixtures that do not meet ASTM or CGSB specifications can affect driveability and could cause the malfunction indicator lamp to come on.

For the 6.0L V8 engine, after refueling, the vehicle calculates the composition of the fuel. It is not recommended to repeatedly switch between fuels. If fuels are switched frequently, add as much fuel as possible and do not add less than 11 L (3 gal) when refueling. Drive at least 11 km (7 mi) immediately after refueling to allow the vehicle to adapt to the change in ethanol concentration.

Because E85 or FlexFuel has less energy per liter (gallon) than gasoline, the vehicle will need to be refilled more often. See *Filling the Tank on page 9-70*.

⚠ Caution

Some additives are not compatible with E85 or FlexFuel and can harm the vehicle's fuel system. Do not add anything to E85 or FlexFuel. Damage caused by additives would not be covered by the vehicle warranty.

⚠ Caution

Do not use fuel containing methanol. It can corrode metal parts in the fuel system and also damage plastic and rubber parts. That damage would not be covered under the vehicle warranty.

Filling the Tank

If the vehicle has a diesel engine, see the Duramax diesel supplement for more information.

⚠ Warning

Fuel vapors and fuel fires burn violently and can cause injury or death.

- To help avoid injuries to you and others, read and follow all the instructions on the fuel pump island.
- Turn off the engine when refueling.
- Keep sparks, flames, and smoking materials away from fuel.
- Do not leave the fuel pump unattended.
- Do not reenter the vehicle while pumping fuel.
- Keep children away from the fuel pump and never let children pump fuel.

(Continued)

Warning (Continued)

- Fuel can spray out if the fuel cap is opened too quickly. This spray can happen if the tank is nearly full, and is more likely in hot weather. Open the fuel cap slowly and wait for any hiss noise to stop then unscrew the cap all the way.

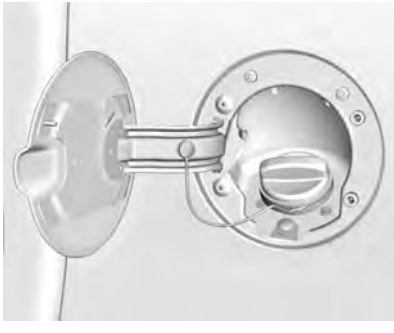

The fuel cap is behind a hinged fuel door on the driver side of the vehicle. Vehicles that have a FlexFuel badge and a yellow fuel cap can use either unleaded gasoline or ethanol fuel containing up to 85% ethanol (E85). See *E85 or FlexFuel on page 9-69*.

To remove the fuel cap, turn it slowly counterclockwise.

If the vehicle is a dual fuel tank chassis cab model, and it runs out of fuel, refuel the front fuel tank first to ensure a quick restart.

Be careful not to spill fuel. Do not top off or overfill the tank and wait a few seconds after you have finished pumping before removing the nozzle. Clean fuel from painted surfaces as soon as possible. See *Exterior Care on page 10-100*.

When replacing the fuel cap, turn it clockwise until it clicks. It will require more effort to turn the fuel cap on the last turn as you tighten it. Make sure the cap is fully installed. The diagnostic system can determine if the fuel cap has been left off or improperly installed. This would allow fuel to evaporate into the atmosphere. See *Malfunction Indicator Lamp on page 5-21*.

The TIGHTEN GAS CAP message displays on the Driver Information Center (DIC) if the fuel cap is not properly installed. See *Fuel System Messages on page 5-39* for more information.

⚠ Warning

If a fire starts while you are refueling, do not remove the nozzle. Shut off the flow of fuel by shutting off the pump or by notifying the station attendant. Leave the area immediately.

⚠ Caution

If a new fuel cap is needed, be sure to get the right type of cap from your dealer. The wrong type of fuel cap may not fit properly, may cause the malfunction indicator lamp to light, and could damage the fuel tank and emissions system. See *Malfunction Indicator Lamp on page 5-21*.

Filling a Portable Fuel Container

⚠ Warning

Filling a portable fuel container while it is in the vehicle can cause fuel vapors that can ignite either by static electricity or other means. You or others could be badly burned and the vehicle could be damaged. Always:

- Use approved fuel containers.
- Remove the container from the vehicle, trunk, or pickup bed before filling.
- Place the container on the ground.
- Place the nozzle inside the fill opening of the container before dispensing fuel, and

(Continued)

Warning (Continued)

keep it in contact with the fill opening until filling is complete.

- Fill the container no more than 95% full to allow for expansion.
- Do not smoke, light matches, or use lighters while pumping fuel.
- Avoid using cell phones or other electronic devices.

Trailer Towing

General Towing Information

Only use towing equipment that has been designed for the vehicle. Contact your dealer or trailering dealer for assistance with preparing the vehicle for towing a trailer. Read the entire section before towing a trailer.

For towing a disabled vehicle, see *Towing the Vehicle on page 10-95*. For towing the vehicle behind another vehicle such as a motor home, see *Recreational Vehicle Towing on page 10-95*.

Driving Characteristics and Towing Tips

Driving with a Trailer

When towing a trailer:

- Become familiar with the state and local laws that apply to trailer towing.
- Do not tow a trailer during the first 800 km (500 mi) to prevent damage to the engine, axle, or other parts.
- Then during the first 800 km (500 mi) of trailer towing, do not drive over 80 km/h (50 mph) and do not make starts at full throttle.
- Vehicles can tow in D (Drive). Shift the transmission to a lower gear if the transmission shifts too often under heavy loads and/or hilly conditions.
- Turn off Park Assist when towing.

⚠ Warning

When towing a trailer, exhaust gases may collect at the rear of the vehicle and enter if the liftgate, trunk/hatch, or rear-most window is open.

When towing a trailer:

- Do not drive with the liftgate, trunk/hatch, or rear-most window open.
- Fully open the air outlets on or under the instrument panel.
- Also adjust the climate control system to a setting that brings in only outside air. See “Climate Control Systems” in the Index.

For more information about Carbon Monoxide, see *Engine Exhaust on page 9-33*.

Towing a trailer requires a certain amount of experience. The combination you are driving is longer and not as responsive as the vehicle itself. Get acquainted with the handling and braking of the rig before setting out for the open road.

Before starting, check all trailer hitch parts and attachments, safety chains, electrical connectors, lamps, tires, and mirrors. If the trailer has electric brakes, start the combination moving and then apply the trailer brake controller by hand to be sure the brakes work.

During the trip, check occasionally to be sure that the load is secure and the lamps and any trailer brakes still work.

Following Distance

Stay at least twice as far behind the vehicle ahead as you would when driving the vehicle without a trailer. This can help to avoid heavy braking and sudden turns.

Passing

More passing distance is needed when towing a trailer. The combination will not accelerate as quickly and is longer so it is necessary to go much farther beyond the passed vehicle before returning to the lane.

Backing Up

Hold the bottom of the steering wheel with one hand. To move the trailer to the left, move that hand to the left. To move the trailer to the right, move your hand to the right. Always back up slowly and, if possible, have someone guide you.

Making Turns

⚠ Caution

Making very sharp turns while trailering could cause the trailer to come in contact with the vehicle.

(Continued)

Caution (Continued)

The vehicle could be damaged. Avoid making very sharp turns while trailering.

When turning with a trailer, make wider turns than normal. Do this so the trailer will not strike soft shoulders, curbs, road signs, trees, or other objects. Avoid jerky or sudden maneuvers. Signal well in advance.

If the trailer turn signal bulbs burn out, the arrows on the instrument cluster will still flash for turns. It is important to check occasionally to be sure the trailer bulbs are still working.

Driving on Grades

Reduce speed and shift to a lower gear *before* starting down a long or steep downgrade. If the transmission is not shifted down, the brakes might get hot and no longer work well.

Vehicles can tow in D (Drive). Shift the transmission to a lower gear if the transmission shifts too often under heavy loads and/or hilly conditions.

The Tow/Haul Mode may be used if the transmission shifts too often. See *Tow/Haul Mode on page 9-39*.

When towing at high altitude on steep uphill grades, consider the following: Engine coolant will boil at a lower temperature than at normal altitudes. If the engine is turned off immediately after towing at high altitude on steep uphill grades, the vehicle may show signs similar to engine overheating. To avoid this, let the engine run while parked, preferably on level ground, with the transmission in P (Park) for a few minutes before turning the engine off. If the overheat warning comes on, see *Engine Overheating on page 10-25*.

Parking on Hills

⚠ Warning

Parking the vehicle on a hill with the trailer attached can be dangerous. If something goes wrong, the rig could start to move. People can be injured, and both the vehicle and the trailer can be damaged. When possible, always park the rig on a flat surface.

If parking the rig on a hill:

1. Press the brake pedal, but do not shift into P (Park) yet. Turn the wheels into the curb if facing downhill or into traffic if facing uphill.
2. Have someone place chocks under the trailer wheels.
3. When the wheel chocks are in place, release the regular brakes until the chocks absorb the load.
4. Reapply the brake pedal. Then apply the parking brake and shift into P (Park).
5. Release the brake pedal.

Leaving After Parking on a Hill

1. Apply and hold the brake pedal.
2. Start the engine.
3. Shift into a gear.
4. Release the parking brake.
5. Let up on the brake pedal.
6. Drive slowly until the trailer is clear of the chocks.
7. Stop and have someone pick up and store the chocks.

Maintenance when Trailer Towing

The vehicle needs service more often when pulling a trailer. See *Maintenance Schedule on page 11-3*. Things that are especially important in trailer operation are automatic transmission fluid, engine oil, axle

lubricant, belts, cooling system, and brake system. It is a good idea to inspect these before and during the trip.

Check periodically to see that all hitch nuts and bolts are tight.

Trailer Towing

If the vehicle has a diesel engine, see the Duramax diesel supplement.

If the vehicle is bi-fuel, see the bi-fuel supplement.

Do not tow a trailer during break-in. See *New Vehicle Break-In on page 9-23*.

⚠ Warning

The driver can lose control when pulling a trailer if the correct equipment is not used or the vehicle is not driven properly. For example, if the trailer is too heavy, the brakes may not work well or even at all. The driver and passengers could be seriously injured. The vehicle may also be damaged; the resulting repairs would not be covered by the vehicle warranty. Pull a trailer only if all the steps in this section have been followed. Ask your dealer for advice and information about towing a trailer with the vehicle.

⚠ Caution

Pulling a trailer improperly can damage the vehicle and result in costly repairs not covered by the vehicle warranty. To pull a trailer correctly, follow the advice in this section and see your dealer for important information about towing a trailer with the vehicle.

See *Vehicle Load Limits on page 9-15* for more information about the vehicle's maximum load capacity.

To identify the trailering capacity of the vehicle, read the information in “Weight of the Trailer” later in this section.

Trailering is different than just driving the vehicle by itself. Trailering means changes in handling, acceleration, braking, durability, and fuel economy.

Successful, safe trailering takes correct equipment, and it has to be used properly.

The following information has many time-tested, important trailering tips and safety rules. Many of these are important for your safety and that of your passengers. Read this section carefully before pulling a trailer.

Weight of the Trailer

How heavy can a trailer safely be?

It depends on how the rig is used. Speed, altitude, road grades, outside temperature, and how much the vehicle is used to pull a trailer are all important. It can depend on any special equipment on the vehicle, and the amount of tongue weight the vehicle can carry. See “Weight of the Trailer Tongue” later in this section for more information.

Trailer weight rating (TWR) for 1500 series trucks is calculated assuming the tow vehicle has the driver, a front seat passenger, and all required trailering equipment. Weight of additional optional equipment, passengers, and cargo in the tow vehicle must be subtracted from the trailer weight rating.

Trailer weight rating (TWR) for 2500 and 3500 series trucks is calculated assuming the tow vehicle has only the driver but all required trailering equipment. Weight of additional optional equipment, passengers, and cargo in the tow vehicle must be subtracted from the trailer weight rating.

For kingpin weight and trailer tongue weight information, see “Weight of the Trailer Tongue” later in this section.

Use the following chart to determine how much the vehicle can weigh, based upon the vehicle model and options.

Weights listed apply for conventional trailers and fifth-wheel trailers unless otherwise noted.

Vehicle	Axle Ratio	Maximum Trailer Weight (c)	GCWR (a)
1500 Series 2WD Regular Cab Standard Box			
4.3L V6 (b)	3.23	2 767 kg (6,100 lb)	4 990 kg (11,000 lb)
4.3L V6 (b)	4.10	2 087 kg (4,600 lb)	4 309 kg (9,500 lb)
5.3L V8	3.08	3 175 kg (7,000 lb)	5 443 kg (12,000 lb)
5.3L V8	3.42	4 082 kg (9,000 lb)	6 350 kg (14,000 lb)
1500 Series 2WD Double Cab Standard Box			
4.3L V6 (b)	3.23	2 540 kg (5,600 lb)	4 990 kg (11,000 lb)
5.3L V8	3.08	2 948 kg (6,500 lb)	5 443 kg (12,000 lb)
5.3L V8	3.42	4 309 kg (9,500 lb)	6 804 kg (15,000 lb)
5.3L V8	3.73	5 080 kg (11,200 lb)	7 575 kg (16,700 lb)
6.2L V8	3.23	4 309 kg (9,500 lb)	6 804 kg (15,000 lb)
6.2L V8	3.42	5 443 kg (12,000 lb)	8 029 kg (17,700 lb)
1500 Series 2WD Crew Cab Standard Box			
4.3L V6 (b)	3.23	2 495 kg (5,500 lb)	4 990 kg (11,000 lb)
5.3L V8	3.08	2 903 kg (6,400 lb)	5 443 kg (12,000 lb)
5.3L V8	3.42	4 264 kg (9,400 lb)	6 804 kg (15,000 lb)

Vehicle	Axle Ratio	Maximum Trailer Weight (c)	GCWR (a)
5.3L V8	3.73	4 990 kg (11,000 lb)	7 575 kg (16,700 lb)
6.2L V8	3.23	4 219 kg (9,300 lb)	6 804 kg (15,000 lb)
6.2L V8	3.42	5 398 kg (11,900 lb)	8 029 kg (17,700 lb)
1500 Series 2WD Crew Cab Short Box (b)			
4.3L V6	3.23	2 540 kg (5,600 lb)	4 990 kg (11,000 lb)
5.3L V8	3.08	2 903 kg (6,400 lb)	5 443 kg (12,000 lb)
5.3L V8	3.42	4 264 kg (9,400 lb)	6 804 kg (15,000 lb)
5.3L V8	3.73	5 035 kg (11,100 lb)	7 575 kg (16,700 lb)
6.2L V8	3.23	4 264 kg (9,400 lb)	6 804 kg (15,000 lb)
6.2L V8	3.42	5 443 kg (12,000 lb)	8 029 kg (17,700 lb)
1500 Series 2WD Regular Cab Long Box			
4.3L V6 (b)	3.23	2 676 kg (5,900 lb)	4 990 kg (11,000 lb)
5.3L V8	3.08	3 085 kg (6,800 lb)	5 443 kg (12,000 lb)
5.3L V8	3.42	4 445 kg (9,800 lb)	6 804 kg (15,000 lb)
1500 Series 4WD Regular Cab Standard Box			
4.3L V6 (b)	3.42	3 447 kg (7,600 lb)	5 806 kg (12,800 lb)

Vehicle	Axle Ratio	Maximum Trailer Weight (c)	GCWR (a)
5.3L V8	3.08	3 039 kg (6,700 lb)	5 443 kg (12,000 lb)
5.3L V8	3.42	3 946 kg (8,700 lb)	6 350 kg (14,000 lb)
1500 Series 4WD Double Cab Standard Box			
4.3L V6 (b)	3.42	3 266 kg (7,200 lb)	5 806 kg (12,800 lb)
5.3L V8	3.08	2 812 kg (6,200 lb)	5 443 kg (12,000 lb)
5.3L V8	3.42	4 173 kg (9,200 lb)	6 804 kg (15,000 lb)
5.3L V8	3.73	4 990 kg (11,000 lb)	7 575 kg (16,700 lb)
6.2L V8	3.23	4 173 kg (9,200 lb)	6 804 kg (15,000 lb)
6.2L V8	3.42	5 398 kg (11,900 lb)	8 029 kg (17,700 lb)
1500 Series 4WD Crew Cab Standard Box			
4.3L V6 (b)	3.42	3 175 kg (7,000 lb)	5 806 kg (12,800 lb)
5.3L V8	3.08	2 767 kg (6,100 lb)	5 443 kg (12,000 lb)
5.3L V8	3.42	4 128 kg (9,100 lb)	6 804 kg (15,000 lb)
5.3L V8	3.73	4 899 kg (10,800 lb)	7 575 kg (16,700 lb)
6.2L V8	3.23	4 128 kg (9,100 lb)	6 804 kg (15,000 lb)
6.2L V8	3.42	5 307 kg (11,700 lb)	8 029 kg (17,700 lb)

Vehicle	Axle Ratio	Maximum Trailer Weight (c)	GCWR (a)
1500 Series 4WD Crew Cab Short Box (b)			
4.3L V6	3.42	3 221 kg (7,100 lb)	5 806 kg (12,800 lb)
5.3L V8	3.08	2 812 kg (6,200 lb)	5 443 kg (12,000 lb)
5.3L V8	3.42	4 173 kg (9,200 lb)	6 804 kg (15,000 lb)
5.3L V8	3.73	4 944 kg (10,900 lb)	7 575 kg (16,700 lb)
6.2L V8	3.23	4 173 kg (9,200 lb)	6 804 kg (15,000 lb)
6.2L V8	3.42	5 353 kg (11,800 lb)	8 029 kg (17,700 lb)
1500 Series 4WD Regular Cab Long Box			
4.3L V6 (b)	3.42	3 357 kg (7,400 lb)	5 806 kg (12,800 lb)
5.3L V8	3.08	2 948 kg (6,500 lb)	5 443 kg (12,000 lb)
5.3L V8	3.42	4 309 kg (9,500 lb)	6 804 kg (15,000 lb)
2500 Series 2WD Double Cab Standard Box			
6.0L V8	3.73	4 536 kg (10,000 lb)	7 257 kg (16,000 lb)
6.0L V8 – Conventional Trailer	4.10	5 897 kg (13,000 lb)	9 299 kg (20,500 lb)
6.0L V8 – Fifth-Wheel Trailer	4.10	6 577 kg (14,500 lb)	9 299 kg (20,500 lb)

Vehicle	Axle Ratio	Maximum Trailer Weight (c)	GCWR (a)
2500 Series 2WD Crew Cab Standard Box			
6.0L V8	3.73	4 445 kg (9,800 lb)	7 257 kg (16,000 lb)
6.0L V8 – Conventional Trailer	4.10	5 897 kg (13,000 lb)	9 299 kg (20,500 lb)
6.0L V8 – Fifth-Wheel Trailer	4.10	6 486 kg (14,300 lb)	9 299 kg (20,500 lb)
2500 Series 2WD Regular Cab Long Box			
6.0L V8	3.73	4 672 kg (10,300 lb)	7 257 kg (16,000 lb)
6.0L V8 – Conventional Trailer	4.10	5 897 kg (13,000 lb)	9 299 kg (20,500 lb)
6.0L V8 – Fifth-Wheel Trailer	4.10	6 713 kg (14,800 lb)	9 299 kg (20,500 lb)
2500 Series 2WD Double Cab Long Box			
6.0L V8	3.73	4 491 kg (9,900 lb)	7 257 kg (16,000 lb)
6.0L V8 – Conventional Trailer	4.10	5 897 kg (13,000 lb)	9 299 kg (20,500 lb)
6.0L V8 – Fifth-Wheel Trailer	4.10	6 532 kg (14,400 lb)	9 299 kg (20,500 lb)
2500 Series 2WD Crew Cab Long Box			
6.0L V8	3.73	4 400 kg (9,700 lb)	7 257 kg (16,000 lb)
6.0L V8 – Conventional Trailer	4.10	5 897 kg (13,000 lb)	9 299 kg (20,500 lb)
6.0L V8 – Fifth-Wheel Trailer	4.10	6 441 kg (14,200 lb)	9 299 kg (20,500 lb)

Vehicle	Axle Ratio	Maximum Trailer Weight (c)	GCWR (a)
2500 Series 4WD Double Cab Standard Box			
6.0L V8	3.73	4 400 kg (9,700 lb)	7 257 kg (16,000 lb)
6.0L V8 – Conventional Trailer	4.10	5 897 kg (13,000 lb)	9 299 kg (20,500 lb)
6.0L V8 – Fifth-Wheel Trailer	4.10	6 441 kg (14,200 lb)	9 299 kg (20,500 lb)
2500 Series 4WD Crew Cab Standard Box			
6.0L V8	3.73	4 309 kg (9,500 lb)	7 257 kg (16,000 lb)
6.0L V8 – Conventional Trailer	4.10	5 897 kg (13,000 lb)	9 299 kg (20,500 lb)
6.0L V8 – Fifth-Wheel Trailer	4.10	6 350 kg (14,000 lb)	9 299 kg (20,500 lb)
2500 Series 4WD Regular Cab Long Box			
6.0L V8	3.73	4 536 kg (10,000 lb)	7 257 kg (16,000 lb)
6.0L V8 – Conventional Trailer	4.10	5 897 kg (13,000 lb)	9 299 kg (20,500 lb)
6.0L V8 – Fifth-Wheel Trailer	4.10	6 577 kg (14,500 lb)	9 299 kg (20,500 lb)
2500 Series 4WD Double Cab Long Box			
6.0L V8	3.73	4 355 kg (9,600 lb)	7 257 kg (16,000 lb)
6.0L V8 – Conventional Trailer	4.10	5 897 kg (13,000 lb)	9 299 kg (20,500 lb)
6.0L V8 – Fifth-Wheel Trailer	4.10	6 396 kg (14,100 lb)	9 299 kg (20,500 lb)

Vehicle	Axle Ratio	Maximum Trailer Weight (c)	GCWR (a)
2500 Series 4WD Crew Cab Long Box			
6.0L V8	3.73	4 218 kg (9,300 lb)	7 257 kg (16,000 lb)
6.0L V8 – Conventional Trailer	4.10	5 897 kg (13,000 lb)	9 299 kg (20,500 lb)
6.0L V8 – Fifth-Wheel Trailer	4.10	6 260 kg (13,800 lb)	9 299 kg (20,500 lb)
3500 Series 2WD Regular Cab Long Box			
6.0L V8 (Single Rear Wheels) Conventional Trailer	4.10	5 897 kg (13,000 lb)	9 299 kg (20,500 lb)
6.0L V8 (Single Rear Wheels) Fifth-Wheel Trailer	4.10	6 623 kg (14,600 lb)	9 299 kg (20,500 lb)
6.0L V8 (Dual Rear Wheels)	3.73	4 400 kg (9,700 lb)	7 257 kg (16,000 lb)
6.0L V8 (Dual Rear Wheels) Conventional Trailer	4.10	6 441 kg (14,200 lb)	9 299 kg (20,500 lb)
6.0L V8 (Dual Rear Wheels) Fifth-Wheel Trailer	4.10	6 441 kg (14,200 lb)	9 299 kg (20,500 lb)
3500 Series 2WD Crew Cab Standard Box			
6.0L V8	3.73	4 355 kg (9,600 lb)	7 257 kg (16,000 lb)
6.0L V8 – Conventional Trailer	4.10	5 897 kg (13,000 lb)	9 299 kg (20,500 lb)

Vehicle	Axle Ratio	Maximum Trailer Weight (c)	GCWR (a)
6.0L V8 Fifth-Wheel Trailer	4.10	6 396 kg (14,100 lb)	9 299 kg (20,500 lb)
3500 Series 2WD Double Cab Long Box			
6.0L V8 (Single Rear Wheels)	3.73	4 400 kg (9,700 lb)	7 257 kg (16,000 lb)
6.0L V8 (Single Rear Wheels) Conventional Trailer	4.10	5 897 kg (13,000 lb)	9 299 kg (20,500 lb)
6.0L V8 (Single Rear Wheels) Fifth-Wheel Trailer	4.10	6 441 kg (14,200 lb)	9 299 kg (20,500 lb)
6.0L V8 (Dual Rear Wheels)	3.73	4 218 kg (9,300 lb)	7 257 kg (16,000 lb)
6.0L V8 (Dual Rear Wheels)	4.10	6 260 kg (13,800 lb)	9 299 kg (20,500 lb)
3500 Series 2WD Crew Cab Long Box			
6.0L V8 (Single Rear Wheels)	3.73	4 309 kg (9,500 lb)	7 257 kg (16,000 lb)
6.0L V8 (Single Rear Wheels) Conventional Trailer	4.10	5 897 kg (13,000 lb)	9 299 kg (20,500 lb)
6.0L V8 (Single Rear Wheels) Fifth-Wheel Trailer	4.10	6 350 kg (14,000 lb)	9 299 kg (20,500 lb)
6.0L V8 (Dual Rear Wheels)	3.73	4 173 kg (9,200 lb)	7 257 kg (16,000 lb)
6.0L V8 (Dual Rear Wheels)	4.10	6 214 kg (13,700 lb)	9 299 kg (20,500 lb)

Vehicle	Axle Ratio	Maximum Trailer Weight (c)	GCWR (a)
3500 Series 4WD Regular Cab Long Box			
6.0L V8 (Single Rear Wheels)	3.73	4 445 kg (9,800 lb)	7 257 kg (16,000 lb)
6.0L V8 (Single Rear Wheels) Conventional Trailer	4.10	5 897 kg (13,000 lb)	9 299 kg (20,500 lb)
6.0L V8 (Single Rear Wheels) Fifth-Wheel Trailer	4.10	6 486 kg (14,300 lb)	9 299 kg (20,500 lb)
6.0L V8 (Dual Rear Wheels)	3.73	4 264 kg (9,400 lb)	7 257 kg (16,000 lb)
6.0L V8 (Dual Rear Wheels)	4.10	6 305 kg (13,900 lb)	9 299 kg (20,500 lb)
3500 Series 4WD Crew Cab Standard Box			
6.0L V8	3.73	4 264 kg (9,400 lb)	7 257 kg (16,000 lb)
6.0L V8 – Conventional Trailer	4.10	5 897 kg (13,000 lb)	9 299 kg (20,500 lb)
6.0L V8 – Fifth-Wheel Trailer	4.10	6 305 kg (13,900 lb)	9 299 kg (20,500 lb)
3500 Series 4WD Double Cab Long Box			
6.0L V8 (Single Rear Wheels)	3.73	4 264 kg (9,400 lb)	7 257 kg (16,000 lb)
6.0L V8 (Single Rear Wheels) Conventional Trailer	4.10	5 897 kg (13,000 lb)	9 299 kg (20,500 lb)

Vehicle	Axle Ratio	Maximum Trailer Weight (c)	GCWR (a)
6.0L V8 (Single Rear Wheels) Fifth-Wheel Trailer	4.10	6 305 kg (13,900 lb)	9 299 kg (20,500 lb)
6.0L V8 (Dual Rear Wheels)	3.73	4 082 kg (9,000 lb)	7 257 kg (16,000 lb)
6.0L V8 (Dual Rear Wheels)	4.10	6 124 kg (13,500 lb)	9 299 kg (20,500 lb)
3500 Series 4WD Crew Cab Long Box			
6.0L V8 (Single Rear Wheels)	3.73	4 173 kg (9,200 lb)	7 257 kg (16,000 lb)
6.0L V8 (Single Rear Wheels) Conventional Trailer	4.10	5 897 kg (13,000 lb)	9 299 kg (20,500 lb)
6.0L V8 (Single Rear Wheels) Fifth-Wheel Trailer	4.10	6 214 kg (13,700 lb)	9 299 kg (20,500 lb)
6.0L V8 (Dual Rear Wheels)	3.73	3 992 kg (8,800 lb)	7 257 kg (16,000 lb)
6.0L V8 (Dual Rear Wheels)	4.10	6 033 kg (13,300 lb)	9 299 kg (20,500 lb)
3500 Series Chassis Cab 2WD/4WD			
6.0L V8	3.73	(d)	7 257 kg (16,000 lb)
6.0L V8	4.10	(d)	9 299 kg (20,500 lb)

Vehicle	Axle Ratio	Maximum Trailer Weight (c)	GCWR (a)
(a) The Gross Combination Weight Rating (GCWR) is the total allowable weight of the completely loaded vehicle and trailer including any passengers, cargo, equipment, and conversions. The GCWR for the vehicle should not be exceeded. (b) This model is neither designed nor intended to tow fifth-wheel or gooseneck trailers. (c) For chassis cab and pickup box delete vehicles, choose an appropriate hitch and load the truck and trailer within the limits of GCWR, GVWR, and RGAWR. (d) Maximum Trailer Weight cannot be provided because total vehicle weight is unknown.			

Ask your dealer for trailering information or advice.

Weight of the Trailer Tongue

The tongue load (1) of any trailer is very important because it is also part of the vehicle weight. The Gross Vehicle Weight (GVW) includes the curb weight of the vehicle, any cargo carried in it, and the people who will be riding in the vehicle as well as trailer tongue weight. Vehicle options, equipment, passengers and cargo in the vehicle reduce the amount of tongue weight the vehicle can carry, which will also reduce the trailer weight the vehicle can tow.

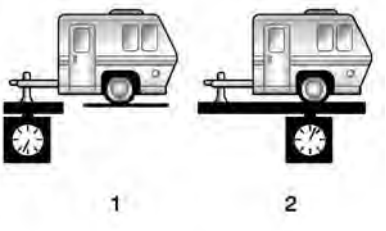

Trailer tongue weight (1) should be 10–15% and fifth-wheel or gooseneck kingpin weight should be 15–25% of the loaded trailer weight (2) up to the maximums for vehicle series and hitch type.

Vehicle Series	Hitch Type	Maximum Tongue Weight
1500	Weight-Carrying	363 kg (800 lb)
1500	Weight-Distributing	544 kg (1,200 lb)
2500/3500 Standard Box	Weight-Carrying or Weight-Distributing	680 kg (1,500 lb)
2500/ 3500 Long Box	Weight-Carrying or Weight-Distributing	907 kg (2,000 lb)
2500	Fifth-Wheel Gooseneck	1 361 kg (3,000 lb)
3500 Single Rear Wheels	Fifth-Wheel Gooseneck	1 814 kg (4,000 lb)
3500 Dual Rear Wheels	Fifth-Wheel Gooseneck	2 495 kg (5,500 lb)

Do not exceed the maximum allowable tongue weight for the vehicle. Choose the shortest hitch extension that will position the hitch ball closest to the vehicle. This will help reduce the effect of trailer tongue weight on the rear axle.

Trailer rating may be limited by the vehicle's ability to carry tongue weight. Tongue or kingpin weight cannot cause the vehicle to exceed the GVWR (Gross Vehicle Weight Rating) or the RGAWR (Rear Gross Axle Weight Rating). See “Total Weight on the Vehicle's Tires” later in this section.

After loading the trailer, weigh the trailer and then the tongue, separately, to see if the weights are proper. If they are not, adjustments might be made by moving some items around in the trailer.

If a cargo carrier is used in the trailer hitch receiver, choose a carrier that positions the load as close to the vehicle as possible. Make sure the total weight, including the carrier, is no more than half of the maximum allowable tongue weight for the vehicle or 227 kg (500 lb), whichever is less.

Total Weight on the Vehicle's Tires

Be sure the vehicle's tires are inflated to the inflation pressures found on the Certification/Tire label on the center pillar or see *Vehicle Load Limits on page 9-15*. Make sure not to exceed the GVWR limit for the vehicle, or the RGAWR, with the tow vehicle and trailer fully loaded for the trip including the weight of the trailer tongue. If using a weight-distributing hitch, make sure not to exceed the RGAWR before applying the weight distribution spring bars.

Weight of the Trailering Combination

It is important that the combination of the tow vehicle and trailer does not exceed any of its weight ratings — GCWR, GVWR, RGAWR, Trailer Weight Rating, or Tongue Weight. The only way to be sure it is not exceeding any of these ratings is to weigh the tow vehicle and trailer combination, fully loaded for the trip, getting individual weights for each of these items.

Towing Equipment

Hitches

The correct hitch equipment helps maintain combination control. Many trailers can be towed with a weight-carrying hitch which simply features a coupler latched to the hitch ball, or a tow eye latched to a pintle hook. Other trailers may require a weight-distributing hitch that uses spring bars to distribute the trailer tongue weight among the two vehicle and trailer axles. Fifth-wheel and gooseneck hitches may also be used. See “Weight of the Trailer Tongue” under *Trailer Towing on page 9-76* for rating limits with various hitch types.

If a step-bumper hitch will be used, the bumper could be damaged in sharp turns. Make sure there is ample room when turning to avoid contact between the trailer and the bumper.

Consider using sway controls with any trailer. Ask a trailering professional about sway controls or refer to the trailer manufacturer's recommendations and instructions.

Weight-Distributing Hitch and Adjustment

A weight distributing hitch may be useful with some trailers. Use the following guidelines to determine if a weight distributing hitch should be used.

Vehicle Series	Trailer Weight	Weight Distributing Hitch Usage	Hitch Distribution
1500	Up to 3175 kg (7,000 lb)	Optional	Refer to trailer manufacturer's recommendation
1500	Over 3175 kg (7,000 lb)	Required	50%
2500/3500	Up to 8165 kg (18,000 lb)	Optional	Refer to trailer manufacturer's recommendation

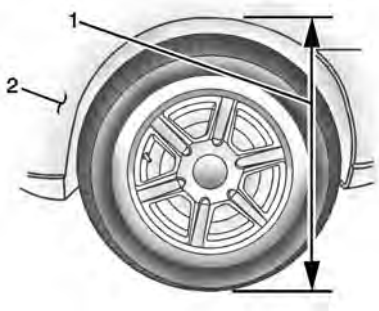

1. Body to Ground Distance
2. Front of Vehicle

When using a weight-distributing hitch, measure distance (1) before coupling the trailer to the hitch ball. Measure the height again after the trailer is coupled and adjust the spring bars so the distance (1) is as close as possible to halfway between the two measurements.

Fifth-Wheel and Gooseneck Trailering

Fifth-wheel and gooseneck trailers can be used with many pickup models. These trailers place a larger percentage of the weight (kingpin weight) on the tow vehicle than conventional trailers. Make sure this weight does not cause the vehicle to exceed GAWR or GVWR.

Fifth-wheel or gooseneck kingpin weight should be 15 to 25% of the trailer weight up to the maximum amount specified in the trailering chart for the vehicle. See "Weight of the Trailer" under *Trailer Towing on page 9-76*.

The hitch should be located in the pickup bed so that its centerline is over or slightly in front of the rear axle. Take care that it is not so far

forward that it will contact the back of the cab in sharp turns. This is especially important for short box pickups. Trailer pin box extensions and sliding fifth-wheel hitch assemblies can help this condition. There should be at least 15 cm (6 in) of clearance between the top of the pickup box and the bottom of the trailer shelf that extends over the box.

Make sure the hitch is attached to the tow vehicle frame rails. Do not use the pickup box for support.

Safety Chains

Always attach chains between the vehicle and the trailer. Cross the safety chains under the tongue of the trailer to help prevent the tongue from contacting the road if it becomes separated from the hitch. Instructions about safety chains may be provided by the hitch manufacturer or by the trailer manufacturer. If the trailer being towed weighs up to 2 271 kg (5,000 lb) with a factory-installed step bumper, safety chains may be attached to the attaching points on the bumper; otherwise, safety chains should be attached to holes on the trailer hitch platform. Always leave just enough slack so the combination can turn. Never allow safety chains to drag on the ground.

Trailer Brakes

A loaded trailer that weighs more than 900 kg (2,000 lb) needs to have its own brake system that is adequate for the weight of the trailer. Be sure to read and follow the instructions for the trailer brakes so they are installed, adjusted, and maintained properly.

Do not tap into the vehicle's hydraulic brake system.

Auxiliary Battery

The auxiliary battery provision can be used to supply electrical power to additional equipment that may be added, such as a slide-in camper. If equipped, this relay will be on the driver side of the vehicle, next to the underhood electrical center.

Be sure to follow the proper installation instructions included with any electrical equipment that is installed.

⚠ Caution

Leaving electrical equipment on for extended periods will drain the battery. Always turn off electrical equipment when not in use and do not use equipment that exceeds the maximum amperage rating of 30 amps for the auxiliary battery provision.

Trailer Wiring Harness

The vehicle is equipped with one of the following wiring harnesses for towing a trailer or hauling a slide-in camper.

Basic Trailer Wiring

All regular, double cab, and crew cab pickups have a seven-wire trailer towing harness.

For vehicles not equipped with heavy-duty trailering, the harness is secured to the vehicle's frame behind the spare tire mount. The harness requires the installation of a trailer connector, which is available through your dealer.

Heavy-Duty Trailer Wiring Harness Package

For vehicles equipped with heavy-duty trailering, the harness connector is mounted in the bumper. The seven-wire harness contains the following trailer circuits:

- Green/Violet: Left Stop/Turn Signal
- Yellow/Gray: Right Stop/Turn Signal
- Gray/Brown: Taillamps/Parking Lamps
- White: Ground
- White/Green: Back-up Lamps
- Red/Green: Battery Feed
- Dark Blue: Trailer Brake

If charging a remote (non-vehicle) battery, press the Tow/Haul Mode button, if equipped, at the end of the shift lever. This will boost the vehicle system voltage and properly charge the battery. If the trailer is too light for Tow/Haul Mode, or the vehicle is not equipped with Tow/Haul, turn on the headlamps as a second way to boost the vehicle system and charge the battery.

Camper/Fifth-Wheel Trailer Wiring Package

The seven-wire camper harness is under the rear bumper, attached to the frame near the rear crossmember. A connector must be added to the wiring harness that connects to the camper.

The harness contains the following camper/trailer circuits:

- Green/Violet: Left Stop/Turn Signal
- Yellow/Gray: Right Stop/Turn Signal
- Gray/Brown: Taillamps/Parking Lamps
- White: Ground
- White/Green: Back-up Lamps
- Red/Green: Battery Feed
- Dark Blue: Trailer Brake

If the vehicle is equipped with the heavy-duty trailering option, see “Heavy-Duty Trailer Wiring Harness Package” earlier in this section.

When the camper-wiring harness is ordered without the heavy-duty trailering package, a seven-wire harness with a seven-pin connector is at the rear of the vehicle and is tied to the vehicle's frame.

Electric Brake Control Wiring Provisions

These wiring provisions are included with the vehicle as part of the trailer wiring package. These provisions are for an electric brake controller.

The harness should be installed by your dealer or a qualified service center.

Tow/Haul Mode

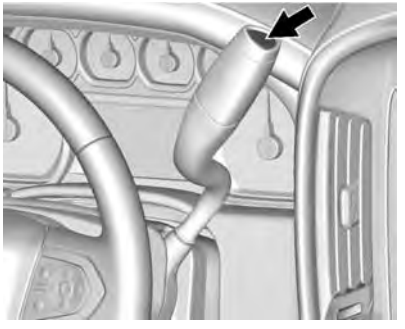

Pressing this button at the end of the shift lever turns on and off the Tow/Haul Mode.

This indicator light on the instrument cluster comes on when the Tow/Haul Mode is on.

Tow/Haul is a feature that assists when pulling a heavy trailer or a large or heavy load. See *Tow/Haul Mode on page 9-39*.

Tow/Haul is designed to be most effective when the vehicle and trailer combined weight is at least 75% of the vehicle's Gross Combined Weight Rating (GCWR). See “Weight of the Trailer” under *Trailer Towing on page 9-76*. Tow/Haul is most useful under the following driving conditions:

- When pulling a heavy trailer or a large or heavy load through rolling terrain.
- When pulling a heavy trailer or a large or heavy load in stop-and-go traffic.
- When pulling a heavy trailer or a large or heavy load in busy parking lots where improved low speed control of the vehicle is desired.

Operating the vehicle in Tow/Haul when lightly loaded or with no trailer at all will not cause damage. However, there is no benefit to the selection of Tow/Haul when the vehicle is unloaded. Such a selection when unloaded may result in unpleasant engine and transmission driving characteristics and reduced fuel economy. Tow/Haul is recommended only when pulling a heavy trailer or a large or heavy load.

Integrated Trailer Brake Control System

The vehicle may have an Integrated Trailer Brake Control (ITBC) system for use with electric trailer brakes or most electric over hydraulic trailer brakes.

This symbol is on the Trailer Brake Control Panel on vehicles with an ITBC system. The power output to the trailer brakes is based on the amount of brake pressure being applied by the vehicle’s brake system, and on the type of trailer brakes detected. This available power output to the trailer brakes can be adjusted to a wide range of trailering situations.

The ITBC system is integrated with the vehicle's brake, antilock brake, and StabiliTrak systems. In trailering conditions that cause the vehicle's antilock brake or StabiliTrak systems to activate, power sent to the trailer's brakes will be automatically adjusted to minimize trailer wheel lock-up. This does not imply that the trailer has StabiliTrak.

If the vehicle's brake, antilock brake, or StabiliTrak systems are not functioning properly, the ITBC system may not be fully functional or may not function at all. Make sure all of these systems are fully operational to ensure full functionality of the ITBC system.

The ITBC system is powered through the vehicle's electrical system. Turning the ignition off will also turn off the ITBC system. The ITBC system is fully functional only when the ignition is in ON/RUN.

⚠ Warning

Connecting a trailer that has an air brake system may result in reduced or complete loss of trailer braking. There may be an increase in stopping distance or trailer instability which could result in personal injury or damage to the vehicle, trailer, or other property. Use the ITBC system only with electric or electric over hydraulic trailer brakes.

Trailer Brake Control Panel

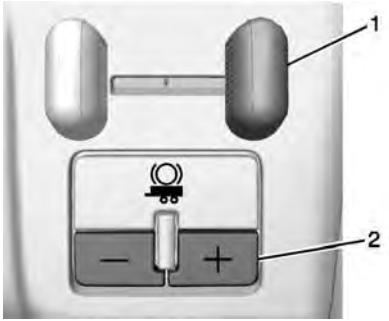

1. Manual Trailer Brake Apply Lever
2. Trailer Gain Adjustment Buttons

The ITBC system has a control panel on the instrument panel to the left of the steering column. See *Instrument Panel on page 1-2*. The control panel allows adjustment to the amount of output, referred to as Trailer Gain, available to the trailer brakes and allows manual application of the trailer brakes.

The Trailer Brake Control Panel is used along with the Trailer Brake Display Page on the Driver Information Center (DIC) to adjust and display power output to the trailer brakes.

Trailer Brake DIC Display Page

The ITBC system displays messages in the DIC.

The display page indicates Trailer Gain setting, power output to the trailer brakes, trailer connection, and system operational status.

To display the Trailer Brake Display Page, do any of the following:

- Scroll through the DIC menu pages.
- Press a Trailer Gain button. If the Trailer Brake Display Page is not currently displayed, press a Trailer Gain button to recall the current Trailer Gain setting. Each press and release of the gain buttons will then change the Trailer Gain setting.
- Activate the Manual Trailer Brake Apply Lever.

TRAILER GAIN: This setting can be adjusted from 0.0 to 10.0 with either a trailer connected or disconnected. To adjust the Trailer Gain, press one of the Trailer Gain Adjustment buttons. Press and hold a gain button to continuously adjust the Trailer Gain. To turn the output to the trailer off, adjust the Trailer Gain setting to 0.0 (zero).

TRAILER OUTPUT: This displays anytime a trailer with electric brakes is connected. Output to the trailer brakes is based on the amount of vehicle braking present and relative to the Trailer Gain setting. Output is displayed from 0 to 100% for each gain setting.

The Trailer Output will indicate "- - - - - -" on the Trailer Brake Display Page whenever the following occur:

- No trailer is connected.
- A trailer without electric brakes is connected (no DIC message will display).
- A trailer with electric brakes has become disconnected (a CHECK TRAILER WIRING message will also display on the DIC).
- There is a fault present in the wiring to the trailer brakes (a CHECK TRAILER WIRING message will also display on the DIC).
- The ITBC system is not working due to a fault (a SERVICE TRAILER BRAKE SYSTEM message will also display in the DIC).

Manual Trailer Brake Apply

The Manual Trailer Brake Apply Lever is used to apply the trailer's electric brakes independent of the vehicle's brakes. Sliding the lever to the left will apply only the trailer brakes. Use this lever to adjust Trailer Gain to properly adjust the power output to the trailer brakes.

The trailer's and the vehicle's brake lamps will come on when either vehicle brakes or manual trailer brakes are applied.

Trailer Gain Adjustment Procedure

Trailer Gain should be set for a specific trailering condition and must be adjusted anytime vehicle loading, trailer loading, or road surface conditions change.

⚠ Warning

Trailer brakes that are over-gained or under-gained may not stop the vehicle and the trailer as intended and can result in a crash. Always follow the instructions to set the Trailer Gain for the proper trailer stopping performance.

Use the following to adjust Trailer Gain for each towing condition:

1. Drive the vehicle with the trailer attached on a level road surface representative of the towing condition and free of traffic at about 32 to 40 km/h (20 to 25 mph) and fully apply the Manual Trailer Brake Apply Lever.

   Adjusting Trailer Gain at speeds lower than 32 to 40 km/h (20 to 25 mph) may result in an incorrect gain setting.

2. Adjust the Trailer Gain, using the Trailer Gain Adjustment Buttons, to just below the point of trailer wheel lock-up, indicated by trailer wheel squeal or tire smoke when a trailer wheel locks.

   Trailer wheel lock-up may not occur if towing a heavily loaded trailer. In this case, adjust the Trailer Gain to the highest allowable setting for the towing condition.

3. Readjust Trailer Gain anytime vehicle loading, trailer loading, or road surface conditions change or if trailer wheel lock-up is noticed at any time while towing.

Other ITBC-Related DIC Messages

In addition to displaying TRAILER GAIN and OUTPUT through the DIC, trailer connection and ITBC system status are displayed on the DIC.

TRAILER CONNECTED: This message will briefly display when a trailer with electric brakes is first connected to the vehicle. This message will automatically turn off in about 10 seconds. This message can be acknowledged before it automatically turns off.

CHECK TRAILER WIRING: This message will display if:

- The ITBC system first determines connection to a trailer with electric brakes and then the trailer harness becomes disconnected from the vehicle.

  If the disconnect occurs while the vehicle is stationary, this message will automatically turn off in about 30 seconds. This message will also turn off if it is acknowledged or if the trailer harness is reconnected.

  If the disconnect occurs while the vehicle is moving, this message will continue until the ignition is turned off. This message will also turn off if it is acknowledged or if the trailer harness is reconnected.

- There is an electrical fault in the wiring to the trailer brakes. This message will continue as long as there is an electrical fault in the trailer wiring. This message will also turn off if it is acknowledged.

To determine if the electrical fault is on the vehicle side or trailer side of the trailer wiring harness connection:

1. Disconnect the trailer wiring harness from the vehicle.
2. Turn the ignition off.
3. Wait 10 seconds, then turn the ignition back to RUN.
4. If the CHECK TRAILER WIRING message reappears, the electrical fault is on the vehicle side.

   If the CHECK TRAILER WIRING message only reappears when connecting the trailer wiring harness to the vehicle, the electrical fault is on the trailer side.

SERVICE TRAILER BRAKE SYSTEM: This message will display when there is a problem with the ITBC system. If this message continues over multiple ignition cycles, there is a problem with the ITBC system. Have the vehicle serviced.

If either the CHECK TRAILER WIRING or SERVICE TRAILER BRAKE SYSTEM message displays while driving, the ITBC system may not be fully functional or may not function at all. When traffic conditions allow, carefully pull the vehicle over to the side of the road and turn the ignition off. Check the wiring connection to the trailer and turn the ignition back on. If either of these messages continues, either the vehicle or trailer needs service.

A GM dealer may be able to diagnose and repair problems with the trailer. However, any diagnosis and repair of the trailer is not covered under the vehicle warranty. Contact your trailer dealer for assistance with trailer repairs and trailer warranty information.

Trailer Sway Control (TSC)

Vehicles with StabiliTrak have a TSC feature. Trailer sway is unintended side-to-side motion of a trailer while being towed. If the vehicle is towing a trailer and the TSC detects that sway is increasing, the vehicle brakes are selectively applied at each wheel, to help reduce excessive trailer sway. If the vehicle is equipped with the Integrated Trailer Brake Control (ITBC) system, and the trailer has the electric actuated brake system, StabiliTrak may also apply the trailer brakes.

If TSC is enabled, the Traction Control System (TCS)/StabiliTrak warning light will flash on the instrument cluster. Vehicle speed must be reduced. If trailer sway continues, StabiliTrak can reduce engine torque to help slow the vehicle. See *Traction Control/ Electronic Stability Control on page 9-54*.

⚠ Warning

Even if the vehicle is equipped with TSC, trailer sway could result in loss of control and the vehicle could crash. If excessive trailer sway is detected, slow down to a safe speed. Check the trailer and vehicle to help correct possible causes. These could include an improperly or overloaded trailer, unrestrained cargo, improper trailer hitch configuration, excessive vehicle-trailer speed, or improperly inflated or incorrect vehicle or trailer tires. See *Towing Equipment on page 9-90* for trailer ratings and hitch setup recommendations.

Adding non-dealer accessories can affect the vehicle performance. See *Accessories and Modifications on page 10-3*.

Conversions and Add-Ons

Add-On Electrical Equipment

⚠ Caution

Some electrical equipment can damage the vehicle or cause components to not work and would not be covered by the warranty. Always check with your dealer before adding electrical equipment.

Add-on equipment can drain the vehicle's 12-volt battery, even if the vehicle is not operating.

The vehicle has an airbag system. Before attempting to add anything electrical to the vehicle, see *Servicing the Airbag-Equipped Vehicle on page 3-34* and *Adding Equipment to the Airbag-Equipped Vehicle on page 3-34*.

For information on wiring auxiliary switches, see www.gmupfitter.com or contact your dealer.

Adding a Snow Plow or Similar Equipment

⚠ Caution

Do not exceed 64 km/h (40 mph) with a snow plow mounted to the vehicle. The vehicle could overheat and be damaged.

Before installing a snow plow on the vehicle, here are some things you need to know:

⚠ Caution

If the vehicle does not have the snow plow prep package, adding a plow can damage the vehicle, and the repairs would not be covered by warranty. Unless the

(Continued)

Caution (Continued)

vehicle was built to carry a snow plow, do not add one to the vehicle. If the vehicle has the snow plow prep package, called RPO VYU, then the payload the vehicle can carry will be reduced when a snow plow is installed. The vehicle can be damaged if either the front or rear axle ratings or the Gross Vehicle Weight Rating (GVWR) are exceeded.

Some vehicles are built with a special snow plow prep package, called RPO VYU. If the vehicle has this option, you can add a plow to it, provided certain weights, such as the weights on the vehicle's axles and the Gross Vehicle Weight Rating (GVWR), are not exceeded.

The plow the vehicle can carry depends on many things, such as:

- The options the vehicle came with, and the weight of those options.
- The weight and number of passengers intended to be carried.
- The weight of items added to the vehicle, like a tool box or truck cap.
- The total weight of any additional cargo intended to be carried.

Say, for example, you have a 318 kg (700 lb) snow plow. The total weight of all occupants and cargo inside the cab should not exceed 135 kg (300 lb). This means that you may only be able to carry one passenger. But, even this may be too much if there is other equipment already adding to the weight of the vehicle.

Here are some guidelines for safely carrying a snow plow on the vehicle:

- Make sure the weight on the front and rear axles does not exceed the axle rating for each.
- For the front axle, if more cargo or passengers must be carried, appropriate counter ballast must be installed rear of the rear axle. Counter ballast must be properly secured so it will not move during driving.
- Follow the snow plow manufacturer's recommendations regarding rear ballast. Rear ballast may be required to ensure a proper front and rear weight distribution ratio, even though the actual weight at the front axle may be less than the front axle rating.
- The snow plow manufacturer or installer can assist you in determining the amount of rear ballast required, to help make sure the snow plow/vehicle combination does not exceed the GVW rating, the front and rear axle ratings, and the front and rear weight distribution ratio.
- The total vehicle must not exceed the GVW rating.

Front axle reserve capacity is the difference between the Gross Axle Weight Rating (GAWR) and the front axle weight of the vehicle with full fuel and passengers. Basically, it is the amount of weight that can be added to the front axle before reaching the front GAWR.

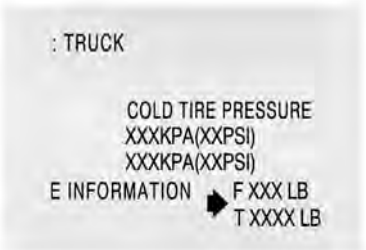

United States

Canada

The front axle reserve capacity for the vehicle can be found in the lower right corner of the Certification/Tire label, as shown.

In order to calculate the amount of weight any front accessory, such as a snow plow, is adding to the front axle, use the following formula:

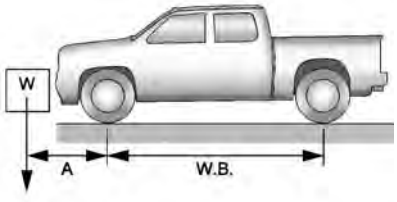

(W x (A + W.B.)) /W.B.= Weight the accessory is adding to the front axle.

Where:

W = Weight of added accessory
A = Distance that the accessory is in front of the front axle
W.B. = Vehicle Wheelbase

For example, adding a 318 kg (700 lb) snow plow actually adds more than 318 kg (700 lb) to the front axle. Using the formula, if the snow plow is 122 cm (4 ft) in front of the front axle and the wheel base is 305 cm (10 ft), then:

W = 318 kg (700 lb)
A = 122 cm (4 ft)
W.B. = 305 cm (10 ft)

(W x (A + W.B.)/W.B. = (318 x (122 + 305))/305 = 445 kg (980 lb)

So, if the front axle reserve capacity is more than 445 kg (980 lb), the snow plow could be added without exceeding the front GAWR.

Heavier equipment can be added on the front of the vehicle if it is compensated for by carrying fewer passengers or less cargo, or by positioning cargo toward the rear. This has the effect of reducing the load on the front. However, the front GAWR, rear GAWR, and Gross Vehicle Weight Rating (GVWR) must never be exceeded.

⚠ Warning

On some vehicles that have certain front mounted equipment, such as a snow plow, it may be possible to load the front axle to the front gross axle weight rating (GAWR) but not have enough weight on the rear axle to have proper braking performance. If the brakes cannot work properly, you could have a crash. To help the brakes work properly when a snow plow is installed, always follow the snow plow manufacturer or installer's recommendation for rear ballast to ensure a proper front and rear weight distribution ratio, even though the actual front weight may be less than the front GAWR, and the total vehicle weight is less than the gross vehicle weight rating (GVWR). Maintaining a proper front and

(Continued)

Warning (Continued)

rear weight distribution ratio is necessary to provide proper braking performance.

Total vehicle reserve capacity is the difference between the GVWR and the weight of the truck with full fuel and passengers. It is the amount of weight that can be added to the vehicle before reaching the GVWR. Keep in mind that reserve capacity numbers are intended as a guide when selecting the amount of equipment or cargo the truck can carry. If unsure of the vehicle's front, rear, or total weight, go to a weigh station and weigh the vehicle. Your dealer can also help with this.

The total vehicle reserve capacity for the vehicle can be found in the lower right corner of the Certification/Tire label as shown previously.

See your dealer for additional advice and information about using a snow plow on the vehicle. Also, see *Vehicle Load Limits on page 9-15*.

Emergency Roof Lamp Provisions

Vehicles with the RPO VYU snow plow prep package also have an emergency roof lamp provision package, RPO TRW. Wiring for the emergency roof lamp is provided above the overhead console. See *Auxiliary Roof-Mounted Lamp on page 6-5* for switch location.

Pickup Conversion to Chassis Cab

We are aware that some vehicle owners might consider having the pickup box removed and a commercial or recreational body installed. Owners should be aware that, as manufactured, there are differences between a chassis cab and a pickup with the box removed which could affect vehicle safety. The components necessary to adapt a pickup to permit its safe use with a specialized body should be installed by the body builder.

Vehicle Care

General Information

General Information 10-3
California Proposition 65 Warning 10-3
California Perchlorate Materials Requirements 10-3
Accessories and Modifications 10-3

Vehicle Checks

Doing Your Own Service Work 10-4
Hood 10-5
Engine Compartment Overview 10-6
Engine Oil 10-11
Engine Oil Life System 10-14
Automatic Transmission Fluid (6 Speed Transmission) 10-15
Automatic Transmission Fluid (8 Speed Transmission) 10-18
Manual Transmission Fluid 10-19
Hydraulic Clutch 10-19
Engine Air Cleaner/Filter 10-19
Cooling System 10-21
Engine Coolant 10-22
Engine Overheating 10-25
Overheated Engine Protection Operating Mode 10-27
Engine Fan 10-27
Power Steering Fluid (1500 Series) 10-28
Power Steering Fluid (2500/3500 Series) 10-28
Washer Fluid 10-29
Brakes 10-30
Brake Fluid 10-31
Battery 10-32
Four-Wheel Drive 10-33
Front Axle 10-34
Rear Axle 10-35
Noise Control System 10-36
Starter Switch Check 10-37
Automatic Transmission Shift Lock Control Function Check 10-37
Ignition Transmission Lock Check 10-38
Park Brake and P (Park) Mechanism Check 10-38
Wiper Blade Replacement 10-38
Glass Replacement 10-39

Headlamp Aiming

Headlamp Aiming 10-39

Bulb Replacement

Bulb Replacement 10-40
Halogen Bulbs 10-40
Headlamps, Front Turn Signal, Sidemarker, and Parking Lamps 10-40
Fog Lamps 10-41
Taillamps (Chassis Cab Models) 10-41
Taillamps, Turn Signal, Stoplamps, and Back-Up Lamps 10-41
Center High-Mounted Stoplamp (CHMSL) and Cargo Lamp 10-43
Replacement Bulbs 10-43

Electrical System

Electrical System Overload 10-44
Fuses 10-44
Engine Compartment Fuse Block 10-45
Instrument Panel Fuse Block (Left) 10-49
Instrument Panel Fuse Block (Right) 10-51

Wheels and Tires

Tires 10-53
All-Season Tires 10-54
Winter Tires 10-55
Low-Profile Tires 10-55
All-Terrain Tires 10-55
Tire Sidewall Labeling 10-56
Tire Designations 10-58
Tire Terminology and Definitions 10-60
Tire Pressure 10-62
Tire Pressure for High-Speed Operation 10-64
Tire Pressure Monitor System 10-64
Tire Pressure Monitor Operation 10-65
Tire Inspection 10-69
Tire Rotation 10-69
Dual Tire Rotation 10-71
When It Is Time for New Tires 10-72
Buying New Tires 10-73
Different Size Tires and Wheels 10-74
Uniform Tire Quality Grading 10-75
Wheel Alignment and Tire Balance 10-76
Wheel Replacement 10-77
Tire Chains 10-78
If a Tire Goes Flat 10-79
Tire Changing 10-80
Full-Size Spare Tire 10-90

Jump Starting

Jump Starting 10-91

Towing the Vehicle

Towing the Vehicle 10-95
Recreational Vehicle Towing 10-95

Appearance Care

Exterior Care 10-100
Interior Care 10-105
Floor Mats 10-109

General Information

For service and parts needs, visit your dealer. You will receive genuine GM parts and GM-trained and supported service people.

Genuine GM parts have one of these marks:

California Proposition 65 Warning

Most motor vehicles, including this one, contain and/or emit chemicals known to the State of California to cause cancer and birth defects or other reproductive harm. Engine exhaust, many parts and systems, many fluids, and some component wear by-products contain and/or emit these chemicals.

California Perchlorate Materials Requirements

Certain types of automotive applications, such as airbag initiators, safety belt pretensioners, and lithium batteries contained in Remote Keyless Entry transmitters, may contain perchlorate materials. Special handling may be necessary. For additional information, see www.dtsc.ca.gov/hazardouswaste/perchlorate.

Accessories and Modifications

Adding non-dealer accessories or making modifications to the vehicle can affect vehicle performance and safety, including such things as airbags, braking, stability, ride and handling, emissions systems, aerodynamics, durability, and electronic systems like antilock brakes, traction control, and stability control. These accessories or modifications could even cause malfunction or damage not covered by the vehicle warranty.

Damage to vehicle components resulting from modifications or the installation or use of non-GM certified parts, including control module or software modifications, is not covered under the terms of the vehicle warranty and may affect remaining warranty coverage for affected parts.

GM Accessories are designed to complement and function with other systems on the vehicle. See your dealer to accessorize the vehicle using genuine GM Accessories installed by a dealer technician.

Also, see *Adding Equipment to the Airbag-Equipped Vehicle on page 3-34*.

Vehicle Checks

Doing Your Own Service Work

⚠ Warning

It can be dangerous to work on your vehicle if you do not have the proper knowledge, service manual, tools, or parts. Always follow owner manual procedures and consult the service manual for your vehicle before doing any service work.

If doing some of your own service work, use the proper service manual. It tells you much more about how to service the vehicle than this manual can. To order the proper service manual, see *Service Publications Ordering Information on page 13-11*.

This vehicle has an airbag system. Before attempting to do your own service work, see *Servicing the Airbag-Equipped Vehicle on page 3-34*.

Keep a record with all parts receipts and list the mileage and the date of any service work performed. See *Maintenance Records on page 11-16*.

⚠ Caution

Even small amounts of contamination can cause damage to vehicle systems. Do not allow contaminants to contact the fluids, reservoir caps, or dipsticks.

Hood

To open the hood:

1. Pull the handle with this symbol on it. It is inside the vehicle under the steering wheel.

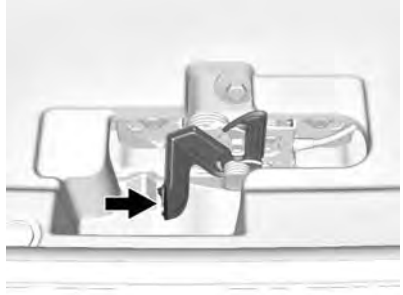

2. Go to the front of the vehicle to find the secondary hood release. The handle is under the front edge of the hood near the center. Push the handle to the right and at the same time raise the hood.

Before closing the hood, be sure all the filler caps are on properly. Then bring the hood from full open to within 15 cm (6 in) from the closed position, pause, and push the front center of the hood with a swift, firm motion to fully close the hood.

Engine Compartment Overview

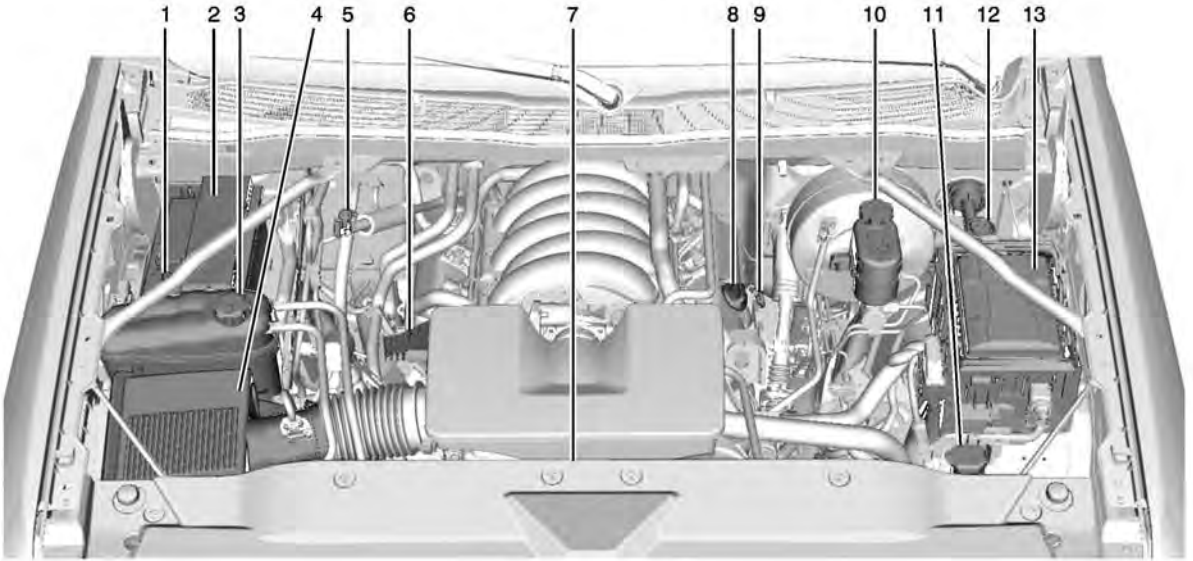

4.3L V6 Engine

1. Positive (+) Terminal. See *Jump Starting on page 10-91*.
2. *Battery on page 10-32*.
3. Coolant Surge Tank and Pressure Cap. See *Cooling System on page 10-21*.
4. *Engine Air Cleaner/Filter on page 10-19*.
5. Automatic Transmission Dipstick (If Equipped). See “How to Check Automatic Transmission Fluid” under *Automatic Transmission Fluid (6 Speed Transmission) on page 10-15* or *Automatic Transmission Fluid (8 Speed Transmission) on page 10-18*.
6. Remote Negative (–) Location. See *Jump Starting on page 10-91*.
7. Engine Cooling Fans (Out of View). See *Cooling System on page 10-21*.
8. Engine Oil Fill Cap. See “When to Add Engine Oil” under *Engine Oil on page 10-11*.
9. Engine Oil Dipstick. See “Checking Engine Oil” under *Engine Oil on page 10-11*.
10. Brake Fluid Reservoir. See *Brake Fluid on page 10-31*.
11. Windshield Washer Fluid Reservoir. See “Adding Washer Fluid” under *Washer Fluid on page 10-29*.
12. Clutch Fluid Reservoir (If Equipped). See *Hydraulic Clutch on page 10-19*.
13. *Engine Compartment Fuse Block on page 10-45*.

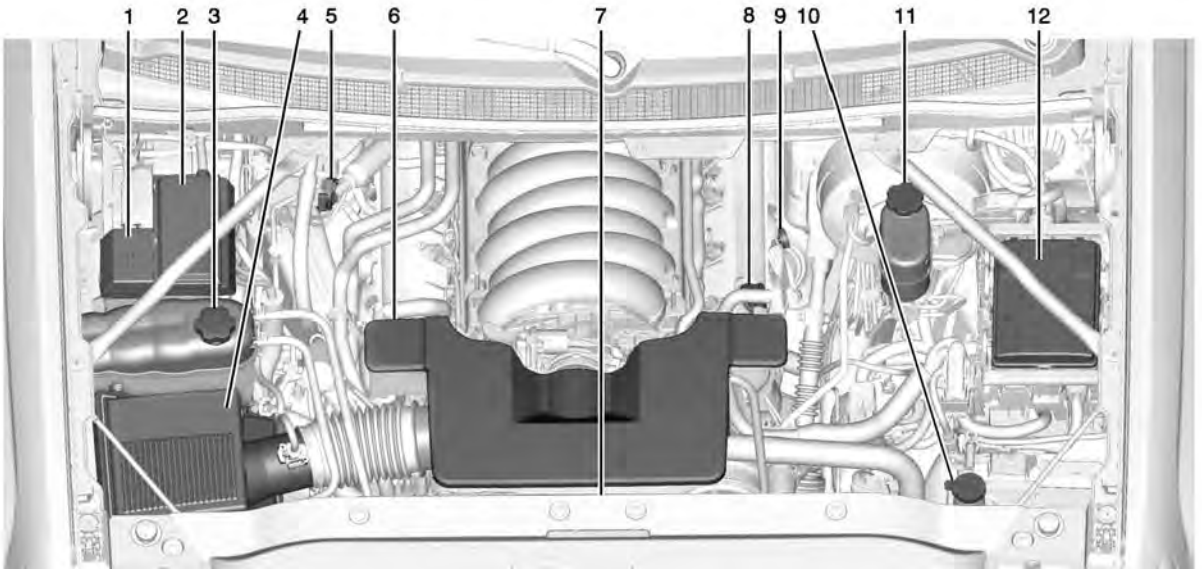

5.3L V8 Engine Shown, 6.2L V8 Engine Similar

1. Positive (+) Terminal. See *Jump Starting on page 10-91*.
2. *Battery on page 10-32*.
3. Coolant Surge Tank and Pressure Cap. See *Cooling System on page 10-21*.
4. *Engine Air Cleaner/Filter on page 10-19*.
5. Automatic Transmission Dipstick (If Equipped). See “How to Check Automatic Transmission Fluid” under *Automatic Transmission Fluid (6 Speed Transmission) on page 10-15* or *Automatic Transmission Fluid (8 Speed Transmission) on page 10-18*.
6. Remote Negative (–) Location (Out of View). See *Jump Starting on page 10-91*.
7. Engine Cooling Fans (Out of View). See *Cooling System on page 10-21*.
8. Engine Oil Fill Cap. See “When to Add Engine Oil” under *Engine Oil on page 10-11*.
9. Engine Oil Dipstick. See “Checking Engine Oil” under *Engine Oil on page 10-11*.
10. Windshield Washer Fluid Reservoir. See “Adding Washer Fluid” under *Washer Fluid on page 10-29*.
11. Brake Fluid Reservoir. See *Brake Fluid on page 10-31*.
12. *Engine Compartment Fuse Block on page 10-45*.

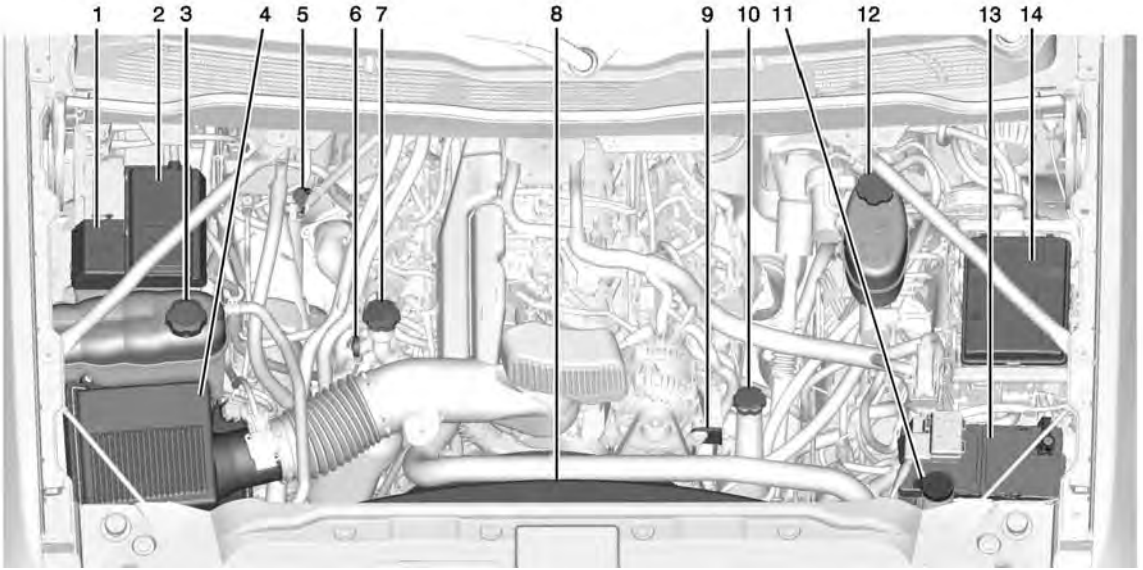

6.0L V8 Engine

1. Positive (+) Terminal. See *Jump Starting on page 10-91*.
2. *Battery on page 10-32*.
3. Coolant Surge Tank and Pressure Cap. See *Cooling System on page 10-21*.
4. *Engine Air Cleaner/Filter on page 10-19*.
5. Automatic Transmission Dipstick (If Equipped). See “How to Check Automatic Transmission Fluid” under *Automatic Transmission Fluid (6 Speed Transmission) on page 10-15* or *Automatic Transmission Fluid (8 Speed Transmission) on page 10-18*.
6. Engine Oil Dipstick. See “Checking Engine Oil” under *Engine Oil on page 10-11*.
7. Engine Oil Fill Cap. See “When to Add Engine Oil” under *Engine Oil on page 10-11*.
8. Engine Cooling Fan (Out of View). See *Cooling System on page 10-21*.
9. Remote Negative (–) Location. See *Jump Starting on page 10-91*.
10. Power Steering Fluid Reservoir. See *Power Steering Fluid (1500 Series) on page 10-28* or *Power Steering Fluid (2500/3500 Series) on page 10-28*.
11. Windshield Washer Fluid Reservoir. See “Adding Washer Fluid” under *Washer Fluid on page 10-29*.
12. Brake Fluid Reservoir. See *Brake Fluid on page 10-31*.
13. Auxiliary Battery (If Equipped). See *Battery on page 10-32*.
14. *Engine Compartment Fuse Block on page 10-45*.

If the vehicle has a diesel engine and/or an Allison Transmission, see the Duramax diesel supplement.

Engine Oil

For diesel engine vehicles, see “Engine Oil” in the Duramax diesel supplement.

To ensure proper engine performance and long life, careful attention must be paid to engine oil. Following these simple, but important steps will help protect your investment:

- Always use engine oil approved to the proper specification and of the proper viscosity grade. See “Selecting the Right Engine Oil” in this section.
- Check the engine oil level regularly and maintain the proper oil level. See “Checking Engine Oil” and “When to Add Engine Oil” in this section.
- Change the engine oil at the appropriate time. See *Engine Oil Life System on page 10-14*.
- Always dispose of engine oil properly. See “What to Do with Used Oil” in this section.

Checking Engine Oil

It is a good idea to check the engine oil level at each fuel fill. In order to get an accurate reading, the vehicle must be on level ground. The engine oil dipstick handle is a loop. See *Engine Compartment Overview on page 10-6* for the location of the engine oil dipstick.

If a low oil message displays on the DIC, it is important to park on level ground to accurately measure the oil level on the dipstick. Idling the vehicle on steep grades for a long time can influence the level sensing accuracy.

Obtaining an accurate oil level reading is essential:

1. If the engine has been running recently, turn off the engine and allow several minutes for the oil to drain back into the oil pan. Checking the oil level too soon after engine shutoff will not provide an accurate oil level reading.

⚠ Warning

The engine oil dipstick handle may be hot; it could burn you. Use a towel or glove to touch the dipstick handle.

2. Pull out the dipstick and wipe it with a clean paper towel or cloth, then push it back in all the way. Remove it again, keeping the tip down, and check the level.

When to Add Engine Oil

If the oil is below the cross-hatched area at the tip of the dipstick, add 1 L (1 qt) of the recommended oil and then recheck the level. See “Selecting the Right Engine Oil” in this section for an explanation of what kind of oil to use. For engine oil crankcase capacity, see *Capacities and Specifications on page 12-2*.

⚠ Caution

Do not add too much oil. Oil levels above or below the acceptable operating range shown on the dipstick are harmful to the engine. If you find that you have an oil level above the operating range, i.e., the engine has so much oil that the oil level gets above the cross-hatched area that shows the proper operating range, the engine could be damaged. You should drain out the excess oil or limit driving of the vehicle and seek a service professional to remove the excess amount of oil.

See *Engine Compartment Overview on page 10-6* for the location of the engine oil fill cap.

Add enough oil to put the level somewhere in the proper operating range. Push the dipstick all the way back in when through.

Selecting the Right Engine Oil

Selecting the right engine oil depends on both the proper oil specification and viscosity grade. See *Recommended Fluids and Lubricants on page 11-12*.

Specification

Use and ask for licensed engine oils with the dexos1® approved certification mark. Engine oils meeting the requirements for the vehicle should have the dexos1 approved certification mark. This certification mark indicates that the oil has been approved to the dexos1 specification. See www.gmdexos.com.

⚠ Caution

Failure to use the recommended engine oil can result in engine damage not covered by the vehicle warranty. Check with your dealer or service provider on whether the oil is approved to the dexos1 specification.

Viscosity Grade

Use SAE 0W-20 viscosity grade for the 5.3L and 6.2L V8 engines. Use SAE 5W-30 viscosity grade for the 4.3L V6, and 6.0L V8 engines.

Cold Temperature Operation: In an area of extreme cold, where the temperature falls below −29°C (−20°F), an SAE 0W-30 oil may be used in the 4.3L or 6.0L engine. An oil of this viscosity grade will provide easier cold starting for the engine at extremely low temperatures.

When selecting an oil of the appropriate viscosity grade, always select an oil of the correct specification. See “Specification” earlier in this section for more information.

Engine Oil Additives/Engine Oil Flushes

Do not add anything to the oil. The recommended oils with the dexos specification and displaying the dexos certification mark are all that is needed for good performance and engine protection.

Engine oil system flushes are not recommended and could cause engine damage not covered by the vehicle warranty.

What to Do with Used Oil

Used engine oil contains certain elements that can be unhealthy for your skin and could even cause cancer. Do not let used oil stay on your skin for very long. Clean your skin and nails with soap and water, or a good hand cleaner. Wash or properly dispose of clothing or rags containing used engine oil. See the manufacturer's warnings about the use and disposal of oil products.

Used oil can be a threat to the environment. If you change your own oil, be sure to drain all the oil from the filter before disposal. Never dispose of oil by putting it in the trash or pouring it on the ground, into sewers, or into streams or bodies of water. Recycle it by taking it to a place that collects used oil.

Engine Oil Life System

When to Change Engine Oil

This vehicle has a computer system that indicates when to change the engine oil and filter. This is based on a combination of factors which include engine revolutions, engine temperature, and miles driven. Based on driving conditions, the mileage at which an oil change is indicated can vary considerably. For the oil life system to work properly, the system must be reset every time the oil is changed.

On some vehicles, when the system has calculated that oil life has been diminished, a CHANGE ENGINE OIL SOON message comes on to indicate that an oil change is necessary. See *Engine Oil Messages on page 5-38*. Change the oil as soon as possible within the next 1 000 km (600 mi). It is possible that, if driving under the best conditions, the oil life system might indicate that an oil change is not necessary for up to a year. The engine oil and filter must be changed at least once a year and, at this time, the system must be reset. For vehicles without the CHANGE ENGINE OIL SOON message, an oil change is needed when the OIL LIFE REMAINING percentage is near 0%. Your dealer has trained service people who will perform this work and reset the system. It is also important to check the oil regularly over the course of an oil drain interval and keep it at the proper level.

If the system is ever reset accidentally, the oil must be changed at 5 000 km (3,000 mi) since the last oil change. Remember to reset the oil life system whenever the oil is changed.

How to Reset the Engine Oil Life System

Reset the system whenever the engine oil is changed so that the system can calculate the next engine oil change. Always reset the engine oil life to 100% after every oil change. It will not reset itself. To reset the engine oil life system:

1. Display the OIL LIFE REMAINING on the DIC. If the vehicle does not have DIC buttons, the vehicle must be in P (Park) to access this display. See *Driver Information Center (DIC) (Base Level) on page 5-30* or *Driver Information Center (DIC) (Uplevel) on page 5-32*.
2. Press and hold ✓, or the trip odometer reset stem if the vehicle does not have DIC buttons, for several seconds. The oil life will change to 100%.

The oil life system can also be reset as follows:

1. Turn the ignition to ON/RUN with the engine off.
2. Fully press the accelerator pedal slowly three times within five seconds.
3. Display the OIL LIFE REMAINING on the DIC. If the display shows 100%, the system is reset.

If the vehicle has a CHANGE ENGINE OIL SOON message and it comes back on when the vehicle is started and/or the OIL LIFE REMAINING is near 0%, the engine oil life system has not been reset. Repeat the procedure.

Automatic Transmission Fluid (6 Speed Transmission)

When to Check and Change Automatic Transmission Fluid

It is usually not necessary to check the transmission fluid level. The only reason for fluid loss is a transmission leak or overheated transmission. If a small leak is suspected, then use the following checking procedures to check the fluid level. However, if there is a large leak, then it may be necessary to have the vehicle towed to a dealer service department and have it repaired before driving the vehicle further.

⚠ Caution

Use of the incorrect automatic transmission fluid may damage the vehicle, and the damage may not be covered by the vehicle warranty. Always use the automatic transmission fluid listed in *Recommended Fluids and Lubricants on page 11-12*.

Change the fluid and filter at the scheduled maintenance intervals listed in *Maintenance Schedule on page 11-3*. Be sure to use the transmission fluid listed in *Recommended Fluids and Lubricants on page 11-12*.

How to Check Automatic Transmission Fluid

⚠ Caution

Too much or too little fluid can damage the transmission. Too much can mean that some of the fluid could come out and fall on hot engine parts or exhaust system parts, starting a fire. Too little fluid could cause the transmission to overheat. Be sure to get an accurate reading if checking the transmission fluid.

Before checking the fluid level, prepare the vehicle:

1. Start the engine and park the vehicle on a level surface. Keep the engine running.
2. Apply the parking brake and place the shift lever in P (Park).
3. With your foot on the brake pedal, move the shift lever through each gear range, pausing for about three seconds in each range. Then, move the shift lever back to P (Park).
4. Allow the engine to idle (500–800 rpm) for at least one minute. Slowly release the brake pedal.
5. Keep the engine running and check the transmission fluid temperature on the Driver Information Center (DIC). See *Driver Information Center (DIC) (Base Level) on page 5-30* or *Driver Information Center (DIC) (Uplevel) on page 5-32*.
6. Using the transmission fluid temperature reading, determine and perform the appropriate check procedure. If the transmission fluid temperature reading is not within the required temperature ranges, allow the vehicle to cool, or operate the vehicle until the appropriate transmission fluid temperature is reached.

Cold Check Procedure

Use this procedure only as a reference to determine if the transmission has enough fluid to be operated safely until a hot check procedure can be made. The hot check procedure is the most accurate method to check the fluid level. Perform the hot check procedure at the first opportunity. Use this cold check procedure to check fluid level when the transmission temperature is between 27°C and 32°C (80°F and 90°F).

1. Locate the transmission dipstick at the rear of the engine compartment, on the passenger side of the vehicle.

   See *Engine Compartment Overview on page 10-6*.

2. Flip the handle up, then pull out the dipstick and wipe it with a clean rag or paper towel.
3. Install the dipstick by pushing it back in all the way; wait three seconds, and then pull it back out again.
4. Check both sides of the dipstick and read the lower level. Repeat the check procedure to verify the reading.

5. If the fluid level is below the COLD check band, add only enough fluid as necessary to bring the level into the COLD band. It does not take much fluid, generally less than 0.5 L (1 pt). Do not overfill.
6. Perform a hot check at the first opportunity after the transmission reaches a normal operating temperature between 71°C to 93°C (160°F to 200°F).
7. If the fluid level is in the acceptable range, push the dipstick back in all the way, then flip the handle down to lock the dipstick in place.

Hot Check Procedure

Use this procedure to check the transmission fluid level when the transmission fluid temperature is between 71°C and 93°C (160°F and 200°F).

The hot check is the most accurate method to check the fluid level. The hot check should be performed at the first opportunity in order to verify the cold check. The fluid level rises as fluid temperature increases, so it is important to ensure the transmission temperature is within range.

1. Locate the transmission dipstick at the rear of the engine compartment, on the passenger side of the vehicle.

   See *Engine Compartment Overview on page 10-6*.

2. Flip the handle up, then pull out the dipstick and wipe it with a clean rag or paper towel.
3. Install the dipstick by pushing it back in all the way; wait three seconds, and then pull it back out again.
4. Check both sides of the dipstick and read the lower level. Repeat the check procedure to verify the reading.

5. Safe operating level is within the HOT cross hatch band on the dipstick. If the fluid level is not within the HOT band, and the transmission temperature is between 71°C and 93°C (160°F and 200°F), add or drain fluid as necessary to bring the level into the HOT band. If the fluid level is low, add only enough fluid to bring the level into the HOT band. It does not take much fluid, generally less than 0.5 L (1 pt). Do not overfill.
6. If the fluid level is in the acceptable range, push the dipstick back in all the way, then flip the handle down to lock the dipstick in place.

Consistency of Readings

Always check the fluid level at least twice using the procedure described previously. Consistency (repeatable readings) is important to maintaining proper fluid level. If readings are still inconsistent, contact the dealer.

Automatic Transmission Fluid (8 Speed Transmission)

When to Check and Change Automatic Transmission Fluid

It is usually not necessary to check the transmission fluid level. The only reason for fluid loss is a transmission leak or overheated transmission. This vehicle is not equipped with a transmission fluid level dipstick. There is a special procedure for checking and changing the transmission fluid in these vehicles. Because this procedure is difficult, this should be done at the dealer. Contact the dealer for additional information or

the procedure can be found in the service manual. See *Service Publications Ordering Information on page 13-11*.

> **⚠ Caution**
>
> Use of the incorrect automatic transmission fluid may damage the vehicle, and the damage may not be covered by the vehicle warranty. Always use the automatic transmission fluid listed in *Recommended Fluids and Lubricants on page 11-12*.

Change the fluid and filter at the scheduled maintenance intervals listed in *Maintenance Schedule on page 11-3*. Be sure to use the transmission fluid listed in *Recommended Fluids and Lubricants on page 11-12*.

Manual Transmission Fluid

It is not necessary to check the manual transmission fluid level. A transmission fluid leak is the only reason for fluid loss. If a leak occurs, take the vehicle to your dealer service department and have it repaired as soon as possible. See *Recommended Fluids and Lubricants on page 11-12* for the proper fluid to use.

Hydraulic Clutch

For vehicles with a manual transmission, it is not necessary to regularly check clutch fluid unless you suspect there is a leak in the system. Adding fluid will not correct a leak. A fluid loss in this system could indicate a problem. Have the system inspected and repaired.

When to Check and What to Use

The hydraulic clutch fluid reservoir is filled with DOT 3 brake fluid as indicated on the reservoir cap. See *Engine Compartment Overview on page 10-6* for reservoir location.

How to Check and Add Fluid

Visually check the clutch fluid reservoir to make sure the fluid level is at the MIN (minimum) line on the side of the reservoir. The hydraulic clutch fluid system should be closed and sealed.

Do not remove the cap to check the fluid level or to top-off the fluid level. Remove the cap only when necessary to add the proper fluid until the level reaches the MIN line.

Engine Air Cleaner/Filter

If the vehicle has a diesel engine, see “Pickup Models” under “Engine Air Cleaner/Filter” in the Duramax

diesel supplement for the correct inspection and replacement procedures.

See *Engine Compartment Overview on page 10-6* for the location of the engine air cleaner/filter.

When to Inspect the Engine Air Cleaner/Filter

Inspect the air cleaner/filter at the scheduled maintenance intervals and replace it at the first oil change after each 80 000 km (50,000 mi) interval. See *Maintenance Schedule on page 11-3*. If driving in dusty/dirty conditions, inspect the filter at each engine oil change.

How to Inspect the Engine Air Cleaner/Filter

To inspect the air cleaner/filter, remove the engine air cleaner/filter from the vehicle by following Steps 1−8. When the engine air cleaner/filter is removed, lightly shake it to release loose dust and dirt. If the engine air cleaner/filter remains covered with dirt, a new filter is required. Never use compressed air to clean the filter.

Replacing the Engine Air Cleaner/ Filter

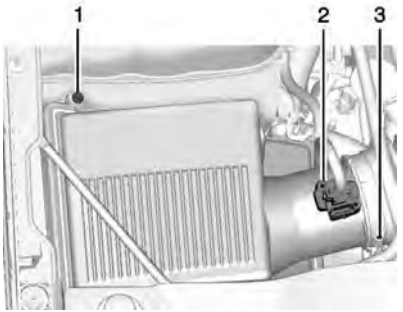

1. Screws
2. Electrical Connectors
3. Air Duct Clamp

1. Locate the air cleaner/filter assembly. See *Engine Compartment Overview on page 10-6*.
2. Disconnect the outlet duct by loosening the air duct clamp (3).
3. Disconnect the electrical connectors (2) and the connector harness from the cover.
4. Remove the four screws (1) on top of the cover of the housing and lift up the cover.
5. Remove the engine air cleaner/ filter from the housing. Take care to dislodge as little dirt as possible.
6. Clean the engine air cleaner/ filter sealing surfaces and the housing.
7. Inspect or replace the engine air cleaner/filter.
8. Reverse Steps 2–4 to reinstall the filter cover housing.

⚠ Warning

Operating the engine with the air cleaner/filter off can cause you or others to be burned. The air cleaner not only cleans the air; it helps to stop flames if the engine backfires. Use caution when working on the engine and do not drive with the air cleaner/filter off.

⚠ Caution

If the air cleaner/filter is off, dirt can easily get into the engine, which could damage it. Always have the air cleaner/filter in place when you are driving.

Cooling System

If the vehicle has the Duramax diesel engine, see the Duramax diesel supplement.

The cooling system allows the engine to maintain the correct working temperature.

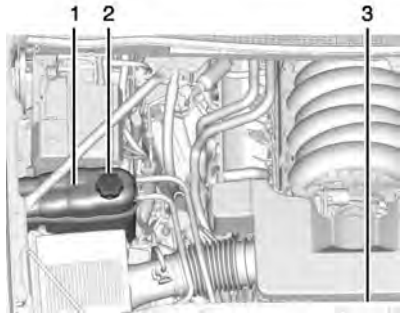

5.3L V8 Engine Shown, 4.3L V6 Engine and 6.2L V8 Engine Similar

1. Coolant Surge Tank
2. Coolant Surge Tank Pressure Cap
3. Engine Electric Cooling Fans

⚠ Warning

An electric engine cooling fan can start even when the engine is not running. To avoid injury, always keep hands, clothing, and tools away from any engine cooling fan.

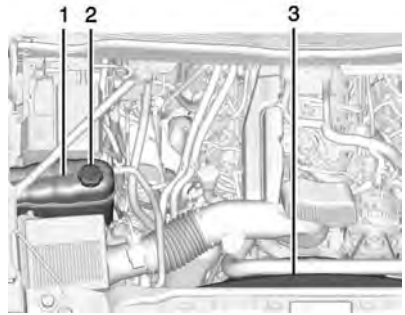

6.0L V8 Engine

1. Coolant Surge Tank
2. Coolant Surge Tank Pressure Cap

3. Engine Belt-Driven Cooling Fan

⚠ Warning

Heater and radiator hoses, and other engine parts, can be very hot. Do not touch them. If you do, you can be burned.

Do not run the engine if there is a leak. If you run the engine, it could lose all coolant. That could cause an engine fire, and you could be burned. Get any leak fixed before you drive the vehicle.

⚠ Caution

Using coolant other than DEX-COOL® can cause premature engine, heater core, or radiator corrosion. In addition, the engine coolant could require changing sooner. Any repairs

(Continued)

Caution (Continued)

would not be covered by the vehicle warranty. Always use DEX-COOL (silicate-free) coolant in the vehicle.

Engine Coolant

The cooling system in the vehicle is filled with DEX-COOL® engine coolant. This coolant is designed to remain in the vehicle for 5 years or 240 000 km (150,000 mi), whichever occurs first.

The following explains the cooling system and how to check and add coolant when it is low. If there is a problem with engine overheating, see *Engine Overheating on page 10-25*.

What to Use

⚠ Warning

Adding only plain water or some other liquid to the cooling system can be dangerous. Plain water and other liquids, can boil before the proper coolant mixture will. The coolant warning system is set for the proper coolant mixture. With plain water or the wrong mixture, the engine could get too hot but you would not get the overheat warning. The engine could catch fire and you or others could be burned. Use a 50/50 mixture of clean, drinkable water and DEX-COOL coolant.

Use a 50/50 mixture of clean, drinkable water and DEX-COOL coolant. If using this mixture, nothing else needs to be added. This mixture:

- Gives freezing protection down to −37°C (−34°F), outside temperature.
- Gives boiling protection up to 129°C (265°F), engine temperature.
- Protects against rust and corrosion.
- Will not damage aluminum parts.
- Helps keep the proper engine temperature.

⚠ Caution

If improper coolant mixture, inhibitors, or additives are used in the vehicle cooling system, the engine could overheat and be damaged. Too much water in the

(Continued)

Caution (Continued)

mixture can freeze and crack engine cooling parts. The repairs would not be covered by the vehicle warranty. Use only the proper mixture of engine coolant for the cooling system. See *Recommended Fluids and Lubricants on page 11-12*.

Never dispose of engine coolant by putting it in the trash, or by pouring it on the ground, or into sewers, streams, or bodies of water. Have the coolant changed by an authorized service center, familiar with legal requirements regarding used coolant disposal. This will help protect the environment and your health.

Checking Coolant

The coolant surge tank is located in the engine compartment on the passenger side of the vehicle. See *Engine Compartment Overview on page 10-6*.

The vehicle must be on a level surface when checking the coolant level.

Check to see if coolant is visible in the coolant surge tank. If the coolant inside the coolant surge tank is boiling, wait until it cools down. The coolant level should be at or above the FULL COLD mark. If it is not, there may be a leak in the cooling system.

If coolant is visible but the coolant level is not at or above the FULL COLD mark, see “How to Add Coolant to the Coolant Surge Tank for Gasoline Engines,” following.

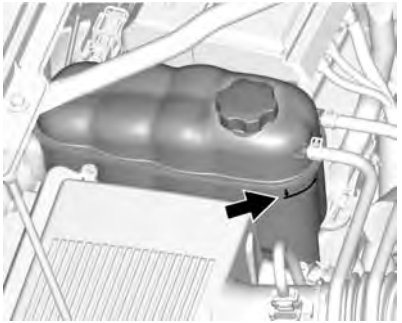

5.3L V8 Shown, 4.3L V6, 6.0L V8, and 6.2L V8 Similar

How to Add Coolant to the Coolant Surge Tank for Gasoline Engines

If the vehicle has a diesel engine, see “Cooling System” in the Duramax diesel supplement for the proper coolant fill procedure.

⚠ Warning

You can be burned if you spill coolant on hot engine parts. Coolant contains ethylene glycol and it will burn if the engine parts are hot enough. Do not spill coolant on a hot engine.

⚠ Caution

This vehicle has a specific coolant fill procedure. Failure to follow this procedure could cause the engine to overheat and be severely damaged.

⚠ Warning

Steam and scalding liquids from a hot cooling system can blow out and burn you badly. Never turn

(Continued)

Warning (Continued)

the cap when the cooling system, including the surge tank pressure cap, is hot. Wait for the cooling system and surge tank pressure cap to cool.

If no coolant is visible in the surge tank, add coolant.

Light-Duty Coolant Surge Tank Pressure Cap

Heavy-Duty Coolant Surge Tank Pressure Cap

1. Remove the coolant surge tank pressure cap when the cooling system, including the coolant surge tank pressure cap and upper radiator hose, is no longer hot.

   Turn the pressure cap slowly counterclockwise about one full turn. If a hiss is heard, wait for that to stop. A hiss means there is still some pressure left.
2. Keep turning the pressure cap slowly, and remove it.
3. Fill the coolant surge tank with the proper mixture to the FULL COLD mark.
4. With the coolant surge tank pressure cap off, start the engine and let it run until the engine coolant temperature gauge indicates approximately 90°C (195°F).

   By this time, the coolant level inside the coolant surge tank may be lower. If the level is lower, add more of the proper mixture to the coolant surge tank until the level reaches the FULL COLD mark.
5. Replace the pressure cap tightly.
6. Verify coolant level after the engine is shut off and the coolant is cold. If necessary, repeat coolant fill procedure Steps 1–6.

⚠ Caution

If the pressure cap is not tightly installed, coolant loss and possible engine damage may occur. Be sure the cap is properly and tightly secured.

Engine Overheating

If the vehicle has the Duramax diesel engine, see the Duramax diesel supplement.

⚠ Caution

Running the engine without coolant may cause damage or a fire. Vehicle damage would not be covered by the vehicle warranty.

The vehicle has several indicators to warn of engine overheating.

There is a coolant temperature gauge in the vehicle's instrument cluster. See *Engine Coolant Temperature Gauge on page 5-16*.

In addition, there are ENGINE OVERHEATED STOP ENGINE, ENGINE OVERHEATED IDLE ENGINE, and ENGINE POWER IS REDUCED messages in the Driver Information Center (DIC). See *Engine Cooling System Messages on page 5-37* and *Engine Power Messages on page 5-39*.

If the decision is made not to lift the hood when this warning appears, get service help right away. See *Roadside Assistance Program on page 13-5*.

If the decision is made to lift the hood, make sure the vehicle is parked on a level surface.

4.3L V6, 5.3L V8, and 6.2L V8 Engines

Check to see if the engine cooling fans are running. If the engine is overheating, the fans should be running. If they are not, do not continue to run the engine and have the vehicle serviced.

If Steam is Coming from the Engine Compartment

⚠ Warning

Steam from an overheated engine can burn you badly, even if you just open the hood. Stay away

(Continued)

Warning (Continued)

from the engine if you see or hear steam coming from it. Just turn it off and get everyone away from the vehicle until it cools down. Wait until there is no sign of steam or coolant before you open the hood.

If you keep driving when the engine is overheated, the liquids in it can catch fire. You or others could be badly burned. Stop the engine if it overheats, and get out of the vehicle until the engine is cool.

If No Steam is Coming from the Engine Compartment

The ENGINE OVERHEATED STOP ENGINE or the ENGINE OVERHEATED IDLE ENGINE message, along with a low coolant condition, can indicate a serious problem.

If there is an engine overheat warning, but no steam is seen or heard, the problem may not be too serious. Sometimes the engine can get a little too hot when the vehicle:

- Climbs a long hill on a hot day.
- Stops after high-speed driving.
- Idles for long periods in traffic.
- Tows a trailer; see *Trailer Towing on page 9-76*.

If the ENGINE OVERHEATED STOP ENGINE or the ENGINE OVERHEATED IDLE ENGINE message appears with no sign of steam, try this for a minute or so:

1. Turn the air conditioning off.
2. Turn the heater on to the highest temperature and to the highest fan speed. Open the windows as necessary.
3. When it is safe to do so, pull off the road, shift to P (Park) or N (Neutral) and let the engine idle.

If the temperature overheat gauge is no longer in the overheat zone or an overheat warning no longer displays, the vehicle can be driven. Continue to drive the vehicle slowly for about 10 minutes. Keep a safe vehicle distance from the vehicle in front. If the warning does not come back on, continue to drive normally and have the cooling system checked for proper fill and function.

If the warning continues, pull over, stop, and park the vehicle right away.

If there is still no sign of steam and the vehicle is equipped with an engine driven cooling fan, push down the accelerator until the engine speed is about twice as fast as normal idle speed for at least five minutes while the vehicle is parked. If the warning is still there, turn off the engine and get everyone out of the vehicle until it cools down.

If there is no sign of steam, idle the engine for five minutes while parked. If the warning is still displayed, turn off the engine until it cools down.

Overheated Engine Protection Operating Mode

If an overheated engine condition exists and the ENGINE POWER IS REDUCED message displays, an overheat protection mode which alternates firing groups of cylinders helps to prevent engine damage. In this mode, a loss in power and engine performance will be noticed. This operating mode allows the vehicle to be driven to a safe place in an emergency. Driving extended distances and/or towing a trailer in the overheat protection mode should be avoided.

⚠ Caution

After driving in the overheated engine protection operating mode, the engine oil will be severely degraded. Any repairs performed before the engine is cool may cause engine damage. Allow the engine to cool before attempting any repair. Repair the cause of coolant loss, change the oil, and reset the oil life system. See *Engine Oil on page 10-11*.

Engine Fan

If the vehicle has a clutched engine cooling fan, when the clutch is engaged, the fan spins faster to provide more air to cool the engine. In most everyday driving conditions, the fan is spinning slower and the clutch is not fully engaged. This improves fuel economy and reduces fan noise. Under heavy vehicle loading, trailer towing, and/or high outside temperatures, the fan speed

increases as the clutch more fully engages, so an increase in fan noise may be heard. This is normal and should not be mistaken as the transmission slipping or making extra shifts. It is merely the cooling system functioning properly. The fan will slow down when additional cooling is not required and the clutch disengages.

This fan noise may also be heard when starting the engine. It will go away as the fan clutch partially disengages.

If the vehicle has electric cooling fans, the fans may be heard spinning at low speed during most everyday driving. The fans may turn off if no cooling is required. Under heavy vehicle loading, trailer towing, high outside temperatures, or operation of the air conditioning system, the fans may change to high speed and an increase in fan noise may be heard. This is normal and indicates that the cooling system is functioning properly. The fans will change to low speed when additional cooling is no longer required.

The electric engine cooling fans may run after the engine has been turned. off. This is normal and no service is required.

Power Steering Fluid (1500 Series)

The vehicle has electric power steering and does not use power steering fluid.

Power Steering Fluid (2500/3500 Series)

See *Engine Compartment Overview on page 10-6* for reservoir location.

When to Check Power Steering Fluid

It is not necessary to regularly check power steering fluid unless there is a leak suspected in the system or an unusual noise is heard. A fluid loss in this system could indicate a problem. Have the system inspected and repaired.

Wait for the power steering system to cool, with the engine off, before checking the fluid.

How to Check Power Steering Fluid

To check the power steering fluid:

1. Turn the key off and let the engine compartment cool down.
2. Wipe the cap and the top of the reservoir clean.
3. Unscrew the cap and wipe the dipstick with a clean rag.
4. Replace the cap and completely tighten it.

5. Remove the cap again and look at the fluid level on the dipstick.

The level should be between the ADD and FULL marks. If necessary, add only enough fluid to bring the level up to the hashed area between the ADD and FULL marks.

What to Use

To determine what kind of fluid to use, see *Recommended Fluids and Lubricants on page 11-12*. Always use the proper fluid.

⚠ Caution

Use of the incorrect fluid may damage the vehicle and the damages may not be covered by the vehicle warranty. Always use the correct fluid listed in *Recommended Fluids and Lubricants on page 11-12*.

Washer Fluid

What to Use

When windshield washer fluid needs to be added, be sure to read the manufacturer's instructions before use. Use a fluid that has sufficient protection against freezing in an area where the temperature may fall below freezing.

Adding Washer Fluid

The vehicle has a low washer fluid message on the DIC that comes on when the washer fluid is low. The message is displayed for 15 seconds at the start of each ignition cycle. When the WASHER FLUID LOW ADD FLUID message displays, washer fluid will need to be added to the windshield washer fluid reservoir.

Open the cap with the washer symbol on it. Add washer fluid until the tank is full. See *Engine Compartment Overview on page 10-6* for reservoir location.

⚠ Caution

- Do not use engine coolant (antifreeze) in the windshield washer. It can damage the windshield washer system and paint.
- Do not mix water with ready-to-use washer fluid. Water can cause the solution to freeze and damage the washer fluid tank and other parts of the washer system.

(Continued)

Caution (Continued)

- When using concentrated washer fluid, follow the manufacturer instructions for adding water.
- Fill the washer fluid tank only three-quarters full when it is very cold. This allows for fluid expansion if freezing occurs, which could damage the tank if it is completely full.

Brakes

This vehicle has front and rear disc brakes.

Disc brake pads have built-in wear indicators that make a high-pitched warning sound when the brake pads are worn and new pads are needed. The sound can come and go or be heard all the time the vehicle is moving, except when applying the brake pedal firmly.

⚠ Warning

The brake wear warning sound means that soon the brakes will not work well. That could lead to a crash. When the brake wear warning sound is heard, have the vehicle serviced.

⚠ Caution

Continuing to drive with worn-out brake pads could result in costly brake repair.

Some driving conditions or climates can cause a brake squeal when the brakes are first applied or lightly applied. This does not mean something is wrong with the brakes.

Properly torqued wheel nuts are necessary to help prevent brake pulsation. When tires are rotated, inspect brake pads for wear and evenly tighten wheel nuts in the proper sequence to torque specifications in *Capacities and Specifications on page 12-2*.

Brake linings should always be replaced as complete axle sets.

Brake Pedal Travel

See your dealer if the brake pedal does not return to normal height, or if there is a rapid increase in pedal travel. This could be a sign that brake service might be required.

Brake Adjustment

Every time the brakes are applied, with or without the vehicle moving, the brakes adjust for wear.

Replacing Brake System Parts

The braking system on a vehicle is complex. Its many parts have to be of top quality and work well together if the vehicle is to have really good braking. The vehicle was designed and tested with top-quality brake parts. When parts of the braking system are replaced, be sure to get

new, approved replacement parts. If this is not done, the brakes might not work properly. For example, installing disc brake pads that are wrong for the vehicle, can change the balance between the front and rear brakes — for the worse. The braking performance expected can change in many other ways if the wrong replacement brake parts are installed.

Brake Fluid

The brake master cylinder reservoir is filled with DOT 3 brake fluid. See *Engine Compartment Overview on page 10-6* for the location of the reservoir.

There are only two reasons why the brake fluid level in the reservoir might go down:

- The brake fluid level goes down because of normal brake lining wear. When new linings are installed, the fluid level goes back up.
- A fluid leak in the brake hydraulic system can also cause a low fluid level. Have the brake hydraulic system fixed, since a leak means that sooner or later the brakes will not work well.

Do not top off the brake fluid. Adding fluid does not correct a leak. If fluid is added when the linings are worn, there will be too much fluid when new brake linings are installed. Add or remove brake fluid, as necessary, only when work is done on the brake hydraulic system.

⚠ Warning

If too much brake fluid is added, it can spill on the engine and burn, if the engine is hot enough. You or others could be burned, and the vehicle could be damaged. Add brake fluid only when work is done on the brake hydraulic system. See “Checking Brake Fluid” in this section.

When the brake fluid falls to a low level, the brake warning light comes on. See *Brake System Warning Light on page 5-24*.

Refer to the Maintenance Schedule to determine when to check the brake fluid. See *Maintenance Schedule on page 11-3*.

Checking Brake Fluid

Check brake fluid by looking at the brake fluid reservoir. See *Engine Compartment Overview on page 10-6*.

The fluid level should be above MIN. If it is not, have the brake hydraulic system checked to see if there is a leak.

After work is done on the brake hydraulic system, make sure the level is above MIN but not over the MAX mark.

What to Add

Use only new DOT 3 brake fluid from a sealed container. See *Recommended Fluids and Lubricants on page 11-12*.

Always clean the brake fluid reservoir cap and the area around the cap before removing it. This helps keep dirt from entering the reservoir.

⚠ Warning

With the wrong kind of fluid in the brake hydraulic system, the brakes might not work well. This could cause a crash. Always use the proper brake fluid.

⚠ Caution

- Using the wrong fluid can badly damage brake hydraulic system parts. For example, just a few drops of mineral-based oil, such as engine oil, in the brake hydraulic system can damage brake hydraulic system parts so badly that they will have to

(Continued)

Caution (Continued)

be replaced. Do not let someone put in the wrong kind of fluid.

- If brake fluid is spilled on the vehicle's painted surfaces, the paint finish can be damaged. Be careful not to spill brake fluid on the vehicle. If you do, wash it off immediately.

Battery

Refer to the replacement number shown on the original battery label when a new battery is needed. See *Engine Compartment Overview on page 10-6* for battery location.

⚠ Warning

Battery posts, terminals, and related accessories contain lead and lead compounds, chemicals known to the State of California to cause cancer and reproductive harm. Wash hands after handling.

Vehicle Storage

⚠ Warning

Batteries have acid that can burn you and gas that can explode. You can be badly hurt if you are not careful. See *Jump Starting on page 10-91* for tips on working around a battery without getting hurt.

Infrequent Usage: Remove the black, negative (−) cable from the battery to keep the battery from running down.

Extended Storage: Remove the black, negative (−) cable from the battery or use a battery trickle charger.

Four-Wheel Drive

Transfer Case

When to Check Lubricant

Refer to *Maintenance Schedule on page 11-3* to determine when to check the lubricant.

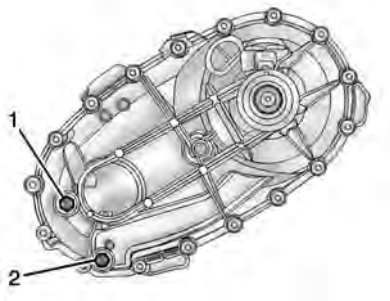

1. Fill Plug
2. Drain Plug

To get an accurate reading, the vehicle should be on a level surface.

If the level is below the bottom of the fill plug (1) hole, located on the transfer case, some lubricant will need to be added. Add enough lubricant to raise the level to the bottom of the fill plug (1) hole. Use care not to overtighten the plug.

When to Change Lubricant

Refer to *Maintenance Schedule on page 11-3* to determine how often to change the lubricant.

What to Use

Refer to *Recommended Fluids and Lubricants on page 11-12* to determine what kind of lubricant to use.

Front Axle

When to Check and Change Lubricant

It is not necessary to regularly check front axle fluid unless a leak is suspected, or an unusual noise is heard. A fluid loss could indicate a problem. Have it inspected and repaired.

How to Check Lubricant

To get an accurate reading, the vehicle should be on a level surface.

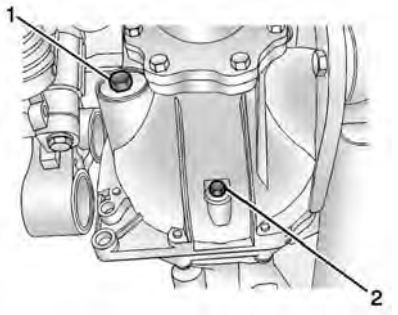

1500 Series

1. Fill Plug
2. Drain Plug

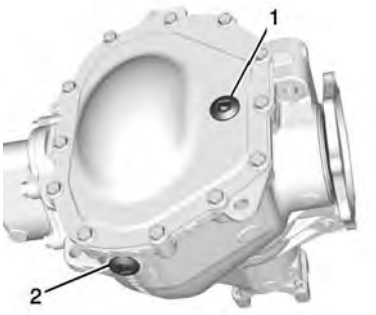

All Except 1500 Series

1. Fill Plug
2. Drain Plug

- When the differential is cold, add enough lubricant to raise the level from 0 mm (0 in) to 3.2 mm (1/8 in) below the fill plug (1) hole.
- When the differential is at operating temperature (warm), add enough lubricant to raise the level to the bottom of the fill plug (1) hole.

What to Use

Refer to *Recommended Fluids and Lubricants on page 11-12* to determine what kind of lubricant to use.

Rear Axle

When to Check Lubricant

It is not necessary to regularly check rear axle fluid unless a leak is suspected or an unusual noise is heard. A fluid loss could indicate a problem. Have it inspected and repaired.

All axle assemblies are filled by volume of fluid during production. They are not filled to reach a certain level. When checking the fluid level on any axle, variations in the readings can be caused by factory fill differences between the minimum and the maximum fluid volume. Also, if a vehicle has just been driven before checking the fluid level, it may appear lower than normal because fluid has traveled out along the axle tubes and has not drained back to the sump area. Therefore, a reading taken five minutes after the vehicle has been driven will appear to have a lower fluid level than a vehicle that has been stationary for an hour or two. The rear axle assembly must be supported on a flat, level surface to get a true reading.

How to Check Lubricant

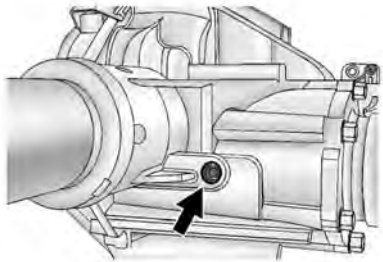

2500HD with 6.0L

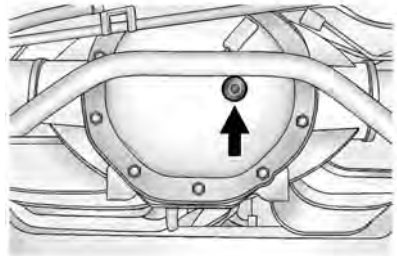

All Other Series and Engines

To get an accurate reading, the vehicle should be on a level surface.

- For all 4.3L and 5.3L 1500 Series applications, the proper level is 1.0 mm to 19.0 mm (0.04 in to 0.7 in) below the bottom of the fill hole, located on the rear axle. Add only enough fluid to reach the proper level.
- For 6.2L 1500 Series applications, the proper level is from 15 mm to 40 mm (0.6 in to 1.6 in) below the bottom of the

fill plug hole, located on the rear axle. Add only enough fluid to reach the proper level.

- For all 6.0L 2500HD Series applications, the proper level is from 0 mm to 13 mm (0 to 0.5 in) below the bottom of the fill plug hole, located on the rear axle. Add only enough fluid to reach the proper level.
- For all 6.6L Duramax Diesel 2500HD Series applications and all 3500 Series applications, the proper level is from 17 mm to 21 mm (0.6 in to 0.8 in) below the bottom of the fill plug hole, located on the rear axle. Add only enough fluid to reach the proper level.

What to Use

Refer to *Recommended Fluids and Lubricants on page 11-12* to determine what kind of lubricant to use.

Noise Control System

The following information relates to compliance with federal noise emission standards for vehicles with a Gross Vehicle Weight Rating (GVWR) of more than 4 536 kg (10,000 lb). The noise control system warranty is given in your warranty manual.

These standards apply only to vehicles sold in the United States.

Federal law prohibits the following acts or the causing thereof:

1. The removal or rendering inoperative by any person, other than for purposes of maintenance, repair or replacement, of any device or element of design incorporated into any new vehicle for the purpose of noise control, prior to its sale or delivery to the ultimate purchaser or while it is in use; or
2. The use of the vehicle after such device or element of design has been removed or rendered inoperative by any person.

Among those acts presumed to constitute tampering are the acts listed below.

Insulation:

Removal of the noise shields or any underhood insulation.

Engine:

Removal or rendering engine speed governor, if the vehicle has one, inoperative so as to allow engine speed to exceed manufacturer specifications.

Fan and Drive:

- Removal of fan clutch, if the vehicle has one, or rendering clutch inoperative.
- Removal of the fan shroud, if the vehicle has one.

Air Intake:

- Removal of the air cleaner silencer.
- Modification of the air cleaner.

Exhaust:

- Removal of the muffler and/or resonator.
- Removal of the exhaust pipes and exhaust pipe clamps.

Starter Switch Check

⚠ Warning

When you are doing this inspection, the vehicle could move suddenly. If the vehicle moves, you or others could be injured.

1. Before starting this check, be sure there is enough room around the vehicle.
2. Apply both the parking brake and the regular brake.

   Do not use the accelerator pedal, and be ready to turn off the engine immediately if it starts.
3. For automatic transmission vehicles, try to start the engine in each gear. The vehicle should start only in P (Park) or N (Neutral). If the vehicle starts in any other position, contact your dealer for service.

   For manual transmission vehicles, put the shift lever in Neutral, push the clutch pedal down halfway, and try to start the engine. The vehicle should start only when the clutch pedal is pushed down all the way to the floor. If the vehicle starts when the clutch pedal is not pushed all the way down, contact your dealer for service.

Automatic Transmission Shift Lock Control Function Check

⚠ Warning

When you are doing this inspection, the vehicle could move suddenly. If the vehicle moves, you or others could be injured.

1. Before starting this check, be sure there is enough room around the vehicle. It should be parked on a level surface.
2. Apply the parking brake. Be ready to apply the regular brake immediately if the vehicle begins to move.
3. With the engine off, turn the ignition on, but do not start the engine. Without applying the regular brake, try to move the shift lever out of P (Park) with

normal effort. If the shift lever moves out of P (Park), contact your dealer for service.

Ignition Transmission Lock Check

While parked, and with the parking brake set, try to turn the ignition to LOCK/OFF in each shift lever position.

- For automatic transmission vehicles, the ignition should turn to LOCK/OFF only when the shift lever is in P (Park).
- For manual transmission vehicles, the ignition should turn to LOCK/OFF only when you press the key release button.

On all vehicles, the ignition key should come out only in LOCK/OFF.

Contact your dealer if service is required.

Park Brake and P (Park) Mechanism Check

⚠ Warning

When you are doing this check, the vehicle could begin to move. You or others could be injured and property could be damaged. Make sure there is room in front of the vehicle in case it begins to roll. Be ready to apply the regular brake at once should the vehicle begin to move.

Park on a fairly steep hill, with the vehicle facing downhill. Keeping your foot on the regular brake, set the parking brake.

- To check the parking brake's holding ability: With the engine running and the transmission in N (Neutral), slowly remove foot pressure from the regular brake pedal. Do this until the vehicle is held by the parking brake only.
- To check the P (Park) mechanism's holding ability: With the engine running, shift to P (Park). Then release the parking brake followed by the regular brake.

Contact your dealer if service is required.

Wiper Blade Replacement

Windshield wiper blades should be inspected for wear or cracking.

Replacement blades come in different types and are removed in different ways. For proper windshield wiper blade length and type, see *Maintenance Replacement Parts on page 11-15*.

⚠ Caution

Allowing the wiper arm to touch the windshield when no wiper blade is installed could damage the windshield. Any damage that

(Continued)

Caution (Continued)

occurs would not be covered by your warranty. Do not allow the wiper arm to touch the windshield.

To replace the windshield wiper blade:

1. Pull the windshield wiper assembly away from the windshield.

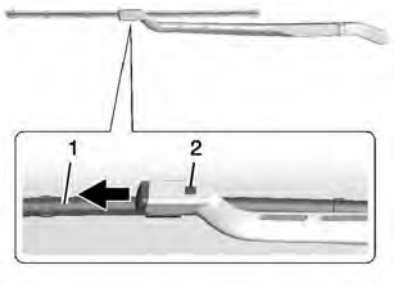

2. Press the button (2) in the middle of the wiper arm connector, and pull the wiper blade away from the arm connector (1).
3. Remove the wiper blade.
4. Reverse Steps 1–3 for wiper blade replacement.

Glass Replacement

If the windshield or front side glass must be replaced, see your dealer to determine the correct replacement glass.

Headlamp Aiming

Headlamp aim has been preset and should need no further adjustment.

If the vehicle is damaged in a crash, the headlamp aim may be affected. If adjustment to the headlamps is necessary, see your dealer.

Bulb Replacement

For the proper type of replacement bulbs, see *Replacement Bulbs on page 10-43*.

For any bulb-changing procedure not listed in this section, contact your dealer.

Halogen Bulbs

⚠ Warning

Halogen bulbs have pressurized gas inside and can burst if you drop or scratch the bulb. You or others could be injured. Be sure to read and follow the instructions on the bulb package.

Headlamps, Front Turn Signal, Sidemarker, and Parking Lamps

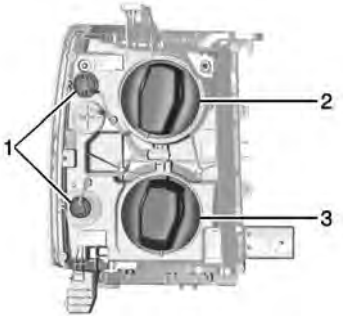

Driver Side

1. Turn Signal/Sidemarker/ Parking Lamp
2. Low-Beam Headlamp
3. High-Beam Headlamp

See your dealer for passenger side replacement.

Headlamp

1. Open the hood.
2. Remove the headlamp bulb assembly cover by turning it counterclockwise.
3. Turn the bulb socket counterclockwise to remove it from the headlamp assembly and pull it straight out.
4. Unplug the electrical connector from the old bulb by releasing the clip on the bulb socket.

Turn Signal/Sidemarker/ Parking Lamp

1. Open the hood.
2. If replacing a bulb on the passenger side, remove the engine air cleaner.
3. Turn the bulb socket counterclockwise to remove it from the headlamp assembly and pull it straight out.
4. Remove the bulb by pulling it straight out of the bulb socket.

Fog Lamps

To replace the front fog lamp bulb:

1. Locate the fog lamp under the front bumper.
2. Disconnect the electrical connector from the fog lamp bulb assembly by pressing the connector release.
3. Remove the bulb from the housing by squeezing the two release tabs and pulling it straight out of the assembly.

Taillamps (Chassis Cab Models)

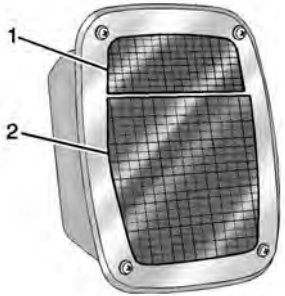

1. Back-Up Lamp
2. Stoplamp/Taillamp/Turn Signal Lamp

To replace one of these bulbs:

1. Remove the four screws.
2. Lift the lens off the lamp assembly.
3. Turn the old bulb counterclockwise and pull it straight out from the socket.

Taillamps, Turn Signal, Stoplamps, and Back-Up Lamps

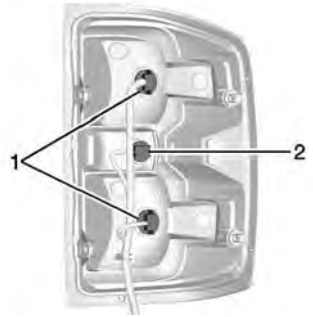

1. Stoplamp/Taillamp/Turn Signal Lamp
2. Back-Up Lamp

To replace one of these bulbs:

1. Open the tailgate.

2. Remove the two rear lamp assembly screws.
3. Pull the rear lamp assembly outboard away from the box side until the retainers release. There will be a noise when the retainers release.

4. Pull the rear lamp assembly straight back to remove it from the vehicle.
5. Turn the bulb socket counterclockwise.
6. Pull the bulb straight out from the socket.
7. Replace the bulb, then insert the bulb socket into the rear lamp assembly and turn clockwise.
8. Verify the retainer ring is in the proper position. If the retainer ring is out of position, it will not engage. Reset the retainer by pulling it forward with a tool.

9. Push the rear lamp assembly straight in until it is seated against the vehicle.
10. Make sure the rear lamp assembly is flush with the box side.
11. Reinstall the two rear lamp assembly screws.

Center High-Mounted Stoplamp (CHMSL) and Cargo Lamp

1. Cargo Lamp Bulbs
2. Center High-Mounted Stoplamp (CHMSL) Bulb

To replace one of these bulbs:

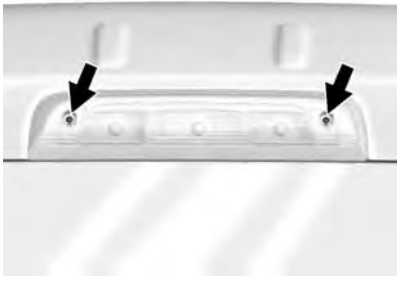

1. Remove the two screws and lift off the lamp assembly.
2. Turn the bulb socket counterclockwise and pull it straight out.
3. Pull the bulb straight out from the socket.

Replacement Bulbs

Exterior Lamp	Bulb Number
Back-up Lamp	921 (W16W)
Back-up Lamp*	1156
Cargo Lamp	921 (W16W)
Center High-Mounted Stoplamp (CHMSL)	921LL
Fog Lamp	PS24W
Front Turn Signal Lamp and Parking Lamp	7443 LL
High-Beam Headlamp	9005 LL
Low-Beam Headlamp	H11 LL

Exterior Lamp	Bulb Number
Stoplamp/Taillamp/ Turn Signal Lamp	7444 LL
Stoplamp/Turn Signal Lamp/ Taillamp*	1157
* Chassis Cab Models	

For replacement bulbs not listed here, contact your dealer.

Electrical System

Electrical System Overload

The vehicle has fuses to protect against an electrical system overload. Fuses also protect power devices in the vehicle.

Replace a bad fuse with a new one of the identical size and rating.

If there is a problem on the road and a fuse needs to be replaced, there are some spare fuses and a fuse puller in the Instrument Panel Fuse Block. The same amperage fuse can also be borrowed. Choose some feature of the vehicle that is not needed to use and replace it as soon as possible.

Headlamp Wiring

An electrical overload may cause the lamps to go on and off, or in some cases to remain off. Have the headlamp wiring checked right away if the lamps go on and off or remain off.

Windshield Wipers

If the wiper motor overheats due to heavy snow or ice, the windshield wipers will stop until the motor cools and will then restart.

Although the circuit is protected from electrical overload, overload due to heavy snow or ice may cause wiper linkage damage. Always clear ice and heavy snow from the windshield before using the windshield wipers.

If the overload is caused by an electrical problem and not snow or ice, be sure to get it fixed.

Fuses

The wiring circuits in the vehicle are protected from short circuits by fuses. This greatly reduces the chance of fires caused by electrical problems.

Look at the silver-colored band inside the fuse. If the band is broken or melted, replace the fuse. Be sure you replace a bad fuse with a new one of the identical size and rating.

Fuses of the same amperage can be temporarily borrowed from another fuse location, if a fuse goes out. Replace the fuse as soon as you can.

Engine Compartment Fuse Block

If the vehicle has a diesel engine, see the Duramax diesel supplement.

The engine compartment fuse block is in the engine compartment, on the driver side of the vehicle.

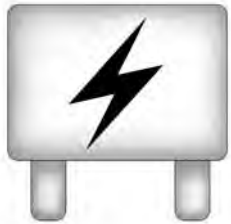

Lift the cover to access the fuse block.

⚠ Caution

Spilling liquid on any electrical component on the vehicle may damage it. Always keep the covers on any electrical component.

A fuse puller is available in the left instrument panel fuse block.

The vehicle may not be equipped with all of the fuses, relays, and features shown.

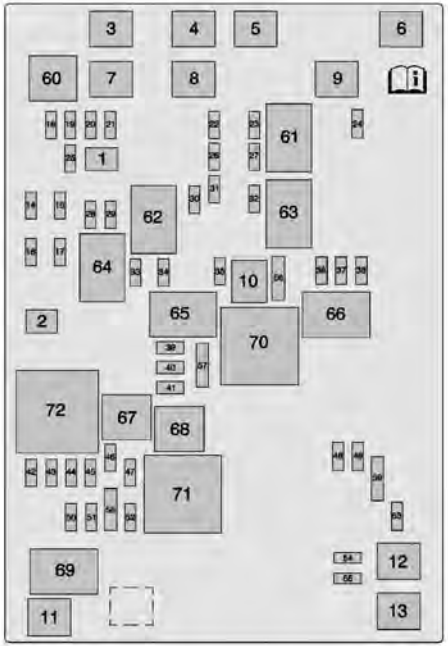

Micro J-Case Fuses	Usage
1	Trailer Brake
2	Trailer Battery

J-Case Fuses	Usage
3	Antilock Brake System Pump
4	Instrument Panel BEC 1
5	Spare
6	4WD Trec
7	Spare
8	Instrument Panel BEC 2
9	Spare
10	Rear Window Defogger
11	Starter

J-Case Fuses	Usage
12	Cooling Fan 1
13	Cooling Fan 2

Mini Fuses (2 Pin)	Usage
14	Trailer Stop/Turn Lamps, Left
15	Trailer Parking Lamps
16	Trailer Back-up Lamp
17	Trailer Stop/Turn Lamps, Right

Micro Fuses (2 Pin)	Usage
18	Fuel Pump
19	Integrated Chassis Control Module

Micro Fuses (2 Pin)	Usage
20	Electronic Suspension Control Module
21	Fuel Pump Power Module
22	Upfitter Switch 1
23	Upfitter 2
24	Front Wiper
25	Antilock Brake System Valves
26	Upfitter SW 2
27	Upfitter SW 3
28	Parking Lamps, Right
29	Parking Lamps, Left
30	Upfitter 3
31	Upfitter SW 4
32	Upfitter 4

Micro Fuses (2 Pin)	Usage
33	Back-up Lamps
34	Engine Control Module Ignition
35	Air Conditioning Compressor Clutch
36	Heated Mirrors
37	Upfitter 1
38	Center High-Mounted Stoplamp
39	Miscellaneous Ignition
40	Transmission Ignition
41	Fuel Pump 2
42	Cooling Fan Clutch
43	Engine
44	Fuel Injectors A, Odd

Micro Fuses (2 Pin)	Usage
45	Fuel Injectors B, Even
46	Oxygen Sensor B
47	Throttle Control
48	Horn
49	Fog Lamp
50	Oxygen Sensor A
51	Engine Control Module
52	Interior Heater
53	Spare
54	Aeroshutter
55	Front Washer

Micro Fuses (3 Pin)	Usage
56	Air Conditioning Compressor/ Battery Regulated Voltage Control
57	Air Conditioning Compressor Module/ Battery Pack
58	Transmission Control Module/ Engine Control Module
59	Headlamps

Micro Relays	Usage
60	Fuel Pump
61	Upfitter 2
62	Upfitter 3
63	Upfitter 4

Micro Relays	Usage
64	Trailer Parking Lamps
65	Run/Crank
66	Upfitter 1
67	Fuel Pump 2
68	Air Conditioning Control
69	Starter

Mini Relays	Usage
70	Rear Window Defogger
71	Engine Control Module

Solid State Relay	Usage
72	Cooling Fan Clutch

Instrument Panel Fuse Block (Left)

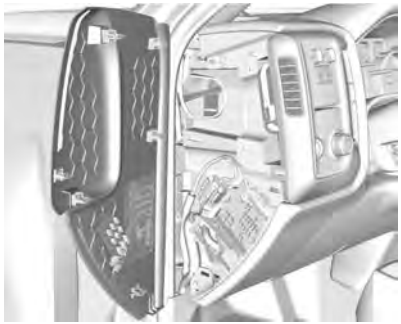

The left instrument panel fuse block access door is on the driver side edge of the instrument panel.

Pull off the cover to access the fuse block.

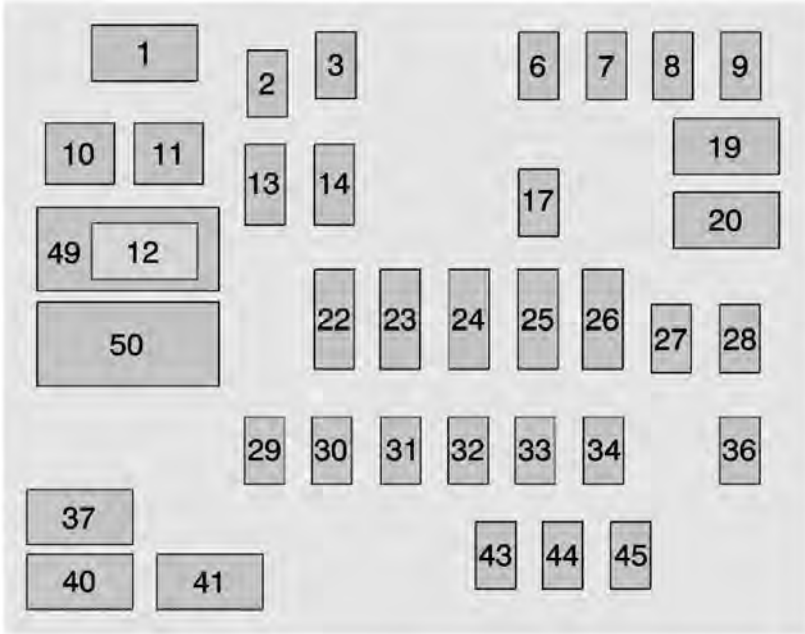

The vehicle may not be equipped with all of the fuses, relays, and features shown.

Number	Usage
1	Accessory Power Outlet 2
2	SEO Retained Accessory Power
3	Universal Garage Door Opener/Inside Rearview Mirror
6	Body Control Module 3
7	Body Control Module 5
8	Driver Window Switch/Mirror Switch
9	Spare
10	Accessory Power Outlet Retained Accessory Power
11	Accessory Power Outlet Battery
12	Accessory Power Outlet 1/Cigarette Lighter
13	Discrete Logic Ignition Switch
14	Switch Backlighting
17	Body Control Module 1
19	Spare
20	Spare
22	Heater, Ventilation, and Air Conditioning/ Auxiliary Heater, Ventilation and Air Conditioning Ignition
23	Instrument Cluster Ignition/Sensing Diagnostic Module Ignition
24	Spare
25	Data Link Connector/ Driver Seat Module
26	Passive Entry Passive Start/Heater, Ventilation, and Air Conditioning
27	Spare
28	Spare
29	Park Enable/ Electrically Adjustable Pedals
30	SEO
31	Accessory/Run Crank
32	Heated Steering Wheel
33	Spare
34	Instrument Cluster
36	Spare
37	Spare
40	Left Doors
41	Driver Power Seat

Number	Usage
43	Left Front Heated/ Cooled Seat
44	Right Front Heated/ Cooled Seats
45	Spare
49	Retained Accessory Power/Accessory
50	Run/Crank

Instrument Panel Fuse Block (Right)

The right instrument panel fuse block access door is on the passenger side edge of the instrument panel.

Pull off the cover to access the fuse block.

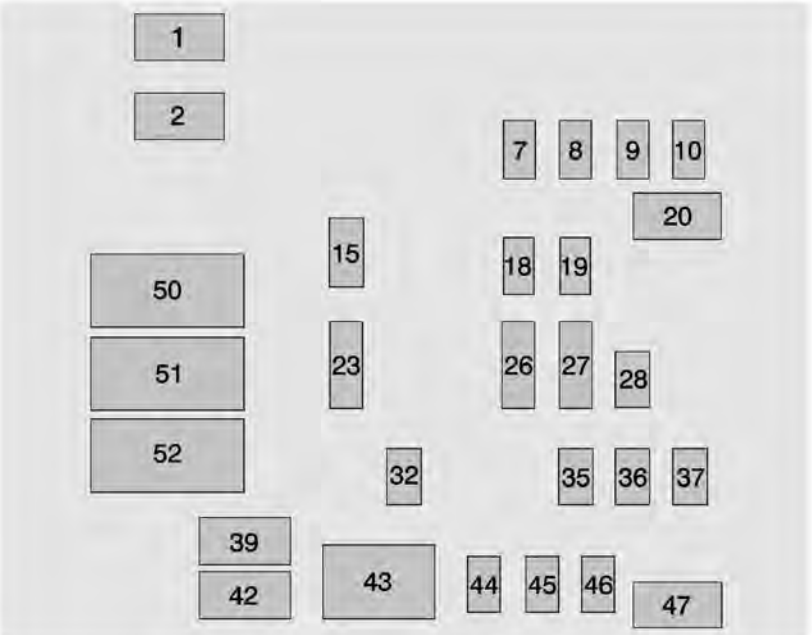

The vehicle may not be equipped with all of the fuses, relays, and features shown.

Number	Usage
1	Accessory Power Outlet 3
2	Accessory Power Outlet 4
7	Body Control Module 4
8	Body Control Module 8
9	Rear Seat Entertainment
10	Cargo Lamp
15	Steering Wheel Controls
18	Radio
19	Spare
20	Sunroof
23	Airbag/Info

Number	Usage
26	Export/Power Take Off/SEO Battery 1
27	Obstacle Detection/ USB Ports
28	Body Control Module 2
32	SEO Battery 2
35	AC Inverter
36	Amplifier
37	Spare
39	Rear Sliding Window
42	Right Door Window Motor

Number	Usage
43	Front Blower
44	SEO
45	Body Control Module 6
46	Body Control Module 7
47	Passenger Seat
50	Retained Accessory Power/Accessory
51	Rear Sliding Window Open
52	Rear Sliding Window Close

Wheels and Tires

Tires

Every new GM vehicle has high-quality tires made by a leading tire manufacturer. See the warranty manual for information regarding the tire warranty and where to get service. For additional information refer to the tire manufacturer.

⚠ Warning

- Poorly maintained and improperly used tires are dangerous.
- Overloading the tires can cause overheating as a result of too much flexing. There could be a blowout

(Continued)

Warning (Continued)

and a serious crash. See *Vehicle Load Limits on page 9-15*.

- Underinflated tires pose the same danger as overloaded tires. The resulting crash could cause serious injury. Check all tires frequently to maintain the recommended pressure. Tire pressure should be checked when the tires are cold.
- Overinflated tires are more likely to be cut, punctured, or broken by a sudden impact — such as when hitting a pothole. Keep tires at the recommended pressure.

(Continued)

Warning (Continued)

- Worn or old tires can cause a crash. If the tread is badly worn, replace them.
- Replace any tires that have been damaged by impacts with potholes, curbs, etc.
- Improperly repaired tires can cause a crash. Only the dealer or an authorized tire service center should repair, replace, dismount, and mount the tires.
- Do not spin the tires in excess of 56 km/h (35 mph) on slippery surfaces such as snow, mud, ice, etc. Excessive spinning may cause the tires to explode.

All-Season Tires

This vehicle may come with all-season tires. These tires are designed to provide good overall performance on most road surfaces and weather conditions. Original equipment tires designed to GM's specific tire performance criteria have a TPC specification code molded onto the sidewall. Original equipment all-season tires can be identified by the last two characters of this TPC code, which will be “MS.”

Consider installing winter tires on the vehicle if frequent driving on snow or ice-covered roads is expected. All-season tires provide adequate performance for most winter driving conditions, but they may not offer the same level of traction or performance as winter tires on snow or ice-covered roads. See *Winter Tires on page 10-55*.

Winter Tires

This vehicle was not originally equipped with winter tires. Winter tires are designed for increased traction on snow and ice-covered roads. Consider installing winter tires on the vehicle if frequent driving on ice or snow covered roads is expected. See your dealer for details regarding winter tire availability and proper tire selection. Also, see *Buying New Tires on page 10-73*.

With winter tires, there may be decreased dry road traction, increased road noise, and shorter tread life. After changing to winter tires, be alert for changes in vehicle handling and braking.

If using winter tires:

- Use tires of the same brand and tread type on all four wheel positions.
- Use only radial ply tires of the same size, load range, and speed rating as the original equipment tires.

Winter tires with the same speed rating as the original equipment tires may not be available for H, V, W, Y, and ZR speed rated tires. If winter tires with a lower speed rating are chosen, never exceed the tire's maximum speed capability.

Low-Profile Tires

If the vehicle has P275/55R20, P285/50R20, or P285/45R22 size tires, they are classified as low-profile tires.

⚠ Caution

Low-profile tires are more susceptible to damage from road hazards or curb impact than standard profile tires. Tire and/or wheel assembly damage can

(Continued)

Caution (Continued)

occur when coming into contact with road hazards like potholes, or sharp edged objects, or when sliding into a curb. The warranty does not cover this type of damage. Keep tires set to the correct inflation pressure and when possible, avoid contact with curbs, potholes, and other road hazards.

All-Terrain Tires

This vehicle may have all-terrain tires. These tires provide good performance on most road surfaces, weather conditions, and for off-road driving. See *Off-Road Driving on page 9-6*.

The tread pattern on these tires may wear more quickly than other tires. Consider rotating the tires more frequently than at 12 000 km (7,500 mi) intervals if irregular wear

is noted when the tires are inspected. See *Tire Inspection on page 10-69*.

Tire Sidewall Labeling

Useful information about a tire is molded into the sidewall. The examples show a typical passenger and light truck tire sidewall.

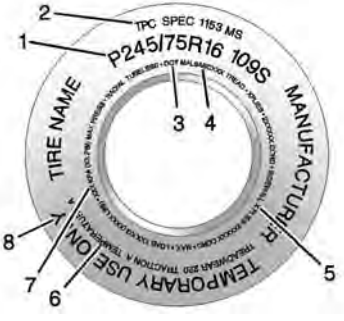

Passenger (P-Metric)/Spare Tire

(1) Tire Size: The tire size code is a combination of letters and numbers used to define a particular tire's width, height, aspect ratio, construction type, and service description. See the "Tire Size" illustration later in this section for more detail.

(2) TPC Spec (Tire Performance Criteria Specification): Original equipment tires designed to GM's specific tire performance criteria have a TPC specification code molded onto the sidewall. GM's TPC specifications meet or exceed all federal safety guidelines.

(3) DOT (Department of Transportation): The Department of Transportation (DOT) code indicates that the tire is in compliance with the U.S. Department of Transportation Motor Vehicle Safety Standards.

DOT Tire Date of Manufacture: The last four digits of the TIN indicate the tire manufactured date. The first two digits represent the week (01-52) and the last two digits, the year. For example, the third week of the year 2010 would have a four-digit DOT date of 0310.

(4) Tire Identification Number (TIN): The letters and numbers following the DOT code are the Tire Identification Number (TIN). The TIN shows the manufacturer and plant code, tire size, and date the tire was manufactured. The TIN is molded onto both sides of the tire, although only one side may have the date of manufacture.

(5) Tire Ply Material: The type of cord and number of plies in the sidewall and under the tread.

(6) Uniform Tire Quality Grading (UTQG): Tire manufacturers are required to grade tires based on three performance factors: treadwear, traction, and temperature resistance. For more information, see *Uniform Tire Quality Grading on page 10-75*.

(7) Maximum Cold Inflation Load Limit: Maximum load that can be carried and the maximum pressure needed to support that load. For information on recommended tire pressure see *Tire Pressure on page 10-62* and *Vehicle Load Limits on page 9-15*.

(8) Temporary Use Only: Only use a temporary spare tire until the road tire is repaired and replaced. This spare tire should not be driven on over 112 km/h (70 mph), or 88 km/h (55 mph) when pulling a trailer, with the proper inflation pressure. See *Full-Size Spare Tire on page 10-90*.

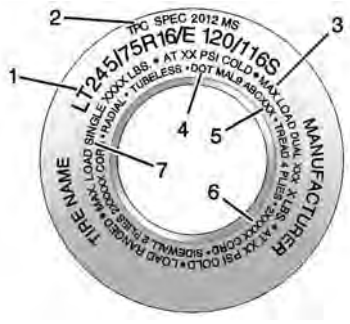

Light Truck (LT-Metric) Tire

(1) Tire Size: The tire size code is a combination of letters and numbers used to define a particular tire's width, height, aspect ratio, construction type, and service description. See the “Tire Size” illustration later in this section for more detail.

(2) TPC Spec (Tire Performance Criteria Specification): Original equipment tires designed to GM's specific tire performance criteria have a TPC specification code molded onto the sidewall. GM's TPC specifications meet or exceed all federal safety guidelines.

(3) Dual Tire Maximum Load: Maximum load that can be carried and the maximum pressure needed to support that load when used in a dual configuration. For information on recommended tire pressure see *Tire Pressure on page 10-62* and *Vehicle Load Limits on page 9-15*.

(4) DOT (Department of Transportation): The Department of Transportation (DOT) code indicates that the tire is in compliance with the

U.S. Department of Transportation Motor Vehicle Safety Standards.

DOT Tire Date of Manufacture: The last four digits of the TIN indicate the tire manufactured date. The first two digits represent the week (01-52) and the last two digits, the year. For example, the third week of the year 2010 would have a four-digit DOT date of 0310.

(5) Tire Identification Number (TIN): The letters and numbers following the DOT code are the Tire Identification Number (TIN). The TIN shows the manufacturer and plant code, tire size, and date the tire was manufactured. The TIN is molded onto both sides of the tire, although only one side may have the date of manufacture.

(6) Tire Ply Material: The type of cord and number of plies in the sidewall and under the tread.

(7) Single Tire Maximum Load: Maximum load that can be carried and the maximum pressure needed to support that load when used as a single. For information on recommended tire pressure see *Tire Pressure on page 10-62* and *Vehicle Load Limits on page 9-15*.

Tire Designations

Tire Size

The examples show a typical passenger vehicle and light truck tire size.

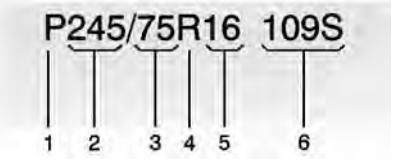

Passenger (P-Metric) Tire

(1) Passenger (P-Metric) Tire: The United States version of a metric tire sizing system. The letter P as the first character in the tire size means a passenger vehicle tire engineered to standards set by the U.S. Tire and Rim Association.

(2) Tire Width: The three-digit number indicates the tire section width in millimeters from sidewall to sidewall.

(3) Aspect Ratio: A two-digit number that indicates the tire height-to-width measurements. For example, if the tire size aspect ratio is 75, as shown in item C of the tire illustration, it

would mean that the tire's sidewall is 75 percent as high as it is wide.

(4) Construction Code: A letter code is used to indicate the type of ply construction in the tire. The letter R means radial ply construction; the letter D means diagonal or bias ply construction; and the letter B means belted-bias ply construction.

(5) Rim Diameter: Diameter of the wheel in inches.

(6) Service Description: These characters represent the load index and speed rating of the tire. The load index represents the load carrying capacity a tire is certified to carry. The speed rating is the maximum speed a tire is certified to carry a load.

Light Truck (LT-Metric) Tire

(1) Light Truck (LT-Metric) Tire: The United States version of a metric tire sizing system. The letters LT as the first two characters in the tire size mean a light truck tire engineered to standards set by the U.S. Tire and Rim Association.

(2) Tire Width: The three-digit number indicates the tire section width in millimeters from sidewall to sidewall.

(3) Aspect Ratio: A two-digit number that indicates the tire height-to-width measurements. For example, if the tire size aspect ratio is 75, as shown in item 3 of the light truck (LT-Metric) tire illustration, it would mean that the tire's sidewall is 75 percent as high as it is wide.

(4) Construction Code: A letter code is used to indicate the type of ply construction in the tire. The letter R means radial ply construction; the letter D means diagonal or bias ply construction; and the letter B means belted-bias ply construction.

(5) Rim Diameter: Diameter of the wheel in inches.

(6) Load Range: Load Range.

(7) Service Description: The service description indicates the load index and speed rating of a tire. If two numbers are given as in the example, 120/116, then this represents the load index for single versus dual wheel usage

(single/dual). The speed rating is the maximum speed a tire is certified to carry a load.

Tire Terminology and Definitions

Air Pressure: The amount of air inside the tire pressing outward on each square inch of the tire. Air pressure is expressed in kPa (kilopascal) or psi (pounds per square inch).

Accessory Weight: The combined weight of optional accessories. Some examples of optional accessories are automatic transmission, power windows, power seats, and air conditioning.

Aspect Ratio: The relationship of a tire's height to its width.

Belt: A rubber coated layer of cords between the plies and the tread. Cords may be made from steel or other reinforcing materials.

Bead: The tire bead contains steel wires wrapped by steel cords that hold the tire onto the rim.

Bias Ply Tire: A pneumatic tire in which the plies are laid at alternate angles less than 90 degrees to the centerline of the tread.

Cold Tire Pressure: The amount of air pressure in a tire, measured in kPa (kilopascal) or psi (pounds per square inch) before a tire has built up heat from driving. See *Tire Pressure on page 10-62*.

Curb Weight: The weight of a motor vehicle with standard and optional equipment including the maximum capacity of fuel, oil, and coolant, but without passengers and cargo.

DOT Markings: A code molded into the sidewall of a tire signifying that the tire is in compliance with the U.S. Department of Transportation (DOT) Motor Vehicle Safety Standards. The DOT code includes the Tire Identification Number (TIN), an alphanumeric designator which can also identify the tire manufacturer, production plant, brand, and date of production.

GVWR: Gross Vehicle Weight Rating. See *Vehicle Load Limits on page 9-15*.

GAWR FRT: Gross Axle Weight Rating for the front axle. See *Vehicle Load Limits on page 9-15*.

GAWR RR: Gross Axle Weight Rating for the rear axle. See *Vehicle Load Limits on page 9-15*.

Intended Outboard Sidewall: The side of an asymmetrical tire that must always face outward when mounted on a vehicle.

Kilopascal (kPa): The metric unit for air pressure.

Light Truck (LT-Metric) Tire: A tire used on light duty trucks and some multipurpose passenger vehicles.

Load Index: An assigned number ranging from 1 to 279 that corresponds to the load carrying capacity of a tire.

Maximum Inflation Pressure: The maximum air pressure to which a cold tire can be inflated. The maximum air pressure is molded onto the sidewall.

Maximum Load Rating: The load rating for a tire at the maximum permissible inflation pressure for that tire.

Maximum Loaded Vehicle Weight: The sum of curb weight, accessory weight, vehicle capacity weight, and production options weight.

Normal Occupant Weight: The number of occupants a vehicle is designed to seat multiplied by 68 kg (150 lb). See *Vehicle Load Limits on page 9-15*.

Occupant Distribution: Designated seating positions.

Outward Facing Sidewall: The side of an asymmetrical tire that has a particular side that faces outward when mounted on a vehicle. The side of the tire that contains a whitewall, bears white lettering, or bears manufacturer, brand, and/or model name molding that is higher or deeper than the same moldings on the other sidewall of the tire.

Passenger (P-Metric) Tire: A tire used on passenger cars and some light duty trucks and multipurpose vehicles.

Recommended Inflation Pressure: Vehicle manufacturer's recommended tire inflation pressure as shown on the tire placard. See *Tire Pressure on page 10-62* and *Vehicle Load Limits on page 9-15*.

Radial Ply Tire: A pneumatic tire in which the ply cords that extend to the beads are laid at 90 degrees to the centerline of the tread.

Rim: A metal support for a tire and upon which the tire beads are seated.

Sidewall: The portion of a tire between the tread and the bead.

Speed Rating: An alphanumeric code assigned to a tire indicating the maximum speed at which a tire can operate.

Traction: The friction between the tire and the road surface. The amount of grip provided.

Tread: The portion of a tire that comes into contact with the road.

Treadwear Indicators: Narrow bands, sometimes called wear bars, that show across the tread of a tire when only 1.6 mm (1/16 in) of tread remains. See *When It Is Time for New Tires on page 10-72*.

UTQGS (Uniform Tire Quality Grading Standards): A tire information system that provides consumers with ratings for a tire's traction, temperature, and treadwear. Ratings are determined by tire manufacturers using government testing procedures. The ratings are molded into the sidewall of the tire. See *Uniform Tire Quality Grading on page 10-75*.

Vehicle Capacity Weight: The number of designated seating positions multiplied by 68 kg (150 lb) plus the rated cargo load. See *Vehicle Load Limits on page 9-15*.

Vehicle Maximum Load on the Tire: Load on an individual tire due to curb weight, accessory weight, occupant weight, and cargo weight.

Vehicle Placard: A label permanently attached to a vehicle showing the vehicle capacity weight and the original equipment tire size and recommended inflation pressure. See “Tire and Loading Information Label” under *Vehicle Load Limits on page 9-15*.

Tire Pressure

Tires need the correct amount of air pressure to operate effectively.

⚠ Caution

Neither tire underinflation nor overinflation is good. Underinflated tires, or tires that do not have enough air, can result in:

- Tire overloading and overheating which could lead to a blowout.
- Premature or irregular wear.
- Poor handling.

(Continued)

Caution (Continued)

- Reduced fuel economy.

Overinflated tires, or tires that have too much air, can result in:

- Unusual wear.
- Poor handling.
- Rough ride.
- Needless damage from road hazards.

The Tire and Loading Information label on the vehicle indicates the original equipment tires and the correct cold tire inflation pressures. The recommended pressure is the minimum air pressure needed to support the vehicle's maximum load carrying capacity.

For additional information regarding how much weight the vehicle can carry, and an example of the Tire and Loading Information label, see *Vehicle Load Limits on page 9-15*. How the vehicle is loaded affects vehicle handling and ride comfort. Never load the vehicle with more weight than it was designed to carry.

When to Check

Check the tires once a month or more.

Do not forget the spare tire, if the vehicle has one. See *Full-Size Spare Tire on page 10-90* for additional information.

How to Check

Use a good quality pocket-type gauge to check tire pressure. Proper tire inflation cannot be determined by looking at the tire.

Check the tire inflation pressure when the tires are cold, meaning the vehicle has not been driven for at least three hours or no more than 1.6 km (1 mi).

Remove the valve cap from the tire valve stem. Press the tire gauge firmly onto the valve to get a pressure measurement. If the cold tire inflation pressure matches the recommended pressure on the Tire and Loading Information label, no further adjustment is necessary. If the inflation pressure is low, add air until the recommended pressure is reached. If the inflation pressure is high, press on the metal stem in the center of the tire valve to release air.

Re-check the tire pressure with the tire gauge.

Return the valve caps on the valve stems to prevent leaks and keep out dirt and moisture.

Tire Pressure for High-Speed Operation

⚠ Warning

Driving at high speeds, 160 km/h (100 mph) or higher, puts an additional strain on tires. Sustained high-speed driving causes excessive heat buildup and can cause sudden tire failure. You could have a crash and you or others could be killed. Some high-speed rated tires require inflation pressure adjustment for high-speed operation. When speed limits and road conditions are such that a vehicle can be driven at high speeds, make sure the tires are rated for high-speed operation, in excellent condition, and set to the correct cold tire inflation pressure for the vehicle load.

Vehicles with P275/55R20 or P285/50R20 size tires require inflation pressure adjustment when driving the vehicle at speeds of 160 km/h (100 mph) or higher. Set the cold tire inflation pressure to 20 kPa (3 psi) above the recommended cold tire pressure shown on the Tire and Loading Information label.

Return the tires to the recommended cold tire inflation pressure when high-speed driving has ended. See *Vehicle Load Limits on page 9-15* and *Tire Pressure on page 10-62*.

Tire Pressure Monitor System

The Tire Pressure Monitor System (TPMS) uses radio and sensor technology to check tire pressure levels. The TPMS sensors monitor the air pressure in your tires and transmit tire pressure readings to a receiver located in the vehicle.

Each tire, including the spare (if provided), should be checked monthly when cold and inflated to the inflation pressure recommended by the vehicle manufacturer on the vehicle placard or tire inflation pressure label. (If your vehicle has tires of a different size than the size indicated on the vehicle placard or tire inflation pressure label, you should determine the proper tire inflation pressure for those tires.)

As an added safety feature, your vehicle has been equipped with a tire pressure monitoring system (TPMS) that illuminates a low tire pressure telltale when one or more of your tires is significantly under-inflated.

Accordingly, when the low tire pressure telltale illuminates, you should stop and check your tires as soon as possible, and inflate them to the proper pressure. Driving on a significantly under-inflated tire causes the tire to overheat and can lead to tire failure. Under-inflation also reduces fuel efficiency and tire

tread life, and may affect the vehicle's handling and stopping ability.

Please note that the TPMS is not a substitute for proper tire maintenance, and it is the driver's responsibility to maintain correct tire pressure, even if under-inflation has not reached the level to trigger illumination of the TPMS low tire pressure telltale.

Your vehicle has also been equipped with a TPMS malfunction indicator to indicate when the system is not operating properly. The TPMS malfunction indicator is combined with the low tire pressure telltale. When the system detects a malfunction, the telltale will flash for approximately one minute and then remain continuously illuminated. This sequence will continue upon subsequent vehicle start-ups as long as the malfunction exists.

When the malfunction indicator is illuminated, the system may not be able to detect or signal low tire pressure as intended. TPMS malfunctions may occur for a variety of reasons, including the installation of replacement or alternate tires or wheels on the vehicle that prevent the TPMS from functioning properly. Always check the TPMS malfunction telltale after replacing one or more tires or wheels on your vehicle to ensure that the replacement or alternate tires and wheels allow the TPMS to continue to function properly.

See *Tire Pressure Monitor Operation on page 10-65*.

See *Radio Frequency Statement on page 13-12*.

Tire Pressure Monitor Operation

This vehicle may have a Tire Pressure Monitor System (TPMS). The TPMS is designed to warn the driver when a low tire pressure condition exists. TPMS sensors are mounted onto each tire and wheel assembly, excluding the spare tire and wheel assembly. The TPMS sensors monitor the air pressure in the tires and transmit the tire pressure readings to a receiver located in the vehicle.

When a low tire pressure condition is detected, the TPMS illuminates the low tire pressure warning light located on the instrument cluster. If the warning light comes on, stop as soon as possible and inflate the tires to the recommended pressure shown on the Tire and Loading Information label. See *Vehicle Load Limits on page 9-15*.

A message to check the pressure in a specific tire displays in the Driver Information Center (DIC). The low tire pressure warning light and the DIC warning message come on at each ignition cycle until the tires are inflated to the correct inflation pressure. If the vehicle has DIC buttons, tire pressure levels can be viewed. For additional information and details about the DIC operation and displays, see *Driver Information Center (DIC) (Base Level) on page 5-30* or *Driver Information Center (DIC) (Uplevel) on page 5-32* and *Tire Messages on page 5-43*.

The low tire pressure warning light may come on in cool weather when the vehicle is first started, and then turn off as the vehicle is driven. This could be an early indicator that the air pressure is getting low and needs to be inflated to the proper pressure.

A Tire and Loading Information label shows the size of the original equipment tires and the correct inflation pressure for the tires when they are cold. See *Vehicle Load Limits on page 9-15*, for an example of the Tire and Loading Information label and its location. Also see *Tire Pressure on page 10-62*.

The TPMS can warn about a low tire pressure condition but it does not replace normal tire maintenance. See *Tire Inspection on page 10-69*, *Tire Rotation on page 10-69* and *Tires on page 10-53*.

⚠ Caution

Tire sealant materials are not all the same. A non-approved tire sealant could damage the TPMS sensors. TPMS sensor damage caused by using an incorrect tire sealant is not covered by the vehicle warranty. Always use only

(Continued)

Caution (Continued)

the GM approved tire sealant available through your dealer or included in the vehicle.

TPMS Malfunction Light and Message

The TPMS will not function properly if one or more of the TPMS sensors are missing or inoperable. When the system detects a malfunction, the low tire pressure warning light flashes for about one minute and then stays on for the remainder of the ignition cycle. A DIC warning message also displays. The malfunction light and DIC warning message come on at each ignition cycle until the problem is corrected. Some of the conditions that can cause these to come on are:

- One of the road tires has been replaced with the spare tire. The spare tire does not have a TPMS sensor. The malfunction

light and the DIC message should go off after the road tire is replaced and the sensor matching process is performed successfully. See "TPMS Sensor Matching Process" later in this section.

- The TPMS sensor matching process was not done or not completed successfully after rotating the tires. The malfunction light and the DIC message should go off after successfully completing the sensor matching process. See "TPMS Sensor Matching Process" later in this section.
- One or more TPMS sensors are missing or damaged. The malfunction light and the DIC message should go off when the TPMS sensors are installed and the sensor matching process is performed successfully. See your dealer for service.
- Replacement tires or wheels do not match the original equipment tires or wheels. Tires and wheels other than those recommended could prevent the TPMS from functioning properly. See *Buying New Tires on page 10-73*.
- Operating electronic devices or being near facilities using radio wave frequencies similar to the TPMS could cause the TPMS sensors to malfunction.

If the TPMS is not functioning properly, it cannot detect or signal a low tire condition. See your dealer for service if the TPMS malfunction light and DIC message come on and stay on.

TPMS Sensor Matching Process

Each TPMS sensor has a unique identification code. The identification code needs to be matched to a new tire/wheel position after rotating the vehicle's tires or replacing one or more of the TPMS sensors. Also, the TPMS sensor matching process should be performed after replacing a spare tire with a road tire containing the TPMS sensor. The malfunction light and the DIC message should go off at the next ignition cycle. The sensors are matched to the tire/wheel positions, using a TPMS relearn tool, in the following order: driver side front tire, passenger side front tire, passenger side rear tire, and driver side rear. See your dealer for service or to purchase a relearn tool. A TPMS relearn tool can also be purchased. See Tire Pressure Monitor Sensor Activation Tool at www.gmtoolsandequipment.com or call 1-800-GM TOOLS (1-800-468-6657).

There are two minutes to match the first tire/wheel position, and five minutes overall to match all four tire/wheel positions. If it takes longer, the matching process stops and must be restarted.

The TPMS sensor matching process is:

1. Set the parking brake.
2. Turn the ignition to ON/RUN with the engine off.
3. Uplevel DIC Only: Make sure the Tire Pressure info page option is turned on. The info pages on the DIC can be turned on and off through the Settings menu. See *Driver Information Center (DIC) (Base Level) on page 5-30* or *Driver Information Center (DIC) (Uplevel) on page 5-32*.
4. If the vehicle has an uplevel DIC, use the DIC controls on the right side of the steering wheel to scroll to the Tire Pressure screen under the DIC info page.

   If the vehicle has a base level DIC, use the trip odometer reset stem to scroll to the Tire Pressure screen.
5. If the vehicle has an uplevel DIC, press and hold the ✓ (Set/Reset) button located in the center of the DIC controls.

   If the vehicle has a base level DIC, press and hold the trip odometer reset stem for about five seconds. A message asking if the process should begin should appear. Select yes and press the trip odometer reset stem to confirm the selection.

   The horn sounds twice to signal the receiver is in relearn mode and the TIRE LEARNING ACTIVE message displays on the DIC screen.
6. Start with the driver side front tire.
7. Place the relearn tool against the tire sidewall, near the valve stem. Then press the button to activate the TPMS sensor. A horn chirp confirms that the sensor identification code has been matched to this tire and wheel position.
8. Proceed to the passenger side front tire, and repeat the procedure in Step 7.
9. Proceed to the passenger side rear tire, and repeat the procedure in Step 7.
10. Proceed to the driver side rear tire, and repeat the procedure in Step 7. The horn sounds two times to indicate the sensor identification code has been matched to the driver side rear tire, and the TPMS sensor matching process is no longer active. The TIRE LEARNING ACTIVE message on the DIC display screen goes off.
11. Turn the ignition switch to LOCK/OFF.
12. Set all four tires to the recommended air pressure level as indicated on the Tire and Loading Information label.

Tire Inspection

We recommend that the tires, including the spare tire, if the vehicle has one, be inspected for signs of wear or damage at least once a month.

Replace the tire if:

- The indicators at three or more places around the tire can be seen.
- There is cord or fabric showing through the tire's rubber.
- The tread or sidewall is cracked, cut, or snagged deep enough to show cord or fabric.
- The tire has a bump, bulge, or split.
- The tire has a puncture, cut, or other damage that cannot be repaired well because of the size or location of the damage.

Tire Rotation

Tires should be rotated every 12 000 km (7,500 mi). See *Maintenance Schedule on page 11-3*.

Tires are rotated to achieve a uniform wear for all tires. The first rotation is the most important.

Anytime unusual wear is noticed, rotate the tires as soon as possible, check for proper tire inflation pressure, and check for damaged tires or wheels. If the unusual wear continues after the rotation, check the wheel alignment. See *When It Is Time for New Tires on page 10-72* and *Wheel Replacement on page 10-77*.

If your vehicle has dual rear wheels, also see *Dual Tire Rotation on page 10-71*.

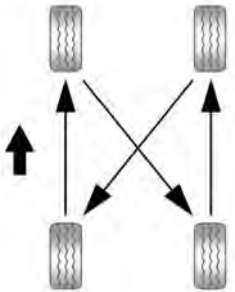

Use this rotation pattern when rotating the tires if the vehicle has single rear wheels.

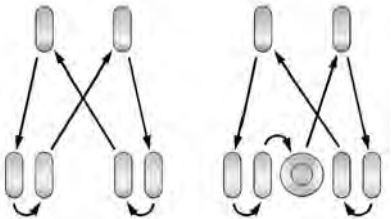

Use this rotation pattern when rotating the tires if the vehicle has dual rear wheels (except polished forged aluminum wheels).

Vehicles with polished forged aluminum dual wheels have three unique wheels; a front, a rear outer and a rear inner. These wheels cannot be rotated to another position, however, they can be rotated from left to right to the same position.

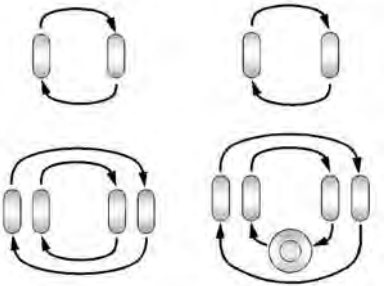

Use this rotation pattern when rotating the tires if the vehicle has polished forged aluminum dual rear wheels. The spare wheel can be used in any position and can be rotated with the rear inner wheels.

When installing dual wheels, check that the vent holes in the inner and outer wheels on each side are lined up.

Adjust the front and rear tires to the recommended inflation pressure on the Tire and Loading Information label after the tires have been rotated. See *Tire Pressure on page 10-62* and *Vehicle Load Limits on page 9-15*.

Check that all wheel nuts are properly tightened. See "Wheel Nut Torque" under *Capacities and Specifications on page 12-2*.

⚠ Warning

Rust or dirt on a wheel, or on the parts to which it is fastened, can make wheel nuts become loose after time. The wheel could come off and cause an accident. When changing a wheel, remove any rust or dirt from places where the wheel attaches to the vehicle. In an emergency, a cloth or a paper

(Continued)

Warning (Continued)

towel can be used; however, use a scraper or wire brush later to remove all rust or dirt.

Lightly coat the center of the wheel hub with wheel bearing grease after a wheel change or tire rotation to prevent corrosion or rust build-up. Do not get grease on the flat wheel mounting surface or on the wheel nuts or bolts.

Reset the Tire Pressure Monitor System (TPMS), if the vehicle has one. See *Tire Pressure Monitor Operation on page 10-65*.

Check that the spare tire, if the vehicle has one, is stored properly. Push, pull, and then try to rotate or turn the tire. If it moves, tighten the cable. See "Storing a Flat or Spare Tire and Tools" under *Tire Changing on page 10-80*.

Dual Tire Rotation

When the vehicle is new, or whenever a wheel, wheel bolt, or wheel nut is replaced, check the wheel nut torque after 160, 1 600, and 10 000 km (100, 1,000, and 6,000 mi) of driving. For proper torque and wheel nut tightening information, see "Removing the Flat Tire and Installing the Spare Tire" under *Tire Changing on page 10-80*.

The outer tire on a dual wheel setup generally wears faster than the inner tire. Tires last longer and wear more evenly if they are rotated. See *Tire Inspection on page 10-69* and *Tire Rotation on page 10-69*. Also see *Maintenance Schedule on page 11-3*.

⚠ Warning

If the vehicle is operated with a tire that is underinflated, the tire can overheat. An overheated tire can lose air suddenly or catch fire. You or others could be injured. Properly inflate all tires, including the spare.

See *Tire Pressure on page 10-62*, for information on proper tire inflation.

When It Is Time for New Tires

Factors, such as maintenance, temperatures, driving speeds, vehicle loading, and road conditions affect the wear rate of the tires.

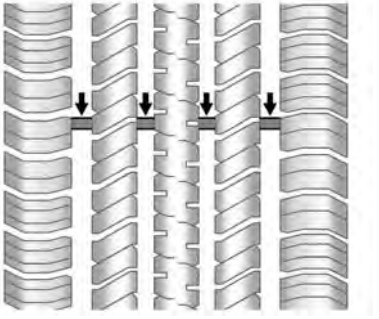

Treadwear indicators are one way to tell when it is time for new tires. Treadwear indicators appear when the tires have only 1.6 mm (1/16 in) or less of tread remaining. Some commercial truck tires may not have treadwear indicators. See *Tire Inspection on page 10-69* and *Tire Rotation on page 10-69* for additional information.

The rubber in tires ages over time. This also applies to the spare tire, if the vehicle has one, even if it is never used. Multiple factors including temperatures, loading conditions, and inflation pressure maintenance affect how fast aging takes place. GM recommends that tires, including the spare if equipped, be replaced after six years, regardless of tread wear. The tire manufacture date is the last four digits of the DOT Tire Identification Number (TIN) which is molded into one side of the tire sidewall. The first two digits represent the week (01-52) and the last two digits, the year. For example, the third week of the year 2010 would have a four-digit DOT date of 0310.

Vehicle Storage

Tires age when stored normally mounted on a parked vehicle. Park a vehicle that will be stored for at least a month in a cool, dry, clean area away from direct sunlight to slow aging. This area should be free of grease, gasoline, or other substances that can deteriorate rubber.

Parking for an extended period can cause flat spots on the tires that may result in vibrations while

driving. When storing a vehicle for at least a month, remove the tires or raise the vehicle to reduce the weight from the tires.

Buying New Tires

GM has developed and matched specific tires for the vehicle. The original equipment tires installed were designed to meet General Motors Tire Performance Criteria Specification (TPC Spec) system rating. When replacement tires are needed, GM strongly recommends buying tires with the same TPC Spec rating.

GM's exclusive TPC Spec system considers over a dozen critical specifications that impact the overall performance of the vehicle, including brake system performance, ride and handling, traction control, and tire pressure monitoring performance. GM's TPC Spec number is molded onto the tire's sidewall near the tire size. If the tires have an all-season tread design, the TPC Spec number will be followed by MS for mud and snow. See *Tire Sidewall Labeling on page 10-56* for additional information.

GM recommends replacing worn tires in complete sets of four (six for dual rear wheels). Uniform tread depth on all tires will help to maintain the performance of the vehicle. Braking and handling performance may be adversely affected if all the tires are not replaced at the same time. If proper rotation and maintenance have been done, all four tires (six for dual rear wheels) should wear out at about the same time. See *Tire Rotation on page 10-69* for information on proper tire rotation. However, if it is necessary to replace only one axle set of worn tires, place the new tires on the rear axle (two for single rear wheels, four for dual rear wheels).

⚠ Warning

Tires could explode during improper service. Attempting to mount or dismount a tire could cause injury or death. Only your dealer or authorized tire service center should mount or dismount the tires.

⚠ Warning

Mixing tires of different sizes, brands, or types may cause loss of control of the vehicle, resulting in a crash or other

(Continued)

Warning (Continued)

vehicle damage. Use the correct size, brand, and type of tires on all wheels.

This vehicle may have a different size spare than the road tires originally installed on the vehicle. When new, the vehicle included a spare tire and wheel assembly with a similar overall diameter as the road tires and wheels, so it is all right to drive on it. The spare tire was developed for use on this vehicle and will not affect vehicle handling.

⚠ Warning

Using bias-ply tires on the vehicle may cause the wheel rim flanges to develop cracks

(Continued)

Warning (Continued)

after many miles of driving. A tire and/or wheel could fail suddenly and cause a crash. Use only radial-ply tires with the wheels on the vehicle.

Winter tires with the same speed rating as the original equipment tires may not be available for H, V, W, Y and ZR speed rated tires. Never exceed the winter tires' maximum speed capability when using winter tires with a lower speed rating.

If the vehicle tires must be replaced with a tire that does not have a TPC Spec number, make sure they are the same size, load range, speed rating, and construction (radial) as the original tires.

Vehicles that have a tire pressure monitoring system could give an inaccurate low-pressure warning if non-TPC Spec rated tires are installed. See *Tire Pressure Monitor System on page 10-64*.

The Tire and Loading Information label indicates the original equipment tires on the vehicle. See *Vehicle Load Limits on page 9-15* for the label location and more information about the Tire and Loading Information label.

Different Size Tires and Wheels

If wheels or tires are installed that are a different size than the original equipment wheels and tires, vehicle performance, including its braking, ride and handling characteristics, stability, and resistance to rollover may be affected. If the vehicle has electronic systems such as antilock

brakes, rollover airbags, traction control, electronic stability control, or All-Wheel Drive, the performance of these systems can also be affected.

⚠ Warning

If different sized wheels are used, there may not be an acceptable level of performance and safety if tires not recommended for those wheels are selected. This increases the chance of a crash and serious injury. Only use GM specific wheel and tire systems developed for the vehicle, and have them properly installed by a GM certified technician.

See *Buying New Tires on page 10-73* and *Accessories and Modifications on page 10-3*.

Uniform Tire Quality Grading

Quality grades can be found where applicable on the tire sidewall between tread shoulder and maximum section width. For example:

Treadwear 200 Traction AA Temperature A

The following information relates to the system developed by the United States National Highway Traffic Safety Administration (NHTSA), which grades tires by treadwear, traction, and temperature performance. This applies only to vehicles sold in the United States. The grades are molded on the sidewalls of most passenger car tires. The Uniform Tire Quality Grading (UTQG) system does not apply to deep tread, winter tires, compact spare tires, tires with nominal rim diameters of 10 to 12 inches (25 to 30 cm), or to some limited-production tires.

While the tires available on General Motors passenger cars and light trucks may vary with respect to these grades, they must also conform to federal safety requirements and additional General Motors Tire Performance Criteria (TPC) standards.

All Passenger Car Tires Must Conform to Federal Safety Requirements In Addition To These Grades.

Treadwear

The treadwear grade is a comparative rating based on the wear rate of the tire when tested under controlled conditions on a specified government test course. For example, a tire

graded 150 would wear one and one-half (1½) times as well on the government course as a tire graded 100. The relative performance of tires depends upon the actual conditions of their use, however, and may depart significantly from the norm due to variations in driving habits, service practices and differences in road characteristics and climate.

Traction

The traction grades, from highest to lowest, are AA, A, B, and C. Those grades represent the tire's ability to stop on wet pavement as measured under controlled conditions on specified government test surfaces of asphalt and concrete. A tire marked C may have poor traction performance. Warning: The traction grade assigned to this tire is based on straight-ahead braking traction tests, and does not include acceleration, cornering, hydroplaning, or peak traction characteristics.

Temperature

The temperature grades are A (the highest), B, and C, representing the tire's resistance to the generation of heat and its ability to dissipate heat when tested under controlled conditions on a specified indoor laboratory test wheel. Sustained high temperature can cause the material of the tire to degenerate and reduce tire life, and excessive temperature can lead to sudden tire failure. The grade C corresponds to a level of performance which all passenger car tires must meet under the Federal Motor Safety Standard No. 109. Grades B and A represent higher levels of performance on the laboratory test wheel than the minimum required by law. Warning: The temperature grade for this tire is established for a tire that is properly inflated and not overloaded. Excessive speed, underinflation, or excessive loading, either separately or in combination, can cause heat buildup and possible tire failure.

Wheel Alignment and Tire Balance

The tires and wheels were aligned and balanced at the factory to provide the longest tire life and best overall performance. Adjustments to wheel alignment and tire balancing are not necessary on a regular basis. Consider an alignment check if there is unusual tire wear or the vehicle is significantly pulling to one side or the other. Some slight pull to the left or right, depending on the crown of the road and/or other road

surface variations such as troughs or ruts, is normal. If the vehicle is vibrating when driving on a smooth road, the tires and wheels may need to be rebalanced. See your dealer for proper diagnosis.

Wheel Replacement

Replace any wheel that is bent, cracked, or badly rusted or corroded. If wheel nuts keep coming loose, the wheel, wheel bolts and wheel nuts should be replaced. If the wheel leaks air, replace it. Some aluminum wheels can be repaired. See your dealer if any of these conditions exist.

Your dealer will know the kind of wheel that is needed.

Each new wheel should have the same load-carrying capacity, diameter, width, offset and be mounted the same way as the one it replaces.

Replace wheels, wheel bolts, wheel nuts, or Tire Pressure Monitor System (TPMS) sensors with new GM original equipment parts.

⚠ Warning

Using the wrong replacement wheels, wheel bolts, or wheel nuts can be dangerous. It could affect the braking and handling of the vehicle. Tires can lose air, and cause loss of control, causing a crash. Always use the correct wheel, wheel bolts, and wheel nuts for replacement.

⚠ Caution

The wrong wheel can also cause problems with bearing life, brake cooling, speedometer or odometer calibration, headlamp aim, bumper height, vehicle

(Continued)

Caution (Continued)

ground clearance, and tire or tire chain clearance to the body and chassis.

Whenever a wheel, wheel bolt, or wheel nut is replaced on a dual wheel setup, check the wheel nut torque after 160, 1 600 and 10 000 km (100, 1,000 and 6,000 mi) of driving. For proper torque, see “Wheel Nut Torque” under *Capacities and Specifications on page 12-2*.

See *If a Tire Goes Flat on page 10-79* for more information.

Used Replacement Wheels

⚠ Warning

Replacing a wheel with a used one is dangerous. How it has been used or how far it has been

(Continued)

Warning (Continued)

driven may be unknown. It could fail suddenly and cause a crash. When replacing wheels, use a new GM original equipment wheel.

Tire Chains

⚠ Warning

If the vehicle has dual wheels or 265/65R18, P265/65R18, P275/55R20, LT265/70R17, LT265/70R18, LT265/60R20, LT275/65R18, P285/50R20, 285/45R22, or P285/45R22 size tires, do not use tire chains. They can damage the vehicle because there is not enough clearance. Tire chains used on a vehicle without the proper amount of clearance can cause damage to the brakes, suspension, or other vehicle

(Continued)

Warning (Continued)

parts. The area damaged by the tire chains could cause you to lose control of the vehicle and you or others may be injured in a crash.

Use another type of traction device only if its manufacturer recommends it for use on the vehicle and tire size combination and road conditions. Follow that manufacturer's instructions. To help avoid damage to the vehicle, drive slowly, readjust, or remove the device if it is contacting the vehicle, and do not spin the vehicle's wheels.

If you do find traction devices that will fit, install them on the rear tires.

⚠ Caution

If the vehicle does not have dual wheels and has a tire size other than 265/65R18, P265/65R18, P275/55R20, LT265/70R17, LT265/70R18, LT265/60R20, LT275/65R18, P285/50R20, 285/45R22, or P285/45R22, use tire chains only where legal and only when you must. Use chains that are the proper size for the tires. Install them on the tires of the rear axle. Do not use chains on the tires of the front axle. Tighten them as tightly as possible with the ends securely fastened. Drive slowly and follow the chain manufacturer's instructions. If you can hear the chains contacting the vehicle, stop and retighten them. If the contact continues, slow down until it stops. Driving too fast or spinning the wheels with chains on will damage the vehicle.

If a Tire Goes Flat

It is unusual for a tire to blowout while driving, especially if the tires are maintained properly. If air goes out of a tire, it is much more likely to leak out slowly. But if there ever is a blowout, here are a few tips about what to expect and what to do:

If a front tire fails, the flat tire creates a drag that pulls the vehicle toward that side. Take your foot off the accelerator pedal and grip the steering wheel firmly. Steer to maintain lane position, and then gently brake to a stop, well off the road, if possible.

A rear blowout, particularly on a curve, acts much like a skid and may require the same correction as used in a skid. Stop pressing the accelerator pedal and steer to straighten the vehicle. It may be very bumpy and noisy. Gently brake to a stop, well off the road, if possible.

⚠ Warning

Driving on a flat tire will cause permanent damage to the tire. Re-inflating a tire after it has been driven on while severely underinflated or flat may cause a blowout and a serious crash. Never attempt to re-inflate a tire that has been driven on while severely underinflated or flat. Have your dealer or an authorized tire service center repair or replace the flat tire as soon as possible.

⚠ Warning

Lifting a vehicle and getting under it to do maintenance or repairs is dangerous without the appropriate safety equipment and training. If a jack is provided with the vehicle, it is designed only for

(Continued)

Warning (Continued)

changing a flat tire. If it is used for anything else, you or others could be badly injured or killed if the vehicle slips off the jack. If a jack is provided with the vehicle, only use it for changing a flat tire.

If a tire goes flat, avoid further tire and wheel damage by driving slowly to a level place, well off the road, if possible. Turn on the hazard warning flashers. See *Hazard Warning Flashers on page 6-4*.

⚠ Warning

Changing a tire can be dangerous. The vehicle can slip off the jack and roll over or fall causing injury or death. Find a level place to change the tire. To help prevent the vehicle from moving:

(Continued)

Warning (Continued)

1. Set the parking brake firmly.
2. Put an automatic transmission in P (Park) or a manual transmission in 1 (First) or R (Reverse).
3. For four-wheel-drive vehicles, be sure the transfer case is in a drive gear– not in N (Neutral).
4. Turn off the engine and do not restart while the vehicle is raised.
5. Do not allow passengers to remain in the vehicle.
6. Place wheel blocks on both sides of the tire at the opposite corner of the tire being changed.

When the vehicle has a flat tire (2), use the following example as a guide to assist in the placement of the wheel blocks (1).

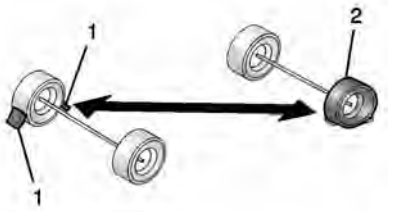

1. Wheel Block
2. Flat Tire

The following information explains how to use the jack and change a tire.

Tire Changing

Removing the Spare Tire and Tools

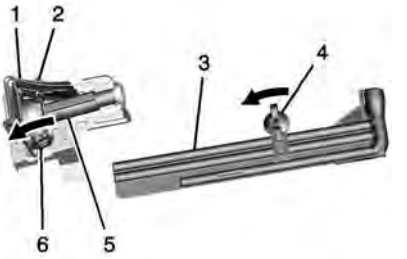

Crew Cab

1. Wheel Blocks
2. Wing Nut Retaining Wheel Blocks
3. Tool Kit
4. Wing Nut Retaining Tool Kit
5. Jack
6. Jack Knob

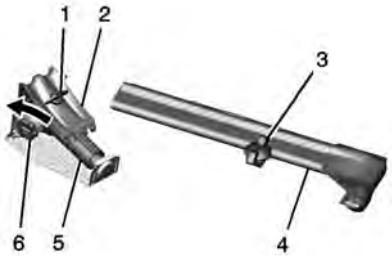

Regular Cab

1. Wing Nut Retaining Wheel Blocks
2. Wheel Blocks
3. Wing Nut Retaining Tool Kit
4. Tool Kit
5. Jack
6. Jack Knob

Double Cab

1. Wheel Blocks
2. Wing Nut Retaining Tool Kit
3. Tool Kit
4. Jack
5. Jack Knob

For regular cab models, the equipment you will need is behind the passenger seat. For double and crew cab models, the equipment is on the shelf behind the passenger side second row seat.

1. Turn the knob on the jack counterclockwise to lower the jack head to release the jack from its holder.
2. Turn the wing nut counterclockwise to remove the wheel blocks and the wheel block retainer.
3. Turn the wing nut used to retain the storage bag and tools counterclockwise to remove it.

Use the jack handle extensions and the wheel wrench to remove the underbody-mounted spare tire.

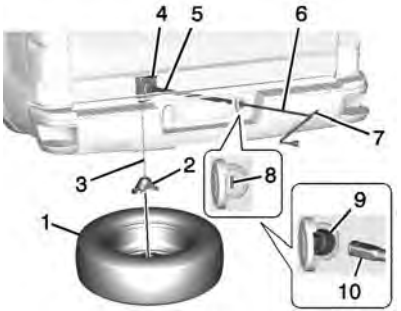

1. Spare Tire (Valve Stem Pointed Down)
2. Tire/Wheel Retainer
3. Hoist Cable
4. Hoist Assembly
5. Hoist Shaft
6. Jack Handle Extensions
7. Wheel Wrench
8. Spare Tire Lock (If Equipped)
9. Hoist Shaft Access Hole
10. Hoist End of Extension Tool

1. Open the spare tire lock cover on the bumper and use the ignition key to remove the spare tire lock (8). To remove the spare tire lock, insert the ignition key turn and pull straight out.

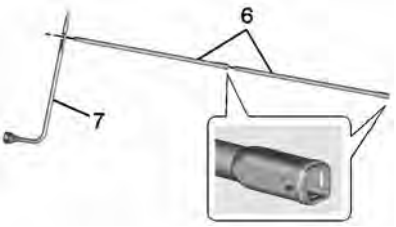

2. Assemble the wheel wrench (7) and the two jack handle extensions (6), as shown.

3. Insert the hoist end (open end) (10) of the extension through the hole (9) in the rear bumper.

   Do not use the chiseled end of the wheel wrench.

   Be sure the hoist end of the extension (10) connects to the hoist shaft. The ribbed square end of the extension is used to lower the spare tire.

4. Turn the wheel wrench counterclockwise to lower the spare tire to the ground.

   Continue to turn the wheel wrench until the spare tire can be pulled out from under the vehicle.

5. Pull the spare tire out from under the vehicle.

6. Tilt the tire toward the vehicle with some slack in the cable to access the tire/wheel retainer.

   Tilt the retainer and pull it through the center of the wheel along with the cable and spring.

7. Put the spare tire near the flat tire.

Removing the Flat Tire and Installing the Spare Tire

Use the following pictures and instructions to remove the flat tire and raise the vehicle.

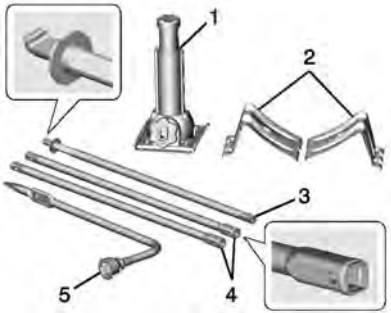

1. Jack
2. Wheel Blocks
3. Jack Handle
4. Jack Handle Extension
5. Wheel Wrench

The tools you will be using include the jack (1), the wheel blocks (2), the jack handle (3), the jack handle extensions (4), and the wheel wrench (5).

1. Do a safety check before proceeding. See *If a Tire Goes Flat on page 10-79* for more information.

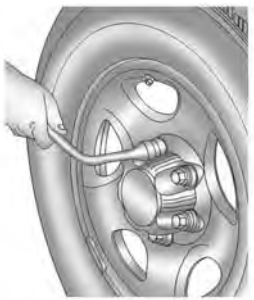

2. If the vehicle has wheel nut caps, loosen them by turning the wheel wrench counterclockwise.

If the vehicle has a center cap with wheel nut caps, the wheel nut caps are designed to stay with the center cap after they are loosened. Remove the entire center cap.

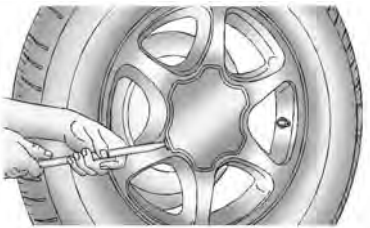

If the wheel has a smooth center cap, place the chisel end of the wheel wrench in the slot on the wheel, and gently pry it out.

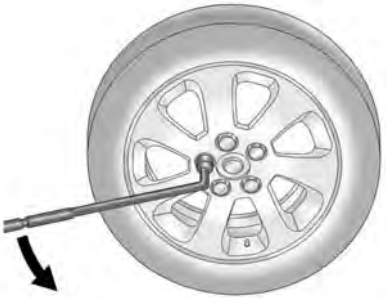

3. Use the wheel wrench and turn it counterclockwise to loosen the wheel nuts. Do not remove the wheel nuts yet.

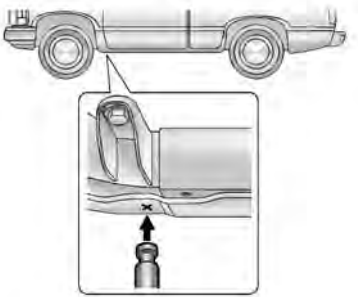

Front Position – 1500 Models

4. If the flat tire is on the front of the vehicle (1500 models), position the jack under the bracket attached to the vehicle's frame, behind the flat tire, as shown.

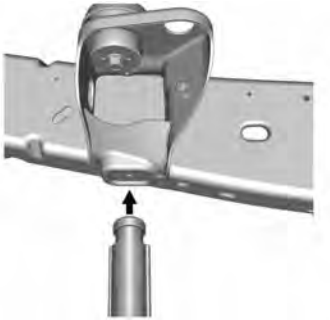

Front Position – All Other Models

If the flat tire is on the front of the vehicle (all other models), position the jack under the vehicle, as shown.

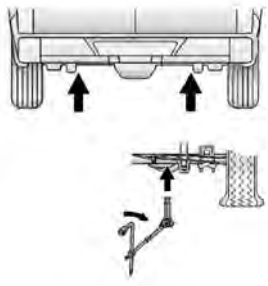

Rear Position – 1500 Models

5. If the flat tire is on the rear, for 1500 models position the jack under the rear axle about 5 cm (2 in) inboard of the shock absorber bracket.

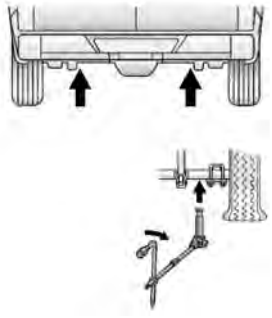

Rear Position – All Other Models

For all other models, position the jack under the rear axle between the spring anchor and the shock absorber bracket.

If a snow plow has been added to the front of the vehicle, lower the snow plow fully before raising the vehicle.

Make sure that the jack head is positioned so that the rear axle is resting securely between the grooves that are on the jack head.

⚠ Warning

Getting under a vehicle when it is lifted on a jack is dangerous. If the vehicle slips off the jack, you could be badly injured or killed. Never get under a vehicle when it is supported only by a jack.

⚠ Warning

Raising the vehicle with the jack improperly positioned can damage the vehicle and even make the vehicle fall. To help avoid personal injury and vehicle damage, be sure to fit the jack lift head into the proper location before raising the vehicle.

6. Turn the wheel wrench clockwise to raise the vehicle. Raise the vehicle far enough off

the ground so there is enough room for the spare tire to fit under the wheel well.

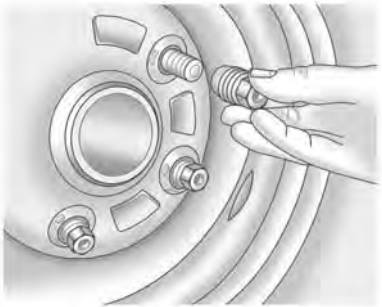

7. Remove all the wheel nuts and take off the flat tire.

⚠ Warning

Rust or dirt on a wheel, or on the parts to which it is fastened, can make wheel nuts become loose after time. The wheel could come off and cause an accident. When

(Continued)

Warning (Continued)

changing a wheel, remove any rust or dirt from places where the wheel attaches to the vehicle. In an emergency, a cloth or a paper towel can be used; however, use a scraper or wire brush later to remove all rust or dirt.

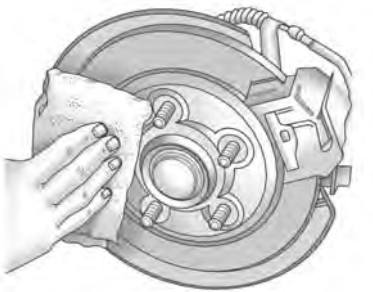

8. Remove any rust or dirt from the wheel bolts, mounting surfaces, and spare wheel.
9. Install the spare tire.

⚠ Warning

Never use oil or grease on bolts or nuts because the nuts might come loose. The vehicle's wheel could fall off, causing a crash.

10. Put the wheel nuts back on with the rounded end of the nuts toward the wheel.
11. Tighten each wheel nut by hand. Then use the wheel wrench to tighten the nuts until the wheel is held against the hub.
12. Turn the wheel wrench counterclockwise to lower the vehicle. Lower the jack completely.

⚠ Warning

If wheel studs are damaged, they can break. If all the studs on a wheel broke, the wheel could

(Continued)

Warning (Continued)

come off and cause a crash.
If any stud is damaged because of a loose-running wheel, it could be that all of the studs are damaged. To be sure, replace all studs on the wheel. If the stud holes in a wheel have become larger, the wheel could collapse in operation. Replace any wheel if its stud holes have become larger or distorted in any way. Inspect hubs and hub-piloted wheels for damage. Because of loose running wheels, piloting pad damage may occur and require replacement of the entire hub, for proper centering of the wheels. When replacing studs, hubs, wheel nuts or wheels, be sure to use GM original equipment parts.

⚠ Warning

Wheel nuts that are improperly or incorrectly tightened can cause the wheels to become loose or come off. The wheel nuts should be tightened with a torque wrench to the proper torque specification after replacing. Follow the torque specification supplied by the aftermarket manufacturer when using accessory locking wheel nuts. See *Capacities and Specifications on page 12-2* for original equipment wheel nut torque specifications.

⚠ Caution

Improperly tightened wheel nuts can lead to brake pulsation and rotor damage. To avoid expensive brake repairs, evenly tighten the wheel nuts in the proper

(Continued)

Caution (Continued)

sequence and to the proper torque specification. See *Capacities and Specifications on page 12-2* for the wheel nut torque specification.

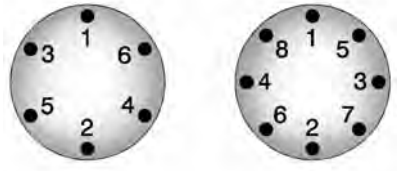

13. Tighten the nuts firmly in a crisscross sequence, as shown, by turning the wheel wrench clockwise.

For vehicles with dual wheels, have a technician check the wheel nut tightness of all wheels with a torque wrench after the first 160, 1 600 and 10 000 km (100, 1,000 and 6,000 mi).

Repeat this service whenever you have a tire removed or serviced. See *Capacities and Specifications on page 12-2*.

When reinstalling the regular wheel and tire, also reinstall either the center cap, or bolt-on hub cap, depending on what the vehicle is equipped with. For center caps, place the cap on the wheel and tap it into place until it seats flush with the wheel. The cap only goes on one way. Be sure to line up the tab on the center cap with the indentation on the wheel. For bolt-on hub caps, align the plastic nut caps with the wheel nuts and then tighten by hand. Then use the wheel wrench to tighten.

Storing a Flat or Spare Tire and Tools

⚠ Warning

Storing a jack, a tire, or other equipment in the passenger compartment of the vehicle could cause injury. In a sudden stop or collision, loose equipment could strike someone. Store all these in the proper place.

⚠ Caution

Storing an aluminum wheel with a flat tire under your vehicle for an extended period of time or with the valve stem pointing up can damage the wheel. Always stow the wheel with the valve stem pointing down and have the wheel/tire repaired as soon as possible.

Store the tire under the rear of the vehicle in the spare tire carrier.

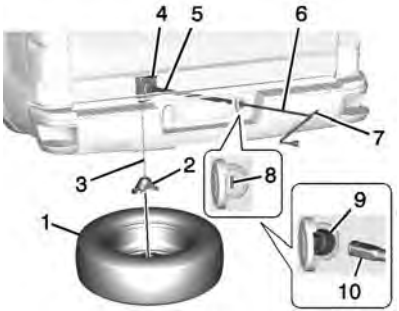

1. Spare Tire (Valve Stem Pointed Down)
2. Tire/Wheel Retainer
3. Hoist Cable
4. Hoist Assembly
5. Hoist Shaft
6. Jack Handle Extensions
7. Wheel Wrench
8. Spare Tire Lock (If Equipped)
9. Hoist Shaft Access Hole
10. Hoist End of Extension Tool

1. Put the tire on the ground at the rear of the vehicle with the valve stem pointed down, and to the rear.
2. Pull the cable and spring through the center of the wheel. Tilt the wheel retainer plate down and through the center wheel.

   Make sure the retainer is fully seated across the underside of the wheel.

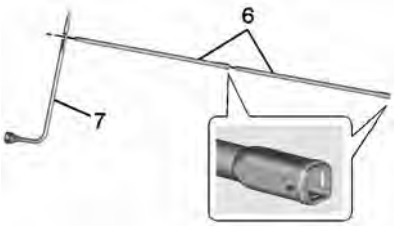

3. Attach the wheel wrench (7) and extensions (6) together, as shown.

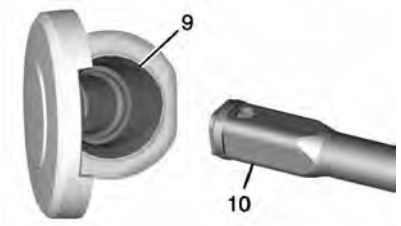

4. Insert the hoist end (10) through the hole (9) in the rear bumper and onto the hoist shaft.

   Do not use the chiseled end of the wheel wrench.
5. Raise the tire part way upward. Make sure the retainer is seated in the wheel opening.
6. Raise the tire fully against the underside of the vehicle by turning the wheel wrench clockwise until you hear two clicks or feel it skip twice. You cannot overtighten the cable.

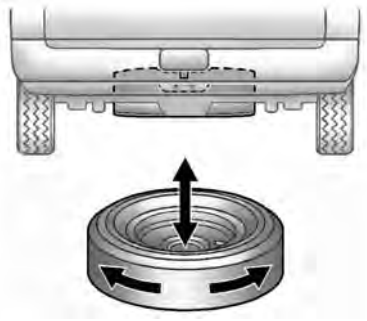

7. Make sure the tire is stored securely. Push, pull, and then try to turn the tire. If the tire moves, use the wheel wrench to tighten the cable.
8. Reinstall the spare tire lock, if the vehicle has one.

To store the jack and jack tools:

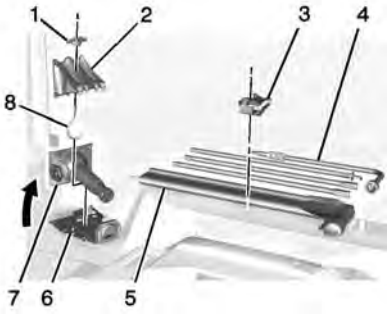

1. Wing Nut Retaining Wheel Blocks
2. Wheel Blocks
3. Wing Nut Retaining Tool Kit
4. Wheel Wrench and Extensions
5. Tool Bag
6. Jack Mounting Bracket
7. Jack
8. Bolt Retaining Wheel Blocks

1. Put the tools (4) in the tool bag (5) and place them in the retaining bracket (3).
2. Tighten down the wing nut (3).
3. Assemble the wheel blocks (2) and jack (7) together with the wing nut (1) and retaining bolt (8).
4. Position the jack (7) in the mounting bracket (6). Position the holes in the base of the jack (7) onto the pin in the mounting bracket (6).
5. Return them to their original location in the vehicle. See “Removing the Spare Tire and Tools.”

Full-Size Spare Tire

If this vehicle came with a full-size spare tire, it was fully inflated when new, however, it can lose air over time. Check the inflation pressure regularly. See *Tire Pressure on page 10-62* and *Vehicle Load Limits on page 9-15*. For instructions on how to remove, install, or store a spare tire, see *Tire Changing on page 10-80*.

If equipped with a temporary use full-size spare tire, it is indicated on the tire sidewall. See *Tire Sidewall Labeling on page 10-56*. This spare tire should not be driven on over 112 km/h (70 mph), or 88 km/h (55 mph) when pulling a trailer, at the proper inflation pressure. Repair and replace the road tire as soon as it is convenient, and stow the spare tire for future use.

⚠ Caution

If the vehicle has four-wheel drive and a different size spare tire is installed, do not drive in four-wheel drive until the flat tire is repaired and/or replaced. The vehicle could be damaged and the repairs would not be covered by the warranty. Never use four-wheel drive when a different size spare tire is installed on the vehicle.

The vehicle may have a different size spare tire than the road tires originally installed on the vehicle. This spare tire was developed for use on this vehicle, so it is all right to drive on it. If the vehicle has four-wheel drive and a different size spare tire is installed, drive only in two-wheel drive.

After installing the spare tire on the vehicle, stop as soon as possible and check that the spare tire is correctly inflated.

Have the damaged or flat road tire repaired or replaced and installed back onto the vehicle as soon as possible so the spare tire will be available in case it is needed again.

Do not mix tires and wheels of different sizes, because they will not fit. Keep your spare tire and its wheel together. If the vehicle has a spare tire that does not match the original road tires and wheels in size and type, do not include the spare in the tire rotation.

Jump Starting

For more information about the vehicle battery, see *Battery on page 10-32*.

If the vehicle's battery (or batteries) has run down, you may want to use another vehicle and some jumper cables to start your vehicle. Be sure to use the following steps to do it safely.

⚠ Warning

Batteries can hurt you. They can be dangerous because:

- They contain acid that can burn you.
- They contain gas that can explode or ignite.
- They contain enough electricity to burn you.

If you do not follow these steps exactly, some or all of these things can hurt you.

⚠ Caution

Ignoring these steps could result in costly damage to the vehicle that would not be covered by the vehicle warranty. Trying to start the vehicle by pushing or pulling it will not work, and it could damage the vehicle.

1. Check the other vehicle. It must have a 12-volt battery with a negative ground system.

⚠ Caution

If the other vehicle does not have a 12-volt system with a negative ground, both vehicles can be damaged. Only use a vehicle that has a 12-volt system with a negative ground for jump starting.

2. If you have a vehicle with a diesel engine with two batteries, you should know before you

begin that, especially in cold weather, you may not be able to get enough power from a single battery in another vehicle to start your diesel engine. If your vehicle has more than one battery, using the battery that is closer to the starter will reduce electrical resistance. This is located on the passenger side, in the rear of the engine compartment.

3. Get the vehicles close enough so the jumper cables can reach, but be sure the vehicles are not touching each other. If they are, it could cause an unwanted ground connection. You would not be able to start your vehicle, and the bad grounding could damage the electrical systems.

   To avoid the possibility of the vehicles rolling, set the parking brake firmly on both vehicles involved in the jump start procedure. Put the automatic transmission in P (Park) or a manual transmission in Neutral before setting the parking brake. If you have a four-wheel-drive vehicle, be sure the transfer case is in a drive gear, not in N (Neutral).

⚠ Caution

If any accessories are left on or plugged in during the jump starting procedure, they could be damaged. The repairs would not be covered by the vehicle warranty. Whenever possible, turn off or unplug all accessories on either vehicle when jump starting.

4. Turn off the ignition on both vehicles. Unplug unnecessary accessories plugged into the accessory power outlets. Turn off the radio and all the lamps that are not needed. This will avoid sparks and help save both batteries. And it could save the radio!

5. Open the hood on the other vehicle and locate the positive (+) and negative (−) terminal locations on that vehicle.

   The positive (+) terminal is under a red plastic cover at the positive battery post. To uncover the positive (+) terminal, open the red plastic cover.

   For more information on the location of the remote positive (+) and remote negative (−) terminals, see *Engine Compartment Overview on page 10-6*.

⚠ Warning

An electric fan can start up even when the engine is not running and can injure you. Keep hands, clothing and tools away from any underhood electric fan.

⚠ Warning

Using an open flame near a battery can cause battery gas to explode. People have been hurt doing this, and some have been blinded. Use a flashlight if you need more light.

Be sure the battery has enough water. You do not need to add water to the battery installed in your new vehicle. But if a battery has filler caps, be sure the right amount of fluid is there. If it is low, add water to take care of that first. If you do not, explosive gas could be present.

Battery fluid contains acid that can burn you. Do not get it on you. If you accidentally get it in your eyes or on your skin, flush the place with water and get medical help immediately.

⚠ Warning

Fans or other moving engine parts can injure you badly. Keep your hands away from moving parts once the engine is running.

6. Check that the jumper cables do not have loose or missing insulation. If they do, you could get a shock. The vehicles could be damaged too.

   Before you connect the cables, here are some basic things you should know. Positive (+) will go to positive (+) or to a remote positive (+) terminal if the vehicle has one. Negative (−) will go to a heavy, unpainted metal engine part or to a remote negative (−) terminal if the vehicle has one.

   Do not connect positive (+) to negative (−) or you will get a short that would damage the battery and maybe other parts too. And do not connect the negative (−) cable to the negative (−) terminal on the dead battery because this can cause sparks.

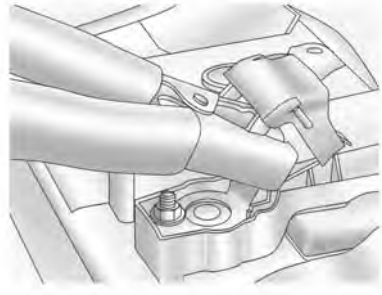

5.3L Shown, 4.3L, 6.0L, 6.2L and 6.6L Similar

7. Connect the red positive (+) cable to the positive (+) terminal of the vehicle with the dead battery.

8. Do not let the other end touch metal. Connect it to the positive (+) terminal of the good battery. Use a remote positive (+) terminal if the vehicle has one.
9. Connect the black negative (−) cable to the negative (−) terminal of the good battery. Use a remote negative (−) terminal if the vehicle has one.

   Do not let the other end touch anything until the next step.
10. Connect the other end of the negative (−) cable.

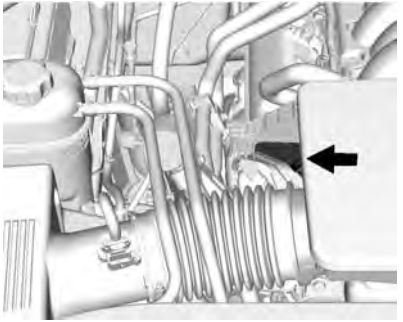

4.3L Shown, 5.3L and 6.2L Similar

- To the metal bracket that is bolted to the engine and supports the resonator, on the vehicle with the dead battery.

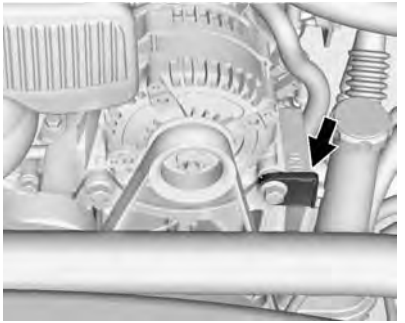

6.0L

- To the generator bracket, on the vehicle with the dead battery.

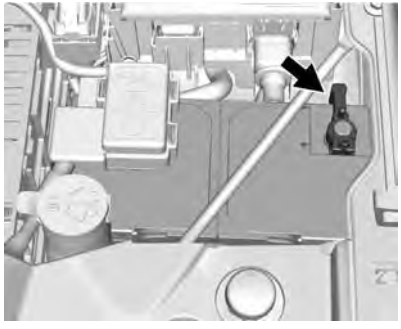

6.6L

- To the negative (−) post on the auxiliary battery, on the vehicle with the dead battery.

11. Start the vehicle with the good battery and run the engine for a while.
12. Try to start the vehicle that had the dead battery. If it will not start after a few tries, it probably needs service.

⚠ Caution

If the jumper cables are connected or removed in the wrong order, electrical shorting may occur and damage the vehicle. The repairs would not be covered by the vehicle warranty. Always connect and remove the jumper cables in the correct order, making sure that the cables do not touch each other or other metal.

Jumper Cable Removal

Reverse the sequence exactly when removing the jumper cables.

Towing the Vehicle

⚠ Caution

Incorrectly towing a disabled vehicle may cause damage. The damage would not be covered by the vehicle warranty.

Have the vehicle towed on a flatbed car carrier. A wheel lift tow truck could damage the vehicle.

Consult your dealer or a professional towing service if the disabled vehicle must be towed.

Recreational Vehicle Towing

Recreational vehicle towing means towing the vehicle behind another vehicle, such as a motor home. The two most common types of recreational vehicle towing are dinghy and dolly towing. Dinghy towing is towing the vehicle with all four wheels on the ground. Dolly

towing is towing the vehicle with two wheels on the ground and two wheels on a dolly.

Follow the tow vehicle manufacturer's instructions. See your dealer or trailering professional for additional advice and equipment recommendations.

⚠ Caution

Use of a shield mounted in front of the vehicle grille could restrict airflow and cause damage to the transmission. The repairs would not be covered by the vehicle warranty. If using a shield, only use one that attaches to the towing vehicle.

Dinghy Towing

Two-Wheel-Drive Vehicles

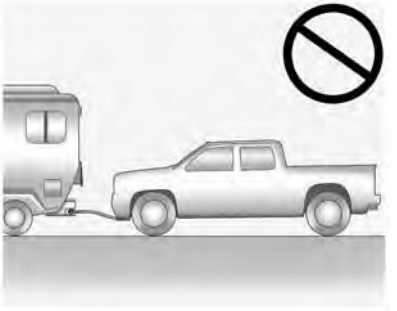

⚠ Caution

If the two-wheel-drive vehicle is towed with all four wheels on the ground, the drivetrain components could be damaged. The repairs would not be covered by the vehicle warranty.

Two-wheel-drive vehicles should not be towed with all four wheels on the ground.

Four-Wheel-Drive Vehicles

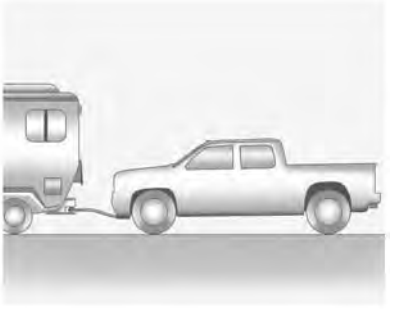

Only dinghy tow four-wheel-drive vehicles with a two-speed transfer case that have an N (Neutral) and a Four-Wheel Drive Low (4 (↓) setting.

⚠ Warning

Shifting a four-wheel-drive vehicle's transfer case into N (Neutral) can cause the vehicle to roll even if the transmission is in P (Park). You or others could be injured. Set the parking brake before shifting the transfer case to N (Neutral).

Follow these steps to dinghy tow:

1. Position the vehicle being towed behind the tow vehicle, facing forward and on a level surface.
2. Securely attach the vehicle being towed to the tow vehicle.
3. Apply the parking brake and start the engine.
4. Shift the transfer case to N (Neutral). See “Shifting into N (Neutral)” under *Four-Wheel Drive on page 9-42* for the proper procedure. Check that the vehicle is in N (Neutral) by shifting the transmission to R (Reverse) and then to D (Drive). There should be no movement of the vehicle while shifting.
5. With the transmission in D (Drive), turn the ignition to ACC/ACCESSORY.

⚠ Caution

Failure to disconnect the negative battery cable or to have it contact the terminals can cause damage to the vehicle.

6. Disconnect the negative battery cable at the battery and secure the nut and bolt. Cover the negative battery post with a non-conductive material to prevent any contact with the negative battery terminal.
7. Shift the transmission to P (Park).

⚠ Caution

If the steering column is locked, vehicle damage may occur.

8. Move the steering wheel to make sure the steering column is unlocked.
9. Release the parking brake.
10. Keep the ignition key in the towed vehicle in ACC/ACCESSORY to prevent the steering column from locking.

Disconnecting the Towed Vehicle

Before disconnecting the towed vehicle:

1. Park on a level surface.
2. Set the parking brake, shift the transmission to P (Park), and move the ignition key to OFF.
3. Connect the battery.
4. Apply the brake pedal.

5. Start the engine, then shift the transfer case out of N (Neutral) to Two-Wheel Drive High. See Four-Wheel Drive for directions on shifting out of N (Neutral).
6. Check that the vehicle is in Two-Wheel Drive High by shifting the transmission to R (Reverse) and then to D (Drive). There should be movement of the vehicle while shifting.
7. Shift the transmission to P (Park) and turn off the ignition.
8. Disconnect the vehicle from the tow vehicle.
9. Release the parking brake.
10. Reset any lost presets.

    The outside temperature display will default to 32°F but will reset with normal usage.

Dolly Towing

Front Towing (Front Wheels Off the Ground) – Two-Wheel-Drive Vehicles

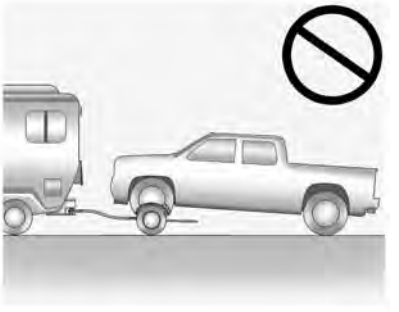

⚠ Caution

If a two-wheel-drive vehicle is towed with the rear wheels on the ground, the transmission could be damaged. The repairs would not be covered by the vehicle

(Continued)

Caution (Continued)

warranty. Never tow the vehicle with the rear wheels on the ground.

Two-wheel-drive vehicles should not be towed with the rear wheels on the ground. Two-wheel-drive transmissions have no provisions for internal lubrication while being towed.

To dolly tow a two-wheel-drive vehicle, the vehicle must be towed with the rear wheels on the dolly. See “Rear Towing (Rear Wheels Off the Ground)” later in this section.

Front Towing (Front Wheels Off the Ground) – Four-Wheel-Drive Vehicles

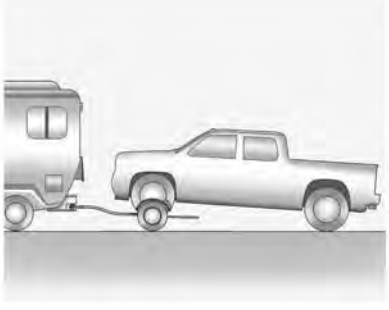

To dolly tow a four-wheel-drive vehicle from the front:

1. Attach the dolly to the tow vehicle following the dolly manufacturer's instructions.
2. Drive the front wheels onto the dolly.
3. Shift the transmission to P (Park).
4. Set the parking brake.

⚠ Warning

Shifting a four-wheel-drive vehicle's transfer case into N (Neutral) can cause the vehicle to roll even if the transmission is in P (Park). You or others could be injured. Set the parking brake before shifting the transfer case to N (Neutral).

5. Use a clamping device designed for towing to ensure that the front wheels are locked into the straight position.
6. Secure the vehicle to the dolly following the manufacturer's instructions.
7. Shift the transfer case to N (Neutral). See “Shifting into N (Neutral)” under *Four-Wheel Drive on page 9-42* for the proper procedure.
8. Release the parking brake only after the vehicle being towed is firmly attached to the tow vehicle.
9. Turn the ignition to LOCK/OFF.

Rear Towing (Rear Wheels Off the Ground)

Two-Wheel-Drive Vehicles

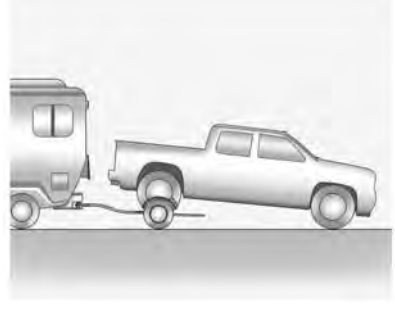

To dolly tow a two-wheel-drive vehicle from the rear:

1. Drive the rear wheels onto the dolly.

2. Set the parking brake. See *Parking Brake on page 9-51*.
3. Put the transmission in P (Park).
4. Secure the vehicle to the dolly following the manufacturer's instructions.
5. Use a clamping device designed for towing to ensure that the front wheels are locked into the straight position.
6. Turn the ignition to LOCK/OFF.

Four-Wheel-Drive Vehicles

> **⚠ Warning**
>
> Shifting a four-wheel-drive vehicle's transfer case into N (Neutral) can cause the vehicle to roll even if the transmission is in P (Park). You or others could be injured. Set the parking brake before shifting the transfer case to N (Neutral).

To dolly tow a four-wheel-drive vehicle from the rear:

1. Drive the rear wheels onto the dolly.
2. Set the parking brake. See *Parking Brake on page 9-51*.
3. Put the transmission in P (Park).
4. Secure the vehicle to the dolly following the manufacturer's instructions.
5. Use a clamping device designed for towing to ensure that the front wheels are locked into the straight position.
6. Shift the transfer case to N (Neutral). See “Shifting into Neutral” under *Four-Wheel Drive on page 9-42* for the proper procedure.
7. Turn the ignition to LOCK/OFF.

Appearance Care

Exterior Care

Locks

Locks are lubricated at the factory. Use a de-icing agent only when absolutely necessary, and have the locks greased after using. See *Recommended Fluids and Lubricants on page 11-12*.

Washing the Vehicle

To preserve the vehicle's finish, wash it often and out of direct sunlight.

> **⚠ Caution**
>
> Do not use petroleum-based, acidic, or abrasive cleaning agents as they can damage the vehicle's paint, metal, or plastic parts. If damage occurs, it would not be covered by the vehicle warranty. Approved cleaning
>
> (Continued)

Caution (Continued)

products can be obtained from your dealer. Follow all manufacturer directions regarding correct product usage, necessary safety precautions, and appropriate disposal of any vehicle care product.

⚠ Caution

Avoid using high-pressure washes closer than 30 cm (12 in) to the surface of the vehicle. Use of power washers exceeding 8,274 kPa (1,200 psi) can result in damage or removal of paint and decals.

This symbol is on any underhood compartment electrical center that should not be power washed. This could cause damage that would not be covered by the vehicle warranty.

If using an automatic car wash, follow with the car wash instructions. The windshield wiper and rear window wiper, if equipped, must be off. Remove any accessories that may be damaged or interfere with the car wash equipment.

Rinse the vehicle well, before washing and after, to remove all cleaning agents completely. If they are allowed to dry on the surface, they could stain.

Dry the finish with a soft, clean chamois or an all-cotton towel to avoid surface scratches and water spotting.

Finish Care

Application of aftermarket clearcoat sealant/wax materials is not recommended. If painted surfaces are damaged, see your dealer to have the damage assessed and repaired. Foreign materials such as calcium chloride and other salts, ice melting agents, road oil and tar, tree sap, bird droppings, chemicals from industrial chimneys, etc., can damage the vehicle's finish if they remain on painted surfaces. Wash the vehicle as soon as possible. If necessary, use non-abrasive cleaners that are marked safe for painted surfaces to remove foreign matter.

Occasional hand waxing or mild polishing should be done to remove residue from the paint finish. See your dealer for approved cleaning products.

Do not apply waxes or polishes to uncoated plastic, vinyl, rubber, decals, simulated wood, or flat paint as damage can occur.

⚠ Caution

Machine compounding or aggressive polishing on a basecoat/clearcoat paint finish may damage it. Use only non-abrasive waxes and polishes that are made for a basecoat/clearcoat paint finish on the vehicle.

To keep the paint finish looking new, keep the vehicle garaged or covered whenever possible.

Protecting Exterior Bright Metal Moldings

⚠ Caution

Failure to clean and protect the bright metal moldings can result in a hazy white finish or pitting. This damage would not be covered by the vehicle warranty.

The bright metal moldings on the vehicle are aluminum. To prevent damage always follow these cleaning instructions:

- Be sure the molding is cool to the touch before applying any cleaning solution.
- Use a cleaning solution approved for aluminum. Some cleaners are highly acidic or contain alkaline substances and can damage the moldings.
- Always dilute a concentrated cleaner according to the manufacturer's instructions.
- Do not use chrome cleaners.
- Do not use cleaners that are not intended for automotive use.
- Use a nonabrasive wax on the vehicle after washing to protect and extend the molding finish.

Spray-In Bedliner Care

A spray-in bedliner is a permanent coating that bonds to the truck bed and cannot be removed. Promptly rinse the bedliner surface following a chemical spill to avoid permanent damage.

Spray-in bedliners can fade from oxidation, road dirt, heavy-duty hauling, and hard water stains. Clean it periodically by washing off the loose dirt and using a mild detergent. To restore the original appearance, apply the bedliner conditioner available through your dealer.

⚠ Caution

Using silicone-based products may damage the bedliner, reduce the slip-resistant texture, and attract dirt.

Cleaning Exterior Lamps/Lenses, Emblems, Decals and Stripes

Use only lukewarm or cold water, a soft cloth, and a car washing soap to clean exterior lamps, lenses,

emblems, decals and stripes. Follow instructions under "Washing the Vehicle" previously in this section.

Lamp covers are made of plastic, and some have a UV protective coating. Do not clean or wipe them while they are dry.

Do not use any of the following on lamp covers:

- Abrasive or caustic agents.
- Washer fluids and other cleaning agents in higher concentrations than suggested by the manufacturer.
- Solvents, alcohols, fuels, or other harsh cleaners.
- Ice scrapers or other hard items.
- Aftermarket appearance caps or covers while the lamps are illuminated, due to excessive heat generated.

⚠ Caution

Failure to clean lamps properly can cause damage to the lamp cover that would not be covered by the vehicle warranty.

⚠ Caution

Using wax on low gloss black finish stripes can increase the gloss level and create a non-uniform finish. Clean low gloss stripes with soap and water only.

Air Intakes

Clear debris from the air intakes, between the hood and windshield, when washing the vehicle.

Windshield and Wiper Blades

Clean the outside of the windshield with glass cleaner.

Clean rubber blades using a lint-free cloth or paper towel soaked with windshield washer fluid or a mild detergent. Wash the windshield thoroughly when cleaning the blades. Bugs, road grime, sap, and a buildup of vehicle wash/wax treatments may cause wiper streaking.

Replace the wiper blades if they are worn or damaged. Damage can be caused by extreme dusty conditions, sand, salt, heat, sun, snow, and ice.

Weatherstrips

Apply Dielectric silicone grease on weatherstrips to make them last longer, seal better, and not stick or squeak. Lubricate weatherstrips once a year. Hot, dry climates may require more frequent application. Black marks from rubber material on painted surfaces can be removed by rubbing with a clean cloth. See *Recommended Fluids and Lubricants on page 11-12*.

Tires

Use a stiff brush with tire cleaner to clean the tires.

> **⚠ Caution**
>
> Using petroleum-based tire dressing products on the vehicle may damage the paint finish and/or tires. When applying a tire dressing, always wipe off any overspray from all painted surfaces on the vehicle.

Wheels and Trim — Aluminum or Chrome

Use a soft, clean cloth with mild soap and water to clean the wheels. After rinsing thoroughly with clean water, dry with a soft, clean towel. A wax may then be applied.

> **⚠ Caution**
>
> Chrome wheels and other chrome trim may be damaged if the vehicle is not washed after driving on roads that have been sprayed with magnesium, calcium, or sodium chloride. These chlorides are used on roads for conditions such as ice and dust. Always wash the chrome with soap and water after exposure.

> **⚠ Caution**
>
> To avoid surface damage, do not use strong soaps, chemicals, abrasive polishes, cleaners, brushes, or cleaners that contain acid on aluminum or chrome-plated wheels. Use only approved cleaners. Also, never drive a vehicle with aluminum or chrome-plated wheels through an
>
> (Continued)

> **Caution (Continued)**
>
> automatic car wash that uses silicone carbide tire cleaning brushes. Damage could occur and the repairs would not be covered by the vehicle warranty.

Steering, Suspension, and Chassis Components

Visually inspect steering, suspension, and chassis components for damaged, loose, or missing parts or signs of wear at least once a year.

Inspect power steering for proper hook-up, binding, leaks, cracks, chafing, etc.

Visually check constant velocity joint boots and axle seals for leaks.

1500 Series vehicles, at least every other oil change lubricate the outer tie rod ends.

2500/3500 Series vehicles, at least every other engine oil change lubricate the upper and lower control arm ball joints. Control arm ball joints on 1500 series vehicles are maintenance-free.

2500/3500 Series vehicles equipped with steering linkage, at least every other engine oil change lubricate the tie rod ball joints, idler arm pivot shaft bearings, idler arm socket, and pitman arm socket.

⚠ Caution

Lubrication of applicable Steering/ Suspension points should not be done unless temperature is -12°C (10°F) or higher, or damage could result.

Body Component Lubrication

Lubricate all key lock cylinders, hood hinges, liftgate hinges, and the steel fuel door hinge unless the components are plastic. Applying silicone grease on weatherstrips with a clean cloth will make them last longer, seal better, and not stick or squeak.

Underbody Maintenance

At least twice a year, spring and fall, use plain water to flush dirt and debris from the vehicle's underbody. Your dealer or an underbody car washing system can do this. If not removed, rust and corrosion can develop.

Sheet Metal Damage

If the vehicle is damaged and requires sheet metal repair or replacement, make sure the body repair shop applies anti-corrosion material to parts repaired or replaced to restore corrosion protection.

Original manufacturer replacement parts will provide the corrosion protection while maintaining the vehicle warranty.

Finish Damage

Quickly repair minor chips and scratches with touch-up materials available from your dealer to avoid corrosion. Larger areas of finish damage can be corrected in your dealer's body and paint shop.

Chemical Paint Spotting

Airborne pollutants can fall upon and attack painted vehicle surfaces causing blotchy, ring-shaped discolorations, and small, irregular dark spots etched into the paint surface. Refer to “Finish Care” previously in this section.

Interior Care

To prevent dirt particle abrasions, regularly clean the vehicle's interior. Immediately remove any soils. Note that newspapers or dark garments that can transfer color to home furnishings can also permanently transfer color to the vehicle's interior.

Use a soft bristle brush to remove dust from knobs and crevices on the instrument cluster. Using a mild soap solution, immediately remove hand lotions, sunscreen, and insect repellent from all interior surfaces or permanent damage may result.

Your dealer may have products for cleaning the interior. Use cleaners specifically designed for the surfaces being cleaned to prevent permanent damage. Apply all cleaners directly to the cleaning cloth. Do not spray cleaners directly on any switches or controls. Cleaners should be removed quickly. Never allow cleaners to remain on the surface being cleaned for extended periods of time.

Cleaners may contain solvents that can become concentrated in the interior. Before using cleaners, read and adhere to all safety instructions on the label. While cleaning the interior, maintain adequate ventilation by opening the doors and windows.

To prevent damage, do not clean the interior using the following cleaners or techniques:

- Never use a razor or any other sharp object to remove a soil from any interior surface.
- Never use a brush with stiff bristles.
- Never rub any surface aggressively or with excessive pressure.
- Do not use laundry detergents or dishwashing soaps with degreasers. For liquid cleaners, use approximately 20 drops per 3.8 L (1 gal) of water.
  A concentrated soap solution will leave a residue that creates streaks and attracts dirt. Do not use solutions that contain strong or caustic soap.
- Do not heavily saturate the upholstery when cleaning.
- Do not use solvents or cleaners containing solvents.

Interior Glass

To clean, use a terry cloth fabric dampened with water. Wipe droplets left behind with a clean dry cloth. Commercial glass cleaners may be used, if necessary, after cleaning the interior glass with plain water.

⚠ Caution

To prevent scratching, never use abrasive cleaners on automotive glass. Abrasive cleaners or aggressive cleaning may damage the rear window defogger.

Cleaning the windshield with water during the first three to six months of ownership will reduce tendency to fog.

Speaker Covers

Vacuum around a speaker cover gently, so that the speaker will not be damaged. Clean spots with just water and mild soap.

Coated Moldings

Coated moldings should be cleaned.

- When lightly soiled, wipe with a sponge or soft lint-free cloth dampened with water.
- When heavily soiled, use warm soapy water.

Fabric/Carpet/Suede

Start by vacuuming the surface using a soft brush attachment. If a rotating brush attachment is being used during vacuuming, only use it on the floor carpet. Before cleaning, gently remove as much of the soil as possible using one of the following techniques:

- Gently blot liquids with a paper towel. Continue blotting until no more soil can be removed.
- For solid soils, remove as much as possible prior to vacuuming.

To clean:

1. Saturate a clean lint-free colorfast cloth with water. Microfiber cloth is recommended to prevent lint transfer to the fabric or carpet.
2. Remove excess moisture by gently wringing until water does not drip from the cleaning cloth.
3. Start on the outside edge of the soil and gently rub toward the center. Rotate the cleaning cloth to a clean area frequently to prevent forcing the soil in to the fabric.
4. Continue gently rubbing the soiled area until there is no longer any color transfer from the soil to the cleaning cloth.
5. If the soil is not completely removed, use a mild soap solution followed only by plain water.

If the soil is not completely removed, it may be necessary to use a commercial upholstery cleaner or spot lifter. Test a small hidden area for colorfastness before using a commercial upholstery cleaner or spot lifter. If ring formation occurs, clean the entire fabric or carpet.

Following the cleaning process, a paper towel can be used to blot excess moisture.

Cleaning High Gloss Surfaces and Vehicle Information and Radio Displays

For vehicles with high gloss surfaces or vehicle displays, use a microfiber cloth to wipe surfaces. Before wiping the surface with the microfiber cloth, use a soft bristle brush to remove dirt that could scratch the surface. Then use the microfiber cloth by gently rubbing to clean. Never use window cleaners or solvents. Periodically hand wash the microfiber cloth separately, using mild soap. Do not use bleach or fabric softener. Rinse thoroughly and air dry before next use.

⚠ Caution

Do not attach a device with a suction cup to the display. This may cause damage and would not be covered by the warranty.

Instrument Panel, Leather, Vinyl, Other Plastic Surfaces, Low Gloss Paint Surfaces and Natural Open Pore Wood Surfaces

Use a soft microfiber cloth dampened with water to remove dust and loose dirt. For a more thorough cleaning, use a soft microfiber cloth dampened with a mild soap solution.

⚠ Caution

Soaking or saturating leather, especially perforated leather, as well as other interior surfaces,

(Continued)

Caution (Continued)

may cause permanent damage. Wipe excess moisture from these surfaces after cleaning and allow them to dry naturally. Never use heat, steam, spot lifters, or spot removers. Do not use cleaners that contain silicone or wax-based products. Cleaners containing these solvents can permanently change the appearance and feel of leather or soft trim and are not recommended.

Do not use cleaners that increase gloss, especially on the instrument panel. Reflected glare can decrease visibility through the windshield under certain conditions.

⚠ Caution

Use of air fresheners may cause permanent damage to plastics and painted surfaces. If an air freshener comes in contact with any plastic or painted surface in the vehicle, blot immediately and clean with a soft cloth dampened with a mild soap solution. Damage caused by air fresheners would not be covered by the vehicle warranty.

Care of Safety Belts

Keep belts clean and dry.

⚠ Warning

Do not bleach or dye safety belts. It may severely weaken them. In a crash, they might not be able to provide adequate protection. Clean safety belts only with mild soap and lukewarm water.

Floor Mats

⚠ Warning

If a floor mat is the wrong size or is not properly installed, it can interfere with the pedals. Interference with the pedals can cause unintended acceleration and/or increased stopping distance which can cause a crash and injury. Make sure the floor mat does not interfere with the pedals.

Use the following guidelines for proper floor mat usage:

- The original equipment floor mats were designed for your vehicle. If the floor mats need replacing, it is recommended that GM certified floor mats be purchased. Non-GM floor mats may not fit properly and may interfere with the pedals. Always check that the floor mats do not interfere with the pedals.
- Do not use a floor mat if the vehicle is not equipped with a floor mat retainer on the driver side floor.
- Use the floor mat with the correct side up. Do not turn it over.
- Do not place anything on top of the driver side floor mat.
- Use only a single floor mat on the driver side.
- Do not place one floor mat on top of another.

Removing and Replacing the Floor Mats

Pull up on the rear of the driver side floor mat to unlock each retainer and remove.

Reinstall by lining up the floor mat retainer openings over the carpet retainers and snapping into position.

Make sure the floor mat is properly secured in place.

Verify the floor mat does not interfere with the pedals.

✍ NOTES

Service and Maintenance

General Information
General Information 11-1

Maintenance Schedule
Maintenance Schedule 11-3

Special Application Services
Special Application Services 11-8

Additional Maintenance and Care
Additional Maintenance and Care 11-9

Recommended Fluids, Lubricants, and Parts
Recommended Fluids and Lubricants 11-12
Maintenance Replacement Parts 11-15

Maintenance Records
Maintenance Records 11-16

General Information

This maintenance section applies to vehicles with a gasoline engine. For diesel engine vehicles, see the maintenance schedule section in the Duramax diesel supplement.

Your vehicle is an important investment. This section describes the required maintenance for the vehicle. Follow this schedule to help protect against major repair expenses resulting from neglect or inadequate maintenance. It may also help to maintain the value of the vehicle if it is sold. It is the responsibility of the owner to have all required maintenance performed.

Your dealer has trained technicians who can perform required maintenance using genuine replacement parts. They have up-to-date tools and equipment for fast and accurate diagnostics. Many dealers have extended evening and Saturday hours, courtesy transportation, and online scheduling to assist with service needs.

Your dealer recognizes the importance of providing competitively priced maintenance and repair services. With trained technicians, the dealer is the place for routine maintenance such as oil changes and tire rotations and additional maintenance items like tires, brakes, batteries, and wiper blades.

⚠ Caution

Damage caused by improper maintenance can lead to costly repairs and may not be covered by the vehicle warranty. Maintenance intervals, checks, inspections, recommended fluids, and lubricants are important to keep the vehicle in good working condition.

The Tire Rotation and Required Services are the responsibility of the vehicle owner. It is recommended to have your dealer perform these services every 12 000 km/7,500 mi. Proper vehicle maintenance helps to keep the vehicle in good working condition, improves fuel economy, and reduces vehicle emissions.

Because of the way people use vehicles, maintenance needs vary. There may need to be more frequent checks and services.

Normal Service

All maintenance services, including those listed under Additional Required Services, are for vehicles that:

- Carry passengers and cargo within recommended limits on the Tire and Loading Information label. See *Vehicle Load Limits on page 9-15*.
- Are driven on reasonable road surfaces within legal driving limits.
- Use the recommended fuel. See *Fuel on page 9-67*.

Severe Service

In addition to the normal service schedule, some vehicles require service more often. Severe service is for vehicles that are:

- Mainly driven in heavy city traffic in hot weather.
- Mainly driven in hilly or mountainous terrain.
- Frequently towing a trailer.
- Used for high-speed or competitive driving.
- Used for taxi, police, or delivery service.

⚠ Warning

Performing maintenance work can be dangerous and can cause serious injury. Perform maintenance work only if the required information, proper tools, and equipment are available.
If they are not, see your dealer to have a trained technician do the work. See *Doing Your Own Service Work on page 10-4*.

Maintenance Schedule

Owner Checks and Services

At Each Fuel Stop

- Check the engine oil level. See *Engine Oil on page 10-11*.

Once a Month

- Check the tire inflation pressures. See *Tire Pressure on page 10-62*.
- Inspect the tires for wear. See *Tire Inspection on page 10-69*.
- Check the windshield washer fluid level. See *Washer Fluid on page 10-29*.

Engine Oil Change

When the CHANGE ENGINE OIL SOON message displays, have the engine oil and filter changed within the next 1 000 km/600 mi. If driven under the best conditions, the engine oil life system may not indicate the need for vehicle service for up to a year. The engine oil and filter must be changed at least once a year and the oil life system must be reset. Your trained dealer technician can perform this work. If the engine oil life system is reset accidentally, service the vehicle within 5 000 km/3,000 mi since the last service. Reset the oil life system when the oil is changed. See *Engine Oil Life System on page 10-14*.

Passenger Compartment Air Filter

The passenger compartment air filter removes dust, pollen, and other airborne irritants from outside air that is pulled into the vehicle. The filter should be replaced as part of routine scheduled maintenance. Inspect the passenger compartment air filter every 36 000 km/ 22,500 miles or two years, whichever comes first. Replace if necessary. More frequent replacement may be needed if the vehicle is driven in areas with heavy traffic, areas with poor air quality, or areas with high dust levels. Replacement may also be needed if there is a reduction in air flow, excessive window fogging, or odors.

Tire Rotation and Required Services Every 12 000 km/ 7,500 mi

Rotate the tires, if recommended for the vehicle, and perform the following services. See *Tire Rotation on page 10-69*.

- Check engine oil level and oil life percentage. If needed, change engine oil and filter, and reset oil life system. See *Engine Oil on page 10-11* and *Engine Oil Life System on page 10-14*.
- Check engine coolant level. See *Engine Coolant on page 10-22*.
- Check windshield washer fluid level. See *Washer Fluid on page 10-29*.

- Visually inspect windshield wiper blades for wear, cracking, or contamination. See *Exterior Care on page 10-100*. Replace worn or damaged wiper blades. See *Wiper Blade Replacement on page 10-38*.
- Check tire inflation pressures. See *Tire Pressure on page 10-62*.
- Inspect tire wear. See *Tire Inspection on page 10-69*.
- Visually check for fluid leaks.
- Inspect engine air cleaner filter. See *Engine Air Cleaner/Filter on page 10-19*.
- Inspect brake system.
- Visually inspect steering, suspension, and chassis components for damaged, loose, or missing parts or signs of wear at least once a year. See *Exterior Care on page 10-100*. Lubricate the suspension and steering components at least every other oil change. (If equipped with grease fittings)
- Check restraint system components. See *Safety System Check on page 3-19*.
- Visually inspect fuel system for damage or leaks.
- Visually inspect exhaust system and nearby heat shields for loose or damaged parts.
- Lubricate body components. See *Exterior Care on page 10-100*.
- Check starter switch. See *Starter Switch Check on page 10-37*.
- Check automatic transmission shift lock control function. See *Automatic Transmission Shift Lock Control Function Check on page 10-37*.
- Check ignition transmission lock. See *Ignition Transmission Lock Check on page 10-38*.
- Check parking brake and automatic transmission park mechanism. See *Park Brake and P (Park) Mechanism Check on page 10-38*.
- Check accelerator pedal for damage, high effort, or binding. Replace if needed.
- Visually inspect gas strut for signs of wear, cracks, or other damage. Check the hold open ability of the strut. See your dealer if service is required.
- Inspect sunroof track and seal, if equipped. See *Sunroof on page 2-23*.
- Verify spare tire key lock operation and lubricate as needed. See *Tire Changing on page 10-80*.

Additional Required Services

Maintenance Schedule Additional Required Services - Normal	12 000 km/7,500 mi	24 000 km/15,000 mi	36 000 km/22,500 mi	48 000 km/30,000 mi	60 000 km/37,500 mi	72 000 km/45,000 mi	84 000 km/52,500 mi	96 000 km/60,000 mi	108 000 km/67,500 mi	120 000 km/75,000 mi	132 000 km/82,500 mi	144 000 km/90,000 mi	156 000 km/97,500 mi	168 000 km/105,000 mi	180 000 km/112,500 mi	192 000 km/120,000 mi	204 000 km/127,500 mi	216 000 km/135,000 mi	228 000 km/142,500 mi	240 000 km/150,000 mi
Rotate tires and perform Required Services. Check engine oil level and oil life percentage. Change engine oil and filter, if needed.	✓	✓	✓	✓	✓	✓	✓	✓	✓	✓	✓	✓	✓	✓	✓	✓	✓	✓	✓	✓
Replace passenger compartment air filter. (1)			✓			✓			✓			✓			✓			✓		
Replace engine air cleaner filter. (2)						✓						✓						✓		
Inspect evaporative control system. (3)						✓						✓						✓		
Replace spark plugs. Inspect spark plug wires.													✓							
Drain and fill engine cooling system. (4)																				✓
Visually inspect accessory drive belts. (5)																				✓
Replace brake fluid. (6)						✓						✓						✓		
Replace clutch fluid. (6)						✓						✓						✓		

Footnotes — Maintenance Schedule Additional Required Services - Normal

(1) Or every two years, whichever comes first. More frequent replacement may be needed if the vehicle is driven in areas with heavy traffic, areas with poor air quality, or areas with high dust levels. Replacement may also be needed if there is a reduction in air flow, excessive window fogging, or odors.

(2) Or every four years, whichever comes first.

(3) Check all fuel and vapor lines and hoses for proper hook-up, routing, and condition.

(4) Or every five years, whichever comes first. See *Cooling System on page 10-21*.

(5) Or every 10 years, whichever comes first. Inspect for fraying, excessive cracking, or damage; replace, if needed.

(6) Or every three years, whichever comes first.

Maintenance Schedule Additional Required Services - Severe	12 000 km/7,500 mi	24 000 km/15,000 mi	36 000 km/22,500 mi	48 000 km/30,000 mi	60 000 km/37,500 mi	72 000 km/45,000 mi	84 000 km/52,500 mi	96 000 km/60,000 mi	108 000 km/67,500 mi	120 000 km/75,000 mi	132 000 km/82,500 mi	144 000 km/90,000 mi	156 000 km/97,500 mi	168 000 km/105,000 mi	180 000 km/112,500 mi	192 000 km/120,000 mi	204 000 km/127,500 mi	216 000 km/135,000 mi	228 000 km/142,500 mi	240 000 km/150,000 mi
Rotate tires and perform Required Services. Check engine oil level and oil life percentage. Change engine oil and filter, if needed.	✓	✓	✓	✓	✓	✓	✓	✓	✓	✓	✓	✓	✓	✓	✓	✓	✓	✓	✓	✓
Replace passenger compartment air filter. (1)			✓			✓			✓			✓			✓			✓		
Replace engine air cleaner filter. (2)						✓						✓						✓		
Inspect evaporative control system. (3)						✓						✓						✓		
Replace spark plugs. Inspect spark plug wires.													✓							
Change automatic transmission fluid and filter.						✓						✓						✓		
Severe Service: Change transfer case fluid, if equipped with 4WD. (4)						✓						✓						✓		
Extreme Service: Change transfer case fluid, if equipped with 4WD. (5)			✓			✓			✓			✓			✓			✓		
Drain and fill engine cooling system. (6)																				✓
Visually inspect accessory drive belts. (7)																				✓
Replace brake fluid. (8)						✓						✓						✓		
Replace clutch fluid. (8)						✓						✓						✓		

Footnotes — Maintenance Schedule Additional Required Services - Severe

(1) Or every two years, whichever comes first. More frequent replacement may be needed if the vehicle is driven in areas with heavy traffic, areas with poor air quality, or areas with high dust levels. Replacement may also be needed if there is a reduction in air flow, excessive window fogging, or odors.

(2) Or every four years, whichever comes first.

(3) Check all fuel and vapor lines and hoses for proper hook-up, routing, and condition.

(4) Do not directly power wash the transfer case output seals. High pressure water can overcome the seals and contaminate the transfer case fluid. Contaminated fluid will decrease the life of the transfer case and should be replaced.

(5) Extreme service for full-size pickups mainly driven off-road in four-wheel drive or used in farming, mining, forestry, Department of Natural Resources (DNR), or snow plowing. Do not directly power wash the transfer case output seals. High pressure water can overcome the seals and contaminate the transfer case fluid. Contaminated fluid will decrease the life of the transfer case and should be replaced.

(6) Or every five years, whichever comes first. See *Cooling System on page 10-21*.

(7) Or every 10 years, whichever comes first. Inspect for fraying, excessive cracking, or damage; replace, if needed.

(8) Or every three years, whichever comes first.

Special Application Services

- Vehicles with Dual Wheels: Check dual wheel nut torque at 160, 1 600 and 10 000 km (100, 1,000 and 6,000 mi) of driving. Repeat this service whenever a tire/wheel is serviced or removed.
- Severe Commercial Use Vehicles Only: Lubricate chassis components every 5 000 km/ 3,000 mi.
- Have underbody flushing service performed. See “Underbody Maintenance” in *Exterior Care on page 10-100*.

Additional Maintenance and Care

Your vehicle is an important investment and caring for it properly may help to avoid future costly repairs. To maintain vehicle performance, additional maintenance services may be required.

It is recommended that your dealer perform these services — their trained dealer technicians know your vehicle best. Your dealer can also perform a thorough assessment with a multi-point inspection to recommend when your vehicle may need attention.

The following list is intended to explain the services and conditions to look for that may indicate services are required.

Battery

The battery supplies power to start the engine and operate any additional electrical accessories.

- To avoid break-down or failure to start the vehicle, maintain a battery with full cranking power.
- Trained dealer technicians have the diagnostic equipment to test the battery and ensure that the connections and cables are corrosion-free.

Belts

- Belts may need replacing if they squeak or show signs of cracking or splitting.
- Trained dealer technicians have access to tools and equipment to inspect the belts and recommend adjustment or replacement when necessary.

Brakes

Brakes stop the vehicle and are crucial to safe driving.

- Signs of brake wear may include chirping, grinding, or squealing noises, or difficulty stopping.
- Trained dealer technicians have access to tools and equipment to inspect the brakes and recommend quality parts engineered for the vehicle.

Fluids

Proper fluid levels and approved fluids protect the vehicle's systems and components. See *Recommended Fluids and Lubricants on page 11-12* for GM approved fluids.

- Engine oil and windshield washer fluid levels should be checked at every fuel fill.
- Instrument cluster lights may come on to indicate that fluids may be low and need to be filled.

Hoses

Hoses transport fluids and should be regularly inspected to ensure that there are no cracks or leaks. With a multi-point inspection, your dealer can inspect the hoses and advise if replacement is needed.

Lamps

Properly working headlamps, taillamps, and brake lamps are important to see and be seen on the road.

- Signs that the headlamps need attention include dimming, failure to light, cracking, or damage. The brake lamps need to be checked periodically to ensure that they light when braking.
- With a multi-point inspection, your dealer can check the lamps and note any concerns.

Shocks and Struts

Shocks and struts help aid in control for a smoother ride.

- Signs of wear may include steering wheel vibration, bounce/sway while braking, longer stopping distance, or uneven tire wear.
- As part of the multi-point inspection, trained dealer technicians can visually inspect the shocks and struts for signs of leaking, blown seals, or damage, and can advise when service is needed.

Tires

Tires need to be properly inflated, rotated, and balanced. Maintaining the tires can save money and fuel, and can reduce the risk of tire failure.

- Signs that the tires need to be replaced include three or more visible treadwear indicators; cord or fabric showing through the rubber; cracks or cuts in the tread or sidewall; or a bulge or split in the tire.
- Trained dealer technicians can inspect and recommend the right tires. Your dealer can also provide tire/wheel balancing services to ensure smooth vehicle operation at all speeds. Your dealer sells and services name brand tires.

Vehicle Care

To help keep the vehicle looking like new, vehicle care products are available from your dealer. For information on how to clean and protect the vehicle's interior and exterior, see *Interior Care on page 10-105* and *Exterior Care on page 10-100*.

Wheel Alignment

Wheel alignment is critical for ensuring that the tires deliver optimal wear and performance.

- Signs that the alignment may need to be adjusted include pulling, improper vehicle handling, or unusual tire wear.
- Your dealer has the required equipment to ensure proper wheel alignment.

Windshield

For safety, appearance, and the best viewing, keep the windshield clean and clear.

- Signs of damage include scratches, cracks, and chips.
- Trained dealer technicians can inspect the windshield and recommend proper replacement if needed.

Wiper Blades

Wiper blades need to be cleaned and kept in good condition to provide a clear view.

- Signs of wear include streaking, skipping across the windshield, and worn or split rubber.
- Trained dealer technicians can check the wiper blades and replace them when needed.

Recommended Fluids, Lubricants, and Parts

Recommended Fluids and Lubricants

This maintenance section applies to vehicles with a gasoline engine. If the vehicle has a diesel engine and/or an Allison Transmission, see the maintenance schedule section in the Duramax diesel supplement.

Fluids and lubricants identified below by name, part number, or specification can be obtained from your dealer.

Usage	Fluid/Lubricant
Engine Oil	Use only engine oil licensed to the dexos1® specification of the proper SAE viscosity grade. ACDelco dexos1 Synthetic Blend is recommended. See *Engine Oil on page 10-11*.
Engine Coolant	50/50 mixture of clean, drinkable water and use only DEX-COOL® coolant. See *Engine Coolant on page 10-22*.
Hydraulic Brake System	DOT 3 Hydraulic Brake Fluid (GM Part No. 19299818, in Canada 19299819).
Hydraulic Clutch System	DOT 3 Hydraulic Brake Fluid (GM Part No. 19299818, in Canada 19299819).
Windshield Washer	Automotive windshield washer fluid that meets regional freeze protection requirements.
Hydraulic Power Steering System (2500/3500 Series Only)	GM Power Steering Fluid (GM Part No. 89021185, in Canada 89021186).

Usage	Fluid/Lubricant
Automatic Transmission (All except 6.2L with 8-Speed transmission)	DEXRON®-VI Automatic Transmission Fluid.
Automatic Transmission (6.2L with 8-Speed transmission)	DEXRON®-HP Automatic Transmission Fluid (GM Part No. 19300536, in Canada 19300537).
Manual Transmission	Manual Transmission Fluid (GM Part No. 93436060).
Transfer Case (Four-Wheel Drive)	DEXRON®-VI Automatic Transmission Fluid.
Floor Shift Linkage	Lubriplate Lubricant Aerosol (GM Part No. 89021668, in Canada 89021674) or lubricant meeting requirements of NLGI #2 Category LB or GC-LB.
Chassis Lubrication	Chassis Lubricant (GM Part No. 12377985, in Canada 88901242) or lubricant meeting requirements of NLGI #2, Category LB or GC-LB.
Front Axle (1500 Series) – Four-Wheel Drive	SAE 80W-90 Axle Lubricant (GM Part No. 89021671, in Canada 89021672).
Rear Axle (1500)	SAE 75W-85 Synthetic Axle Lubricant (GM Part No. 19300457, in Canada 19300458).
Front and Rear Axle (2500/3500)	SAE 75W-90 Synthetic Axle Lubricant (GM Part No. 88900401, in Canada 89021678).

Usage	Fluid/Lubricant
Front Axle Driveshaft Splines (All 4WD 1500/2500/3500 Series) and Rear Axle Driveshaft Splines (All 2WD 1500 Series with Automatic Transmission)	Spline Lubricant, Special Lubricant (GM Part No. 19257121, in Canada 19257122).
Rear Driveline Center Spline (Two-Piece Driveshaft)	Chassis Lubricant (GM Part No. 12377985, in Canada 88901242) or lubricant meeting requirements of NLGI #2, Category LB or GC-LB.
Key Lock Cylinders, Hood Hinges, Body Door Hinge Pins, Tailgate Hinge and Linkage, Fuel Door Hinge, Tailgate Handle Pivot Points, Hinges, Latch Bolt, and Linkage	Multi-Purpose Lubricant, Superlube (GM Part No. 12346241, in Canada 10953474).
Weatherstrip Conditioning	Weatherstrip Lubricant (GM Part No. 3634770, in Canada 10953518) or Dielectric Silicone Grease (GM Part No. 12345579, in Canada 10953481).
Weatherstrip Squeaks	Synthetic Grease with Teflon, Superlube (GM Part No. 12371287, in Canada 10953437).

Maintenance Replacement Parts

Replacement parts identified below by name, part number, or specification can be obtained from your dealer.

If your vehicle has a diesel engine, see the Duramax diesel supplement for more information.

Part	GM Part Number	ACDelco Part Number
Engine Air Cleaner/Filter	22845992	A3181C
Oil Filter		
4.3L V6	89017525	PF63
5.3L V8; 6.2L V8	89017525	PF63
6.0L V8	89017524	PF48
Passenger Compartment Air Filter	22808781	CF188
Spark Plugs		
4.3L V6	12622441	41–114
5.3L V8; 6.2L V8	12622441	41–114
6.0L V8	12621258	41–110
Wiper Blades		
Driver Side – 55 cm (21.7 in)	22754397	-
Passenger Side – 55 cm (21.7 in)	22754398	-

Maintenance Records

After the scheduled services are performed, record the date, odometer reading, who performed the service, and the type of services performed in the boxes provided. Retain all maintenance receipts.

Date	Odometer Reading	Serviced By	Services Performed

Date	Odometer Reading	Serviced By	Services Performed

Date	Odometer Reading	Serviced By	Services Performed

Technical Data

Vehicle Identification
Vehicle Identification Number (VIN) 12-1
Service Parts Identification Label 12-1

Vehicle Data
Capacities and Specifications 12-2
Engine Drive Belt Routing . . . 12-5

Vehicle Identification

Vehicle Identification Number (VIN)

This legal identifier is in the front corner of the instrument panel, on the left side of the vehicle. It can be seen through the windshield from outside. The VIN also appears on the Vehicle Certification and Service Parts labels and certificates of title and registration.

Engine Identification

The eighth character in the VIN is the engine code. This code identifies the vehicle's engine, specifications, and replacement parts. See “Engine Specifications” under *Capacities and Specifications on page 12-2* for the vehicle's engine code.

Service Parts Identification Label

This label, on the inside of the glove box, has the following information:

- Vehicle Identification Number (VIN).
- Model designation.
- Paint information.
- Production options and special equipment.

Do not remove this label from the vehicle.

Vehicle Data

Capacities and Specifications

The following approximate capacities are given in metric and English conversions. See *Recommended Fluids and Lubricants on page 11-12*.

If the vehicle has a diesel engine, see the Duramax diesel supplement.

Application	Capacities	
	Metric	English
Air Conditioning Refrigerant	For the air conditioning system refrigerant type and charge amount, see the refrigerant label under the hood. See your dealer for more information.	
Cooling System		
4.3L V6 1500 Series	15.1 L	15.9 qt
5.3L V8 1500 Series	15.7 L	16.6 qt
6.0L V8 2500 Series and 3500 Series	16.1 L	17.0 qt
6.2L V8 1500 Series	15.7 L	16.6 qt
Engine Oil with Filter		
4.3L V6	5.7 L	6.0 qt
5.3L V8; 6.2L V8	8.0 L	8.5 qt

Application	Capacities	
	Metric	English
6.0L V8	5.7 L	6.0 qt
Fuel Tank		
1500 Series Standard and Short Box	98.4 L	26.0 gal
1500 Series Long Box	128.7 L	34.0 gal
2500 Series and 3500 Series Standard Box	136.3 L	36.0 gal
2500 Series and 3500 Series Long Box	136.3 L	36.0 gal
3500 Series Chassis Cab	240.4 L	63.5 gal
3500 Chassis Cab – Front Tank	89.0 L	23.5 gal
3500 Chassis Cab – Rear Tank (if equipped)	151.4 L	40.0 gal
Transfer Case Fluid	1.5 L	1.6 qt
Wheel Nut Torque	190 N•m	140 lb ft
All capacities are approximate. When adding, be sure to fill to the approximate level, as recommended in this manual. Recheck fluid level after filling.		

Engine Specifications

Engine	VIN Code	Spark Plug Gap
4.3L V6 (LV3)	H	0.95–1.10 mm (0.037–0.043 in)
4.3L V6 (LV1)	P	0.95–1.10 mm (0.037–0.043 in)
5.3L V8 (L83)	C	0.95–1.10 mm (0.037–0.043 in)
6.0L V8 (L96)	G	0.95–1.10 mm (0.037–0.043 in)
6.2L V8 (L86)	J	0.95–1.10 mm (0.037–0.043 in)

Engine Drive Belt Routing

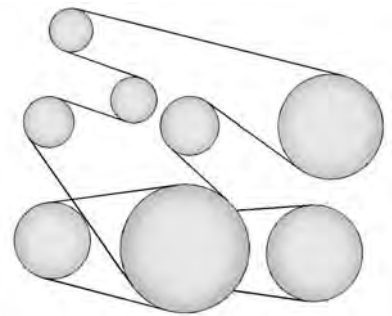

V6 Engines

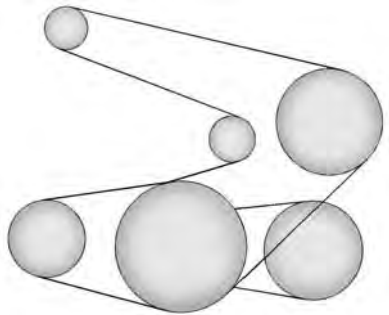

5.3L and 6.2L V8 Engines

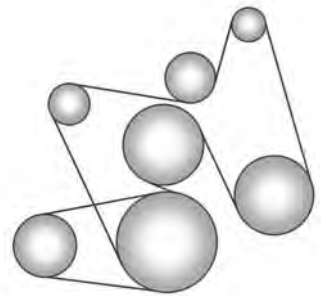

6.0L V8 Engines

If the vehicle has a diesel engine, see the Duramax diesel supplement.

✍ NOTES

Customer Information

Customer Information
Customer Satisfaction Procedure 13-1
Customer Assistance Offices 13-3
Customer Assistance for Text Telephone (TTY) Users 13-4
Online Owner Center 13-4
GM Mobility Reimbursement Program 13-5
Roadside Assistance Program 13-5
Scheduling Service Appointments 13-7
Courtesy Transportation Program 13-7
Collision Damage Repair 13-8
Service Publications Ordering Information 13-11
Radio Frequency Identification (RFID) 13-12
Radio Frequency Statement 13-12

Reporting Safety Defects
Reporting Safety Defects to the United States Government 13-12
Reporting Safety Defects to the Canadian Government 13-13
Reporting Safety Defects to General Motors 13-13

Vehicle Data Recording and Privacy
Vehicle Data Recording and Privacy 13-14
Event Data Recorders 13-14
OnStar® 13-15
Infotainment System 13-15

Customer Information

Customer Satisfaction Procedure

Your satisfaction and goodwill are important to your dealer and to Chevrolet. Normally, any concerns with the sales transaction or the operation of the vehicle will be resolved by your dealer's sales or service departments. Sometimes, however, despite the best intentions of all concerned, misunderstandings can occur. If your concern has not been resolved to your satisfaction, the following steps should be taken:

STEP ONE: Discuss your concern with a member of dealership management. Normally, concerns can be quickly resolved at that level. If the matter has already been reviewed with the sales, service, or parts manager, contact the owner of your dealership or the general manager.

STEP TWO: If after contacting a member of dealership management, it appears your concern cannot be resolved by your dealership without further help, in the U.S., call the Chevrolet Customer Assistance Center at 1-800-222-1020. In Canada, call General Motors of Canada Customer Care Centre at 1-800-263-3777 (English), or 1-800-263-7854 (French).

We encourage you to call the toll-free number in order to give your inquiry prompt attention. Have the following information available to give the Customer Assistance representative:

- Vehicle Identification Number (VIN). This is available from the vehicle registration or title, or the plate at the top left of the instrument panel and visible through the windshield.
- Dealership name and location.
- Vehicle delivery date and present mileage.

When contacting Chevrolet, remember that your concern will likely be resolved at a dealer's facility. That is why we suggest following Step One first.

STEP THREE — U.S. Owners: Both General Motors and your dealer are committed to making sure you are completely satisfied with your new vehicle. However, if you continue to remain unsatisfied after following the procedure outlined in Steps One and Two, you can file with the Better Business Bureau (BBB) Auto Line® Program to enforce your rights.

The BBB Auto Line Program is an out-of-court program administered by the Council of Better Business Bureaus to settle automotive disputes regarding vehicle repairs or the interpretation of the New Vehicle Limited Warranty. Although you may be required to resort to this informal dispute resolution program prior to filing a court action, use of the program is free of charge and your case will generally be heard within 40 days. If you do not agree with the decision given in your case, you may reject it and proceed with any other venue for relief available to you.

You may contact the BBB Auto Line Program using the toll-free telephone number or write them at the following address:

BBB Auto Line Program
Council of Better Business Bureaus, Inc.
4200 Wilson Boulevard
Suite 800
Arlington , VA 22203-1838

Telephone: 1-800-955-5100
www.dr.bbb.org/goauto

This program is available in all 50 states and the District of Columbia. Eligibility is limited by vehicle age, mileage, and other factors. General Motors reserves the right to change eligibility limitations and/or discontinue its participation in this program.

STEP THREE — Canadian Owners: In the event that you do not feel your concerns have been addressed after following the procedure outlined in Steps One and Two, General Motors of Canada Limited wants you to be aware of its participation in a no-charge Mediation/Arbitration Program. General Motors of Canada Limited has committed to binding arbitration of owner disputes involving factory-related vehicle service claims. The program provides for the review of the facts involved by an impartial third party arbiter, and may include an informal hearing before the arbiter. The program is designed so that the entire dispute settlement process, from the time you file your complaint to the final decision, should be completed in about 70 days. We believe our impartial program offers advantages over courts in most jurisdictions because it is informal, quick, and free of charge.

For further information concerning eligibility in the Canadian Motor Vehicle Arbitration Plan (CAMVAP), call toll-free 1-800-207-0685, or call the General Motors Customer Care Centre, 1-800-263-3777 (English), 1-800-263-7854 (French), or write to:

The Mediation/Arbitration Program
c/o Customer Care Centre
General Motors of Canada Limited
Mail Code: CA1-163-005
1908 Colonel Sam Drive
Oshawa , Ontario L1H 8P7

Your inquiry should be accompanied by the Vehicle Identification Number (VIN).

Customer Assistance Offices

Chevrolet encourages customers to call the toll-free number for assistance. However, if a customer wishes to write or e-mail Chevrolet, the letter should be addressed to:

United States and Puerto Rico

Chevrolet Motor Division
Chevrolet Customer Assistance Center
P.O. Box 33170
Detroit, MI 48232-5170
www.Chevrolet.com

1-800-222-1020
1-800-833-2438 (For Text Telephone Devices (TTYs))
Roadside Assistance:
1-800-243-8872

From U.S. Virgin Islands:

1-800-496-9994

Canada

General Motors of Canada Limited
Customer Care Centre,
Mail Code: CA1-163-005
1908 Colonel Sam Drive
Oshawa, Ontario L1H 8P7
www.gm.ca

1-800-263-3777 (English)
1-800-263-7854 (French)
1-800-263-3830 (For Text Telephone devices (TTYs))
Roadside Assistance:
1-800-268-6800

Overseas

Please contact the local General Motors Business Unit.

Customer Assistance for Text Telephone (TTY) Users

To assist customers who are deaf, hard of hearing, or speech-impaired and who use Text Telephones (TTYs), Chevrolet has TTY equipment available at its Customer Assistance Center. Any TTY user in the U.S. can communicate with Chevrolet by dialing: 1-800-833-2438. TTY users in Canada can dial 1-800-263-3830.

Online Owner Center

Online Owner Experience (U.S.) my.chevrolet.com

The Chevrolet online owner experience is a one-stop resource that allows interaction with Chevrolet and keeps important vehicle-specific information in one place.

Membership Benefits

(Vehicle Information): Download owner manuals and view vehicle-specific how-to videos.

(Maintenance Information): View maintenance schedules, alerts, OnStar onboard vehicle diagnostic information, and schedule service appointments.

(Service History): View and print dealer-recorded service records and self-recorded service records.

(Preferred Dealer Information): Select a preferred dealer and view dealer location, maps, phone numbers, and hours.

(Warranty Tracking Information): Track the vehicle's warranty information.

(Recall Information): View active recalls by Vehicle Identification Number (VIN). See *Vehicle Identification Number (VIN) on page 12-1*.

(Other Account Information): View GM Card, SiriusXM Satellite radio (if equipped), and OnStar account information.

(Live Chat Support): Chat live with online help representatives.

Visit my.chevrolet.com to register your vehicle.

Chevrolet Owner Centre (Canada) chevroletowner.ca

Take a trip to the Chevrolet Owner Centre:

- Chat live with online help representatives.
- Use the Vehicle Tools section.
- Access third party enthusiast sites and social media networks.
- Locate owner resources such as lease-end, financing, and warranty information.
- Retrieve your favorite articles, quizzes, tips, and multimedia galleries organized into the Features and Auto Care Sections.
- Download the owner manual for your vehicle, quickly and easily.
- Find the Chevrolet-recommended maintenance services for your vehicle.

GM Mobility Reimbursement Program

This program is available to qualified applicants for cost reimbursement of eligible aftermarket adaptive equipment required for the vehicle, such as hand controls or a wheelchair/scooter lift for the vehicle.

For more information on the limited offer, visit www.gmmobility.com or call the GM Mobility Assistance Center at 1-800-323-9935. Text Telephone (TTY) users, call 1-800-833-9935.

General Motors of Canada also has a Mobility Program. Visit www.gm.ca or call 1-800-GM-DRIVE (463-7483) for details. TTY users call 1-800-263-3830.

Roadside Assistance Program

For U.S.-purchased vehicles, call 1-800-243-8872. (Text Telephone (TTY): 1-888-889-2438.)

For Canadian-purchased vehicles, call 1-800-268-6800.

Service is available 24 hours a day, 365 days a year.

Calling for Assistance

When calling Roadside Assistance, have the following information ready:

- Your name, home address, and home telephone number.
- Telephone number of your location.
- Location of the vehicle.

- Model, year, color, and license plate number of the vehicle.
- Odometer reading, Vehicle Identification Number (VIN), and delivery date of the vehicle.
- Description of the problem.

Coverage

Services are provided up to 5 years/ 160 000 km (100,000 mi), whichever comes first.

In the U.S., anyone driving the vehicle is covered. In Canada, a person driving the vehicle without permission from the owner is not covered.

Roadside Assistance is not a part of the New Vehicle Limited Warranty. General Motors North America and Chevrolet reserve the right to make any changes or discontinue the Roadside Assistance program at any time without notification.

General Motors North America and Chevrolet reserve the right to limit services or payment to an owner or driver if they decide the claims are made too often, or the same type of claim is made many times.

Services Provided

- **Emergency Fuel Delivery:** Delivery of enough fuel for the vehicle to get to the nearest service station.
- **Lock-Out Service:** Service to unlock the vehicle if you are locked out. A remote unlock may be available if you have OnStar. For security reasons, the driver must present identification before this service is given.
- **Emergency Tow from a Public Road or Highway:** Tow to the nearest Chevrolet dealer for warranty service, or if the vehicle was in a crash and cannot be driven. Assistance is not given when the vehicle is stuck in the sand, mud, or snow.
- **Flat Tire Change:** Service to change a flat tire with the spare tire. The spare tire, if equipped, must be in good condition and properly inflated. It is the owner's responsibility for the repair or replacement of the tire if it is not covered by the warranty.
- **Battery Jump Start:** Service to jump start a dead battery.

Services Not Included in Roadside Assistance

- Impound towing caused by violation of any laws.
- Legal fines.
- Mounting, dismounting, or changing of snow tires, chains, or other traction devices.

Service is not provided if a vehicle is in an area that is not accessible to the service vehicle or is not a regularly traveled or maintained public road, which includes ice and winter roads. Off-road use is not covered.

Services Specific to Canadian-Purchased Vehicles

- **Fuel Delivery:** Reimbursement is up to 7 liters. Diesel fuel delivery may be restricted. Propane and other fuels are not provided through this service.
- **Lock-Out Service:** Vehicle registration is required.
- **Trip Interruption Benefits and Assistance:** Must be over 150 kilometers from where your trip was started to qualify. General Motors of Canada Limited requires pre-authorization, original detailed receipts, and a copy of the repair orders. Once authorization has been received, the Roadside Assistance advisor will help to make arrangements and explain how to receive payment.
- **Alternative Service:** If assistance cannot be provided right away, the Roadside Assistance advisor may give permission to get local emergency road service. You will receive payment, up to $100, after sending the original receipt to Roadside Assistance. Mechanical failures may be covered, however any cost for parts and labor for repairs not covered by the warranty are the owner responsibility.

Scheduling Service Appointments

When the vehicle requires warranty service, contact your dealer and request an appointment. By scheduling a service appointment and advising the service consultant of your transportation needs, your dealer can help minimize your inconvenience.

If the vehicle cannot be scheduled into the service department immediately, keep driving it until it can be scheduled for service, unless, of course, the problem is safety related. If it is, please call your dealership, let them know this, and ask for instructions.

If your dealer requests you to bring the vehicle for service, you are urged to do so as early in the work day as possible to allow for same-day repair.

Courtesy Transportation Program

To enhance your ownership experience, we and our participating dealers are proud to offer Courtesy Transportation, a customer support program for vehicles with the Bumper-to-Bumper (Base Warranty Coverage period in Canada), extended powertrain, and/or hybrid-specific warranties in both the U.S. and Canada.

Several Courtesy Transportation options are available to assist in reducing inconvenience when warranty repairs are required.

Courtesy Transportation is not a part of the New Vehicle Limited Warranty. A separate booklet entitled “Limited Warranty and Owner Assistance Information” furnished with each new vehicle provides detailed warranty coverage information.

Transportation Options

Warranty service can generally be completed while you wait. However, if you are unable to do so, your dealer may offer the following transportation options:

Shuttle Service

This includes one-way or round-trip shuttle service within reasonable time and distance parameters of your dealer's area.

Public Transportation or Fuel Reimbursement

If overnight warranty repairs are needed, and public transportation is used, the expense must be supported by original receipts and within the maximum amount allowed by GM for shuttle service. If U.S. customers arrange their own transportation, limited reimbursement for reasonable fuel expenses may be available. Claim amounts should reflect actual costs and be supported by original receipts. See your dealer for information.

Courtesy Rental Vehicle

For an overnight warranty repair, the dealer may provide an available courtesy rental vehicle or provide for reimbursement of a rental vehicle. Reimbursement is limited and must be supported by original receipts as well as a signed and completed rental agreement and meet state/provincial, local, and rental vehicle provider requirements. Requirements vary and may include minimum age requirements, insurance coverage, credit card, etc. Additional fees such as fuel usage charges, taxes, levies, usage fees, excessive mileage, or rental usage beyond the completion of the repair are also your responsibility. It may not be possible to provide a like vehicle as a courtesy rental.

Additional Program Information

All program options, such as shuttle service, may not be available at every dealer. Contact your dealer for specific availability.

General Motors reserves the right to unilaterally modify, change, or discontinue Courtesy Transportation at any time and to resolve all questions of claim eligibility pursuant to the terms and conditions described herein at its sole discretion.

Collision Damage Repair

If the vehicle is involved in a collision and it is damaged, have the damage repaired by a qualified technician using the proper equipment and quality replacement parts. Poorly performed collision repairs diminish the vehicle resale

value, and safety performance can be compromised in subsequent collisions.

Collision Parts

Genuine GM Collision parts are new parts made with the same materials and construction methods as the parts with which the vehicle was originally built. Genuine GM Collision parts are the best choice to ensure that the vehicle's designed appearance, durability, and safety are preserved. The use of Genuine GM parts can help maintain the GM New Vehicle Limited Warranty.

Recycled original equipment parts may also be used for repair. These parts are typically removed from vehicles that were total losses in prior crashes. In most cases, the parts being recycled are from undamaged sections of the vehicle. A recycled original equipment GM part may be an acceptable choice to maintain the vehicle's originally designed appearance and safety performance; however, the history of these parts is not known. Such parts are not covered by the GM New Vehicle Limited Warranty, and any related failures are not covered by that warranty.

Aftermarket collision parts are also available. These are made by companies other than GM and may not have been tested for the vehicle. As a result, these parts may fit poorly, exhibit premature durability/corrosion problems, and may not perform properly in subsequent collisions. Aftermarket parts are not covered by the GM New Vehicle Limited Warranty, and any vehicle failure related to such parts is not covered by that warranty.

Repair Facility

GM also recommends that you choose a collision repair facility that meets your needs before you ever need collision repairs. Your dealer may have a collision repair center with GM-trained technicians and state-of-the-art equipment, or be able to recommend a collision repair center that has GM-trained technicians and comparable equipment.

Insuring the Vehicle

Protect your investment in the GM vehicle with comprehensive and collision insurance coverage. There are significant differences in the quality of coverage afforded by various insurance policy terms. Many insurance policies provide reduced protection to the GM vehicle by limiting compensation for damage repairs through the use of aftermarket collision parts. Some insurance companies will not specify aftermarket collision parts. When purchasing insurance, we recommend that you ensure that the vehicle will be repaired with GM original equipment collision parts. If such insurance coverage is not available from your current insurance carrier, consider switching to another insurance carrier.

If the vehicle is leased, the leasing company may require you to have insurance that ensures repairs with Genuine GM Original Equipment Manufacturer (OEM) parts or Genuine Manufacturer replacement parts. Read the lease carefully, as you may be charged at the end of the lease for poor quality repairs.

If a Crash Occurs

If there has been an injury, call emergency services for help. Do not leave the scene of a crash until all matters have been taken care of. Move the vehicle only if its position puts you in danger, or you are instructed to move it by a police officer.

Give only the necessary information to police and other parties involved in the crash.

For emergency towing see *Roadside Assistance Program on page 13-5*.

Gather the following information:

- Driver name, address, and telephone number.
- Driver license number.
- Owner name, address, and telephone number.
- Vehicle license plate number.
- Vehicle make, model, and model year.
- Vehicle Identification Number (VIN).
- Insurance company and policy number.
- General description of the damage to the other vehicle.

Choose a reputable repair facility that uses quality replacement parts. See “Collision Parts” earlier in this section.

If the airbag has inflated, see *What Will You See after an Airbag Inflates? on page 3-26*.

Managing the Vehicle Damage Repair Process

In the event that the vehicle requires damage repairs, GM recommends that you take an active role in its repair. If you have a pre-determined repair facility of choice, take the vehicle there, or have it towed there. Specify to the facility that any required replacement collision parts be original equipment parts, either new Genuine GM parts or recycled original GM parts. Remember, recycled parts will not be covered by the GM vehicle warranty.

Insurance pays the bill for the repair, but you must live with the repair. Depending on your policy limits, your insurance company may initially value the repair using aftermarket parts. Discuss this with the repair professional, and insist on Genuine GM parts. Remember, if the vehicle is leased, you may be obligated to have the vehicle repaired with Genuine GM parts, even if your insurance coverage does not pay the full cost.

If another party's insurance company is paying for the repairs, you are not obligated to accept a repair valuation based on that insurance company's collision policy repair limits, as you have no contractual limits with that company. In such cases, you can have control of the repair and parts choices as long as the cost stays within reasonable limits.

Service Publications Ordering Information

Service Manuals

Service Manuals have the diagnosis and repair information on the engines, transmission, axle, suspension, brakes, electrical, steering, body, etc.

Service Bulletins

Service Bulletins give additional technical service information needed to knowledgeably service General Motors cars and trucks. Each bulletin contains instructions to assist in the diagnosis and service of the vehicle.

Owner Information

Owner publications are written specifically for owners and intended to provide basic operational information about the vehicle. The Owner Manual includes the Maintenance Schedule for all models.

In-Portfolio: Includes a Portfolio, Owner Manual, and Warranty Manual.

RETAIL SELL PRICE: $35.00 – $40.00 (U.S.) plus handling and shipping fees.

Without Pouch: Owner Manual only.

RETAIL SELL PRICE:
$25.00 (U.S.) plus handling and shipping fees.

Current and Past Models

Technical Service Bulletins and Manuals are available for current and past model GM vehicles.

ORDER TOLL FREE:
1-800-551-4123 Monday – Friday
8:00 AM – 6:00 PM Eastern Time

For Credit Card Orders Only (VISA-MasterCard-Discover), see Helm, Inc. at: www.helminc.com.

Or write to:

Helm, Incorporated
Attention: Customer Service
47911 Halyard Drive
Plymouth, MI 48170

Prices are subject to change without notice and without incurring obligation. Allow ample time for delivery.

All listed prices are quoted in U.S. funds. Make checks payable in U.S. funds.

Radio Frequency Identification (RFID)

RFID technology is used in some vehicles for functions such as tire pressure monitoring and ignition system security, as well as in connection with conveniences such as Remote Keyless Entry (RKE) transmitters for remote door locking/unlocking and starting, and in-vehicle transmitters for garage door openers. RFID technology in GM vehicles does not use or record personal information or link with any other GM system containing personal information.

Radio Frequency Statement

This vehicle has systems that operate on a radio frequency that complies with Part 15/Part 18 of the Federal Communications Commission (FCC) rules and with Industry Canada Standards RSS-GEN/210/220/310.

Operation is subject to the following two conditions:

1. The device may not cause harmful interference.
2. The device must accept any interference received, including interference that may cause undesired operation of the device.

Changes or modifications to any of these systems by other than an authorized service facility could void authorization to use this equipment.

Reporting Safety Defects

Reporting Safety Defects to the United States Government

If you believe that your vehicle has a defect which could cause a crash or could cause injury or death, you should immediately inform the National Highway Traffic Safety Administration (NHTSA) in addition to notifying General Motors.

If NHTSA receives similar complaints, it may open an investigation, and if it finds that a safety defect exists in a group of vehicles, it may order a recall and remedy campaign. However, NHTSA cannot become involved in individual problems between you, your dealer, or General Motors.

To contact NHTSA, you may call the Vehicle Safety Hotline toll-free at 1-888-327-4236 (TTY: 1-800-424-9153); go to *http://www.safercar.gov;* or write to:

Administrator, NHTSA
1200 New Jersey Avenue, S.E.
Washington, D.C. 20590

You can also obtain other information about motor vehicle safety from *http://www.safercar.gov*.

Reporting Safety Defects to the Canadian Government

If you live in Canada, and you believe that the vehicle has a safety defect, notify Transport Canada immediately, and notify General Motors of Canada Limited. Call Transport Canada at 1-800-333-0510 or write to:

Transport Canada
Road Safety Branch
80 rue Noel
Gatineau , QC J8Z 0A1

Reporting Safety Defects to General Motors

In addition to notifying NHTSA (or Transport Canada) in a situation like this, notify General Motors.

Call 1-800-222-1020, or write:

Chevrolet Motor Division
Chevrolet Customer Assistance Center
P.O. Box 33170
Detroit, MI 48232-5170

In Canada, call 1-800-263-3777 (English) or 1-800-263-7854 (French), or write:

General Motors of Canada Limited
Customer Care Centre,
Mail Code: CA1-163-005
1908 Colonel Sam Drive
Oshawa, Ontario L1H 8P7

Vehicle Data Recording and Privacy

The vehicle has a number of computers that record information about the vehicle's performance and how it is driven. For example, the vehicle uses computer modules to monitor and control engine and transmission performance, to monitor the conditions for airbag deployment and deploy them in a crash, and, if equipped, to provide antilock braking to help the driver control the vehicle. These modules may store data to help the dealer technician service the vehicle. Some modules may also store data about how the vehicle is operated, such as rate of fuel consumption or average speed. These modules may retain personal preferences, such as radio presets, seat positions, and temperature settings.

Event Data Recorders

This vehicle is equipped with an event data recorder (EDR). The main purpose of an EDR is to record, in certain crash or near crash-like situations, such as an air bag deployment or hitting a road obstacle, data that will assist in understanding how a vehicle's systems performed. The EDR is designed to record data related to vehicle dynamics and safety systems for a short period of time, typically 30 seconds or less. The EDR in this vehicle is designed to record such data as:

- How various systems in your vehicle were operating;
- Whether or not the driver and passenger safety belts were buckled/fastened;
- How far (if at all) the driver was depressing the accelerator and/or brake pedal; and,
- How fast the vehicle was traveling.

These data can help provide a better understanding of the circumstances in which crashes and injuries occur. NOTE: EDR data are recorded by your vehicle only if a non-trivial crash situation occurs; no data are recorded by the EDR under normal driving conditions and no personal data (e.g., name, gender, age, and crash location) are recorded. However, other parties, such as law enforcement, could combine the EDR data with the type of personally identifying data routinely acquired during a crash investigation.

To read data recorded by an EDR, special equipment is required, and access to the vehicle or the EDR is needed. In addition to the vehicle manufacturer, other parties, such as law enforcement, that have the special equipment, can read the information if they have access to the vehicle or the EDR.

GM will not access this data or share it with others except: with the consent of the vehicle owner or, if the vehicle is leased, with the consent of the lessee; in response to an official request by police or similar government office; as part of GM's defense of litigation through the discovery process; or, as required by law. Data that GM collects or receives may also be used for GM research needs or may be made available to others for research purposes, where a need is shown and the data is not tied to a specific vehicle or vehicle owner.

OnStar®

If the vehicle is equipped with OnStar® and has an active subscription, additional data may be collected through the OnStar system. This includes information about the vehicle's operation; collisions involving the vehicle; the use of the vehicle and its features; and, in certain situations, the location and approximate GPS speed of the vehicle. Refer to the OnStar Terms and Conditions and Privacy Statement on the OnStar website.

Infotainment System

If the vehicle is equipped with a navigation system as part of the infotainment system, use of the system may result in the storage of destinations, addresses, telephone numbers, and other trip information. See the infotainment manual for information on stored data and for deletion instructions.

✍ NOTES

OnStar

OnStar Overview
OnStar Overview 14-1

OnStar Services
Emergency 14-2
Security 14-3
Navigation 14-3
Connections 14-4
Vehicle Diagnostics 14-6

OnStar Additional Information
OnStar Additional Information 14-6

OnStar Overview

Voice Command Button

Blue OnStar Button

Emergency Button

This vehicle may be equipped with a comprehensive, in-vehicle system that can connect to a live OnStar Advisor for Emergency, Security, Navigation, Connection, and Diagnostic Services. OnStar services may require a paid subscription. OnStar requires the vehicle battery and electrical system, cellular service, and GPS satellite signals to be available and operating. OnStar acts as a link to existing public emergency service providers. OnStar may collect information about you and your vehicle, including location information. See OnStar's Terms and Conditions and Privacy Statement for more details including system limitations at www.onstar.com (U.S.) or www.onstar.ca (Canada).

The OnStar system status light is next to the OnStar buttons. If the status light is:

- Solid Green: System is on.
- Flashing Green: On a call.
- Red: Indicates a problem.
- Off: System is off. Press the blue OnStar button twice to speak with an OnStar Advisor.

Press On or call 1-888-4-ONSTAR (1-888-466-7827) to speak to an Advisor.

Press to:

- Make a call, end a call, or answer an incoming call.
- Give OnStar Hands-Free Calling voice commands.
- Give OnStar Turn-by-Turn Navigation voice commands. Requires a specific OnStar subscription plan.
- Obtain the WiFi network name, or Service Set Identifier or SSID, and passphrase (if equipped).

Press On to connect to a live Advisor to:

- Verify account information or update contact information.
- Get driving directions. Requires a specific OnStar subscription plan..
- Receive On-Demand Diagnostics for a check of the vehicle's key operating systems.
- Receive Roadside Assistance.
- Manage WiFi Settings (if equipped).

Press SOS to get a priority connection to an OnStar Emergency Advisor available 24/7 to:

- Get help for an emergency.
- Be a Good Samaritan or respond to an AMBER Alert.
- Get assistance in severe weather or other crisis and evacuation routes.

OnStar Services

Emergency

With Automatic Crash Response, the OnStar system can automatically connect to an OnStar Emergency Advisor. The built-in system can automatically connect to help in certain crashes.

Press SOS to connect to an OnStar Emergency Advisor. GPS technology is used to identify the vehicle location and can provide important information to emergency personnel. OnStar Emergency Advisors are trained to provide assistance and link to existing public emergency service providers in emergency situations.

With OnStar Crisis Assist, specially trained Crisis Advisors are available 24 hours a day, 7 days a week, to provide a central point of contact, assistance, and information if a crisis occurs.

Security

OnStar provides services including Stolen Vehicle Assistance, Remote Ignition Block, and Roadside Assistance, if equipped. OnStar can unlock the vehicle doors remotely, if equipped with automatic door locks, and can help police locate the vehicle if it is stolen.

Navigation

OnStar navigation requires a specific OnStar subscription plan.

Press On to receive directions or have them sent to the vehicle navigation screen, if equipped. Destinations can also be forwarded to the vehicle from MapQuest.com.

Turn-by-Turn Navigation

1. Press On to connect to a live Advisor.
2. Request directions.
3. Directions are downloaded to the vehicle.
4. Follow the voice-guided commands.

Using Voice Commands During a Planned Route

Cancel Route

1. Press . System responds: “OnStar ready,” then a tone. Say “Cancel route.” System responds: “Do you want to cancel directions?”
2. Say “Yes.” System responds: “OK, request completed, thank you, goodbye.”

Route Preview

1. Press . System responds: “OnStar ready,” then a tone.
2. Say “Route preview.” System responds with the next three maneuvers.

Repeat

1. Press . System responds: “OnStar ready,” then a tone.
2. Say “Repeat.” System responds with the last direction given, then responds with “OnStar ready,” then a tone.

Get My Destination

1. Press . System responds: “OnStar ready,” then a tone.
2. Say “Get my destination.” System responds with the address and the distance to the destination, then responds with “OnStar ready,” then a tone.

Other Navigation Services Available from OnStar

OnStar eNav: Subscribers can send destinations from MapQuest.com to the vehicle Turn-by-Turn Navigation or screen-based navigation system (if equipped). When ready, the directions will be downloaded to the vehicle.

Destination Download: Press On, then request the Advisor to download directions to the navigation system in the vehicle (if equipped). After the call ends, press the “Go” button on the navigation screen to begin driving directions.

If directions are downloaded to the navigation system, the route can only be canceled through the navigation system.

Destinations can also be downloaded on the go. For information about eNav or Destination Download, see www.onstar.com (U.S.) or www.onstar.ca (Canada).

Connections

The required specific Onstar subscription plan includes the services that follow to help customers stay connected.

For coverage maps, see www.onstar.com (U.S.) or www.onstar.ca (Canada).

WiFi Connectivity (If Equipped)

The vehicle has a WiFi hotspot that provides a high-speed, wireless Internet connection to connect multiple mobile devices (data plan required).

1. To retrieve WiFi hotspot information, press and select or say “WiFi settings.”
2. The WiFi settings will display the WiFi network name/SSID, passphrase, and level of encryption.
3. To change the SSID or passphrase, press On or call 1-888-4-ONSTAR to connect with an Advisor.

OnStar RemoteLink® Mobile App (If Equipped)

Download the OnStar RemoteLink mobile app to select Apple®, Android™, and BlackBerry® or Windows 7 or 8 mobile devices. From the mobile device, check the vehicle’s fuel level, oil life, or tire pressure (if the vehicle is equipped with the tire pressure monitoring system); or activate remote horn and lights. Also remote start the vehicle (if factory equipped) or unlock the doors from anywhere with a wireless connection (if equipped with automatic locks). With a required specific OnStar subscription plan, a destination can be sent to the vehicle. For OnStar RemoteLink information and compatibility, see www.onstar.com (U.S.) or www.onstar.ca (Canada).

OnStar RemoteLink® Key Fob Services

This feature is included for five years and allows for remote door lock/unlock (if equipped with automatic locks), remote start (if factory equipped), or activation of horn and lights from anywhere with a wireless signal. Download the app and start using it any time during the trial period to get started.

OnStar Hands-Free Calling

This service allows calls to be made and received from the vehicle.

To Make a Call

1. Press . System responds: “OnStar ready.”
2. Say “Call.” System responds: “Call. Please say the name or number to call.”
3. Say the entire number without pausing, including a “1” and the area code. System responds: “OK calling.”

Calling 911 Emergency

1. Press . System responds: “OnStar Ready,” followed by a tone.
2. Say “Call.” System responds: “Call. Please say the name or number to call.”
3. Say “911” without pausing. System responds: “911.”
4. Say “Call.” System responds: “OK, dialing 911.”

Retrieve My Number

1. Press . System responds: “OnStar ready.”
2. Say “My number.” System responds: “Your OnStar Hands-Free Calling number is,” then says the number.

End a Call

Press . System responds: “Call ended.”

Store a Name Tag for Speed Dialing

1. Press . System responds: “OnStar ready.”
2. Say “Store.” System responds: “Please say the number you would like to store.”
3. Say the entire number without pausing. System responds: “Please say the name tag.”
4. Pick a name tag. System responds: “About to store <name tag>. Does that sound OK?”
5. Say “Yes” or say “No” to try again. System responds: “OK, storing <name tag>.”

Place a Call Using a Stored Number

1. Press . System responds: “OnStar ready.”
2. Say “Call <name tag>.” System responds: “OK, calling <name tag>.”

Verify Minutes and Expiration

Press and say “Minutes” then “Verify” to check how many minutes remain and their expiration date.

Vehicle Diagnostics

OnStar Vehicle Diagnostics can perform a vehicle check every month. It will check the engine, transmission, antilock brakes, and other major vehicle systems. It also checks the tire pressures, if the vehicle is equipped with the Tire Pressure Monitoring System. If an On-Demand Diagnostics check is needed, press On, and an Advisor can run a check.

OnStar Additional Information

Transferring Service

Press On to request account transfer eligibility information. The Advisor can assist in canceling or removing account information.

Selling/Transferring the Vehicle

Call 1-888-4-ONSTAR immediately to terminate your OnStar services if the vehicle is disposed of, sold, transferred, or if the lease ends.

Reactivation for Subsequent Owners

Press On and follow the prompts to speak to an Advisor as soon as possible. The Advisor will update vehicle records and explain the OnStar service options available.

How OnStar Service Works

Automatic Crash Response, Emergency Services, Crisis Assist, Stolen Vehicle Assistance, Vehicle Diagnostics, Remote Door Unlock, Roadside Assistance, Turn-by-Turn Navigation, and Hands-Free Calling are available on most vehicles. Not all OnStar services are available everywhere or on all vehicles. For more information, a full description of OnStar services, system limitations, and OnStar terms and conditions:

- Call 1-888-4-ONSTAR (1-888-466-7827).
- See www.onstar.com (U.S.).
- See www.onstar.ca (Canada).
- Call TTY 1-877-248-2080.
- Press On to speak with an Advisor.

OnStar services cannot work unless the vehicle is in a place where OnStar has an agreement with a wireless service provider for service

in that area. The wireless service provider must also have coverage, network capacity, reception, and technology compatible with OnStar services. Service involving location information about the vehicle cannot work unless GPS signals are available, unobstructed, and compatible with the OnStar hardware. OnStar services may not work if the OnStar equipment is not properly installed or it has not been properly maintained. If equipment or software is added, connected, or modified, OnStar services may not work. Other problems beyond the control of OnStar may prevent service such as hills, tall buildings, tunnels, weather, electrical system design and architecture of the vehicle, damage to the vehicle in a crash, or wireless phone network congestion or jamming.

See *Radio Frequency Statement on page 13-12*.

Services for People with Disabilities

Advisors provide services to help subscribers with physical disabilities and medical conditions.

Press On for help with:

- Locating a gas station with an attendant to pump gas.
- Finding a hotel, restaurant, etc., that meets accessibility needs.
- Providing directions to the closest hospital or pharmacy in urgent situations.

TTY Users

OnStar has the ability to communicate to deaf, hard-of-hearing, or speech-impaired customers while in the vehicle. The available dealer-installed TTY system can provide in-vehicle access to all of the OnStar services, except Virtual Advisor and OnStar Turn-by-Turn Navigation.

OnStar Personal Identification Number (PIN)

A PIN is needed to access some of the OnStar services, like Remote Door Unlock and Stolen Vehicle Assistance. The PIN will need to be changed the first time when speaking with an Advisor. To change the OnStar PIN, contact an OnStar Advisor by pressing On or calling 1-888-4-ONSTAR.

Warranty

OnStar equipment may be warranted as part of the vehicle warranty.

Languages

The vehicle can be programmed to respond in multiple languages. Press On and ask for an Advisor. Advisors are available in English, Spanish, and French. Available languages may vary by country.

Potential Issues

OnStar cannot perform Remote Door Unlock or Stolen Vehicle Assistance after the vehicle has been off continuously for five days. After five days, OnStar can contact Roadside Assistance and a locksmith to help gain access to the vehicle.

Global Positioning System (GPS)

- Obstruction of the GPS can occur in a large city with tall buildings; in parking garages; around airports; in tunnels, underpasses; or in an area with very dense trees. If GPS signals are not available, the OnStar system should still operate to call OnStar. However, OnStar could have difficulty identifying the exact location.
- In emergency situations, OnStar can use the last stored GPS location to send to emergency responders.

A temporary loss of GPS can cause loss of the ability to send a Turn-by-Turn Navigation route. The Advisor may give a verbal route or may ask for a call back after the vehicle is driven into an open area.

Cellular and GPS Antennas

Do not place items over or near the antenna to prevent blocking cellular and GPS signal reception. Cellular reception is required for OnStar to send remote signals to the vehicle.

Unable to Connect to OnStar Message

If there is limited cellular coverage or the cellular network has reached maximum capacity, this message may come on. Press on to try the call again or try again after driving a few miles into another cellular area.

Vehicle and Power Issues

OnStar services require a vehicle electrical system, wireless service, and GPS satellite technologies to be available and operating for features to function properly. These systems may not operate if the battery is discharged or disconnected.

Add-on Electrical Equipment

The OnStar system is integrated into the electrical architecture of the vehicle. Do not add any electrical equipment. See *Add-On Electrical Equipment on page 9-100*. Added electrical equipment may interfere with the operation of the OnStar system and cause it to not operate.

Privacy

The complete OnStar Privacy Statement may be found at www.onstar.com (U.S.), or www.onstar.ca (Canada). We recommend that you review it. If you have any questions, call 1-888-4-ONSTAR (1-888-466-7827) or press on to speak with an Advisor. Users of wireless communications are cautioned that the privacy of any information sent via wireless cellular communications cannot be assured. Third parties

may unlawfully intercept or access transmissions and private communications without consent.

OnStar - software acknowledgements

Certain OnStar components include libcurl and unzip software and other third party software. Below are the notices and licenses associated with libcurl and unzip and for other third party software please see http://www.lg.com/global/support/opensource/index and https://www.onstar.com/web/portal/getdocuments

libcurl:

COPYRIGHT AND PERMISSION NOTICE

Copyright (c) 1996 - 2010, Daniel Stenberg, <daniel@haxx.se>.

All rights reserved.

Permission to use, copy, modify, and distribute this software for any purpose with or without fee is hereby granted, provided that the above copyright notice and this permission notice appear in all copies.

THE SOFTWARE IS PROVIDED "AS IS," WITHOUT WARRANTY OF ANY KIND, EXPRESS OR IMPLIED, INCLUDING BUT NOT LIMITED TO THE WARRANTIES OF MERCHANTABILITY, FITNESS FOR A PARTICULAR PURPOSE AND NONINFRINGEMENT OF THIRD PARTY RIGHTS. IN NO EVENT SHALL THE AUTHORS OR COPYRIGHT HOLDERS BE LIABLE FOR ANY CLAIM, DAMAGES OR OTHER LIABILITY, WHETHER IN AN ACTION OF CONTRACT, TORT OR OTHERWISE, ARISING FROM, OUT OF OR IN CONNECTION WITH THE SOFTWARE OR THE USE OR OTHER DEALINGS IN THE SOFTWARE.

Except as contained in this notice, the name of a copyright holder shall not be used in advertising or otherwise to promote the sale, use or other dealings in this Software without prior written authorization of the copyright holder.

unzip:

This is version 2005-Feb-10 of the Info-ZIP copyright and license. The definitive version of this document should be available at ftp://ftp.info-zip.org/pub/infozip/license.html indefinitely.

Copyright (c) 1990-2005 Info-ZIP. All rights reserved.

For the purposes of this copyright and license, "Info-ZIP" is defined as the following set of individuals:

Mark Adler, John Bush, Karl Davis, Harald Denker, Jean-Michel Dubois, Jean-loup Gailly, Hunter Goatley, Ed Gordon, Ian Gorman, Chris Herborth, Dirk Haase, Greg Hartwig, Robert Heath, Jonathan Hudson, Paul Kienitz, David Kirschbaum, Johnny Lee, Onno van der Linden, Igor Mandrichenko, Steve P. Miller, Sergio Monesi, Keith Owens, George Petrov, Greg Roelofs, Kai

Uwe Rommel, Steve Salisbury, Dave Smith, Steven M. Schweda, Christian Spieler, Cosmin Truta, Antoine Verheijen, Paul von Behren, Rich Wales, Mike White.

This software is provided “as is,” without warranty of any kind, express or implied. In no event shall Info-ZIP or its contributors be held liable for any direct, indirect, incidental, special or consequential damages arising out of the use of or inability to use this software.

Permission is granted to anyone to use this software for any purpose, including commercial applications, and to alter it and redistribute it freely, subject to the following restrictions:

1. Redistributions of source code must retain the above copyright notice, definition, disclaimer, and this list of conditions.
2. Redistributions in binary form (compiled executables) must reproduce the above copyright notice, definition, disclaimer, and this list of conditions in documentation and/or other materials provided with the distribution. The sole exception to this condition is redistribution of a standard UnZipSFX binary (including SFXWiz) as part of a self-extracting archive; that is permitted without inclusion of this license, as long as the normal SFX banner has not been removed from the binary or disabled.
3. Altered versions–including, but not limited to, ports to new operating systems, existing ports with new graphical interfaces, and dynamic, shared, or static library versions–must be plainly marked as such and must not be misrepresented as being the original source. Such altered versions also must not be misrepresented as being Info-ZIP releases–including, but not limited to, labeling of the altered versions with the names “Info-ZIP” (or any variation thereof, including, but not limited to, different capitalizations), “Pocket UnZip,” “WiZ” or “MacZip” without the explicit permission of Info-ZIP. Such altered versions are further prohibited from misrepresentative use of the Zip-Bugs or Info-ZIP e-mail addresses or of the Info-ZIP URL(s).
4. Info-ZIP retains the right to use the names “Info-ZIP,” “Zip,” “UnZip,” “UnZipSFX,” “WiZ,” “Pocket UnZip,” “Pocket Zip,” and “MacZip” for its own source and binary releases.

A

Accessories and Modifications 10-3
Accessory Power 9-28
Active Fuel Management® 9-33
Add-On Electrical Equipment 9-100
Adding a Snow Plow or Similar Equipment 9-101
Additional Information OnStar® 14-6
Additional Maintenance and Care 11-9
Adjustable Throttle and Brake Pedal 9-23
Adjustments
Lumbar, Front Seats 3-4
Air Cleaner/Filter, Engine 10-19
Air Filter, Passenger Compartment 8-9
Air Vents 8-8
Airbag System
Check 3-35
How Does an Airbag Restrain? 3-26
Passenger Sensing System 3-29
What Makes an Airbag Inflate? 3-25
What Will You See after an Airbag Inflates? 3-26
When Should an Airbag Inflate? 3-24
Where Are the Airbags? 3-22
Airbags
Adding Equipment to the Vehicle 3-34
Light On-Off 5-18
On-Off Light 5-18
On-Off Switch 3-27
Passenger Status Indicator . . . 5-20
Readiness Light 5-18
Servicing Airbag-Equipped Vehicles 3-34
System Check 3-20
Alarm
Vehicle Security 2-11
All-Season Tires 10-54
All-Terrain Tires 10-55
AM-FM Radio 7-8
Antenna
Multi-band 7-11
Antilock Brake System (ABS) 9-50
Warning Light 5-25
Appearance Care
Exterior 10-100
Interior 10-105
Assistance Program, Roadside 13-5
Assistance Systems for Driving 9-63
Assistance Systems for Parking and Backing 9-60
Audio
Bluetooth 7-21
Audio Players 7-15
CD 7-15
Audio System
Fixed Mast Antenna 7-11
Radio Reception 7-10
Theft-Deterrent Feature 7-2

Automatic
Dimming Mirrors 2-17
Door Locks 2-9
Headlamp System 6-3
Transmission 9-34
Transmission Fluid . . 10-15, 10-18
Automatic Transmission
Manual Mode 9-37
Shift Lock Control
Function Check 10-37
Auxiliary
Roof Mounted Lamp 6-5
Auxiliary Jack 7-21
Axle, Front 10-34
Axle, Rear 10-35

B

Battery 10-32
Jump Starting 10-91
Load Management 6-8
Power Protection 6-9
Voltage and Charging
Messages 5-36
Blade Replacement, Wiper . . . 10-38
Blind Spot Mirrors 2-17
Bluetooth
Overview 7-31, 7-32, 7-37, 7-42, 7-46
Bluetooth Audio 7-21
Brake
Pedal and Adjustable
Throttle 9-23
System Warning Light 5-24
Brakes 10-30
Antilock 9-50
Assist 9-53
Fluid 10-31
Parking 9-51
System Messages 5-36
Braking 9-3
Break-In, New Vehicle 9-23
Bulb Replacement 10-43
Center High-Mounted
Stoplamp (CHMSL) and
Cargo Lamp 10-43
Halogen Bulbs 10-40
Headlamp Aiming 10-39
Headlamps 10-40
Bulb Replacement (cont'd)
Headlamps, Front Turn
Signal, Sidemarker, and
Parking Lamps 10-40
Taillamps 10-41
Taillamps, Turn Signal,
Stoplamps, and
Back-up Lamps 10-41
Buying New Tires 10-73

C

Calibration 5-5
California
Fuel Requirements 9-69
Perchlorate Materials
Requirements 10-3
Warning 10-3
Canadian Vehicle Owners iii
Capacities and
Specifications 12-2
Carbon Monoxide
Engine Exhaust 9-33
Tailgate 2-10
Winter Driving 9-12
Card Reader
SD 7-20

Cargo
Tie-Downs 4-4
Cargo Lamp 6-6
Cautions, Danger, and
Warnings iv
CD Player 7-15
Center Console Storage 4-3
Center High-Mounted
Stoplamp (CHMSL) and
Cargo Lamp 10-43
Center Seat 3-3
Chains, Tire 10-78
Charging System Light 5-21
Check
Engine Light 5-21
Ignition
Transmission Lock 10-38
Child Restraints
Infants and Young
Children 3-38
Lower Anchors and
Tethers for Children 3-44
Older Children 3-36
Securing 3-57, 3-61
Systems 3-41
Cleaning
Exterior Care 10-100
Interior Care 10-105
Climate Control Systems . . . 8-1, 8-3
Air Conditioning 8-1, 8-3
Dual Automatic 8-5
Heating 8-1, 8-3
Clock 5-5
Cluster, Instrument 5-10
Clutch, Hydraulic 10-19
Collision Damage Repair 13-8
Compartments
Storage 4-1
Compass 5-5
Messages 5-37
Connections
OnStar® 14-4
Control 9-56
Traction and Electronic
Stability 9-54
Control Light
Hill Descent 5-26
Control of a Vehicle 9-3
Convex Mirrors 2-14
Coolant
Engine 10-22
Engine Temperature
Gauge 5-16
Cooling System 10-21
Engine Messages 5-37
Courtesy Transportation
Program 13-7
Cruise Control 9-57
Light 5-30
Cupholders 4-2
Customer Assistance 13-4
Offices 13-3
Text Telephone (TTY)
Users 13-4
Customer Information
Service Publications
Ordering Information 13-11
Customer Satisfaction
Procedure 13-1

D

Damage Repair, Collision 13-8
Danger, Warnings, and
Cautions iv
Data Recorders, Event 13-14
Daytime Running
Lamps (DRL) 6-3
Defensive Driving 9-3
Delayed Locking 2-9
Distracted Driving 9-2
Dome Lamps 6-7
Door
Ajar Messages 5-37
Delayed Locking 2-9
Locks 2-7
Power Locks 2-8
Drive Belt Routing, Engine 12-5
Driver
Teen 7-48
Driver Assistance Systems 9-60
Driver Information
Center (DIC) 5-30, 5-32
Driving
Assistance Systems 9-63
Characteristics and
Towing Tips 9-73
Defensive 9-3
Drunk 9-3
For Better Fuel Economy 1-30
Hill and Mountain Roads 9-11
If the Vehicle is Stuck 9-14
Loss of Control 9-5
Off-Road 9-6
Off-Road Recovery 9-5
Vehicle Load Limits 9-15
Wet Roads 9-11
Winter 9-12
Dual Automatic Climate
Control System 8-5
Dual Tire
Rotation 10-71

E

E85 or FlexFuel 9-69
Electrical Equipment,
Add-On 9-100
Electrical System
Engine Compartment
Fuse Block 10-45
Fuses 10-44
Instrument Panel
Fuse Block 10-49, 10-51
Overload 10-44
Emergency
OnStar® 14-2
Engine
Air Cleaner/Filter 10-19
Check and Service Engine
Soon Light 5-21
Compartment Overview 10-6
Coolant 10-22
Coolant Heater 9-29
Coolant Temperature
Gauge 5-16
Cooling System 10-21
Cooling System Messages ...5-37
Drive Belt Routing 12-5
Exhaust 9-33
Fan 10-27
Oil Life System 10-14
Oil Messages 5-38
Oil Pressure Gauge 5-15

Engine (cont'd)
Overheated Protection
Operating Mode 10-27
Overheating 10-25
Power Messages 5-39
Running While Parked 9-34
Starting 9-26
Entry Lighting 6-8
Equipment, Towing 9-90
Event Data Recorders 13-14
Exit Lighting 6-8
Extender, Safety Belt 3-19
Exterior Lamp Controls 6-1
Exterior Lamps Off Reminder ... 6-2

F

Fan
Engine 10-27
Fast Idle System 9-27
Features
Memory 1-10
Filter,
Engine Air Cleaner 10-19
Flash-to-Pass 6-3
Flashers, Hazard Warning 6-4
Flat Tire 10-79
Changing 10-80
FlexFuel
E85 9-69
Floor Console Storage 4-4
Floor Mats 10-109
Fluid
Automatic
Transmission 10-15, 10-18
Brakes 10-31
Four-Wheel Drive
Transfer Case 9-42
Power Steering 10-28
Washer 10-29
Fog Lamps 6-5
Bulb Replacement 10-41
Folding Mirrors 2-16
Forward Collision Alert
(FCA) System 9-63
Four-Wheel Drive 9-42, 10-33
Four-Wheel-Drive Light 5-25
Frequency Statement
Radio 13-12
Front Axle 10-34
Front Fog Lamp
Light 5-29
Front Seats
Adjustment 3-3
Heated and Cooled 3-9
Fuel 9-67
Additives 9-69
Economy Driving 1-30
Filling a Portable Fuel
Container 9-72
Filling the Tank 9-70
Foreign Countries 9-69
Gauge 5-14
Low Fuel Warning Light 5-28
Management, Active 9-33
Requirements, California 9-69
System Messages 5-39
Full-Size Spare Tire 10-90
Fuses 10-44
Engine Compartment
Fuse Block 10-45
Instrument Panel
Fuse Block 10-49, 10-51

G

Garage Door Opener 5-54
Programming 5-54
Gauges
Engine Coolant
Temperature 5-16
Engine Oil Pressure 5-15
Fuel 5-14
Odometer 5-13
Speedometer 5-13
Tachometer 5-13
Trip Odometer 5-13
Voltmeter 5-16
Warning Lights and
Indicators 5-9
General Information
Service and Maintenance 11-1
Towing 9-73
Vehicle Care 10-3
Glass Replacement 10-39
Glove Box 4-2
GM Mobility Reimbursement
Program 13-5

H

Halogen Bulbs 10-40
Hazard Warning Flashers 6-4
Head Restraints 3-2
Headlamps
Aiming 10-39
Automatic 6-3
Bulb Replacement 10-40
Daytime Running
Lamps (DRL) 6-3
Flash-to-Pass 6-3
Headlamps, Front Turn
Signal, Sidemarker, and
Parking Lamps 10-40
High-Beam On Light 5-29
High/Low Beam Changer 6-2
Lamps On Reminder 5-29
Heated
Steering Wheel 5-4
Heated and Cooled Front
Seats 3-9
Heated Mirrors 2-17
Heater
Engine Coolant 9-29
Heating and Air
Conditioning 8-1, 8-3
High-Beam On Light 5-29
High-Speed Operation 10-64
Hill and Mountain Roads 9-11
Hill Descent Control (HDC) 9-56
Hill Descent Control Light 5-26
Hill Start Assist (HSA) 9-53
Home Page 7-5
Hood 10-5
Horn 5-4
How to Wear Safety Belts
Properly 3-13
Hydraulic Clutch 10-19

I

Idle System
Fast 9-27
Ignition Positions 9-24
Ignition Transmission Lock
Check 10-38
Immobilizer 2-12
Indicator
Vehicle Ahead 5-26

Infants and Young Children, Restraints 3-38
Infotainment 7-1
Infotainment System 13-15
Instrument Cluster 5-10
Instrument Panel
Storage Area 4-1
Interior Rearview Mirrors 2-19
Internet Radio
Pandora 7-11
Introduction iii

J

Jack
Auxiliary 7-21
Jump Starting 10-91

K

Key and Lock Messages 5-39
Keyless Entry
Remote (RKE) System 2-4
Keys 2-1

L

Labeling, Tire Sidewall 10-56
Lamps
Auxiliary Roof
Mounted Lamp 6-5
Cargo 6-6
Daytime Running (DRL) 6-3
Dome 6-7
Exterior Controls 6-1
Exterior Lamps Off
Reminder 6-2
Fog 6-5
Malfunction Indicator 5-21
Messages 5-39
On Reminder 5-29
Reading 6-7
Taillamps 10-41
Lane Departure
Warning (LDW) 9-66
Lane Departure Warning
Light 5-26
Lap Belt 3-18
Lap-Shoulder Belt 3-14
LATCH System
Replacing Parts after a
Crash 3-57
LATCH, Lower Anchors and
Tethers for Children 3-44
Light
Hill Decent Control 5-26
Lighting
Entry 6-8
Exit 6-8
Illumination Control 6-6
Lights
Airbag On-Off 5-18
Airbag Readiness 5-18
Antilock Brake System
(ABS) Warning 5-25
Brake System Warning 5-24
Charging System 5-21
Cruise Control 5-30
Flash-to-Pass 6-3
Four-Wheel-Drive 5-25
Front Fog Lamp 5-29
High-Beam On 5-29
High/Low Beam Changer 6-2
Lane Departure Warning 5-26
Low Fuel Warning 5-28
Safety Belt Reminders 5-17
Security 5-29
StabiliTrak® OFF 5-27

Lights (cont'd)
Tire Pressure 5-28
Tow/Haul Mode 5-26
Traction Control System (TCS)/StabiliTrak® 5-27
Traction Off 5-27
Locking Rear Axle 9-56
Locks
Automatic Door 2-9
Delayed Locking 2-9
Door 2-7
Lockout Protection 2-9
Power Door 2-8
Safety 2-9
Loss of Control 9-5
Low Fuel Warning Light 5-28
Low-Profile Tires 10-55
Lower Anchors and Tethers for Children (LATCH System) 3-44
Lumbar Adjustment 3-4
Front Seats 3-4

M

Maintenance
Records 11-16
Maintenance and Care
Additional 11-9
Maintenance Schedule 11-3
Recommended Fluids and Lubricants 11-12
Transfer Case 9-42
Malfunction Indicator Lamp 5-21
Manual Mirrors 2-14
Manual Mode 9-37
Manual Transmission 9-40
Fluid 10-19
Manual Windows 2-20
Memory Features 1-10
Memory Seats 3-7
Messages
Airbag System 5-42
Battery Voltage and Charging 5-36
Brake System 5-36
Compass 5-37
Door Ajar 5-37
Engine Cooling System 5-37
Engine Oil 5-38
Messages (cont'd)
Engine Power 5-39
Fuel System 5-39
Key and Lock 5-39
Lamp 5-39
Object Detection System 5-40
Ride Control System 5-40
Safety Belt 5-42
Security 5-42
Steering System 5-42
Tire 5-43
Transmission 5-44
Vehicle 5-35
Vehicle Reminder 5-45
Vehicle Speed 5-46
Washer Fluid 5-46
Mirrors
Automatic Dimming 2-17
Automatic Dimming Rearview 2-19
Blind Spot 2-17
Convex 2-14
Folding 2-16
Heated 2-17
Manual 2-14
Manual Rearview 2-19

Mirrors (cont'd)
Power 2-15
Tilt in Reverse 2-18
Trailer Tow 2-14
Mirrors, Interior Rearview 2-19
Monitor System, Tire
Pressure 10-64
Multi-band Antenna 7-11

N

Navigation
OnStar® 14-3
New Vehicle Break-In 9-23
Noise Control System 10-36

O

Object Detection System
Messages 5-40
Odometer 5-13
Trip 5-13
Off-Road 9-6
Driving 9-6
Recovery 9-5
Oil
Engine 10-11
Engine Oil Life System 10-14
Engine Oil Pressure
Gauge 5-15
Messages 5-38
Older Children, Restraints 3-36
Online Owner Center 13-4
OnStar 13-15
OnStar System 7-22
OnStar®
System, In Brief 1-31
OnStar® Additional
Information 14-6
OnStar® Connections 14-4
OnStar® Emergency 14-2
OnStar® Navigation 14-3
OnStar® Overview 14-1
OnStar® Security 14-3
OnStar® Vehicle
Diagnostics 14-6
Operating Mode
Overheated Engine
Protection 10-27
Ordering
Service Publications 13-11
Outlets
Power 5-6
Overheated Engine
Protection
Operating Mode 10-27
Overheating, Engine 10-25
Overview, Infotainment
System 7-3

P

Pandora Internet Radio 7-11
Park
Shifting Into 9-30
Shifting Out of 9-31
Parking 9-32
Brake 9-51
Brake and P (Park)
Mechanism Check 10-38
Over Things That Burn 9-32
Parking or Backing
Assistance Systems 9-60
Passenger Airbag Status
Indicator 5-20
Passenger Compartment Air
Filter 8-9
Passenger Sensing System ... 3-29

Perchlorate Materials
Requirements, California 10-3
Personalization
Vehicle 5-47
Phone
Bluetooth 7-31, 7-32, 7-37, 7-42, 7-46
Pickup Conversion to
Chassis Cab 9-104
Port
USB 7-18
Power
Door Locks 2-8
Mirrors 2-15
Outlets 5-6
Protection, Battery 6-9
Retained Accessory (RAP) ...9-28
Seat Adjustment 3-4
Steering Fluid 10-28
Windows 2-20
Pregnancy, Using Safety
Belts 3-18
Privacy
Vehicle Data Recording 13-14
Program
Courtesy Transportation 13-7
Proposition 65 Warning,
California 10-3

R

Radio Frequency
Identification (RFID) 13-12
Radio Frequency
Statement 13-12
Radios
AM-FM Radio 7-8
Reception 7-10
Satellite 7-10
Reading Lamps 6-7
Rear Axle 10-35
Locking 9-56
Rear Seats 3-10, 3-11
Rear Windows 2-22
Rearview Mirrors 2-19
Automatic Dimming 2-19
Reclining Seatbacks 3-5
Recommended Fluids and
Lubricants 11-12
Records
Maintenance 11-16
Recreational Vehicle
Towing 10-95
Reimbursement Program,
GM Mobility 13-5
Remote Keyless Entry (RKE)
System 2-4
Remote Vehicle Start 2-6
Replacement
Glass 10-39
Replacement Bulbs 10-43
Replacement Parts
Airbags 3-36
Maintenance 11-15
Replacing Airbag System 3-36
Replacing LATCH System
Parts after a Crash 3-57
Replacing Safety Belt
System Parts after a Crash ... 3-20
Reporting Safety Defects
Canadian Government 13-13
General Motors 13-13
U.S. Government 13-12
Restraints
Where to Put 3-43
Retained Accessory
Power (RAP) 9-28
Reverse Tilt Mirrors 2-18

Ride Control Systems
Messages 5-40
Roads
Driving, Wet 9-11
Roadside Assistance
Program 13-5
Roof
Sunroof 2-23
Rotation, Tires 10-69
Routing, Engine Drive Belt 12-5
Running the Vehicle While
Parked 9-34

S

Safety Belts 3-12
Care 3-19
Extender 3-19
How to Wear Safety Belts
Properly 3-13
Lap Belt 3-18
Lap-Shoulder Belt 3-14
Messages 5-42
Reminders 5-17
Replacing after a Crash 3-20
Use During Pregnancy 3-18
Safety Defects Reporting
Canadian Government 13-13
General Motors 13-13
U.S. Government 13-12
Safety Locks 2-9
Safety System Check 3-19
Satellite Radio 7-10
Scheduling Appointments 13-7
SD Card Reader 7-20
Seats
Adjustment, Front 3-3
Center Seat 3-3
Head Restraints 3-2
Lumbar Adjustment, Front 3-4
Memory 3-7
Power Adjustment, Front 3-4
Rear 3-10, 3-11
Reclining Seatbacks 3-5
Securing Child
Restraints 3-57, 3-61
Security
Light 5-29
Messages 5-42
OnStar® 14-3
Vehicle 2-11
Vehicle Alarm 2-11
Service 8-10
Accessories and
Modifications 10-3
Doing Your Own Work 10-4
Engine Soon Light 5-21
Maintenance Records 11-16
Maintenance, General
Information 11-1
Parts Identification Label 12-1
Publications Ordering
Information 13-11
Scheduling Appointments 13-7
Services
Special Application 11-8
Servicing the Airbag 3-34
Shift Lock Control Function
Check, Automatic
Transmission 10-37
Shifting
Into Park 9-30
Out of Park 9-31
Signals, Turn and
Lane-Change 6-4
Snow Plow 9-101
Software Updates 7-8
Special Application Services ... 11-8

Specifications and
Capacities 12-2
Speedometer 5-13
StabiliTrak
OFF Light 5-27
Start Assist, Hills 9-53
Start Vehicle, Remote 2-6
Starter Switch Check 10-37
Starting the Engine 9-26
Steering 9-4
Fluid, Power 10-28
Heated Wheel 5-4
Wheel Adjustment 5-2
Wheel Controls 5-3
Steering System Messages 5-42
Stoplamps and Back-up Lamps
Bulb Replacement 10-41
Storage Areas
Center Console 4-3
Floor Console 4-4
Glove Box 4-2
Instrument Panel 4-1
Sunglasses 4-3
Storage Compartments 4-1
Stuck Vehicle 9-14
Sun Visors 2-23
Sunglass Storage 4-3
Sunroof 2-23
Switches
Airbag On-Off 3-27
Symbols iv
System
Forward Collision
Alert (FCA) 9-63
Infotainment 7-1, 13-15
Noise Control 10-36
Systems
Driver Assistance 9-60

T

Tachometer 5-13
Tailgate 2-10
Taillamps 10-41
Bulb Replacement 10-41
Teen Driver 7-48
Text Telephone (TTY) Users . . . 13-4
Theft-Deterrent Systems 2-13
Immobilizer 2-12
Throttle, Adjustable 9-23
Time 5-5
Tires 10-53
All-Season 10-54
All-Terrain 10-55
Buying New Tires 10-73
Chains 10-78
Changing 10-80
Designations 10-58
Different Size 10-74
Dual Rotation 10-71
Full-Size Spare 10-90
If a Tire Goes Flat 10-79
Inflation Monitor System 10-65
Inspection 10-69
Low Profile 10-55
Messages 5-43
Pressure 10-64
Pressure Light 5-28
Pressure Monitor System . . . 10-64
Rotation 10-69
Sidewall Labeling 10-56
Terminology and
Definitions 10-60
Uniform Tire Quality
Grading 10-75
Wheel Alignment and Tire
Balance 10-76

Tires (cont'd)
Wheel Replacement 10-77
When It Is Time for New Tires 10-72
Winter 10-55
Tow/Haul Mode 9-39
Tow/Haul Mode Light 5-26
Towing
Driving Characteristics 9-73
Equipment 9-90
General Information 9-73
Recreational Vehicle 10-95
Trailer 9-76
Trailer Sway Control (TSC) 9-100
Vehicle 10-95
Traction
Control System (TCS)/ StabiliTrak® Light 5-27
Off Light 5-27
Traction Control/Electronic Stability Control 9-54
Trademarks and License Agreements 7-50
Trailer
Sway Control (TSC) 9-100
Tow Mirrors 2-14
Towing 9-76
Transfer Case 9-42
Transmission
Automatic 9-34
Fluid, Automatic 10-15, 10-18
Fluid, Manual 10-19
Messages 5-44
Transportation Program, Courtesy 13-7
Trip Odometer 5-13
Truck-Camper Loading Information 9-21
Turn and Lane-Change Signals 6-4
Turn Signal
Bulb Replacement 10-41

U

Uniform Tire Quality Grading 10-75
Universal Remote System 5-54
Operation 5-56
Programming 5-54
Updates
Software 7-8
USB Port 7-18
Using This Manual iii

V

Vehicle
Alarm System 2-11
Canadian Owners iii
Control 9-3
Identification Number (VIN) 12-1
Load Limits 9-15
Messages 5-35
Personalization 5-47
Reminder Messages 5-45
Remote Start 2-6
Security 2-11
Speed Messages 5-46
Towing 10-95
Vehicle Ahead Indicator 5-26
Vehicle Care
Tire Pressure 10-62
Vehicle Data Recording and Privacy 13-14

Vehicle Diagnostics
OnStar® 14-6
Ventilation, Air 8-8
Visors 2-23
Voice Recognition 7-24
Voltmeter Gauge 5-16

W

Warning
Brake System Light 5-24
Lane Departure (LDW) 9-66
Warning Lights, Gauges, and
Indicators 5-9
Warnings iv
Cautions and Danger iv
Hazard Flashers 6-4
Washer Fluid 10-29
Messages 5-46
Wheels
Alignment and Tire
Balance 10-76
Different Size 10-74
Replacement 10-77
When It Is Time for New
Tires 10-72
Where to Put the Restraint 3-43
Windows 2-19
Manual 2-20
Power 2-20
Rear 2-22
Windshield
Wiper/Washer 5-4
Winter
Driving 9-12
Winter Tires 10-55
Wiper Blade Replacement 10-38