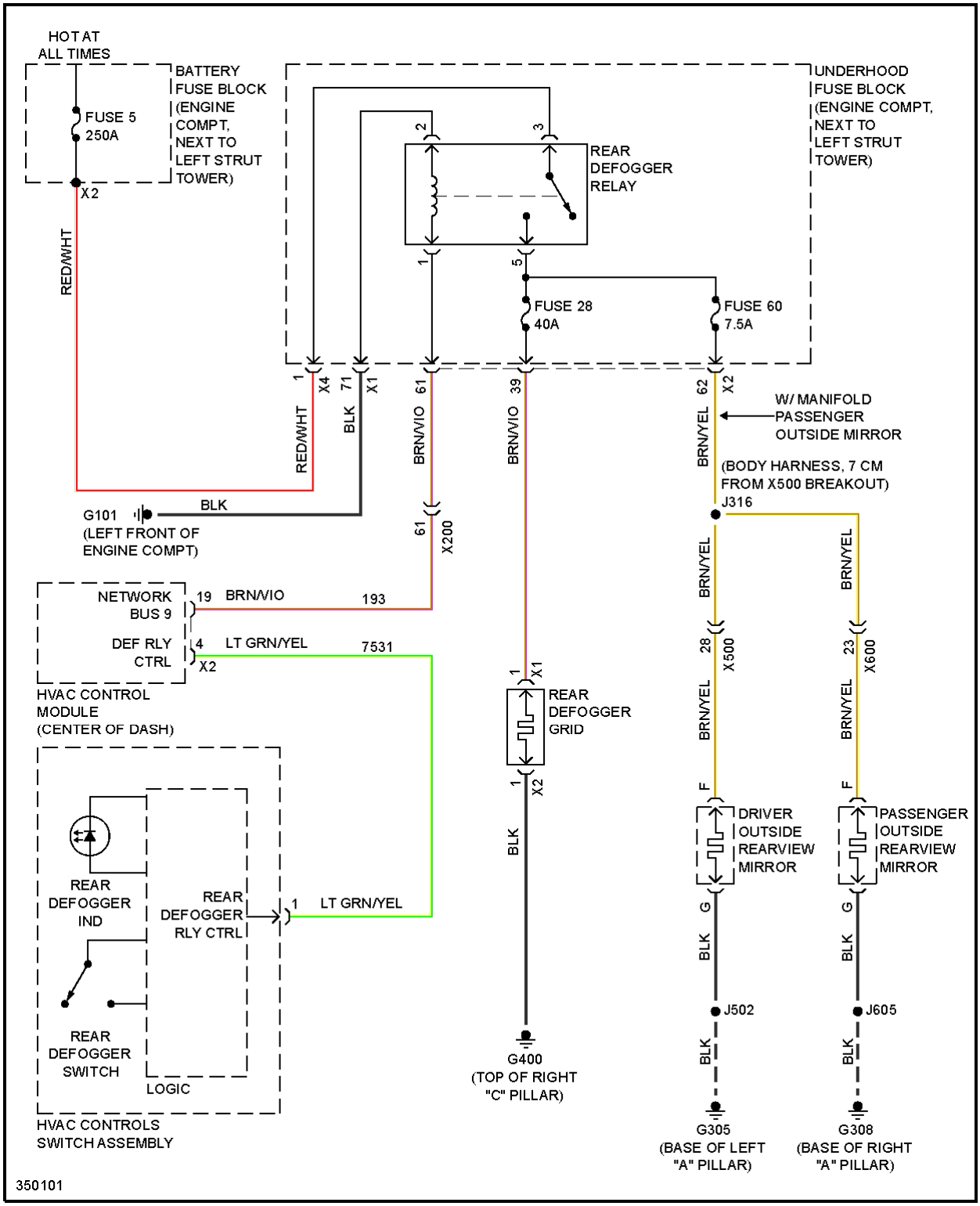


**Fig. 16: Defoggers Circuit**

cardiagn.com

# ELECTRONIC POWER STEERING

cardiagn.com