Workshop Manual

Audi A6 2005 ➤
Audi A8 2003 ➤

Servicing automatic gearbox 09E, four-wheel drive

Edition 12.2011

Protected by copyright. Copying for private or commercial purposes, in part or in whole, is not permitted unless authorised by AUDI AG. AUDI AG does not guarantee or accept any liability with respect to the correctness of information in this document. Copyright by AUDI AG.

List of Workshop Manual Repair Groups

Protected by copyright. Copying for private or commercial purposes, in part or in whole, is not permitted unless authorised by AUDI AG. AUDI AG does not guarantee or accept any liability with respect to the correctness of information in this document. Copyright by AUDI AG.

Repair Group

00 - Technical data
32 - Torque converter
37 - Controls, housing
38 - Gears, control
39 - Final drive - front differential

Technical information should always be available to the foremen and mechanics, because their careful and constant adherence to the instructions is essential to ensure vehicle road-worthiness and safety. In addition, the normal basic safety precautions for working on motor vehicles must, as a matter of course, be observed.

All rights reserved.
No reproduction without prior agreement from publisher.

Copyright © 2015 Audi AG, Ingolstadt

D3E804A684B

Contents

00 - Technical data 1
- **1 Repair instructions** 1
- 1.1 General repair instructions 1
- 1.2 Special tools 3
- **2 Rules for cleanliness when working on the gearbox** 11
- **3 Common faults** 12
- 3.1 Jolting on overrun, delayed gear engagement when shifting to „D“ or „R“ when stationary, in some cases sporadic fault in event memory „Reverse gear“ 12
- 3.2 Defective stator shaft bushes 13
- 3.3 Jolting under power and on overrun, entry in event memory „Torque converter lock-up clutch, no transmission“ 14
- **4 Gearbox adaption for vehicles from model year 2006 onwards** 15

32 - Torque converter 17
- **1 Torque converter** 17
- 1.1 Draining torque converter 17
- 1.2 Checking torque converter 17

37 - Controls, housing 18
- **1 Securing gearbox to assembly stand** 18
- **2 Dismantling and assembling planetary gearbox** 19
- 2.1 Planetary gearbox - exploded view 19
- 2.2 Dismantling and assembling planetary gearbox 20
- **3 Dismantling and assembling body „I“** 47
- 3.1 Body „I“ - exploded view 47
- 3.2 Clutch „C“ - exploded view 49
- 3.3 Dismantling and assembling clutch „C“ 50
- 3.4 Piston/cylinder „D“ - exploded view 53
- 3.5 Dismantling and assembling piston/cylinder „D“ 54
- 3.6 Adjusting clearance of clutch „D“ 57
- 3.7 Planetary drive „II“ and „III“ - exploded view 60
- 3.8 Dismantling and assembling planetary drive „II“ and „III“ 61
- **4 Dismantling and assembling clutch „B“** 66
- 4.1 Clutch „B“ - exploded view 66
- 4.2 Dismantling and assembling clutch „B“ 67
- **5 Dismantling and assembling body „II“** 72
- 5.1 Body „II“ - exploded view 72
- 5.2 Dismantling body „II“ 73
- 5.3 Clutch „A“ - exploded view 75
- 5.4 Dismantling and assembling clutch „A“ 76
- 5.5 Clutch „E“ - exploded view 81
- 5.6 Dismantling and assembling clutch „E“ 82
- 5.7 Assembling body „II“ 87

38 - Gears, control 90
- **1 Oil pan, ATF strainer and mechatronic unit - exploded view** 90
- 1.1 Removing and installing oil pan 92
- 1.2 Removing and installing ATF strainer 96
- 1.3 Removing and installing mechatronic unit - gearbox with 24 bolts on oil pan 98
- 1.4 Removing and installing mechatronic unit - gearbox with 13 bolts on oil pan 101
- 1.5 Removing and installing wiring harness in gearbox 104
- **2 Dismantling and assembling ATF supply unit** 107

Any use for commercial purposes, in part or in whole, is not permitted unless authorised by AUDI AG. AUDI AG does not guarantee or accept any liability with respect to the correctness of information in this document. Copyright by AUDI AG.

2.1 ATF supply unit - exploded view . . . 107
2.2 Renewing oil seal for torque converter . . . 108
2.3 Removing and installing ATF supply unit . . . 110
2.4 Removing and installing ATF pump in ATF supply unit . . . 121
2.5 Removing and installing needle bearing for torque converter . . . 123

39 - Final drive - front differential . . . 125

1 Servicing front final drive . . . 125
1.1 Front final drive - exploded view . . . 125
1.2 Removing and installing flange shaft (right-side) with gearbox removed . . . 126
1.3 Removing and installing flange shaft (left-side) . . . 127
1.4 Renewing oil seal for flange shaft (right-side) . . . 130
1.5 Renewing oil seal between final drive and gearbox housing . . . 130
1.6 Renewing O-ring on cover for front final drive . . . 133
1.7 Renewing oil seals for side shaft - gearbox with separate oil systems . . . 134
1.8 Renewing O-rings for protective tube for side shaft - gearbox with common oil system . . . 145
1.9 Renewing oil seal for selector shaft . . . 154

2 Servicing transfer box . . . 156
2.1 Exploded view - centre differential . . . 156
2.2 Removing and installing centre differential housing with gearbox removed . . . 157
2.3 Renewing ball bearing for self-locking centre differential . . . 159
2.4 Renewing oil seal for flange shaft (rear) . . . 160

3 Assessment of wear on gearbox components . . . 163
3.1 Assessment of wear by checking ATF for colour and contamination . . . 163
3.2 Clutch „C“ . . . 163
3.3 Clutch „D“ . . . 165
3.4 Planetary drive „II“ and „III“ . . . 167
3.5 Clutch „B“ . . . 169
3.6 Body „II“ . . . 170
3.7 Clutch „A“ . . . 173
3.8 Clutch „E“ . . . 174
3.9 ATF supply unit . . . 176

Protected by copyright. Copying for private or commercial purposes, in part or in whole, is not permitted unless authorised by AUDI AG. AUDI AG does not guarantee or accept any liability with respect to the correctness of information in this document. Copyright by AUDI AG.

00 – Technical data

1 Repair instructions

Overview

- ⇒ „1.1 General repair instructions“, page 1
- ⇒ „1.2 Special tools“, page 3

1.1 General repair instructions

Proper tools and the maximum possible care and cleanliness are essential for satisfactory repairs. The usual basic safety precautions also naturally apply when carrying out repair work.

A number of generally applicable instructions for the various repair procedures - which were previously repeated at numerous places in the Workshop Manual - are summarised here. They apply to the work described in this Manual.

Protected by copyright. Copying for private or commercial purposes, in part or in whole, is not permitted unless authorised by AUDI AG. AUDI AG does not guarantee or accept any liability with respect to the correctness of information in this document. Copyright by AUDI AG.

Gearbox

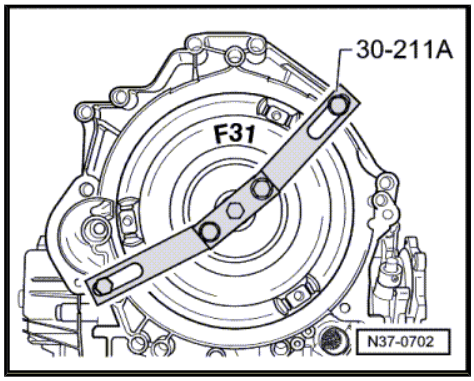

- Rules for cleanliness when working on the automatic gearbox ⇒ page 11
- If the gearbox has been removed from the vehicle and the flange shaft (left-side) then removed, the torque converter must be secured using the support bridge -30 - 211 A- to prevent it from falling out.
- Use only ATF or vaseline on all parts running in ATF. Other lubricants will cause malfunction of the gearbox hydraulics.
- After the gearbox has been overhauled it should be installed and operated as soon as possible to prevent any corrosion forming on the new components.
- After installation, fill up and check all fluid levels. For capacities and specifications refer to ⇒ Automatic gearbox 09E, four-wheel drive; Rep. gr. 00 .

Procedure if ATF is dirty

If the ATF and related components are very dirty (caused by worn clutch linings):

- Dismantle and clean complete gearbox.
- Dismantle and check all clutches.
- Renew torque converter (cannot be cleaned).
- Renew mechatronic unit (cannot be cleaned).
- Clean ATF lines and ATF cooler and renew ATF strainer.

O-rings, seals, oil seals and gaskets

- Always renew O-rings, seals, oil seals and gaskets.
- After removing gaskets and seals, always inspect the contact surface on the housing or shaft for burrs resulting from removal or for other signs of damage.
- The open side of the oil seal should face the side containing the fluid.
- Lightly lubricate the outer circumference and sealing lip of oil seals with ATF before installing.
- Lightly lubricate O-rings with ATF or vaseline before installation to prevent them getting crushed during assembly.
- Use only ATF or vaseline on all parts running in ATF. Other lubricants will cause malfunction of the gearbox hydraulics.
- When installing a new oil seal, position the seal such that the sealing lip does not contact the shaft in the same place as the old seal (make use of installation depth tolerances).
- Completely remove old gaskets, clean sealing surfaces thoroughly and renew gaskets.

Nuts, bolts

- Slacken bolts in reverse sequence to the specified tightening sequence.
- Nuts and bolts which secure covers and housings should be loosened and tightened in diagonal sequence and in stages if no tightening sequence is specified.
- The tightening torques stated apply to non-oiled nuts and bolts.
- Always renew self-locking bolts and nuts.

Protected by copyright. Copying for private or commercial purposes, in part or in whole, is not permitted unless authorised by AUDI AG. AUDI AG does not guarantee or accept any liability with respect to the correctness of information in this document. Copyright by AUDI AG.

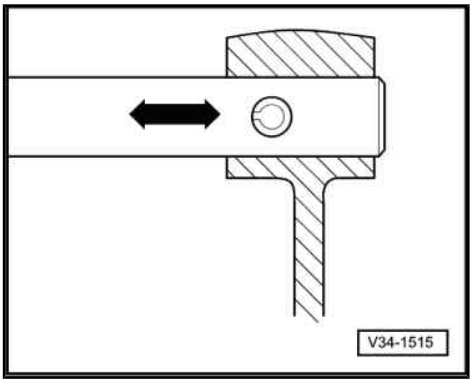

Locking elements

- Do not over-stretch circlips.
- Always renew circlips which have been damaged or over-stretched.
- Circlips must be properly seated in the base of the groove.
- Renew spring pins. Installation position: slot must be in line with direction of force -arrow-.

Bearings

- Lightly lubricate bearings with ATF before inserting.
- Fit bearings and shims loosely with vaseline only. Other types of lubricant will cause the gearbox hydraulics to malfunction.

ATF/oil pipes

- The oil pipes must be renewed if the gearbox is very dirty.

1.2 Special tools

Special tools

List of special tools used in this Workshop Manual ⇒ "Workshop equipment and special tools"

Special tools and workshop equipment required

- Drift -VW 295-
- Support plate -VW 309-
- Measuring bridge -VW 382/7-
- Universal dial gauge bracket -VW 387-
- Thrust plate -VW 401-
- Thrust plate -VW 402-

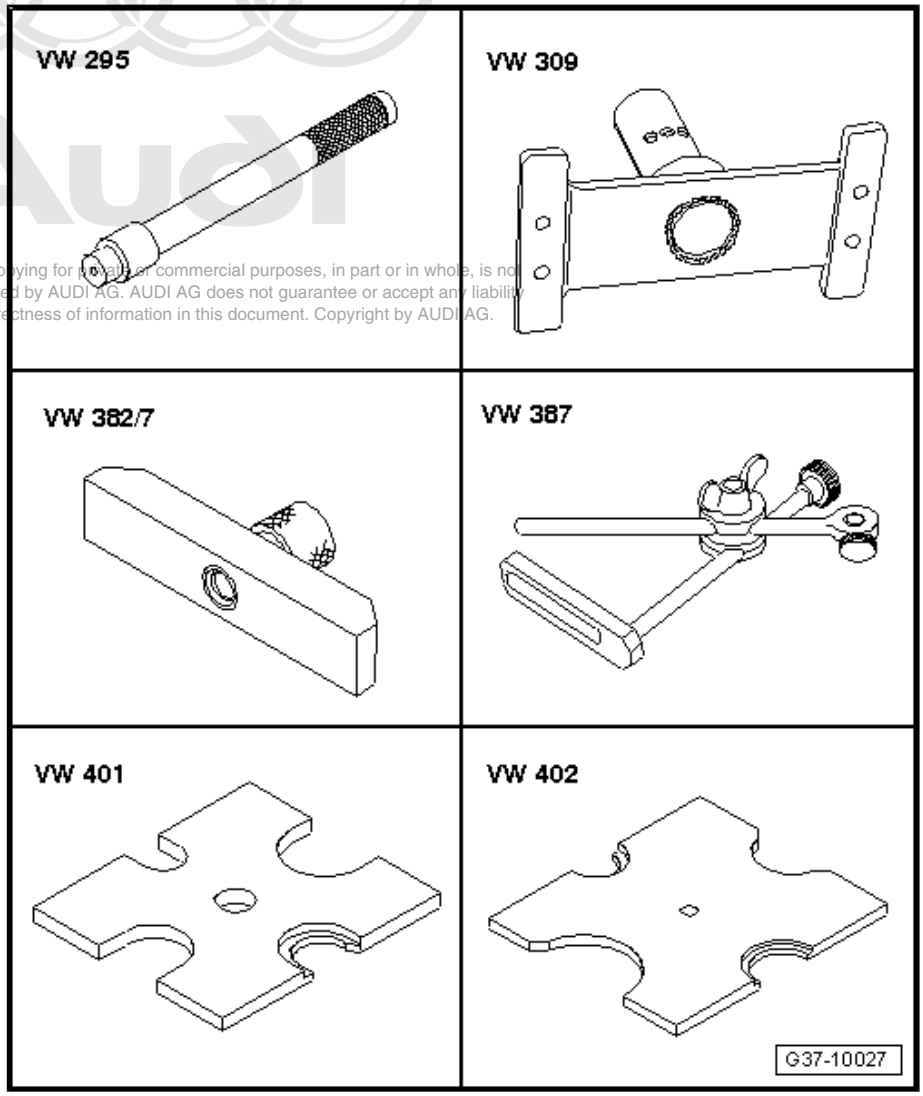

Protected by copyright. Copying for private or commercial purposes, in part or in whole, is not permitted unless authorised by AUDI AG. AUDI AG does not guarantee or accept any liability with respect to the correctness of information in this document. Copyright by AUDI AG.

- Press tool -VW 409-
- Press tool -VW 412-
- Thrust piece -VW 432-
- Thrust plate -VW 447 i-
- Assembly tool -3350-
- Splitter 22 ... 115 mm -Kukko 17/2-

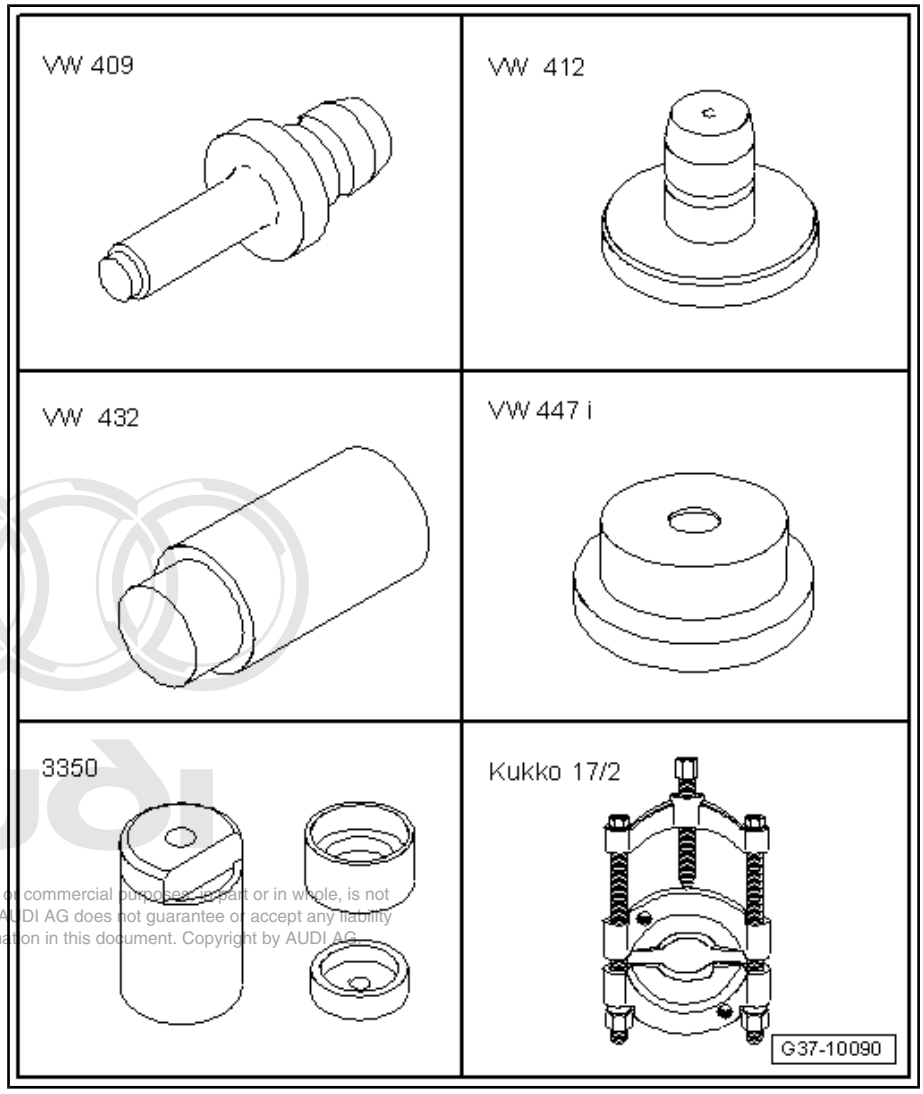

Protected by copyright. Copying for private or commercial purposes, in part or in whole, is not permitted unless authorised by AUDI AG. AUDI AG does not guarantee or accept any liability with respect to the correctness of information in this document. Copyright by AUDI AG.

- Oil seal extractor lever -VW 681-
- Shackle -10 - 222 A/12-
- Support bridge -30 - 211 A-
- Hook and support tool -3311-
- Used oil collection and extraction unit -V.A.G 1782-
- Dial gauge -VAS 6080-

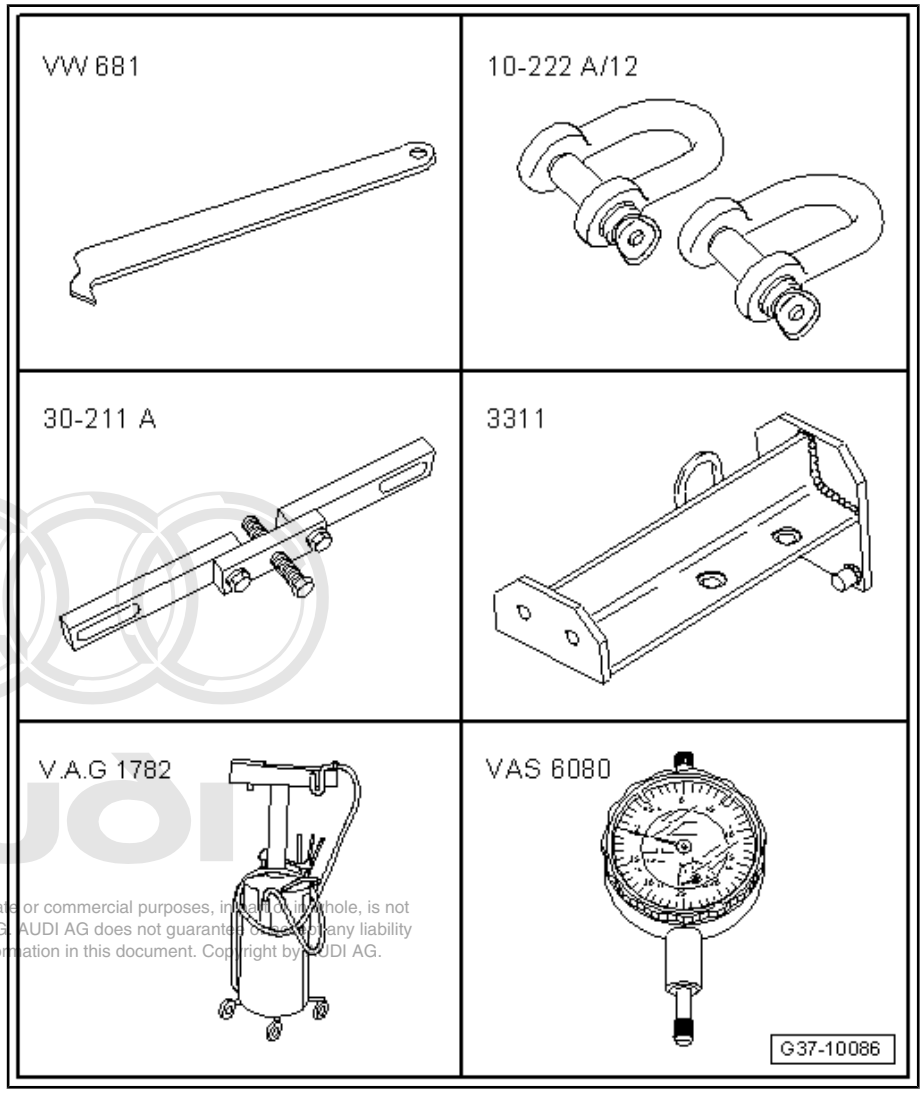

Protected by copyright. Copying for private or commercial purposes, in part or in whole, is not permitted unless authorised by AUDI AG. AUDI AG does not guarantee or assume any liability with respect to the correctness of information in this document. Copyright by AUDI AG.

- Digital depth gauge -VAS 6087-
- Engine and gearbox support -VAS 6095-
- Workshop hoist -VAS 6100-
- Thrust piece -T10137-
- Dial gauge extension -T10170/1-
- Extractor tool -T10271-

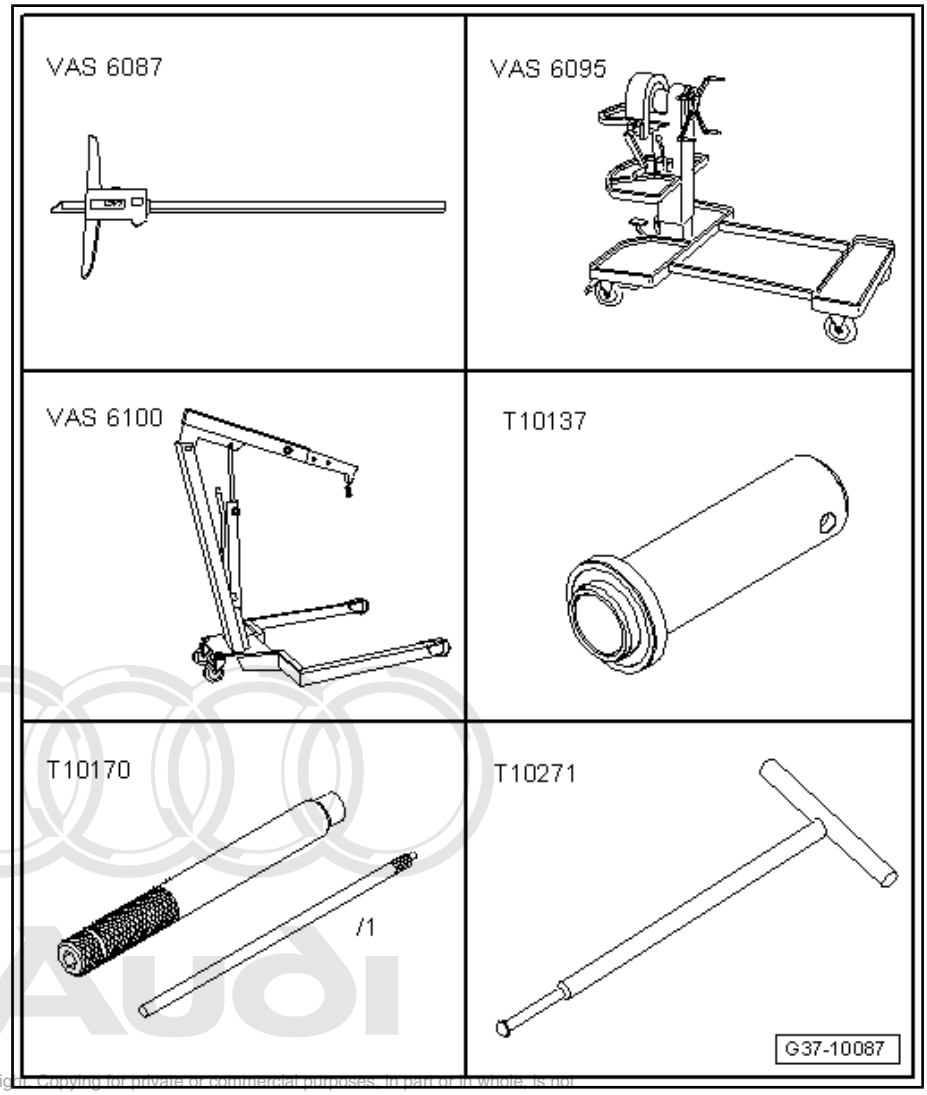

Protected by copyright. Copying for private or commercial purposes, in part or in whole, is not permitted unless authorised by AUDI AG. AUDI AG does not guarantee or accept any liability with respect to the correctness of information in this document. Copyright by AUDI AG.

- Lifting device -T10272-
- Assembly jig -T10277-
- Assembly jig -T10278-
- Plate -T10279-
- Plate -T10281-
- Support -T10283-

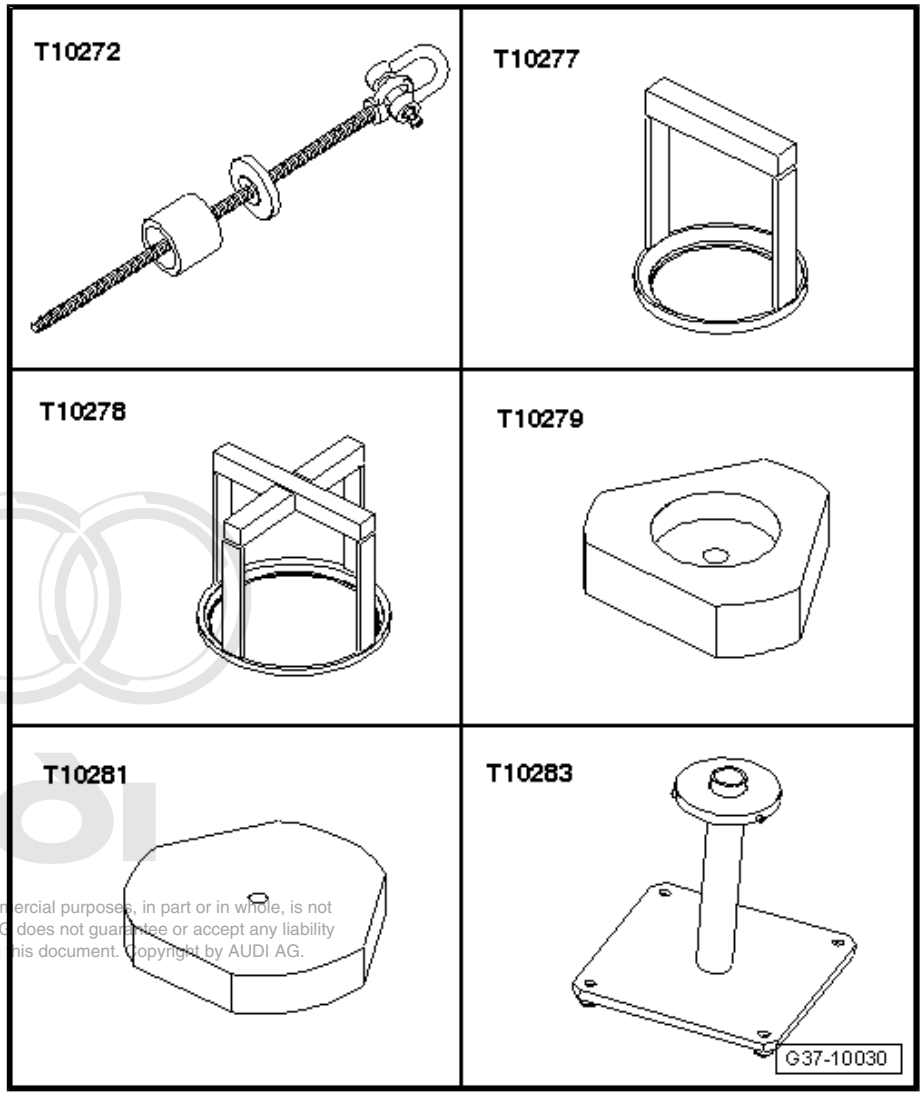

Protected by copyright. Copying for private or commercial purposes, in part or in whole, is not permitted unless authorised by AUDI AG. AUDI AG does not guarantee or accept any liability with respect to the correctness of information in this document. Copyright by AUDI AG.

- Compressor tool -T10285-
- Guide pins M6 -T10288/4-
- Assembly jig -T10289-
- Extractor tool -T20143/2-
- Support -T40118-
- Thrust piece -T40119-

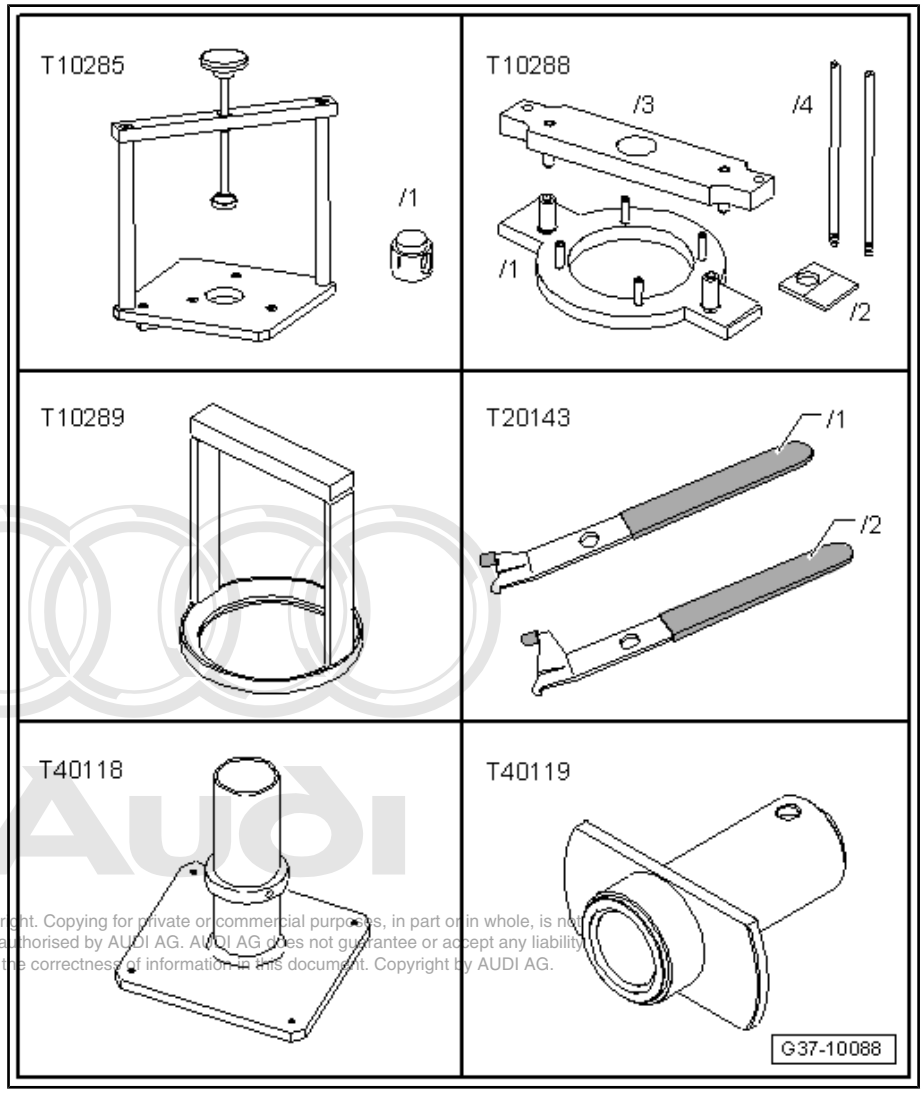

Protected by copyright. Copying for private or commercial purposes, in part or in whole, is not permitted unless authorised by AUDI AG. AUDI AG does not guarantee or accept any liability with respect to the correctness of information in this document. Copyright by AUDI AG.

- Assembly tool -T40120-
- Thrust piece -T40121-
- Thrust piece -T40122-
- Puller for ATF supply unit -T40123-
- Hexagon wrench -T40124-
- -1-internal puller -Kukko 21/5-

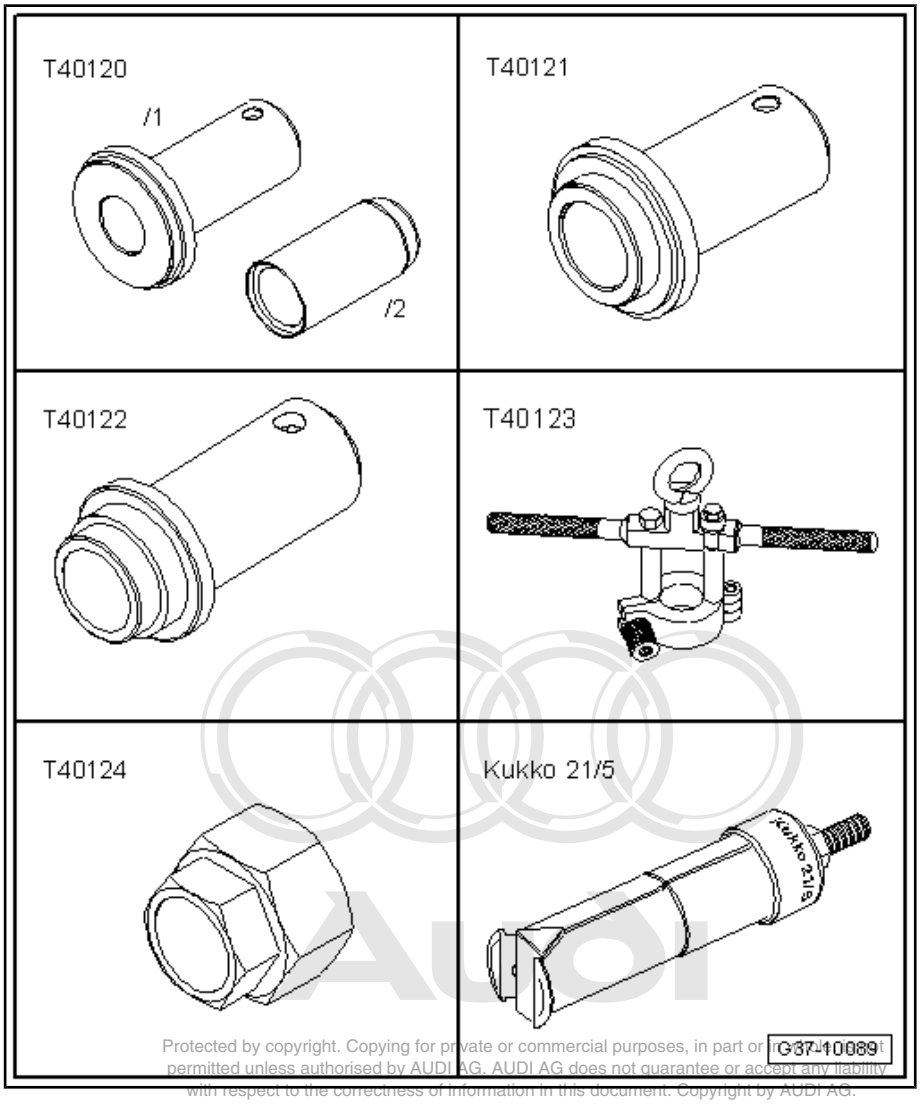

Protected by copyright. Copying for private or commercial purposes, in part or in whole, is not permitted unless authorised by AUDI AG. AUDI AG does not guarantee or accept any liability with respect to the correctness of information in this document. Copyright by AUDI AG.

- Thrust piece -T10135-

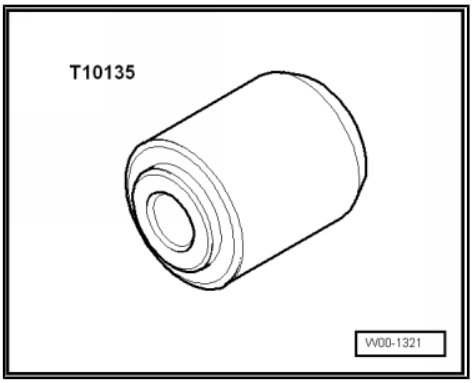

- Fitting tool -T10136-

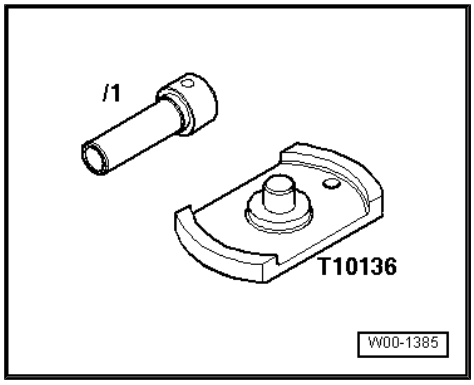

- Thrust piece -T10138-

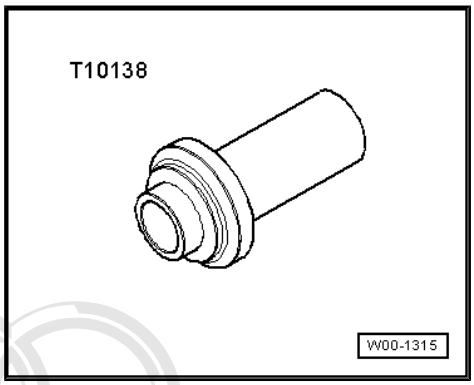

- Thrust piece -T10139-

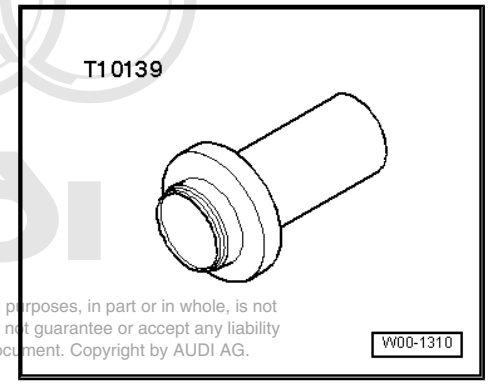

Protected by copyright. Copying for private or commercial purposes, in part or in whole, is not permitted unless authorised by AUDI AG. AUDI AG does not guarantee or accept any liability with respect to the correctness of information in this document. Copyright by AUDI AG.

- Guide pin -T40199-

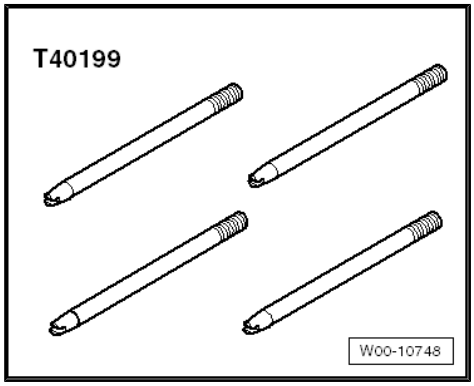

- Hot air blower
- Safety goggles
- Sealing grease -G 052 128 A1-
- Vaseline

2 Rules for cleanliness when working on the gearbox

- Thoroughly clean all joints and connections and the surrounding areas before dismantling.
- Use cleaning fluid -D 009 401 04- to clean the gearbox and its components.
- Use commercially available lint-free cloths for cleaning, such as the „WYPALL X70 / WORKHORSE“ cloth from Kimberly-Clark Professional.
- Seal off open lines and connections immediately with clean plugs or sealing caps from engine bung set -VAS 6122- immediately.
- Place removed parts on a clean surface and cover them over. Use sheeting or lint-free cloths.
- Carefully cover or seal open components if repairs cannot be carried out immediately.
- Only install clean components: do not remove replacement parts from packaging until just before installation.
- Protect unplugged electrical connectors against dirt and moisture and make sure connections are dry when attaching.

Protected by copyright. Copying for private or commercial purposes, in part or in whole, is not permitted unless authorised by AUDI AG. AUDI AG does not guarantee or accept any liability with respect to the correctness of information in this document. Copyright by AUDI AG.

3 Common faults

Overview

- ⇒ „3.1 Jolting on overrun, delayed gear engagement when shifting to D or R when stationary, in some cases sporadic fault in event memory Reverse gear “, page 12
- ⇒ „3.2 Defective stator shaft bushes“, page 13
- ⇒ „3.3 Jolting under power and on overrun, entry in event memory Torque converter lock-up clutch, no transmission “, page 14

Note

- *Before commencing fault-finding, interrogate the event memory of the automatic gearbox control unit -J217- ⇒ Vehicle diagnostic tester.*
- *Also interrogate the event memory of the engine control unit, as fault messages from the engine control unit can lead to malfunctioning of the gearbox ⇒ Vehicle diagnostic tester.*
- *Before commencing fault-finding, check the ATF level ⇒ Automatic gearbox 09E, four-wheel drive; Rep. gr. 37 .*

Preparation for public Quality Control or commercial purposes, in part or in whole, is not permitted unless authorised by AUDI AG. AUDI AG does not guarantee or accept any liability with respect to the correctness of information in this document. Copyright by AUDI AG.

3.1 Jolting on overrun, delayed gear engagement when shifting to „D“ or „R“ when stationary, in some cases sporadic fault in event memory „Reverse gear“

- Possible fault:

ATF pump seized

Water in gearbox

Rectangular section seals worn

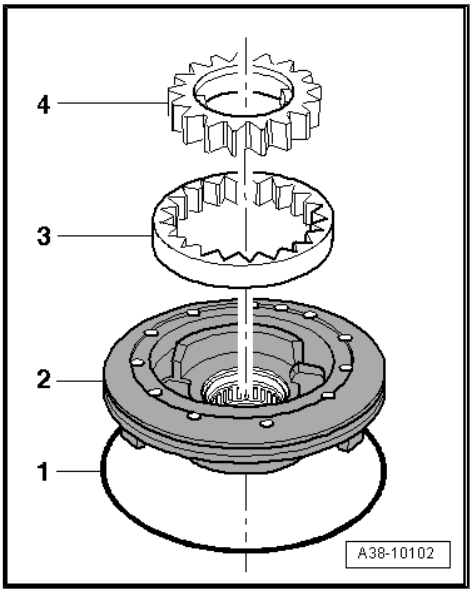

♦ Fault rectification:

– Check following parts of ATF pump and contact surface of ATF supply unit for scoring or seizure marks:

2 - ATF pump housing

3 - Annulus

4 - ATF pump gear

If seizure marks are visible:

– Renew ATF supply unit.

Procedure if ATF is severely contaminated
⇒ „3.1 Assessment of wear by checking ATF for colour and contamination“, page 163 :

– Renew mechatronic unit ⇒ Item 15 (page 92) .

– Renew torque converter (cannot be cleaned).

Note

The mechatronic unit does not have to be renewed if the ATF is only slightly contaminated.

– Dismantle and clean complete gearbox.

– Clean ATF lines and ATF cooler.

– Dismantle and check all clutches.

Note

If the clutches are OK the mechatronic unit does not have to be renewed.

Protected by copyright. Copying for private or commercial purposes, in part or in whole, is not permitted unless authorised by AUDI AG. AUDI AG does not guarantee or accept any liability with respect to the correctness of information in this document. Copyright by AUDI AG.

3.2 Defective stator shaft bushes

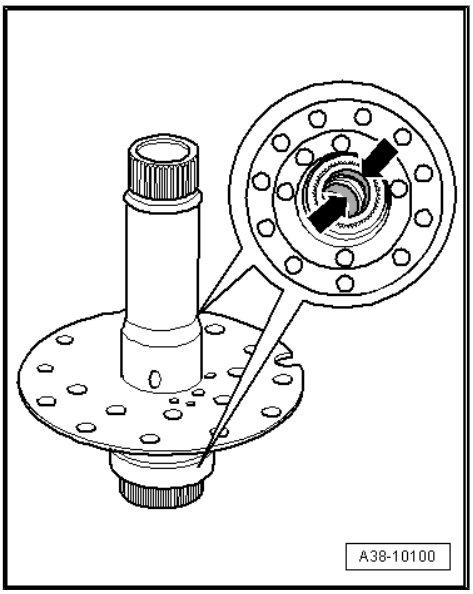

♦ Possible fault:

Brass bushes on stator shaft have seized, causing failure of clutch „E“.

♦ Fault rectification:

– Check brass bushes -arrows- for scoring and seizure marks.

If seizure marks are visible:

– Renew ATF supply unit with stator shaft.

– Check rectangular section seals and input shaft of clutch „E“.

3.3 Jolting under power and on overrun, entry in event memory „Torque converter lock-up clutch, no transmission“

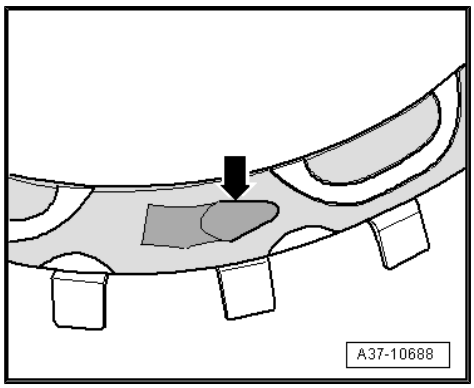

♦ Possible fault:

Lining material on torque converter lock-up clutch split and bent back, so no flush friction surface; pieces of lining broken off (gearbox codes GNT and GNU only).

Note

When the bent-back piece of lining is worn flat the torque converter lock-up clutch may function correctly again for a period of time.

♦ Fault rectification:

– Renew torque converter.

– Renew ATF strainer ⇒ Automatic gearbox 09E, four-wheel drive; Rep. gr. 38

Protected by copyright. Copying for private or commercial purposes, in part or in whole, is not permitted unless authorised by AUDI AG. AUDI AG does not guarantee or accept any liability with respect to the correctness of information in this document. Copyright by AUDI AG.

4 Gearbox adaption for vehicles from model year 2006 onwards

Note

This gearbox adaption is not possible on vehicles before model year 2006. The software of the automatic gearbox control unit - J217- in these vehicles does not support this function.

One of the essentials for optimum and consistent gear shifting, apart from favourable design parameters, is the accurate control of the selector elements. In order to keep the gear shift quality at a consistently high level throughout the service life of the gearbox, it is necessary to continuously adapt various open and closed-loop control parameters and to store the calculated adaption values. This process of adaptation or learning is referred to as adaption.

Protected by copyright. Copying for private or commercial purposes, in part or in whole, is not permitted unless authorised by AUDI AG. AUDI AG does not guarantee or accept any liability with respect to the correctness of information in this document. Copyright by AUDI AG.

The objective of gearbox adaption is to compensate for variations in gearbox components during manufacture (i.e. tolerances) and throughout their service life. The adaption values take the form of offsets which can be added to or subtracted from the applied values permanently stored in the gearbox control unit.

For a detailed description of adaption, please refer to ⇒ Self-study programme No. 385 ; 6-speed automatic gearbox 09L / 0AT / 0B6 / 0BQ / 09E .

When should the adaption values be read / assessed / deleted and when should an adaption drive be performed?

- ♦ Customer complains that gear shifts are rough
- ♦ After an ATF change
- ♦ After repairs to the clutches
- ♦ After installing a replacement mechatronic unit or gearbox
- ♦ After a software update
- ♦ After certain repairs to the engine, e.g. after renewing the air mass meter.

– It is important to follow closely all the instructions, work procedures and conditions in the „Guided Functions“.

– Connect up ⇒ Vehicle diagnostic tester, select „Guided Functions“ and run function „J217 - Adaption values, checking / adaption drive (Rep.Gr.38)“.

Note

- *Before deleting any adaption values, always make an assessment and keep a record of the existing adaption values. Previous adaption values can be an invaluable aid in establishing the condition of the individual clutches and determining how to proceed. It will be easier to establish the cause of the complaint if proper records of the adaption values are kept.*
- *After deleting the adaption values, an adaption drive must be performed using the "Guided Functions" or "Guided Fault Finding". If the adaption drive is not possible, for whatever reason, an extensive road test must be performed. The conditions for the adaption should be met as far as possible, and the quality of every gear shift should be assessed. If certain gear shifts come to notice, the relevant selector elements can be adapted individually.*

Reproduction of this document or parts thereof for commercial purposes, in part or in whole, is not permitted unless authorised by AUDI AG. AUDI AG does not guarantee or accept any liability with respect to the correctness of information in this document. Copyright by AUDI AG.

General adaption conditions

Various driving modes and operating conditions are required to prevail, depending on the type of adaption and which selector element is to be adapted. Consequently, "adaption conditions" are defined for each adaption process.

An adaption can be performed only if the defined adaption conditions have been met.

The criteria below apply during the adaption:

- The ATF temperature must be within a defined range.
- Defined gear or gear shift.
- The engine load must be within a defined range. A very low engine load or a light throttle application is usually required.
- No fault memory entries in the gearbox control unit.
- A particular driving condition must prevail (e.g. throttle applied or overrun mode, constant driving mode, vehicle stopped with engine idling, etc.).
- Good road conditions, best possible road surface, no steep uphill or downhill gradients, flat stretch of road.

32 – Torque converter

1 Torque converter

Overview

- ⇒ „1.1 Draining torque converter“, page 17
- ⇒ „1.2 Checking torque converter“, page 17

1.1 Draining torque converter

Drain the torque converter as follows if the ATF is very dirty due to component wear, or when performing a major gearbox overhaul:

– Extract ATF from torque converter with used oil collection and extraction unit -V.A.G 1782- .

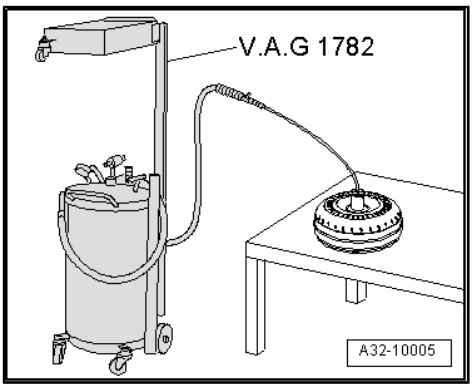

1.2 Checking torque converter

– Check hub -arrow- of torque converter for scoring.

If scoring is visible on the torque converter hub:

– Renew torque converter.

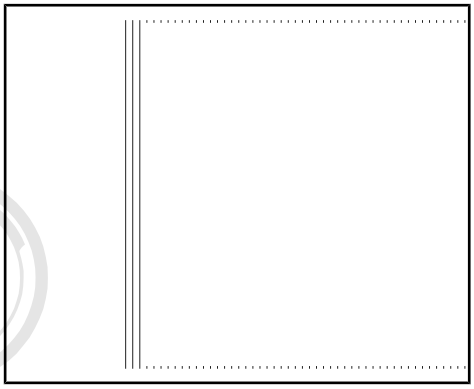

Protected by copyright. Copying for private or commercial purposes, in part or in whole, is not permitted unless authorised by AUDI AG. AUDI AG does not guarantee or accept any liability with respect to the correctness of information in this document. Copyright by AUDI AG.

37 – Controls, housing

1 Securing gearbox to assembly stand

Procedure

- If the flange shaft (left-side) has been removed, the torque converter must be secured using the support bridge -30 - 211 A- to prevent it from falling out.

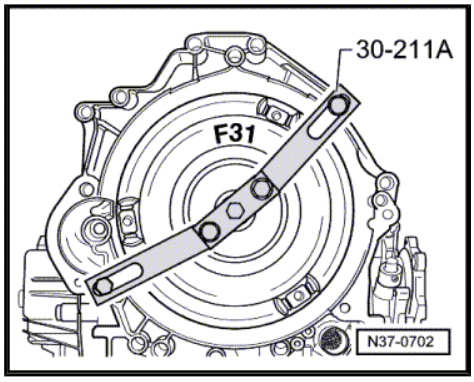

– Attach support plate -VW 309- to hook and support tool -3311- .

– Fit hook and support tool -3311- to attachment points on gearbox housing and secure in place.

– Use workshop hoist -VAS 6100- to attach gearbox to engine and gearbox support -VAS 6095- .

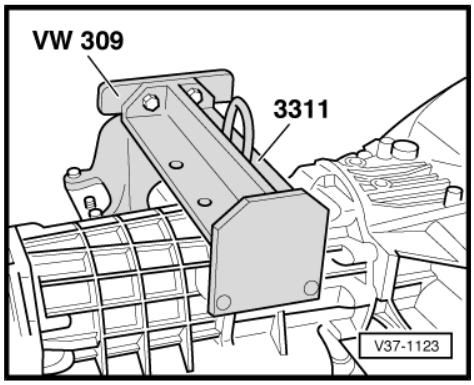

Note

If the filled gearbox with oil pan is to be turned upside-down on the engine and gearbox support, the gearbox housing and final drive breathers must be sealed.

Protected by copyright. Copying for private or commercial purposes, in part or in whole, is not permitted unless authorised by AUDI AG. AUDI AG does not guarantee or accept any liability with respect to the correctness of information in this document. Copyright by AUDI AG.

2 Dismantling and assembling planetary gearbox

Overview

- ⇒ „2.1 Planetary gearbox - exploded view“, page 19
- ⇒ „2.2 Dismantling and assembling planetary gearbox“, page 20

Note

- *General repair instructions ⇒ page 1 .*
- *Rules for cleanliness when working on the automatic gearbox ⇒ page 11*
- *Coat O-rings and seals with ATF or vaseline. Other types of lubricant will cause the gearbox hydraulics to malfunction.*
- *Fit bearings and shims loosely with vaseline only. Other types of lubricant will cause the gearbox hydraulics to malfunction.*

Protected by copyright. Copying for private or commercial purposes, in part or in whole, is not permitted unless authorised by AUDI AG. AUDI AG does not guarantee or accept any liability with respect to the correctness of information in this document. Copyright by AUDI AG.

2.1 Planetary gearbox - exploded view

Note

Some of the components shown are supplied as part of an assembly group and cannot be ordered as separate components ⇒ Electronic parts catalogue .

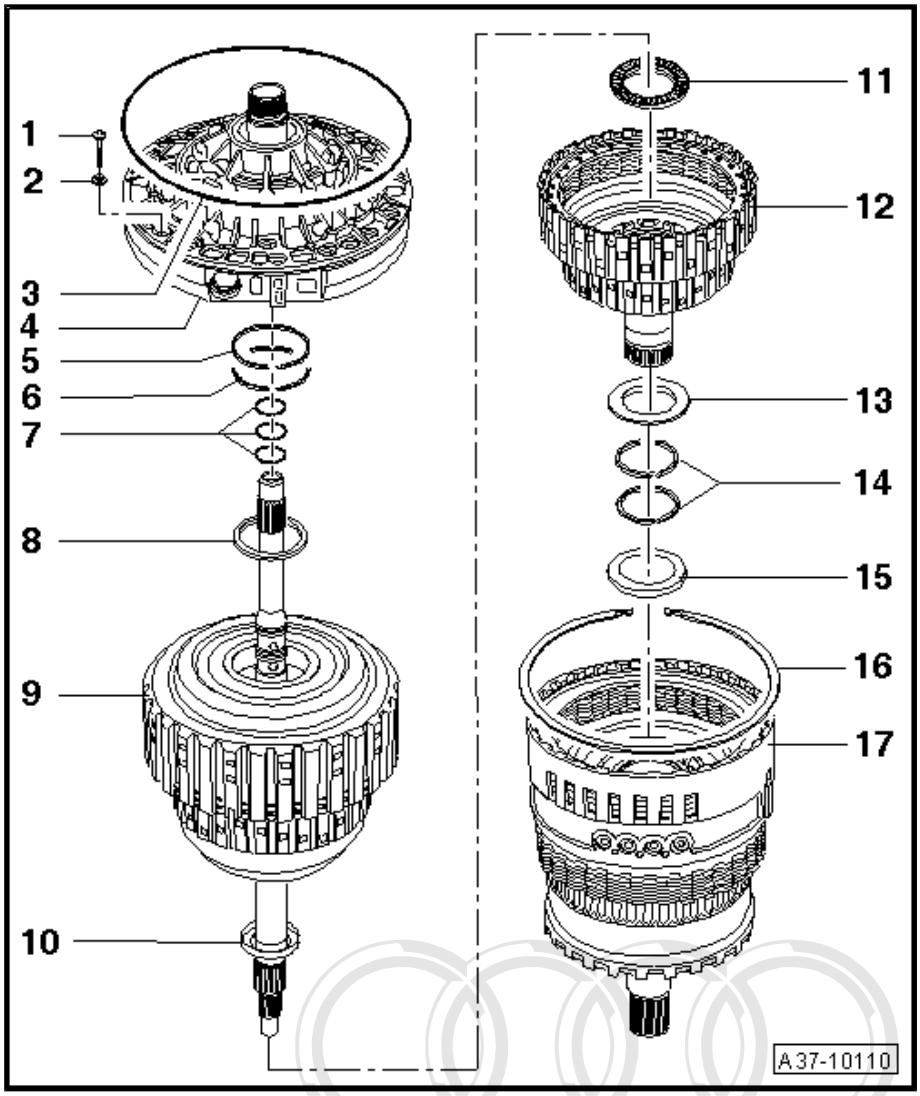

1 - Bolt
- ❑ 10 Nm

2 - Sealing washer
- ❑ Renew

3 - O-ring
- ❑ Renew

4 - ATF supply unit
- ❑ With ATF pump
- ❑ Dismantling and assembling ⇒ page 107

5 - Rectangular section seal
- ❑ For ATF supply unit
- ❑ Renew
- ❑ Hook ends together

6 - Rectangular section seal
- ❑ For ATF supply unit
- ❑ Renew
- ❑ Hook ends together

7 - Rectangular section seals
- ❑ For input shaft
- ❑ Renew

8 - Shim
- ❑ Determining thickness ⇒ page 36

9 - Body „II“
- ❑ Dismantling and assembling ⇒ page 72

10 - Thrust washer

11 - Axial needle bearing

12 - Clutch „B“
- ❑ Dismantling and assembling ⇒ page 67

13 - Axial needle bearing

14 - Rectangular section seals
- ❑ Renew

15 - Flange washer
- ❑ Flange faces downwards towards clutch „C/D“

16 - Circlip
- ❑ For body „I“
- ❑ Must be re-used

17 - Body „I“
- ❑ Dismantling and assembling ⇒ page 47

Protected by copyright. Copying for private or commercial purposes, in part or in whole, is not permitted unless authorised by AUDI AG. AUDI AG does not guarantee or accept any liability with respect to the correctness of information in this document. Copyright by AUDI AG.

2.2 Dismantling and assembling planetary gearbox

Dismantling

– Secure gearbox to assembly stand ⇒ page 18 .

- The gearbox must be horizontal with the ATF oil pan facing downwards.

– Place used oil collection and extraction unit -V.A.G 1782- below gearbox.

– Remove ATF drain plug -arrow A- and allow ATF to drain off.

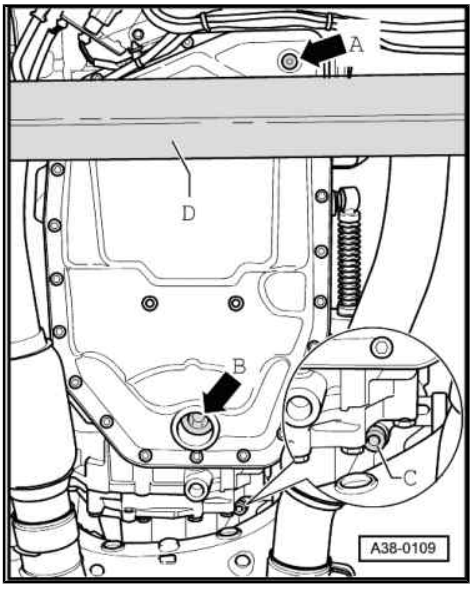

Note

- *Observe relevant disposal regulations.*
- *Some ATF always remains in the oil pan.*
- *-Arrow B- can be disregarded.*

– Remove drain plug -C- and allow gear oil to drain out of front final drive.

– Loosen bolts -arrows- for cover for front final drive in diagonal sequence and remove bolts.

– Catch escaping gear oil using used oil collection and extraction unit -V.A.G 1782- .

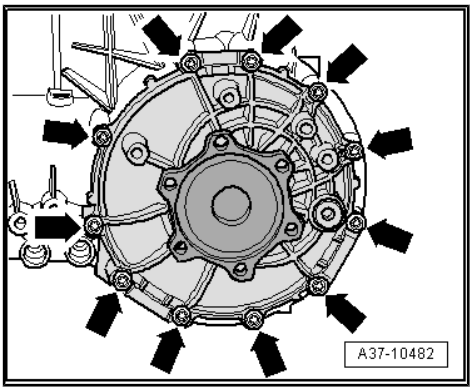

Caution

Risk of accident.

- *The differential is very heavy.*

– Detach cover for front final drive together with differential.

– Place cover for front final drive together with differential on a soft surface.

– Lever flange shaft (right-side) off differential -arrows- using two levers.

– Drive oil seal for flange shaft out of cover for front final drive using a drift.

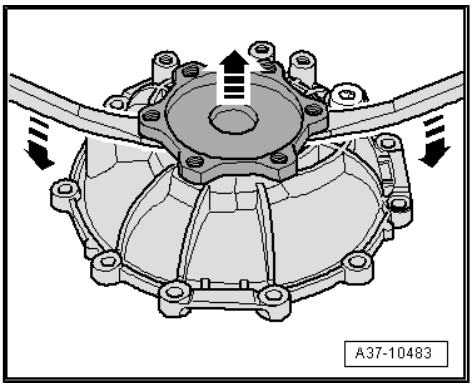

Protected by copyright. Copying for private or commercial purposes, in part or in whole, is not permitted unless authorised by AUDI AG. AUDI AG does not guarantee or accept any liability with respect to the correctness of information in this document. Copyright by AUDI AG.

– Cover splines on flange shaft (left-side) -arrow- with insulating tape to prevent damage to oil seal between final drive and gearbox housing when pulling out flange shaft. Take care to cover the splines completely, without creasing or overlapping the tape.

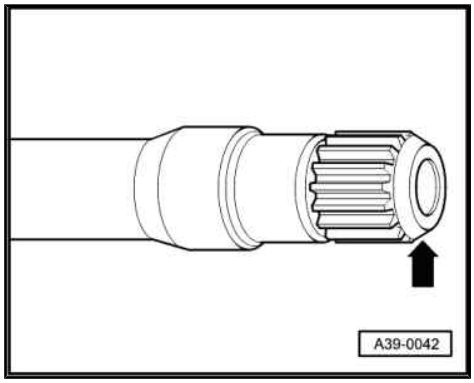

– Remove bolts -arrows- and detach baffle plate.

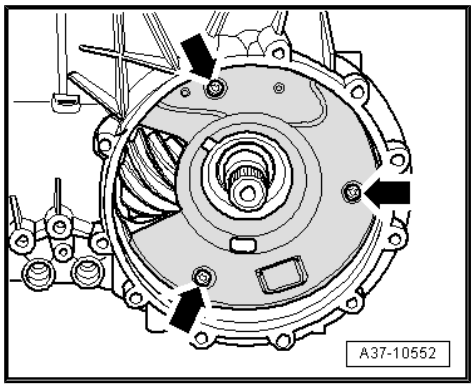

– Remove bolts -arrows- on mounting bracket for flange shaft (left-side).

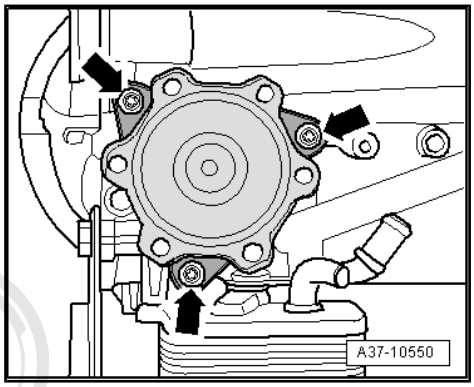

Caution

While pulling out the flange shaft (left-side), it must be held centrally to avoid damaging the oil seal between the final drive and the gearbox housing.

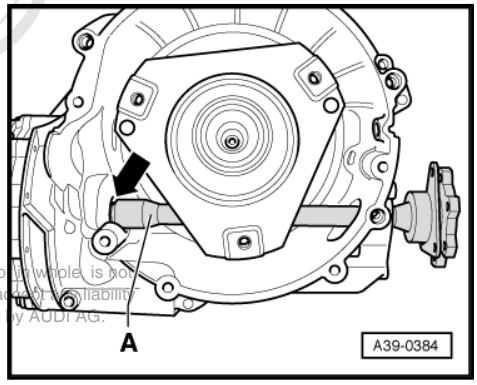

– Pull flange shaft -A- (left-side) out of gearbox, making sure that shaft remains centered in opening at differential -arrow-.
– Remove torque converter.
– Extract ATF from torque converter ⇒ page 17 .

Protected by copyright. Copying for private or commercial purposes, in part or in whole, is not permitted unless authorised by AUDI AG. AUDI AG does not guarantee or accept any liability with respect to the correctness of information in this document. Copyright by AUDI AG.

Caution

The self-locking centre differential can drop out of the gearbox when the centre differential housing is removed.

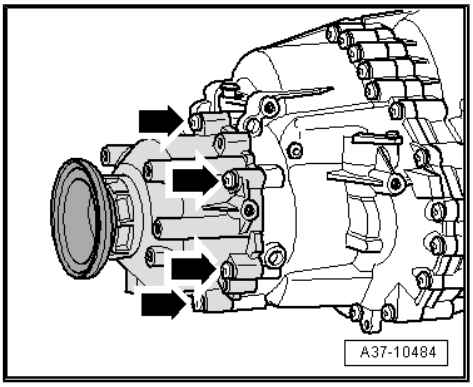

– Loosen bolts -arrows- on housing for centre differential in diagonal sequence and remove bolts.

– Slowly and carefully pull housing for centre differential off gearbox.

– Pull self-locking centre differential -arrow- off input shaft.

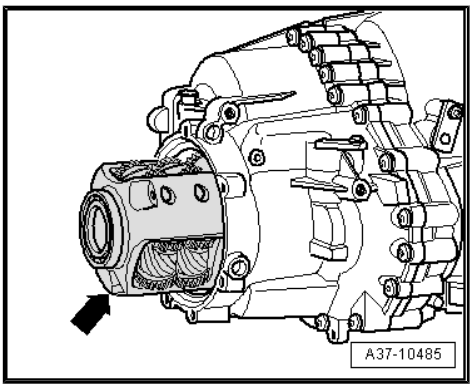

– Take off shim -1-.

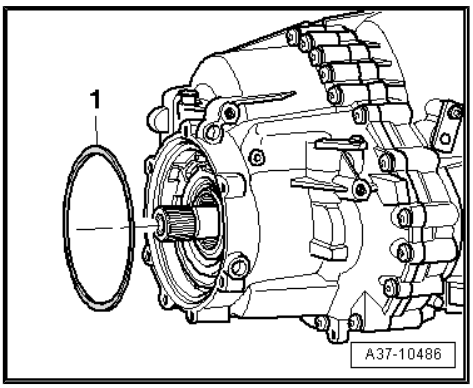

Protected by copyright. Copying for private or commercial purposes, in part or in whole, is not permitted unless authorised by AUDI AG. AUDI AG does not guarantee or accept any liability with respect to the correctness of information in this document. Copyright by AUDI AG.

Gearbox with common gear oil system:

– Unscrew bolt -arrow- and detach oil line from intermediate flange for front axle drive.

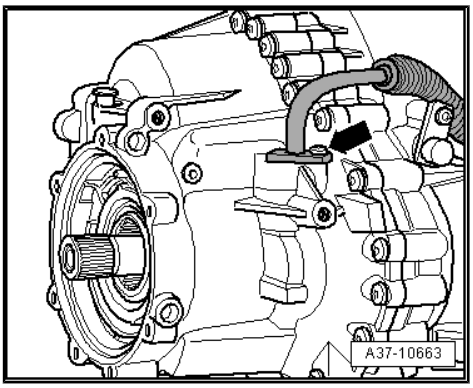

Continued for all gearboxes:

– Slacken bolts on intermediate flange for front axle drive in the sequence -19 ... 1- and remove bolts.

– Take off intermediate flange for front axle drive and gasket.

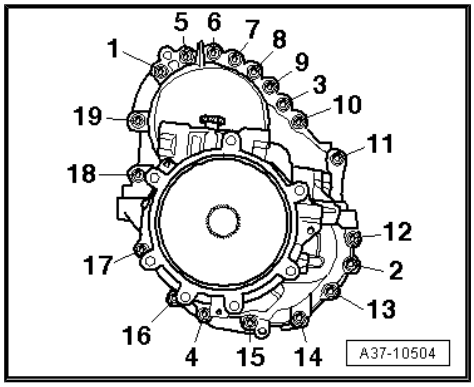

– Take off intermediate pinion for front axle drive -1- with input shaft.

– Take off shims -2- and -3-.

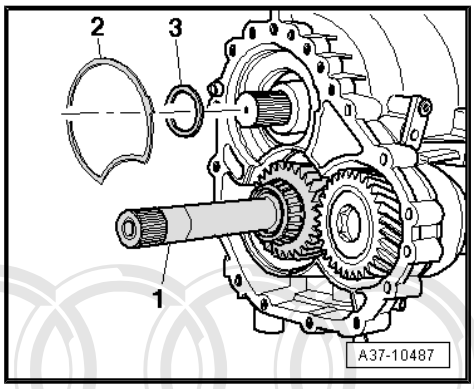

– Remove magnet -arrow- from gearbox housing.

– Turn gearbox on assembly stand.

• The ATF oil pan must face upwards.

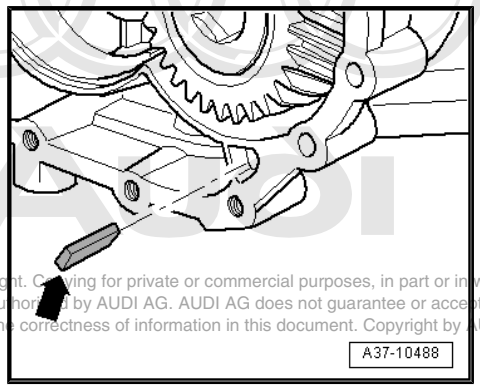

Protected by copyright. Copying for private or commercial purposes, in part or in whole, is not permitted unless authorised by AUDI AG. AUDI AG does not guarantee or accept any liability with respect to the correctness of information in this document. Copyright by AUDI AG.

Gearbox with 24 bolts on ATF oil pan:

– Slacken bolts for ATF oil pan in the sequence -24 ... 1- and remove bolts.

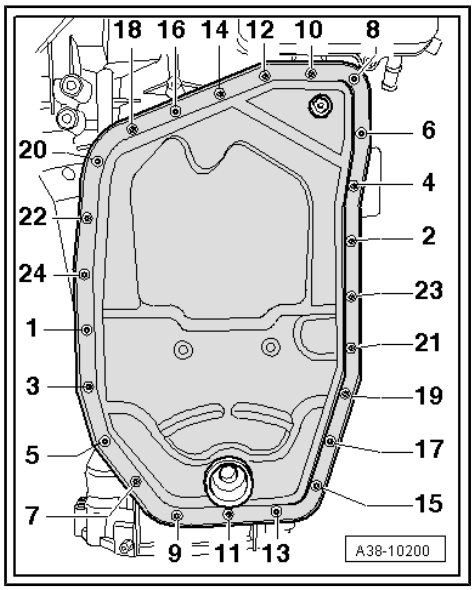

Gearbox with 13 bolts on ATF oil pan:

– Slacken bolts for ATF oil pan in the sequence -13 ... 1- and remove bolts.

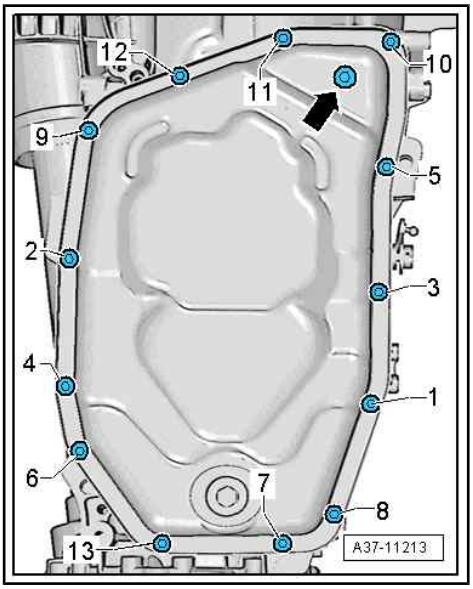

Continued for all gearboxes:

– Take off ATF oil pan and gasket.

Depending on the type of oil pan, with either 13 or 24 bolts:

– Remove mechatronic unit (13 bolts on oil pan)
⇒ „1.4 Removing and installing mechatronic unit - gearbox with 13 bolts on oil pan“, page 101

– Remove mechatronic unit (24 bolts on oil pan)
⇒ „1.3 Removing and installing mechatronic unit - gearbox with 24 bolts on oil pan“, page 98

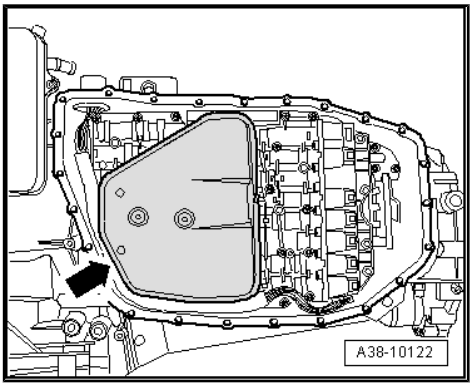

Continued for all vehicles:

– Detach adapter -B- for mechatronic unit.

– Pull out gasket -A- for ATF strainer (if it has not already been removed together with the ATF strainer).

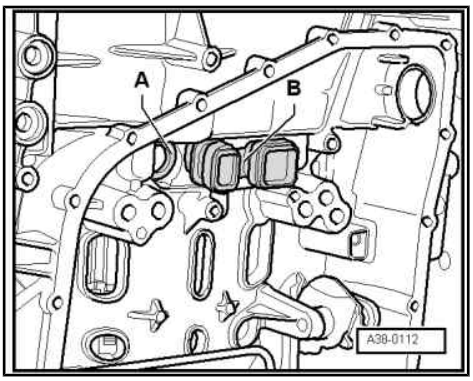

– Pull out a total of four aluminium sleeves -1-.

> ⚠ **Caution**
>
> *The sealing sleeves -2- are of different lengths: note the original positions for re-installation.*

Protected by copyright. Copying for private or commercial purposes, in part or in whole, is not permitted unless authorised by AUDI AG. AUDI AG does not guarantee or accept any liability with respect to the correctness and completeness of this document's contents.

– Pull out a total of four sealing sleeves -2- using extractor tool -T10271- .

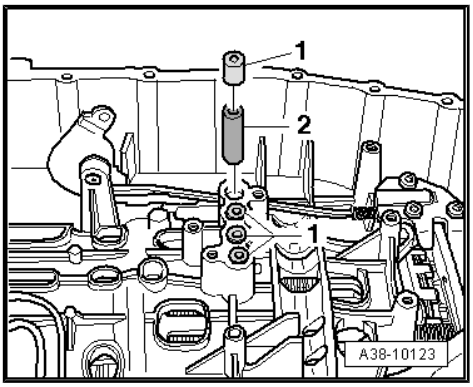

– Turn gearbox on assembly stand.

• The torque converter must face upwards.

– Slacken bolts for ATF supply unit in the sequence -14 ... 1- and remove bolts.

– Remove bolts with sealing washers.

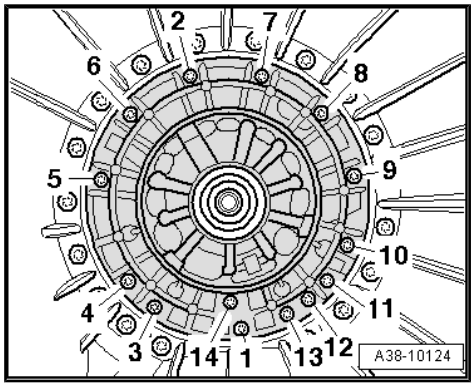

– Apply puller for ATF supply unit -T40123- to stator shaft.

– Detach ATF supply unit.

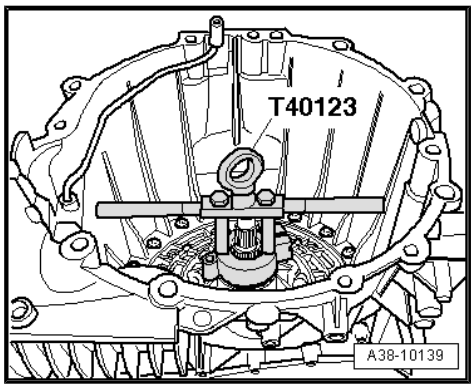

Note

If necessary, release ATF supply unit by tapping gently with a rubber-headed hammer.

– Detach O-ring from ATF supply unit.

– Detach shim -1- from body „II“ using a magnet.

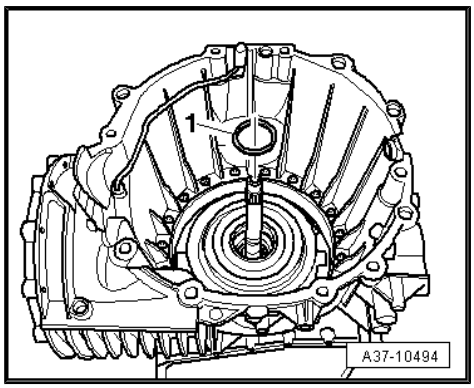

– Lift body „II“ -item 1- out of gearbox housing.

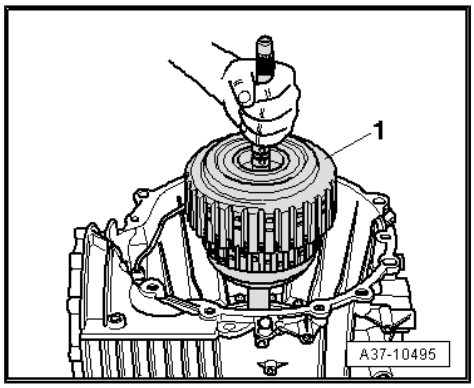

Protected by copyright. Copying for private or commercial purposes, in part or in whole, is not permitted unless authorised by AUDI AG. AUDI AG does not guarantee or accept any liability with respect to the correctness of information in this document. Copyright by AUDI AG.

– Secure support plate of support -T10283- flush with top edge of support tube.
– Turn body „II“ -item 1- through 180° and place on support -T10283- .
• The ATF pump end must face downwards.

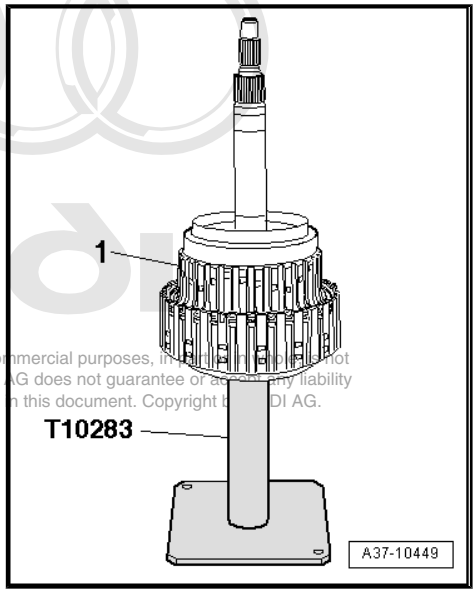

Protected by copyright. Copying for private or commercial purposes, in part or in whole, is not permitted unless authorised by AUDI AG. AUDI AG does not guarantee or accept any liability with respect to the correctness of information in this document. Copyright by AUDI AG.

– Unclip flange washer -1- using two small screwdrivers.

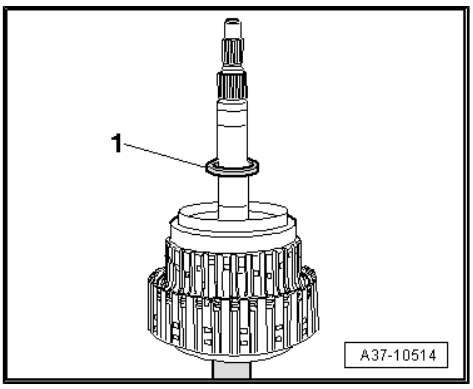

– Take clutch „B“ -item 1- out of gearbox.

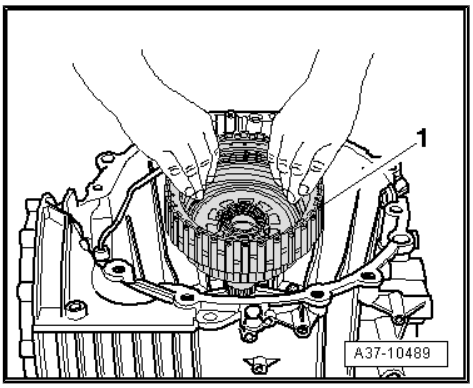

– Detach axial needle bearing -4- from top of clutch „B“ -item 3-.

– Turn clutch „B“ upside down.

– Using two small screwdrivers, unclip axial needle bearing -2- from clutch „B“ -item 3-.

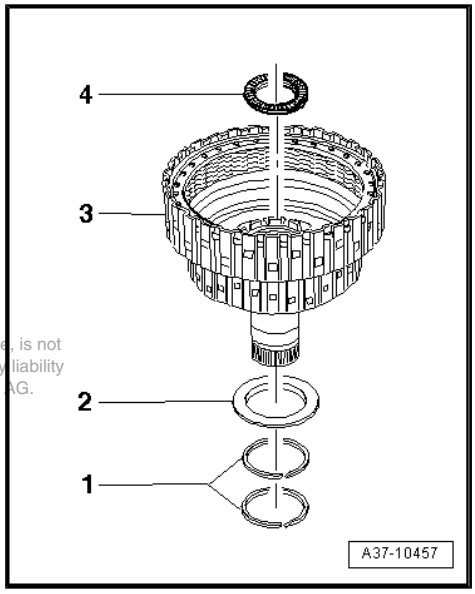

Note

Make sure that the axial needle bearing is unclipped complete with the bearing cage and thrust washer.

Protected by copyright. Copying for private or commercial purposes, in part or in whole, is not permitted unless authorised by AUDI AG. AUDI AG does not guarantee or accept any liability with respect to the correctness of information in this document. Copyright by AUDI AG.

– Detach rectangular section seals -1- from sun gear shaft of body „II“.

– Detach flange washer -1- from clutch „C/D“.

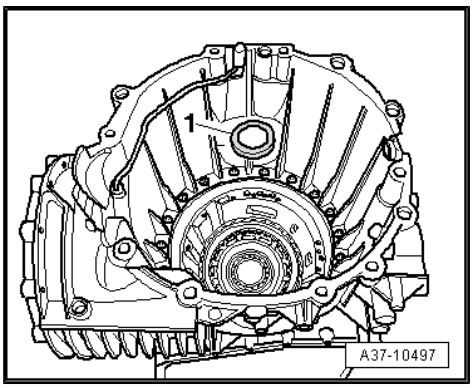

– Remove circlip -arrow- for body „I“.

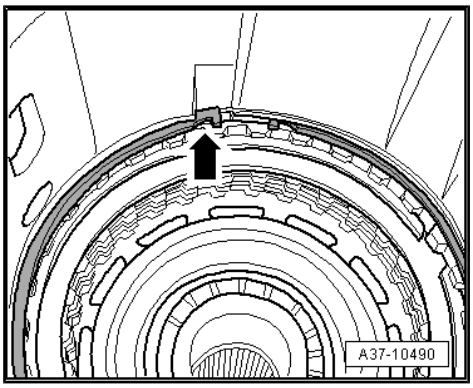

Note

The circlip must be re-used; take care not to over-stretch it on removal.

– Screw threaded spindle -1- of lifting device -T10272- into tapped hole of body „I“ as far as stop.
– Secure components of body „I“ to prevent them being pulled apart (by screwing sleeve -2- all the way down on threaded spindle by hand).
– Connect eye of lifting device -T10272- to workshop hoist -VAS 6100- by means of shackle -10-222 A/12- .
– Lift body „I“ out of gearbox housing using workshop hoist -VAS 6100- .

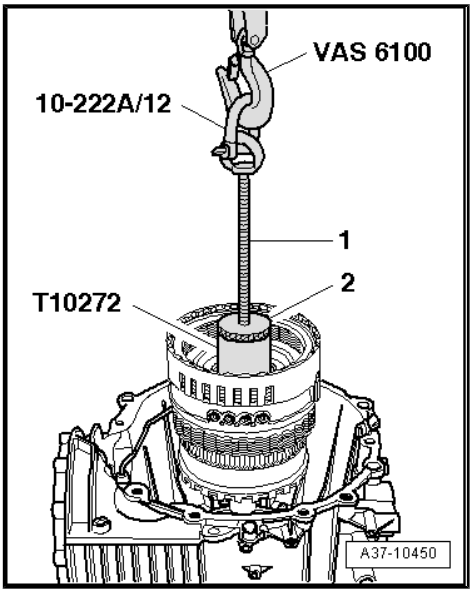

– Place body „I“ on support -T40118- .
– Detach lifting device -T10272- from body „I“ by releasing sleeve -2- and unscrewing threaded spindle -1-.

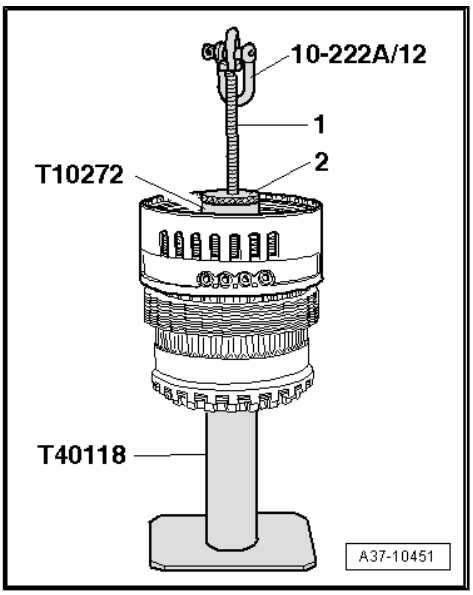

– Detach clutch „C/D“ -item 2- from planetary drive „II“ and „III“ -item 1-.

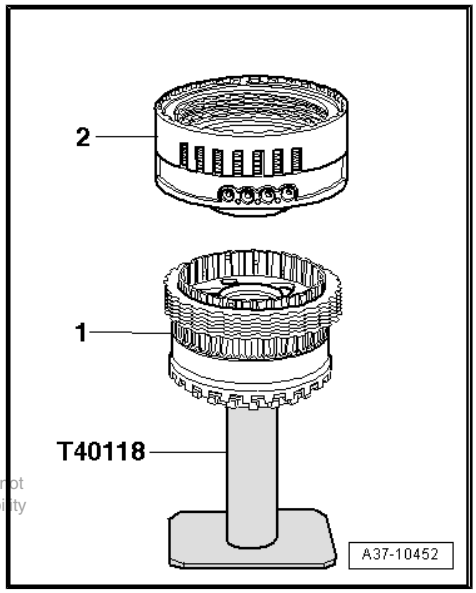

Protected by copyright. Copying for private or commercial purposes, in part or in whole, is not permitted unless authorised by AUDI AG. AUDI AG does not guarantee or accept any liability with respect to the correctness of information in this document. Copyright by AUDI AG.

– Turn clutch „C/D“ upside down.

• Axial needle bearing faces upwards.

– Using two small screwdrivers, unclip axial needle bearing -2- from cylinder „C/D“ -item 1-.

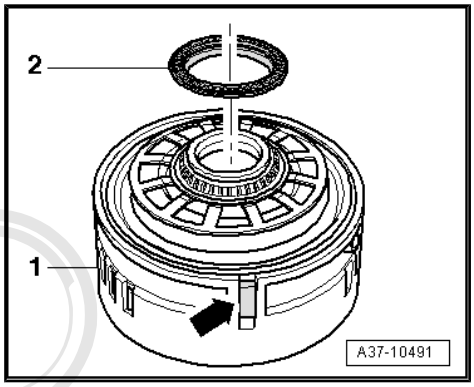

Note

-Arrow- can be disregarded.

– Detach plates of clutch „D“ -item 2- from plate carrier of planetary drive „II“ and „III“ -item 1-.

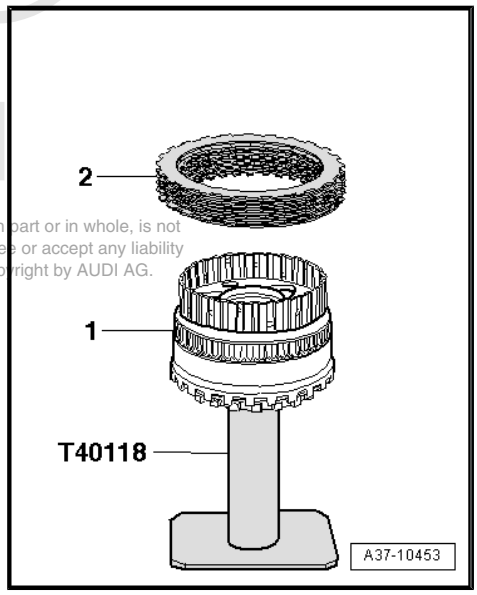

Protected by copyright. Copying for private or commercial purposes, in part or in whole, is not permitted unless authorised by AUDI AG. AUDI AG does not guarantee or accept any liability with respect to the correctness of information in this document. Copyright by AUDI AG.

– Detach flange washer -2- from planetary drive „II“ and „III“ -item 1-.

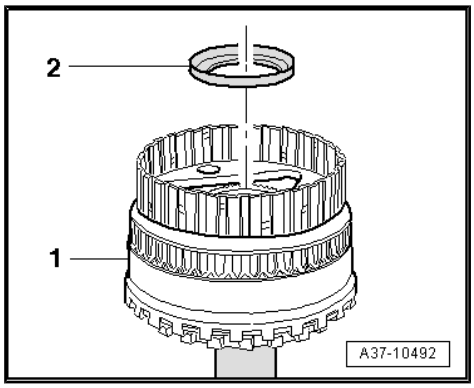

– Turn gearbox on assembly stand.

• The ATF oil pan must face downwards.

Caution

Risk of damage to needle bearing.

♦ *Take care when removing twin-lip oil seal for output shaft.*

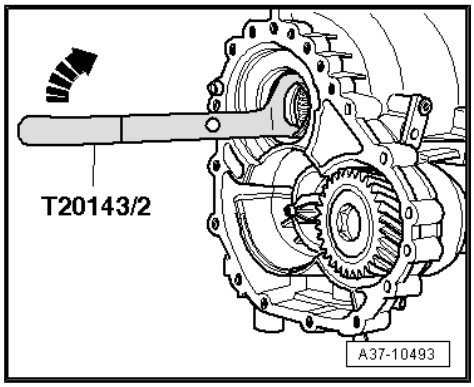

– Pry out twin-lip oil seal for output shaft using extractor tool -T20143/2- .

– Check needle bearing behind oil seal for damage and renew needle bearing if damaged.

Assembling

Note

When installing body „I“, the complete planetary drive „II“ and „III“ is first installed without clutch „C/D“ and without the plates of clutch „D“.

– Fit flange washer -2- on planetary drive „II“ and „III“ -item 1-.

• The flange on the rim of the flange washer faces upwards.

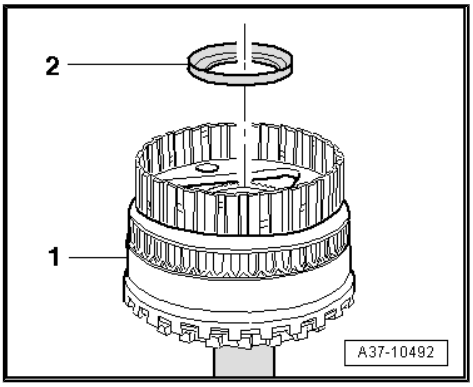

– Screw threaded spindle -1- of lifting device -T10272- into tapped hole of planetary drive „II“ and „III“ as far as stop.

– Secure planetary drive „II“ and „III“ on lifting device by screwing sleeve -2- on threaded spindle by hand all the way down.

– Connect eye of lifting device -T10272- to workshop hoist -VAS 6100- by means of shackle -10 - 222 A/12- .

– Turn gearbox on assembly stand.

• The torque converter must face upwards.

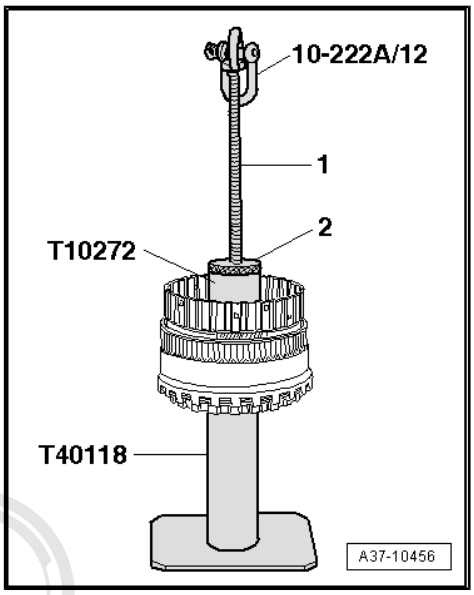

– Lift planetary drive „II“ and „III“ off support -T40118- .

– Lower planetary drive „II“ and „III“ into gearbox housing using workshop hoist -VAS 6100- .

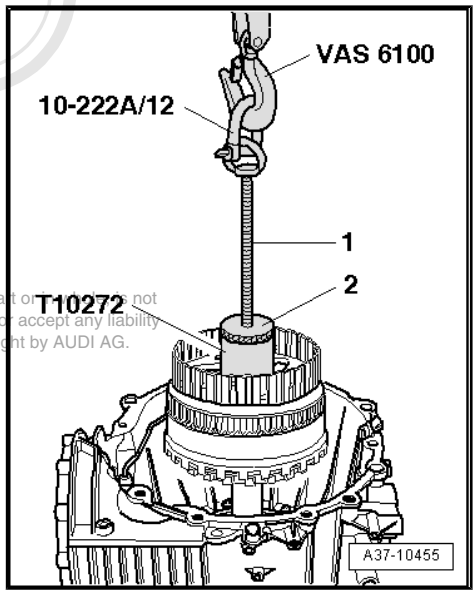

Protected by copyright. Copying for private or commercial purposes, in part or in whole, is not permitted unless authorised by AUDI AG. AUDI AG does not guarantee or accept any liability with respect to the correctness of information in this document. Copyright by AUDI AG.

Caution

Before fitting the plates of clutch „D“, you must first adjust the clearance of clutch „D“ by determining the thickness of the thick outer plate for clutch „D“ *⇒ page 57* *.*

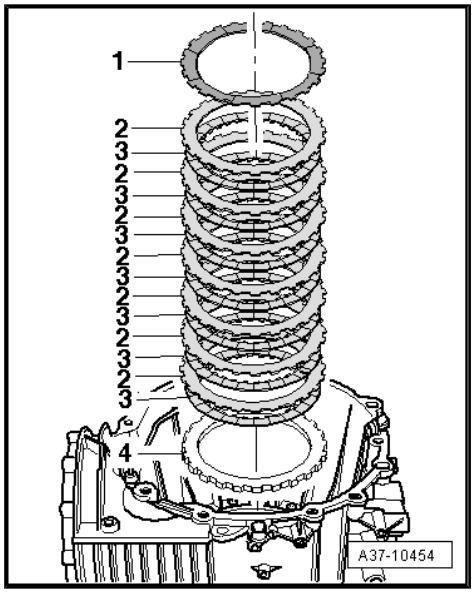

– Install thick outer plate for clutch „D“ of the required thickness -item 4-.
– Fit friction plates -3- and outer plates -2- alternately.
– Insert corrugated spring -1-.

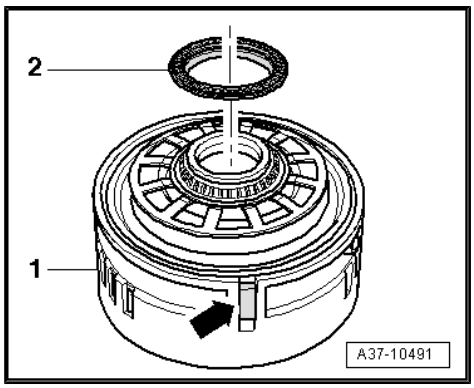

– Clip axial bearing -2- onto cylinder „C/D“ -item 1-.
– Check whether parallel keys -arrow- are fitted centrally on both sides of cylinder „C/D“.

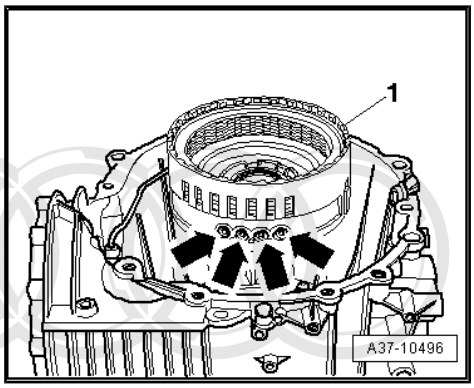

– Turn clutch „C/D“ -item 1- upside down and fit clutch in gearbox housing.
• The oil drillings -arrows- on cylinder „C/D“ face towards the ATF oil pan end.

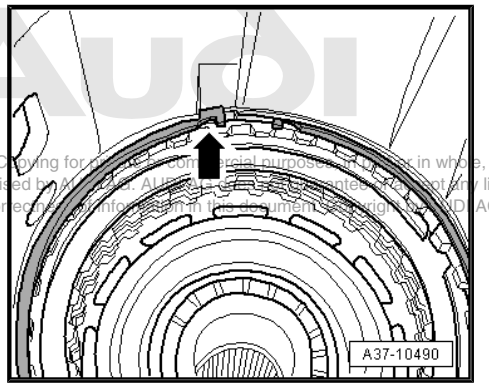

– Carefully insert circlip -arrow- for body „I“ into gearbox housing.

Note

The circlip must be re-used; take care not to over-stretch it when installing.

– Make sure that circlip locates securely in groove of gearbox housing; knock circlip into groove all round with a punch if necessary.

Protected by copyright. Copying for private or commercial purposes, in part or in whole, is not permitted unless authorised by AUDI AG. AUDI AG does not guarantee or assume any liability with respect to the correctness of information in this document. Copyright by AUDI AG.

– Fit flange washer -1- on clutch „C/D“.

• Flange on flange washer faces downwards towards clutch „C/D“

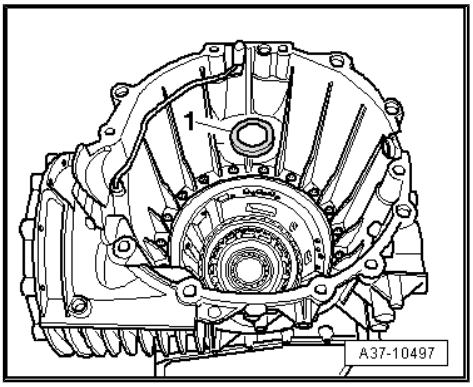

– Clip axial needle bearing -2- onto clutch „B“ -item 3- from below.

– Renew rectangular section seals -1- on sun gear shaft of body „II“ below clutch „B“ -item 3-.

– Lightly lubricate the rectangular section seals with vaseline before fitting. Use vaseline only. Other types of lubricant will cause the gearbox hydraulics to malfunction.

– Fit axial needle bearing -4- on top of clutch „B“ -item 3-.

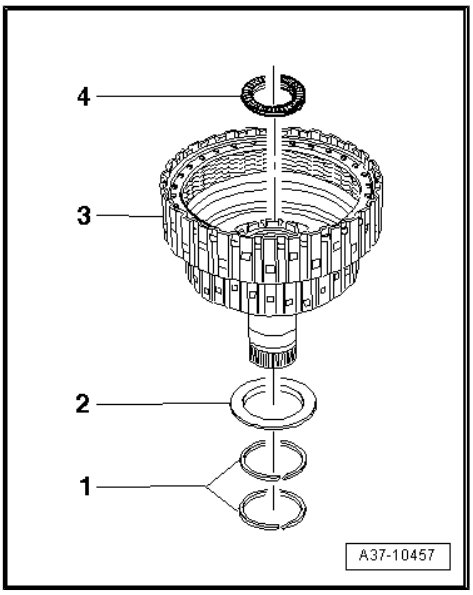

– Fit clutch „B“ -item 1- into clutch „C“.

– Allow clutch „B“ -item 1- to engage in all plates of clutch „C“ by lifting and rotating slightly as required.

– Lift clutch „B“ -item 1- a few millimetres and then let it drop to check that all the plates have meshed.

♦ If you hear a metallic sound, all the plates have meshed.

♦ If you only hear a muffled sound, some of the plates have not meshed.

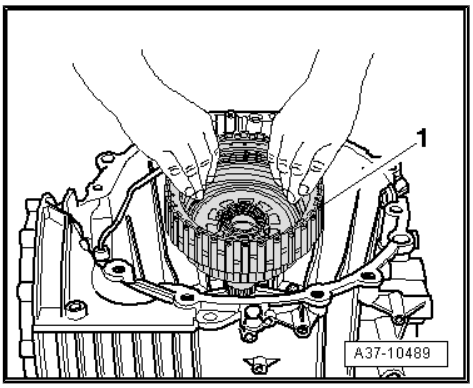

– To make it easier to fit body „II“, use the tip of a depth gauge -1- or similar to align plates of clutch „B“ so that the teeth are in line.

Protected by copyright. Copying for private or commercial purposes, in part or in whole, is not permitted unless authorised by AUDI AG. AUDI AG does not guarantee or accept any liability with respect to the correctness of information in this document. Copyright by AUDI AG.

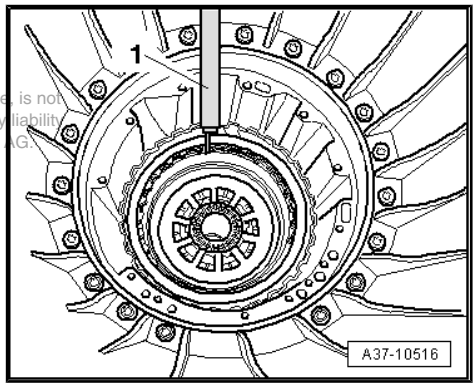

– Take body „II“ -item 1- off support -T10283- .
– Turn body „II“ to installation position.
• The ATF pump end must face upwards.

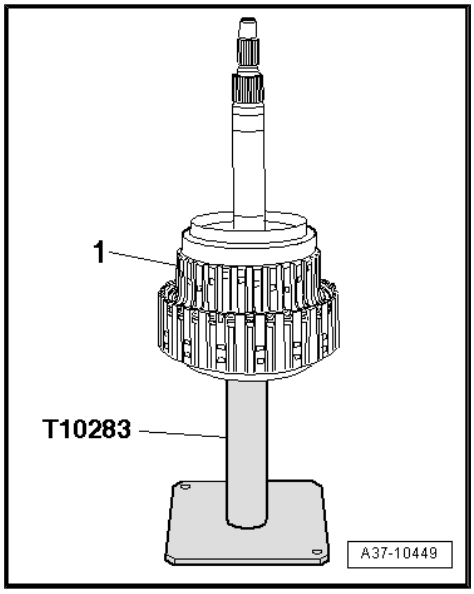

– Clip flange washer -1- onto body „II“.
• The flange on the flange washer faces towards body „II“.

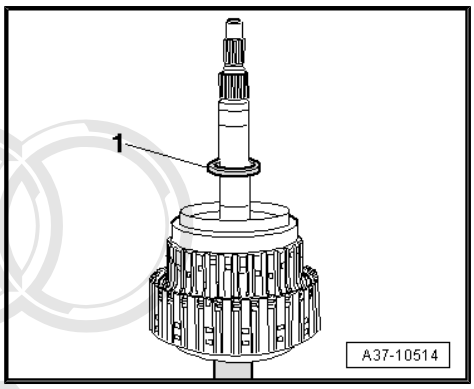

– Renew rectangular section seals -2- on sun gear shaft of body „II“ -item 1-.
– Lightly lubricate the rectangular section seals with vaseline before fitting. Use vaseline only. Other types of lubricant will cause the gearbox hydraulics to malfunction.
– Make sure that the rectangular section seals are fully seated all round in the groove on the input shaft of body „II“ -item 1-, otherwise they can be damaged when the ATF pump is fitted later.

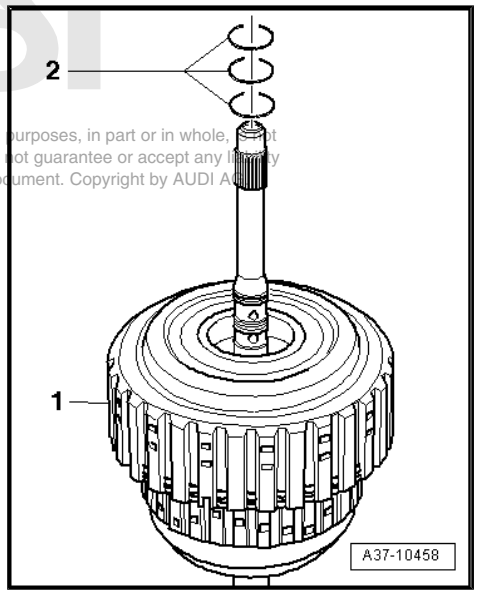

Protected by copyright. Copying for private or commercial purposes, in part or in whole, is not permitted unless authorised by AUDI AG. AUDI AG does not guarantee or accept any liability with respect to the correctness of information in this document. Copyright by AUDI AG.

– Insert body „II“ -item 1- into gearbox by hand.

– Allow plate carrier on body „II“ to engage into all plates of clutch „B“ (lift and rotate plate carrier slightly as required.)

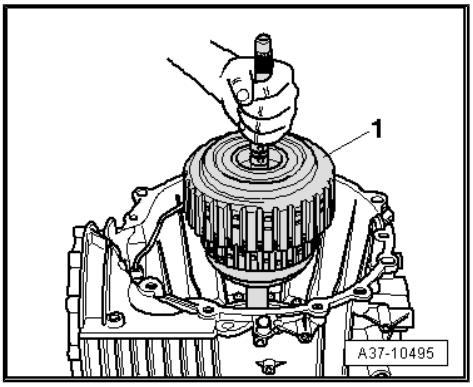

Note

To prevent body „I“ from turning when performing this step, it may be necessary to hold body „I“ from the ATF oil pan end using a large screwdriver.

– Lift body „II“ a few millimetres and then let it drop to check that the plates have meshed.

♦ If you hear a metallic sound, all the plates have meshed.

♦ If you only hear a muffled sound, some of the plates have not meshed.

Check proper installation of body „II“:

– Measure height of top edge of body „II“ above contact surface for ATF pump.

• Dimension -a- = approx. 12 mm

If the dimension -a- is exceeded, some of the gearbox components are not fitted properly - repeat installation procedure.

Protected by copyright. Copying for private or commercial purposes, in part or in whole, is not permitted unless authorised by AUDI AG. AUDI AG does not guarantee or accept any liability with respect to the correctness of information in this document. Copyright by AUDI AG.

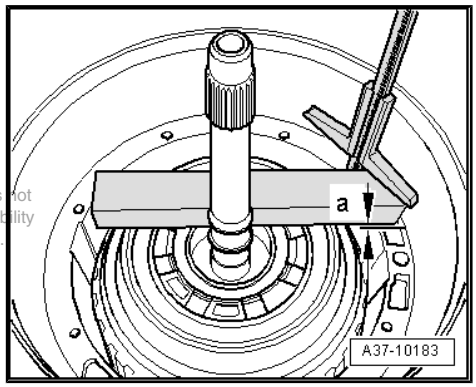

– Fit existing shim -1- onto clutch „A“.

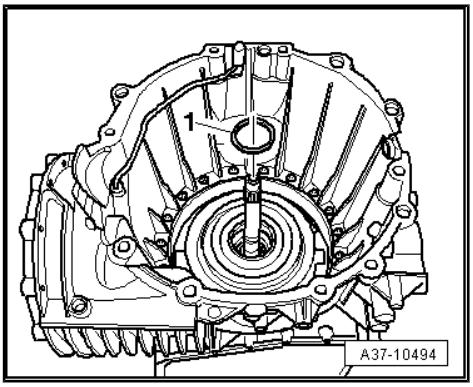

– Apply puller for ATF supply unit -T40123- to stator shaft.

– Fit ATF supply unit in gearbox housing without O-ring at this stage (turn ATF supply unit slightly in both directions).

• The opening on the housing of the ATF supply unit faces towards the ATF oil pan end.

– Detach puller for ATF supply unit -T40123- .

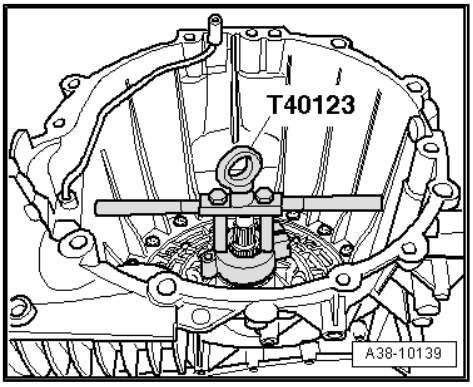

– Fit bolts -1, 2, 5, 9- for ATF supply unit with old sealing washers and tighten bolts.

• Tightening torque: 10 Nm

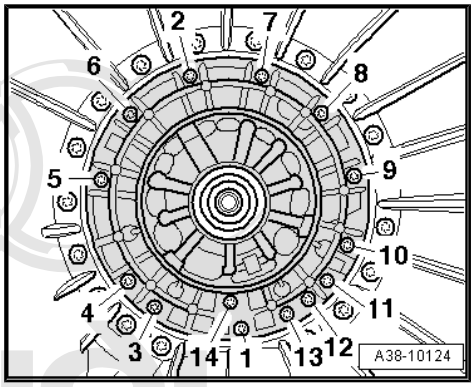

– Set up dial gauge -VAS 6080- with universal dial gauge bracket -VW 387- on gearbox flange.

– Apply dial gauge -VAS 6080- with dial gauge extension -T10170/1- to drilling in input shaft as shown in illustration.

– Wrap insulating tape around input shaft to prevent damage.

– Move input shaft up and down with pliers (avoid diagonal movements).

– Read off axial clearance of input shaft from dial gauge.

• Specification: 0.20 ... 0.40 mm

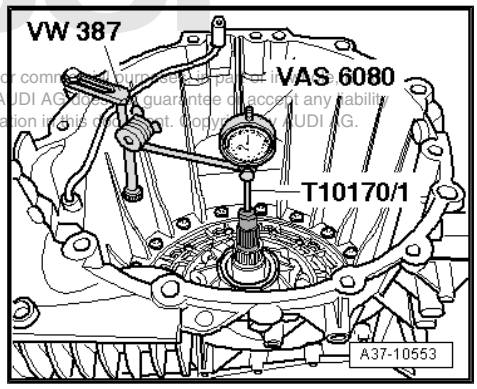

Protected by copyright. Copying for private or commercial purposes, in part or in whole, is not permitted unless authorised by AUDI AG. AUDI AG does not guarantee or accept any liability with respect to the correctness of information in this document. Copyright by AUDI AG.

If result does not match specification:

– Select shim of required thickness from following table.

• Axial clearance too small: insert thinner shim of appropriate thickness.

• Axial clearance too large: insert thicker shim of appropriate thickness.

Available shims - thickness of shims in mm		
2.6	3.4	4.2
2.8	3.6	4.4
3.0	3.8	4.6
3.2	4.0	4.8

– Remove ATF supply unit again.

– Fit new shim of required thickness -1- (if applicable) onto clutch „A“.

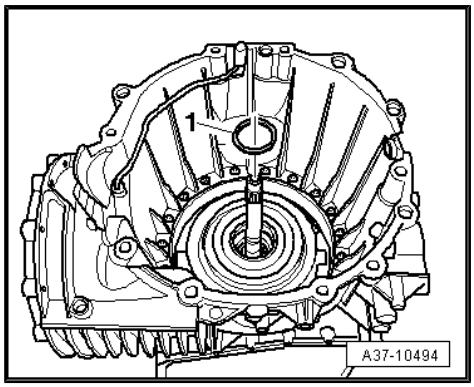

– Renew rectangular section seals -3- on stator shaft.
– Lightly lubricate the rectangular section seals with vaseline before fitting. Use vaseline only. Other types of lubricant will cause the gearbox hydraulics to malfunction.
– Hook ends of rectangular section seals together.
– Make sure that the rectangular section seals are seated properly all round in the stator shaft grooves.
– Renew O-ring -1- on ATF supply unit -2-.

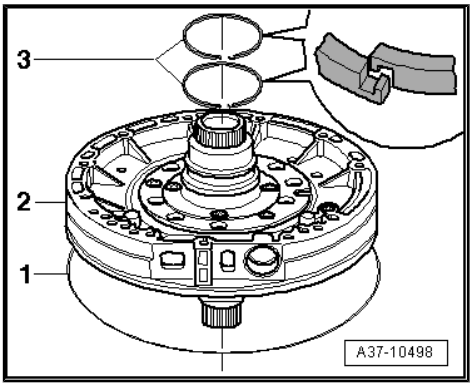

– Apply puller for ATF supply unit -T40123- to stator shaft.
– Fit ATF supply unit in gearbox housing again (turn ATF supply unit slightly in both directions).
• The opening on the housing of the ATF supply unit faces towards the ATF oil pan end.
– Detach puller for ATF supply unit -T40123- .

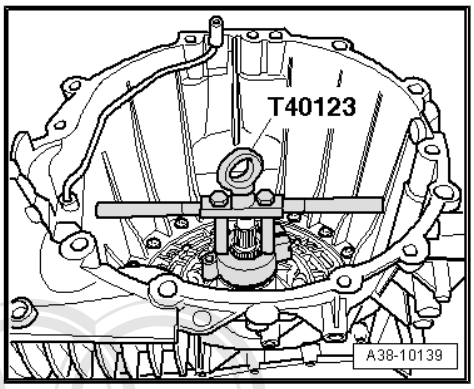

– Fit new sealing washers on bolts for ATF supply unit.
– Tighten bolts for ATF supply unit in sequence -1 ... 14-.
• Tightening torque: 10 Nm
– Check axial clearance of input shaft again ⇒ page 36 .

If reading again does not match specification:

– Repeat adjustment.

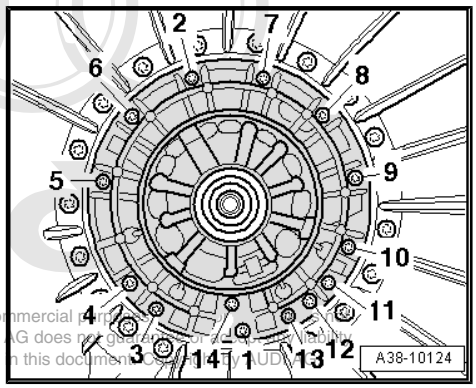

Protected by copyright. Copying for private or commercial purposes, in part or in whole, is not permitted unless authorised by AUDI AG. AUDI AG does not guarantee or assume any liability with respect to the correctness of information in this document copyrighted by AUDI AG.

If reading matches specification:

– Turn gearbox on assembly stand.
• The ATF oil pan must face upwards.
– Fit sealing sleeves -2- and aluminium sleeves -1- according to marks made when removing.

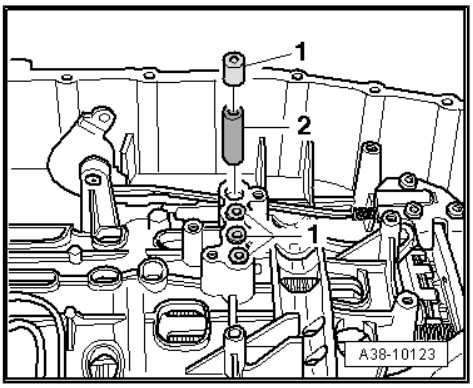

> ⚠ **Caution**
>
> ***Observe different lengths of sealing sleeves; they should be at the same height when installed.***

– Renew seals on adapter -B-.
– Install adapter -B-.

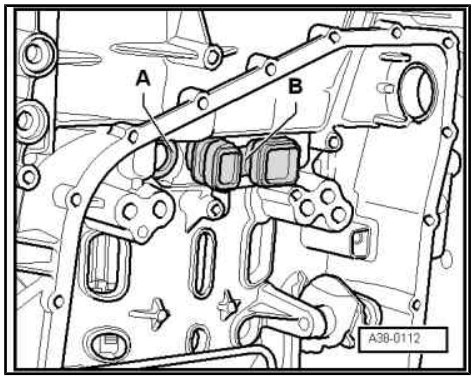

Note

Item -A- can be disregarded.

Gearbox with 24 bolts on oil pan:

– Install mechatronic unit (24 bolts on oil pan)
⇒ „1.3 Removing and installing mechatronic unit - gearbox with 24 bolts on oil pan“, page 98 .

Gearbox with 13 bolts on oil pan:

– Renew O-rings for wiring harness connector.
– Fit wiring harness connector in gearbox housing.
• Lugs -1- and -2- on collar are horizontal, flat section -arrow- of connector faces inside of gearbox.

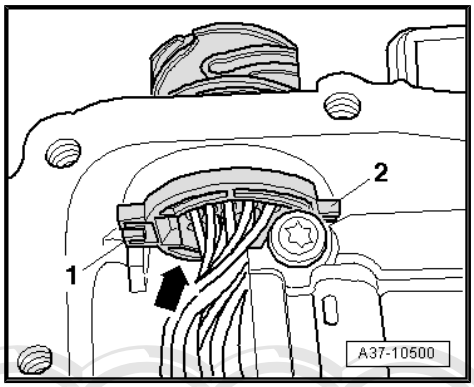

– Fit retaining clip -arrow- for wiring harness connector.
– Install mechatronic unit (13 bolts on oil pan)
⇒ „1.4 Removing and installing mechatronic unit - gearbox with 13 bolts on oil pan“, page 101 .

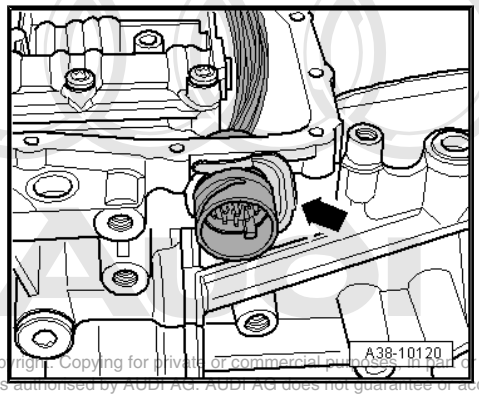

Protected by copyright. Copying for private or commercial purposes, in part or in whole, is not permitted unless authorised by AUDI AG. AUDI AG does not guarantee or accept any liability with respect to the correctness of information in this document. Copyright by AUDI AG.

Continued for all vehicles:

– Renew ATF strainer -arrow- and install ⇒ page 96 .
– Install ATF oil pan ⇒ page 92 .
– Turn gearbox on assembly stand.
• The ATF oil pan must face downwards.

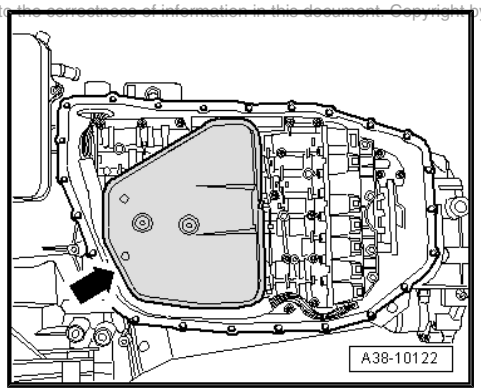

– Slide twin-lip oil seal onto thrust piece -T40119- .

• The twin-lip oil seal will only fit in one position on the thrust piece.

– Press in twin-lip oil seal onto stop in gearbox housing.

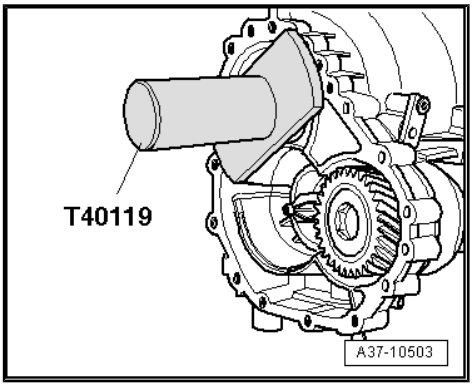

– Slide magnet -arrow- into gearbox housing, as shown in illustration.

Protected by copyright. Copying for private or commercial purposes, in part or in whole, is not permitted unless authorised by AUDI AG. AUDI AG does not guarantee or accept any liability with respect to the correctness of information in this document. Copyright by AUDI AG.

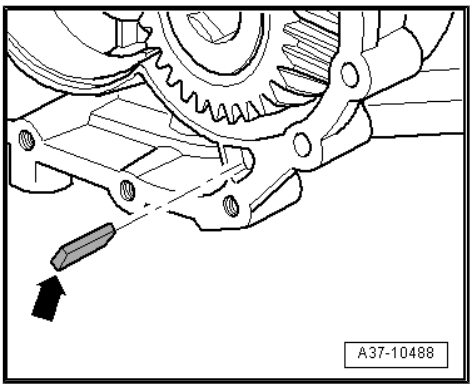

– Install intermediate pinion for front axle drive -1- with input shaft.

– Fit shims -2- and -3-.

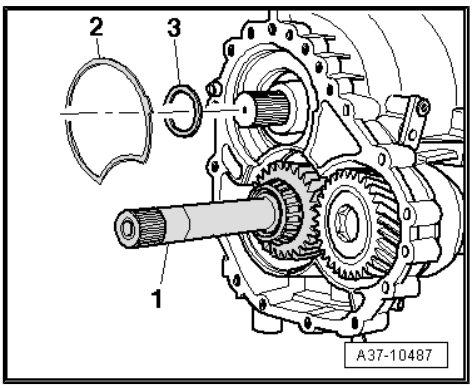

Gearbox with common gear oil system:

– Install oil line on intermediate flange for front axle drive and tighten bolt -arrow-.

• Tightening torque: 8 Nm

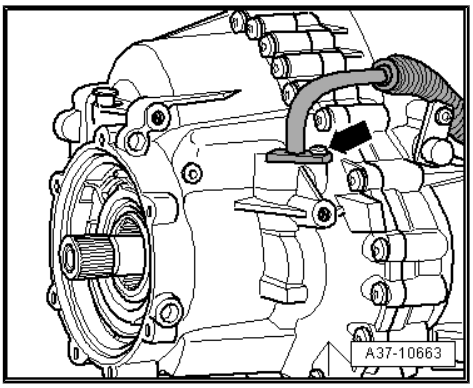

Continued for all gearboxes:

– Check that dowel sleeve -1- is fitted.

– Renew gasket for intermediate flange for front axle drive.

– Fit intermediate flange for front axle drive on gearbox housing.

• The pump drive coupling -3- must engage in the hexagon in the side shaft -2-.

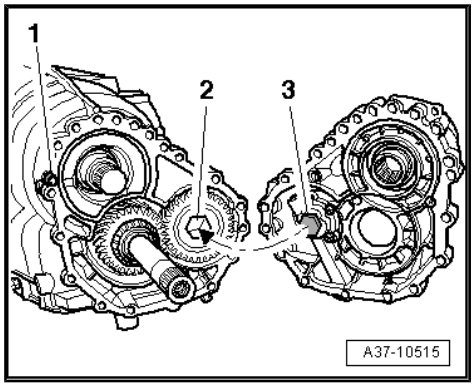

– Tighten bolts on intermediate flange for front axle drive in two stages as follows:

Stage	Tightening sequence
1	– Pre-tighten bolts to 5 Nm in sequence -1 ... 4-.
2	– Tighten bolts to 30 Nm in sequence -1 ... 19-.

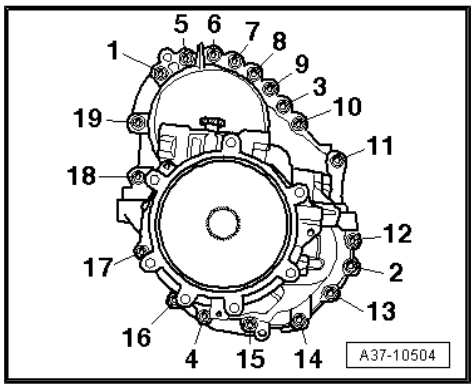

– Press bearing race -1- into intermediate flange for front axle drive as far as stop.

– Check installation depth of bearing race using a depth gauge.

• Dimension -a- = approx. 9 mm

If dimension -a- is significantly smaller, the bearing race has become displaced.

– Remove bearing race and check that installation position is correct.

• Lugs on rear side of bearing race should engage in corresponding recesses on intermediate flange for front axle drive.

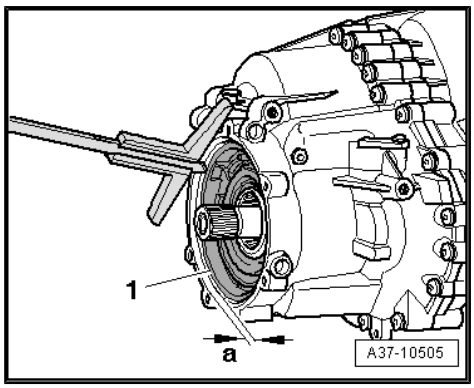

– Fit shim -1-.

– Check ball bearing for self-locking centre differential; if necessary press on new ball bearing ⇒ page 159 .

Protected by copyright. Copying for private or commercial purposes, in part or in whole, is not permitted unless authorised by AUDI AG. AUDI AG does not guarantee or accept any liability with respect to the correctness of information in this document. Copyright by AUDI AG.

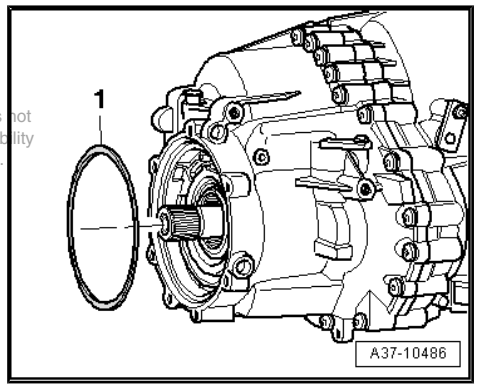

– Fit self-locking centre differential -arrow- onto splines of input shaft, turning slightly at the same time.

– Check that self-locking centre differential can be turned by hand when it is in position.

– If necessary, renew oil seal for flange shaft (rear) ⇒ „2.4 Renewing oil seal for flange shaft (rear)“, page 160 .

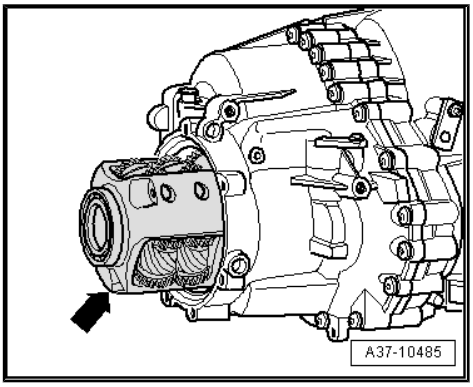

– Renew O-ring on centre differential housing.

– Fit centre differential housing (with rear flange shaft installed) onto self-locking centre differential, turning flange shaft slightly if necessary.

– Tighten bolts on centre differential housing in two stages as follows:

Stage	Tightening sequence
1	– Tighten bolts -1- and -2- initially to 3 Nm.
2	– Tighten bolts to 16 Nm in sequence -1 ... 7-.

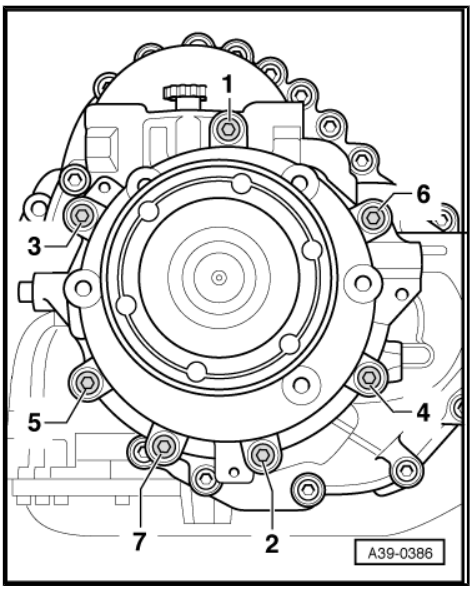

– If necessary, renew oil seal between final drive and gearbox housing ⇒ page 130 .

– Install torque converter (push torque converter hub through oil seal as far as first stop).

– Turn the torque converter, at the same time pressing it inwards lightly until the slots on the torque converter hub engage in the drive lugs on the ATF pump gear and the torque converter slips in noticeably.

Installation depth:

If the torque converter has been correctly installed, the distance -a- measured between the surface of the mounting holes and the contact surface of the torque converter bellhousing should be:

- 8 or 12-cylinder petrol engines: at least 5.9 mm
- 10-cylinder petrol engines and 8-cylinder TDI engines: at least 18.9 mm

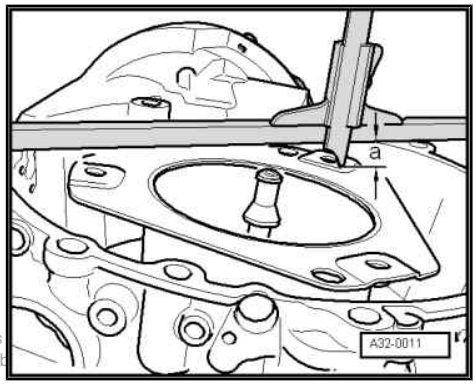

Caution

If the torque converter is not fitted correctly, the torque converter drive lugs or the ATF pump will be irreparably damaged when the gearbox is joined to the engine.

Protected by copyright. Copying for private or commercial purposes, in part or in whole, is permitted unless authorised by AUDI AG. AUDI AG does not guarantee or accept any liability with respect to the correctness of information in this document. Copyright by AUDI AG.

– Cover splines on flange shaft (left-side) -arrow- with insulating tape to prevent damage to oil seal between final drive and gearbox housing when inserting flange shaft. Take care to cover the splines completely, without creasing or overlapping the tape.

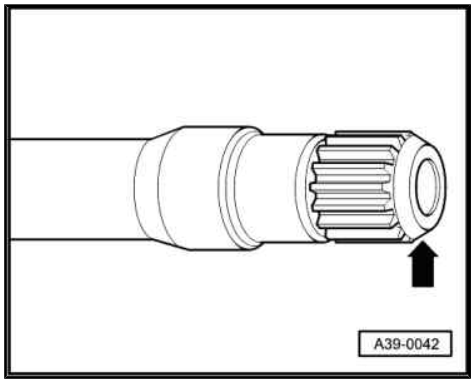

– Clean flange shaft (left-side) and oil seal between final drive and gearbox housing.

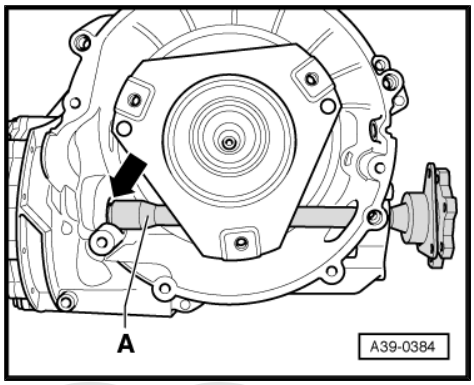

– Pack space between sealing lips of oil seal -arrow- half-full with sealing grease -G 052 128 A1- .

Caution

While inserting the flange shaft (left-side), it must be held centrally to avoid damaging the oil seal between the final drive and the gearbox housing.

– Insert flange shaft -A- into gearbox, guiding shaft centrally into oil seal between final drive and gearbox housing -arrow-.

Protected by copyright. Copying for private or commercial purposes, in part or in whole, is not permitted unless authorised by AUDI AG. AUDI AG does not guarantee or accept any liability with respect to the correctness of information in this document. Copyright by AUDI AG.

– Tighten bolts -arrows- on mounting bracket for flange shaft (left-side).

- Tightening torque: 23 Nm

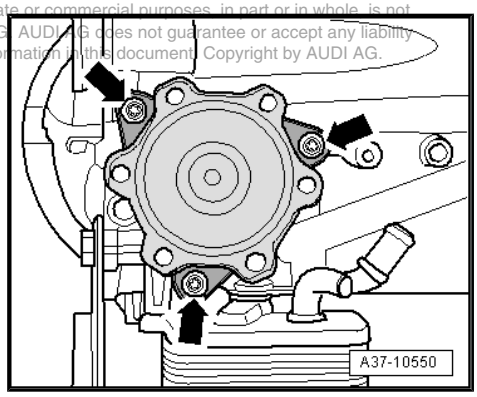

Caution

- *Make sure that the bearing races and shims for the differential do not drop out of the gearbox housing and the front final drive cover.*
- *Bearing races and shims cannot be re-allocated to their original positions by the workshop if they have dropped out.*

– Clean magnet -1- on rear side of baffle plate.
– Ensure that magnet makes full contact with baffle plate.
– Renew seal -2- for breather passage.

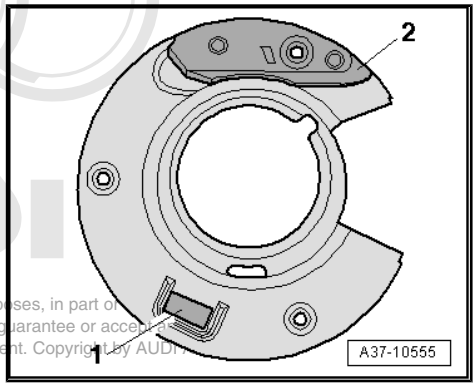

Protected by copyright. Copying for private or commercial purposes, in part or
permitted unless authorised by AUDI AG. AUDI AG does not guarantee or accept
with respect to the correctness of information in this document. Copyright by AUDI

– Tighten bolts for baffle plate -arrows-.
• Tightening torque: 8 Nm.

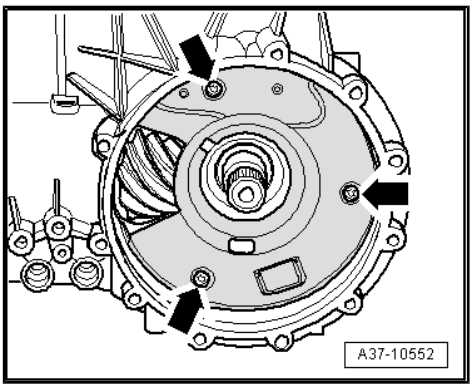

– Renew O-ring -arrow- in cover for front final drive.

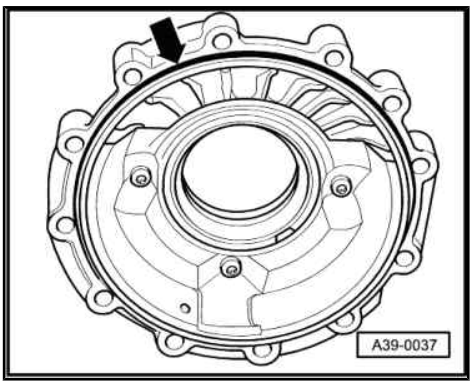

– Carefully install differential -arrow-.

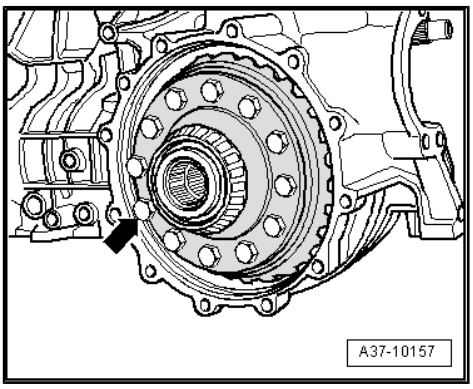

– Locate cover for front final drive on gearbox housing and tighten bolts in two stages as follows:

Stage	Tightening sequence
1	– Pre-tighten bolts to 3 Nm in sequence -1, 2, 3-.
2	– Tighten bolts to 23 Nm in sequence -1 ... 11-.

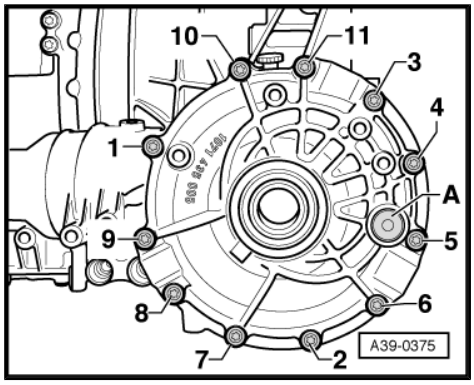

Protected by copyright. Copying for private or commercial purposes, in part or in whole, is not permitted unless authorised by AUDI AG. AUDI AG does not guarantee or accept any liability with respect to the correctness of information in this document. Copyright by AUDI AG.

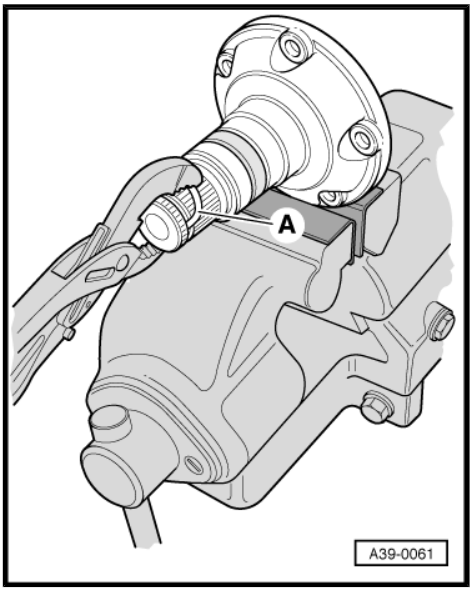

– Clamp flange shaft (right-side) into vice with jaw covers to renew circlip for flange shaft.
– Press old circlip out of groove in flange shaft (right-side) using new circlip -A-.
– Renew oil seal for flange shaft (right-side) if necessary ⇒ Automatic gearbox 09E, four-wheel drive; Rep. gr. 39 .
– Clean flange shaft (right-side) and oil seal.
– Pack space between sealing lip and dust lip of oil seal half-full with sealing grease -G 052 128 A1- .
– Insert flange shaft (right-side) by hand into splines of differential until splines engage.
– Press in flange shaft (right-side) by hand or with drift -VW 295- as far as stop.
• The circlip on the flange shaft should click into place.
– Detach gearbox from assembly stand.

Caution

Risk of damage to gearbox components.

- *Do not operate gearbox without ATF filling.*
- *After the gearbox has been overhauled it should be installed and operated as soon as possible to prevent any corrosion forming on the new components.*

– Fill up with ATF and check ATF level ⇒ Automatic gearbox 09E, four-wheel drive; Rep. gr. 37 .

Gearbox with separate oil systems:

– Fill up gear oil in front final drive after repairs and check oil level ⇒ Automatic gearbox 09E, four-wheel drive; Rep. gr. 39 .
– Fill up gear oil in transfer box after repairs and check oil level ⇒ Automatic gearbox 09E, four-wheel drive; Rep. gr. 39 .

Gearbox with common oil system:

– Fill up gear oil in transfer box after repairs and check oil level ⇒ Automatic gearbox 09E, four-wheel drive; Rep. gr. 39 .

Protected by copyright. Copying for private or commercial purposes, in part or in whole, is not permitted unless authorised by AUDI AG. AUDI AG does not guarantee or accept any liability with respect to the correctness of information in this document. Copyright by AUDI AG.

Tightening torques

Component	Nm
ATF supply unit to gearbox housing	⇒ page 90
Mechatronic unit to gearbox housing	⇒ page 90
ATF oil pan to gearbox housing — Note how many bolts are fitted	⇒ page 90
Mounting bracket for flange shaft (left-side) to gearbox	23
Cover for front final drive to gearbox	23
Intermediate flange for front axle drive to gearbox	23
Baffle plate to gearbox	8
Housing for centre differential to intermediate flange for front axle drive	⇒ page 156
Oil line to intermediate flange for front axle drive	8
• [1] Renew bolts	

Protected by copyright. Copying for private or commercial purposes, in part or in whole, is not permitted unless authorised by AUDI AG. AUDI AG does not guarantee or accept any liability with respect to the correctness of information in this document. Copyright by AUDI AG.

3 Dismantling and assembling body „I“

Overview

- ⇒ „3.1 Body I - exploded view“, page 47
- ⇒ „3.2 Clutch C - exploded view“, page 49
- ⇒ „3.3 Dismantling and assembling clutch C “, page 50
- ⇒ „3.4 Piston/cylinder D - exploded view“, page 53
- ⇒ „3.5 Dismantling and assembling piston/cylinder D “, page 54
- ⇒ „3.6 Adjusting clearance of clutch D “, page 57
- ⇒ „3.7 Planetary drive II and III - exploded view“, page 60
- ⇒ „3.8 Dismantling and assembling planetary drive II and III “, page 61

3.1 Body „I“ - exploded view

Note

Some of the components shown are supplied as part of an assembly group and cannot be ordered as separate components ⇒ Electronic parts catalogue .

Protected by copyright. Copying for private or commercial purposes, in part or in whole, is not permitted unless authorised by AUDI AG. AUDI AG does not guarantee or accept any liability with respect to the correctness of information in this document. Copyright by AUDI AG.

1 - Cylinder „C/D“

- ❑ With clutch „C“ installed
- ❑ Exploded view of clutch „C“ ⇒ page 49
- ❑ With piston/cylinder „D“
- ❑ Exploded view of piston/cylinder „D“ ⇒ page 53

2 - Parallel key

- ❑ Check that it is securely seated

3 - Axial needle bearing

4 - Corrugated spring

- ❑ For clutch „D“

5 - Outer plate

- ❑ For clutch „D“

6 - Friction plate

- ❑ For clutch „D“

7 - Thick outer plate

- ❑ For clutch „D“
- ❑ Determining required thickness ⇒ „3.6 Adjusting clearance of clutch D “, page 57

8 - Flange washer

9 - Planetary drive „II“ and „III“

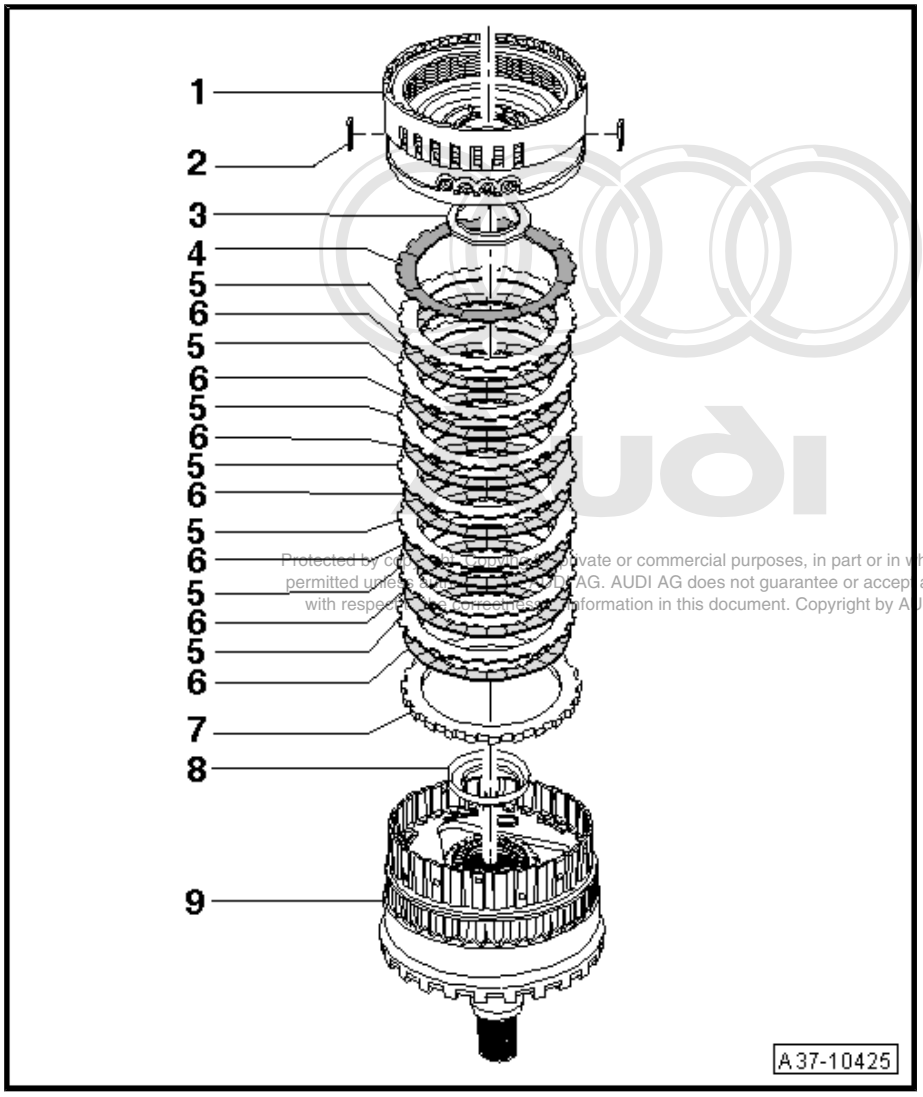

Protected by copyright. Copying for private or commercial purposes, in part or in whole, is not permitted unless authorised by AUDI AG. AUDI AG does not guarantee or accept any liability with respect to the correctness of information in this document. Copyright by AUDI AG.

3.2 Clutch „C“ - exploded view

Note

- *Some of the components shown are supplied as part of an assembly group and cannot be ordered as separate components ⇒ Electronic parts catalogue .*
- *Check components of clutch „C“ for traces of wear and damage ⇒ „3.2 Clutch C “, page 163 .*

1 - Circlip
- ❑ Determining thickness ⇒ page 52

2 - Thick outer plate

3 - Friction plate

4 - Outer plate

5 - Corrugated spring

6 - Circlip

7 - Retaining ring

8 - Dished spring

9 - O-ring
- ❑ Renew

10 - Piston„C“

11 - O-ring
- ❑ Renew

12 - Cylinder „C/D“

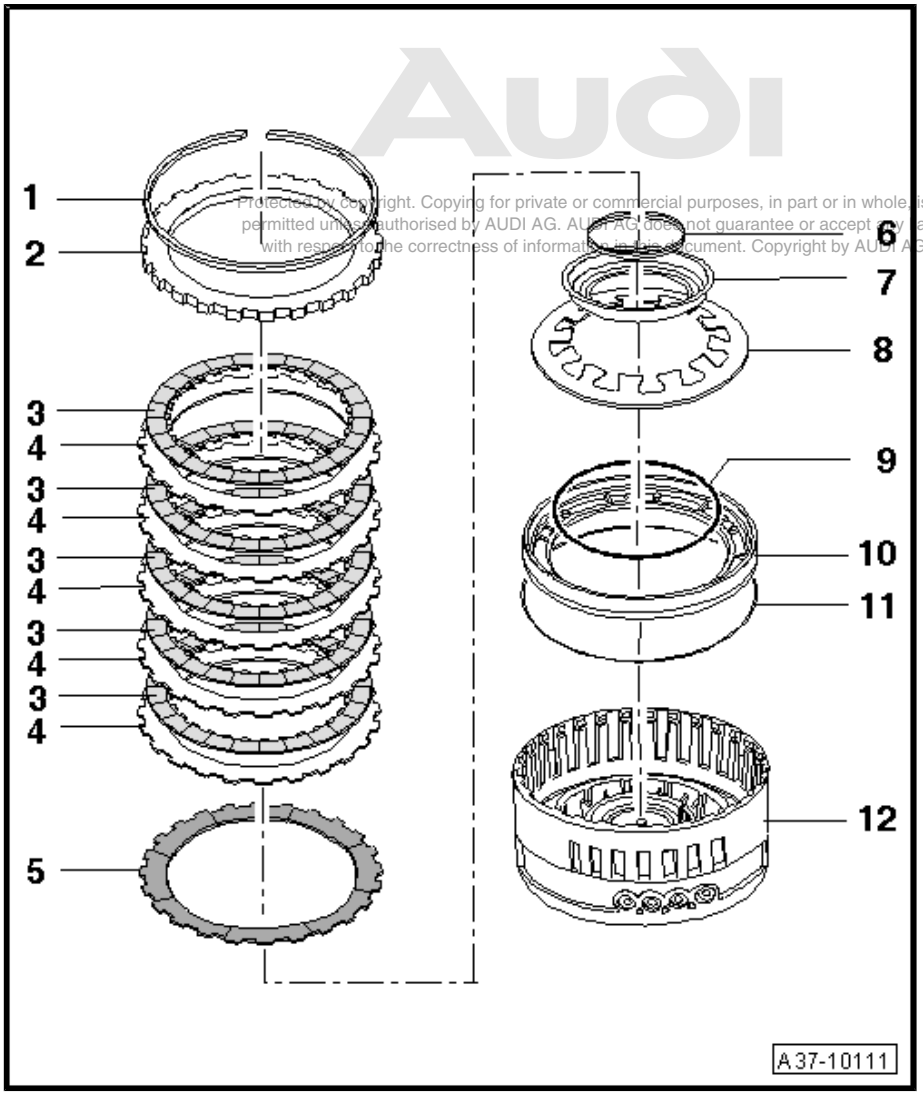

Protected by copyright. Copying for private or commercial purposes, in part or in whole, is not permitted unless authorised by AUDI AG. AUDI AG does not guarantee or accept any liability with respect to the correctness of information in this document. Copyright by AUDI AG.

3.3 Dismantling and assembling clutch „C“

Dismantling

– Detach circlip -1- and remove clutch pack -2- from cylinder „C/D“.

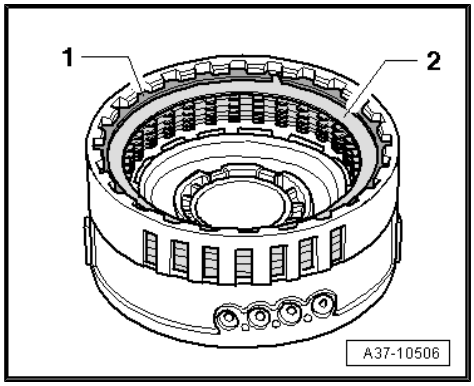

– Press dished spring down using workshop press with assembly jig -T10278- .

– Remove circlip -1-.

– Release workshop press.

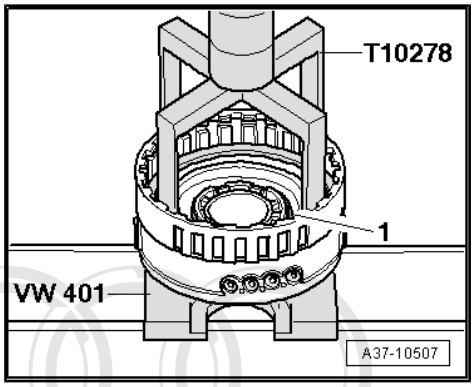

– Detach retaining ring -3- and dished spring -2- from cylinder „C/D“ -item 1-.

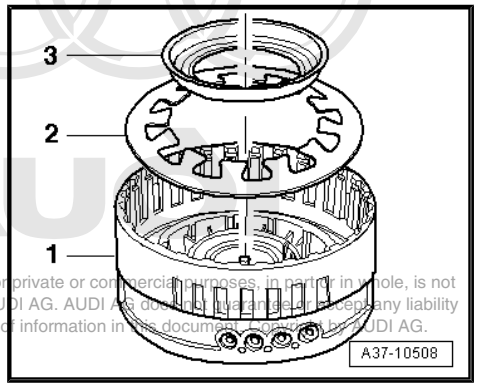

Protected by copyright. Copying for private or commercial purposes, in part or in whole, is not permitted unless authorised by AUDI AG. AUDI AG does not give any warranty or accept any liability with respect to the correctness of information in this document. Copyright by AUDI AG.

WARNING

Wear safety goggles.

– Carefully press piston „C“ out of cylinder „C/D“ using compressed air.

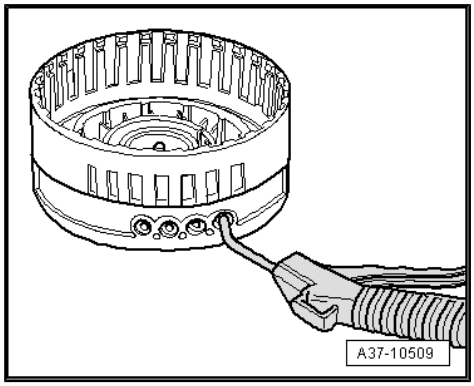

Assembling

Caution

Check components of clutch „C“ for traces of wear and damage *⇒ „3.2 Clutch C “, page 163* .

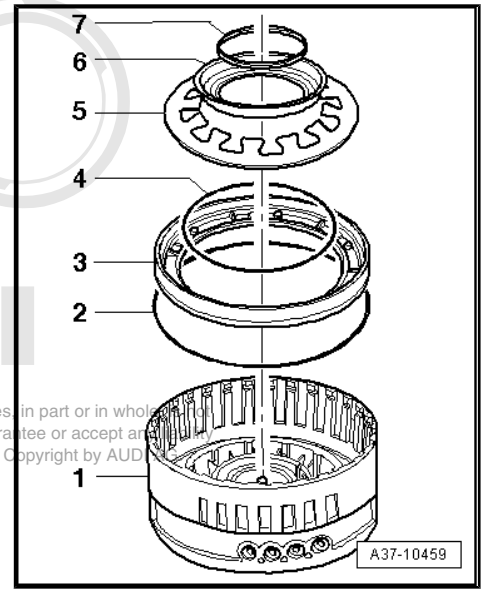

- Renew O-rings -2- and -4- for piston „C“ -item 3-.
- Push piston „C“, -item 3- into cylinder „C/D“, -item 1- as far as stop.
- Fit dished spring -5- and retaining ring -6-.

7 - Circlip

Protected by copyright. Copying for private or commercial purposes, in part or in whole, is not permitted unless authorised by AUDI AG. AUDI AG does not guarantee or accept any liability with respect to the correctness of information in this document. Copyright by AUDI AG.

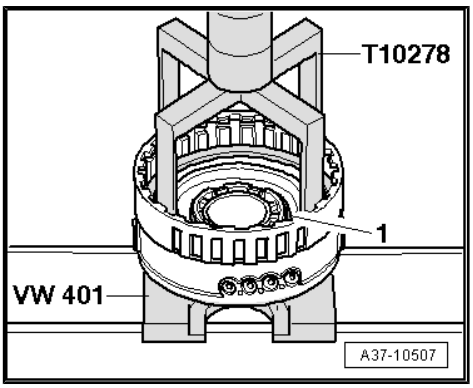

- Press dished spring down using workshop press with assembly jig -T10278- .
- Insert circlip -1-.
- Make sure that circlip is seated securely all round in groove on cylinder „C/D“.
- Release workshop press.

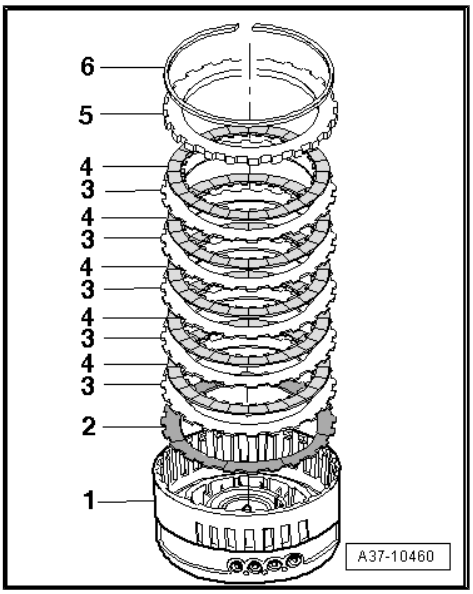

- Insert corrugated spring -2- into cylinder „C/D“ -item 1-.
- Fit outer plates -3- and friction plates -4- alternately.
- Insert thick outer plate -5-.
- Insert circlip -6-.

Adjusting clearance of clutch „C“

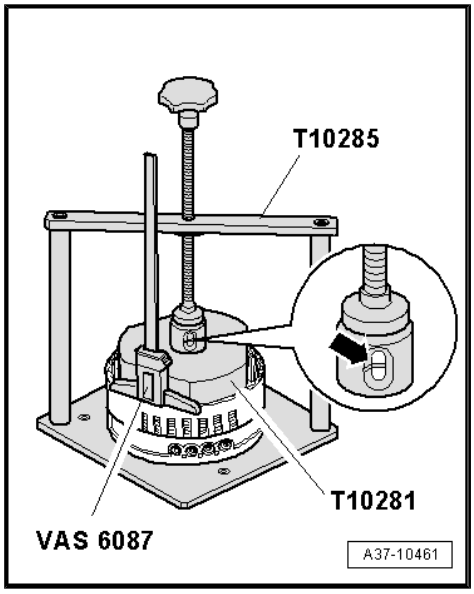

– Place cylinder „C/D“ on compressor tool -T10285- .

• Clutch „C“ faces upwards.

– Place holding plate -T10281- centrally on outer plate of clutch „C“.

• Avoid any contact between holding plate and circlip.

– Fit centring pin of thrust piece -T10285/1- into drilling in holding plate.

– Bring cylinder „C/D“ into correct position on base plate of compressor tool.

• Thrust piece must be positioned centrally below thrust plate of spindle.

– Turn spindle of compressor tool downwards.

• The markings on the inspection hole of the thrust piece must align -arrow-.

– Apply digital depth gauge -VAS 6087- to upper rim of cylinder „C/D“ as shown in illustration.

– Bring measuring tip into contact with outer plate and note value obtained.

– Mark measuring point on cylinder „C/D“.

– Repeat measurement at two other points on outer plate (offset by 120°) and mark measuring points.

– Determine average value from the three measurements under load.

– Release spindle and remove holding plate.

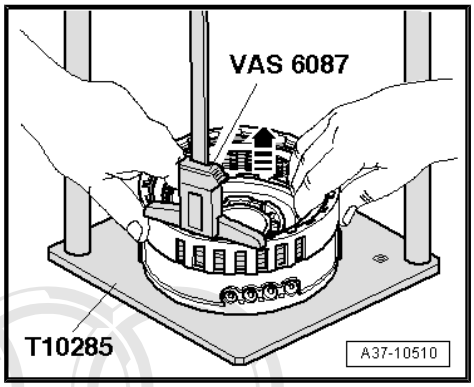

– Use both hands to pull clutch pack upwards as far as possible in clutch „C“.

– With clutch pack pulled up as far as stop, measure distance between upper rim of cylinder „C/D“ and outer plate at one of the points marked (second mechanic required).

– Repeat measurement at the two remaining markings on the outer plate.

– Determine average value from the three measurements with clutch pack pulled up as far as stop.

– Determine clearance using the following formula:

	Mean value of measurements under load (value 1 + value 2 + value 3) : 3
–	Mean value of measurements with clutch pack pulled up as far as stop (value 1 + value 2 + value 3) : 3
=	Clearance

– Subtract mean value of measurements with clutch pack pulled up as far as stop from mean value of measurements under load.

Clearance:

• Specification: 1.38 ... 1.83 mm

Protected by copyright. Copying for private or commercial purposes, in part or in whole, is not permitted unless authorised by AUDI AG. AUDI AG does not guarantee or accept any liability with respect to the correctness of information in this document. Copyright by AUDI AG.

If result does not match specification:

– Select required new circlip -1- according to following table.

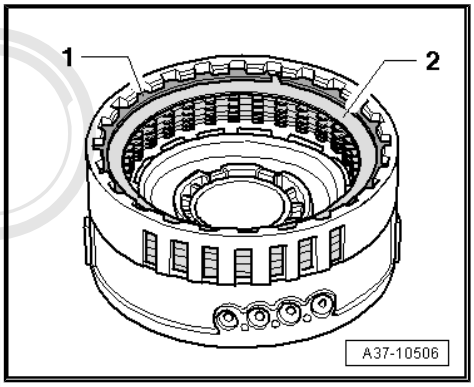

Note

-Item 2- can be disregarded.

- If clearance is below specification: insert thinner circlip of appropriate thickness.
- If clearance is above specification: insert thicker circlip of appropriate thickness.

Available circlips - Thickness of circlips in mm		
2.20	3.20	4.20
2.40	3.40	4.40
2.60	3.60	4.60
2.80	3.80	
3.00	4.00	

Protected by copyright. Copying for private or commercial purposes, in part or in whole, is not permitted unless authorised by AUDI AG. AUDI AG does not guarantee or accept any liability with respect to the correctness of information in this document. Copyright by AUDI AG.

– Check clearance again after inserting circlip.

3.4 Piston/cylinder „D“ - exploded view

Note

♦ *Some of the components shown are supplied as part of an assembly group and cannot be ordered as separate components ⇒ Electronic parts catalogue .*

♦ *Check components of piston/cylinder „D“ for traces of wear and damage* *⇒ „3.3 Clutch D “, page 165* *.*

1 - Cylinder „C/D“

2 - O-ring
- ❑ Renew

3 - O-ring
- ❑ Renew

4 - O-ring
- ❑ Renew

5 - Piston „D“

6 - O-ring
- ❑ Renew

7 - Retaining plate

8 - Split retaining ring
- ❑ Installation position: the upward-pointing retaining lugs must fit in the recess on cylinder „C/D“

9 - Dished spring

10 - Split retaining ring
- ❑ Shoulder faces dished spring

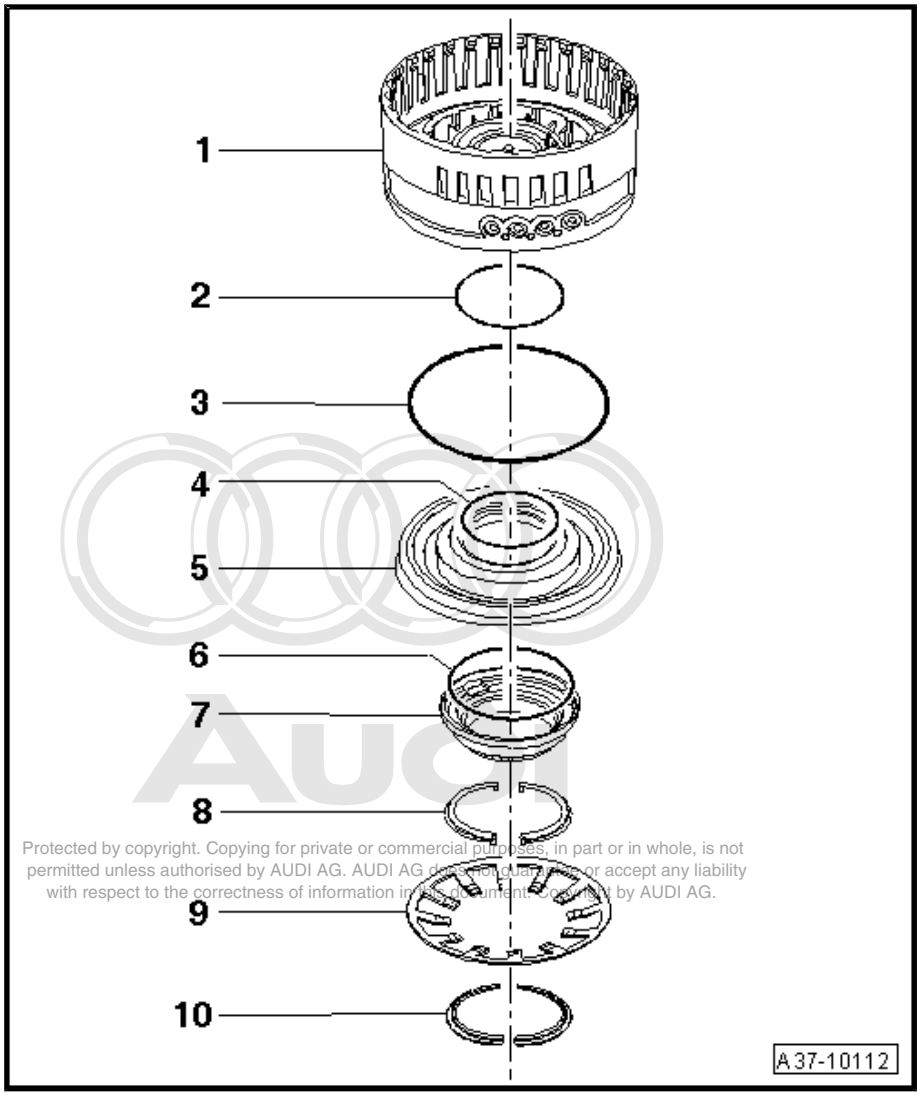

Protected by copyright. Copying for private or commercial purposes, in part or in whole, is not permitted unless authorised by AUDI AG. AUDI AG does not guarantee or accept any liability with respect to the correctness of information in this document. Copyright by AUDI AG.

3.5 Dismantling and assembling piston/cylinder „D“

Dismantling

– Press dished spring down using workshop press with assembly jig -T10277- .

– Remove split retaining ring -1-.

– Release workshop press.

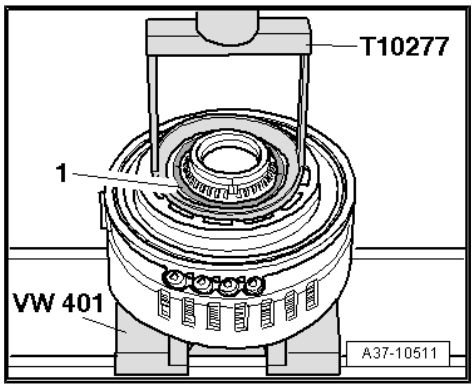

– Detach dished spring -2- from cylinder „C/D“ -item 1-.

3 - Split retaining ring

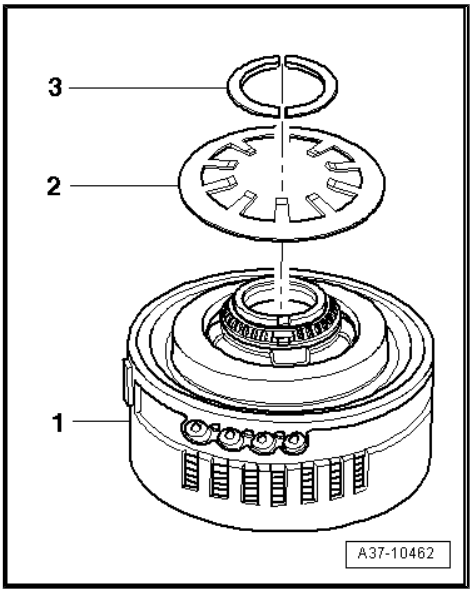

– Press retaining plate -4- downwards by hand or using two screwdrivers.
– Remove split retaining ring -5-.
– Detach retaining plate -4- and take O-rings -2- and -3- off retaining plate and cylinder „C/D“ -item 1-.

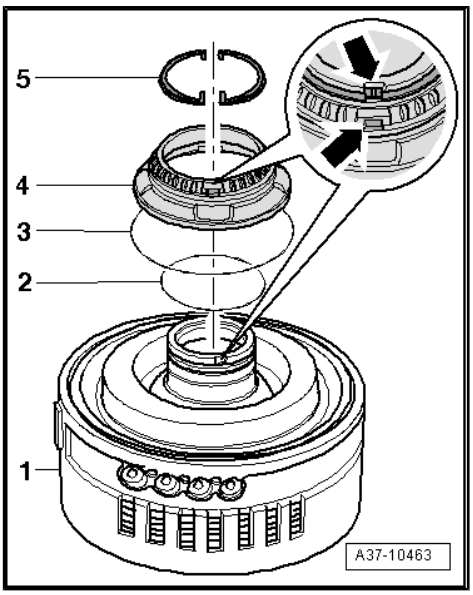

Note

-Arrows- can be disregarded.

Protected by copyright. Copying for private or commercial purposes, in part or in whole, is not permitted unless authorised by AUDI AG. AUDI AG does not guarantee or accept any liability with respect to the correctness of information in this document. Copyright by AUDI AG.

WARNING

Wear safety goggles.

– Carefully press piston „D“ out of cylinder „C/D“ using compressed air.

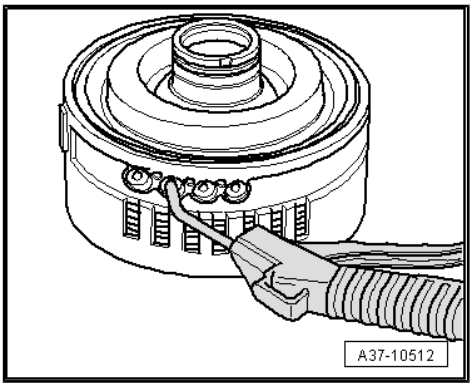

Assembling

> **Caution**
>
> *Check components of piston/cylinder „D“ for traces of wear and damage* *⇒ „3.3 Clutch D “, page 165* *.*

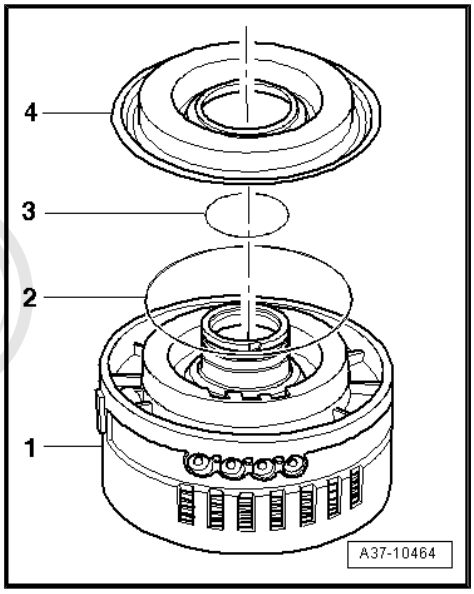

– Renew O-ring -2- for cylinder „C/D“ -item 1-.
– Renew O-ring -3- in piston „D“ -item 4-.
– Fit piston „D“ -item 4- into cylinder „C/D“ -item 1-.

Protected by copyright. Copying for private or commercial purposes, in part or in whole, is not permitted unless authorised by AUDI AG. AUDI AG does not guarantee or accept any liability with respect to the correctness of information in this document. Copyright by AUDI AG.

– Renew O-ring -2- for cylinder „C/D“ -item 1-.
• The O-ring is fitted in the 2nd groove from the top.
– Renew O-ring -3- for retaining plate -4-.
– Insert retaining plate -4- into cylinder „C/D“ -item 1-.
• The cast lug on the retaining plate must be located opposite the recess on cylinder „C/D“ -arrows-.
– Insert split retaining ring -5-.
• The upward-pointing retaining lugs must fit in the recess on cylinder „C/D“

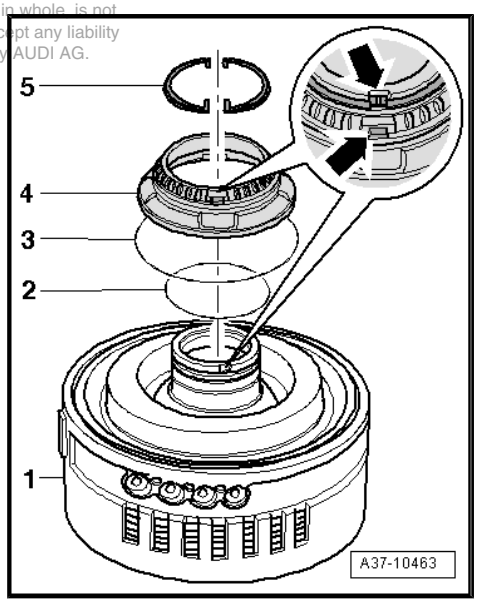

– Carefully press retaining plate upwards with two screwdrivers until it makes contact with retaining ring -arrows-.

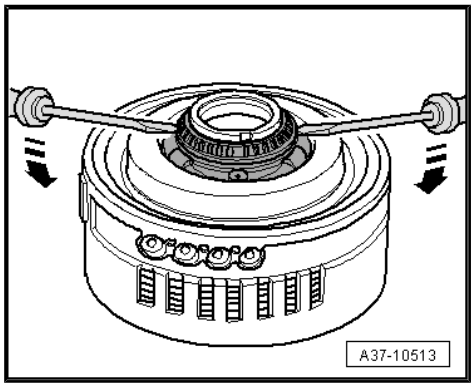

– Fit dished spring -2- on cylinder „C/D“ -item 1-.

3 - Split retaining ring

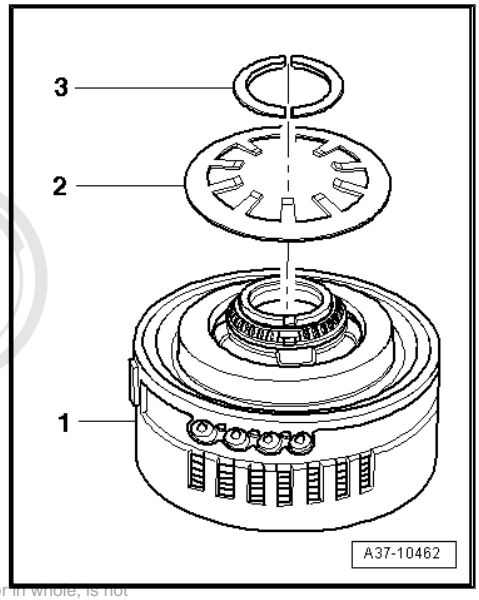

Protected by copyright. Copying for private or commercial purposes, in part or in whole, is not permitted unless authorised by AUDI AG. AUDI AG does not guarantee or accept any liability with respect to the correctness of information in this document. Copyright by AUDI AG.

– Press dished spring down using workshop press with assembly jig -T10277- .

– Insert split retaining ring -1-.

– Make sure that split retaining ring is seated securely all round in groove on cylinder „C/D“.

– Release workshop press.

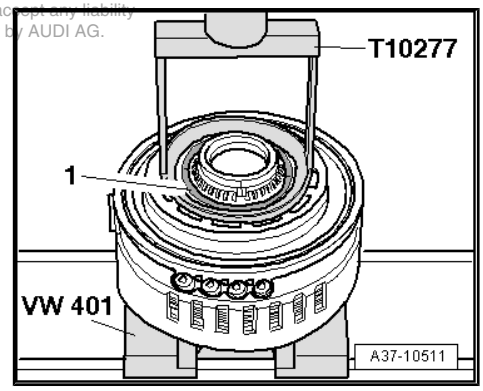

3.6 Adjusting clearance of clutch „D“

- Planetary drive „II“ and „III“ installed

Note

- *The clearance of clutch „D“ can only be determined by measuring the dimensions of the gearbox housing because the plates of clutch „D“ are inserted directly into the housing.*
- *The clearance is set by determining the required thickness of the thick outer plate for clutch „D“.*

Overview

The instructions and dimensions in the following text refer to the diagram shown here.

1 - Piston „D“

2 - Cylinder „C/D“

3 - Gearbox housing

4 - Clutch pack for clutch „D“ without thick outer plate

5 - Thick outer plate

Dimensions -a … g- are explained in the following text.

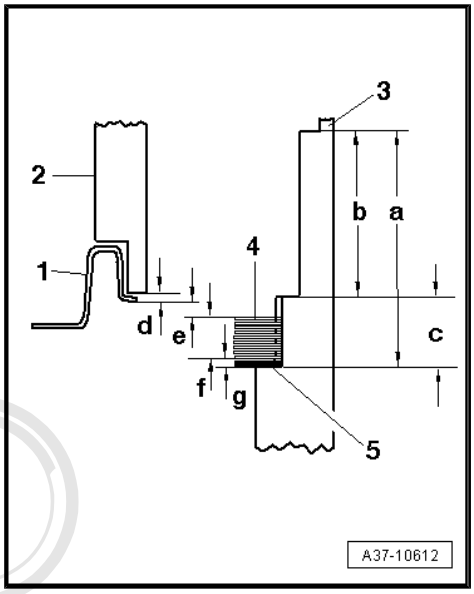

– Using digital depth gauge -VAS 6087- , measure depth in gearbox housing from contact surface of ATF supply unit (as reference point) to contact surface for plates of clutch „D“ -arrow-.

– Make a note of dimension -a-.

Protected by copyright. Copying for private or commercial purposes, in part or in whole, is not permitted unless authorised by AUDI AG. AUDI AG does not guarantee or accept any liability with respect to the correctness of information in this document. Copyright by AUDI AG.

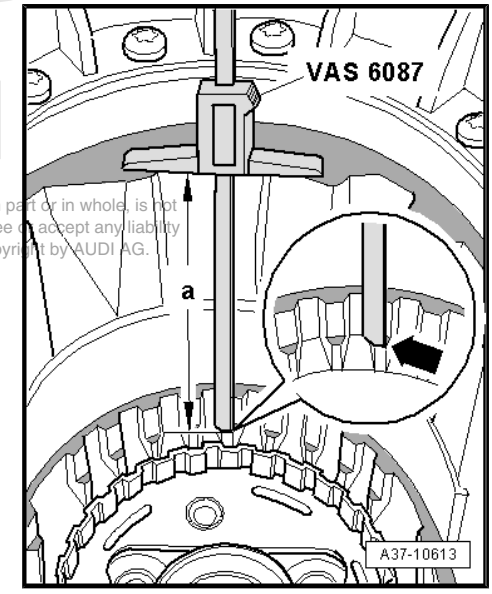

– Using digital depth gauge -VAS 6087- , measure depth in gearbox housing from contact surface of ATF supply unit (as reference point) to contact surface for cylinder „C/D“ -arrow-.

– Make a note of dimension -b-.

– Calculate installation height (dimension -c-) according to the following formula:

  c = a – b

– Make a note of dimension -c-.

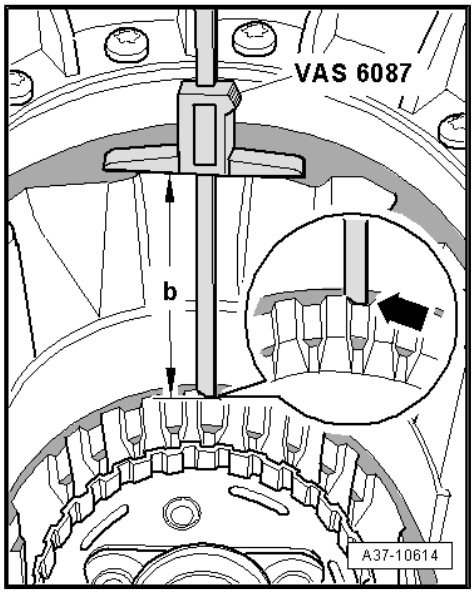

– Using digital depth gauge -VAS 6087- , measure projection of piston „D“ -item 2- above cylinder „C/D“ -item 1-.

– Make a note of dimension -d-.

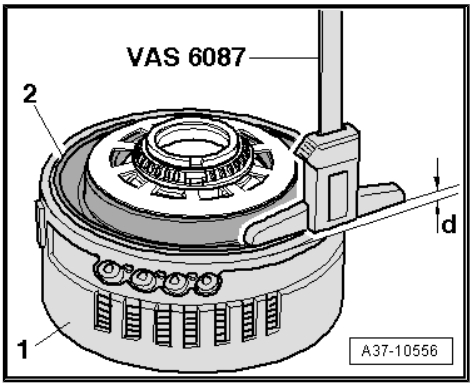

– Assemble plates of clutch „D“ -item 1- in correct sequence, without thick outer plate, on compressor tool -T10285- .

• The last friction plate is fitted at the top.

• The corrugated spring is at the bottom.

– Place holding plate -T10281- onto last friction plate.

• The holding plate should be positioned centrally on the friction plate.

– Fit centring pin of thrust piece -T10285/1- into drilling in holding plate.

– Position plates of clutch „D“ -item 1- so they are aligned exactly one above the other on base plate of compressor tool.

• Thrust piece must be positioned centrally below thrust plate of spindle.

– Turn spindle of compressor tool downwards.

• The markings on the inspection hole of the thrust piece must align -arrow-.

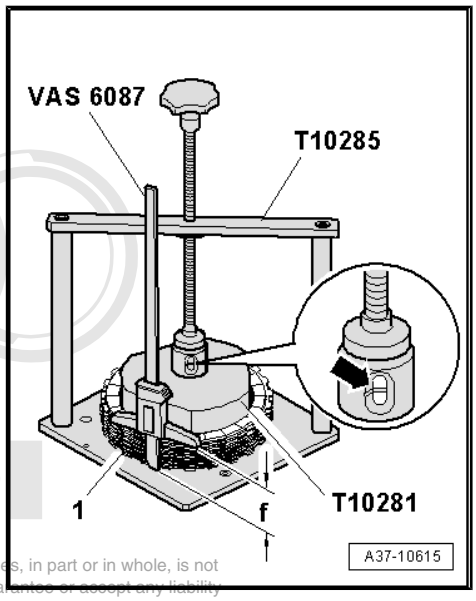

Copyright by AUDI AG. All rights reserved. Unauthorised copying or distribution of this document, in part or in whole, is not permitted unless authorised by AUDI AG. AUDI AG does not guarantee or accept any liability with respect to the correctness of information in this document. Copyright by AUDI AG.

– Apply digital depth gauge -VAS 6087- to outer rim of top friction plate as shown in illustration.

– Measure height of plates -1- of clutch „D“ above base plate of compressor tool in compressed condition.

• Height of clutch pack in compressed condition (not including thick outer plate) = dimension -f-

– Make a note of dimension -f-.

– Repeat measurement at two further points on top friction plate, offset by 120° each time.

– Determine average value from the three measurements under load.

– Release spindle and remove holding plate.

- Specified value for clearance -e-: 2.11 … 2.75 mm

– Calculate correct thickness -g- of thick outer plate -5- according to following formula:

  g = c – d – f – e

– Select thick outer plate as required from following table:

Available thick outer plates - thickness in mm		
2.10	3.00	3.90
2.40	3.30	
2.70	3.60	

– Fit new thick outer plate.

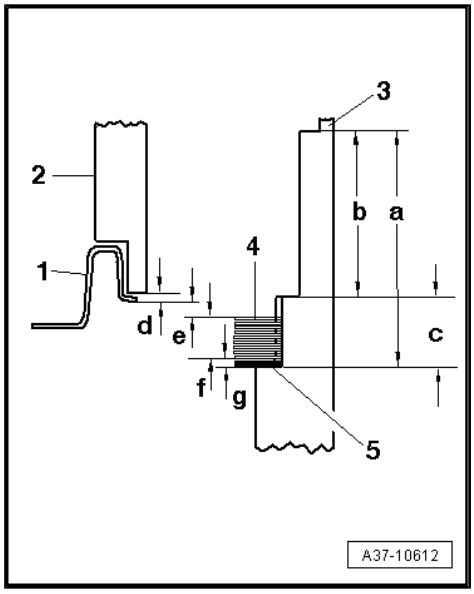

3.7 Planetary drive „II“ and „III“ - exploded view

Note

- *The planetary gear set cannot be renewed separately. The gearbox must be renewed if these parts are damaged.*
- *The planetary gear set should only be dismantled for cleaning and assessment of wear* ⇒ page 167 .

Protected by copyright. Copying for private or commercial purposes, in part or in whole, is not permitted unless authorised by AUDI AG. AUDI AG does not guarantee or accept any liability with respect to the correctness of information in this document. Copyright by AUDI AG.

1 - Sun gear „II“
2 - Thrust washer
3 - Axial needle bearing
4 - Sun gear „III“
5 - Axial needle bearing
6 - Thrust washer
7 - Planet carrier „II“ and „III“
8 - Annulus „III“
9 - Axial needle bearing
10 - Thrust washer
11 - Output shaft
12 - Circlip

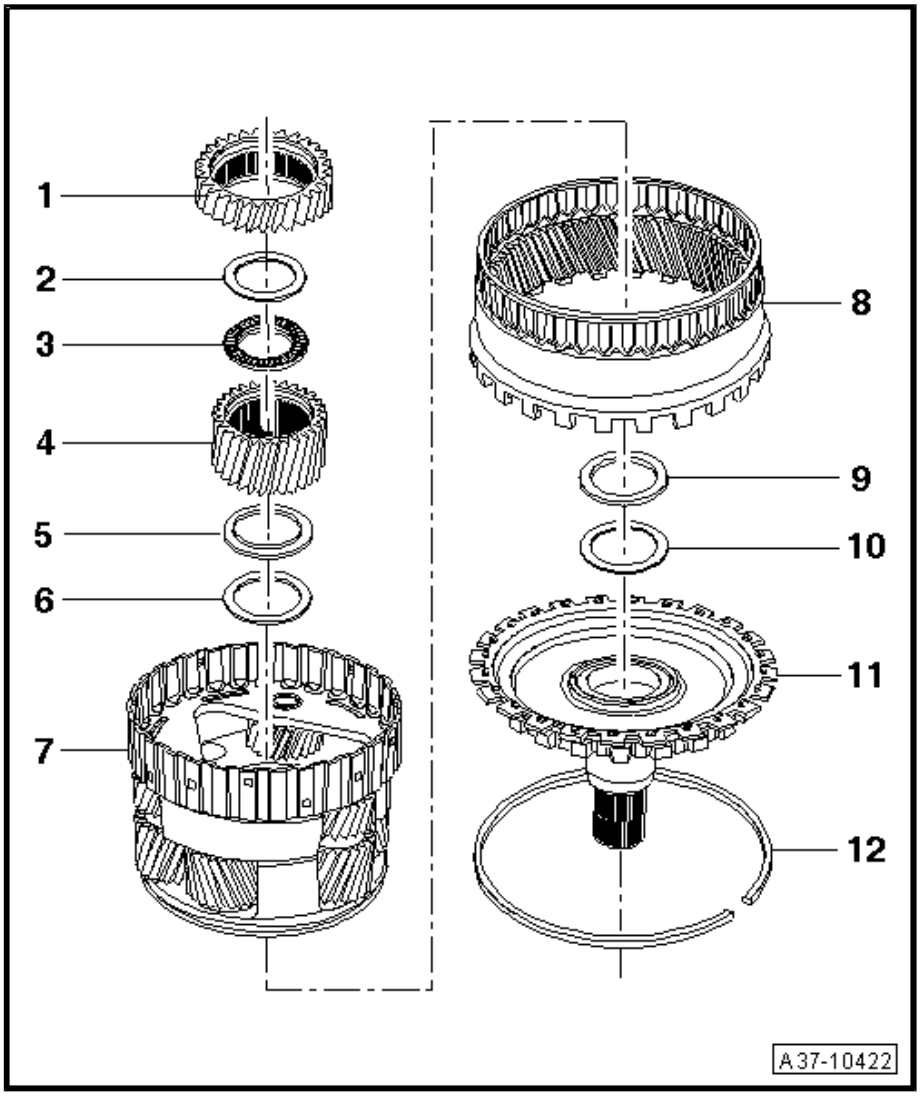

3.8 Dismantling and assembling planetary drive „II“ and „III“

Dismantling

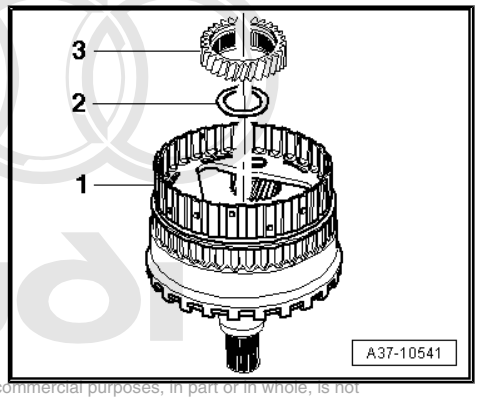

Note

- *The planetary gear set cannot be renewed separately. The gearbox must be renewed if these parts are damaged.*
- *The planetary gear set should only be dismantled for cleaning and assessment of wear* ⇒ page 167 .

– Take sun gear „II“ -item 3- out of planet carrier „II“ and „III“ -item 1-.

– Unclip thrust washer -2- from sun gear „II“ -item 3-.

Protected by copyright. Copying for private or commercial purposes, in part or in whole, is not permitted unless authorised by AUDI AG. AUDI AG does not guarantee or accept any liability with respect to the correctness of information in this document. Copyright by AUDI AG.

– Apply internal puller 30 … 37 mm -Kukko 21/5- by hand to sun gear „III“ -item 2-, as shown in detail view, and pull sun gear „III“ out of planet carrier „II“ and „III“ -item 1- by hand.

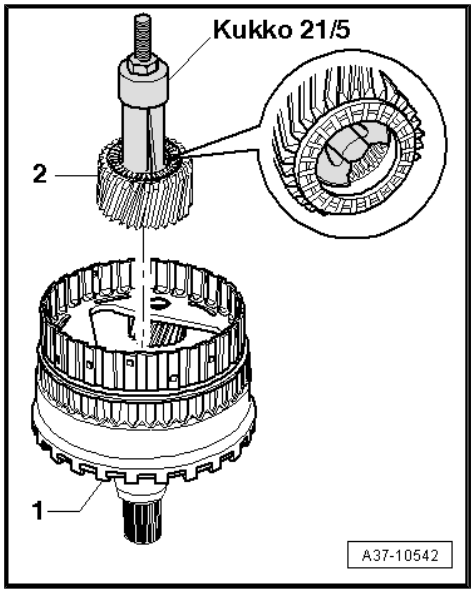

Note

The internal puller may only be applied below the teeth and not close to the axial needle bearing.

Audi

– For re-installation, mark which axial needle bearing was clipped on at chamfer -arrow- on top of sun gear „III“ -item 2-.

Protected by copyright. Copyright by AUDI AG. AUDI AG does not guarantee or accept any liability with respect to the correctness of information in this document. Copyright by AUDI AG.

– If required, unclip axial needle bearings -1- and -3- from sun gear „III“ -item 2-.

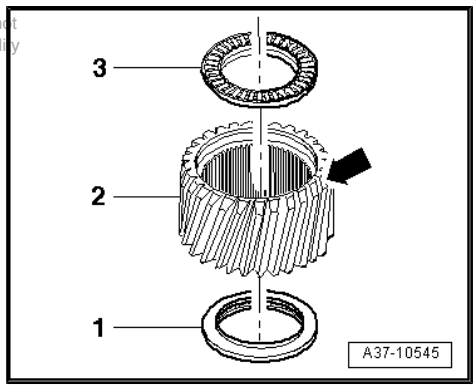

– Take thrust washer -3- out of planet carrier „II“ and „III“ -item 2-.

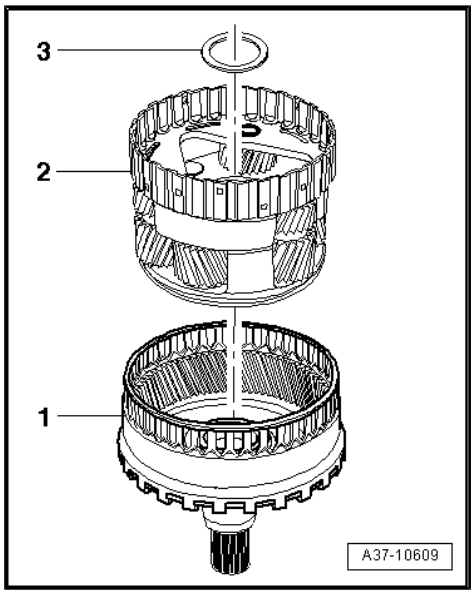

Note

If necessary, the thrust washer can be made to come loose by blowing compressed air under it and pulling it off with a wire hook.

– Take planet carrier „II“ and „III“ -item 2- out of annulus „III“ -item 1- with output shaft.

– Turn planet carrier „II“ and „III“ -item 1- upside down.
– Unclip axial needle bearing -2- from planet carrier „II“ and „III“ -item 1-.

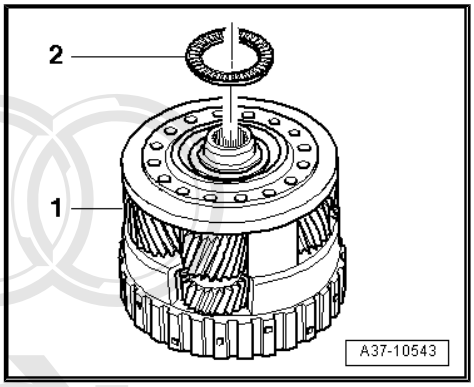

– Remove thrust washer -2- from annulus „III“ -item 1- with output shaft.

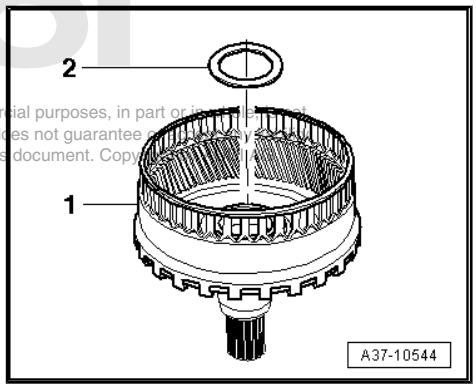

Protected by copyright. Copying for private or commercial purposes, in part or in whole, is not permitted unless authorised by AUDI AG. AUDI AG does not guarantee or assume liability with respect to the correctness of information in this document. Copyright by AUDI AG.

– Turn annulus „III“ with output shaft upside down.
– Remove circlip -3-.
– Detach output shaft -2- from annulus „III“ -item 1-.

Assembling

– Engage splines of output shaft -2- in splines of annulus „III“ -item 1-.
– Install new circlip -3-.

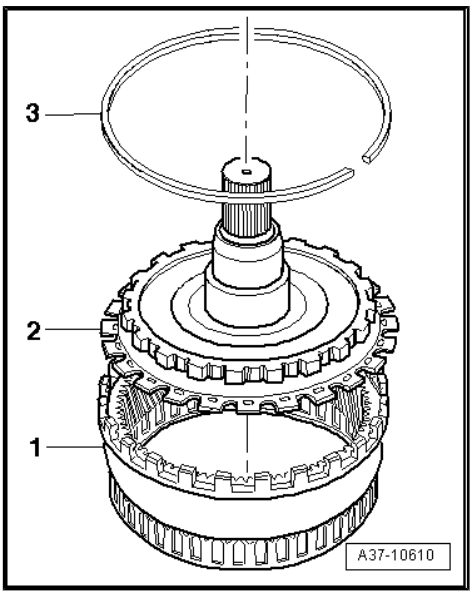

– Turn annulus „III“ with output shaft upside down.
– Fit thrust washer -2- in annulus „III“ -item 1- with output shaft.

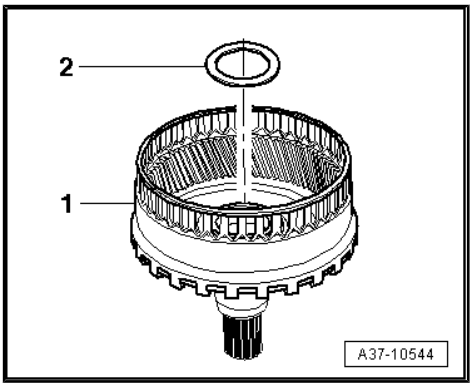

– Clip axial needle bearing -2- (bottom) onto planet carrier „II“ and „III“ -item 1-.

• The closed side of the axial needle bearing faces towards planet carrier „II“ and „III“.

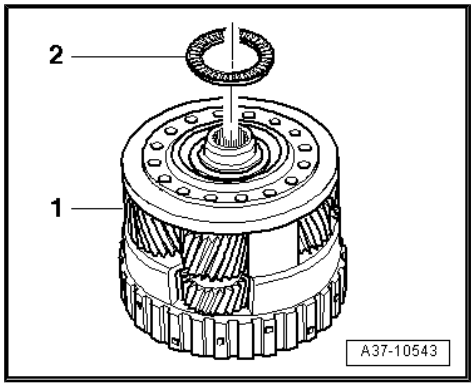

– Turn planet carrier „II“ and „III“ upside down.

– Fit planet carrier „II“ and „III“ -item 2- into annulus „III“ -item 1- with output shaft.

– Fit thrust washer -3- in planet carrier „II“ and „III“ -item 2-.

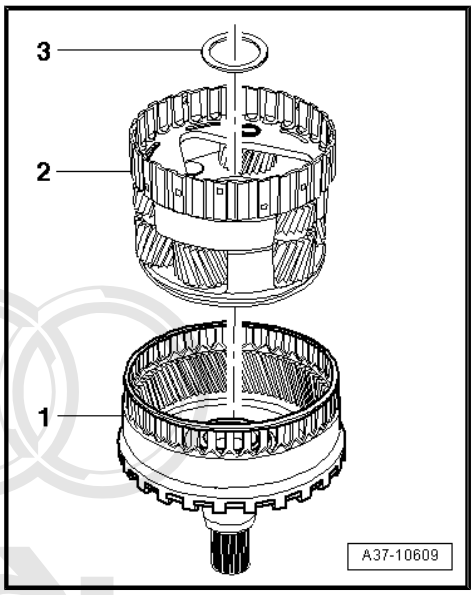

– Clip axial needle bearings -1- and -3- on at top -arrow- and bottom of sun gear „III“ -item 2- according to marks made on removal.

• The closed side of the axial needle bearings faces towards sun gear „III“.

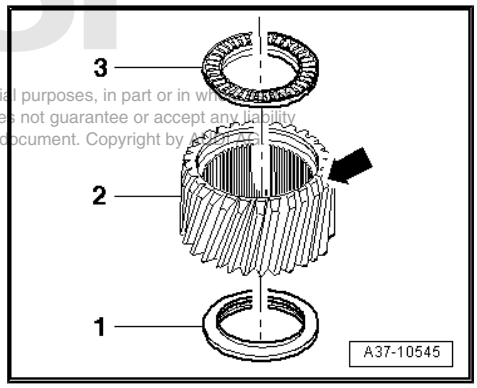

Protected by copyright. Copying for private or commercial purposes, in part or in whole, is not permitted unless authorised by AUDI AG. AUDI AG does not guarantee or accept any liability with respect to the correctness of information in this document. Copyright by AUDI AG.

– Fit sun gear „III“ -item 2- in planet carrier „II“ and „III“ -item 1-.

• The chamfer -arrow- on sun gear „III“ faces upwards.

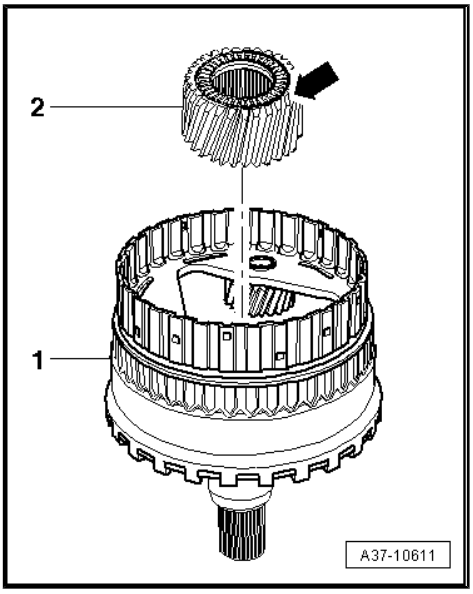

– Clip thrust washer -2- into sun gear „II“ -item 3-.

– Fit sun gear „II“ -item 3- in planet carrier „II“ and „III“ -item 1-.

• The side with the clipped-on thrust washer faces towards planet carrier „II“ and „III“.

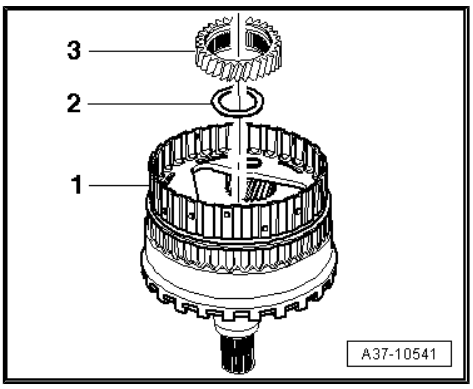

Protected by copyright. Copying for private or commercial purposes, in part or in whole, is not permitted unless authorised by AUDI AG. AUDI AG does not guarantee or accept any liability with respect to the correctness of information in this document. Copyright by AUDI AG.

4 Dismantling and assembling clutch „B“

Overview

- ⇒ „4.1 Clutch B - exploded view“, page 66
- ⇒ „4.2 Dismantling and assembling clutch B “, page 67

4.1 Clutch „B“ - exploded view

Note

- *Some of the components shown are supplied as part of an assembly group and cannot be ordered as separate components ⇒ Electronic parts catalogue .*
- *Check components of clutch „B“ for traces of wear and damage ⇒ „3.5 Clutch B “, page 169 .*

1 - Circlip
- ❑ Determining thickness ⇒ page 70

2 - Thick outer plate
- ❑ Studded side faces upwards towards circlip

3 - Friction plate

4 - Outer plate

5 - Corrugated spring

6 - Circlip
- ❑ Renew

7 - Retaining ring
- ❑ Smooth side faces towards dished spring

8 - Dished spring

9 - Circlip

10 - Retaining plate

11 - O-ring
- ❑ Renew

12 - Piston „B“

13 - O-ring
- ❑ Renew

14 - O-ring
- ❑ Renew

15 - Cylinder „B“

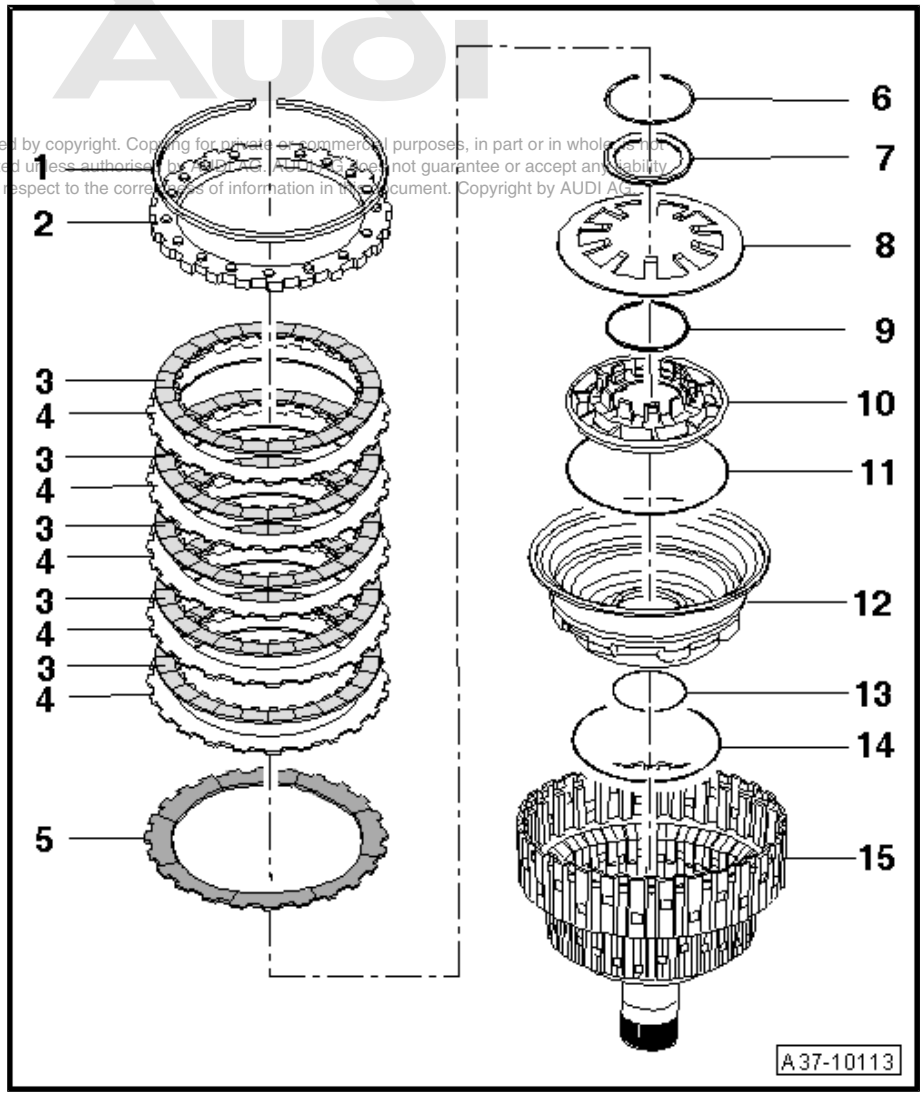

Protected by copyright. Copying for private or commercial purposes, in part or in whole, is not permitted unless authorised by AUDI AG. AUDI AG does not guarantee or accept any liability with respect to the correctness of information in this document. Copyright by AUDI AG.

4.2 Dismantling and assembling clutch „B“

Dismantling

– Detach circlip -1- and remove clutch pack -2- from cylinder „B“.

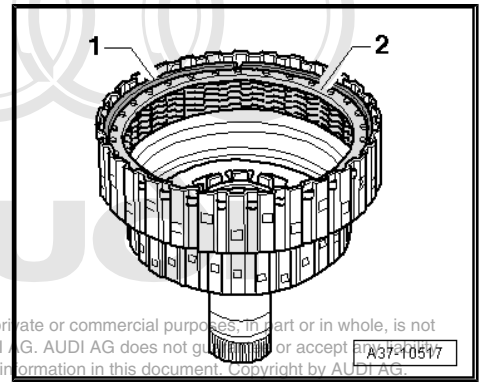

Protected by copyright. Copying for private or commercial purposes, in part or in whole, is not permitted unless authorised by AUDI AG. AUDI AG does not guarantee or accept any liability with respect to the correctness of information in this document. Copyright by AUDI AG.

– Press dished spring down using workshop press with assembly jig -T10289- .
– Remove circlip -1-.
– Release workshop press.

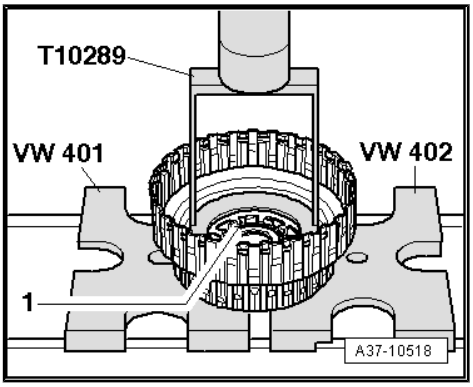

– Detach retaining ring -3- and dished spring -2- from cylinder „B“ -item 1-.

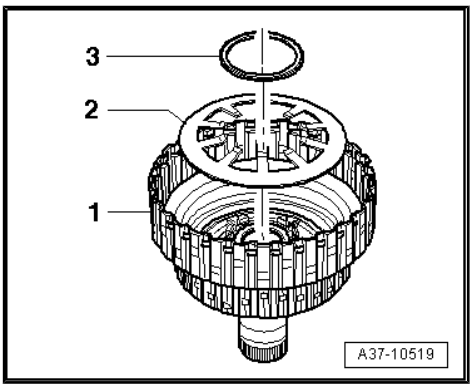

– Press retaining plate -1- downwards by hand or using two screwdrivers -arrow-.
– Remove circlip -2-.

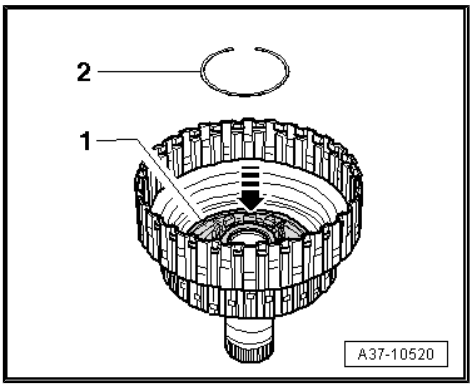

– Turn cylinder „B“ upside down.

> ⚠ **WARNING**
>
> *Wear safety goggles.*

– Carefully press piston „B“ together with retaining plate out of cylinder „B“ using compressed air (cover oil drilling on opposite side with your finger).

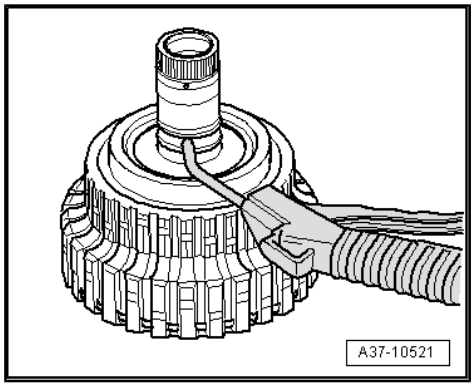

Assembling

> ⚠ **Caution**
>
> *Check components of clutch „B“ for traces of wear and damage* *⇒ „3.5 Clutch B “, page 169* *.*

– Renew O-rings -2- and -3- for piston „B“ -item 4-.

– Renew O-ring -5- for retaining plate -6-.

– Push piston „B“ -item 4- into cylinder „B“ -item 1- as far as stop.

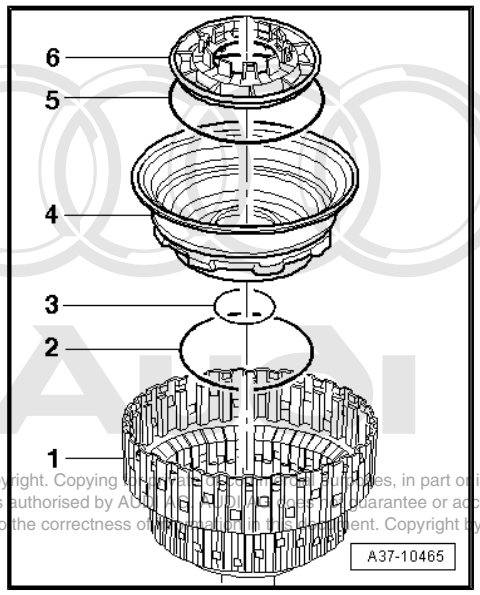

Protected by copyright. Copying [illegible] permitted unless authorised by AUDI AG. [illegible] guarantee or accept any liability with respect to the correctness of [illegible] ent. Copyright by AUDI AG.

– Insert retaining plate -1-.

– Press retaining plate downwards slightly by hand or using two screwdrivers -arrow-.

– Insert circlip -2-.

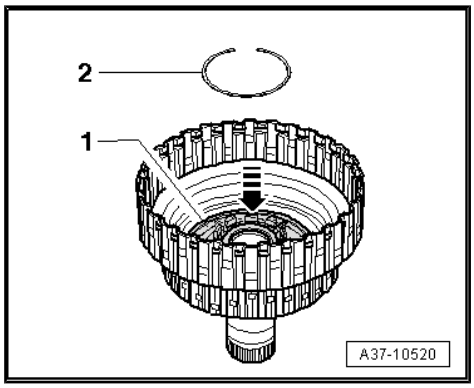

– Fit dished spring -2- and retaining ring -3- on cylinder „B“ -item 1-.

• The smooth side of the retaining ring faces the dished spring.

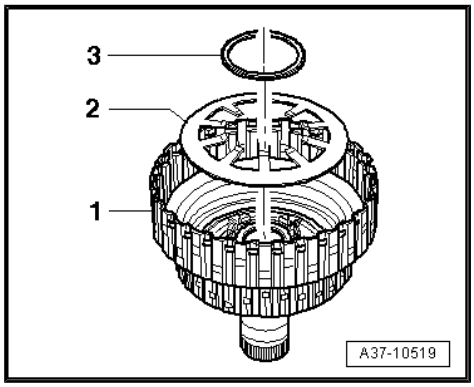

– Press dished spring down using workshop press with assembly jig -T10289- .
– Insert circlip -1-.
– Make sure that circlip is seated securely all round in groove on retaining plate.
– Release workshop press.

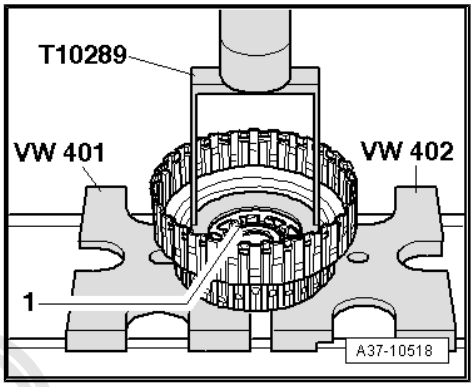

– Insert corrugated spring -2- into cylinder „B“ -item 1-.
– Fit outer plates -3- and friction plates -4- alternately.
– Insert thick outer plate -5-.
• Studded side of thick outer plate faces upwards towards circlip
– Insert circlip -6-.

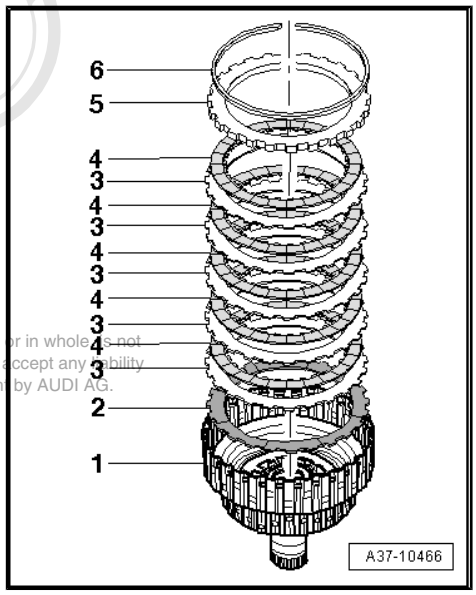

Protected by copyright. Copying for private or commercial purposes, in part or in whole, is not permitted unless authorised by AUDI AG. AUDI AG does not guarantee or accept any liability with respect to the correctness of information in this document. Copyright by AUDI AG.

Adjusting clearance of clutch „B“

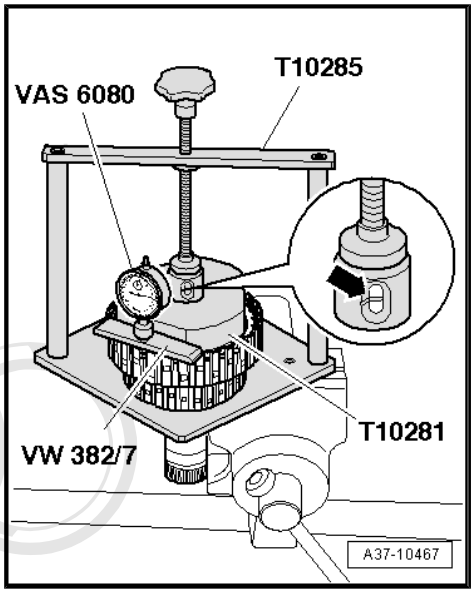

– Position clutch „B“ onto compressor tool -T10285- .

– Place holding plate -T10281- on outer plate of clutch „B“.

• The holding plate should not contact the studs on the outer plate at any point.

– Fit centring pin of thrust piece -T10285/1- into drilling in holding plate.

– Bring clutch „B“ into correct position on base plate of compressor tool.

• Thrust piece must be positioned centrally below thrust plate of spindle.

– Turn spindle of compressor tool downwards.

• The markings on the inspection hole of the thrust piece must align -arrow-.

– Insert dial gauge -VAS 6080- into measuring bridge -VW 382/7- and secure with knurled nut.

– Position measuring bridge on upper rim of cylinder „B“ as shown in illustration.

– Check that measuring bridge is seated properly on rim of cylinder „B“.

Protected by copyright. Copying for private or commercial purposes, in part or in whole, is not permitted unless authorised by AUDI AG. AUDI AG does not guarantee or accept any liability with respect to the correctness of information in this document. Copyright by AUDI AG.

– Bring measuring tip into contact with outer plate and note value obtained.

– Mark exact contact point on cylinder „B“.

– Repeat measurement at two other points on outer plate (offset by 120°) and mark measuring points.

– Determine average value from the three measurements under load.

– Release spindle and remove holding plate.

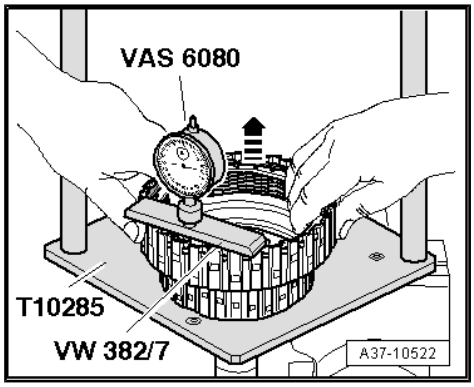

– Use both hands to pull clutch pack upwards as far as stop in clutch „B“.

– With clutch pack pulled up as far as stop, measure distance between upper rim of cylinder „B“ and outer plate at one of the points marked (second mechanic required).

– Repeat measurement at the two remaining markings on the outer plate.

– Determine average value from the three measurements with clutch pack pulled up as far as stop.

– Determine clearance using the following formula:

	Mean value of measurements under load (value 1 + value 2 + value 3) : 3
–	Mean value of measurements with clutch pack pulled up as far as stop (value 1 + value 2 + value 3) : 3
=	Clearance

– Subtract mean value of measurements with clutch pack pulled up as far as stop from mean value of measurements under load.

Clearance:

• Specification: 1.41 ... 1.86 mm

If result does not match specification:

– Determine new circlip -1-.

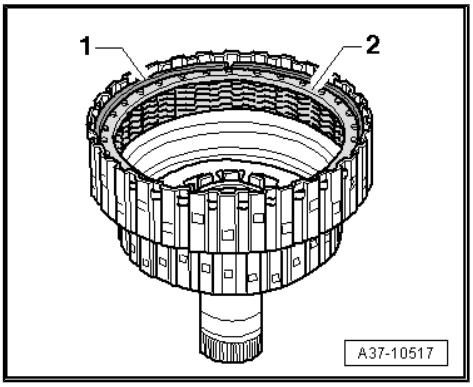

Note

-Item 2- can be disregarded.

- If clearance is below specification: insert thinner circlip of appropriate thickness.
- If clearance is above specification: insert thicker circlip of appropriate thickness.

Available circlips - Thickness of circlips in mm		
2.20	3.20	4.20
2.40	3.40	4.40
2.60	3.60	4.60
2.80	3.80	
3.00	4.00	

– Check clearance again after inserting circlip.

Protected by copyright. Copying for private or commercial purposes, in part or in whole, is not permitted unless authorised by AUDI AG. AUDI AG does not guarantee or accept any liability with respect to the correctness of information in this document. Copyright by AUDI AG.

5 Dismantling and assembling body „II“

Overview

- ⇒ „5.1 Body II - exploded view“, page 72
- ⇒ „5.2 Dismantling body II “, page 73
- ⇒ „5.3 Clutch A - exploded view“, page 75
- ⇒ „5.4 Dismantling and assembling clutch A “, page 76
- ⇒ „5.5 Clutch E - exploded view“, page 81
- ⇒ „5.6 Dismantling and assembling clutch E “, page 82
- ⇒ „5.7 Assembling body II “, page 87

5.1 Body „II“ - exploded view

Note

Some of the components shown are supplied as part of an assembly group and cannot be ordered as separate components ⇒ Electronic parts catalogue .

1 - Clutch „A“

2 - Circlip
- ❑ For planet carrier „I“
- ❑ Renew

3 - Sun gear „I“

4 - Axial needle bearing

5 - Planet carrier „I“

6 - Rectangular section seals
- ❑ Renew

7 - Axial needle bearing

8 - Clutch „E“ with annulus „I“

9 - Axial needle bearing

10 - Inner plate carrier „E“ with intermediate shaft

11 - Axial needle bearing

12 - Inner plate carrier „A“

13 - Inner plate carrier „B“

14 - Circlip
- ❑ Must be re-used

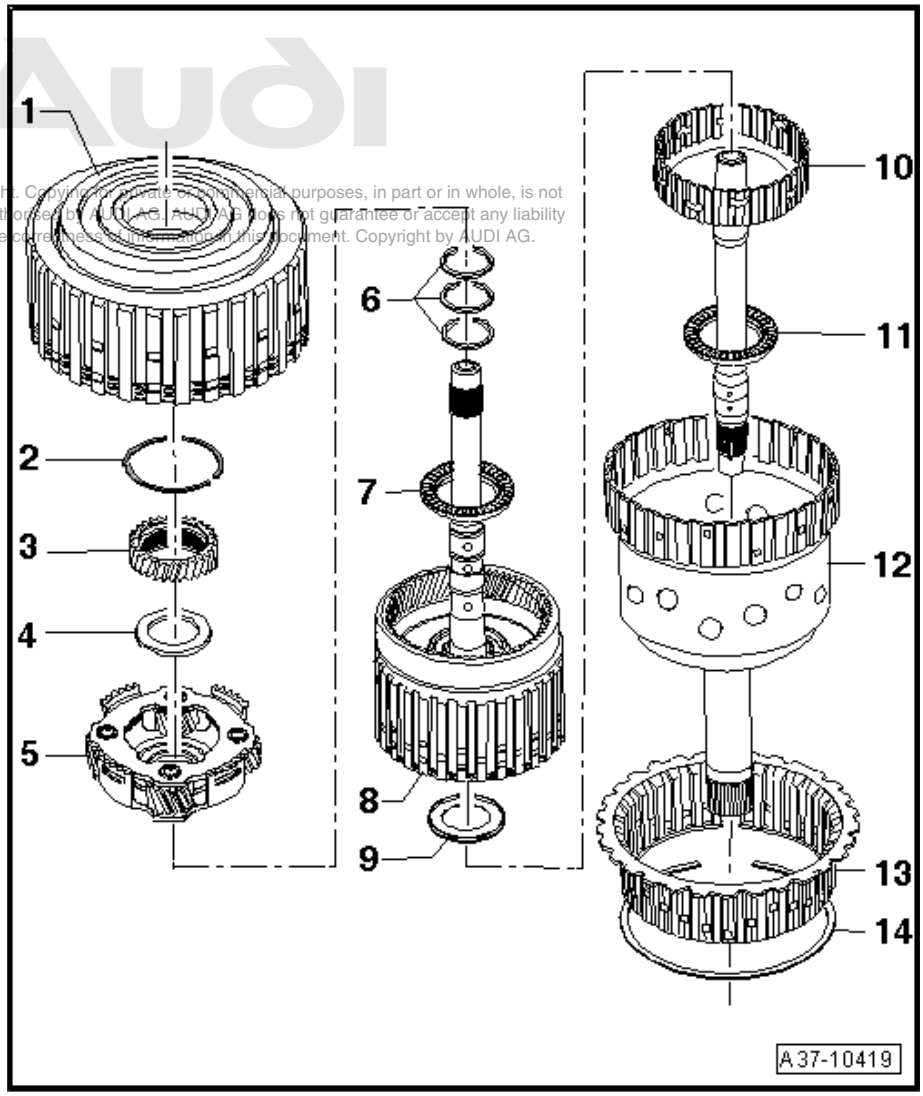

Protected by copyright. Copying for private or commercial purposes, in part or in whole, is not permitted unless authorised by AUDI AG. AUDI AG does not guarantee or accept any liability with respect to the correctness of information in this document. Copyright by AUDI AG.

5.2 Dismantling body „II“

– Place body „II“ -item 1- on support -T10283- .

• The ATF pump end must face downwards.

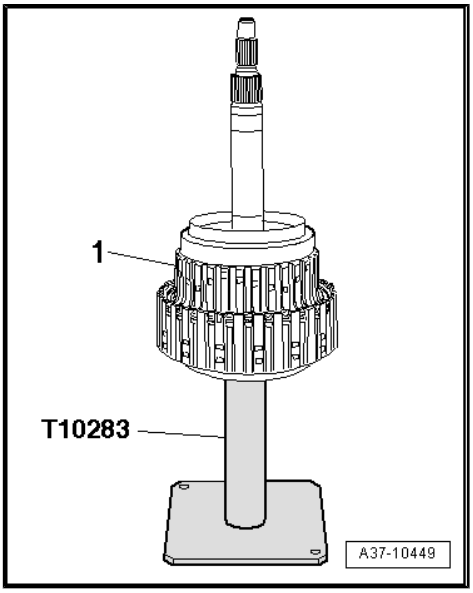

– Remove circlip -arrow-.

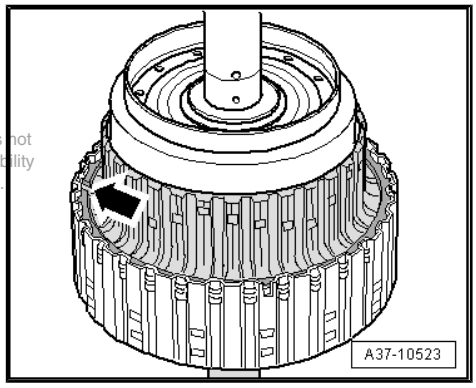

Note

The circlip must be re-used; take care not to over-stretch it on removal.

Protected by copyright. Copying for private or commercial purposes, in part or in whole, is not permitted unless authorised by AUDI AG. AUDI AG does not guarantee or assume any liability with respect to the correctness of information in this document. Copyright by AUDI AG.

– Detach inner plate carrier „B“ -item 2- from clutch „A“ -item 1-.

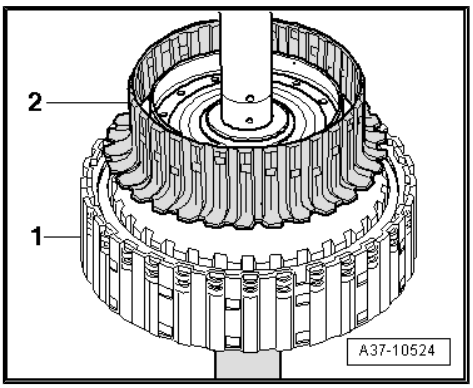

– Detach inner plate carrier „A“ -item 3- from clutch „A“ -item 1- and clutch „E“ -item 2-.

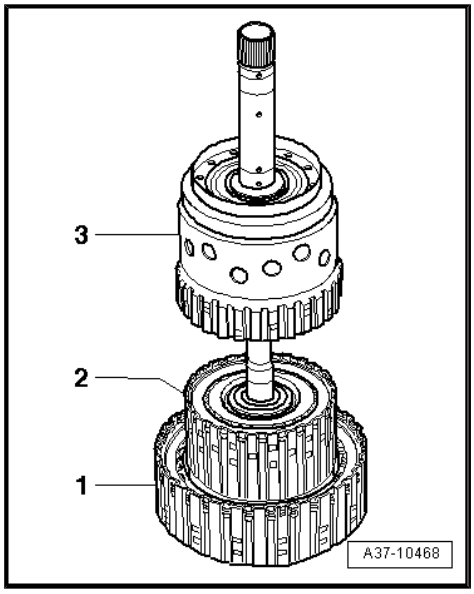

– Turn inner plate carrier „A“ -item 1- upside down and remove axial needle bearing -2-.

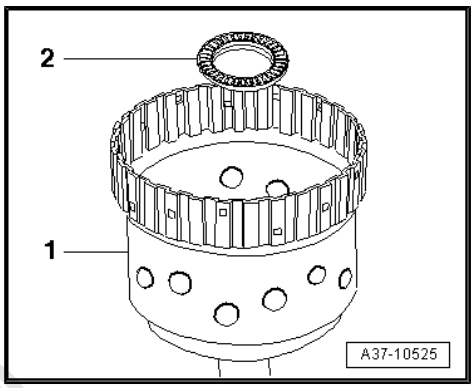

Note

Use a scriber if necessary to unclip bearing.

– Detach inner plate carrier „E“ -item 6- with intermediate shaft from clutch „E“ -item 4-.
– Unclip axial needle bearing -5- from clutch „E“ -item 4-.
– Detach clutch „E“ -item 4- from clutch „A“ -item 1-.
– Unclip axial needle bearing -3- from clutch „E“ -item 4-.

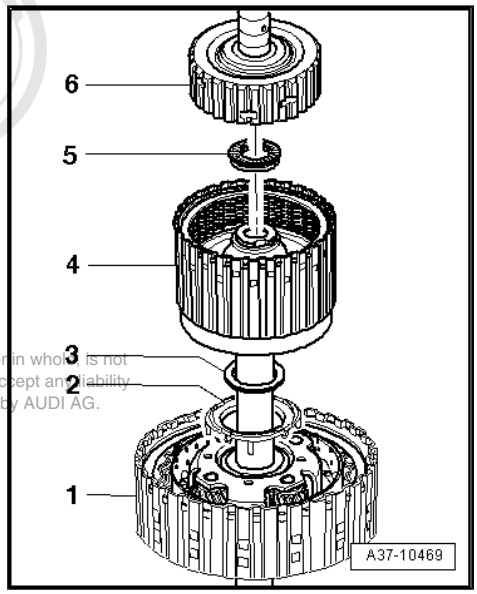

Note

Use a scriber if necessary to unclip bearing.

Protected by copyright. Copying for private or commercial purposes, in part or in whole, is not permitted unless authorised by AUDI AG. AUDI AG does not guarantee or accept any liability with respect to the correctness of information in this document. Copyright by AUDI AG.

– Remove oil collector -2- from planet carrier „I“ in clutch „A“ -item 1-.

– Place clutch „A“ with planet carrier „I“ -item 2- on workbench.

– Release circlip -1- on inside of planet carrier „I“ -item 2- at a total of four points using a small screwdriver.

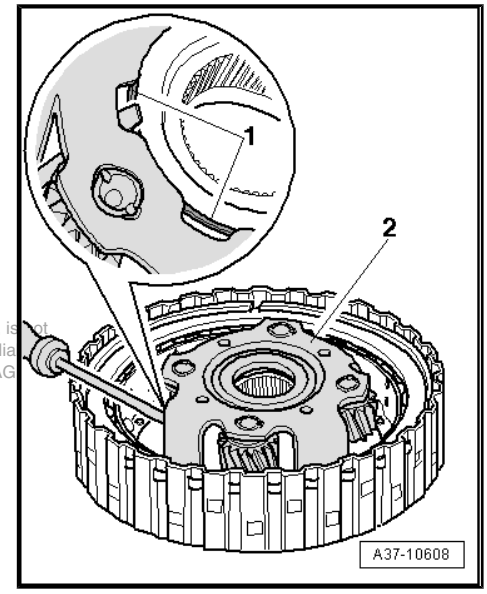

Note

- *Aim a torch (flashlight) between the planetary gears to find the points where you can press against the circlip.*
- *Pull planet carrier „I“ evenly off clutch „A“ as you release the circlip to prevent the points that have already been released from re-engaging.*

Protected by copyright. Copying or distribution for commercial purposes, in part or in whole, is not permitted unless authorised by AUDI AG. AUDI AG does not guarantee or accept any liability with respect to the correctness of information in this document. Copyright by AUDI AG.

– Detach planet carrier „I“ -item 2- and turn it upside down.

– Remove circlip -4- from groove in planet carrier „I“ -item 1-.

– Take sun gear „I“ -item 3- and axial needle bearing -2- out of planet carrier „I“ -item 1-.

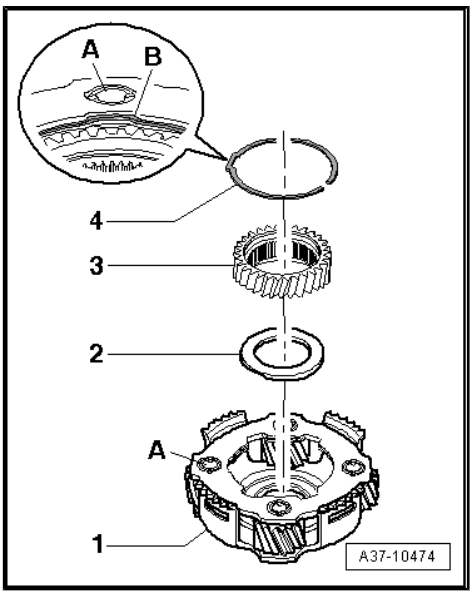

Note

Ignore -item A- and -item B-.

5.3 Clutch „A“ - exploded view

Note

- *Some of the components shown are supplied as part of an assembly group and cannot be ordered as separate components ⇒ Electronic parts catalogue .*
- *Check components of clutch „A“ for traces of wear and damage* *⇒ „3.7 Clutch A “, page 173* .

1 - Cylinder „A“

2 - O-ring
- ❑ Renew

3 - O-ring
- ❑ Renew
- ❑ Rib on O-ring must be inserted in groove

4 - Piston

5 - Dished spring

6 - O-ring
- ❑ Renew
- ❑ Rib on O-ring must be inserted in groove

7 - Retaining plate

8 - Circlip

9 - Corrugated spring

10 - Outer plate

11 - Friction plate

12 - Last outer plate

13 - Circlip
- ❑ Determining thickness ⇒ page 80

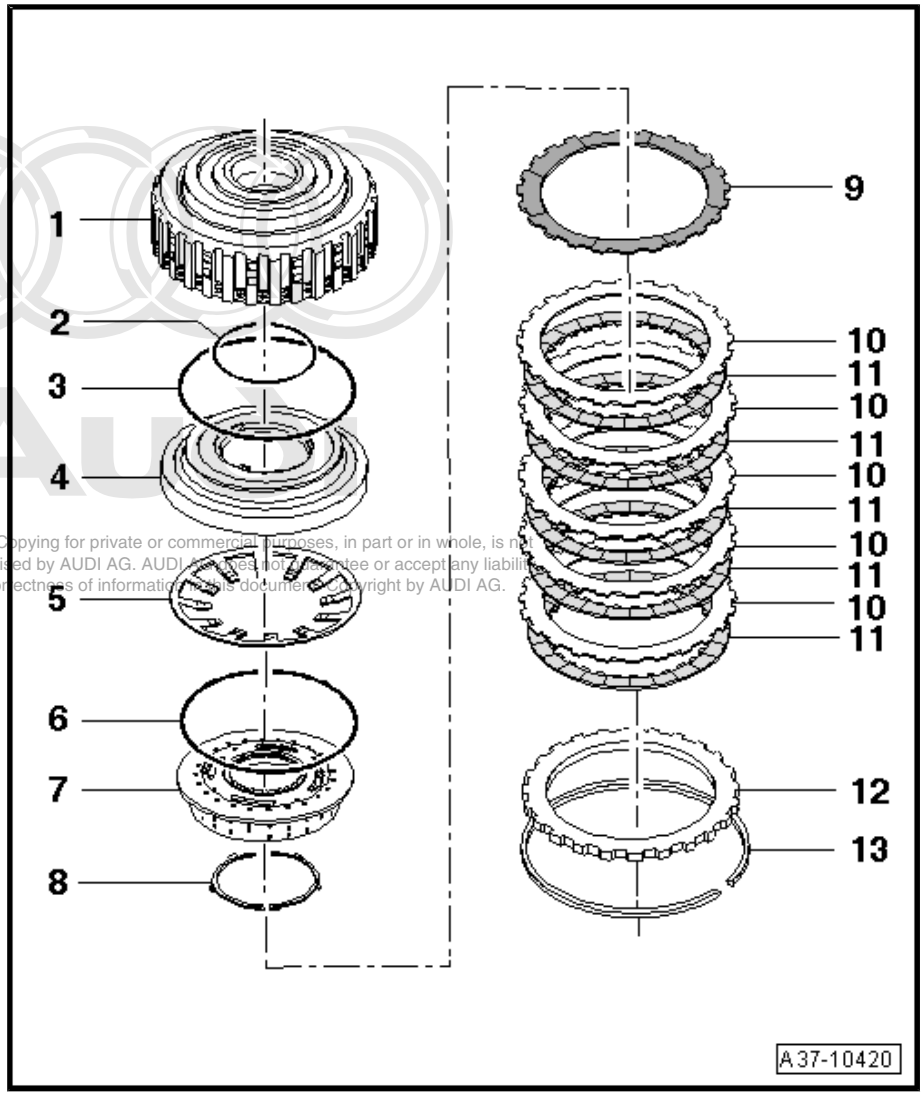

Protected by copyright. Copying for private or commercial purposes, in part or in whole, is not permitted unless authorised by AUDI AG. AUDI AG does not guarantee or accept any liability with respect to the correctness of information in this document. Copyright by AUDI AG.

5.4 Dismantling and assembling clutch „A“

Dismantling

– Detach circlip -1- and remove clutch pack -2- from cylinder „A“.

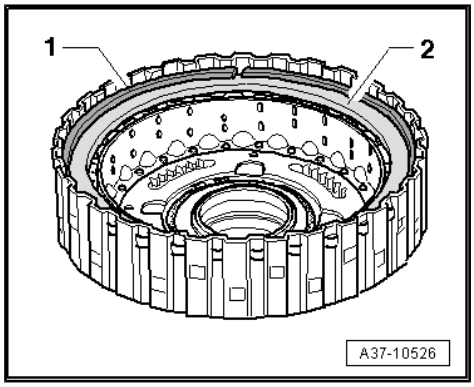

– Mark installation position of retaining plate -2- relative to cylinder „A“ -item 1- using a scriber -arrows-.

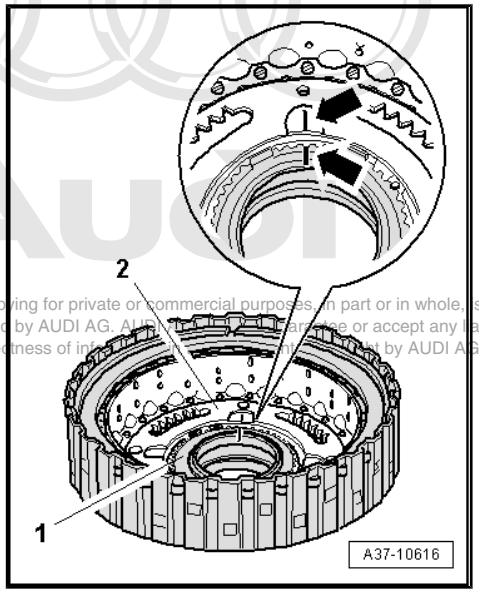

Protected by copyright. Copying for private or commercial purposes, in part or in whole, is not permitted unless authorised by AUDI AG. AUDI AG does not guarantee or accept any liability with respect to the correctness of information supplied by AUDI AG.

– Press retaining plate down using workshop press with assembly jig -T10277- .
– Remove circlip -1-.
– Release workshop press.

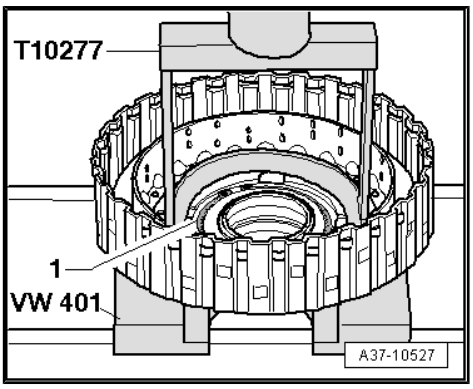

– Detach retaining plate -4- with O-ring -3- from cylinder „A“ -item 1-.
– Detach dished spring -2-.

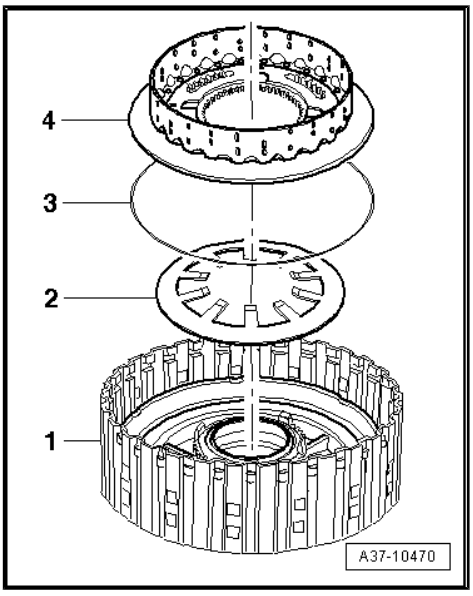

– Place cylinder „A“ -item 2- on ATF supply unit -1- as shown in illustration.

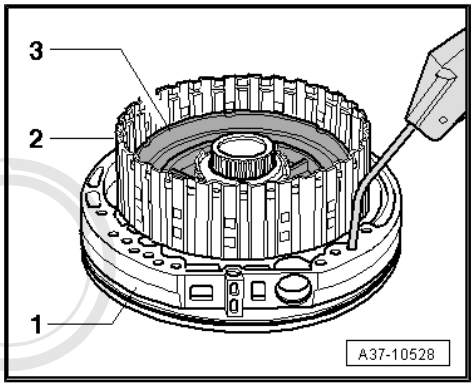

> ⚠ **WARNING**
>
> *Wear safety goggles.*

– Carefully press piston „A“ -item 3- out of cylinder „A“ using compressed air.

Assembling

> ⚠ **Caution**
>
> *Check components of clutch „A“ for traces of wear and damage* *⇒ „3.7 Clutch A “, page 173“.*

Protected by copyright. Copying for private or commercial purposes, in part or in whole, is not permitted unless authorised by AUDI AG. AUDI AG does not guarantee or accept any liability with respect to the correctness of information in this document. Copyright by AUDI AG.

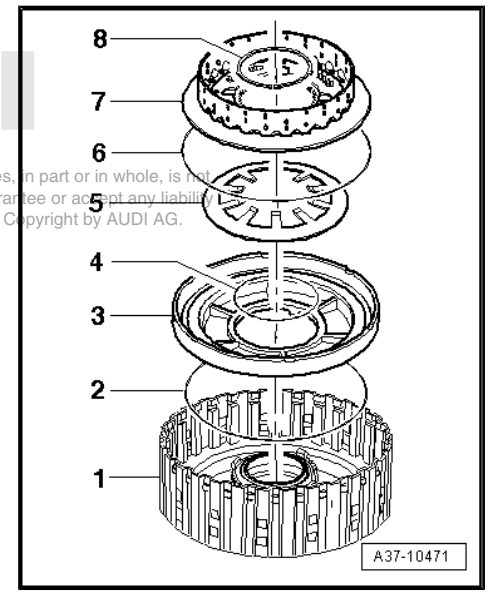

– Renew O-rings -2- and -4- for piston „A“ -item 3-.

• Rib on O-ring -2- must be inserted in groove

– Push piston „A“, -item 3- into cylinder „A“, -item 1- as far as stop.

– Fit dished spring -5-.

– Renew O-ring -6- for retaining plate -7-.

• Rib on O-ring -6- must be inserted in groove

– Insert retaining plate -7-, observing markings (see following illustration „A37-10616“).

8 - Circlip

– When installing retaining plate -2- in cylinder „A“ -item 1-, pay attention to marks made on removal -arrows-

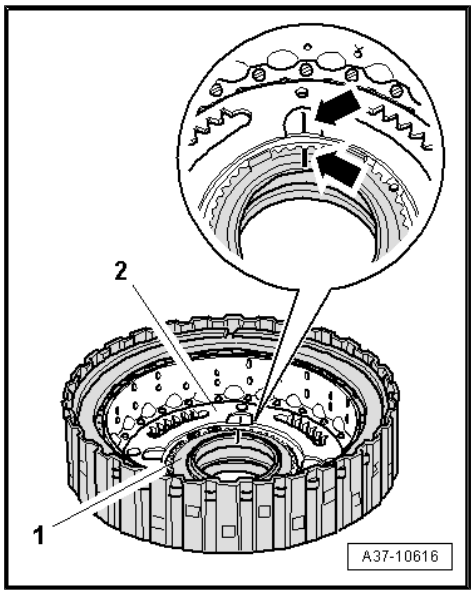

– Press retaining plate down using workshop press with assembly jig -T10277- .
– Renew circlip -1- and install new circlip with care.
– Make sure that circlip is seated securely in groove on cylinder „A“.
– Release workshop press.

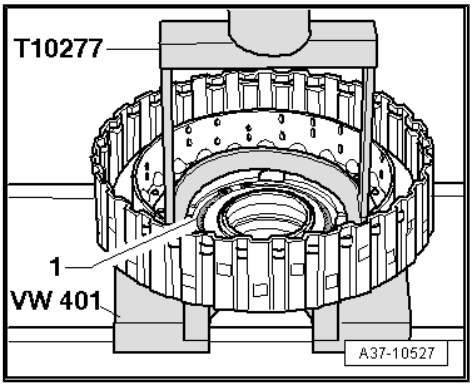

– Insert corrugated spring -2- into cylinder „A“ -item 1-.
– Fit outer plates -3- and friction plates -4- alternately.
– Insert last outer plate -5-.
– Insert circlip -6-.

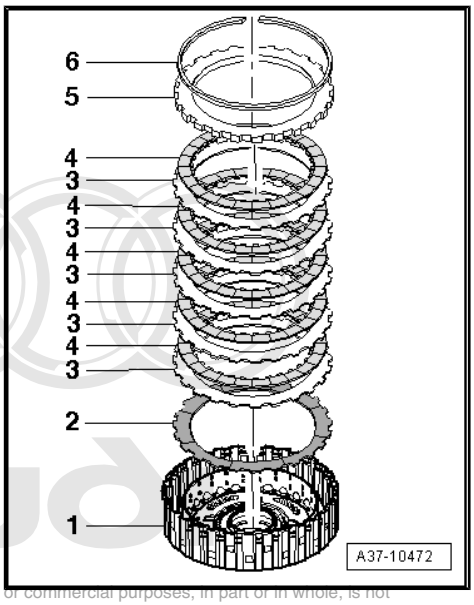

Protected by copyright. Copying for private or commercial purposes, in part or in whole, is not permitted unless authorised by AUDI AG. AUDI AG does not guarantee or accept any liability with respect to the correctness of information in this document. Copyright by AUDI AG.

Adjusting clearance of clutch „A“

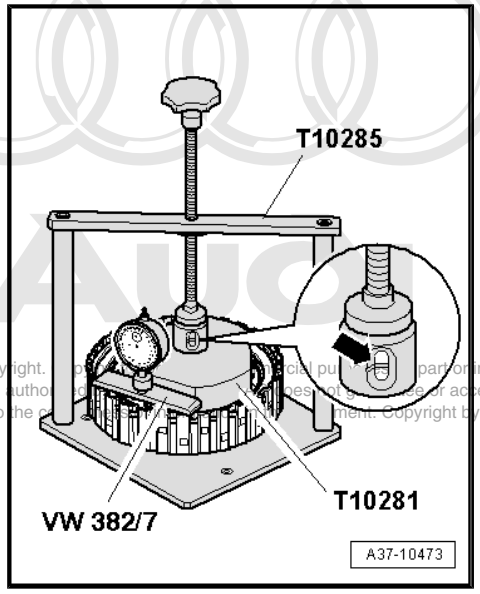

Protected by copyright. Copying for private or commercial purposes, in part or in whole, is not permitted unless authorised by AUDI AG. AUDI AG does not guarantee or accept any liability with respect to the correctness of information in this document. Copyright by AUDI AG.

– Insert clutch „A“ in compressor tool.
– Place holding plate -T10281- on last outer plate of clutch „A“.
• Avoid any contact between holding plate and circlip.
– Fit centring pin of thrust piece -T10285/1- into drilling in holding plate.
– Bring clutch „A“ into correct position on base plate of compressor tool.
• Thrust piece must be positioned centrally below thrust plate of spindle.
– Turn spindle of compressor tool downwards.
• The markings on the inspection hole of the thrust piece must align -arrow-.
– Insert dial gauge -VAS 6080- into measuring bridge -VW 382/7- and secure with knurled nut.
– Position measuring bridge on upper rim of cylinder „A“ as shown in illustration.
– Check that measuring bridge is seated properly on rim of cylinder „A“.
– Bring measuring tip into contact with outer plate and note value obtained.
– Mark exact contact point on cylinder „A“.
– Repeat measurement at two other points on outer plate (offset by 120°) and mark measuring points.
– Determine average value from the three measurements under load.
– Release spindle and remove holding plate.

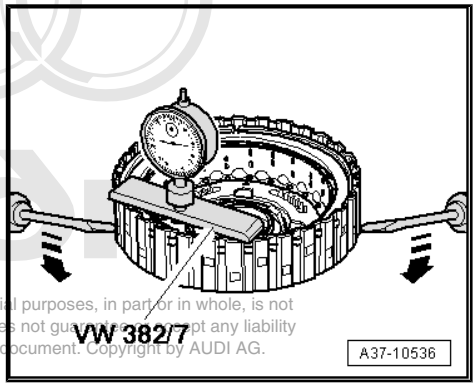

– Insert two thin screwdrivers in openings on opposite sides on outside of cylinder „A“.
– Using two screwdrivers, press clutch pack upwards as far as stop -arrows-.
– With clutch pack pressed upwards, measure distance between upper rim of cylinder „A“ and outer plate at one of the points marked (second mechanic required).
– Repeat measurement at the two remaining markings on the outer plate.
– Calculate mean value of three measurements with clutch pack pressed up as far as stop.

Protected by copyright. Copying for private or commercial purposes, in part or in whole, is not permitted unless authorised by AUDI AG. AUDI AG does not guarantee or accept any liability with respect to the correctness of information in this document. Copyright by AUDI AG.

– Determine clearance using the following formula:

	Mean value of measurements under load (value 1 + value 2 + value 3) : 3
–	Mean value of measurements with clutch pack pressed up as far as stop (value 1 + value 2 + value 3) : 3
=	Clearance

– Subtract mean value of measurements with clutch pack pressed up as far as stop from mean value of measurements under load.

Clearance:

- Specification: 1.59 ... 2.04 mm

If result does not match specification:

– Determine new circlip -1-.

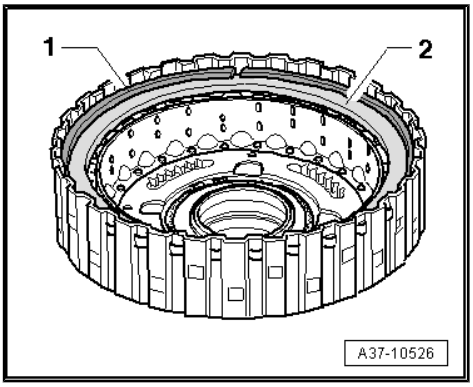

Note

-Item 2- can be disregarded.

- If clearance is below specification: insert thinner circlip of appropriate thickness.
- If clearance is above specification: insert thicker circlip of appropriate thickness.

Available circlips - Thickness of circlips in mm		
2.20	3.20	4.20
2.40	3.40	4.40
2.60	3.60	4.60
2.80	3.80	
3.00	4.00	

– Check clearance again after inserting circlip.

5.5 Clutch „E“ - exploded view

Note

♦ *Some of the components shown are supplied as part of an assembly group and cannot be ordered as separate components ⇒ Electronic parts catalogue .*

♦ *Check components of clutch „E“ for traces of wear and damage* *⇒ „3.8 Clutch E “, page 174* *.*

1 - Cylinder „E“ with annulus „I“

2 - O-ring
- ❑ Renew

3 - O-ring
- ❑ Renew

4 - Piston „E“

5 - Dished spring

6 - O-ring
- ❑ Renew

7 - Retaining plate

8 - Retaining plate
- ❑ Angled outer rim faces towards circlip

9 - Circlip
- ❑ Renew

10 - Corrugated spring

11 - Outer plate

12 - Friction plate

13 - Thick outer plate

14 - Circlip
- ❑ Determining thickness ⇒ page 85

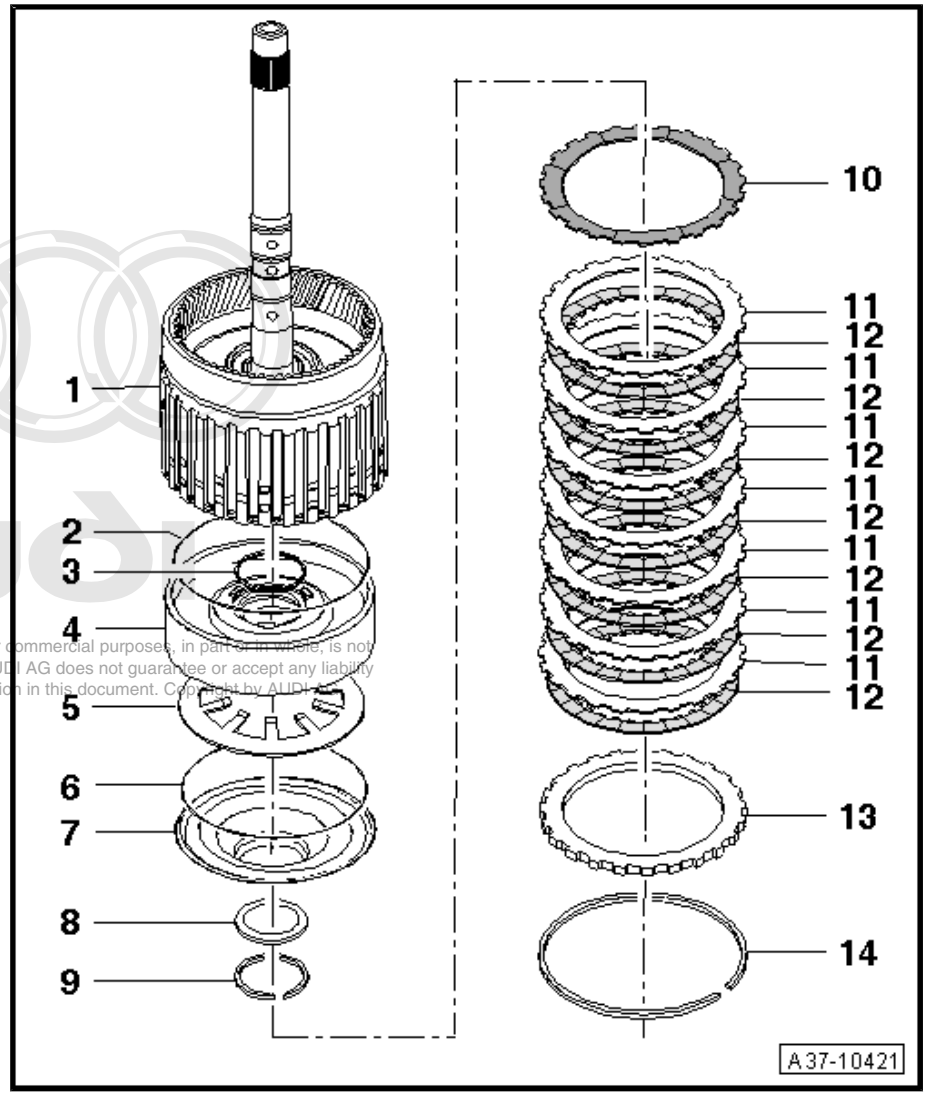

Creation of copies of this document for private or commercial purposes, in part or in whole, is not permitted unless authorised by AUDI AG. AUDI AG does not guarantee or accept any liability with respect to the correctness of information in this document. Copyright by AUDI AG.

5.6 Dismantling and assembling clutch „E“

Dismantling

– Detach circlip -1- and remove clutch pack -2- from cylinder „E“.

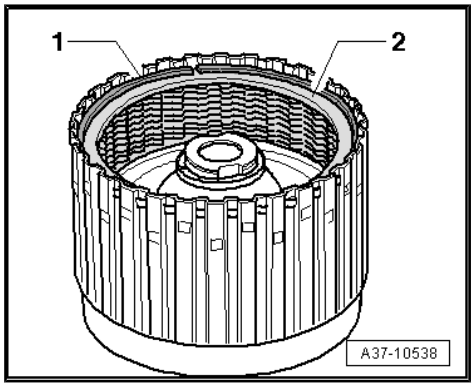

– Press retaining plate down using workshop press with assembly jig -T10277- .
– Remove circlip -1-.
– Release workshop press.

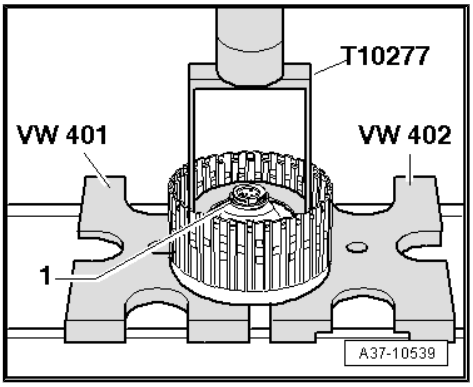

– Detach retaining plate -5-.
– Take out retaining plate -4- with O-ring -3-.
– Detach dished spring -2- from cylinder „E“ -item 1-.

6 - Circlip

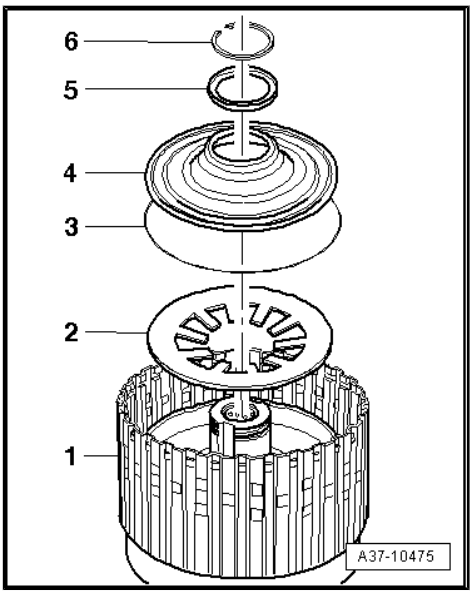

– Turn cylinder „E“ upside down.

WARNING

Wear safety goggles.

– Carefully press piston „E“ out of cylinder „E“ using compressed air (cover oil drilling on opposite side with your finger).

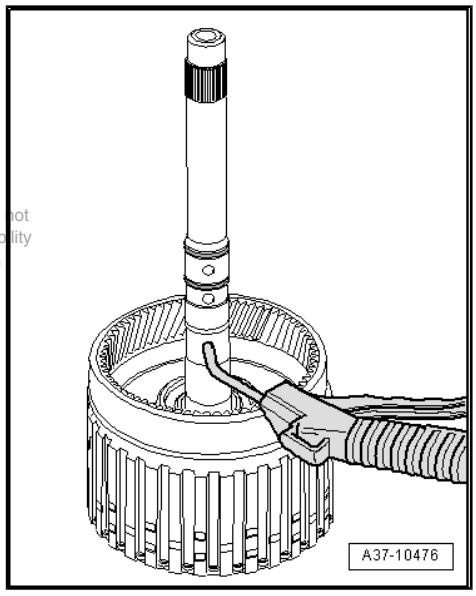

Protected by copyright. Copying for private or commercial purposes, in part or in whole, is not permitted unless authorised by AUDI AG. AUDI AG does not guarantee or assume any liability with respect to the correctness of information in this document. Copyright by AUDI AG.

Assembling

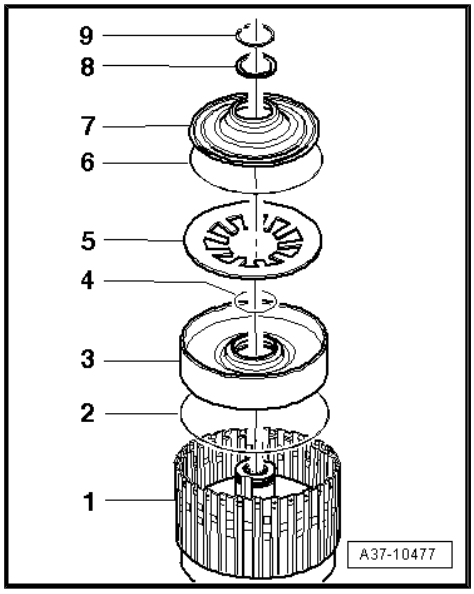

> **Caution**
>
> *Check components of clutch „E“ for traces of wear and damage* *⇒ „3.8 Clutch E “, page 174* *.*

- Renew O-rings -2- and -4- for piston „E“ -item 3-.
- Push piston „E“, -item 3- into cylinder „E“, -item 1- as far as stop.
- Fit dished spring -5-.
- Renew O-ring -6- in retaining plate -7-.
- Insert retaining plate -7-.
- Insert retaining plate -8-.
- The angled outer rim of the retaining plate faces upwards towards circlip -9-.

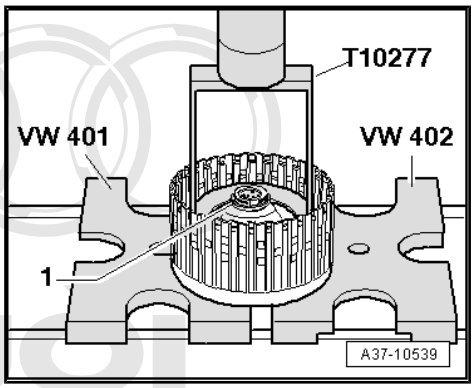

- Press retaining plate down using workshop press with assembly jig -T10277- .

> **Caution**
>
> *Take care not to stretch circlip too far when installing.*

- Renew circlip -1- and install new circlip with care.
- When installing, make sure that circlip is seated securely all round in groove on cylinder „E“.
- Release workshop press.

Protected by copyright. Copying for private or commercial purposes, in part or in whole, is not permitted unless authorised by AUDI AG. AUDI AG does not guarantee or assume any liability with respect to the correctness of information in this document. Copyright by AUDI AG.

- Fit corrugated spring -2- in cylinder „E“ -item 1-.
- Fit outer plates -3- and friction plates -4- alternately.
- Insert thick outer plate -5-.
- Insert circlip -6-.

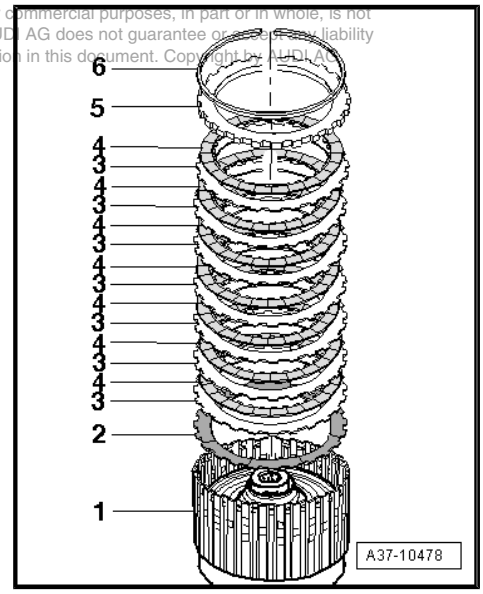

Adjusting clearance of clutch „E“

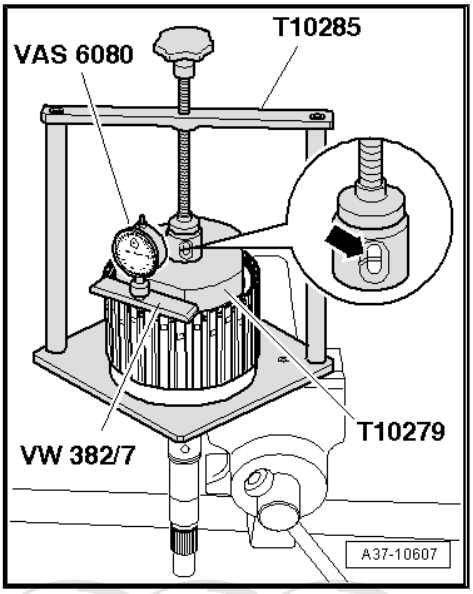

– Clamp support leg of compressor tool -T10285- in vice.
– Insert clutch „E“ in compressor tool.
• The input shaft projects out of drilling in base plate.
– Place holding plate -T10279- on outer plate of clutch „E“.
• Avoid any contact between holding plate and circlip.
– Fit centring pin of thrust piece -T10285/1- into drilling in holding plate.
– Bring clutch „E“ into correct position on base plate of compressor tool.
• Thrust piece must be positioned centrally below thrust plate of spindle.
– Turn spindle of compressor tool downwards.
• The markings on the inspection hole of the thrust piece must align -arrow-.
– Insert dial gauge -VAS 6080- into measuring bridge -VW 382/7- and secure with knurled nut.
– Position measuring bridge on upper rim of cylinder „E“ as shown in illustration.
– Check that measuring bridge is seated properly on rim of cylinder „E“.
– Bring measuring tip into contact with outer plate and note value obtained.
– Mark exact contact point on cylinder „E“.
– Repeat measurement at two other points on outer plate (offset by 120°) and mark measuring points.
– Determine average value from the three measurements under load.
– Release spindle and remove holding plate.

Protected by copyright. Copying for private or commercial purposes, in part or in whole, is not permitted unless authorised by AUDI AG. AUDI AG does not guarantee or accept any liability with respect to the correctness of information in this document. Copyright by AUDI AG.

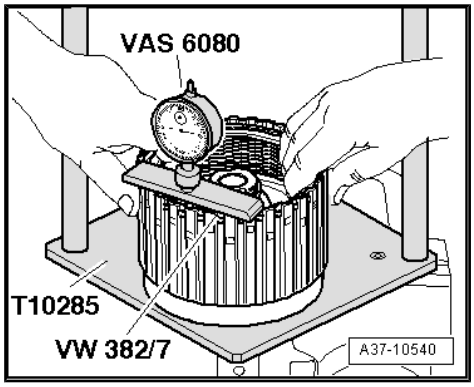

– Use both hands to pull clutch pack upwards in clutch „E“ as far as stop.
– With clutch pack pulled up as far as stop, measure distance between upper rim of cylinder „E“ and outer plate at one of the points marked (second mechanic required).
– Repeat measurement at the two remaining markings on the outer plate.
– Determine average value from the three measurements with clutch pack pulled up as far as stop.
– Determine clearance using the following formula:

	Mean value of measurements under load (value 1 + value 2 + value 3) : 3
–	Mean value of measurements with clutch pack pulled up as far as stop (value 1 + value 2 + value 3) : 3
=	Clearance

– Subtract mean value of measurements with clutch pack pulled up as far as stop from mean value of measurements under load.

Clearance:

- Specification: 1.84 ... 2.37 mm

If result does not match specification:

– Determine new circlip -1-.

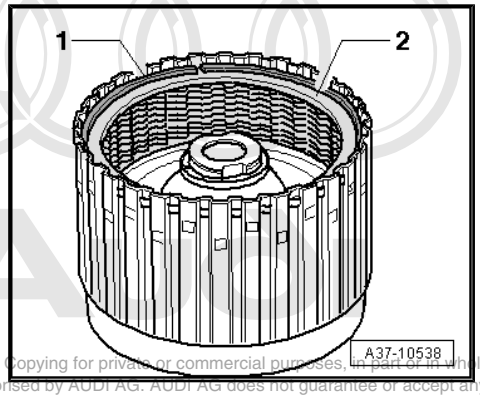

Note

-Item 2- can be disregarded.

- If clearance is below specification: insert thinner circlip of appropriate thickness.
- If clearance is above specification: insert thicker circlip of appropriate thickness.

Protected by copyright. Copying for private or commercial purposes, in part or in whole, is not permitted unless authorised by AUDI AG. AUDI AG does not guarantee or accept any liability with respect to the correctness of information in this document. Copyright by AUDI AG.

Available circlips - Thickness of circlips in mm		
1.80	2.60	3.40
2.00	2.80	3.60
2.20	3.00	
2.40	3.20	

– Check clearance again after inserting circlip.

5.7 Assembling body „II“

– Clip axial needle bearing -2- into sun gear „I“ -item 3-.

• The closed side of the axial needle bearing faces towards sun gear „I“.

– Fit sun gear „I“ -item 3- in planet carrier „I“ -item 1-.

• The side with the axial needle bearing faces towards planet carrier „I“.

– Renew circlip -4-.

– Fit circlip -4- in planet carrier „I“ -item 1-.

• The angled section -B- of the circlip must be located in the recess directly next to planetary gear shaft -A-.

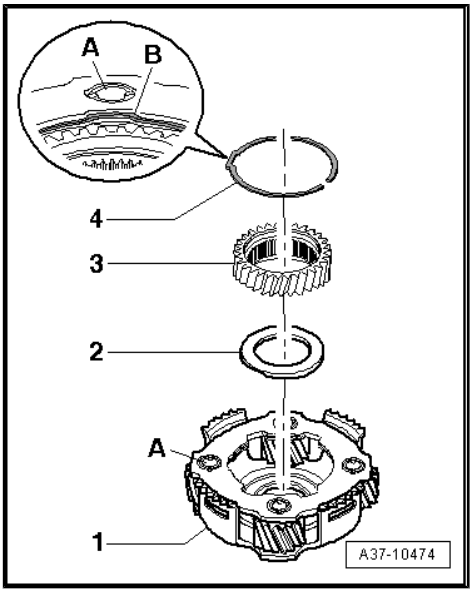

– Engage planet carrier „I“ -item 1- on retaining plate of cylinder „A“ -item 2-.

• The toothed segments -item A- and -item C- must engage in the retaining plate.

• The planetary gear shafts -item B- must be located directly next to the holes in the retaining plate.

• The planet carrier „I“ -item 1- should engage audibly.

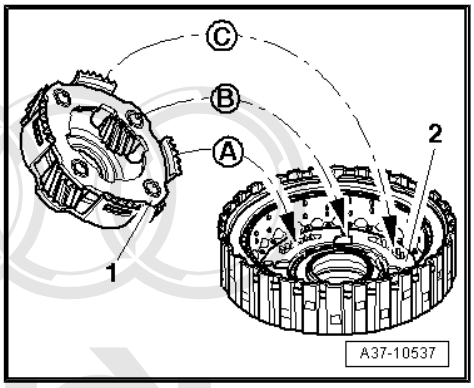

Protected by copyright. Copying for private or commercial purposes, in part or in whole, is not permitted unless authorised by AUDI AG. AUDI AG does not guarantee or accept any liability with respect to the correctness of information in this document. Copyright by AUDI AG.

– Place oil collector -2- on planet carrier „I“ in clutch „A“ -item 1-.

• The pins on the oil collector must fit into the holes on planet carrier „I“.

– Place clutch „A“ -item 1- with planet carrier „I“ on support - T10283- .

• The ATF pump end must face downwards.

– Clip axial needle bearing -3- onto clutch „E“ -item 4-.

• The closed side of the axial needle bearing faces towards clutch „E“.

– Place clutch „E“ -item 4- on planet carrier „I“ in clutch „A“ -item 1-.

– Clip axial needle bearing -5- onto clutch „E“.

• The closed side of the axial needle bearing faces towards clutch „E“ -item 4-.

– Allow inner plate carrier „E“ -item 6- with intermediate shaft to engage in all plates of clutch „E“ -item 4- by lifting and turning slightly as required.

– Lift inner plate carrier „E“ -item 6- with intermediate shaft a few millimetres and then let it drop to check that all the plates have meshed.

♦ If you hear a metallic sound, all the plates have meshed.

♦ If you only hear a muffled sound, some of the plates have not meshed.

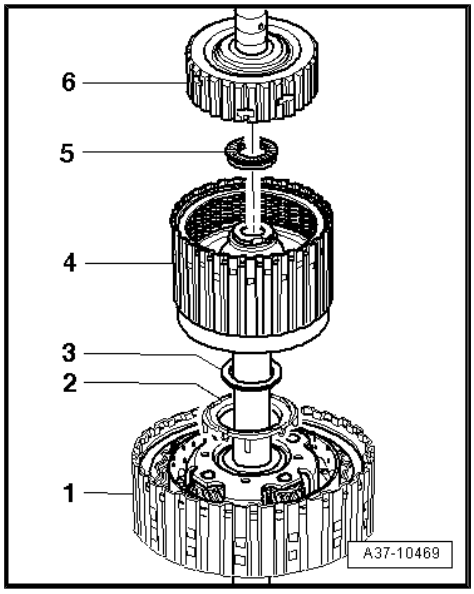

– Clip axial needle bearing -2- into inner plate carrier „A“ -item 1-.

• The closed side of the axial needle bearing faces towards inner plate carrier „A“.

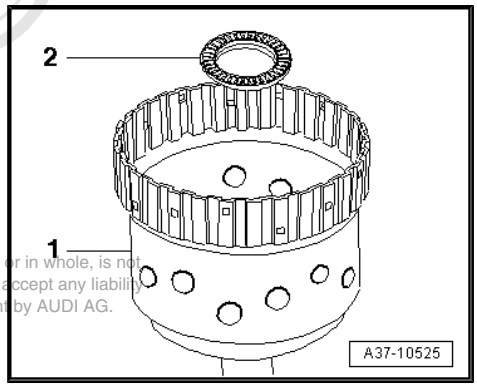

Protected by copyright. Copying for private or commercial purposes, in part or in whole, is not permitted unless authorised by AUDI AG. AUDI AG does not guarantee or accept any liability with respect to the correctness of information in this document. Copyright by AUDI AG.

– Turn inner plate carrier „A“ upside down.

– Insert inner plate carrier „A“ -item 3- into clutch „A“ -item 1-, turning as required.

– Lift inner plate carrier „A“ -item 3- a few millimetres and then let it drop to check that all the plates have meshed.

♦ If you hear a metallic sound, all the plates have meshed.

♦ If you only hear a muffled sound, some of the plates have not meshed.

2 - Clutch „E“

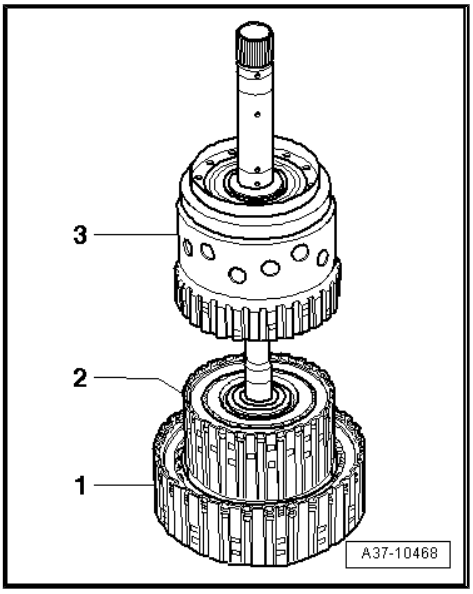

– Fit inner plate carrier „B“ -item 2- onto clutch „A“ -item 1-.

• The lugs on inner plate carrier „B“ -item 2- must locate in the slots in cylinder „A“.

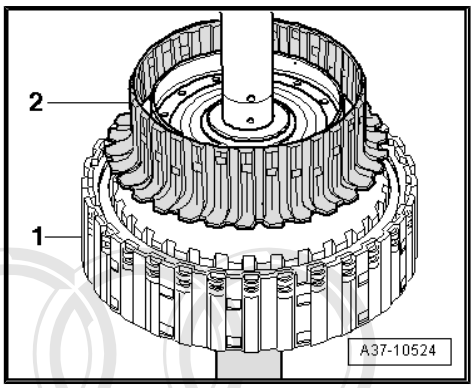

– Insert circlip -arrow-.

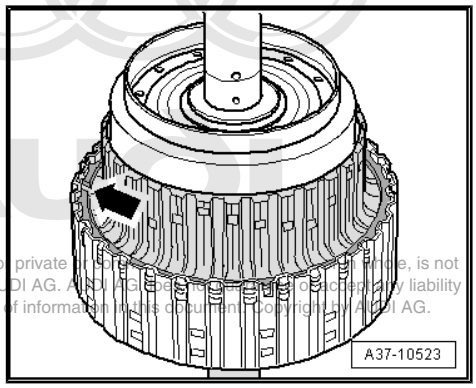

Note

The circlip must be re-used; take care not to over-stretch it when installing.

– Make sure that circlip is seated securely all round in groove on cylinder „A“.

Protected by copyright. Copying for private or commercial purposes, in part or in whole, is not permitted unless authorised by AUDI AG. AUDI AG does not guarantee or assume any liability with respect to the correctness of information in this document. Copyright by AUDI AG.

38 – Gears, control

1 Oil pan, ATF strainer and mechatronic unit - exploded view

Caution

Do not run engine or tow vehicle with oil pan removed or when there is no ATF in the gearbox.

Note

- *Always renew mechatronic unit if contaminated or defective.*
- *Rules for cleanliness when working on the automatic gearbox* *⇒ page 11*
- *General repair instructions* *⇒ page 1* *.*
- *Coat O-rings and seals with ATF. Other types of lubricant will cause the gearbox hydraulics to malfunction.*

Protected by copyright. Copying for private or commercial purposes, in part or in whole, is not permitted unless authorised by AUDI AG. AUDI AG does not guarantee or accept any liability with respect to the correctness of information in this document. Copyright by AUDI AG.

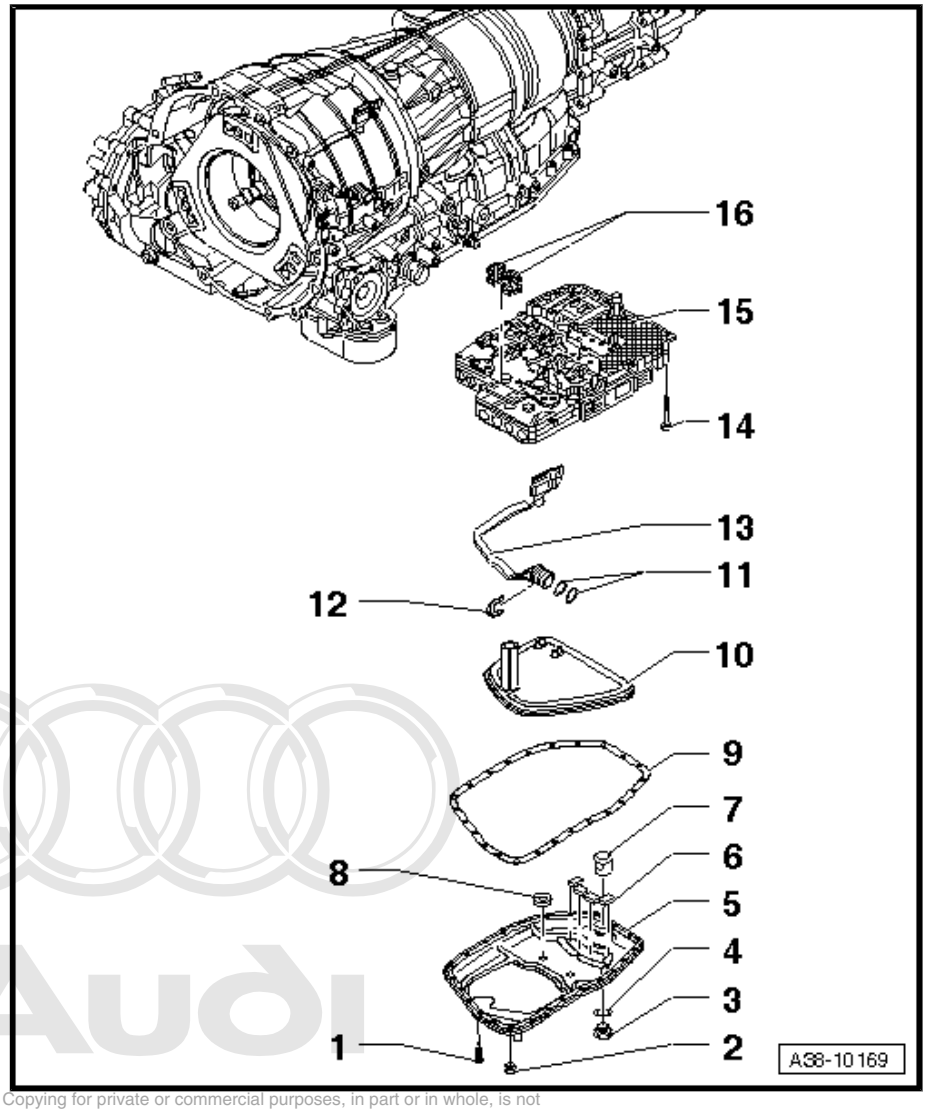

1 - Bolt

- ❑ Secures oil pan to gearbox

Various versions apply, depending on the gearbox code letters:

- ❑ Select correct type ⇒ Electronic parts catalogue
- ❑ Note tightening specifications and sequence ⇒ „1.1 Removing and installing oil pan“, page 92

Versions with 24 bolts:

- ❑ 11 Nm

Versions with 13 bolts:

- ❑ Renew all bolts
- ❑ 2.5 Nm + 90°

2 - ATF drain plug

- ❑ 12 Nm
- ❑ Always renew plug

3 - ATF inspection plug

Different versions possible

Steel ATF inspection plug with steel oil pan:

- ❑ 80 Nm

Plastic ATF inspection plug with aluminium oil pan:

- ❑ 8 Nm

Protected by copyright. Copying for private or commercial purposes, in part or in whole, is not permitted unless authorised by AUDI AG. AUDI AG does not guarantee or accept any liability with respect to the correctness of information in this document. Copyright by AUDI AG.

4 - O-ring

- ❑ Always renew

5 - Oil pan

- ❑ ⇒ „1.1 Removing and installing oil pan“, page 92

6 - Magnet

- ❑ Ensure full contact
- ❑ Clean before installing

7 - Deflector cap

- ❑ Plugged into opening on oil pan

8 - Magnet

- ❑ Ensure full contact
- ❑ Clean before installing

9 - Oil pan gasket

Versions with 24 bolts on oil pan:

- ❑ Always renew

Versions with 13 bolts on oil pan:

- ❑ Check for damage and renew if necessary
- ❑ Sealing surfaces on gearbox and oil pan must be dry and free of oil and grease

10 - ATF strainer

- ⇒ „1.2 Removing and installing ATF strainer“, page 96

11 - O-ring

- Always renew

12 - Retaining clip for wiring harness connector

13 - Wiring harness in gearbox

- ⇒ „1.5 Removing and installing wiring harness in gearbox“, page 104

14 - Bolt

- Secures mechatronic unit to gearbox
- 8 Nm

Different numbers and versions of bolts depending on gearbox code letters:

Follow removal and installation instructions and select correct type from ⇒ Electronic parts catalogue

- ⇒ „1.4 Removing and installing mechatronic unit - gearbox with 13 bolts on oil pan“, page 101
- ⇒ „1.3 Removing and installing mechatronic unit - gearbox with 24 bolts on oil pan“, page 98

15 - Mechatronic unit

Various versions apply, depending on the gearbox code letters:

Follow removal and installation instructions and select correct type from ⇒ Electronic parts catalogue

- ⇒ „1.4 Removing and installing mechatronic unit - gearbox with 13 bolts on oil pan“, page 101
- ⇒ „1.3 Removing and installing mechatronic unit - gearbox with 24 bolts on oil pan“, page 98

16 - Seal

1.1 Removing and installing oil pan

Special tools and workshop equipment required

- Guide pins (4x) -T40199-
- Used oil collection and extraction unit -V.A.G 1782-

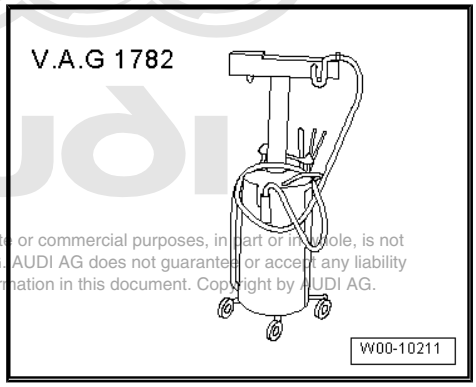

Protected by copyright. Copying for private or commercial purposes, in part or in whole, is not permitted unless authorised by AUDI AG. AUDI AG does not guarantee or accept any liability with respect to the correctness of information in this document. Copyright by AUDI AG.

- Safety goggles

Note

- *Rules for cleanliness when working on the automatic gearbox ⇒ page 11*
- *General repair instructions ⇒ page 1 .*

Removing (gearbox in vehicle)

The oil pan can also be removed and installed with the gearbox installed in the vehicle, in which case some additional preparation is required.

– Removing and installing oil pan ⇒ Automatic gearbox 09E, four-wheel drive; Rep. gr. 38 ; Removing and installing oil pan

Removing (gearbox removed from vehicle)

– Secure gearbox to assembly stand ⇒ page 18 .

– Place used oil collection and extraction unit -V.A.G 1782- below gearbox.

> ⚠ WARNING
>
> *Wear safety goggles.*

– Remove ATF drain plug -arrow A- and drain off ATF.

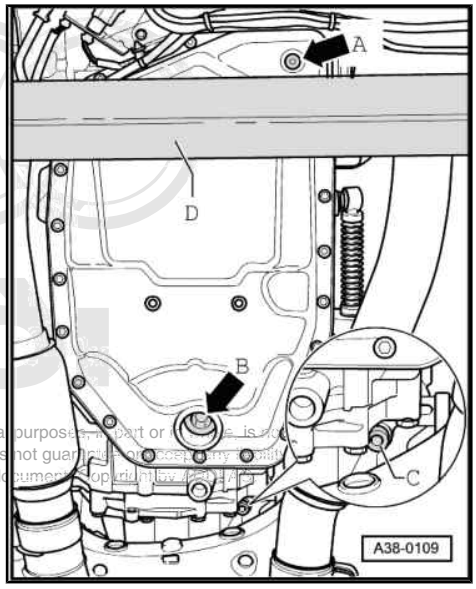

Protected by copyright. Copying for private or commercial purposes, in part or in whole, is not permitted unless authorised by AUDI AG. AUDI AG does not guarantee or accept any liability with respect to the correctness of information in this document. Copyright by AUDI AG.

Gearbox with 24 bolts on oil pan

– Remove oil pan bolts in sequence -24 to 1- (opposite to tightening sequence).

– Remove oil pan.

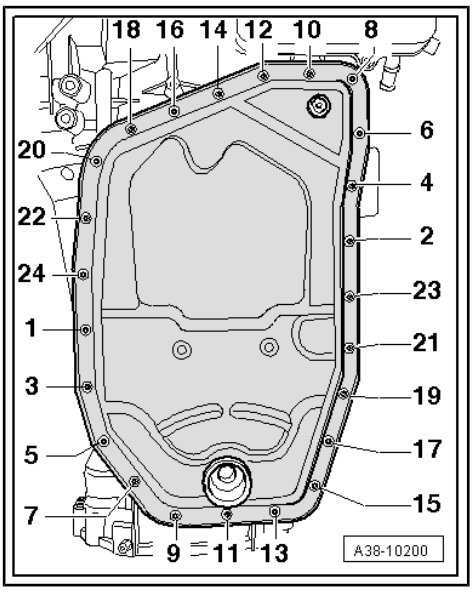

Gearbox with 13 bolts on oil pan

– Remove oil pan bolts in sequence -13 to 1- (opposite to tightening sequence).

– Remove oil pan.

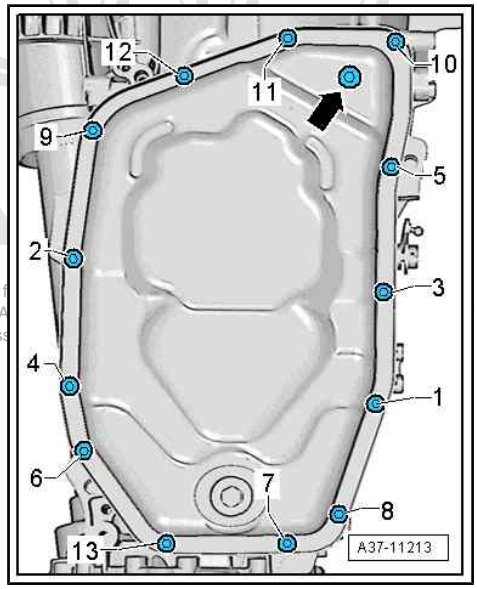

Protected by copyright. Copying f
permitted unless authorised by A
with respect to the correctness

Installing oil pan

Installation is carried out in reverse sequence; note the following:

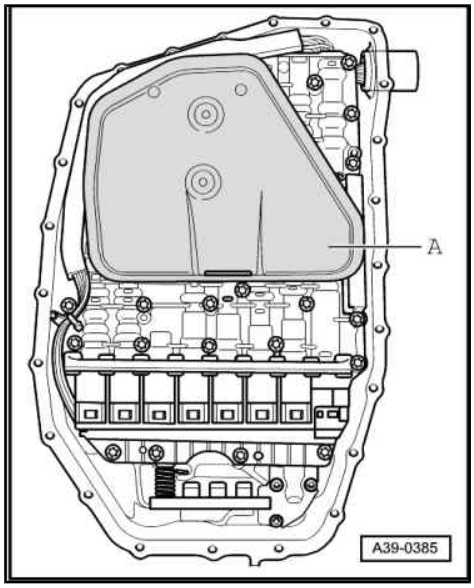

Caution

Risk of damage to the gearbox housing.

- *Different tightening torques are specified for the oil pan bolts, depending on the version.*
- *Observe exact tightening torques and adhere to specified sequence.*

Tightening torques ⇒ page 90

Note

- *Renew seals and gaskets.*
- *The drain plug with seal must be renewed.*
- *If vehicle mileage is high, it is recommended to renew the ATF strainer -A- when removing the oil pan ⇒ page 96 . Otherwise the ATF strainer only has to be renewed if it has been damaged.*

– Clean magnets -1- and -2- in ATF oil pan.

– Ensure that magnets make full contact with ATF oil pan.

– Clean sealing surface on gearbox and on oil pan.

• Sealing surfaces must be dry and free of oil and grease.

• Remaining material from the old gasket must be removed completely.

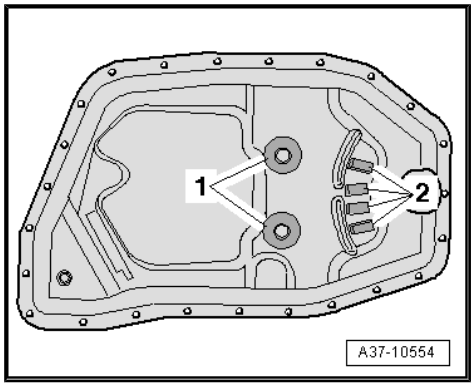

– Check that ATF strainer -A- is correctly seated; press into position if necessary.

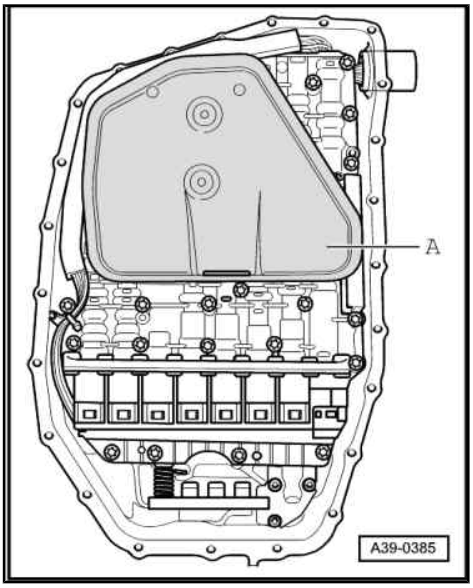

Note

- *Gearbox malfunctions will occur when the vehicle is driven if the ATF strainer -A- is not correctly installed.*
- *If the ATF strainer -A- cannot be seated properly (i.e. if the strainer drops down at the rear), it must be renewed* *⇒ page 96* .

Audi

Gearbox with 24 bolts on oil pan

– Screw four guide pins -T40199- into positions -11, 12, 23 and 24- with oil pan removed.

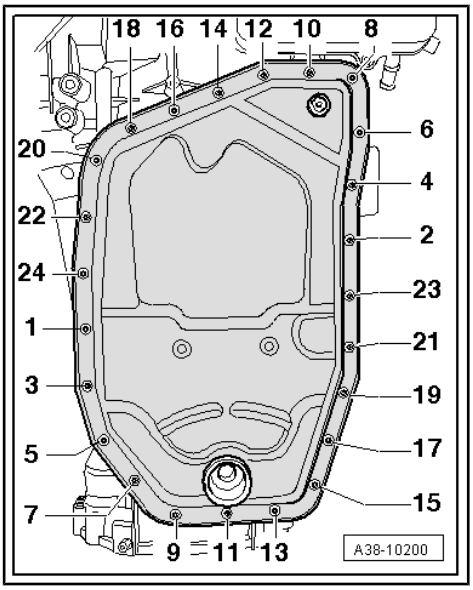

Note

The guide pins -T40199- hold the gasket and oil pan in position. Without them the oil pan will not be not sealed off properly.

Copyright by AUDI AG. This document is intended for training purposes only. Its content is not guaranteed to be complete and correct. AUDI AG does not accept any liability with respect to the correctness of information in this document. Copyright by AUDI AG.

– Guide new gasket and oil pan over guide pins -T40199- .
– Tighten oil pan bolts in the sequence -1 to 10-.
– Remove the four guide pins -T40199- .
– Screw in remaining bolts in the sequence -11 to 24-.

Gearbox with 13 bolts on oil pan

– Screw four guide pins -T40199- into positions -10, 11, 12, and 13- with oil pan removed.

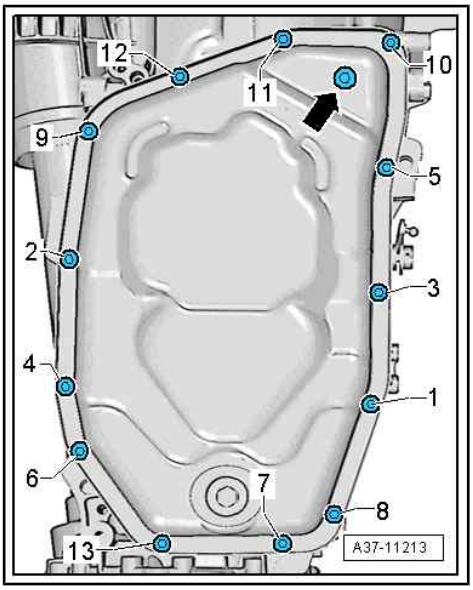

Note

- *The guide pins -T40199- hold the gasket and oil pan in position. Without them the oil pan will not be not sealed off properly.*
- *Renew aluminium bolts for oil pan.*

– Check gasket for damage and renew if necessary.
– Guide gasket and oil pan over guide pins -T40199- .
– Tighten new oil pan bolts in the sequence -1 to 9-.
– Remove the four guide pins -T40199- .
– Fit remaining bolts -10, 11, 12 and 13- one by one.
– Fill up with ATF ⇒ Automatic gearbox 09E, four-wheel drive; Rep. gr. 37 ; Draining ATF and filling up after repairs .

1.2 Removing and installing ATF strainer

Note

- *Rules for cleanliness when working on the automatic gearbox* ⇒ page 11
- *General repair instructions* ⇒ page 1 .

Removing

– Remove oil pan ⇒ page 92 .

– Carefully pull ATF strainer -A- out of gearbox.

Copyright by AUDI AG. Copying for private or commercial purposes, in part or in whole, is not permitted unless authorised by AUDI AG. AUDI AG does not guarantee or accept any liability with respect to the correctness of information in this document. Copyright by AUDI AG.

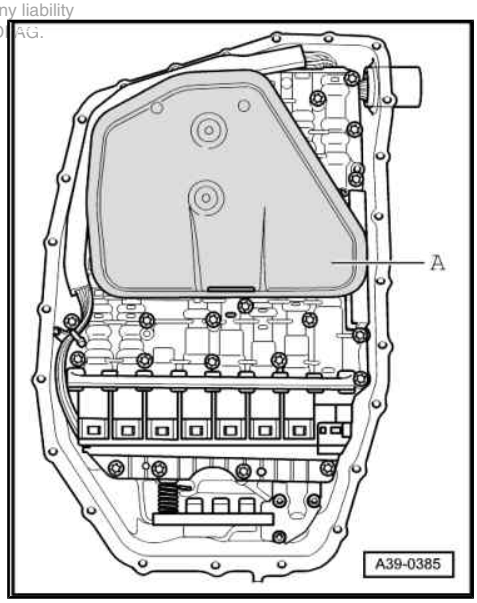

Installing

Installation is carried out in reverse sequence; note the following:

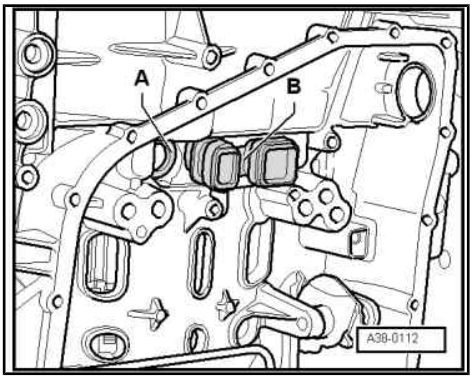

Note

- *The ATF strainer -A- only has to be renewed if it has been damaged.*
- *If vehicle mileage is high, it is recommended to renew the ATF strainer when removing the oil pan.*
- *Gearbox malfunctions will occur when the vehicle is driven if the ATF strainer -A- is not correctly installed.*
- *If the ATF strainer -A- cannot be seated properly (i.e. if the strainer drops down at the rear), it must be renewed.*
- *In most cases, the ATF strainer seal -A- will remain in place in the gearbox when the ATF strainer is removed. The illustration shows the seal with the mechatronic unit removed.*
- *This seal must be removed first if you want to renew the ATF strainer.*
- *The seal can be reused if the old ATF strainer is reinstalled.*

Note the following if fitting a new ATF strainer:

– Carefully remove seal for ATF strainer -A- from gearbox using a screwdriver or similar.

Note

- *Take care not to damage sealing surface.*
- *The new ATF strainer is supplied with the seal fitted.*
- *When fitting a new ATF strainer, press it into the gearbox with the seal already attached.*

Continuation for old and new ATF strainer:

– Press intake neck of ATF strainer -A- carefully as far as stop into mounting hole in gearbox.

– Install oil pan ⇒ page 92 .

– Fill up with ATF ⇒ Automatic gearbox 09E, four-wheel drive; Rep. gr. 37 ; Draining ATF and filling up after repairs .

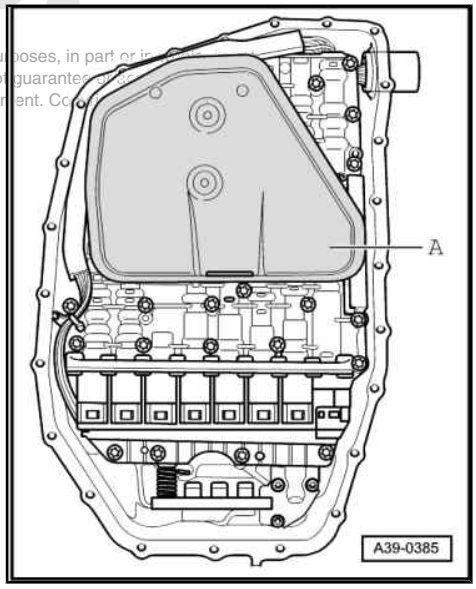

Protected by copyright. Copying for private or commercial purposes, in part or in whole, is not permitted unless authorised by AUDI AG. AUDI AG does not guarantee or assume liability with respect to the correctness of information in this document. Copyright by AUDI AG.

1.3 Removing and installing mechatronic unit - gearbox with 24 bolts on oil pan

Note

- *Always renew mechatronic unit if contaminated or defective.*
- *Rules for cleanliness when working on the automatic gearbox* ⇒ page 11
- *General repair instructions* ⇒ page 1 .

Removing

– Remove oil pan ⇒ page 92 .

– Remove ATF strainer ⇒ page 96 .

Caution

The gearbox control unit (mechatronic unit) can be damaged by electrostatic discharge.

- ***Before touching or removing the mechatronic unit, always discharge any static electricity by touching vehicle earth or other earthed object with your hand.***
- ***DO NOT touch contacts in 16-pin connector with your hands, as static discharge can seriously damage the control unit and mechatronic unit.***

– Touch vehicle earth or gearbox housing with your hand (without gloves) to discharge any static electricity.

Gearbox installed in vehicle

– Turn electrical connector on left side of gearbox anti-clockwise -arrow- and unplug.

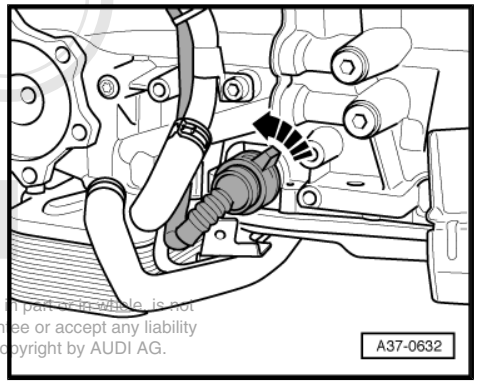

Protected by copyright. Copying for private or commercial purposes, in part or in whole, is not permitted unless authorised by AUDI AG. AUDI AG does not guarantee or accept any liability with respect to the correctness of information in this document. Copyright by AUDI AG.

Gearbox removed and installed

– Detach retaining clip -arrow- for wiring harness connector and push connector inwards.

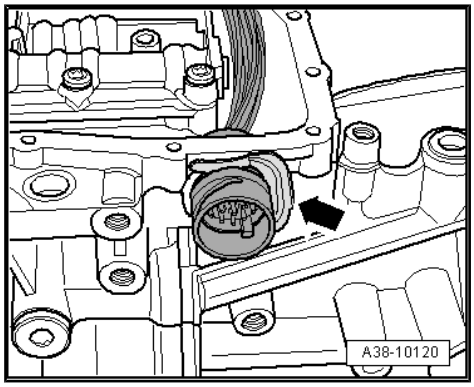

– Unscrew securing bolts for mechatronic unit in reverse order (i.e. first bolt -11-, then -10-, ... etc. until -1-).

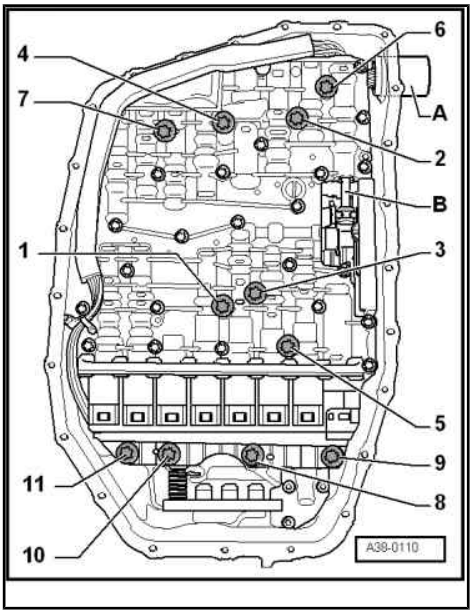

Note

- *Loosen only the securing bolts indicated in the illustration -1 ... 11-.*
- *If other bolts are loosened, this may affect the operation of the mechatronic unit or the mechatronic unit could come apart.*

– Remove mechatronic unit together with wiring harness from gearbox, at the same time guide out connector for wiring harness.

Installing

Installation is carried out in reverse sequence; note the following:

Tightening torques ⇒ page 90

– Make sure that seal -B- is properly inserted and secured.

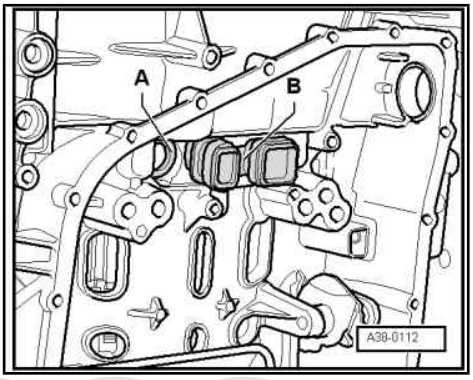

– Clip wiring harness -A- onto mechatronic unit -B-. To do so, first attach tab -arrow- on reverse side of wiring harness to mechatronic unit.

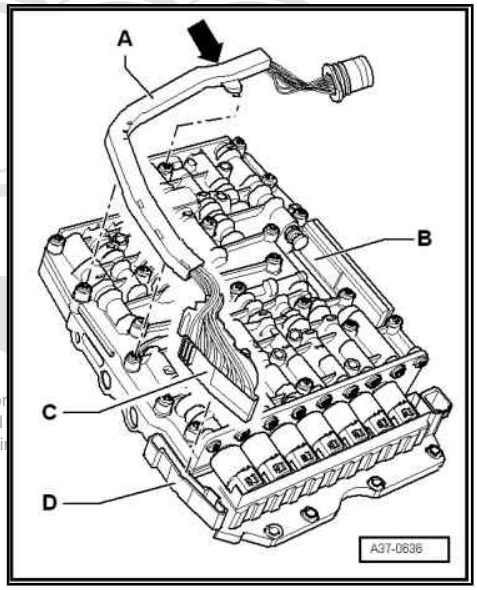

Note

If the tab on the reverse side of the wiring harness breaks off, the wiring harness must be renewed.

Protected by copyright. Copying for pr
permitted unless authorised by AUDI
with respect to the correctness of i

– Renew O-rings on connector for wiring harness and lightly lubricate with ATF.

– Install wiring harness connector in gearbox housing.

• Lugs -1- and -2- on collar are horizontal, flat section -arrow- of connector faces inside of gearbox.

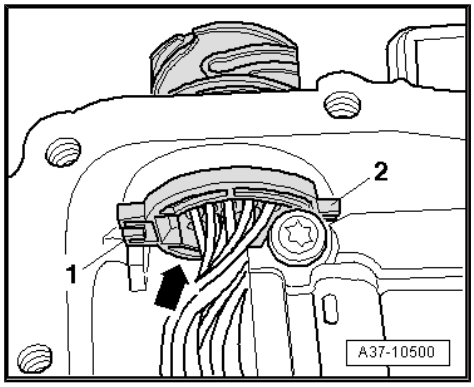

– Install mechatronic unit without using force, and at the same time fit pin on gearbox selector lever -arrow- into slot on selector slide -A- (move selector slide backwards and forwards if necessary).

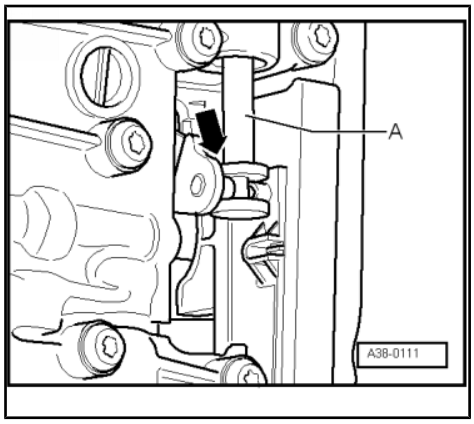

– Tighten securing bolts -1- and -2- for mechatronic unit to 2 Nm.

– Tighten securing bolts for mechatronic unit in specified order to specified torque (i.e. first bolt -1-, then -2-, ... etc. until -11-).

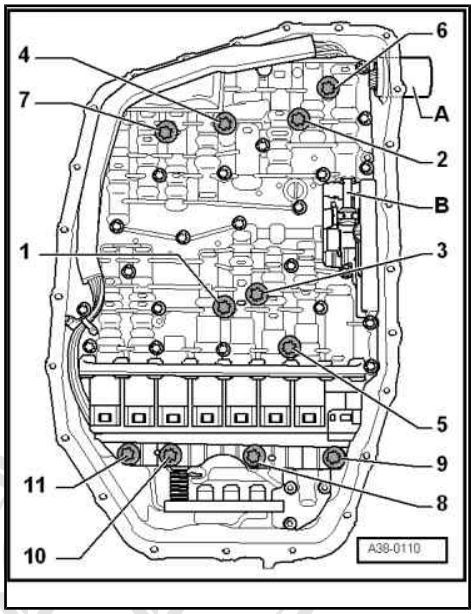

– Push retainer clip -arrow- onto wiring harness connector.

– Install ATF strainer ⇒ page 96 .

– Install oil pan ⇒ page 92 .

– Fill up with ATF ⇒ Automatic gearbox 09E, four-wheel drive; Rep. gr. 37 ; Draining ATF and filling up after repairs .

• If mechatronic unit was renewed:

– Perform gearbox adaption after gearbox is installed in vehicle ⇒ page 15 .

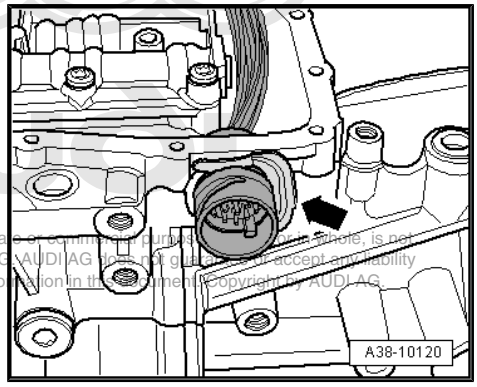

Protected by copyright. Copying for private or commercial purposes, in part or in whole, is not permitted unless authorised by AUDI AG. AUDI AG does not guarantee or accept any liability with respect to the correctness of information in this document. Copyright by AUDI AG.

1.4 Removing and installing mechatronic unit - gearbox with 13 bolts on oil pan

Removing

Note

- *Rules for cleanliness when working on the automatic gearbox* *⇒ page 11*
- *General repair instructions* *⇒ page 1* .
- *Always renew mechatronic unit if contaminated or defective.*

– Remove oil pan ⇒ page 92 .

– Remove ATF strainer ⇒ page 96 .

Caution

The gearbox control unit (mechatronic unit) can be damaged by electrostatic discharge.

- ***Before touching or removing the mechatronic unit, always discharge any static electricity by touching vehicle earth or other earthed object with your hand.***
- ***DO NOT touch contacts in 16-pin connector with your hands, as static discharge can seriously damage the control unit and mechatronic unit.***

– Touch vehicle earth or gearbox housing with your hand (without gloves) to discharge any static electricity.

Note

Wiring harness -B- with connector -C- must be disconnected from the mechatronic unit before removing the mechatronic unit. The wiring harness connector remains in the gearbox housing.

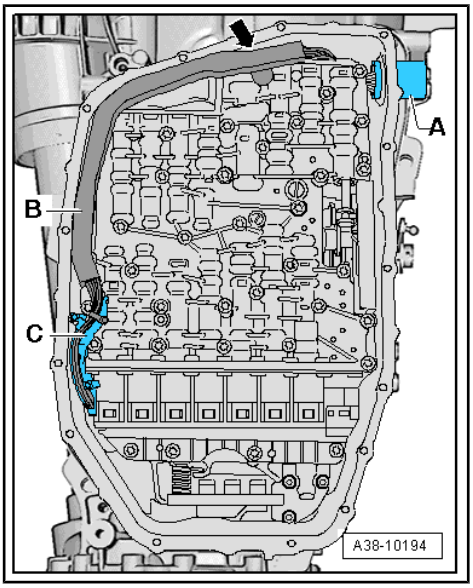

Protected by copyright. Copying for private or commercial purposes, in part or in whole, is not permitted unless authorised by AUDI AG. AUDI AG does not guarantee or accept any liability with respect to the correctness of information in this document. Copyright by AUDI AG.

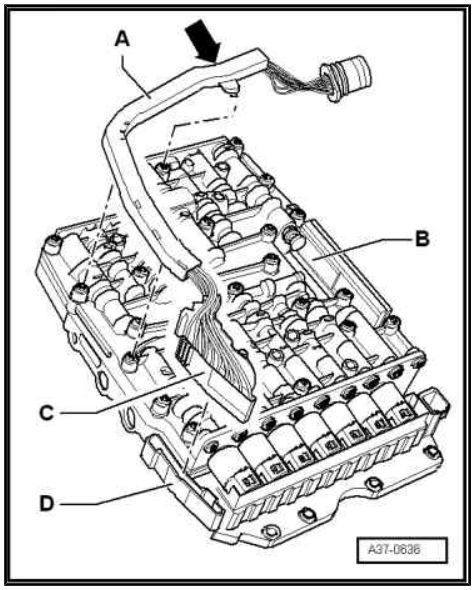

Note

The following illustrations show the mechatronic unit removed from the gearbox. The wiring harness connector remains in the gearbox housing.

– Carefully detach wiring harness -A- from mechatronic unit -B-. At the same time, detach tab -arrow- on reverse side of wiring harness from mechatronic unit.

Note

If the tab -arrow- on the reverse side of the wiring harness breaks off, the wiring harness must be renewed.

– Carefully detach connector -C- from socket -D- of mechatronic unit.

– Carefully move wiring harness clear to one side.

Note

The wiring harness connector remains in the gearbox housing, so the attached harness cannot be removed.

– Unscrew securing bolts for mechatronic unit in reverse order (i.e. first bolt -14-, then -13-, ... etc. until -1-).

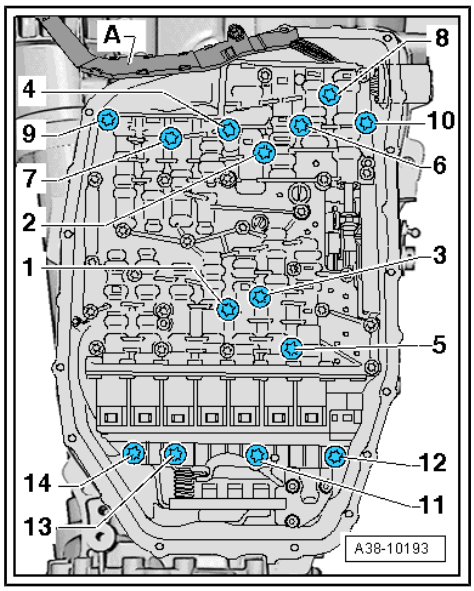

Note

- *Loosen only the securing bolts indicated in the illustration -14 ... 1-.*
- *If other bolts are loosened, this may affect the operation of the mechatronic unit or the mechatronic unit could come apart.*

– Detach mechatronic unit from gearbox.

Installing

- Tightening torques ⇒ page 90

– Make sure that seal -B- is properly inserted and secured.

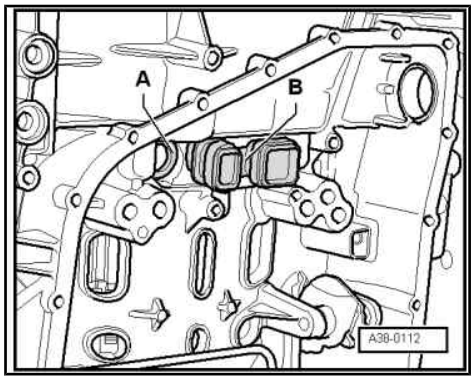

Copyright by AUDI AG. Any use or disclosure of the contents in any form or by any means, in whole or in part, is not permitted unless authorised by AUDI AG. AUDI AG does not guarantee or accept any liability with respect to the correctness of information in this document. Copyright by AUDI AG.

– Install mechatronic unit without using force, and at the same time fit pin on gearbox selector lever -arrow- into slot on selector slide -A- (move selector slide backwards and forwards if necessary).

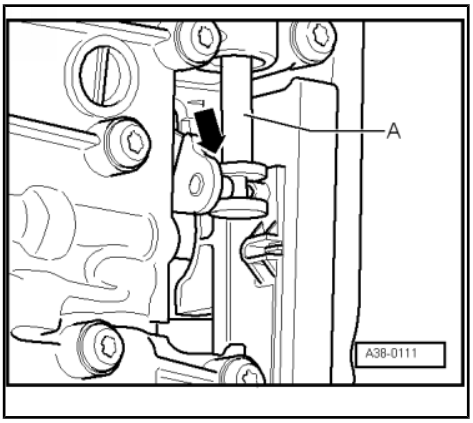

– Tighten securing bolts -1- and -2- for mechatronic unit to 2 Nm.

– Tighten securing bolts for mechatronic unit in specified order to specified torque (i.e. first bolt -1-, then -2-, ... etc. until -14-).

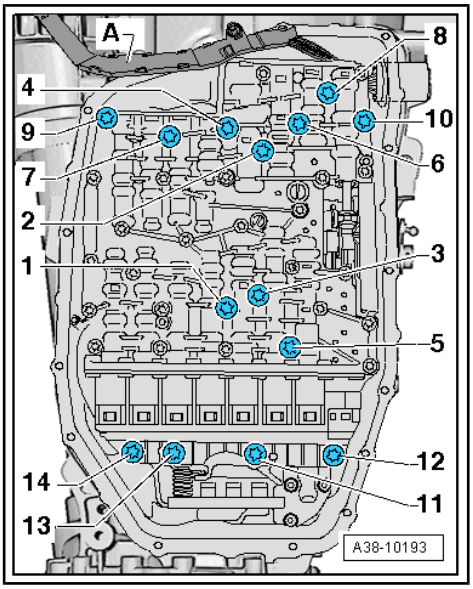

– Clip wiring harness -B- onto mechatronic unit. To do so, first attach tab -arrow- on reverse side of wiring harness to mechatronic unit.

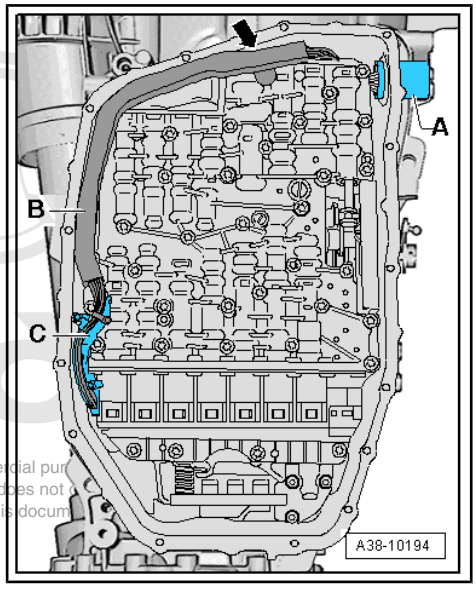

Note

If the tab on the reverse side of the wiring harness breaks off, the wiring harness must be renewed.

– Carefully insert connector -C- in connector socket on mechatronic unit.

The remaining installation steps are carried out in reverse sequence; note the following:

– Install ATF strainer ⇒ page 96 .

– Install oil pan ⇒ page 92 .

– Fill up with ATF ⇒ Automatic gearbox 09E, four-wheel drive; Rep. gr. 37 ; Draining ATF and filling up after repairs .

• If mechatronic unit was renewed:

– Perform gearbox adaption after gearbox is installed in vehicle ⇒ page 15 .

Protected by copyright. Copying for private or commercial pur
permitted unless authorised by AUDI AG. AUDI AG does not
with respect to the correctness of information in this docum

1.5 Removing and installing wiring harness in gearbox

Removing

Caution

The gearbox control unit (mechatronic unit) can be damaged by electrostatic discharge.

- *Before touching or removing the mechatronic unit, always discharge any static electricity by touching vehicle earth or other earthed object with your hand.*
- *DO NOT touch contacts in 16-pin connector with your hands, as static discharge can seriously damage the control unit and mechatronic unit.*

– Touch vehicle earth or gearbox housing with your hand (without gloves) to discharge any static electricity.

Gearbox with 24 bolts on oil pan

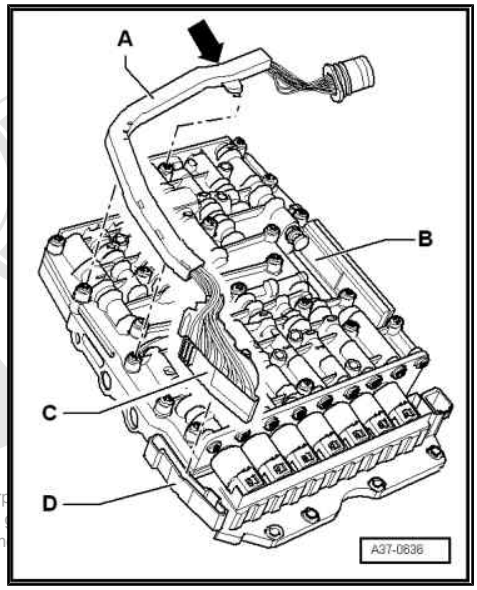

Note

On gearboxes with 24 bolts on oil pan, the wiring harness is removed together with the mechatronic unit.

– Remove mechatronic unit
⇒ „1.3 Removing and installing mechatronic unit - gearbox with 24 bolts on oil pan“, page 98 .

– Carefully detach wiring harness -A- from mechatronic unit -B-. At the same time, detach tab -arrow- on reverse side of wiring harness from mechatronic unit.

Note

Protected by copyright. Copying for private or commercial purp
permitted unless authorised by AUDI AG. AUDI AG does not g
with respect to the correctness of information in this docum

If the tab -arrow- on the reverse side of the wiring harness breaks off, the wiring harness must be renewed.

– Carefully detach connector -C- from socket -D- of mechatronic unit.

Gearbox with 13 bolts on oil pan

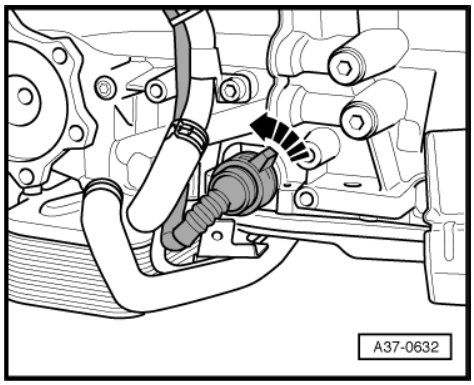

Note

On gearboxes with 13 bolts on oil pan, the mechatronic unit must be removed before the wiring harness can be removed.

– Remove mechatronic unit
⇒ „1.4 Removing and installing mechatronic unit - gearbox with 13 bolts on oil pan“, page 101 .

– When gearbox is installed in vehicle: Turn electrical connector on left side of gearbox anti-clockwise -arrow- and unplug.

– Detach retaining clip -arrow- for wiring harness connector and push connector inwards.

– Remove wiring harness.

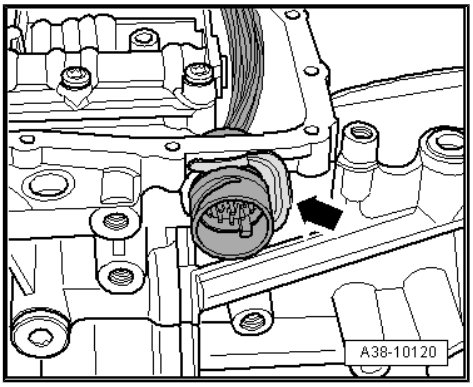

Installing

Installation is carried out in reverse sequence; note the following:

Gearbox with 24 bolts on oil pan

– Carefully attach connector -C- to socket -D- on mechatronic unit.

– Clip wiring harness -A- onto mechatronic unit -B-. To do so, first attach tab -arrow- on reverse side of wiring harness to mechatronic unit.

– Install mechatronic unit
⇒ „1.3 Removing and installing mechatronic unit - gearbox with 24 bolts on oil pan“, page 98 .

Protected by copyright. Copying for private or commercial purposes, in part or in whole, is not permitted unless authorized by AUDI AG. Liability for the accuracy of the data is excluded with respect to the reproduction of information in this document. Copyright by AUDI AG.

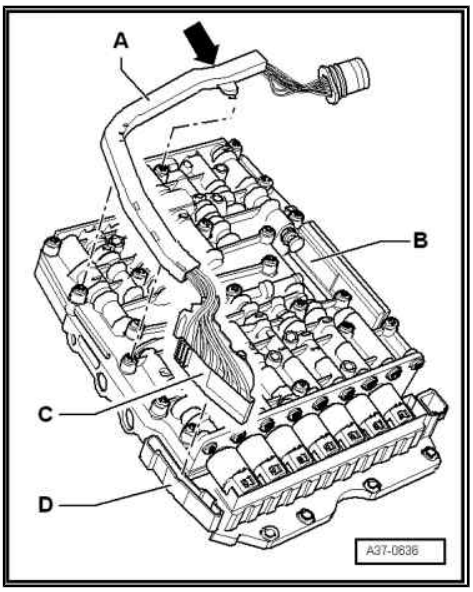

Gearbox with 13 bolts on oil pan

– Renew O-rings on connector for wiring harness and lightly lubricate with ATF.

– Install wiring harness connector in gearbox housing.

• Lugs -1- and -2- on collar are horizontal, flat section -arrow- of connector faces inside of gearbox.

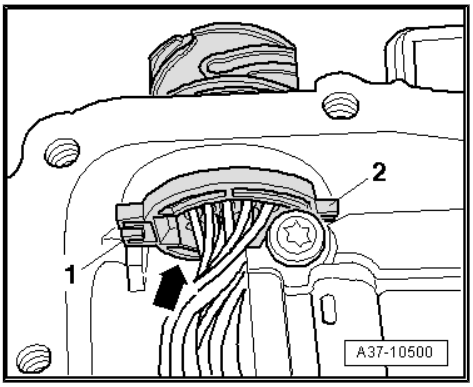

– Push retainer clip -arrow- onto wiring harness connector.

– Install mechatronic unit
⇒ „1.4 Removing and installing mechatronic unit - gearbox with 13 bolts on oil pan“, page 101 .

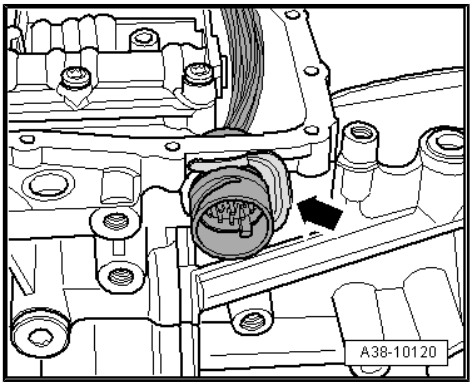

– Gearbox installed in vehicle: Plug in electrical connector on left side of gearbox and turn clockwise (in opposite direction of -arrow-).

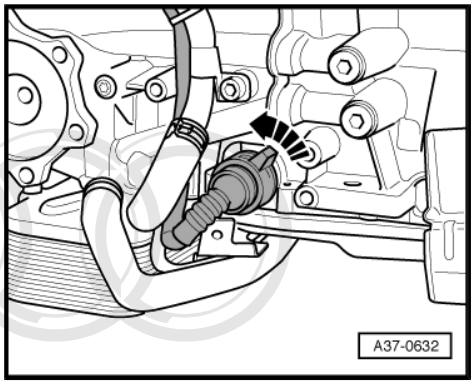

All versions:

– Fill up with ATF ⇒ Automatic gearbox 09E, four-wheel drive; Rep. gr. 37 ; Draining ATF and filling up after repairs .

Protected by copyright. Copying for private or commercial purposes, in part or in whole, is not permitted unless authorised by AUDI AG. AUDI AG does not guarantee or accept any liability with respect to the correctness of information in this document. Copyright by AUDI AG.

2 Dismantling and assembling ATF supply unit

Overview

- ⇒ „2.1 ATF supply unit - exploded view“, page 107
- ⇒ „2.2 Renewing oil seal for torque converter“, page 108
- ⇒ „2.3 Removing and installing ATF supply unit“, page 110
- ⇒ „2.4 Removing and installing ATF pump in ATF supply unit“, page 121
- ⇒ „2.5 Removing and installing needle bearing for torque converter“, page 123

2.1 ATF supply unit - exploded view

Note

- *Some of the components shown are supplied as part of an assembly group and cannot be ordered as separate components ⇒ Electronic parts catalogue .*
- *Check the individual components of ATF supply unit for traces of wear and damage ⇒ page 176 .*

1 - Oil seal for torque converter
- ❑ Renewing ⇒ page 108

2 - Circlip

3 - Needle bearing for torque converter
- ❑ Removing and installing ⇒ page 123

4 - O-ring
- ❑ Renew

5 - ATF pump housing
- ❑ Removing and installing ⇒ page 121

6 - Annulus
- ❑ Note correct position: dots face upwards

7 - ATF pump gear
- ❑ Note correct position: dots face upwards

8 - O-ring
- ❑ Renew

9 - ATF supply unit
- ❑ Housing (top section)
- ❑ Removing and installing ⇒ page 110

10 - ATF supply unit
- ❑ Housing (bottom section)
- ❑ Removing and installing ⇒ page 110

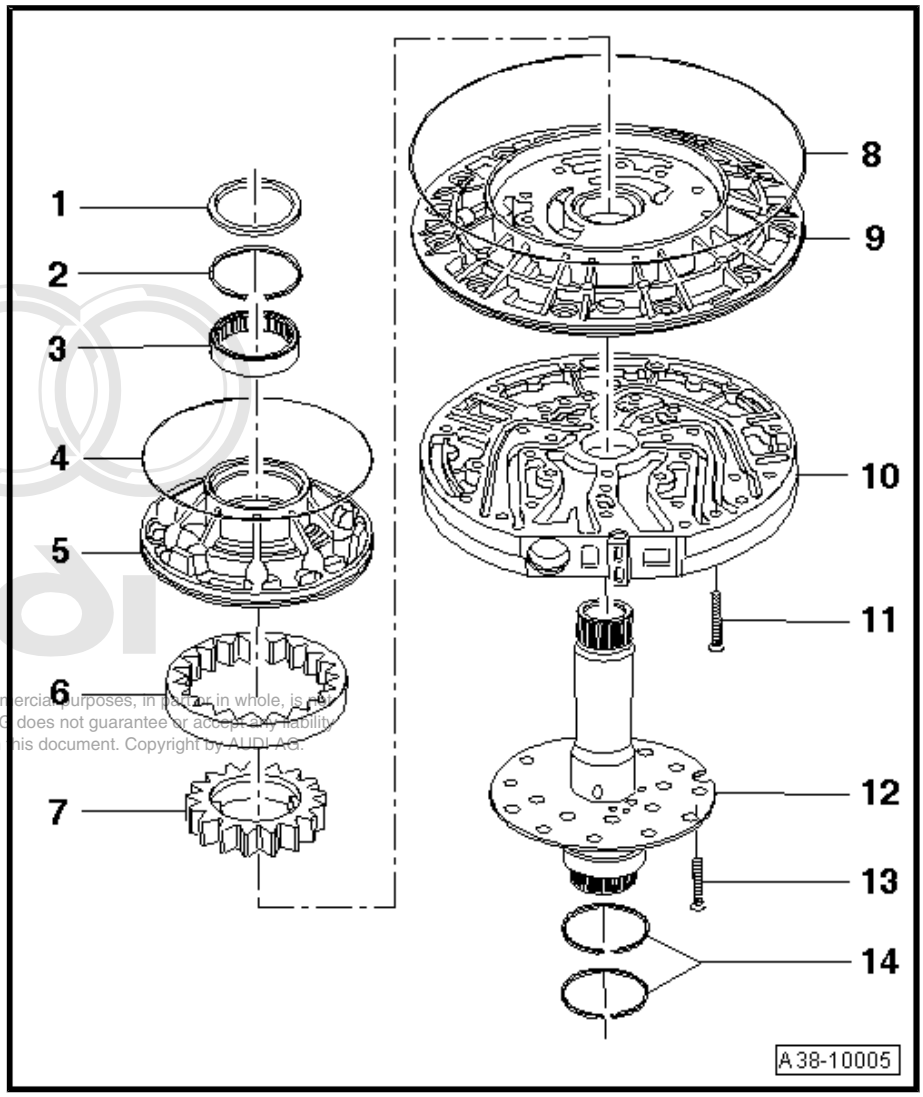

Protected by copyright. Copying for private or commercial purposes, in part or in whole, is not permitted unless authorised by AUDI AG. AUDI AG does not guarantee or accept any liability with respect to the correctness of information in this document. Copyright by AUDI AG.

11 - Bolt

- ❑ 10 Nm

12 - Stator shaft

- ❑ Component part of ATF supply unit; cannot be renewed separately
- ❑ Removing and installing ⇒ „2.3 Removing and installing ATF supply unit“, page 110

13 - Bolt

- ❑ 10 Nm

14 - Rectangular section seals for ATF supply unit

- ❑ Renew

Protected by copyright. Copying for private or commercial purposes, in part or in whole, is not permitted unless authorised by AUDI AG. AUDI AG does not guarantee or accept any liability with respect to the correctness of information in this document. Copyright by AUDI AG.

2.2 Renewing oil seal for torque converter

Procedure

– Secure gearbox to assembly stand ⇒ page 18 .

– Remove bolts -arrows- on mounting bracket for flange shaft (left-side).

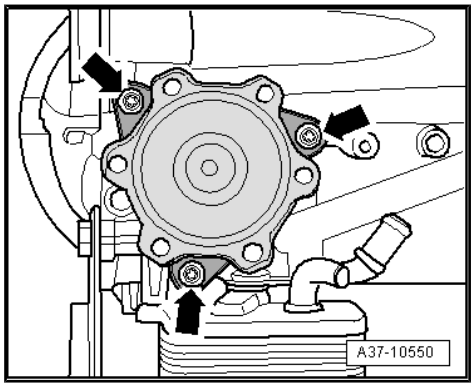

> ⚠ **Caution**
>
> ***While pulling out the flange shaft (left-side), it must be held centrally to avoid damaging the oil seal between the final drive and the gearbox housing.***

– Pull flange shaft -A- (left-side) out of gearbox, making sure that shaft remains centered in opening at differential -arrow-.

– Remove torque converter.

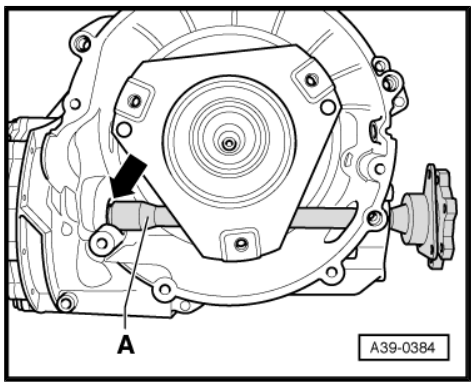

– Pry out oil seal for torque converter using oil seal extractor lever -VW 681- .

– Lightly lubricate outer circumference and sealing lips of oil seal with ATF.

• Open side of torque converter oil seal faces gearbox.

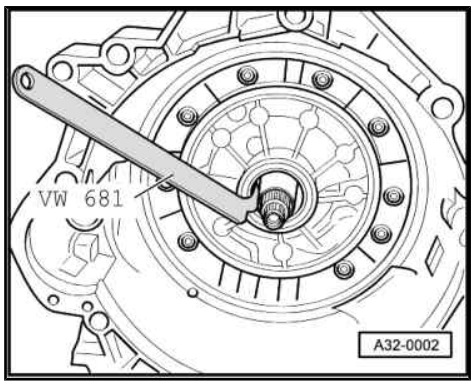

– Drive in torque converter oil seal with thrust piece -T10137- until thrust piece reaches stop.

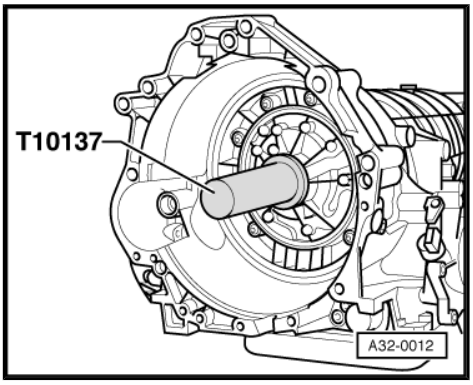

– Cover splines on flange shaft (left-side) -arrow- with insulating tape to prevent damage to oil seal between final drive and gearbox housing when inserting flange shaft. Take care to cover the splines completely, without creasing or overlapping the tape.

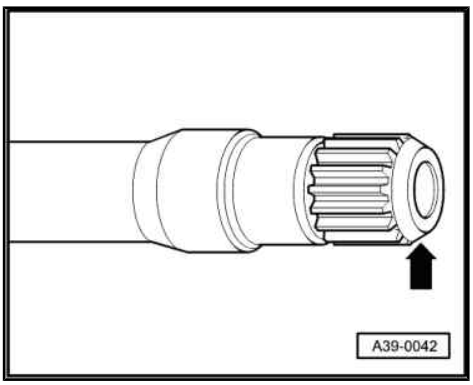

– Clean flange shaft (left-side) and oil seal between final drive and gearbox housing.

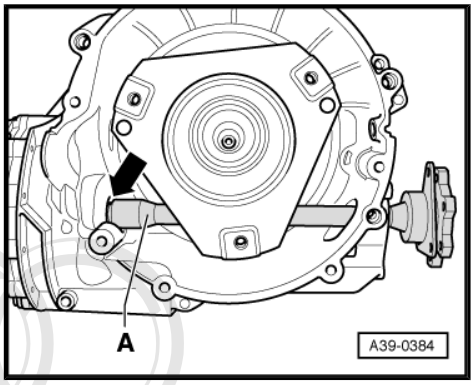

– Pack space between sealing lips of oil seal -arrow- half-full with sealing grease -G 052 128 A1- .

> **Caution**
>
> ***While inserting the flange shaft (left-side), it must be held centrally to avoid damaging the oil seal between the final drive and the gearbox housing.***

Protected by copyright. Copying for private or commercial purposes, in part or in whole, is not permitted unless authorised by AUDI AG. AUDI AG does not guarantee or accept any liability with respect to the correctness of information in this document. Copyright by AUDI AG.

– Insert flange shaft -A- into gearbox, guiding shaft centrally into oil seal between final drive and gearbox housing -arrow-.

– Tighten bolts -arrows- on mounting bracket for flange shaft (left-side).

• Tightening torque: 23 Nm

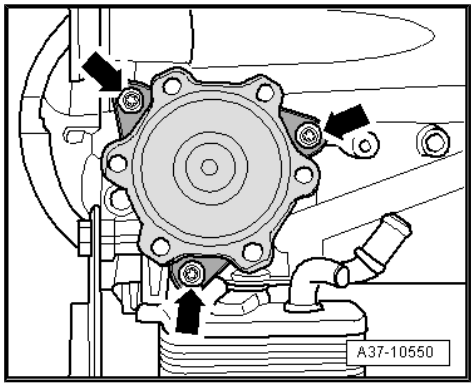

2.3 Removing and installing ATF supply unit

Removing

– Secure gearbox to assembly stand ⇒ page 18 .

• The gearbox must be horizontal with the ATF oil pan facing downwards.

– Place used oil collection and extraction unit -V.A.G 1782- below gearbox.

– Remove ATF drain plug -arrow A- and allow ATF to drain off.

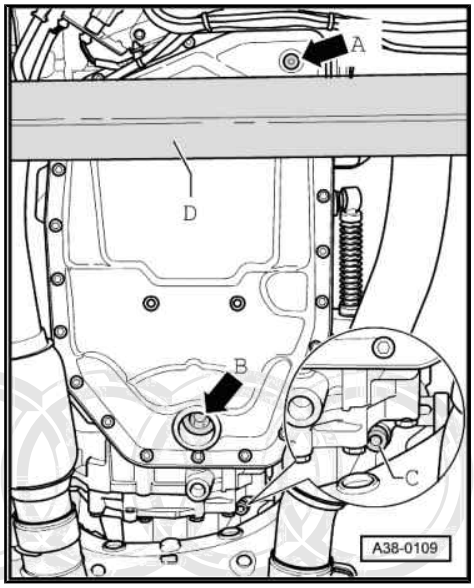

Note

♦ *Observe relevant disposal regulations.*

♦ *Some ATF always remains in the oil pan.*

♦ *-Arrow B- and -item C- can be disregarded.*

– Remove bolts -arrows- on mounting bracket for flange shaft (left-side).

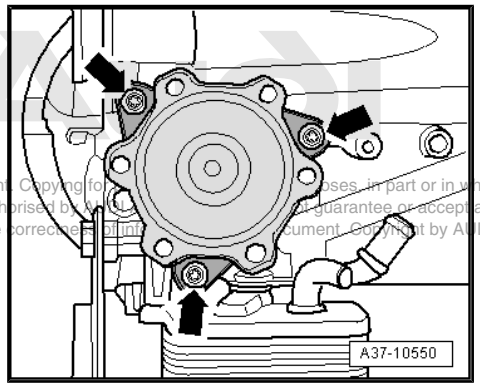

Protected by copyright. Copying for [illegible] poses, in part or in whole, is not permitted unless authorised by [illegible] guarantee or accept any liability with respect to the correctness of inf[illegible] cument. Copyright by AUDI AG.

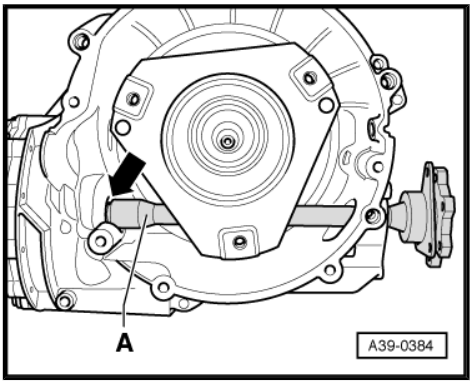

Caution

While pulling out the flange shaft (left-side), it must be held centrally to avoid damaging the oil seal between the final drive and the gearbox housing.

– Pull flange shaft -A- (left-side) out of gearbox, making sure that shaft remains centered in opening at differential -arrow-.
– Remove torque converter.
– Turn gearbox on assembly stand.
• The ATF oil pan must face upwards.

Gearbox with 24 bolts on oil pan:

– Slacken bolts for ATF oil pan in the sequence -24 ... 1- and remove bolts.

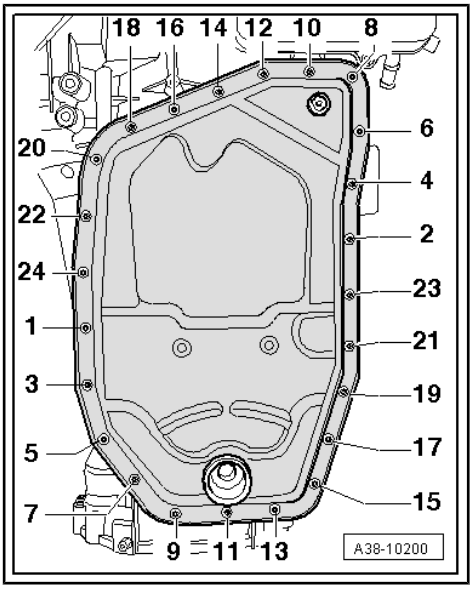

Protected by copyright. Copying for private or commercial purposes, in part or in whole, is not permitted without the prior consent of AUDI AG. AUDI AG does not guarantee or accept any liability with respect to the correctness of information in this document. Copyright by AUDI AG.

Gearbox with 13 bolts on oil pan:

– Slacken bolts for ATF oil pan in the sequence -13 ... 1- and remove bolts.

Continued for all gearboxes:

– Take off ATF oil pan and gasket.

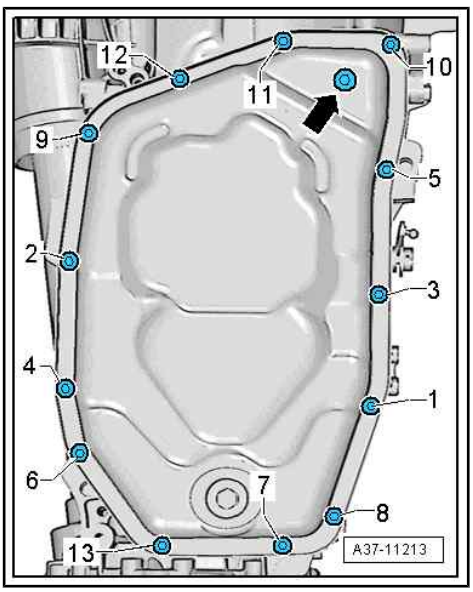

– Pull ATF strainer -arrow- off mechatronic unit.

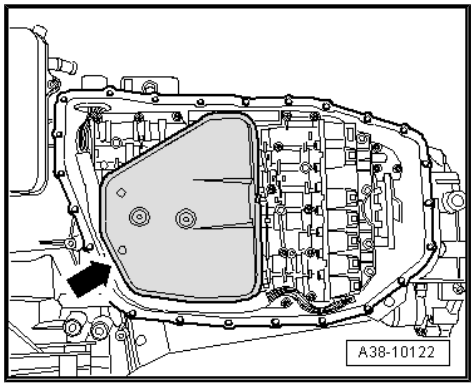

– Detach retaining clip -arrow- for wiring harness connector and push connector inwards.

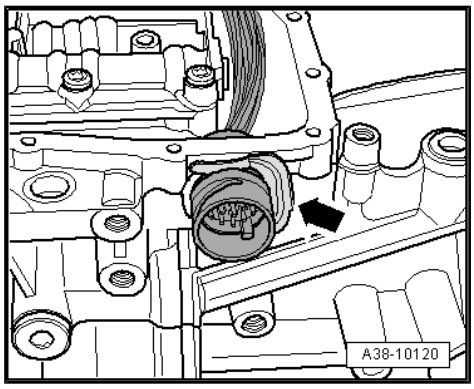

– Remove bolts -arrows A and B-.

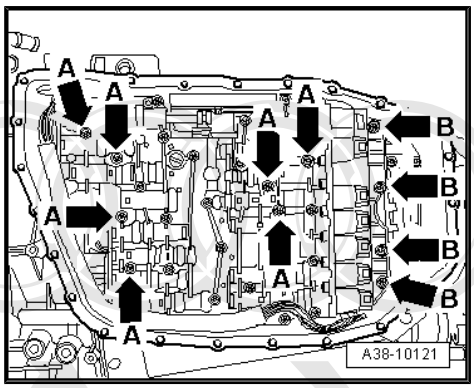

> **Caution**
>
> - *Loosen ONLY the bolts with the larger bolt heads -arrows A- and -arrows B-.*
> - *If other bolts are loosened, this may affect the operation of the mechatronic unit or the mechatronic unit could come apart.*
> - *Observe different bolt lengths.*

– Lift mechatronic unit slightly and pull wiring harness connector out of gearbox housing.

> **Caution**
>
> *To avoid damaging the senders on the rear of the unit, always put down the mechatronic unit so that the side with the bolt heads faces downwards.*

Protected by copyright. Copying for private or commercial purposes, in part or in whole, is not permitted unless authorised by AUDI AG. AUDI AG does not guarantee or accept any liability with respect to the correctness of information in this document. Copyright by AUDI AG.

– Detach adapter -B- for mechatronic unit.

– Pull out gasket -A- for ATF strainer (if it has not already been removed together with the ATF strainer).

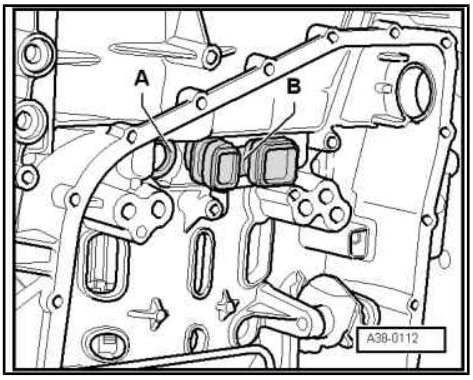

– Turn gearbox on assembly stand.

• The torque converter must face upwards.

– Slacken bolts for ATF supply unit in the sequence -14 ... 1- and remove bolts.

– Remove bolts with sealing washers.

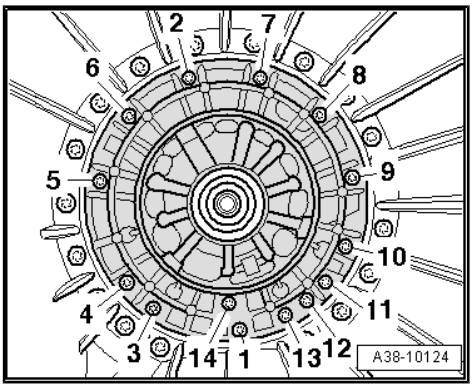

– Apply puller for ATF supply unit -T40123- to stator shaft.

– Detach ATF supply unit.

– Detach O-ring from ATF supply unit.

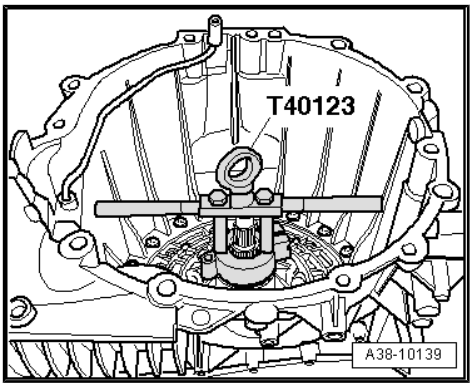

Installing

Make sure that body „II“ and clutch „B“ are still correctly installed.

– Measure height of top edge of body „II“ above contact surface for ATF pump.

• Dimension -a- = approx. 12 mm

If dimension -a- is exceeded, body „II“ or clutch „B“ was pulled out of engagement with plates upon removal.

– Remove body „II“ and clutch „B“ and then install again ⇒ page 33 .

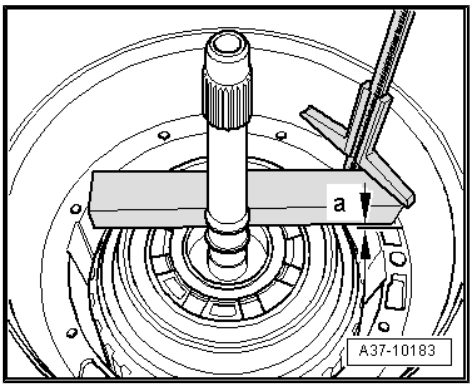

Protected by copyright. Copying for private or commercial purposes, in part or in whole, is not permitted unless authorised by AUDI AG. AUDI AG does not guarantee or accept any liability with respect to the correctness of information in this document. Copyright by AUDI AG.

– Check whether the existing shim -1- is still fitted on clutch „A“.

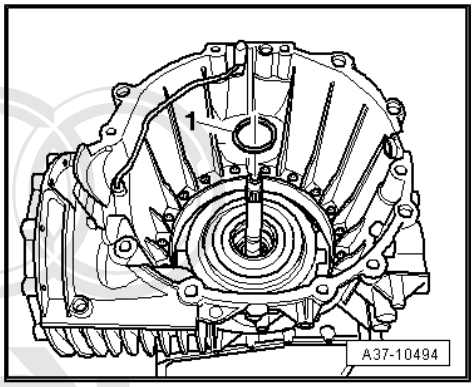

– Apply puller for ATF supply unit -T40123- to stator shaft.
– Fit ATF supply unit in gearbox housing without O-ring at this stage (turn ATF supply unit slightly in both directions).
• The opening on the housing of the ATF supply unit faces towards the ATF oil pan end.
– Detach puller for ATF supply unit -T40123- .

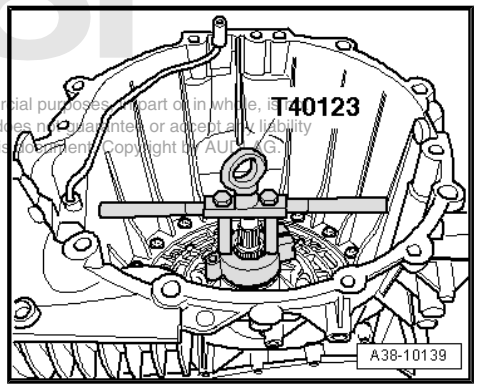

Protected by copyright. Copying for private or commercial purposes, in part or in whole, is not permitted unless authorised by AUDI AG. AUDI AG does not guarantee or accept any liability with respect to the correctness of information in this document. Copyright by AUDI AG.

– Fit bolts -1, 2, 5, 9- for ATF supply unit with old sealing washers and tighten bolts.
• Tightening torque: 10 Nm

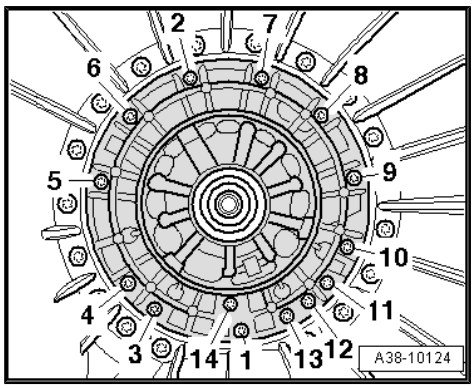

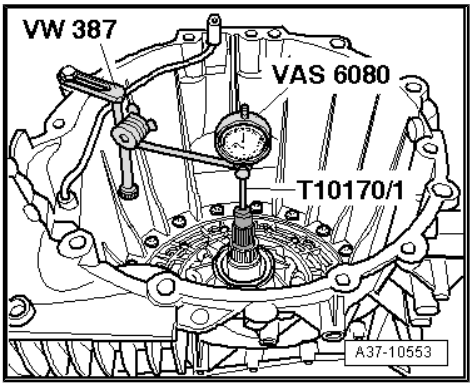

– Set up dial gauge -VAS 6080- with universal dial gauge bracket -VW 387- on gearbox flange.
– Apply dial gauge -VAS 6080- with dial gauge extension -T10170/1- to drilling in input shaft as shown in illustration.
– Wrap insulating tape around input shaft to prevent damage.
– Move input shaft up and down with pliers (avoid diagonal movements).
– Read off axial clearance of input shaft from dial gauge.
• Specification: 0.20 ... 0.40 mm

If result does not match specification:

– Select shim of required thickness from following table.
• Axial clearance too small: insert thinner shim of appropriate thickness.
• Axial clearance too large: insert thicker shim of appropriate thickness.

Available shims - thickness of shims in mm		
2.60	3.40	4.20
2.80	3.60	4.40
3.00	3.80	4.60
3.20	4.00	4.80

– Remove ATF supply unit again.
– Fit new shim of required thickness -1- onto clutch „A“.

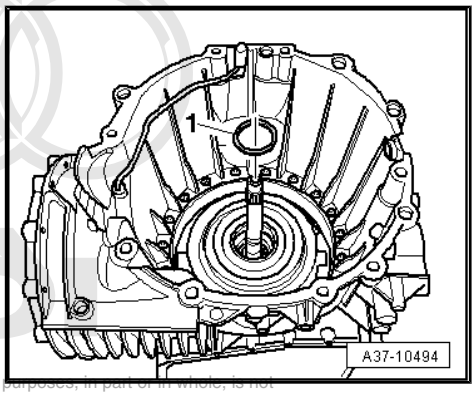

Protected by copyright. Copying for private or commercial purposes, in part or in whole, is not permitted unless authorised by AUDI AG. AUDI AG does not guarantee or accept any liability with respect to the correctness of information in this document. Copyright by AUDI AG.

– Renew rectangular section seals -3- on stator shaft.
– Lightly lubricate the rectangular section seals with vaseline before fitting. Use vaseline only. Other types of lubricant will cause the gearbox hydraulics to malfunction.
– Hook ends of rectangular section seals together.
– Make sure that the rectangular section seals are seated properly all round in the stator shaft grooves.
– Renew O-ring -1- on ATF supply unit -2-.

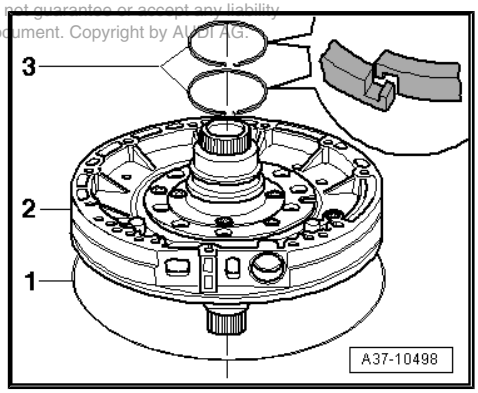

– Apply puller for ATF supply unit -T40123- to stator shaft.
– Fit ATF supply unit in gearbox housing again (turn ATF supply unit slightly in both directions).
• The opening on the housing of the ATF supply unit faces towards the ATF oil pan end.
– Detach puller for ATF supply unit -T40123- .

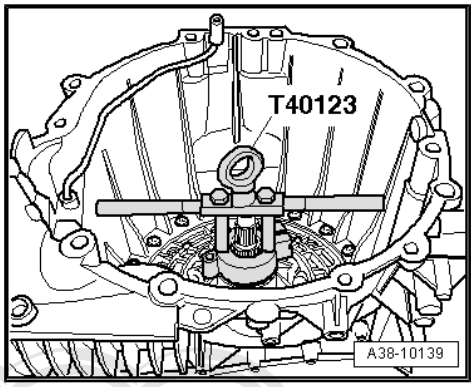

– Fit new sealing washers on bolts for ATF supply unit.
– Tighten bolts for ATF supply unit in sequence -1 ... 14-.
• Tightening torque: 10 Nm
– Check axial clearance of input shaft again ⇒ page 115 .

If reading again does not match specification:

– Repeat adjustment.

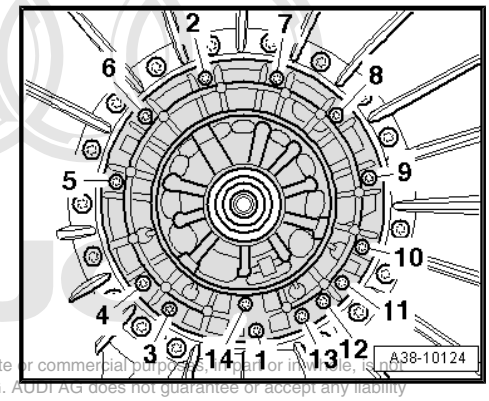

Protected by copyright. Copying for private or commercial purposes, in part or in whole, is not permitted unless authorised by AUDI AG. AUDI AG does not guarantee or accept any liability with respect to the correctness of information in this document. Copyright by AUDI AG.

If result matches specification:

– Turn gearbox on assembly stand.
• The ATF oil pan must face upwards.
– Make sure that sealing sleeves -2- and aluminium sleeves -1- are fitted.

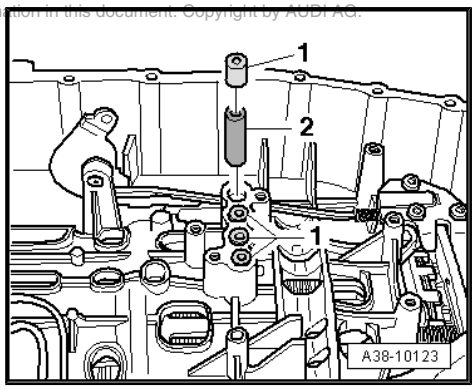

Caution

Observe different lengths of sealing sleeves; they should be at the same height when installed.

– Renew seals on adapter -B-.
– Install adapter for mechatronic unit.

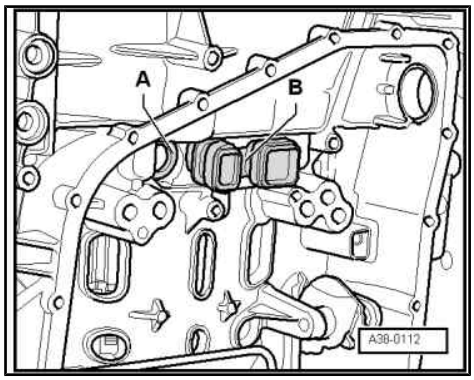

Note

Item -A- can be disregarded.

– Renew O-rings for wiring harness connector.
– Fit wiring harness connector in gearbox housing.
• Lugs -1- and -2- on collar are horizontal, flat section -arrow- of connector faces inside of gearbox.

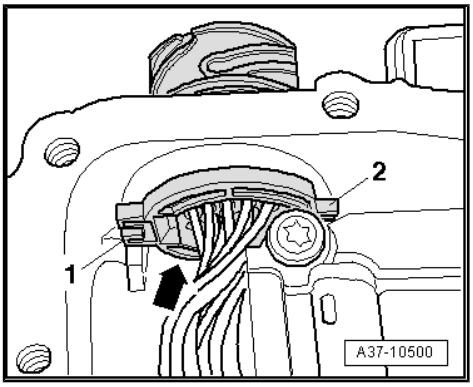

– Fit retaining clip -arrow- for wiring harness connector.

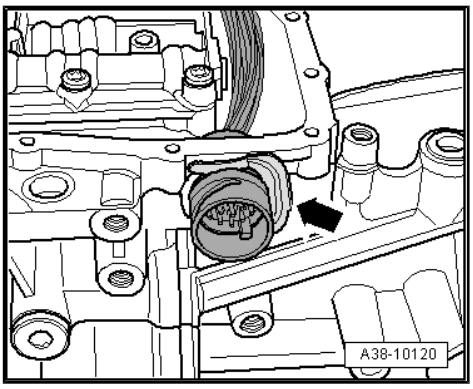

– Place mechatronic unit in position on gearbox housing without using force. At the same time insert pin -2- of detent plate so that it engages in slot on selector slide -1-.

Protected by copyright. Copying for private or commercial purposes, in part or in whole, is not permitted unless authorised by AUDI AG. AUDI AG does not guarantee or accept any liability with respect to the correctness of information in this document. Copyright by AUDI AG

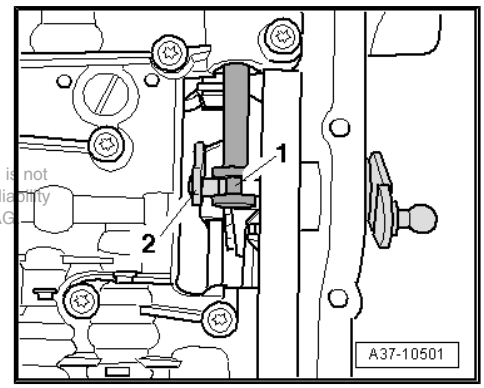

– Screw in bolts -arrows- hand-tight.

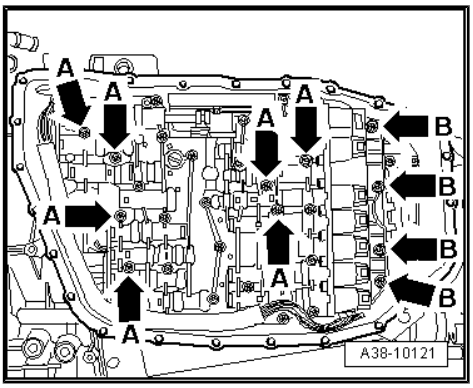

Note

Note different bolt lengths. Allocation:

Location		Quantity	Bolt length
-Arrow A-	=	7	M6x50
-Arrow B-	=	4	M6x20

– Tighten bolts in sequence -1 … 11-.

• Tightening torque: 8 Nm

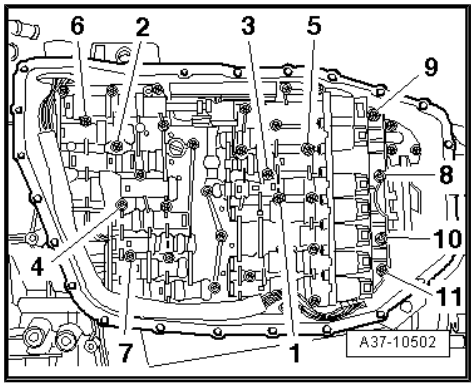

– Renew ATF strainer.

– Check whether seal is fitted on new ATF strainer.

– Fit ATF strainer on mechatronic unit.

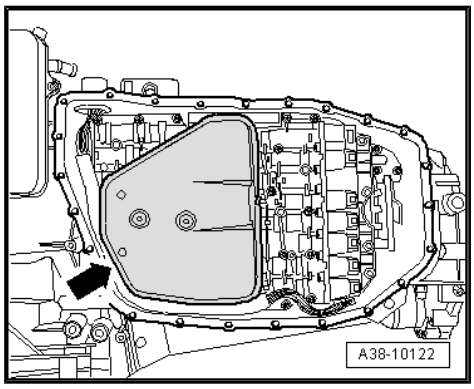

– Clean magnets -1- and -2- in ATF oil pan.

– Ensure that magnets make full contact with ATF oil pan.

– Fit ATF oil pan with new gasket.

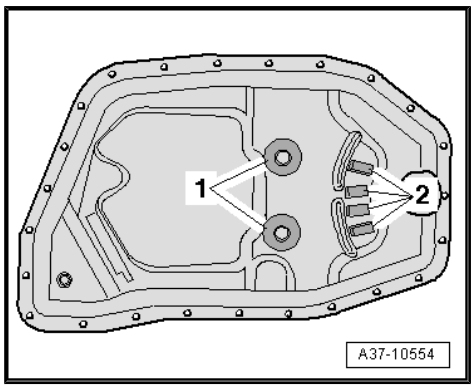

Gearbox with 24 bolts on ATF oil pan:

– With ATF oil pan removed, screw guide pins -T40199- into positions -11, 12, 23 and 24-.

Note

The guide pins -T40199- hold the gasket and the ATF oil pan in position. Without them the ATF oil pan will not be properly sealed.

Protected by copyright. Copying for private or commercial purposes, in part or in whole, is not permitted unless authorised by AUDI AG. AUDI AG does not guarantee or assume any liability with respect to the correctness of information in this document. Copyright by AUDI AG.

– Guide new gasket and ATF oil pan over guide pins -T40199- .

– Tighten bolts for ATF oil pan in the sequence -1 ... 10-.

– Unscrew guide pins -T40199- .

– Tighten remaining bolts for ATF oil pan in the sequence -11 ... 24-.

• Tightening torque: 12 Nm

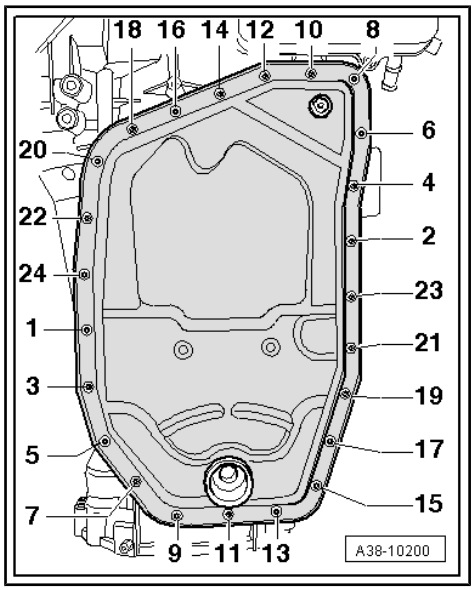

Gearbox with 13 bolts on ATF oil pan:

– With ATF oil pan removed, screw guide pins -T40199- into positions -10, 11, 12 and 13-.

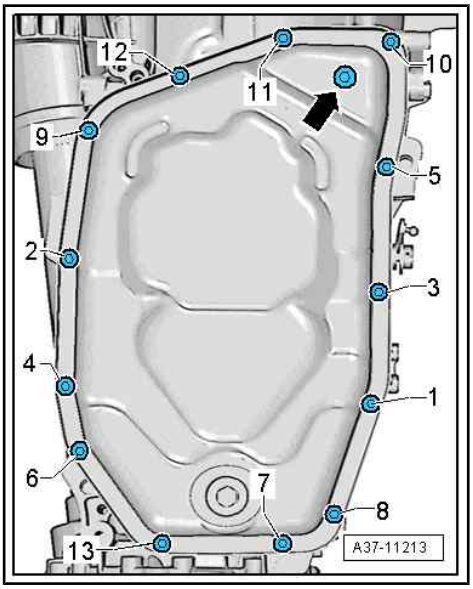

Note

- ♦ *The guide pins -T40199- hold the gasket and the ATF oil pan in position. Without them the oil pan will not be properly sealed.*
- ♦ *Renew aluminium bolts for oil pan.*

– Guide new gasket and ATF oil pan over guide pins -T40199- .

– Tighten bolts for ATF oil pan in the sequence -1 ... 9-.

– Unscrew guide pins -T40199- .

– Tighten remaining bolts for ATF oil pan in the sequence -11 ... 13-.

• Tightening torque: 2.5 Nm and turn 90° further

Continued for all gearboxes:

– Turn gearbox on assembly stand.

• The ATF oil pan must face downwards.

– If necessary, renew oil seal between final drive and gearbox housing ⇒ page 130 .

– Install torque converter (push torque converter hub through oil seal as far as first stop).

– Turn the torque converter, at the same time pressing it inwards lightly until the slots on the torque converter hub engage in the drive lugs on the ATF pump gear and the torque converter slips in noticeably.

Installation depth:

If the torque converter has been correctly installed, the distance -a- measured between the surface of the mounting holes and the contact surface of the torque converter bellhousing should be:

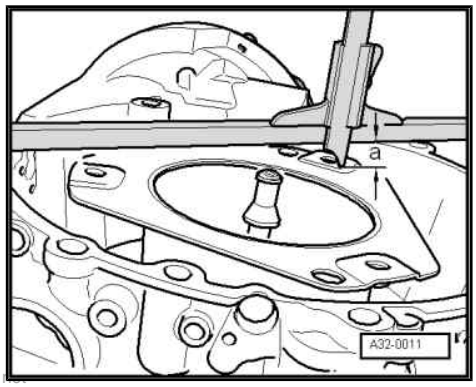

• 8 or 12-cylinder petrol engines: at least 5.9 mm

• 10-cylinder petrol engines and 8-cylinder TDI engines: at least 18.9 mm

Caution

If the torque converter is not fitted correctly, the torque converter drive lugs or the ATF pump will be irreparably damaged when the gearbox is joined to the engine.

Copyright by AUDI AG. Reproduction, transmission or duplication of this document, or any part of it, in whole, is not permitted without written authorization from AUDI AG. We do not assume any liability for the accuracy of the information in this document. Copyright by AUDI AG.

– Check that there are no burrs or sharp edges on gearbox end of flange shaft (left-side) -arrow-; deburr edges if necessary.

– Clean flange shaft (left-side) and oil seal between final drive and gearbox housing.

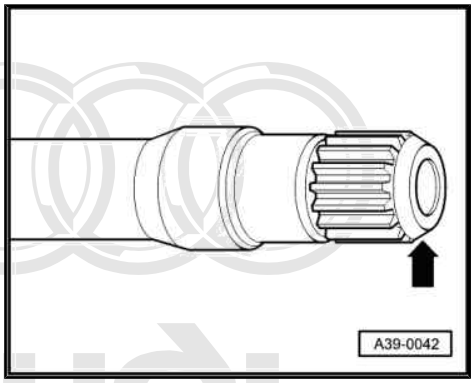

– Pack space between sealing lips -arrow- of oil seal half-full with sealing grease -G 052 128 A1- .

Protected by copyright. Copying for private or commercial purposes, in part or in whole, is not permitted unless authorised by AUDI AG. AUDI AG does not any liability with respect to the correctness of information in this document. Copyright by AUDI AG.

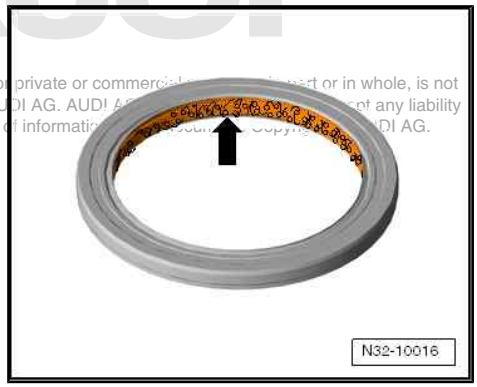

Caution

While inserting the flange shaft (left-side), it must be held centrally to avoid damaging the oil seal between the final drive and the gearbox housing.

– Insert flange shaft -A- (left-side) into gearbox, guiding shaft centrally into oil seal between final drive and gearbox housing -arrow-.

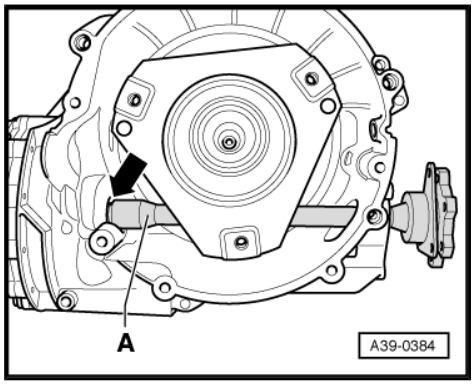

– Tighten bolts -arrows- on mounting bracket for flange shaft (left-side).

• Tightening torque: 23 Nm

– Detach gearbox from assembly stand.

– Fill up with ATF and check ATF level ⇒ Automatic gearbox 09E, four-wheel drive; Rep. gr. 37 .

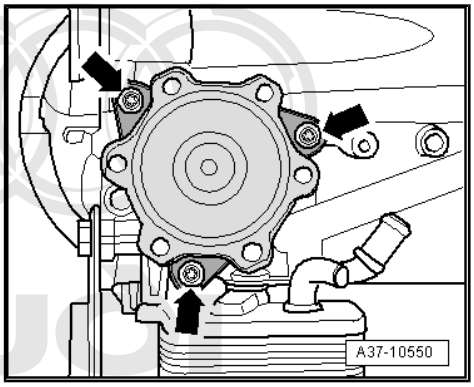

Gearbox with separate oil systems:

– Check gear oil level in front final drive ⇒ Automatic gearbox 09E, four-wheel drive; Rep. gr. 39 .

Gearbox with common oil system:

– Check gear oil level in gearbox ⇒ Automatic gearbox 09E, four-wheel drive; Rep. gr. 39 .

Copyright by AUDI AG. Copying for private or commercial purposes, in part or in whole, is not permitted unless authorised by AUDI AG. AUDI AG does not guarantee or accept any liability with respect to the correctness of information in this document. Copyright by AUDI AG.

Tightening torques

Component		Nm
ATF supply unit to gearbox housing		10
Mechatronic unit to gearbox housing		8
ATF oil pan to gearbox housing	24 bolts	12
	13 bolts	2.5 +90° 1)
Mounting bracket for flange shaft (left-side) to gearbox		23
• 1) Renew bolts		

2.4 Removing and installing ATF pump in ATF supply unit

Removing

– Remove ATF supply unit ⇒ page 110 .

– Turn ATF supply unit upside down.

– Remove bolts -arrows 1-.

– Unscrew bolts -arrows 2- approx. 5 turns.

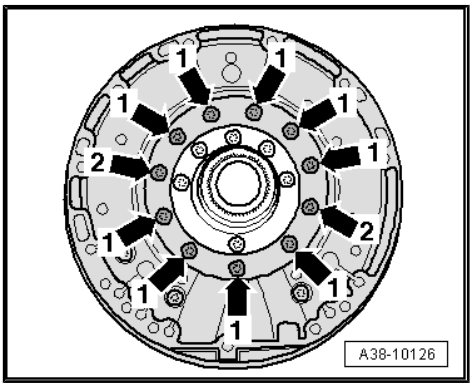

– Loosen ATF supply unit by tapping bolt heads gently with a plastic-headed hammer -arrow-.

– Unscrew remaining two bolts.

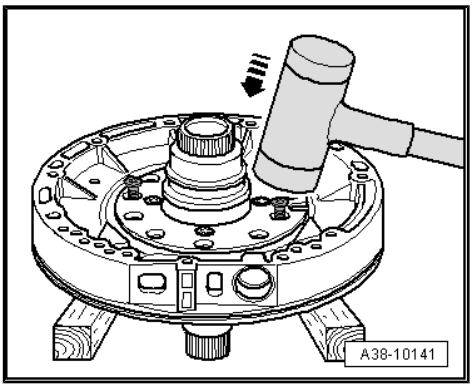

– Remove ATF pump gears -3- and -4- from ATF pump housing -2-.

1 - O-ring

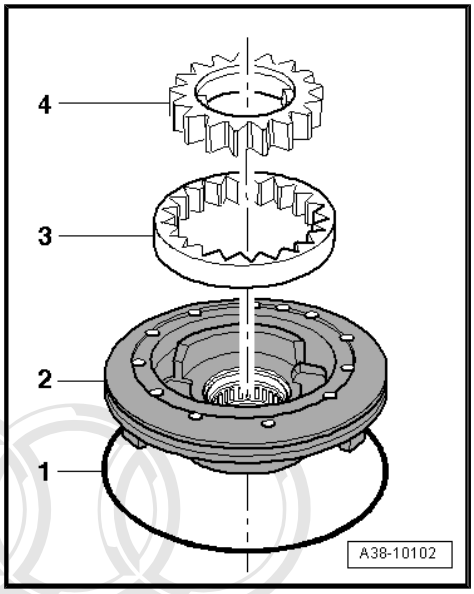

Installing

> **Caution**
>
> *Check the individual components of ATF supply unit for traces of wear and damage* *⇒ page 176* *.*

– Renew O-ring -1- on ATF pump housing.

– Insert ATF pump gears -3- and -4- into ATF pump housing -2-.

• The dots on the ATF pump gears face upwards.

– Screw in M6 guide pins -T10288/4- .

– Install ATF pump unit into the ATF supply unit housing.

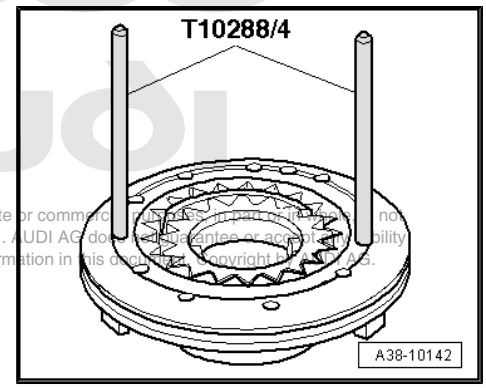

Protected by copyright. Copying for private or commercial purposes, in part or in whole, is not permitted unless authorised by AUDI AG. AUDI AG does not guarantee or accept any liability with respect to the correctness of information in this document. Copyright by AUDI AG.

– Tighten bolts -arrows 1- and -arrows 2- diagonally in stages.

• Tightening torque: 10 Nm

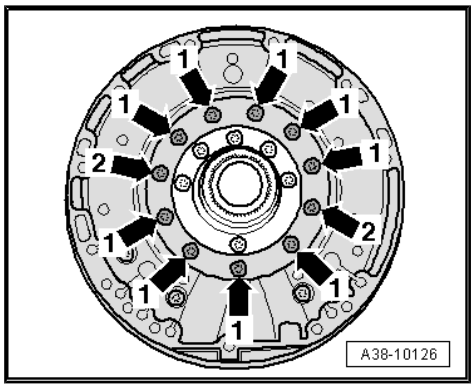

2.5 Removing and installing needle bearing for torque converter

Removing

– Remove ATF pump ⇒ page 121 .

– Pry out torque converter oil seal using extractor tool - T20143/2- .

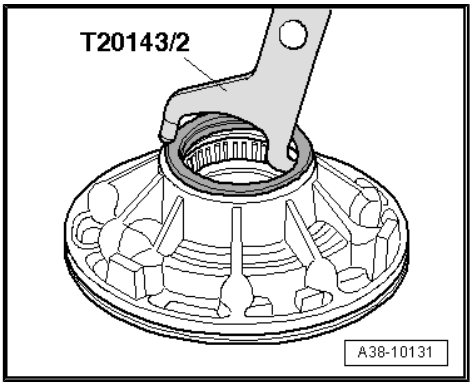

– Remove circlip -2- from ATF pump housing -1-.

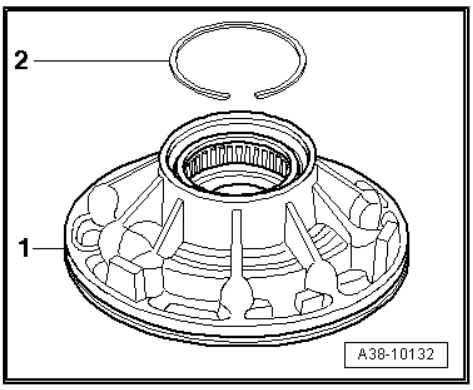

Note

- *The needle bearing for the torque converter cannot be removed without being damaged.*
- *Take care not to damage the ATF pump housing when driving out the needle bearing.*

– Turn ATF pump housing upside down and drive out needle bearing for torque converter using a suitable punch -arrow-.

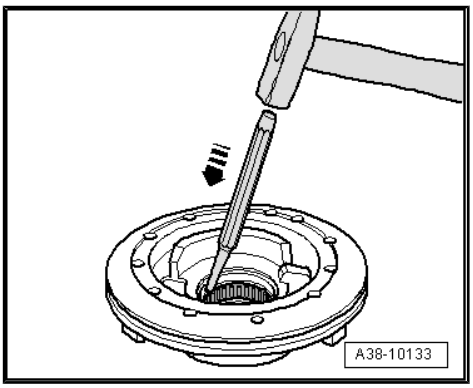

Protected by copyright. Copying for private or commercial purposes, in part or in whole, is not permitted unless authorised by AUDI AG. AUDI AG does not guarantee or accept any liability with respect to the correctness of information in this document. Copyright by AUDI AG.

Installing

– Using thrust piece -T40122- , drive needle bearing -2- for torque converter into ATF pump housing -1- as far as stop.

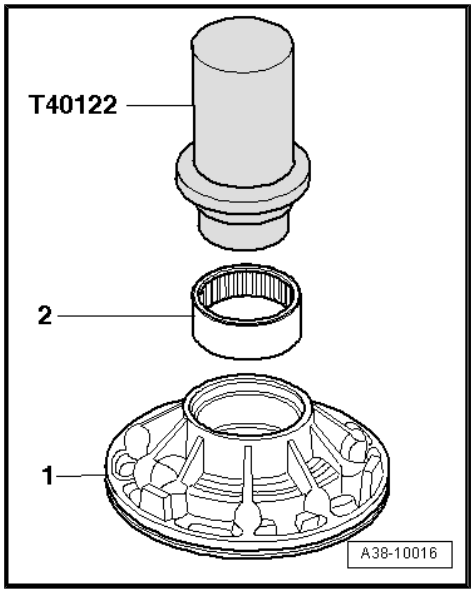

> **Caution**
>
> *Risk of gearbox malfunction.*
>
> - *The wide collar on the needle cage faces towards thrust piece -T40122- .*

– Install circlip -2- in ATF pump housing -1-.

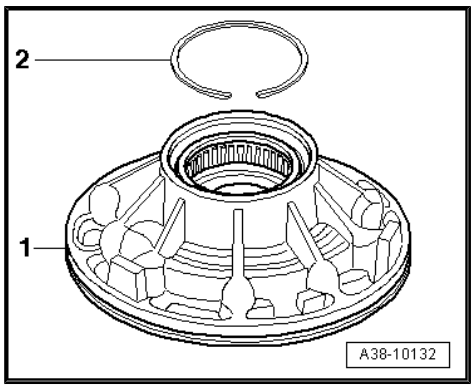

– Lightly lubricate outer circumference and sealing lips of torque converter oil seal with ATF.

- Open side of oil seal faces gearbox.

– Drive in torque converter oil seal with thrust piece -T10137- until thrust piece reaches stop.

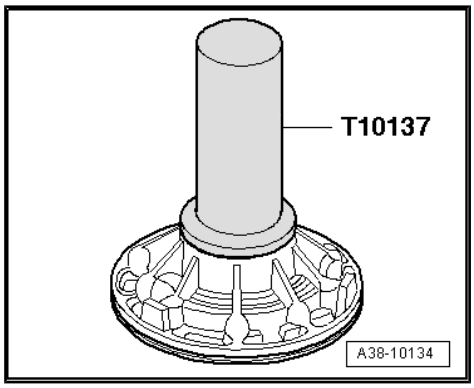

– Assemble ATF supply unit .

Protected by copyright. Copying for private or commercial purposes, in part or in whole, is not permitted unless authorised by AUDI AG. AUDI AG does not guarantee or accept any liability with respect to the correctness of information in this document. Copyright by AUDI AG.

39 – Final drive - front differential

1 Servicing front final drive

Overview

- ⇒ „1.1 Front final drive - exploded view“, page 125
- ⇒ „1.4 Renewing oil seal for flange shaft (right-side)“, page 130
- ⇒ „1.5 Renewing oil seal between final drive and gearbox housing“, page 130
- ⇒ „1.6 Renewing O-ring on cover for front final drive“, page 133
- ⇒ „1.7 Renewing oil seals for side shaft - gearbox with separate oil systems“, page 134
- ⇒ „1.8 Renewing O-rings for protective tube for side shaft - gearbox with common oil system“, page 145
- ⇒ „1.9 Renewing oil seal for selector shaft“, page 154

1.1 Front final drive - exploded view

1 - Oil seal
- ❑ Between final drive and gearbox housing
- ❑ Renewing ⇒ page 130

2 - Shim
- ❑ Behind tapered roller bearing outer race

3 - Tapered roller bearing outer race

4 - O-ring
- ❑ Renew

5 - Screw plug
- ❑ Renew
- ❑ 35 Nm

6 - Flange shaft (right-side)
- ❑ Removing and installing with gearbox in vehicle ⇒ Automatic gearbox 09E, four-wheel drive; Rep. gr. 39
- ❑ ⇒ „1.2 Removing and installing flange shaft (right-side) with gearbox removed“, page 126

7 - Circlip
- ❑ Renew

8 - Oil seal for flange shaft (right-side)
- ❑ Renewing ⇒ page 130

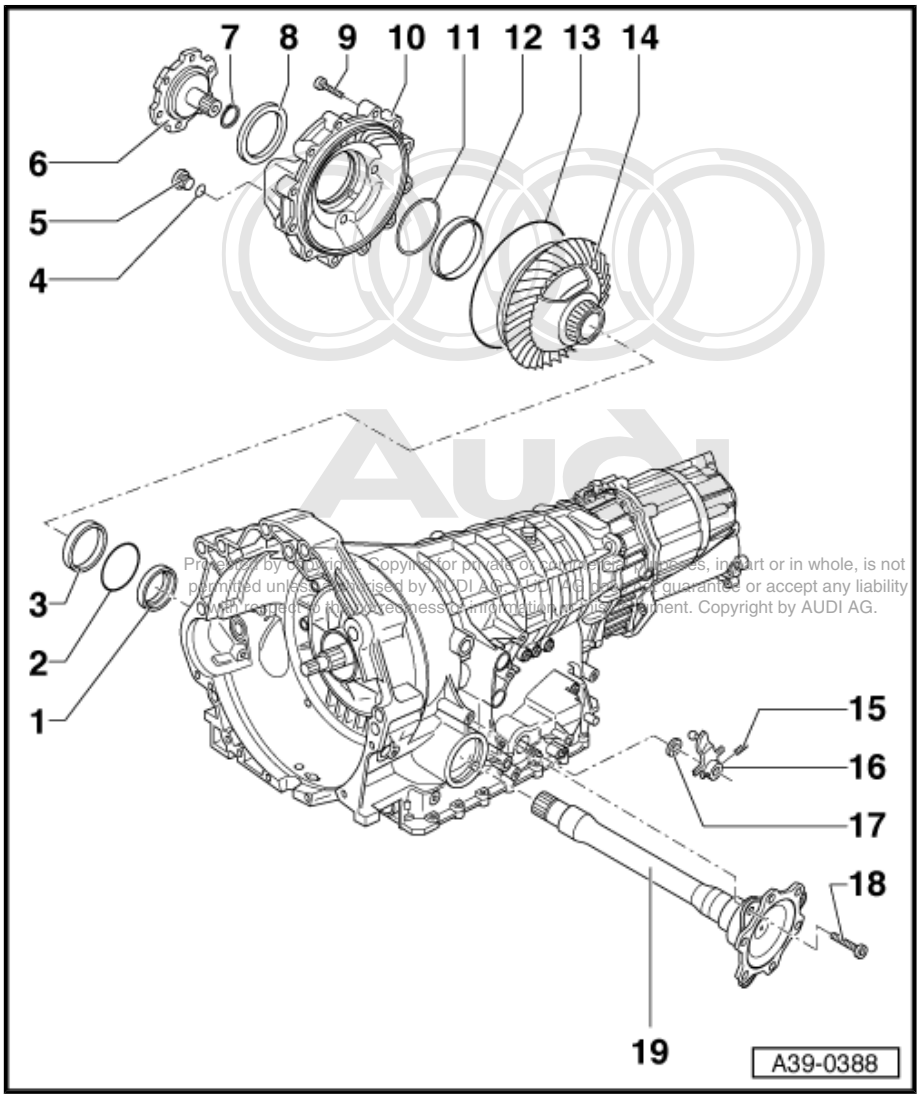

9 - Bolt

- ❑ Note tightening torque and sequence ⇒ page 126

10 - Cover for front final drive

- ❑ Removing and installing ⇒ page 133

11 - Shim

- ❑ Behind tapered roller bearing outer race

12 - Tapered roller bearing outer race

13 - O-ring for front final drive cover

- ❑ ⇒ „1.6 Renewing O-ring on cover for front final drive“, page 133

14 - Differential

15 - Roll pin

16 - Gearbox selector lever

17 - Oil seal for selector shaft

- ❑ Renewing ⇒ page 154

Protected by copyright. Copying for private or commercial purposes, in part or in whole, is not permitted unless authorised by AUDI AG. AUDI AG does not guarantee or accept any liability with respect to the correctness of information in this document. Copyright by AUDI AG.

18 - Bolt

- ❑ 23 Nm

19 - Flange shaft (left-side)

- ❑ ⇒ „1.3 Removing and installing flange shaft (left-side)“, page 127

Cover for front final drive - tightening torque and sequence:

– Tighten bolts of cover for front final drive as follows.

Stage	Tightening sequence
1	– Tighten bolts -1- and -2- to 3 Nm.
2	– Tighten bolts -1 ... 11- to 23 Nm in the sequence indicated.

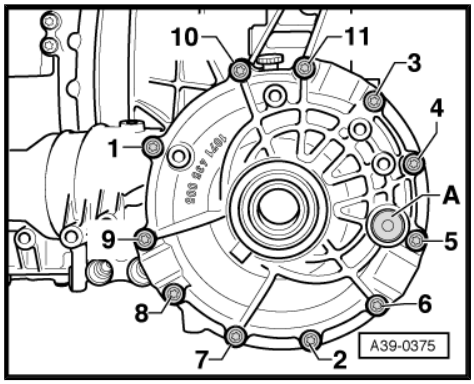

1.2 Removing and installing flange shaft (right-side) with gearbox removed

Special tools and workshop equipment required

- ♦ Used oil collection and extraction unit -V.A.G 1782-

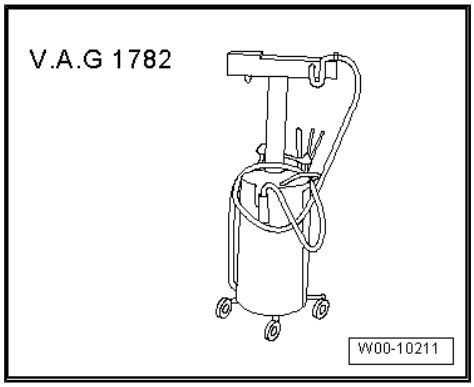

Removing

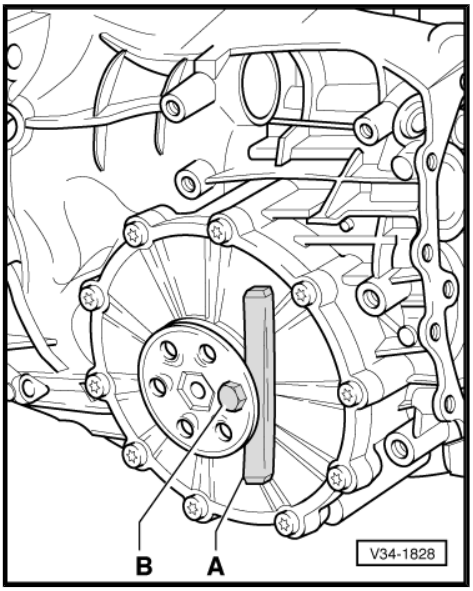

Note

- *Rules for cleanliness when working on the automatic gearbox ⇒ page 11*
- *General repair instructions ⇒ page 1 .*
- *The flange shaft (right-side) can also be removed and installed with the gearbox in the vehicle ⇒ Automatic gearbox 09E, four-wheel drive; Rep. gr. 39 .*

– Secure gearbox to assembly stand ⇒ page 18 .

– Place used oil collection and extraction unit -V.A.G 1782- below gearbox.

– Remove flange shaft: Place a chisel or suitable spacer -A- under the flange shaft and pull flange shaft out by turning bolt -B-.

Note

If the flange shaft does not come out easily, turn the shaft and insert the bolt in the opposite tapped hole to assist removal.

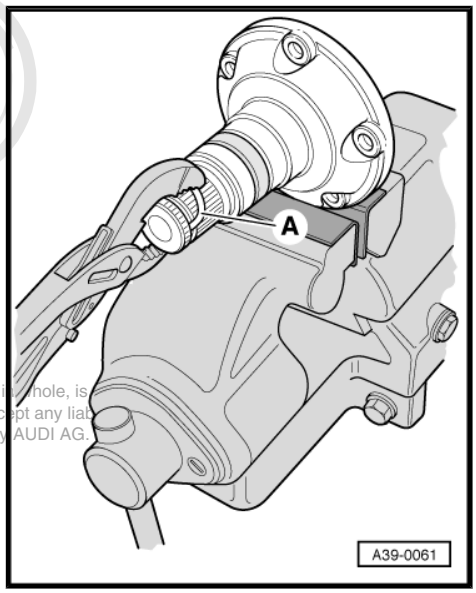

– Always renew circlip for flange shaft.

– Clamp flange shaft in vice, using jaw protectors. Use new circlip -A- to press old circlip out of groove in flange shaft.

Installing

– Clean flange shaft and oil seal.

– If oil seal is damaged, it must be renewed ⇒ page 130 .

– Pack space between sealing lip and dust lip half-full with sealing grease -G 052 128 A1- .

– Insert flange shaft by hand into splines of front final drive until splines lock properly into place.

– Press flange shaft in by hand or with mandrel -VW 295- as far as the stop.

Protected by copyright. Copying for private or commercial purposes, in part or in whole, is not permitted unless authorised by AUDI AG. AUDI AG does not guarantee or accept any liability with respect to the correctness of information in this document. Copyright by AUDI AG.

Note

The circlip on the flange shaft should click into place.

– After installing gearbox, check gear oil level in gearbox and top up as required ⇒ Automatic gearbox 09E, four-wheel drive; Rep. gr. 39 .

1.3 Removing and installing flange shaft (left-side)

Special tools and workshop equipment required

- Used oil collection and extraction unit -V.A.G 1782-

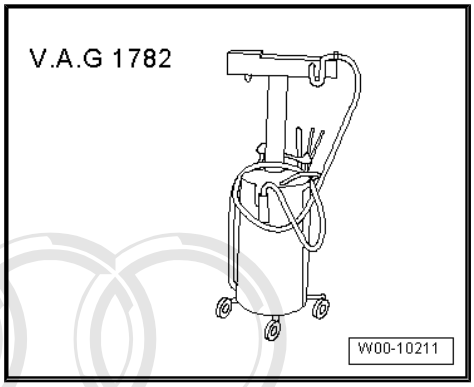

- Puller -T10037-

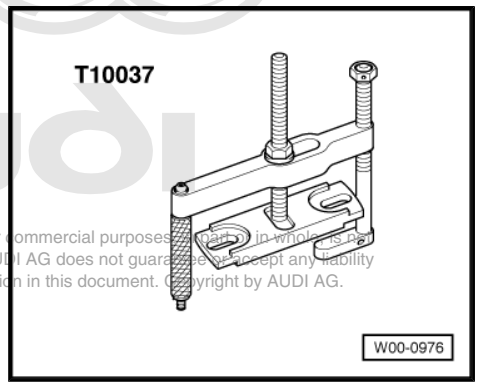

Protected by copyright. Copying for private or commercial purposes, in part or in whole, is not permitted unless authorised by AUDI AG. AUDI AG does not guarantee or accept any liability with respect to the correctness of information in this document. Copyright by AUDI AG.

Removing

- Gearbox removed
- Secure gearbox to assembly stand ⇒ page 18 .

Note

- *Rules for cleanliness when working on the automatic gearbox* *⇒ page 11*
- *General repair instructions* *⇒ page 1* .

Caution

The gearbox must not be placed down on ATF cooler or oil pan.

– Unscrew bolts -arrows- on mounting bracket for flange shaft (left-side).

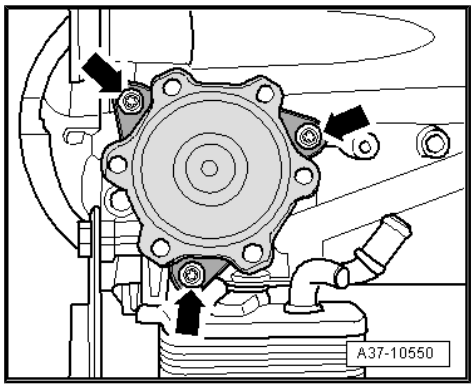

– Place used oil collection and extraction unit -V.A.G 1782- below gearbox.

– Remove flange shaft (left-side); to do so, secure puller -T10037- to gearbox housing -arrow-.

– Pull out flange shaft using puller -T10037- only until bearing on shaft is removed from gearbox housing.

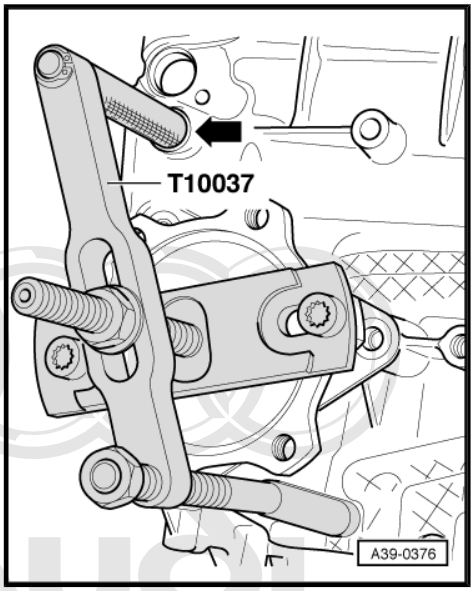

Protected by copyright. Copying for private or commercial purposes, in part or in whole, is not permitted unless authorised by AUDI AG. AUDI AG does not guarantee or accept any liability with respect to the correctness of information in this document. Copyright by AUDI AG.

Note

If you do not keep the shaft centered when pulling it out further -arrow-, the splines of the shaft will fall against the oil seal for the flange shaft (left-side). The oil seal will be damaged and will have to be renewed ⇒ page 130 *.*

– Pull flange shaft -A- out of gearbox making sure that the shaft remains centered in the opening on the front final drive -arrow-.

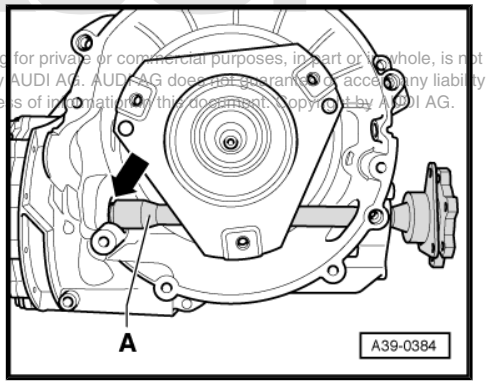

Installing

– Install in the reverse order.

You must also perform and observe the following checks.

Tightening torques
⇒ „1.1 Front final drive - exploded view“, page 125

– Clean flange shaft and oil seal.

– If oil seal between final drive and gearbox housing is damaged, it must be renewed ⇒ page 130 .

– Pack space between sealing lip and dust lip half-full with sealing grease -G 052 128 A1- .

– Insert flange shaft -A- into gearbox and guide shaft into oil seal on front final drive -arrow-, keeping it centered.

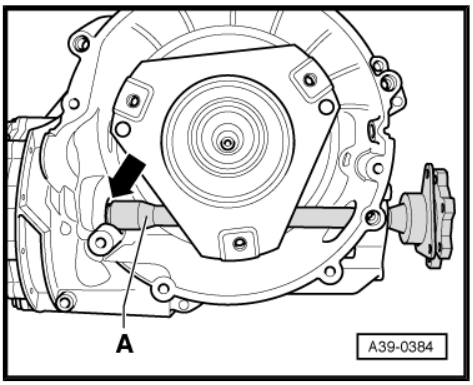

Note

If you do not keep the shaft centered, the splines of the shaft will damage the oil seal between final drive and gearbox housing. In this case, the oil seal will have to be renewed ⇒ page 130 *.*

– After installing gearbox, check gear oil level in gearbox and top up as required ⇒ Automatic gearbox 09E, four-wheel drive; Rep. gr. 39 .

1.4 Renewing oil seal for flange shaft (right-side)

Procedure

Note

- *General repair instructions* ⇒ page 1 .
- *Rules for cleanliness when working on the automatic gearbox* ⇒ page 11

– Remove flange shaft (right-side) ⇒ page 126 .
– Pull out flange shaft oil seal.
– Lightly lubricate outer circumference of oil seal with gear oil.

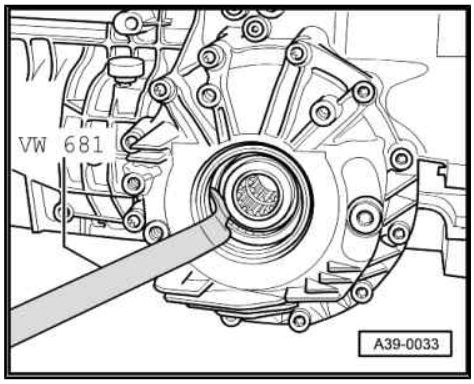

– Drive in new oil seal onto stop (take care to keep oil seal straight).
– Lightly lubricate outer circumference of seal with gear oil.
– Drive in new seal onto stop (take care to keep seal straight).
• Installation position: the open side of the oil seal should face the gearbox.

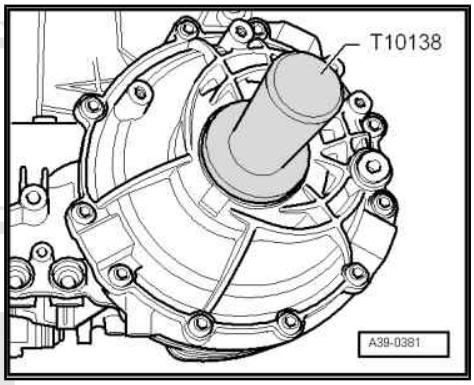

– Pack space between sealing lips -arrow- of oil seal half-full with sealing grease -G 052 128 A1- .
– Install flange shaft (right-side) ⇒ page 126 .

Copyright by AUDI AG. Copying for private or commercial purposes, in part or in whole, is not permitted unless authorised by AUDI AG. AUDI AG does not guarantee or accept any liability with respect to the correctness of information in this document. Copyright by AUDI AG.

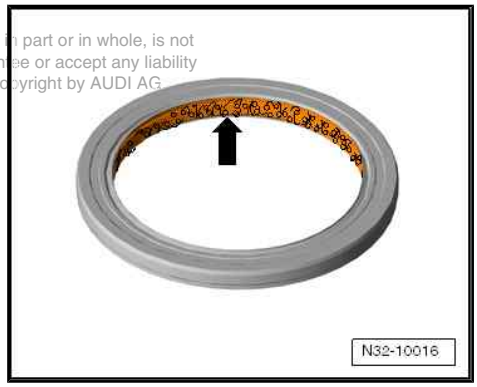

1.5 Renewing oil seal between final drive and gearbox housing

Requirements

• Gearbox secured to assembly stand ⇒ page 18 .

WARNING

The gearbox must not be placed down on ATF cooler or oil pan.

Procedure

Note

- *A defective seal allows gear oil to enter the torque converter bellhousing.*
- *General repair instructions ⇒ page 1 .*
- *Rules for cleanliness when working on the automatic gearbox ⇒ page 11*

Reproduced by copyright. Copying for private or commercial purposes, in part or in whole, is not permitted unless authorised by AUDI AG. AUDI AG does not guarantee or accept any liability with respect to the correctness of information in this document. Copyright by AUDI AG.

– Remove flange shaft (right-side) ⇒ page 126 .

– Remove bolts in the sequence -11 ... 1-.

– Remove cover for front final drive together with outer race for tapered roller bearing and shim.

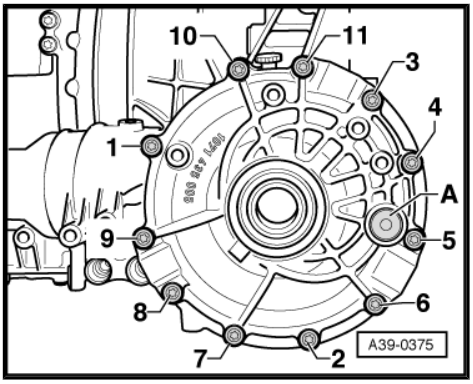

Note

The thickness of the shim has been measured to fit; the shim must not be replaced with another shim of different thickness.

– Remove differential.

– Remove tapered roller bearing outer race -1- for differential and shim -2- (behind outer race) from gearbox housing by hand.

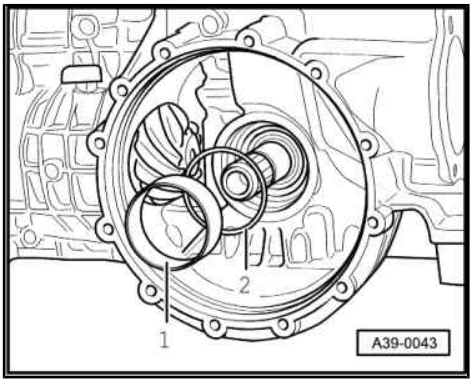

Note

The thickness of the shim has been measured to fit; the shim must not be replaced with another shim of different thickness.

– Remove flange shaft (left-side) ⇒ page 127 .

– Pull out oil seal.

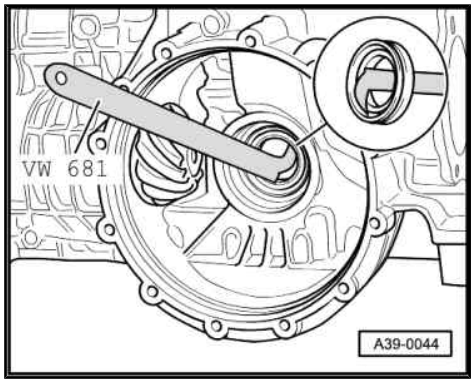

Note

The oil seal extractor lever -VW 681- must be applied behind the two sealing lips of the oil seal. Do not position at outer circumference of oil seal as the contact surface in the gearbox housing could be damaged. Guide the lever carefully when removing the seal.

– Examine oil seal seat in gearbox housing for damage; reface surface if necessary.

– Lightly lubricate outer circumference and sealing lip of oil seal with gear oil.

Note

Push oil seal onto thrust piece with the protruding sealing lip on the oil seal facing towards the tool.

– Drive in new oil seal as far as stop using thrust piece -T10139- .

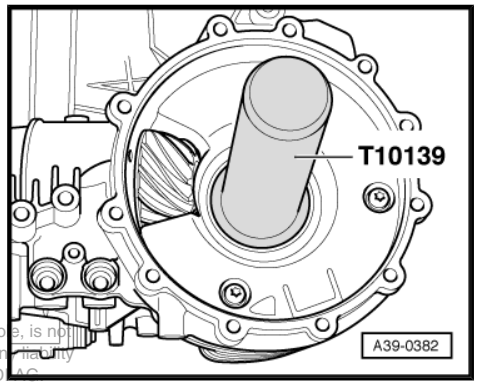

Protected by copyright. Copying for private or commercial purposes, in part or in whole, is not permitted unless authorised by AUDI AG. AUDI AG does not guarantee or accept any liability with respect to the correctness of information in this document. Copyright by AUDI AG.

– Insert shim -2- and tapered roller bearing outer race -1- for differential onto stop in gearbox housing by hand.

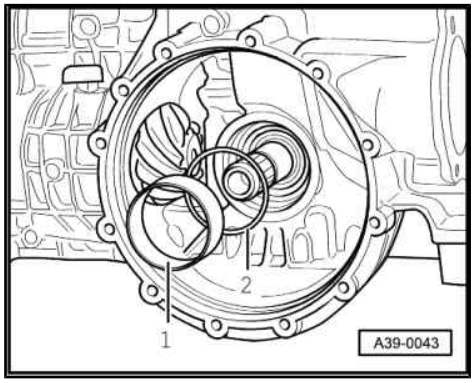

Note

Make sure that shim and outer race are kept straight when inserting.

– Renew O-ring -arrow-.

– Install differential in gearbox housing.

Note the following if the outer race for tapered roller bearing and the shim have dropped out of the front final drive cover:

– Lubricate shim and outer race for tapered roller bearing with gear oil and insert in cover for front final drive as far as stop.

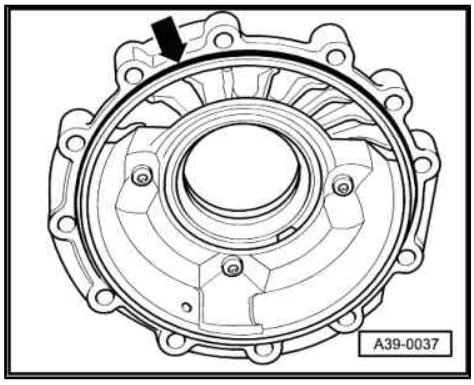

– Install bolts for cover for front final drive (observe specified tightening torque and sequence) ⇒ page 126 .

– Install flange shaft (right-side) ⇒ page 126 .

– Install flange shaft (left-side) ⇒ page 127 .

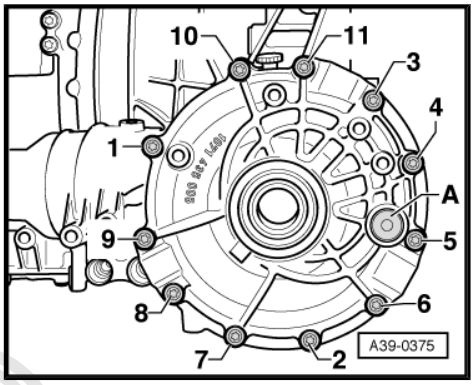

1.6 Renewing O-ring on cover for front final drive

Procedure

Note

- *General repair instructions* *⇒ page 1* .
- *Rules for cleanliness when working on the automatic gearbox* *⇒ page 11*

Protected by copyright. Copying for private or commercial purposes, in part or in whole, is not permitted unless authorised by AUDI AG. AUDI AG does not guarantee or accept any liability with respect to the correctness of information in this document. Copyright by AUDI AG.

– Place used oil collection and extraction unit -V.A.G 1782- below gearbox.

– Remove flange shaft (right-side) ⇒ page 126 .

– Unscrew bolts in the sequence -11 ... 1- and remove cover for front final drive together with outer race for tapered roller bearing and shim.

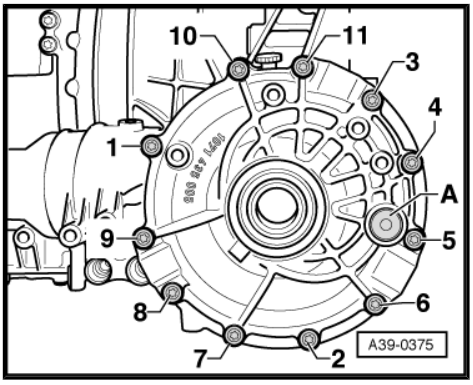

Note

The thickness of the shim has been measured to fit; the shim must not be replaced with another shim of different thickness.

– Renew O-ring -arrow-.

Note the following if the outer race for tapered roller bearing and the shim have dropped out of the front final drive cover:

– Lubricate shim and outer race for tapered roller bearing with gear oil and insert in cover for front final drive as far as stop.

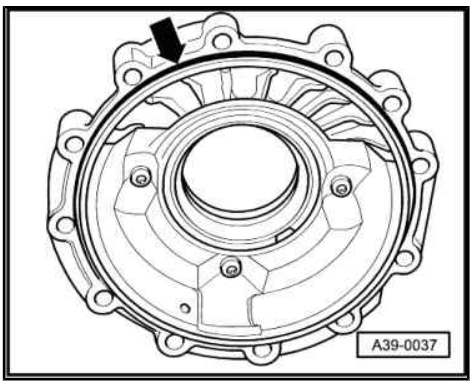

– Install bolts for cover for front final drive (observe specified tightening torque and sequence) ⇒ page 126 .

– Install flange shaft (right-side) ⇒ page 126 .

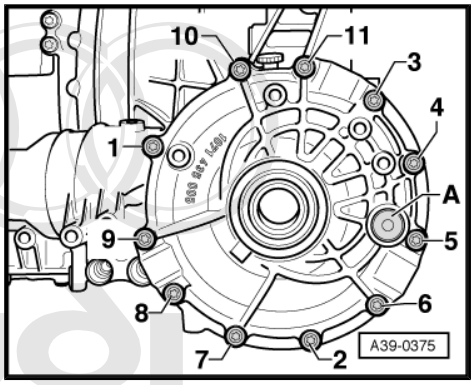

1.7 Renewing oil seals for side shaft - gearbox with separate oil systems

Protected by copyright. Copying for private or commercial purposes, in part or in whole, is not permitted unless authorised by AUDI AG. AUDI AG does not guarantee or accept any liability with respect to the correctness of information in this document. Copyright by AUDI AG.

Procedure

Note

- *General repair instructions* *⇒ page 1* .
- *Rules for cleanliness when working on the automatic gearbox* *⇒ page 11*

- Gearbox removed
- Secure gearbox to assembly stand ⇒ page 18 .
- The gearbox must be horizontal with the ATF oil pan facing downwards.

– Place used oil collection and extraction unit -V.A.G 1782- below gearbox.

– Remove ATF drain plug -arrow A- and allow ATF to drain off.

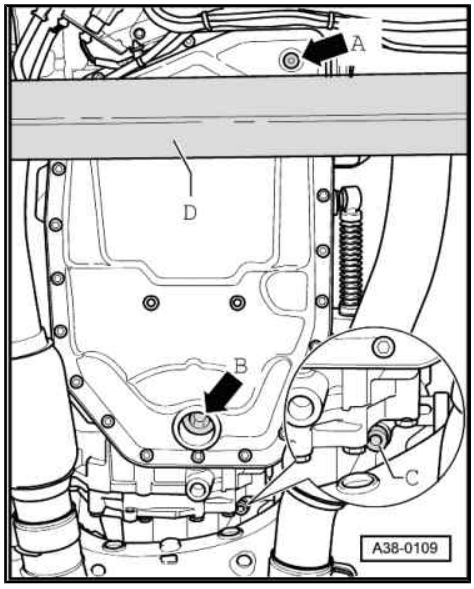

Note

- *Observe relevant disposal regulations.*
- *Some ATF always remains in the oil pan.*
- *-Arrow B- can be disregarded.*

– Remove drain plug -C- and allow gear oil to drain out of transfer box.

– Loosen bolts -arrows- for cover for front final drive in diagonal sequence and remove bolts.
– Catch escaping gear oil using used oil collection and extraction unit -V.A.G 1782- .
– Detach cover for front final drive together with differential.

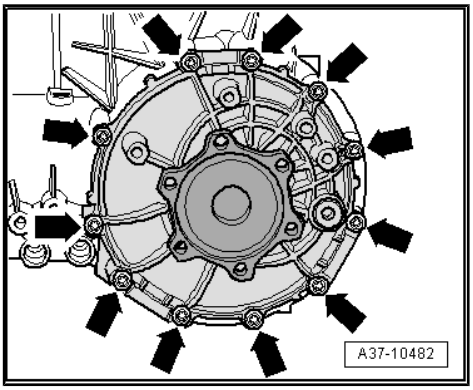

– Place cover for front final drive together with differential on a soft surface.
– Lever flange shaft (right-side) off differential -arrows- using two levers.
– Drive oil seal for flange shaft out of cover for front final drive using a drift.

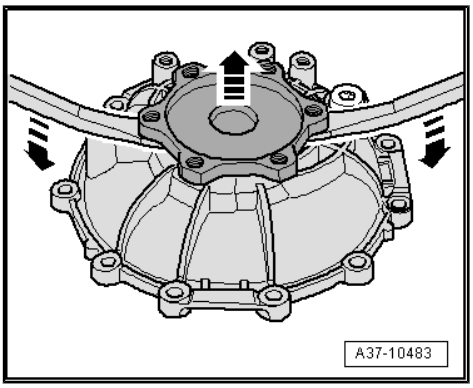

– Remove bolts -arrows- and detach baffle plate.
– Remove flange shaft (left-side) ⇒ page 127 .
– Remove torque converter.

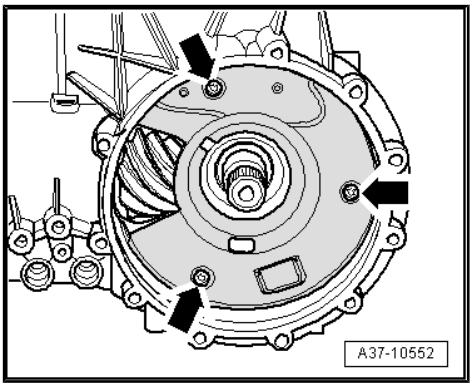

Protected by copyright. Copying for private or commercial purposes, in part or in whole, is not permitted unless authorised by AUDI AG. AUDI AG does not guarantee or accept any liability with respect to the correctness of information in this document. Copyright by AUDI AG.

Caution

The self-locking centre differential can drop out of the gearbox when the centre differential housing is removed.

– Loosen bolts -arrows- on housing for centre differential in diagonal sequence and remove bolts.
– Slowly and carefully pull housing for centre differential off gearbox.

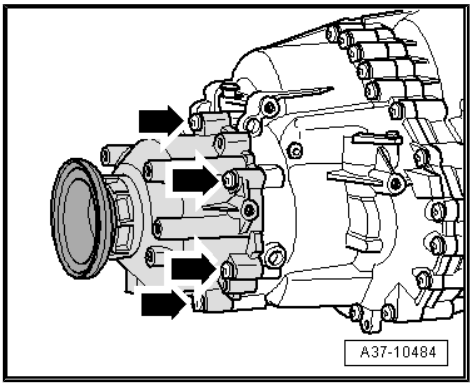

– Pull self-locking centre differential -arrow- off input shaft.

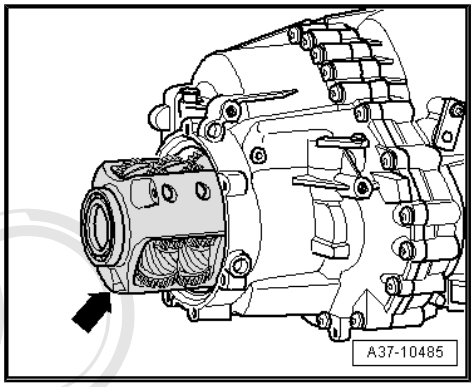

– Take off shim -1-.

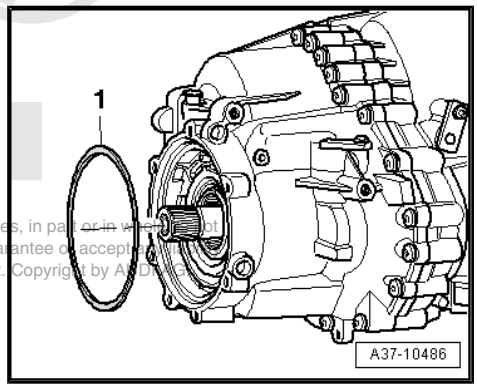

Protected by copyright. Copying for private or commercial purposes, in part or in whole, is not permitted unless authorised by AUDI AG. AUDI AG does not guarantee or accept any liability with respect to the correctness of information in this document. Copyright by AUDI AG.

– Slacken bolts on intermediate flange for front axle drive in the sequence -19 ... 1- and remove bolts.
– Take off intermediate flange for front axle drive and gasket.

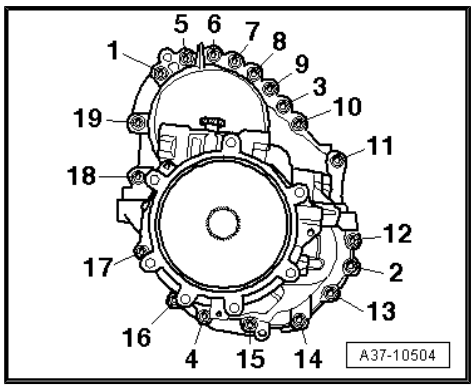

– Take off intermediate pinion for front axle drive -1- with input shaft.
– Take off shims -2- and -3-.

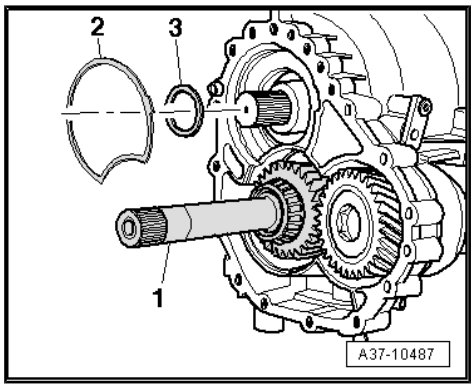

– Remove magnet -arrow- from gearbox housing.

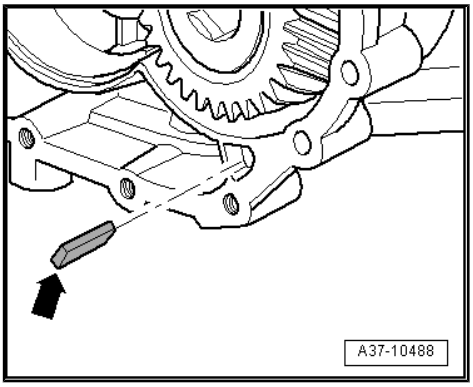

– Remove securing bolt for side shaft using 17 mm socket with approx. 350 mm extension.
– Counterhold with hexagon wrench -T40124- and 27 mm open-end spanner -item 1-.
– Pull out side shaft.

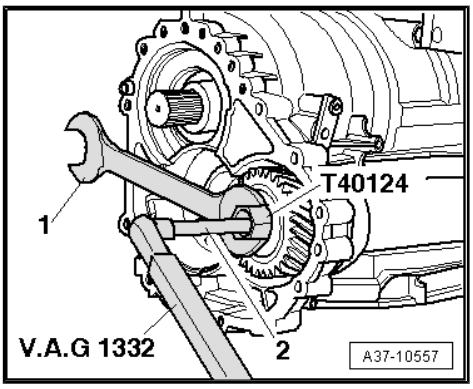

Protected by copyright. Copying for private or commercial purposes, in part or in whole, is not permitted unless authorised by AUDI AG. AUDI AG does not guarantee or accept any liability with respect to the correctness of information in this document. Copyright by AUDI AG.

– Loosen bolts -1 … 18- for torque converter bellhousing in diagonal sequence and remove bolts.
– Take off torque converter bellhousing and protective tube for side shaft.

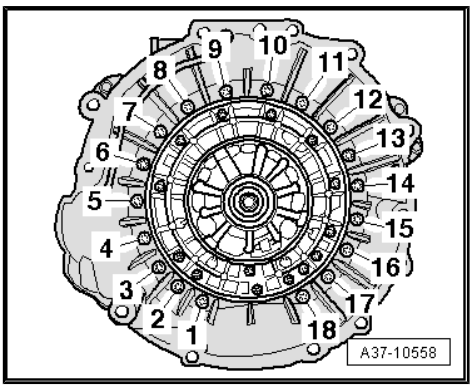

– Remove conical washer -1- from end of pinion shaft -2-.

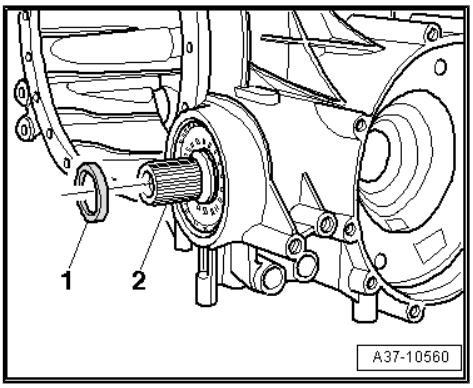

– Knock an awl -1- into the pinion shaft oil seal and make a small hole -arrow- for fitting a self-tapping screw in the oil seal.

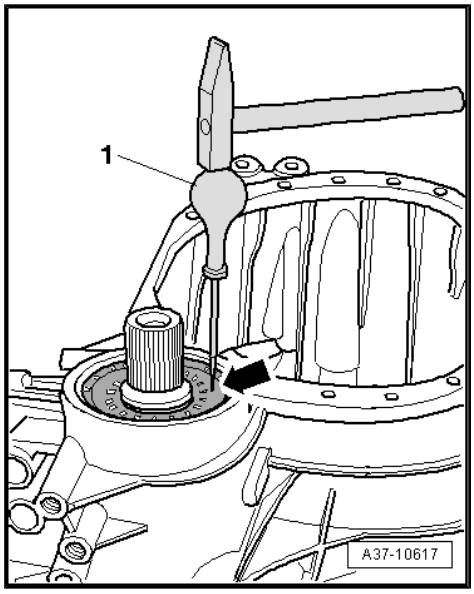

– Screw self-tapping screw with large head -arrow- into hole in oil seal.

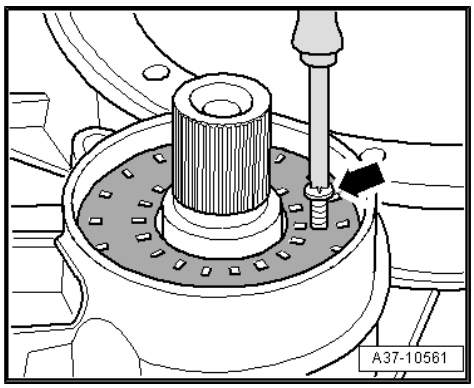

– Make a notch -arrow- in the centre of a sturdy assembly lever -1- to take up the self-tapping screw.

– Apply assembly lever to self-tapping screw.

> ⚠ **Caution**
>
> ♦ *For protection, insert a suitable piece of wood or plastic -2- between the assembly lever and gearbox housing.*
>
> ♦ *Take care not to damage the housing.*

– Pull out pinion shaft oil seal.

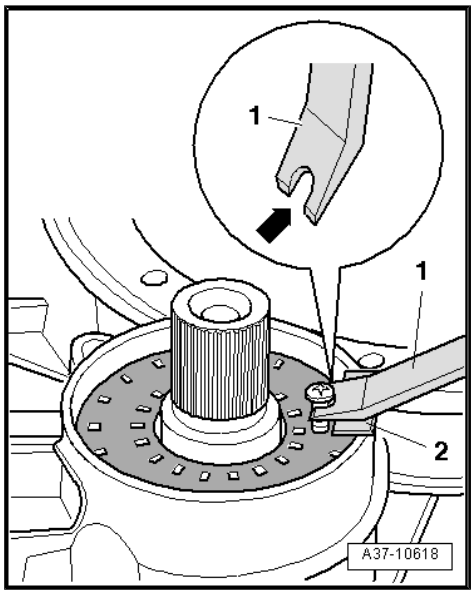

Protected by copyright. Copying for private or commercial purposes, in part or in whole, is not permitted unless authorised by AUDI AG. AUDI AG does not guarantee or accept any liability with respect to the correctness of information in this document. Copyright by AUDI AG.

– Slide fitting tool -T40120/2- onto end of pinion shaft.

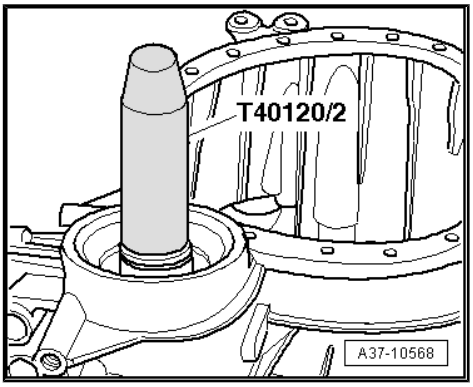

– Drive in new pinion shaft oil seal evenly as far as stop using thrust piece -T40120/1- .

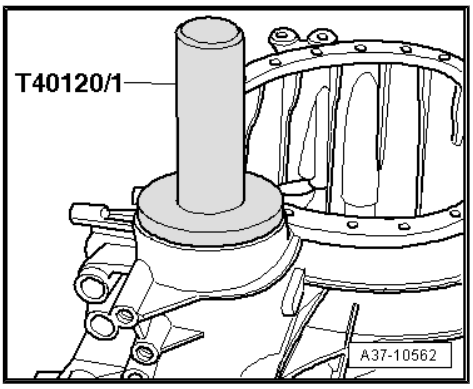

– Pull out oil seal for side shaft using extractor tool -T20143/2- .

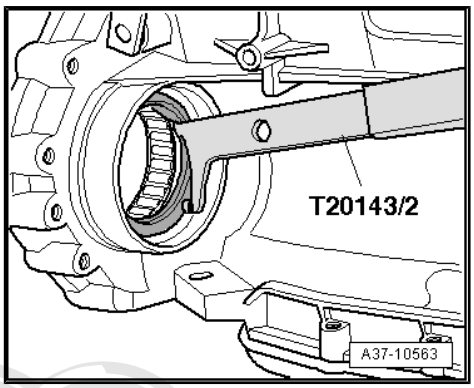

– Drive in oil seal for side shaft evenly as far as stop using thrust piece -T40121- .

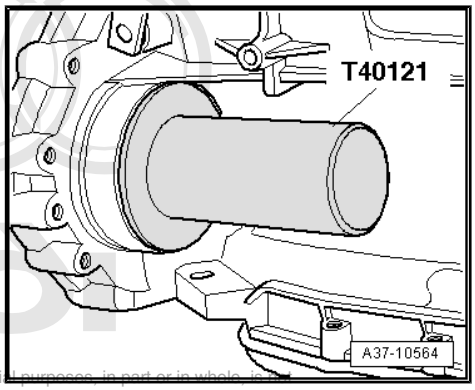

Protected by copyright. Copying for private or commercial purposes, in part or in whole, is not permitted unless authorised by AUDI AG. AUDI AG does not guarantee or accept any liability with respect to the correctness of information in this document. Copyright by AUDI AG.

– Renew sealing sleeves -4- and -5-.
– Check that dowel sleeves -1- and -3- are fitted.
– Insert protective tube -2- for side shaft in gearbox housing.
• The drilling on the side of the protective tube must fit on the cast lug on the gearbox housing.

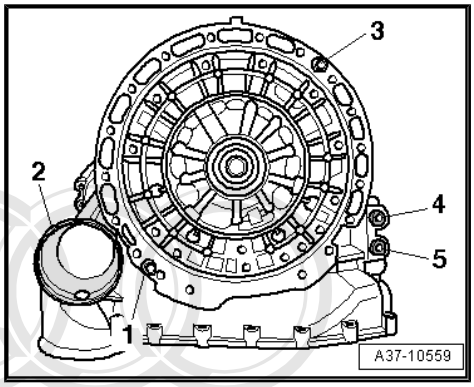

– Stick conical washer -1- onto end of pinion shaft -2- using a small amount of grease.

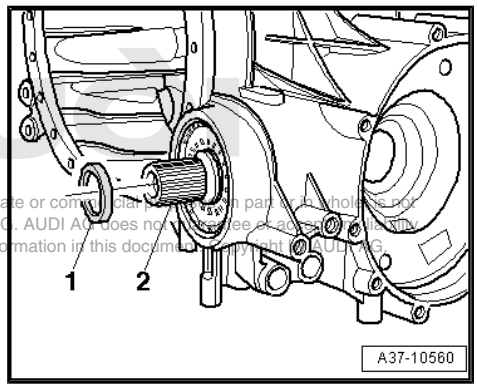

Protected by copyright. Copying for private or commercial purposes, in part or in whole, is not permitted unless authorised by AUDI AG. AUDI AG does not guarantee or accept any liability with respect to the correctness of information in this document. Copyright by AUDI AG.

– Fit torque converter bellhousing on gearbox and tighten bolts -1 … 18- diagonally in stages.
• Tightening torque: 23 Nm

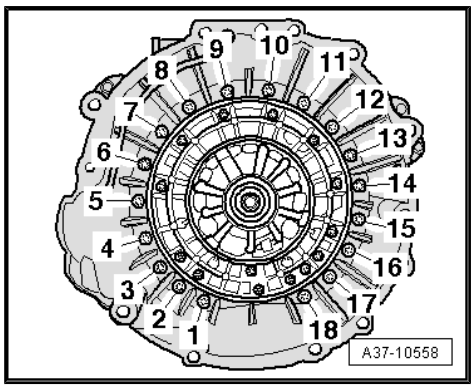

– Renew securing bolt for side shaft.
– Insert securing bolt through washer in side shaft and apply 17 mm socket with approx. 350 mm extension to bolt.
– With socket applied, insert side shaft into gearbox.
– Counterhold with hexagon wrench -T40124- and 27 mm open-end spanner -item 1-.
– Tighten securing bolt for side shaft in five stages as follows:

Stage	Tightening sequence
1	– Tighten bolt to 60 Nm.
2	– Slacken bolt.
3	– Tighten bolt to 60 Nm once again.
4	– Slacken bolt.
5	– Tighten bolt to 77 Nm.

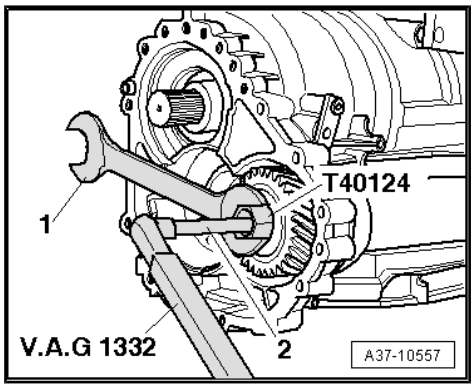

– Slide magnet -arrow- into gearbox housing, as shown in illustration.

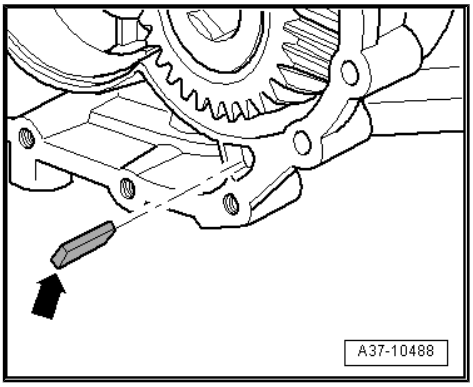

– Install intermediate pinion for front axle drive -1- with input shaft.

– Fit shims -2- and -3-.

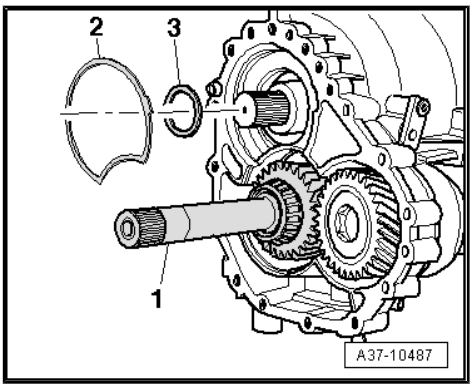

– Check that dowel sleeve -1- is fitted.

– Renew gasket for intermediate flange for front axle drive.

– Fit intermediate flange for front axle drive on gearbox housing.

• The pump drive coupling -3- must engage in the hexagon in the side shaft -2-.

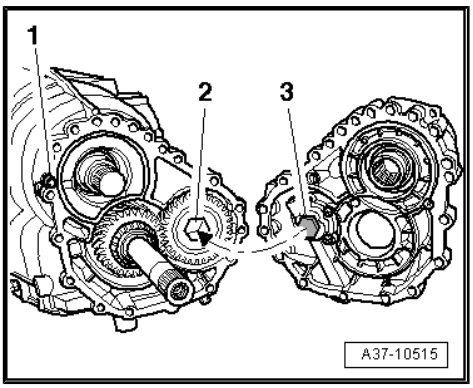

– Tighten bolts on intermediate flange for front axle drive in two stages as follows:

This document is copyright. Copyright by AUDI AG. All rights reserved. Any reproduction or distribution, in whole or in part, is not permitted unless authorised by AUDI AG. AUDI AG does not guarantee or accept any liability with respect to the correctness of information in this document. Copyright by AUDI AG.

Stage	Tightening sequence
1	– Pre-tighten bolts to 5 Nm in sequence -1 ... 4-.
2	– Tighten bolts to 30 Nm in sequence -1 ... 19-.

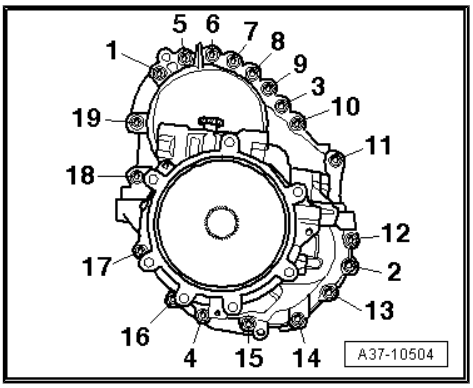

– Press bearing race -1- into intermediate flange for front axle drive as far as stop.

– Check installation depth of bearing race using a depth gauge.

• Dimension -a- = approx. 9 mm

If dimension -a- is significantly smaller, the bearing race has become displaced.

– Remove bearing race and check that installation position is correct.

• Lugs on rear side of bearing race should engage in corresponding recesses on intermediate flange for front axle drive.

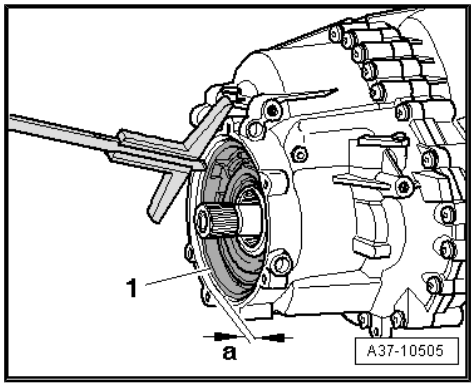

– Fit shim -1-.

– Check ball bearing for self-locking centre differential; if necessary press on new ball bearing ⇒ page 159 .

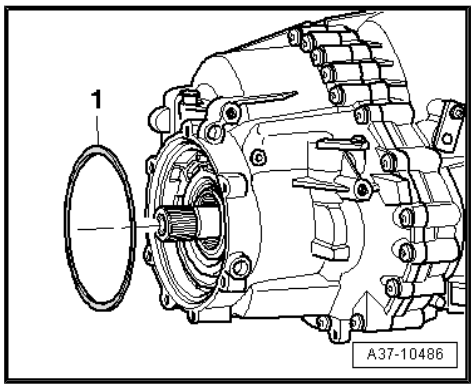

– Fit self-locking centre differential -arrow- onto splines of input shaft, turning slightly at the same time.

– Check that self-locking centre differential can be turned by hand when it is in position.

– If necessary, renew oil seal for flange shaft (rear) ⇒ „2.4 Renewing oil seal for flange shaft (rear)“, page 160 .

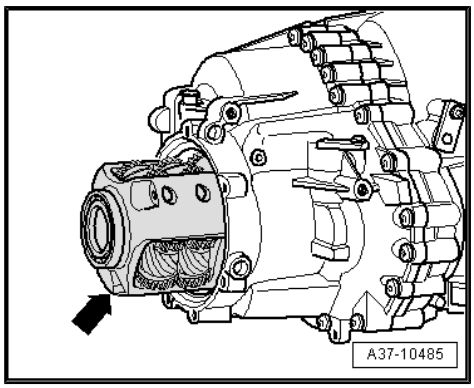

– Renew O-ring on centre differential housing.

– Fit centre differential housing (with rear flange shaft installed) onto self-locking centre differential, turning flange shaft slightly if necessary.

– Tighten bolts on centre differential housing in two stages as follows:

Stage	Tightening sequence
1	– Tighten bolts -1- and -2- initially to 3 Nm.
2	– Tighten bolts to 16 Nm in sequence -1 ... 7-.

– If necessary, renew oil seal between final drive and gearbox housing ⇒ page 130 .

– Install torque converter (push torque converter hub through oil seal as far as first stop).

– Turn the torque converter, at the same time pressing it inwards lightly until the slots on the torque converter hub engage in the drive lugs on the ATF pump gear and the torque converter slides in a noticeable distance.

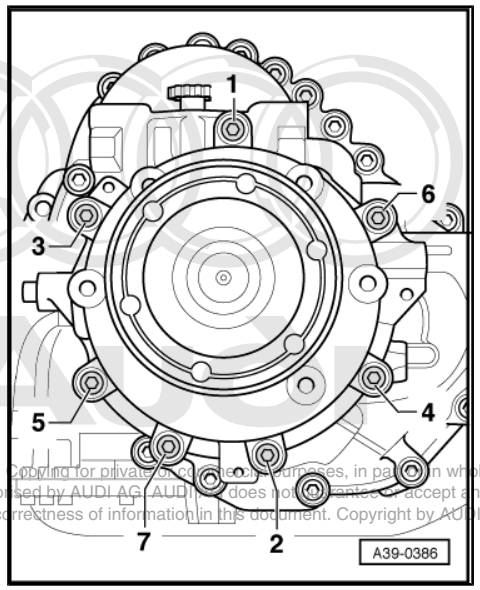

Protected by copyright. Copying for private or commercial purposes, in part or in whole, is not permitted unless authorised by AUDI AG. AUDI AG does not guarantee or accept any liability with respect to the correctness of information in this document. Copyright by AUDI AG.

Installation depth:

If the torque converter has been correctly installed, the distance -a- measured between the surface of the mounting holes and the contact surface of the torque converter bellhousing should be:

- 8 or 12-cylinder petrol engines: at least 5.9 mm
- 10-cylinder petrol engines and 8-cylinder TDI engines: at least 18.9 mm

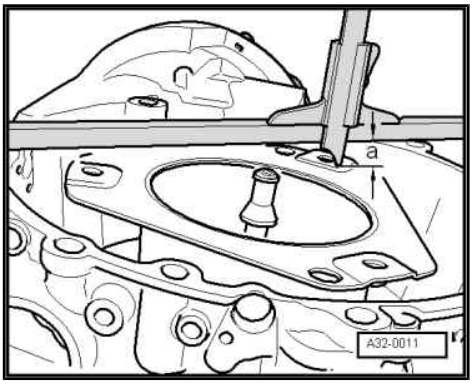

> **Caution**
>
> *If the torque converter is not fitted correctly, the torque converter drive lugs or the ATF pump will be irreparably damaged when the gearbox is joined to the engine.*

– Install flange shaft (left-side) ⇒ page 127 .

> **Caution**
>
> ♦ *Make sure that the bearing races and shims for the differential do not drop out of the gearbox housing and the front final drive cover.*
>
> ♦ *Bearing races and shims cannot be re-allocated to their original positions by the workshop if they have dropped out.*

– Clean magnet -1- on rear side of baffle plate.
– Ensure that magnet makes full contact with baffle plate.
– Renew seal -2- for breather passage.

Protected by copyright. Copying for private or commercial purposes, in whole, is not permitted unless authorised by AUDI AG. AUDI AG does not guarantee or assume any liability with respect to the correctness of information in this document. Copyright by AUDI AG.

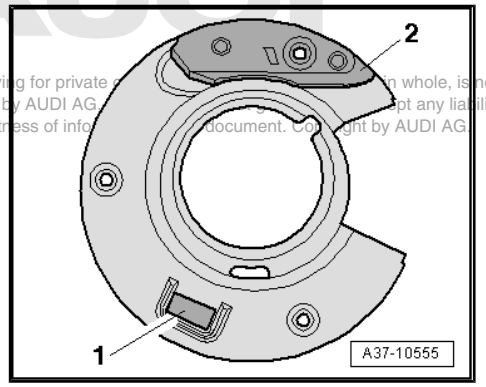

– Tighten bolts for baffle plate -arrows-.
- Tightening torque: 8 Nm.

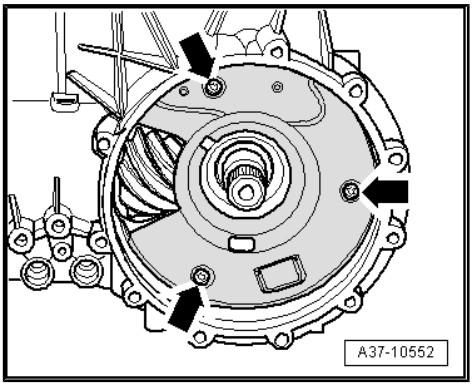

– Renew O-ring -arrow- in cover for front final drive.

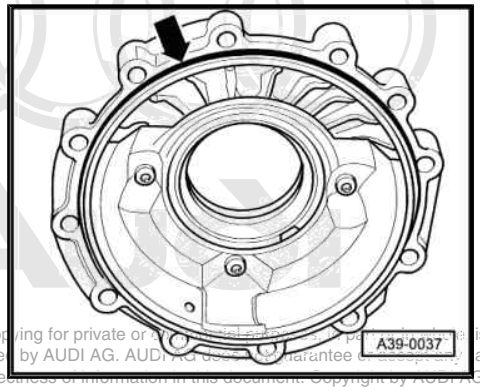

Protected by copyright. Copying for private or commercial purposes, in part or in whole, is not permitted unless authorised by AUDI AG. AUDI AG does not guarantee or accept any liability with respect to the correctness of information in this document. Copyright by AUDI AG.

– Carefully install differential -arrow-.

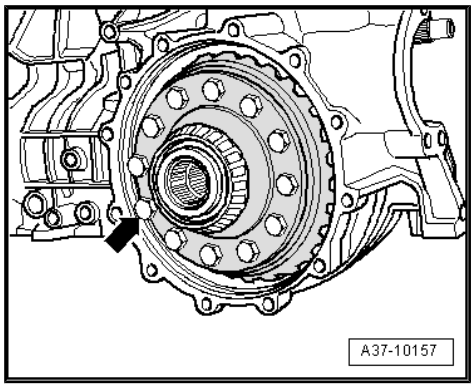

– Install bolts for cover for front final drive (observe specified tightening torque and sequence) ⇒ page 126 .

– If necessary, renew oil seal for flange shaft (right-side) ⇒ page 130 .

– Clean flange shaft (right-side) and oil seal.

– Install flange shaft (right-side) ⇒ page 126 .

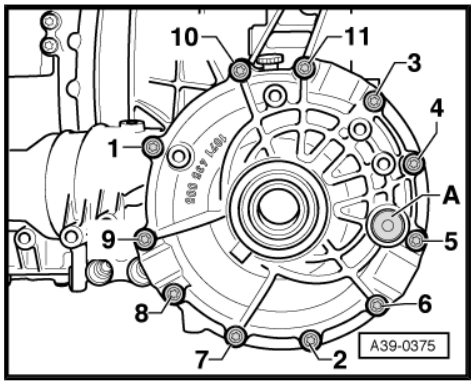

After installing gearbox:

– Fill up with ATF and check ATF level ⇒ Automatic gearbox 09E, four-wheel drive; Rep. gr. 37 .

– Fill up gear oil in front final drive and check oil level ⇒ Automatic gearbox 09E, four-wheel drive; Rep. gr. 39 .

– Fill up gear oil in transfer box and check oil level ⇒ Automatic gearbox 09E, four-wheel drive; Rep. gr. 39 .

Tightening torques

Component	Nm
Intermediate flange for front axle drive to gearbox	23
Housing for centre differential to intermediate flange for front axle drive	⇒ page 156

1.8 Renewing O-rings for protective tube for side shaft - gearbox with common oil system

Procedure

Note

- *General repair instructions* ⇒ page 1 .
- *Rules for cleanliness when working on the automatic gearbox* ⇒ page 11

- Gearbox removed
- Secure gearbox to assembly stand ⇒ page 18 .
- The gearbox must be horizontal with the ATF oil pan facing downwards.

– Place used oil collection and extraction unit -V.A.G 1782- below gearbox.

– Remove ATF drain plug -arrow A- and allow ATF to drain off.

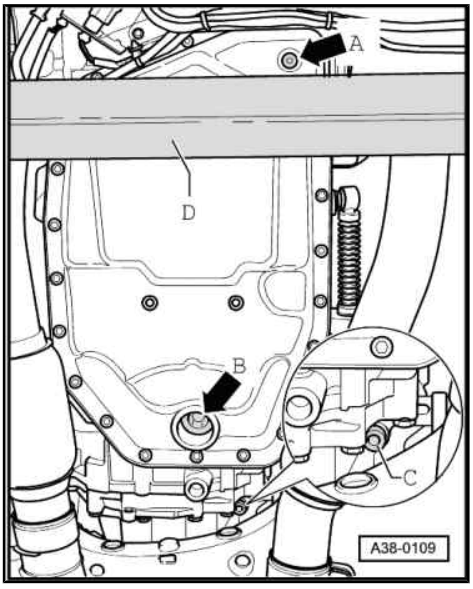

Note

- *Observe relevant disposal regulations.*
- *Some ATF always remains in the oil pan.*
- *-Arrow B- can be disregarded.*

– Remove drain plug -C- and allow gear oil to drain out of front final drive.

– Loosen bolts -arrows- for cover for front final drive in diagonal sequence and remove bolts.

– Catch escaping gear oil using used oil collection and extraction unit -V.A.G 1782- .

– Detach cover for front final drive together with differential.

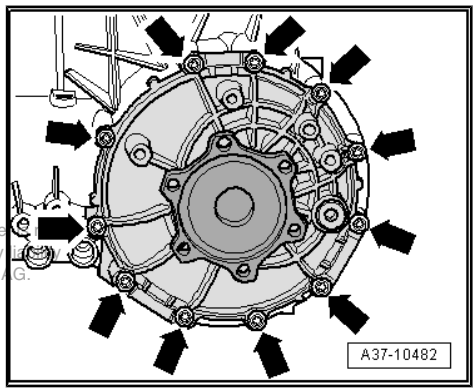

Protected by copyright. Copying for private or commercial purposes, in part or in whole, is not permitted unless authorised by AUDI AG. AUDI AG does not guarantee or accept any liability with respect to the correctness of information in this document. Copyright by AUDI AG.

– Place cover for front final drive together with differential on a soft surface.
– Lever flange shaft (right-side) off differential -arrows- using two levers.
– Drive oil seal for flange shaft out of cover for front final drive using a drift.

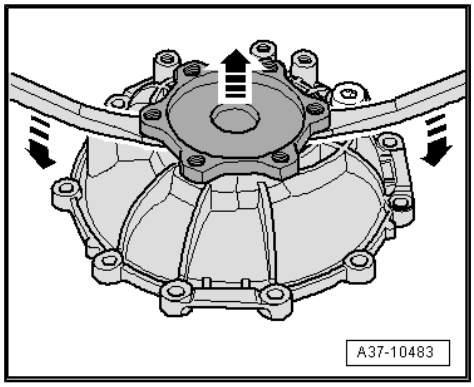

– Remove bolts -arrows- and detach baffle plate.
– Remove flange shaft (left-side) ⇒ page 127 .
– Remove torque converter.

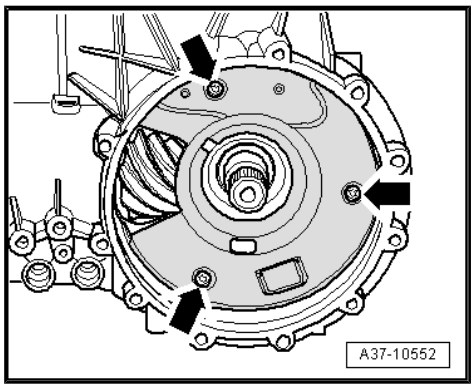

Caution

The self-locking centre differential can drop out of the gearbox when the centre differential housing is removed.

– Loosen bolts -arrows- for centre differential housing in diagonal sequence and remove bolts.
– Slowly and carefully pull centre differential housing off gearbox.

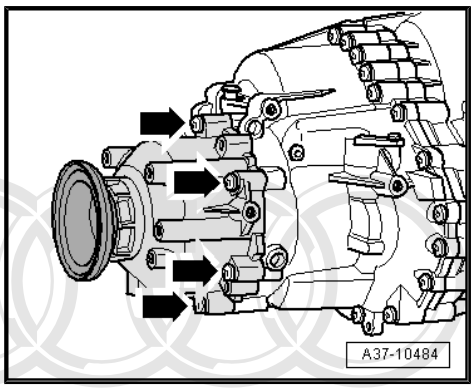

– Pull self-locking centre differential -arrow- off input shaft.

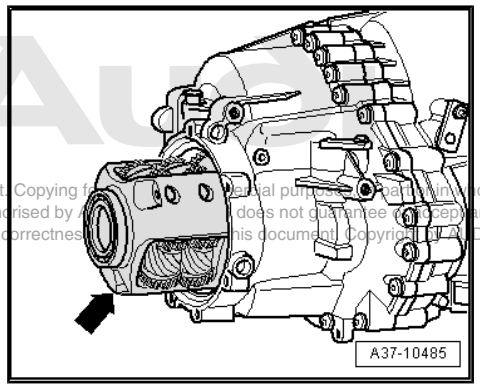

Protected by copyright. Copying for private or commercial purposes, in part or in whole, is not permitted unless authorised by AUDI AG. AUDI AG does not guarantee or accept any liability with respect to the correctness of information in this document. Copyright by AUDI AG.

– Detach oil lines from gearbox -arrows-.

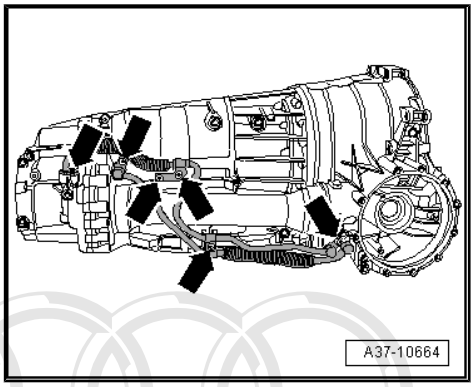

– Take off shim -1-.

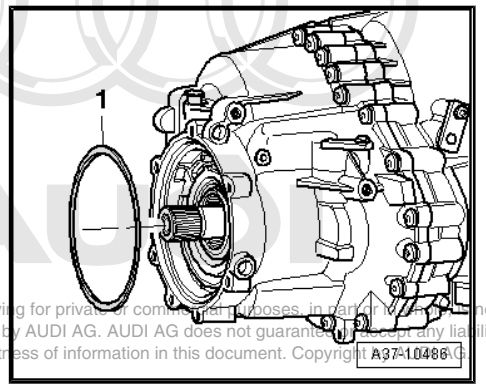

Protected by copyright. Copying for private or commercial purposes, in part or in whole, is not permitted unless authorised by AUDI AG. AUDI AG does not guarantee or accept any liability with respect to the correctness of information in this document. Copyright AUDI AG.

– Slacken bolts on intermediate flange for front axle drive in the sequence -19 ... 1- and remove bolts.
– Take off intermediate flange for front axle drive and gasket.

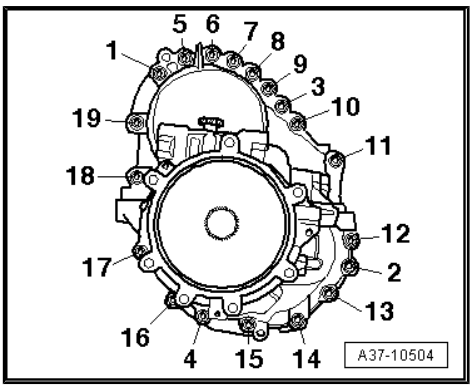

– Take off intermediate pinion for front axle drive -1- with input shaft.
– Take off shims -2- and -3-.

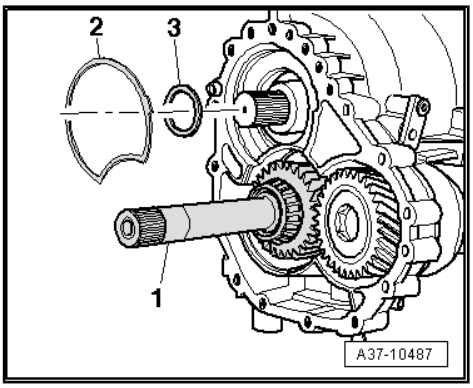

– Remove magnet -arrow- from gearbox housing.

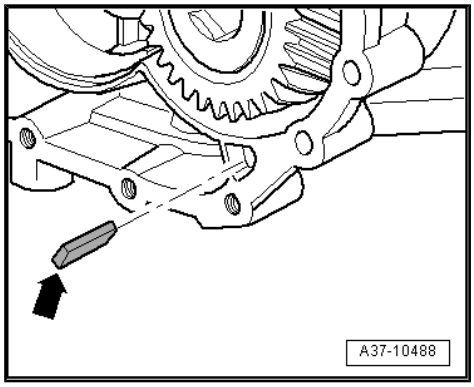

– Remove securing bolt for side shaft using 17 mm socket with approx. 350 mm extension.
– Counterhold with hexagon wrench -T40124- and 27 mm open-end spanner -item 1-.
– Pull out side shaft.

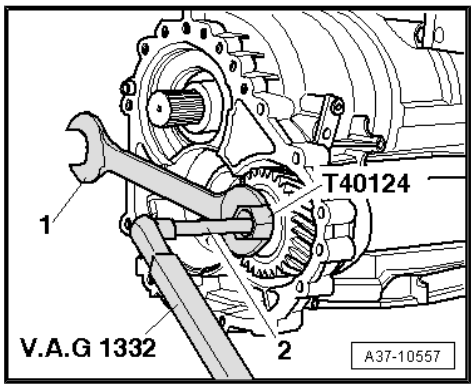

– Loosen bolts -1 … 18- for torque converter bellhousing in diagonal sequence and remove bolts.

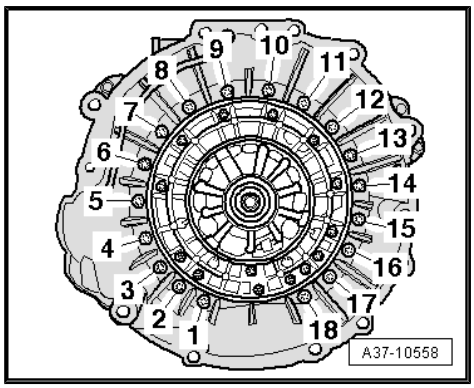

Protected by copyright. Copying for private or commercial purposes, in part or in whole, is not permitted unless authorised by AUDI AG. AUDI AG does not guarantee or accept any liability with respect to the correctness of information in this document. Copyright by AUDI AG.

– Take off torque converter bellhousing -3- and protective tube -2- for side shaft.
– Renew O-rings -1-.
– Lubricate new O-rings with gear oil and fit protective tube -2- for side shaft on gearbox housing.

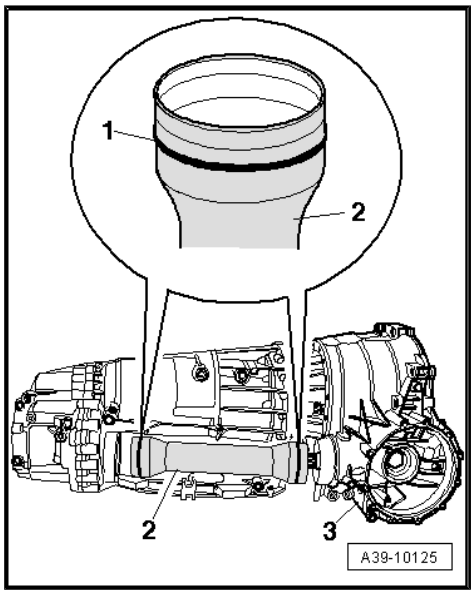

– Renew sealing sleeves -4- and -5-.
– Check that dowel sleeves -1- and -3- are fitted.
– Hold protective tube -2- for side shaft in position.

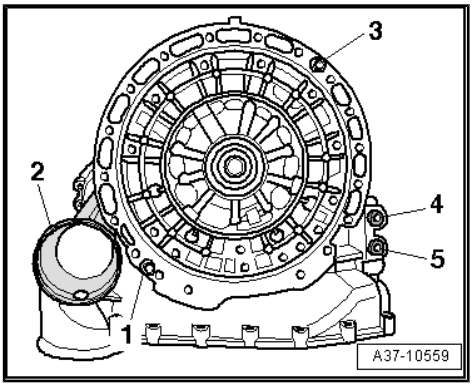

– Stick conical washer -1- onto end of pinion shaft -2- using a small amount of grease.

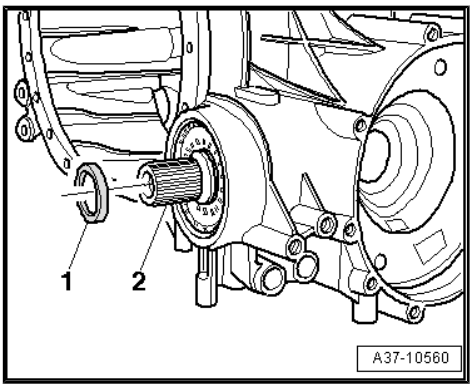

– Fit torque converter bellhousing on gearbox and tighten bolts -1 … 18- diagonally in stages.

• Tightening torque: 23 Nm

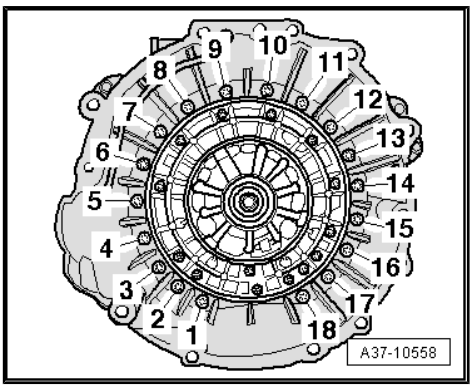

Protected by copyright. Copying for private or commercial purposes, in part or in whole, is not permitted unless authorised by AUDI AG. AUDI AG does not guarantee or accept any liability with respect to the correctness of information in this document. Copyright by AUDI AG.

– Renew securing bolt for side shaft.
– Insert securing bolt through washer in side shaft and apply 17 mm socket with approx. 350 mm extension to bolt.
– With socket applied, insert side shaft into gearbox.
– Counterhold with hexagon wrench -T40124- and 27 mm open-end spanner -item 1-.
– Tighten securing bolt for side shaft in five stages as follows:

Stage	Tightening sequence
1	– Tighten bolt to 60 Nm.
2	– Slacken bolt.
3	– Tighten bolt to 60 Nm once again.
4	– Slacken bolt.
5	– Tighten bolt to 77 Nm.

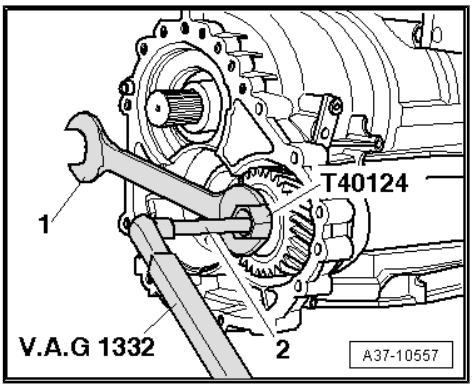

– Slide magnet -arrow- into gearbox housing, as shown in illustration.

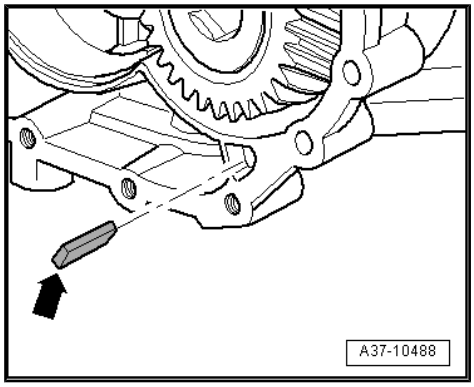

– Install intermediate pinion for front axle drive -1- with input shaft.

– Fit shims -2- and -3-.

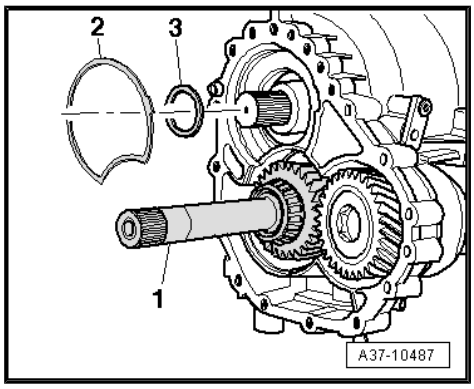

– Check that dowel sleeve -1- is fitted.

– Renew gasket for intermediate flange for front axle drive.

– Fit intermediate flange for front axle drive on gearbox housing.

• The pump drive coupling -3- must engage in the hexagon in the side shaft -2-.

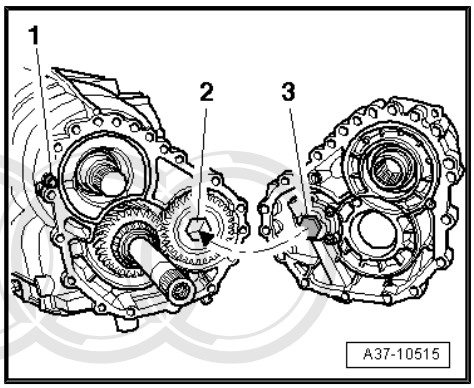

– Tighten bolts on intermediate flange for front axle drive in two stages as follows:

Stage	Tightening sequence
1	– Pre-tighten bolts to 5 Nm in sequence -1 ... 4-.
2	– Tighten bolts to 30 Nm in sequence -1 ... 19-.

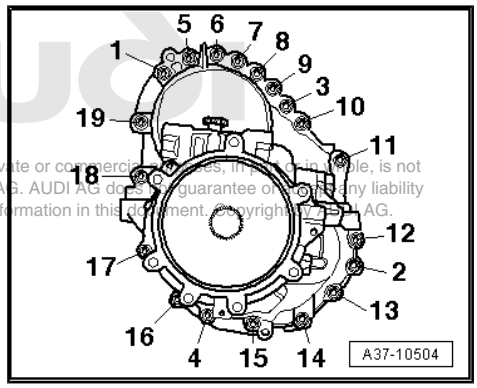

Protected by copyright. Copying for private or commercial purposes, in part or in whole, is not permitted unless authorised by AUDI AG. AUDI AG does not guarantee or assume any liability with respect to the correctness of information in this document. Copyright by AUDI AG.

– Press bearing race -1- into intermediate flange for front axle drive as far as stop.

– Check installation depth of bearing race using a depth gauge.

• Dimension -a- = approx. 9 mm

If dimension -a- is significantly smaller, the bearing race has become displaced.

– Remove bearing race and check that installation position is correct.

• Lugs on rear side of bearing race should engage in corresponding recesses on intermediate flange for front axle drive.

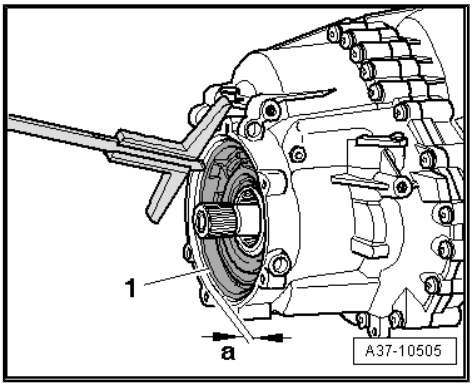

– Fit shim -1-.

– Check ball bearing for self-locking centre differential; if necessary press on new ball bearing ⇒ page 159 .

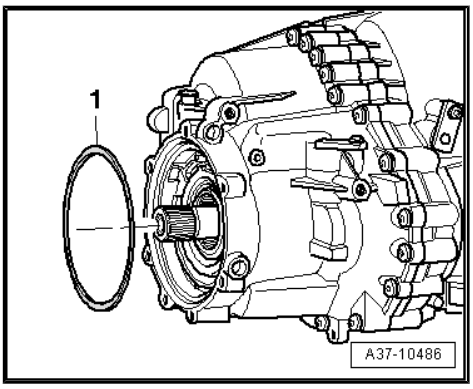

– Fit self-locking centre differential -arrow- onto splines of input shaft, turning differential slightly at the same time.

– Check whether centre differential can be turned by hand after being fitted.

– If necessary, renew oil seal for flange shaft (rear) ⇒ „2.4 Renewing oil seal for flange shaft (rear)“, page 160 .

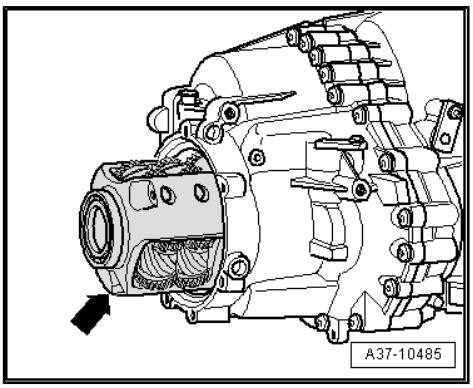

– Renew O-ring for centre differential housing.

– Fit centre differential housing (with rear flange shaft installed) onto self-locking centre differential, turning flange shaft slightly if necessary.

– Tighten bolts on centre differential housing in two stages as follows:

Stage	Tightening sequence
1	– Tighten bolts -1- and -2- initially to 3 Nm.
2	– Tighten bolts to 16 Nm in sequence -1 ... 7-.

Protected by copyright. Copying for private or commercial purposes, in part or in whole, is not permitted unless authorised by AUDI AG. AUDI AG does not guarantee or accept any liability with respect to the correctness of information in this document. Copyright by AUDI AG.

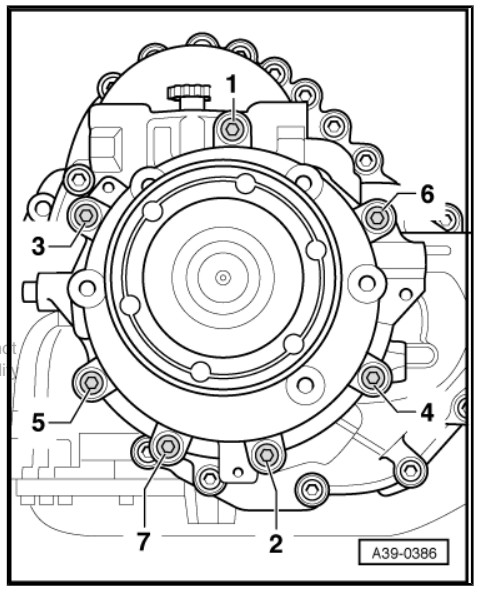

– Renew O-rings on oil lines and install oil lines -arrows-.

• Tightening torque: 8 Nm

– If necessary, renew oil seal between final drive and gearbox housing ⇒ page 130 .

– Install torque converter (push torque converter hub through oil seal as far as first stop).

– Turn the torque converter, at the same time pressing it inwards lightly until the slots on the torque converter hub engage in the drive lugs on the ATF pump gear and the torque converter slides in a noticeable distance.

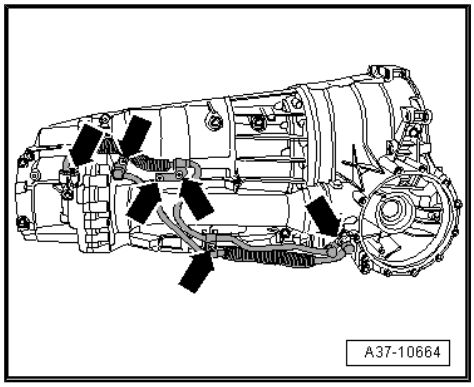

Installation depth:

If the torque converter has been correctly installed, the distance -a- measured between the surface of the mounting holes and the contact surface of the torque converter bellhousing should be:

• 8 or 12-cylinder petrol engines: at least 5.9 mm

• 10-cylinder petrol engines and 8-cylinder TDI engines: at least 18.9 mm

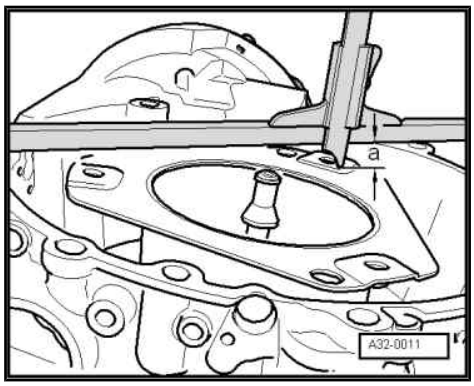

Caution

If the torque converter is not fitted correctly, the torque converter drive lugs or the ATF pump will be irreparably damaged when the gearbox is joined to the engine.

– Install flange shaft (left-side) ⇒ page 127 .

Caution

- *Make sure that the bearing races and shims for the differential do not drop out of the gearbox housing and the front final drive cover.*
- *Bearing races and shims cannot be re-allocated to their original positions by the workshop if they have dropped out.*

– Clean magnet -1- on rear side of baffle plate.

– Ensure that magnet makes full contact with baffle plate.

– Renew seal -2- for breather passage.

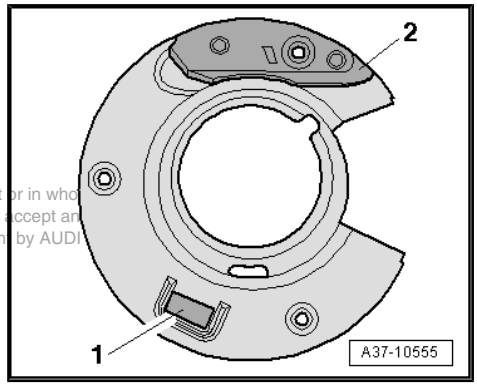

Protected by copyright. Copying for private or commercial purposes, in part or in whole, is not permitted unless authorised by AUDI AG. AUDI AG does not guarantee or accept any liability with respect to the correctness of information in this document. Copyright by AUDI AG.

– Tighten bolts for baffle plate -arrows-.

• Tightening torque: 8 Nm.

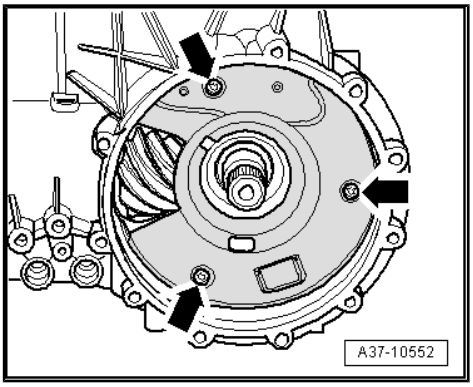

Protected by copyright. Copying for private or commercial purposes, in part or in whole, is not permitted unless authorised by AUDI AG. AUDI AG does not guarantee or accept any liability with respect to the correctness of information in this document. Copyright by AUDI AG.

– Renew O-ring -arrow- in cover for front final drive.

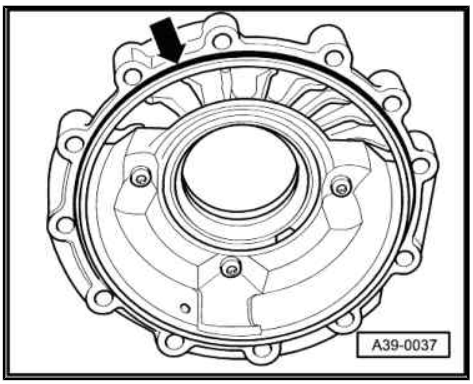

– Carefully install differential -arrow-.

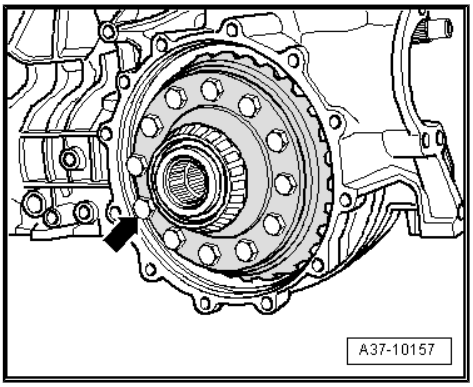

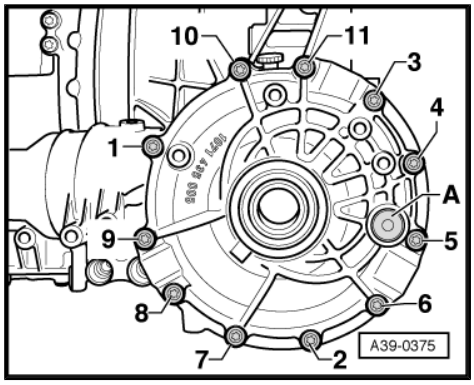

– Install bolts for cover for front final drive (observe specified tightening torque and sequence) ⇒ page 126 .

– If necessary, renew oil seal for flange shaft (right-side) ⇒ page 130 .

– Clean flange shaft (right-side) and oil seal.

– Install flange shaft (right-side) ⇒ page 126 .

After installing gearbox:

– Fill up with ATF and check ATF level ⇒ Automatic gearbox 09E, four-wheel drive; Rep. gr. 37 .

– Fill up gear oil in front final drive and check oil level ⇒ Automatic gearbox 09E, four-wheel drive; Rep. gr. 39 .

– Fill up gear oil in transfer box and check oil level ⇒ Automatic gearbox 09E, four-wheel drive; Rep. gr. 39 .

Tightening torques

Component	Nm
Intermediate flange for front axle drive to gearbox	23
Centre differential housing to intermediate flange for front axle drive	23
Oil lines to gearbox	8

1.9 Renewing oil seal for selector shaft

Procedure

Note

- *Rules for cleanliness when working on the automatic gearbox* *⇒ page 11*
- *General repair instructions* *⇒ page 1* .
- *The oil seal for the selector shaft can also be renewed with the gearbox in the vehicle ⇒ Automatic gearbox 09E, four-wheel drive; Rep. gr. 39 .*

– Drive out roll pin -1- at gearbox selector lever -2- -arrow- until it is possible to detach gearbox selector lever from selector shaft.

Protected by copyright. Copying for private or commercial purposes, in part or in whole, is not permitted unless authorised by AUDI AG. AUDI AG does not guarantee or accept any liability with respect to the correctness of information in this document. Copyright by AUDI AG.

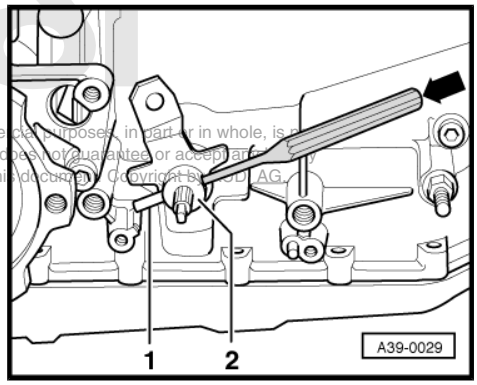

– Push a small screwdriver through the oil seal and pull it out.
– Lubricate outer circumference and space between sealing lips of new oil seal with ATF.
– Fit oil seal onto selector shaft.
• Installation position: the open side of the oil seal should face the gearbox.

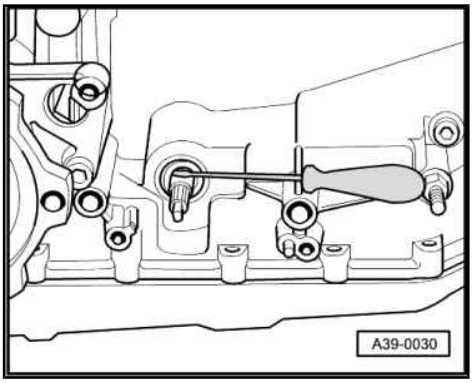

– Drive in oil seal onto stop using thrust piece -T10135- . Take care to keep seal straight when installing.
– Before installing gearbox selector lever, knock back roll pin through lever in opposite direction.
– Push gearbox selector lever onto selector shaft and drive in roll pin.

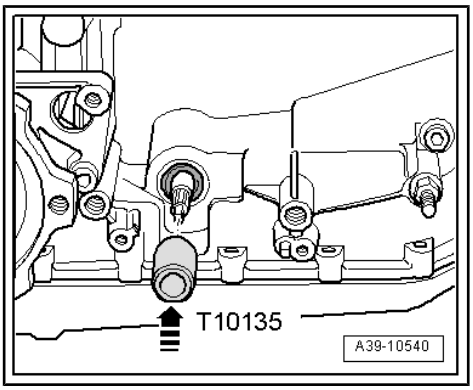

Protected by copyright. Copying for private or commercial purposes, in part or in whole, is not permitted unless authorised by AUDI AG. AUDI AG does not guarantee or accept any liability with respect to the correctness of information in this document. Copyright by AUDI AG.

2 Servicing transfer box

Overview

- ⇒ „2.1 Exploded view - centre differential“, page 156
- ⇒ „2.2 Removing and installing centre differential housing with gearbox removed“, page 157
- ⇒ „2.3 Renewing ball bearing for self-locking centre differential“, page 159
- ⇒ „2.4 Renewing oil seal for flange shaft (rear)“, page 160

2.1 Exploded view - centre differential

Caution

Risk of damage to gearbox

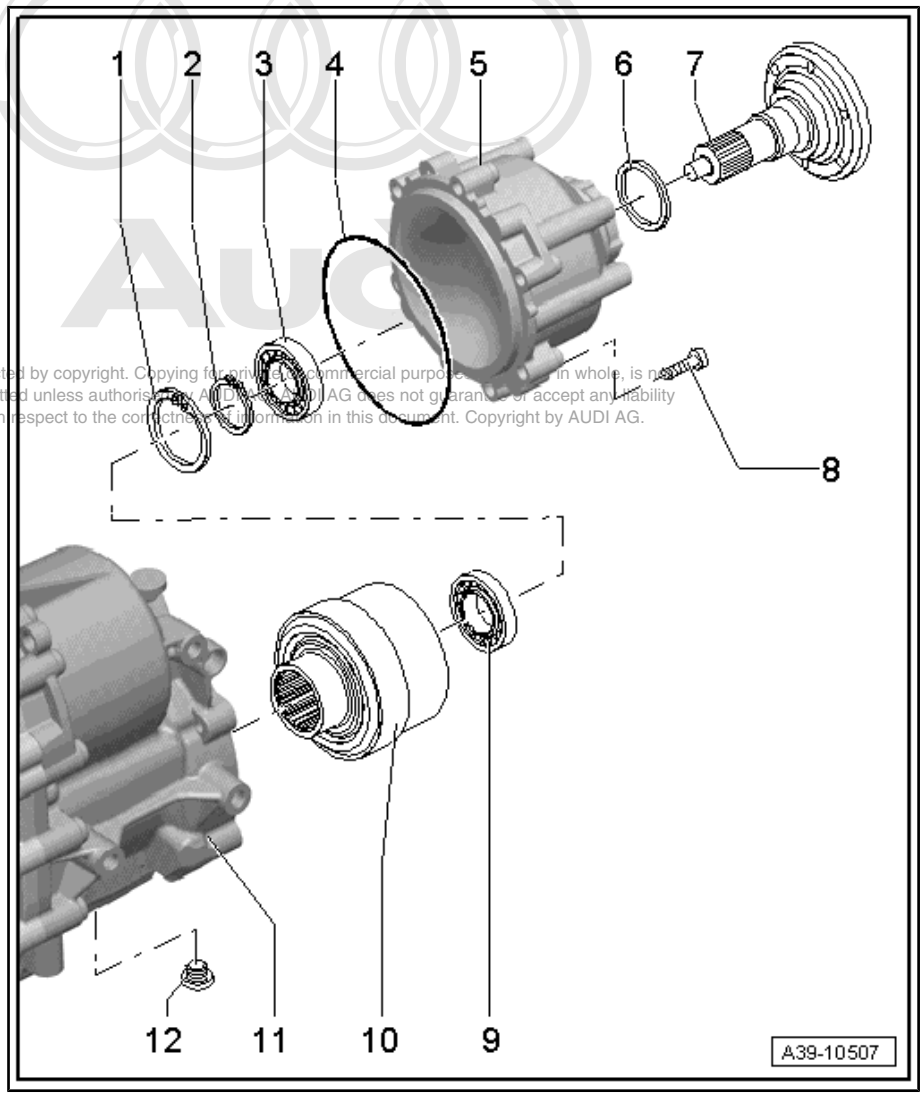

Protected by copyright. Copying for private or commercial purposes, in whole, is not permitted unless authorised by AUDI AG. AUDI AG does not guarantee or accept any liability with respect to the correctness of information in this document. Copyright by AUDI AG.

1 - Circlip

- ❑ For ball bearing for flange shaft

2 - Circlip

- ❑ For flange shaft

3 - Ball bearing

- ❑ For flange shaft (rear)
- ❑ ⇒ „2.3 Renewing ball bearing for self-locking centre differential“, page 159

4 - O-ring

- ❑ Renew
- ❑ Lubricate with gear oil
- ❑ On centre differential housing

5 - Centre differential housing

- ❑ Removing and installing centre differential housing with gearbox in vehicle ⇒ Automatic gearbox 09E, four-wheel drive; Rep. gr. 39
- ❑ ⇒ „2.2 Removing and installing centre differential housing with gearbox removed“, page 157

6 - Oil seal for flange shaft (rear)

- ❑ ⇒ „2.4 Renewing oil seal for flange shaft (rear)“, page 160

7 - Flange shaft (rear)

- ❑ Removing and installing ⇒ „2.4 Renewing oil seal for flange shaft (rear)“, page 160
- ❑ Renew oil seal when renewing flange shaft (rear)
- ❑ Select correct components from ⇒ Electronic parts catalogue

8 - Bolt

- ❑ Tightening torque and sequence ⇒ page 157
- ❑ Renew

9 - Ball bearing

- ❑ For centre differential
- ❑ ⇒ „2.3 Renewing ball bearing for self-locking centre differential“, page 159

10 - Centre differential

11 - Gearbox

12 - Screw plug

- ❑ For oil filler hole on transfer box
- ❑ 20 Nm
- ❑ Renew

Centre differential housing - tightening torque and sequence

– Tighten bolts for centre differential housing in two stages as follows:

1. Tighten bolts -1- and -2- initially to 3 Nm.
2. Tighten bolts to 16 Nm in sequence -1 ... 7-.

Protected by copyright. Copying for private or commercial purposes, in part or in whole, is not permitted unless authorised by AUDI AG. AUDI AG does not guarantee or accept any liability with respect to the correctness of information in this document. Copyright by AUDI AG.

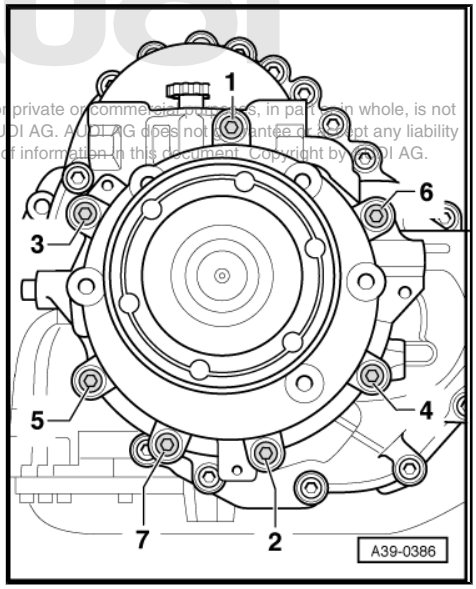

2.2 Removing and installing centre differential housing with gearbox removed

Removing

Note

- ♦ *General repair instructions ⇒ page 1 .*
- ♦ *Rules for cleanliness when working on the automatic gearbox ⇒ page 11*
- ♦ *The centre differential housing can also be removed and installed with the gearbox in the vehicle ⇒ Automatic gearbox 09E, four-wheel drive; Rep. gr. 39 .*

- Gearbox removed
- Secure gearbox to assembly stand ⇒ page 18 .

– Place used oil collection and extraction unit -V.A.G 1782- below gearbox.

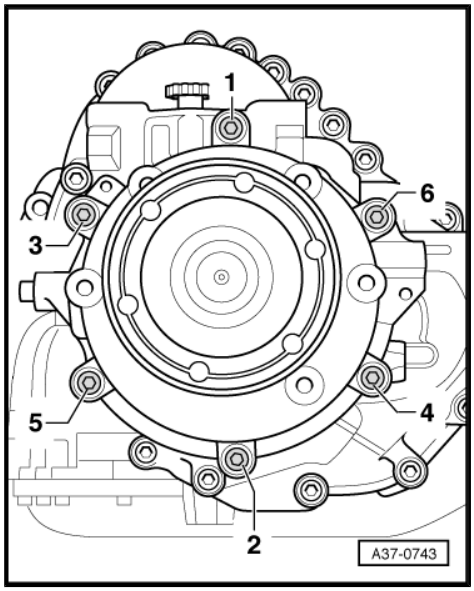

WARNING

Wear safety goggles.

– Slacken and remove securing bolts for cover for self-locking centre differential in the sequence -6 ... 1- and allow gear oil to drain out.

Note

The cover does not have a drain plug; gear oil can only be drained by removing the cover.

Caution

Detach centre differential housing from gearbox carefully towards the rear. Take care that self-locking centre differential does not drop out of gearbox.

– Secure self-locking centre differential -B- and baffle plate -A- to prevent them dropping out, or pull them off the output shaft towards the rear.

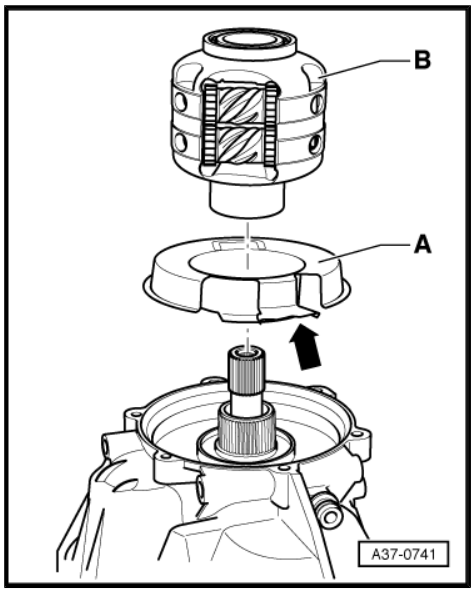

Installing

Installation is carried out in reverse sequence; note the following:

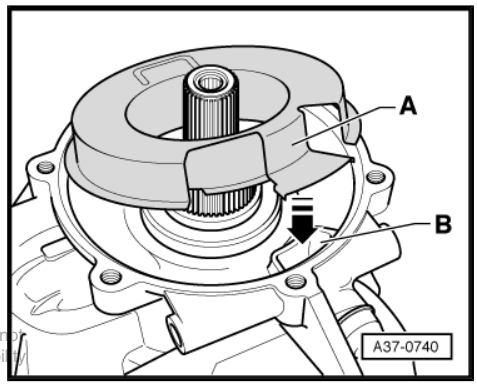

Note

Renew O-ring on cover for transfer box.

Note the following if the self-locking centre differential -B- and the baffle plate -A- have been removed:

– Clean baffle plate, lubricate with gear oil and insert in gearbox.

Protected by copyright. Copying for private or commercial purposes, in part or in whole, is not permitted unless authorised by AUDI AG. AUDI AG does not guarantee or accept any liability with respect to the correctness of information in this document. Copyright by AUDI AG.

- Installation position: tongue on baffle plate should be positioned on the gearbox so that the side lugs are located above opening -B- -arrow-.

– Fit self-locking centre differential -B- onto splines of output shaft (turn slightly at the same time).

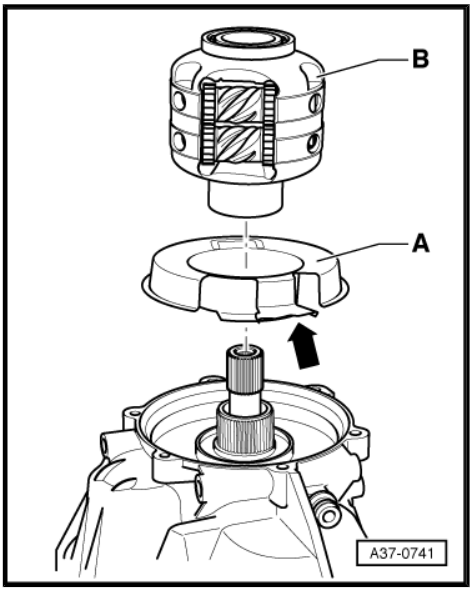

Note

Check installation position of tongue on baffle plate -arrow- again.

– Check that self-locking centre differential can be turned by hand when it is in position.

– Check whether the tongue -arrow- on the baffle plate is still located properly.

– If necessary, renew oil seal for flange shaft (rear) ⇒ page 160 .

– Renew O-ring on centre differential housing.

– Fit centre differential housing onto self-locking centre differential with shaft installed; turn slightly if necessary.

– Tighten bolts on centre differential housing in specified sequence to final torque ⇒ page 157 .

The remaining installation steps are carried out in reverse sequence; note the following:

– After installing gearbox, fill up gear oil in gearbox ⇒ Automatic gearbox 09E, four-wheel drive; Rep. gr. 39 .

2.3 Renewing ball bearing for self-locking centre differential

Procedure

– Remove centre differential housing ⇒ page 157 .

– Pull centre differential -1- off output shaft.

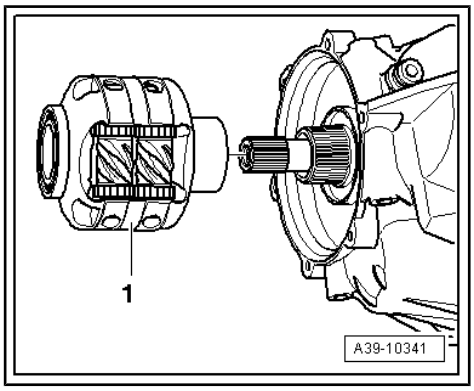

Note

Different versions of centre differential -1- depending on equipment version.

– Press ball bearing off centre differential.

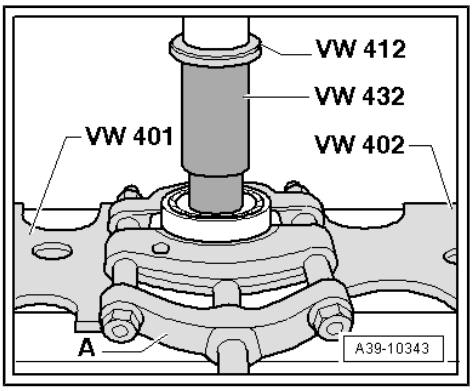

Caution

Risk of damage to the centre differential.

- ***A second mechanic must hold the centre differential when pressing off the ball bearing.***

A - Splitter 22 ... 115 mm -Kukko 17/2-

- The collar of press tool -VW 432- points towards ball bearing.

Protected by copyright. Copying for private or commercial purposes, in part or in whole, is not permitted unless authorised by AUDI AG. AUDI AG does not guarantee or accept any liability with respect to the correctness of information in this document. Copyright by AUDI AG.

– Press ball bearing onto centre differential.

– Press ball bearing -A- onto centre differential as far as stop using workshop press in conjunction with assembly tool -3350- .

– Install centre differential housing ⇒ page 157 .

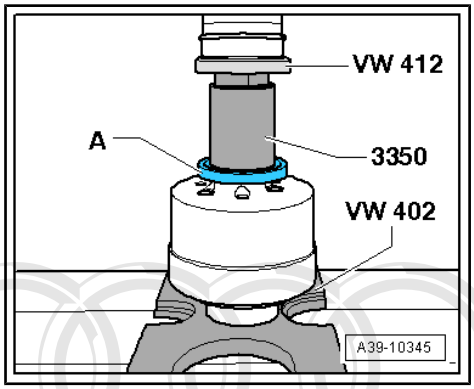

2.4 Renewing oil seal for flange shaft (rear)

Procedure

– Remove centre differential housing ⇒ page 157 .

– Remove circlip -arrow- on inner side of cover.

Note

The circlip locates the flange shaft on the bearing in the cover.

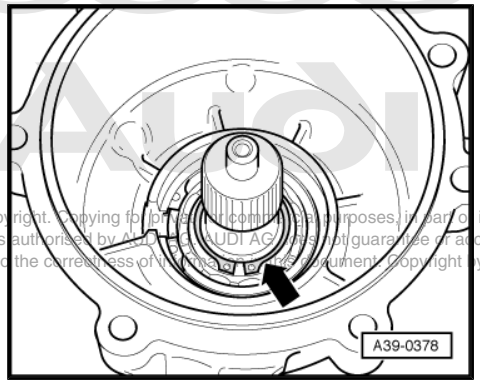

Protected by copyright. Copying for private or commercial purposes, in part or in whole, is not permitted unless authorised by AUDI AG. AUDI AG does not guarantee or accept any liability with respect to the correctness of information in this document. Copyright by AUDI AG.

– Using press tool -VW 409- , press flange shaft out of centre differential housing; to do so, place housing on thrust plate -VW 401- and thrust plate -VW 402- .

Note

Hold flange shaft -A- with one hand to prevent it from falling.

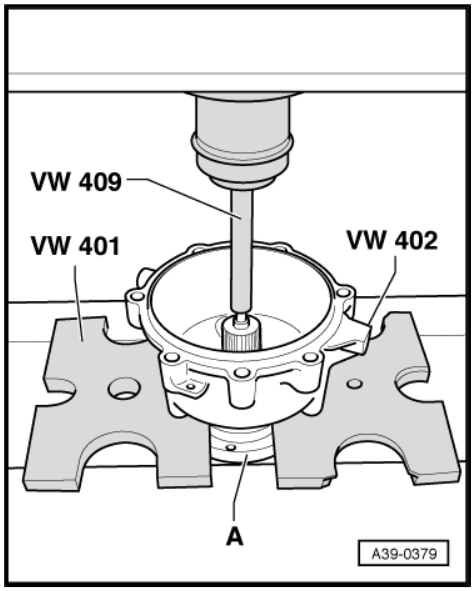

– Pry out oil seal.

Note

To prevent damage to the housing, place something underneath (e.g. metal bar -A-).

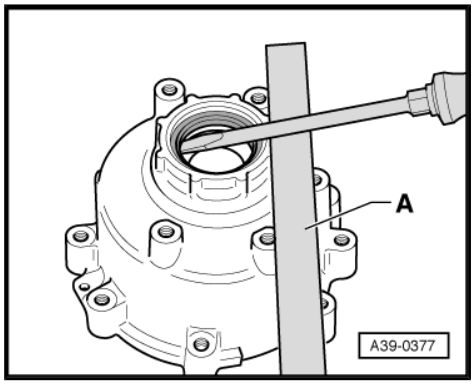

– Place cover -A- for self-locking centre differential on fitting tool -T10136- .

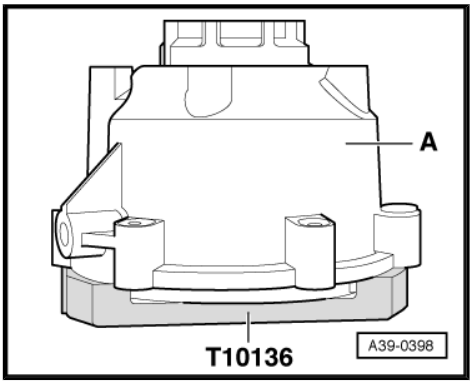

Note

The peg in the middle of the tool is centred and faces upwards in the cover. It serves as a guide and stop for press tool -T10136/1- .

– Lubricate outer circumference of seal with gear oil.

– Push new oil seal onto press tool -T10136/1- .

• Installation position: the open side of the seal should face the cover.

– Insert press tool -T10136/1- with oil seal into cover from above.

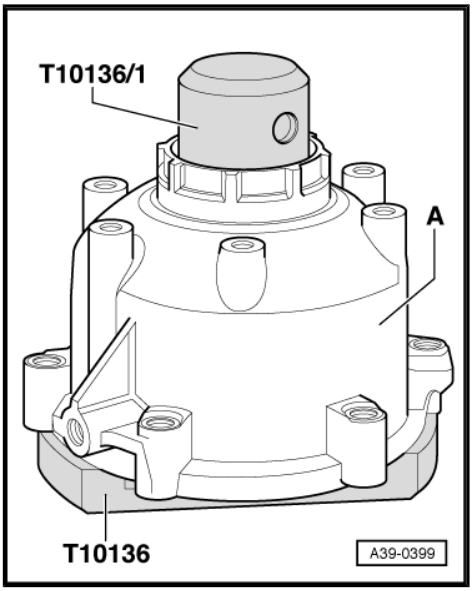

Note

The peg of the thrust piece -T10136- serves as a guide from below and also as a stop for press tool -T10136/1- .

– Drive in new oil seal onto stop (take care to keep oil seal straight).

Protected by copyright. Copying for private or commercial purposes, in part or in whole, is not permitted unless authorised by AUDI AG. AUDI AG does not guarantee or accept any liability with respect to the correctness of information in this document. Copyright by AUDI AG.

– Pack space between sealing lips -arrow- of oil seal half-full with sealing grease -G 052 128 A1- .

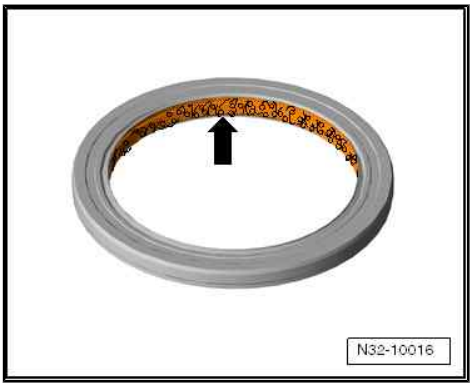

– Press flange shaft into centre differential housing using press tool -VW 409- and thrust plate -VW 447 i- (place housing on thrust plate -VW 401- and thrust plate -VW 402-).

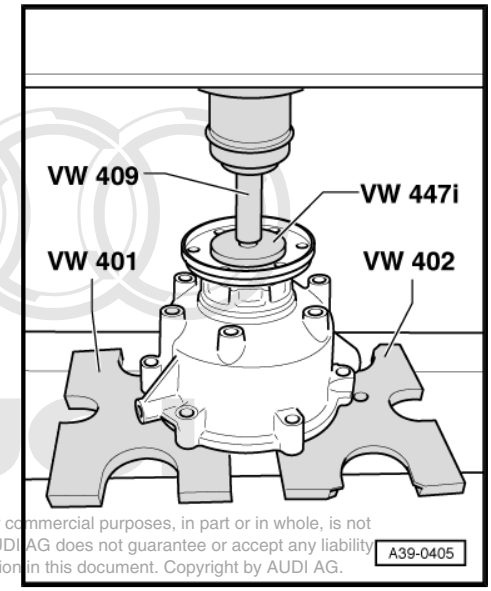

Note

Only insert flange shaft as far as necessary to install circlip.

Protected by copyright. Copying for private or commercial purposes, in part or in whole, is not permitted unless authorised by AUDI AG. AUDI AG does not guarantee or accept any liability with respect to the correctness of information in this document. Copyright by AUDI AG.

– Install circlip -arrow- in groove of flange shaft on inner side of cover.

– Install centre differential housing ⇒ page 157 .

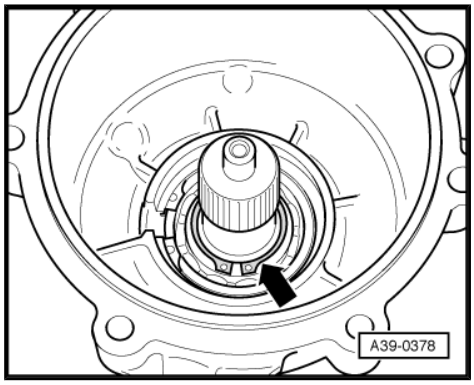

3 Assessment of wear on gearbox components

Overview

- ⇒ „3.1 Assessment of wear by checking ATF for colour and contamination“, page 163
- ⇒ „3.2 Clutch C “, page 163
- ⇒ „3.3 Clutch D “, page 165
- ⇒ „3.4 Planetary drive II and III “, page 167
- ⇒ „3.5 Clutch B “, page 169
- ⇒ „3.6 Body II “, page 170
- ⇒ „3.7 Clutch A “, page 173
- ⇒ „3.8 Clutch E “, page 174
- ⇒ „3.9 ATF supply unit“, page 176

3.1 Assessment of wear by checking ATF for colour and contamination

Colour of ATF

Protected by copyright. Copying for private or commercial purposes, in part or in whole, is not permitted unless authorised by AUDI AG. AUDI AG does not guarantee or accept any liability with respect to the correctness of information in this document. Copyright by AUDI AG.

- Colour yellow or blue: ATF is new.
- Colour brown: ATF is used (approx. 60,000 km upwards)
- Colour black: gearbox component is defective (e.g. overheating of torque converter lock-up clutch, burnt out clutch linings).

Note

On vehicles with TDI engines, the ATF turns black after approx. 60,000 km without the gearbox being defective.

ATF contains metal particles

- Wear is within normal range if metal particles on magnet in oil pan or in ATF are smaller than 0.1 mm ∅ and quantity is not more than 1 cm^3.
- Metal particles larger than 2.0 mm ∅ on magnet in oil pan or in ATF indicate abnormal wear or a mechanical fault in the gearbox.

Procedure if ATF is contaminated

ATF very contaminated (ATF black or metal particles in ATF ⇒ page 163):

- Dismantle and clean complete gearbox.
- Flush ATF galleries and blow through with compressed air.
- Dismantle and check all clutches.
- Renew torque converter (cannot be cleaned).
- Renew mechatronic unit (cannot be cleaned).
- Clean ATF lines and ATF cooler and renew ATF strainer.

3.2 Clutch „C“

3 - Friction plate

- ❑ Checking for wear ⇒ page 164

4 - Outer plate

- ❑ Checking for wear ⇒ page 164

10 - Piston„C“

- ❑ Check for wear

12 - Cylinder „C/D“

- ❑ Check running surface of piston „D“ for scoring by friction plates ⇒ page 165
- ❑ Checking bearing bush for wear ⇒ page 165

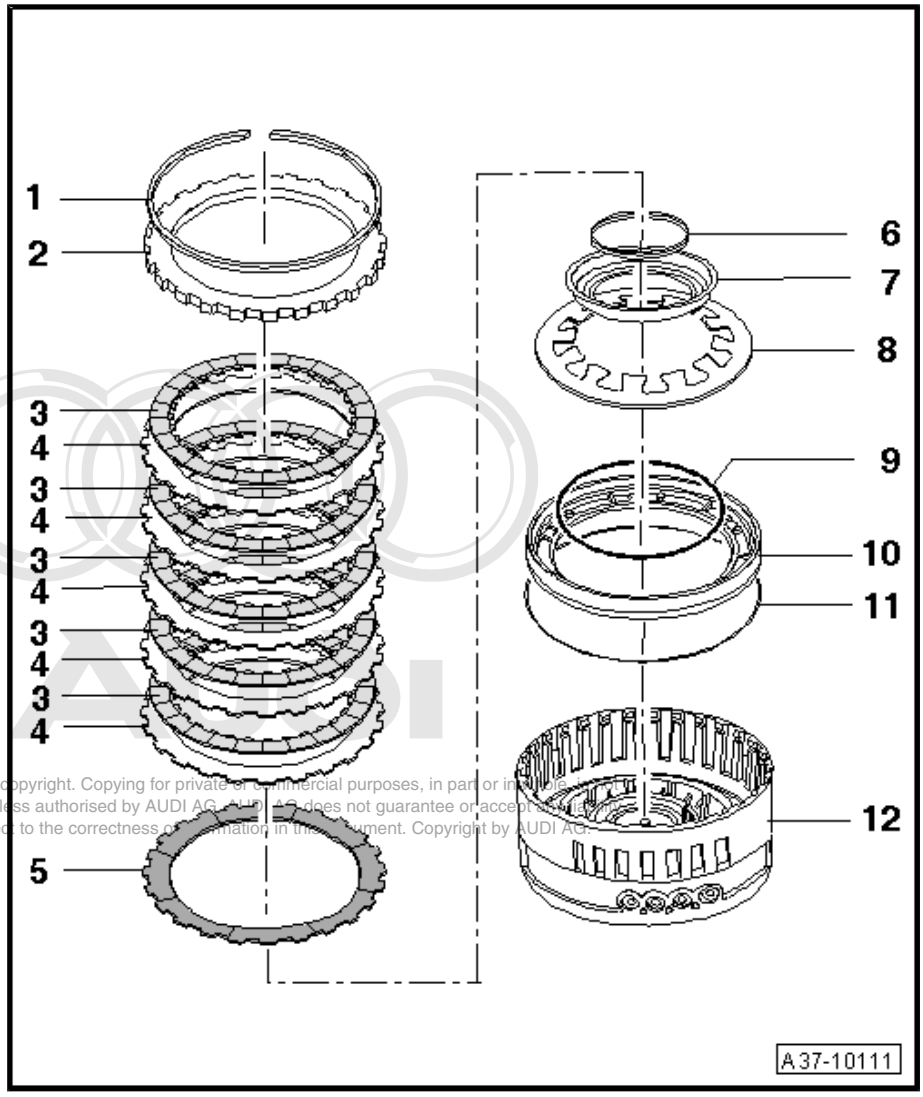

Protected by copyright. Copying for private or commercial purposes, in part or in whole, is not permitted unless authorised by AUDI AG. AUDI AG does not guarantee or accept any liability with respect to the correctness of information in this document. Copyright by AUDI AG.

Checking friction plates and outer plates for wear

Signs of overheating on the outer plates indicate that the friction plates are worn. Assess the degree of wear as described below:

A - Heat discoloration spots at intervals of more than 20 mm: outer plates and friction plates are OK; they can be used again.

B - Heat discoloration spots at intervals of less than 20 mm: outer plates and friction plates are worn and require renewal.

C - If outer and/or inner parts of outer plates are discoloured blue or brown: outer plates and friction plates are worn and require renewal.

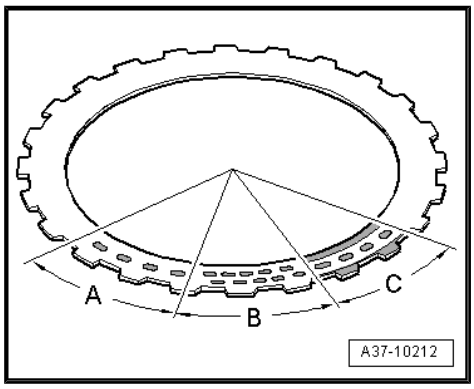

Checking inner surfaces of cylinder „C/D“ for scoring by friction plates

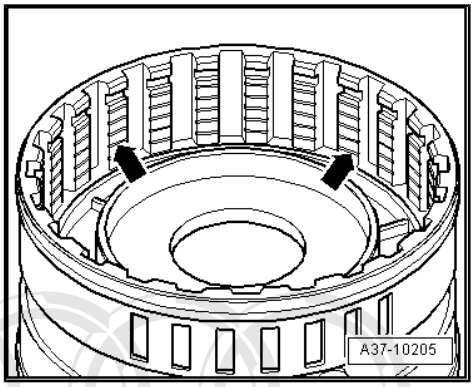

– Check inner surfaces of cylinder „C/D“ for scoring by friction plates.

• The friction plates must not catch in the scores.

If the scores caused by the friction plates are deeper than 0.5 mm:

– Renew cylinder „C/D“.

Checking bearing bush in cylinder „C/D“ for wear

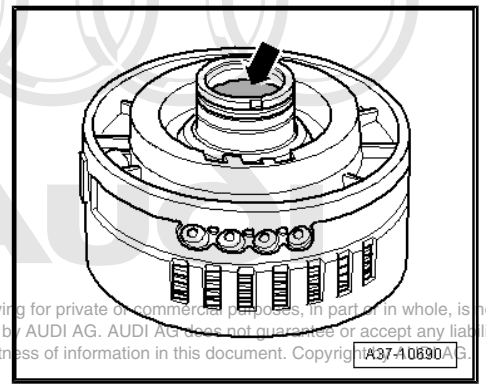

– Check running surfaces of bearing bush -arrow- inside cylinder „C/D“ for wear.

• The running surfaces should not have any deep scoring and/or blue discoloration.

If there are deep scores and/or blue discolouring:

– Renew cylinder „C/D“.

• Proceed as follows if the running surfaces have no blue discoloration and there is only slight scoring:

– Rub down running surface one or two times with abrasive paper and oil (grain size 600).

– Clean running surface thoroughly with clean cloth and check running surface.

• The running surfaces should now be in as-new condition.

If scoring is still present after this step:

– Renew cylinder „C/D“.

Protected by copyright. Copying for private or commercial purposes, in part or in whole, is not permitted unless authorised by AUDI AG. AUDI AG does not guarantee or accept any liability with respect to the correctness of information in this document. Copyright AUDI AG.

3.3 Clutch „D“

Note

The plates of clutch „D“ are inserted directly in the gearbox. Wear assessment ⇒ page 166 *and* ⇒ page 167

1 - Cylinder „C/D“

- ❑ Checking bearing bush for wear ⇒ page 167

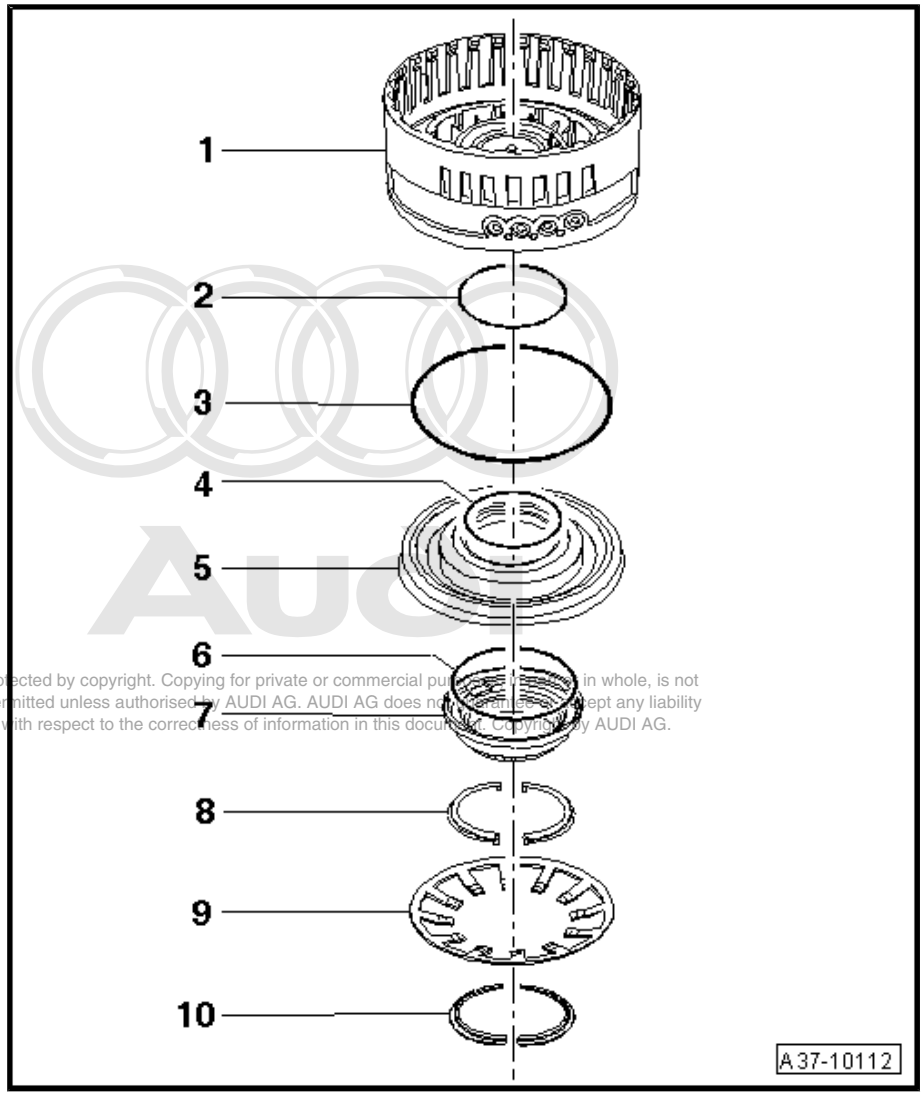

Protected by copyright. Copying for private or commercial purposes, in whole or in part, is not permitted unless authorised by AUDI AG. AUDI AG does not guarantee or accept any liability with respect to the correctness of information in this document. Copyright by AUDI AG.

Checking friction plates and outer plates for wear

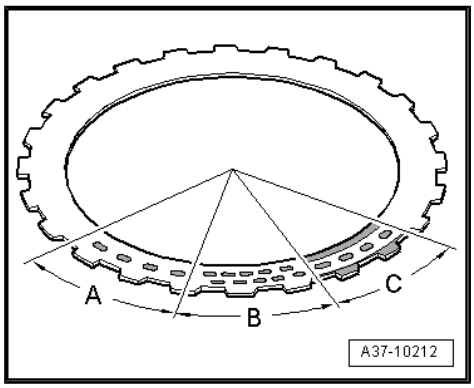

Note

The plates of clutch „D“ are inserted directly in the gearbox.

Signs of overheating on the outer plates indicate that the friction plates are worn. Assess the degree of wear as described below:

A - Heat discoloration spots at intervals of more than 20 mm: outer plates and friction plates are OK; they can be used again.

B - Heat discoloration spots at intervals of less than 20 mm: outer plates and friction plates are worn and require renewal.

C - If outer and/or inner parts of outer plates are discoloured blue or brown: outer plates and friction plates are worn and require renewal.

Checking gearbox housing for scoring by friction plates

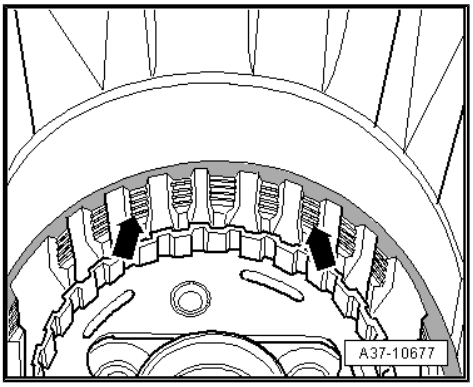

Note

The plates of clutch „D“ are inserted directly in the gearbox.

– Check gearbox housing for scoring by friction plates of clutch „D“ -arrows-.

• The friction plates must not catch in the scores.

If the scores caused by the friction plates are deeper than 0.5 mm:

– Renew gearbox.

Checking bearing bush in cylinder „C/D“ for wear

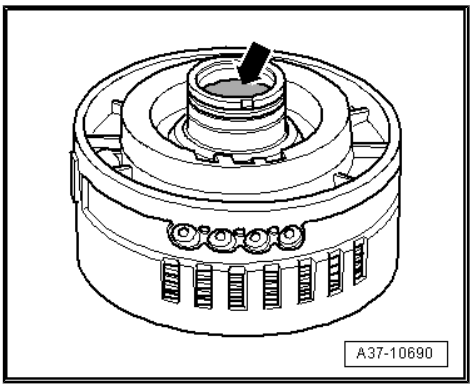

– Check running surfaces of bearing bush -arrow- inside cylinder „C/D“ for wear.

• The running surfaces should not have any deep scoring and/or blue discoloration.

If there are deep scores and/or blue discolouring:

– Renew cylinder „C/D“.

• Proceed as follows if the running surfaces have no blue discoloration and there is only slight scoring:

– Rub down running surface one or two times with abrasive paper and oil (grain size 600).

– Clean running surface thoroughly with clean cloth and check running surface.

• The running surfaces should now be in as-new condition.

If scoring is still present after this step:

– Renew cylinder „C/D“.

3.4 Planetary drive „II“ and „III“

Protected by copyright. Copying for private or commercial purposes, in part or in whole, is not permitted unless authorised by AUDI AG. AUDI AG does not guarantee or accept any liability with respect to the correctness of information in this document. Copyright by AUDI AG.

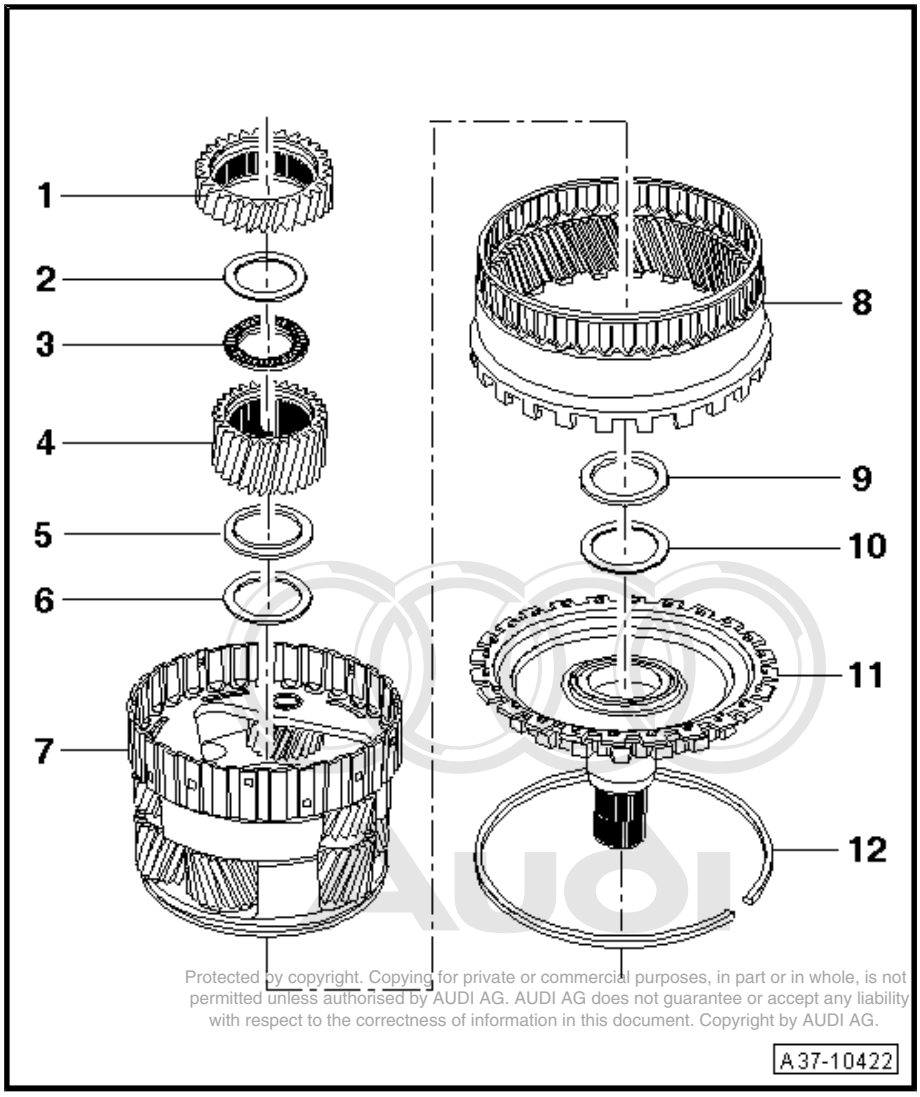

Protected by copyright. Copying for private or commercial purposes, in part or in whole, is not permitted unless authorised by AUDI AG. AUDI AG does not guarantee or accept any liability with respect to the correctness of information in this document. Copyright by AUDI AG.

1 - Sun gear „II“

- ❑ Check teeth of planetary drive; renew planetary drive if teeth are damaged

3 - Axial needle bearing

- ❑ Inspect visually for damage: axial needle bearing and contact surface of thrust washer -2- should be in as-new condition; renew both parts if necessary

4 - Sun gear „III“

- ❑ Check teeth of planetary drive; renew planetary drive if teeth are damaged

5 - Axial needle bearing

- ❑ Inspect visually for damage: axial needle bearing and contact surface of thrust washer -6- should be in as-new condition; renew both parts if necessary

7 - Planet carrier „II“ and „III“

- ❑ Check teeth of planetary drive; renew planetary drive if teeth are damaged
- ❑ Checking axial and radial clearance of planetary gears ⇒ page 168

8 - Annulus „III“

- ❑ Check teeth of planetary drive; renew planetary drive if teeth are damaged

9 - Axial needle bearing

- ❑ Inspect visually for damage: axial needle bearing and contact surface of thrust washer -10- should be in as-new condition; renew both parts if necessary

11 - Output shaft

- ❑ Check running surfaces of output shaft for wear ⇒ page 169
- ❑ Check splines

Checking axial and radial clearance of planetary gears

– Check axial clearance of planetary gears -arrows A-.

• Wear limit (axial clearance): 0.4 mm

– Check planetary gears for radial clearance -arrow B-.

• The planetary gears must not have any noticeable radial clearance.

– Check shafts for planetary gears.

• Shafts must be properly secured (check peening)

• Make sure area around shafts has no blue discolouration.

– Renew planet carrier „II“ and „III“ if necessary.

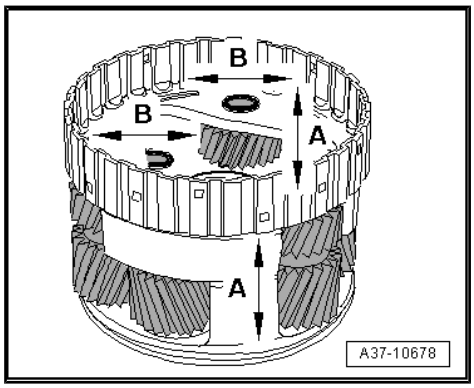

Checking running surfaces of output shaft for wear

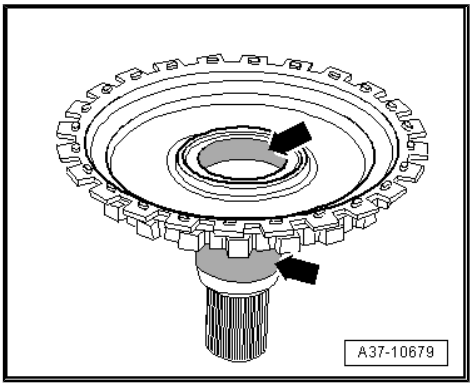

– Check running surfaces on inside and outside of output shaft -arrows- for wear.

• The running surfaces should not have any deep scoring and/ or blue discoloration.

If there are deep scores and/or blue discolouring:

– Renew output shaft.

Proceed as follows if the running surfaces have no blue discoloration and there is only slight scoring:

– Rub down running surface one or two times with abrasive paper and oil (grain size 600).

– Clean running surface thoroughly with clean cloth and check running surface.

• The running surfaces should now be in as-new condition.

If scoring is still present after this step:

– Renew output shaft.

3.5 Clutch „B“

3 - Friction plate

❑ Checking for wear
⇒ page 170

4 - Outer plate

❑ Checking for wear
⇒ page 170

15 - Cylinder „B“

❑ Checking running surface of shaft
⇒ page 170

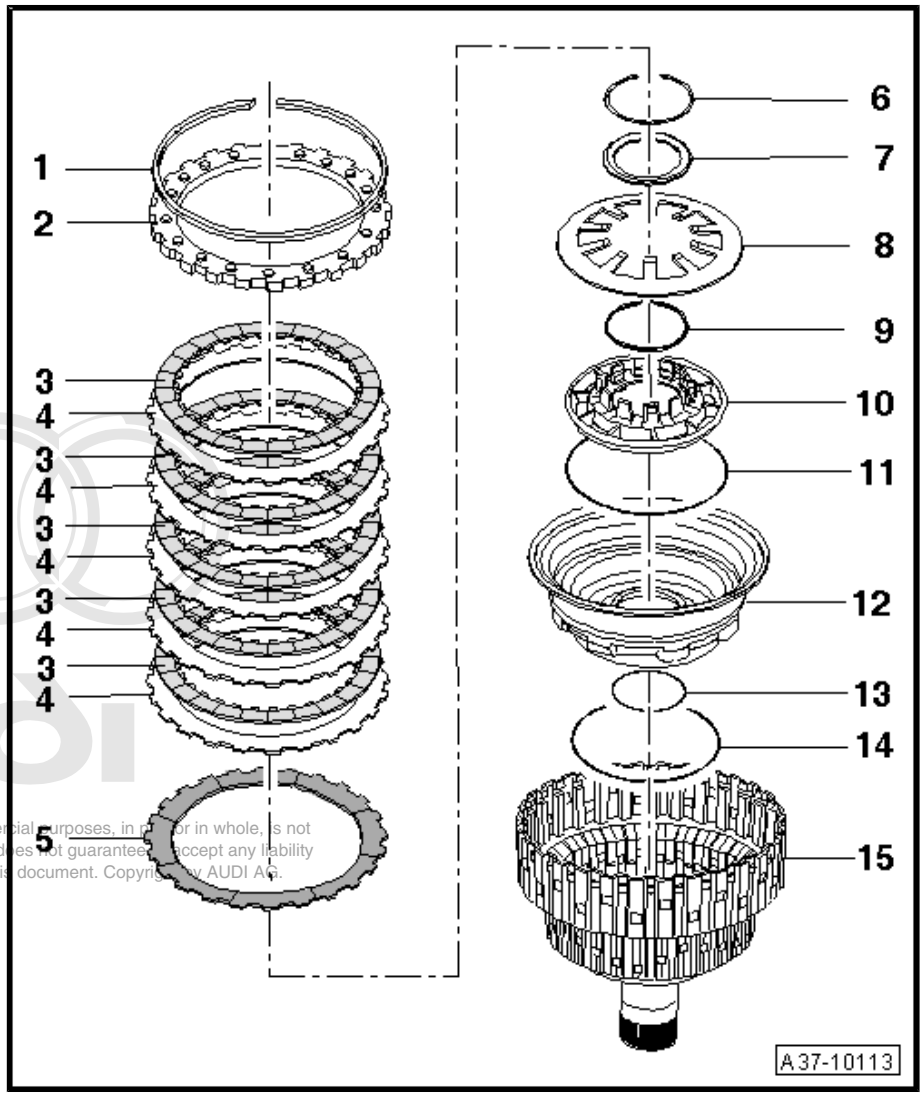

Protected by copyright. Copying for private or commercial purposes, in part or in whole, is not permitted unless authorised by AUDI AG. AUDI AG does not guarantee or accept any liability with respect to the correctness of information in this document. Copyright by AUDI AG.

Checking friction plates and outer plates for wear

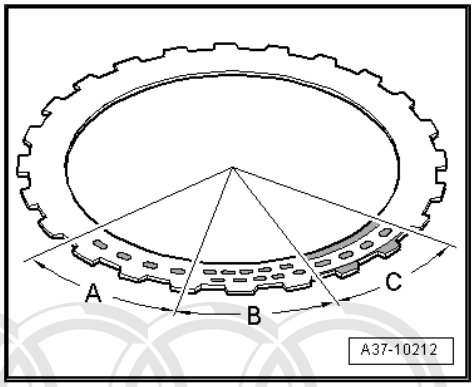

Signs of overheating on the outer plates indicate that the friction plates are worn. Assess the degree of wear as described below:

A - Heat discoloration spots at intervals of more than 20 mm: outer plates and friction plates are OK; they can be used again.

B - Heat discoloration spots at intervals of less than 20 mm: outer plates and friction plates are worn and require renewal.

C - If outer and/or inner parts of outer plates are discoloured blue or brown: outer plates and friction plates are worn and require renewal.

Checking running surfaces of shaft of cylinder „B“ for wear

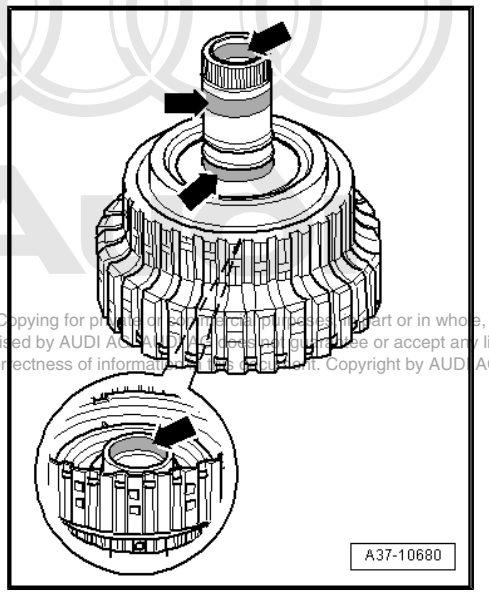

– Check running surfaces -arrows- of shaft for wear.

• The running surfaces should not have any deep scoring and/or blue discoloration.

If there are deep scores and/or blue discolouring:

– Renew cylinder „B“.

Proceed as follows if the running surfaces have no blue discoloration and there is only slight scoring:

– Rub down running surface one or two times with abrasive paper and oil (grain size 600).

– Clean running surface thoroughly with clean cloth and check running surface.

• The running surfaces should now be in as-new condition.

If scoring is still present after this step:

– Renew cylinder „B“.

Protected by copyright. Copying for private or commercial purposes, in part or in whole, is not permitted unless authorised by AUDI AG. AUDI AG does not guarantee or accept any liability with respect to the correctness of information in this document. Copyright by AUDI AG.

3.6 Body „II“

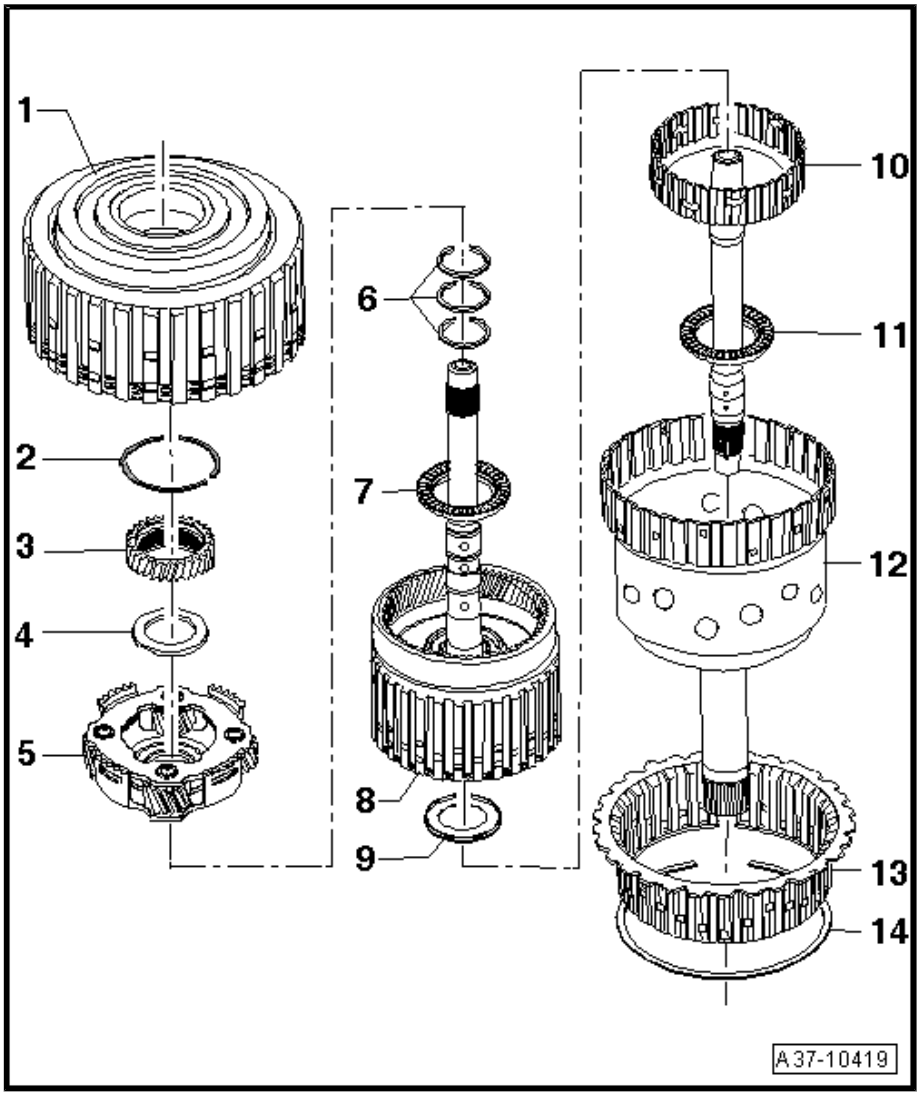

1 - Clutch „A“

- ❑ Wear assessment ⇒ page 173

3 - Sun gear „I“

- ❑ Check teeth of planetary drive; renew planetary drive if teeth are damaged

4 - Axial needle bearing

- ❑ Perform visual check for damage: axial needle bearing and contact surfaces should be in as-new condition; renew if necessary.

5 - Planet carrier „I“

- ❑ Check teeth of planetary drive; if teeth are damaged, renew planetary drive „I“ and clutch „E“ with annulus
- ❑ Checking axial and radial clearance of planetary gears ⇒ page 172

6 - Rectangular section seals

- ❑ Checking for wear ⇒ page 172

7 - Axial needle bearing

- ❑ Perform visual check for damage: axial needle bearing and contact surfaces should be in as-new condition; renew if necessary.

8 - Clutch „E“ with annulus „I“

- ❑ Wear assessment of clutch „E“ ⇒ page 174
- ❑ Check teeth of annulus „I“; if teeth are damaged, renew cylinder „E“ and planet carrier „I“

9 - Axial needle bearing

- ❑ Perform visual check for damage: axial needle bearing and contact surfaces should be in as-new condition; renew if necessary.

10 - Inner plate carrier „E“ with intermediate shaft

- ❑ Checking running surfaces for wear ⇒ page 172

11 - Axial needle bearing

- ❑ Perform visual check for damage: axial needle bearing and contact surfaces should be in as-new condition; renew if necessary.

12 - Inner plate carrier „A“

- ❑ Check running surfaces of shaft for wear ⇒ page 173

Protected by copyright. Copying for private or commercial purposes, in part or in whole, is not permitted unless authorised by AUDI AG. AUDI AG does not guarantee or accept any liability with respect to the correctness of information in this document. Copyright by AUDI AG.

Checking axial and radial clearance of planetary gears

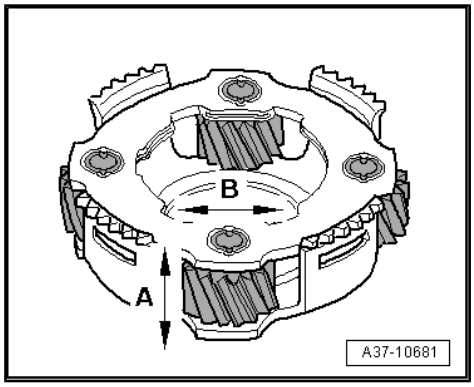

– Check axial clearance of planetary gears -arrow A-.

• Wear limit (axial clearance): 0.4 mm

– Check planetary gears for radial clearance -arrow B-.

• The planetary gears must not have any noticeable radial clearance.

– Check shafts for planetary gears.

• Shafts must be properly secured (check peening)

• Make sure area around shafts has no blue discolouration.

– Renew planet carrier „I“ if necessary.

Checking rectangular section seals for wear

Protected by copyright. Copying for private or commercial purposes, in part or in whole, is not permitted unless authorised by AUDI AG. AUDI AG does not guarantee or accept any liability with respect to the correctness of information in this document. Copyright by AUDI AG.

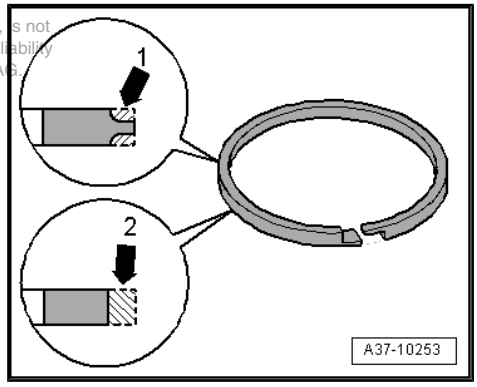

Note

Always renew rectangular section seals. Nevertheless, the wear pattern on the rectangular section seals gives an indication of the condition of the contact surface for the seals. For this reason it is always advisable to check the rectangular section seals for wear.

If the axial wear -arrow 1- on the rectangular section seals is excessive (slight wear on the outside corners is normal):

– Renew cylinder „E“ with annulus „I“ ⇒ Item 1 (page 175)

If the radial wear on the rectangular section seals exceeds 0.3 mm -arrow 2- (compare with thickness of new rectangular section seal):

– Renew ATF supply unit with stator shaft.

Checking running surfaces of shaft of inner plate carrier „E“ with intermediate shaft for wear

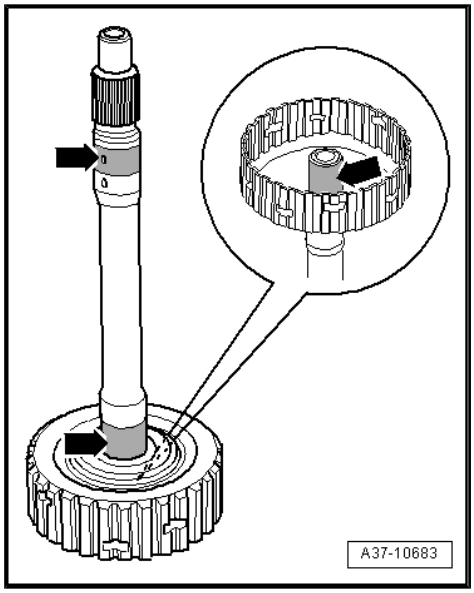

– Check running surfaces -arrows- of shaft for wear.

• The running surfaces should not have any deep scoring and/or blue discoloration.

If there are deep scores and/or blue discolouring:

– Renew inner plate carrier „E“ with intermediate shaft.

Proceed as follows if the running surfaces have no blue discoloration and there is only slight scoring:

– Rub down running surface one or two times with abrasive paper and oil (grain size 600).

– Clean running surface thoroughly with clean cloth and check running surface.

• The running surfaces should now be in as-new condition.

If scoring is still present after this step:

– Renew inner plate carrier „E“ with intermediate shaft.

Checking running surfaces of inner plate carrier „A“ for wear.

– Check running surfaces -arrows- of shaft for wear.

• The running surfaces should not have any deep scoring and/ or blue discoloration.

If there are deep scores and/or blue discolouring:

– Renew inner plate carrier „A“.

Proceed as follows if the running surfaces have no blue discoloration and there is only slight scoring:

– Rub down running surface one or two times with abrasive paper and oil (grain size 600).

– Clean running surface thoroughly with clean cloth and check running surface.

• The running surfaces should now be in as-new condition.

If scoring is still present after this step:

– Renew inner plate carrier „A“.

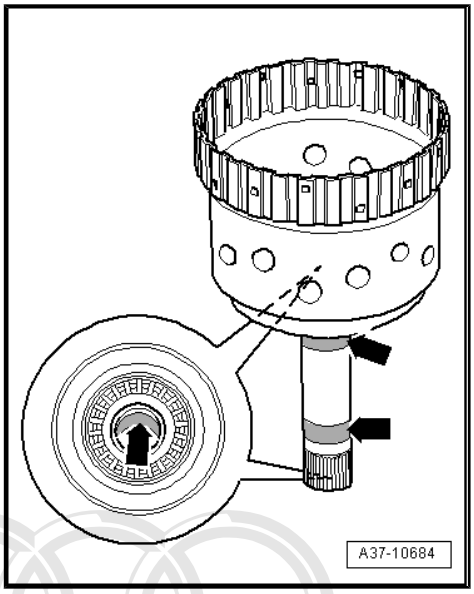

3.7 Clutch „A“

1 - Cylinder „A“

❑ Checking running surfaces for wear
⇒ page 174

4 - Piston „A“

❑ Check for wear

10 - Outer plate

❑ Checking for wear
⇒ page 174

11 - Friction plate

❑ Checking for wear
⇒ page 174

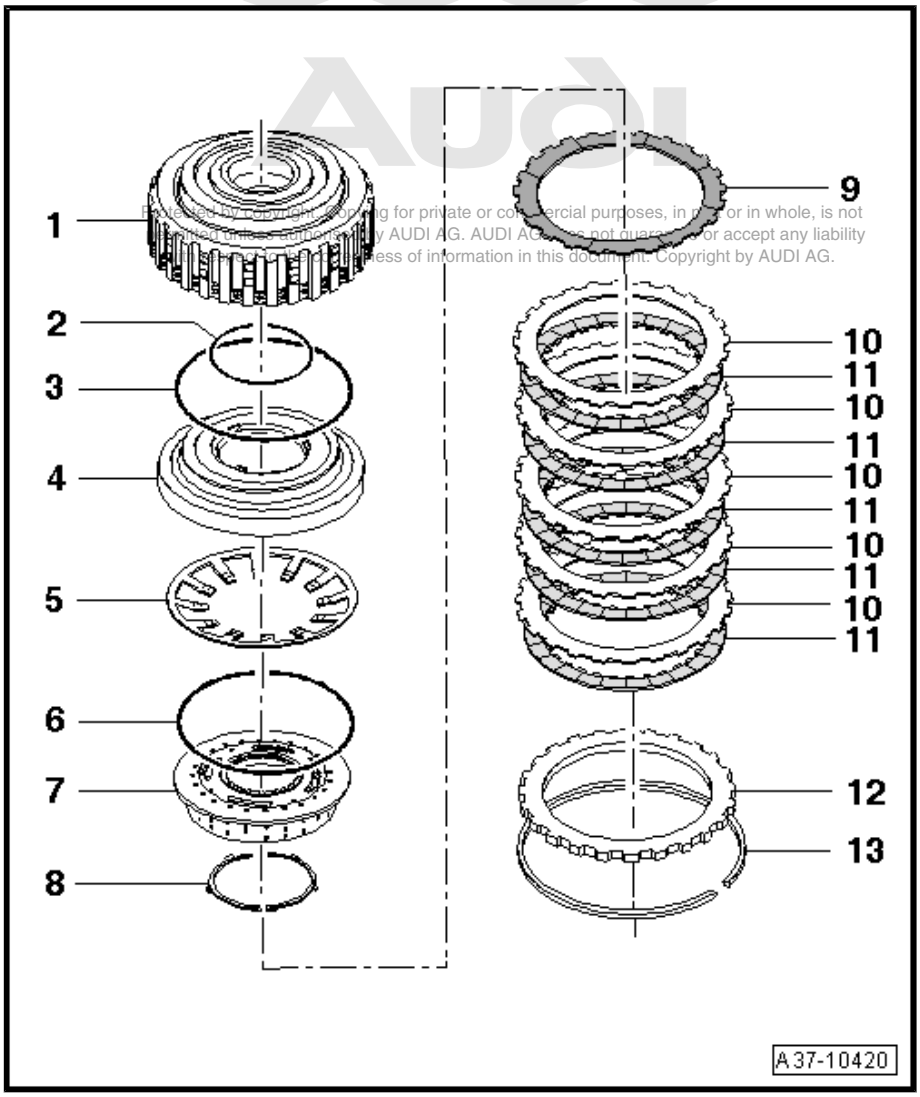

Protected by copyright. Copying for private or commercial purposes, in part or in whole, is not permitted unless authorised by AUDI AG. AUDI AG does not guarantee or accept any liability with respect to the correctness of information in this document. Copyright by AUDI AG.

Checking running surfaces for wear

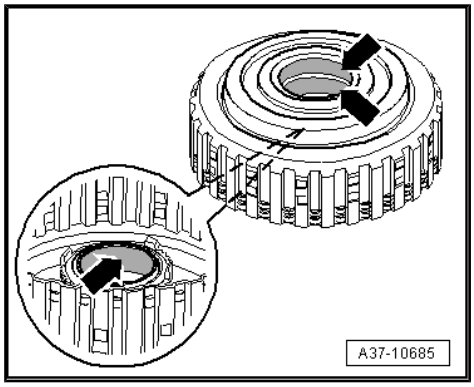

– Check running surfaces -arrows- on inside of cylinder „A“ for wear.

• The running surface should not have any deep scoring and/or blue discoloration.

If there are deep scores and/or blue discolouring:

– Renew cylinder „A“.

Proceed as follows if the running surface has no blue discoloration and there are only slight scores:

– Rub down running surface one or two times with abrasive paper and oil (grain size 600).

– Clean running surface thoroughly with clean cloth and check running surface.

• The running surface should now be in as-new condition.

If scoring is still present after this step:

– Renew cylinder „A“.

Checking friction plates and outer plates for wear

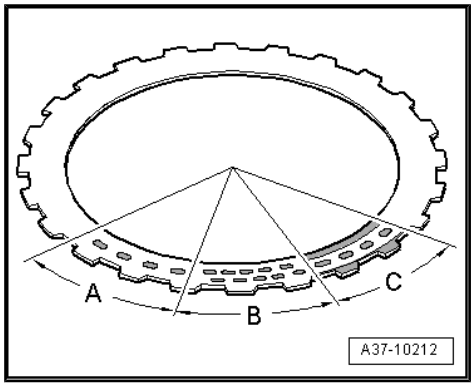

Signs of overheating on the outer plates indicate that the friction plates are worn. Assess the degree of wear as described below:

A - Heat discoloration spots at intervals of more than 20 mm: outer plates and friction plates are OK; they can be used again.

B - Heat discoloration spots at intervals of less than 20 mm: outer plates and friction plates are worn and require renewal.

C - If outer and/or inner parts of outer plates are discoloured blue or brown: outer plates and friction plates are worn and require renewal.

3.8 Clutch „E“

Protected by copyright. Copying for private or commercial purposes, in part or in whole, is not permitted unless authorised by AUDI AG. AUDI AG does not guarantee or accept any liability with respect to the correctness of information in this document. Copyright by AUDI AG.

1 - Cylinder „E“ with annulus „I“

- ❑ Checking running surfaces for wear ⇒ page 175

4 - Piston „E“

- ❑ Check for wear

11 - Outer plate

- ❑ Checking for wear ⇒ page 176

12 - Friction plate

- ❑ Checking for wear ⇒ page 176

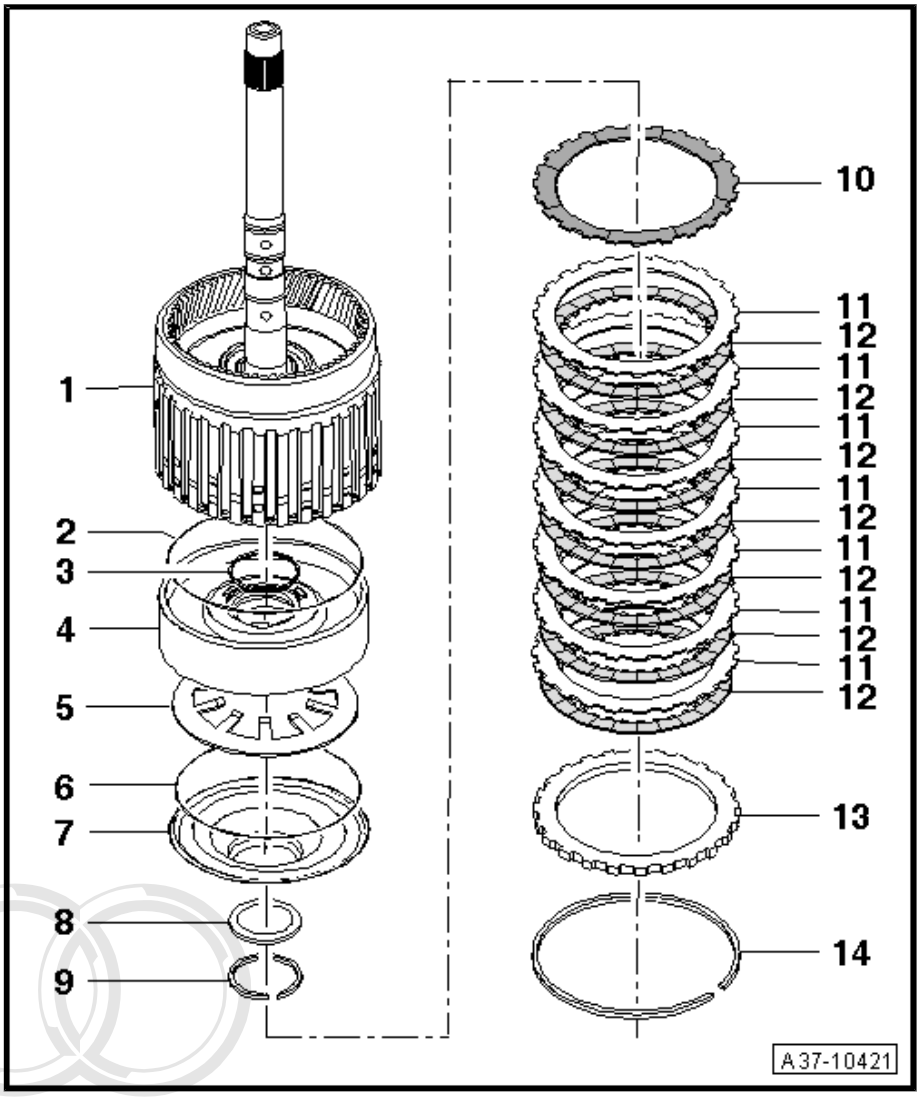

Checking running surfaces of shaft of cylinder „E“ for wear

– Check running surfaces on inside and outside of shaft -arrows- for wear.

• The running surfaces should not have any deep scoring and/or blue discoloration.

Protected by copyright. Copying for private or commercial purposes, in part or in whole, is not permitted unless authorised by AUDI AG. AUDI AG does not guarantee or accept any liability with respect to the correctness of information in this document. Copyright by AUDI AG.

If there are deep scores and/or blue discolouring:

– Renew cylinder „E“ with annulus „I“.

Proceed as follows if the running surfaces have no blue discoloration and there is only slight scoring:

– Rub down running surface one or two times with abrasive paper and oil (grain size 600).

– Clean running surface thoroughly with clean cloth and check running surface.

• The running surfaces should now be in as-new condition.

If scoring is still present after this step:

– Renew cylinder „E“ with annulus „I“.

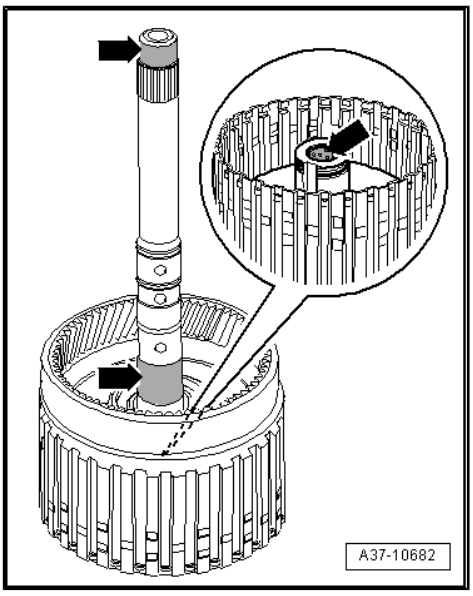

Checking friction plates and outer plates for wear

Signs of overheating on the outer plates indicate that the friction plates are worn. Assess the degree of wear as described below:

A - Heat discoloration spots at intervals of more than 20 mm: outer plates and friction plates are OK; they can be used again.

B - Heat discoloration spots at intervals of less than 20 mm: outer plates and friction plates are worn and require renewal.

C - If outer and/or inner parts of outer plates are discoloured blue or brown: outer plates and friction plates are worn and require renewal.

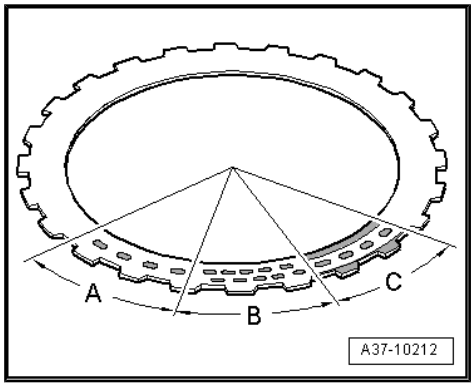

3.9 ATF supply unit

3 - Needle bearing

- ❑ Perform visual check for damage: needle bearing should be in as-new condition; renew if necessary

5 - ATF pump housing

- ❑ Check running surfaces for scoring and signs of abnormal wear ⇒ page 177

6 - Annulus

- ❑ Check running surfaces for scoring and signs of abnormal wear ⇒ page 177
- ❑ Check drive lugs in pump gear ⇒ page 177

7 - ATF pump gear

- ❑ Check running surfaces for scoring and signs of abnormal wear ⇒ page 177

13 - Stator shaft

- ❑ Check brass bushes for wear ⇒ page 177
- ❑ Check splines for wear
- ❑ Component part of ATF supply unit; cannot be renewed separately

15 - Rectangular section seals

- ❑ Checking for wear ⇒ page 178

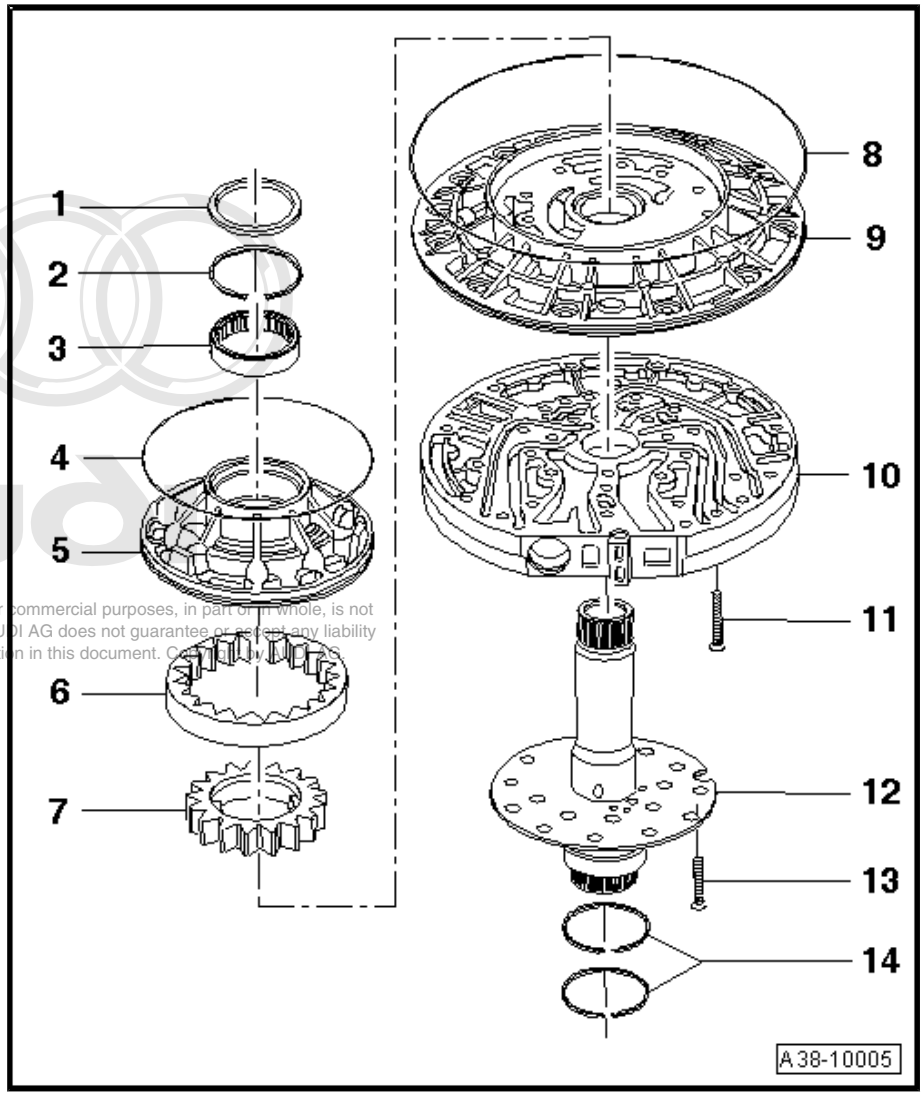

Protected by copyright. Copying for private or commercial purposes, in part or in whole, is not permitted unless authorised by AUDI AG. AUDI AG does not guarantee or accept any liability with respect to the correctness of information in this document. Copyright by AUDI AG

Checking components of ATF pump for scoring and signs of wear

– Check running surfaces of following components for scoring and signs of wear:

2 - ATF pump housing

3 - Annulus

4 - ATF pump gear

• The running surfaces should have either a dull or bright finish and should be free of even the slightest trace of scoring.

Protected by copyright. Copying for private or commercial purposes, in part or in whole, is not permitted unless authorised by AUDI AG. AUDI AG does not guarantee or accept any liability with respect to the correctness of information in this document. Copyright by AUDI AG.

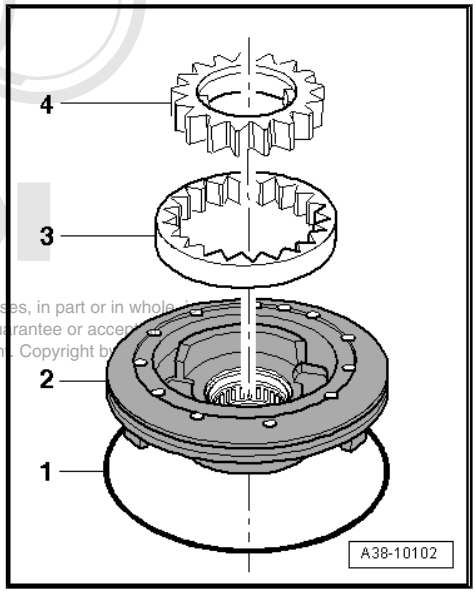

Note

♦ *Very slight scoring can be smoothed down with an oilstone.*

♦ *A defective ATF pump causes delays in power transmission and gear changes.*

Checking drive lugs in ATF pump gear

– Check whether the drive lugs -arrows- on the ATF pump gear have broken off; renew ATF pump if necessary.

Possible causes of fault:

♦ A - Incorrect installation of torque converter

♦ B - Centring sleeve for torque converter not inserted in crankshaft

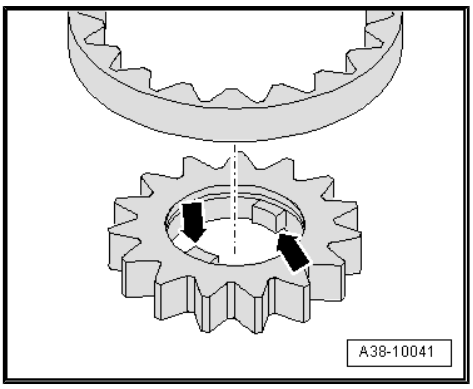

Caution

Make sure that broken-off drive lugs are found and removed.

Checking brass bushes on stator shaft for wear.

– Check running surfaces of brass bushes -arrows- on inside of shaft for wear.

• The running surfaces should not have any deep scoring and/or blue discoloration.

If there are deep scores and/or blue discolouring:

– Renew ATF supply unit with stator shaft.

– Check rectangular section seals and input shaft of clutch „E“.

– Check clutch „A“.

• Proceed as follows if the running surfaces have no blue discoloration and there is only slight scoring:

– Rub down running surface one or two times with abrasive paper and oil (grain size 600).

– Clean running surface thoroughly with clean cloth and check running surface.

If scoring is still present after this step:

• The running surfaces should now be in as-new condition.

– Renew ATF supply unit with stator shaft.

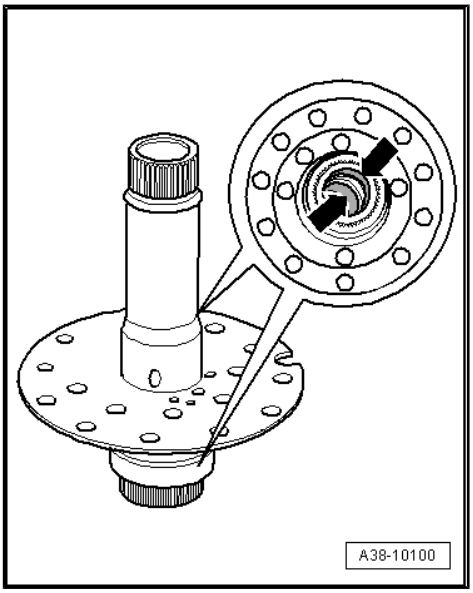

Checking rectangular section seals for wear

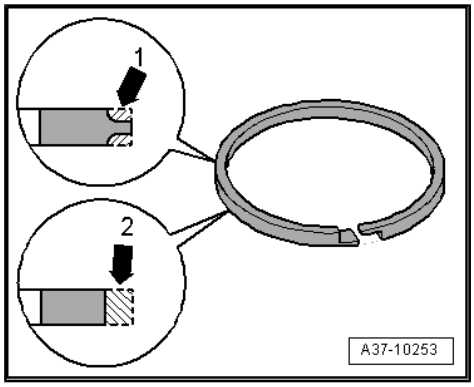

Always renew rectangular section seals. Nevertheless, the wear pattern on the rectangular section seals gives an indication of the condition of the contact surface for the seals. For this reason it is always advisable to check the rectangular section seals for wear.

If the axial wear -arrow 1- on the rectangular section seals is excessive (slight wear on the outside corners is normal):

– Renew ATF supply unit with stator shaft.

If the radial wear on the rectangular section seals exceeds 0.3 mm -arrow 2- (compare with thickness of new rectangular section seal):

– Renew cylinder „A“ ⇒ Item 1 (page 173) .

Protected by copyright. Copying for private or commercial purposes, in part or in whole, is not permitted unless authorised by AUDI AG. AUDI AG does not guarantee or accept any liability with respect to the correctness of information in this document. Copyright by AUDI AG.