Service Training

# The new Audi A4 ´05

Self-Study Programme 343

## The new Audi A4 ´05

Audi introduces a new model generation that is obvious at first glance.
The front-end styling of both saloon and Avant models is new, with the addition of the characteristic Audi single-frame grille.
The rear end, with its distinct horizontal lines, and the sides, where the shoulder line lends the body a distinctly sporty look, are also new.

Driving pleasure, superior technology, exciting styling and a level of luxury that even satisfies the demands made of the luxury car class.

The architecture of the driver's area, especially the cockpit – a perfect synthesis of ergonomics, function and design – is pioneering.

343_009

**Excellence in design & performance**

# Contents

Introduction . . . . . 4

The body. . . . . 6

Occupant protection . . . . . 8

Diagnosis . . . . . 10

The engine . . . . . 12

The chassis . . . . . 18

The heating / air conditioning system . . . . . 24

The convenience electronics . . . . . 26

The purpose of the Self-Study Programme is to provide a basic knowledge of the design and function of new models, new automotive components or new technologies.

**The Self-Study Programme is not a Repair Manual!**
**All values given are intended as a guideline only, and refer to the software version valid at the time of publication of the SSP.**

For maintenance and repair work, always refer to the current technical literature.

**Reference**

**Note**

## Overview

Dimensions of the Audi A4 ‘05 Avant.

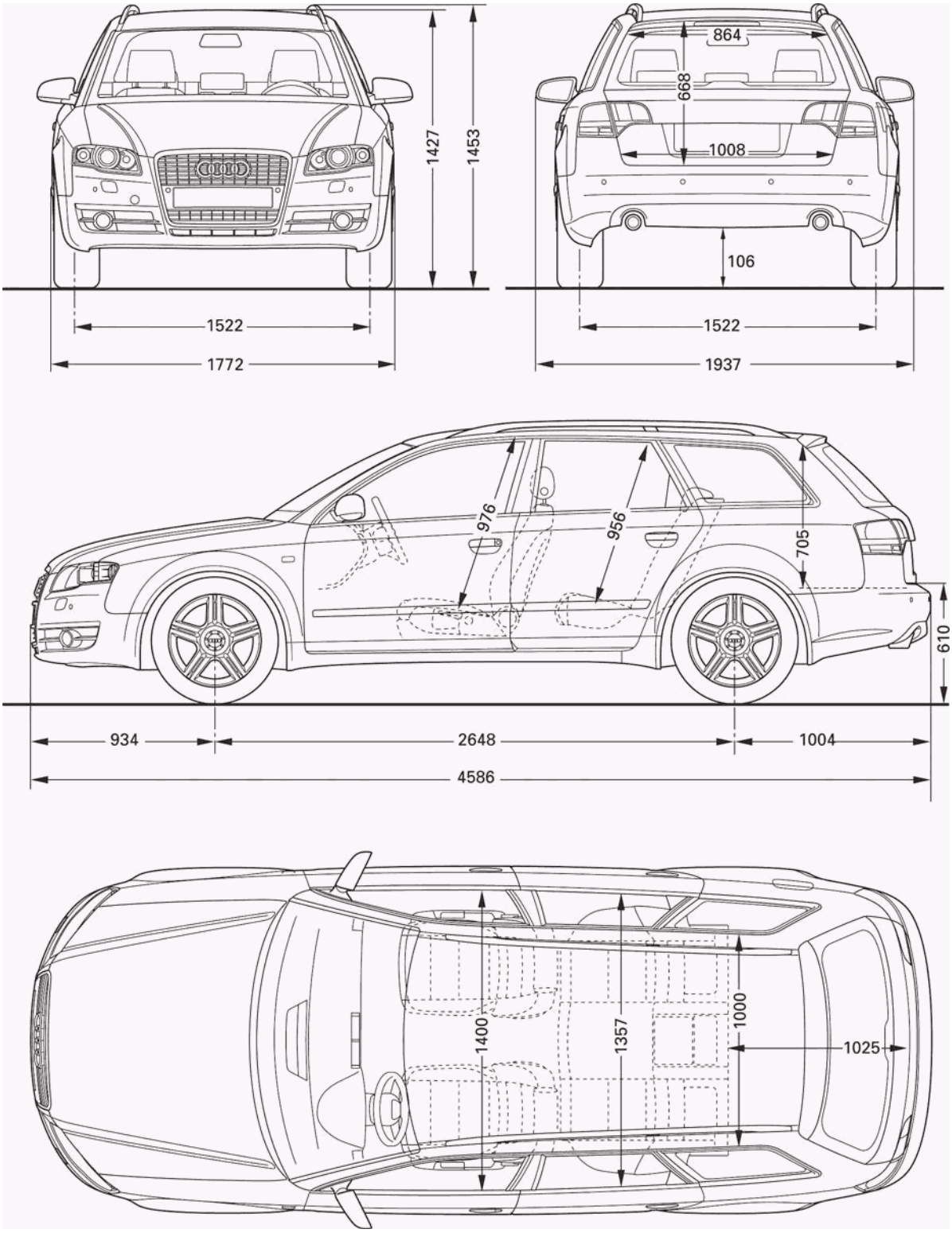


343_010

Dimensions of the Audi A4 ‘05 saloon.

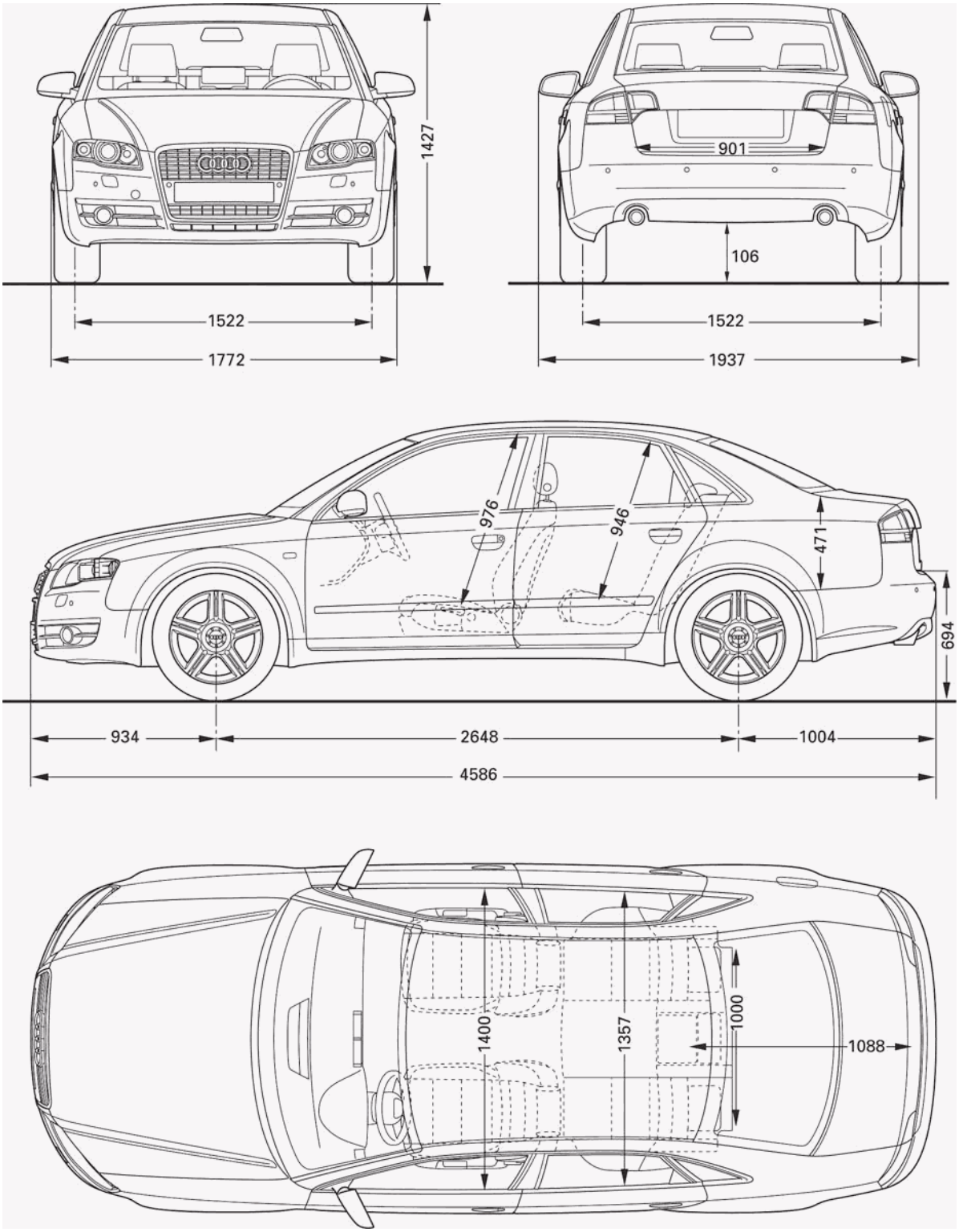


343_011

## Overview of the body

One of the key factors contributing to the vehicle's lower kerb weight was the use of high-strength body panels, which account in total for 45% of the bodyshell weight. These special panels are used especially at the body front end, where they are intended to absorb as effectively as possible the impact energy in the event of a head-on collision.

In the floorpan area, the occupant cell is protected by three large tailored blanks in varying wall thickness. In the occupant cell area, tailored blanks are connected sturdily and homogeneously to the front and rear ends of the vehicle by a branched support system.

At the rear end of the vehicle, the side members are made from tailored blanks with different materials and wall thickness.

**Note**

The repair concept is identical to that of the Audi A4 '04 (B6).

**Front end adapted to singleframe radiator grille**

**Optimised body**

- New exterior design
- Installation space for diesel particulate filter
- Compliance with applicable vehicle safety requirements

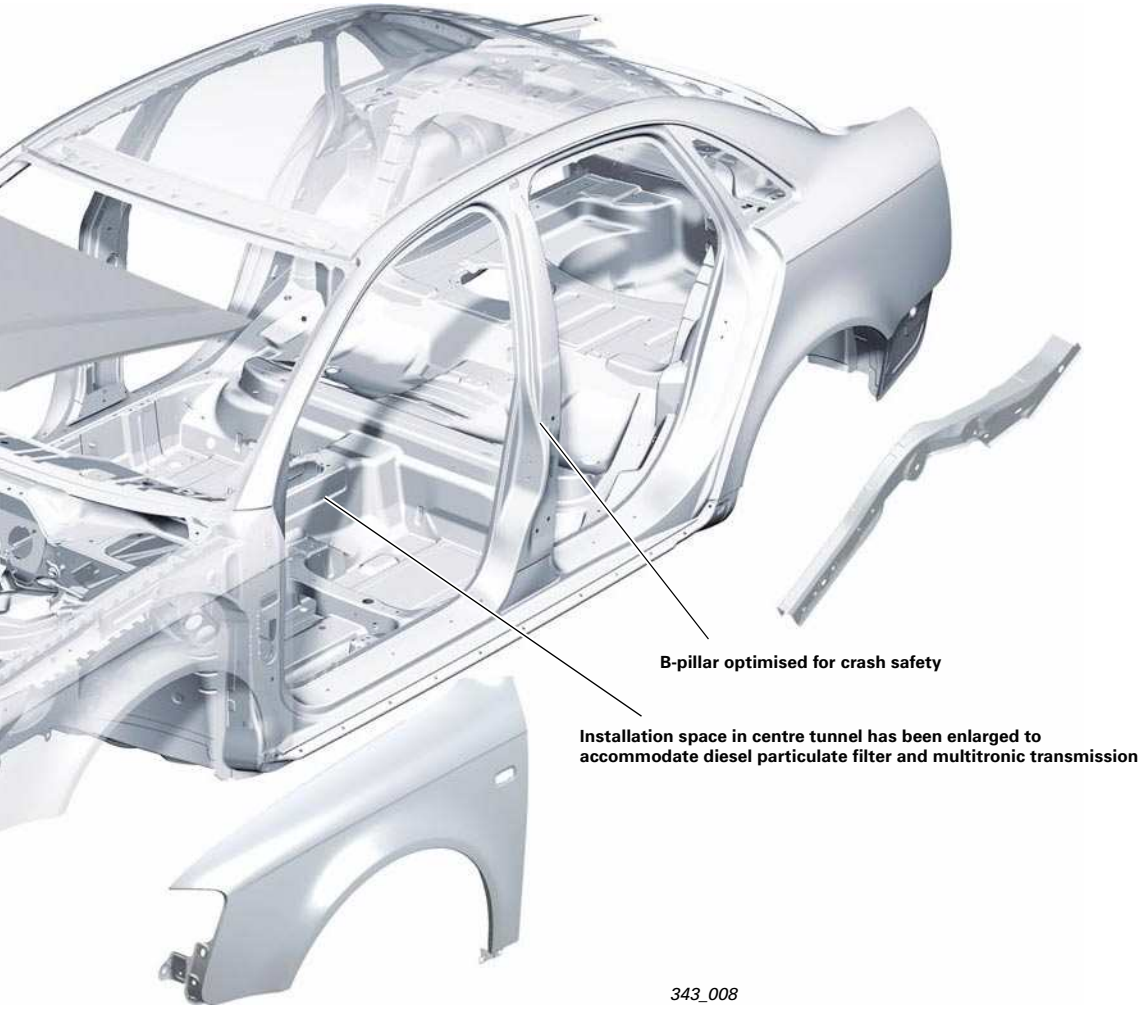


*343_008*

## Safety system

The development objective for the safety system in the Audi A4 ‘05 was clearly defined: The system must comply with all legislation now in effect and pass all current consumer tests, not to mention meeting Audi's stringent in-house requirements.
The safety system in the Audi A4 ´05 is based on the systems in the Audi A3 Sportback and Audi A6 ‘05.
The complete system, as well as the adopted components, were adapted to suit the Audi A4 ’05.

**Reference**

For further information about the safety system, refer to Self-Study Programmes
SSP 323 Audi A6 ´05 and
SSP 332 Audi A3 Sportback.

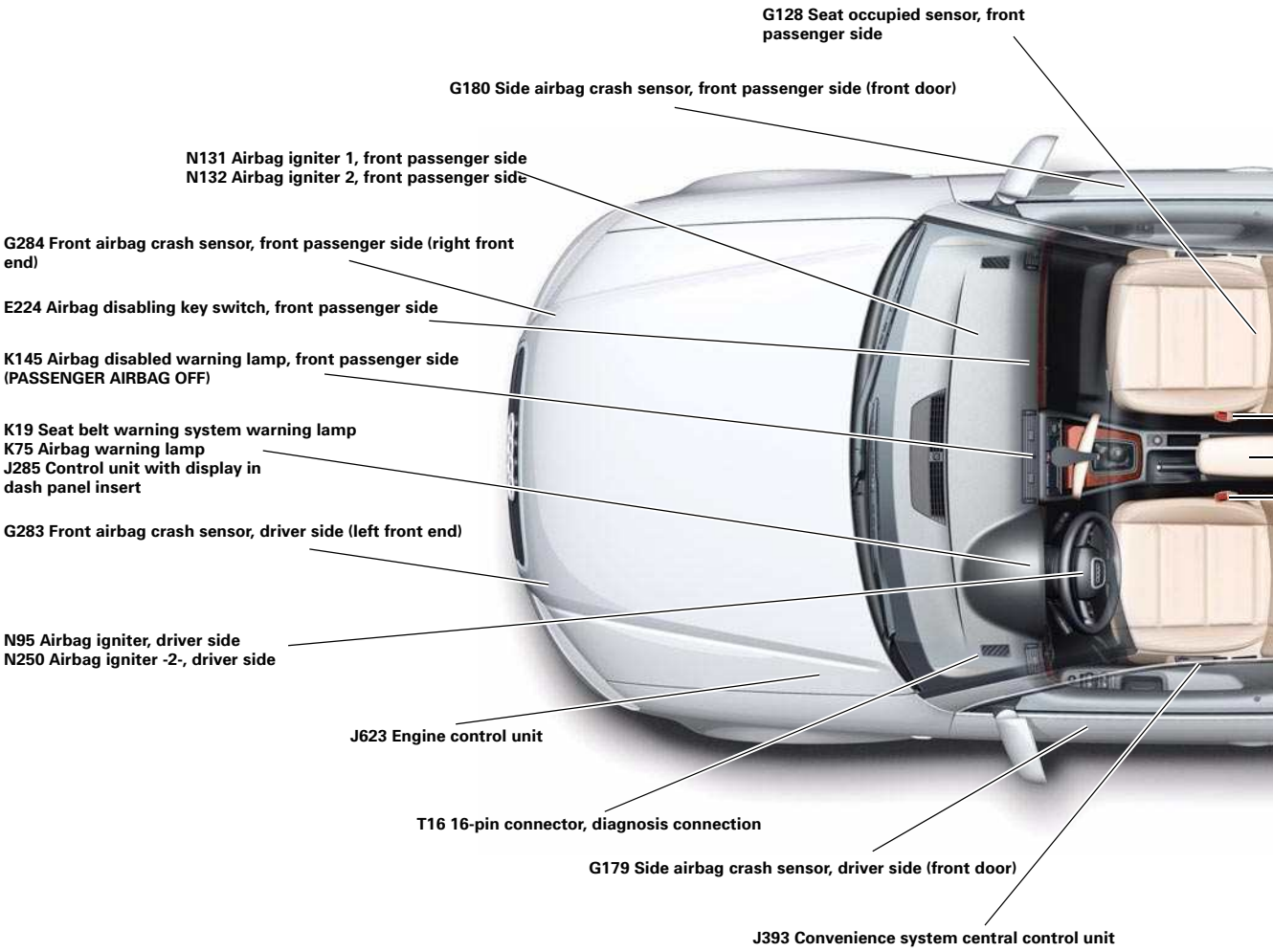

The safety system in the Audi A4 ´05 consists of the following components and functions:

- Airbag control unit
- Driver and front passenger airbags, two-stage
- Front side airbags
- Sideguards (head airbags)
- Side impact detection sensors on the C-pillar
- Side impact detection sensors in the front doors (pressure sensors)
- Crash sensors for intelligent head-on collision detection, so-called upfront sensors
- Front belt tensioners
- Seat belt reminders for driver and front passenger
- Switches in the front seat-belt buckles
- Seat occupied sensor, front passenger seat
- Active head restraints in the front seats
- Rear collision detection

Rear side airbags and deactivation of the front passenger front airbag by keyswitch with associated warning lamp are available as optional extras.

In some countries, such as the North American market, deviating specifications may apply due to different country-specific requirements.

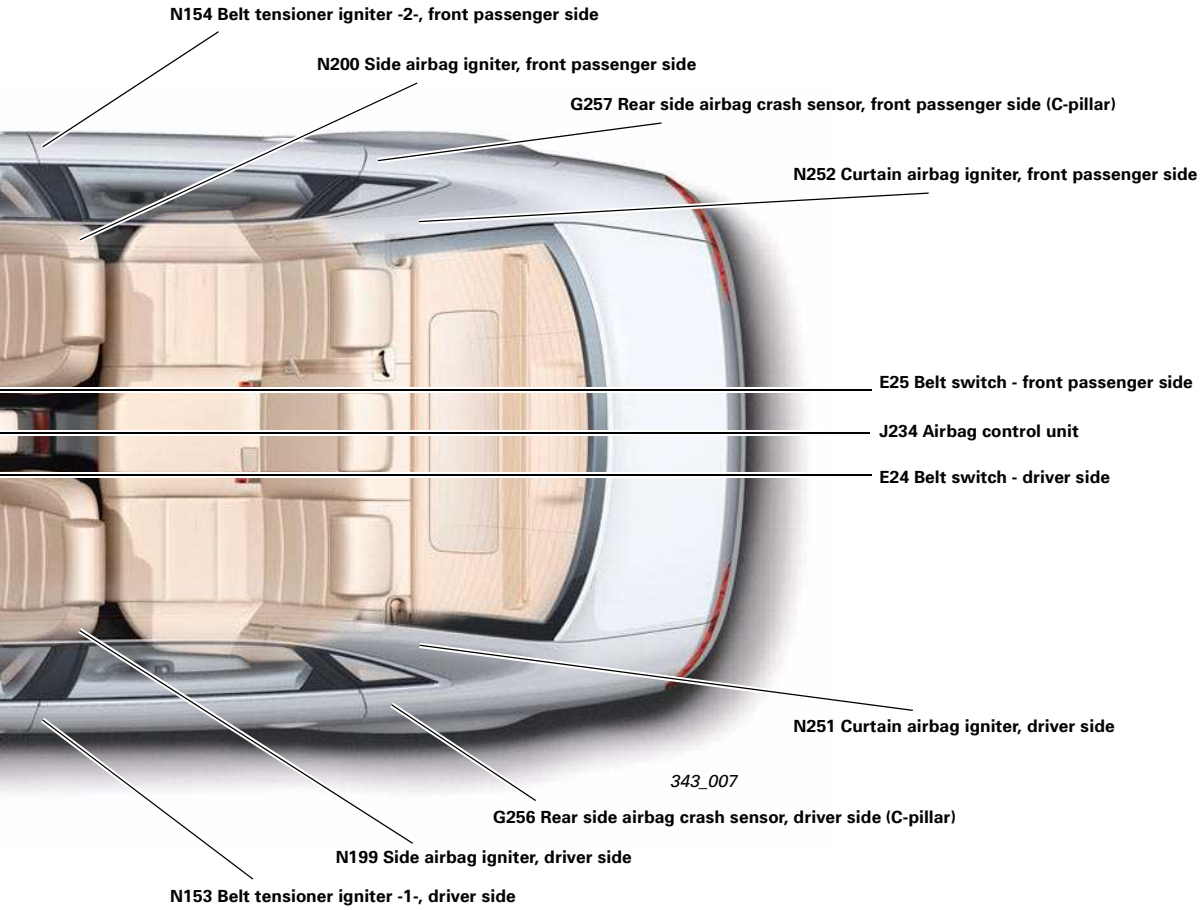

## K-wire switch VAS 6017 B

Like in the Audi A4 ´01, K-wire switch is also required in the Audi A4 ´05 for communication between the individual vehicle systems and the VAS testers.
Since the new control units are diagnosable via CAN only, the new K-wire switch VAS 6017 B must be used.
K-wire switch VAS 6017 B replaces switch VAS 6017 A.

## Communication

If communication is to be established between a control unit and a VAS tester, the tester sends the appropriate address word via the diagnosis CAN data bus.

The K-wire switch VAS 6017 B does not evaluate signals on the diagnosis CAN data bus, rather it relays them directly to the vehicle.

If the tester receives no response from the control unit on the diagnosis CAN data bus, its resends the appropriate address word, this time via the K-wire. The K-wire switch receives this information and relays it to the vehicle both on the K-wire and on the L-wire.

If the control unit sends its response on the L-wire, the K-wire switch detects this and establishes a direct connection between the L-wire of the vehicle and the K-wire of the tester.

As long as the tester is connected to a control unit via the L-wire, the contact to the K-wire of the vehicle is broken by the K-wire switch.

343_018

| PIN | Designation |
|---|---|
| 1 | Terminal 15 |
| 2 | Unassigned or assigned on US spec vehicles |
| 3 | Unassigned |
| 4 | Terminal 31 |
| 5 | Terminal 31 |
| 6 | Data bus, diagnosis CAN bus, CAN High |
| 7 | K-wire |
| 8 | Unassigned |
| 9 | Unassigned |
| 10 | Unassigned or assigned on US spec vehicles |
| 11 | Unassigned |
| 12 | Unassigned |
| 13 | Unassigned |
| 14 | Data bus, diagnosis CAN bus, CAN High |
| 15 | L lead |
| 16 | Terminal 30 |

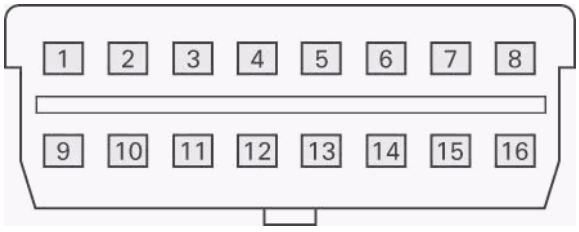


343_003

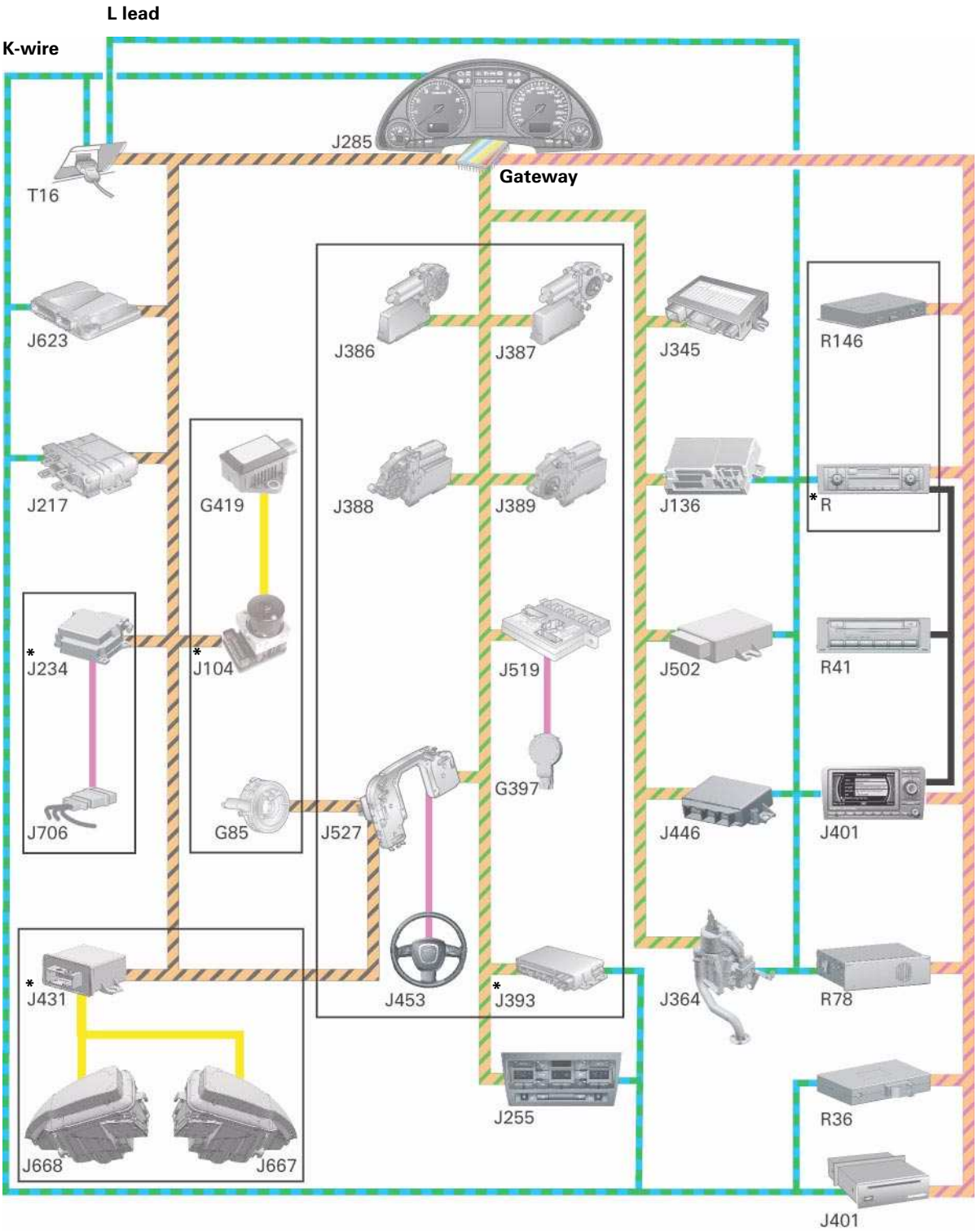


343_004

* These control units assume the diagnosis gateway functions.
They receive diagnosis data sent by the VAS testers on the diagnosis line and relay the data to the appropriate data bus.
The addressed control unit evaluates this information and responds on the data bus.
The control unit with diagnosis gateway function receives this data and sends it via the diagnosis line to the tester.

## Engines in the new Audi A4 '05

343_014

| Diesel engines | Power output | | Torque | Engine code | Emission category |
|---|---|---|---|---|---|
| Engine | kW | bhp | Nm | | |
| R4 1.9l 2V TDI-PD | 85 | 115 | 285 | BKE | EU IV |
| R4 2.0l 2V TDI-PD (DPF) | 103 | 140 | 310 | BPW | EU IV with DPF |
| R4 2.0l 4V TDI-PD | 103 | 140 | 310 | BLB | EU IV |
| R4 2.0l 4V TDI-PD | 100 | 136 | 310 | BNA | EU IV |
| V6 2.5l TDI-VEP | 120 | 163 | 350 | BDG | EU IV |
| V6 3.0l 4V TDI-CR | 150 | 204 | 450 | BKN | EU IV |
| V6 3.0l 4V TDI-CR (DPF) | 150 | 204 | 450 | BKN | EU IV with DPF |

343_015

| Petrol engines | Power output | | Torque | Engine code | Emission category |
|---|---|---|---|---|---|
| Engine | kW | bhp | Nm | | |
| R4 1.6l 2V | 75 | 102 | 148 | ALZ | EU IV |
| R4 1.8l 5V Turbo | 120 | 163 | 225 | BFB | EU IV |
| R4 2.0l 4V FSI | 110 | 150 | 200 | AWA | EU IV |
| R4 2.0l 5V MPI | 96 | 130 | 195 | ALT | EU IV |
| R4 2.0l 4V TFSI | 147 | 200 | 280 | BGB | EU IV |
| V6 3.0-litre 5V MPI | 160 | 218 | 300 | BBJ | EU IV |
| V6 3.2-litre 4V FSI | 188 | 255 | 330 | AUK | EU IV |
| V8 4.2-litre 5V MPI | 53 | 344 | 410 | BHF | EU IV |

## 2.0-litre pump injection engine

### New features

A balancer shaft module with two counter-rotating shafts provides an effective reduction in second-order engine oscillations.

The module is a built-up module consisting of two housing halves.
The balancer shafts rotate in bearing bushes and are driven by the crankshaft at double the crankshaft speed via a sleeve-type chain. The second shaft is driven in the opposite direction to the crankshaft via a pair of gears. This balancer shaft connects to a hexagon bolt at the front end and also drives the oil pump.

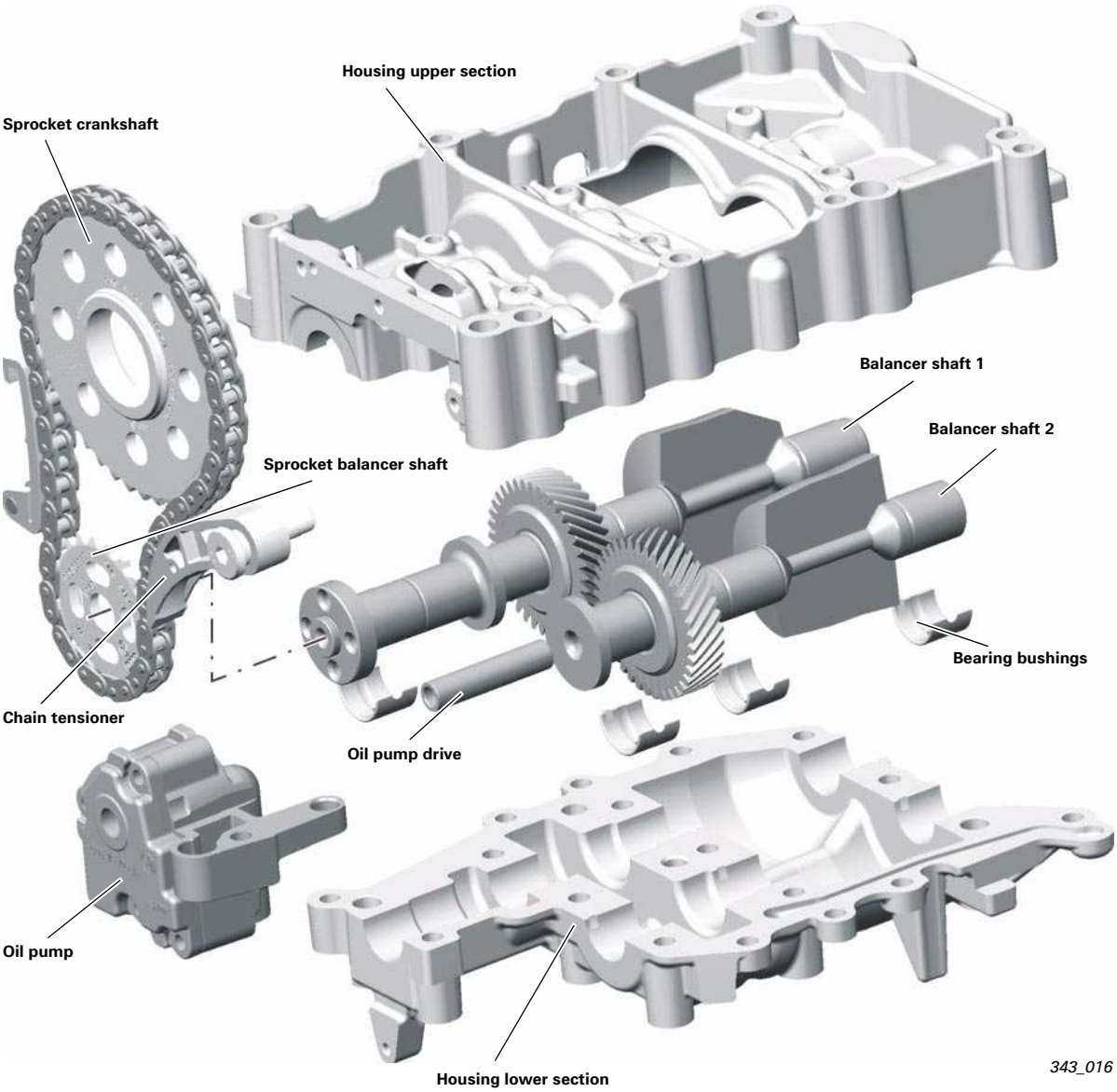

## Exhaust-gas recirculation cooler

A lower combustion temperature is required to reduce nitrogen oxide (NOx) emissions. This was achieved by using a variable, water-cooled exhaust gas recirculation cooler.

The exhaust gas recirculation cooler has a bypass valve, which is opened when the engine is cold. This allows the recycled exhaust gases to bypass the cooler and reach the intake end of the engine uncooled. As a result, the catalytic converter reaches its operating temperature more quickly. The valve is closed when the engine temperature exceeds 35°C, and the exhaust gases flow via the cooler.

The bypass valve is controlled by a solenoid valve via a vacuum box, whereby the valve is closed when the solenoid is de-energised and the exhaust gases flow via the cooler.

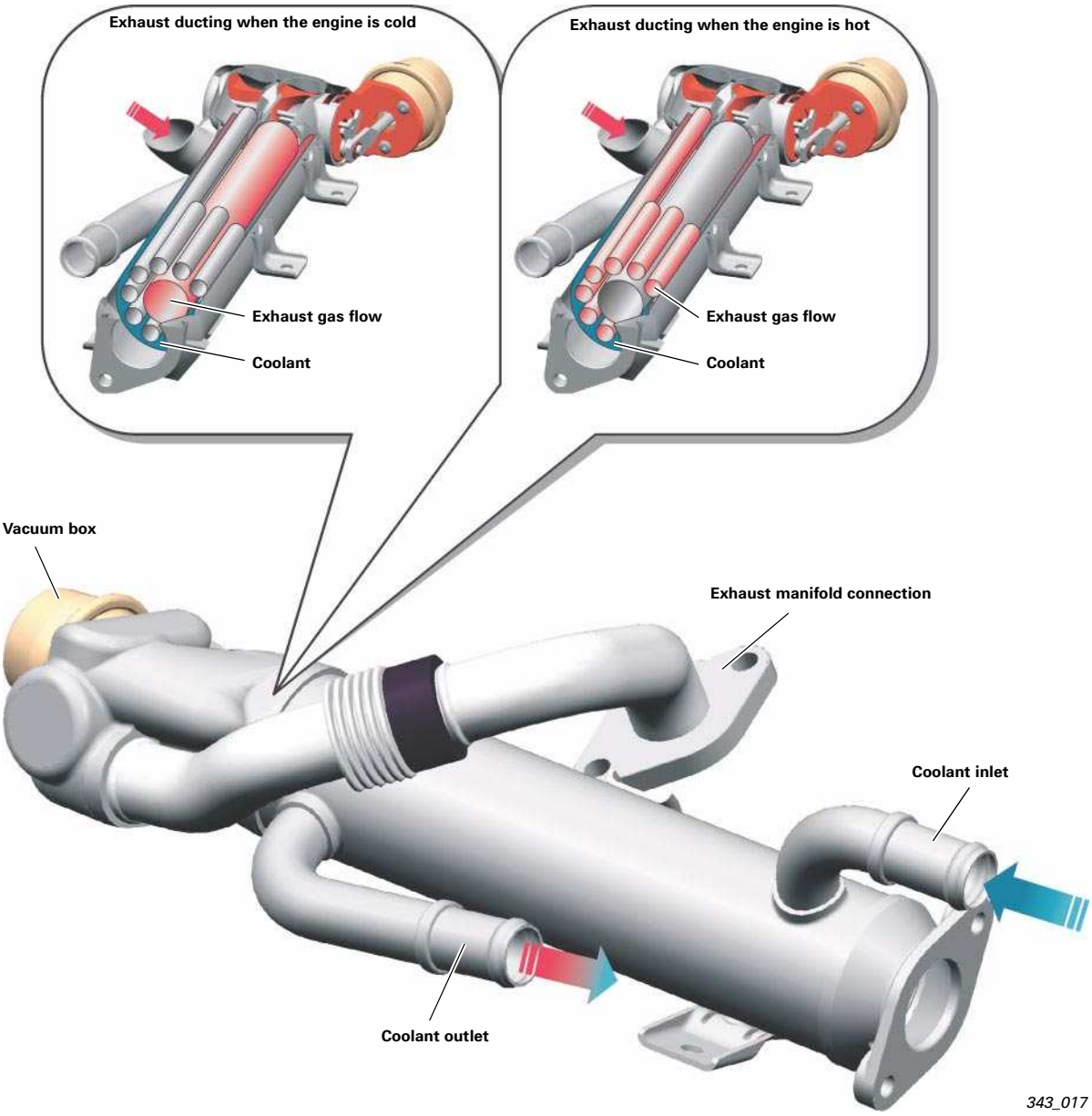


343_017

## Particulate filter in the 3.0-litre V6 common rail engine and in the 2.0-litre pump injection engine

(roll-out planned for 1st quarter 2005)

Audi uses regenerative, additive-free particulate filters.
The Catalysed Soot Filter (CSF for short) has filter coatings containing precious metals which act in two ways.

During the passive regeneration process, which takes place when the car is being driven at motorway speeds, temperatures of between 350 and 500 °C are reached. This causes the soot particulates deposited in the particulate filter to be converted into $CO^2$.

The process of active regeneration runs in the background and is triggered automatically by temperature-increasing measures.

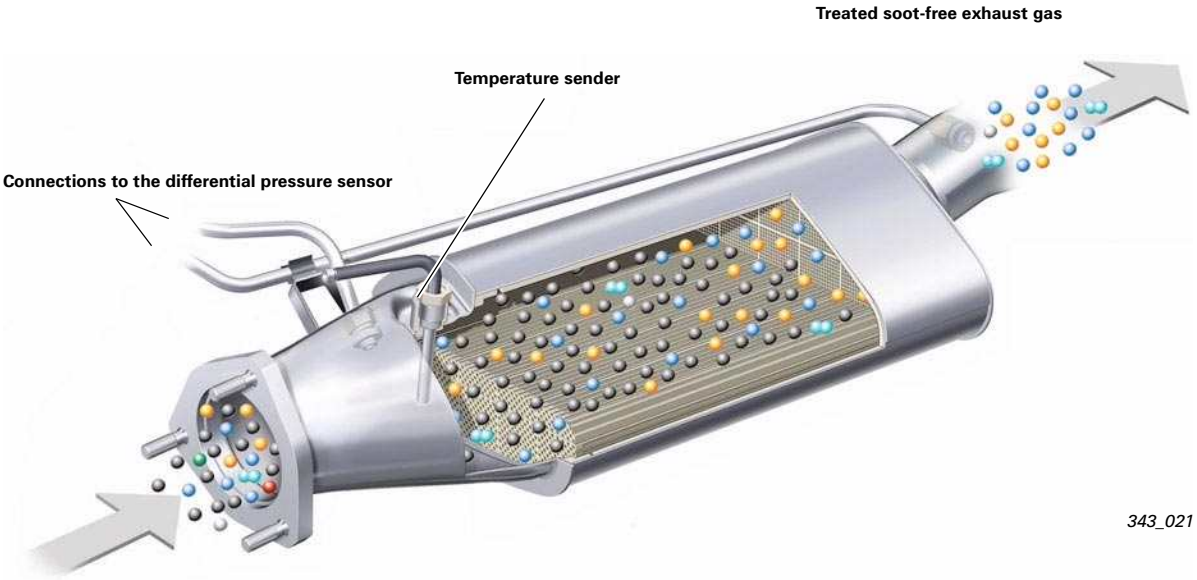


343_021

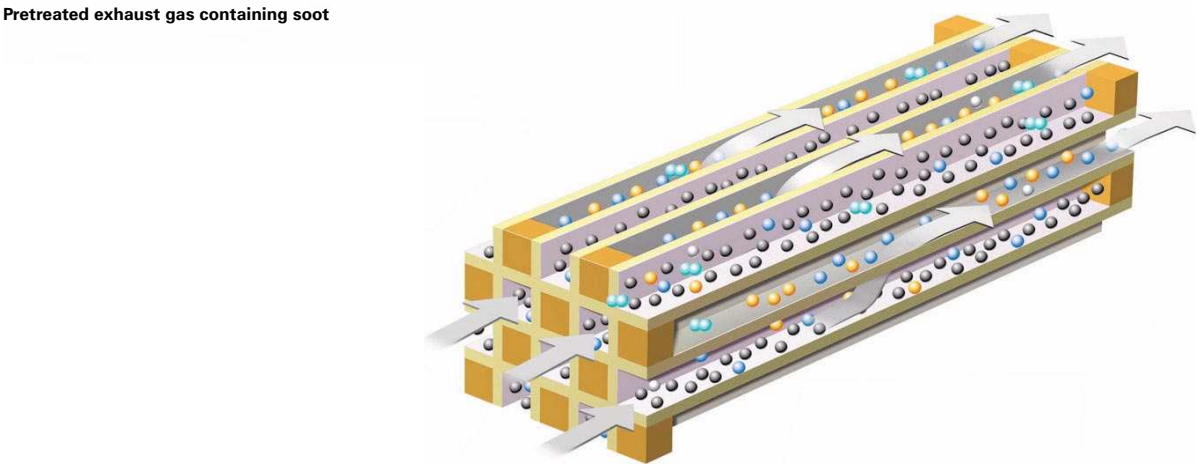


343_020

**Reference**

For information on design and function, refer to Self-Study Programme 325.

# Transmission

## Installed transmission

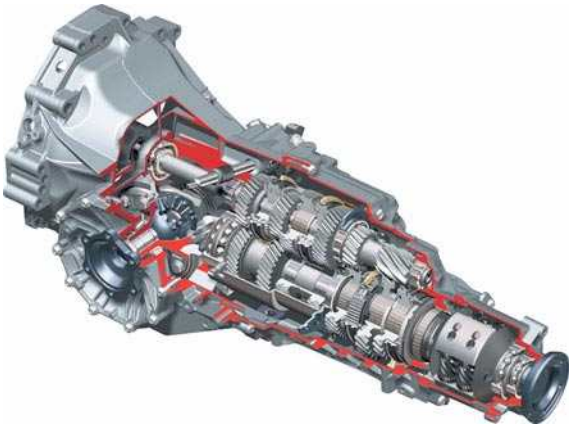

332_025

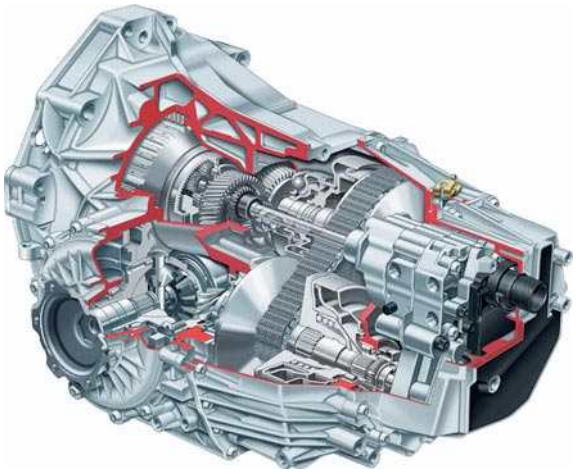

332_024

## The new A4 engine/ transmission variants

| | Engine | | | Transmission | | | |
|---|---|---|---|---|---|---|---|
| | | | | Manual gearbox | | Automatic transmission | |
| | Petrol engines | kW | bhp | front | quattro | front | quattro |
| | R4 1.6l 2V | 75 | 102 | ML285-5F | | | |
| | R4 2.0l 5V MPI | 96 | 130 | ML285-5F | | VL300-F | |
| | R4 1.8l 5V T MPI | 120 | 163 | ML285-5F | ML310-6Q | VL300-F | |
| | R4 2.0l 4V FSI | 110 | 150 | ML285-5F | | VL300-F | |
| | R4 2.0l 4V T FSI | 147 | 200 | ML310-6F | ML310-6Q | VL300-F | AL420-6Q |
| | V6 3.0l 5V MPI | 160 | 218 | ML310-6F | ML310-6Q | VL300-F | 5HP19Q |
| | V6 3.2l 4V FSI | 188 | 255 | | ML310-6Q | VL300-F | AL420-6Q |
| | V8 4.2l 5V MPI | 253 | 344 | | ML450-6Q | | AL420-6Q |
| | Diesel engines | | | | | | |
| | R4 1.9l 2V TDI-PD | 85 | 115 | ML285-5F | | | |
| | R4 2.0l 2V TDI-PD | 103 | 140 | ML310-6F | | VL300-F | |
| | R4 2.0l 4V TDI-PD | 103 | 140 | ML310-6F | | VL300-F | |
| | V6 2.5l TDI | 120 | 163 | ML350-6F | | VL300-F | |
| | V6 3.0l TDI-CR | 150 | 204 | ML450-6Q | | | AL420-6Q |

## General

Three chassis variants are available for the Audi A4 `05. In the case of the sports suspension, ride height has been lowered by 20mm compared to the standard suspension system. For the heavy-duty suspension, ride height was raised by 13 mm. Both suspensions use different tuning parts (springs, shock absorbers, anti-roll bars). In the case of the heavy-duty suspension system, additional covers are fitted to the track rod and the trapezoidal link on the rear axle to provide effective stone chip protection.

## Front suspension

The proven four-link front suspension is also used in the new Audi A4 `05 (see SSP 161).

The following new developments will be introduced:

**Subframe**
The geometry of the subframe was modified by lowering the engine position on the 4-cylinder TDI engines.

**Anti-roll bars**
Geometric modifications were necessary due to the different engine position.

**Guide link**
The guide link bearing connecting the link and subframe was redesigned.

**Drive shafts**
Vehicles with the AL420 gearbox have a newly developed triple roller joint drive shaft with a smaller triple roller joint.
A new special tool T40084 was developed for installing/removing the new triple roller joint.

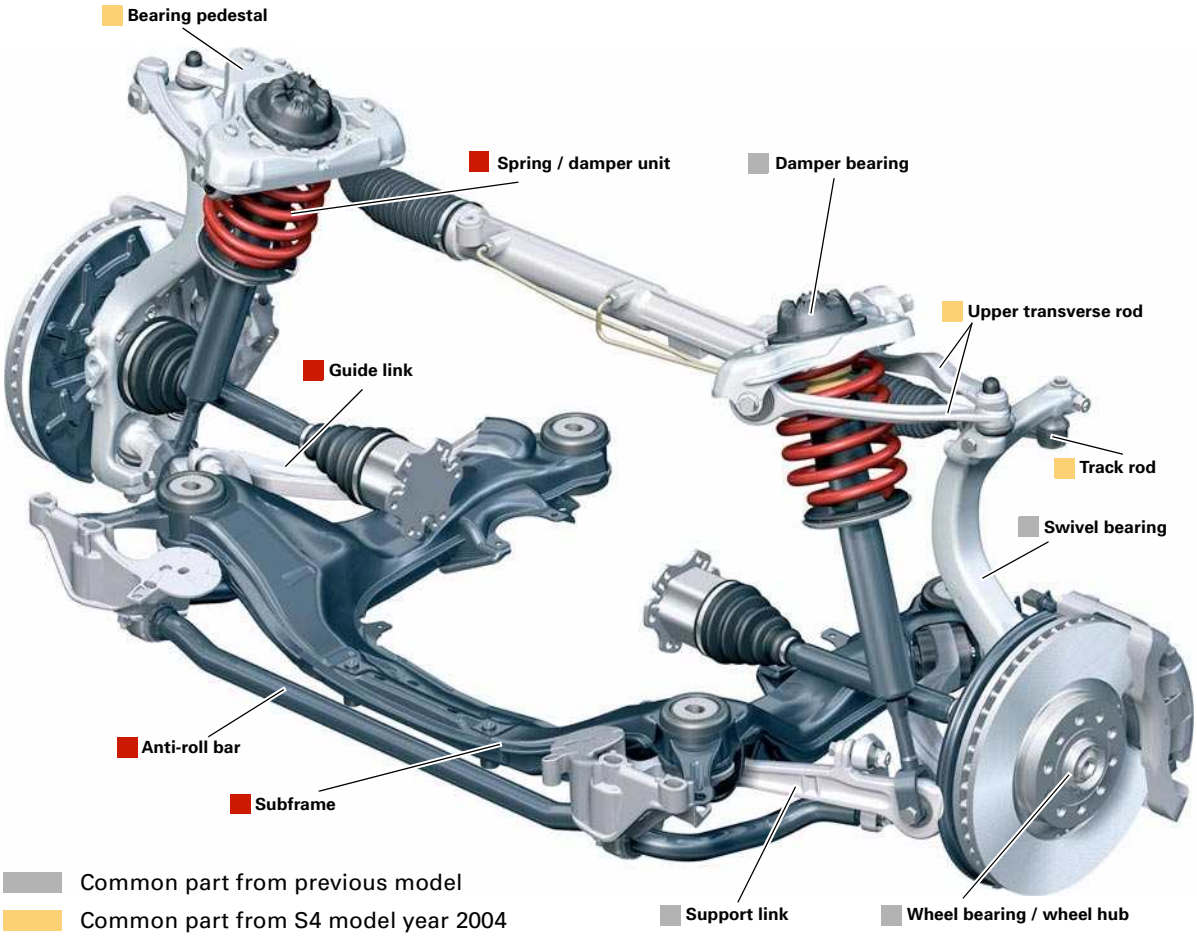


Common part from previous model
Common part from S4 model year 2004
New part

343_012

## Rear suspension

The rear suspension is an advancement on the trapezoidal-link suspension familiar from the Audi A4 `04.
In particular the bearing set-ups have been modified. Several bearing elements from the Audi A6 `04 are used.

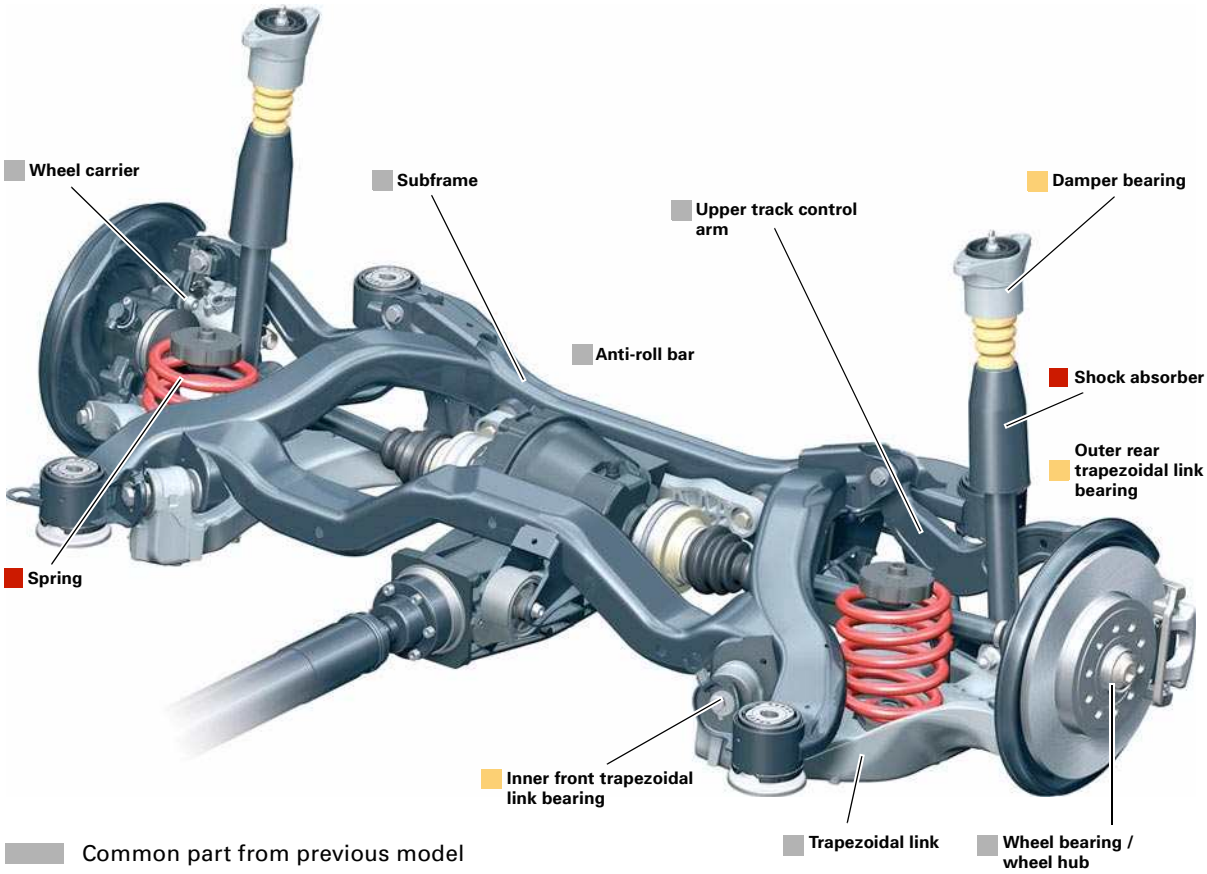


Common part from previous model
Common part from A6 model year 2004/2005
New part

343_013

**Reference**

For information on design and function, refer to Self-Study Programme 161.

## Suspension alignment/setting

The alignment and setting procedures, as well as the setting positions on the vehicle, are unchanged from the previous model.

## Brake system

The A4 `05 models with 120 and 147 kW four-cylinder engines have 16-inch brake systems. The Teves FNRG 60 16-inch frame-design caliper brake is already being used in the A6 and A8. This system was optimised for the A4 and specially adapted for the new vehicle.
The CII-41 floating caliper brake on the rear axle originates from the S4 `04. The brake was adapted for use in the A4 `05 by reducing the piston diameter to 41mm, and a solid brake disc is used.
The brake control mechanism is unchanged from the previous model.

| Units | Front suspension | | Rear suspension | |
|---|---|---|---|---|
| | Brake disc (Ø x thickness) | Brake caliper | Brake disc (Ø x thickness) | Brake caliper |
| 1.6-litre 75 KW | 280x22 vented | TRW C54 | 245x10 solid | TRW C38 |
| Four-cylinder 85 - 103 kW | 280x25 vented | ContiTeves FN3-57 15" | 245x10 solid | TRW C38 |
| 1.8-litre 120 kW | 312x25 vented | ContiTeves FN3-57 15" | 245x12 solid | TRW C38 |
| All six-cylinder 2.0-litre TFSI | 320x30 vented | ContiTeves FNRG-60 16" | 288x12 solid | TRW CII-41 16" |
| 4.2-litre V8 | 345x30 vented | ContiTeves FNRG-60 17" | 300x22 vented | TRW CII-43 17" |

## ESP

As previously in the A6 `04, the new-generation system Bosch 8.0 ESP system is also featured on the A4 `05 (see SSP 324). The fundamental difference in design between the A4 and A6 systems is the use of passive wheel speed sensors.

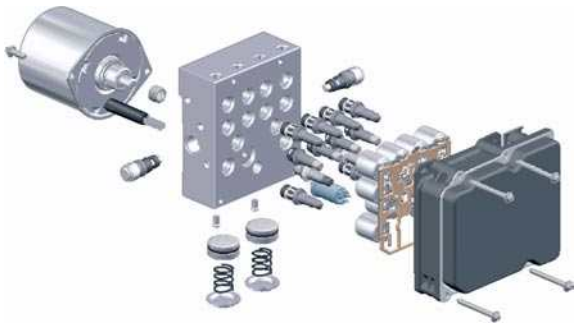

343_027

In addition to the familiar subfunctions, the A4`06 has a new function called Hydraulic Fading Compensation (HFC). By comparing the brake pressures at which ABS system begins to operate, the system can detect brake fading at an early stage. The greater the fading, the higher the brake pressure needed to activate the ABS system.
If fading is detected, ESP raises the overall pressure in the system by building up additional brake pressure. The driver does not need to apply more pressure to the brake pedal, in order to achieve the same braking effect as with fading-free brakes.

The "hill-holder" function implemented for the A6 `05 models with multitronic transmission is not available for the A4 `05 from launch.

## Steering system

A modified hydraulic rack and pinion steering system is used in the A4 `05. In particular, the turn-in precision and the feedback on roll steer effect were optimised compared to the previous model. The steering valve characteristic was adapted to the new axle kinematics. Turn-in was improved through the use of stiffer track rods.
For the first time in this class, the "Servotronic" function is standard for all 6-cylinder vehicles and the 2.0-litre TFSI. "Servotronic" is optional for the other 4-cylinder models with power outputs of 96 kW and higher.
The Servotronic II system familiar from the A6 and A8 is used (for information on mode of operation, see SSP 285).
Different characteristic curves for steering wheel torque and pressure as a function of vehicle speed are implemented in the steering system. The systems on the S4 `05 and A4 `05 have different characteristic curves.
The Servotronic solenoid valve is now connected directly to the solenoid valve. The second connector in the wheel housing was retained for installation reasons.

The steering column was adopted from the previous model, and the steering wheels from the A3 ´04 are used.

343_029

## Wheels and tyres

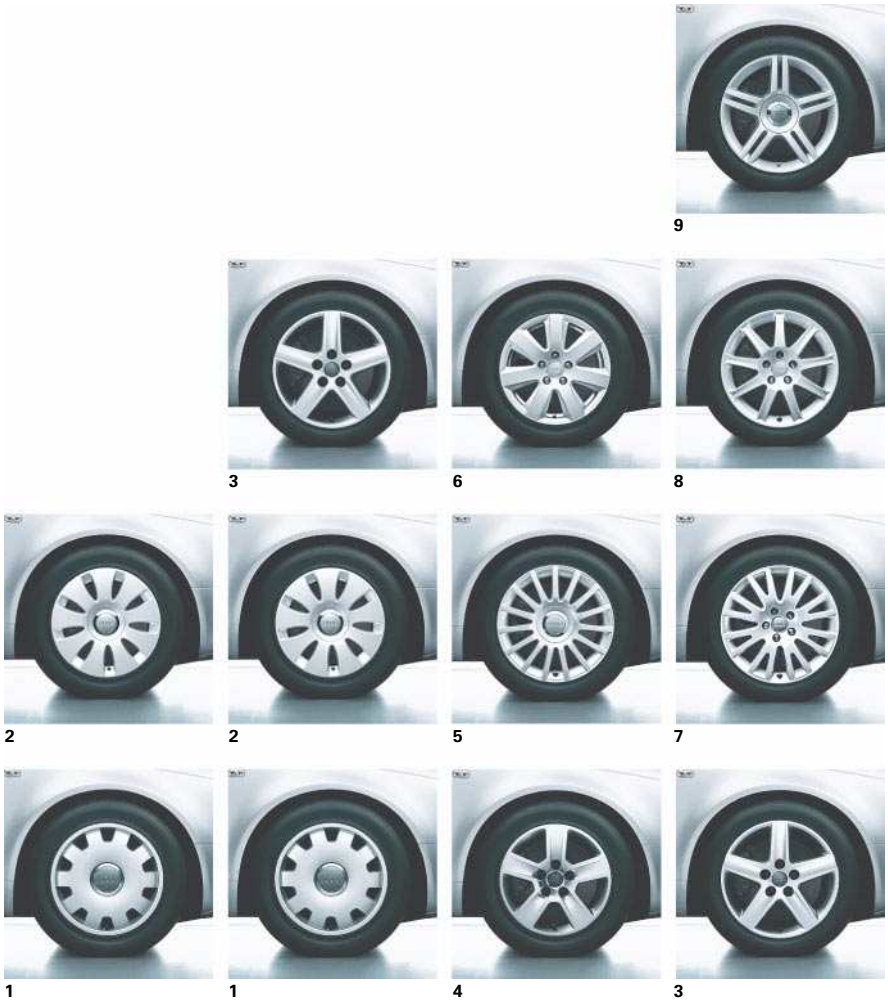


343_023

| Basic wheels | Winter wheels | Optional wheels | |
|---|---|---|---|
| For 1.6-litre and 1.9-litre TDI versions:<br>**Steel wheel with full sized wheel trim 7Jx16** (1)<br>with 205/55R16 tyres | **Steel wheel 7Jx16** (1)<br>with 205/55R16 tyres | **Cast aluminium wheel 7Jx16** (4)<br>with 205/55R tyres;<br>2.0T and 6-cylinder with 215/55R16 tyres | **Cast aluminium wheel 7.5Jx16** (3)<br>with 235/45R17 tyres; |
| 2.0-litre engines and larger:<br>***Cast aluminium wheel 7Jx16** (2)<br>with 205/55R tyres;<br>2.0T and 6-cylinder with 215/55R16 tyres | **Cast aluminium wheel 7Jx16** (2)<br>with 205/55R16 tyres | ***Cast aluminium wheel 7Jx16** (5)<br>with 205/55R tyres;<br>2.0T and 6-cylinder with 215/55R16 tyres | **Cast aluminium wheel 7.5Jx17** (7)<br>with 235/45R17 tyres |
| | **Cast aluminium wheel 7.5Jx17** (3)<br>with 235/45R17 tyres; | **Lightweight forged aluminium wheel 7.5Jx16** (6)<br>with 215/55R16 tyres | **Cast aluminium wheel 7.5Jx17** (8)<br>with 235/45R17 tyres |
| | | | ***Cast aluminium wheel 7.5Jx17** (9)<br>with 235/45R17 tyres |

* new wheels

The A4 `05 is equipped as standard with "Tire Mobility System". As an option, the customer can choose between a spare wheel fitted with a ready-for-road tyre or a temporary spare wheel.

The PAX run-flat system with one all-season wheel is a new option for the A4 ‘05 (design and function see SSP 285).

343_036

## Tyre pressure monitoring system

The tyre pressure monitoring system was adopted from the previous model. The system is now operated using the 'Reset' key and the rocker switch on the windscreen wiper stalk (see operating instructions).

## New features of the air conditioning system in the Audi A4

### General

The air conditioning concept familiar from the Audi A4 ´01 was largely adopted into the Audi A4 ´05. However, the software has been expanded to allow the air-conditioning parameters to be adapted to suit the individual preferences of the vehicle occupants. As a result, several functions can now be adjusted more finely. All adjustments can be made in the service workshop using the VAG diagnostic tester VAS 5051/5052. Air outlet temperatures, for example, can be increased or decreased slightly to perceived temperatures comfortable to the vehicle occupants. Partial air flows can also be directed to various outlets.

**Reference**

For general information about the design and function of the air conditioning system in the Audi A4 ´05, please refer to Self-Study Programme 254,
Audi A4 ´01 - Technology.

343_030

### Adaption

The so-called physiological adaption of the air conditioning system in the new Audi A4 ‘05 is performed using the additional adaption channels. Incidentally, ' physiology' is a medical term describing how stimuli are perceived by the cardiovascular system and how humans feel.
Adaption "1" on channel 10 directs a minimum air flow to the windscreen inner surface via the defroster vent. This prevents fogging of the windscreen. Such adjustments can also be made for the footwell outlets. The adaption function also allows nominal out-flow temperature and fresh air blower speed to be adjusted more finely, and provides extended air recirculation independent of the signal from the air quality sensor G263.

## Overview of the adaption channels

| Adaption channel | Description |
|---|---|
| 01 | Offset added to the desired temperature at the start of overheating. |
| 02 | Offset which remains added to the nominal temperature after the end of the overheating phase. |
| 03 | Bidirectional engine control unit interface: Adaption "1" means that compressor shut-off/reduction signals from the engine control unit are ignored. |
| 04 | Engine compressor speed ratio |
| 06 | "0" Decision on auxiliary heating/auxiliary ventilation is made by the air conditioning system<br>"1" Previously selected operating mode is activated independently of the air conditioning system |
| 07 | "0" After terminal 15 OFF, the auxiliary heating / auxiliary ventilation function runs until the timer expires<br>"1" Auxiliary heating/auxiliary ventilation mode is also deactivated at terminal 15 OFF |
| 08 | Adjustment of fresh air blower output reduction during a telephone conversation |
| 09 | Adjustment of undervoltage shut-off for the auxiliary ventilation function |
| 10 | Minimum air flow rate to defroster vent<br>"0" Yes<br>"1" No |
| 11 | Nominal out-flow temperature<br>"0" Mixed air characteristic, depending on country code<br>"1" Adaption for "Rest of World", warmer<br>"2" Adaption for "Rest of World"<br>"3" USA / Japan<br>"4" Cooler than USA / Japan |
| 12 | Fresh air blower<br>"0" Fresh air blower characteristic is set automatically via the country code<br>"1" Less air in relation to fresh air blower characteristic via country code<br>"2" Fresh air blower characteristic is set automatically via country code<br>"3" More air in relation to fresh air blower characteristic via country code |
| 13 | Transient response during heater operation<br>"0 " Default setting<br>"1" Cooler, Scandinavia |
| 14 | Physiological adaption<br>"0" Default setting<br>"1" Warmer<br>"2" Default setting<br>"3" Cooler |
| 15 | Recirculated air / fresh air handling<br>"0" Default setting (familiar recirculated-air handling setting)<br>"1" New recirculated air handling setting (extended air recirculation)<br>"2" Default setting (familiar recirculated-air handling setting) |
| 16 | Minimum air flow to footwell during air conditioner operation<br>"0" No<br>"1" Yes |

## Bus topology

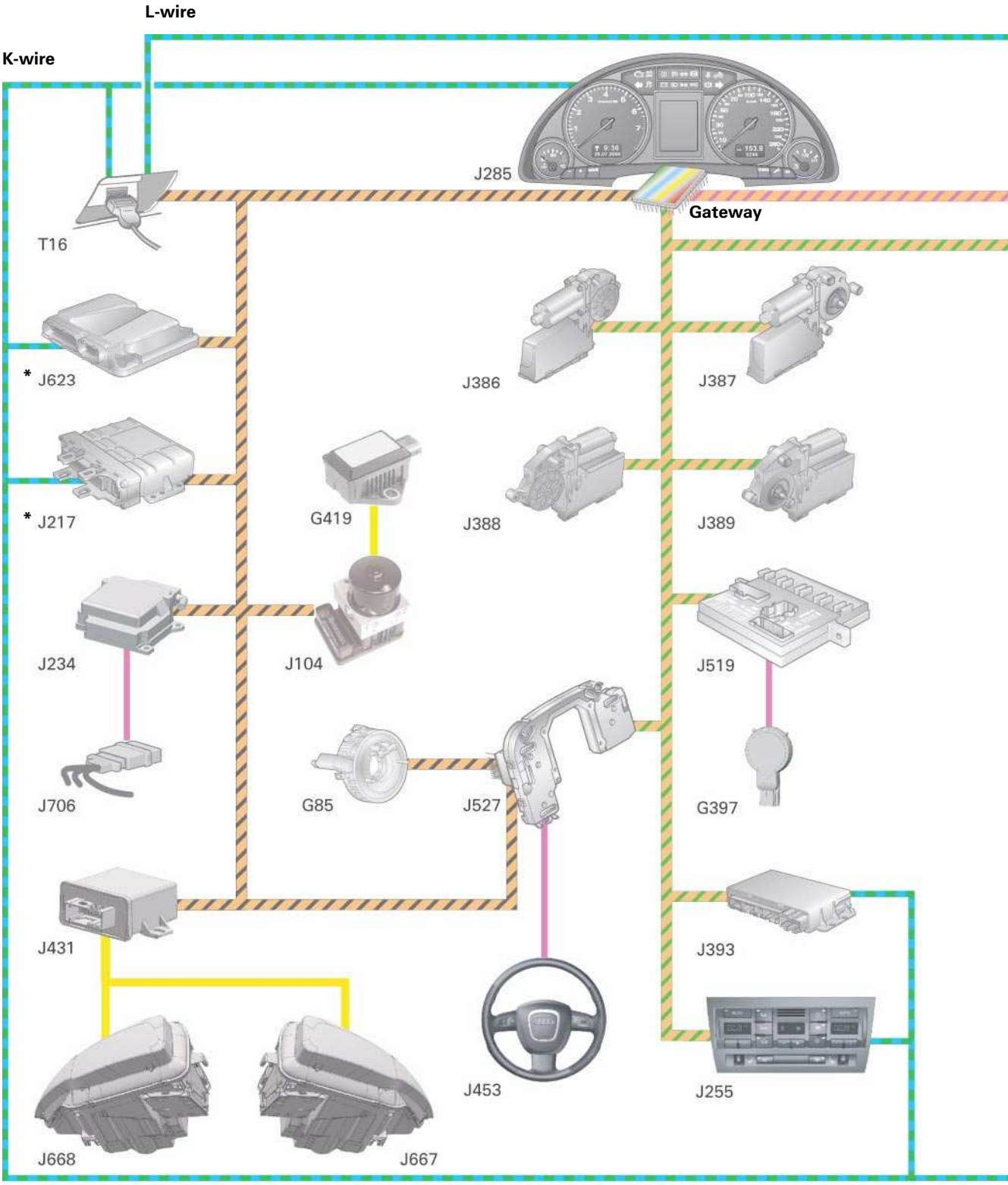


* The K-wire is not available in all engine and gearbox control units. New engine and transmission units coming onto the market can only be diagnosed via CAN bus.

The bus topology - as with the complete electrical system - is heavily based on the Audi A4 '01. As before, the gateway is integrated in dash panel insert J285. To diagnose on the driveline CAN bus the control units adopted from the Audi A3 and Audi A6, the driveline CAN bus is connected directly to the diagnosis plug. The control units on the convenience CAN bus and on the infotainment CAN bus are also diagnosed via the K and L wires (see also chapter "Diagnosis", page 10).

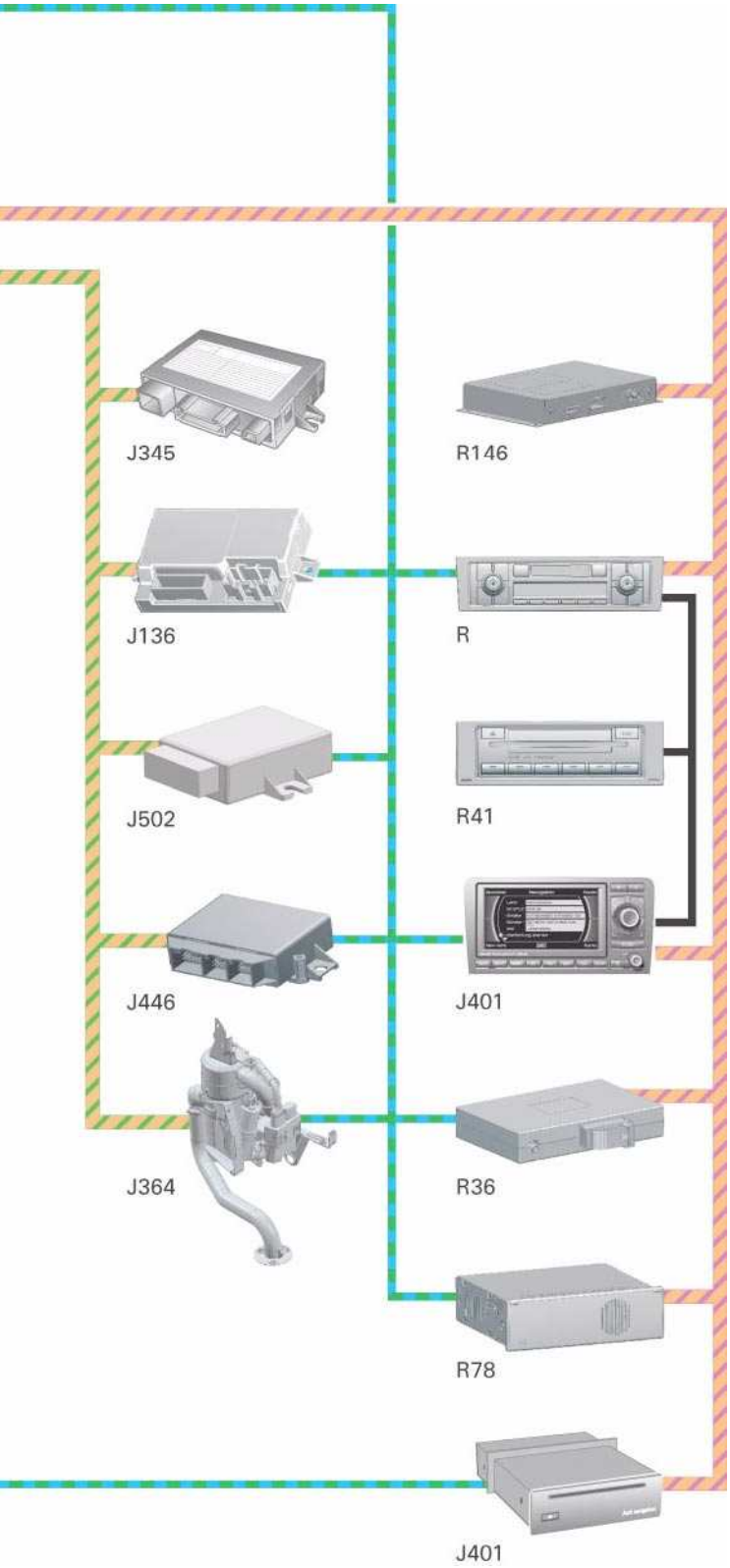


343_001

**Legend**

G85 Steering angle sender
G397 Rain and light detector sensor
G419 ESP sensor unit
J104 ABS with EDL control unit
J136 Seat and steering column adjustment control unit with memory
J217 Automatic gearbox control unit
J234 Airbag control unit
J255 Climatronic control unit
J285 Control unit with display in dash panel insert
J345 Trailer detection control unit
J364 Additional heater control unit
J386 Driver door control unit
J387 Front passenger door control unit
J388 Rear left door control unit
J389 Rear right door control unit
J393 Convenience system central control unit
J401 Operating electronics control unit, navigation
J431 Headlight range control, control unit
J446 Parking aid control unit
J453 Multi-function steering wheel control unit
J502 Control unit for tyre pressure monitoring
J519 onboard power supply control unit
J527 Steering column electronics control unit
J623 Engine control unit
J667 Power output module for left headlight
J668 Power output module for right headlight
J706 Seat occupied recognition control unit
R Radio
R36 Telephone transmitter and receiver unit
R41 CD changer
R78 TV tuner
R146 Satellite radio (SDARS)

Driveline CAN bus:500 kBaud
Convenience CAN bus:100 kBaud
Infotainment CAN bus:100 kBaud
LIN
K-wire
L-wire
Panasonic bus
Various subbus systems

## Control unit with display in dash panel insert J285

343_002

### Basic functions

The dash panel insert in the Audi A4 '05 is based on the dash panel insert from the Audi A4 '01. The basic functions of the dash panel insert are unchanged. The innovations were necessary due to the adoption of components and units from the Audi A6 '05 and Audi A3 '04.

The dash panel insert also incorporates:

- the dash panel insert
- a gateway for linking the three data buses - driveline CAN bus, convenience CAN bus and infotainment CAN bus
- the immobiliser

### Driver information system

The driver information system basically corresponds to the system used in the A3 Sportback.

A fuel tank symbol has been added for displaying the vehicle range.

The symbol is for differentiation purposes, since the function "Distance" has also been added to the previous displays.

**Range**

343_031

**Distance**

343_032

Diesel particulate filter warning

343_033

Audi adaptive light faulty:
The vehicle is equipped with the optional adaptive light and a fault is present in the headlight range control, control unit J431 (see SSP 326 page 34).

343_034

In the case of multistep automatic transmissions, the currently selected gear is displayed in addition to the D or S symbol in Tiptronic mode

343_035

## Engine-specific differences

Depending on what engine is fitted in the vehicle, there are differences between detail functions in the dash panel insert. A distinction is made between engines previously available in the Audi A4 ‘01 and engines introduced since the
Audi A3 ‘04 or the Audi A6 ‘05.

| | "old engines" | "new engines" |
|---|---|---|
| **Engine** | 1.6l 75kW (102 bhp)<br>2.0l 96 kW (130 bhp)<br>2.0l FSI 110 kW (150 bhp)<br>1.8l T 120kW (163 bhp)<br>3.0l 160kW (220 bhp)<br>1.9l TDI 85kW (115 bhp)<br>2.5l TDI 120kW (163 bhp) | 2.0l T, 147kW (200 bhp)<br>3.2l FSI 188 kW (255 bhp)<br>4.2l 253 kW (344 bhp)<br>2.0l TDI 103 kW (140 bhp)<br>3.0l TDI 150kW (204 bhp) |
| **Extended service intervals** | Generation 2:<br><br>The computation software is integrated in the dash panel insert | Generation 3:<br><br>The computation software is integrated in the engine control unit |
| | In both cases, the oil level/oil temperature sender G266 is connected to the dash panel insert. Depending on service interval extension, the data is used differently in data blocks 6 and 7. For a detailed description, refer to the description of the Guided Fault Finding function. | |
| **Coolant temperature** | Two coolant temperature senders are fitted: The coolant temperature is measured by the coolant temperature sender G62 and transferred to the engine control unit. From here, the value is sent via CAN to the air conditioner control unit.<br><br>The coolant temperature sender G2 is connected to the dash panel insert. The value is used by the display in the dash panel insert and for computing the high-temperature warning, and is also sent from here via CAN to the air conditioner control unit. | Only one coolant temperature sender is fitted: The coolant temperature is measured by the coolant temperature sender G62 and transferred to the engine control unit. From here, the value is sent via CAN to the dash panel insert and the air conditioner control unit.<br><br>All high-temperature warnings are sent likewise from the engine control unit via CAN to the dash panel insert or air conditioner control unit |

## New features of the convenience electronics

### Auto Lock

The Auto Lock function locks all doors and the boot lid when the vehicle exceeds a speed of approximately 15 kph. Removing the ignition key unlocks the vehicle automatically.

The vehicle can also be unlocked by the driver if the 'Open' function on the central locking switch (**1**) or if one of the door opening levers (**2**) is operated.

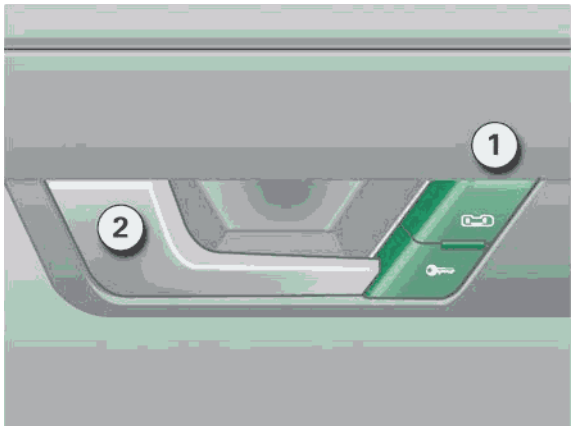


*343_005*

### Safety central locking

The safety central locking system offers the possibility to unlock only the driver's door and the fuel filler flap. The vehicle otherwise remains locked. This is done by turning the key once in the 'Open' direction or by pressing the 'Open' button on the radio-operated remote control.

If all doors, the boot lid and the fuel filler flap are to be unlocked, this is done by
turning the key twice within 5 seconds in the 'Open' direction or by pressing the 'Open' button on the radio-operated remote control twice within 5 seconds.

*326_138*

The "Auto Lock" and "safety central locking" functions can be activated and deactivated in the convenience system central control unit J393 using the diagnostic tester VAS 5051 (under menu item "Code control unit").

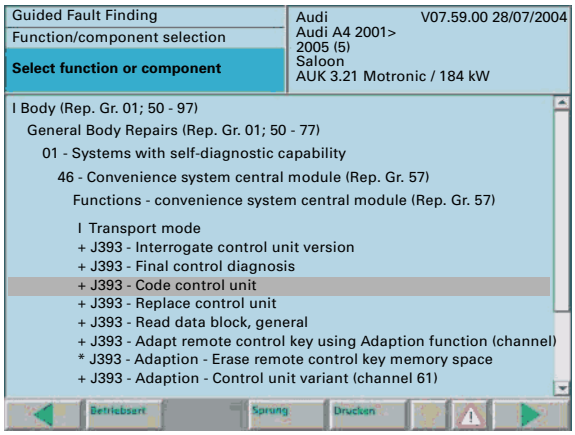


*343_006*

# Self-study programmes on the Audi A4 '05

343_041

**SSP 161 The Audi A8**

– The suspension

Order number: 440.2809.79.20

**SSP 254 Audi A4 '01 - Technology**

– The dash panel insert
– The chassis
– Heating and air conditioning

Order number: 040.2810.73.20

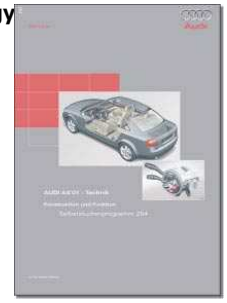

343_042

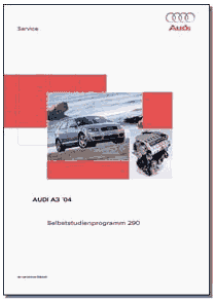


332_085

**SSP 290 Audi A3 '04**

– Introduction
– The body
– The engine
– The transmission
– The chassis
– The electrical system
– Heating/air conditioning
– Service

Order number: A03.5S00.01.20

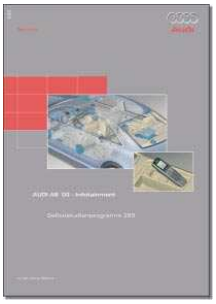

343_037

**SSP 293**
**Audi A8 '03 - Infotainment**

– Infotainment
– The sound system
– The radio module
– Navigation

Order number: 000.2811.13.20

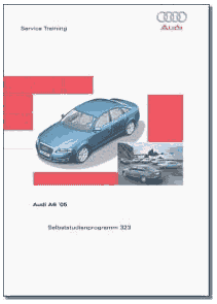


343_043

**SSP 323 Audi A6 '05**

– Occupant protection

Order number: A04.5S00.06.20

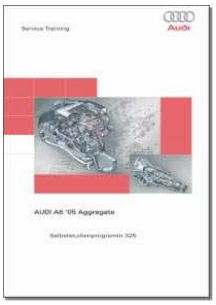


343_038

**SSP 325 Audi A6 '05 Units**

– The engine
– The transmission

Order number: A04.5S00.08.20

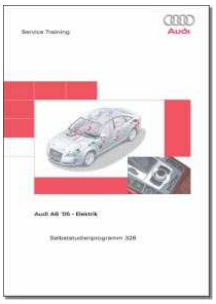


343_039

**SSP 326 Audi A6 '05 Electrical system**

– Convenience electrics
– Infotainment

Order number: A04.5S00.09.20

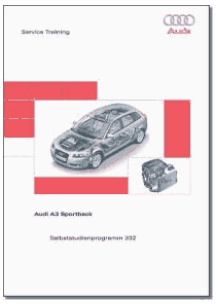


343_040

**SSP 332 Audi A3 Sportback**

– The body
– Occupant protection
– The engine
– The chassis
– Convenience electronics
– Infotainment

Order number: A04.5S00.11.20

Vorsprung durch Technik **www.audi.de**

343

**All rights reserved.**
**Technical specifications subject to change without notice.**

**Copyright**
**AUDI AG**
**I/VK-35**
**Service.training@audi.de**
**Fax +49-841/89-36367**

**AUDI AG**
**D-85045 Ingolstadt**
**Technical status: 05/04**

**Printed in Germany**
**A04.5S00.12.20**