SPECIFICATIONS

FASTENER TIGHTENING SPECIFICATIONS

Fastener Tightening Specifications

Application	Specification	
	Metric	English
Air Distribution Duct Retaining Screws	1.8 N.m	16 lb in
Bose(R) Module Retaining Bolts	2.5 N.m	22 lb in
Brake Booster Nuts	29 N.m	21 lb ft
Center Air Outlet Retaining Screws	1.7 N.m	15 lb in
Cigar Lighter Retainer	2.8 N.m	25 lb in
Clutch Pedal Bracket Mounting Nuts	27 N.m	20 lb ft
Console Door Hinge Retaining Nuts	2.4N.m	21 lb in
Console Door Retaining Screws	1.9N.m	17 lb in
Console Retaining Nuts	10 N.m	89 lb in
Cruise Control Release Switch Bracket Bolts	12 N.m	106 lb in
DIC Switch Retaining Screws	1.5 N.m	13 lb in
Driver Knee Bolster Bracket Retaining Screws	1.9 N.m	17 lb in
Driver Knee Bolster Outer Bracket Retaining Screws	1.9 N.m	17 lb in
Driver Knee Bolster Trim Panel Retaining Screw behind Fog Lamp, Rear Compartment Lid Release Switch	1.9 N.m	17 lb in
Driver Knee Bolster Trim Panel Lower Retaining Screws	1.9 N.m	17 lb in
Floor Air Outlet Duct Retaining Screws	1.6 N.m	14 lb in
Head-Up Display Retaining Nuts	5 N.m	44 lb in
Head-Up Display-to-Steering Column Bracket Retaining Screw	3 N.m	27 lb in
HVAC Control Retaining Screws	1.9 N.m	17 lb in
Ignition Switch Retaining Bolts	5.5	49 lb in

	N.m	
Ignition Switch Housing Bracket to I/P Center Support Bracket Bolts	12 N.m	106 lb in
Ignition Switch Housing Bracket to Steering Column Bracket Bolt	1.9 N.m	17 lb in
IP Accessory Trim Plate Retaining Screw next to Cigar Lighter	3 N.m	27 lb in
IP Accessory Trim Plate Retaining Screw behind Ashtray	3 N.m	27 lb in
IP Accessory Trim Plate Retaining Screw in Grille Opening	3 N.m	27 lb in
IP Center Support Bracket Bolts	12 N.m	106 lb in
IP Cluster Bezel Retaining Screws	1.5 N.m	13 lb in
IP Cluster Bezel to I/P Upper Trim Pad Screws	1.3 N.m	12 lb in
IPC to Steering Column Bracket Retaining Screws	3 N.m	27 lb in
IPC Rear Cover Retaining Screws	0.7 N.m	6 lb in
IP Dimmer Switch Retaining Screws	1.5 N.m	13 lb in
IP Passenger Compartment Upper Retaining Screw	1.9 N.m	17 lb in
IP Passenger Compartment Side Retaining Screw	1.9 N.m	17 lb in
IP Passenger Compartment Lower Retaining Bolts	12 N.m	106 lb in
IP Upper Trim Pad to Driver Knee Bolster Outer Bracket Screw	1.9 N.m	17 lb in
I/P Upper Trim Pad to I/P Center Support Bracket Screws	1.9 N.m	17 lb in
IP Upper Trim Pad to LH and RH Hinge Pillar Screws	2.5 N.m	22 lb in
IP Upper Trim Pad to Passenger SIR Bracket Screw	1.9 N.m	17 lb in
IP Upper Trim Pad to Windshield Defroster Duct Screws	1.9 N.m	17 lb in
Negative Battery Cable Bolt	15 N.m	11 lb ft
Passenger Air Outlet Retaining Screws	1.7 N.m	15 lb in
Passenger SIR Bracket Mounting Bolts	12 N.m	106 lb in
Passenger SIR Module Retaining Nuts	10 N.m	89 lb in
Passenger Knee Bolster Bracket Retaining Bolts	12 N.m	106 lb in

Radio Control Retaining Screws	2.5 N.m	22 lb in
Steering Column Bracket Mounting Bolts	10 N.m	89 lb in
UV Inverter Mounting Screws	0.7 N.m	6 lb in
Windshield Defroster Duct Retaining Screws	10 N.m	89 lb in

FUEL LEVEL SPECIFICATIONS

The information in this table is intended for use with the **J 33431-C** Signal Generator and Instrument Panel Tester. See **Special Tools and Equipment** . The fuel level sensor values represent the test values to be used on the Signal Generator to drive the fuel gage display to the indicated positions. Vehicles that require more than one fuel level sensor calculate gage position from many possible resistance combinations of fuel levels between the two tanks. Therefore, the values in the table may not correlate directly to readings taken from the vehicle primary or secondary sending units.

The resistance values only reflect the specified fuel level when the signal circuits for both the primary and secondary fuel level senders are tied together.

Fuel Level Specifications

Fuel Gage Display	Resistance	Fuel Level
E	24ohm	4%
1/4	43ohm	30%
1/2	57ohm	64%
3/4	95ohm	74%
F	125ohm	96%
Reserve Fuel Indicator On	30ohm	17%

SCHEMATIC AND ROUTING DIAGRAMS

INSTRUMENT CLUSTER SCHEMATICS

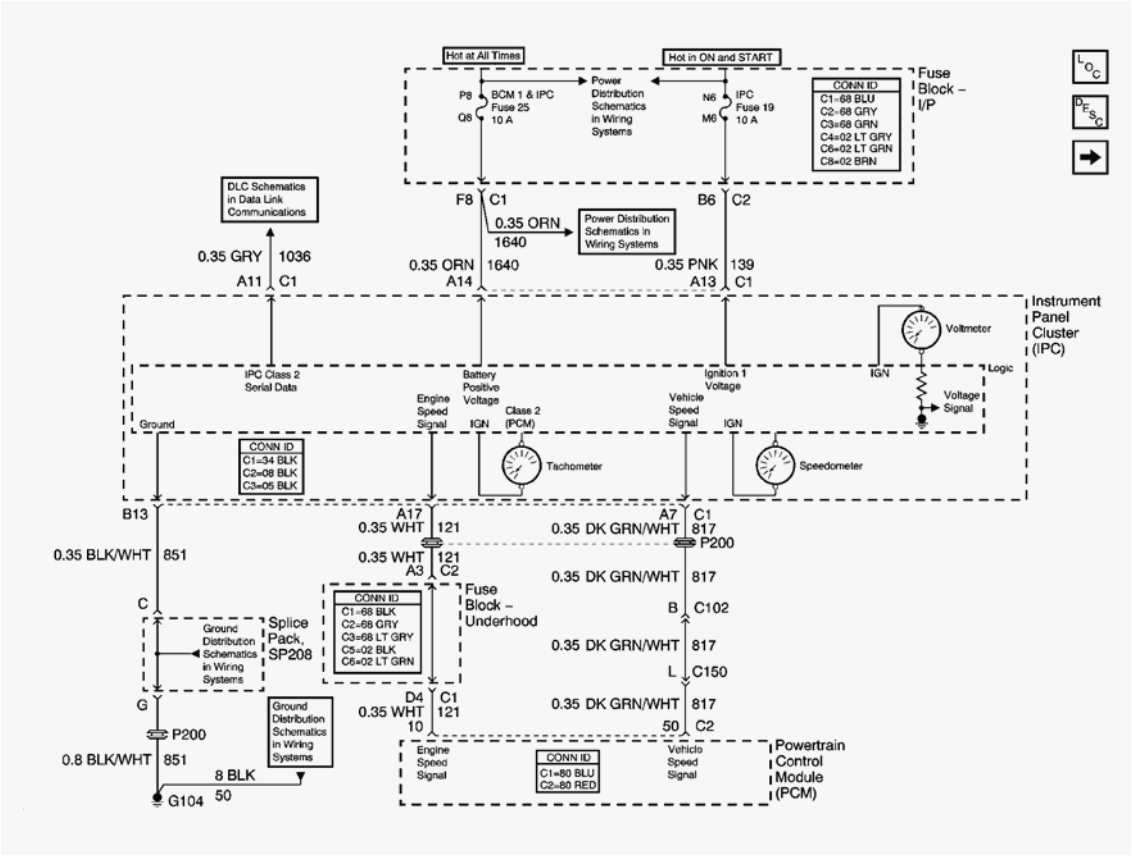

Fig. 1: Power, Ground, DLC, Tachometer And Speedometer Schematic
Courtesy of GENERAL MOTORS CORP.

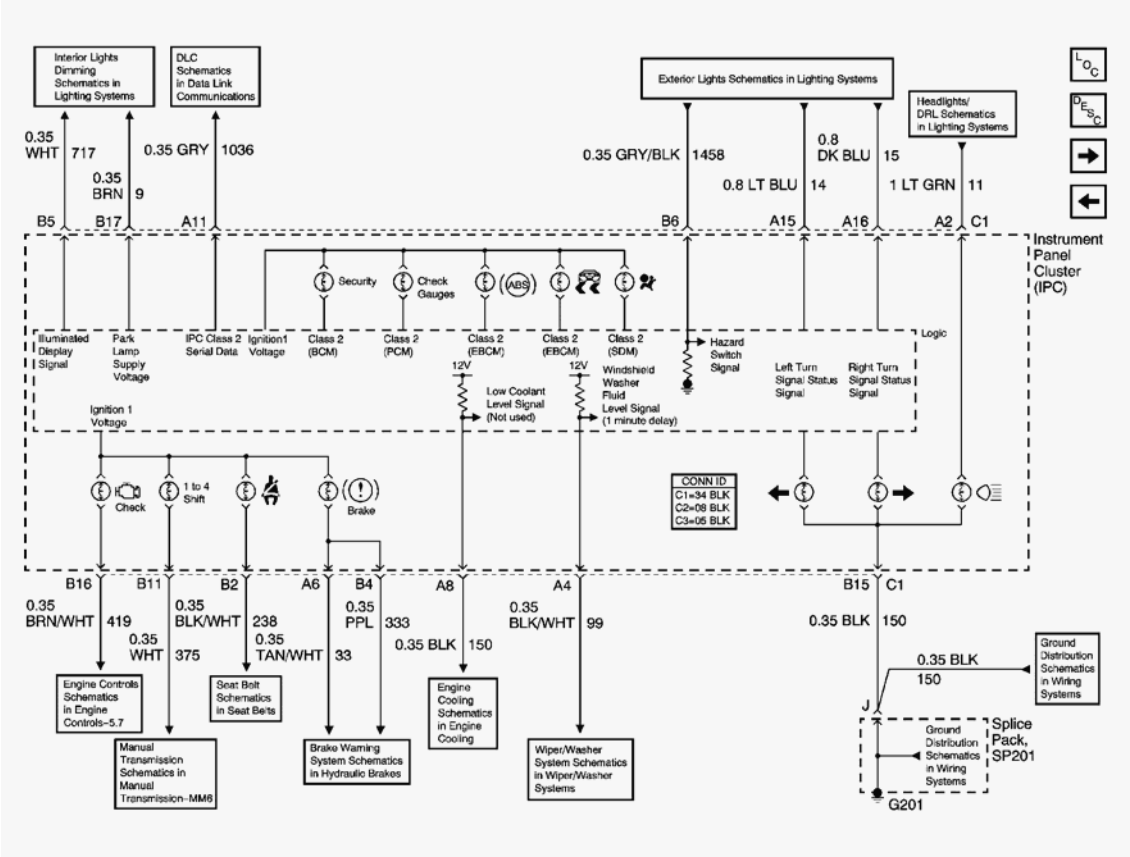

Fig. 2: Indicators Schematic
Courtesy of GENERAL MOTORS CORP.

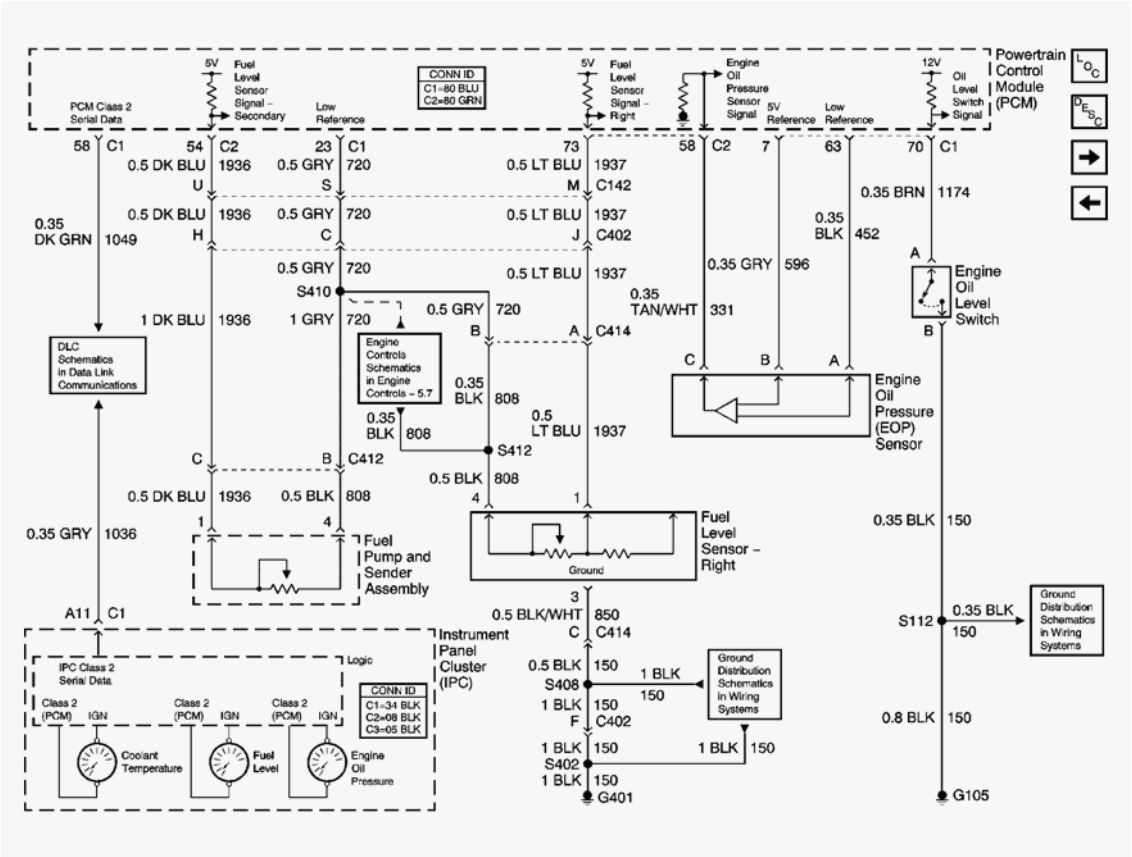

Fig. 3: Temperature, Fuel Level And Oil Pressure Gages Schematic
Courtesy of GENERAL MOTORS CORP.

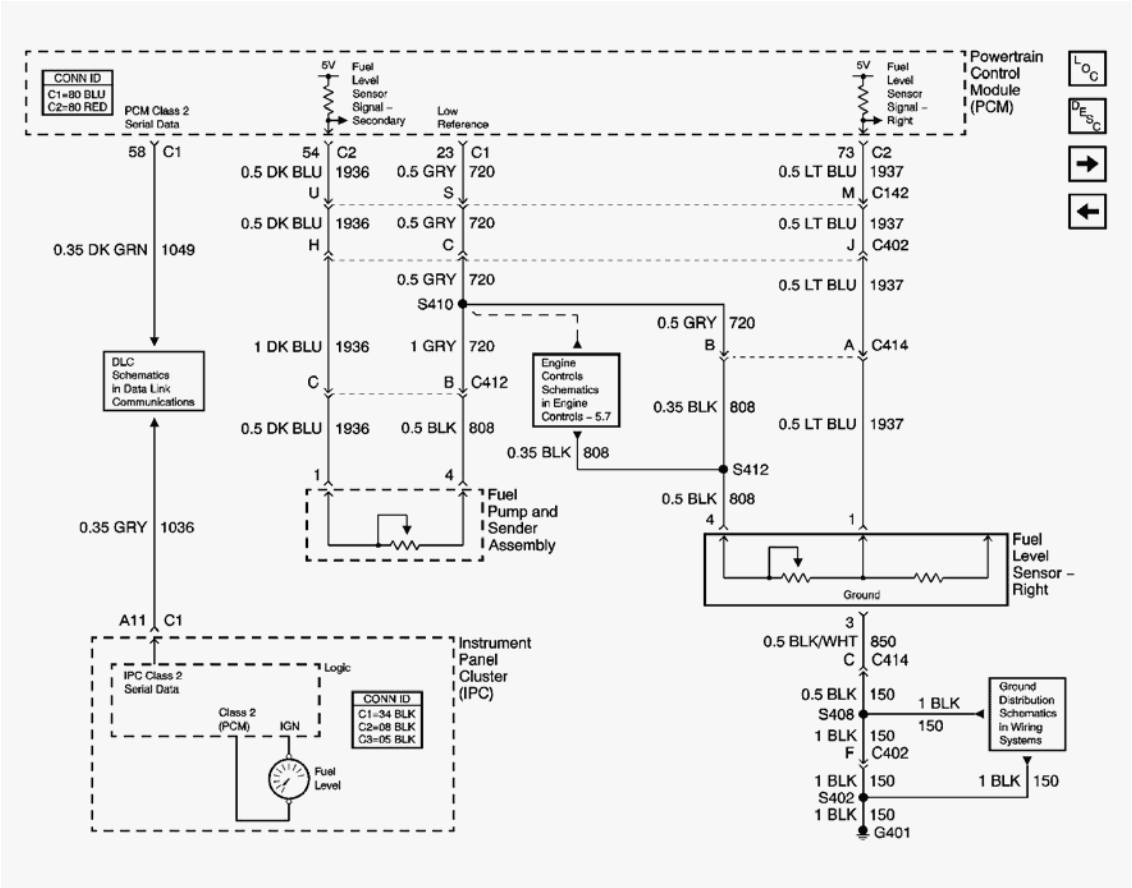

Fig. 4: Fuel Level Signals Schematic (W/FFS)
Courtesy of GENERAL MOTORS CORP.

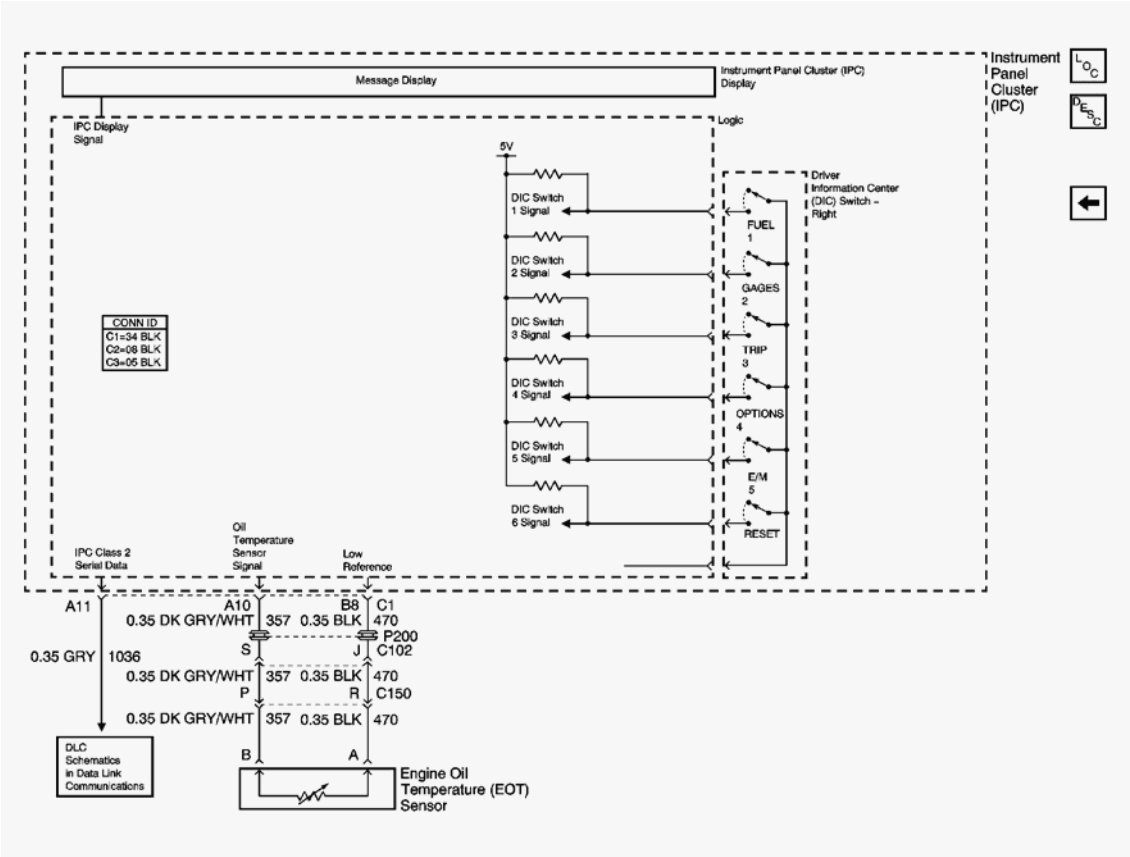

Fig. 5: Driver Information Center, Engine Oil Temperature Gage Sensor And Dimmer Switch Schematic
Courtesy of GENERAL MOTORS CORP.

HEAD UP DISPLAY SCHEMATICS

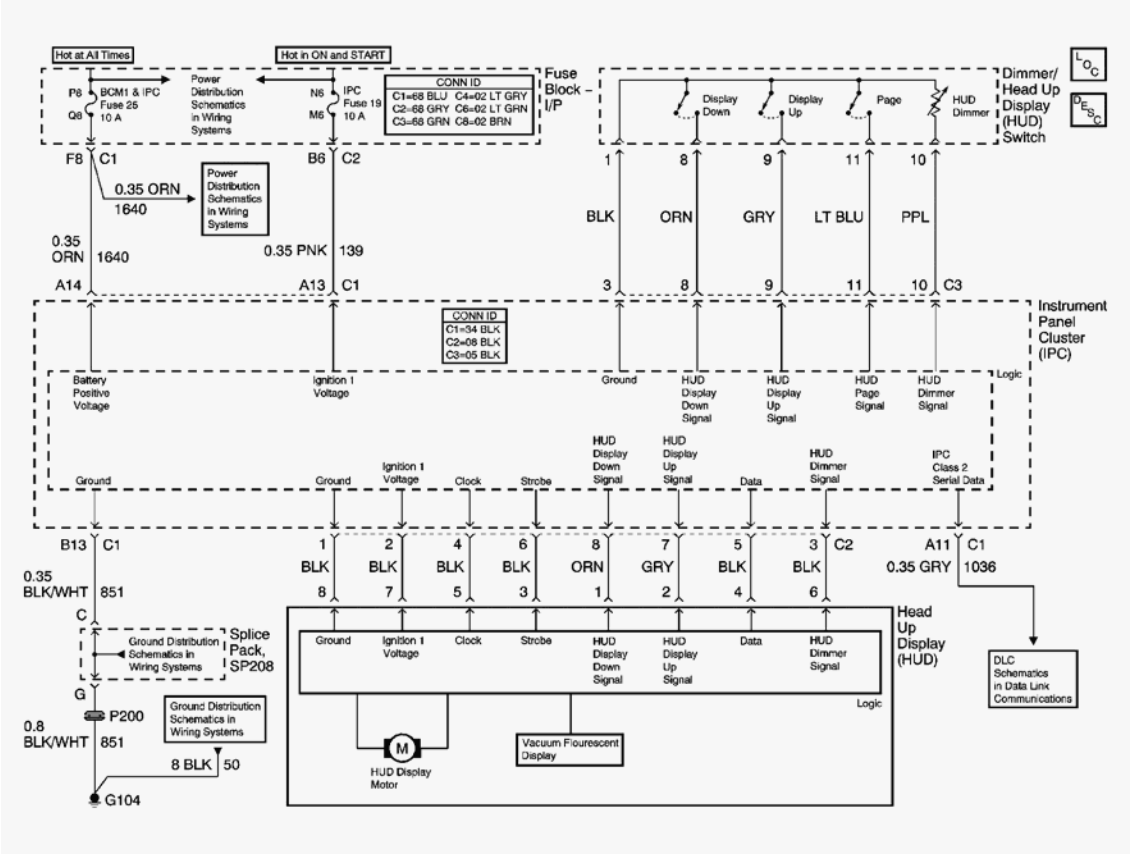

Fig. 6: Head Up Display Schematic
Courtesy of GENERAL MOTORS CORP.

AUDIBLE WARNINGS SCHEMATICS

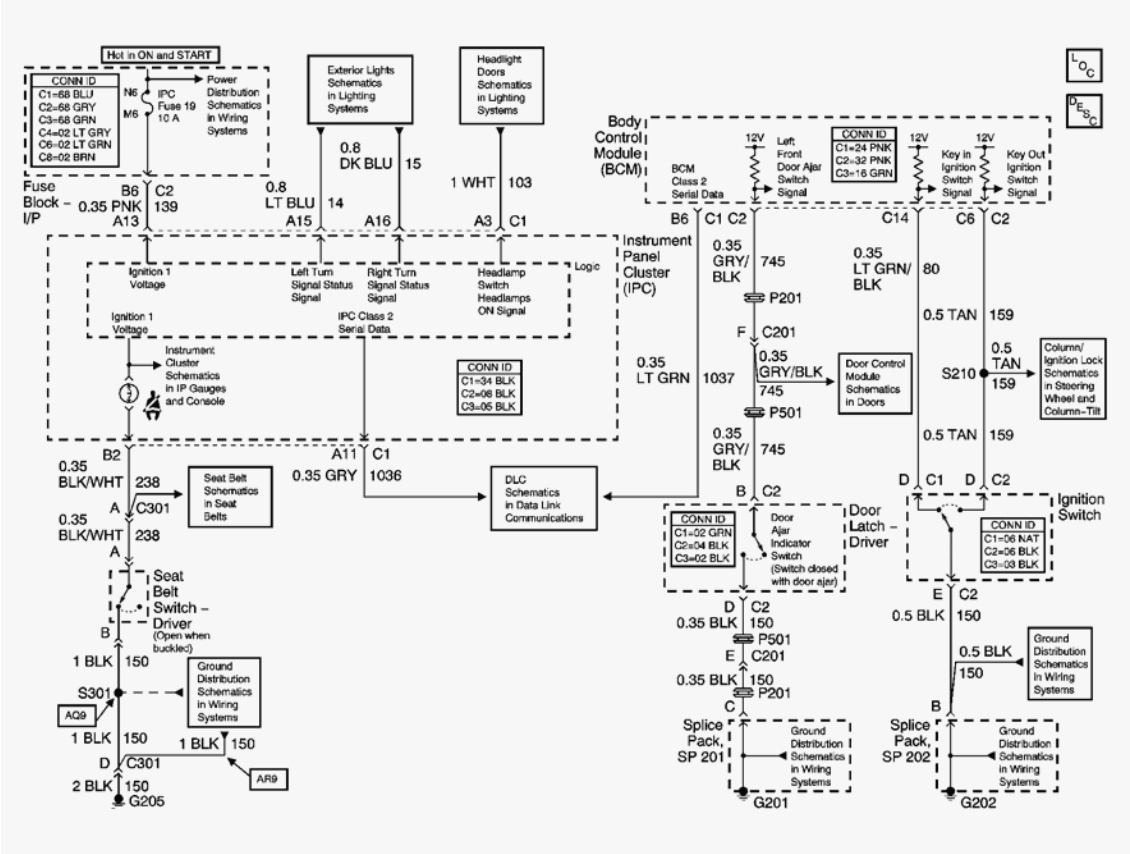

Fig. 7: Audible Warnings Schematic
Courtesy of GENERAL MOTORS CORP.

COMPONENT LOCATOR

INSTRUMENT PANEL, GAGES, AND CONSOLE COMPONENT VIEWS

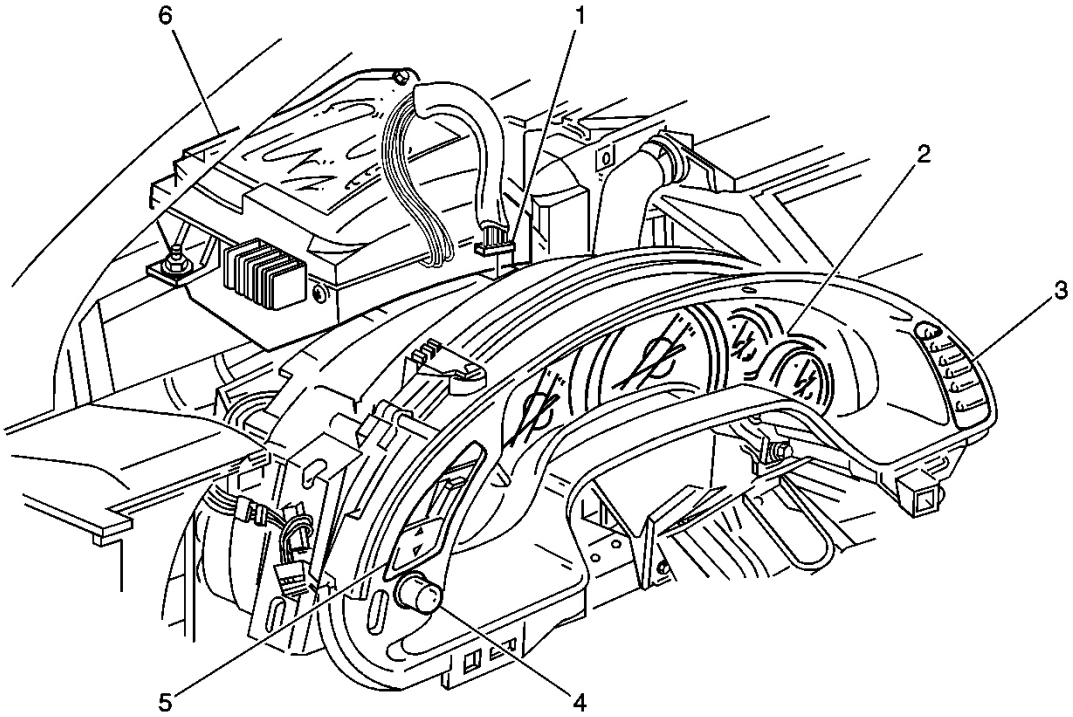

Fig. 8: Instrument Cluster Component View
Courtesy of GENERAL MOTORS CORP.

Callouts For Fig. 8

Callout	Component Name
1	Heads Up Display (HUD) Connector
2	Instrument Panel Cluster (IPC)
3	Driver Information Center (DIC) Switch-Right
4	Dimmer Switch
5	Heads Up Display (HUD) Switch
6	Heads Up Display (HUD)

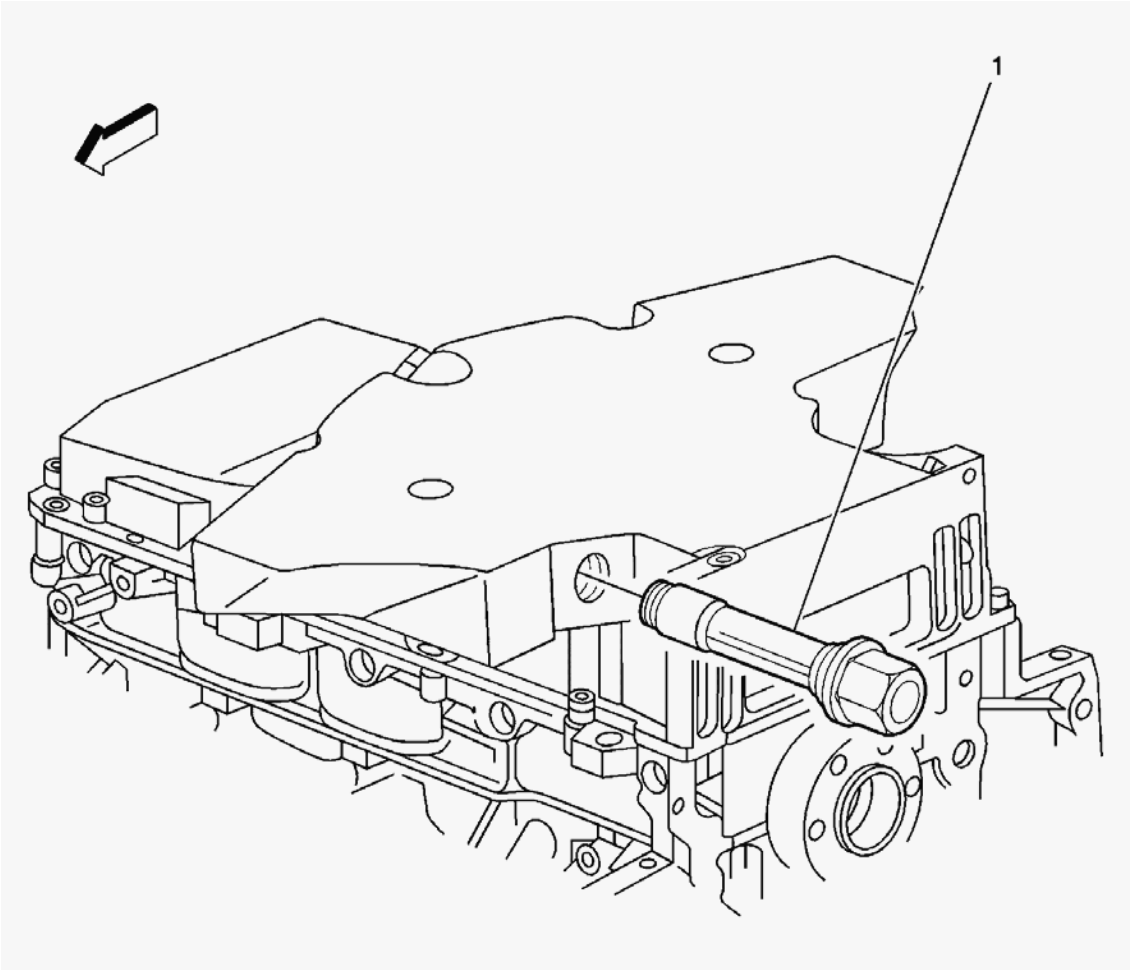

Fig. 9: Engine Oil Level Switch Component View
Courtesy of GENERAL MOTORS CORP.

Callouts For Fig. 9

Callout	Component Name
1	Engine Oil Level Switch

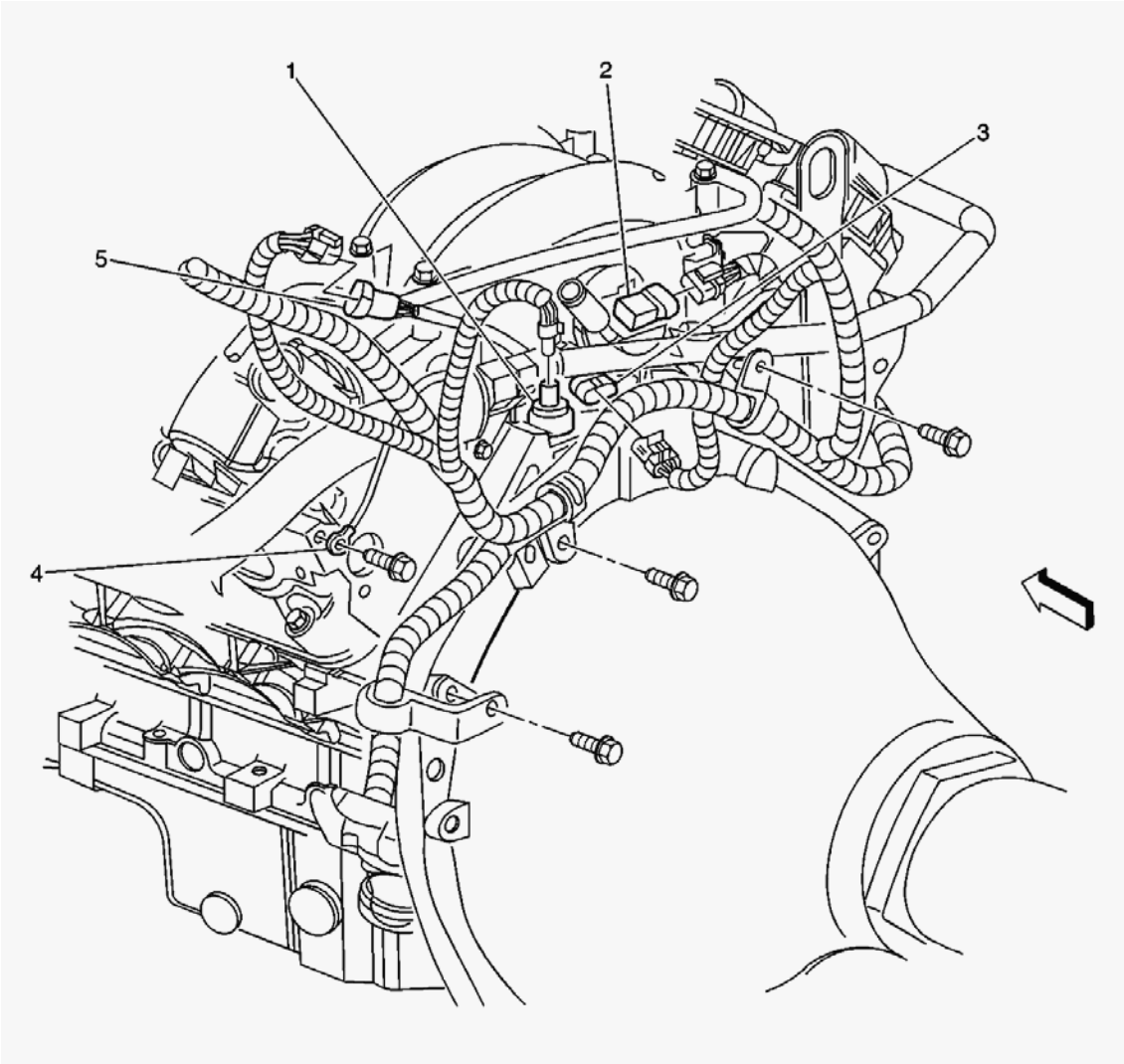

Fig. 10: Rear Of Engine Component View
Courtesy of GENERAL MOTORS CORP.

Callouts For Fig. 10

Callout	Component Name
1	Engine Oil Pressure (EOP) Sensor
2	Manifold Absolute Pressure (MAP) Sensor
3	Camshaft Position (CMP) Sensor
4	G107
5	C112

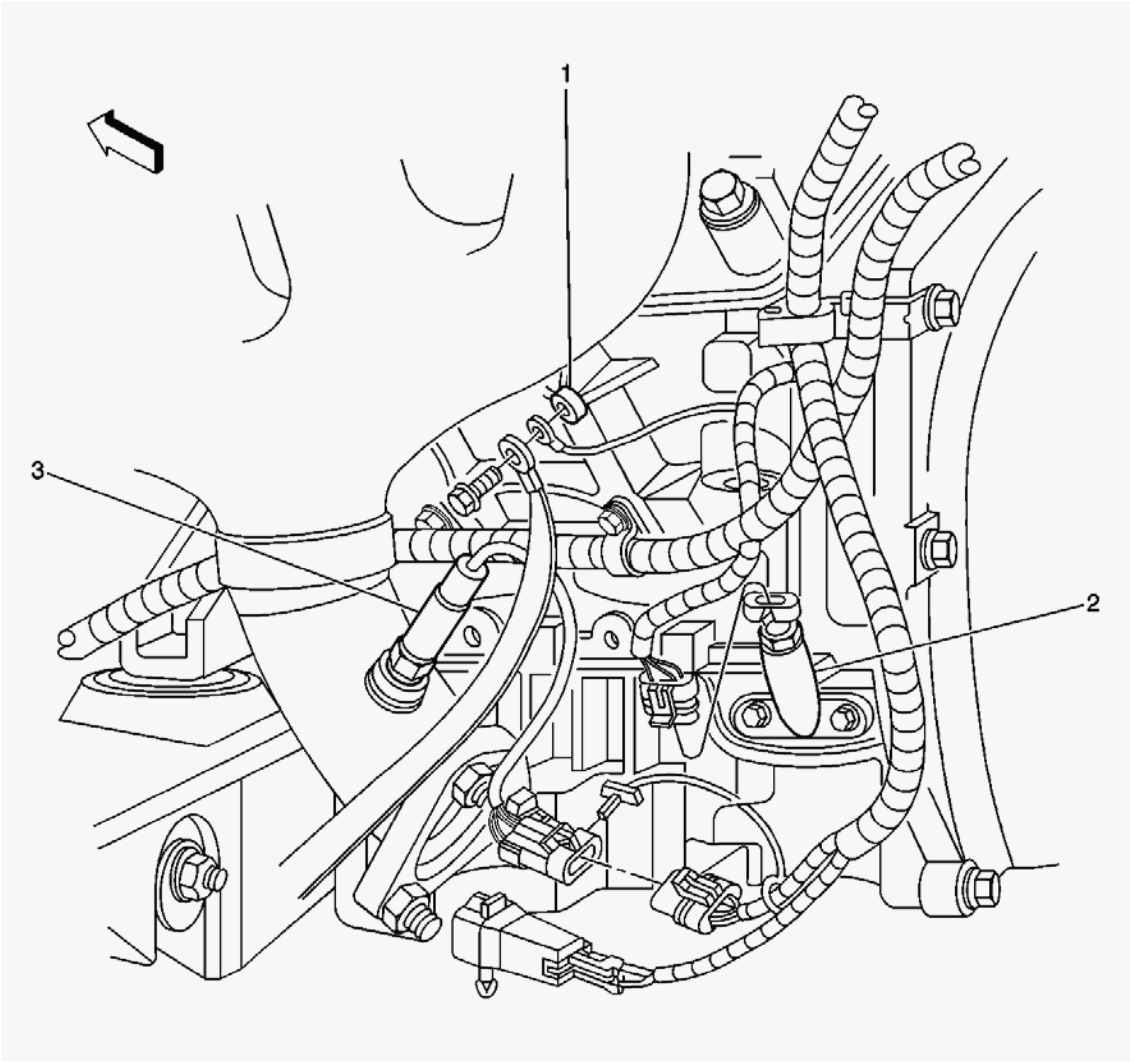

Fig. 11: Lower Side Of Engine Component View - Left
Courtesy of GENERAL MOTORS CORP.

Callouts For Fig. 11

Callout	Component Name
1	G105
2	Engine Oil Temperature (EOT) Sensor
3	Heated Oxygen Sensor (HO2S) Bank 1 Sensor 1

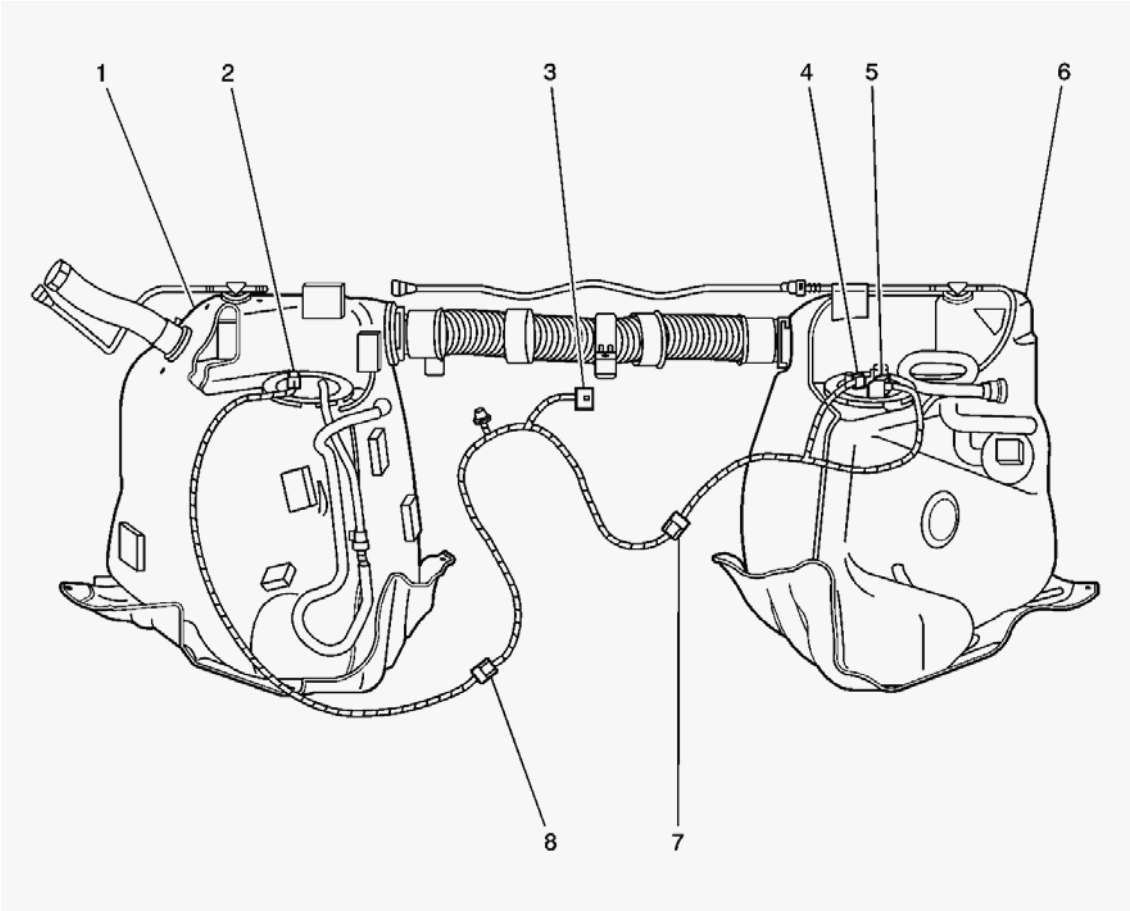

Fig. 12: Fuel Tanks Component View
Courtesy of GENERAL MOTORS CORP.

Callouts For Fig. 12

Callout	Component Name
1	Fuel Tank - Left
2	Fuel Pump and Sender Assembly
3	C402
4	Fuel Tank Pressure (FTP) Sensor
5	Fuel Level Sensor - Right
6	Fuel Tank - Right
7	C414
8	C412

INSTRUMENT PANEL, GAGES, AND CONSOLE CONNECTOR END VIEWS

Instrument Panel Cluster (IPC) Terminal Identification

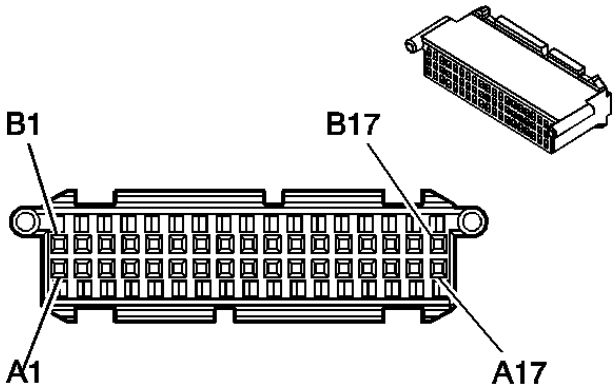

Connector Part Information		• 12065803 • 34-Way F Micro-Pack 100 Series (BLK)	
Pin	**Wire Color**	**Circuit No.**	**Function**
A1	-	-	Not Used
A2	LT GRN	11	Headlamp High Beam Supply Voltage
A3	WHT	103	Headlamp Switch Headlamps On Signal
A4	BLK/WHT	99	Windshield Washer Fluid Level Signal
A5	-	-	Not Used
A6	TAN/WHT	33	Brake Warning Indicator Control
A7	DK GRN/WHT	817	Vehicle Speed Signal
A8	BLK	150	Ground
A9	-	-	Not Used
A10	DK GRN/WHT	357	Oil Temperature Sensor Signal
A11	GRY	1036	IPC Class 2 Serial Data
A12	-	-	Not Used
A13	PNK	139	Ignition 1 Voltage
A14	ORN	1640	Battery Positive Voltage
A15	LT BLU	14	Left Turn Signal Status Signal
A16	DK BLU	15	Right Turn Signal Status Signal
A17	WHT	121	Engine Speed Signal
B1	-	-	Not Used
B2	BLK/WHT	238	Seat Belt Switch Signal - Driver
B3	-	-	Not Used
B4	PPL	333	Brake Fluid Level Sensor Signal
B5	WHT	717	Illuminated Display Signal
B6	GRY/BLK	1458	Instrument Panel Lamp Supply Voltage - 4
B7	-	-	Not Used

B8	BLK	470	Low Reference
B9-B10	-	-	Not Used
B11	WHT	375	Skip Shift Indicator Control
B12	-	-	Not Used
B13	BLK/WHT	851	Ground
B14	-	-	Not Used
B15	BLK	150	Ground
B16	BRN/WHT	419	MIL Control
B17	BRN	9	Park Lamp Supply Voltage

Engine Oil Temperature (EOT) Sensor Terminal Identification

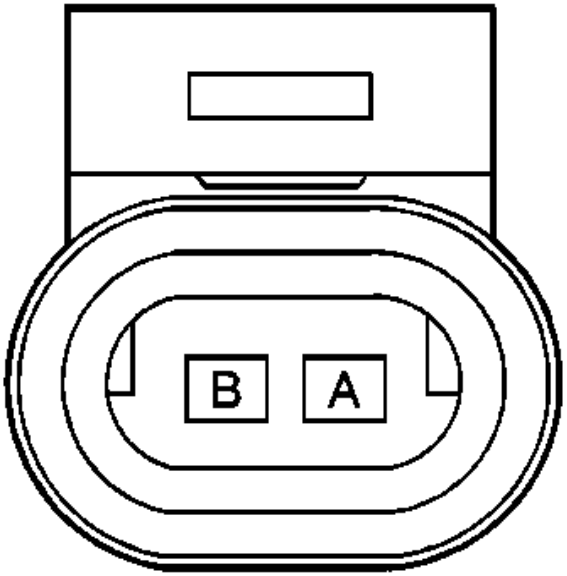

Connector Part Information		• **12162192** • **2-Way F Metri-Pack 150.2 Series (BLK)**	
Pin	**Wire Color**	**Circuit No.**	**Function**
A	BLK	470	Low Reference
B	DK GRN/WHT	357	Oil Temperature Sensor Signal

Engine Oil Level Switch Terminal Identification

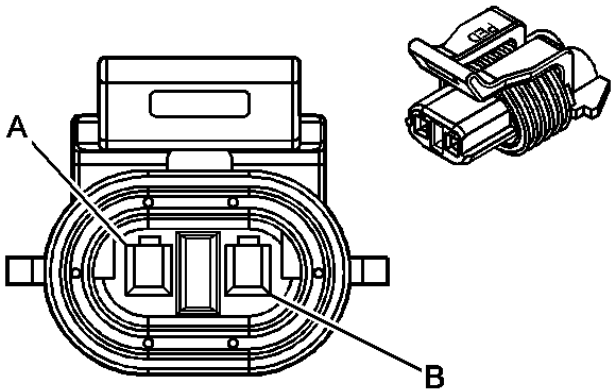

Connector Part Information		• 12052635 • 2-Way F Metri-Pack 150 Series (BLK)	
Pin	**Wire Color**	**Circuit No.**	**Function**
A -	BRN	1174	Engine Oil Level Sensor - Signal
B	BLK	150	Ground

Engine Oil Pressure (EOP) Sensor Terminal Identification

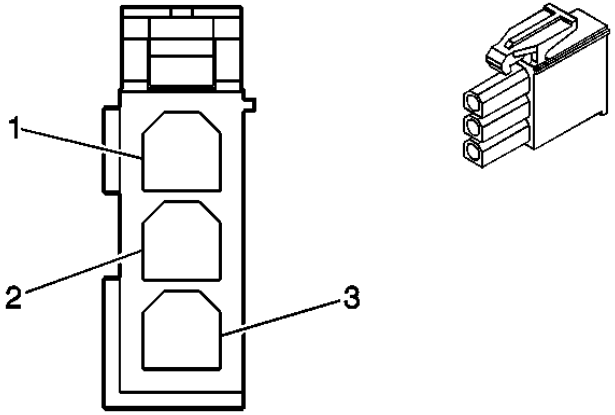

Connector Part Information		• 12065286 • 3-Way F Metri-Pack 150 Series (BLK)	
Pin	**Wire Color**	**Circuit No.**	**Function**
A	BLK	452	Low Reference
B	GRY	596	5 Volt Reference

C	TAN/WHT	331	Engine Oil Pressure (EOP) Sensor - Signal

Fuel Level Sensor Terminal Identification - Right (W/O FFS)

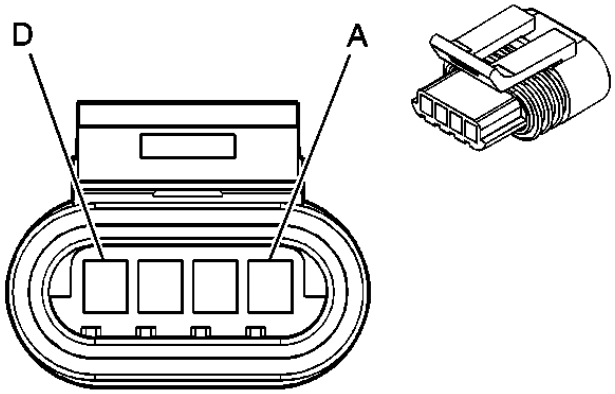

Connector Part Information		• **12162187** • **4-Way F Metri-Pack 150.2 Series (BLK)**	
Pin	**Wire Color**	**Circuit No.**	**Function**
A	-	-	Not Used
B	GRY	720	Low Reference
C	LT BLU	1937	Right Fuel Level Sensor - Signal
D	BLK	150	Ground

Fuel Level Sensor Terminal Identification - Right (W/ FFS)

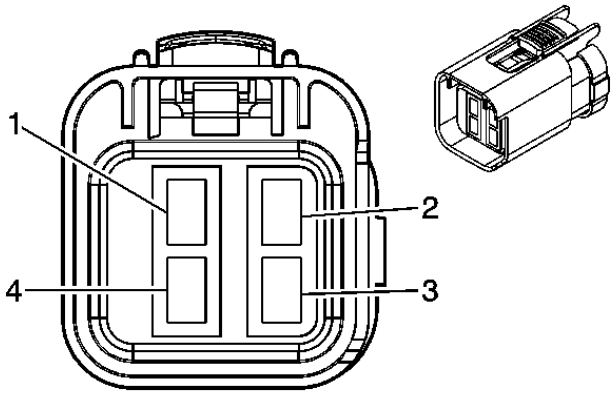

Connector Part Information	• **15324862** • **4-Way F Metri-Pack 150.2 Series (BLK)**

Pin	Wire Color	Circuit No.	Function
1	LT BLU	1937	Fuel Level Sensor Signal
2	-	-	Not Used
3	BLK/WHT	850	Ground
4	BLK	808	Low Reference

Fuel Pump And Sender Assembly Terminal Identification (W/O Ffs)

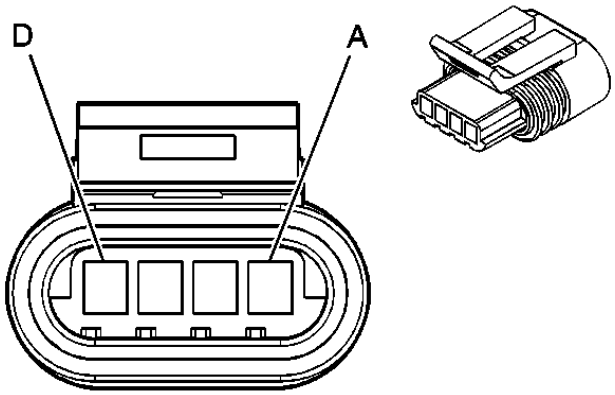

Connector Part Information		• 12162187 • 4-Way F Metri-Pack 150.2 Series (BLK)	
Pin	**Wire Color**	**Circuit No.**	**Function**
A	GRY	120	Fuel Pump Supply Voltage
B	GRY	720	Low Reference
C	DK BLU	1936	Fuel Level Sensor Signal - Secondary
D	BLK	150	Ground

Fuel Pump And Sender Assembly Terminal Identification (W/ FFS)

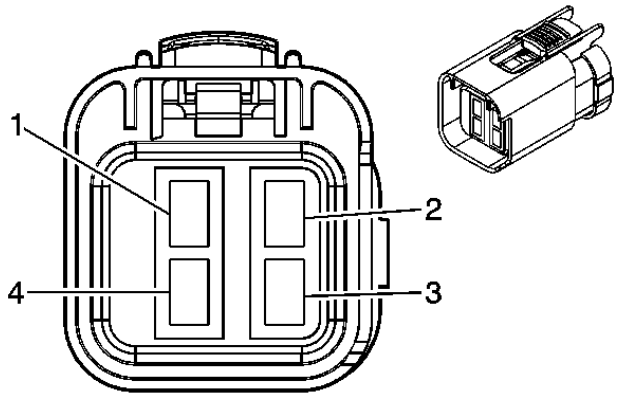

Connector Part Information		• 15324862 • 4-Way F Metri-Pack 150.2 Series (BLK)	
Pin	**Wire Color**	**Circuit No.**	**Function**
1	DK BLU	1936	Fuel Level Sensor Signal - Secondary
2	GRY	120	Fuel Pump Supply Voltage
3	BLK	9531	Ground
4	BLK	808	Low Reference

DIAGNOSTIC INFORMATION AND PROCEDURES

DIAGNOSTIC STARTING POINT - INSTRUMENT PANEL, GAGES AND CONSOLE

Begin the IP, DIC, or HUD system diagnosis with the **Diagnostic System Check - Instrument Cluster** or begin the audible warning system diagnosis with the **Diagnostic System Check - Audible Warnings** . The Diagnostic System Check will provide the following information:

- The identification of the control module(s) which command the system
- The ability of the control module(s) to communicate through the serial data circuit
- The identification of any stored diagnostic trouble codes (DTCs) and their status

The use of the Diagnostic System Check will identify the correct procedure for diagnosing the system and where the procedure is located.

DIAGNOSTIC SYSTEM CHECK - INSTRUMENT CLUSTER

Test Description

The number(s) below refer to the step number(s) on the diagnostic table.

2: Lack of communication may be due to a partial malfunction of the class 2 serial data circuit or due to a total malfunction of the class 2 serial data circuit. The specified procedure will determine the particular condition.

3: The symptom list in Symptoms will determine the correct diagnostic procedure to use.

4: The presence of DTCs which begin with "U" indicate that a loss of Class 2 communications has occurred.

Diagnostic System Check - Instrument Cluster

Step	Action	Yes	No
1	Install a scan tool. Does the scan tool power up?	Go to **Step 2**	Go to **Scan Tool Does Not Power Up** in Data Link Communications
2	1. Turn ON the ignition, with the engine OFF. 2. Attempt to establish communication with the following control modules: • Body Control Module (BCM) • Electronic Brake Control Module (EBCM) • Inflatable Restraint Sensing and Diagnostic Module (SDM) • Instrument Panel Cluster (IPC) • Powertrain Control Module (PCM) • Tire Pressure Module (TPM) Does the scan tool communicate with the control modules listed above?	Go to **Step 3**	Go to **Scan Tool Does Not Communicate with Class 2 Device** in Data Link Communications
3	Select the display DTCs function on the scan tool for the following control modules: • Body Control Module (BCM) • Electronic Brake Control Module (EBCM) • Inflatable Restraint Sensing and Diagnostic Module (SDM) • Instrument Panel Cluster (IPC)		

	• Powertrain Control Module (PCM) • Tire Pressure Module (TPM) Does the scan tool display any DTCs?	Go to **Step 4**	Go to **Symptoms - Instrument Panel, Gages and Console**
4	Does the scan tool display any DTCs which begin with a "U"?	Go to **Scan Tool Does Not Communicate with Class 2 Device** in Data Link Communications	Go to **Step 5**
5	Does the scan tool display DTC B0605 or B1000?	Go to **Diagnostic Trouble Code (DTC) List** in Body Control System	Go to **Step 6**
6	Does the scan tool display B0846, B0851,B2282, B2283, B2284, B2285, P0562, P0563, P1637, or P1638?	Go to **Diagnostic Trouble Code (DTC) List** in Engine Electrical	Go to **Diagnostic Trouble Code (DTC) List**

DIAGNOSTIC SYSTEM CHECK - AUDIBLE WARNINGS

Test Description

The number(s) below refer to the step number(s) on the diagnostic table.

2: Lack of communication may be due to a partial malfunction of the class 2 serial data circuit or due to a total malfunction of the class 2 serial data circuit. The specified procedure will determine the particular condition.

3: The symptom list in Symptoms will determine the correct diagnostic procedure to use.

4: The presence of DTCs which begin with "U" indicate that a loss of Class 2 communications has occurred.

Diagnostic System Check - Audible Warnings

Step	Action	Yes	No
1	Install a scan tool. Does the scan tool power up?	Go to **Step 2**	Go to **Scan Tool Does Not Power Up** in Data Link Communications
2	1. Turn ON the ignition, with the engine OFF. 2. Attempt to establish communication with the following control modules: • Instrument Panel Cluster (IPC)		

	• Body Control Module (BCM) Does the scan tool communicate with the control modules listed above?	Go to **Step 3**	Go to **Scan Tool Does Not Communicate with Class 2 Device** in Data Link Communications
3	Select the display DTCs function on the scan tool for the following control modules: • Instrument Panel Cluster (IPC) • Body Control Module (BCM) Does the scan tool display any DTCs?	Go to **Step 4**	Go to **Symptoms - Instrument Panel, Gages and Console**
4	Does the scan tool display any other DTCs which begin with a "U"?	Go to **Scan Tool Does Not Communicate with Class 2 Device** in Data Link Communications	Go to **Step 5**
5	Does the scan tool display DTC B0605 or B1000?	Go to **Diagnostic Trouble Code (DTC) List** in Body Control System	Go to **Step 6**
6	Does the scan tool display B0846, B0851, B2282, B2283, B2284, B2285, P0562, P0563, P1637, or P1638?	Go to **Diagnostic Trouble Code (DTC) List** in Engine Electrical	Go to **Diagnostic Trouble Code (DTC) List**

SCAN TOOL OUTPUT CONTROLS

IPC Scan Tool Output Controls

Scan Tool Output Control	Additional Menu Selection (s)	Description
Chime Test	Chime Test	The chime sounds slow, medium, or fast depending on priority.
Coolant Gage Sweep Test	IPC Gages	The IPC drives the coolant gage at or above 125°C (260°F) when you select Up. The IPC drives the coolant gage at or below 38°C (100°F) when you select Down.
Fuel Gage Sweep Test	IPC Gages	The IPC drives the fuel gage at or above full when you select Up. The IPC drives the fuel gage at or below empty when you select Down.
		The IPC illuminates the following indicators when you select On: • ABS • Air Bag • BRAKE

Lamp Test	Lamp Test	• CHECK GAGES • MPH or KM/H • SECURITY • Traction The indicators should illuminate until commanded Off.
Oil Gage Sweep Test	IPC Gages	The IPC drives the engine oil pressure gage at or above 552 kPa (80 PSI) when you select Up. The IPC drives the engine oil pressure gage at or below 0 kPa (0 PSI) when you select Down.
Speed Gage Sweep Test	IPC Gages	The IPC drives the speedometer at or above 200 MPH when you select Up. The IPC drives the speedometer at or below 0 MPH when you select Down.
Switch Dimming Test	Switch Dimming Test	The IPC tests the dimming circuit for the IPC. When you select ON the IPC illuminates the dimming circuit to its brightest point and when you select OFF the IPC turns off the dimming to the IPC.
Tach Gage Sweep Test	IPC Gages	The IPC drives the tachometer at or above 7,000 RPM when you select Up. The IPC drives the tachometer at or below 0 RPM when you select Down.
Volts Gage Sweep Test	IPC Gages	The IPC drives the volt gage at or above 18 volts when you select Up. The IPC drives the volt gage at or below 8 volts when you select Down.

PCM Scan Tool Output Controls

Scan Tool Engine Output Control	Additional Menu Selection(s)	Description
Fuel Pump	Engine Output Controls	The PCM drives the fuel pump on when you select ON. The PCM drives the fuel pump off when you select OFF.

SCAN TOOL DATA LIST

The scan tool data list(s) contain all the instrument panel, gages, and console related parameters that are available on the scan tool. The parameters in the list are arranged in order, as they appear on the scan tool. The data list column indicates the location of the parameter within the scan tool menu selections.

Use the scan tool data list(s) as directed by a diagnostic table or in order to supplement the diagnostic procedures. Begin all of the diagnostic procedures with the **Diagnostic System Check - Instrument Cluster** for DIC, HUD, and IPC or **Diagnostic System Check - Audible Warnings** for audible warnings.

Use the scan tool data list(s) only after the following is determined:

- There is no published DTC procedure nor published symptom procedure for the customer concern.
- The DTC or symptom procedure indicated by the diagnostic system check does not resolve the customer concern.

The typical data values are obtained from a properly operating vehicle under the conditions specified in the first row of the scan tool data list table. Comparison of the parameter values from the suspect vehicle with the typical data values may reveal the source of the customer concern.

BCM Scan Tool Data List

Scan Tool Parameter	Data List	Units Displayed	Typical Data Value
Operating Conditions: Ignition ON, Engine OFF, High Beams Off, Doors and Hatch Closed, Park Brake Unapplied.			
Battery Volts	Data	Volts	Varies
Driver Door Ajar Switch	Input Data 2	Open/Closed	Closed
Hatch/Trunk Ajar	Input Data 2	Open/Closed	Closed
Hatch/Trunk Release Switch	Input Data 2	Active/Inactive	Inactive
Headlamp Off Switch	Input Data 1	Active/Inactive	Active
Key In Ignition	Input Data 1	Active/Inactive	Active
Key Out Of IGN	Input Data 1	Active/Inactive	Inactive
Passenger Door Ajar Switch	Input Data 2	Open/Closed	Closed

IPC Scan Tool Data List

Scan Tool Parameter	Data List	Units Displayed	Typical Data Value
Operating Conditions: Turn Ignition ON, Engine OFF, Doors and Hatch Closed, Park Brake Unapplied.			
8-Digit GM Part Number	Module Information 2	Part Number	Varies
ABS Lamp	Inputs	On/Off	Off
Air Bag Lamp	Inputs	On/Off	Off
Ambient Light Sensor	Data 2	Counts	0-255
Average Speed	Data 1	km/h (mph)	0-255 km/h (159 mph)
Avg. Fuel Economy	Data 1	km/L (mpg)	100 km/0-99.9 L (99.9 mpg)
Brake Fluid Level	Inputs	OK/Low	OK
Brake Lamp	Inputs	On/Off	Off
Check Engine Lamp State	Inputs	On/Off	Off
Check Gages Lamp	Inputs	On/Off	Off
Chime	Inputs	On/Off	Off
Circuit Board Day	Module Information 1	Day	Varies
Circuit Board Month	Module Information 1	Month	Varies
Circuit Board Year	Module Information 1	Year	Varies
Cluster Manufacture Day	Module Information 2	Day	Varies
Cluster Manufacture Month	Module Information 2	Month	Varies
Cluster Manufacture Year	Module Information 2	Year	Varies
Coolant Level Input	Inputs	OK/Low	OK
Courtesy Switch	Inputs	Active/Inactive	Inactive
Cruise Control Set Speed	Data 1	km/h (mph)	0-255 km/h (0-159 mph)
DIC Switch 1	Inputs	Active/Inactive	Inactive

DIC Switch 2	Inputs	Active/Inactive	Inactive
DIC Switch 3	Inputs	Active/Inactive	Inactive
DIC Switch 4	Inputs	Active/Inactive	Inactive
DIC Switch 5	Inputs	Active/Inactive	Inactive
Elapse Time	Data 2	Hours	00-23 Hrs
Elapse Time	Data 2	Minutes	00-59 Min
Elapse Time	Data 2	Seconds	00-59 Sec
Engine Coolant Temp	Data 1	°C (°F)	-40-215°C (-40-419°F)
Engine Oil Life Remaining	Data 1	%	0-100%
Fuel Range	Data 1	km (mi)	0-999 km (0-999 mi)
Fuel Remaining	Data 1	L (gal)	0-72.3L (0-19.1gal)
Head Lamp State	Inputs	On/Off	Off
High Beam Lamp	Inputs	On/Off	Off
Ignition 1	Data 1	Volts	8-18 volts
Inst. Fuel Economy	Data 1	km/L (mpg)	100 km/0-99.9 L (99.9 mpg)
KM/H Lamp	Inputs	On/Off	Varies
Left Turn Signal	Inputs	On/Off	Off
LF Tire Pressure	Data 2	kPa (psi)	0-1020 kPa (0-148 psi)
Low Trac. Lamp	Inputs	On/Off	Off
LR Tire Pressure	Data 2	kPa (psi)	0-1020 kPa (0-148 psi)
MPH Lamp	Inputs	On/Off	Varies
Odometer	Data 2	km (mi)	0-999 999 km (0-624,999 mi)
Oil Pressure	Data 1	kPa (psi)	0-550kPa (0-80psi)
Oil Temp	Data 1	°C (°F)	-40-215°C (-40-419°F)
Park Brake Switch	Inputs	Active/Inactive	Inactive
Park Lamp Input	Inputs	Active/Inactive	Inactive
Reset Switch	Inputs	Active/Inactive	Inactive
RF Tire Pressure	Data 2	kPa (psi)	0-1020 kPa (0-148 psi)
Right Turn Signal	Inputs	On/Off	Off
ROM ID	Module Information 1	ID Number	Varies
RPM	Data 1	RPM	0-8000 RPM
RR Tire Pressure	Data 2	kPa (psi)	0-1020 kPa (0-148 psi)
Seat Belt Sensor	Inputs	Buckled/Unbuckled	Unbuckled

Security Lamp Status	Inputs	On/Off	Off
Switch Dimming	Data 2	Counts	0-255
Trans Fluid Temp	Data 1	°C (°F)	-40-215°C (-40-419°F)
Trip Odometer A	Data 2	km/mi	0-99 999 km (0-62,499 mi)
Trip Odometer B	Data 2	km/mi	0-99 999 km (0-62,499 mi)
Vehicle Speed	Data 1	km/h (mph)	0-255 km/h (159 mph)
Washer Fluid Sensor	Inputs	OK/Low	Ok

PCM Scan Tool Data List

Scan Tool Parameter	Data List	Units Displayed	Typical Data Value
Operating Conditions: Engine idling, normal operating temperature			
ECT	Engine Data 1	°C (°F)	85-105°C (185-220°F)
Engine Oil Life	Engine Data 3	%	Varies
Engine Oil Pressure Sensor	Engine Data 3	V	Varies
Engine Oil Pressure Sensor	Engine Data 3	kPa	0 kPa
Engine Speed	Engine Data 1	RPM	+/-100 RPM from Desired Idle Speed
Fuel Level Sensor Left Tank	Enhanced EVAP	5-0 volts	0.7-2.5 volts
Fuel Level Sensor Right Tank	Enhanced EVAP	5-0 volts	0.7-2.5 volts
Fuel Tank Level Remaining	Enhanced EVAP	%	Varies
Low Oil Level	Engine Data 2	Yes/No	No
Vehicle Speed	Engine Data 1	km/h (mph)	0 km/h (0 mph)

SCAN TOOL DATA DEFINITIONS

IPC Scan Tool Data Definitions

The instrument panel cluster (IPC) Scan Tool Data Definitions contains a brief description of all IPC related parameters available on the scan tool.

8-Digit GM Part Number

The scan tool displays the GM eight digit part number of the IPC.

ABS Lamp

The scan tool displays On or Off. The state of the ABS indicator as commanded by the IPC.

Air Bag Lamp

The scan tool displays On or Off. The state of the air bag indicator as commanded by the IPC.

Ambient Light Sensor

The scan tool displays 0-255 counts. The counts varies based upon the ambient light level at the sensor. When light levels are high, counts increase. When light levels are low, counts decrease. The IPC uses this information for interior light dimming operation.

Average Speed

The scan tool displays 0-255 km/h (0-159 mph). The IPC calculates the average speed the vehicle has travelled per hour of ignition on time.

Avg. Fuel Economy

The scan tool displays 0-99.9 L/100 km (0-99.9 mpg). The IPC obtains fuel consumption data from the powertrain control module (PCM) on the serial data line. The IPC calculates the fuel economy based upon fuel consumption and vehicle speed data received from the PCM.

Battery Volts

The scan tool displays 0-25.5 volts. The voltage at the battery voltage circuit of the body control module (BCM).

Brake Fluid Level

The scan tool displays Ok or Low. The IPC monitors the signal circuit of the brake fluid level switch. When the brake fluid level is low, the scan tool will display Low. When the brake fluid level is full, the scan tool displays Ok.

Brake Lamp

The scan tool displays On or Off. When the BRAKE indicator is On, the scan tool will display On. When the BRAKE indicator is Off, the scan tool displays OFF. The IPC monitors signal circuit of the park brake switch.

Check Engine Lamp State

The scan tool displays On or Off. The state of the check engine indicator as commanded by the IPC.

Check Gages Lamp

The scan tool displays On or Off. The state of the check gages indicator as commanded by the IPC.

Chime

The scan tool displays On or Off. When the chime is On, the scan tool will display On. When the chime is Off, the scan tool displays Off.

Circuit Board Day

The scan tool displays the day the IPC circuit board was manufactured.

Circuit Board Month

The scan tool displays the month the IPC circuit board was manufactured.

Circuit Board Year

The scan tool displays the year the IPC circuit board was manufactured.

Cluster Manufacture Day

The scan tool displays the day the IPC was manufactured.

Cluster Manufacture Month

The scan tool displays the month the IPC was manufactured.

Cluster Manufacture Year

The scan tool displays the year the IPC was manufactured.

Coolant Level Input

The scan tool displays Ok or Low. When the coolant level is low, the scan tool will display Low. The IPC monitors the signal circuit of coolant level switch. When the coolant level is full, the scan tool displays Ok.

Courtesy Switch

The scan tool displays Active or Inactive. When the courtesy light switch is On, the scan tool will display Active. The IPC monitors the signal circuit of the courtesy switch. When the courtesy light switch is Off, the scan tool displays Inactive.

Cruise Control Set Speed

The scan tool displays 0-255 km/h (0-159 mph). The IPC obtains cruse control set speed data from the PCM on the serial data line.

DIC Switch 1

The scan tool displays Active or Inactive. The IPC monitors the signal circuit of the FUEL button of the DIC switch. A closed switch is displayed as Active.

DIC Switch 2

The scan tool displays Active or Inactive. The IPC monitors the signal circuit of the GAGES button of the DIC switch. A closed switch is displayed as Active

DIC Switch 3

The scan tool displays Active or Inactive. The IPC monitors the signal circuit of the TRIP button of the DIC switch. A closed switch is displayed as Active.

DIC Switch 4

The scan tool displays Active or Inactive. The IPC monitors the signal circuit of the OPTIONS button of the DIC switch. A closed switch is displayed as Active

DIC Switch 5

The scan tool displays Active or Inactive. The IPC monitors the signal circuit of the E/M button of the DIC switch. A closed switch is displayed as Active

Driver Door Ajar Switch

The scan tool displays Open/Closed. The BCM monitors the signal circuit of the driver door ajar switch. A closed switch is displayed as open.

ECT

The scan tool displays -40°C (-40°F) to 140°C (284°F). The state of the engine coolant temperature detected by the PCM.

Elapse Time (Hours)

The scan tool displays 00-23 Hours. The IPC starts to calculates elapse time when elapse time is displayed on the DIC and the RESET button is pressed on the DIC switch.

Elapse Time (Minutes)

The scan tool displays 00-59 Minutes. The IPC starts to calculates elapse time when elapse time is displayed on the DIC and the RESET button is pressed on the DIC switch.

Elapse Time (Seconds)

The scan tool displays 00-59 Seconds. The IPC starts to calculates elapse time when elapse time is displayed on the DIC and the RESET button is pressed on the DIC switch.

Engine Coolant Temp

The scan tool displays -40 to +215° C (-40 to +419° F). The IPC obtains coolant temperature data from the PCM on the serial data line.

Engine Oil Life

The scan tool displays 0-100%. The PCM calculates the remaining engine oil life.

Engine Oil Life Remaining

The scan tool displays 0-100%. The IPC obtains this information from the PCM on the serial data line.

Engine Oil Pressure Sensor

The scan tool displays 0-145 kPa. The PCM monitors the signal circuit of the engine oil pressure switch.

Engine Oil Pressure Sensor

The scan tool displays 0-5.0 V. The PCM monitors the signal circuit of the engine oil pressure switch.

Engine Speed

The scan tool displays 0-8,000 RPM. The PCM is responsible for calculating correct engine speed data.

Fuel Level Sensor Left Tank

The scan tool displays 0-5 volts. The PCM supplies a 5 volt signal circuit to the fuel level sensor. The float inside the fuel tank is a variable resistor which varies the resistance based on the fuel level. The PCM then averages this voltage and the signal voltage from the right tank in order to determine the fuel level. The scan tool displays close to 0.7 volts for an empty tank, and close to 2.5 volts for a full tank.

Fuel Level Sensor Right Tank

The scan tool displays 0-5 volts. The PCM supplies a 5 volt signal circuit to the fuel level sensor. The float inside the fuel tank is a variable resistor which varies the resistance based on the fuel level. The PCM then averages this voltage as well as the signal voltage from the left tank in order to determine the fuel level. The scan tool displays close to 0.7 volts for an empty tank, and close to 2.5 volts for a full tank.

Fuel Range

The scan tool displays 0-999 km (0-624 mi). The IPC obtains fuel consumption data from the PCM on the serial data line. The IPC calculates the fuel range based upon fuel consumption and fuel level data received from the PCM.

Fuel Remaining

The scan tool displays 0-72.3 L (0-19.3 gal). The IPC obtains fuel gage data from the PCM on the serial

data line.

Fuel Tank Level Remaining

The scan tool displays 0-100%. The PCM calculates the amount of fuel remaining in the tank based on the input from the fuel level sensor.

Hatch/Trunk Ajar

The scan tool displays Open/Closed. The BCM monitors the signal circuit of the hatch ajar switch. A closed switch is displayed as open.

Hatch/Trunk Release Switch

The scan tool displays Active/Inactive. The BCM monitors the signal circuit of the hatch release switch. A closed switch is displayed as Active.

Headlamp Off Switch

The scan tool displays Active/Inactive. The BCM monitors the signal circuit of the headlamp switch. When the headlamps are On, the scan tool will display Inactive. When the headlamps are Off, the scan tool displays Active.

Head Lamp State

The scan tool displays On or Off. The BCM monitors the signal circuit of the headlamp switch. When the headlamps are ON, the scan tool will display On. When the headlamps are Off, the scan tool displays Off.

High Beam Lamp

The scan tool displays On or Off. When the high beam lamps are On, the scan tool will display On. When the high beam lamps are Off, the scan tool displays Off.

Ignition 1

The scan tool displays 8-18 volts. The IPC obtains this information from battery voltage measured at the IPC.

Inst. Fuel Economy

The scan tool displays 0-99.9 L/100 km (0-99.9 mpg). The IPC obtains fuel consumption data from the PCM on the serial data line. The IPC calculates the fuel range based upon fuel consumption and vehicle speed data received from the PCM.

Key In Ignition

The scan tool displays Active/Inactive. The BCM monitors the signal circuit of the ignition key alarm switch. When the key is in the ignition switch, the scan tool will display Active. When the key is out of the ignition switch, the scan tool displays Inactive.

Key Out of IGN

The scan tool displays Active/Inactive. The BCM monitors the signal circuit of the ignition key alarm switch. When the key is in the ignition switch, the scan tool will display Inactive. When the key is out of the ignition switch, the scan tool displays Active.

KM/H Lamp

The scan tool displays On or Off. When the KM/H indicator is On, the scan tool will display On. When the KM/H indicator is Off, the scan tool displays Off.

Left Turn Signal

The scan tool displays On or Off. The IPC monitors the turn signal switch. When the left turn signal is On, the scan tool will display On. When the left turn signal is Off, the scan tool displays Off.

LF Tire Pressure

The scan tool displays 0-1020 kPa (0-148 psi). The IPC obtains LF tire pressure data from the TPM system on the serial data line. The IPC will display a default value of 0 kPa (0 psi) until LF tire pressure data is received from the TPM system.

Low Oil Level

The scan tool displays Yes/No. The PCM monitors the signal circuit of the engine oil level switch, where an open switch is displayed as Yes (low engine oil level).

Low Trac. Lamp

The scan tool displays On or Off. When the Traction indicator is On, the scan tool will display On. When the Traction indicator is Off, the scan tool displays Off. This indicator is illuminated when the IPC receives a message request from the ABS system on the serial data line.

LR Tire Pressure

The scan tool displays 0-1020 kPa (0-148 psi). The IPC obtains LR tire pressure data from the TPM system on the serial data line. The IPC will display a default value of 0 kPa (0 psi) until LR tire pressure data is received from the TPM system.

MPH Lamp

The scan tool displays On or Off. When the MPH indicator is On, the scan tool will display On. When the MPH indicator is Off, the scan tool displays Off.

Odometer

The scan tool displays 0-999 999 km (0-624,999 mi). The IPC calculates trip odometer information from vehicle speed data received from the PCM.

Oil Pressure

The scan tool displays 0-550 kPa (0-80 psi). The IPC obtains oil pressure data from the PCM on the serial data line.

Oil Temp

The scan tool displays -40 to +215°C (-40 to +419°F). The IPC obtains oil temperature data directly from the oil temperature sensor. The IPC is responsible for calculating correct oil temperature data.

Park Brake Switch

The scan tool displays Active or Inactive. The IPC monitors signal circuit of the park brake switch. When the park brake is applied, the scan tool will display Active. When the park brake is released, the scan tool displays Inactive.

Park Lamp Input

The scan tool displays Active or Inactive. The IPC monitors the signal circuit of the park lamp switch. When the park lamps are On, the scan tool will display Active. When the park lamps are Off, the scan tool displays Inactive.

Passenger Door Ajar Switch

The scan tool displays Open/Closed. The BCM monitors the signal circuit of the passenger door ajar switch. A closed switch is displayed as open.

PASSKey State

The scan tool displays which state the PASSKey is in.

Reset Switch

The scan tool displays Active or Inactive. The IPC monitors the signal circuit of the Reset button of the DIC switch A closed switch is displayed as Active.

RF Tire Pressure

The scan tool displays 0-1020 kPa (0-148 psi). The IPC obtains RF tire pressure data from the TPM system on the serial data line. The IPC will display a default value of 0 kPa (0 psi) until RF tire pressure data is received from the TPM system.

Right Turn Signal

The scan tool displays On or Off. The IPC monitors the turn signal switch. When the right turn signal is On, the scan tool will display On. When the right turn signal is Off, the scan tool displays Off.

ROM ID

The scan tool displays the ROM ID number for the IPC.

RPM

The scan tool displays 0-8,000 RPM. The IPC obtains engine speed data from the PCM on a dedicated input and the serial data line.

RR Tire Pressure

The scan tool displays 0-1020 kPa (0-148 psi). The IPC obtains RR tire pressure data from the TPM system on the serial data line. The IPC will display a default value of 0 kPa (0 psi) until RR tire pressure data is received from the TPM system.

Seat Belt Sensor

The scan tool displays Buckled or Unbuckled. When the seat belts are fastened, the scan tool will display Buckled. When the seat belts are unfastened, the scan tool displays Unbuckled.

Security Lamp Status

The scan tool displays On or Off. The state of the security indicator as commanded by the IPC.

Switch Dimming

The scan tool displays 0-255 counts. The switch dimming counts vary based upon the dimming switch position and ambient light level information. When the dimming switch is rotated to bright, the switch dimming counts will increase. When the dimming switch is rotated to dim, the switch dimming counts will decrease. The headlamps or park lamps must be ON to read this data.

Theft Deterrent State

The scan tool displays Active/Inactive. When the theft deterrent system is OFF, the scan tool will display Inactive. When the theft deterrent system is ON, the scan tool displays Active.

Trans Fluid Temp

The scan tool displays -40 to +215°C (-40 to +419°F). The IPC obtains trans fluid temperature data from the PCM on the serial data line. The PCM is responsible for calculating and sending the correct trans fluid data to the IPC.

Trip Odometer A

The scan tool displays 0-99 999 km (0-62,499 mi). The IPC calculates trip odometer information from vehicle speed data received from the PCM on a dedicated input and the serial data line.

Trip Odometer B

The scan tool displays 0-99 999 km (0-62,499 mi). The IPC calculates trip odometer information from vehicle speed data received from the PCM on a dedicated input and the serial data line.

Vehicle Speed

The scan tool displays 0-255 km/h (0-159 mph). The IPC obtains vehicle speed data from the PCM.

Washer Fluid Sensor

The scan tool displays Ok or Low. The IPC monitors the signal circuit of the washer fluid sensor. When the washer fluid level is low, the scan tool will display Low. When the washer fluid level is full, the scan tool displays Ok.

DIAGNOSTIC TROUBLE CODE (DTC) DISPLAYING

This vehicle is equipped with an on-board diagnostic display feature capable displaying DTCs. By selecting specific buttons on the IPC, DTCs are displayed on the IPC 20 character display unit. This feature allow DTCs to be read or cleared without the use of a scan tool. When the diagnostic mode is first entered, the IPC will enter into an automatic display sequence and will display all systems that communicate on the serial data line. After each system is displayed, the IPC will display the number of DTCs (current or history) for that system. The manual diagnostic mode may be selected at any time during the automatic DTC display sequence by pressing any button on the DIC except the E/M button. In the manual diagnostic mode, you can manually select what module to display. In this mode, DTCs are only displayed for a specific module and will not proceed to the next until requested. Both diagnostic mode displays will also indicate if the DTC is a current DTC (malfunction present now) or a history DTC (malfunction has occurred, but is not present now) with a C or an H, respectively. Diagnostics will automatically be exited if no DIC buttons are pressed for 60 seconds.

Entering On-Board Diagnostics

To enter the Diagnostic Display function perform the following steps:

1. Turn ON the ignition switch, with the engine OFF.
2. Press the RESET button to acknowledge any warning messages present.
3. Press the OPTIONS button on the Driver Information Center (DIC) and hold.
4. While holding the OPTIONS button press the FUEL button 4 times within a 5 second period.
5. System will first enter automatic display mode followed by the manual display mode.

Automatic Display DTC Mode

The automatic display feature allows you to read each module DTC display function in an automatic display sequence. Each system module DTC will be displayed for 3 seconds followed by a 1 second pause before the next DTC is displayed in an automatic sequence. If no DTC information is available from the system currently displayed on the IPC, the IPC will display NO CODES for that system. If there is a communications problem between any system, the IPC will display NO COMM when the IPC is trying to communicate with that system. When all DTCs have been displayed for all systems, the IPC will display NO MORE CODES for 2 seconds before entering the manual mode. At any time during the automatic display function, the manual display feature can be activated by pressing any button on the DIC except the E/M button. The E/M button is used to completely exit the DIAGNOSTICS mode at any time.

Manual Display DTC Mode

The manual display feature allows you to manually select each module DTC display function. The manual mode will automatically be entered after the automatic DTC display sequence is complete, or can be entered at any time during the automatic mode by pressing any button on the DIC except the E/M (E/M button is used to exit the DIAGNOSTIC mode at any time). When the manual mode is selected, the IPC will display the MANUAL DIAGNOSTICS mode message for 2 seconds, or until any button on the DIC except the E/M is pressed. After the MANUAL DIAGNOSTICS mode message is displayed, the IPC will display the first system abbreviation and quantity of codes stored for that system, then the IPC will wait for further instructions. The buttons on the DIC provide the following functions when operating the on-board diagnostic feature in the manual mode:

DIC Button Functions

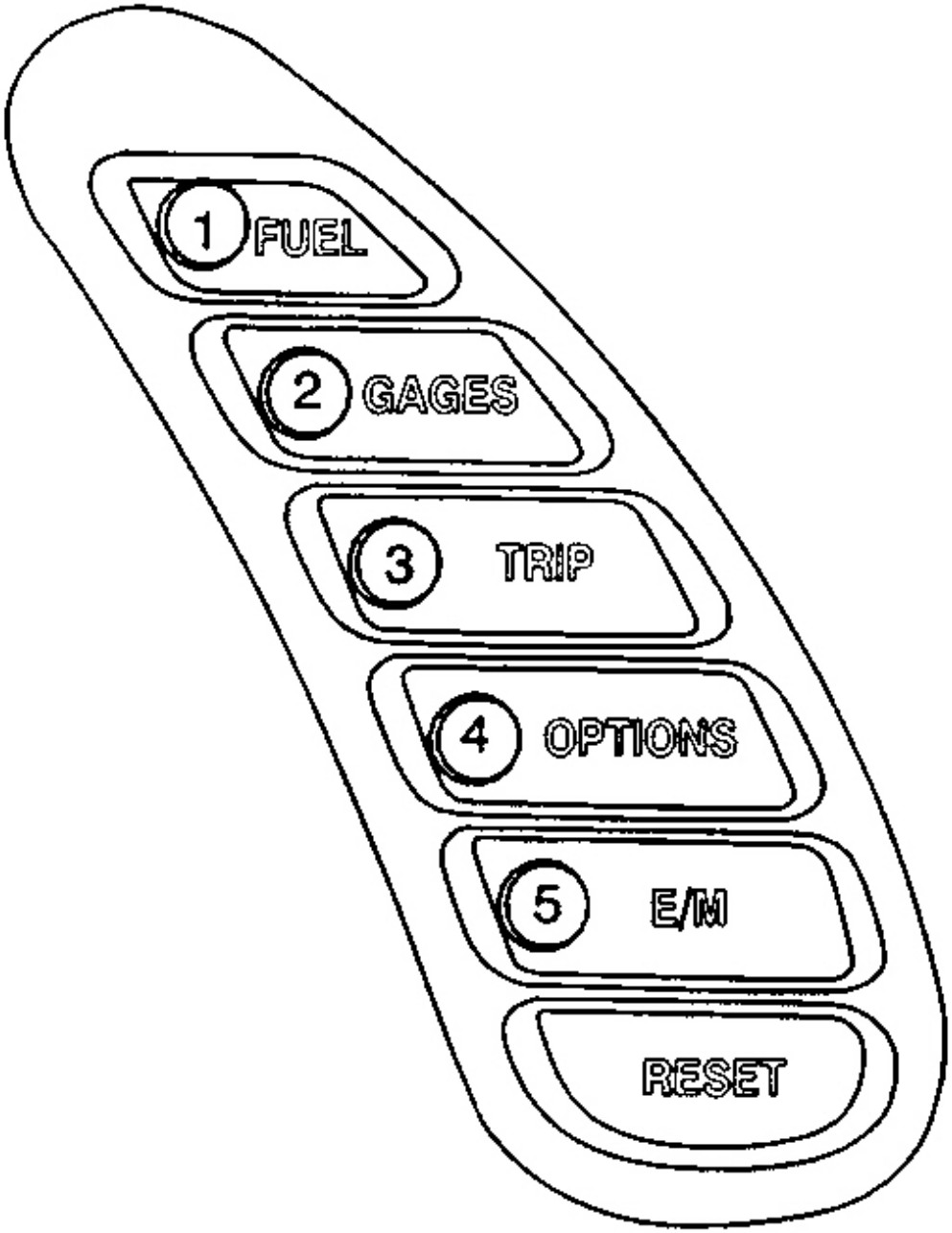

Fig. 13: DIC Buttons
Courtesy of GENERAL MOTORS CORP.

Diagnostic Trouble Code (DTC) Displaying

DIC Button	Function
1. FUEL	Previous DTC
2. GAGES	Next DTC
3. TRIP	Previous System
4. OPTIONS	Next System
5. E/M	Exit Diagnostics
RESET	Clear DTCs

In both diagnostic modes, systems will be displayed in the following order:

- PCM (Powertrain Control Module)
- TCS (Traction Control System)
- RTD (Real Time Damping) (with F45 option)
- BCM (Body Control Module)
- SDM (Sensing and Diagnostic Module)
- IPC (Instrument Panel Cluster)
- RADIO (Radio)
- HVAC (Heater, Ventilation and Air Conditioning) (with CJ2 option)
- LDCM (Left Door Control Module)
- RDCM (Right Door Control Module)
- SCM (Seat Control Module) (with AAB option)
- RFA (Remote Function Actuation) (known as the remote control door lock receiver (RCDLR))

Exiting On-Board Diagnostics

In order to exit On-Board diagnostics press the E/M button.

DIAGNOSTIC TROUBLE CODE (DTC) CLEARING

Clearing DTCs

Disconnecting the battery or the IPC connectors will not clear a DTC. A DTC can only be cleared in one of the following three ways:

- Using the IPC On-Board diagnostic feature.
- Using a scan tool.
- The IPC will automatically clear a DTC if the malfunction has not occurred within 50 ignition cycles.

To clear DTCs press and hold the RESET button to clear DTCs for the system displayed.

DIAGNOSTIC TROUBLE CODE (DTC) LIST

Diagnostic Trouble Code (DTC) List

DTC	Diagnostic Procedure	Module(s)
B0516	**DTC B0516**	IPC
B0521	**DTC B0521**	IPC
B1512	**DTC B1512-B1537**	IPC
B1517	**DTC B1512-B1537**	IPC
B1522	**DTC B1512-B1537**	IPC
B1527	**DTC B1512-B1537**	IPC
B1532	**DTC B1512-B1537**	IPC
B1537	**DTC B1512-B1537**	IPC
B1542	**DTC B1542**	IPC
B1543	**DTC B1543**	IPC
B2578	**DTC B2578** in Lighting Systems	BCM
B2648	**DTC B2648** in Lighting Systems	BCM
BXXXX	**Diagnostic Trouble Code (DTC) List** in SIR	SDM
C0750	**DTC C0750, C0755, C0760, or C0765** in Tire Pressure Monitoring	TPM
C0755	**DTC C0750, C0755, C0760, or C0765** in Tire Pressure Monitoring	TPM
C0760	**DTC C0750, C0755, C0760, or C0765** in Tire Pressure Monitoring	TPM
C0765	**DTC C0750, C0755, C0760, or C0765** in Tire Pressure Monitoring	TPM
CXXXX	**Diagnostic Trouble Code (DTC) List** in ABS	EBCM
P0461	**DTC P0461**	PCM
P0462	**DTC P0462**	PCM
P0463	**DTC P0463**	PCM
P0502	**DTC P0502** in Automatic Transmission	PCM
P0503	**DTC P0503** in Automatic Transmission	PCM
P0522	**DTC P0522**	PCM
P0523	**DTC P0523**	PCM
P0608	**DTC P0608**	PCM
P0654	**DTC P0654**	PCM
P0706	**DTC P0706** in Automatic Transmission	PCM
P2066	**DTC P2066**	PCM
P2067	**DTC P2067**	PCM
P2068	**DTC P2068**	PCM
PXXXX	PXXXX, PCM DTCs Refer to **Diagnostic Trouble Code (DTC) List** in Engine Controls	PCM
UXXXX	For all U codes refer to **Scan Tool Does Not Communicate with Class 2 Device** in Data Link	IPC, BCM, PCM, Radio, SDM, EBCM, RTD, HVAC, LDCM,

	Communications	RDCM, RFA

DTC B0516

Circuit Description

The instrument panel cluster (IPC) receives vehicle speed information from the powertrain control module (PCM). The IPC receives a 4000 pulse-per mile vehicle speed sensor (VSS) input over a dedicated input from the PCM. The PCM is responsible for processing the VSS data and sending it to the IPC. The IPC monitors the VSS output information sent from the PCM for an out of range condition.

Conditions for Setting the DTC

- The IPC detects that the vehicle speed is over 322 km/h (200 mph).
- The above condition must be present for 1 second.

Action Taken When the DTC Sets

- The IPC stores DTC B0516.
- The IPC displays vehicle speed at 322 km/h (200 mph).

Conditions for Clearing the DTC

- The IPC detects that the vehicle speed is less than 322 km/h (200 mph).
- A history DTC clears after 50 consecutive ignition cycles if the condition for the malfunction is no longer present.
- The code is cleared using on-board diagnostics.
- The IPC receives a clear code command from the scan tool.

Diagnostic Aids

- The following conditions may cause an intermittent malfunction to occur:
  - The PCM is unable to process the correct vehicle speed data sent from the VSS.
  - Intermittent or erratic VSS operation.
- Refer to **Testing for Intermittent Conditions and Poor Connections** in Wiring Systems.

Test Description

The number(s) below refer to the step number(s) on the diagnostic table.

2: Tests the speedometer operation. Speedometer malfunctions must be diagnosed and corrected first.

DTC B0516

		Value		

Step	Action	(s)	Yes	No
Schematic Reference: Instrument Cluster Schematics				
1	Did you perform the IPC Diagnostic System Check?	-	Go to **Step 2**	Go to **Diagnostic System Check - Instrument Cluster**
2	1. Turn the ignition OFF. 2. Raise the drive wheels. Refer to **Lifting and Jacking the Vehicle** in General Information. 3. Start and idle the engine 4. Idle the engine in gear. 5. Does the vehicle speedometer indicate a vehicle speed?	-	Go to **Testing for Intermittent Conditions and Poor Connections** in Wiring Systems	Go to **Step 3**
3	Test the VSS circuit for an open, short to voltage, or short to ground. Refer to **Circuit Testing** and to **Wiring Repairs** in Wiring Systems. Did you find and correct the condition?	-	Go to **Step 6**	Go to **Step 4**
4	Inspect for poor connections at the harness connector of the IPC. Refer to **Testing for Intermittent Conditions and Poor Connections** and to **Connector Repairs** in Wiring Systems. Did you find and correct the condition?	-	Go to **Step 6**	Go to **Step 5**
5	Replace the IPC. Refer to **Instrument Panel Cluster (IPC) Replacement** . Did you complete the replacement?	-	Go to **Step 6**	-
6	1. Use the scan tool in order to clear the DTCs. 2. Operate the vehicle within the Conditions for Running the DTC. Does the DTC reset?	-	Go to **Step 2**	System OK

DTC B0521

Circuit Description

The instrument panel cluster (IPC) receives engine RPM information from the powertrain control module (PCM). Engine RPM input information is obtained from the PCM on a dedicated engine speed input to the IPC. The IPC also receives engine RPM data on the serial data line. The PCM is responsible for processing and sending engine RPM data to the IPC. The IPC will only display the engine RPM data that was sent by the PCM. The IPC monitors the engine RPM output information sent from the PCM for an out of range condition.

Conditions for Setting the DTC

- The IPC detects that the engine RPM is at least 7,400 RPM.
- The above condition must be present for 1 second.

Action Taken When the DTC Sets

- The IPC stores a DTC B0521.
- The IPC displays engine RPM at 7,400 RPM.

Conditions for Clearing the DTC

- The IPC detects that the engine RPM is less than 7,400 RPM.
- A history DTC clears after 50 consecutive ignition cycles if the condition for the malfunction is no longer present.
- The code is cleared using on-board diagnostics.
- The IPC receives a clear code command from the scan tool.

Diagnostic Aids

- The following conditions may cause an intermittent malfunction to occur:
  - The PCM is unable to process the correct RPM data.
  - Intermittent or erratic RPM signal sent from the PCM.
- For intermittents and poor connections refer to **Testing for Intermittent Conditions and Poor Connections** in Wiring Systems.

Test Description

The number(s) below refer to the step number(s) on the diagnostic table.

2: Tests the tachometer operation. All tachometer malfunctions must be diagnosed and corrected first.

DTC B0521

Step	Action	Value (s)	Yes	No
Schematic Reference: Instrument Cluster Schematics				
1	Did you perform the IPC Diagnostic System Check?	-	Go to **Step 2**	Go to **Diagnostic System Check - Instrument Cluster**
2	1. Start the engine. 2. Observe for proper tachometer operation.	-	Go to **Testing for Intermittent Conditions and Poor Connections**	

	Does the tachometer operate properly?		in Wiring Systems	Go to **Step 3**
3	Test the engine speed (tachometer) signal circuit for an open, short to voltage, or short to ground. Refer to **Circuit Testing** and **Wiring Repairs** in Wiring Systems. Did you find and correct the condition?	-	Go to **Step 6**	Go to **Step 4**
4	Inspect for poor connections at the harness connector of the IPC. Refer to **Testing for Intermittent Conditions and Poor Connections** and **Connector Repairs** in Wiring Systems. Did you find and correct the condition?	-	Go to **Step 6**	Go to **Step 5**
5	Replace the IPC. Refer to **Instrument Panel Cluster (IPC) Replacement** . Did you complete the replacement?	-	Go to **Step 6**	-
6	1. Use the scan tool in order to clear the DTCs. 2. Operate the vehicle within the Conditions for Running the DTC as specified in the supporting text. Does the DTC reset?	-	Go to **Step 2**	System OK

DTC B1512-B1537

Circuit Description

The driver information center (DIC) contains six switch circuits that allow instrument panel cluster (IPC) functions to be performed. The IPC detects which DIC switch is pressed by monitoring the voltage level on each DIC switch circuit.

Conditions for Setting the DTC

- The IPC detects a low voltage level in the DIC switch signal circuit.
- The above condition must be present for at least 60 seconds.

Action Taken When the DTC Sets

The IPC stores a DTC.

- B1512 (FUEL DIC Switch)
- B1517 (GAGES DIC Switch)
- B1522 (TRIP DIC Switch)
- B1527 (OPTIONS DIC Switch)

- B1532 (E/M DIC Switch)
- B1537 (RESET DIC Switch)

Conditions for Clearing the DTC

- The IPC does not detect a low voltage level in the DIC switch signal circuit.
- A history DTC will clear after 50 consecutive ignition cycles if the condition for the malfunction is no longer present.
- The code is cleared using on-board diagnostics.
- The IPC receives a clear code command from the scan tool.

Diagnostic Aids

- The following conditions may cause an intermittent malfunction to occur:
  - An intermittent short to ground in the DIC switch signal circuit.
  - An internal short to ground in the DIC switch.
  - The DIC switch is pressed for longer than 60 seconds.
- If a DIC switch is pressed for longer than 60 seconds, a DTC may set with no malfunctions present. Always verify that this condition did not occur before diagnosing a DTC.
- For intermittents and poor connections refer to **Testing for Intermittent Conditions and Poor Connections** in Wiring Systems.

Test Description

The number(s) below refer to the step number(s) on the diagnostic table.

2: Tests for the normal state of the DIC switch using a scan tool. The scan tool will display the normal state as INACTIVE, and ACTIVE when the switch is activated.

3: Tests if the IPC is able to detect a change in DIC switch. The scan tool will display the normal state as INACTIVE, and ACTIVE when the switch is activated.

4: Tests for a stuck or shorted DIC switch. If the DIC switch is stuck or shorted, the state will change from ACTIVE to INACTIVE when the DIC switch is disconnected.

DTC B1512-B1537

Step	Action	Value (s)	Yes	No
Schematic Reference: Instrument Cluster Schematics				
1	Did you perform the IPC Diagnostic System Check?	-	Go to **Step 2**	Go to **Diagnostic System Check - Instrument Cluster**
	1. Install a scan tool. 2. Turn ON the ignition, with the engine OFF.			

2	3. With a scan tool, observe the suspected DIC Switch parameter in the IPC Inputs data list. Does the scan tool display INACTIVE?	-	Go to **Step 3**	Go to **Step 4**
3	1. Activate the DIC switch. 2. With the scan tool, observe the DIC Switch parameter in the IPC Inputs data list. Does the DIC Switch parameter change state?	-	Go to Diagnostic Aids	Go to **Step 4**
4	1. Turn OFF the ignition. 2. Disconnect the DIC switch connector. 3. Turn ON the ignition, with the engine OFF. 4. With a scan tool, observe the DIC Switch parameter in the IPC Inputs data list. Does the scan tool display INACTIVE?	-	Go to **Step 7**	Go to **Step 5**
5	Test the signal circuit of the DIC switch for a short to ground. Refer to **Circuit Testing** and **Wiring Repairs** in Wiring Systems. Did you find and correct the condition?	-	Go to **Step 10**	Go to **Step 6**
6	Inspect for poor connections at the harness connector of the IPC. Refer to **Testing for Intermittent Conditions and Poor Connections** and **Connector Repairs** in Wiring Systems. Did you find and correct the condition?	-	Go to **Step 10**	Go to **Step 8**
7	Inspect for poor connections at the harness connector of the DIC switch. Refer to **Testing for Intermittent Conditions and Poor Connections** and **Connector Repairs** in Wiring Systems. Did you find and correct the condition?	-	Go to **Step 10**	Go to **Step 9**
8	Replace the IPC. Refer to **Instrument Panel Cluster (IPC) Replacement** . Did you complete the replacement?	-	Go to **Step 10**	-
9	Replace the DIC switch. Refer to **Driver Information Center Switch Replacement** . Did you complete the replacement?	-	Go to **Step 10**	-
10	1. Use the scan tool in order to clear the DTCs. 2. Operate the vehicle within the Conditions for Running the DTC as specified in the supporting text. Does the DTC reset?	-	Go to **Step 2**	System OK

DTC B1542

Circuit Description

The instrument panel cluster (IPC) detects high resistance with low engine oil temperature, and low resistance with high engine oil temperature. The instrument panel cluster monitors the oil temperature sensor signal circuit to determine engine oil temperature. The IPC measures the reference voltage change and displays the calculated value on the gage.

Conditions for Setting the DTC

- The IPC detects oil temperature above 190°C (374°F).
- The above condition must be present for 1 second.

Action Taken When the DTC Sets

- The IPC stores DTC B1542.
- The IPC displays the oil temperature over 190°C (374°F).
- The IPC displays the HIGH OIL TEMPERATURE REDUCE ENGINE RPM message in the DIC.

Conditions for Clearing the DTC

- The IPC detects that the oil temperature is less than 190°C (374°F).
- A history DTC will clear after 50 consecutive ignition cycles if the condition for the malfunction is no longer present.
- The code is cleared using on-board diagnostics.
- The IPC receives a clear code command from the scan tool.

Test Description

The numbers below refer to the step numbers on the diagnostic table.

2: Tests the oil temperature normal operating range data using a scan tool.

DTC B1542

Step	Action	Values	Yes	No
Schematic Reference: Instrument Cluster Schematics				
1	Did you perform the IPC Diagnostic System Check?	-	Go to **Step 2**	Go to **Diagnostic System Check - Instrument Cluster**
	1. Install a scan tool. 2. Turn the ignition ON, with the engine OFF.	-10 to		

2	3. With a scan tool, observe the Oil Temp parameter in the IPC data 1 list. Does the scan tool indicate that the Oil Temp parameter is within the specified range?	+190°C (14-374° F)	Go to **Testing for Intermittent Conditions and Poor Connections** in Wiring Systems	Go to **Step 3**
3	1. Turn the ignition OFF. 2. Disconnect the engine oil temperature sensor. 3. Turn the ignition ON, with the engine OFF. 4. With a scan tool, observe the Oil Temp parameter. Does the scan tool indicate that the Oil Temp parameter is less than the specified value?	-10°C (14°F)	Go to **Step 4**	Go to **Step 5**
4	1. Turn the ignition OFF. 2. Connect a 3-ampere fused jumper between the signal circuit of the engine oil temperature sensor and the low reference circuit of the engine oil temperature sensor. 3. Turn the ignition ON, with the engine OFF. 4. With a scan tool, observe the Oil Temp parameter. Does the scan tool indicate that the Oil Temp parameter is greater than the specified value?	190°C (374°F)	Go to **Step 6**	Go to **Step 7**
5	Test the signal circuit of the engine oil temperature sensor for a short to ground. Refer to **Circuit Testing** and to **Wiring Repairs** in Wiring Systems. Did you find and correct the condition?	-	Go to **Step 10**	Go to **Step 7**
6	Inspect for poor connections at the harness connector of the engine oil temperature sensor. Refer to **Testing for Intermittent Conditions and Poor Connections** and to **Connector Repairs** in Wiring Systems. Did you find and correct the condition?	-	Go to **Step 10**	Go to **Step 8**
7	Inspect for poor connections at the harness connector of the IPC. Refer to **Testing for Intermittent Conditions and Poor Connections** and to **Connector Repairs** in Wiring Systems.	-		

	Did you find and correct the condition?		Go to **Step 10**	Go to **Step 9**
8	Replace the engine oil temperature sensor. Refer to **Engine Oil Temperature Gage Sensor Replacement** in Engine Mechanical. Did you complete the replacement?	-	Go to **Step 10**	-
9	Replace the IPC. Refer to **Instrument Panel Cluster (IPC) Replacement** . Did you complete the replacement?	-	Go to **Step 10**	-
10	1. Use the scan tool in order to clear the DTCs. 2. Operate the vehicle within the Conditions for Running the DTC. Does the DTC reset?	-	Go to **Step 2**	System OK

DTC B1543

Circuit Description

The instrument panel cluster (IPC) detects high resistance with low engine oil temperature, and low resistance with high engine oil temperature. The instrument panel cluster monitors the oil temperature sensor signal circuit to determine engine oil temperature. The IPC measures the reference voltage change and displays the calculated value on the gage.

Conditions for Setting the DTC

- The IPC detects that the oil temperature is less than -10°C (14°F)
- The engine must be running for longer than 5 minutes for this DTC to set.

Action Taken When the DTC Sets

- The IPC stores DTC B1543.
- The IPC displays oil temperature on the gage as LOW.

Conditions for Clearing the DTC

- The IPC detects that the oil temperature is above -10°C (14°F).
- A history DTC will clear after 50 consecutive ignition cycles if the condition for the malfunction is no longer present.
- The code is cleared using on-board diagnostics.
- The IPC receives a clear code command from the scan tool.

Test Description

The numbers below refer to the step numbers on the diagnostic table.

2: Tests the oil temperature normal operating range data using a scan tool.

DTC B1543

Step	Action	Values	Yes	No
Schematic Reference: Instrument Cluster Schematics				
1	Did you perform the IPC Diagnostic System Check?	-	Go to **Step 2**	Go to **Diagnostic System Check - Instrument Cluster**
2	1. Install a scan tool. 2. Turn the ignition ON, with the engine OFF. 3. With a scan tool, observe the Oil Temp parameter in the IPC data 1 list. Does the scan tool indicate that the Oil Temp parameter is within the specified range?	-10 to +190°C (14-374° F)	Go to **Testing for Intermittent Conditions and Poor Connections** in Wiring Systems.	Go to **Step 3**
3	1. Turn the ignition OFF. 2. Connect a 3-ampere fused jumper between the signal circuit of the engine oil temperature sensor and the low reference circuit of the engine oil temperature sensor. 3. Turn the ignition ON, with the engine OFF. 4. With a scan tool, observe the Oil Temp parameter. Does the scan tool indicate that the Oil Temp parameter is greater than the specified value?	190°C (374°F)	Go to **Step 6**	Go to **Step 4**
4	Test the signal circuit of the engine oil temperature sensor for an open or for a high resistance. Refer to **Circuit Testing** and to **Wiring Repairs** in Wiring Systems. Did you find and correct the condition?	-	Go to **Step 10**	Go to **Step 5**
5	Test the low reference circuit of the engine oil temperature sensor for an open. Refer to **Circuit Testing** and to **Wiring Repairs** in Wiring Systems. Did you find and correct the condition?	-	Go to **Step 10**	Go to **Step 7**
6	Inspect for poor connections at the harness connector of the engine oil temperature sensor. Refer to **Testing for Intermittent Conditions and Poor Connections** and to	-		

	Connector Repairs in Wiring Systems. Did you find and correct the condition?		Go to **Step 10**	Go to **Step 8**
7	Inspect for poor connections at the harness connector of the IPC. Refer to **Testing for Intermittent Conditions and Poor Connections** and to **Connector Repairs** in Wiring Systems. Did you find and correct the condition?	-	Go to **Step 10**	Go to **Step 9**
8	Replace the engine oil temperature sensor. Refer to **Engine Oil Temperature Gage Sensor Replacement** Engine Mechanical. Did you complete the replacement?	-	Go to **Step 10**	-
9	Replace the IPC. Refer to **Instrument Panel Cluster (IPC) Replacement** . Did you complete the replacement?	-	Go to **Step 10**	-
10	1. Use the scan tool in order to clear the DTCs. 2. Operate the vehicle within the Conditions for Running the DTC. Does the DTC reset?	-	Go to **Step 2**	System OK

DTC P0461

Circuit Description

The fuel level sensor changes resistance in response to the fuel level. The powertrain control module (PCM) monitors the signal circuit of the fuel level sensor in order to determine the fuel level. When the fuel tank is full, the sensor resistance is high and the PCM senses a high signal voltage. When the fuel tank is empty, the sensor resistance is low and the PCM senses a low signal voltage. The PCM uses the signal circuit of the fuel level sensor in order to calculate the percentage of remaining fuel in the tank. The PCM sends the fuel level percentage via the class 2 serial data circuit to the instrument cluster in order to control the fuel gage. The fuel level information is also used for misfire and EVAP diagnostics.

This diagnostic tests for a stuck fuel level sensor signal. The PCM sets this DTC if the fuel level sensor signal appears to be stuck based on a lack of signal variation expected during normal operation.

Conditions for Running the DTC

The ignition is ON.

Conditions for Setting the DTC

The PCM does not detect a change in the left/primary fuel level of at least 4.0L (1.1 gal) over a distance of 241 km (150 miles) or 40 min.

Action Taken When the DTC Sets

- The fuel gage defaults to empty.
- The low fuel and check gages indicator illuminates.
- The PCM records the operating conditions at the time that the diagnostic test fails. The PCM displays the failure information in the Failure Records on the scan tool.

Conditions for Clearing the DTC

- The DTC becomes history when the conditions for setting the DTC are no longer present.
- The history DTC clears after 40 malfunction free warm-up cycles.
- The PCM receives the clear code command from the scan tool.

Diagnostic Aids

- Use the Freeze Frame/Failure Records data in order to locate an intermittent condition. If you cannot duplicate the DTC, the information included in the Freeze Frame/Failure Records data may help in determining the number of miles since the DTC set. The Fail Counter and Pass Counter can also help in determining the number of ignition cycles that the diagnostic test reported a pass and/or fail. Operate the vehicle within the same freeze frame conditions, including those for RPM, for engine load, for vehicle speed, for temperature, and for others. This will isolate at what point the DTC failed.
- Refer to **Testing for Intermittent Conditions and Poor Connections** in Wiring Systems.

DTC P0461

Step	Action	Value (s)	Yes	No
Schematic Reference:Instrument Cluster Schematics				
1	Did you perform the Instrument Cluster Diagnostic System Check?	-	Go to **Step 2**	Go to **Diagnostic System Check - Instrument Cluster**
2	1. Remove the left/primary fuel level sender. 2. Inspect for the following items: • The fuel level sensor is stuck, perhaps due to an interference with the fuel strainer. • The fuel tank contains foreign material, for instance, ice. Did you find and correct the condition?	-	Go to **Step 4**	Go to **Step 3**
3	Replace the fuel level sensor. Refer to **Fuel Level Sensor Replacement - Left** in Engine Controls - 5.7L. Did you complete the replacement?	-	Go to **Step 4**	-
	1. Use the scan tool in order to clear the DTCs.			

4	2. Operate the vehicle within the Conditions for Running the DTC as specified in the supporting text. Does the DTC reset?	-	Go to **Step 2**	System OK

DTC P0462

Circuit Description

The left/primary fuel level sensor measures fuel level changes within the left/primary fuel tank and changes resistance based on fuel level. The powertrain control module (PCM) monitors changes in the resistance of the sensor to determine fuel level.

When the fuel tank is full, the sensor resistance is high, and the PCM senses high signal voltage. When the fuel tank is empty, the sensor resistance is low, and the PCM senses a low signal voltage.

The PCM uses inputs from the fuel level sensors to calculate the total fuel remaining in both the fuel tanks. This information is then sent to the instrument panel cluster (IPC) via the class 2 serial data circuit.

When the PCM senses a signal voltage lower than the normal operating range of the sensor, this DTC sets.

Conditions for Running the DTC

The ignition is ON.

Conditions for Setting the DTC

- Fuel level sensor voltage for the left/primary fuel level sensor is below 0.39 volts.
- The fuel level signal is less than 3.5 percent.
- The above conditions are present for greater than 2 minutes.

Action Taken When the DTC Sets

- The driver information center (DIC) displays the LOW FUEL message.
- The fuel gage defaults to empty.
- The check gages indicator illuminates.
- The PCM records the operating conditions at the time the diagnostic fails. The PCM displays the failure information in the Failure Records on the scan tool.

Conditions for Clearing the DTC

- The DTC becomes history when the conditions for setting the DTC are no longer present.
- The history DTC clears after 40 malfunction free warm-up cycles.
- The PCM receives the clear code command from the scan tool.

Diagnostic Aids

IMPORTANT: When inspecting for a deformed or a warped fuel tank, measure the resistance of the suspect fuel level sensor at empty, with the sensor in the fuel tank, and again with the sensor removed from the fuel tank. The measured resistance values should be the same at empty. If the measured resistance values are not the same, refer to Fuel Tank Replacement (Right) or Fuel Tank Replacement (Left) in Engine Controls - 5.7L.

- Use the Freeze Frame and/or Failure Records data in order to locate an intermittent condition. If you cannot duplicate the DTC, the information included in the Freeze Frame and/or Failure Records data may aid in determining the number of miles since the DTC set.
- The Fail Counter and Pass Counter can also aid in determining the number of ignition cycles that the diagnostic reported a pass and/or fail. Operate the vehicle within the same freeze frame conditions (RPM, engine load, vehicle speed, temperature, etc.). This will isolate when the DTC failed.

  Refer to **Testing for Intermittent Conditions and Poor Connections** in Wiring Systems.

Test Description

The number below refers to the step number on the diagnostic table.

3: Tests for the proper operation of the circuit in the high voltage range.

DTC P0462

Step	Action	Value (s)	Yes	No
Schematic Reference: Instrument Cluster Schematics				
1	Did you perform the IPC Diagnostic System Check?	-	Go to **Step 2**	Go to **Diagnostic System Check - Instrument Cluster**
2	1. Install a scan tool. 2. Turn the ignition ON, with the engine OFF. 3. With a scan tool, observe the Fuel Tank Level Remaining parameter in the powertrain control module (PCM) Enhanced EVAP data list. Does the scan tool indicate that the Fuel Level parameter is less than the specified value?	4%	Go to **Step 3**	Go to Diagnostic Aids
3	1. Turn the ignition OFF. 2. Disconnect C402. 3. Turn the ignition ON, with the engine OFF. 4. With a scan tool, observe the Fuel Level parameter.	98%		

	Does the scan tool indicate that the Fuel Tank Level Remaining parameter is greater than the specified value?		Go to **Step 5**	Go to **Step 4**
4	Test the signal circuit of the fuel level sender for a short to ground. Refer to **Circuit Testing** and to **Wiring Repairs** in Wiring Systems. Did you find and correct the condition?	-	Go to **Step 10**	Go to **Step 7**
5	Test the signal circuit of the fuel level sensor for a short to ground between C402 and the fuel level sensor. Refer to **Circuit Testing** and to **Wiring Repairs** in Wiring Systems. Did you find and correct the condition?	-	Go to **Step 10**	Go to **Step 6**
6	Inspect for poor connections at the harness connector of the fuel level sensor. Refer to **Testing for Intermittent Conditions and Poor Connections** and to **Connector Repairs** in Wiring Systems. Did you find and correct the condition?	-	Go to **Step 10**	Go to **Step 8**
7	Inspect for poor connections at the harness connector of the PCM. Refer to **Testing for Intermittent Conditions and Poor Connections** and to **Connector Repairs** in Wiring Systems. Did you find and correct the condition?	-	Go to **Step 10**	Go to **Step 9**
8	Replace the fuel level sensor. Refer to **Fuel Level Sensor Replacement - Left** in Engine Controls - 5.7L. Did you complete the replacement?	-	Go to **Step 10**	-
9	**IMPORTANT:** **Program the replacement PCM.** Replace the PCM. Refer to **Powertrain Control Module (PCM) Replacement** in Engine Controls - 5.7L.Did you complete the replacement?	-	Go to **Step 10**	-
10	1. Use the scan tool in order to clear the DTCs. 2. Operate the vehicle within the Conditions for Running the DTC. Does the DTC reset?	-	Go to **Step 2**	System OK

DTC P0463

Circuit Description

The left/primary fuel level sensor measures fuel level changes within the left/primary fuel tank and changes resistance based on fuel level. The powertrain control module (PCM) monitors changes in the resistance of the sensor to determine fuel level.

When the fuel tank is full, the sensor resistance is high, and the PCM senses high signal voltage. When the fuel tank is empty, the sensor resistance is low, and the PCM senses a low signal voltage.

The PCM uses inputs from the fuel level sensors to calculate the total fuel remaining in both the fuel tanks. This information is then sent to the instrument panel cluster (IPC) via the class 2 serial data circuit.

When the PCM senses a signal voltage higher than the normal operating range of the sensor, this DTC sets.

Conditions for Running the DTC

The ignition is ON.

Conditions for Setting the DTC

- Fuel level sensor voltage for the left/primary level sensor is above 2.9 volts.
- The fuel level signal is greater than 98 percent.
- The above conditions are present for greater than 2 minutes.

Action Taken When the DTC Sets

- The DIC displays a LOW FUEL message.
- The fuel gage defaults to empty.
- The check gages indicator illuminates.
- The PCM records the operating conditions at the time the diagnostic fails. The PCM displays the failure information in the Failure Records on the scan tool.

Conditions for Clearing the DTC

- The DTC becomes history when the conditions for setting the DTC are no longer present.
- The history DTC clears after 40 malfunction free warm-up cycles.
- The PCM receives the clear code command from the scan tool.

Diagnostic Aids

Use the Freeze Frame and/or Failure Records data in order to locate an intermittent condition. If you cannot duplicate the DTC, the information included in the Freeze Frame and/or Failure Records data may aid in determining the number of miles since the DTC set. The Fail Counter and Pass Counter can also aid in determining the number of ignition cycles that the diagnostic reported a pass and/or fail. Operate the vehicle within the same freeze frame conditions (RPM, load, vehicle speed, temperature, etc.). This will isolate when the DTC failed.

Refer to **Testing for Intermittent Conditions and Poor Connections** in Wiring Systems.

IMPORTANT: When inspecting for a deformed or warped fuel tank, measure the resistance of the suspect fuel level sensor at empty, with the sensor in the fuel tank, and again with the sensor removed from the fuel tank. The measured resistance values should be the same at empty. If the measured resistance values are not the same, refer to Fuel Tank Replacement (Right) or Fuel Tank Replacement

(Left) in Engine Controls - 5.7L.

Test Description

The number below refers to the step number on the diagnostic table.

3: Tests for the proper operation of the circuit in the low voltage range.

DTC P0463

Step	Action	Value (s)	Yes	No
Schematic Reference:Instrument Cluster Schematics				
1	Did you perform the IPC Diagnostic System Check?	-	Go to **Step 2**	Go to **Diagnostic System Check - Instrument Cluster**
2	1. Install a scan tool. 2. Turn the ignition ON, with the engine OFF. 3. With a scan tool, observe the Fuel Tank Level Remaining parameter in the powertrain control module (PCM) Enhanced EVAP data list. Does the scan tool indicate that the Fuel Tank Level Remaining parameter is greater than the specified value?	98%	Go to **Step 3**	Go to Diagnostic Aids
3	1. Turn the ignition OFF. 2. Disconnect C402. 3. Connect a 3-amp fused jumper between the signal circuit of the fuel level sensor and the low reference circuit of the fuel level sensor (female terminal side). 4. Turn the ignition ON, with the engine OFF. 5. With a scan tool, observe the Fuel Tank Level Remaining parameter. Does the scan tool indicate that the Fuel Tank Level Remaining parameter is less than the specified value?	4%	Go to **Step 6**	Go to **Step 4**
4	Test the signal circuit of the fuel level sensor for an open, a high resistance, or for a short to voltage. Refer to **Circuit Testing** and to **Wiring Repairs** in Wiring Systems. Did you find and correct the condition?	-	Go to **Step 12**	Go to **Step 5**
5	Test the low reference circuit of the fuel level sensor for an open, a high resistance, or for a short to voltage. Refer to **Circuit Testing** and to **Wiring Repairs** in Wiring Systems. Did you find and correct the condition?	-	Go to **Step 12**	Go to **Step 9**
	Test the signal circuit of the fuel level sensor for an open, a			

6	high resistance, or for a short to voltage between C402 and the fuel level sensor. Refer to **Circuit Testing** and to **Wiring Repairs** in Wiring Systems. Did you find and correct the condition?	-	Go to **Step 12**	Go to **Step 7**
7	Test the low reference circuit of the fuel level sensor for an open, a high resistance, or for a short to voltage between C408 and the fuel level sensor. Refer to **Circuit Testing** and to **Wiring Repairs** in Wiring Systems. Did you find and correct the condition?	-	Go to **Step 12**	Go to **Step 8**
8	Inspect for poor connections at the harness connector of the fuel level sensor. Refer to **Testing for Intermittent Conditions and Poor Connections** and to **Connector Repairs** in Wiring Systems. Did you find and correct the condition?	-	Go to **Step 12**	Go to **Step 10**
9	Inspect for poor connections at the harness connector of the PCM. Refer to **Testing for Intermittent Conditions and Poor Connections** and to **Connector Repairs** in Wiring Systems. Did you find and correct the condition?	-	Go to **Step 12**	Go to **Step 11**
10	Replace the fuel level sensor. Refer to **Fuel Level Sensor Replacement - Left** in Engine Controls - 5.7L. Did you complete the replacement?	-	Go to **Step 12**	-
11	**IMPORTANT:** **Program the replacement PCM.** Replace the PCM. Refer to **Powertrain Control Module (PCM) Replacement** in Engine Controls - 5.7L.Did you complete the replacement?	-	Go to **Step 12**	-
12	1. Use the scan tool in order to clear the DTCs. 2. Operate the vehicle within the Conditions for Running the DTC. Does the DTC reset?	-	Go to **Step 2**	System OK

DTC P0522

Circuit Description

The engine oil pressure (EOP) sensor changes resistance based on engine oil pressure. The PCM monitors the signal circuit of the EOP sensor. When the oil pressure is high, the sensor resistance is high, and the PCM senses a high signal voltage. When the oil pressure is low, the sensor resistance is low, and the PCM senses a low signal voltage. The PCM sends the engine oil pressure information to the IPC via the class 2 serial data circuit.

Conditions for Running the DTC

- The engine is running.
- DTC P0641 is not present.

Conditions for Setting the DTC

- The PCM detects that the EOP sensor signal circuit is less than 0.48 volts.
- The above condition is present for greater than 9 seconds.

Action Taken When the DTC Sets

- The PCM records the operating conditions at the time the diagnostic test fails. The PCM displays this information in the Failure Records on the scan tool.
- The instrument panel cluster (IPC) illuminates the engine oil pressure indicator.

Conditions for Clearing the DTC

- The DTC becomes history when the conditions for setting the DTC are no longer present.
- The history DTC clears after 40 malfunction free warm-up cycles.
- The PCM receives a clear code command from the scan tool.

Diagnostic Aids

Using the Failure Records data may help locate an intermittent condition. If you cannot duplicate the DTC, the information in the Failure Records can help determine how many miles since the DTC set. The Fail Counter and Pass Counter can help determine how many ignition cycles that the diagnostic test reported a pass and/or a fail.

Refer to **Testing for Intermittent Conditions and Poor Connections** in Wiring Systems.

Test Description

The numbers below refer to the step numbers on the diagnostic table.

4: This step tests for the proper operation of the circuit in the high voltage range.

DTC P0522

Step	Action	Values	Yes	No
Schematic Reference: Instrument Cluster Schematics				
1	Did you perform the Instrument Cluster Diagnostic System Check?	-	Go to **Step 2**	Go to **Diagnostic System Check - Instrument Cluster**
2	1. Install a scan tool. 2. Turn the ignition ON, with the engine OFF. 3. With the scan tool, observe the Engine Oil Pressure Sensor parameter in the PCM Engine	0.48 V		

	Data 3 data list. Does the Engine Oil Pressure Sensor parameter display less than the specified value?		Go to **Step 3**	Go to Diagnostic Aids
3	Is DTC P0641 current in the PCM?	-	Go to **DTC P0641** in Engine Controls	Go to **Step 4**
4	1. Turn the ignition OFF. 2. Disconnect the engine oil pressure (EOP) sensor. 3. Connect a 3-ampere fused jumper between the EOP sensor signal circuit and the 5 volt reference circuit of the EOP sensor. 4. With the scan tool, observe the Engine Oil Pressure Sensor parameter. Does the Engine Oil Pressure Sensor parameter display greater than the specified value?	4.6 V	Go to **Step 8**	Go to **Step 5**
5	1. Disconnect the fused jumper. 2. Measure the voltage between the 5 volt reference circuit of the EOP sensor and the low reference circuit of the EOP sensor. Does the voltage measure greater than the specified value?	4.6 V	Go to **Step 7**	Go to **Step 6**
6	Test the 5 volt reference circuit of the EOP sensor for an open or for a high resistance. Refer to **Circuit Testing** and to **Wiring Repairs** in Wiring Systems. Did you find and correct the condition?	-	Go to **Step 12**	Go to **Step 9**
7	Test the EOP sensor signal circuit for an open, for a short to ground, or for a high resistance. Refer to **Circuit Testing** and to **Wiring Repairs** in Wiring Systems. Did you find and correct the condition?	-	Go to **Step 12**	Go to **Step 9**
8	Inspect for poor connections at the harness connector of the EOP sensor. Refer to **Testing for Intermittent Conditions and Poor Connections** and to **Connector Repairs** in Wiring Systems. Did you find and correct the condition?	-	Go to **Step 12**	Go to **Step 10**
9	Inspect for poor connections at the harness connector of the PCM. Refer to **Testing for Intermittent Conditions and Poor Connections** and to **Connector Repairs** in Wiring Systems.	-		

	Did you find and correct the condition?		Go to **Step 12**	Go to **Step 11**
10	Replace the EOP sensor. Refer to **Engine Oil Pressure Sensor and/or Switch Replacement** in Engine Mechanical. Did you complete the replacement?	-	Go to **Step 12**	-
11	**IMPORTANT:** **Program the replacement PCM.** Replace the PCM. Refer to **Powertrain Control Module (PCM) Replacement** in Engine Controls.Did you complete the replacement?	-	Go to **Step 12**	-
12	1. Use the scan tool in order to clear the DTCs. 2. Operate the vehicle within the Conditions for Running the DTC. Does the DTC reset?	-	Go to **Step 2**	System OK

DTC P0523

Circuit Description

The engine oil pressure (EOP) sensor changes resistance based on engine oil pressure. The PCM monitors the signal circuit of the EOP sensor. When the oil pressure is high, the sensor resistance is high, and the PCM senses a high signal voltage. When the oil pressure is low, the sensor resistance is low, and the PCM senses a low signal voltage. The PCM sends the engine oil pressure information to the IPC via the class 2 serial data circuit.

Conditions for Running the DTC

- The engine is running.
- DTC P0641 is not present

Conditions for Setting the DTC

- The PCM detects that the EOP sensor signal circuit is greater than 4.5 volts.
- The above condition is present for greater than 9 seconds.

Action Taken When the DTC Sets

The PCM records the operating conditions at the time that the diagnostic test fails. The PCM displays this information in the Failure Records on the scan tool.

Conditions for Clearing the DTC

- The DTC becomes history when the conditions for setting the DTC are no longer present.

- The history DTC is cleared after 40 malfunction-free warm-up cycles.
- The PCM receives the clear code command from the scan tool.

Diagnostic Aids

Using the Failure Records data may help locate an intermittent condition. If you cannot duplicate the DTC, the information in the Failure Records can help in determining how many miles since the DTC set. The Fail Counter and the Pass Counter can help determine how many ignition cycles that the diagnostic test reported a pass and/or a fail.

Refer to **Testing for Intermittent Conditions and Poor Connections** in Wiring Systems.

Test Description

The numbers below refer to the step numbers on the diagnostic table.

3: This step tests for the proper operation of the circuit in the low voltage range.

DTC P0523

Step	Action	Values	Yes	No
Schematic Reference:Instrument Cluster Schematics				
1	Did you perform the Instrument Cluster Diagnostic System Check?	-	Go to **Step 2**	Go to **Diagnostic System Check - Instrument Cluster**
2	1. Install a scan tool. 2. Turn ON the ignition, with the engine OFF. 3. With the scan tool, observe the Engine Oil Pressure Sensor parameter in the PCM Engine Data 3 list. Does the Engine Oil Pressure Sensor parameter display greater than the specified value?	4.5 V	Go to **Step 3**	Go to Diagnostic Aids
3	1. Turn OFF the ignition. 2. Disconnect the engine oil pressure (EOP) sensor. 3. With the scan tool, observe the Engine Oil Pressure Sensor parameter. Does the Engine Oil Pressure Sensor parameter display less than the specified value?	0.4 V	Go to **Step 4**	Go to **Step 5**
4	1. Turn OFF the ignition. 2. Disconnect the negative battery cable. Refer to **Battery Negative Cable Disconnect/Connect Procedure** in Engine Electrical. 3. Measure the resistance from the low reference circuit of	5 ohm		

	the EOP sensor to a good ground. Is the resistance less than the specified value?		Go to **Step 7**	Go to **Step 6**
5	Test the EOP sensor signal circuit for a short to voltage. Refer to **Circuit Testing** and to **Wiring Repairs** in Wiring Systems. Did you find and correct the condition?	-	Go to **Step 11**	Go to **Step 8**
6	1. Disconnect the PCM. 2. Test the low reference circuit of the EOP sensor for an open or for a high resistance. Refer to **Circuit Testing** and to **Wiring Repairs** in Wiring Systems. Did you find and correct the condition?	-	Go to **Step 11**	Go to **Step 8**
7	Inspect for poor connections at the harness connector of the EOP sensor. Refer to **Testing for Intermittent Conditions and Poor Connections** and to **Connector Repairs** in Wiring Systems. Did you find and correct the condition?	-	Go to **Step 11**	Go to **Step 9**
8	Inspect for poor connections at the harness connector of the PCM. Refer to **Testing for Intermittent Conditions and Poor Connections** and to **Connector Repairs** in Wiring Systems. Did you find and correct the condition?	-	Go to **Step 11**	Go to **Step 10**
9	Replace the EOP sensor. Refer to **Engine Oil Pressure Sensor and/or Switch Replacement** in Engine Mechanical. Did you complete the replacement?	-	Go to **Step 11**	-
10	**IMPORTANT:** **Program the replacement PCM.** Replace the PCM. Refer to **Powertrain Control Module (PCM) Replacement** in Engine Controls.Did you complete the replacement?	-	Go to **Step 11**	-
11	1. Use the scan tool in order to clear the DTCs. 2. Operate the vehicle within the Conditions for Running the DTC. Does the DTC reset?	-	Go to **Step 2**	System OK

DTC P0608

Circuit Description

The PCM creates the vehicle speed output signal by pulsing the circuit to ground. The PCM monitors the voltage on the vehicle speed output circuit. If the PCM determines that the voltage is out of the normal

operating range, a DTC sets.

Conditions for Running the DTC

- The engine speed is more than 400 RPM.
- The ignition voltage is between 6.0 volts and 18.0 volts.

Conditions for Setting the DTC

- The PCM detects that the commanded state of the driver and the actual state of the signal circuit do not match.
- The above condition must be present for a minimum of 5 seconds.

Action Taken When the DTC Sets

The PCM records the operating conditions at the time the diagnostic fails. The PCM displays the failure information in the Failure Records on the scan tool.

Conditions for Clearing the MIL/DTC

- The history DTC clears after 40 malfunction free warm-up cycles.
- The DTC becomes history when the conditions for setting the DTC are no longer present.
- The PCM receives the clear code command from the scan tool.

DTC P0608

Step	Action	Yes	No
Schematic Reference: Instrument Cluster Schematics			
1	Did you perform the IPC Diagnostic System Check?	Go to **Step 2**	Go to **Diagnostic System Check - Instrument Cluster**
2	1. Install a scan tool. 2. Raise the vehicle's drive wheels. Refer to **Lifting and Jacking the Vehicle** in General Information. 3. Start the engine. 4. Place the transmission into drive for an automatic transmission or third gear for a manual transmission. 5. With the scan tool, observe the Vehicle Speed parameter in the PCM Engine Data 2 data list. Does the Vehicle Speed parameter match the	Go to **Testing for Intermittent Conditions and Poor Connections** in	

	speedometer display?	Wiring Systems	Go to **Step 3**
3	1. Turn the ignition OFF. 2. Disconnect the PCM connector C2. 3. Install one lead of the **J 33431-C** to the vehicle speed signal circuit at the PCM harness connector, and the other lead to a good ground. See **Special Tools and Equipment** . 4. Turn the ignition ON, with the engine OFF. 5. Set the **J 33431-C** to generate a speedometer signal. See **Special Tools and Equipment** . Does the vehicle speedometer indicate approximately 55 MPH?	Go to **Step 5**	Go to **Step 4**
4	Test the vehicle speed signal circuit for an open, for a short to voltage, or for a short to ground. Refer to **Circuit Testing** and to **Wiring Repairs** in Wiring Systems. Did you find and correct the condition?	Go to **Step 9**	Go to **Step 6**
5	Inspect for poor connections at harness connector of the PCM. Refer to **Testing for Intermittent Conditions and Poor Connections** and to **Connector Repairs** in Wiring Systems. Did you find and correct the condition?	Go to **Step 9**	Go to **Step 7**
6	Inspect for poor connections at the harness connector of the IPC. Refer to **Testing for Intermittent Conditions and Poor Connections** and to **Connector Repairs** in Wiring Systems. Did you find and correct the condition?	Go to **Step 9**	Go to **Step 8**
7	**IMPORTANT:** **Program the replacement PCM.** Replace the PCM. Refer to **Powertrain Control Module (PCM) Replacement** in Engine Controls.Did you complete the replacement?	Go to **Step 9**	-
8	**IMPORTANT:** **Perform the set up procedure for the replacement IPC.** Replace the IPC. Refer to **Instrument Panel Cluster (IPC) Replacement** .Did you complete the replacement?	Go to **Step 9**	-
	1. Use the scan tool in order to clear the		

9	DTCs. 2. Operate vehicle within the Conditions for Running this DTC. Does the DTC reset?	Go to **Step 2**	System OK

DTC P0654

Circuit Description

The PCM creates the engine speed output signal by pulsing the circuit to ground at a predetermined hertz rate. The PCM pulses the circuit at the same rate as the engine speed signal input. The PCM monitors the voltage on the engine speed output circuit. If the PCM determines the voltage is out of the normal operating range, a DTC sets.

Conditions for Running the DTC

- The engine speed is greater than 400 RPM.
- The ignition voltage is greater than 6 volts, but less than 18 volts.

Conditions for Setting the DTC

- The PCM detects that the commanded state of the driver and the actual state of the control circuit do not match.
- All of the above conditions exist for a minimum of 5.0 seconds.

Action Taken When the DTC Sets

- The PCM stores the DTC information into memory when the diagnostic runs and fails.
- The malfunction indicator lamp (MIL) will not illuminate.
- The PCM records the operating conditions at the time the diagnostic fails. The PCM stores this information in the Failure Records.

Conditions for Clearing the MIL/DTC

- A last test failed (current DTC) clears when the diagnostic runs and does not fail.
- A History DTC clears after forty consecutive warm-up cycles, if this or any other emission related diagnostic does not report any failures.
- Use a scan tool in order to clear the MIL/DTC.

Diagnostic Aids

IMPORTANT: Remove any debris from the PCM module connector surfaces before servicing the PCM. Inspect the PCM connector gaskets when diagnosing/replacing the PCM. Ensure that the gaskets are installed correctly. The gaskets prevent

contaminate intrusion into the PCM.

For an intermittent, refer to **Testing for Intermittent Conditions and Poor Connections** in Wiring Systems.

Test Description

The numbers below refer to the step numbers on the diagnostic table.

3: Further circuit diagnosis may require IPC removal. Test the circuit from the PCM to the tachometer for being open, shorted to ground or, voltage. If you can not find any trouble, follow the appropriate IPC diagnostic procedure.

DTC P0654

Step	Action	Values	Yes	No
Schematic Reference: Instrument Cluster Schematics				
1	Did you perform the IPC Diagnostic System Check?	-	Go to **Step 2**	Go to **Diagnostic System Check - Instrument Cluster**
2	With the engine running, does the vehicles tachometer indicate engine RPM?	-	Go to **Testing for Intermittent Conditions and Poor Connections** in Wiring Systems	Go to **Step 3**
3	1. Turn the ignition OFF. 2. Disconnect the PCM connector located on the same side as the manufacturer's logo. Refer to **Powertrain Control Module (PCM) Replacement** in Engine Controls. 3. Install the Signal Generator Tester between the engine speed signal circuit and a good ground. 4. Turn the ignition ON. 5. Set the Signal Generator Tester to generate a tachometer signal. Does the tachometer indicate a RPM?	-	Go to **Step 5**	Go to **Step 4**
4	Test the engine speed signal circuit for an open, high resistance, or a short to ground. Refer to **Circuit Testing** and **Wiring Repairs** in Wiring Systems. Did you find and correct the condition?	-	Go to **Step 9**	Go to **Step 7**
	Inspect for poor connections at the PCM			

5	connector. Refer to **Testing for Intermittent Conditions and Poor Connections** and **Connector Repairs** in Wiring Systems. Did you find and correct the condition?	-	Go to **Step 9**	Go to **Step 6**
6	Inspect for poor connections at the harness connector of the IPC. Refer to **Testing for Intermittent Conditions and Poor Connections** and **Connector Repairs** in Wiring Systems. Did you find and correct the condition?	-	Go to **Step 9**	Go to **Step 8**
7	**IMPORTANT:** **Program the replacement PCM.** Replace the PCM. Refer to **Powertrain Control Module (PCM) Replacement** in Engine Controls.Did you complete the replacement?	-	Go to **Step 9**	-
8	Replace the IPC. Refer to **Instrument Panel Cluster (IPC) Replacement** . Did you complete the replacement?	-	Go to **Step 9**	-
9	1. Use the scan tool in order to clear the DTCs. 2. Operate the vehicle within the conditions for running the DTC. Does the DTC reset?	-	Go to **Step 2**	System OK

DTC P2066

Circuit Description

The right/secondary fuel level sensor measures fuel level changes within the right/secondary fuel tank.

When the fuel level is high the sensor signal voltage is high. When the fuel level is low the sensor signal voltage is low.

The powertrain control module (PCM) uses inputs from the left/primary fuel level sensor and the right/secondary fuel level sensors in order to calculate the total fuel remaining in both fuel tanks. The PCM sends this information via class 2 to the IPC.

This diagnostic tests for a stuck right/secondary fuel level sensor signal. If the PCM determines that the fuel level (right tank) signal appears to be stuck based on a lack of signal variation expected during normal operation, this DTC sets.

Conditions for Running the DTC

The engine is operating.

Conditions for Setting the DTC

- The right/secondary fuel tank is not empty.
- More than 241 km (150 mi) have been accumulated.
- The PCM does not detect that the fuel level in the right/secondary fuel tank has not changed by at least 3.0 liters (0.80 gallons).

OR

- The right/secondary fuel tank is not empty.
- The left/primary fuel tank is not full.
- Engine operating greater than 40 minutes.
- The left/primary fuel tank does not achieve the top of its range. Observe, after operating the engine for greater than 40 minutes the fuel in the right/secondary fuel tank will transfer to the left/primary fuel tank.

OR

- The right/secondary fuel tank is empty.
- The left/primary fuel tank is full.
- The fuel level in both fuel tanks does not change after traveling more than 284 km (200 mi). Observe, if the right/secondary fuel tank is empty, the left/primary fuel level should decrease after 284 km (200 mi).

Action Taken When the DTC Sets

- The PCM stores the DTC information into memory when the diagnostic runs and fails.
- The malfunction indicator lamp (MIL) will not illuminate.
- The PCM records the operating conditions at the time the diagnostic fails. The PCM stores this information in the Failure Records.
- The vehicle fuel gage displays empty.
- The check gages indicator illuminates.
- The driver information center displays the LOW FUEL message.

Conditions for Clearing the MIL or DTC

- A history DTC will clear after 40 consecutive warm-up cycles, if no failures are reported by this or any other non-emission related diagnostic.
- A last test failed, ore current DTC, will clear when the diagnostic runs and does not fail.
- Use a scan tool in order to clear the MIL or DTC.

Diagnostic Aids

IMPORTANT: When inspecting for a deformed or warped fuel tank, measure the resistance of the suspect fuel level sensor at empty, with the sensor in the fuel tank, and again with the sensor removed from the fuel tank. The measured resistance values should be the same at empty. If the measured values are not the same, refer to Fuel Tank Replacement (Right) or Fuel Tank Replacement (Left) in Engine Controls.

Depending on the current fuel level, it may be difficult to locate a malfunctioning sending unit. The malfunction may only occur when the fuel level is full or near empty. The fuel sending unit may need to be removed for further diagnosis. A fuel level sensor that has an intermittent condition causes this DTC to set. Remove the fuel level sensor. Refer to **Fuel Sender Assembly Replacement (RH)** or **Fuel Sender Assembly Replacement (LH)** in Engine Controls in order to test the resistance of the sensor. The resistance of the sensor should change from 40 to 250 ohms. Replace the sensor if the resistance did not change or was out of range.

DTC P2066

Step	Action	Values	Yes	No
Schematic Reference: Instrument Cluster Schematics				
1	Did you perform the IPC Diagnostic System Check?	-	Go to **Step 2**	Go to **Diagnostic System Check - Instrument Cluster**
2	1. Connect a scan tool, record the left/primary and right/secondary fuel level sensor voltages in the powertrain control module (PCM) data list. 2. Remove 5 gallons of fuel. Refer to **Fuel Tank Draining Procedure** in Engine Controls. 3. Record the voltage on the left/primary and right/secondary fuel level sensors. 4. Start the engine, let the engine idle for 20 minutes. Did the voltage increase on the left/primary fuel level sensor and decrease on the right/secondary fuel level sensor after 20 minutes?	-	Go to **Step 4**	Go to **Step 3**
3	Remove the right/secondary fuel tank. Refer to **Fuel Tank Replacement (Right)** or **Fuel Tank Replacement (Left)** in Engine Controls - 5.7L. Is there any fuel in the right/secondary fuel tank?	-	Go to **Fuel System Diagnosis** in Engine Controls - 5.7L	Go to **Step 4**
	1. Remove the right/secondary fuel level sensor. Refer to **Fuel Level Sensor**			

4	**Replacement - Right** in Engine Controls - 5.7L. 2. Inspect for the following items: • The fuel level sensor is stuck, perhaps due to an interface with the fuel strainer. • The fuel tank contains foreign material, for instance, ice. • Warped fuel tank. Did you find and correct the condition?	-	Go to **Step 7**	Go to **Step 5** -
5	1. With the DMM, measure the resistance of the fuel level sensor while moving the float arm. 2. Observe both the analog and digital displays on the DMM. Does the resistance change smoothly across the specified range?	40-250ohm	Go to Diagnostic Aids	Go to **Step 6**
6	Replace the right/secondary fuel sensor. Refer to **Fuel Level Sensor Replacement - Right** in Engine Control - 5.7L. Did you complete the replacement?	-	Go to **Step 7**	-
7	1. Use the scan tool in order to clear the DTCs. 2. Operate the vehicle within the conditions for running the DTC. Does the DTC reset?	-	Go to **Step 2**	System OK

DTC P2067

Circuit Description

The right/secondary fuel level sensor measures fuel level changes within the right/secondary fuel tank and changes resistance based on fuel level. The powertrain control module (PCM) monitors changes in the resistance of the sensor to determine fuel level.

When the fuel tank is full, the sensor resistance is high, and the PCM senses high signal voltage. When the fuel tank is empty, the sensor resistance is low, and the PCM senses a low signal voltage.

The PCM uses inputs from the fuel level sensors to calculate the total fuel remaining in the fuel tanks. This information is then sent to the instrument panel cluster (IPC) via the class 2 serial data circuit.

When the PCM senses a signal voltage lower than the normal operating range of the sensor, this DTC sets.

Conditions for Running the DTC

The ignition is ON.

Conditions for Setting the DTC

- Fuel level sensor voltage for the right/secondary fuel level sensor is below 0.39 volts.
- The fuel level signal is less than 3.5 percent.
- The above conditions are present for greater than 2 minutes.

Action Taken When the DTC Sets

- The DIC displays the LOW FUEL message.
- The fuel gage defaults to empty.
- The check gages indicator illuminates.
- The PCM records the operating conditions at the time the diagnostic fails. The PCM displays the failure information in the Failure Records on the scan tool.

Conditions for Clearing the DTC

- The DTC becomes history when the conditions for setting the DTC are no longer present.
- The history DTC clears after 40 malfunction free warm-up cycles.
- The PCM receives the clear code command from the scan tool.

Diagnostic Aids

IMPORTANT: When inspecting for a deformed or a warped fuel tank, measure the resistance of the suspect fuel level sensor at empty, with the sensor in the fuel tank, and again with the sensor removed from the fuel tank. The measured resistance values should be the same at empty. If the measured resistance values are not the same, refer to Fuel Tank Replacement (Right) or Fuel Tank Replacement (Left) in Engine Controls.

- Use the Freeze Frame and/or Failure Records data in order to locate an intermittent condition. If you cannot duplicate the DTC, the information included in the Freeze Frame and/or Failure Records data may aid in determining the number of miles since the DTC set.
- The Fail Counter and Pass Counter can also aid in determining the number of ignition cycles that the diagnostic reported a pass and/or fail. Operate the vehicle within the same freeze frame conditions (RPM, engine load, vehicle speed, temperature, etc.). This will isolate when the DTC failed.

  Refer to **Testing for Intermittent Conditions and Poor Connections** in Wiring Systems.

Test Description

The number below refers to the step number on the diagnostic table.

3: Tests for the proper operation of the circuit in the high voltage range.

DTC P2067

Step	Action	Value (s)	Yes	No
Schematic Reference:Instrument Cluster Schematics				
1	Did you perform the IPC Diagnostic System Check?	-	Go to **Step 2**	Go to **Diagnostic System Check - Instrument Cluster**
2	1. Install a scan tool. 2. Turn the ignition ON, with the engine OFF. 3. With a scan tool, observe the Fuel Tank Level Remaining parameter in the powertrain control module (PCM) Enhanced EVAP data list. Does the scan tool indicate that the Fuel Level parameter is less than the specified value?	4%	Go to **Step 3**	Go to Diagnostic Aids
3	1. Turn the ignition OFF. 2. Disconnect C402. 3. Turn the ignition ON, with the engine OFF. 4. With a scan tool, observe the Fuel Level parameter. Does the scan tool indicate that the Fuel Tank Level Remaining parameter is greater than the specified value?	98%	Go to **Step 5**	Go to **Step 4**
4	Test the signal circuit of the fuel level sender for a short to ground. Refer to **Circuit Testing** and to **Wiring Repairs** in Wiring Systems. Did you find and correct the condition?	-	Go to **Step 10**	Go to **Step 7**
5	Test the signal circuit of the fuel level sensor for a short to ground between C402 and the fuel level sensor. Refer to **Circuit Testing** and to **Wiring Repairs** in Wiring Systems. Did you find and correct the condition?	-	Go to **Step 10**	Go to **Step 6**
6	Inspect for poor connections at the harness connector of the fuel level sensor. Refer to **Testing for Intermittent Conditions and Poor Connections** and to **Connector Repairs** in Wiring Systems. Did you find and correct the condition?	-	Go to **Step 10**	Go to **Step 8**
7	Inspect for poor connections at the harness connector of the PCM. Refer to **Testing for Intermittent Conditions and Poor Connections** and to **Connector Repairs** in Wiring Systems. Did you find and correct the condition?	-	Go to **Step 10**	Go to **Step 9**

8	Replace the fuel level sensor. Refer to **Fuel Level Sensor Replacement - Right** in Engine Controls - 5.7L. Did you complete the replacement?	-	Go to **Step 10**	-
9	**IMPORTANT:** **Program the replacement PCM.** Replace the PCM. Refer to **Powertrain Control Module (PCM) Replacement** in Engine Controls - 5.7L.Did you complete the replacement?	-	Go to **Step 10**	-
10	1. Use the scan tool in order to clear the DTCs. 2. Operate the vehicle within the Conditions for Running the DTC. Does the DTC reset?	-	Go to **Step 2**	System OK

DTC P2068

Circuit Description

The right/secondary fuel level sensor measures fuel level changes within the right/secondary fuel tank and changes resistance based on fuel level. The powertrain control module (PCM) monitors changes in the resistance of the sensor to determine fuel level.

When the fuel tank is full, the sensor resistance is high, and the PCM senses high signal voltage. When the fuel tank is empty, the sensor resistance is low, and the PCM senses a low signal voltage.

The PCM uses inputs from the fuel level sensors to calculate the total fuel remaining in the fuel tanks. This information is then sent to the instrument panel cluster (IPC) via the class 2 serial data circuit.

When the PCM senses a signal voltage higher than the normal operating range of the sensor, this DTC sets.

Conditions for Running the DTC

The ignition is ON.

Conditions for Setting the DTC

- Fuel level sensor voltage for the right/secondary fuel level sensor is above 2.9 volts.
- The fuel level signal is greater than 98 percent.
- The above conditions are present for greater than 2 minutes.

Action Taken When the DTC Sets

- The DIC displays a LOW FUEL message.
- The fuel gage defaults to empty.

- The check gages indicator illuminates.
- The PCM records the operating conditions at the time the diagnostic fails. The PCM displays the failure information in the Failure Records on the scan tool.

Conditions for Clearing the DTC

- The DTC becomes history when the conditions for setting the DTC are no longer present.
- The history DTC clears after 40 malfunction free warm-up cycles.
- The PCM receives the clear code command from the scan tool.

Diagnostic Aids

Use the Freeze Frame and/or Failure Records data in order to locate an intermittent condition. If you cannot duplicate the DTC, the information included in the Freeze Frame and/or Failure Records data may aid in determining the number of miles since the DTC set. The Fail Counter and Pass Counter can also aid in determining the number of ignition cycles that the diagnostic reported a pass and/or fail. Operate the vehicle within the same freeze frame conditions (RPM, load, vehicle speed, temperature, etc.). This will isolate when the DTC failed.

Refer to **Testing for Intermittent Conditions and Poor Connections** in Wiring Systems.

IMPORTANT: When inspecting for a deformed or warped fuel tank, measure the resistance of the suspect fuel level sensor at empty, with the sensor in the fuel tank, and again with the sensor removed from the fuel tank. The measured resistance values should be the same at empty. If the measured resistance values are not the same, refer to Fuel Tank Replacement (Right) or Fuel Tank Replacement (Left) in Engine Controls.

Test Description

The number below refers to the step number on the diagnostic table.

3: Tests for the proper operation of the circuit in the low voltage range.

DTC P2068

Step	Action	Value (s)	Yes	No
Schematic Reference: Instrument Cluster Schematics				
1	Did you perform the IPC Diagnostic System Check?	-	Go to **Step 2**	Go to **Diagnostic System Check - Instrument Cluster**
	1. Install a scan tool. 2. Turn the ignition ON, with the engine OFF. 3. With a scan tool, observe the Fuel Tank Level			

2	Remaining parameter in the powertrain control module (PCM) Enhanced EVAP data list. Does the scan tool indicate that the Fuel Tank Level Remaining parameter is greater than the specified value?	98%	Go to **Step 3**	Go to Diagnostic Aids
3	1. Turn the ignition OFF. 2. Disconnect C402. 3. Connect a 3-amp fused jumper between the signal circuit of the fuel level sensor and the low reference circuit of the fuel level sensor (female terminal side). 4. Turn the ignition ON, with the engine OFF. 5. With a scan tool, observe the Fuel Tank Level Remaining parameter. Does the scan tool indicate that the Fuel Tank Level Remaining parameter is less than the specified value?	4%	Go to **Step 6**	Go to **Step 4**
4	Test the signal circuit of the fuel level sensor for an open, a high resistance, or for a short to voltage. Refer to **Circuit Testing** and to **Wiring Repairs** in Wiring Systems. Did you find and correct the condition?	-	Go to **Step 12**	Go to **Step 5**
5	Test the low reference circuit of the fuel level sensor for an open, a high resistance, or for a short to voltage. Refer to **Circuit Testing** and to **Wiring Repairs** in Wiring Systems. Did you find and correct the condition?	-	Go to **Step 12**	Go to **Step 9**
6	Test the signal circuit of the fuel level sensor for an open, a high resistance, or for a short to voltage between C402 and the fuel level sensor. Refer to **Circuit Testing** and to **Wiring Repairs** in Wiring Systems. Did you find and correct the condition?	-	Go to **Step 12**	Go to **Step 7**
7	Test the low reference circuit of the fuel level sensor for an open, a high resistance, or for a short to voltage between C408 and the fuel level sensor. Refer to **Circuit Testing** and to **Wiring Repairs** in Wiring Systems. Did you find and correct the condition?	-	Go to **Step 12**	Go to **Step 8**
8	Inspect for poor connections at the harness connector of the fuel level sensor. Refer to **Testing for Intermittent Conditions and Poor Connections** and to **Connector Repairs** in Wiring Systems. Did you find and correct the condition?	-	Go to **Step 12**	Go to **Step 10**
9	Inspect for poor connections at the harness connector of the PCM. Refer to **Testing for Intermittent Conditions and Poor Connections** and to **Connector Repairs** in Wiring Systems. Did you find and correct the condition?	-	Go to **Step 12**	Go to **Step 11**

10	Replace the fuel level sensor. Refer to **Fuel Level Sensor Replacement - Right** in Engine Controls - 5.7L. Did you complete the replacement?	-	Go to **Step 12**	-
11	**IMPORTANT:** **Program the replacement PCM.** Replace the PCM. Refer to **Powertrain Control Module (PCM) Replacement** in Engine Controls - 5.7L.Did you complete the replacement?	-	Go to **Step 12**	-
12	1. Use the scan tool in order to clear the DTCs. 2. Operate the vehicle within the Conditions for Running the DTC. Does the DTC reset?	-	Go to **Step 2**	System OK

SYMPTOMS - INSTRUMENT PANEL, GAGES AND CONSOLE

IMPORTANT: The following steps must be completed before using the symptom tables.

1. Perform the **Diagnostic System Check - Instrument Cluster** for DIC, HUD and IPC systems or the **Diagnostic System Check - Audible Warnings** for audible warnings before using the symptom table in order to verify that all of the following are true:
   - There are no DTCs set.
   - The module(s) can communicate via the serial data link.
2. Review the system operation in order to familiarize yourself with the system functions. Refer to the following:
   - **Instrument Panel Cluster (IPC) Description and Operation**
   - **Indicator/Warning Message Description and Operation**
   - **Driver Information Center (DIC) Description and Operation**
   - **Head Up Display (HUD) Description and Operation**
   - **Audible Warnings Description and Operation**

Visual/Physical Inspection

- Inspect for aftermarket devices which could affect the operation of the audible warnings, DIC, HUD or IPC. Refer to **Checking Aftermarket Accessories** in Wiring Systems.
- Inspect the easily accessible or visible system components for obvious damage or conditions which could cause the symptom.
- For any indicator or message relating to fluid level, perform a visual inspection of the fluid level before beginning diagnosis.
- Verify that the indicators, and message display works properly during the bulb check.

Intermittent

Faulty electrical connections or wiring may be the cause of intermittent conditions. Refer to **Testing for Intermittent Conditions and Poor Connections** in Wiring Systems.

Symptom List

Refer to a symptom diagnostic procedure from the following list in order to diagnose the symptom:

Audible Warnings

For symptom diagnosis refer to one of the following:

- **Chime Always On**
- **Chime Inoperative**

Driver Information Display (DID)

For symptom diagnosis refer to one of the following:

- **Driver Information Center (DIC) Inoperative**
- **Driver Information Center (DIC) Switch(es) Inoperative**

Gages

For symptom diagnosis refer to one of the following:

- **Engine Coolant Temperature Gage Inaccurate or Inoperative**
- **Engine Oil Pressure Gage Inaccurate or Inoperative**
- **Engine Oil Temperature Gage Inoperative**
- **Fuel Gage Inaccurate or Inoperative**
- **Speedometer and/or Odometer Inaccurate or Inoperative**
- **Tachometer Inaccurate or Inoperative**
- **Transmission Fluid Temperature Gage Inaccurate or Inoperative**
- **Volt Gage Inaccurate or Inoperative**

Heads Up Display

For symptom diagnosis refer to one of the following:

- **Head Up Display (HUD) Image Adjustment Inoperative**
- **Head Up Display (HUD) Inoperative**
- **Head Up Display (HUD) Intensity Does Not Vary**
- **Head Up Display (HUD) Hazard Indicators Inoperative**

Indicators

For symptom diagnosis refer to one of the following:

- For 1-4 Shift indicator refer to **Skip Shift Description and Operation** in Manual Transmission-
- **ABS Indicator Always On** in Antilock Brake System
- **ABS Indicator Inoperative** in Antilock Brake System
- **Air Bag Indicator Circuit Malfunction** in SIR
- **Brake Warning Indicator Always On** in Hydraulic Brakes
- **Brake Warning Indicator Inoperative** in Hydraulic Brakes
- **Change Engine Oil Indicator Always On**
- **Change Engine Oil Indicator Inoperative**
- **Charge Indicator Always On** in Engine Electrical
- **Charge Indicator Inoperative** in Engine Electrical
- **Check Gages Indicator Inoperative**
- **Door Ajar Indicator Inoperative** in Doors
- **High Beam Indicator Inoperative** in Lighting Systems
- **Low Engine Oil Level Indicator Always On**
- For LOW FUEL indicator refer to **Fuel Gage Inaccurate or Inoperative**
- For LOW OIL PRESSURE indicator refer to **Engine Oil Pressure Gage Inaccurate or Inoperative**
- **Low Washer Fluid Indicator Malfunction** in Wipers/Washer Systems
- **Malfunction Indicator Lamp (MIL) Always On** in Engine Controls
- **Malfunction Indicator Lamp (MIL) Inoperative** in Engine Controls
- **MPH (Km/h) Indicator Inoperative**
- **Rear Compartment Lid Ajar Indicator Always On** in Body Rear End
- **Rear Compartment Lid Ajar Indicator Inoperative** in Body Rear End
- For RESERVE FUEL indicator refer to **Fuel Gage Inaccurate or Inoperative**
- **Seat Belt Indicator Circuit Malfunction** in Seat Belts
- **Security Indicator Always On or Flashing** in Theft Deterrent
- **Security Indicator Inoperative** in Theft Deterrent
- **Tonneau Ajar Indicator Always On** in Body Rear End
- **Tonneau Ajar Indicator Inoperative** in Body Rear End
- **Traction Control and Active Handling Indicator Always On** in Antilock Brake System
- **Traction Control and Active Handling Indicator Inoperative** in Antilock Brake System
- **Turn Signal Lamps and/or Indicators Inoperative** in Lighting Systems

ENGINE COOLANT TEMPERATURE GAGE INACCURATE OR INOPERATIVE

Engine Coolant Temperature Gage Inaccurate or Inoperative

Step	Action	Yes	No
Schematic Reference: Instrument Cluster Schematics			
1	Did you perform the IPC Diagnostic System Check?	Go to **Step 2**	Go to **Diagnostic System Check - Instrument Cluster**
2	1. Install a scan tool. 2. Turn ON the ignition, with the engine OFF. 3. With the scan tool, perform the IPC Gages Coolant Gage Sweep Test. Does the engine coolant temperature gage move up and down when commanded?	Go to **Testing for Intermittent Conditions and Poor Connections** in Wiring Systems	Go to **Step 3**
3	Replace the IPC. Refer to **Instrument Panel Cluster (IPC) Replacement** . Did you complete the replacement?	Go to **Step 4**	-
4	Operate the system in order to verify the repair. Did you correct the condition?	System OK	Go to **Step 2**

ENGINE OIL PRESSURE GAGE INACCURATE OR INOPERATIVE

Engine Oil Pressure Gage Inaccurate or Inoperative

Step	Action	Yes	No
Schematic Reference:Instrument Cluster Schematics			
1	Did you perform the Instrument Panel Cluster (IPC) Diagnostic System Check?	Go to **Step 2**	Go to **Symptoms - Instrument Panel, Gages and Console**
2	1. Install a scan tool. 2. Start the engine. 3. With the scan tool, perform the IPC Gages Oil Pressure Gage Sweep Test. Does the engine oil pressure gage move up and down when commanded?	Go to **Testing for Intermittent Conditions and Poor Connections** in Wiring Systems	Go to **Step 3**
3	Replace the IPC. Refer to **Instrument Panel Cluster (IPC) Replacement** .		

	Did you complete the replacement?	Go to **Step 4**	-
4	Operate the system in order to verify the repair. Did you correct the condition?	System OK	Go to **Step 2**

ENGINE OIL TEMPERATURE GAGE INOPERATIVE

Engine Oil Temperature Gage Inoperative

Step	Action	Values	Yes	No
Schematic Reference: Instrument Cluster Schematics				
1	Did you perform the IPC Diagnostic System Check?	-	Go to **Step 2**	Go to **Diagnostic System Check - Instrument Cluster**
2	With a scan tool, observe the Oil Temp parameter in the IPC data 1 list. Does the scan tool indicate the correct oil temperature?	-	Go to **Step 3**	Go to **Step 4**
3	With a scan tool, observe the Oil Temp parameter in the IPC data 1 list and the oil temperature gage display on the DIC. Does the scan tool display correspond with the oil temperature gage display within the specified value?	10°C (14°F)	System OK	Go to **Step 5**
4	Replace the oil temperature sensor. Refer to **Engine Oil Temperature Gage Sensor Replacement** . Did you complete the replacement?	-	Go to **Step 6**	-
5	Replace the IPC. Refer to **Instrument Panel Cluster (IPC) Replacement** . Did you complete the replacement?	-	Go to **Step 6**	-
6	Operate the system in order to verify the repair. Did you correct the condition?	-	System OK	Go to **Step 2**

FUEL GAGE INACCURATE OR INOPERATIVE

Diagnostic Aids

- Ensure that the fuel level is in the same range as the customer concern.
- For intermittent diagnosis, refer to **Testing for Intermittent Conditions and Poor Connections** in Wiring Systems.
- Refer to **Fuel Level Specifications** in order to verify the correct fuel level sensor readings. The Fuel Tank Level Remaining (%) parameter is available on the scan tool in the powertrain control module (PCM) Enhanced EVAP data list.

IMPORTANT: When inspecting for a deformed or warped fuel tank, measure the resistance of

the suspect fuel level sensor at empty, with the sensor in the fuel tank, and again with the sensor removed from the fuel tank. The measured resistance values should be the same at empty. If the measured resistance values are not the same, refer to Fuel Tank Replacement (Right) or Fuel Tank Replacement (Left) in Engine Controls.

Test Description

The numbers below refer to the step numbers on the diagnostic table.

3: This step tests for a high resistance in the signal circuit and the low reference circuit of the fuel level sensor.

13: DTCs will be set in the PCM when you perform this diagnostic table.

Fuel Gage Inaccurate or Inoperative

Step	Action	Value (s)	Yes	No
Schematic Reference: Instrument Cluster Schematics				
1	Did you perform the IPC Diagnostic System Check?	-	Go to **Step 2**	Go to **Diagnostic System Check - Instrument Cluster**
2	1. Disconnect C402. 2. Connect a jumper wire between the signal circuit of the left/primary fuel level sensor and the signal circuit of the right/secondary fuel level sensor (female terminal side). 3. Connect the **J 33431-C** Signal Generator and Instrument Panel Tester between the signal circuit of the fuel level sensor and the low reference circuit of the fuel level sensor (female terminal side). See **Special Tools and Equipment** . 4. Turn ON the ignition, with the engine OFF. **IMPORTANT:** **Verify the J 33431-C resistance settings with a DMM. See Special Tools and Equipment .** 5. Vary the resistance on the **J 33431-C** from 40-250 ohm. See **Special Tools and Equipment** . 6. Refer to **Fuel Level Specifications** in order to convert from resistance to fuel gage display. Does the fuel gage display the correct fuel level?	-	Go to **Step 4**	Go to **Step 3**

3	1. Install a scan tool. 2. Turn ON the ignition, with the engine OFF. **IMPORTANT:** **Verify the J 33431-C resistance settings with a DMM. See Special Tools and Equipment .** 3. Vary the resistance on the **J 33431-C** from 40-250 ohm. See **Special Tools and Equipment** . 4. Refer to **Fuel Level Specifications** in order to convert from resistance to fuel level percent. **IMPORTANT:** **Turn OFF the ignition momentarily between the resistance settings in order to quickly update the scan tool display.** 5. With the scan tool, observe the Fuel Tank Level Remaining percent parameter in the powertrain control module (PCM) Enhanced EVAP data list. Does the scan tool display the correct fuel level percent?	-	Go to **Step 11**	Go to **Step 5**
4	Inspect for the following items: • A poor connection at the harness connector of the fuel level sensor. Refer to **Testing for Intermittent Conditions and Poor Connections** and **Connector Repairs** in Wiring Systems. • A high resistance in the signal circuit or the low reference circuit between the fuel level sensor and C402. • A misaligned fuel level sensor. • A deformed fuel tank. Did you find and correct the condition?	-	Go to **Step 13**	Go to **Step 7**
5	Test the signal circuit of the fuel level sensor for a high resistance. Refer to **Circuit Testing** and **Wiring Repairs** in Wiring Systems. Did you find and correct the condition?	-	Go to **Step 13**	Go to **Step 6**
6	Test the low reference circuit of the fuel level sensor for a high resistance. Refer to **Circuit Testing** and **Wiring Repairs** in Wiring Systems. Did you find and correct the condition?	-	Go to **Step 13**	Go to **Step 9**

7	1. Remove the fuel level sensor. 2. Inspect for the following items: • A stuck fuel level sensor (i.e. the fuel strainer interfering with the sensor float arm) • Foreign material in the fuel tank (ice) Did you find and correct the condition?	-	Go to **Step 13**	Go to **Step 8**
8	1. With the DMM, measure the resistance of the fuel level sensor while moving the float arm. 2. Observe both the analog and digital displays on the DMM. Does the resistance change smoothly across the specified range?	40-250 ohm	Go to Diagnostic Aids	Go to **Step 10**
9	Inspect for poor connections at the harness connector of the PCM. Refer to **Testing for Intermittent Conditions and Poor Connections** and **Connector Repairs** in Wiring Systems. Did you find and correct the condition?	-	Go to **Step 13**	Go to **Step 12**
10	Replace the fuel level sensor. Refer to **Fuel Level Sensor Replacement - Left** or **Fuel Level Sensor Replacement - Right** in Engine Controls - 5.7L. Did you complete the replacement?	-	Go to **Step 13**	-
11	Replace the instrument panel cluster (IPC). Refer to **Instrument Panel Cluster (IPC) Replacement** . Did you complete the replacement?	-	Go to **Step 13**	-
12	**IMPORTANT:** **Program the replacement PCM.** Replace the PCM. Refer to **Powertrain Control Module (PCM) Replacement** in Engine Controls - 5.7L.Did you complete the replacement?	-	Go to **Step 13**	-
13	1. Use the scan tool in order to clear the PCM DTCs. 2. Operate the system in order to verify the repair. Did you correct the condition?	-	System OK	Go to **Step 2**

SPEEDOMETER AND/OR ODOMETER INACCURATE OR INOPERATIVE

Test Description

The number(s) below refer to the step number(s) on the diagnostic table.

4: This step tests for the proper vehicle speed signal from the PCM.

Speedometer and/or Odometer Inaccurate or Inoperative

Step	Action	Value (s)	Yes	No
Schematic Reference: Instrument Cluster Schematics				
1	Did you perform the IPC Diagnostic System Check?	-	Go to **Step 2**	Go to **Diagnostic System Check - Instrument Cluster**
2	1. Install a scan tool. 2. Raise the vehicle's drive wheels. Refer to **Lifting and Jacking the Vehicle** in General Information. 3. Start the engine. 4. Place the transmission into drive for automatic transmission and third gear for manual transmission. 5. With the scan tool, observe the Vehicle Speed parameter in the PCM Engine Data 1 data list. Does the Vehicle Speed parameter match the speedometer display?	-	Go to **Step 3**	Go to **Step 4**
3	Does the odometer operate properly?	-	Go to **Testing for Intermittent Conditions and Poor Connections** in Wiring Systems	Go to **Step 8**
4	1. Turn the ignition OFF. 2. Disconnect the PCM connector C2. 3. Turn the ignition ON, with the engine OFF. 4. Measure the voltage from the vehicle speed signal circuit to a good ground. Does the voltage measure greater than the specified value?	9.6 V	Go to **Step 6**	Go to **Step 5**
5	Test the vehicle speed signal circuit for an open, a short to ground, or a high resistance between the IPC and the PCM. Refer to **Circuit Testing** and **Wiring Repairs** in Wiring Systems.	-		

	Did you find and correct the condition?		Go to **Step 10**	Go to **Step 7**
6	Inspect for poor connections at the harness connector of the IPC. Refer to **Testing for Intermittent Conditions and Poor Connections** and **Connector Repairs** in Wiring Systems. Did you find and correct the condition?	-	Go to **Step 10**	Go to **Step 8**
7	Inspect for poor connections at the harness connector of the PCM. Refer to **Testing for Intermittent Conditions and Poor Connections** and **Connector Repairs** in Wiring Systems. Did you find and correct the condition?	-	Go to **Step 10**	Go to **Step 9**
8	Replace the IPC. Refer to **Instrument Panel Cluster (IPC) Replacement** . Did you complete the replacement?	-	Go to **Step 10**	-
9	**IMPORTANT:** **Program the replacement PCM.** Replace the PCM. Refer to **Powertrain Control Module (PCM) Replacement** in Engine Controls.Did you complete the replacement?	-	Go to **Step 10**	-
10	Operate the system in order to verify the repair. Use the scan tool in order to clear the DTC's that may have set in other modules during diagnosis. Did you correct the condition?	-	System OK	Go to **Step 2**

TACHOMETER INACCURATE OR INOPERATIVE

Tachometer Inaccurate or Inoperative

Step	Action	Yes	No
Schematic Reference: Instrument Cluster Schematics			
1	Did you perform the IPC Diagnostic System Check?	Go to **Step 2**	Go to **Diagnostic System Check - Instrument Cluster**
2	1. Set the park brake. 2. Install a scan tool. 3. Start the engine. 4. With the scan tool, observe the Engine Speed parameter in the PCM Engine Data 1 data list.		

	Does the Engine Speed parameter match the tachometer display?	Go to **Testing for Intermittent Conditions and Poor Connections** in Wiring Systems	Go to **Step 3**
3	Replace the IPC. Refer to **Instrument Panel Cluster (IPC) Replacement** . Did you complete the replacement?	Go to **Step 4**	-
4	Operate the system in order to verify the repair. Did you correct the condition?	System OK	Go to **Step 2**

TRANSMISSION FLUID TEMPERATURE GAGE INACCURATE OR INOPERATIVE

Transmission Fluid Temperature Gage Inaccurate or Inoperative

Step	Action	Value (s)	Yes	No
Schematic Reference: Instrument Cluster Schematics				
1	Did you perform the IPC Diagnostic System Check?	-	Go to **Step 2**	Go to **Diagnostic System Check - Instrument Cluster**
2	1. Turn ON the ignition, with the engine OFF. 2. With a scan tool, observe Trans Fluid Temp parameter in the IPC data 1 list. Does the scan tool indicate the Transmission Fluid Temperature parameter is within the specific range?	-40 to +215°C (-40 to +419°F)	Go to **Step 3**	Go to **Step 4**
3	With a scan tool, observe Trans Fluid Temp parameter in the IPC data 1 list and the Transmission Fluid Temperature gage display on the DIC. Does the scan tool display correspond with the transmission fluid temperature gage display within the specified value?	10°C (10°F)	Go to **Step 4**	Go to **Step 6**
4	Inspect for poor connections at the harness connector of the PCM. Refer to **Testing for Intermittent Conditions and Poor Connections** and **Connector Repairs** in Wiring Systems. Did you find and correct the condition?	-	Go to **Step 7**	Go to **Step 5**
5	**IMPORTANT:** **Program the replacement PCM.** Replace the PCM. Refer to **Powertrain Control Module (PCM) Replacement** in Engine Controls.Did you complete the replacement?	-	Go to **Step 7**	-
6	Replace the IPC. Refer to **Instrument Panel Cluster (IPC) Replacement** .	-	Go to	-

	Did you complete the replacement?		**Step 7**	
7	Operate the system in order to verify the repair. Did you correct the condition?	-	System OK	Go to **Step 2**

VOLT GAGE INACCURATE OR INOPERATIVE

Volt Gage Inaccurate or Inoperative

Step	Action	Value (s)	Yes	No
Schematic Reference: Instrument Cluster Schematics				
1	Did you perform the IPC Diagnostic System Check?	-	Go to **Step 2**	Go to **Diagnostic System Check - Instrument Cluster**
2	1. Install a scan tool. 2. Turn ON the ignition, with the engine OFF. 3. With the scan tool, perform the IPC Gages Volts Gage Sweep Test. Does the volt gage move up and down when commanded?	-	Go to **Step 3**	**Go to Step 6**
3	With a scan tool, observe the Ignition 1 parameter in the IPC data 1 list. Does the scan tool indicate that the Ignition 1 parameter is within the specified range?	8.0-16.0 V	Go to **Step 4**	Go to **Step 5**
4	With a scan tool, observe the Ignition 1 parameter in the IPC data 1 list and the voltage gage display on the IPC. Does the scan tool display correspond with the voltage gage display within the specified value?	0.5 V	System OK	**Go to Step 6**
5	Test the ignition positive voltage circuit of the IPC for a short to ground or an open. Refer to **Circuit Testing** and **Wiring Repairs** in Wiring Systems. Did you find and correct the condition?	-	Go to **Step 7**	Go to **Step 6**
6	Replace the IPC. Refer to **Instrument Panel Cluster (IPC) Replacement** . Did you complete the replacement?	-	Go to **Step 7**	-
7	Operate the system in order to verify the repair. Did you correct the condition?	-	System OK	Go to **Step 2**

CHANGE ENGINE OIL INDICATOR ALWAYS ON

Change Engine Oil Indicator Always On

Step	Action	Yes	No
Schematic Reference: Instrument Cluster Schematics			

1	Did you perform the IPC Diagnostic System Check?	Go to **Step 2**	Go to **Diagnostic System Check - Instrument Cluster**
2	1. Install a scan tool. 2. Turn ON the ignition, with the engine OFF. 3. With a scan tool, observe the engine oil life percent in the PCM data 3 list. Does the scan tool display zero percent with the change engine oil message on?	Go to **Step 3**	Go to **Step 4**
3	Reset GM engine oil life system. Refer to **GM Oil Life System - Resetting** in Maintenance and Lubrication. Has the GM engine oil life system been reset?	Go to **Step 5**	-
4	Replace the IPC. Refer to **Instrument Panel Cluster (IPC) Replacement** . Did you complete the replacement?	Go to **Step 5**	-
5	1. Install a scan tool. 2. Turn ON the ignition, with the engine OFF. 3. With a scan tool, observe the Engine Oil Life percent in PCM data 3 list. Does the scan tool display 100 percent with the engine oil message off?	System OK	Go to **Diagnostic System Check - Engine Controls** in Engine Controls

CHANGE ENGINE OIL INDICATOR INOPERATIVE

Change Engine Oil Indicator Inoperative

Step	Action	Yes	No
Schematic Reference: Instrument Cluster Schematics			
1	Did you perform the IPC Diagnostic System Check?	Go to **Step 2**	Go to **Diagnostic System Check - Instrument Cluster**
2	1. Install a scan tool. 2. Turn ON the ignition, with the engine OFF. 3. With a scan tool, observe the Engine Oil Life percent in PCM data 3 list. Does the scan tool display zero percent with change engine oil message inoperative?	Go to **Step 3**	System OK
3	Replace the IPC. Refer to **Instrument Panel Cluster (IPC) Replacement** . Did you complete the replacement?	Go to **Step 4**	-
4	Operate the system in order to verify the repair. Did you correct the condition?	System OK	Go to **Step 2**

CHECK GAGES INDICATOR INOPERATIVE

Check Gages Indicator Inoperative

Step	Action	Yes	No
Schematic Reference: Instrument Cluster Schematics			
1	Did you perform the IPC Diagnostic System Check?	Go to **Step 2**	Go to **Diagnostic System Check - Instrument Cluster**
2	Start the vehicle. Does the CHECK GAGES indicator illuminate during the bulb test?	Go to **Testing for Intermittent Conditions and Poor Connections** in Wiring Systems	Go to **Step 3**
3	1. Connect a scan tool. 2. Turn ON the ignition with the engine OFF. 3. Using a scan tool command the instrument cluster indicators on. Does the CHECK GAGES indicator turn on?	Go to **Diagnostic System Check - Engine Controls** in Engine Controls	Go to **Step 4**
4	Replace the IPC. Refer to **Instrument Panel Cluster (IPC) Replacement** . Did you complete the replacement?	Go to **Step 5**	-
5	Operate the system in order to verify the repair. Did you correct the condition?	System OK	Go to **Step 3**

LOW ENGINE OIL LEVEL INDICATOR ALWAYS ON

Low Engine Oil Level Indicator Always On

Step	Action	Value (s)	Yes	No
Schematic Reference: Instrument Cluster Schematics				
1	Did you perform the Instrument Cluster Diagnostic System Check?	-	Go to **Step 2**	Go to **Diagnostic System Check - Instrument Cluster**
2	1. Install a scan tool. 2. Turn the ignition ON, with the engine OFF. 3. With the scan tool, observe the Engine Oil Level parameter in the PCM Engine Data 2 data list.	-		

	Does the Engine Oil Level parameter display NO?		Go to **Step 3**	Go to **Step 4**
3	Does the low engine oil indicator remain illuminated after the displays test?	-	Go to **Step 11**	Go to **Testing for Intermittent Conditions and Poor Connections** in Wiring Systems
4	1. Turn the ignition OFF. 2. Disconnect the engine oil level switch. 3. Connect a 3-ampere fused jumper between the signal circuit of the engine oil level switch and a good ground. 4. Turn the ignition ON, with the engine OFF. 5. With the scan tool, observe the Engine Oil Level parameter. Does the Engine Oil Level parameter display NO?	-	Go to **Step 6**	Go to **Step 5**
5	Test the signal circuit of the engine oil level switch for a short to battery voltage, for an open or for a high resistance. Refer to **Circuit Testing** and to **Wiring Repairs** in Wiring Systems. Did you find and correct the condition?	-	Go to **Step 12**	Go to **Step 8**
6	Test the ground circuit of the engine oil level switch for an open or for a high resistance. Refer to **Circuit Testing** and to **Wiring Repairs** in Wiring Systems. Did you find and correct the condition?	-	Go to **Step 12**	Go to **Step 7**
7	Inspect for poor connections at the harness connector of the engine oil level switch. Refer to **Testing for Intermittent Conditions and Poor Connections** and to **Connector Repairs** in Wiring Systems. Did you find and correct the condition?	-	Go to **Step 12**	Go to **Step 9**
8	Inspect for poor connections at the harness connector of the PCM. Refer to **Testing for Intermittent Conditions and Poor Connections** and to **Connector Repairs** in Wiring Systems. Did you find and correct the condition?	-	Go to **Step 12**	Go to **Step 10**
9	Replace the engine oil level switch. Refer to **Engine Oil Level Sensor and/or Switch Replacement** in Engine Mechanical. Did you complete the replacement?	-	Go to **Step 12**	-
10	**IMPORTANT:** **Program the replacement PCM.** Replace the PCM. Refer to **Powertrain Control Module (PCM) Replacement** in Engine	-	Go to	-

	Controls.Did you complete the replacement?		**Step 12**	
11	**IMPORTANT:** **[Program the replacement IPC.]** Replace the IPC. Refer to **Instrument Panel Cluster (IPC) Replacement** .Did you complete the replacement?	-	Go to **Step 12**	-
12	Operate the system in order to verify the repair. Did you correct the condition?	-	System OK	Go to **Step 2**

MPH (KM/H) INDICATOR INOPERATIVE

MPH (Km/h) Indicator Inoperative

Step	Action	Yes	No
Schematic Reference: Instrument Cluster Schematics			
1	Did you perform the IPC Diagnostic System Check?	Go to **Step 2**	Go to **Diagnostic System Check - Instrument Cluster**
2	Does the MPH or KM/H turn on during bulb check?	Go to **Testing for Intermittent Conditions and Poor Connections** in Wiring Systems	Go to **Step 3**
3	Replace the IPC. Refer to **Instrument Panel Cluster (IPC) Replacement** . Did you complete the replacement?	Go to **Step 4**	-
4	Operate the system in order to verify the repair. Did you correct the condition?	System OK	Go to **Step 2**

DRIVER INFORMATION CENTER (DIC) INOPERATIVE

Driver Information Center (DIC) Inoperative

Step	Action	Yes	No
Schematic Reference: Instrument Cluster Schematics			
1	Did you perform the IPC Diagnostic System Check?	Go to **Step 2**	Go to **Diagnostic System Check - Instrument Cluster**
2	Replace the IPC. Refer to **Instrument Panel Cluster (IPC) Replacement** . Did you complete the replacement?	Go to **Step 3**	-
3	Operate the system in order to verify the repair. Did you correct the condition?	System OK	Go to **Step 2**

DRIVER INFORMATION CENTER (DIC) SWITCH(ES) INOPERATIVE

Driver Information Center (DIC) Switch(es) Inoperative

Step	Action	Yes	No
Schematic Reference: Instrument Cluster Schematics			
1	Did you perform the IPC Diagnostic System Check?	Go to **Step 2**	Go to **Diagnostic System Check - Instrument Cluster**
2	Replace the DIC switch. Refer to **Driver Information Center Switch Replacement** . Does the DIC switch work?	Go to **Step 4**	Go to **Step 3**
3	Replace the IPC. Refer to **Instrument Panel Cluster (IPC) Replacement** . Did you complete the replacement?	Go to **Step 4**	-
4	Operate the system in order to verify the repair. Did you correct the condition?	System OK	Go to **Step 2**

HEAD UP DISPLAY (HUD) INOPERATIVE

Head Up Display (HUD) Inoperative

Step	Action	Yes	No
Schematic Reference: Head Up Display Schematics			
1	Did you perform the IPC Diagnostic System Check?	Go to **Step 2**	Go to **Diagnostic System Check - Instrument Cluster**
2	1. Turn the ignition OFF. 2. Move the head-up display dimmer switch to the full bright position. 3. Turn the ignition ON, with the engine OFF. Do all segments of the head-up display illuminate for 3.5 seconds?	Go to **Testing for Intermittent Conditions and Poor Connections** in Wiring Systems	Go to **Step 3**
3	Does the HUD display 2 dashes?	Go to **Step 4**	Go to **Step 5**
4	Test the head-up display clock circuit for a short to ground, or an open at the IPC. Refer to **Circuit Testing** and **Wiring Repairs** in Wiring Systems. Did you find and correct the condition?	Go to **Step 18**	Go to **Step 6**
5	Test the head-up display ground circuit for a short to B+, or an open at the IPC. Refer to **Circuit Testing** and **Wiring Repairs** in Wiring Systems. Did you find and correct the condition?	Go to **Step 18**	Go to **Step 8**
6	Test the head-up display data circuit for an open or a short to ground at the IPC. Refer to **Circuit Testing** and **Wiring Repairs** in Wiring Systems. Did you find and correct the condition?	Go to **Step 18**	Go to **Step 7**
	Test the head-up display strobe circuit for an open		

7	or a short to ground at the IPC. Refer to **Circuit Testing** and **Wiring Repairs** in Wiring Systems. Did you find and correct the condition?	Go to **Step 18**	Go to **Step 13**
8	Test the head-up display ignition 1 circuit for a short to ground, or an open at the IPC. Refer to **Circuit Testing** and **Wiring Repairs** in Wiring Systems. Did you find and correct the condition?	Go to **Step 18**	Go to **Step 9**
9	Test the head-up display dim slider circuit for an open at the IPC. Refer to **Circuit Testing** and **Wiring Repairs** in Wiring Systems. Did you find and correct the condition?	Go to **Step 18**	Go to **Step 10**
10	Test the head-up display switch ground circuit for an open at the HUD switch. Refer to **Circuit Testing** and **Wiring Repairs** in Wiring Systems. Did you find and correct the condition?	Go to **Step 18**	Go to **Step 11**
11	Test the head-up display switch dim slider circuit for an open at the HUD switch. Refer to **Circuit Testing** and **Wiring Repairs** in Wiring Systems. Did you find and correct the condition?	Go to **Step 18**	Go to **Step 12**
12	Test the head-up display switch page circuit for an open at the HUD switch. Refer to **Circuit Testing** and **Wiring Repairs** in Wiring Systems. Did you find and correct the condition?	Go to **Step 18**	Go to **Step 13**
13	Inspect for poor connections at the harness connector of the head-up display switch and IPC. Refer to **Testing for Intermittent Conditions and Poor Connections** and **Connector Repairs** in Wiring Systems. Did you find and correct the condition?	Go to **Step 18**	Go to **Step 14**
14	Inspect for poor connections at the harness connector of the head-up display. Refer to **Testing for Intermittent Conditions and Poor Connections** and **Connector Repairs** in Wiring Systems. Did you find and correct the condition?	Go to **Step 18**	Go to **Step 15**
15	Replace the head-up display switch. Refer to **Head Up Display Switch Replacement** . Did you find and correct the condition?	Go to **Step 18**	Go to **Step 16**
16	Replace the head-up display. Refer to **Head Up Display Replacement** . Did you find and correct the condition?	Go to **Step 18**	Go to **Step 17**
17	Replace the IPC. Refer to **Instrument Panel Cluster (IPC) Replacement** . Did you complete the replacement?	Go to **Step 18**	-

18	Operate the system in order to verify the repair. Did you correct the condition?	System OK	Go to **Step 2**

HEAD UP DISPLAY (HUD) HAZARD INDICATORS INOPERATIVE

Head Up Display (HUD) Hazard Indicators Inoperative

Step	Action	Yes	No
Schematic Reference: Head Up Display Schematics			
1	Did you perform the IPC Diagnostic System Check?	Go to **Step 2**	Go to **Diagnostic System Check - Instrument Cluster**
2	Verify the hazard indicators HUD display are operating properly. Does the system operate normally?	Go to **Testing for Intermittent Conditions and Poor Connections** in Wiring Systems	Go to **Step 3**
3	1. Turn OFF the ignition. 2. Disconnect the IPC connector. 3. Turn ON the ignition, with the engine OFF. 4. Turn on the hazard switch. 5. Using a test lamp probe the signal circuit of the hazard switch to ground at the IPC. Refer to **Circuit Testing** in Wiring Systems. Does the test lamp illuminate?	Go to **Step 4**	Go to **Step 5**
4	Replace the IPC. Refer to **Instrument Panel Cluster (IPC) Replacement** . Did you complete the replacement?	Go to **Step 7**	-
5	1. Disconnect the hazard warning switch connector. 2. Test the hazard switch signal circuit for an open. Refer to **Circuit Testing** and **Wiring Repairs** in Wiring Systems. Did you find and correct the condition?	Go to **Step 7**	Go to **Step 6**
6	Replace the hazard warning switch. Refer to **Hazard Warning Switch Replacement** in Lighting Systems. Did you complete the replacement?	Go to **Step 7**	-
7	Operate the system in order to verify the repair.		

	Did you correct the condition?	System OK	Go to **Step 3**

HEAD UP DISPLAY (HUD) IMAGE ADJUSTMENT INOPERATIVE

Head Up Display (HUD) Image Adjustment Inoperative

Step	Action	Yes	No
Schematic Reference: Head Up Display Schematics			
1	Did you perform the IPC Diagnostic System Check?	Go to **Step 2**	Go to **Diagnostic System Check - Instrument Cluster**
2	1. Turn the ignition ON, with the engine OFF. 2. Adjust the head up display (HUD) UP, then DOWN. Does the HUD display adjust properly?	Go to **Testing for Intermittent Conditions and Poor Connections** in Wiring Systems	Go to **Step 3**
3	1. Turn the ignition OFF. 2. Disconnect the HUD connector. 3. Connect a test lamp between the HUD display UP circuit and B+. Refer to **Circuit Testing** in Wiring Systems. 4. Turn the ignition ON, with the engine OFF. 5. Move the HUD up/down switch to the UP position. Does the test lamp illuminate?	Go to **Step 4**	Go to **Step 5**
4	1. Connect a test lamp between the HUD display down circuit and B+ at the IPC. Refer to **Circuit Testing** in Wiring Systems. 2. Move the HUD up/down switch to the DOWN position. Does the test lamp illuminate?	Go to **Step 12**	Go to **Step 6**
5	Test the HUD display up circuit for an open or high resistance. Refer to **Circuit Testing** and to **Wiring Repairs** in Wiring Systems. Did you find and correct the condition?	Go to **Step 15**	Go to **Step 9**
6	Test the HUD display down circuit for an open, a short to ground, or high resistance. Refer to **Circuit Testing** and **Wiring Repairs** in Wiring Systems. Did you find and correct the condition?	Go to **Step 15**	Go to **Step 7**
	Test the HUD display switch down circuit for an		

7	open or high resistance at the HUD switch. Refer to **Circuit Testing** and **Wiring Repairs** in Wiring Systems. Did you find and correct the condition?	Go to **Step 15**	Go to **Step 8**
8	Test the HUD display up circuit for a short to ground. Refer to **Circuit Testing** and **Wiring Repairs** in Wiring Systems. Did you find and correct the condition?	Go to **Step 15**	Go to **Step 10**
9	Test the HUD display up circuit for an open or for a high resistance at the HUD switch. Refer to **Circuit Testing** and to **Wiring Repairs** in Wiring Systems. Did you find and correct the condition?	Go to **Step 15**	Go to **Step 10**
10	Inspect for poor connections at the harness connector of the HUD dimmer switch. Refer to **Testing for Intermittent Conditions and Poor Connections** and to **Connector Repairs** in Wiring Systems. Did you find and correct the condition?	Go to **Step 15**	Go to **Step 11**
11	Replace the HUD dimmer switch. Refer to **Head Up Display Switch Replacement** . Did you find and correct the condition?	Go to **Step 15**	Go to **Step 14**
12	Inspect for poor connections at the harness connector of the HUD. Refer to **Testing for Intermittent Conditions and Poor Connections** and to **Connector Repairs** in Wiring Systems. Did you find and correct the condition?	Go to **Step 15**	Go to **Step 13**
13	Replace the HUD. Refer to **Head Up Display Replacement** . Did you complete the replacement?	Go to **Step 15**	-
14	Replace the IPC. Refer to **Instrument Panel Cluster (IPC) Replacement** . Did you complete the replacement?	Go to **Step 15**	-
15	Operate the system in order to verify the repair. Did you correct the condition?	System OK	Go to **Step 2**

HEAD UP DISPLAY (HUD) INTENSITY DOES NOT VARY

Head Up Display (HUD) Intensity Does Not Vary

Step	Action	Yes	No
Schematic Reference: Head Up Display Schematics			
1	Did you perform the IPC Diagnostic System Check?	Go to **Step 2**	Go to **Diagnostic System Check - Instrument Cluster**
	1. Turn ON the ignition, with the engine		

2	OFF. 2. Adjust the head up display (HUD) dimmer switch to full intensity, then back to full dim. Does the HUD dim properly?	Go to **Testing for Intermittent Conditions and Poor Connections** in Wiring Systems	Go to **Step 3**
3	1. Turn OFF the ignition. 2. Disconnect the HUD display connector. 3. Turn ON the ignition, with the engine OFF. 4. Connect a test lamp between the HUD dim slider circuit and B+ at the IPC. Refer to **Circuit Testing** in Wiring Systems. 5. Adjust the HUD to full intensity, then back to full dim. Does the test lamp go from full intensity then dim?	Go to **Step 6**	Go to **Step 4**
4	Test the HUD dim slider circuit for a short to ground. Refer to **Circuit Testing** and **Wiring Repairs** in Wiring Systems. Did you find and correct the condition?	Go to **Step 8**	Go to **Step 5**
5	Replace the HUD dimmer switch. Refer to **Head Up Display Switch Replacement** . Did you find and correct the condition?	Go to **Step 8**	Go to **Step 7**
6	Replace the HUD display. Refer to **Head Up Display Replacement** . Did you complete the replacement?	Go to **Step 8**	-
7	Replace the IPC. Refer to **Instrument Panel Cluster (IPC) Replacement** . Did you complete the replacement?	Go to **Step 8**	-
8	Operate the system in order to verify the repair. Did you correct the condition?	System OK	Go to **Step 2**

CHIME ALWAYS ON

Chime Always On

Step	Action	Yes	No
Schematic Reference: Audible Warnings Schematics			
1	Did you perform the Audible Warnings Diagnostic System Check?	Go to **Step 2**	Go to **Diagnostic System Check - Audible Warnings**

2	Turn ON the ignition. Are any indicators/messages illuminated?	Go to **Symptoms - Instrument Panel, Gages and Console**	Go to **Step 3**
3	1. Turn OFF the ignition. 2. Turn the headlamp switch off. 3. Remove the key from the ignition. 4. Open the driver's door. Does the chime sound?	Go to **Step 4**	Go to **Testing for Intermittent Conditions and Poor Connections** in Wiring Systems
4	1. Close the driver's door. 2. Install a scan tool. 3. Turn ON the ignition, with the engine OFF. 4. With a scan tool, observe the Key In Ignition parameter in the Body Control Module Input data list. Does the Key In Ignition parameter display Inactive?	Go to **Step 5**	Go to **Step 6**
5	Test the ignition switch ground circuit for an open. Refer to **Circuit Testing** and **Wiring Repairs** in Wiring Systems. Did you find and correct the condition?	Go to **Step 11**	Go to **Step 8**
6	1. Remove the key from the ignition. 2. Disconnect the BCM connector C2. 3. Test the key in ignition signal circuit for a short to ground. Refer to **Circuit Testing** and **Wiring Repairs** in Wiring Systems. Is a short to ground present?	Go to **Step 7**	Go to **Step 9**
7	1. Disconnect the ignition switch connector C1. 2. Test the key in ignition signal circuit for a short to ground. Refer to **Circuit Testing** and **Wiring Repairs** in Wiring Systems. Did you find and correct the condition?	Go to **Step 11**	Go to **Step 10**
8	Test the key out of ignition signal circuit for an open. Refer to **Circuit Testing** and **Wiring Repairs** in Wiring Systems.		

	Did you find and correct the condition?	Go to **Step 11**	Go to **Step 10**
9	**IMPORTANT:** **Perform the programming procedure for the BCM.** Replace the BCM. Refer to **Body Control Module Replacement** in Body Control System.Did you complete the replacement?	Go to **Step 11**	-
10	Replace the ignition switch. Refer to **Ignition Switch Replacement** . Did you complete the replacement?	Go to **Step 11**	-
11	Operate the system in order to verify the repair. Did you correct the condition?	System OK	Go to **Step 2**

CHIME INOPERATIVE

Chime Inoperative

Step	Action	Yes	No
Schematic Reference: Audible Warnings Schematics			
1	Did you perform the Audible Warning Diagnostic System Check?	Go to **Step 2**	Go to **Diagnostic System Check - Audible Warnings**
2	1. Turn ON the ignition. 2. Buckle the driver's seat belt. Is the fasten seat belt indicator inoperative?	Go to **Seat Belt Indicator Circuit Malfunction** in Seat Belts	Go to **Step 3**
3	Turn the headlamps on. Are the headlamps on?	Go to **Step 4**	Go to **Headlamps Inoperative - Low and High Beams** in Lighting Systems
4	Open the driver's door. Does the DIC display DOOR AJAR?	Go to **Step 5**	Go to **Door Ajar Indicator Inoperative** in Doors
5	**IMPORTANT:** **Program the replacement BCM.** Replace the BCM. Refer to **Body Control Module Replacement** in Body Control System.Did you complete the replacement?	Go to **Step 6**	-
6	Operate the system in order to verify the repair. Did you correct the condition?	System OK	Go to **Step 2**

REPAIR INSTRUCTIONS

INSTRUMENT PANEL (I/P) DISASSEMBLY PRECAUTIONS

IMPORTANT: The instrument panel (I/P) bracket locations MUST be marked PRIOR to disassembly.
The original locations of the I/P brackets are required for proper trim fit. PRIOR to disassembling the I/P brackets, mark their locations using a paint stick, grease pencil, or other suitable method. The following is a list of the I/P brackets which should be marked and the recommended locations for marking them:

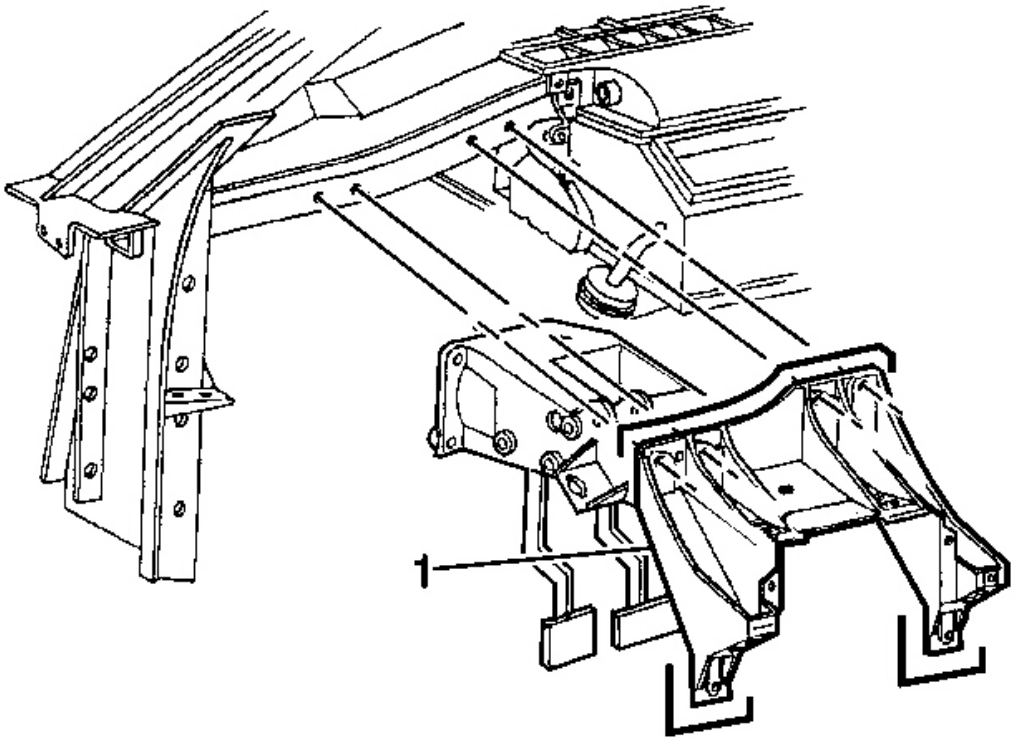

Fig. 14: Steering Column Bracket At I/P Upper & Lower Support Beams
Courtesy of GENERAL MOTORS CORP.

- The steering column bracket (1):

  Mark the bracket (1) in relation to the I/P upper and lower support beams.

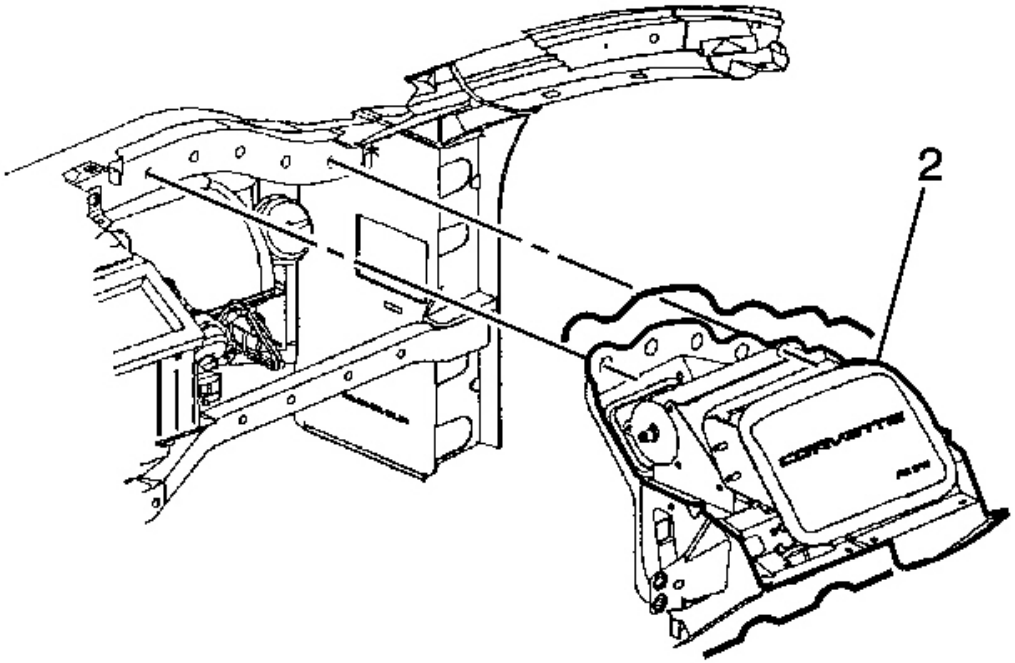

Fig. 15: Passenger SIR Bracket At I/P Upper & Lower Support Beams
Courtesy of GENERAL MOTORS CORP.

- The passenger SIR bracket (2):

  Mark the bracket (2) in relation to the I/P upper and lower support beams.

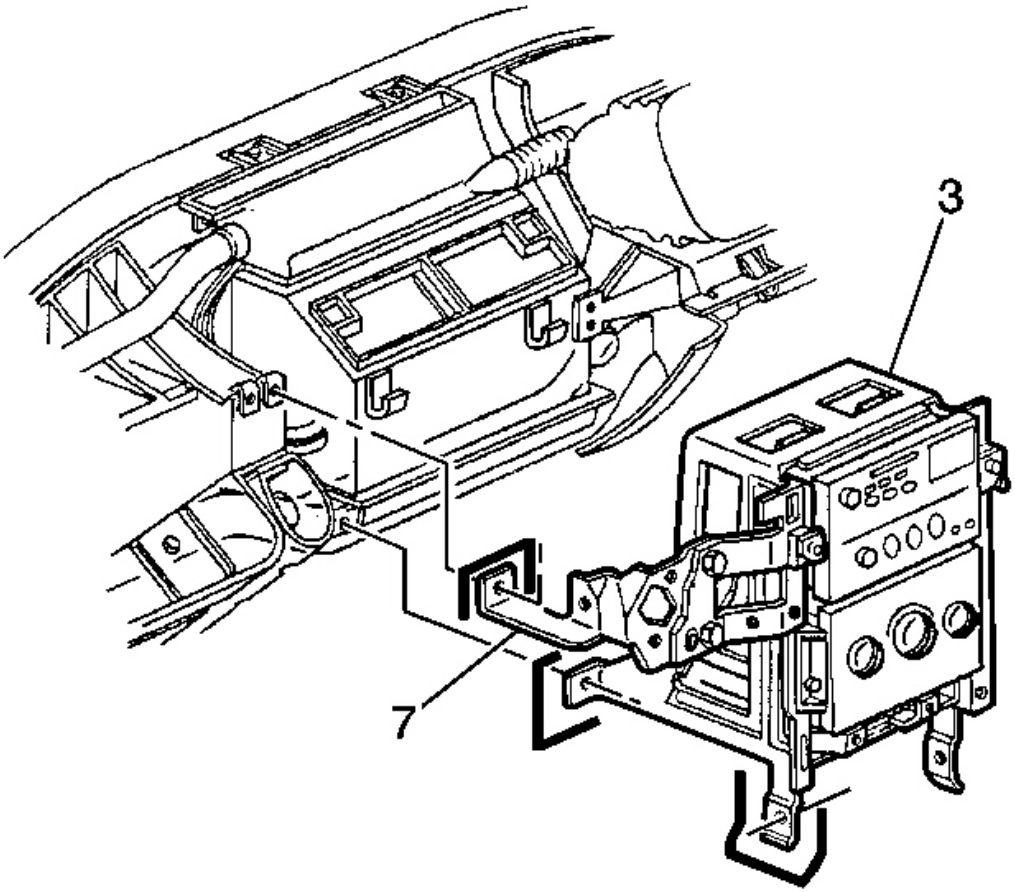

Fig. 16: I/P Center Support Bracket LH side
Courtesy of GENERAL MOTORS CORP.

- The I/P center support bracket (3), LH side:

  Mark the bracket (3), LH side, in relation to the I/P lower support beam and the driveline tunnel; mark the ignition switch housing bracket (7), connected to the I/P center support bracket (3), in relation to the steering column bracket.

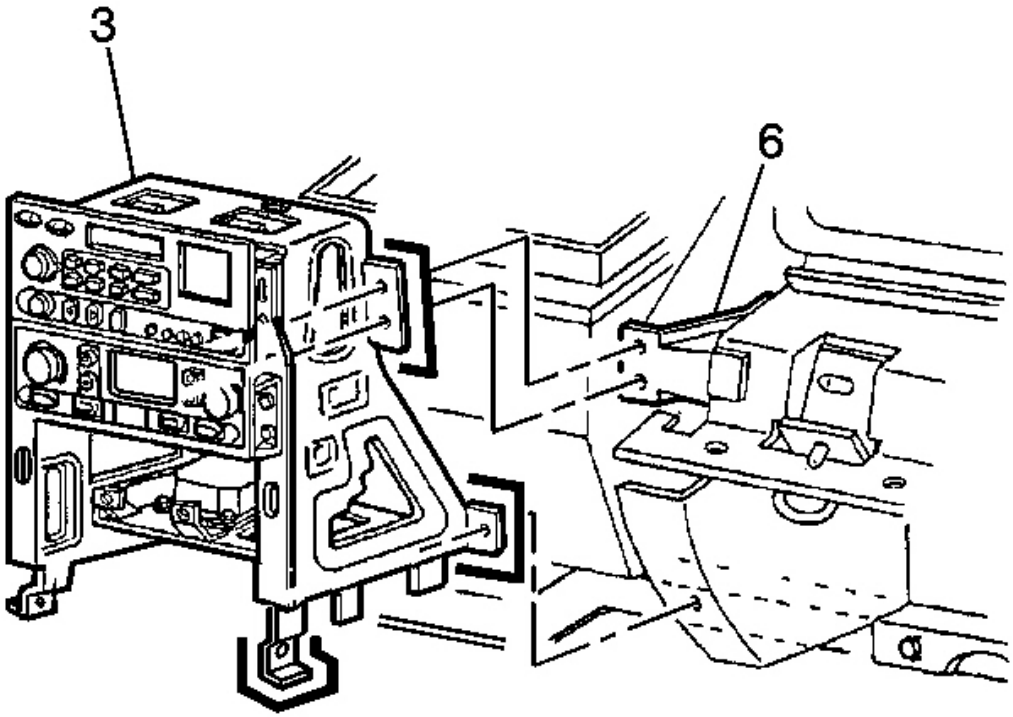

Fig. 17: I/P Center Support Bracket RH side
Courtesy of GENERAL MOTORS CORP.

- The I/P center support bracket (3), RH side:

  Mark the bracket (3), RH side, in relation to the I/P lower support beam, the driveline tunnel, and the passenger knee bolster bracket (6).

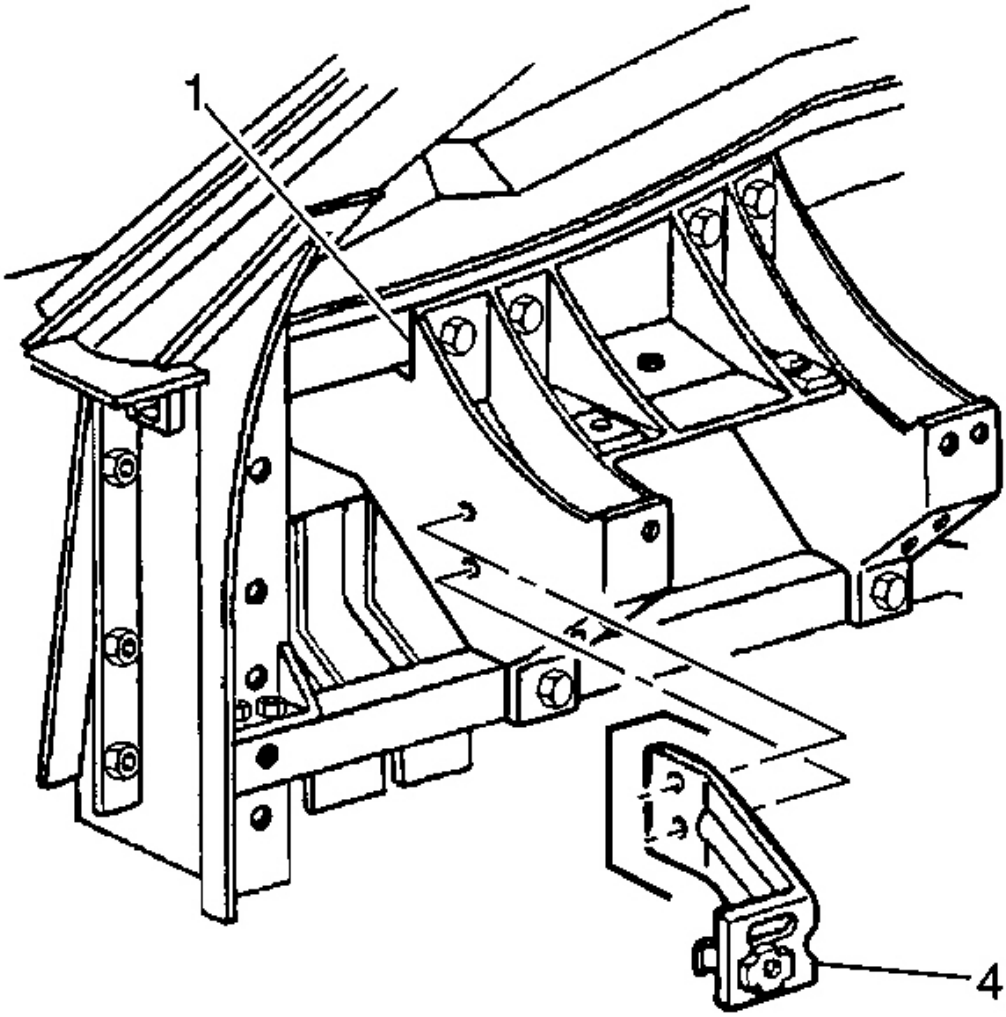

Fig. 18: Driver Knee Bolster Outer Bracket To Steering Column Bracket
Courtesy of GENERAL MOTORS CORP.

- The driver knee bolster outer bracket (4):

  Mark the bracket (4) in relation to the steering column bracket (1).

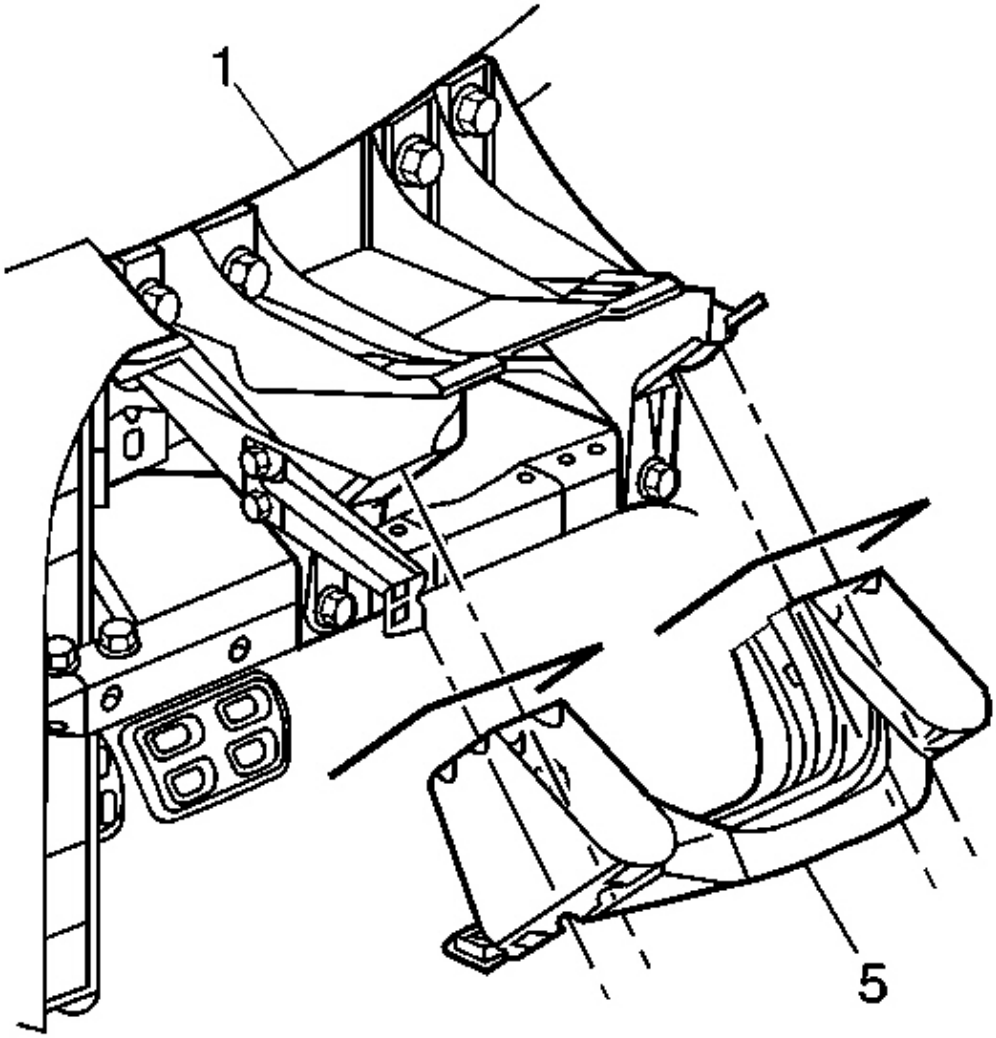

Fig. 19: Driver Knee Bolster Bracket To Steering Column Bracket
Courtesy of GENERAL MOTORS CORP.

- The driver knee bolster bracket (5):

  Mark the bracket (5) in relation to the steering column bracket (1).

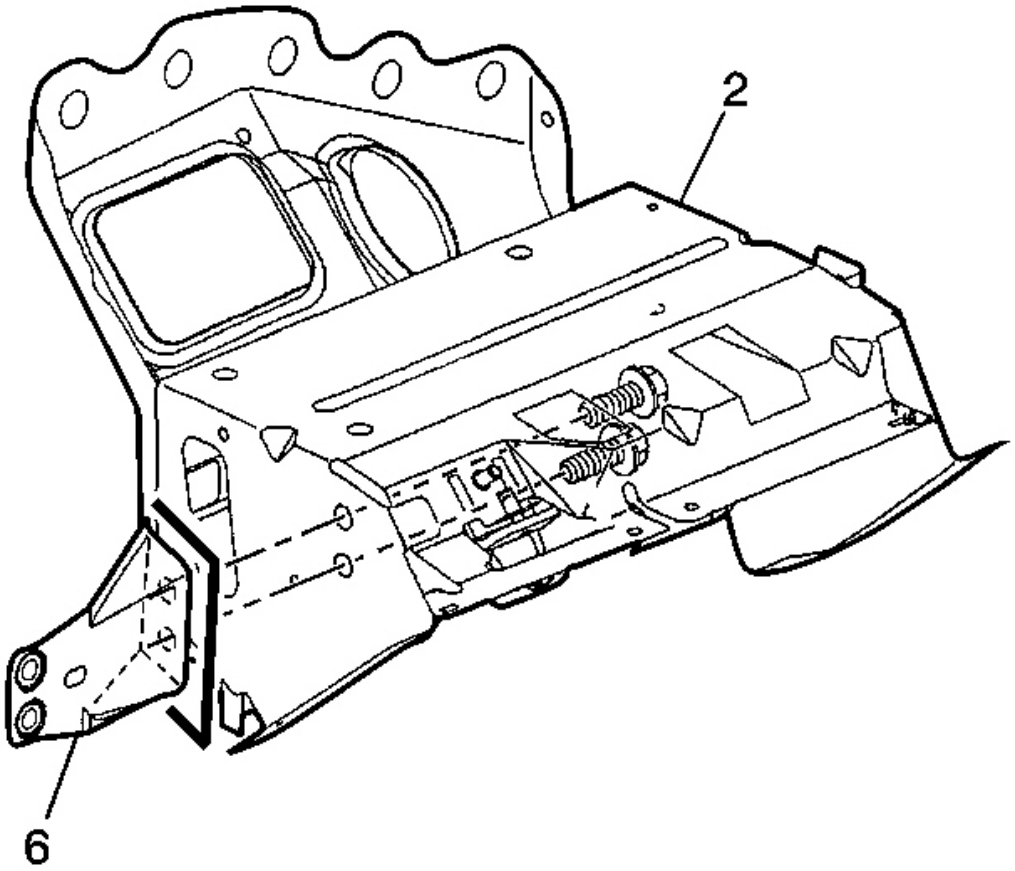

Fig. 20: Passenger Knee Bolster Bracket To Passenger SIR Bracket
Courtesy of GENERAL MOTORS CORP.

- The passenger knee bolster bracket (6):

  Mark the bracket (6) in relation to the passenger SIR bracket (2).

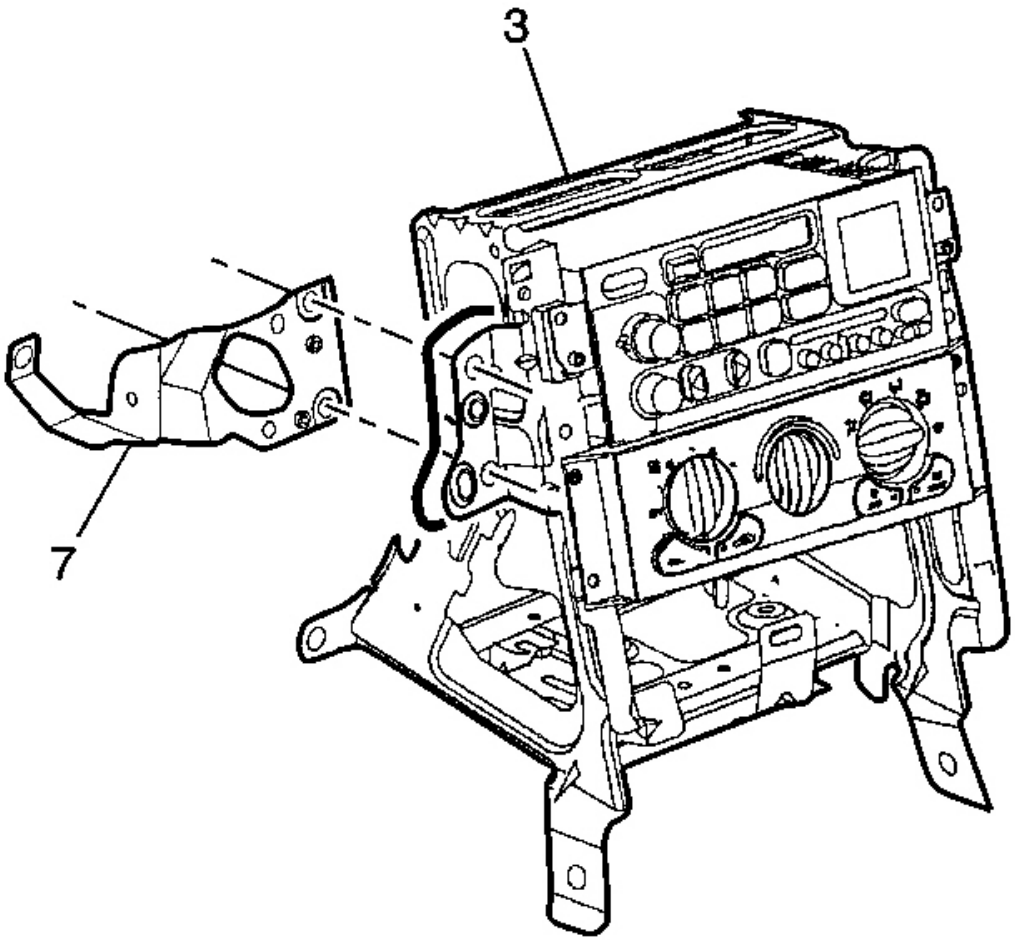

Fig. 21: Ignition Switch Housing Bracket To I/P Center Support Bracket
Courtesy of GENERAL MOTORS CORP.

- The ignition switch housing bracket (7):

  Mark the bracket (7) in relation to the I/P center support bracket (3).

INSTRUMENT CLUSTER SERVICE PRECAUTIONS

NOTE: **Whenever the Instrument Panel Cluster (IPC) is removed from the vehicle, DO NOT set the IPC on its face for more than 15 minutes or damage to the fluid filled air core gages may result.**

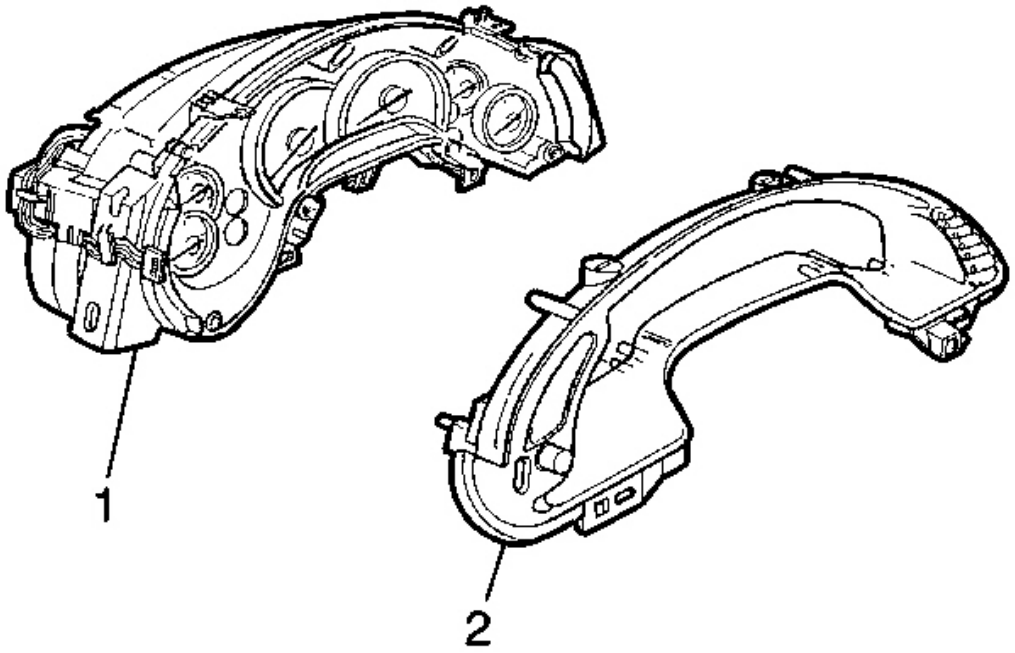

Fig. 22: I/P Cluster Bezel With I/P Dimmer Switch & DIC Switch
Courtesy of GENERAL MOTORS CORP.

IMPORTANT: If it is determined that an instrument panel cluster (IPC) needs to be shipped to an authorized Delco Service Center, the following MUST be observed:

The I/P cluster bezel (2) (along with the I/P dimmer switch and the DIC switch) MUST be REMOVED from the IPC (1) prior to shipping. The bezel and switches are then to be reused on the replacement IPC.

IGNITION SWITCH LOCK CYLINDER REPLACEMENT

Removal Procedure

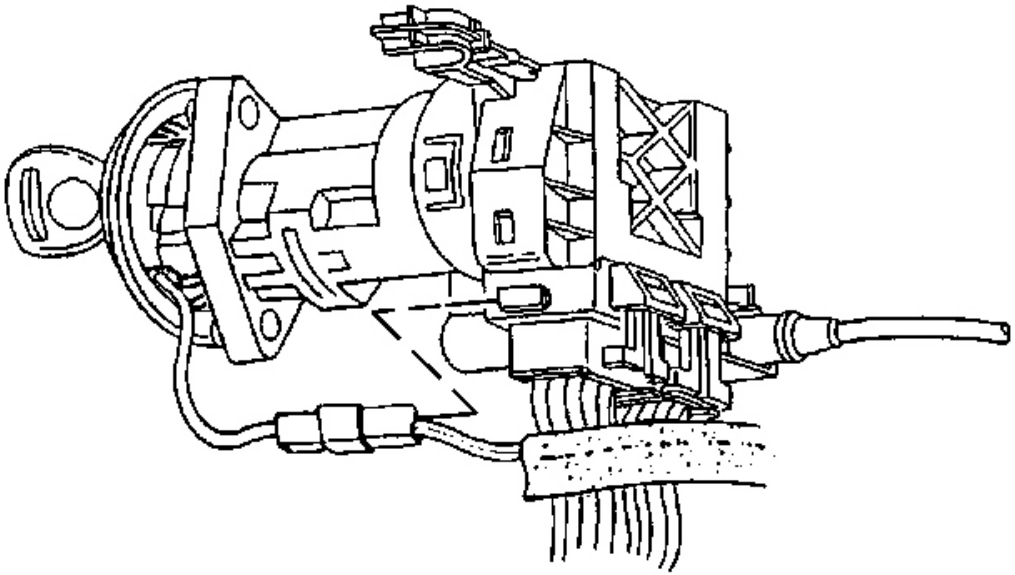

Fig. 23: Ignition Switch Lock Cylinder Electrical Connector At Side Of Ignition Switch
Courtesy of GENERAL MOTORS CORP.

1. Apply the parking brake.

CAUTION: Refer to Battery Disconnect Caution in Cautions and Notices.

2. Disconnect the negative battery cable.
3. Remove the console. Refer to **Console Replacement** .
4. Remove the IP accessory trim plate. Refer to **Trim Plate Replacement - Instrument Panel (I/P) Accessory** .
5. Remove the driver knee bolster trim panel. Refer to **Trim Panel Replacement - Knee Bolster** .
6. Remove the ignition switch lock cylinder electrical connector from the retaining tab on the side of the ignition switch.

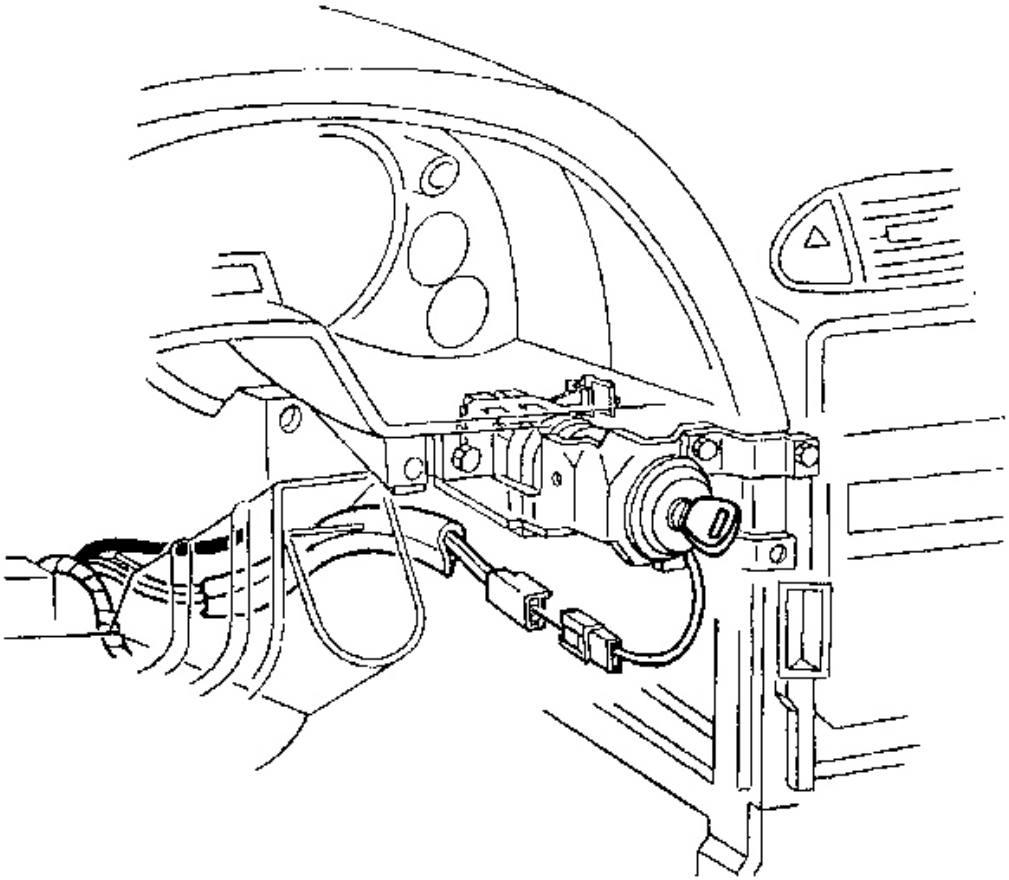

Fig. 24: Ignition Switch Lock Cylinder Electrical Connector
Courtesy of GENERAL MOTORS CORP.

7. Disconnect the ignition switch lock cylinder electrical connector.

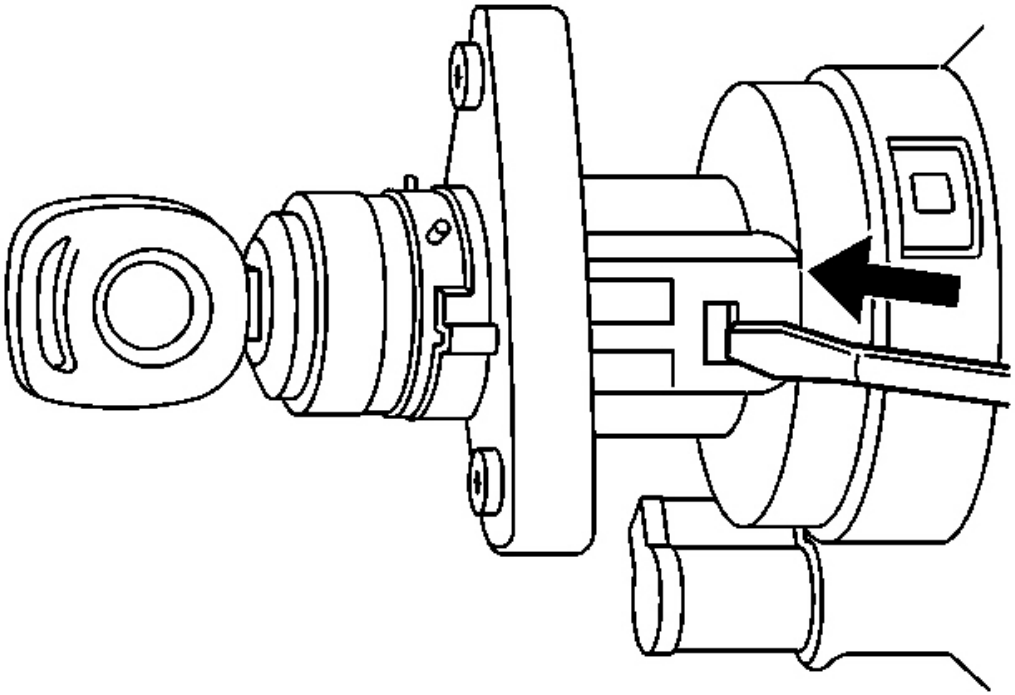

Fig. 25: Ignition Lock Cylinder At RH Lower Side Of Ignition Switch
Courtesy of GENERAL MOTORS CORP.

8. Insert the key and turn the ignition to ON.
9. Using a flat bladed screwdriver or other suitable tool, depress and hold the ignition lock cylinder retaining tab (located on the RH lower side of the ignition switch)

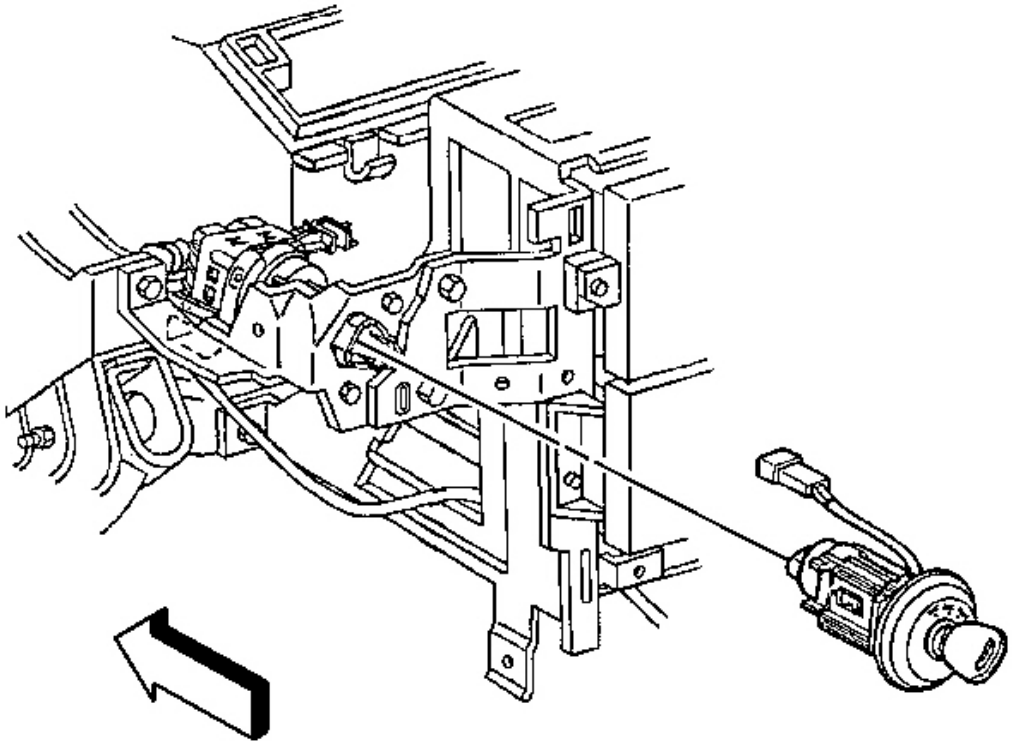

Fig. 26: Ignition Switch Lock Cylinder Wire To Base Of Ignition Switch Bezel
Courtesy of GENERAL MOTORS CORP.

10. Pull to remove the ignition lock cylinder.

IMPORTANT: Take note of how the ignition switch lock cylinder wire is wrapped around the base of the ignition switch bezel.

11. Remove the ignition switch bezel.

    Carefully pull to unsnap.

Installation Procedure

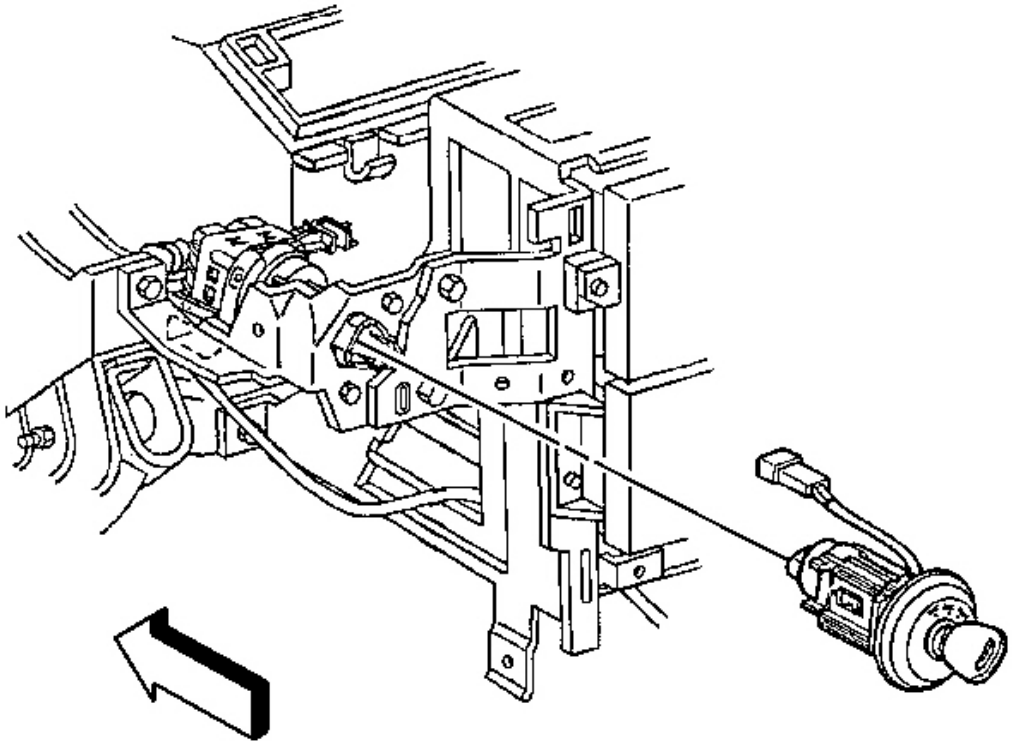

Fig. 27: Ignition Switch Lock Cylinder Wire To Base Of Ignition Switch Bezel
Courtesy of GENERAL MOTORS CORP.

1. Install the ignition switch bezel to the ignition switch lock cylinder.
    1. Wrap the ignition switch lock cylinder wire around the base of the ignition switch bezel, as noted during removal.
    2. Align the bezel slots to the lock cylinder pins, then push to secure.
2. Insert the ignition lock cylinder, with the key, into the ignition switch.
3. Press the ignition lock cylinder into place.

   The lock cylinder retaining tab will produce an audible click.

4. Check to be sure that the ignition lock cylinder is fully engaged.

   Use light force to pull the lock cylinder and attempt to remove it. (The lock cylinder should not be removable.)

5. Turn the ignition to OFF, then remove the key.

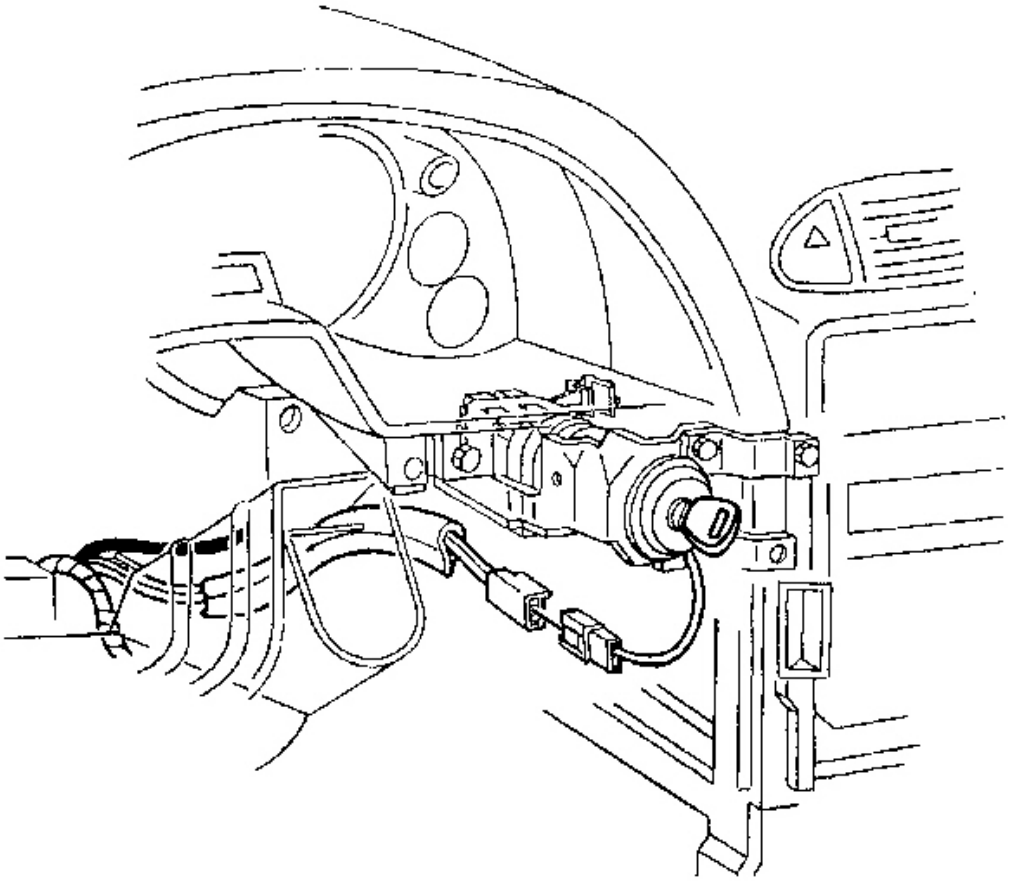

Fig. 28: Ignition Switch Lock Cylinder Electrical Connector
Courtesy of GENERAL MOTORS CORP.

6. Connect the ignition switch lock cylinder electrical connector.

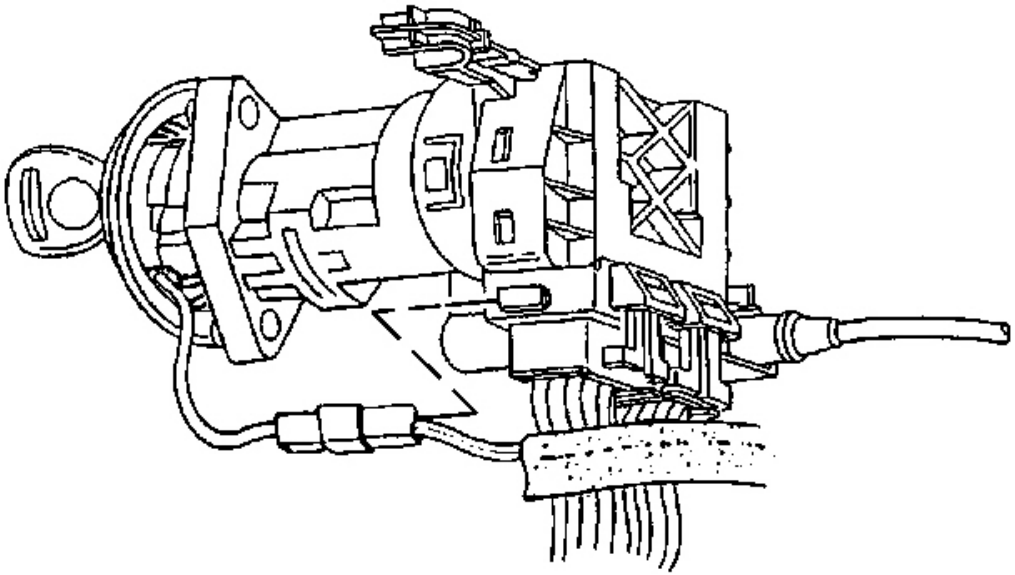

Fig. 29: Ignition Switch Lock Cylinder Electrical Connector At Side Of Ignition Switch
Courtesy of GENERAL MOTORS CORP.

7. Install the lock cylinder electrical connector to the retaining tab on the side of the ignition switch.
8. Install the driver knee bolster trim panel. Refer to **Trim Panel Replacement - Knee Bolster** .
9. Install the IP accessory trim plate. Refer to **Trim Plate Replacement - Instrument Panel (I/P) Accessory** .
10. Install the console. Refer to **Console Replacement** .

NOTE: Refer to Fastener Notice in Cautions and Notices.

11. Connect the negative battery.

    Tighten: Tighten the negative battery cable bolt to 15 N.m (11 lb ft).

12. Program the transmitters. Refer to **Transmitter Programming** in Keyless Entry.
13. Release the parking brake.
14. Inspect the functional operation of the ignition lock cylinder.
    1. Insert the key and turn the ignition to the various positions, while checking for freedom of movement.
    2. Attempt to remove the key while the ignition is in each of the positions.

The key should only be removable in the OFF position.

IGNITION SWITCH REPLACEMENT

Removal Procedure

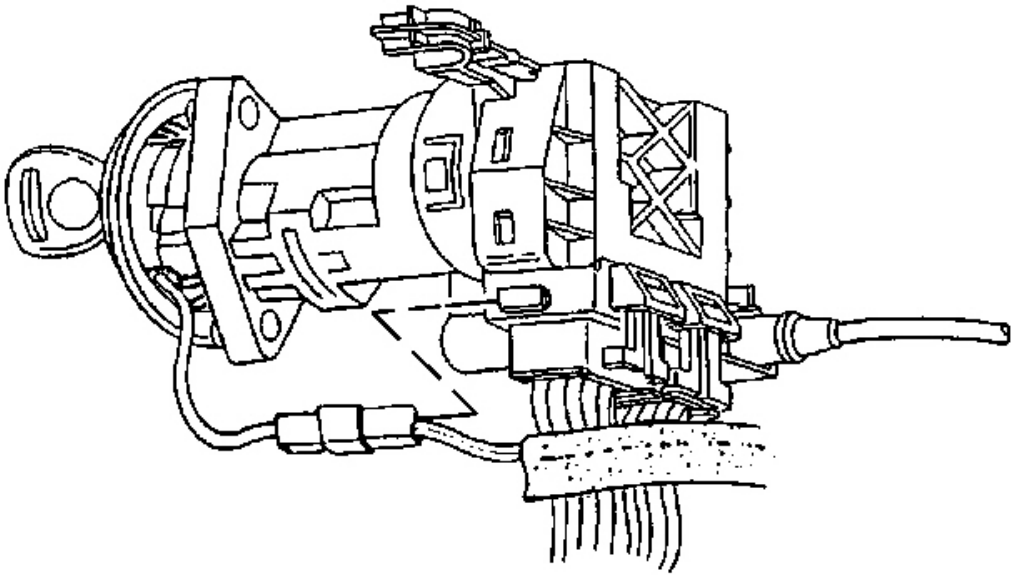

Fig. 30: Ignition Switch Lock Cylinder Electrical Connector At Side Of Ignition Switch
Courtesy of GENERAL MOTORS CORP.

CAUTION: Refer to Battery Disconnect Caution in Cautions and Notices.

1. Disconnect the negative battery cable.
2. Apply the parking brake.
3. Remove the console. Refer to **Compartment Replacement - Instrument Panel (I/P)** .
4. Remove the IP accessory trim plate. Refer to **Trim Plate Replacement - Instrument Panel (I/P) Accessory** .
5. Remove the driver knee bolster trim panel. Refer to **Trim Panel Replacement - Knee Bolster** .
6. Remove the ignition switch lock cylinder electrical connector from the retaining tab on the side of the ignition switch.

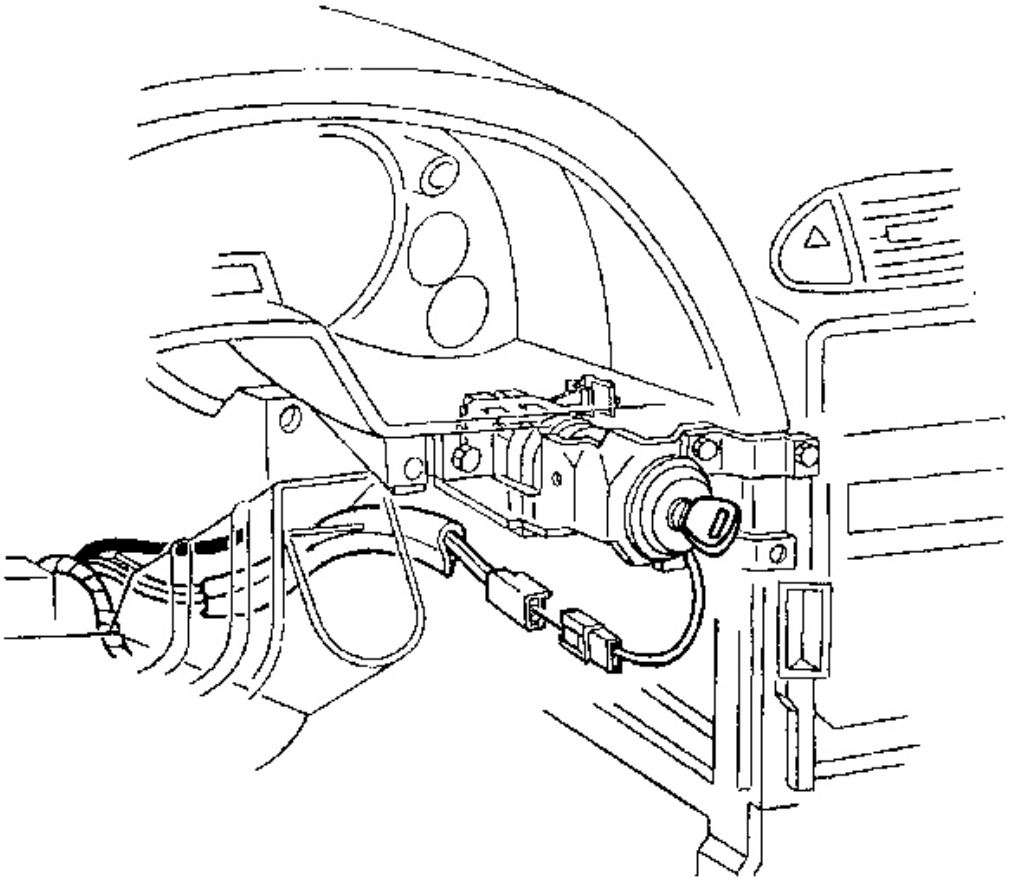

Fig. 31: Ignition Switch Lock Cylinder Electrical Connector
Courtesy of GENERAL MOTORS CORP.

7. Disconnect the lock cylinder electrical connector.

IMPORTANT: Take note of the way in which the ignition switch lock cylinder wire is wrapped around the base of the ignition switch bezel.

8. Remove the ignition switch bezel.

   Carefully pull to unsnap.

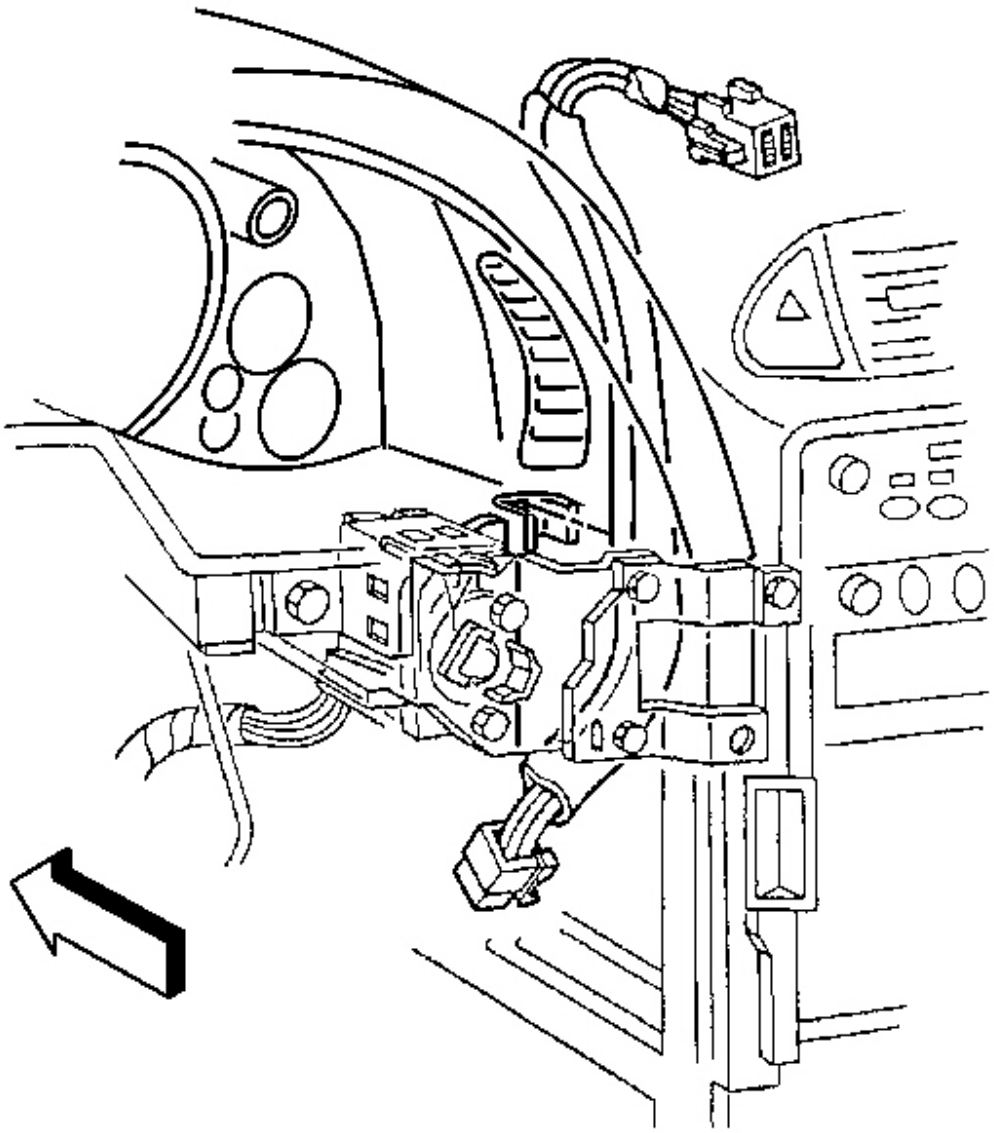

Fig. 32: Hazard Warning Switch Wiring Harness To Ignition Switch Retainer
Courtesy of GENERAL MOTORS CORP.

9. Remove the hazard warning switch wiring harness from the ignition switch retainer.

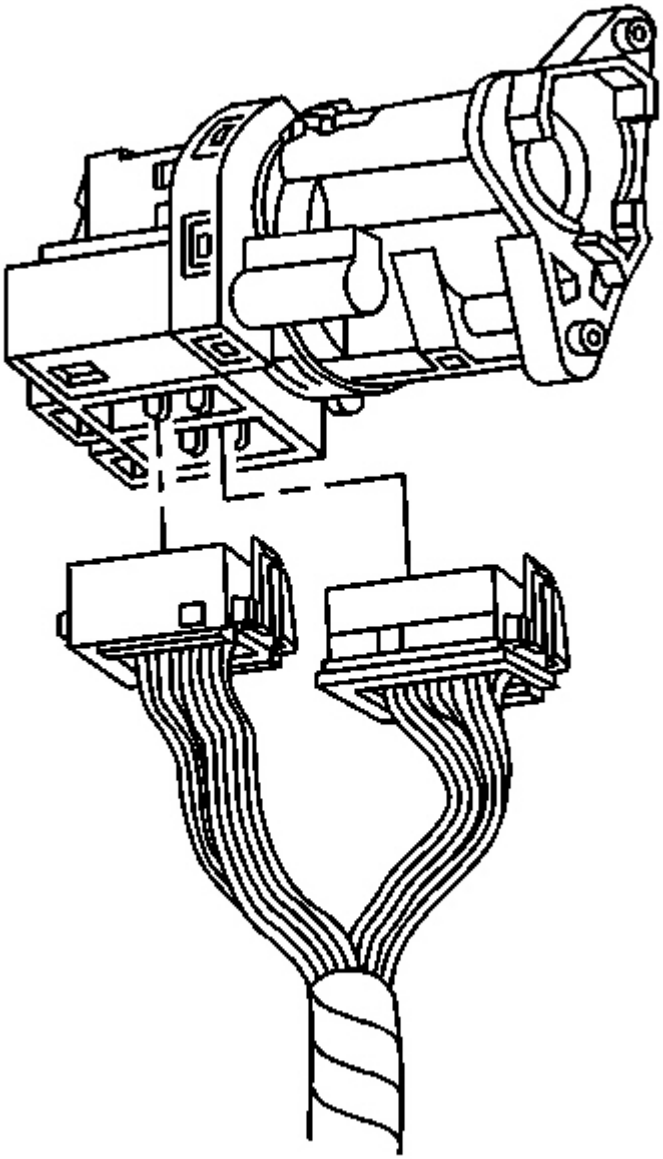

Fig. 33: Ignition Switch Electrical Connectors
Courtesy of GENERAL MOTORS CORP.

10. Disconnect the ignition switch electrical connectors.

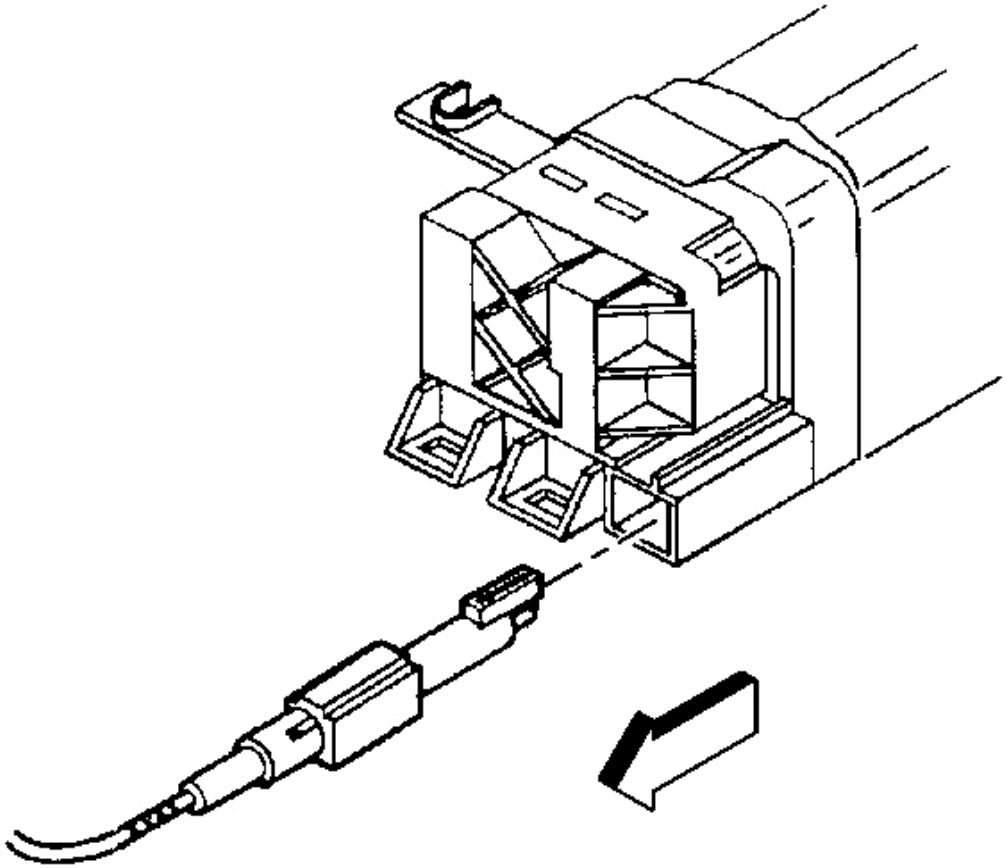

Fig. 34: Park/Lock Cable (A/T) To Ignition Switch
Courtesy of GENERAL MOTORS CORP.

11. Disconnect the park/lock cable (A/T) from the ignition switch.
    1. Insert the key into the ignition switch, then turn the ignition to ON.
    2. Using a flat bladed screwdriver or other suitable tool, depress the park/lock cable retaining tab (located on the underside of the switch near the base of the cable).
    3. Pull to remove the cable.

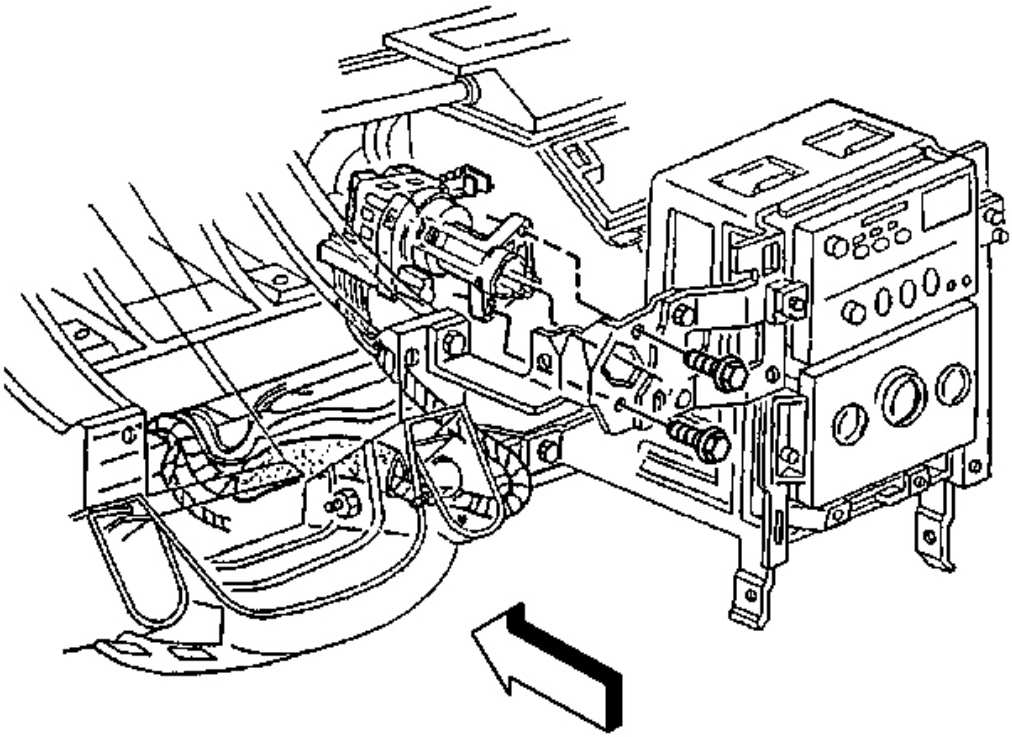

Fig. 35: Ignition Switch Retaining Bolts
Courtesy of GENERAL MOTORS CORP.

12. Remove the ignition switch retaining bolts.
13. Remove the ignition switch.

Installation Procedure

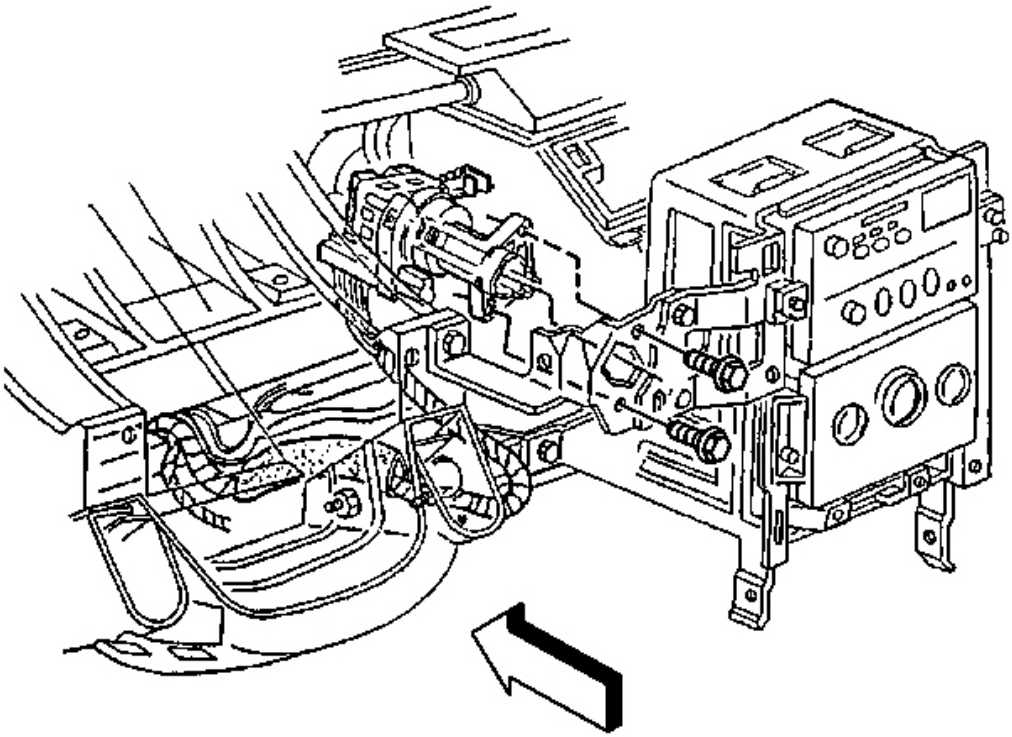

Fig. 36: Ignition Switch Retaining Bolts
Courtesy of GENERAL MOTORS CORP.

1. Install the ignition switch into position on the ignition switch housing bracket.

   NOTE: Refer to Fastener Notice in Cautions and Notices.

2. Install the ignition switch retaining bolts.

   Tighten: Tighten the ignition switch retaining bolts to 5.5 N.m (49 lb in).

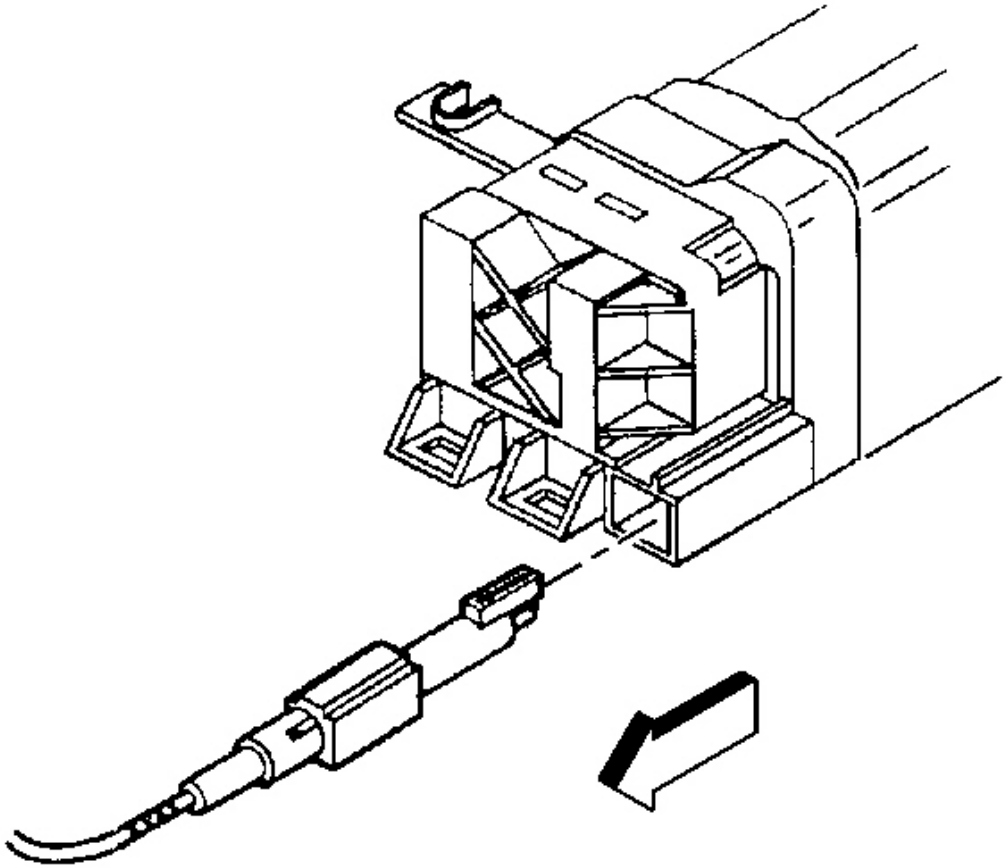

Fig. 37: Park/Lock Cable (A/T) To Ignition Switch
Courtesy of GENERAL MOTORS CORP.

3. Install the park/lock cable (A/T) to the ignition switch (still in the ON position).

   Push to secure the cable retaining tab.

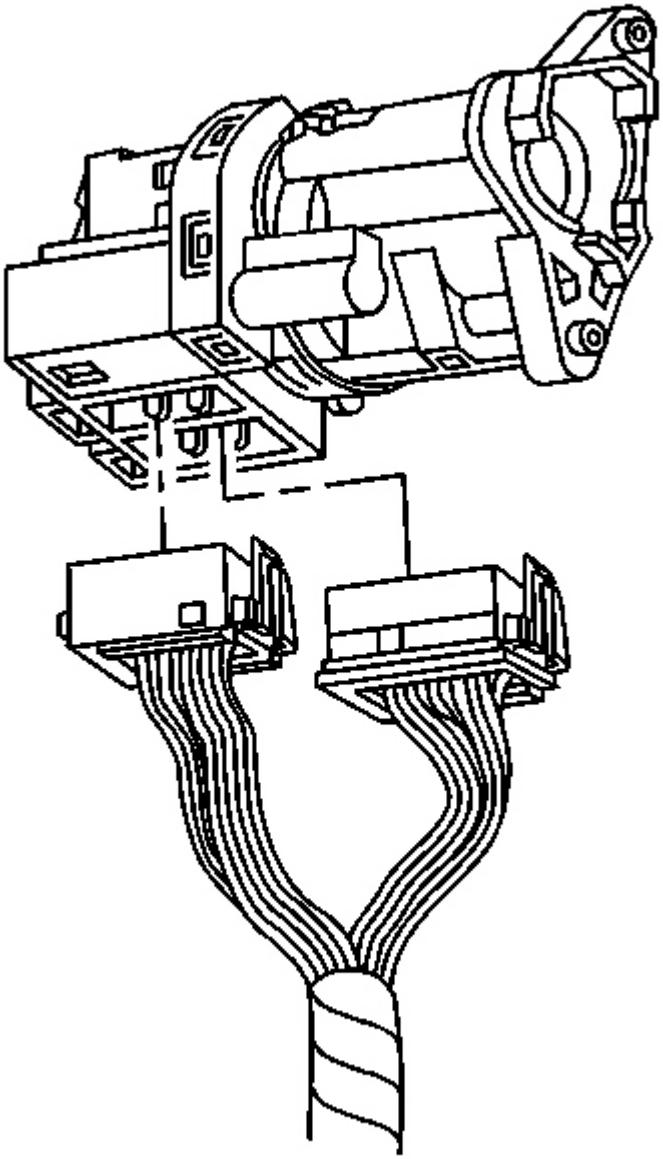

Fig. 38: Ignition Switch Electrical Connectors
Courtesy of GENERAL MOTORS CORP.

4. Connect the ignition switch electrical connections.

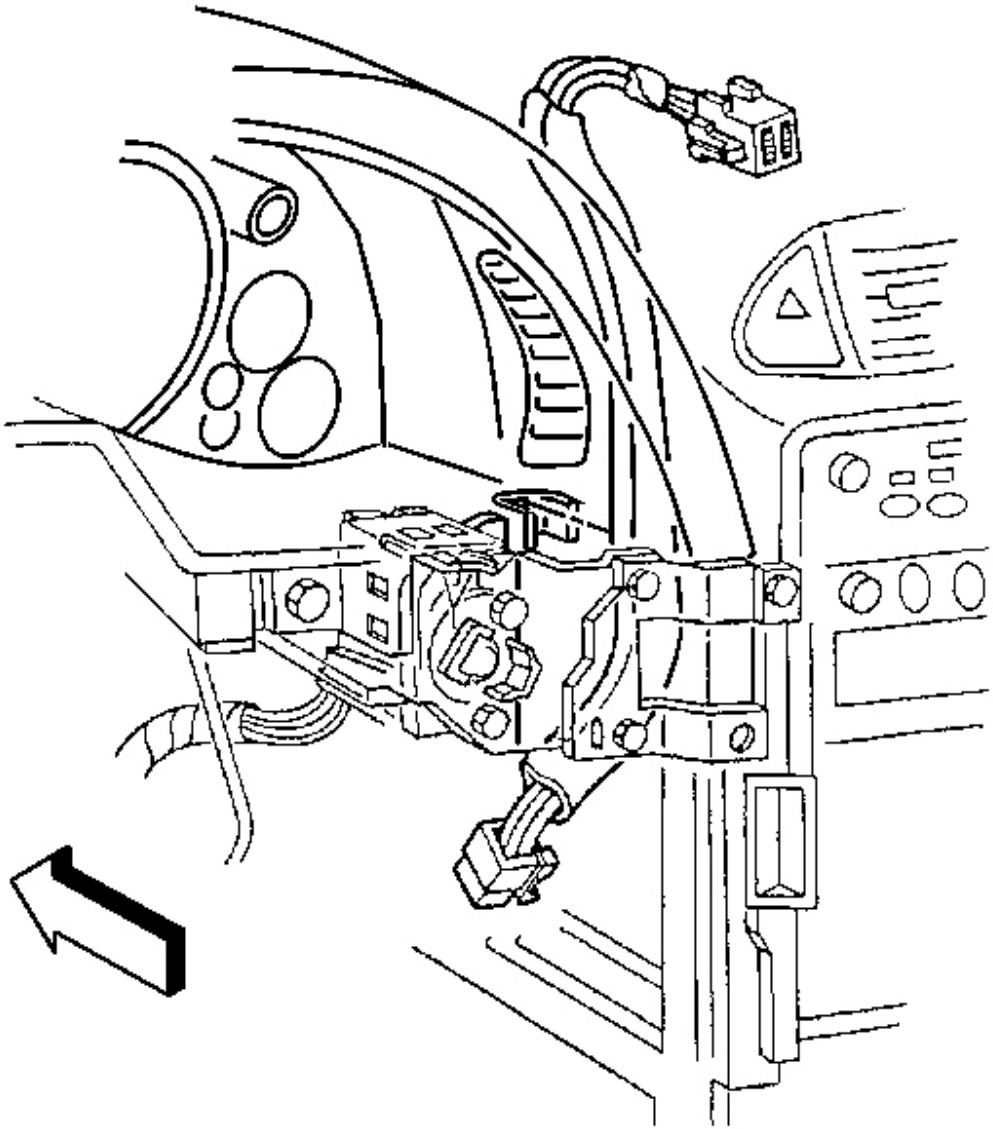

Fig. 39: Hazard Warning Switch Wiring Harness To Ignition Switch Retainer
Courtesy of GENERAL MOTORS CORP.

5. Install the hazard warning switch wiring harness to the ignition switch retainer.

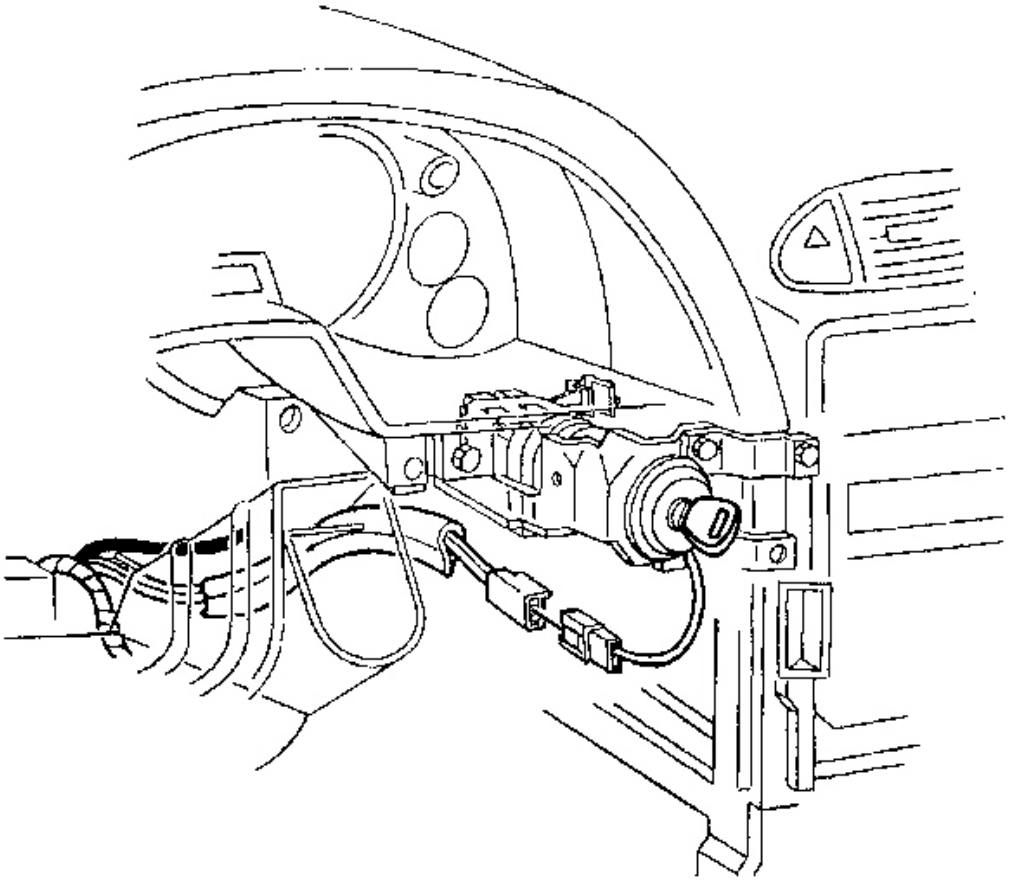

Fig. 40: Ignition Switch Lock Cylinder Electrical Connector
Courtesy of GENERAL MOTORS CORP.

6. Install the ignition switch bezel to the switch.
    1. Wrap the ignition switch lock cylinder wire around the base of the ignition switch bezel, as noted during removal.
    2. Align the bezel slots to the lock cylinder pins, then push to secure.
7. Connect the lock cylinder electrical connector.

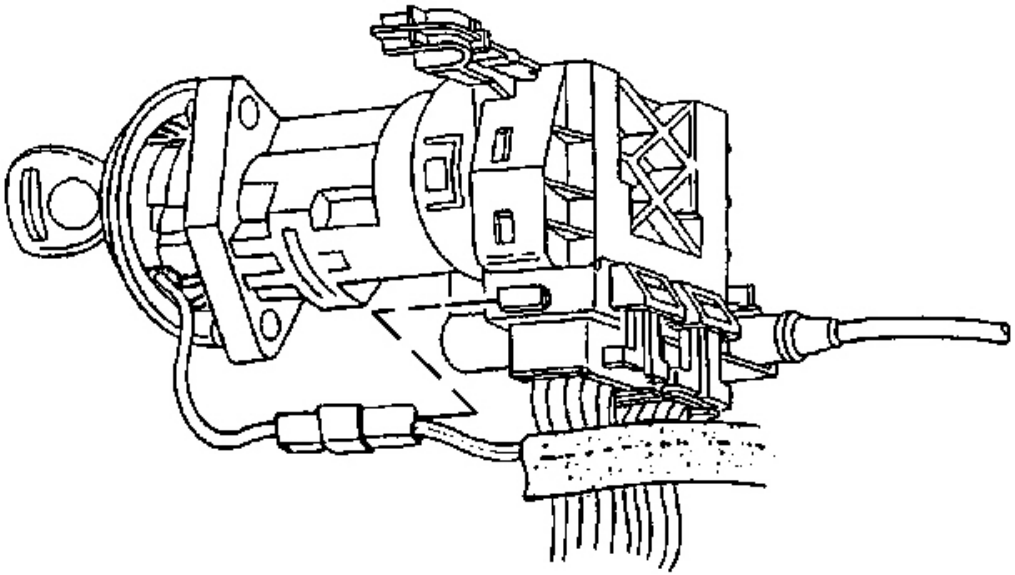

Fig. 41: Ignition Switch Lock Cylinder Electrical Connector At Side Of Ignition Switch
Courtesy of GENERAL MOTORS CORP.

8. Install the lock cylinder electrical connector to the retaining tab on the side of the ignition switch.
9. Install the driver knee bolster trim panel. Refer to **Trim Panel Replacement - Knee Bolster** .
10. Install the IP accessory trim plate. Refer to **Trim Plate Replacement - Instrument Panel (I/P) Accessory** .
11. Install the console. Refer to **Compartment Replacement - Instrument Panel (I/P)** .
12. Connect the negative battery cable.

    Tighten: Tighten the negative battery cable bolt to 15 N.m (11 lb ft).

13. Program the transmitters. Refer to **Transmitter Programming** in Keyless Entry.
14. Release the parking brake.

IGNITION SWITCH HOUSING BRACKET REPLACEMENT

Removal Procedure

1. Remove the console. Refer to **Console Replacement** .

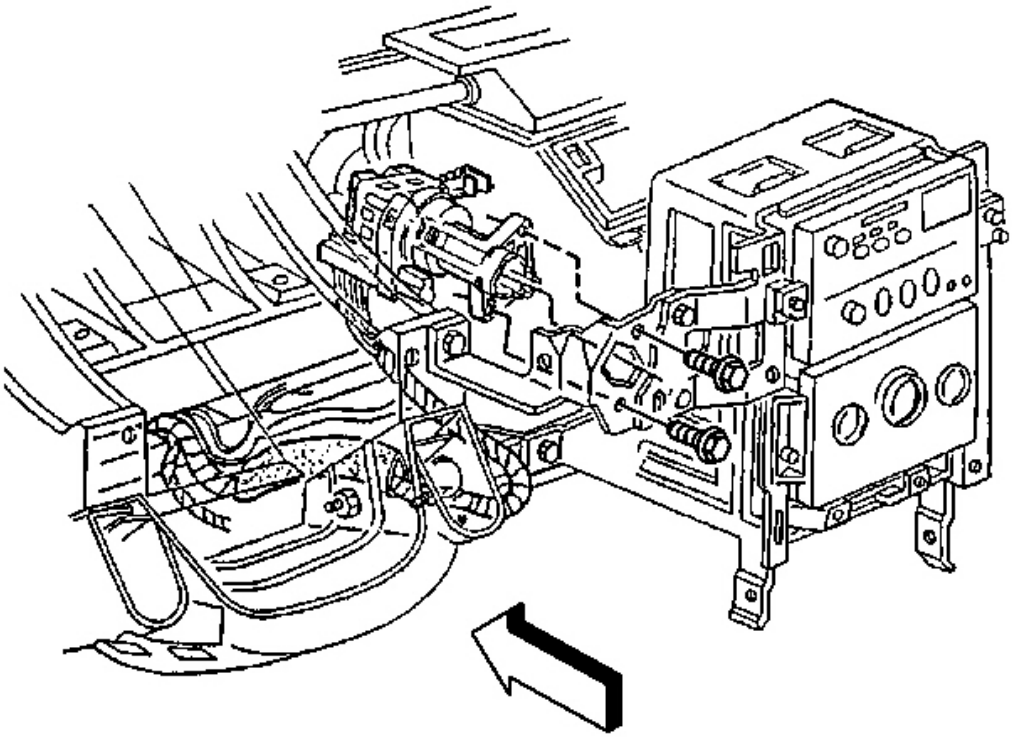

Fig. 42: Ignition Switch Retaining Bolts
Courtesy of GENERAL MOTORS CORP.

2. Remove the IP accessory trim plate. Refer to **Trim Plate Replacement - Instrument Panel (I/P) Accessory** .
3. Remove the driver knee bolster trim panel. Refer to **Trim Panel Replacement - Knee Bolster** .
4. Remove the IP upper trim pad. Refer to **Trim Pad Replacement - Instrument Panel (I/P) Upper** .
5. Remove the ignition switch lock cylinder. Refer to **Ignition Switch Lock Cylinder Replacement** .
6. Remove the bolts retaining the ignition switch to the ignition switch housing bracket.
7. Reposition the ignition switch.

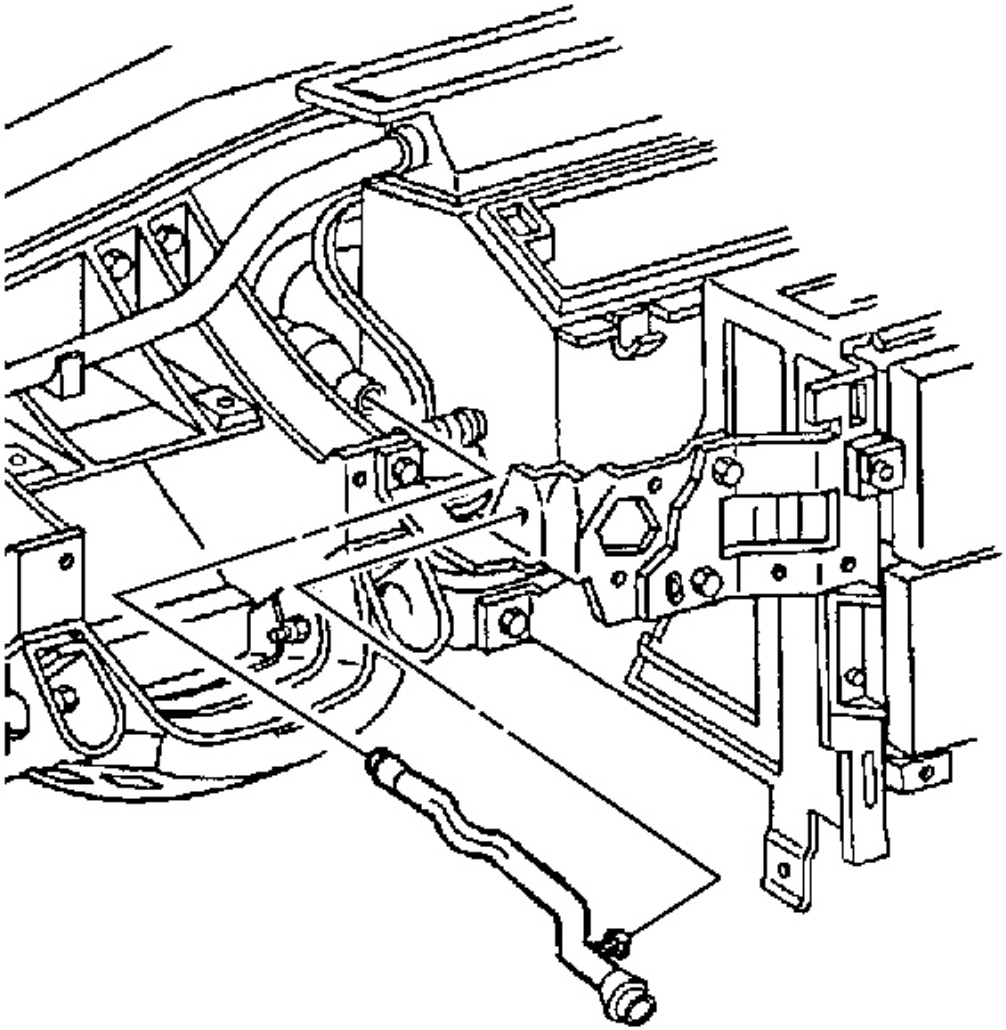

Fig. 43: Inside Air Temperature Sensor Aspirator Duct
Courtesy of GENERAL MOTORS CORP.

8. Remove the inside air temperature sensor aspirator duct, if equipped.
    1. Depress the duct retaining tab and remove the duct from the ignition switch housing bracket.
    2. Use a twisting motion to release the duct from the duct muffler.

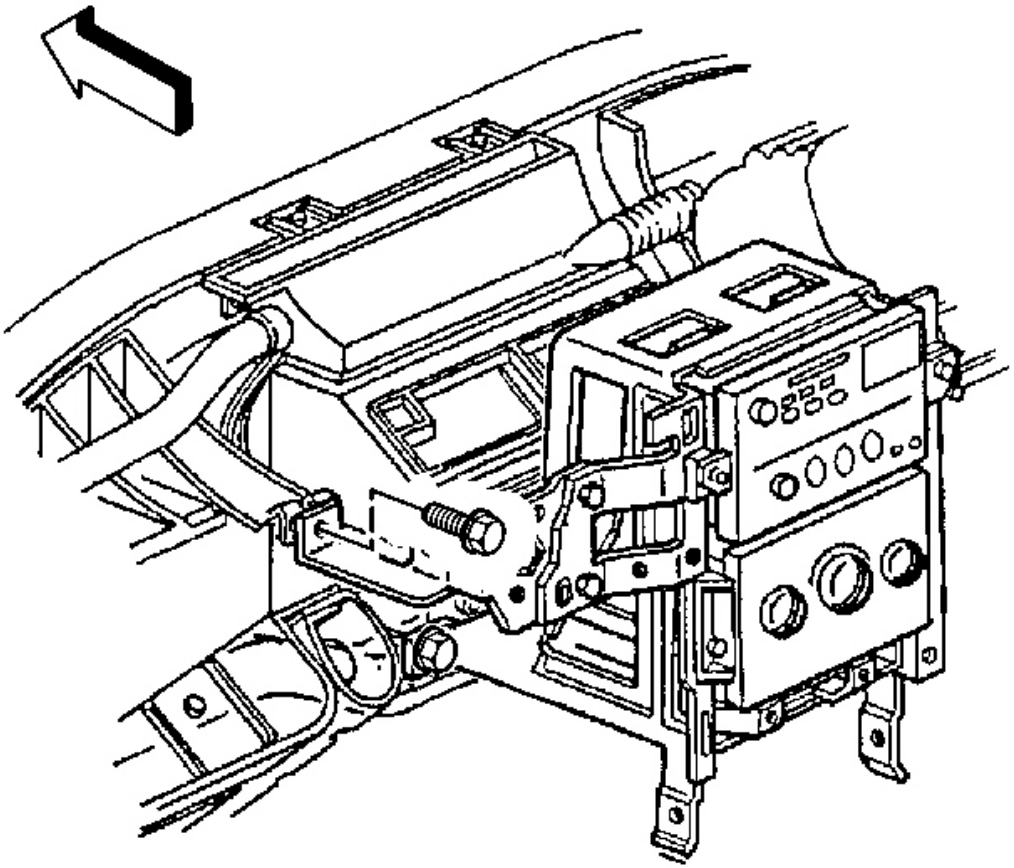

Fig. 44: Ignition Switch Housing Bracket To Steering Column Bracket
Courtesy of GENERAL MOTORS CORP.

IMPORTANT: The following step must be performed to assure proper trim fits during installation.

9. Mark the location of the ignition switch housing bracket. Refer to **Instrument Panel (I/P) Disassembly Precautions** .
10. Remove the bolt retaining the ignition switch housing bracket to the steering column bracket.

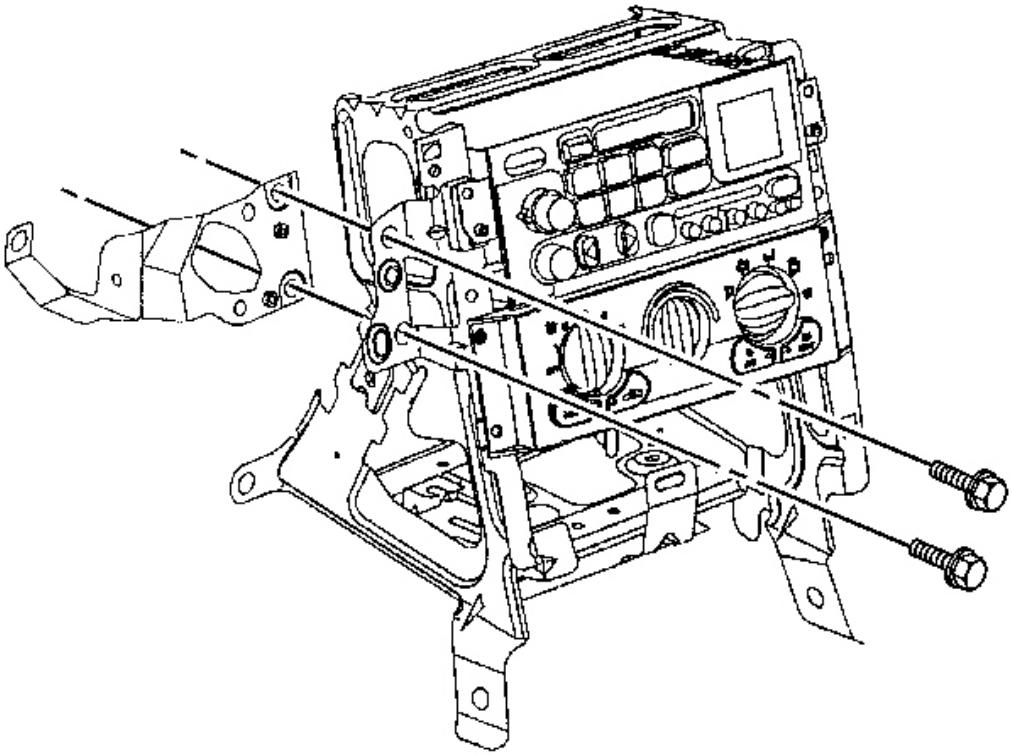

Fig. 45: Ignition Switch Housing Bracket To IP Center Support Bracket
Courtesy of GENERAL MOTORS CORP.

11. Remove the bolts retaining the ignition switch housing bracket to the IP center support bracket.
12. Remove the ignition switch housing bracket.

Installation Procedure

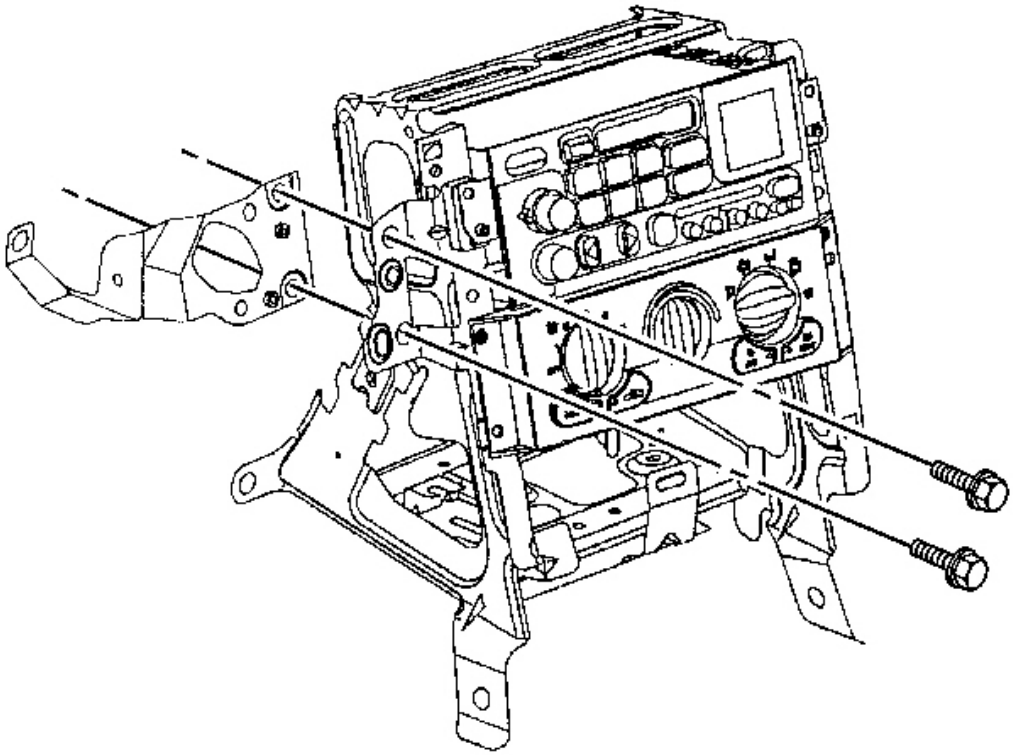

Fig. 46: Ignition Switch Housing Bracket To IP Center Support Bracket
Courtesy of GENERAL MOTORS CORP.

1. Install the ignition switch housing bracket into position as marked prior to removal.

   NOTE: Refer to Fastener Notice in Cautions and Notices.

2. Install the bolts retaining the ignition switch housing bracket to the IP center support bracket.

   Tighten: Tighten the ignition switch housing bracket to IP center support bracket bolts to 12 N.m (106 lb in).

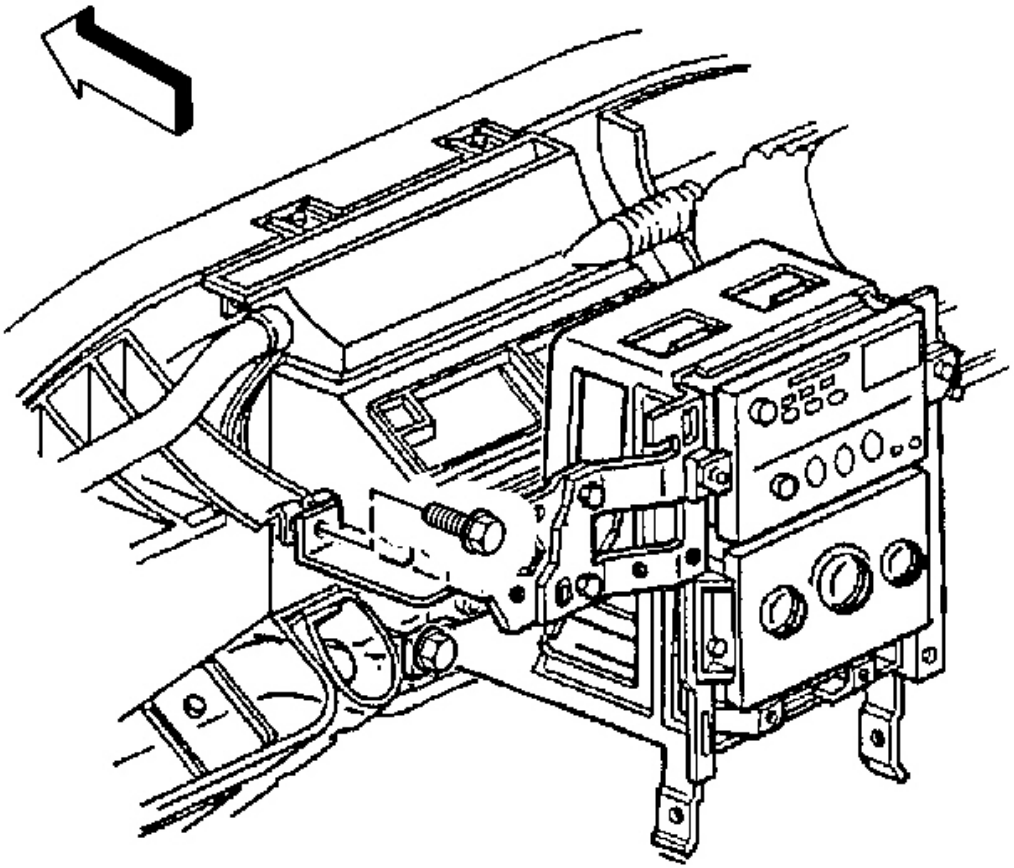

Fig. 47: Ignition Switch Housing Bracket To Steering Column Bracket
Courtesy of GENERAL MOTORS CORP.

3. Install the bolt retaining the ignition switch housing bracket to the steering column bracket.

   Tighten: Tighten the ignition switch housing bracket to steering column bracket bolt to 1.9 N.m (17 lb in).

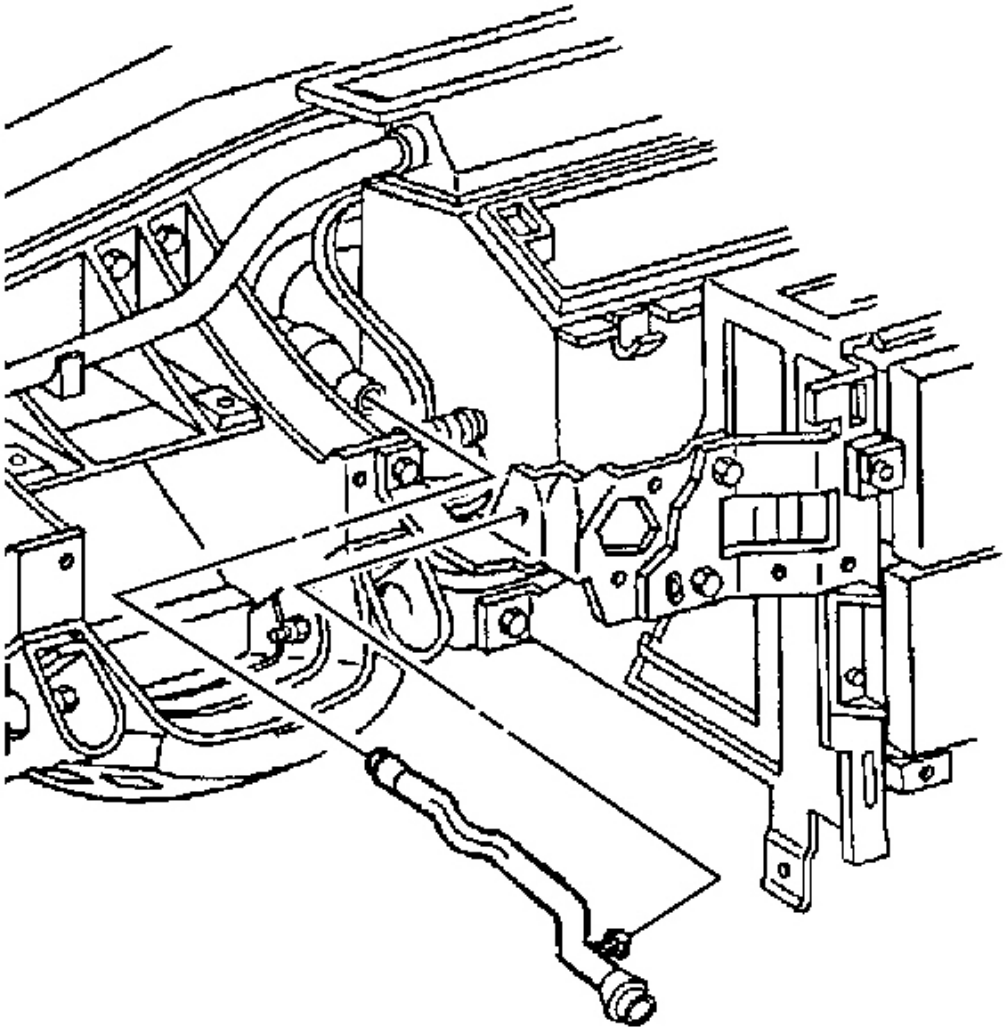

Fig. 48: Inside Air Temperature Sensor Aspirator Duct
Courtesy of GENERAL MOTORS CORP.

4. Install the inside air temperature sensor aspirator duct, if equipped.
    1. Use a twisting motion to secure the duct to the duct muffler.
    2. Install the duct retaining tab to the ignition switch housing bracket.

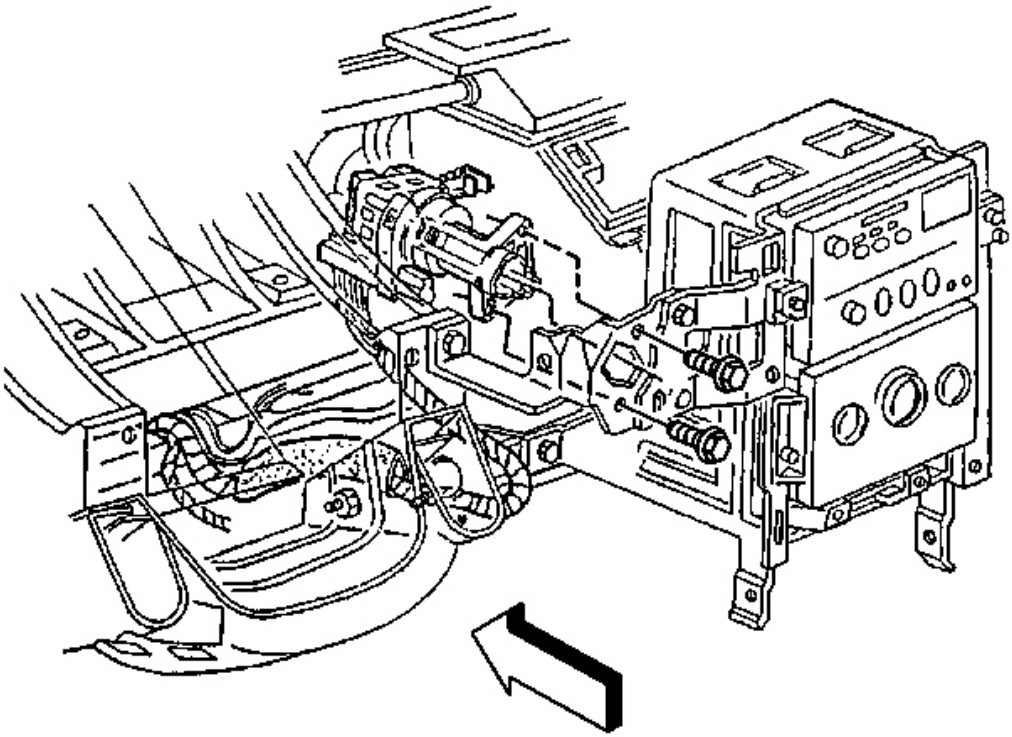

Fig. 49: Ignition Switch Retaining Bolts
Courtesy of GENERAL MOTORS CORP.

5. Install the ignition switch to the ignition switch housing bracket.
6. Install the ignition switch retaining bolts.

   Tighten: Tighten the ignition switch retaining bolts to 5.5 N.m (49 lb in).

7. Install the ignition switch lock cylinder. Refer to **Ignition Switch Lock Cylinder Replacement** .
8. Install the IP upper trim pad. Refer to **Trim Pad Replacement - Instrument Panel (I/P) Upper** .
9. Install the driver knee bolster trim panel. Refer to **Trim Panel Replacement - Knee Bolster** .
10. Install the IP accessory trim plate. Refer to **Trim Plate Replacement - Instrument Panel (I/P) Accessory** .
11. Install the console. Refer to **Console Replacement** .

HEAD UP DISPLAY SWITCH REPLACEMENT

Removal Procedure

NOTE: **Refer to IPC Servicing Notice in Cautions and Notices.**

1. Remove the instrument panel cluster (IPC) from the vehicle. Refer to **Instrument Panel Cluster (IPC) Replacement** .
2. Disconnect the instrument panel (IP) dimmer/head-up display (HUD) switch electrical connector.

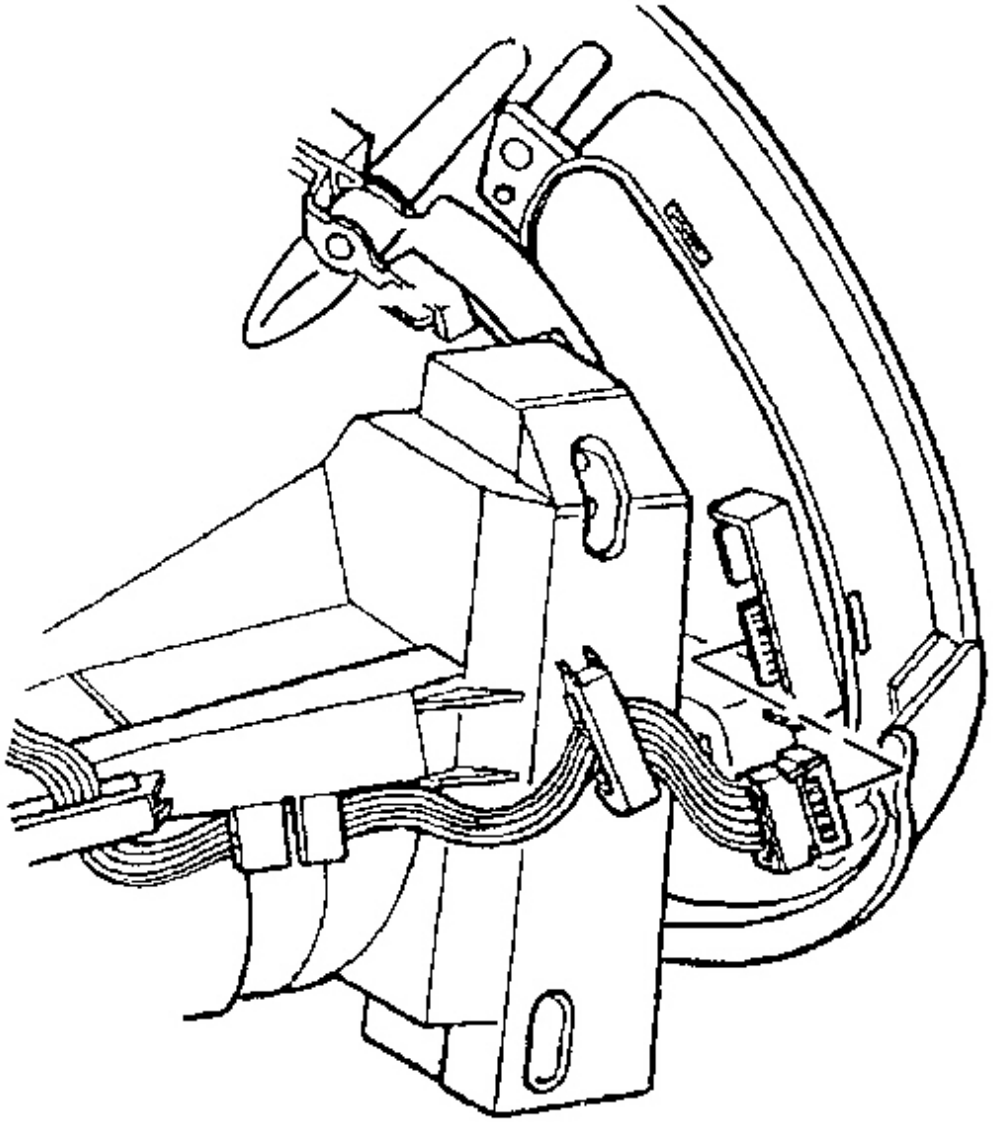

Fig. 50: Instrument Panel Dimmer/HUD Switch Electrical Connector

Courtesy of GENERAL MOTORS CORP.

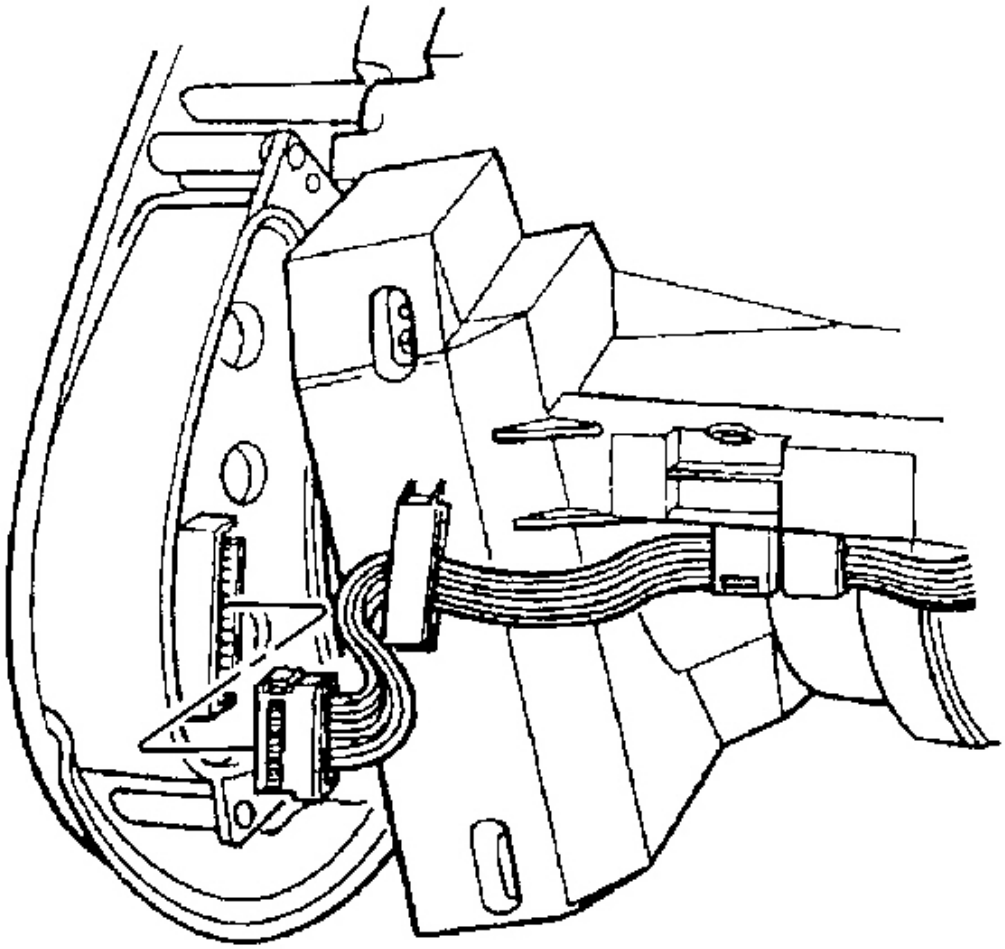

Fig. 51: Driver Information Center (DIC) Switch Electrical Connector
Courtesy of GENERAL MOTORS CORP.

3. Disconnect the driver information center (DIC) switch electrical connector.

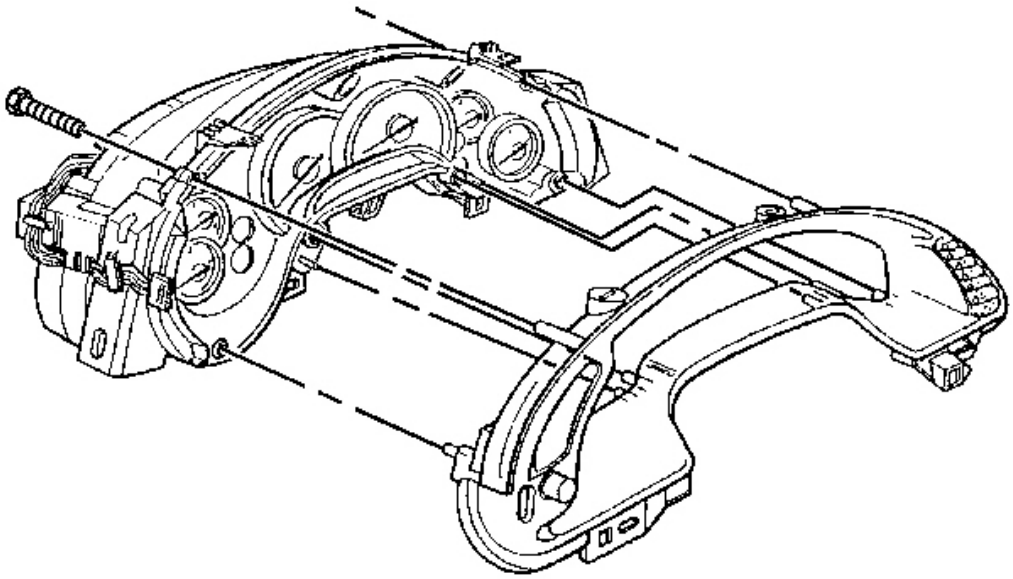

Fig. 52: IP Cluster Bezel To IPC
Courtesy of GENERAL MOTORS CORP.

4. Remove the IP cluster bezel retaining screws.
5. Remove the bezel from the IPC.

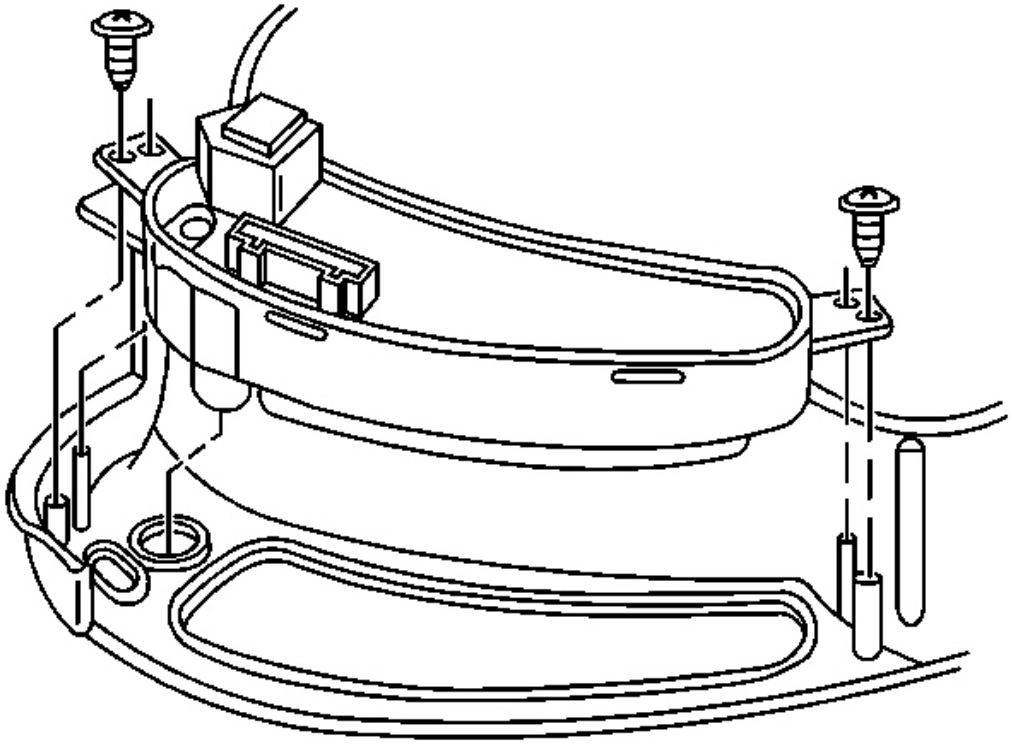

Fig. 53: IP Dimmer/HUD Switch To IP Cluster Bezel
Courtesy of GENERAL MOTORS CORP.

6. Remove the IP dimmer/HUD switch retaining screws.
7. Remove the IP dimmer/HUD switch.

Installation Procedure

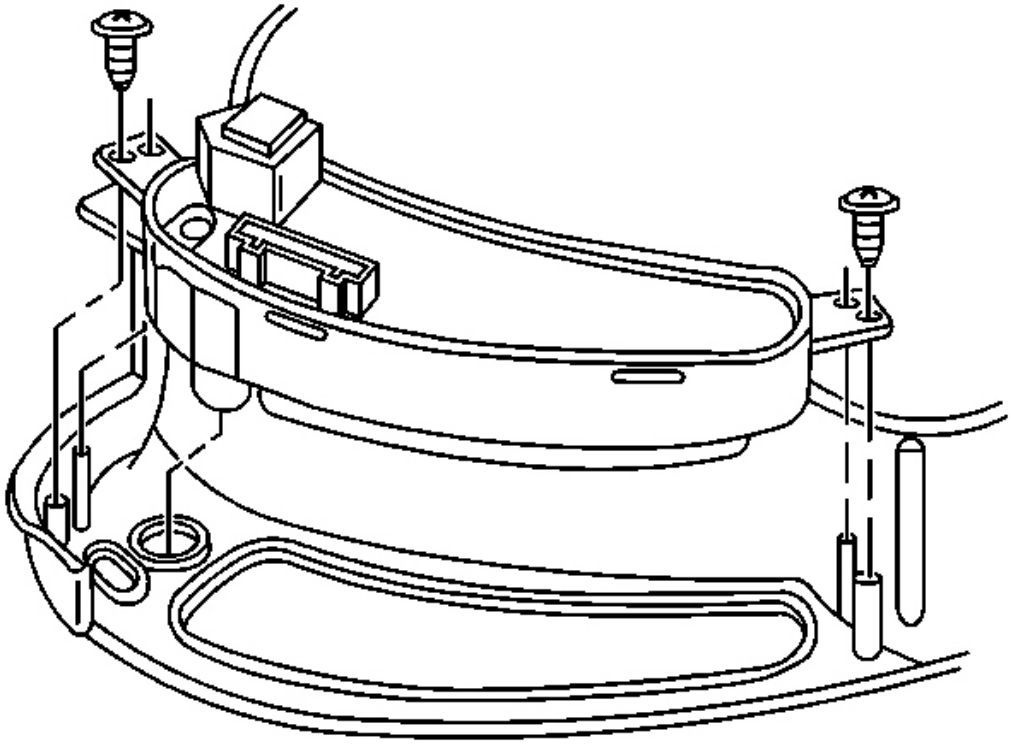

Fig. 54: IP Dimmer/HUD Switch To IP Cluster Bezel
Courtesy of GENERAL MOTORS CORP.

1. Install the IP dimmer/HUD switch to the IP cluster bezel.

   NOTE: Refer to Fastener Notice in Cautions and Notices.

2. Install the IP dimmer/HUD switch retaining screws.

   Tighten: Tighten the IP dimmer/HUD switch retaining screws to 1.5 N.m (13 lb in).

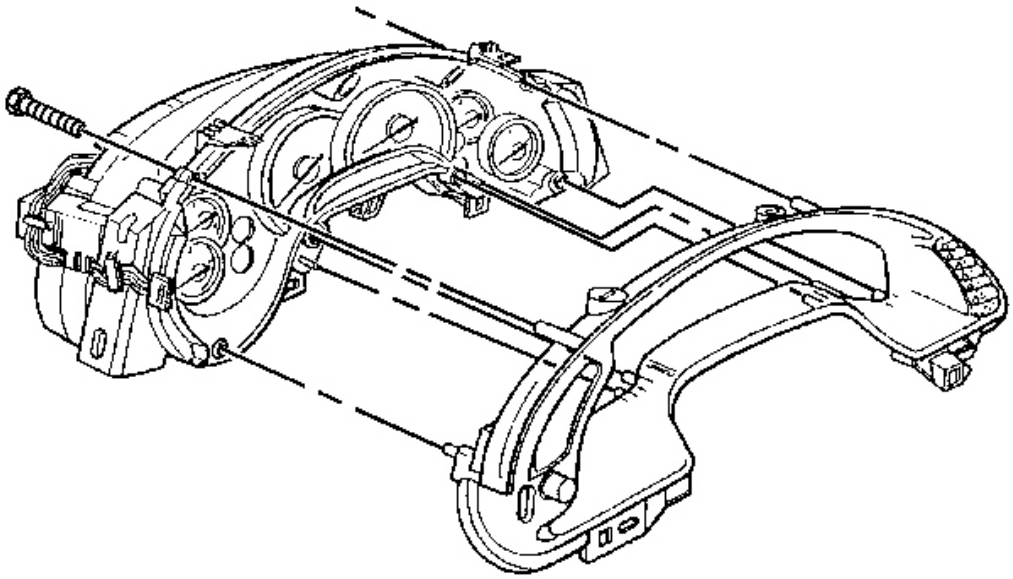

Fig. 55: IP Cluster Bezel To IPC
Courtesy of GENERAL MOTORS CORP.

3. Install the bezel to the IPC.

   Align the bezel onto the guide pins.

4. Install the IP cluster bezel retaining screws.

   Tighten: Tighten the instrument panel cluster bezel retaining screws to 1.5 N.m (13 lb in).

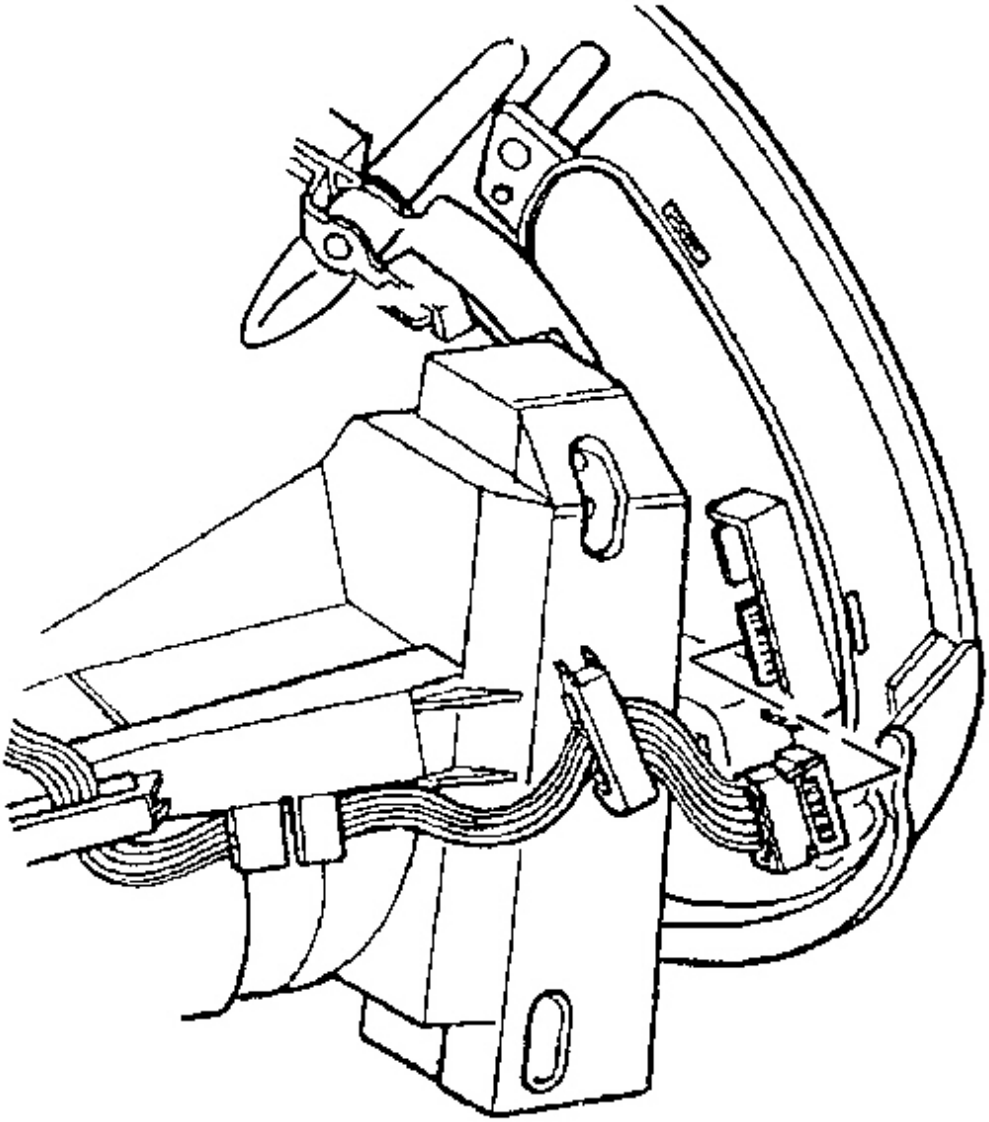

Fig. 56: Instrument Panel Dimmer/HUD Switch Electrical Connector
Courtesy of GENERAL MOTORS CORP.

5. Connect the IP dimmer/HUD switch electrical connector.

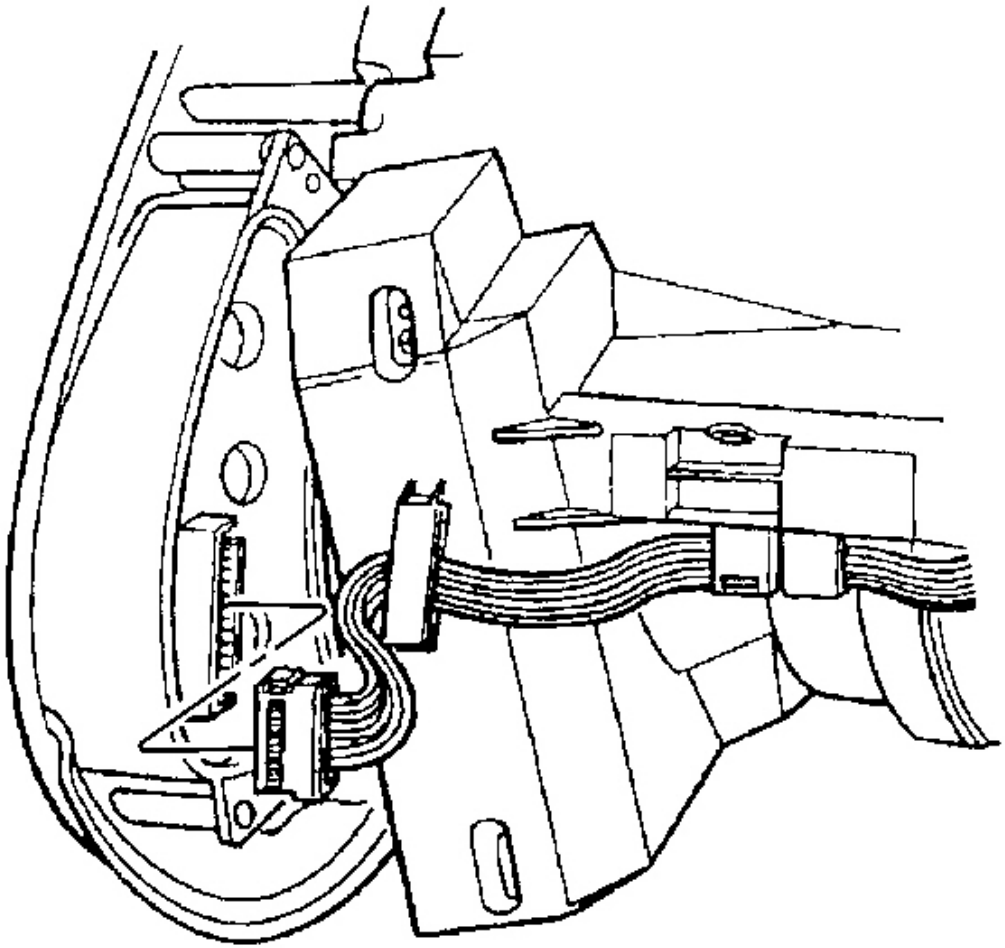

Fig. 57: Driver Information Center (DIC) Switch Electrical Connector
Courtesy of GENERAL MOTORS CORP.

6. Connect the DIC switch electrical connector.
7. Install the IPC to the vehicle. Refer to **Instrument Panel Cluster (IPC) Replacement** .

HEAD UP DISPLAY REPLACEMENT

Removal Procedure

CAUTION: Refer to Battery Disconnect Caution in Cautions and Notices.

1. Disconnect the negative battery cable.
2. Remove the I/P upper trim pad. Refer to **Trim Pad Replacement - Instrument Panel (I/P) Upper** .
3. Carefully lift the head-up display (HUD) electrical harness from between the instrument panel cluster (IPC) and the HUD.

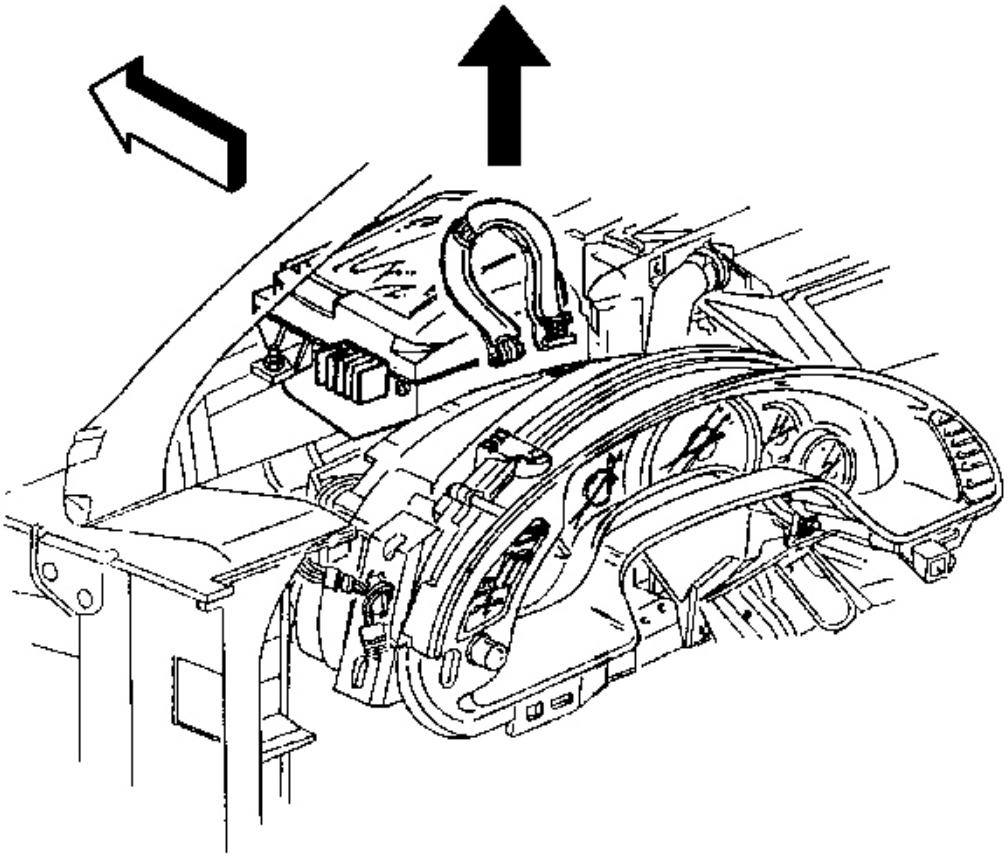

Fig. 58: HUD Electrical Connector At IPC
Courtesy of GENERAL MOTORS CORP.

4. Disconnect the HUD electrical connector from the IPC.

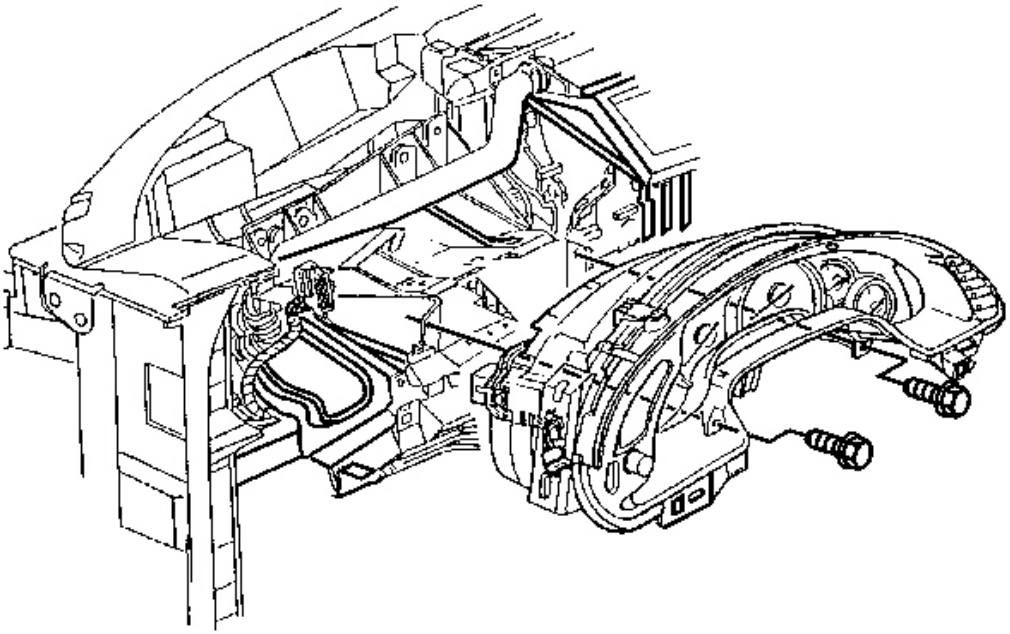

Fig. 59: IPC To Steering Column Bracket Retaining Screws
Courtesy of GENERAL MOTORS CORP.

5. Remove the IPC to steering column bracket retaining screws.
6. Raise the rear of the IPC slightly to release the locator tab, then reposition the IPC to access the HUD-to-steering column bracket retaining screw.

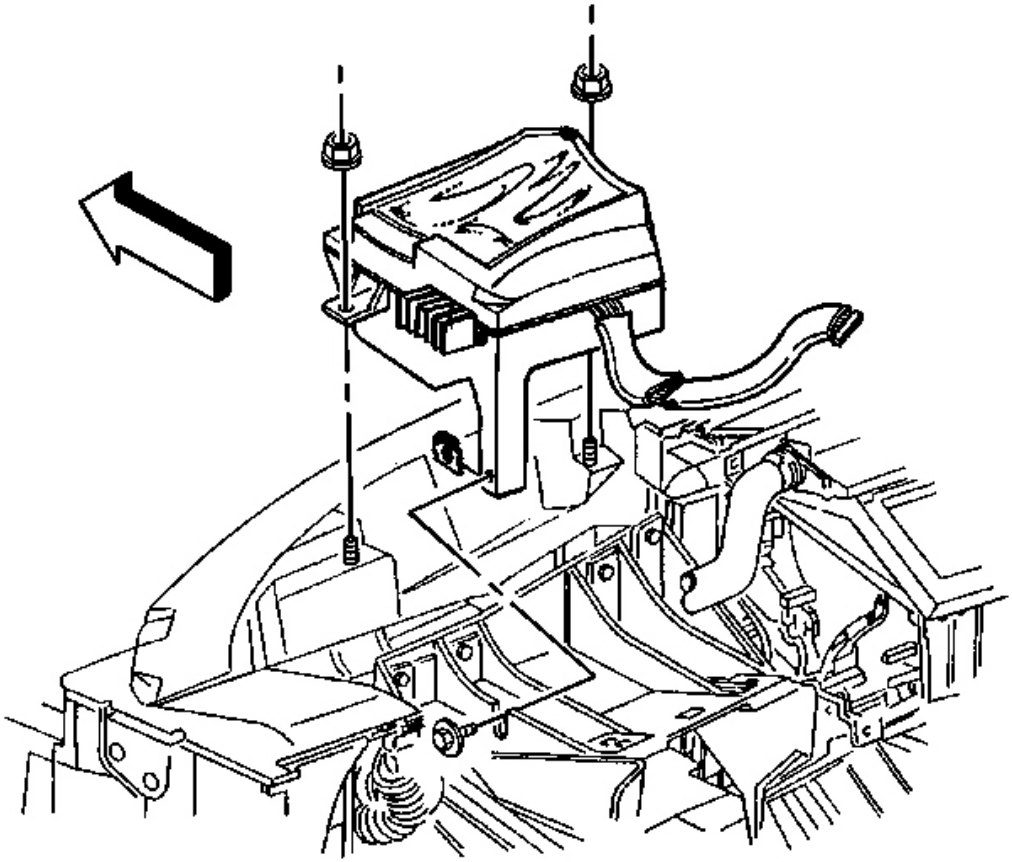

Fig. 60: HUD-To-Steering Column Bracket
Courtesy of GENERAL MOTORS CORP.

7. LOOSEN the HUD-to-steering column bracket retaining screw.
8. Remove the HUD retaining nuts.
9. Remove the HUD from the vehicle.

Installation Procedure

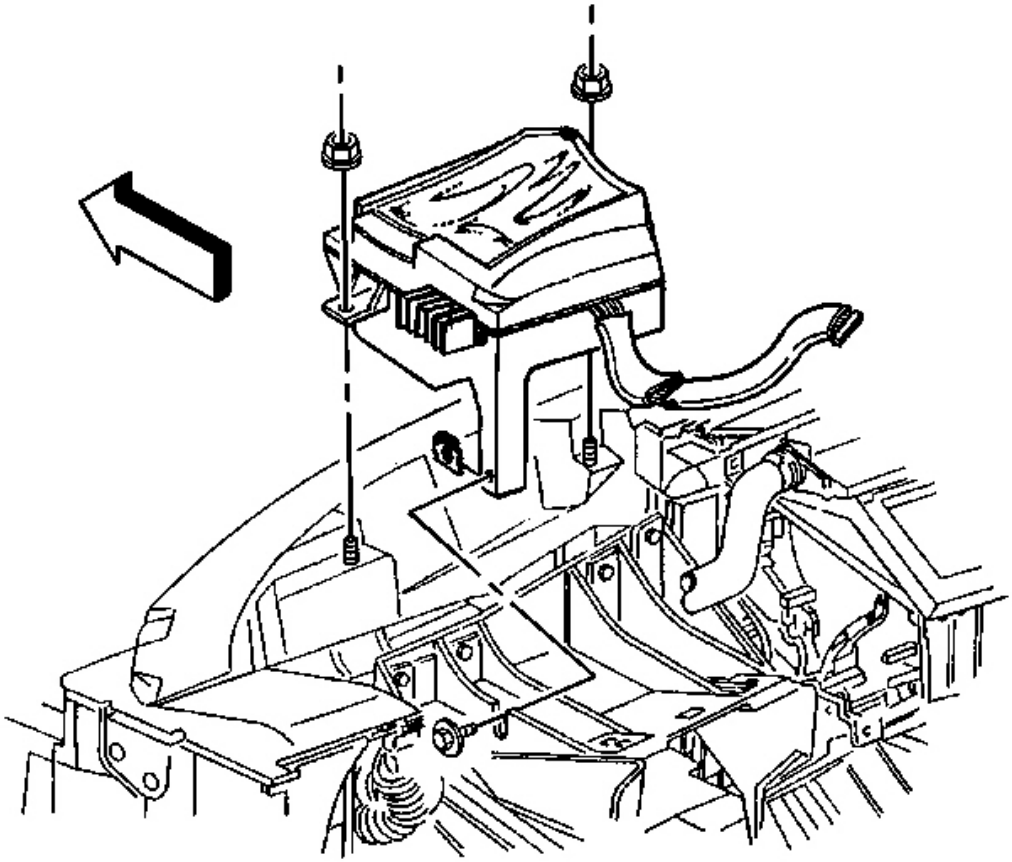

Fig. 61: HUD-To-Steering Column Bracket
Courtesy of GENERAL MOTORS CORP.

1. Transfer the HUD-to-steering column bracket retaining screw and nut, to the replacement HUD, if necessary.
2. Install the head-up display (HUD) to the vehicle:
    1. Install the HUD onto the dash panel mounting studs.
    2. Slide the HUD retaining screw into the slot on the steering column bracket.

NOTE: Refer to Fastener Notice in Cautions and Notices.

3. Install the HUD retaining nuts.

Tighten: Tighten the HUD retaining nuts to 5 N.m (44 lb in).

4. Tighten the HUD-to-steering column bracket retaining screw.

   Tighten: Tighten the HUD-to-steering column bracket retaining screw to 3 N.m (27 lb in).

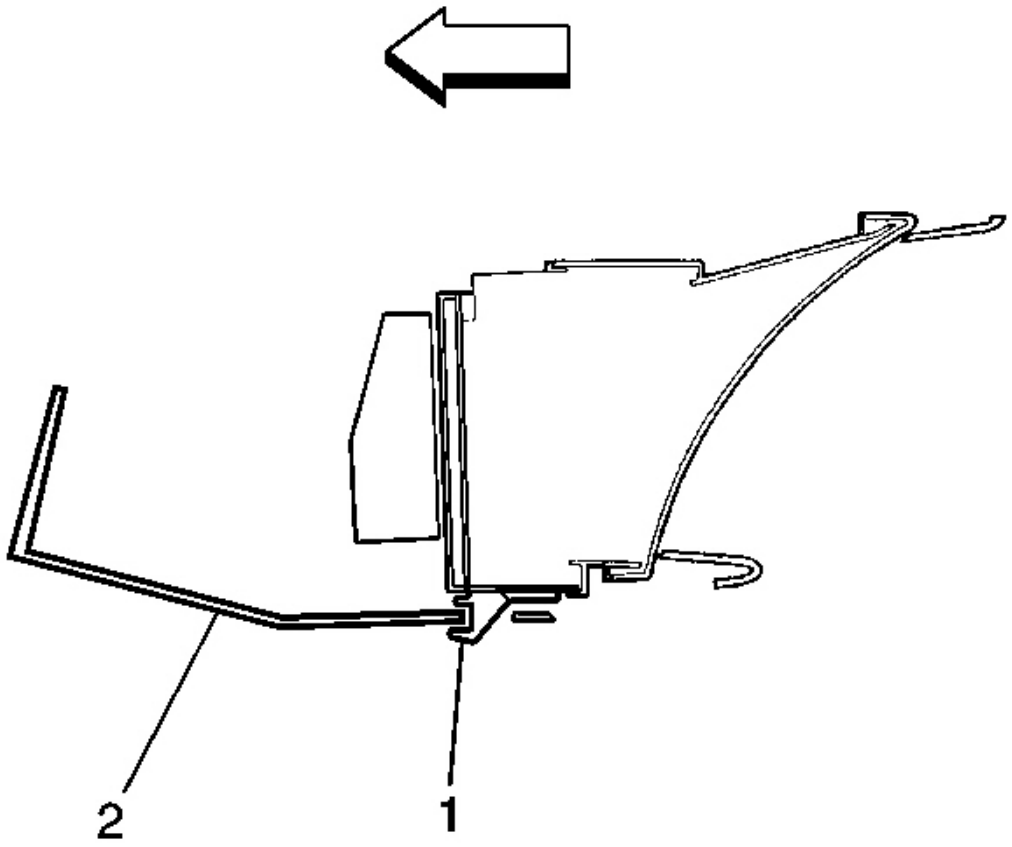

Fig. 62: IPC At Steering Column Bracket
Courtesy of GENERAL MOTORS CORP.

5. Position the IPC to the steering column bracket.
6. Check that the IPC retaining tab (1) is positioned correctly to the steering column bracket (2).

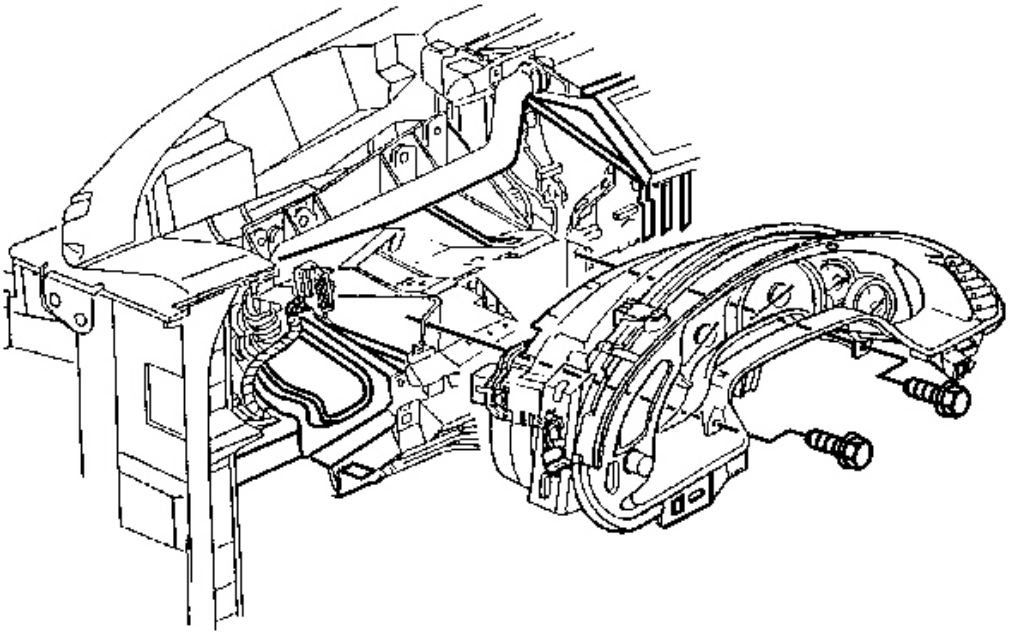

Fig. 63: IPC To Steering Column Bracket Retaining Screws
Courtesy of GENERAL MOTORS CORP.

NOTE: Refer to Fastener Notice in Cautions and Notices.

7. Install the IPC to steering column bracket retaining screws.

   Tighten: Tighten the IPC to steering column bracket retaining screws to 3 N.m (27 lb in).

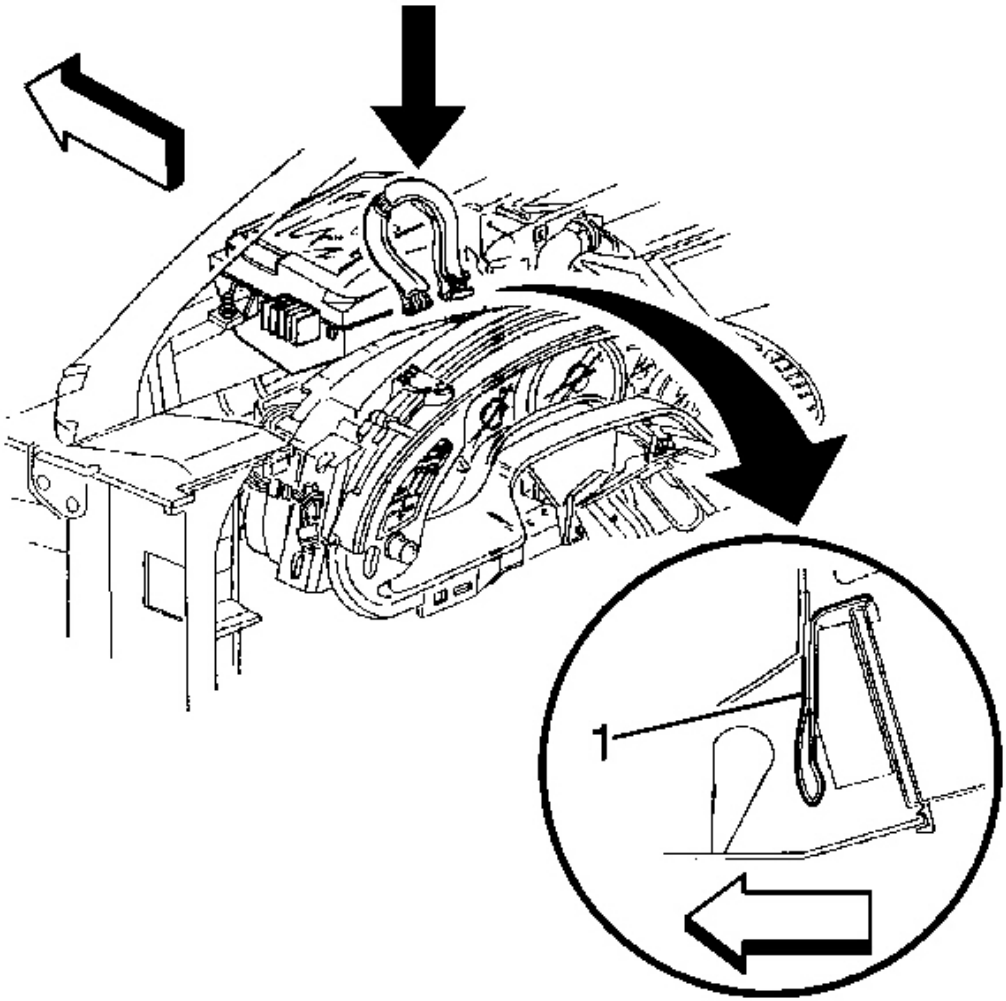

Fig. 64: HUD Electrical Connector To IPC
Courtesy of GENERAL MOTORS CORP.

8. Connect the HUD electrical connector to the IPC.
9. Carefully tuck the HUD electrical harness (1) down between the IPC and the HUD as shown.
10. Install the I/P upper trim pad. Refer to **Trim Pad Replacement - Instrument Panel (I/P) Upper** .
11. Connect the negative battery cable.

    Tighten: Tighten the negative battery cable bolt to 15 N.m (11 lb ft).

12. Program the transmitters. Refer to **Transmitter Programming** in Keyless Entry.

CLOSEOUT/INSULATOR PANEL REPLACEMENT - RIGHT

Removal Procedure

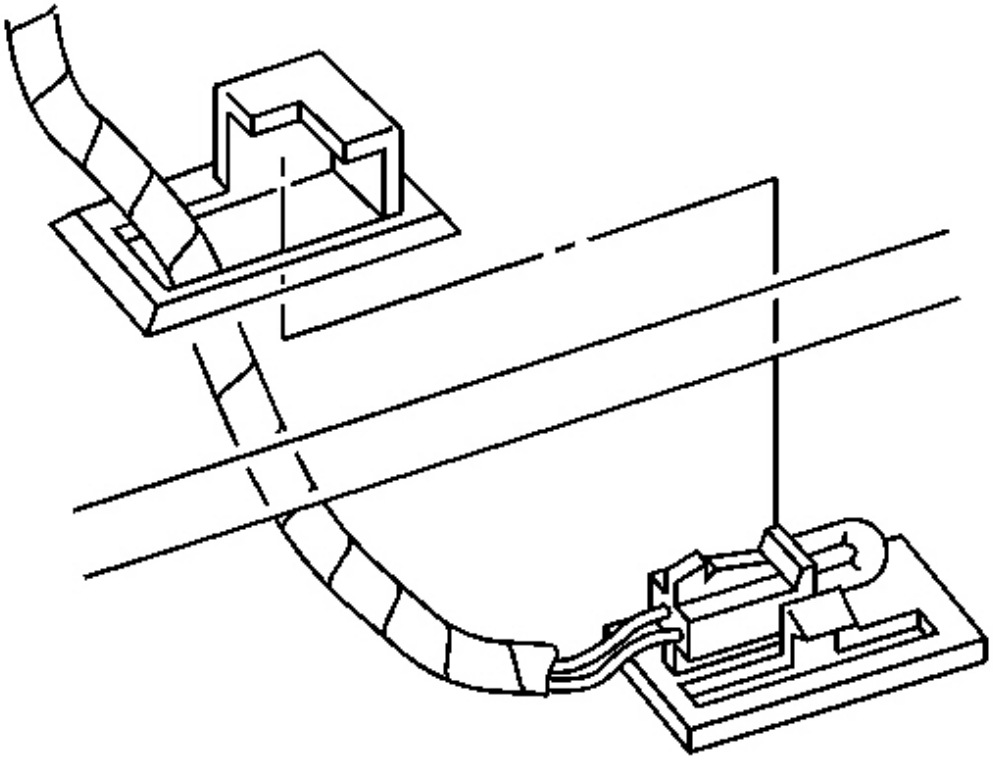

Fig. 65: I/P Courtesy Lamp Assembly To RH Lower Closeout Panel
Courtesy of GENERAL MOTORS CORP.

1. Using a flat bladed tool, carefully pry the I/P courtesy lamp assembly from the RH lower closeout panel.

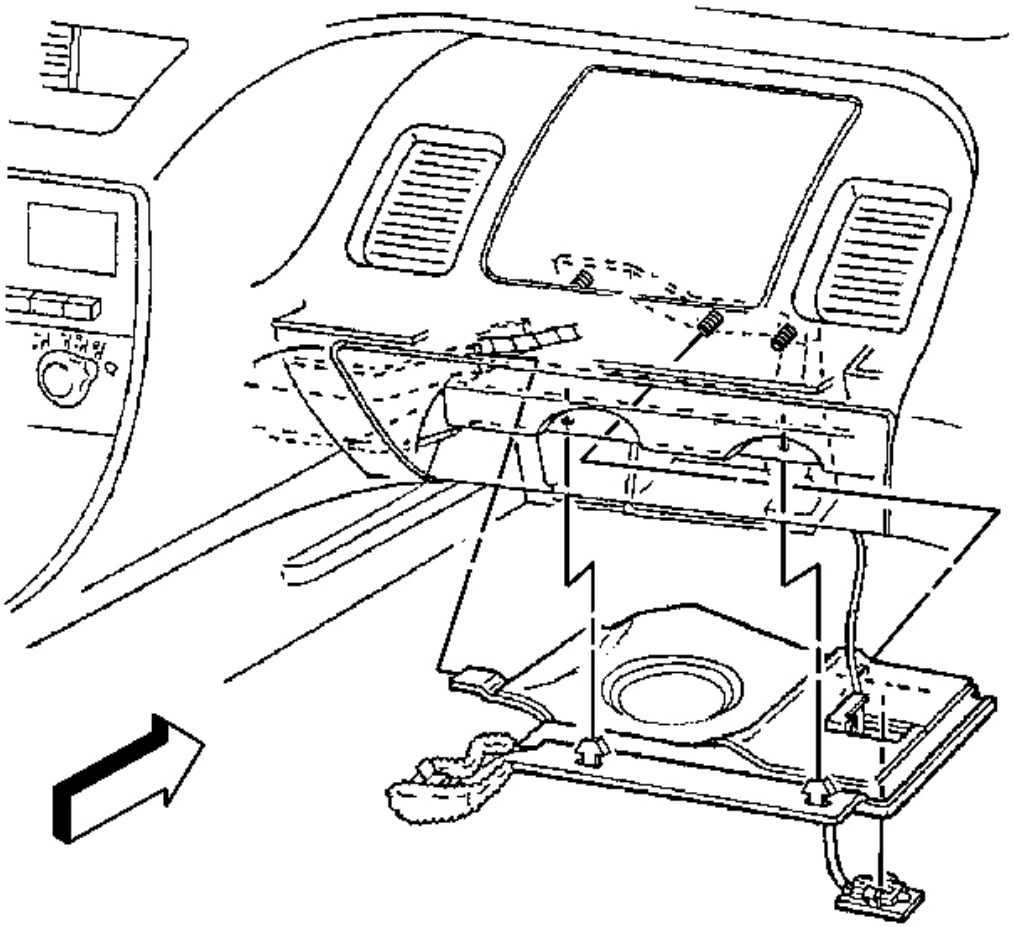

Fig. 66: RH Lower Closeout Panel Push-In Retainers To I/P Lower Support Beam
Courtesy of GENERAL MOTORS CORP.

2. Remove the RH lower closeout panel push-in retainers from the I/P lower support beam.
3. Lower the closeout panel slightly, and finesse the left side of the closeout panel from above the driveline tunnel.
4. Insert the I/P courtesy lamp assembly up through the opening in the closeout panel.
5. Continue to lower the closeout panel, then pull to remove from the dash panel studs.
6. Remove the closeout panel.

Installation Procedure

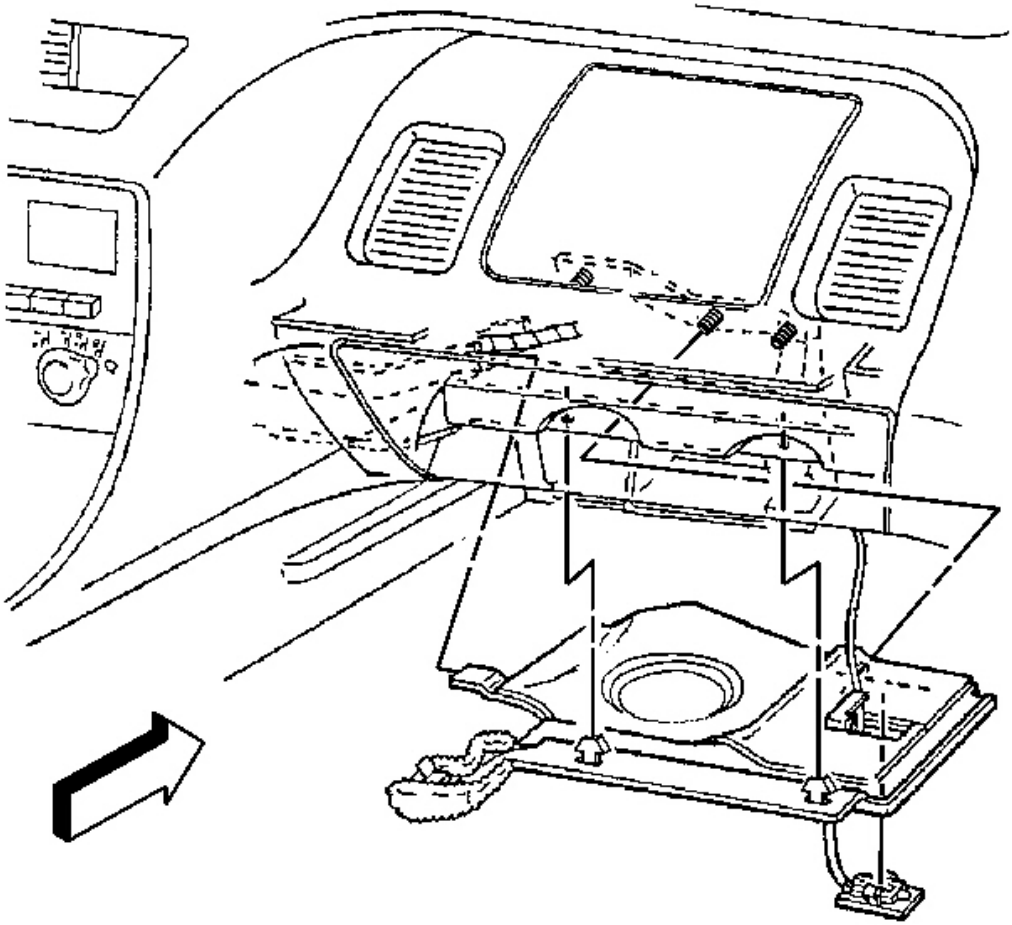

Fig. 67: RH Lower Closeout Panel Push-In Retainers To I/P Lower Support Beam
Courtesy of GENERAL MOTORS CORP.

1. Install the RH closeout panel onto the dash panel studs.
2. Insert the I/P courtesy lamp down through the opening in the closeout panel.
3. Raise the closeout panel slightly, and finesse the left side of the closeout panel into position above the driveline tunnel.
4. Install the closeout panel push-in retainers to the I/P lower support beam.

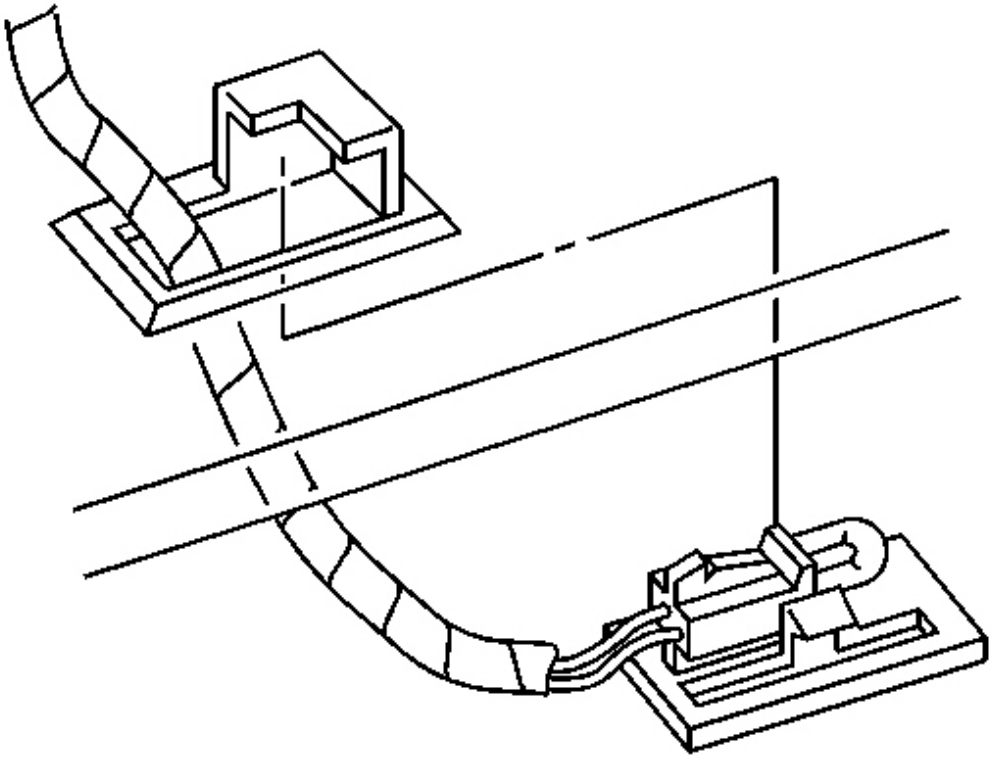

Fig. 68: I/P Courtesy Lamp Assembly To RH Lower Closeout Panel
Courtesy of GENERAL MOTORS CORP.

5. Align the I/P courtesy lamp to the closeout panel opening, then push to secure.

CLOSEOUT/INSULATOR PANEL REPLACEMENT - LEFT

Removal Procedure

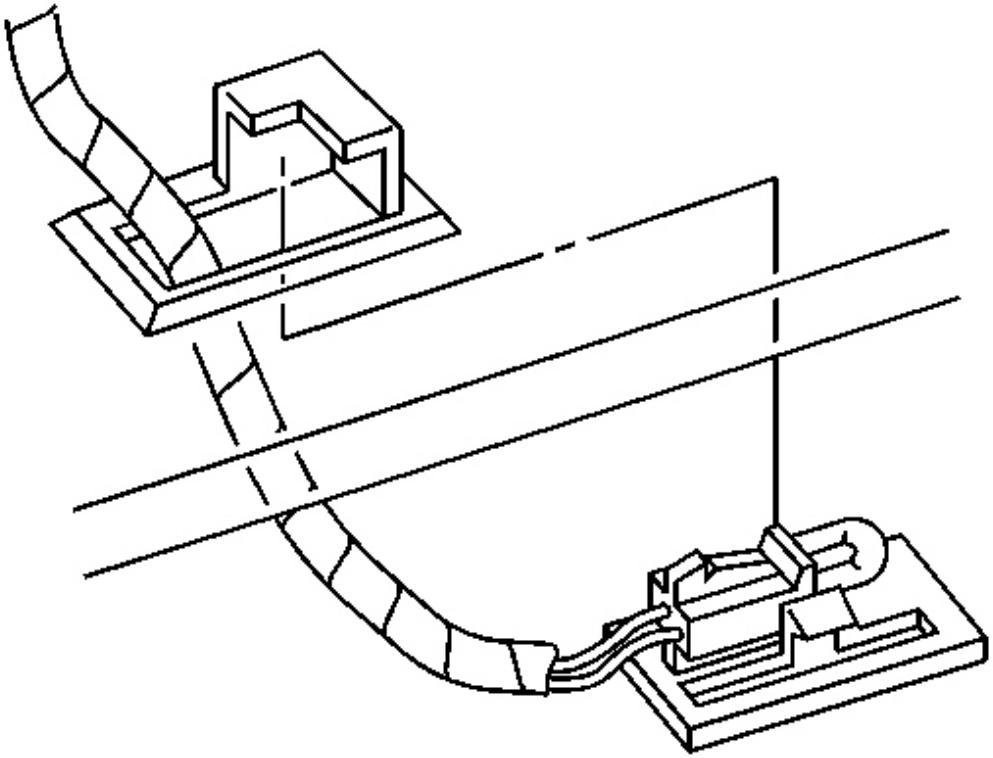

Fig. 69: I/P Courtesy Lamp Assembly To RH Lower Closeout Panel
Courtesy of GENERAL MOTORS CORP.

1. Using a flat bladed tool, carefully pry the I/P courtesy lamp assembly from the LH lower closeout panel.

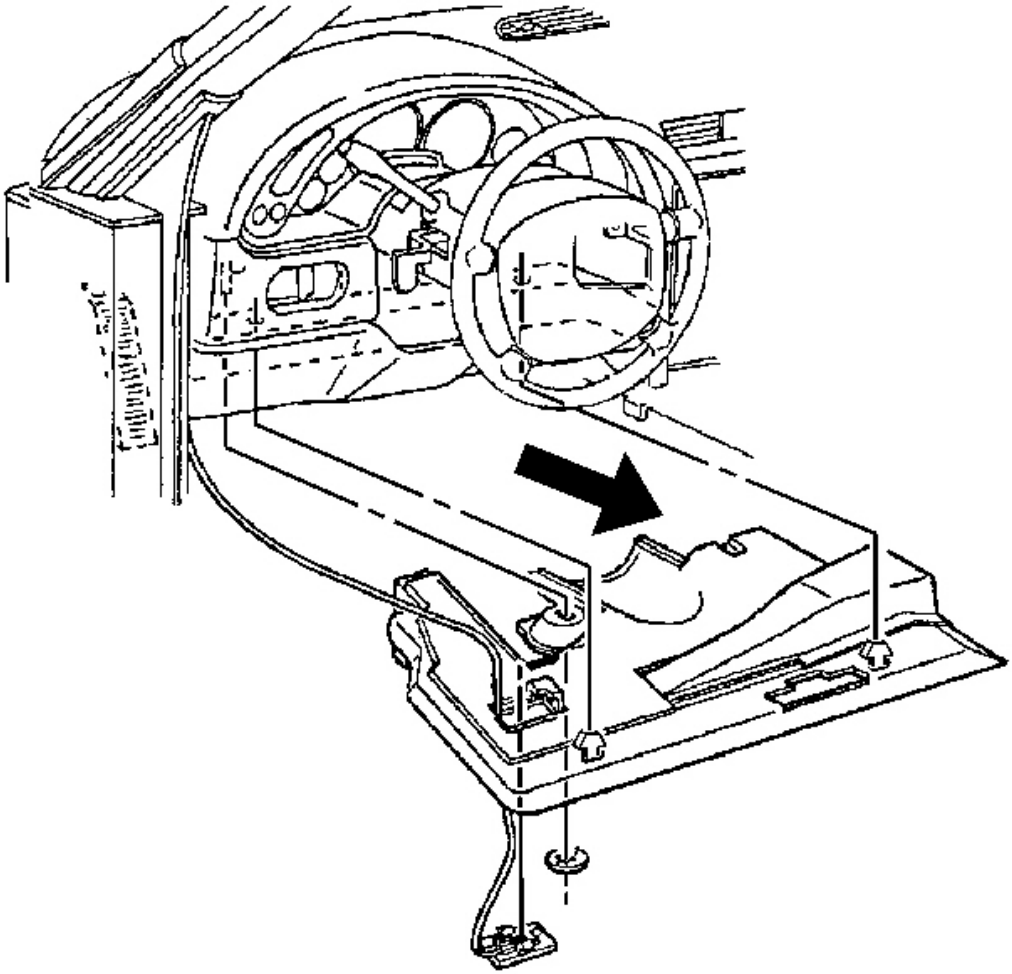

Fig. 70: LH Lower Closeout Panel And Push-In Retainers
Courtesy of GENERAL MOTORS CORP.

2. Remove the push-on retaining nut from the steering column bracket stud.
3. Release the LH lower closeout panel push-in retainers from the I/P lower support beam.
4. Insert the I/P courtesy lamp assembly up through the opening in the closeout panel.
5. Lower and remove the closeout panel.

   Release the notch in the RH forward edge of the closeout panel from the tab on the accelerator pedal bracket.

Installation Procedure

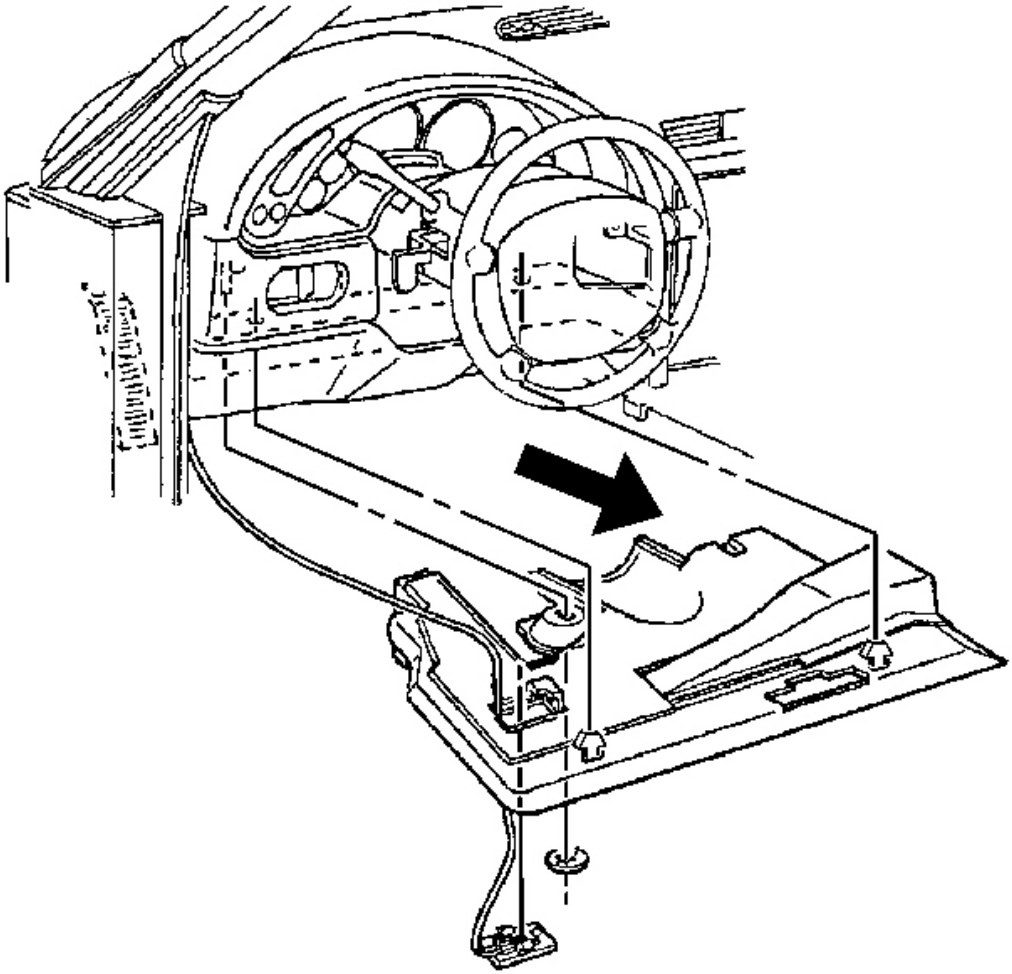

Fig. 71: LH Lower Closeout Panel And Push-In Retainers
Courtesy of GENERAL MOTORS CORP.

1. Insert the I/P courtesy lamp down through the opening in the closeout panel.
2. Install the closeout panel into position.
3. Secure the closeout panel push-in retainers to the I/P lower support beam.
4. Secure the notch in the RH forward edge of the closeout panel to the tab on the accelerator pedal bracket.

   Align, then push up to secure.

5. Install the push-on retaining nut to the steering column bracket stud.

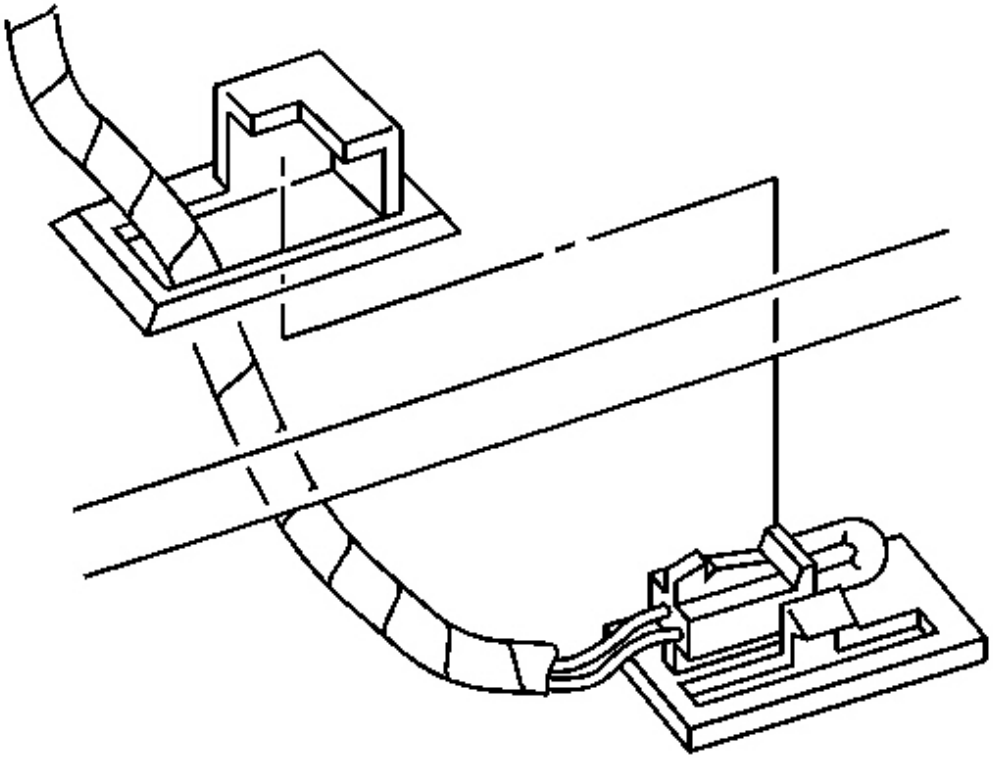

Fig. 72: I/P Courtesy Lamp Assembly To RH Lower Closeout Panel
Courtesy of GENERAL MOTORS CORP.

6. Align the I/P courtesy lamp to the closeout panel opening, then push to secure.

TRIM PANEL REPLACEMENT - KNEE BOLSTER

Removal Procedure

1. Remove the console. Refer to **Console Replacement** .
2. Remove the IP accessory trim plate. Refer to **Trim Plate Replacement - Instrument Panel (I/P) Accessory** .
3. Remove the fog lamp, rear compartment lid release switch.
    1. Pry carefully at the lower edge of the switch to release the locking tab.
    2. Disconnect the electrical connector from the switch.

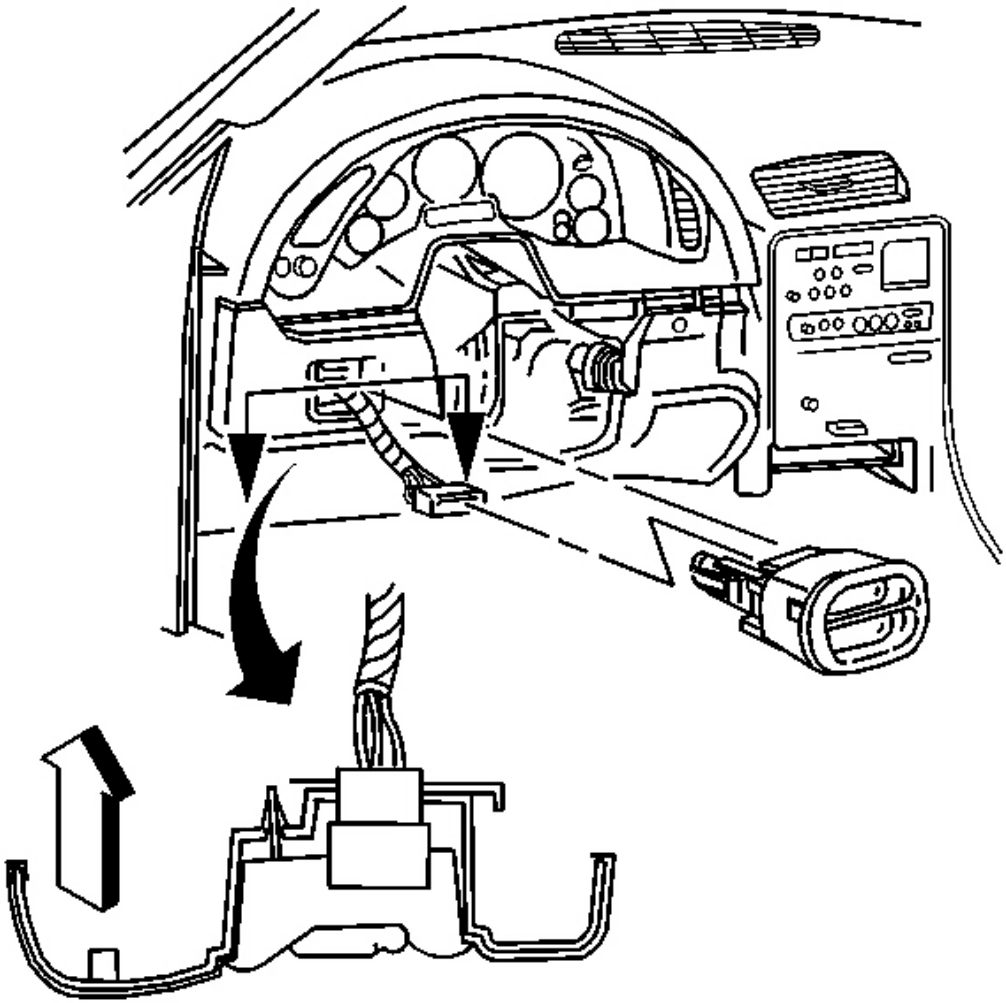

Fig. 73: IP Accessory Trim Plate, Fog Lamp, Rear Compartment Lid Release Switch
Courtesy of GENERAL MOTORS CORP.

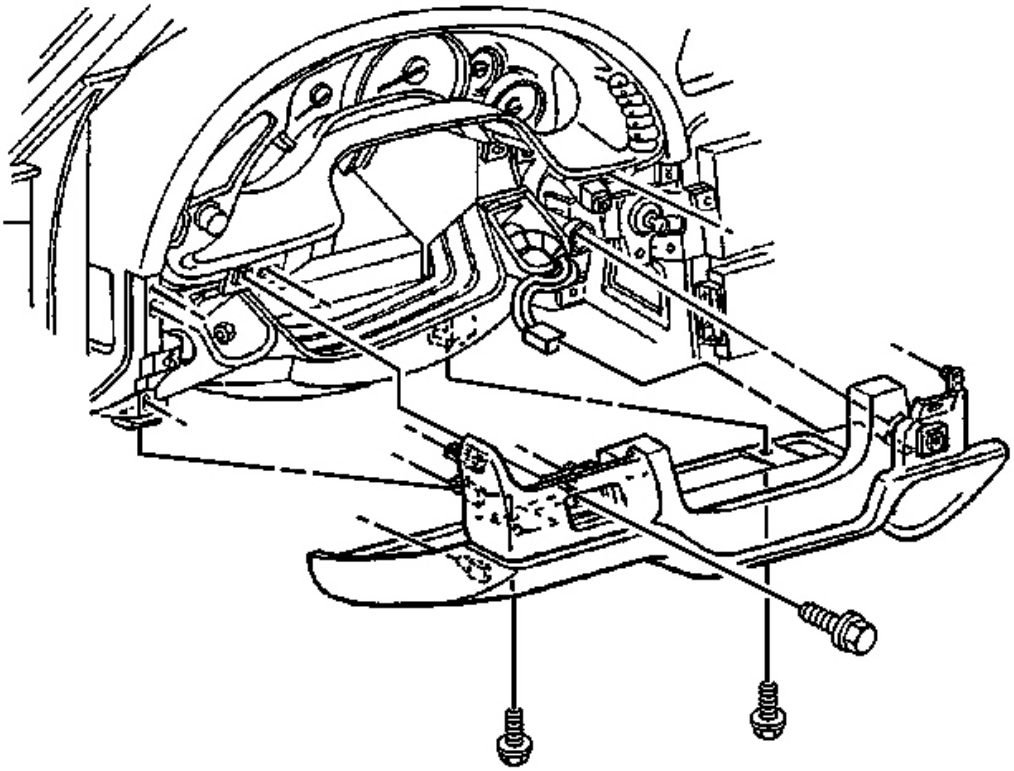

Fig. 74: Driver Knee Bolster Trim Panel
Courtesy of GENERAL MOTORS CORP.

4. Remove the driver knee bolster trim panel retaining screw behind the fog lamp, rear compartment lid release switch.
5. Remove the driver knee bolster trim panel lower retaining screws.
6. Grasp the trim panel at the side edges.
7. Pull firmly rearward to release the locking tabs.
8. Disconnect the electrical connector from the inside air temperature sensor, if equipped.
9. Remove the trim panel.

Installation Procedure

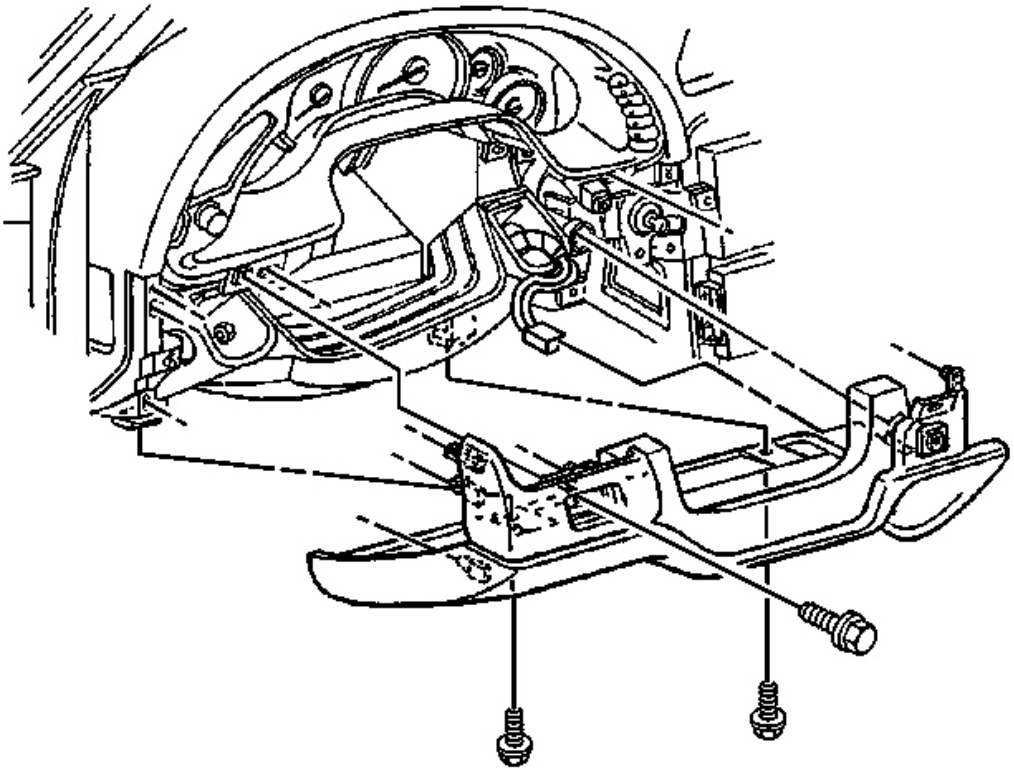

Fig. 75: Driver Knee Bolster Trim Panel
Courtesy of GENERAL MOTORS CORP.

1. Connect the electrical connector to the inside air temperature sensor, if equipped.
2. Insert the electrical connector for the fog lamp, rear compartment lid release switch through the opening in the trim panel.
3. Install the driver knee bolster trim panel.
    1. If equipped, insert the inside air temperature sensor wire down into the driver knee bolster bracket to avoid pinching the wire.
    2. Align the locking tabs to the slots.
    3. Push the trim panel to secure.
4. Loosely install the screws retaining the bottom of the driver knee bolster trim panel, in order to align the nuts on the knee bolster bracket.

NOTE: Refer to Fastener Notice in Cautions and Notices.

5. Install the remaining driver knee bolster trim panel retaining screw.

Tighten:

- Tighten the driver knee bolster trim panel retaining screw behind fog lamp, rear compartment lid release switch to 1.8 N.m (16 lb in).
- Tighten the driver knee bolster trim panel lower retaining screws to 1.8 N.m (16 lb in).

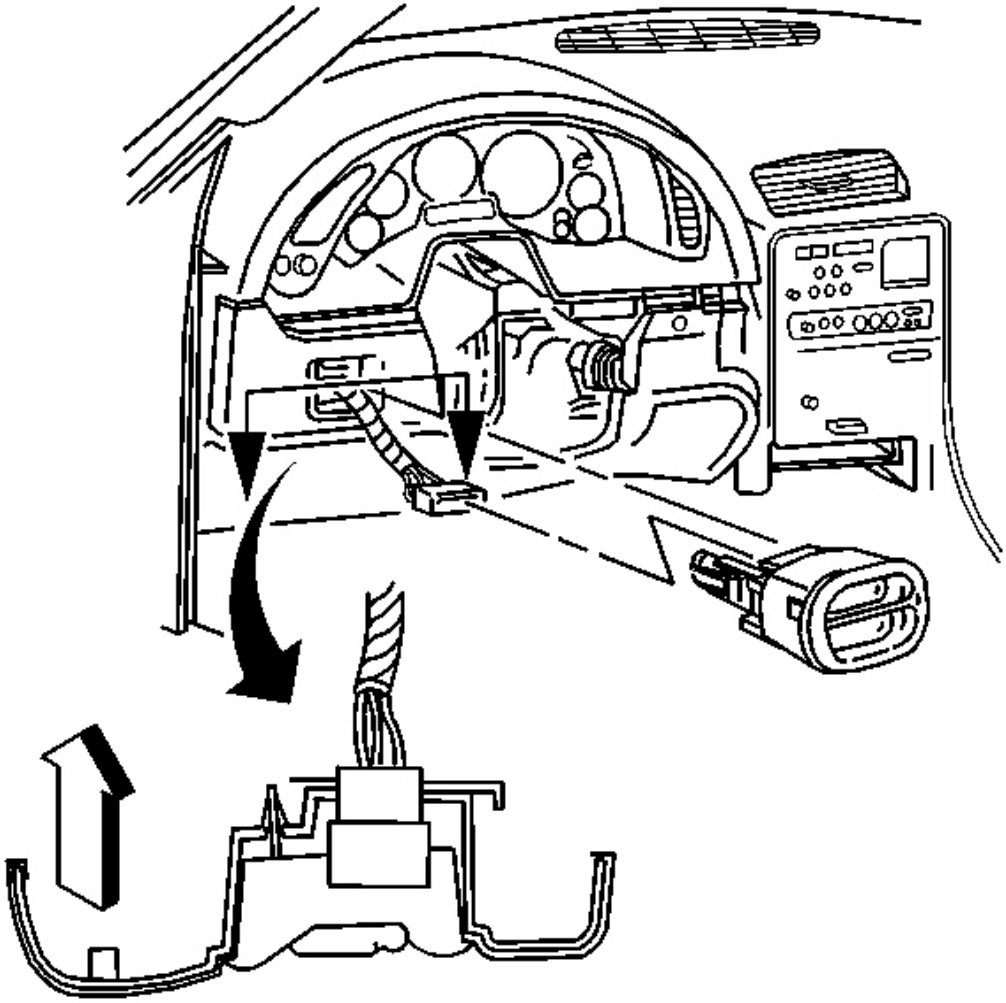

Fig. 76: IP Accessory Trim Plate, Fog Lamp, Rear Compartment Lid Release Switch
Courtesy of GENERAL MOTORS CORP.

6. Install the fog lamp, rear compartment lid release switch.
    1. Connect the electrical connector to the switch.
    2. Align the switch, then push to secure.

7. Install the IP accessory trim plate. Refer to **Trim Plate Replacement - Instrument Panel (I/P) Accessory** .
8. Install the console. Refer to **Console Replacement** .

TRIM PLATE REPLACEMENT - INSTRUMENT PANEL (I/P) ACCESSORY

Removal Procedure

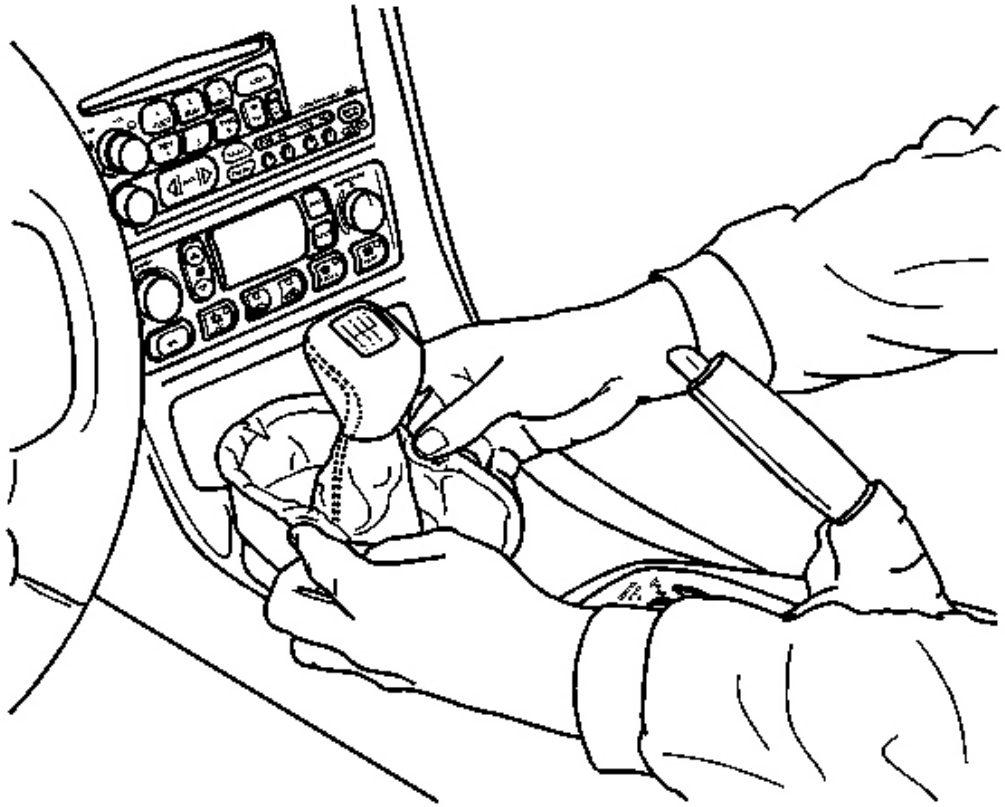

Fig. 77: Parking Brake At Parking Brake Lever
Courtesy of GENERAL MOTORS CORP.

1. Apply the parking brake for additional clearance around the parking brake lever.
2. Shift the transmission into SECOND (A/T), or FOURTH (M/T).
3. Remove the console. Refer to **Console Replacement** .
4. Grasp the shift control boot (M/T) and apply light pressure in toward the shift control lever, to begin to release the shift boot retaining tabs from the instrument panel (IP) accessory trim plate.

5. Using light pressure, continue to release the remaining boot retaining tabs, then lift the boot away from the trim plate.

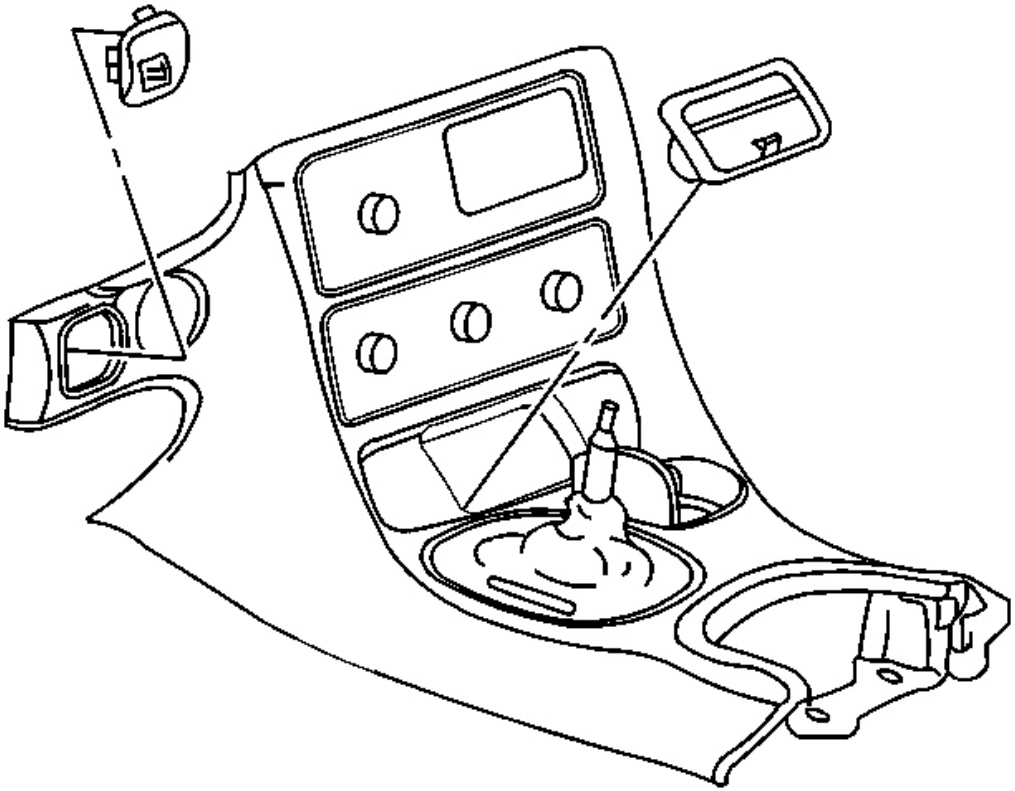

Fig. 78: IP Accessory Trim Plate Grille
Courtesy of GENERAL MOTORS CORP.

6. Open the cigar lighter door and remove the ashtray.
7. Remove the IP accessory trim plate grille.

   Pry gently at the side edge with a flat-bladed screwdriver to release the tab.

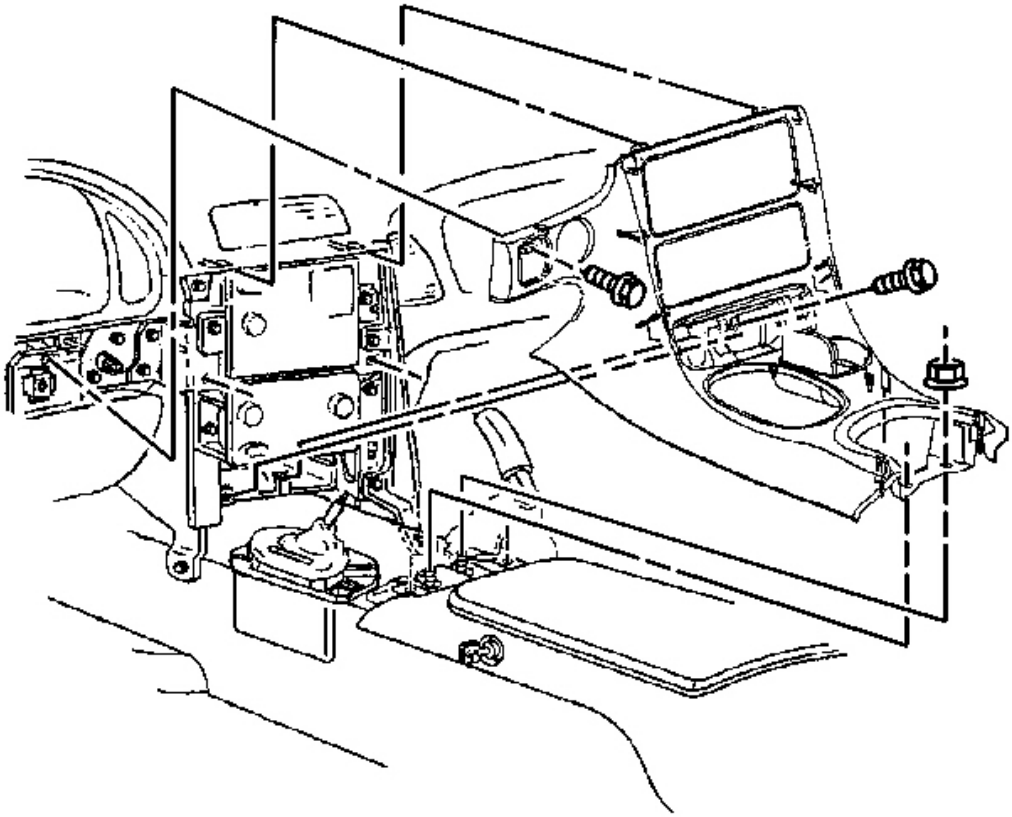

Fig. 79: Accessory Trim Plate To Grille Opening
Courtesy of GENERAL MOTORS CORP.

8. Remove the accessory trim plate retaining screws next to the cigar lighter and behind the ashtray.
9. Remove the accessory trim plate retaining screw in the grille opening.

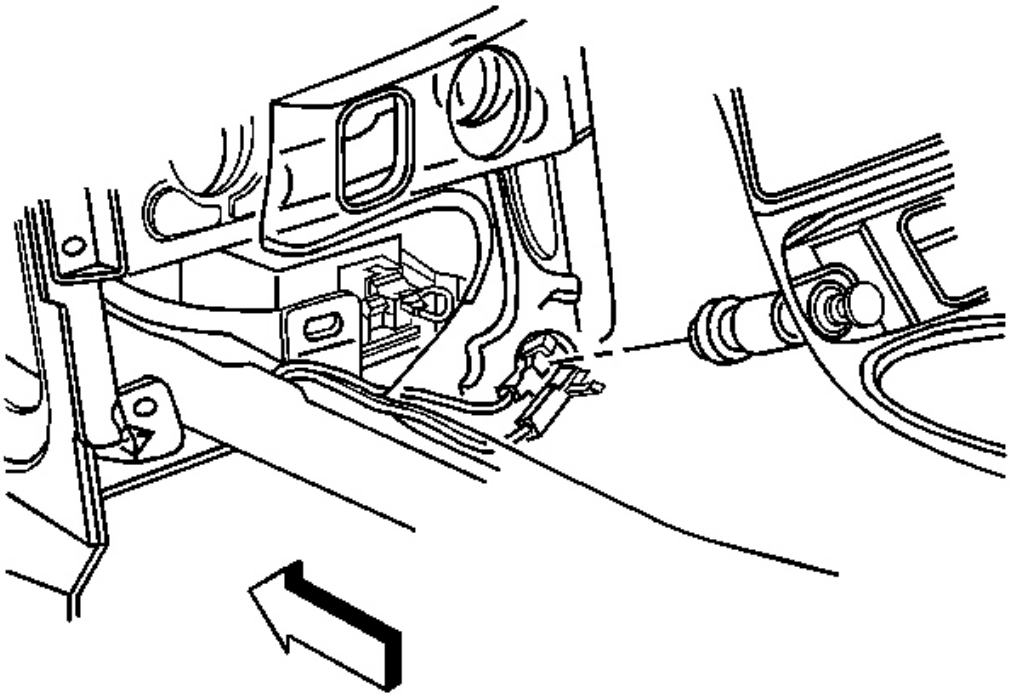

Fig. 80: Electrical Connector To Cigar Lighter
Courtesy of GENERAL MOTORS CORP.

10. Grasp the sides of the accessory trim plate near the curve at the base.
11. Pull the trim plate rearward to release the locking tabs.

    Lift the rear of the trim plate to clear the driveline tunnel studs.

12. Disconnect the electrical connector from the cigar lighter.

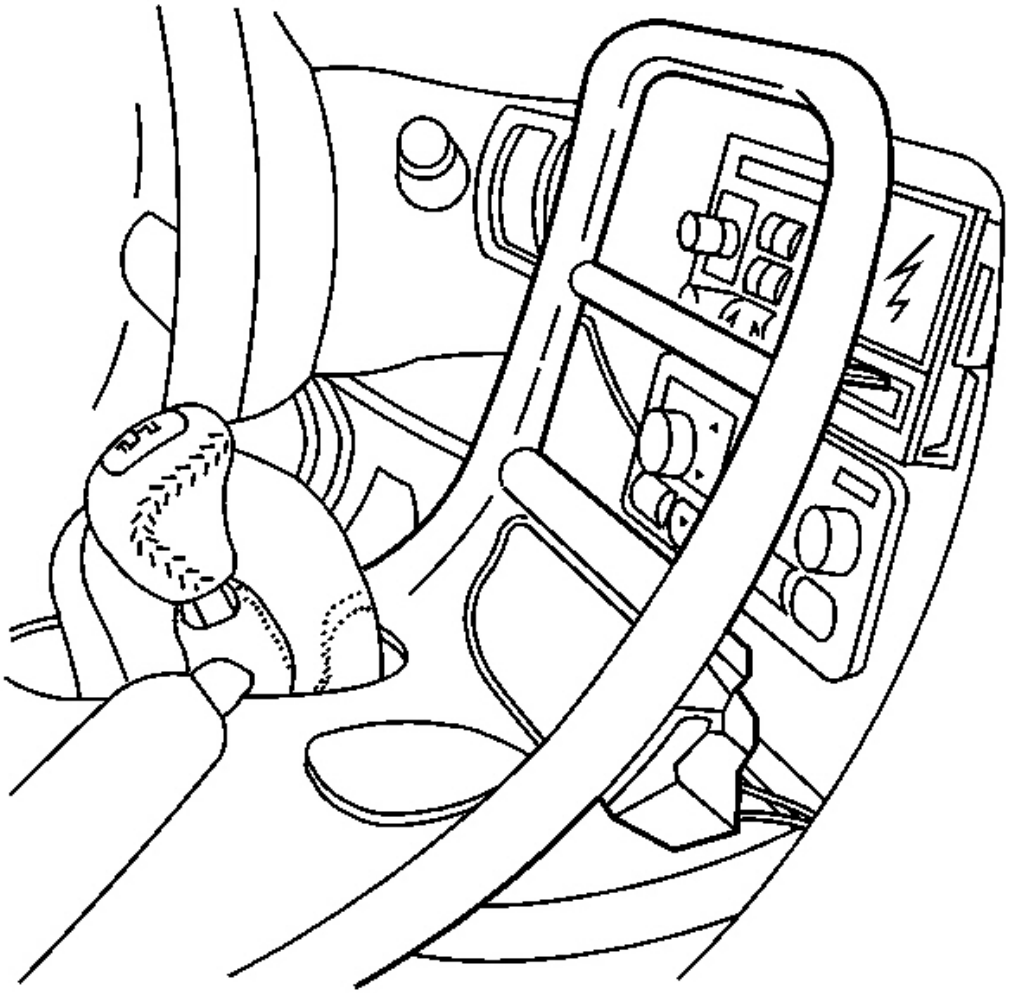

Fig. 81: Accessory Trim Plate To Shifter
Courtesy of GENERAL MOTORS CORP.

13. Rotate the shift control boot (M/T) and reposition one end down into the shifter opening in the trim plate.
14. Lift the accessory trim plate over the shifter (and shift control boot, M/T), and remove the trim plate.

Installation Procedure

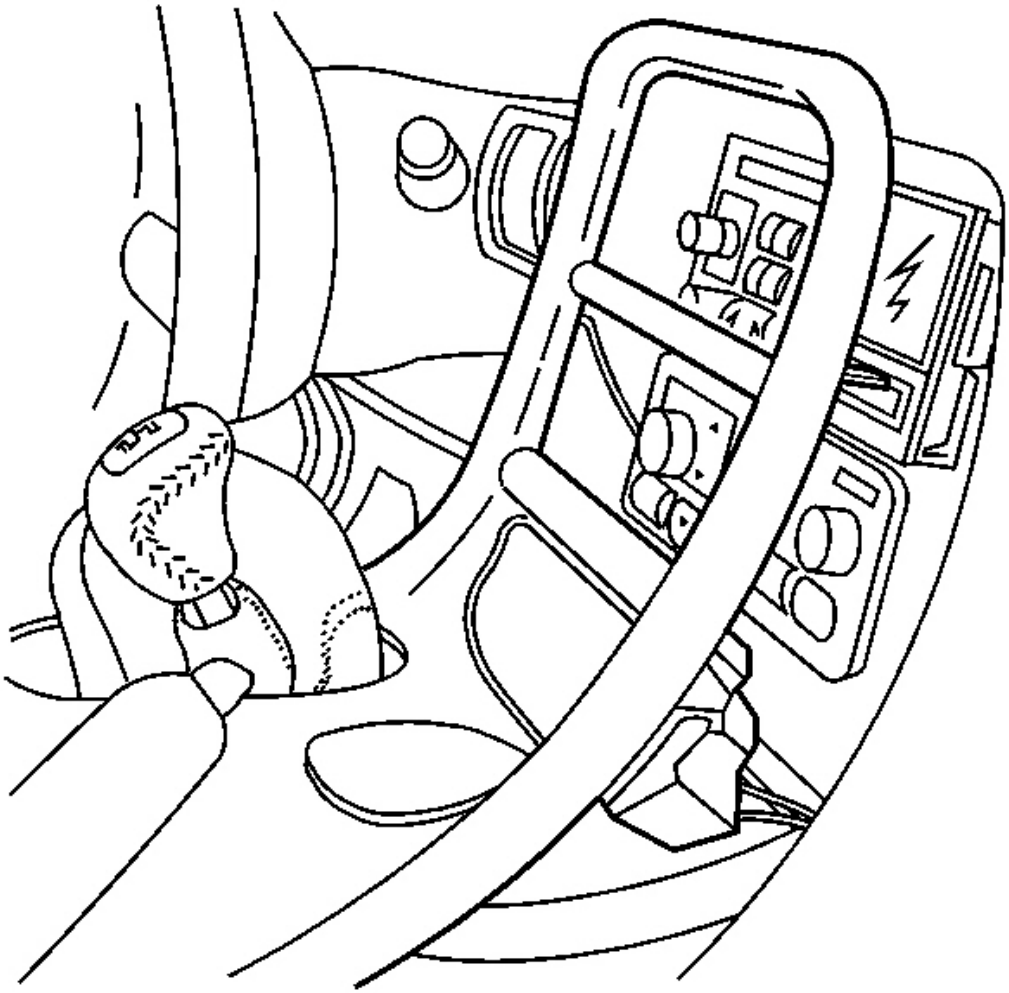

Fig. 82: Accessory Trim Plate To Shifter
Courtesy of GENERAL MOTORS CORP.

1. Lower the IP accessory trim plate over the shifter and under the parking brake lever.

   Position the shift control boot (M/T) as during removal and insert the boot up through the shifter opening in the accessory trim plate.

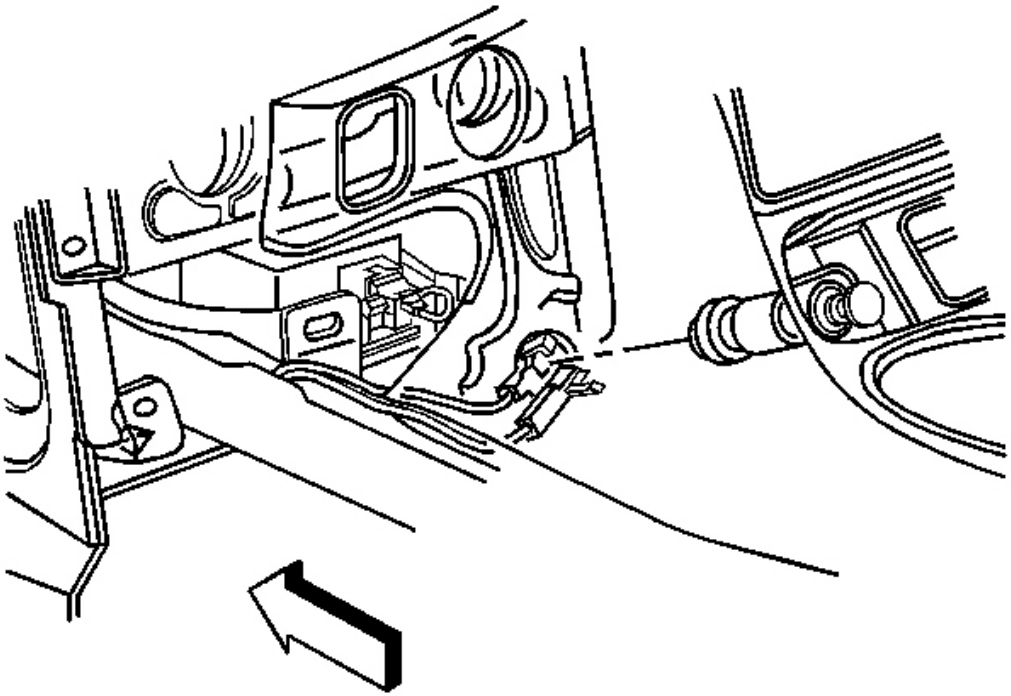

Fig. 83: Electrical Connector To Cigar Lighter
Courtesy of GENERAL MOTORS CORP.

2. Connect the electrical connector to the cigar lighter.

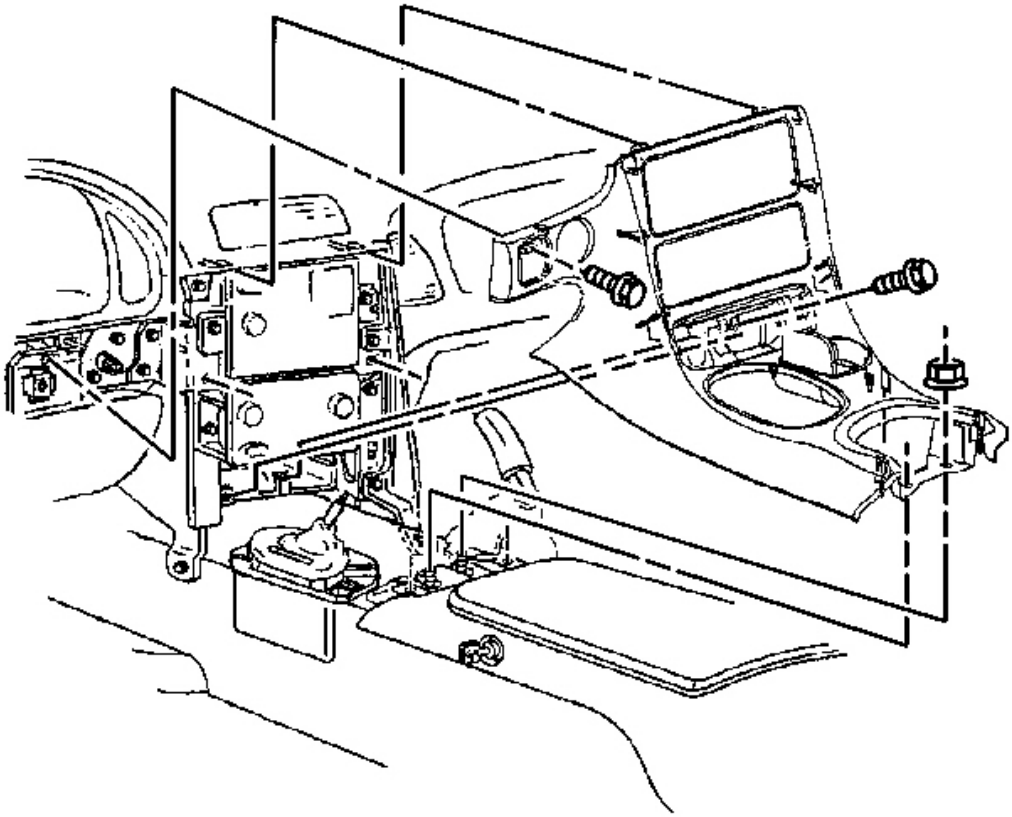

Fig. 84: Accessory Trim Plate To Grille Opening
Courtesy of GENERAL MOTORS CORP.

3. Install the trim plate into position.

   Align the locator tabs and the locking tabs to the slots.

4. Begin to install the upper locator tabs and the upper locking tabs, then work downward to install the remaining tabs.

   Install the rear of the trim plate onto the driveline tunnel studs.

   NOTE: Refer to Fastener Notice in Cautions and Notices.

5. Install the accessory trim plate retaining screws.

   Tighten:

- Tighten the IP accessory trim plate retaining screw next to cigar lighter to 1.9 N.m (17 lb in).
- Tighten the IP accessory trim plate retaining screw behind ashtray to 1.9 N.m (17 lb in).
- Tighten the IP accessory trim plate retaining screw in grille opening to 1.9 N.m (17 lb in).

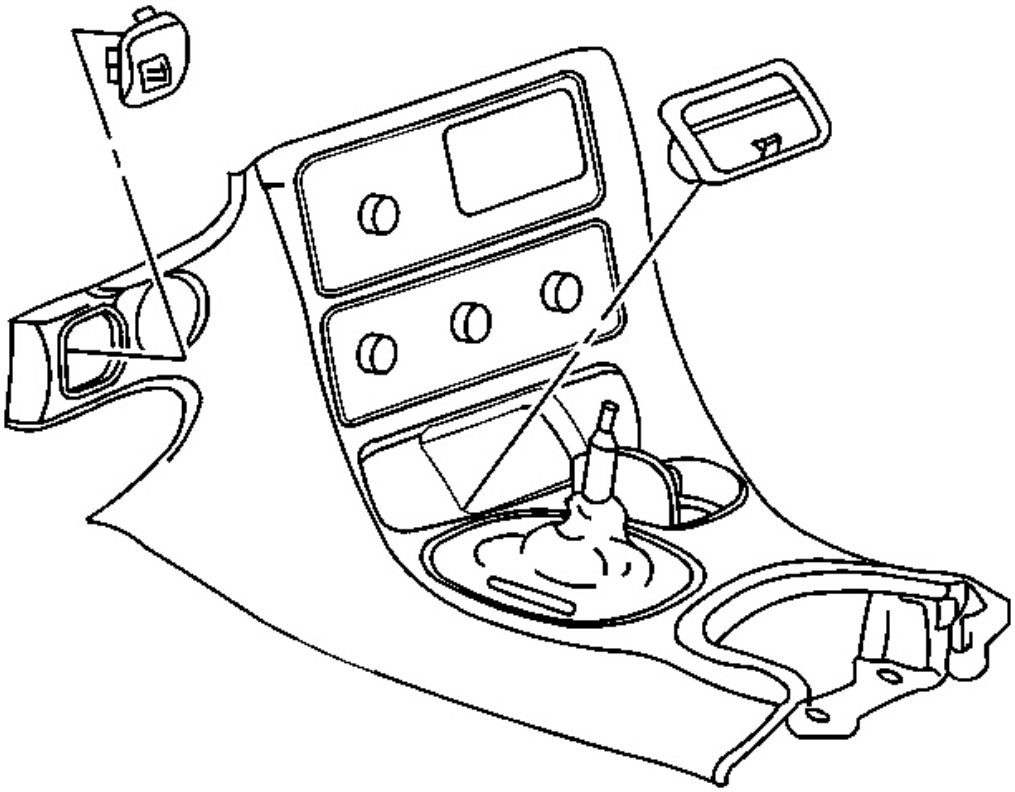

Fig. 85: IP Accessory Trim Plate Grille
Courtesy of GENERAL MOTORS CORP.

6. Install the accessory trim plate grille.

   Position the grille, then push to secure.

7. Install the ashtray.

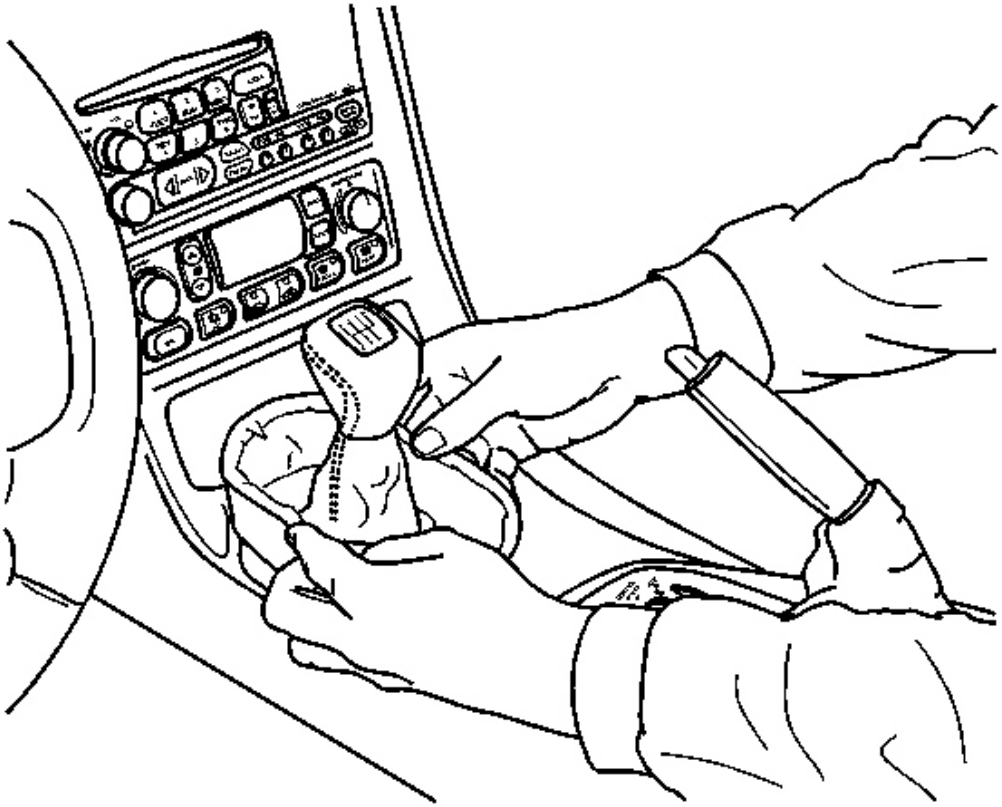

Fig. 86: IP Accessory Trim Plate Opening & Parking Brake
Courtesy of GENERAL MOTORS CORP.

8. Install the console. Refer to **Console Replacement** .
9. Align the shift control boot to the IP accessory trim plate opening, then press to lock the boot retaining tabs.
10. Adjust the shape of the boot for appearance, if necessary.
11. Shift the transmission into PARK (A/T), or REVERSE (M/T).
12. Release the parking brake.

BEZEL REPLACEMENT - INSTRUMENT PANEL (I/P) CLUSTER

Removal Procedure

NOTE: Refer to IPC Servicing Notice in Cautions and Notices.

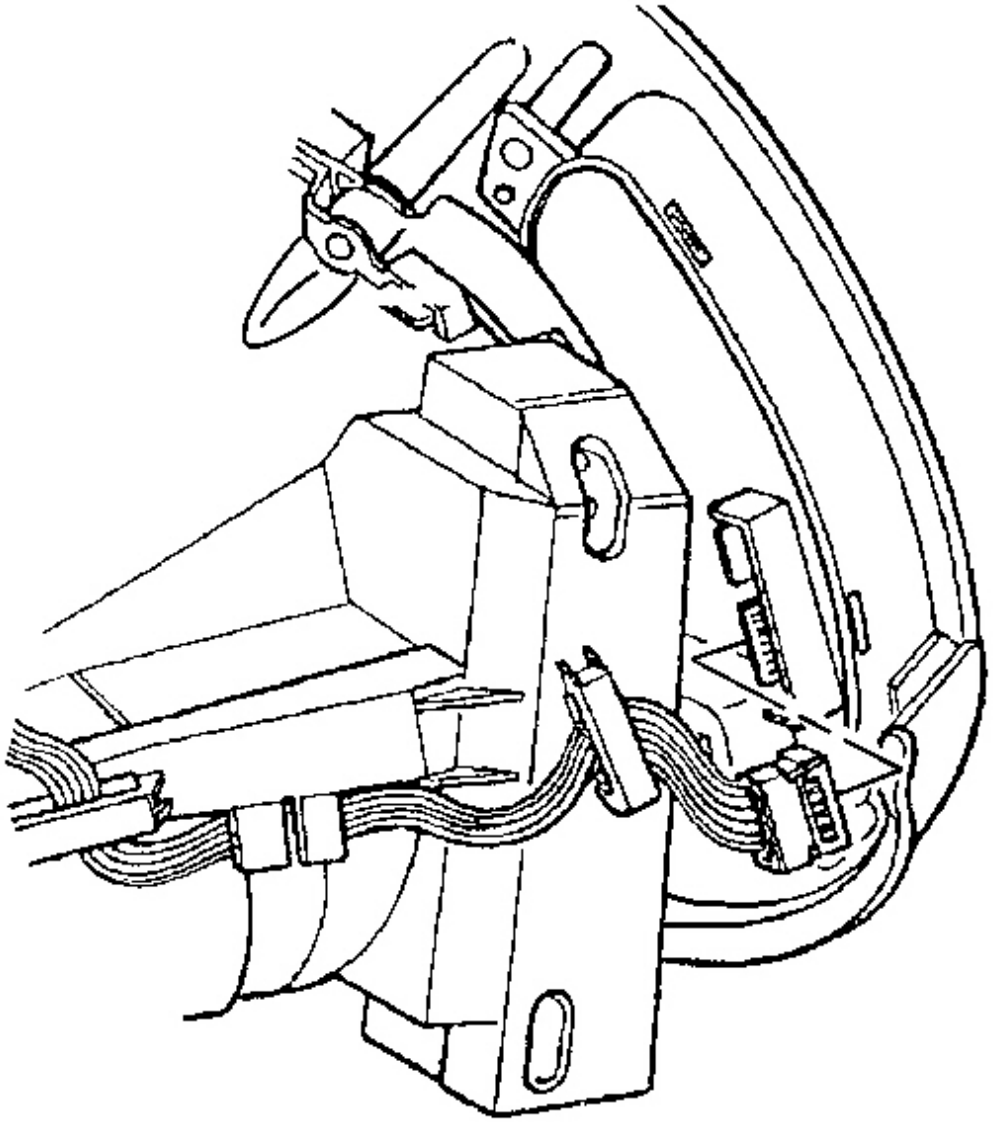

Fig. 87: Instrument Panel Dimmer/HUD Switch Electrical Connector
Courtesy of GENERAL MOTORS CORP.

1. Remove the instrument panel cluster (IPC) from the vehicle. Refer to **Instrument Panel Cluster (IPC) Replacement** .
2. Disconnect the instrument panel (I/P) dimmer switch or I/P dimmer/head-up display (HUD) switch electrical connector.

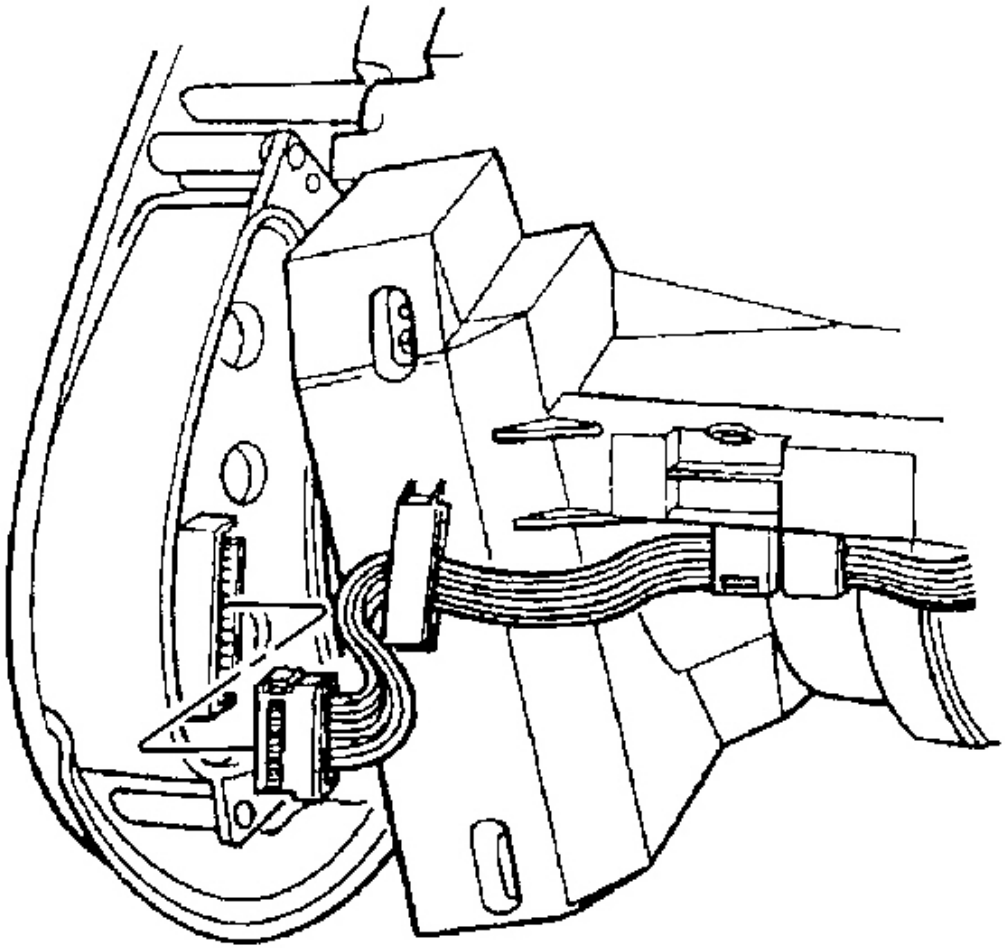

Fig. 88: Driver Information Center (DIC) Switch Electrical Connector
Courtesy of GENERAL MOTORS CORP.

3. Disconnect the driver information center (DIC) switch electrical connector.

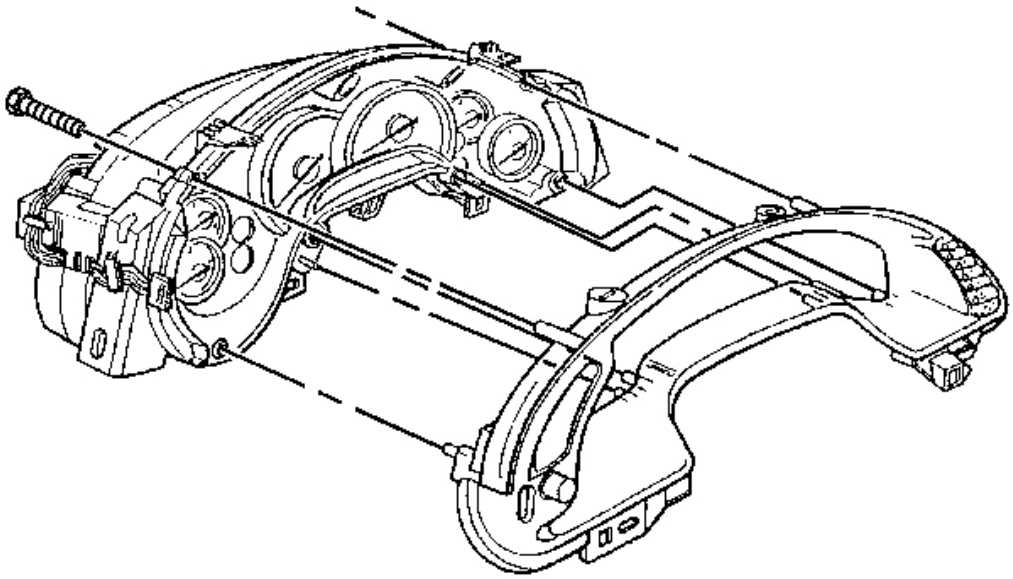

Fig. 89: IP Cluster Bezel To IPC
Courtesy of GENERAL MOTORS CORP.

4. Remove the I/P cluster bezel retaining screws.
5. Remove the cluster bezel from the IPC.

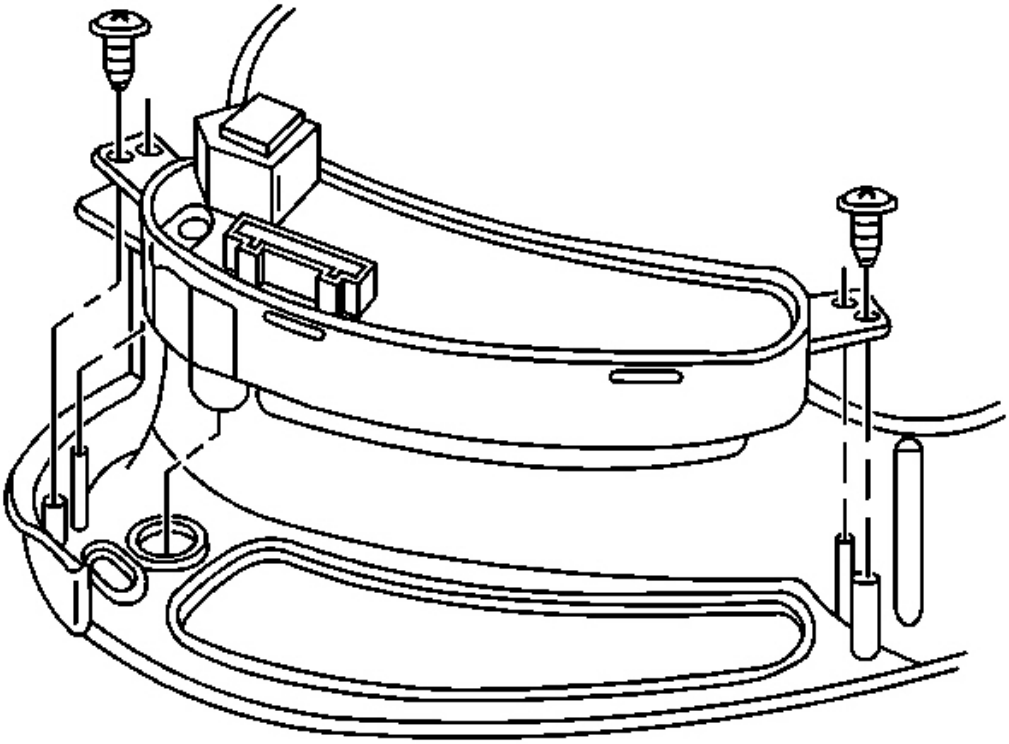

Fig. 90: IP Dimmer/HUD Switch To IP Cluster Bezel
Courtesy of GENERAL MOTORS CORP.

6. Remove the I/P dimmer switch or I/P dimmer/HUD switch retaining screws.
7. Remove the I/P dimmer switch or I/P dimmer/HUD switch.

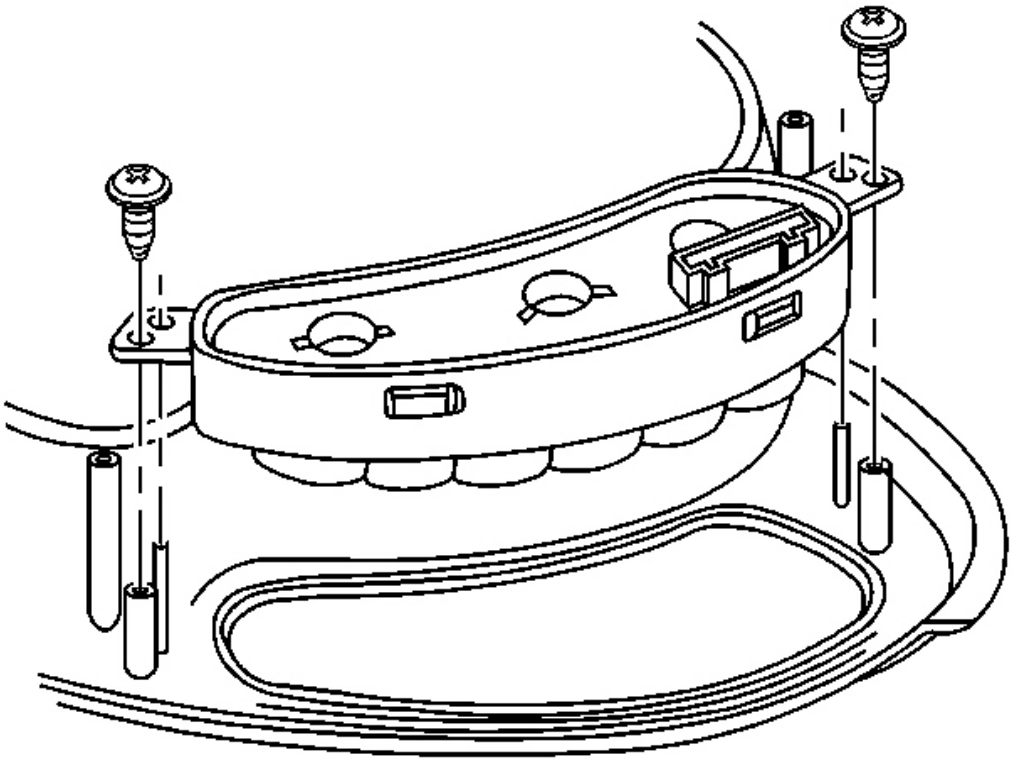

Fig. 91: DIC Switch To I/P Cluster Bezel
Courtesy of GENERAL MOTORS CORP.

8. Remove the DIC switch retaining screws.
9. Remove the DIC switch.

Installation Procedure

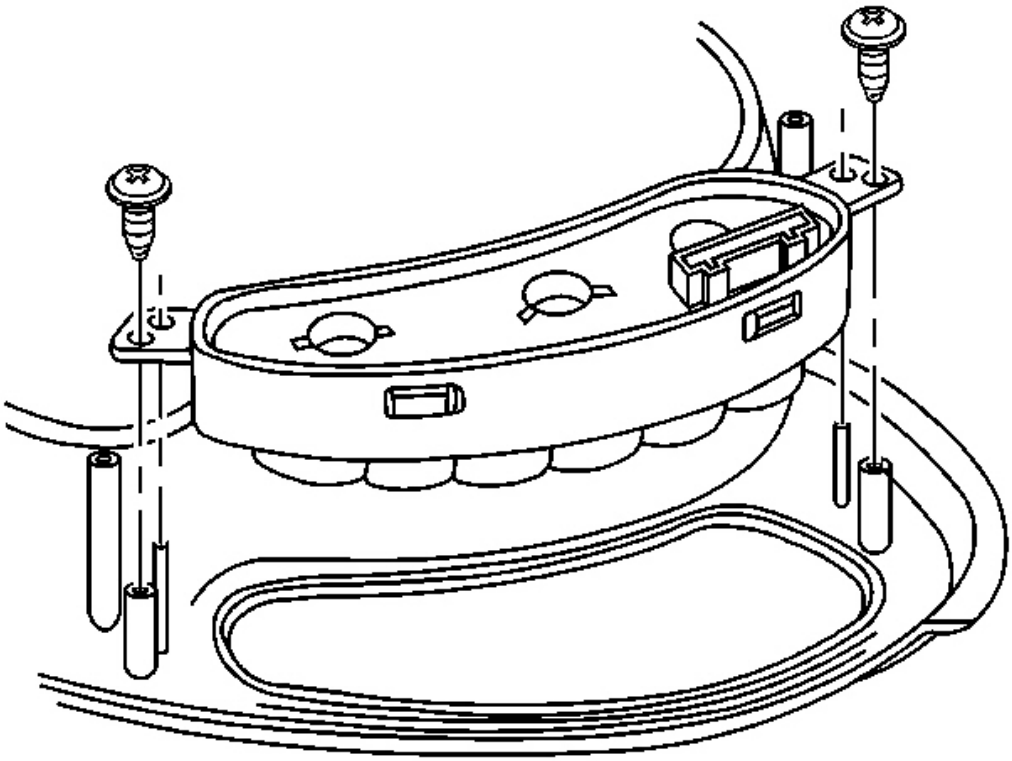

Fig. 92: DIC Switch To I/P Cluster Bezel
Courtesy of GENERAL MOTORS CORP.

1. Install the DIC switch to the I/P cluster bezel.

   NOTE: Refer to Fastener Notice in Cautions and Notices.

2. Install the DIC switch retaining screws.

   Tighten: Tighten the DIC switch retaining screws to 1.5 N.m (13 lb in).

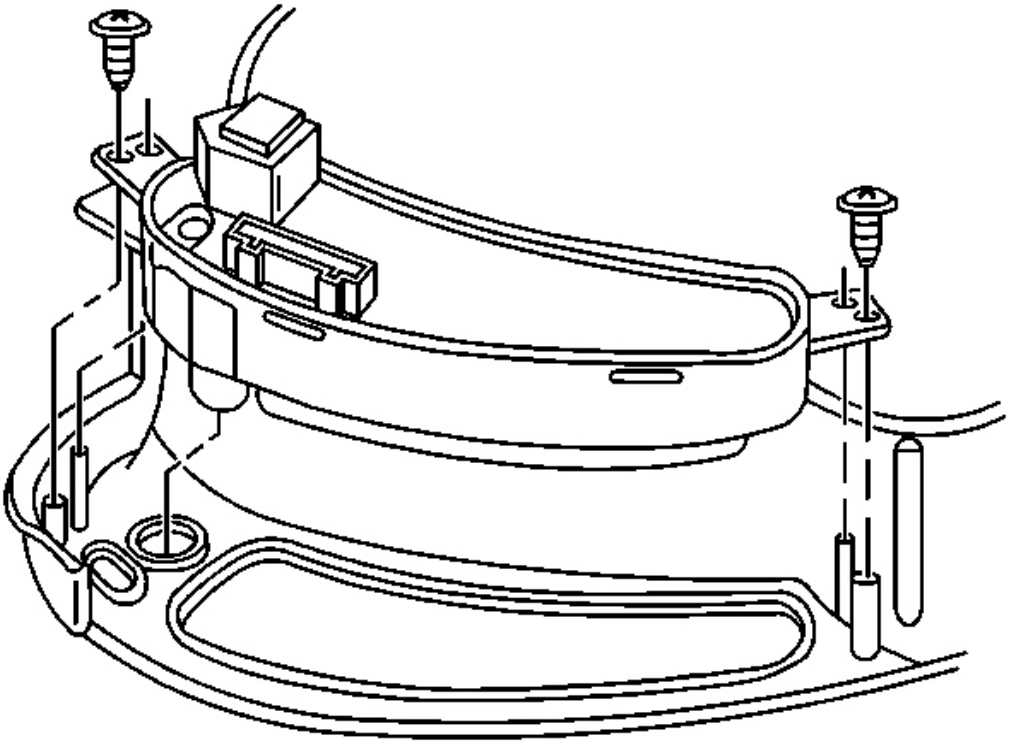

Fig. 93: IP Dimmer/HUD Switch To IP Cluster Bezel
Courtesy of GENERAL MOTORS CORP.

3. Install the I/P dimmer switch or I/P dimmer/HUD switch to the bezel.
4. Install the I/P dimmer switch or I/P dimmer/HUD switch retaining screws.

   Tighten: Tighten the I/P dimmer switch or I/P dimmer/HUD switch retaining screws to 1.5 N.m (13 lb in).

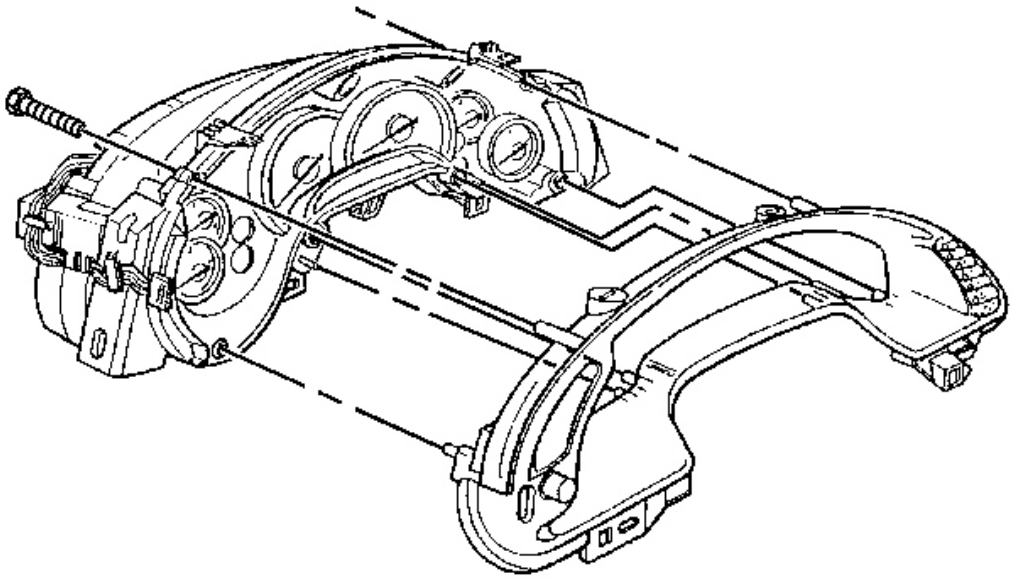

Fig. 94: IP Cluster Bezel To IPC
Courtesy of GENERAL MOTORS CORP.

5. Install the bezel to the IPC.

   Align the bezel onto the guide pins.

6. Install the I/P cluster bezel retaining screws.

   Tighten: Tighten the I/P cluster bezel retaining screws to 1.5 N.m (13 lb in).

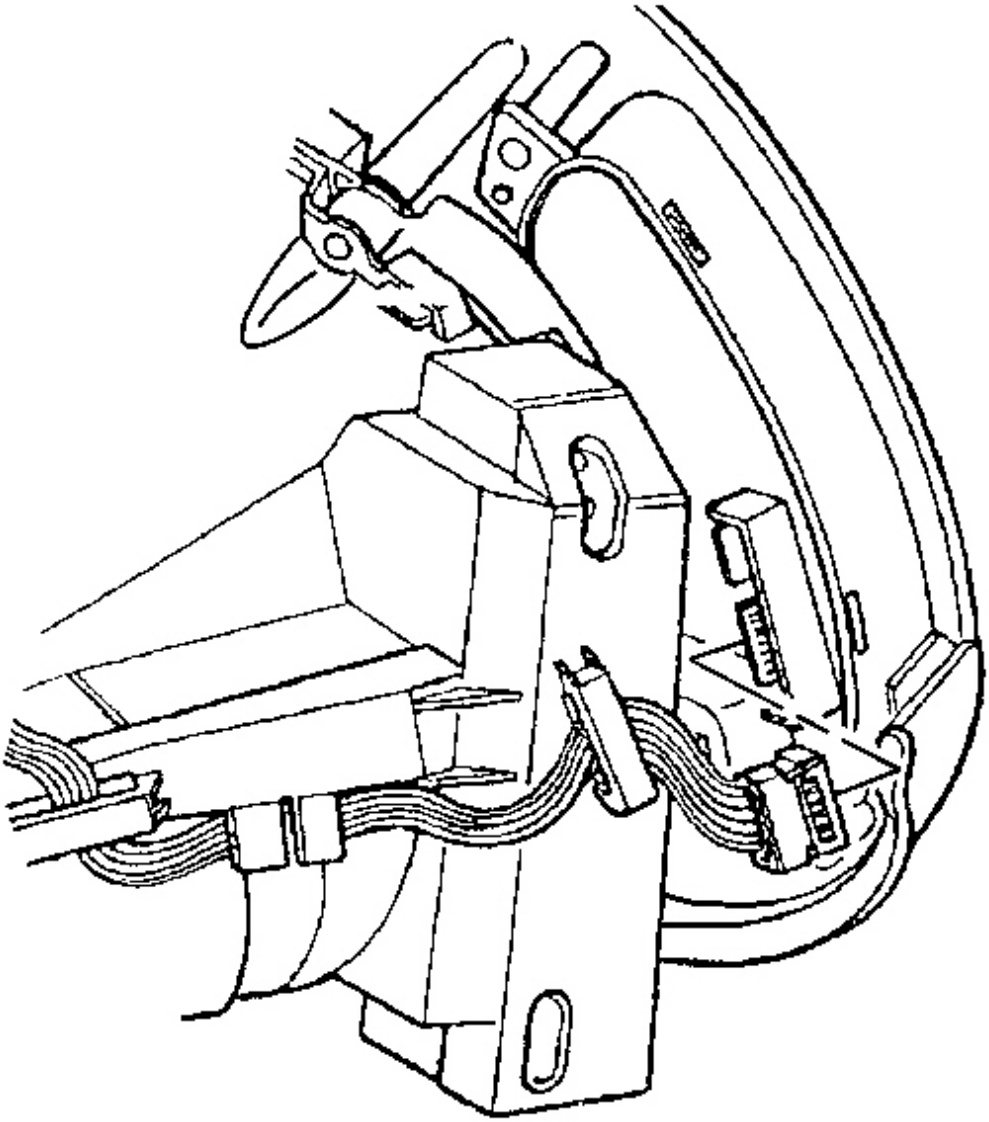

Fig. 95: Instrument Panel Dimmer/HUD Switch Electrical Connector
Courtesy of GENERAL MOTORS CORP.

7. Connect the I/P dimmer switch or I/P dimmer/HUD switch electrical connector.

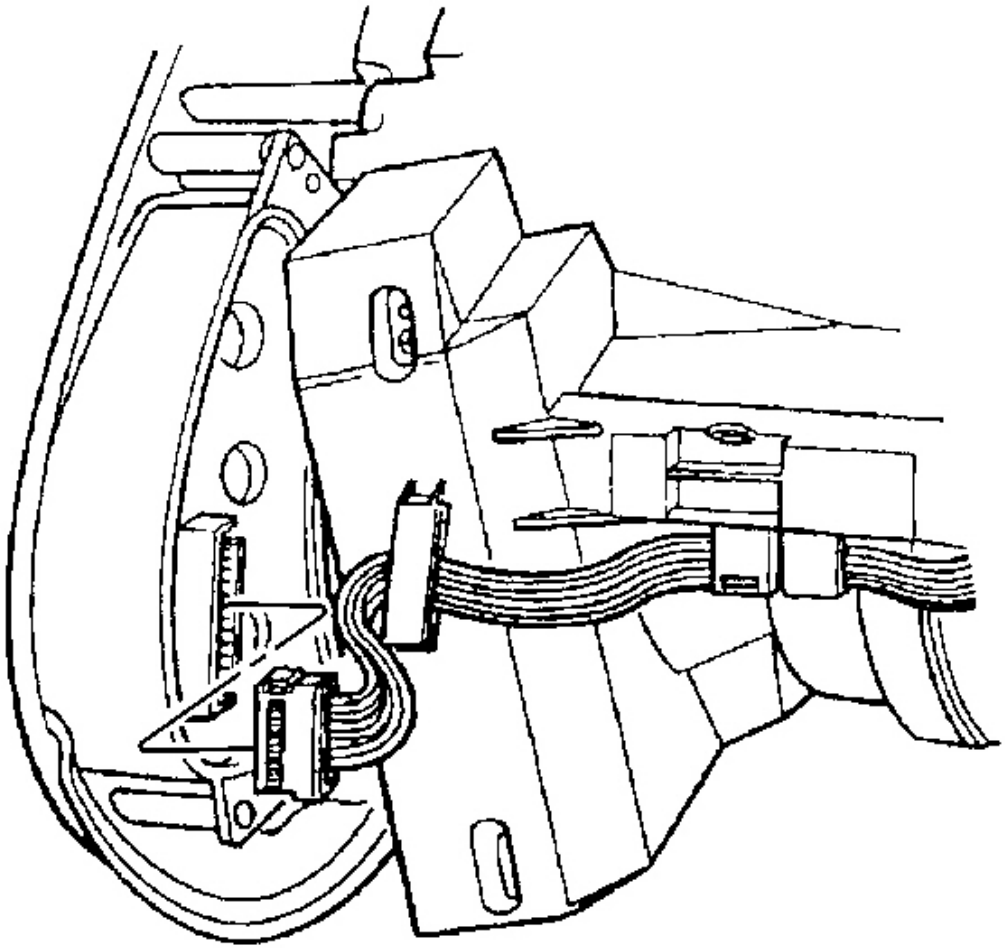

Fig. 96: Driver Information Center (DIC) Switch Electrical Connector
Courtesy of GENERAL MOTORS CORP.

8. Connect the DIC switch electrical connector.
9. Install the IPC to the vehicle. Refer to **Instrument Panel Cluster (IPC) Replacement** .

COMPARTMENT REPLACEMENT - INSTRUMENT PANEL (I/P)

Removal Procedure

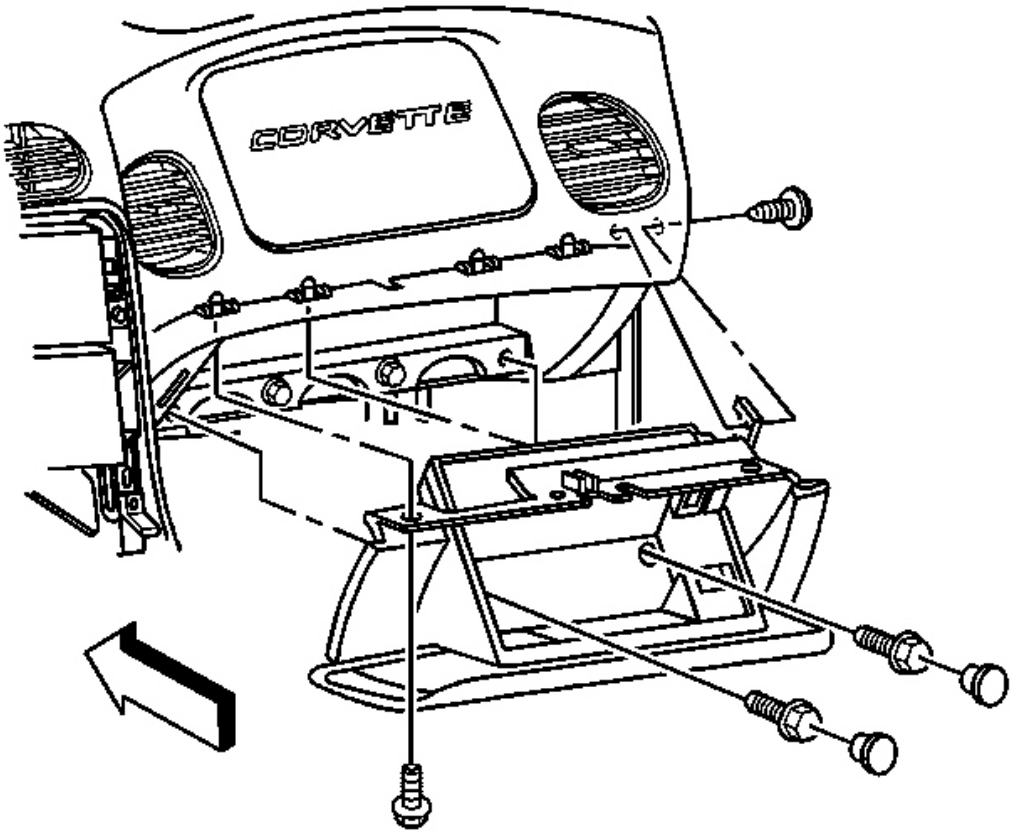

Fig. 97: Instrument Panel (I/P) Passenger Compartment Door
Courtesy of GENERAL MOTORS CORP.

1. Open the instrument panel (I/P) passenger compartment door.
2. Disconnect the electrical connector from the I/P compartment lamp switch.
3. Remove the trim plugs from the bottom of the compartment door.

   Reach behind the compartment door and push the plugs out. Use a suitable flat bladed tool on the front side to remove the plugs, if necessary.

4. Remove the lower retaining bolts from the I/P compartment.
5. Remove the side and upper retaining screws from the I/P compartment.

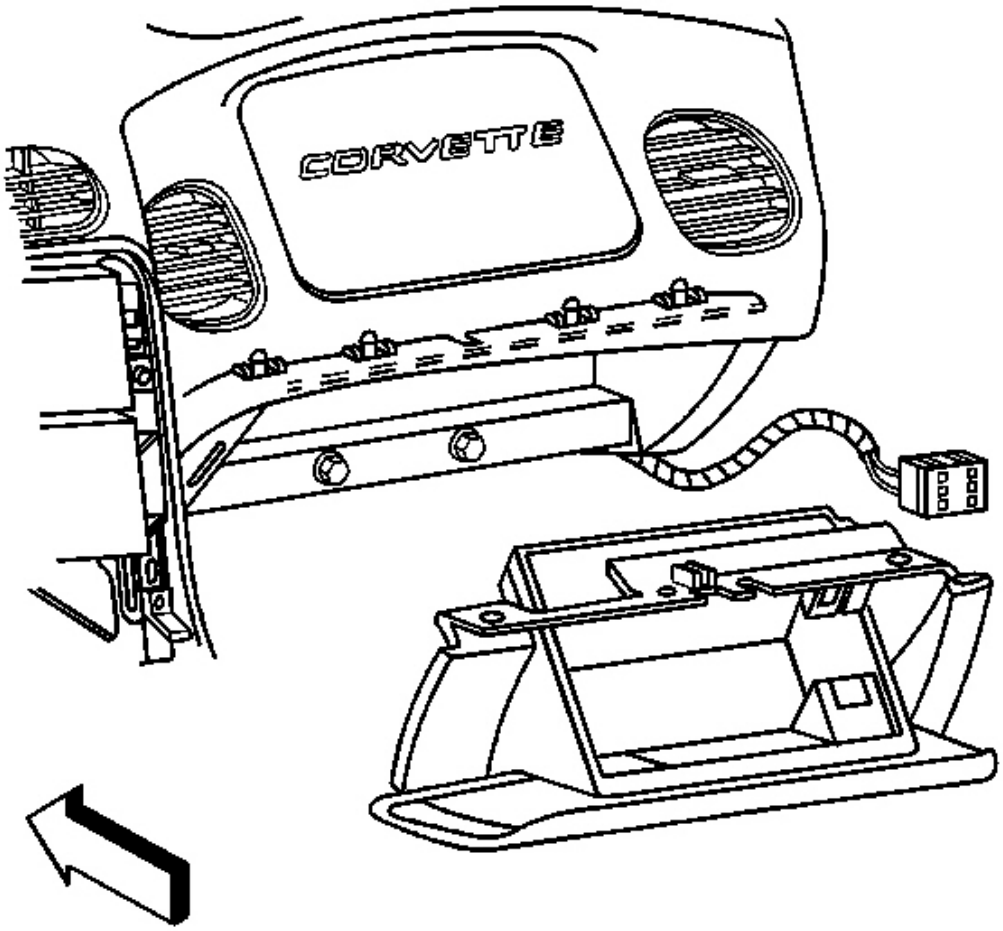

Fig. 98: I/P Compartment To Wiring Harness Connector
Courtesy of GENERAL MOTORS CORP.

6. Slowly pull the I/P compartment just enough to disconnect the wiring harness connector from the inflatable restraint module switch.
7. Remove the I/P compartment.

Installation Procedure

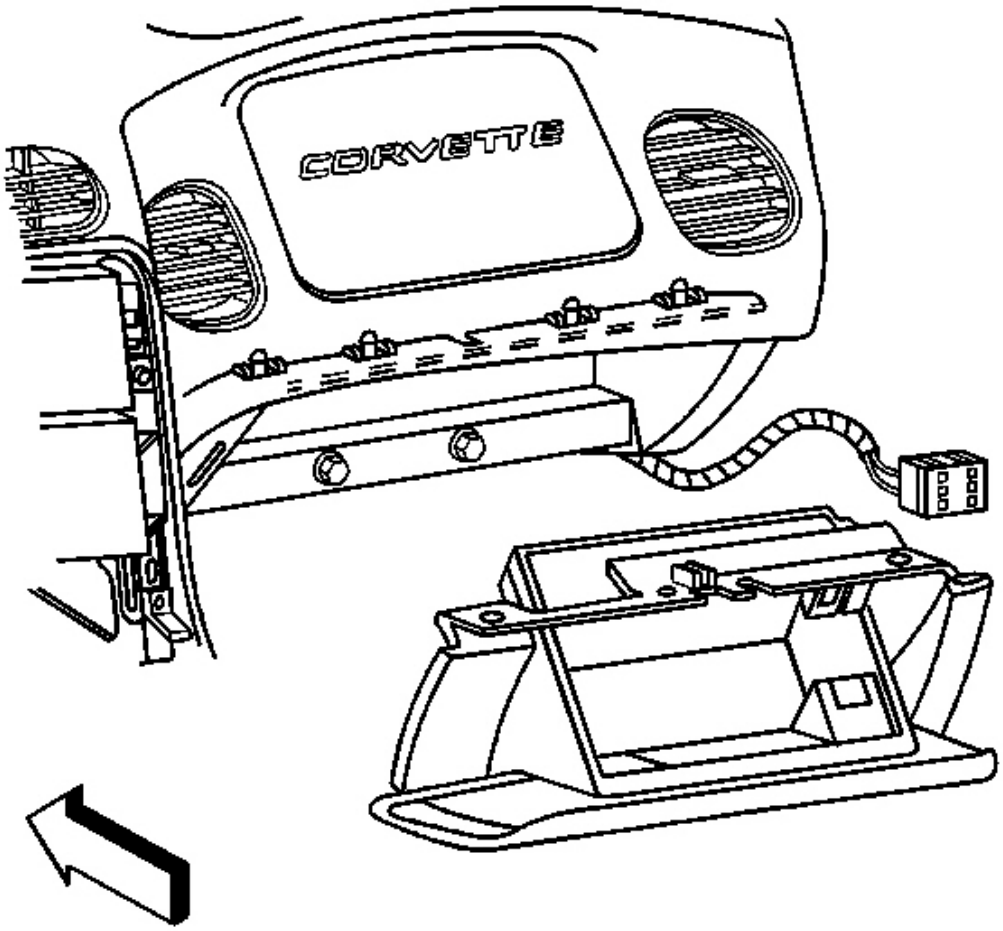

Fig. 99: I/P Compartment To Wiring Harness Connector
Courtesy of GENERAL MOTORS CORP.

1. Connect the wiring harness connector to the inflatable restraint I/P module switch connector.

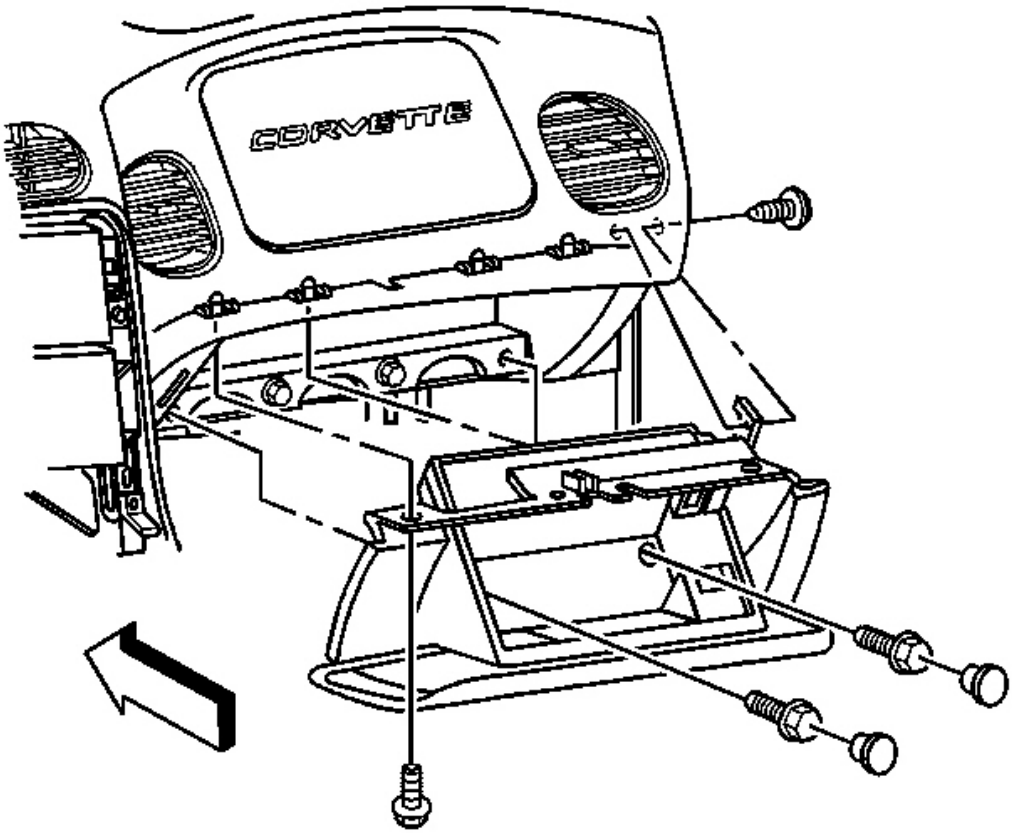

Fig. 100: Instrument Panel (I/P) Passenger Compartment Door
Courtesy of GENERAL MOTORS CORP.

2. Install the I/P compartment.
3. Loosely install the screw which retains the side of the I/P compartment, in order to align the nut on the passenger SIR bracket.

NOTE: **Refer to Fastener Notice in Cautions and Notices.**

4. Install the upper retaining screw to the I/P compartment.

   Tighten: Tighten the retaining screw to 1.9 N.m (17 lb in).

5. Install the lower retaining bolts to the I/P compartment.

   Tighten: Tighten the retaining bolts to 12 N.m (106 lb in).

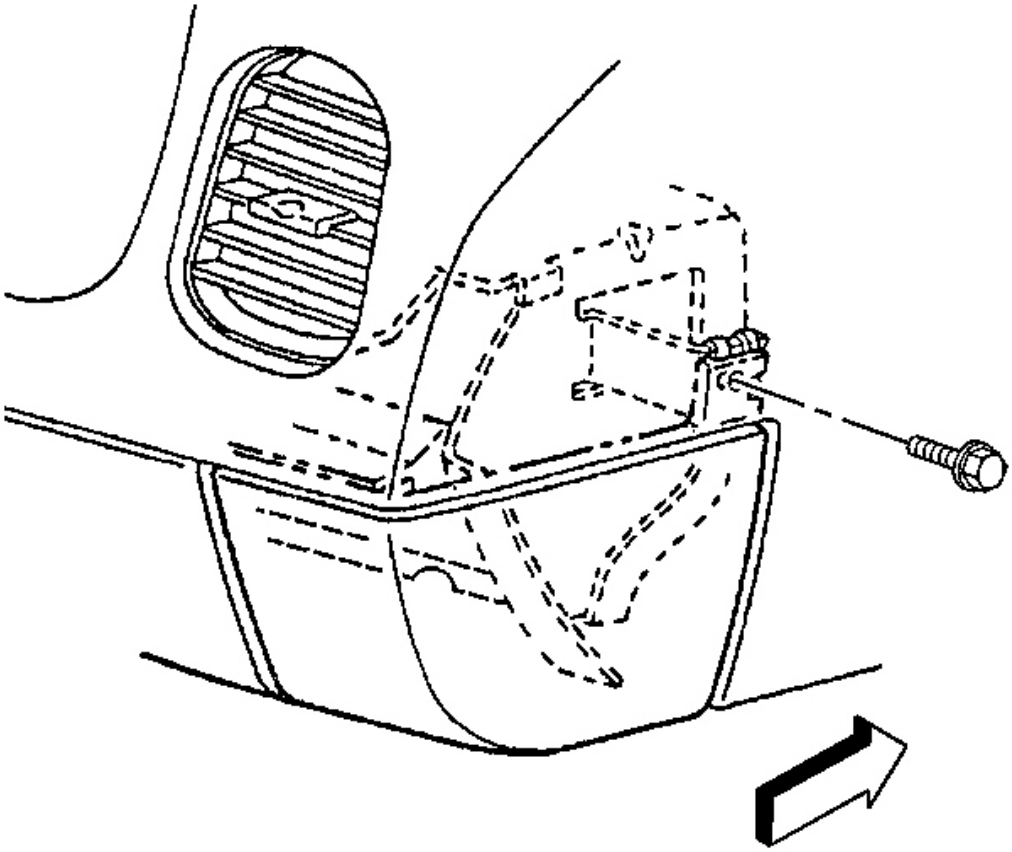

Fig. 101: Electrical Connector To I/P Compartment Lamp Switch
Courtesy of GENERAL MOTORS CORP.

6. Align and hold the I/P compartment to the I/P, then install the side retaining screw to the I/P compartment.

   Tighten: Tighten the retaining screw to 1.9 N.m (17 lb in).

7. Install the trim plugs to the I/P compartment door.
8. Connect the electrical connector to the I/P compartment lamp switch.
9. Close the I/P passenger compartment door.

STRIKER ADJUSTMENT - INSTRUMENT PANEL (I/P) COMPARTMENT

I/P Compartment Door Striker Adjustment

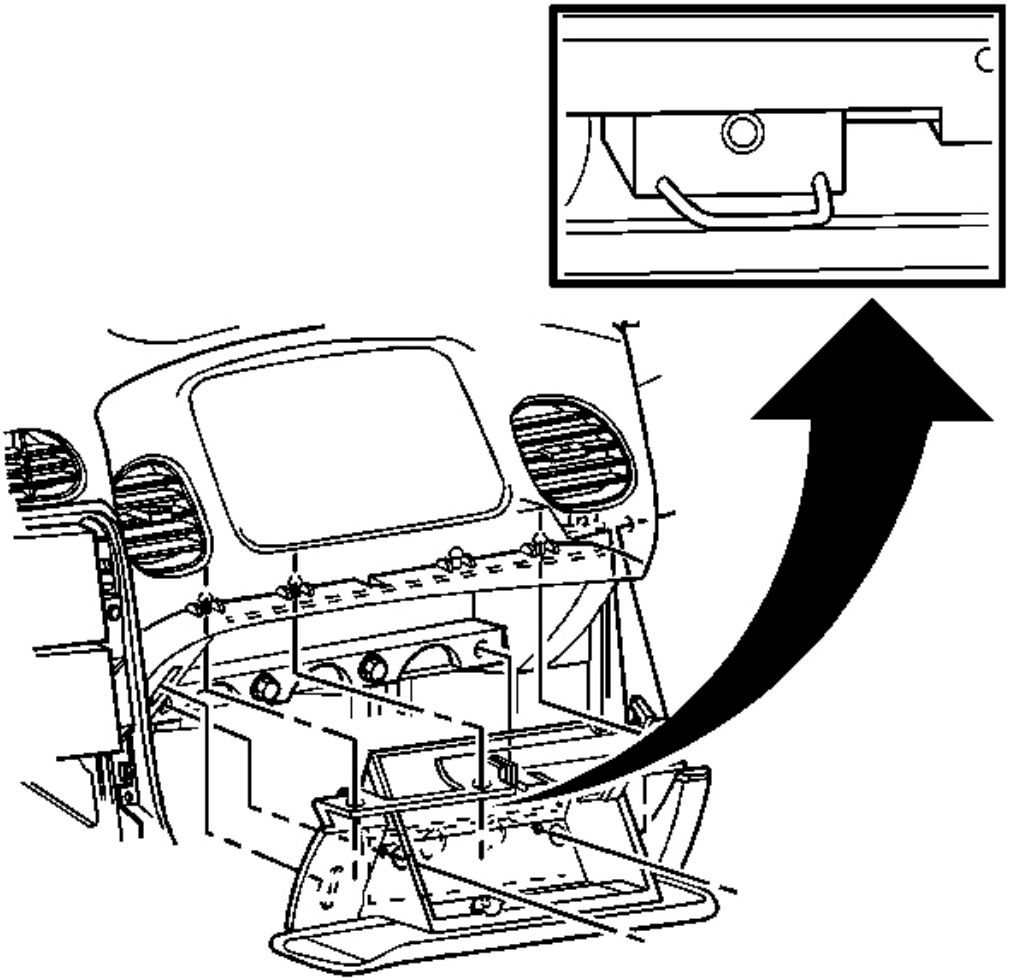

Fig. 102: I/P Compartment Door At Underside Of The Striker
Courtesy of GENERAL MOTORS CORP.

1. Open the I/P compartment door.
2. Loosen the attaching screw on the underside of the striker.
3. Turn the adjusting screw as needed.
4. Inspect the I/P compartment door for proper fit and operation, repeat the procedure if required.

LOCK CYLINDER REPLACEMENT - INSTRUMENT PANEL (I/P) COMPARTMENT DOOR

Removal Procedure

1. Open the I/P passenger compartment door.
2. Remove the screws retaining the passenger compartment door handle.

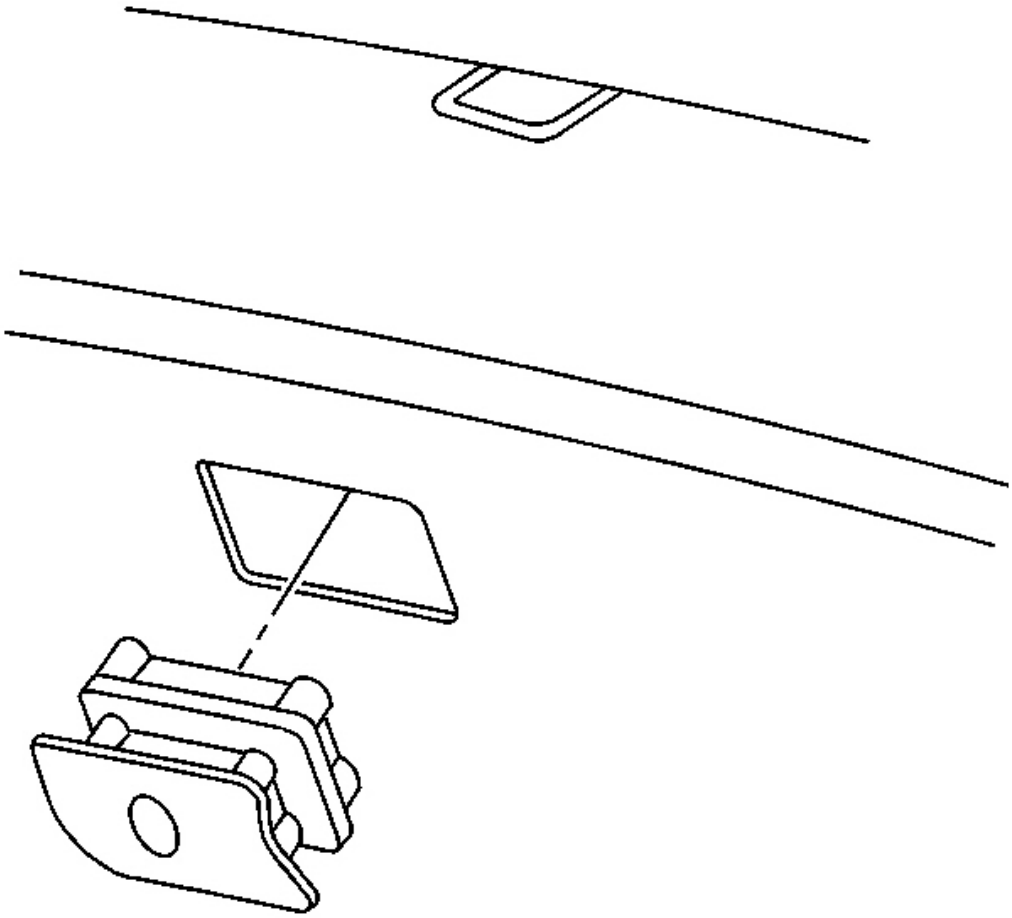

Fig. 103: Passenger Compartment Door Handle
Courtesy of GENERAL MOTORS CORP.

3. Remove the door handle.

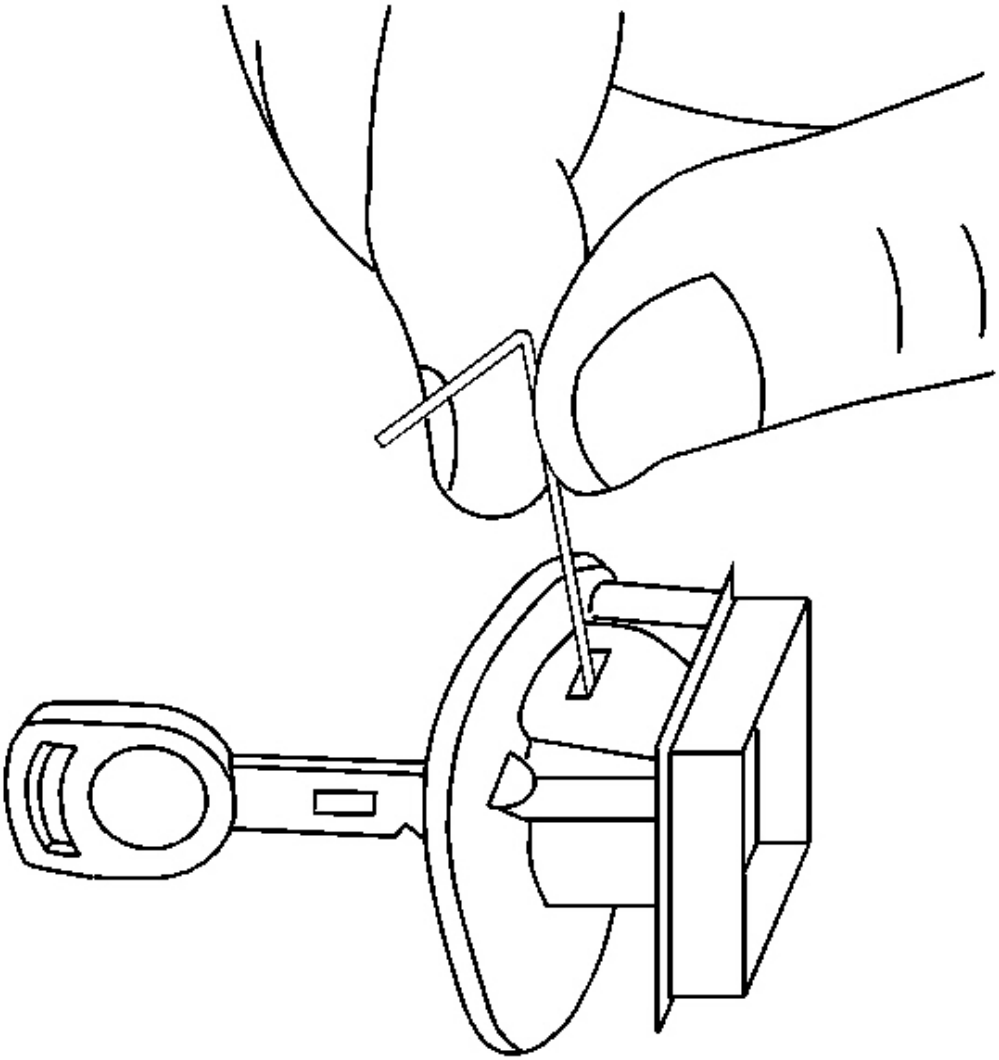

Fig. 104: Key To Door Handle Lock Cylinder
Courtesy of GENERAL MOTORS CORP.

4. Insert the key into the door handle lock cylinder.
5. Turn the key 1/4 turn clockwise (LOCK position).
6. Release the lock cylinder retainer.

   Insert a small diameter tool into the slot on the RH side of the door handle and depress and hold the lock cylinder retainer.

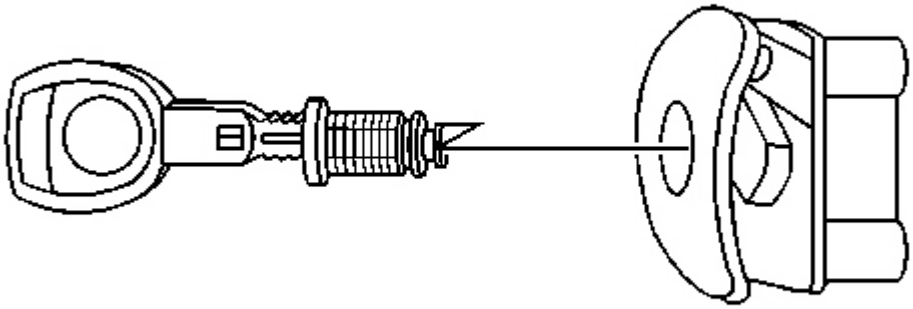

Fig. 105: Key To Lock Cylinder
Courtesy of GENERAL MOTORS CORP.

7. Turn the key an additional 1/4 turn clockwise.
8. Pull to remove the lock cylinder.

Installation Procedure

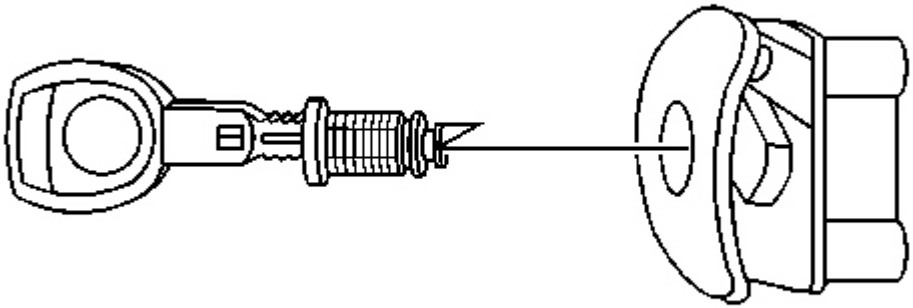

Fig. 106: Key To Lock Cylinder
Courtesy of GENERAL MOTORS CORP.

1. Insert the key into the lock cylinder.
2. Insert the lock cylinder into the passenger compartment door handle.

Align the lock cylinder in the same position used for removal, then push to seat fully.

3. Turn the key 1/4 turn counterclockwise to secure the lock cylinder retainer.
4. Turn the key an additional 1/4 turn counterclockwise and remove.
5. Inspect the operation of the lock cylinder.

The lock cylinder should only allow a 1/4 turn and should be securely retained in the door handle.

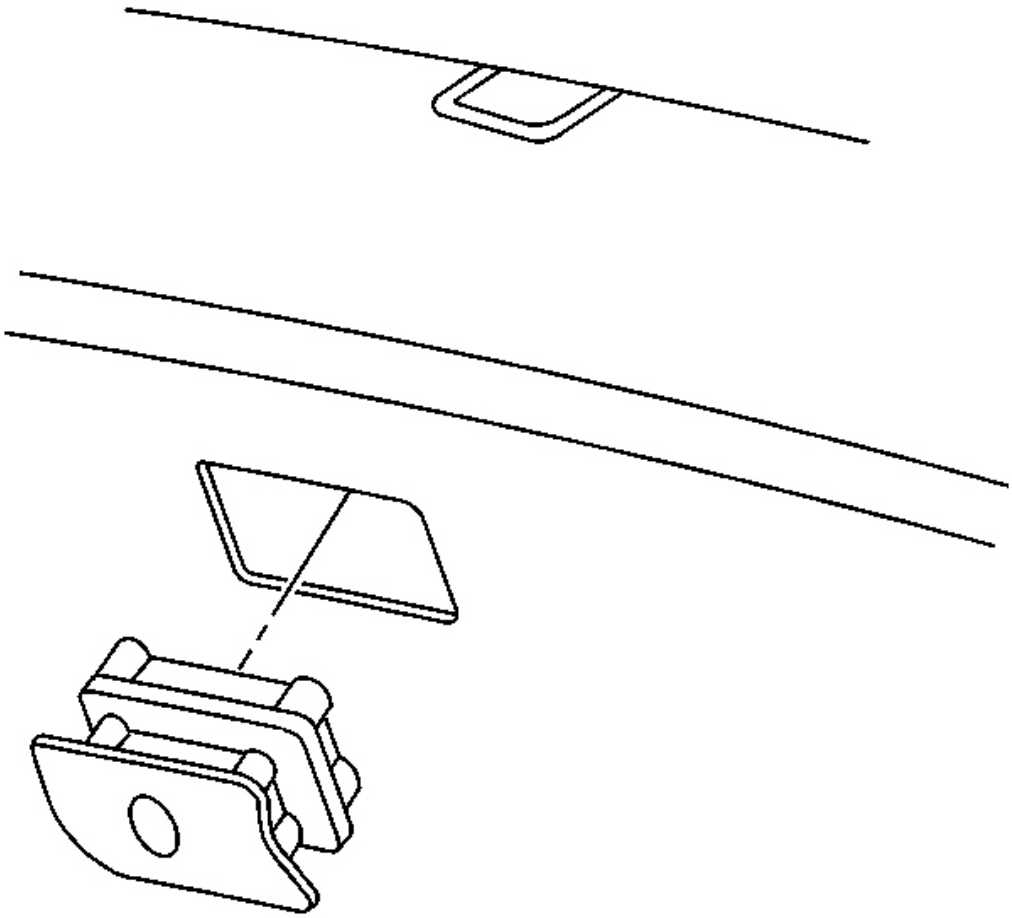

Fig. 107: Passenger Compartment Door Handle
Courtesy of GENERAL MOTORS CORP.

6. Install the door handle to the passenger compartment.
7. Install the passenger compartment door handle retaining screws.

8. Close the passenger compartment door.

DEFROSTER GRILLE REPLACEMENT

Removal Procedure

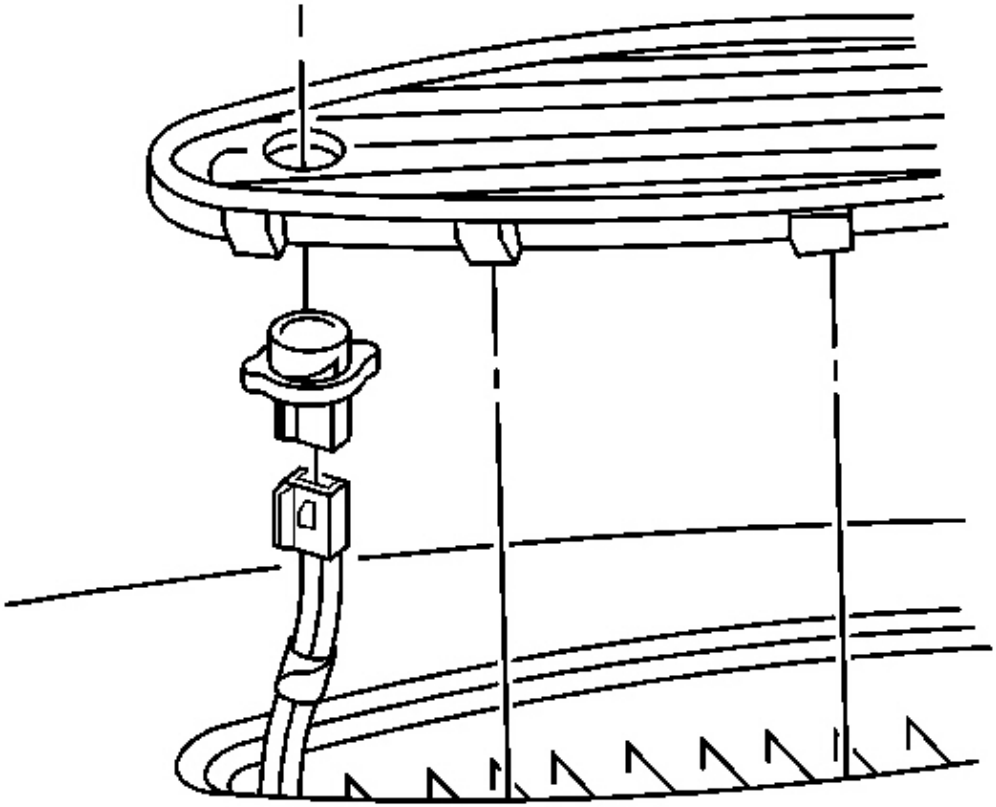

Fig. 108: Windshield Defroster Grille At I/P Upper Trim Pad
Courtesy of GENERAL MOTORS CORP.

1. Release and lift the windshield defroster grille from the I/P upper trim pad.
    1. Insert two small flat bladed screwdrivers, or other suitable tools, close to each other between the rear edge of the defroster grille and the upper trim pad near one corner of the grille.
    2. Begin to CAREFULLY pry the grille up from the trim pad.
    3. Work the screwdrivers gradually to the other corner of the grille while continuing to CAREFULLY pry the grille up.

2. Lift the grille to access the DRL sensor and the sunload sensor, if equipped.
3. Rotate to release the DRL sensor from the grille, if equipped.

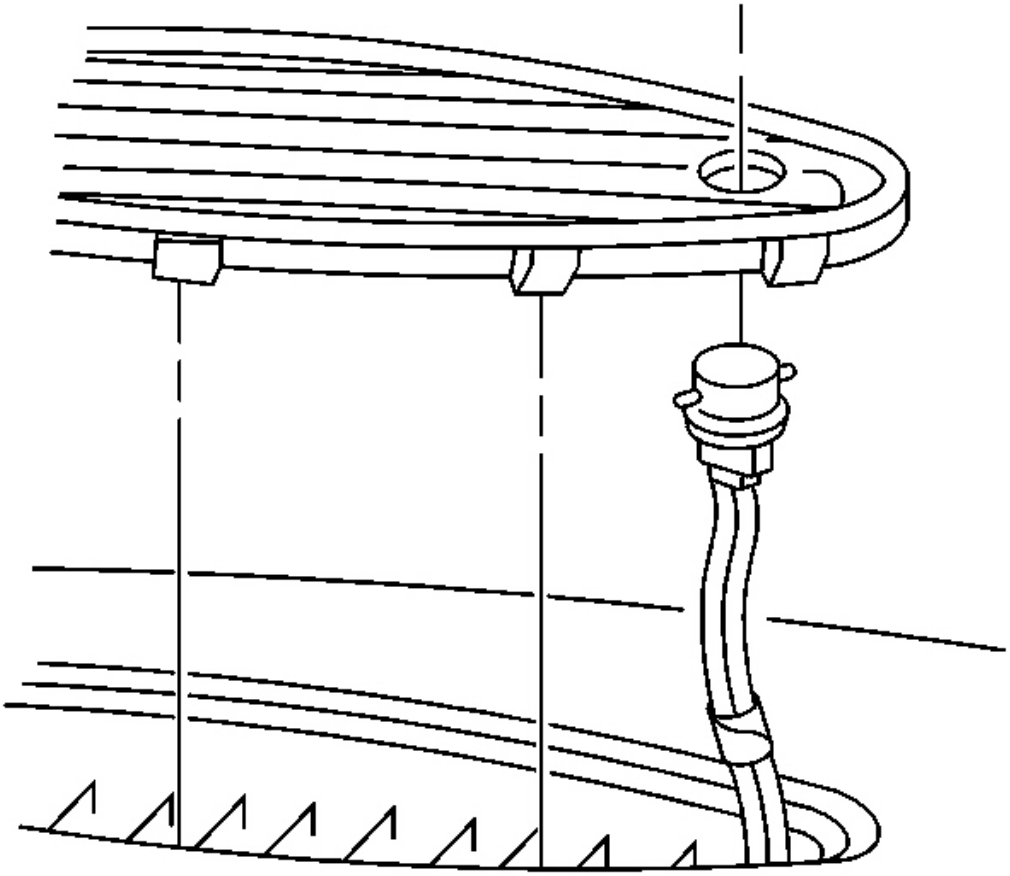

Fig. 109: Sunload Sensor To Grille
Courtesy of GENERAL MOTORS CORP.

4. Rotate to release the sunload sensor from the grille, if equipped.

Installation Procedure

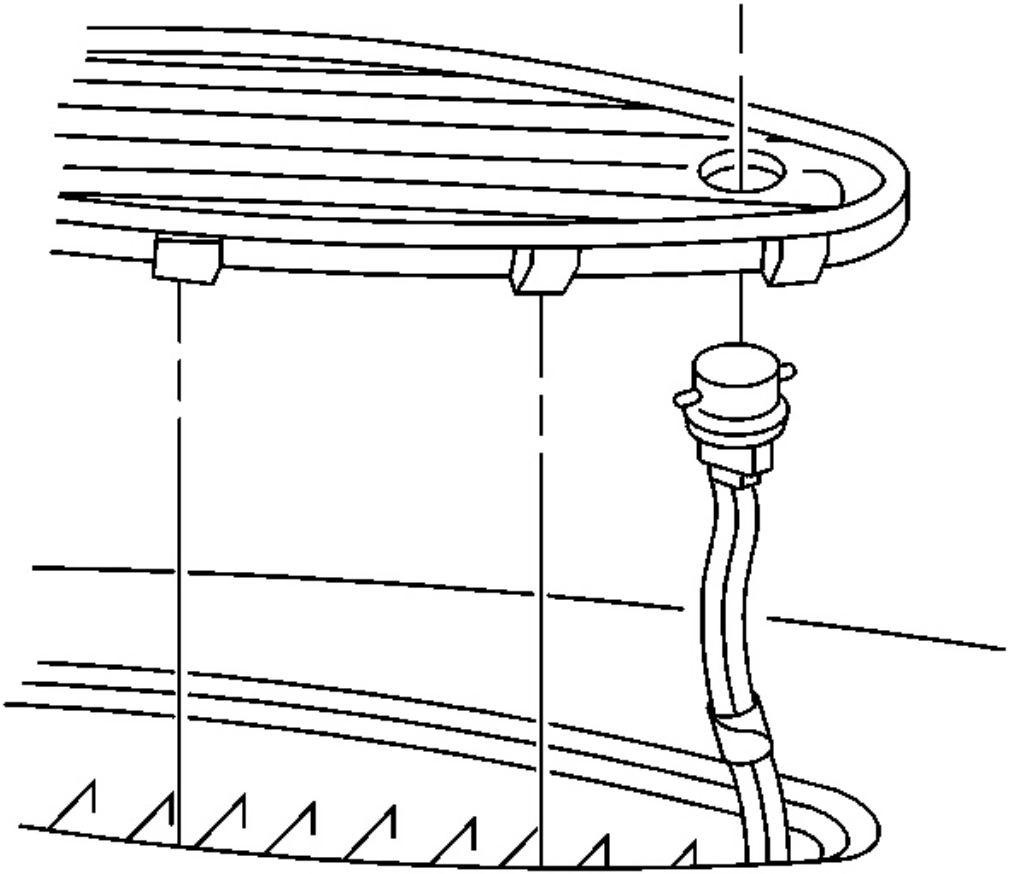

Fig. 110: Sunload Sensor To Grille
Courtesy of GENERAL MOTORS CORP.

1. Rotate to secure the sunload sensor to the defroster grille, if equipped.

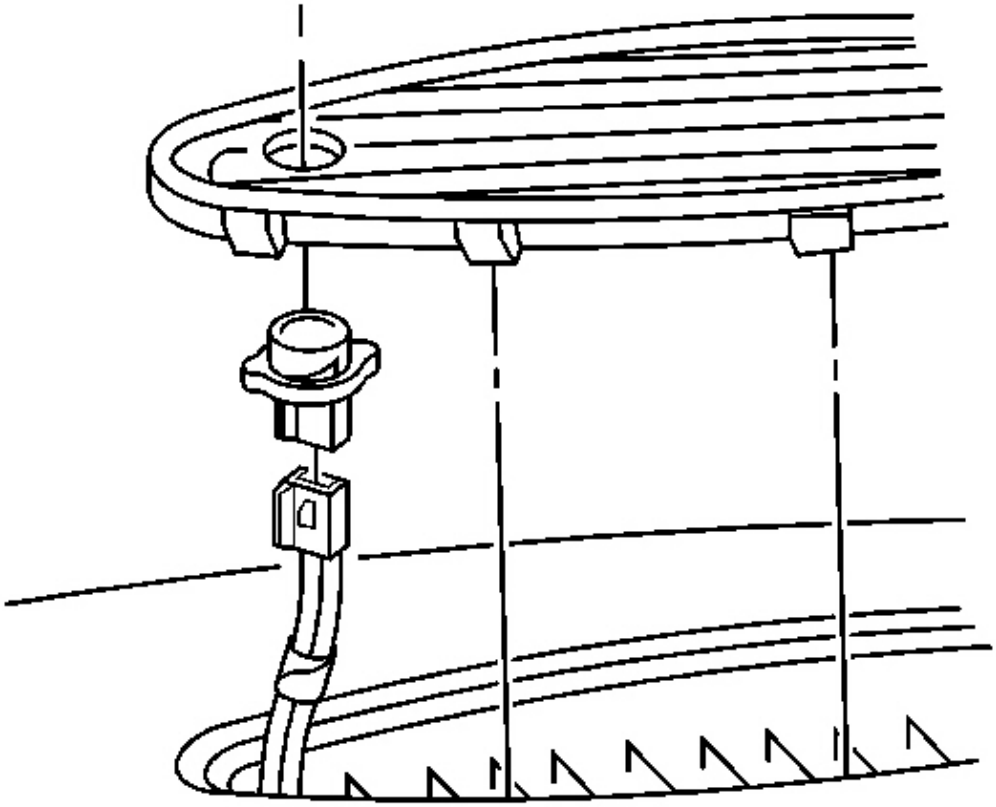

Fig. 111: Windshield Defroster Grille At I/P Upper Trim Pad
Courtesy of GENERAL MOTORS CORP.

2. Rotate to secure the DRL sensor to the defroster grille, if equipped.
3. Position the tabs along the front edge of the defroster grille down into the slots in the upper trim pad.
4. Lower the rear edge of the defroster grille into position, then CAREFULLY press the rear tabs into place.

TRIM PAD REPLACEMENT - INSTRUMENT PANEL (I/P) UPPER

Removal Procedure

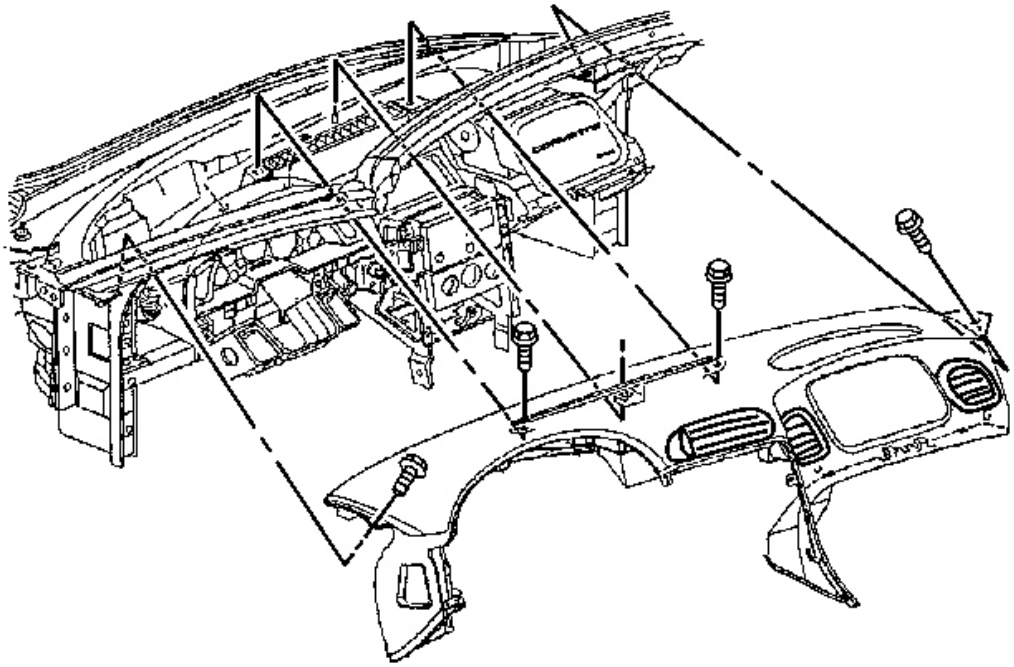

Fig. 112: Upper Trim Pad To Windshield Defroster Duct
Courtesy of GENERAL MOTORS CORP.

1. Remove the console. Refer to **Console Replacement** .
2. Remove the IP accessory trim plate. Refer to **Trim Plate Replacement - Instrument Panel (I/P) Accessory** .
3. Remove the driver knee bolster trim panel. Refer to **Trim Panel Replacement - Knee Bolster** .
4. Remove the instrument panel compartment. Refer to **Compartment Replacement - Instrument Panel (I/P)** .
5. Remove the windshield defroster grille. Refer to **Defroster Grille Replacement** .
6. Insert the DRL and sunload sensors, if equipped, into the nearest openings in the windshield defroster duct.

   Moving the sensors into the defroster duct provides additional clearance to remove the trim pad.

7. Remove the windshield side garnish moldings. Refer to **Windshield Side Garnish Molding Replacement** in Interior Trim.
8. Remove the screws retaining the upper trim pad to the defroster duct.
9. Remove the screws retaining the upper trim pad to the LH and RH hinge pillars.

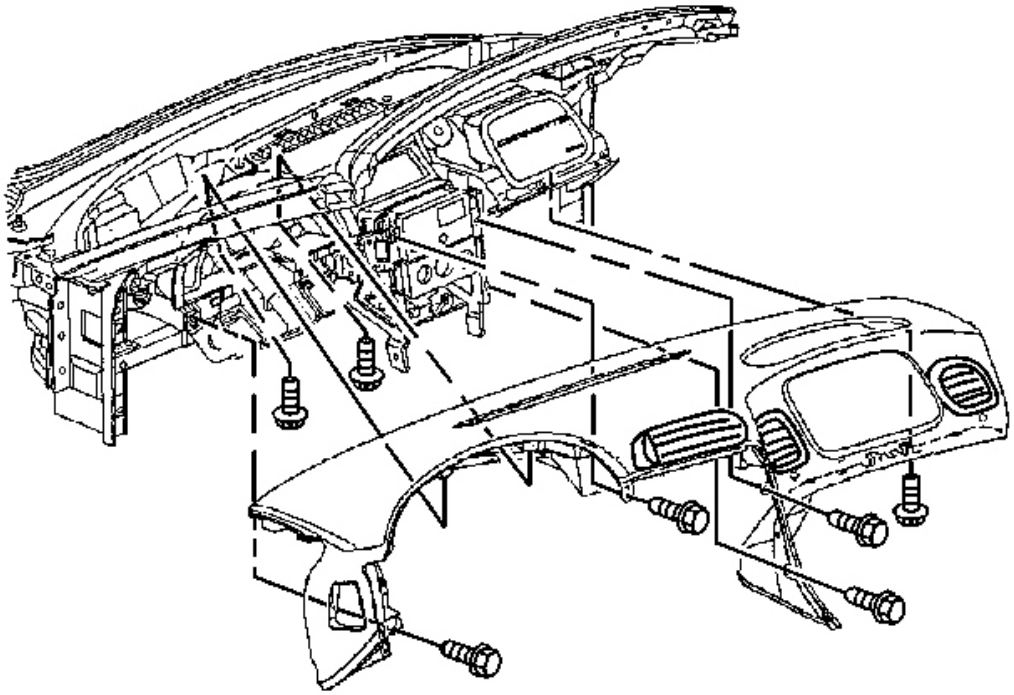

Fig. 113: Upper Trim Pad To Driver Knee Bolster Outer Bracket & Center Support Bracket
Courtesy of GENERAL MOTORS CORP.

10. Remove the screws retaining the IP cluster bezel to the upper trim pad.
11. Remove the screws retaining the upper trim pad to the driver knee bolster outer bracket and the center support bracket.
12. Remove the screw retaining the upper trim pad to the passenger SIR bracket.

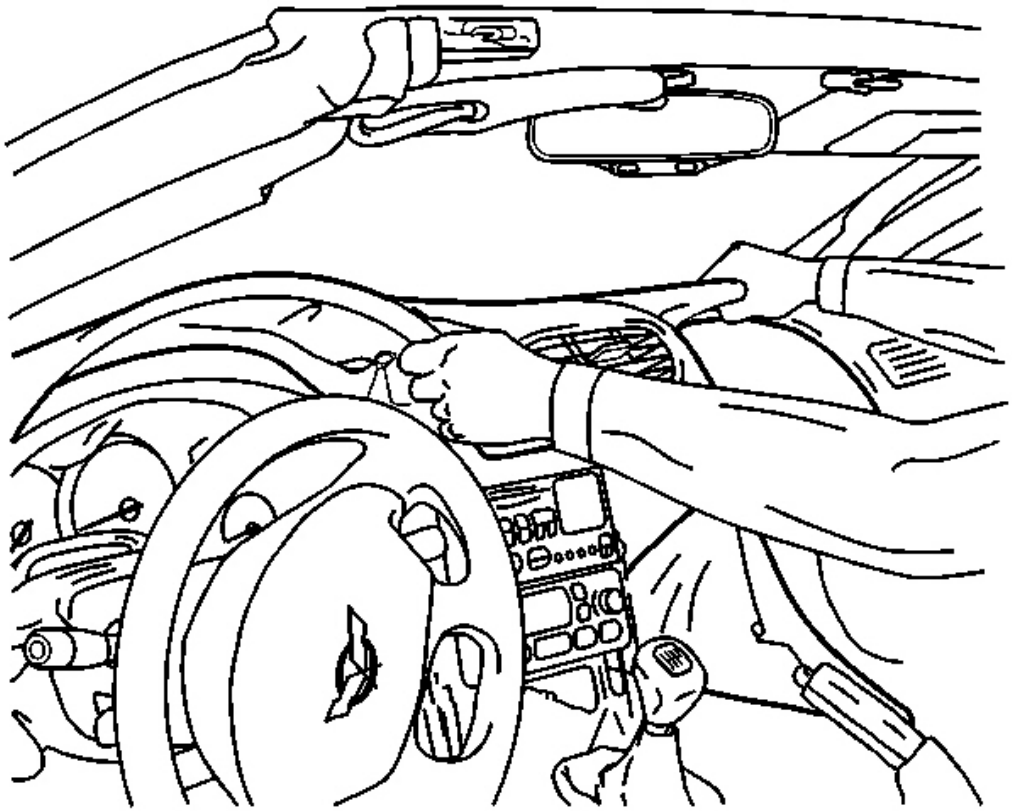

Fig. 114: Upper Trim Pad At Windshield To LH & RH Side Of Trim Pad At Hinge Pillars
Courtesy of GENERAL MOTORS CORP.

13. Tilt the steering wheel to the lowest position.
14. Lift the rearward edge of the upper trim pad approximately 5 cm (2 in) to provide clearance for the air distribution duct located on the underside of the trim pad.
15. SLOWLY pull the upper trim pad away from the windshield while guiding the tabs on the LH and RH side of the trim pad past the hinge pillars.

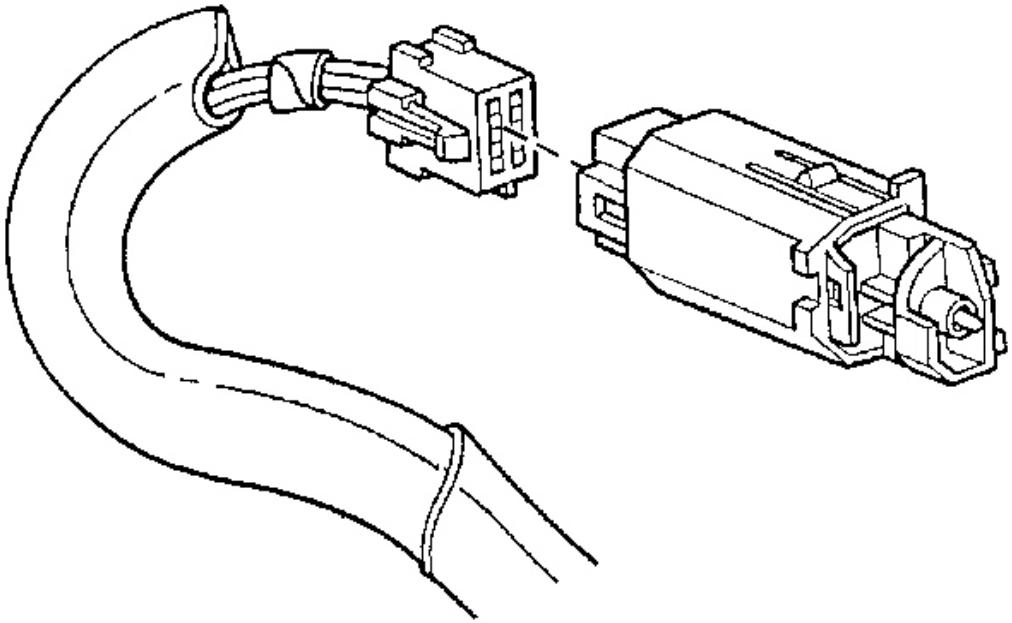

Fig. 115: Hazard Warning Switch Electrical Connector
Courtesy of GENERAL MOTORS CORP.

16. Disconnect the hazard warning switch electrical connector.
17. Remove the upper trim pad from the vehicle.

Installation Procedure

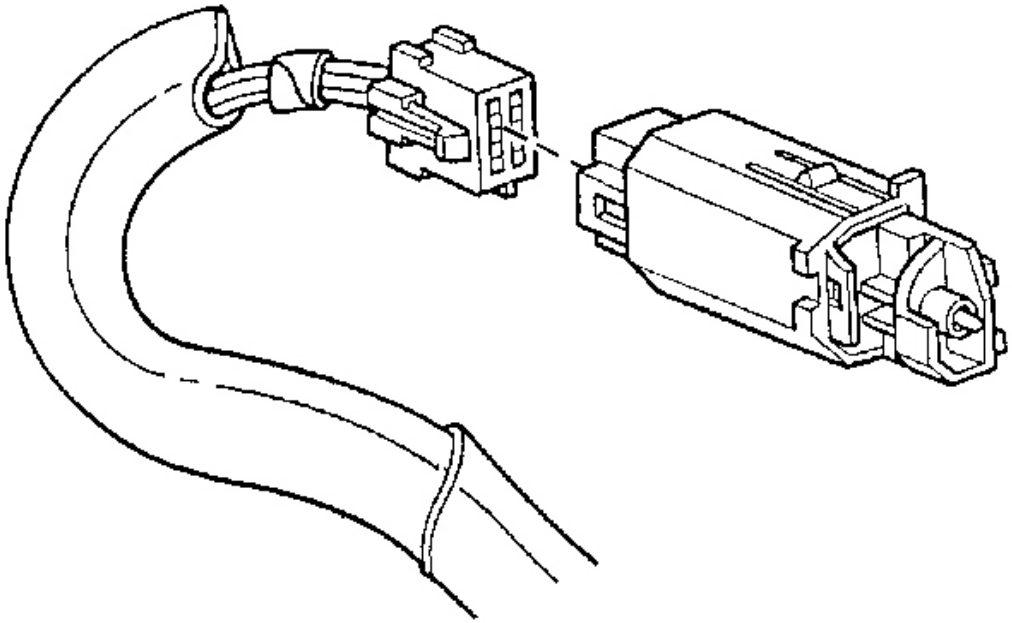

Fig. 116: Hazard Warning Switch Electrical Connector
Courtesy of GENERAL MOTORS CORP.

1. Connect the hazard warning switch electrical connector.

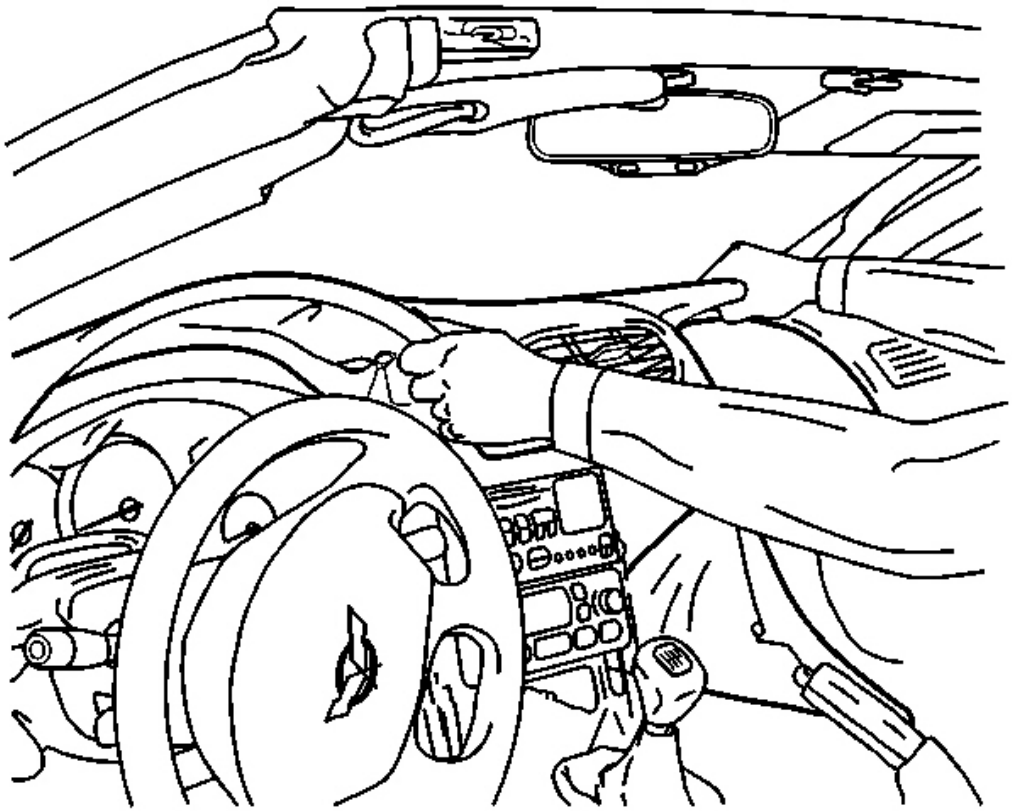

Fig. 117: Upper Trim Pad At Windshield To LH & RH Side Of Trim Pad At Hinge Pillars
Courtesy of GENERAL MOTORS CORP.

2. Install the IP upper trim pad into position.
    1. Tilt the forward edge of the trim pad down slightly.
    2. SLOWLY begin to move the trim pad into position while guiding the tabs on the LH and RH side of the trim pad past the hinge pillars.
    3. Locate the trim pad by guiding the alignment notch on the underside of the pad onto the alignment pin on the dash panel.
    4. Lower the rearward edge of the pad into place.
3. Remove the DRL and sunload sensors, if equipped, from the openings in the windshield defroster duct and position above the trim pad.

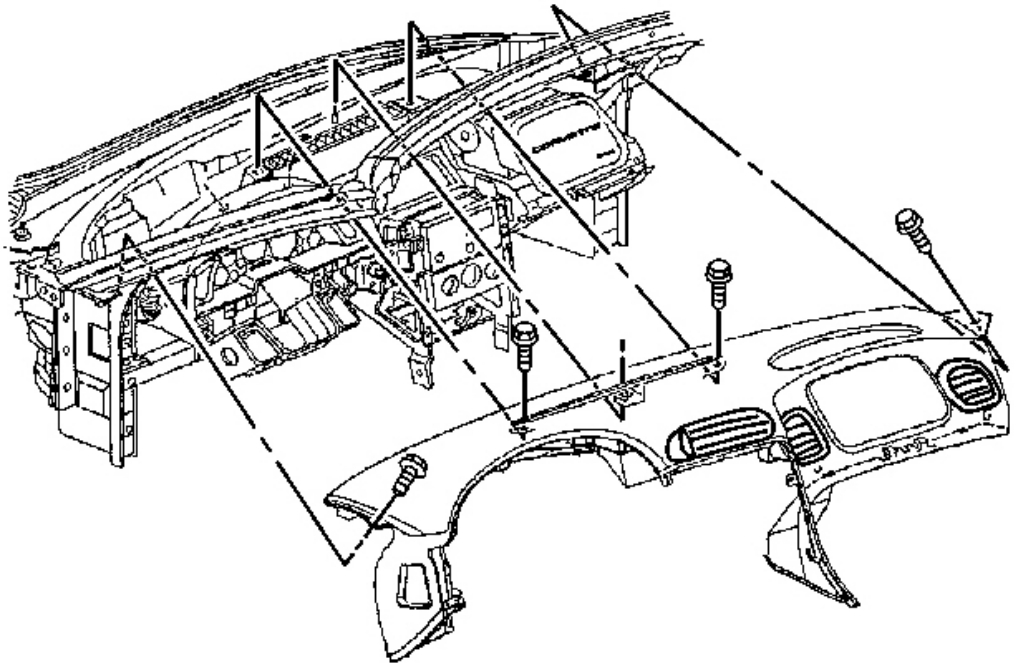

Fig. 118: Upper Trim Pad To Windshield Defroster Duct
Courtesy of GENERAL MOTORS CORP.

NOTE: Refer to Fastener Notice in Cautions and Notices.

4. Install the screws retaining the upper trim pad to the windshield defroster duct.

   Tighten: Tighten the IP upper trim pad to windshield defroster duct screws to 1.9 N.m (17 lb in).

5. Install the screws retaining the upper trim pad to the LH and RH hinge pillars.

   Tighten: Tighten the IP upper trim pad to LH and RH hinge pillar screws to 2.5 N.m (22 lb in).

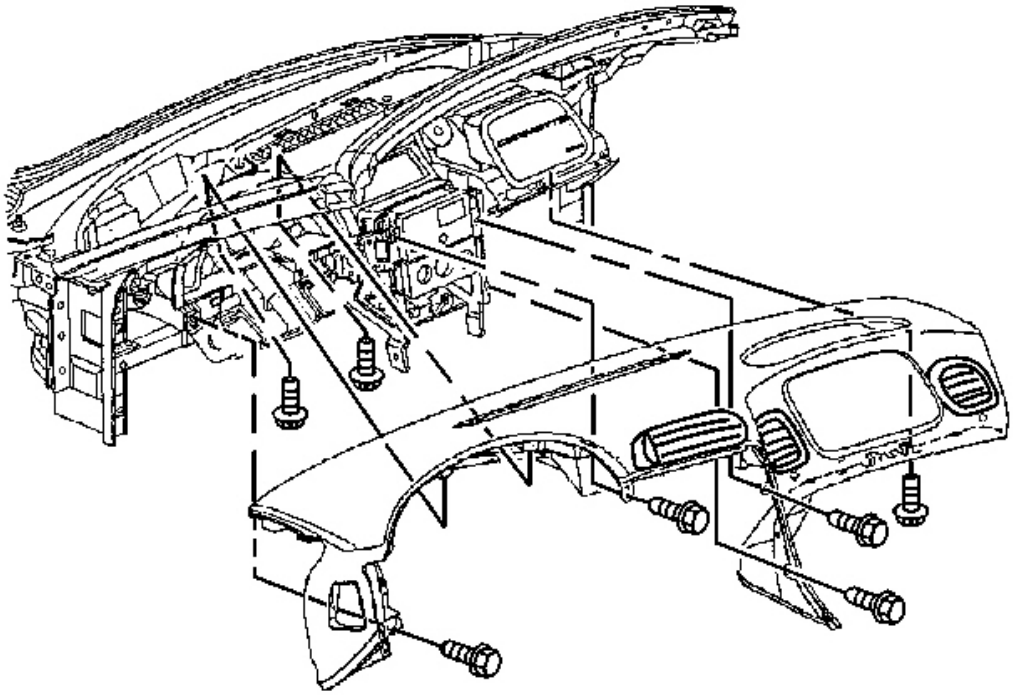

Fig. 119: Upper Trim Pad To Driver Knee Bolster Outer Bracket & Center Support Bracket
Courtesy of GENERAL MOTORS CORP.

6. Install the screws retaining the upper trim pad to the driver knee bolster outer bracket, the center support bracket and the passenger SIR bracket.

   Tighten:
   - Tighten the IP upper trim pad to driver knee bolster outer bracket screw to 1.9 N.m (17 lb in).
   - Tighten the IP upper trim pad to IP center support bracket screws to 1.9 N.m (17 lb in).
   - Tighten the IP upper trim pad to passenger SIR bracket screw to 1.9 N.m (17 lb in).

7. Install the screws retaining the IP cluster bezel to the upper trim pad.

   Tighten: Tighten the IP cluster bezel to IP upper trim pad screws to 1.3 N.m (12 lb in).

8. Install the windshield side garnish moldings. Refer to **Windshield Side Garnish Molding Replacement** in Interior Trim.
9. Install the windshield defroster grille. Refer to **Defroster Grille Replacement** .
10. Install the instrument panel compartment. Refer to **Compartment Replacement - Instrument Panel**

(I/P) .

11. Install the driver knee bolster trim panel. Refer to **Trim Panel Replacement - Knee Bolster** .
12. Install the IP accessory trim plate. Refer to **Trim Plate Replacement - Instrument Panel (I/P) Accessory** .
13. Install the console. Refer to **Console Replacement** .

BRACKET REPLACEMENT - KNEE BOLSTER (PASSENGER)

Removal Procedure

1. Remove the console. Refer to **Console Replacement** .
2. Remove the IP accessory trim plate. Refer to **Trim Plate Replacement - Instrument Panel (I/P) Accessory** .
3. Remove the driver knee bolster trim panel. Refer to **Trim Panel Replacement - Knee Bolster** .
4. Remove the IP passenger compartment. Refer to **Compartment Replacement - Instrument Panel (I/P)** .
5. Remove the IP upper trim pad. Refer to **Trim Pad Replacement - Instrument Panel (I/P) Upper** .

IMPORTANT: The following step must be performed to assure proper trim fits during installation.

6. Mark the location of the passenger knee bolster bracket. Refer to **Instrument Panel (I/P) Disassembly Precautions** .
7. Remove the bolts retaining the passenger knee bolster bracket to the IP center support bracket.

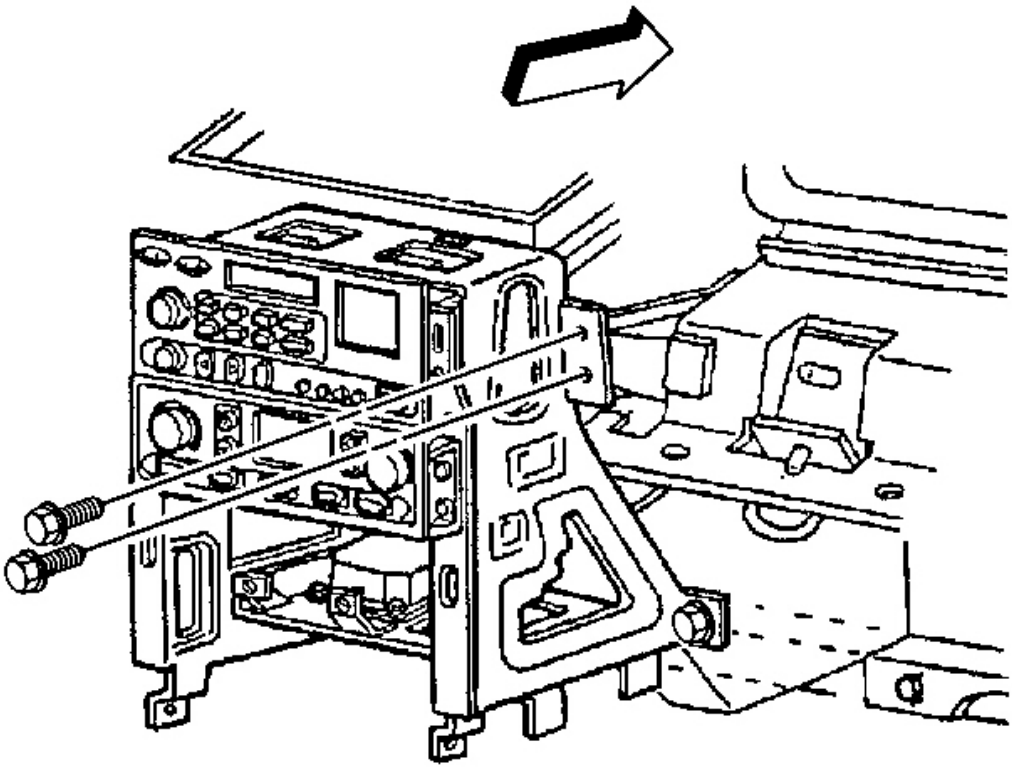

Fig. 120: Passenger Knee Bolster Bracket To IP Center Support Bracket Retaining Bolts
Courtesy of GENERAL MOTORS CORP.

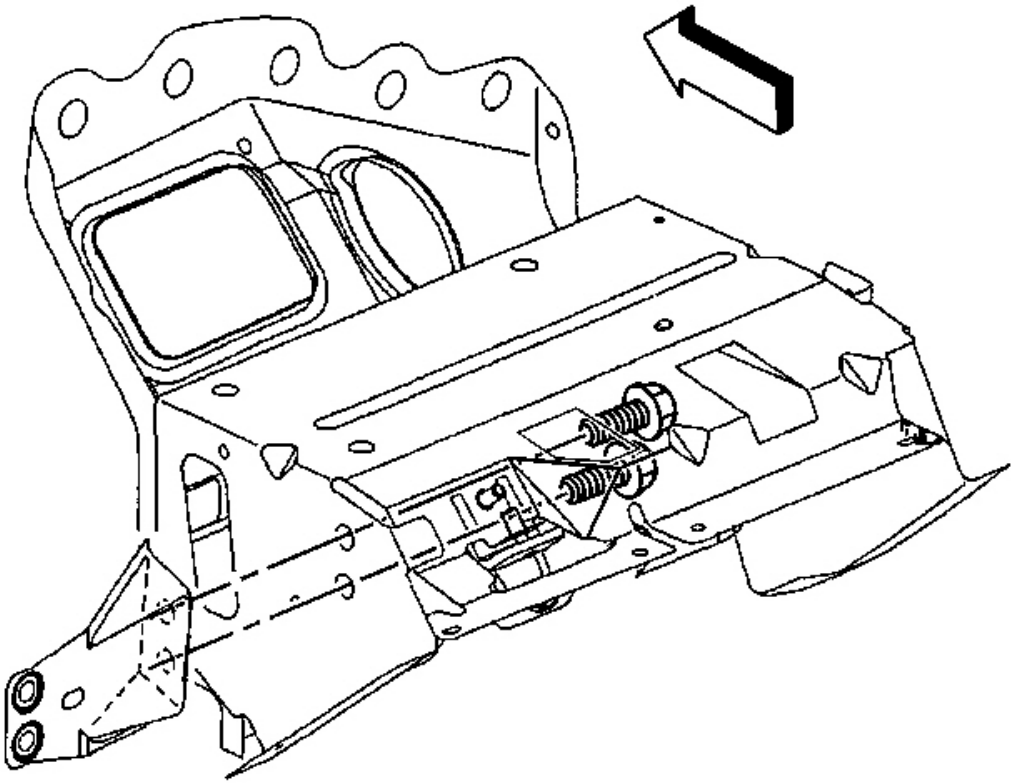

Fig. 121: Passenger Knee Bolster Bracket To Passenger SIR Bracket
Courtesy of GENERAL MOTORS CORP.

8. Remove the bolts retaining the passenger knee bolster bracket to the passenger SIR bracket.
9. Remove the passenger knee bolster bracket.

Installation Procedure

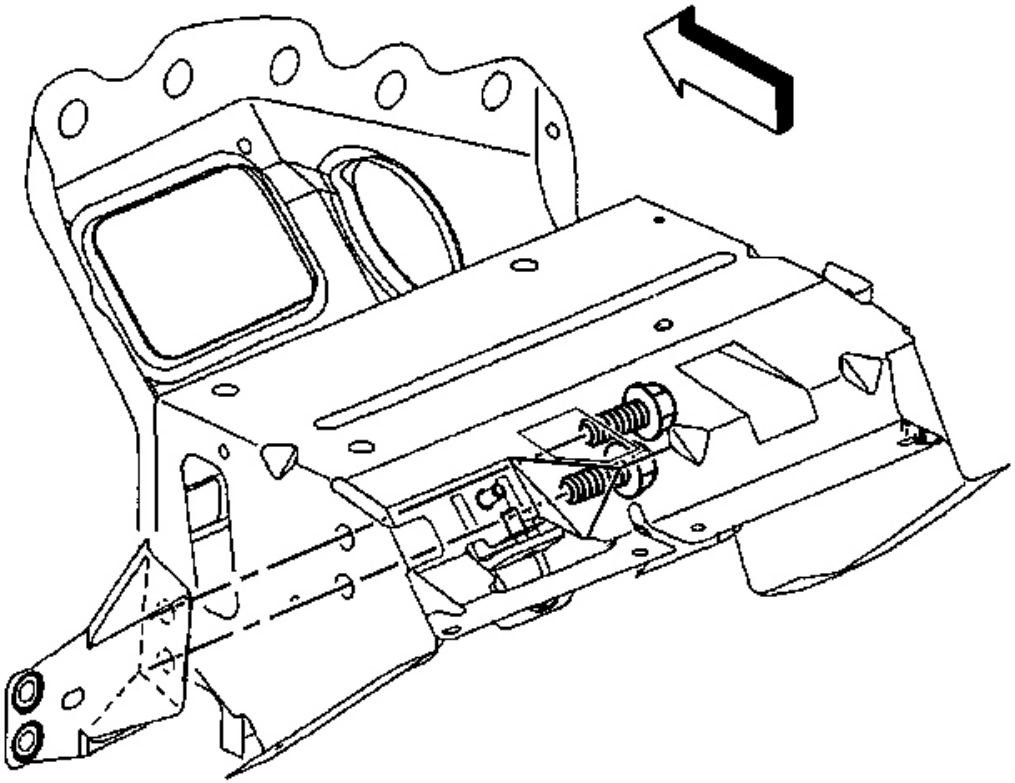

Fig. 122: Passenger Knee Bolster Bracket To Passenger SIR Bracket
Courtesy of GENERAL MOTORS CORP.

1. Install the passenger knee bolster bracket as marked prior to removal.

NOTE: **Refer to Fastener Notice in Cautions and Notices.**

2. Install the passenger knee bolster bracket to passenger SIR bracket retaining bolts.

Tighten: Tighten the passenger knee bolster bracket retaining bolts to 12 N.m (106 lb in).

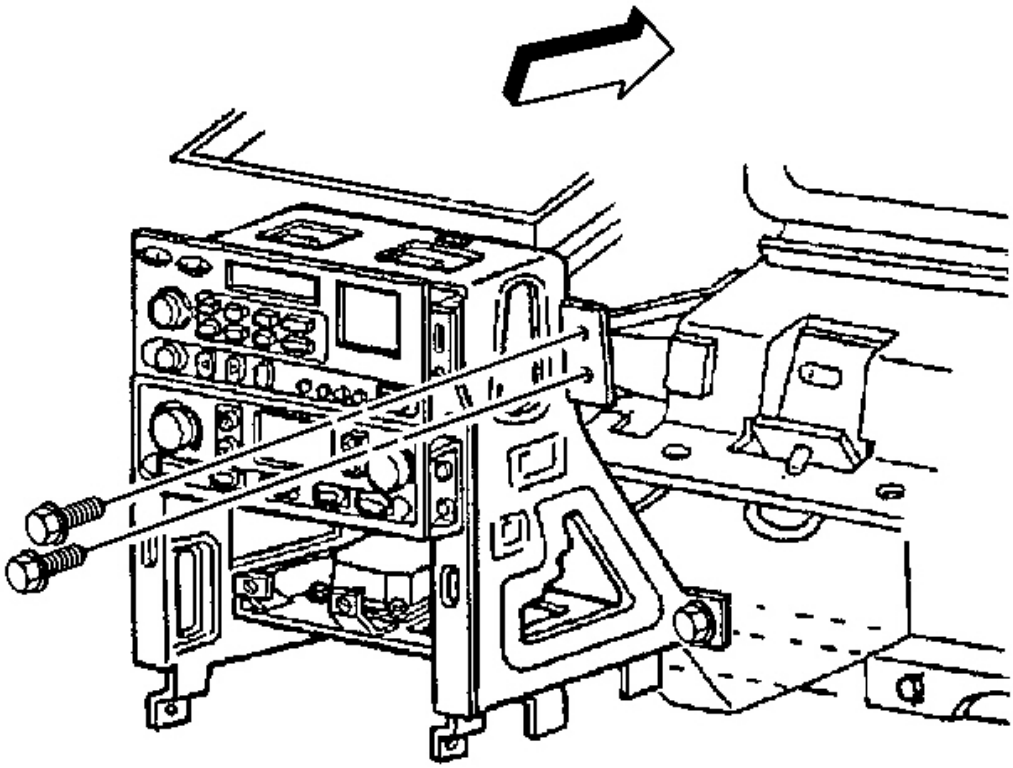

Fig. 123: Passenger Knee Bolster Bracket To IP Center Support Bracket Retaining Bolts
Courtesy of GENERAL MOTORS CORP.

3. Install the passenger knee bolster bracket to IP center support bracket retaining bolts.

   Tighten: Tighten the passenger knee bolster bracket retaining bolts to 12 N.m (106 lb in).

4. Install the IP upper trim pad. Refer to **Trim Pad Replacement - Instrument Panel (I/P) Upper** .
5. Install the IP passenger compartment. Refer to **Compartment Replacement - Instrument Panel (I/P)** .
6. Install the driver knee bolster trim panel. Refer to **Trim Panel Replacement - Knee Bolster** .
7. Install the IP accessory trim plate. Refer to **Trim Plate Replacement - Instrument Panel (I/P) Accessory** .
8. Install the console. Refer to **Console Replacement** .

BRACKET REPLACEMENT - KNEE BOLSTER (DRIVER)

Removal Procedure

1. Remove the console. Refer to **Console Replacement** .
2. Remove the IP accessory trim plate. Refer to **Trim Plate Replacement - Instrument Panel (I/P) Accessory** .
3. Remove the driver knee bolster trim panel. Refer to **Trim Panel Replacement - Knee Bolster** .
4. Release the ignition switch and hazard warning switch wiring harness retainers from the driver knee bolster bracket.

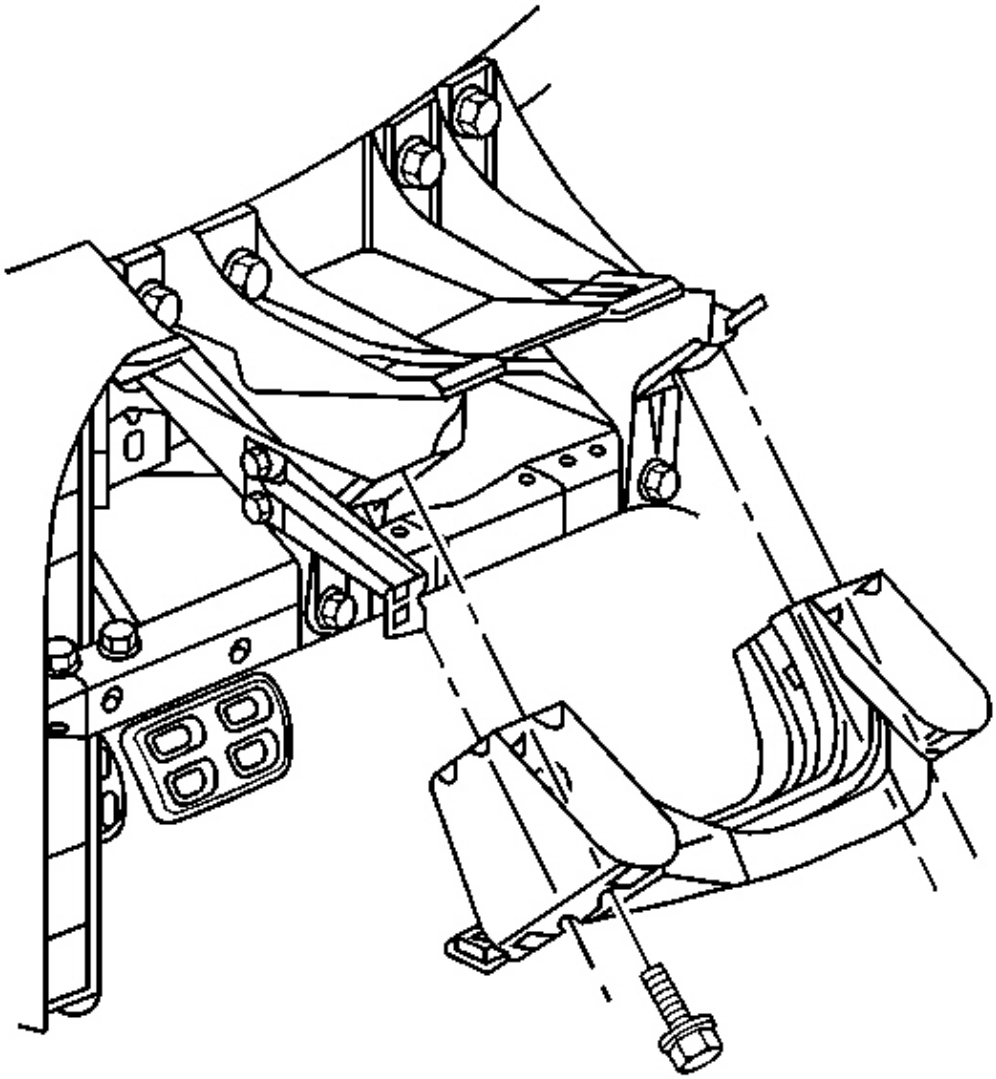

Fig. 124: Driver Knee Bolster Bracket To Steering Column Bracket

Courtesy of GENERAL MOTORS CORP.

IMPORTANT: The following step must be performed to assure proper trim fits during installation.

5. Mark the location of the driver knee bolster bracket. Refer to **Instrument Panel (I/P) Disassembly Precautions** .
6. Remove the screws retaining the driver knee bolster bracket to the steering column bracket.
7. Remove the driver knee bolster bracket.

Installation Procedure

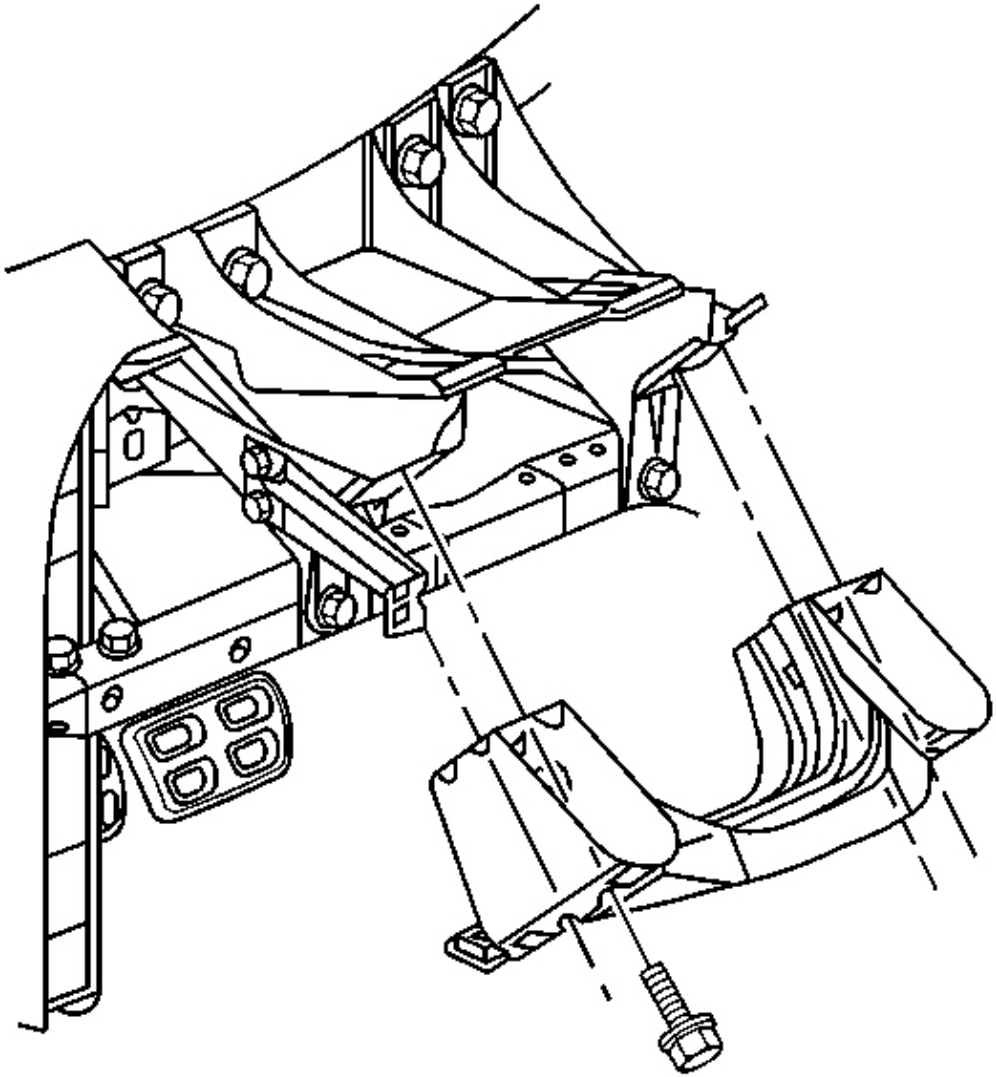

Fig. 125: Driver Knee Bolster Bracket To Steering Column Bracket
Courtesy of GENERAL MOTORS CORP.

1. Install the driver knee bolster bracket into position as marked prior to removal.

NOTE: Refer to Fastener Notice in Cautions and Notices.

2. Install the screws which retain the driver knee bolster bracket to the steering column bracket.

Tighten: Tighten the driver knee bolster bracket retaining screws to 1.9 N.m (17 lb in).

3. Secure the ignition switch and hazard warning switch wiring harness retainers to the driver knee bolster bracket.
4. Install the driver knee bolster trim panel. Refer to **Trim Panel Replacement - Knee Bolster** .
5. Install the IP accessory trim plate. Refer to **Trim Plate Replacement - Instrument Panel (I/P) Accessory** .
6. Install the console. Refer to **Console Replacement** .

BRACKET REPLACEMENT - KNEE BOLSTER (DRIVER OUTER)

Removal Procedure

1. Remove the console. Refer to **Console Replacement** .
2. Remove the IP accessory trim plate. Refer to **Trim Plate Replacement - Instrument Panel (I/P) Accessory** .
3. Remove the driver knee bolster trim panel. Refer to **Trim Panel Replacement - Knee Bolster** .

IMPORTANT: The following step must be performed to assure proper trim fits during installation.

4. Mark the location of the driver knee bolster outer bracket. Refer to **Instrument Panel (I/P) Disassembly Precautions** .
5. Remove the screws retaining the driver knee bolster outer bracket to the steering column bracket.

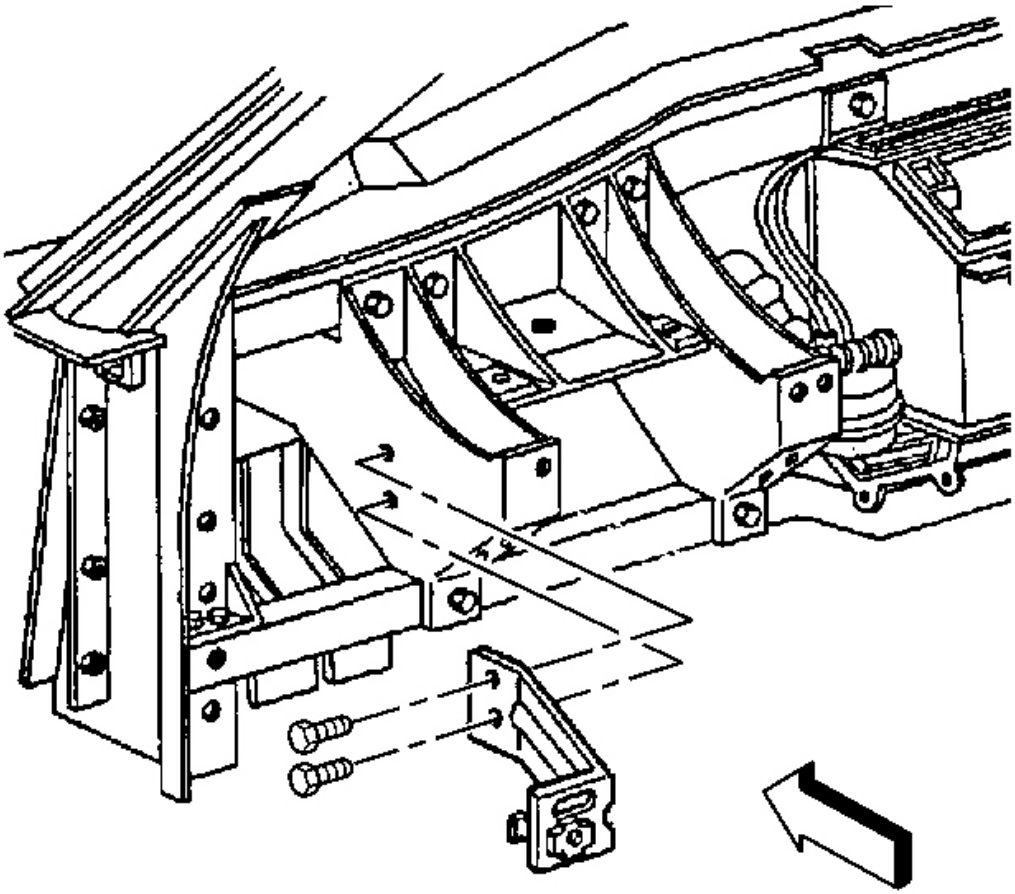

Fig. 126: Driver Knee Bolster Outer Bracket To Steering Column Bracket
Courtesy of GENERAL MOTORS CORP.

6. Remove the driver knee bolster outer bracket.

Installation Procedure

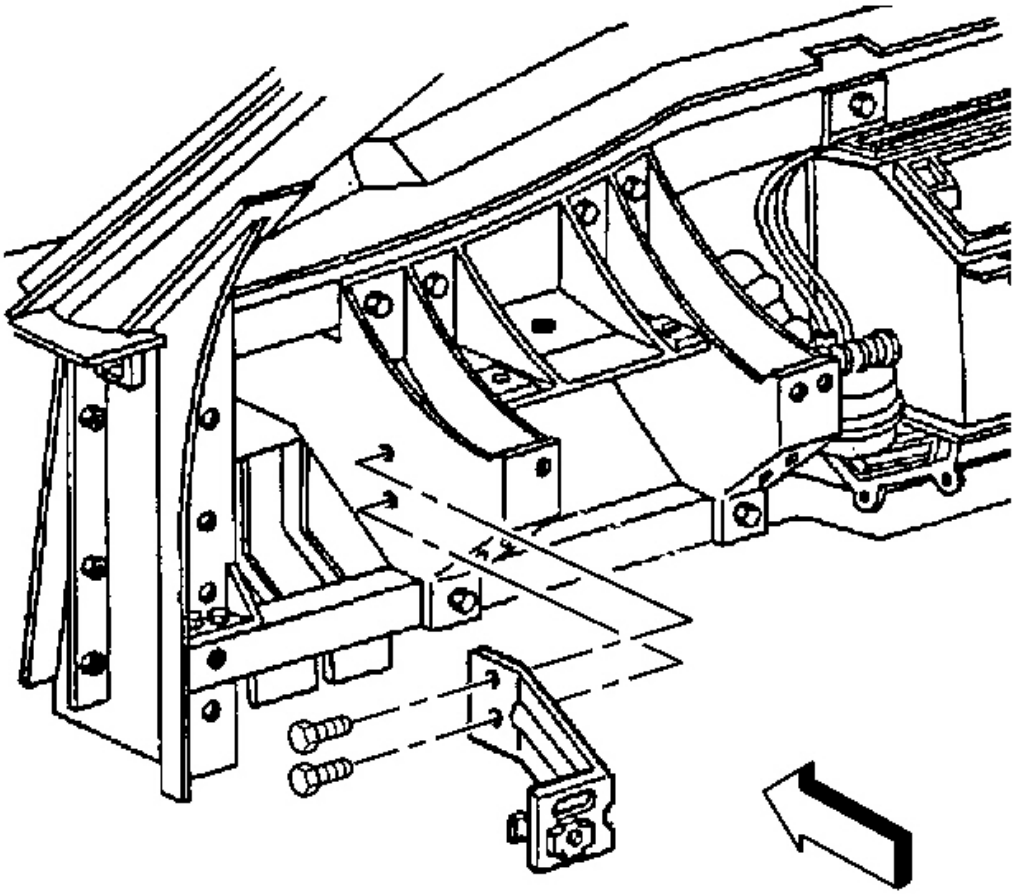

Fig. 127: Driver Knee Bolster Outer Bracket To Steering Column Bracket
Courtesy of GENERAL MOTORS CORP.

1. Install the outer driver knee bolster bracket into position as marked prior to removal.

NOTE: **Refer to Fastener Notice in Cautions and Notices.**

2. Install the driver knee bolster outer bracket to steering column bracket retaining screws.

   Tighten: Tighten the driver knee bolster outer bracket retaining screws to 1.9 N.m (17 lb in).

3. Install the driver knee bolster trim panel. Refer to **Trim Panel Replacement - Knee Bolster** .
4. Install the IP accessory trim plate. Refer to **Trim Plate Replacement - Instrument Panel (I/P) Accessory** .

5. Install the console. Refer to **Console Replacement** .

BRACKET REPLACEMENT - INSTRUMENT PANEL (I/P) CENTER SUPPORT

Removal Procedure

1. Disable the SIR system. Refer to **SIR Disabling and Enabling Zone 4** in SIR.

CAUTION: Refer to Battery Disconnect Caution in Cautions and Notices.

2. Disconnect the negative battery cable.
3. Remove the console. Refer to **Console Replacement** .
4. Remove the I/P accessory trim plate. Refer to **Trim Plate Replacement - Instrument Panel (I/P) Accessory** .
5. Remove the driver knee bolster trim panel. Refer to **Trim Panel Replacement - Knee Bolster** .
6. Remove the I/P passenger compartment. Refer to **Compartment Replacement - Instrument Panel (I/P)** .
7. Remove the I/P upper trim pad. Refer to **Trim Pad Replacement - Instrument Panel (I/P) Upper** .
8. Remove the park/lock control cable (A/T). Refer to **Park Lock Cable Replacement** in Automatic Transmission - 4L60-E.

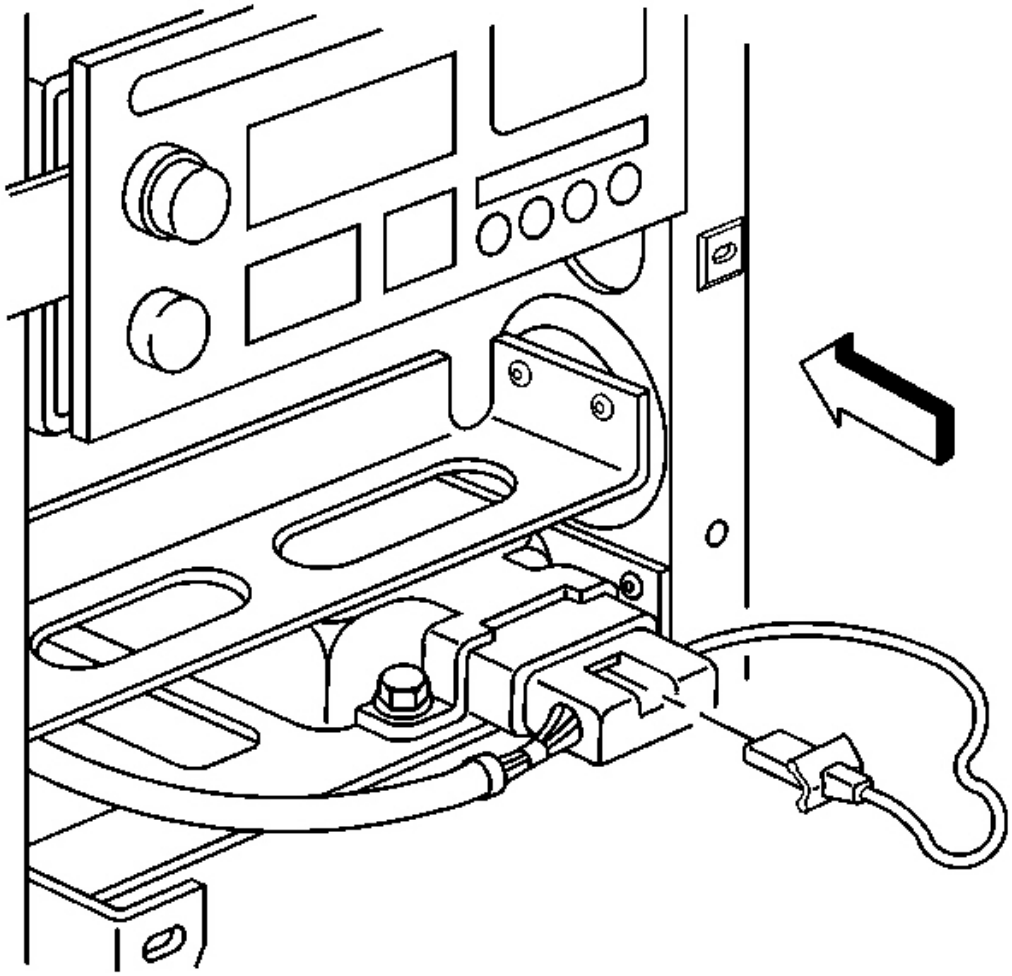

Fig. 128: CPA To SDM Electrical Connector
Courtesy of GENERAL MOTORS CORP.

9. Remove the connector position assurance (CPA) from the electrical connector on the inflatable restraint sensing and diagnostic module (SDM).

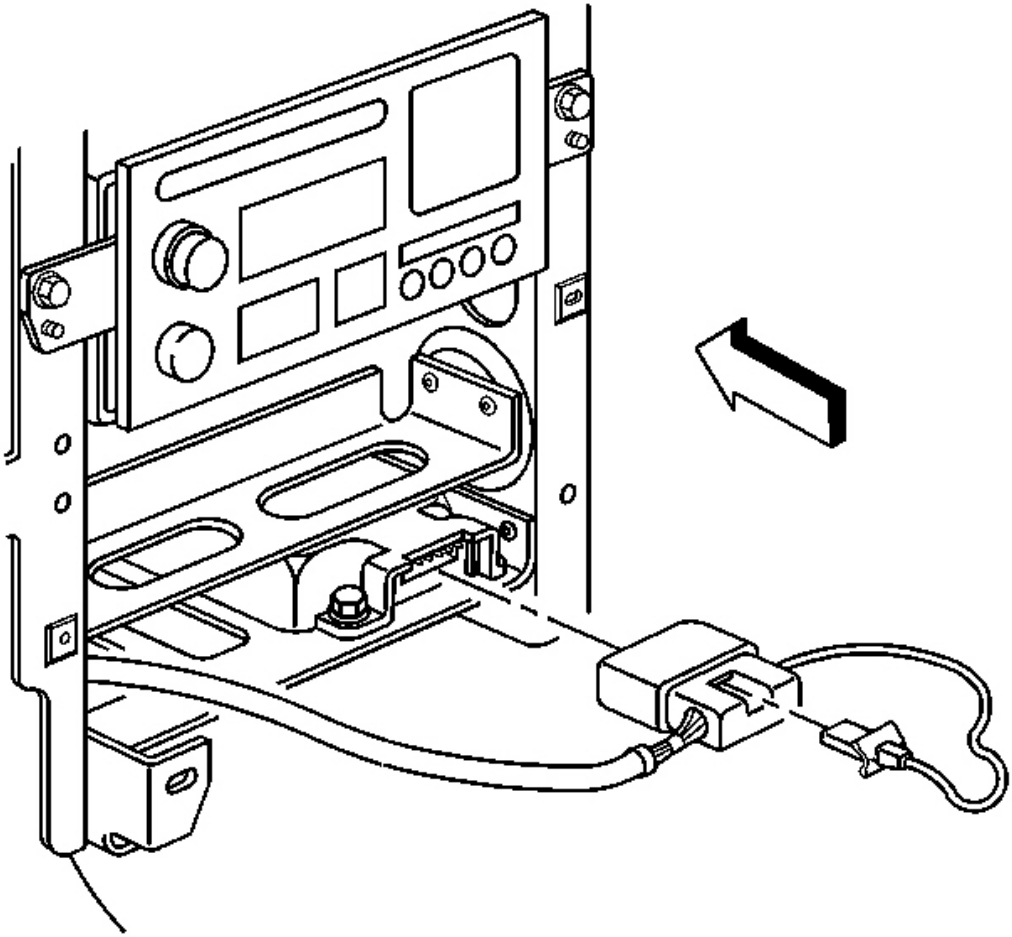

Fig. 129: SDM Electrical Connector
Courtesy of GENERAL MOTORS CORP.

10. Disconnect the SDM electrical connector.
11. Remove the ignition switch bolts, then reposition the ignition switch. Refer to **Ignition Switch Replacement** .

IMPORTANT: The following step must be performed to assure proper trim fit during installation.

12. Mark the location of the I/P center support bracket. Refer to **Instrument Panel (I/P) Disassembly Precautions** .
13. Remove the right bolt that secures the center support bracket to the driveline tunnel.

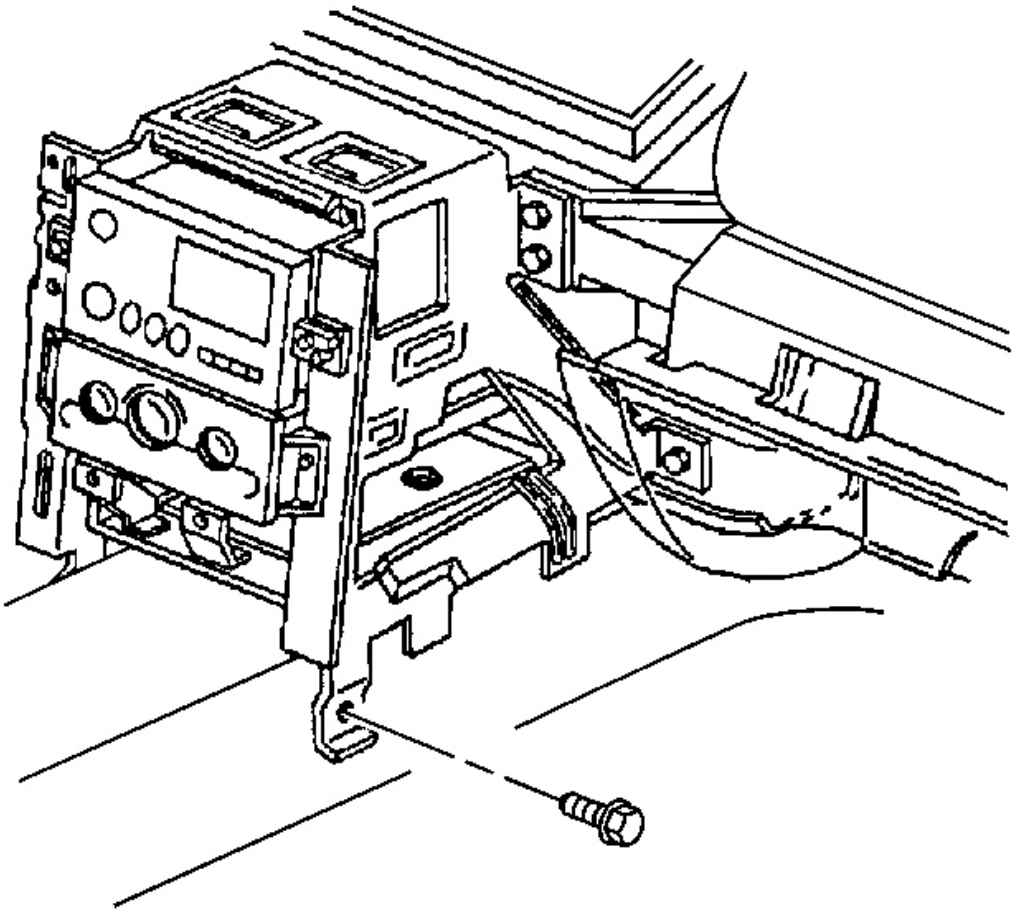

Fig. 130: Right Bolts To Center Support Bracket At Driveline Tunnel
Courtesy of GENERAL MOTORS CORP.

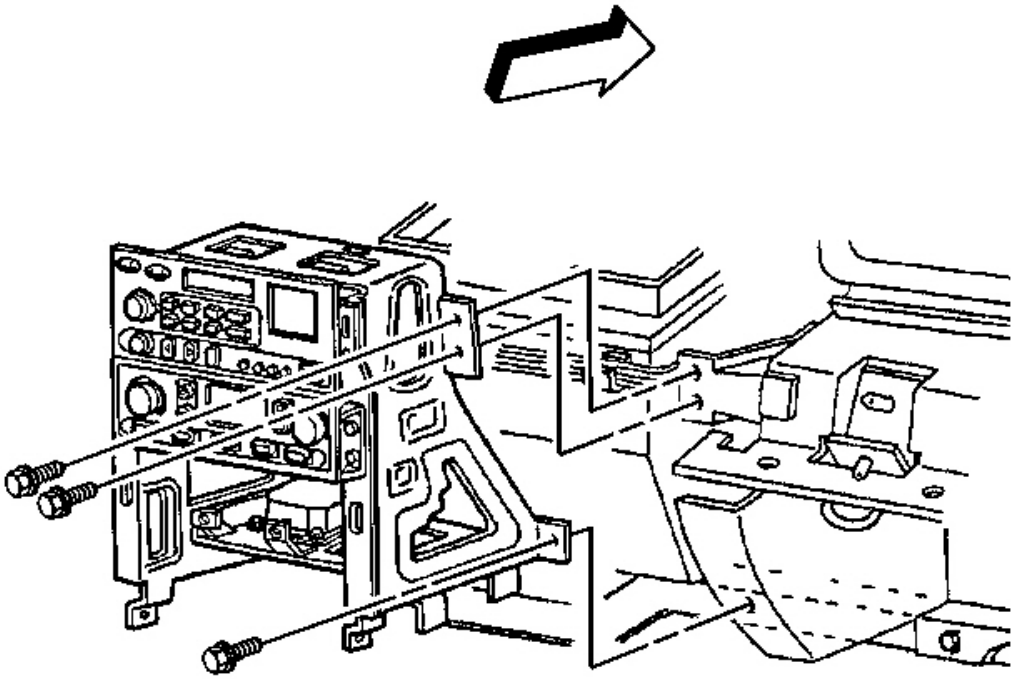

Fig. 131: Right Bolt To Center Support Bracket At I/P Lower Support Beam
Courtesy of GENERAL MOTORS CORP.

14. Remove the bolts that secure the center support bracket to the passenger knee bolster bracket.
15. Remove the right bolt that secures the center support bracket to the I/P lower support beam.

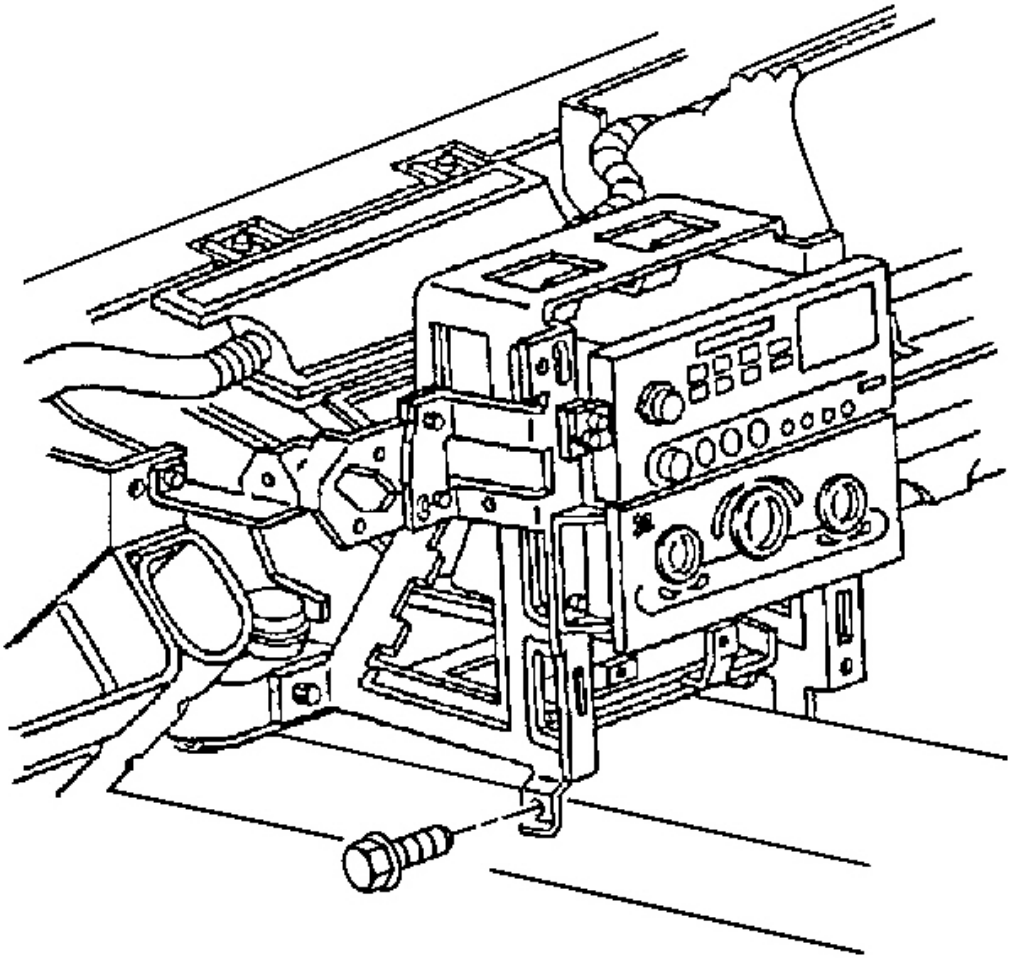

Fig. 132: Right & Left Bolt To Center Support Bracket At Driveline Tunnel
Courtesy of GENERAL MOTORS CORP.

16. Remove the right bolt that secures the center support bracket to the driveline tunnel.

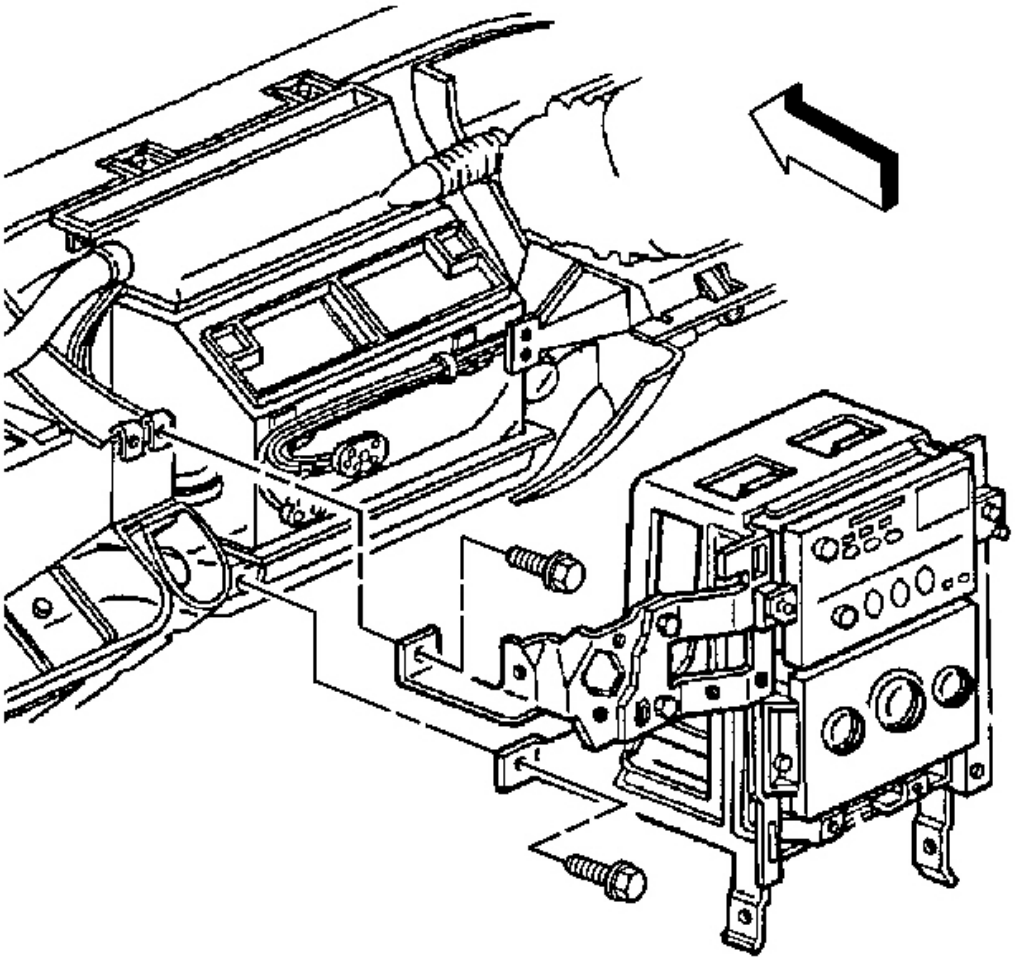

Fig. 133: Center Support Bracket To I/P Lower Support Beam
Courtesy of GENERAL MOTORS CORP.

IMPORTANT: The following step must be performed to assure proper trim fit during installation.

17. Mark the location of the ignition switch housing bracket. Refer to **Instrument Panel (I/P) Disassembly Precautions** .
18. Remove the bolt that secures the ignition switch housing bracket to the steering column bracket.
19. Remove the left bolt that secures the center support bracket to the I/P lower support beam.
20. Slowly pull the center support bracket away from the I/P to access the radio control and HVAC control connectors.

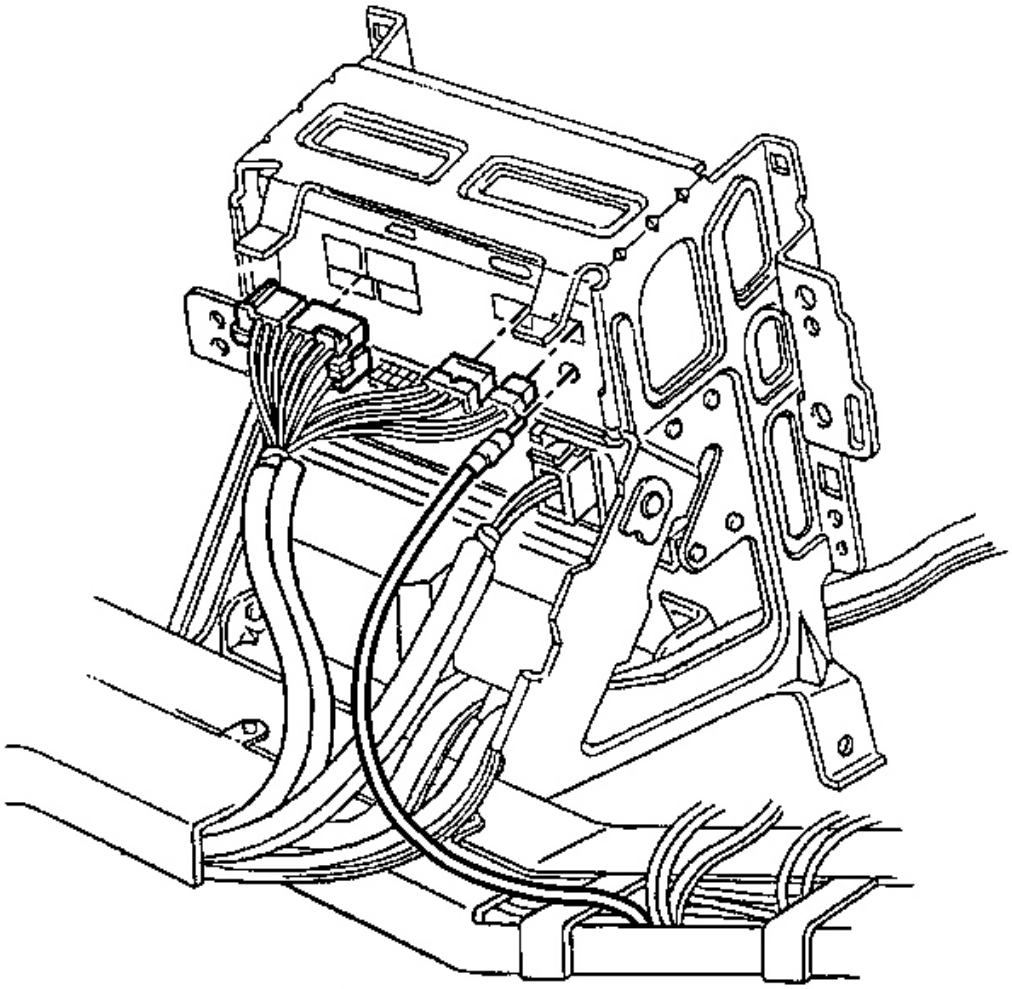

Fig. 134: Connectors To Radio Control Electrical/Audio & Coaxial Cable
Courtesy of GENERAL MOTORS CORP.

21. Disconnect the connectors from the radio control electrical/audio and the coaxial cable.
22. Disconnect the HVAC control electrical connectors and the vacuum harness connectors (C60).
23. Release the I/P wiring harness retainer and the parking brake connector clip from the center support bracket.

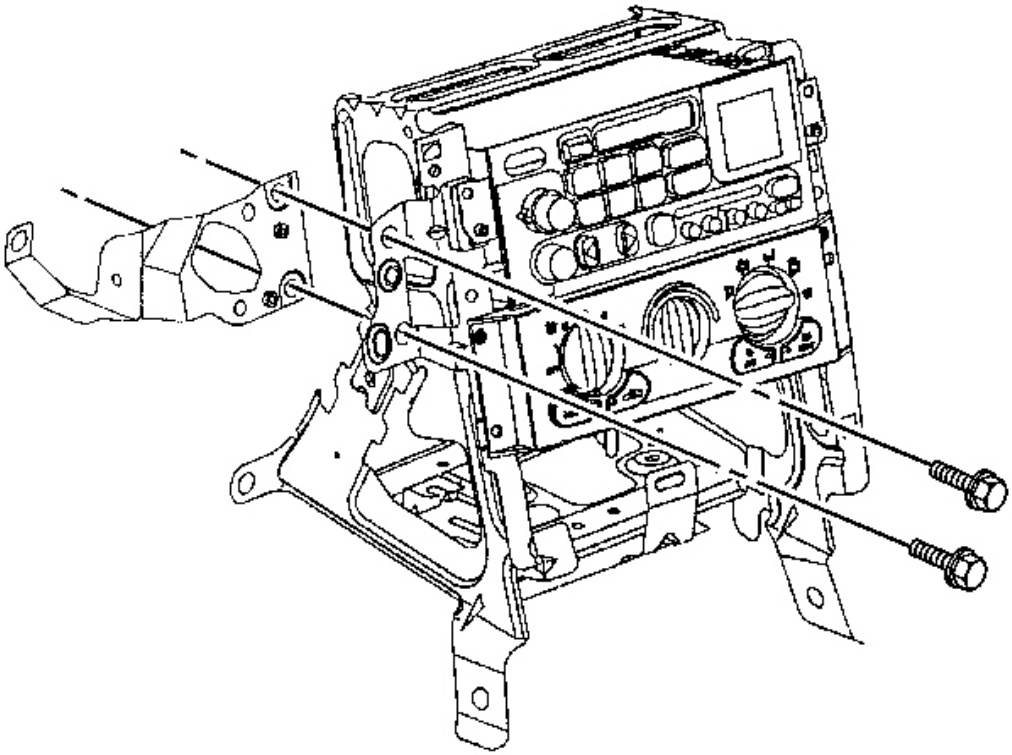

Fig. 135: Ignition Switch Housing Bracket To IP Center Support Bracket
Courtesy of GENERAL MOTORS CORP.

24. Remove the bolts that secure the ignition switch housing bracket to the center support bracket.
25. Remove the ignition switch housing bracket.

IMPORTANT: Take note of the I/P harness routing through the I/P center support bracket prior to removal.

26. Remove the I/P harness from the center support bracket.
27. Remove the center support bracket from the vehicle.

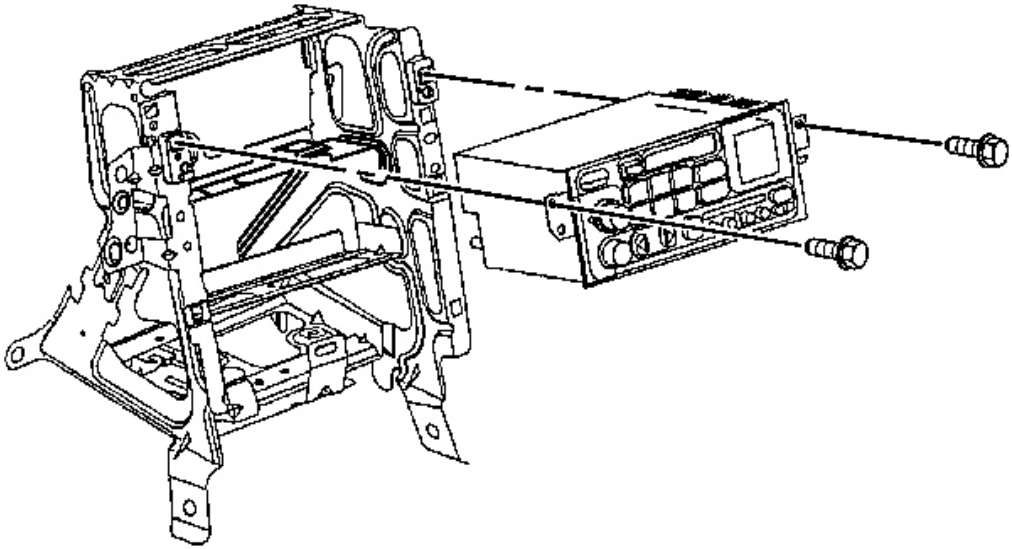

Fig. 136: Radio Control & Screws
Courtesy of GENERAL MOTORS CORP.

28. Remove the radio control retaining screws.

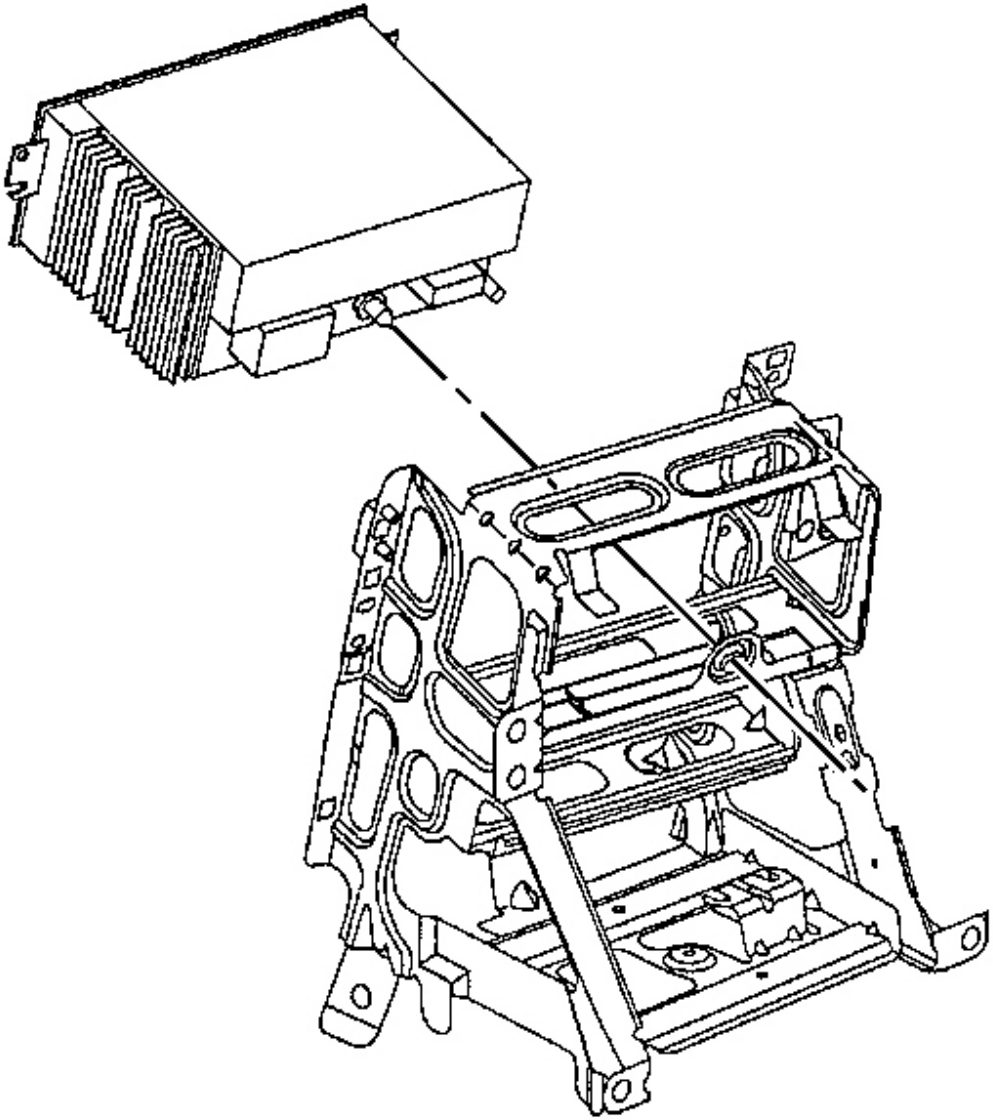

Fig. 137: Radio Control At Center Support Bracket
Courtesy of GENERAL MOTORS CORP.

29. Remove the radio control from the center support bracket.

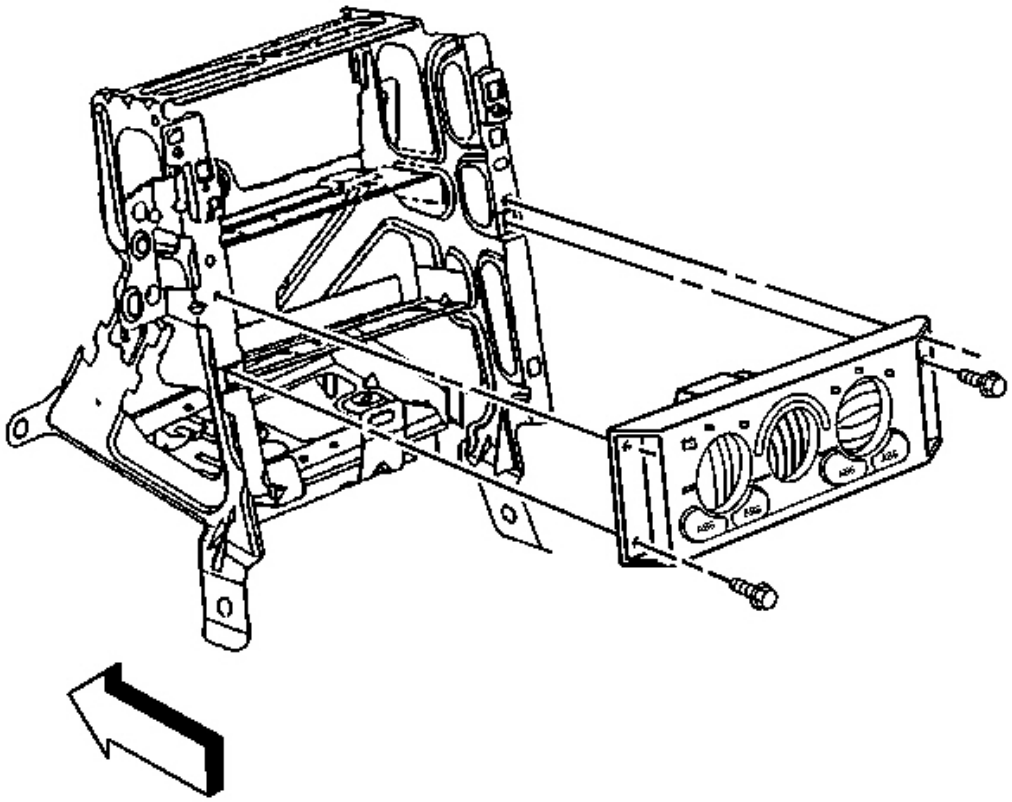

Fig. 138: HVAC Control At Center Support Bracket
Courtesy of GENERAL MOTORS CORP.

30. Remove the HVAC control retaining screws.
31. Remove the HVAC control from the center support bracket.
32. Remove the SDM from the center support bracket. Refer to **Inflatable Restraint Sensing and Diagnostic Module Replacement** in SIR.

Installation Procedure

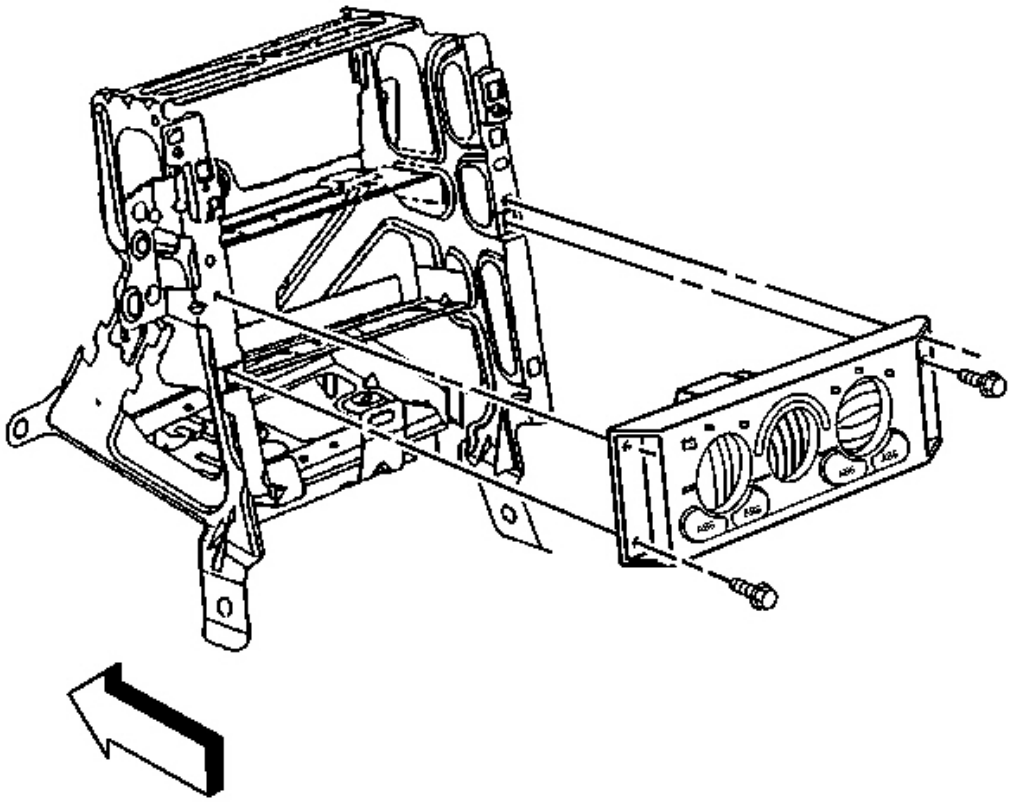

Fig. 139: HVAC Control At Center Support Bracket
Courtesy of GENERAL MOTORS CORP.

1. Install the SDM to the center support bracket. Refer to **Inflatable Restraint Sensing and Diagnostic Module Replacement** in SIR.
2. Install the HVAC control to the center support bracket.

NOTE: **Refer to Fastener Notice in Cautions and Notices.**

3. Install the HVAC control retaining screws.

   Tighten: Tighten the screws to 1.9 N.m (17 lb in).

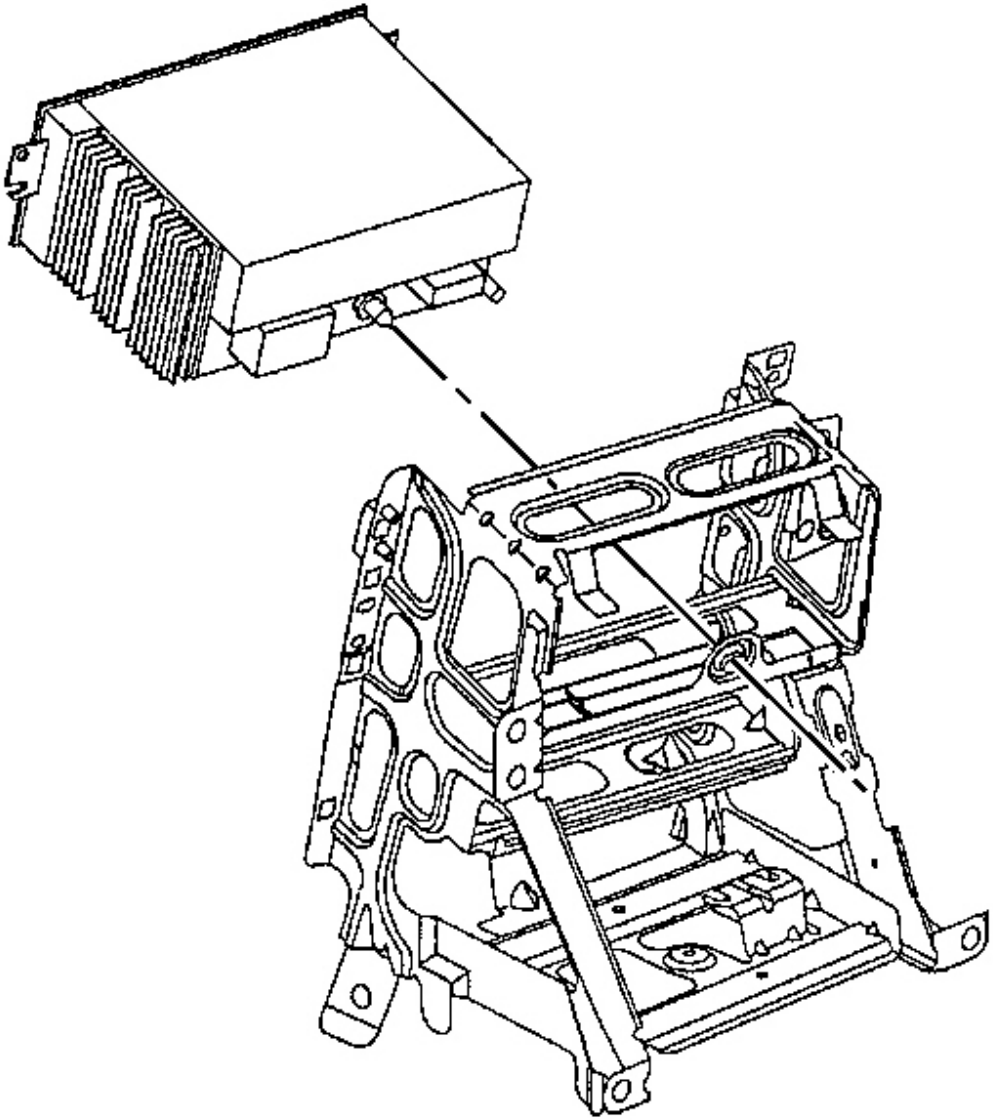

Fig. 140: Radio Control At Center Support Bracket
Courtesy of GENERAL MOTORS CORP.

4. Align the radio control locator to the center support bracket locator hole, then push to install the radio control.

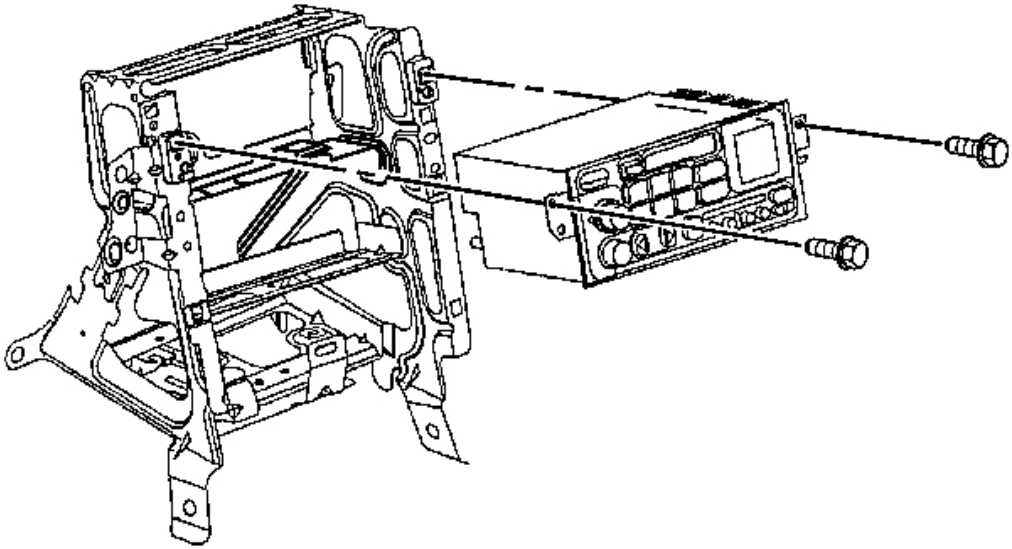

Fig. 141: Radio Control & Screws
Courtesy of GENERAL MOTORS CORP.

5. Install the radio control retaining screws.

   Tighten: Tighten the screws to 2.5 N.m (22 lb in).

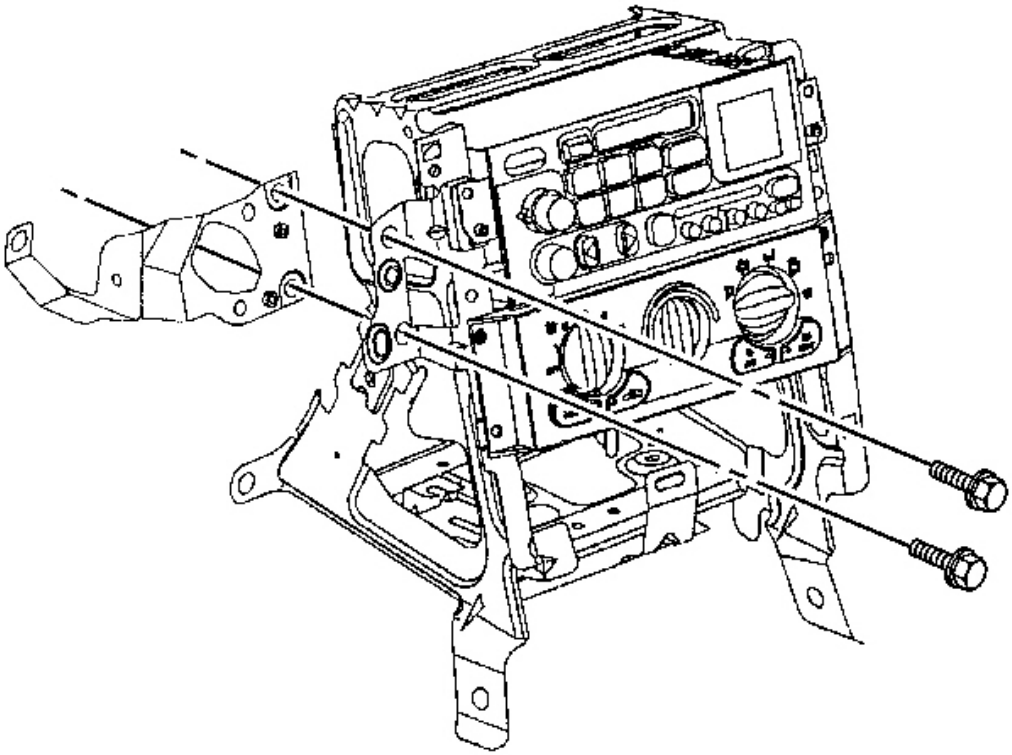

Fig. 142: Ignition Switch Housing Bracket To IP Center Support Bracket
Courtesy of GENERAL MOTORS CORP.

6. Position the ignition switch housing bracket to the center support bracket as marked prior to removal.
7. Install the bolts that secure the ignition switch housing bracket to the center support bracket.

   Tighten: Tighten the bolts to 12 N.m (106 lb in).

8. Install the center support bracket to the vehicle.
9. Install the I/P wiring harness to the center support bracket as noted prior to removal.

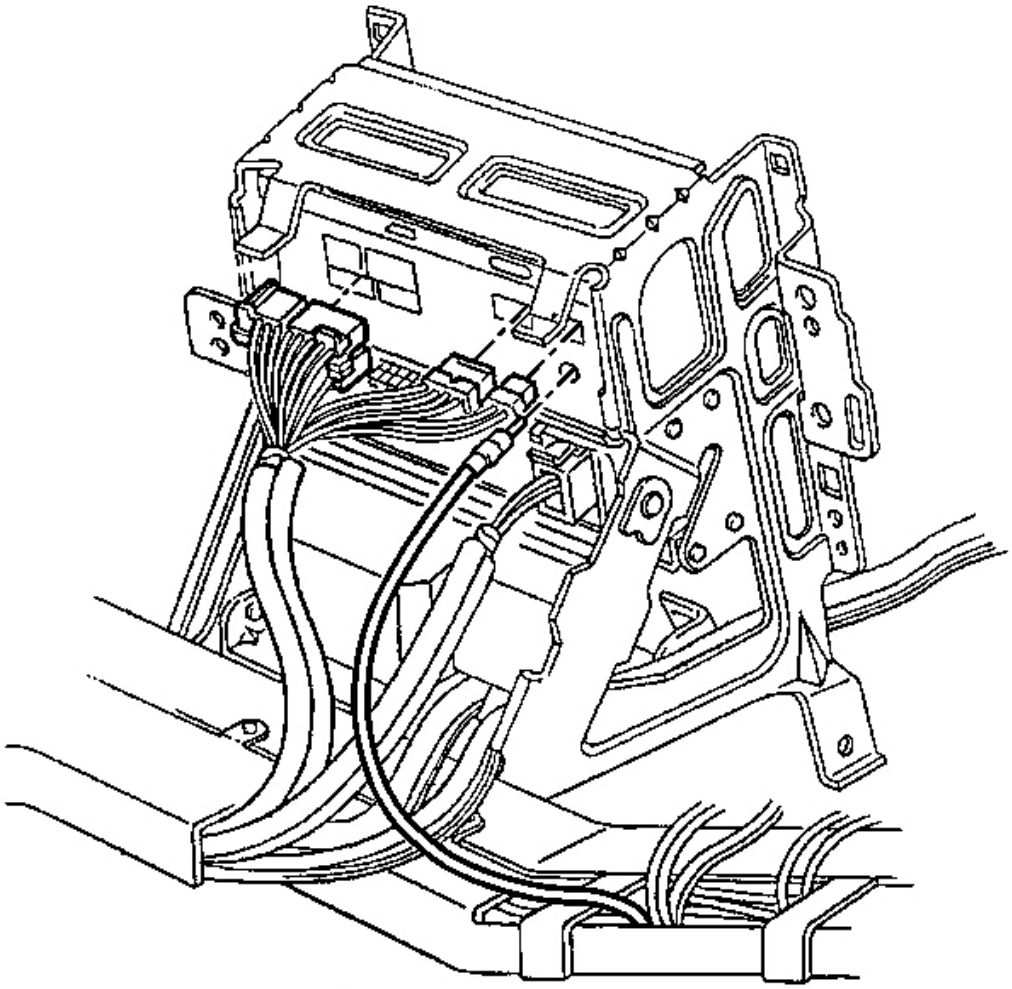

Fig. 143: Connectors To Radio Control Electrical/Audio & Coaxial Cable
Courtesy of GENERAL MOTORS CORP.

10. Secure the I/P wiring harness retainer and the parking brake connector clip to the center support bracket.
11. Connect the HVAC control electrical connectors and the vacuum harness connectors (C60).
12. Connect the radio control electrical/audio connectors and the coaxial cable connectors.

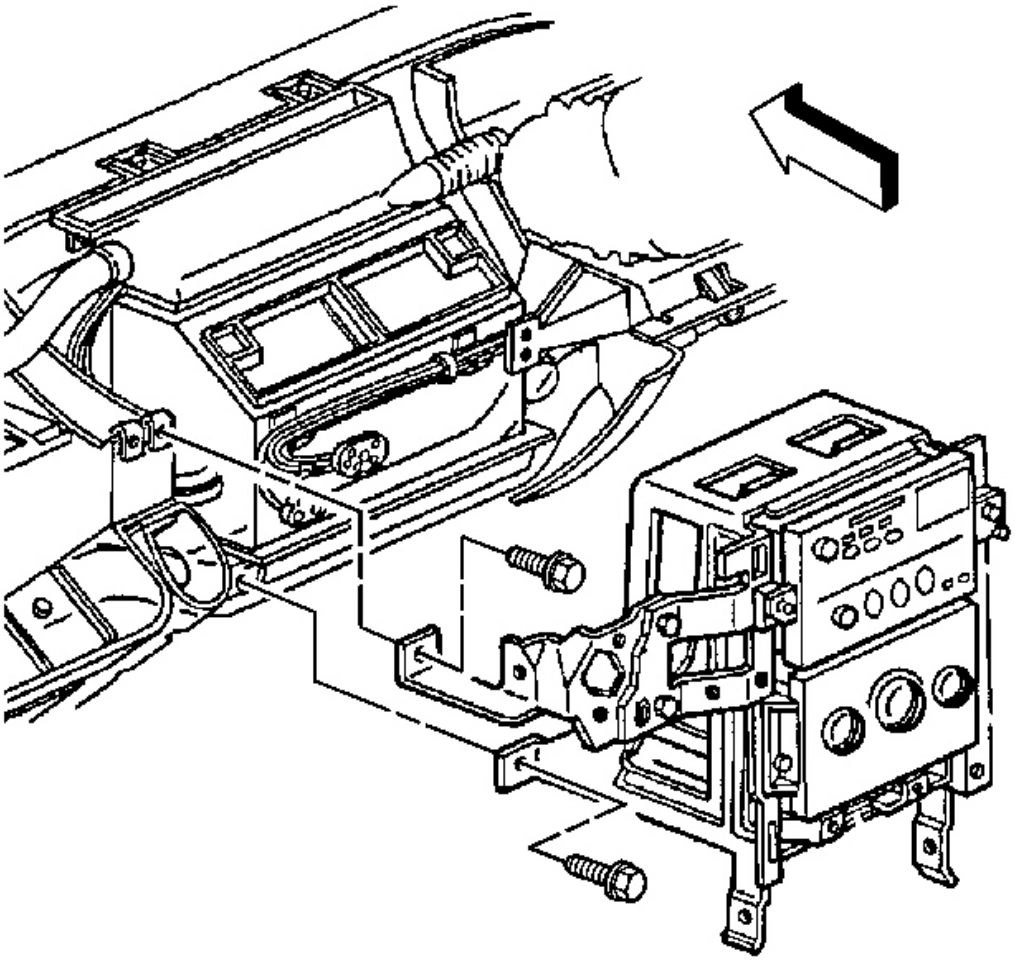

Fig. 144: Center Support Bracket To I/P Lower Support Beam
Courtesy of GENERAL MOTORS CORP.

13. Install the center support bracket into position as marked prior to removal.
14. Install the left bolt to secure the center support bracket to the I/P lower support beam.

    Tighten: Tighten the bolt to 12 N.m (106 lb in).

15. Position the ignition switch housing bracket to the steering column bracket as marked prior to removal.
16. Install the bolt to secure the ignition switch housing bracket to the steering column bracket.

    Tighten: Tighten the bolt to 1.9 N.m (17 lb in).

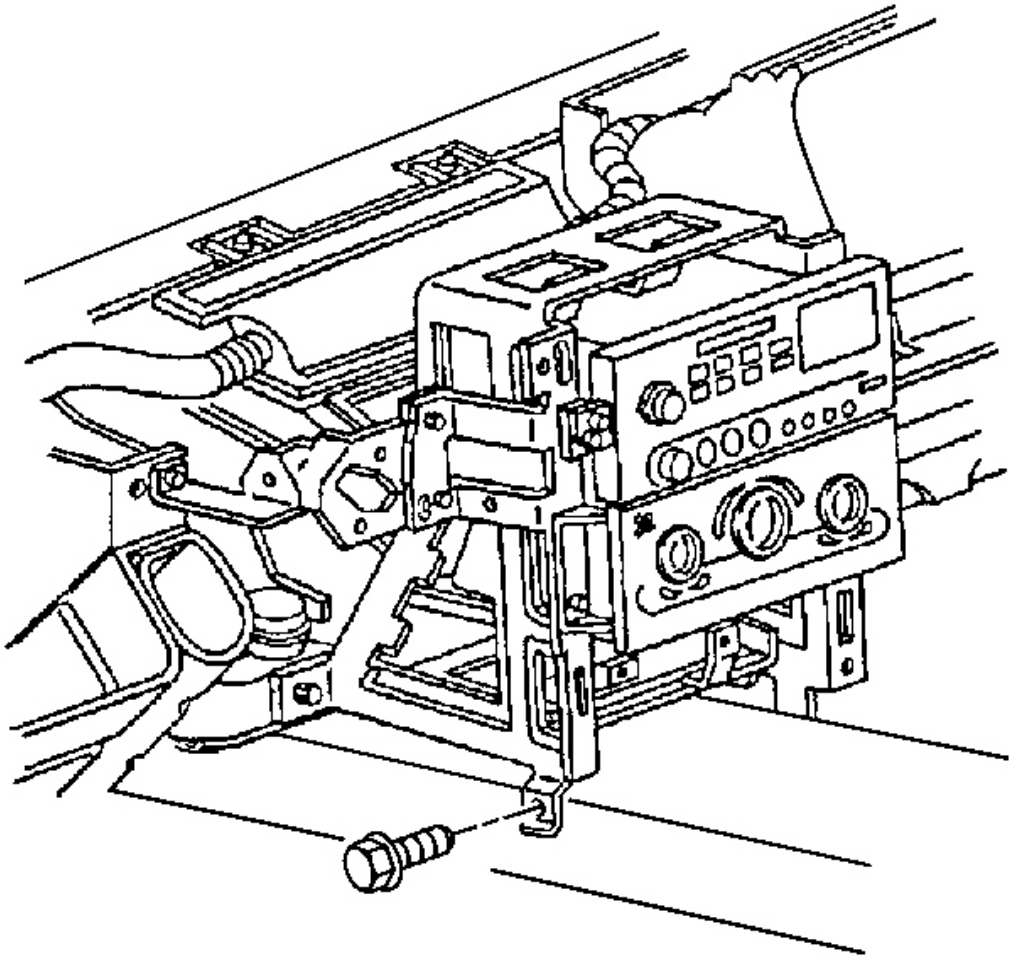

Fig. 145: Right & Left Bolt To Center Support Bracket At Driveline Tunnel
Courtesy of GENERAL MOTORS CORP.

17. Install the left bolt to secure the center support bracket to the driveline tunnel.

    Tighten: Tighten the bolt to 12 N.m (106 lb in).

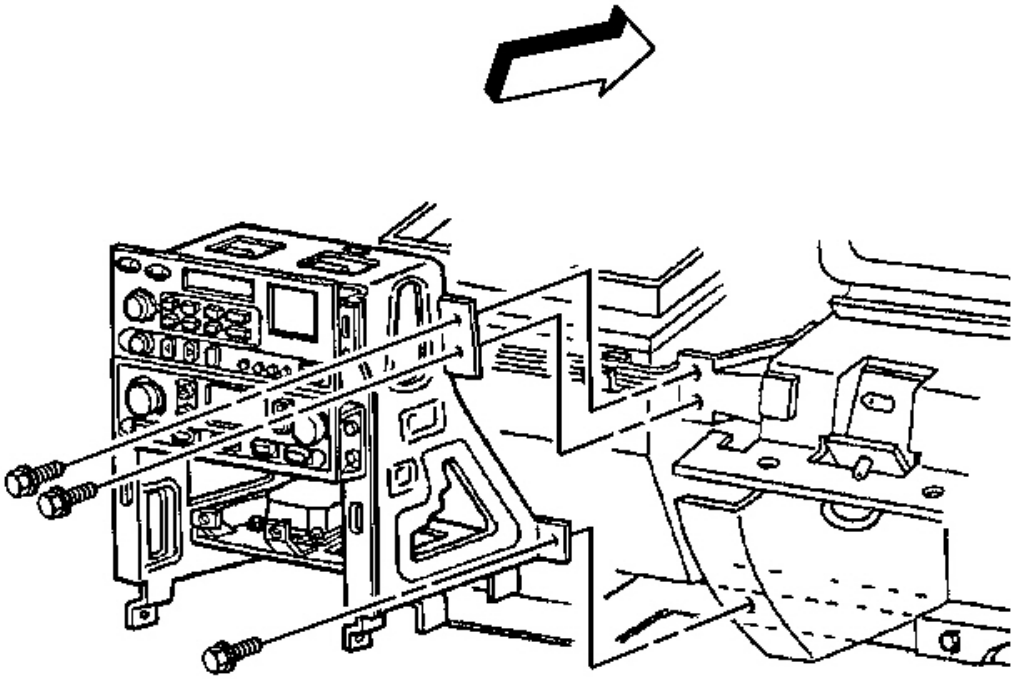

Fig. 146: Right Bolt To Center Support Bracket At I/P Lower Support Beam
Courtesy of GENERAL MOTORS CORP.

18. Install the right bolt to secure the center support bracket to the I/P lower support beam.

    Tighten: Tighten the bolt to 12 N.m (106 lb in).

19. Install the bolts to secure the center support bracket to the passenger knee bolster bracket.

    Tighten: Tighten the bolts to 12 N.m (106 lb in).

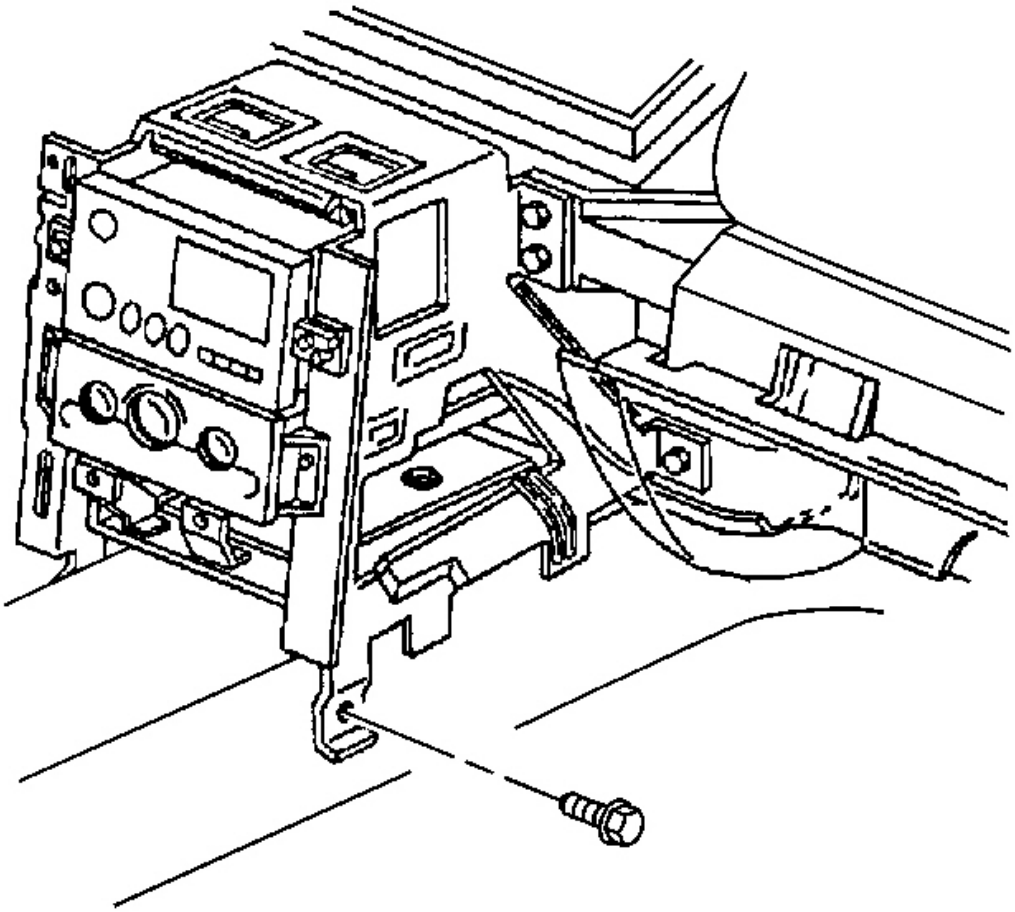

Fig. 147: Right Bolts To Center Support Bracket At Driveline Tunnel
Courtesy of GENERAL MOTORS CORP.

20. Install the right bolts to secure the center support bracket to the driveline tunnel.

    Tighten: Tighten the bolt to 12 N.m (106 lb in).

21. Position and install the ignition switch to the ignition switch housing bracket. Refer to **Ignition Switch Replacement** .
22. Connect the SDM electrical connector.

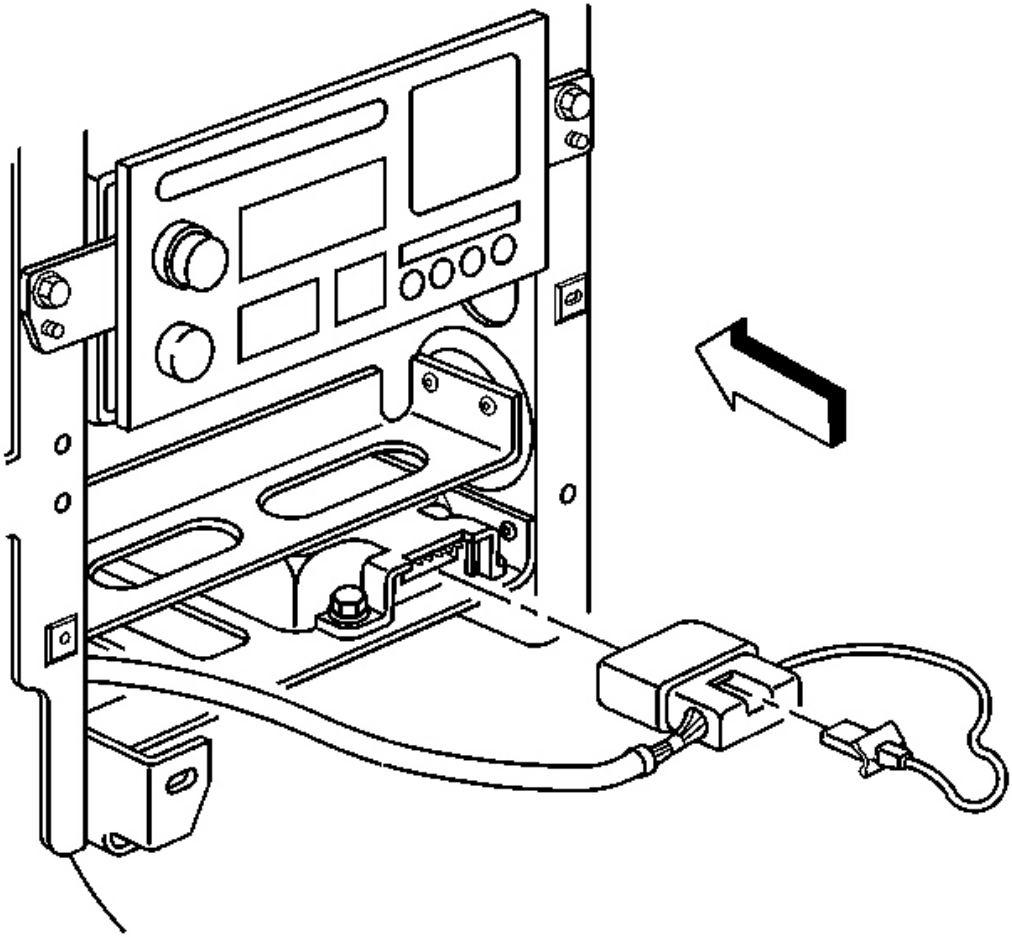

Fig. 148: SDM Electrical Connector
Courtesy of GENERAL MOTORS CORP.

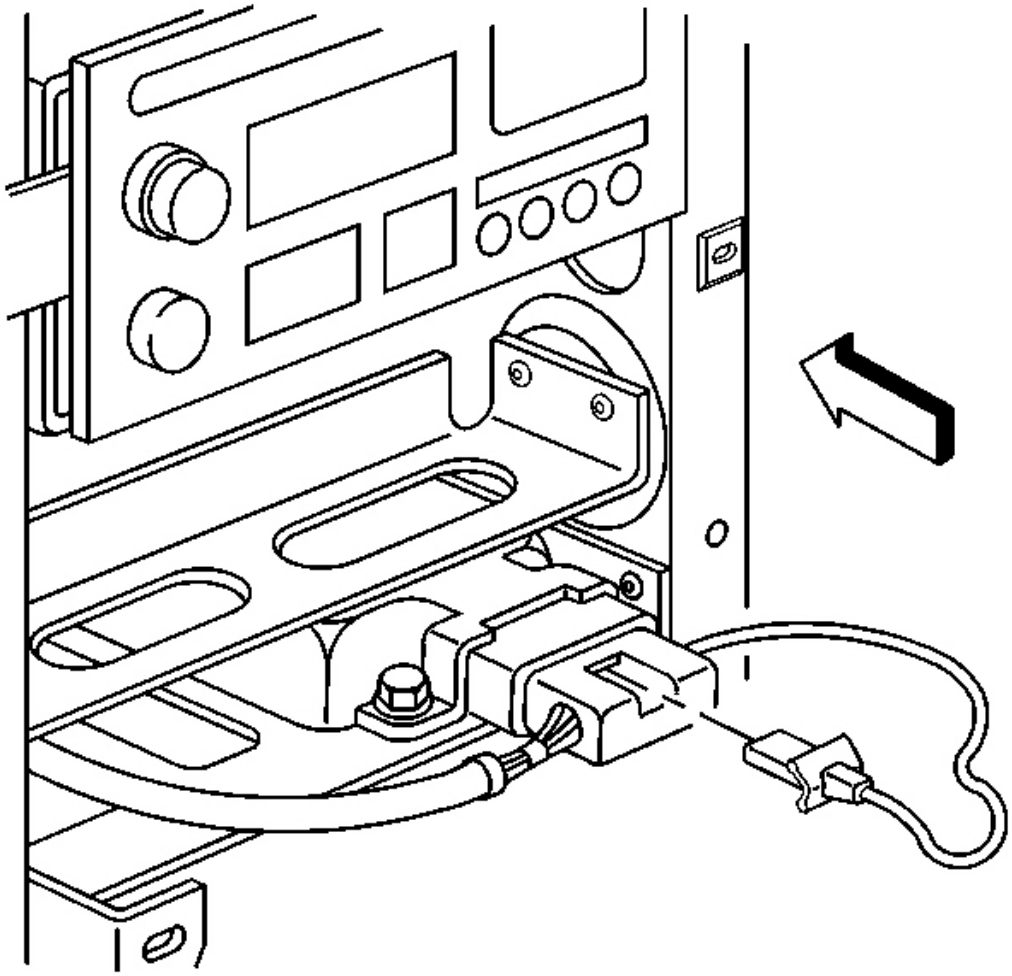

Fig. 149: CPA To SDM Electrical Connector
Courtesy of GENERAL MOTORS CORP.

23. Install the CPA to the SDM electrical connector.
24. Install the park/lock control cable (A/T). Refer to **Park Lock Cable Replacement** in Automatic Transmission.
25. Install the I/P upper trim pad. Refer to **Trim Pad Replacement - Instrument Panel (I/P) Upper** .
26. Install the I/P passenger compartment. Refer to **Compartment Replacement - Instrument Panel (I/P)** .
27. Install the driver knee bolster trim panel. Refer to **Trim Panel Replacement - Knee Bolster** .
28. Install the I/P accessory trim plate. Refer to **Trim Plate Replacement - Instrument Panel (I/P) Accessory** .

29. Install the console. Refer to **Console Replacement** .
30. Connect the negative battery cable.

    Tighten: Tighten the cable bolt to 15 N.m (11 lb ft).

31. Program the transmitters. Refer to **Transmitter Programming** in Keyless Entry.
32. Enable the SIR system. Refer to **SIR Disabling and Enabling Zone 4** in SIR.

BRACKET REPLACEMENT - STEERING COLUMN

Removal Procedure

1. Disable the SIR system. Refer to **SIR Disabling and Enabling Zone 3** in SIR.

CAUTION: Refer to Battery Disconnect Caution in Cautions and Notices.

2. Disconnect the negative battery cable.
3. Remove the console. Refer to **Console Replacement** .
4. Remove the I/P accessory trim plate. Refer to **Trim Plate Replacement - Instrument Panel (I/P) Accessory** .
5. Remove the driver knee bolster trim panel. Refer to **Trim Panel Replacement - Knee Bolster** .
6. Remove the ignition switch housing bracket and reposition the ignition switch. Refer to **Ignition Switch Housing Bracket Replacement** .
7. Release the ignition switch and hazard warning switch wiring harness retainers from the driver knee bolster bracket.

IMPORTANT: The following step must be performed to assure proper trim fit during installation.

8. Mark the location of the driver knee bolster bracket. Refer to **Instrument Panel (I/P) Disassembly Precautions** .

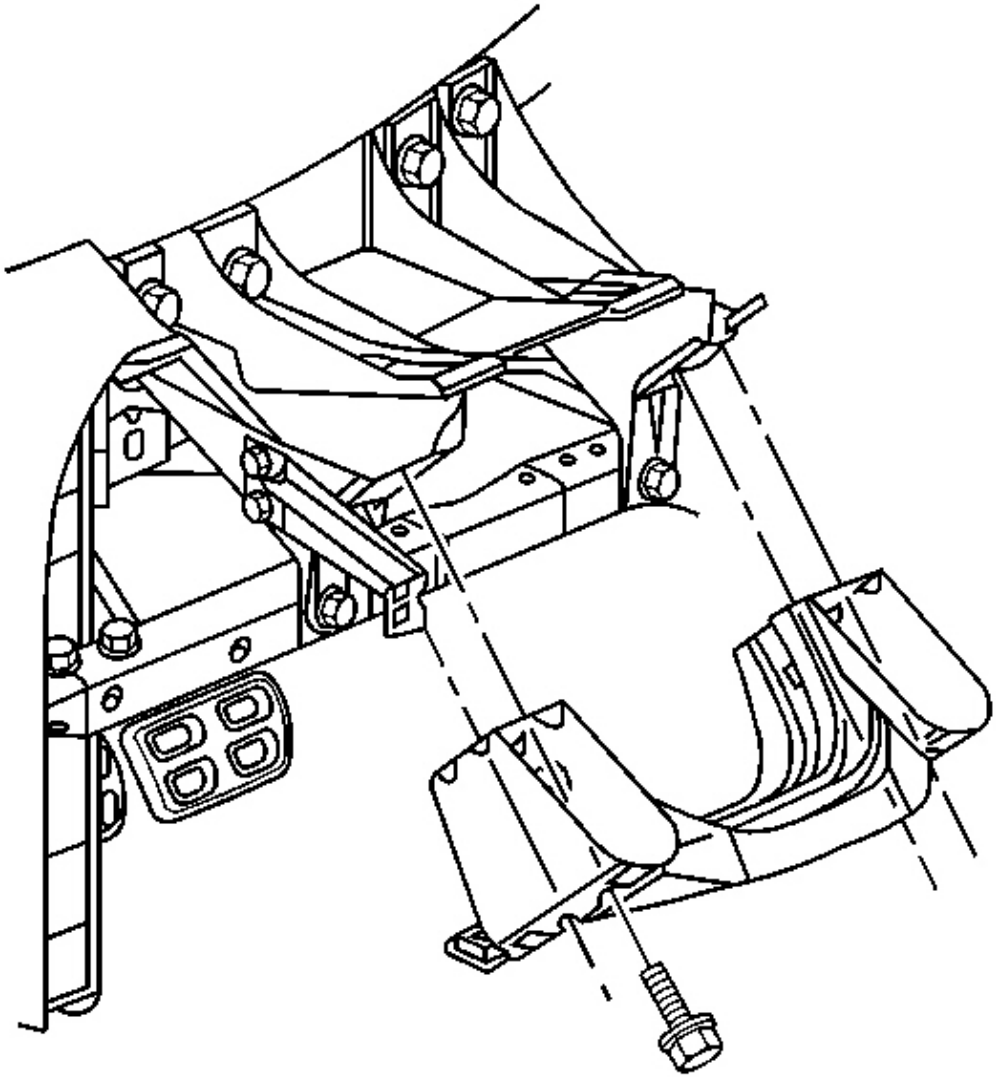

Fig. 150: Driver Knee Bolster Bracket To Steering Column Bracket
Courtesy of GENERAL MOTORS CORP.

9. Remove the retaining screws from the driver knee bolster bracket.
10. Remove the driver knee bolster bracket.

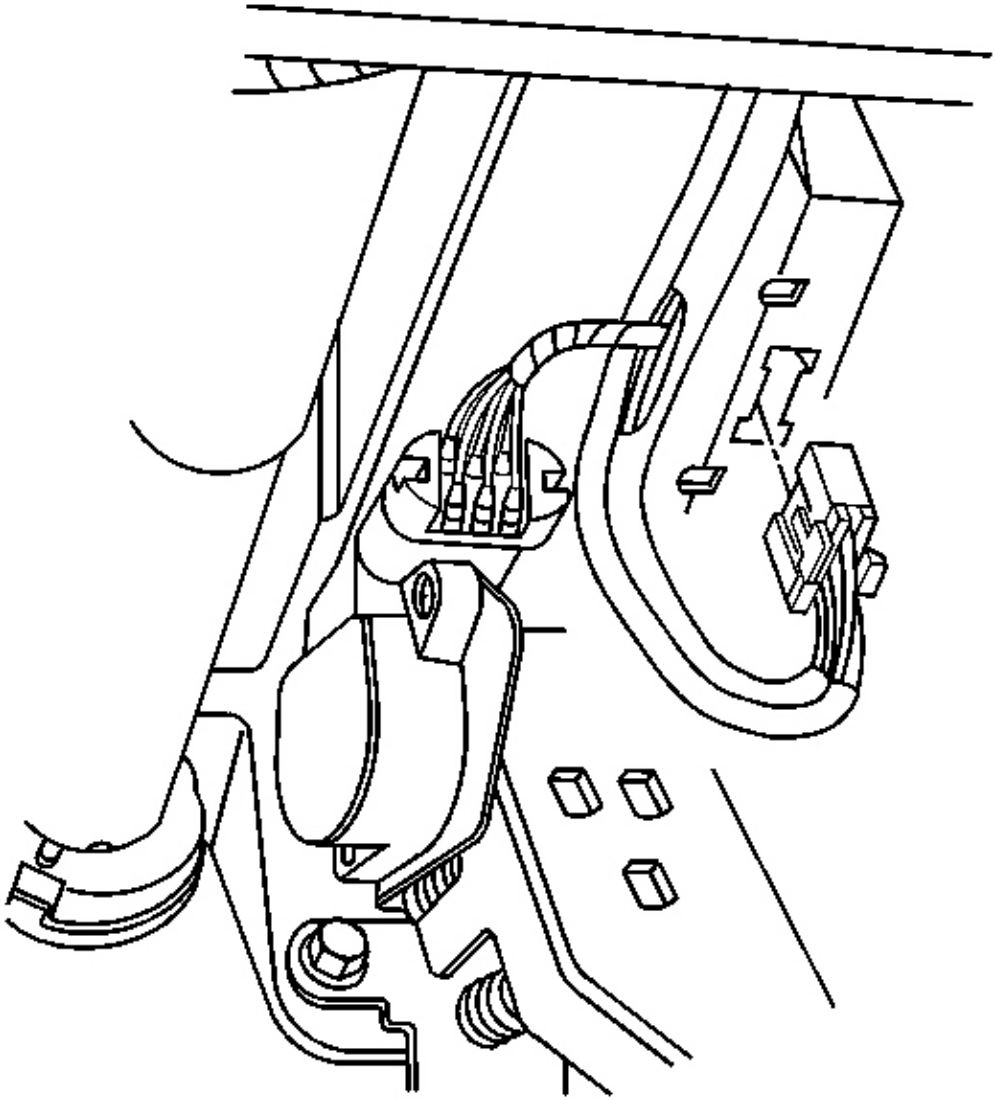

Fig. 151: Bose(R) Module Electrical/Audio Connector
Courtesy of GENERAL MOTORS CORP.

11. Remove the left lower closeout panel. Refer to **Closeout/Insulator Panel Replacement - Left** .
12. Tilt the steering wheel to the lowest position.
13. Remove the upper and lower nuts retaining the steering column to the steering column bracket. Carefully rest the steering column on the I/P lower support beam. Refer to **Steering Column Replacement** in Steering Wheel and Column.

14. Remove the left windshield side garnish molding. Refer to **Windshield Side Garnish Molding Replacement** in Interior Trim.
15. Remove the I/P upper trim pad. Refer to **Trim Pad Replacement - Instrument Panel (I/P) Upper** .
16. Remove the outlet duct from the left side window defogger.
17. Remove the instrument panel cluster. Refer to **Instrument Panel Cluster (IPC) Replacement** .
18. Disconnect the Bose(R) module electrical/audio connector, if equipped.

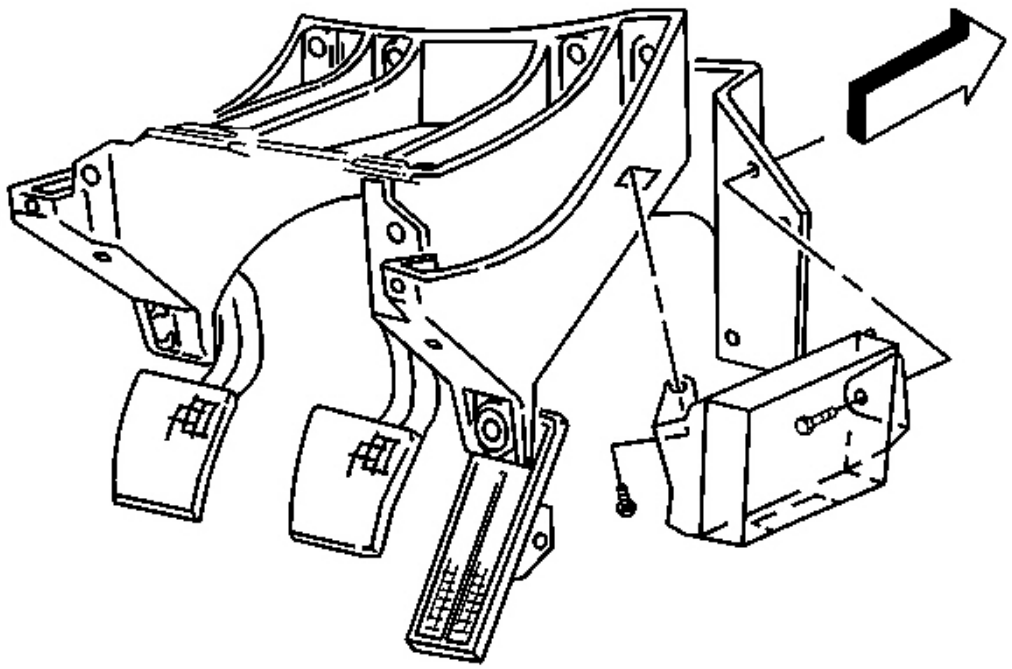

Fig. 152: Bose(R) Module To Steering Column Bracket
Courtesy of GENERAL MOTORS CORP.

IMPORTANT: The Bose(R) module is only held in place by retaining bolts. Support the module upon removal.

19. If the vehicle is equipped with a Bose(R) player, remove the bolts mounting the Bose(R) module to the steering column bracket
20. Remove the Bose(R) module.

IMPORTANT: The following step must be performed to assure proper trim fit during installation.

21. Mark the location of the driver knee bolster outer bracket. Refer to **Instrument Panel (I/P) Disassembly Precautions** .

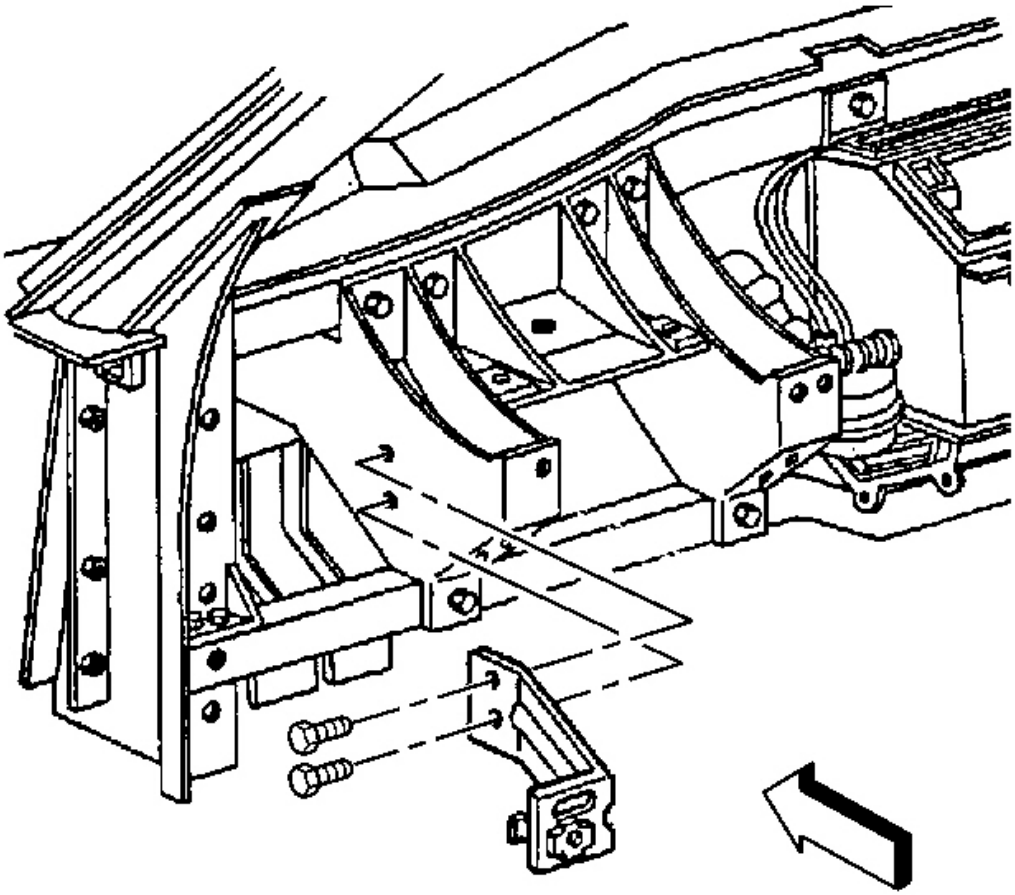

Fig. 153: Driver Knee Bolster Outer Bracket To Steering Column Bracket
Courtesy of GENERAL MOTORS CORP.

22. Remove the retaining screws from the driver knee bolster outer bracket.
23. Remove the outer bracket.

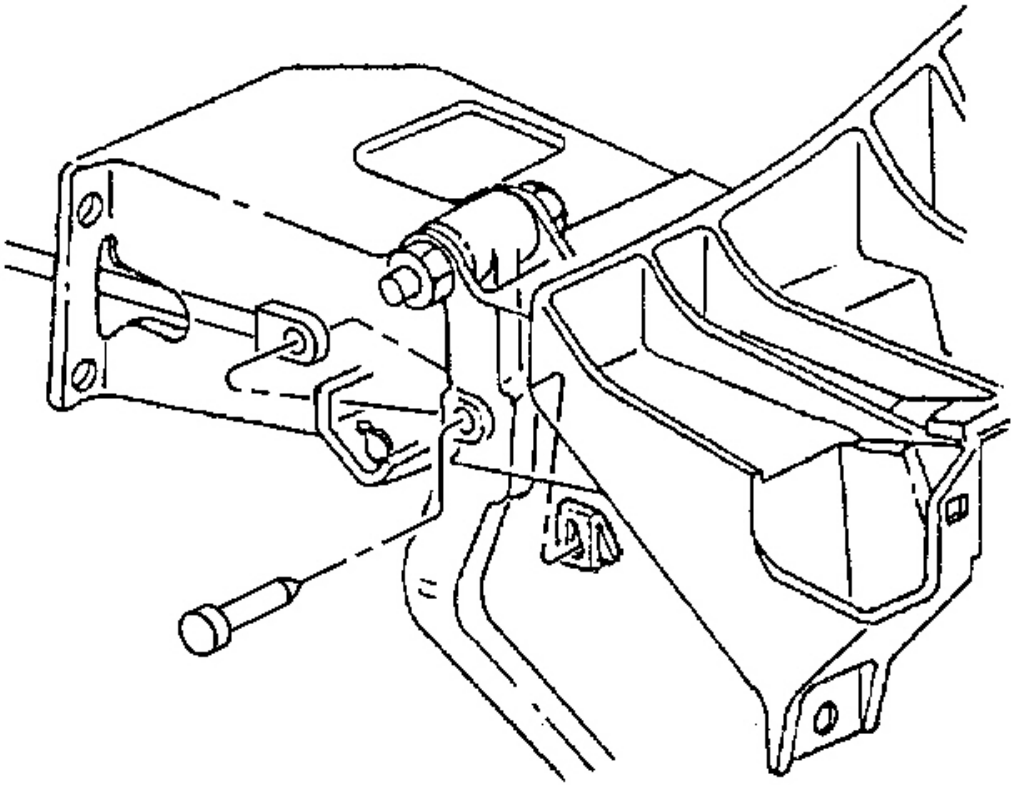

Fig. 154: Brake Booster Mounting Nuts At Accelerator Pedal
Courtesy of GENERAL MOTORS CORP.

24. Remove the accelerator pedal assembly with the accelerator pedal position sensor. Refer to **Accelerator Pedal Position (APP) Sensor Replacement** in Engine Controls - 5.7L.
25. Disconnect the brake master cylinder push rod from the brake pedal.
26. Remove the brake booster mounting nuts.

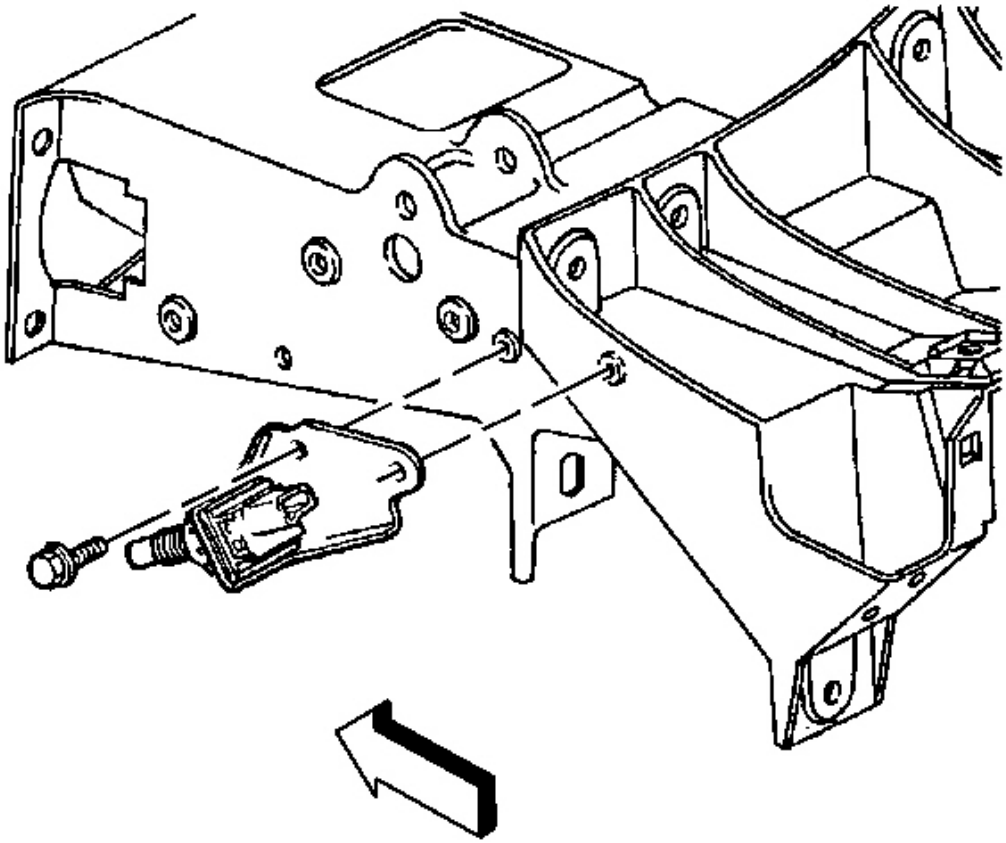

Fig. 155: Cruise Control Release Switch & Bracket
Courtesy of GENERAL MOTORS CORP.

27. Remove the mounting bolts from the cruise control release switch bracket.
28. Reposition the cruise control release switch and the bracket.

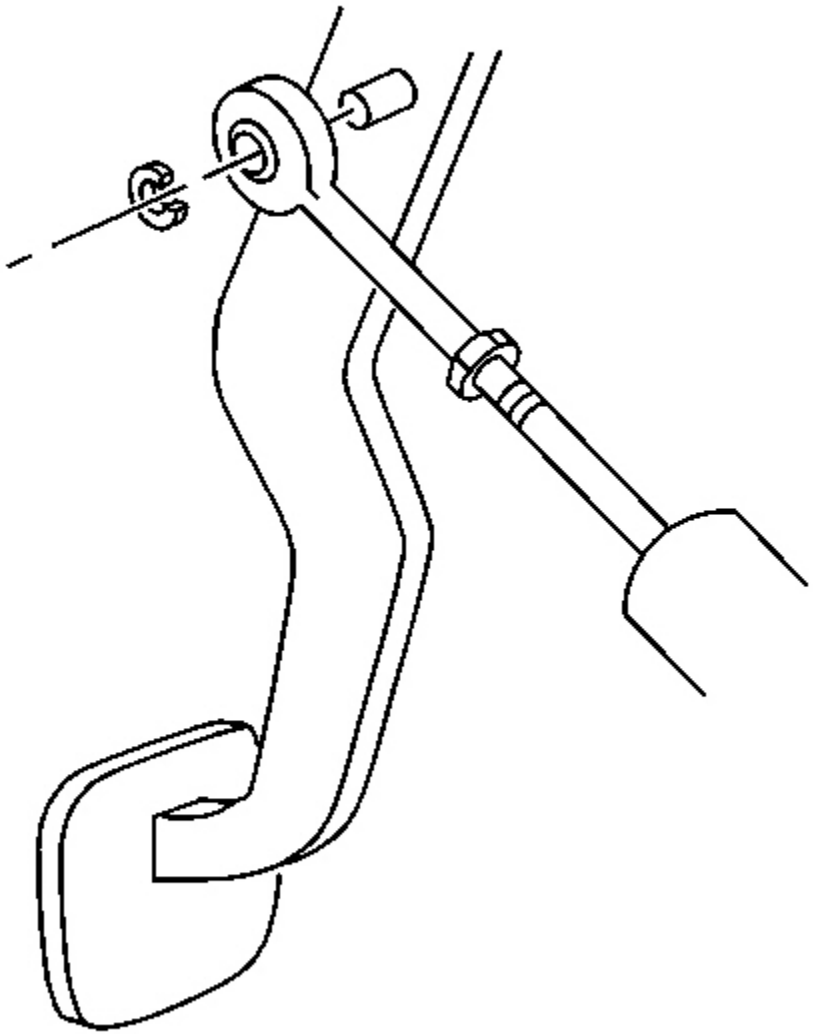

Fig. 156: Master Cylinder Push Rod From The Clutch Pedal
Courtesy of GENERAL MOTORS CORP.

29. Disconnect the master cylinder push rod from the clutch pedal.

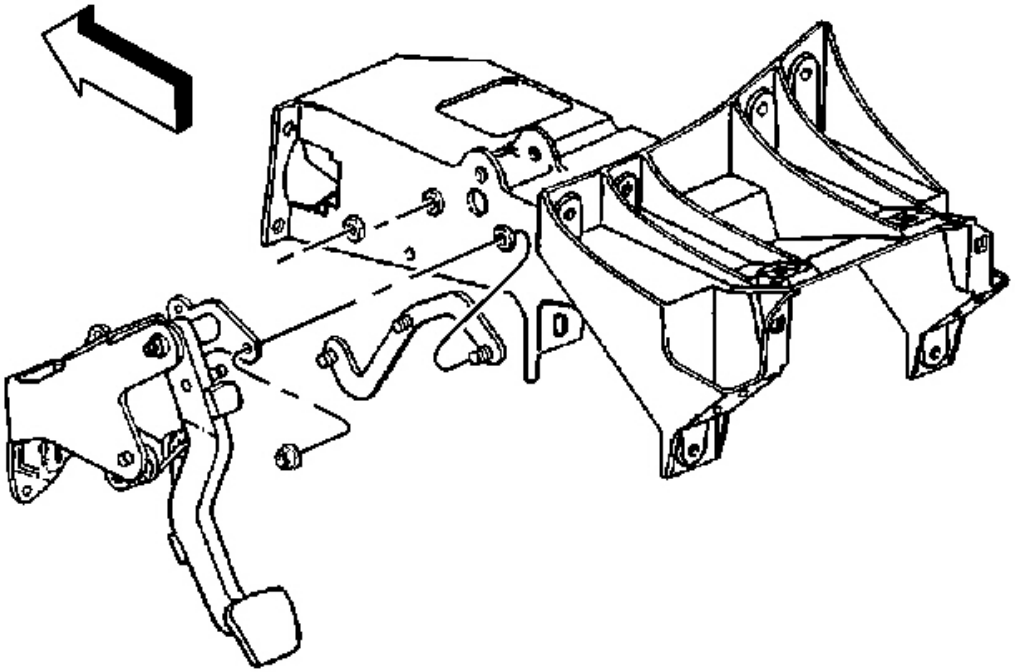

Fig. 157: Clutch Pedal Bracket & Steering Column Bracket
Courtesy of GENERAL MOTORS CORP.

30. Remove the nuts which secure the clutch pedal bracket to the steering column bracket.
31. Remove the pedal bracket stud plate.

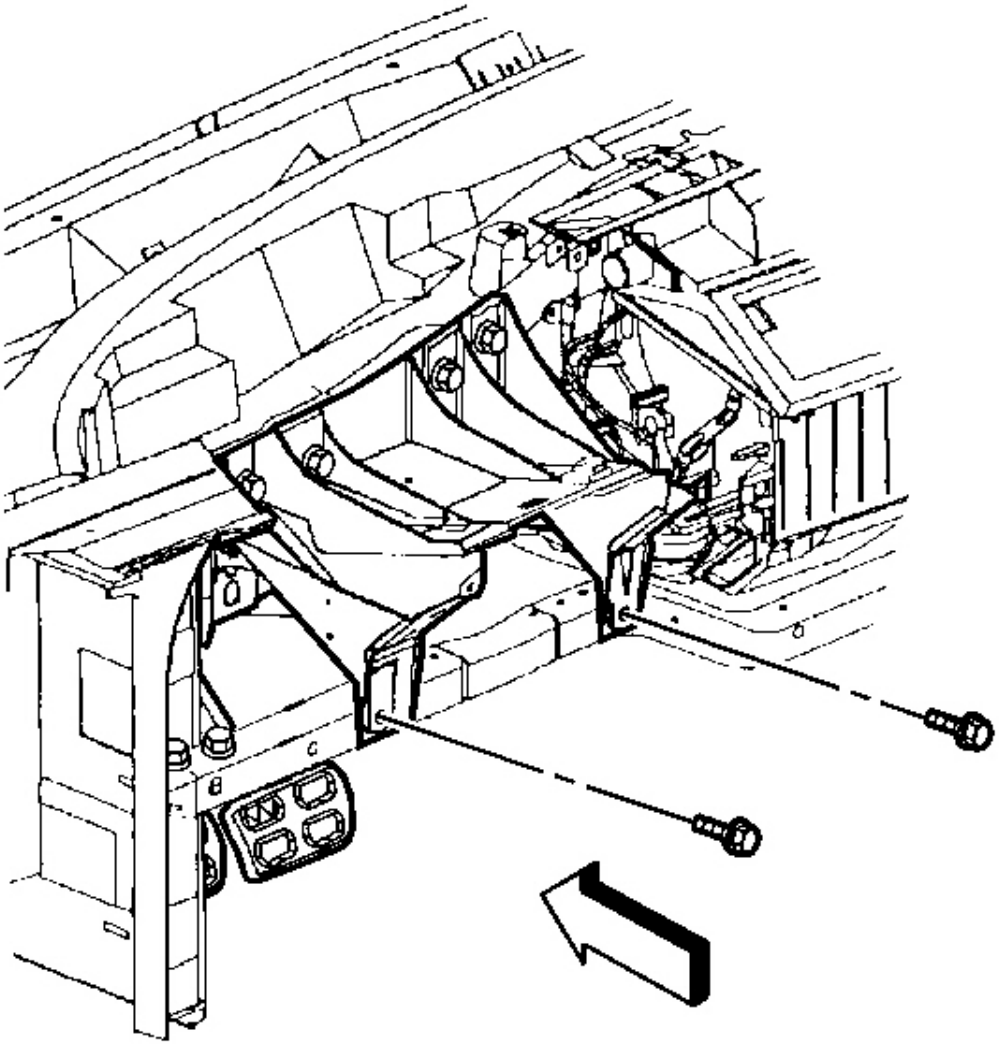

Fig. 158: Steering Column Bracket To I/P Lower Support Beam
Courtesy of GENERAL MOTORS CORP.

IMPORTANT: The following step assures proper trim fit during installation.

32. Mark the location of the steering column bracket. Refer to **Instrument Panel (I/P) Disassembly Precautions** .
33. Remove the bolts which secure the steering column bracket to the I/P lower support beam.

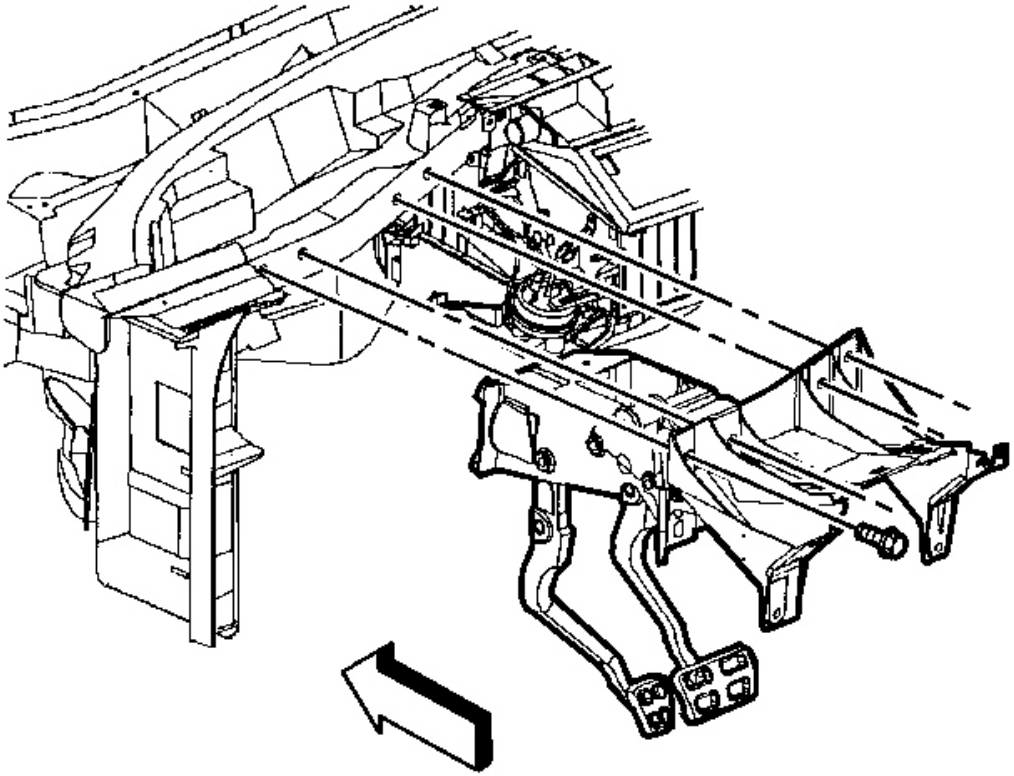

Fig. 159: Steering Column Bracket To I/P Upper Support Beam
Courtesy of GENERAL MOTORS CORP.

34. Remove the bolts which secure the steering column bracket to the I/P upper support beam.
35. Remove the steering column bracket.

Installation Procedure

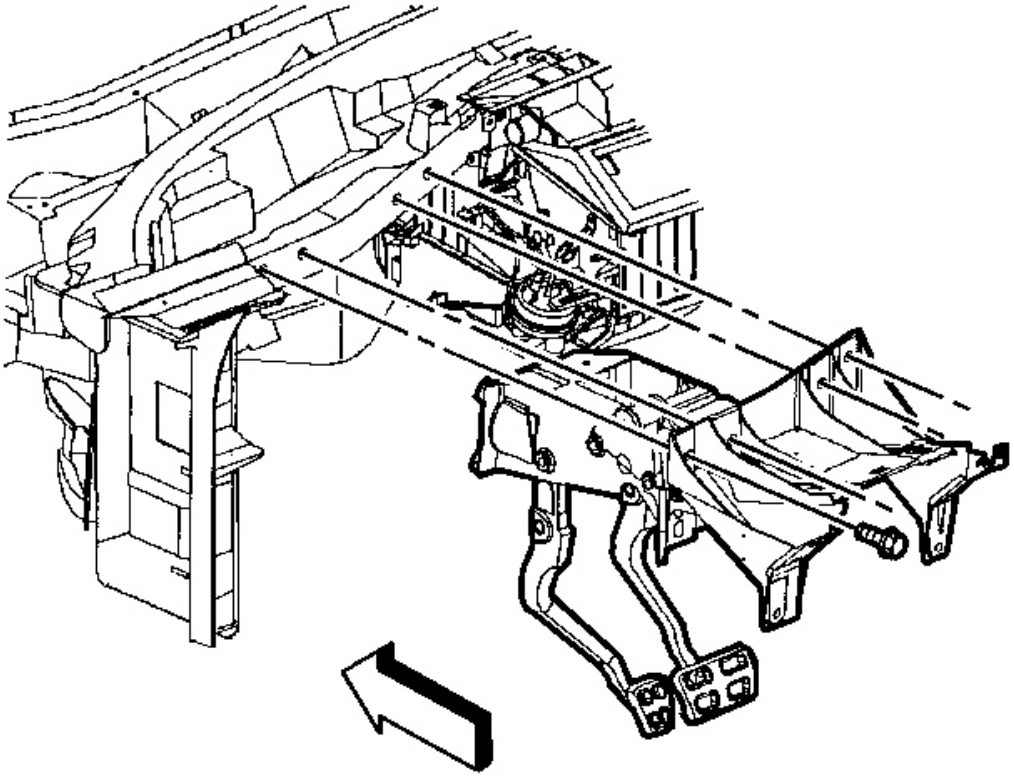

Fig. 160: Steering Column Bracket To I/P Upper Support Beam
Courtesy of GENERAL MOTORS CORP.

1. Install the steering column bracket into position as marked prior to removal.
2. Install the bolts which secure the steering column bracket to the I/P upper support beam. Do NOT tighten the bolts.

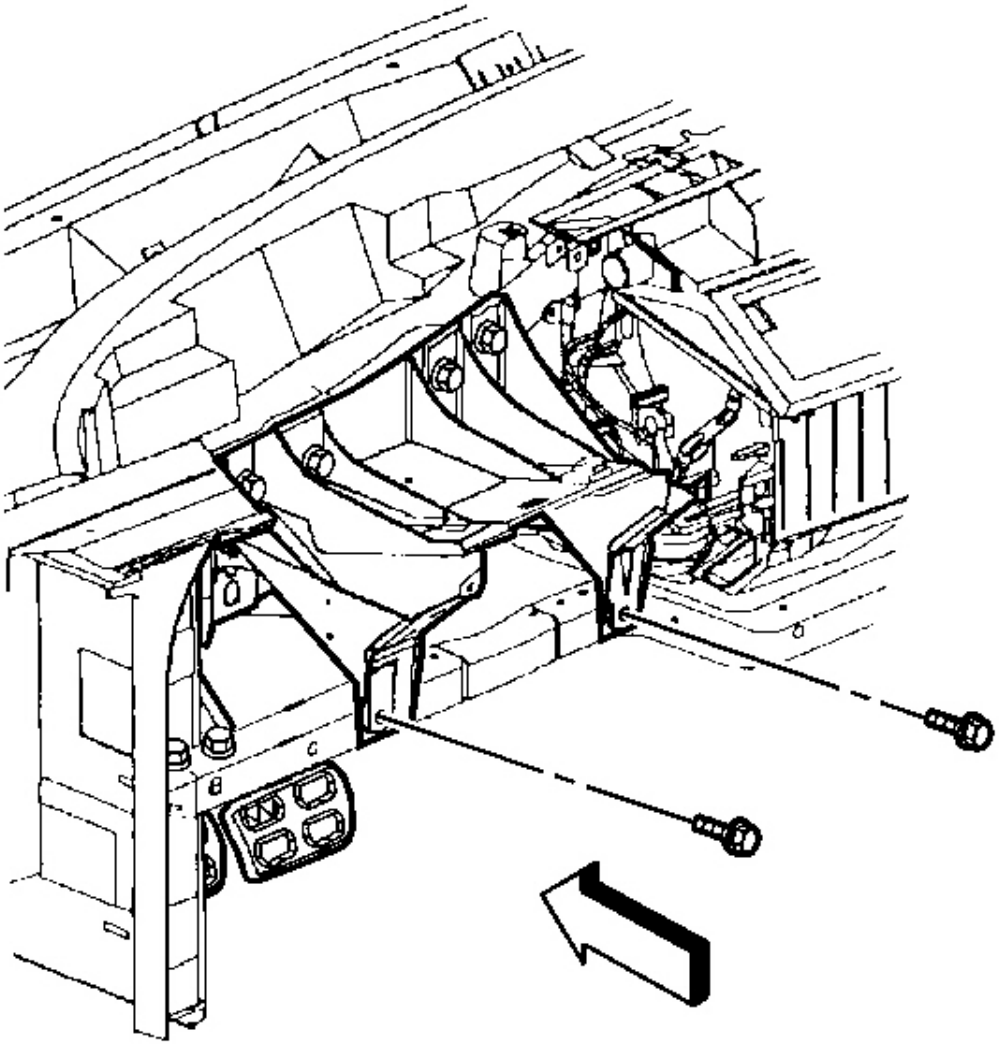

Fig. 161: Steering Column Bracket To I/P Lower Support Beam
Courtesy of GENERAL MOTORS CORP.

NOTE: Refer to Fastener Notice in Cautions and Notices.

3. Install the bolts which secure the steering column bracket to the I/P lower support beam.

   Tighten: Tighten all of the bolts to 10 N.m (89 lb in).

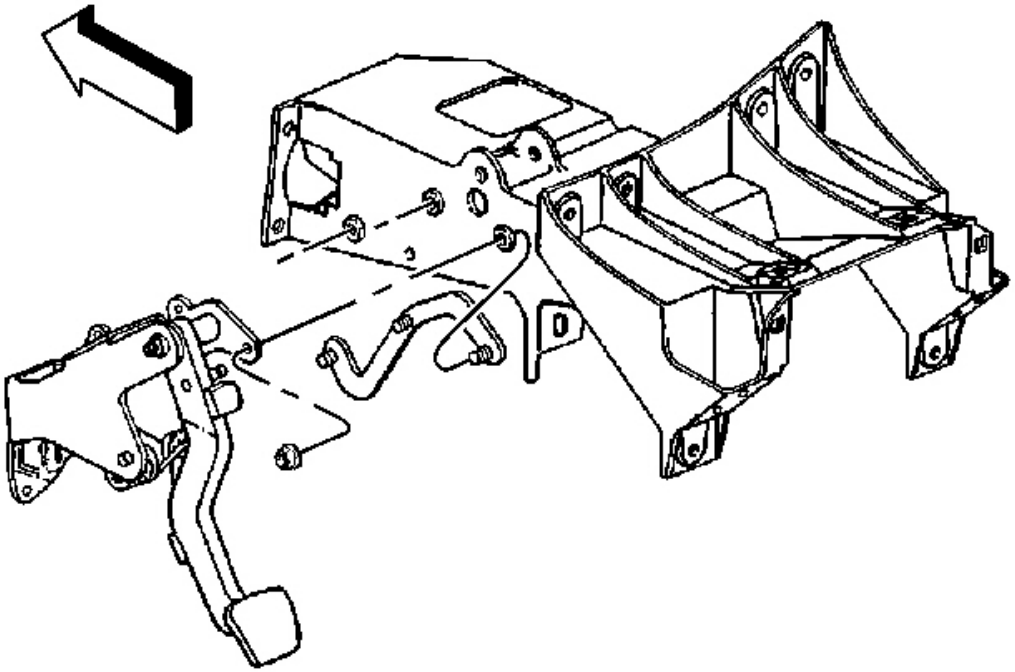

Fig. 162: Clutch Pedal Bracket & Steering Column Bracket
Courtesy of GENERAL MOTORS CORP.

4. Install the clutch pedal bracket stud plate.
5. Install the nuts to the clutch pedal bracket stud plate.

Tighten: Tighten the nuts to 27 N.m (20 lb ft).

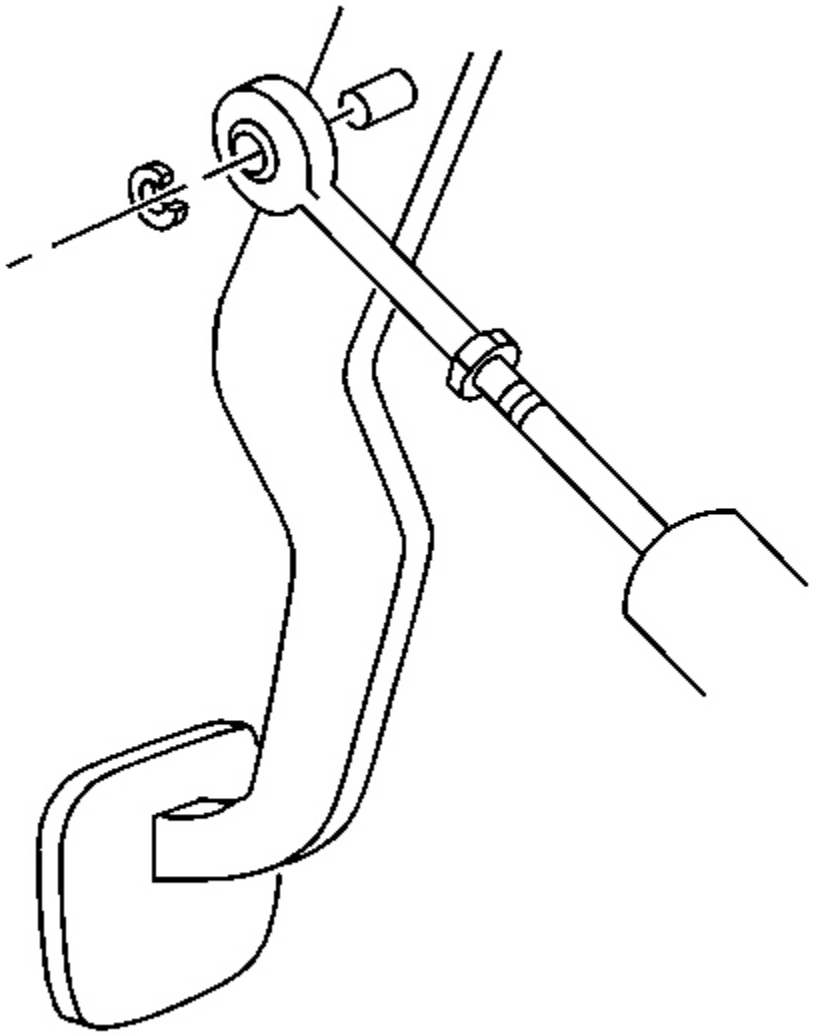

Fig. 163: Master Cylinder Push Rod From The Clutch Pedal
Courtesy of GENERAL MOTORS CORP.

6. Connect the master cylinder push rod to the clutch pedal.

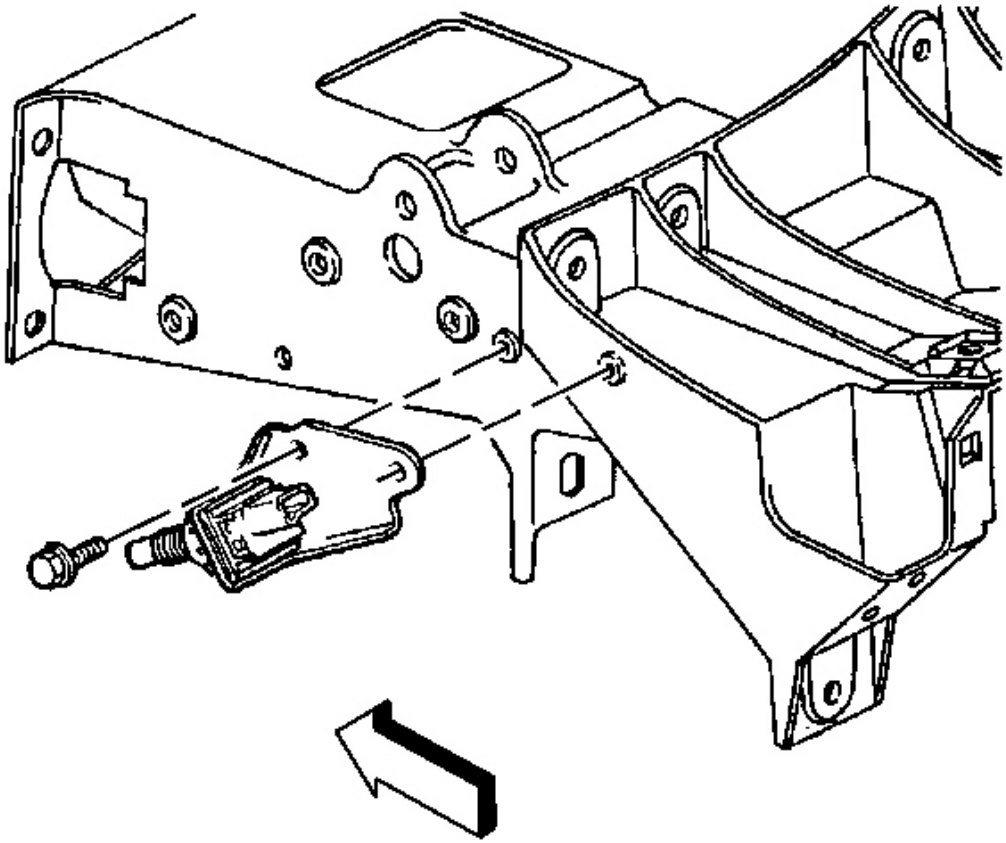

Fig. 164: Cruise Control Release Switch & Bracket
Courtesy of GENERAL MOTORS CORP.

7. Position the cruise control release switch and bracket to the steering column bracket.
8. Install the bracket bolts to the cruise control release switch.

   Tighten: Tighten the bracket bolts to 12 N.m (106 lb in).

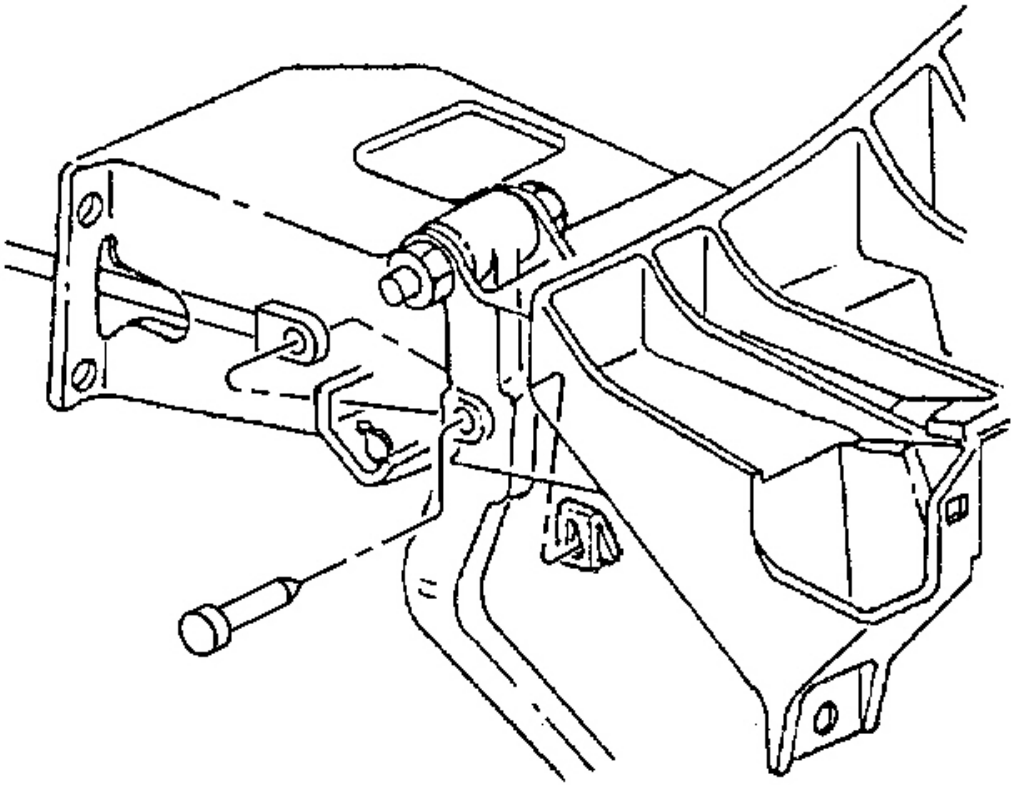

Fig. 165: Brake Booster Mounting Nuts At Accelerator Pedal
Courtesy of GENERAL MOTORS CORP.

9. Install the brake booster nuts.

   Tighten: Tighten the nuts to 29 N.m (21 lb ft).

10. Connect the master cylinder push rod to the brake pedal.
11. Install the accelerator pedal assembly with accelerator pedal position sensor. Refer to **Accelerator Pedal Position (APP) Sensor Replacement** in Engine Controls - 5.7L.

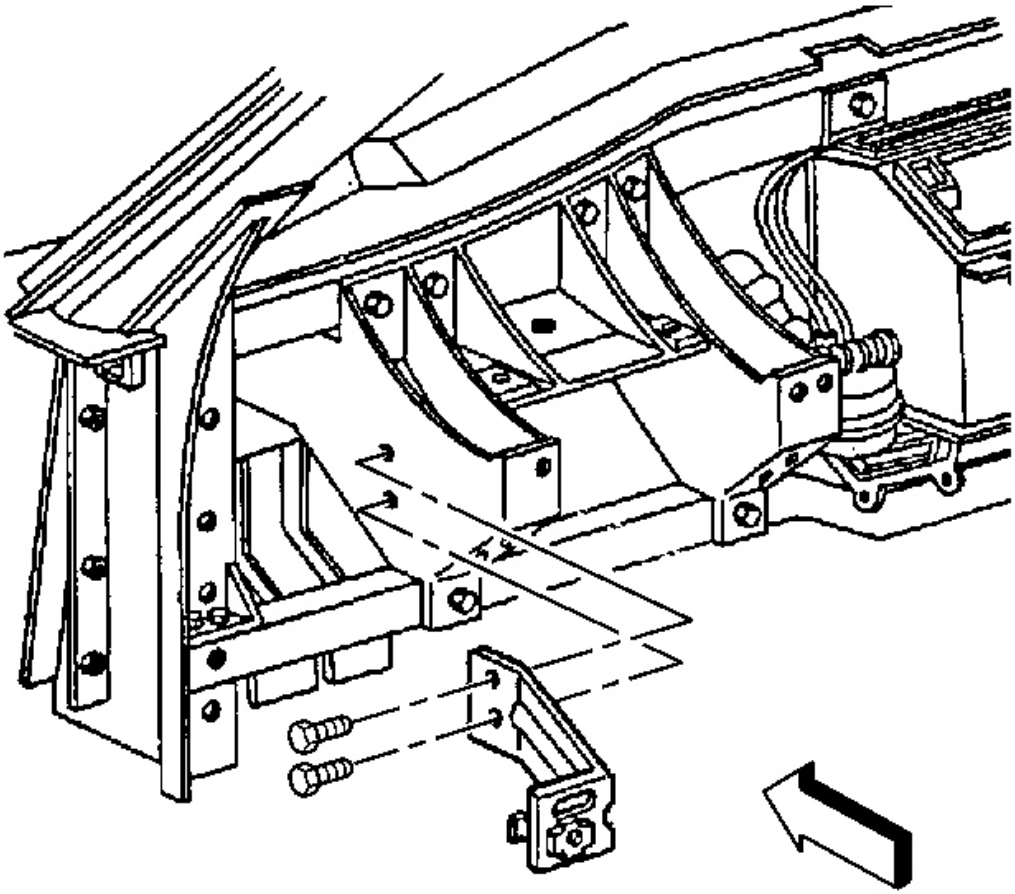

Fig. 166: Driver Knee Bolster Outer Bracket To Steering Column Bracket
Courtesy of GENERAL MOTORS CORP.

12. Install the driver knee bolster outer bracket into position as marked prior to removal.
13. Install the retaining screws to the driver knee bolster outer bracket.

Tighten: Tighten the retaining screws to 1.9 N.m (17 lb in).

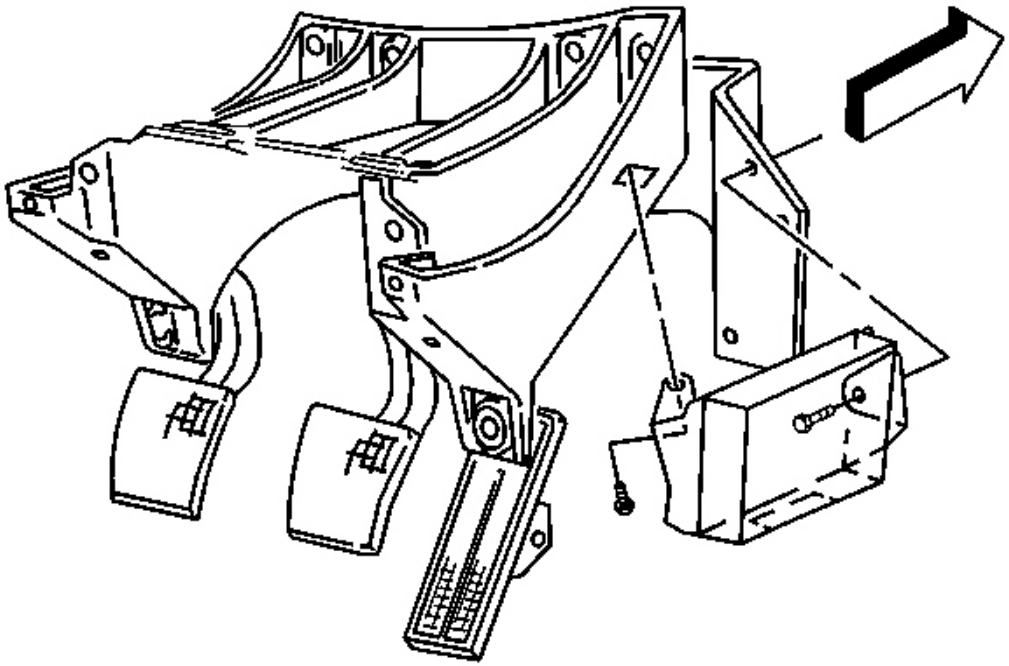

Fig. 167: Bose(R) Module To Steering Column Bracket
Courtesy of GENERAL MOTORS CORP.

14. If the vehicle is equipped with a Bose(R) module, position the Bose(R) module to the steering column bracket.
15. Install the Bose(R) module retaining bolts.

    Tighten: Tighten the retaining bolts to 2.5 N.m (22 lb in).

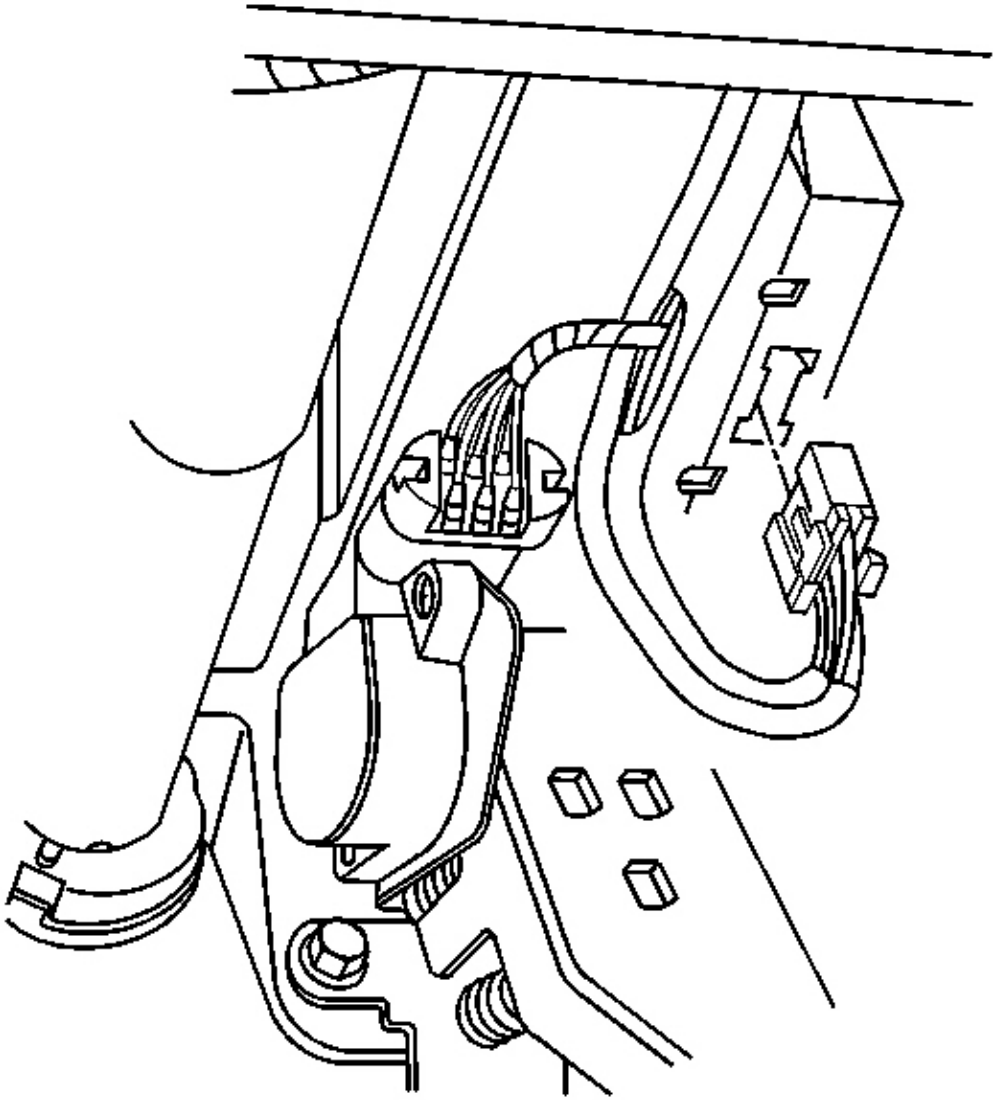

Fig. 168: Bose(R) Module Electrical/Audio Connector
Courtesy of GENERAL MOTORS CORP.

16. Connect the Bose(R) module electrical/audio connector.
17. Install the instrument panel cluster. Refer to **Instrument Panel Cluster (IPC) Replacement** .
18. Install the outlet duct to the left side window defogger.
19. Install the I/P upper trim pad. Refer to **Trim Pad Replacement - Instrument Panel (I/P) Upper** .

20. Install the left windshield side garnish molding. Refer to **Windshield Side Garnish Molding Replacement** in Interior Trim.
21. Install the steering column to the steering column bracket. Refer to **Steering Column Replacement** in Steering Wheel and Column.
22. Install the left lower closeout panel. Refer to **Closeout/Insulator Panel Replacement - Left** .

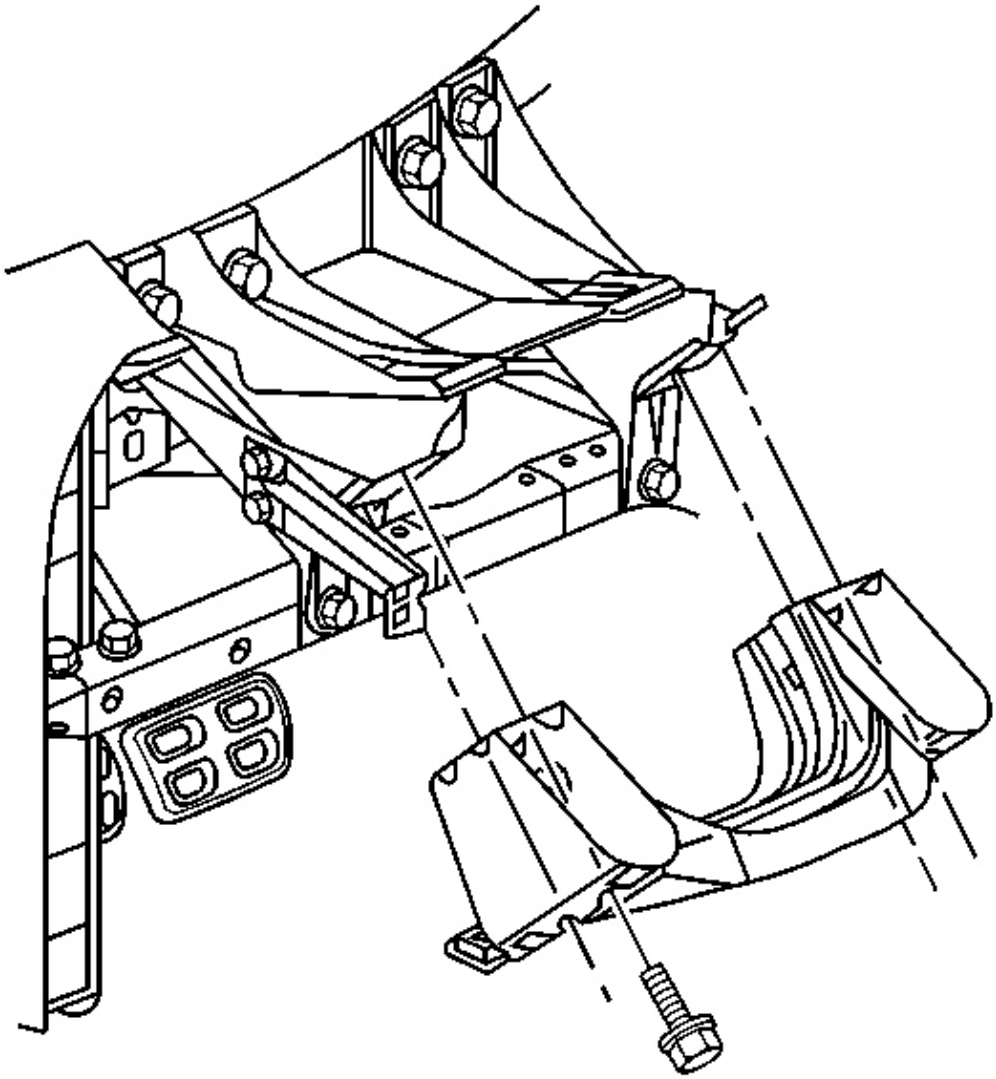

Fig. 169: Driver Knee Bolster Bracket To Steering Column Bracket
Courtesy of GENERAL MOTORS CORP.

23. Install the driver knee bolster bracket into position as marked prior to removal.
24. Install the screws which retain the driver knee bolster bracket to the steering column bracket.

    Tighten: Tighten the screws to 1.9 N.m (17 lb in).

25. Secure the wiring harness retainers on the ignition switch and hazard warning switch to the driver knee bolster bracket.
26. Install the ignition switch housing bracket. Refer to **Ignition Switch Housing Bracket Replacement** .
27. Install the driver knee bolster trim panel. Refer to **Trim Panel Replacement - Knee Bolster** .
28. Install the I/P accessory trim plate. Refer to **Trim Plate Replacement - Instrument Panel (I/P) Accessory** .
29. Install the console. Refer to **Console Replacement** .
30. Connect the negative battery cable and install the cable bolt.

    Tighten: Tighten the bolt to 15 N.m (11 lb ft).

31. Program the transmitters. Refer to **Transmitter Programming** in Keyless Entry.
32. Enable the SIR system. Refer to **SIR Disabling and Enabling Zone 3** in SIR.

BRACKET REPLACEMENT - SIR

Removal Procedure

CAUTION: Refer to SIR Inflator Module Handling and Storage Caution in Cautions and Notices.

1. Disable the SIR system. Refer to **SIR Disabling and Enabling Zone 5** in SIR.
2. Remove the console. Refer to **Console Replacement** .
3. Remove the I/P accessory trim plate. Refer to **Trim Plate Replacement - Instrument Panel (I/P) Accessory** .
4. Remove the I/P compartment. Refer to **Compartment Replacement - Instrument Panel (I/P)** .
5. Remove the driver knee bolster trim panel. Refer to **Trim Panel Replacement - Knee Bolster** .
6. Remove the I/P upper trim pad. Refer to **Trim Pad Replacement - Instrument Panel (I/P) Upper** .
7. Remove the outlet duct from the right side window defogger.

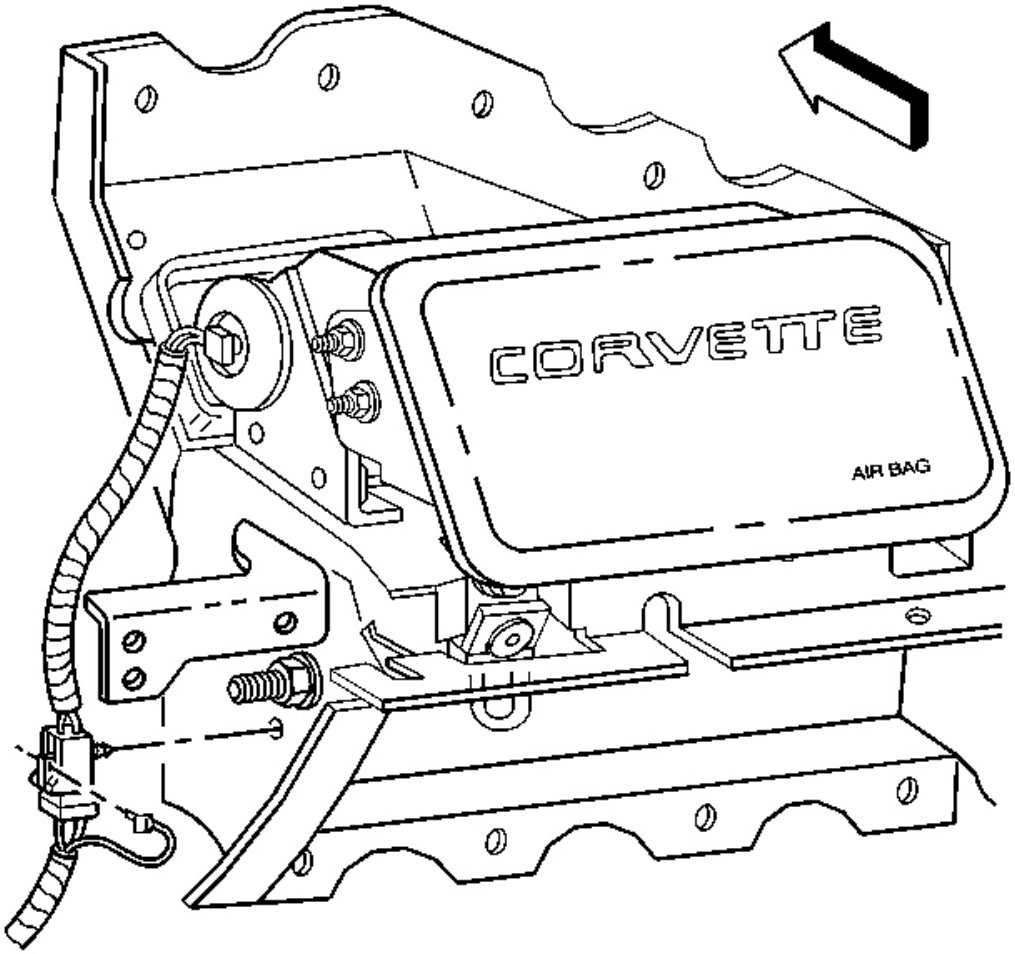

Fig. 170: Electrical Connector Retainer To SIR Bracket
Courtesy of GENERAL MOTORS CORP.

8. Release the I/P harness retainer from the passenger SIR bracket along the hinge pillar.
9. Remove the connector position assurance (CPA) from the SIR module electrical connector.
10. Release the electrical connector retainer from the SIR bracket.

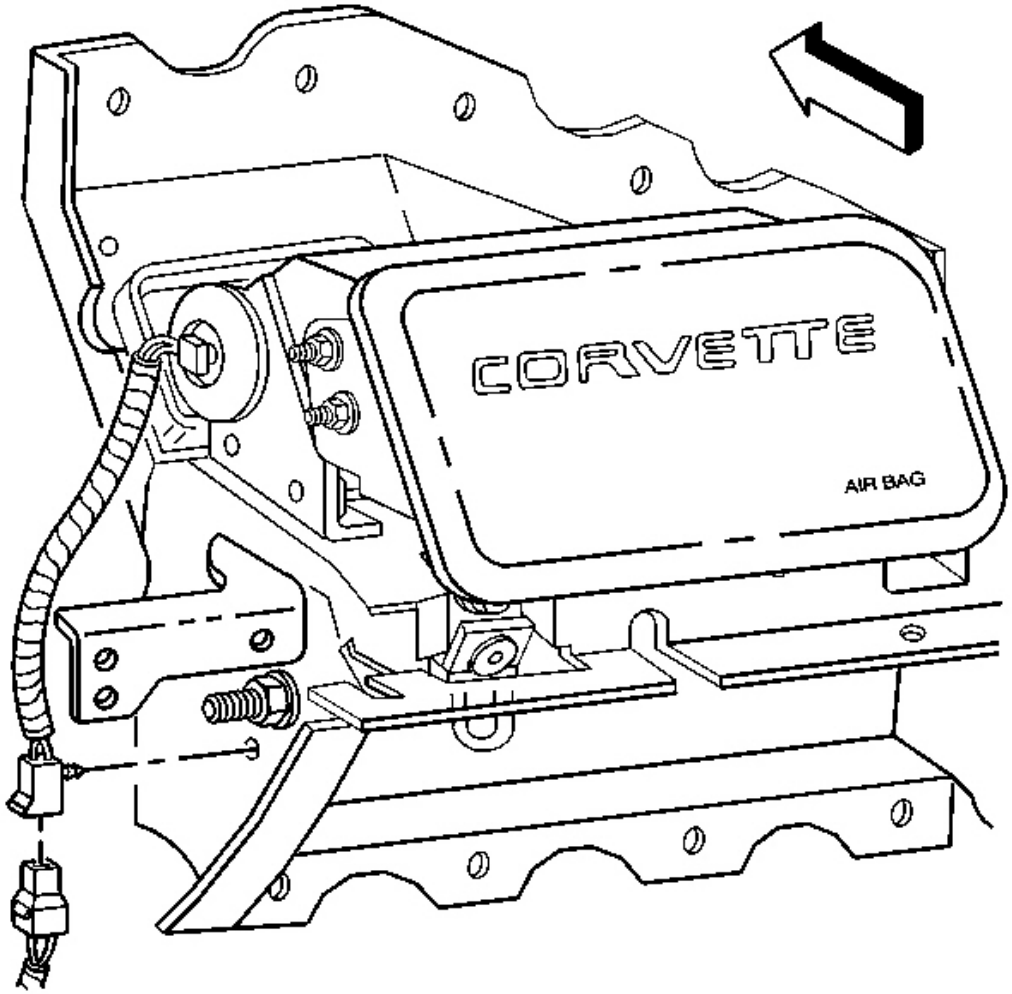

Fig. 171: SIR Module Electrical Connector
Courtesy of GENERAL MOTORS CORP.

11. Disconnect the SIR module electrical connector.

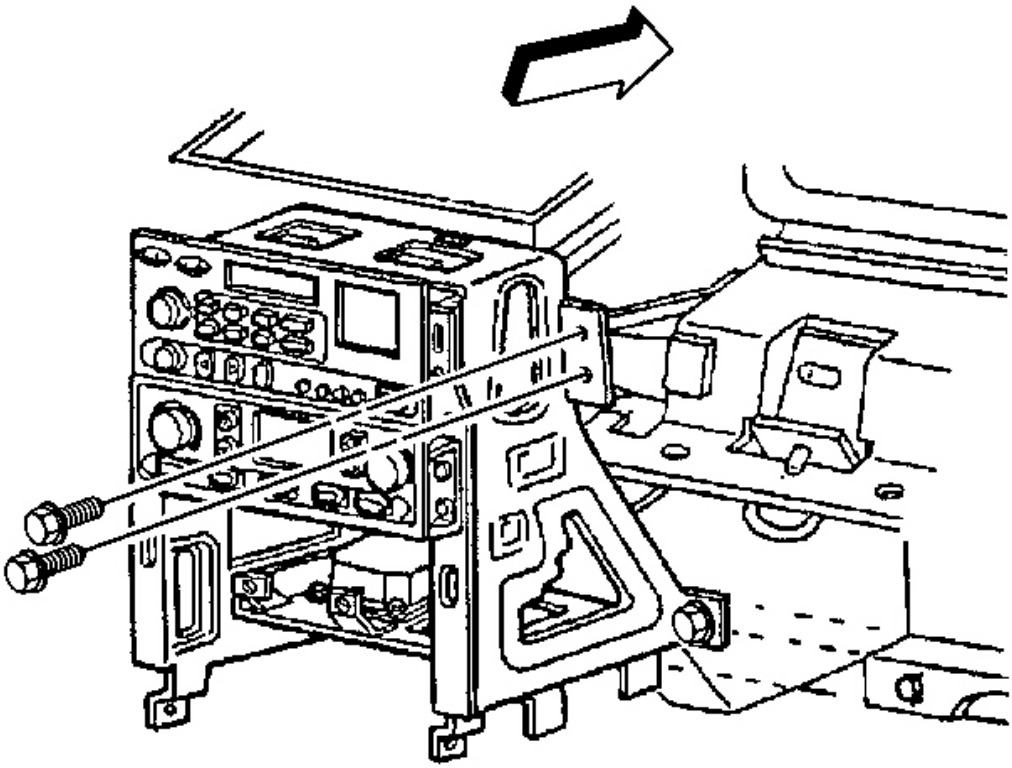

Fig. 172: Passenger Knee Bolster Bracket To IP Center Support Bracket Retaining Bolts
Courtesy of GENERAL MOTORS CORP.

IMPORTANT: The following step must be performed to assure proper trim fit during installation.

12. Mark the location of the knee bolster bracket. Refer to **Instrument Panel (I/P) Disassembly Precautions** .
13. Remove the bolts retaining the knee bolster bracket to the center support bracket.

IMPORTANT: The following step must be performed to assure proper trim fit during installation.

14. Mark the location of the SIR bracket. Refer to **Instrument Panel (I/P) Disassembly Precautions** .

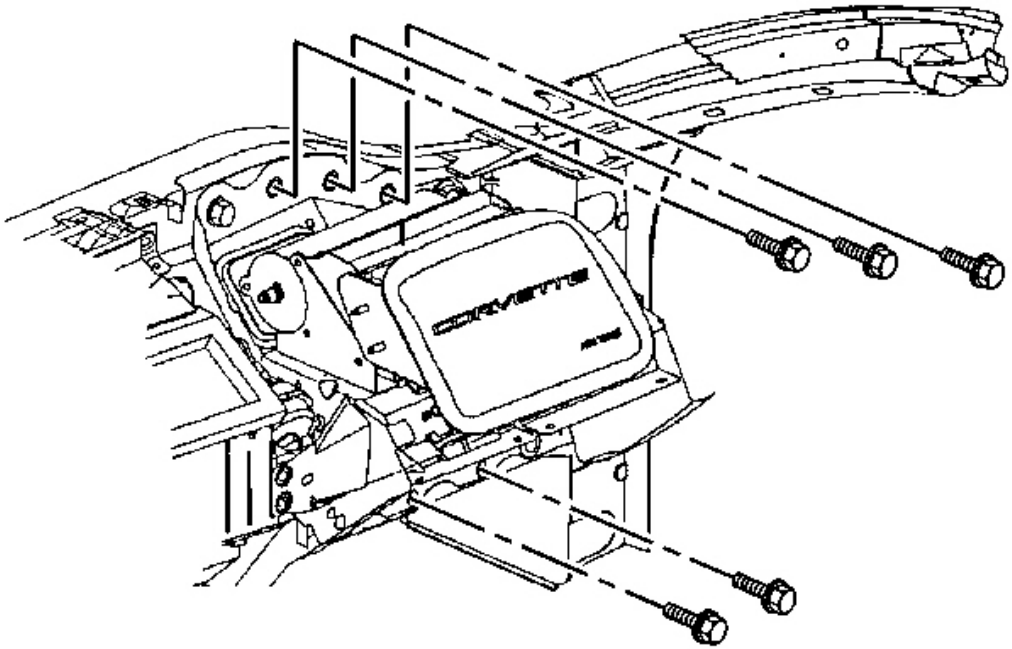

Fig. 173: SIR Bracket To I/P Lower Support Beam
Courtesy of GENERAL MOTORS CORP.

15. Remove the bolts mounting the SIR bracket to the I/P lower support beam.

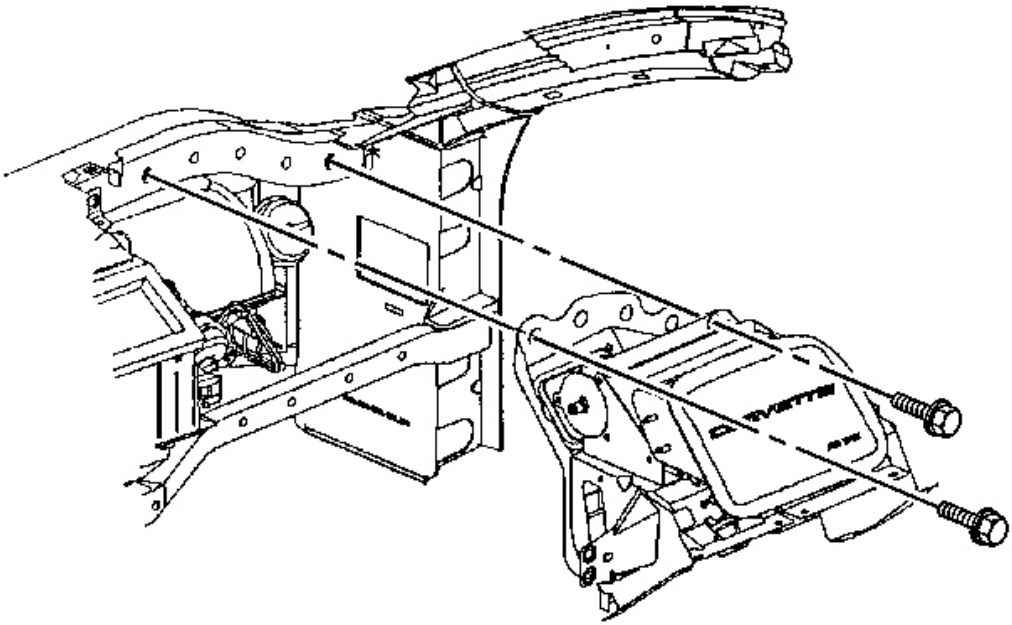

Fig. 174: SIR Bracket To I/P Upper Support Beam
Courtesy of GENERAL MOTORS CORP.

16. Remove the bolts mounting the SIR bracket to the I/P upper support beam.
17. Remove the SIR bracket.

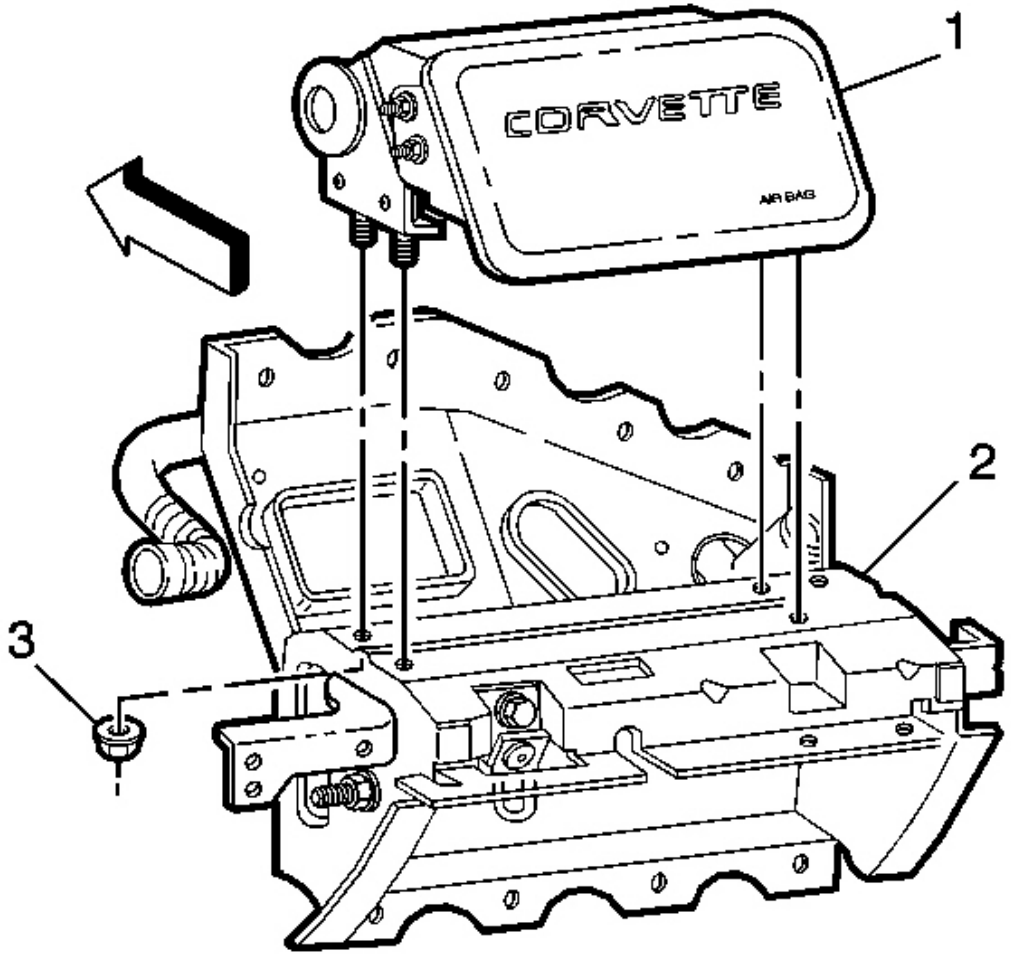

Fig. 175: SIR Module At SIR Bracket
Courtesy of GENERAL MOTORS CORP.

18. Mark the location of the SIR module in the SIR bracket.
19. Remove the SIR module retaining nuts (3).
20. Remove the SIR module (1) from the SIR bracket (2).

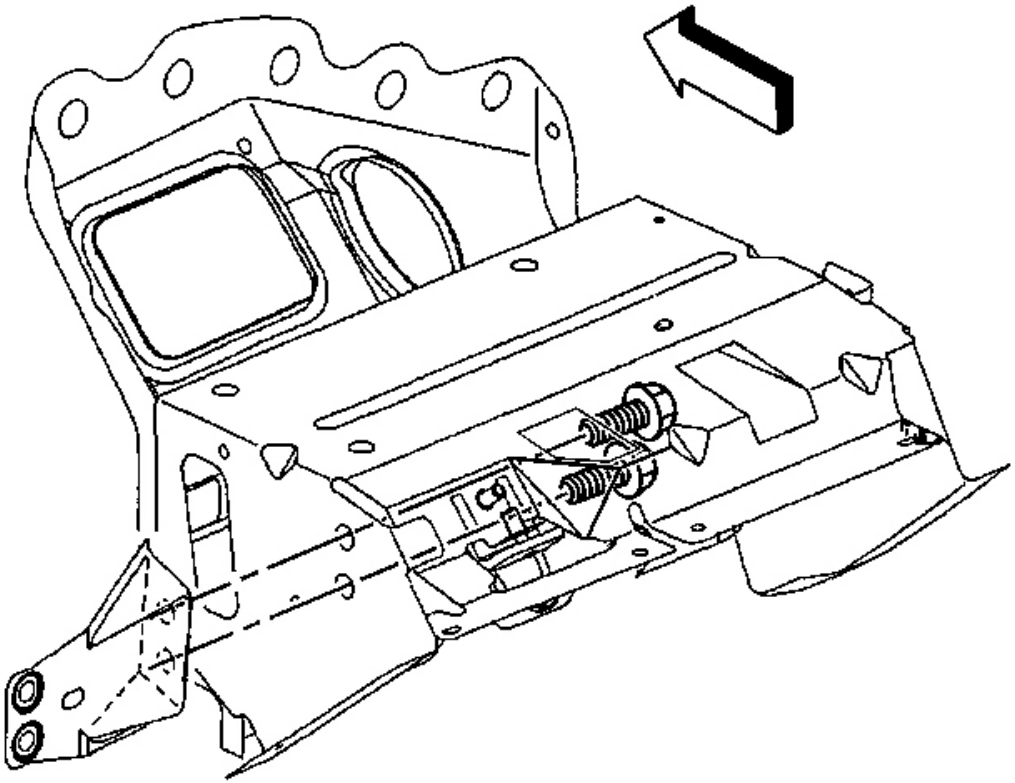

Fig. 176: Passenger Knee Bolster Bracket To Passenger SIR Bracket
Courtesy of GENERAL MOTORS CORP.

21. Remove the mounting bolts from the knee bolster bracket.
22. Remove the knee bolster bracket.

Installation Procedure

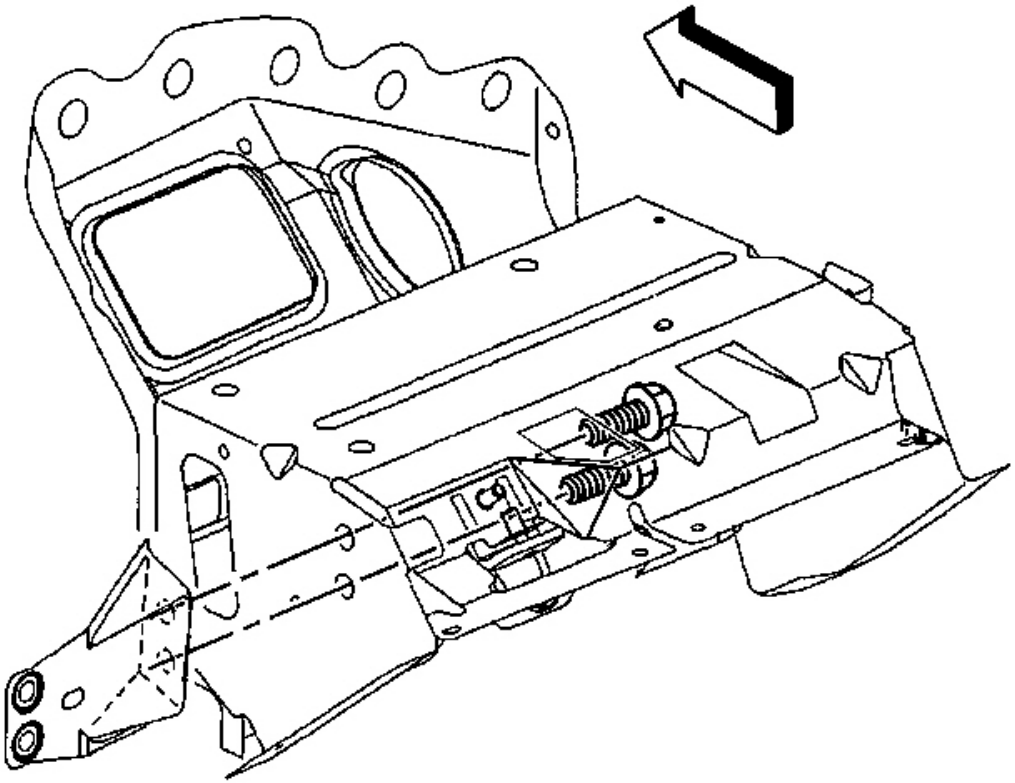

Fig. 177: Passenger Knee Bolster Bracket To Passenger SIR Bracket
Courtesy of GENERAL MOTORS CORP.

1. Install the knee bolster bracket into position as marked prior to removal.

NOTE: Refer to Fastener Notice in Cautions and Notices.

2. Install the retaining bolts which secure the knee bolster bracket to the SIR bracket.

Tighten: Tighten the bolts to 12 N.m (106 lb in).

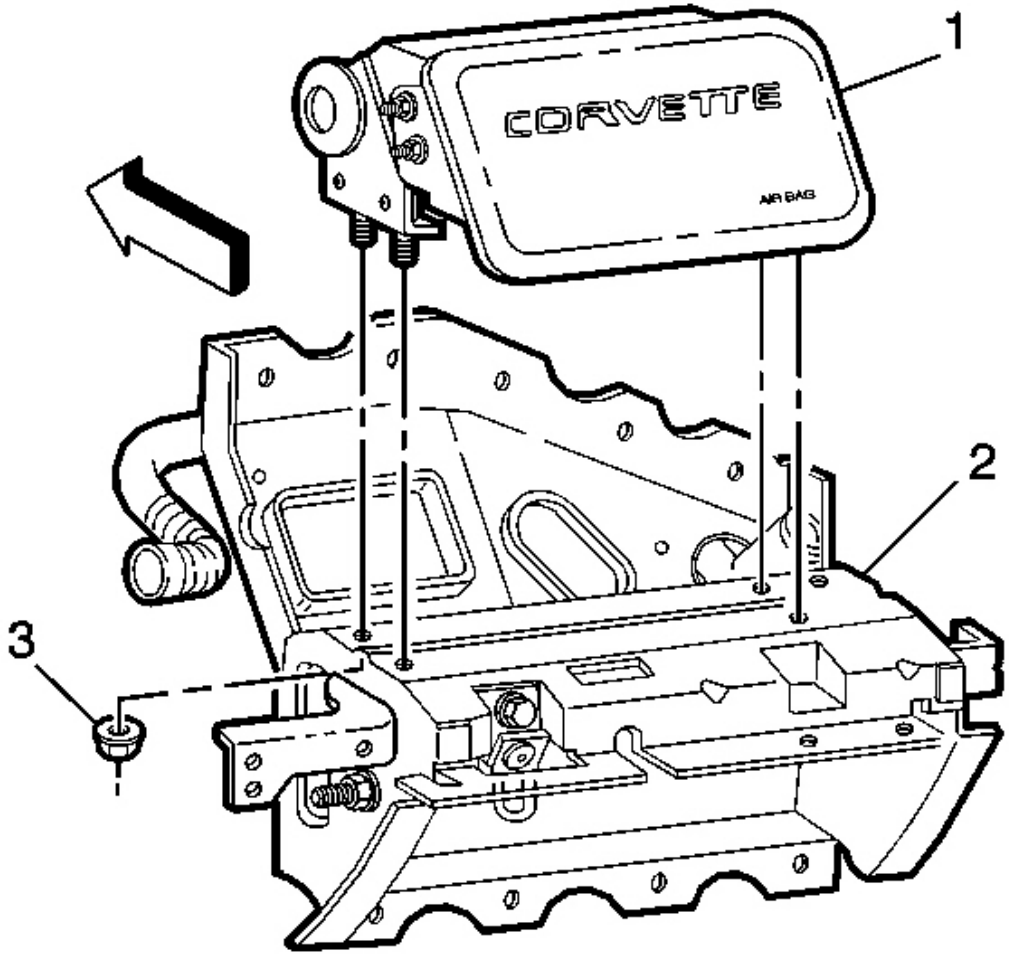

Fig. 178: SIR Module At SIR Bracket
Courtesy of GENERAL MOTORS CORP.

3. Install the SIR module (1) to the SIR bracket (2) as marked prior to removal.
4. Install the SIR module retaining nuts (3).

Tighten: Tighten the nuts to 10 N.m (89 lb in).

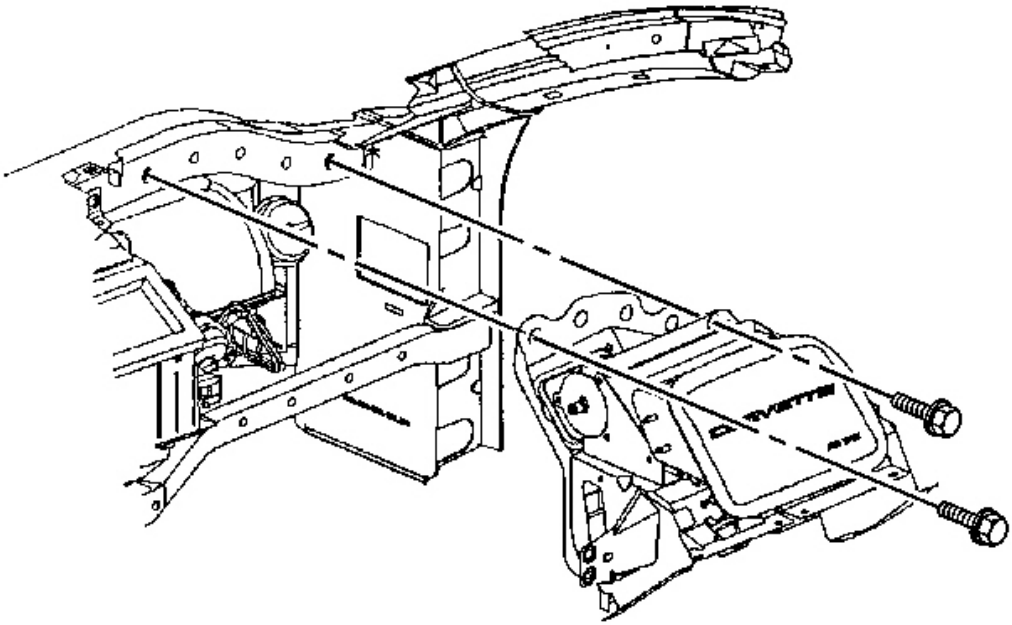

Fig. 179: SIR Bracket To I/P Upper Support Beam
Courtesy of GENERAL MOTORS CORP.

5. Install the SIR bracket into position as marked prior to removal.

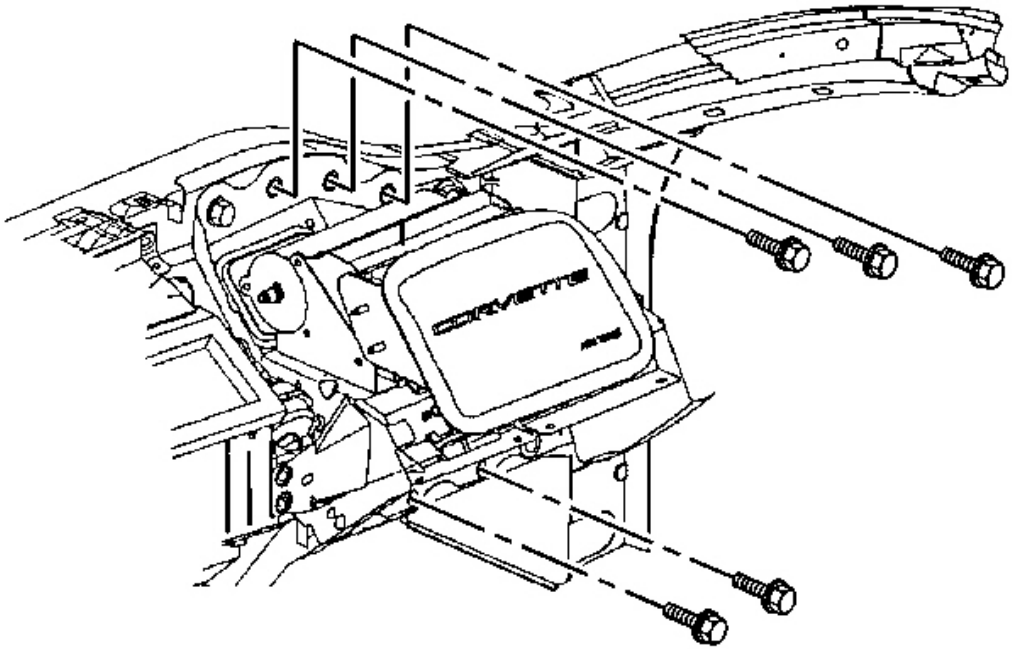

Fig. 180: SIR Bracket To I/P Lower Support Beam
Courtesy of GENERAL MOTORS CORP.

6. Install the bolts which secure the SIR bracket to the I/P upper and lower support beams.

   Tighten: Tighten the bolts to 12 N.m (106 lb in).

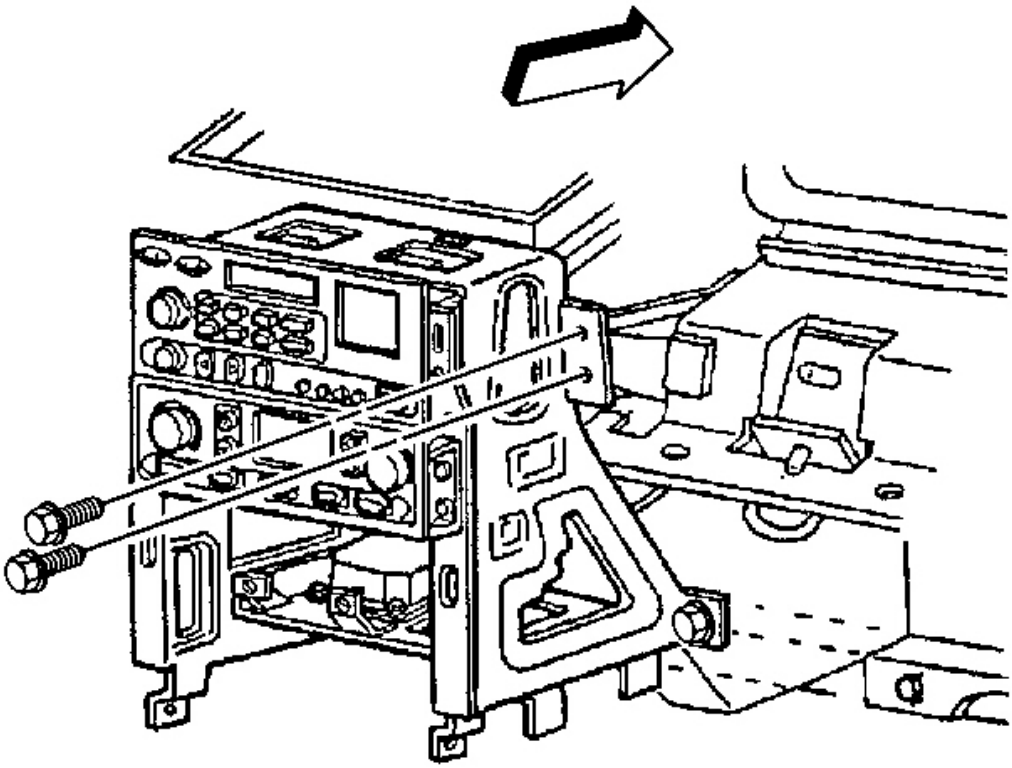

Fig. 181: Passenger Knee Bolster Bracket To IP Center Support Bracket Retaining Bolts
Courtesy of GENERAL MOTORS CORP.

7. Position the knee bolster bracket to the center support bracket as marked prior to removal.
8. Install the bolts which secure the knee bolster bracket to the center support bracket.

   Tighten: Tighten the bolts to 12 N.m (106 lb in).

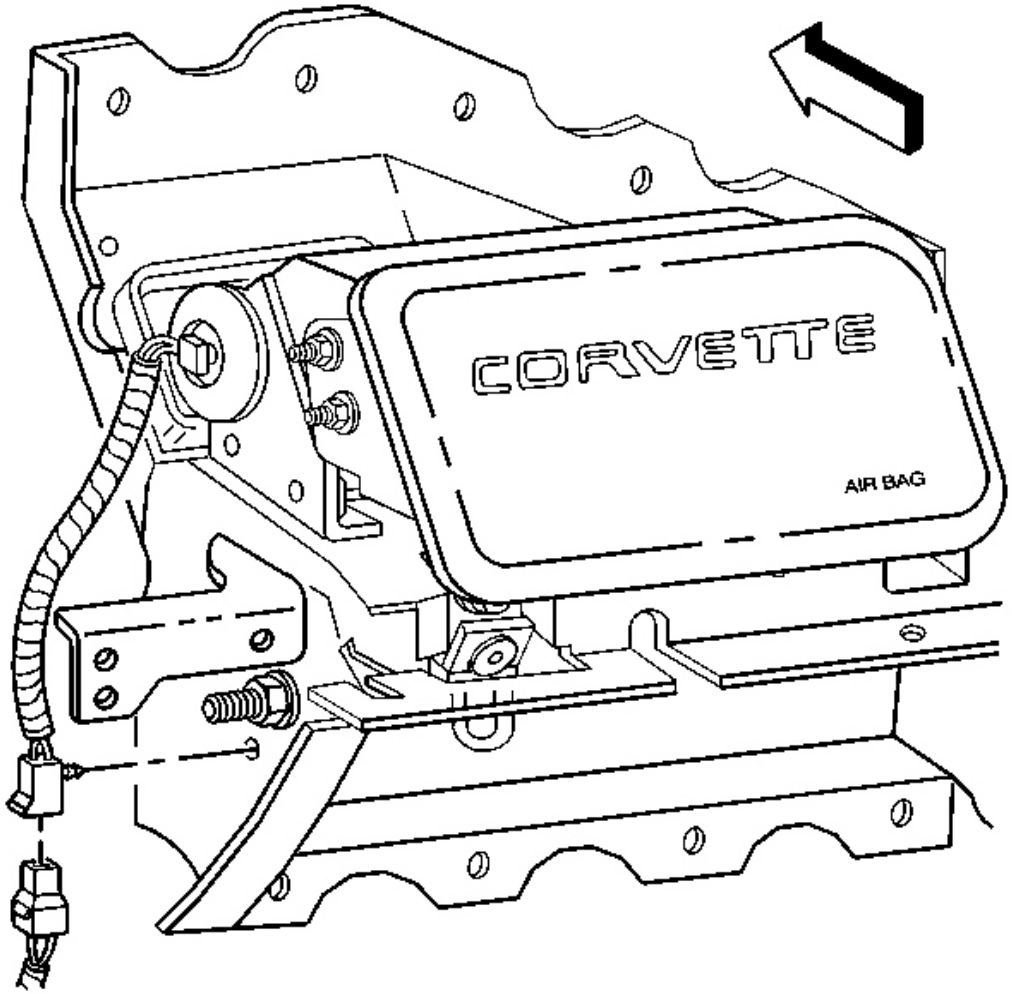

Fig. 182: SIR Module Electrical Connector
Courtesy of GENERAL MOTORS CORP.

9. Connect the SIR module electrical connector.

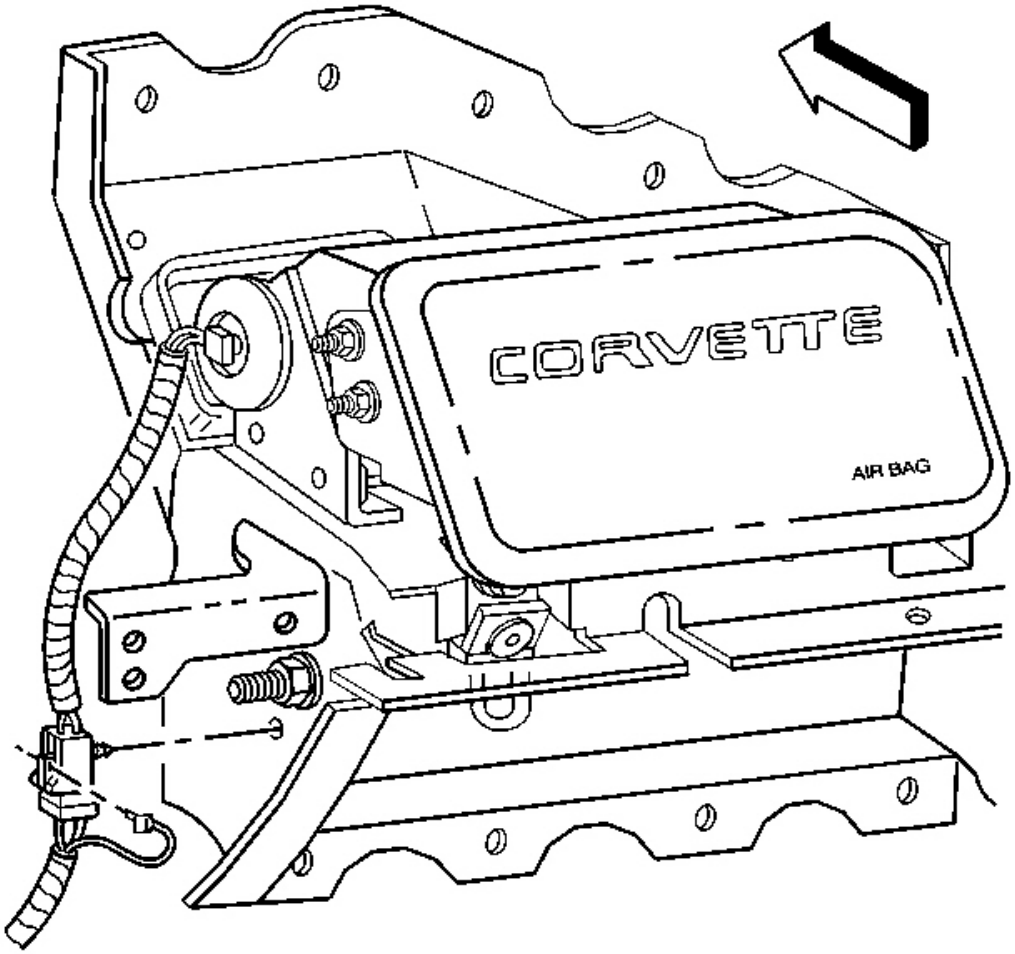

Fig. 183: Electrical Connector Retainer To SIR Bracket
Courtesy of GENERAL MOTORS CORP.

10. Secure the electrical connector retainer to the SIR bracket.
11. Install the CPA to the SIR module electrical connector.
12. Secure the I/P harness retainer to the SIR bracket along the hinge pillar. Insert the I/P compartment lamp electrical connector down through the opening in the top of the SIR bracket.
13. Install the right side window defogger outlet duct.
14. Install the I/P upper trim pad. Refer to **Trim Pad Replacement - Instrument Panel (I/P) Upper** .
15. Adjust the fit of the SIR module to the I/P upper trim pad, if necessary.
16. Install the I/P compartment. Refer to **Compartment Replacement - Instrument Panel (I/P)** .
17. Install the driver knee bolster trim panel. Refer to **Trim Panel Replacement - Knee Bolster** .

18. Install the I/P accessory trim plate. Refer to **Trim Plate Replacement - Instrument Panel (I/P) Accessory** .
19. Install the console. Refer to **Console Replacement** .
20. Enable the SIR system. Refer to **SIR Disabling and Enabling Zone 5** in SIR.

DRIVER INFORMATION CENTER SWITCH REPLACEMENT

Removal Procedure

NOTE: Refer to IPC Servicing Notice in Cautions and Notices.

1. Remove the instrument panel cluster (IPC) from the vehicle. Refer to **Instrument Panel Cluster (IPC) Replacement** .
2. Disconnect the instrument panel (IP) dimmer switch or the IP dimmer/head-up display (HUD) switch electrical connector.

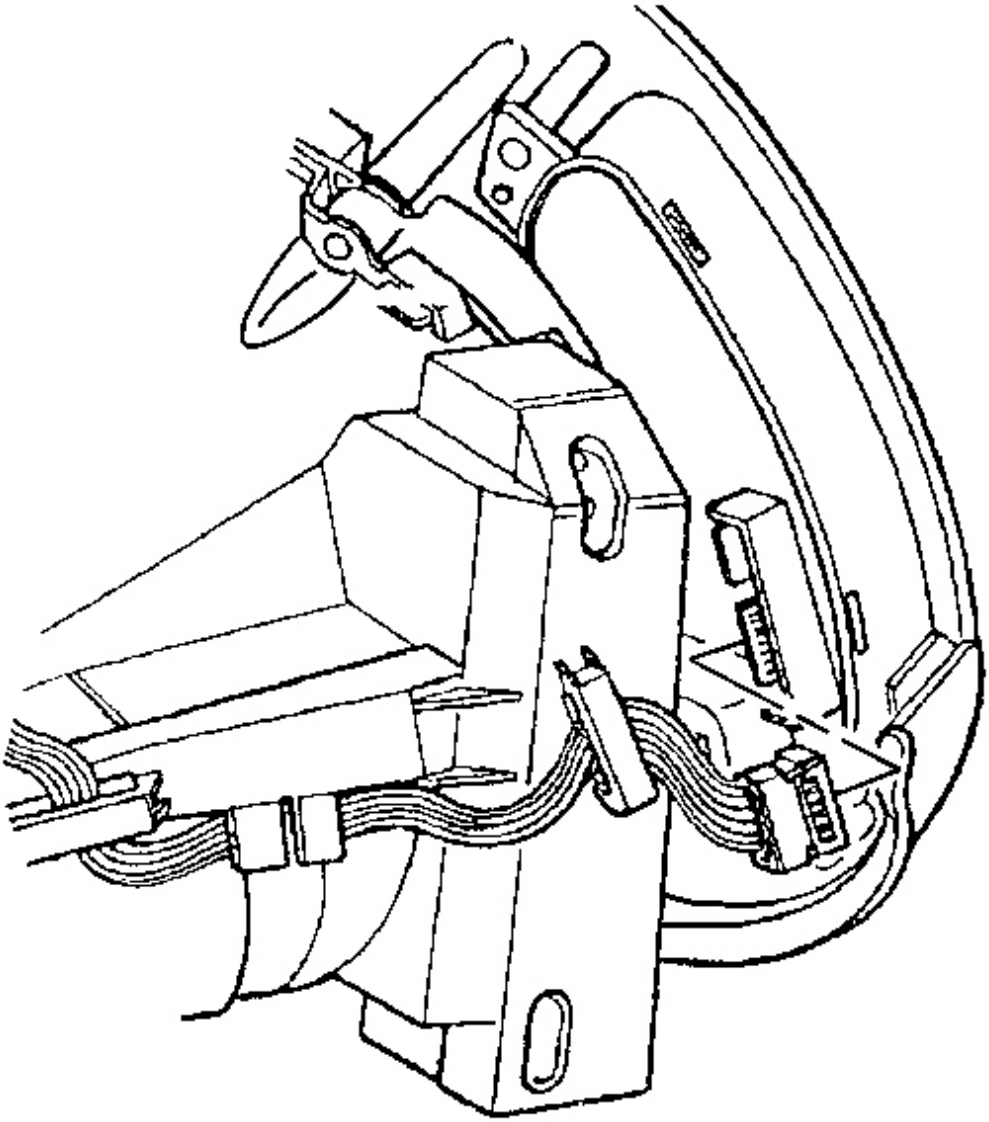

Fig. 184: Instrument Panel Dimmer/HUD Switch Electrical Connector
Courtesy of GENERAL MOTORS CORP.

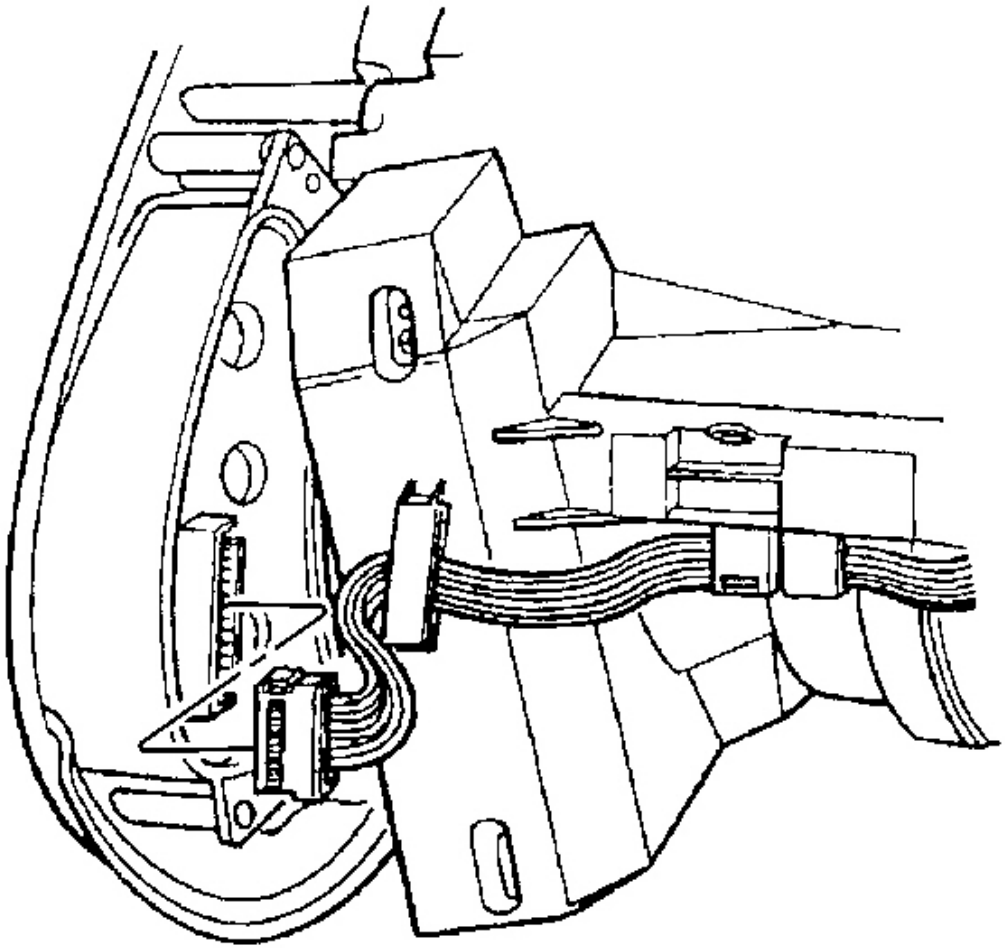

Fig. 185: Driver Information Center (DIC) Switch Electrical Connector
Courtesy of GENERAL MOTORS CORP.

3. Disconnect the driver information center (DIC) switch electrical connector.

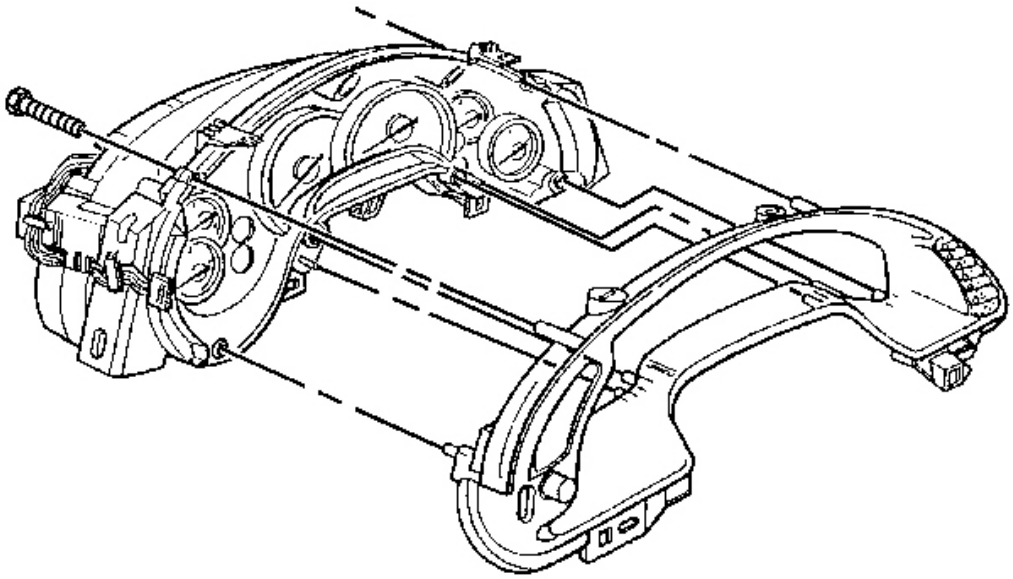

Fig. 186: IP Cluster Bezel To IPC
Courtesy of GENERAL MOTORS CORP.

4. Remove the IP cluster bezel retaining screws.
5. Remove the bezel from the IPC.

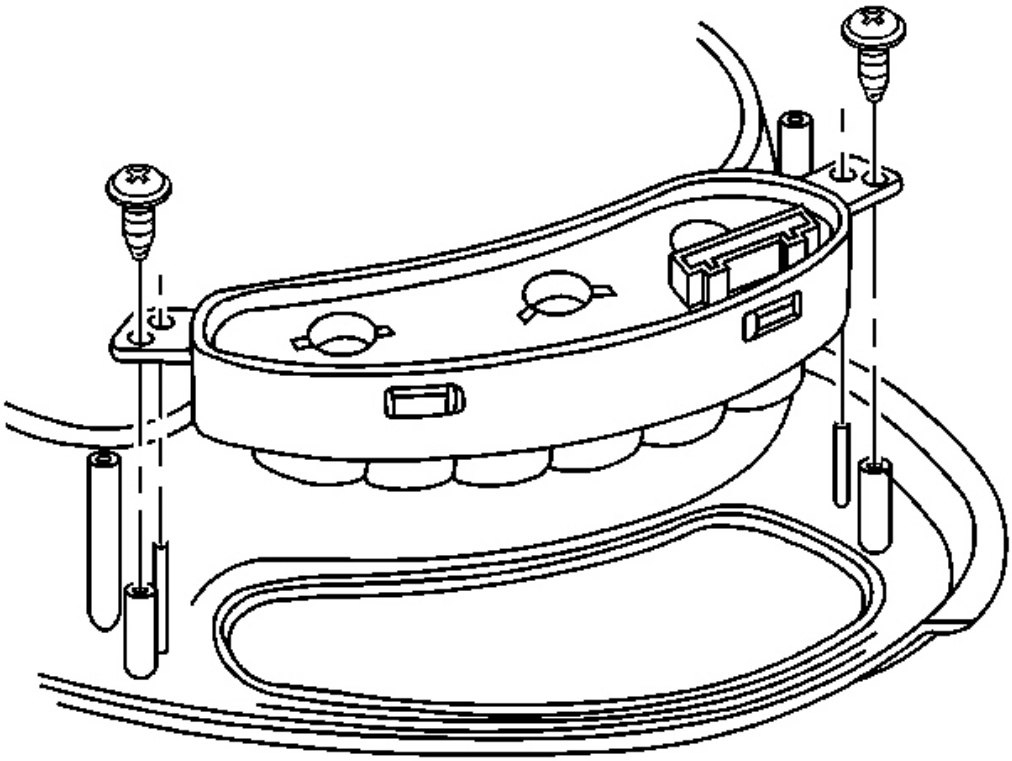

Fig. 187: DIC Switch To I/P Cluster Bezel
Courtesy of GENERAL MOTORS CORP.

6. Remove the DIC switch retaining screws.
7. Remove the DIC switch.

Installation Procedure

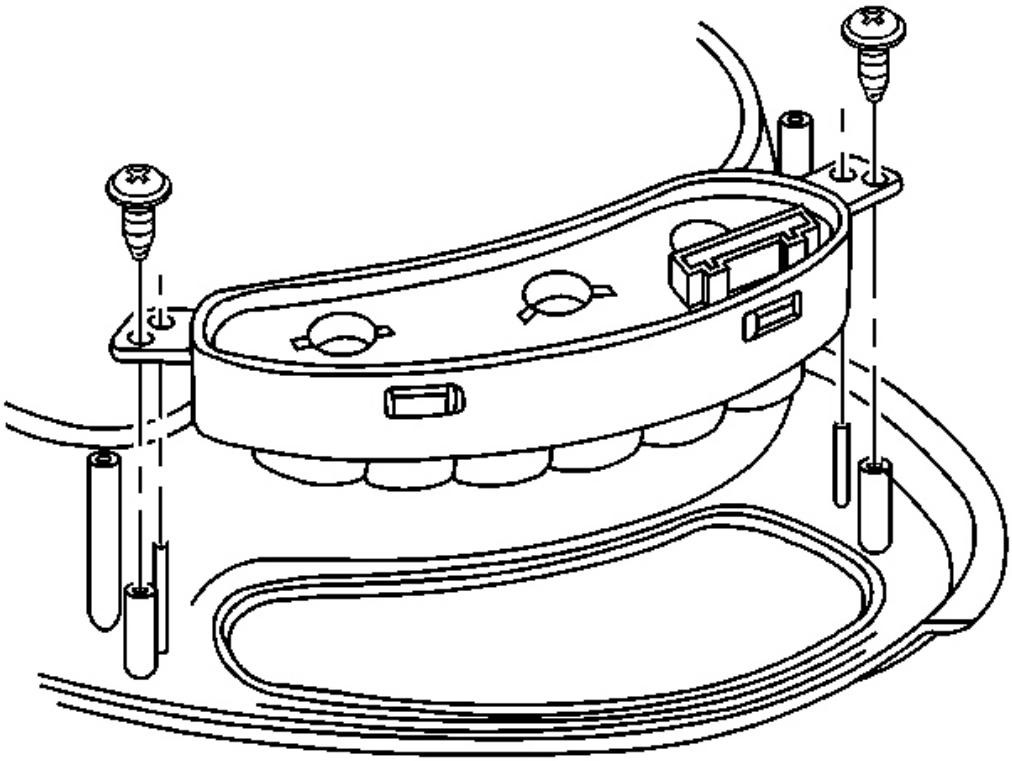

Fig. 188: DIC Switch To I/P Cluster Bezel
Courtesy of GENERAL MOTORS CORP.

1. Install the DIC switch to the IP cluster bezel.

   NOTE: Refer to Fastener Notice in Cautions and Notices.

2. Install the DIC switch retaining screws.

   Tighten: Tighten the DIC switch retaining screws to 1.5 N.m (13 lb in).

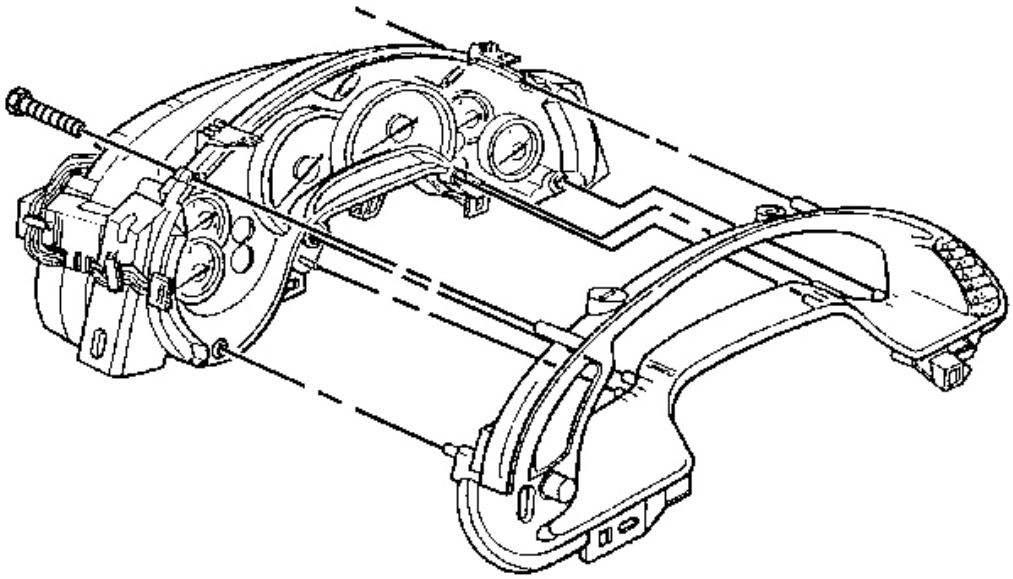

Fig. 189: IP Cluster Bezel To IPC
Courtesy of GENERAL MOTORS CORP.

3. Install the bezel to the IPC.

   Align the bezel onto the guide pins.

4. Install the IP cluster bezel retaining screws.

   Tighten: Tighten the IP cluster bezel retaining screws to 1.5 N.m (13 lb in).

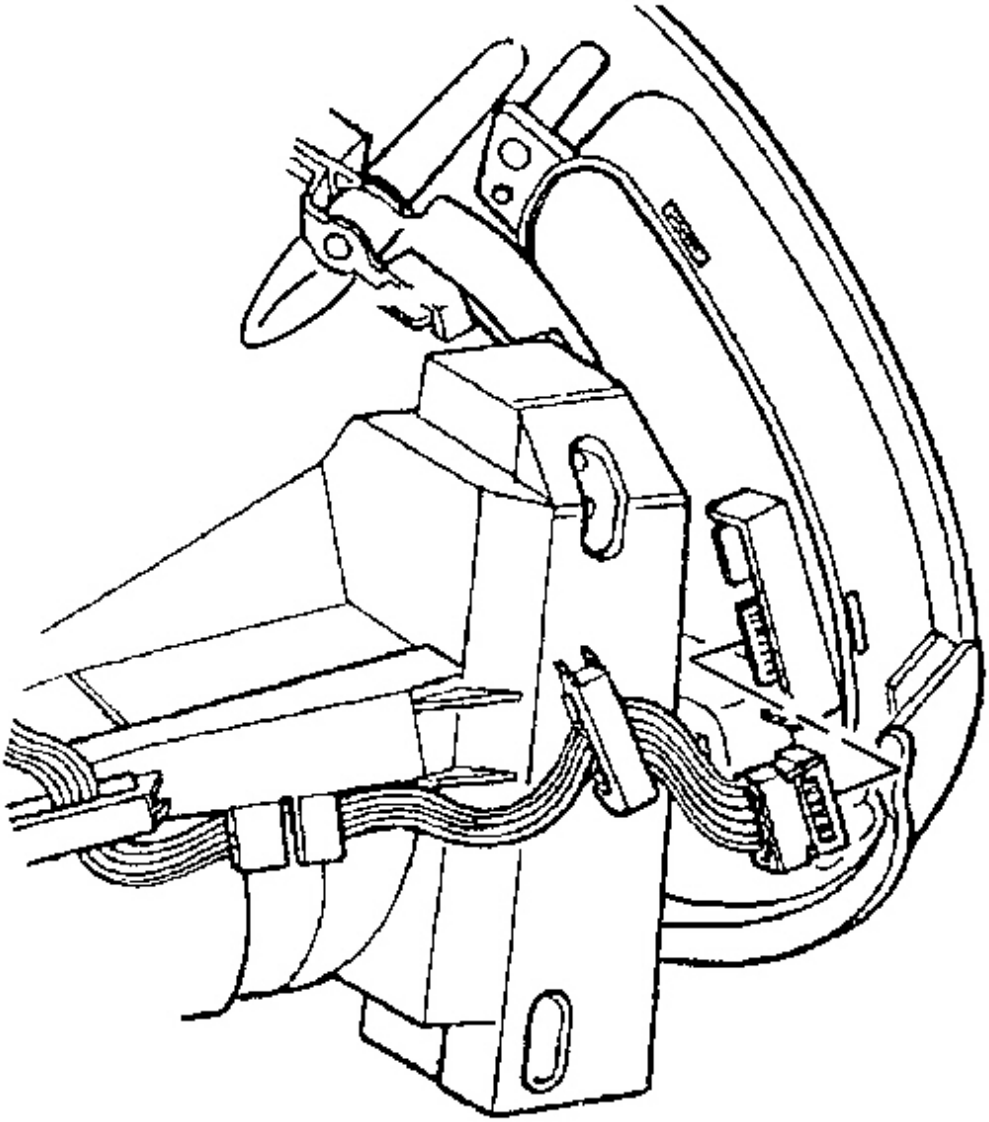

Fig. 190: Instrument Panel Dimmer/HUD Switch Electrical Connector
Courtesy of GENERAL MOTORS CORP.

5. Connect the IP dimmer switch or the IP dimmer/HUD switch electrical connector.

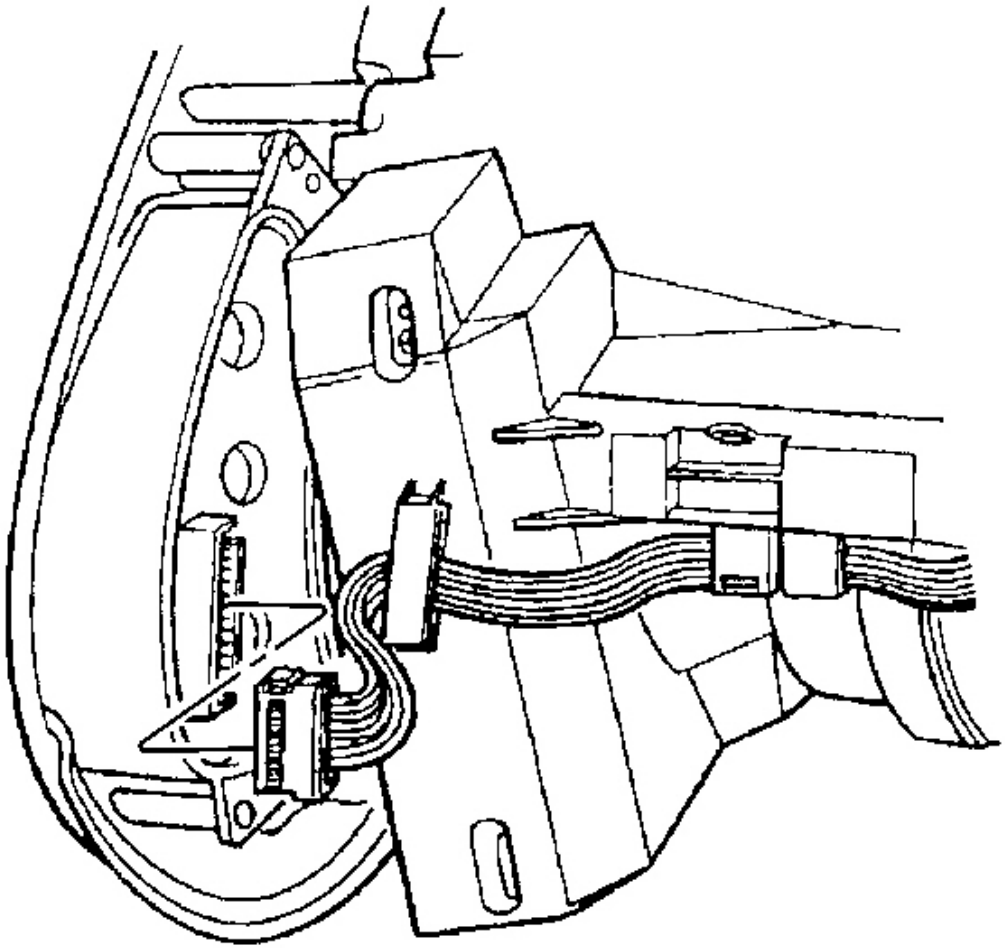

Fig. 191: Driver Information Center (DIC) Switch Electrical Connector
Courtesy of GENERAL MOTORS CORP.

6. Connect the DIC switch electrical connector.
7. Install the IPC to the vehicle. Refer to **Instrument Panel Cluster (IPC) Replacement** .

INSTRUMENT PANEL CLUSTER (IPC) REPLACEMENT

Removal Procedure

NOTE: Refer to IPC Servicing Notice in Cautions and Notices.

If the instrument panel cluster (IPC) that is being removed is to be sent to an authorized Delco Service Center, prior to shipping the unit, refer to **Instrument Cluster Service Precautions** .

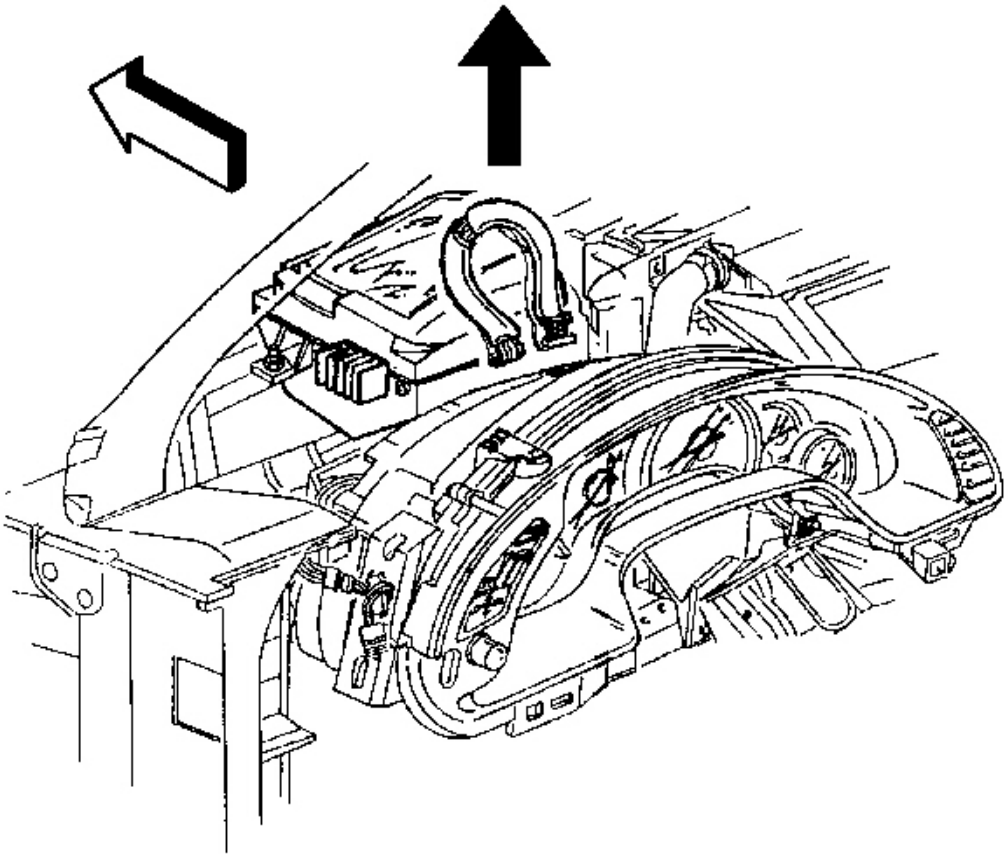

Fig. 192: HUD Electrical Connector At IPC
Courtesy of GENERAL MOTORS CORP.

CAUTION: Refer to Battery Disconnect Caution in Cautions and Notices.

1. Disconnect the negative battery cable.
2. Remove the I/P upper trim pad. Refer to **Trim Pad Replacement - Instrument Panel (I/P) Upper** .
3. Carefully lift the head-up display (HUD) electrical harness from between the instrument panel cluster (IPC) and the HUD, if equipped.
4. Disconnect the HUD electrical connector from the IPC, if equipped.

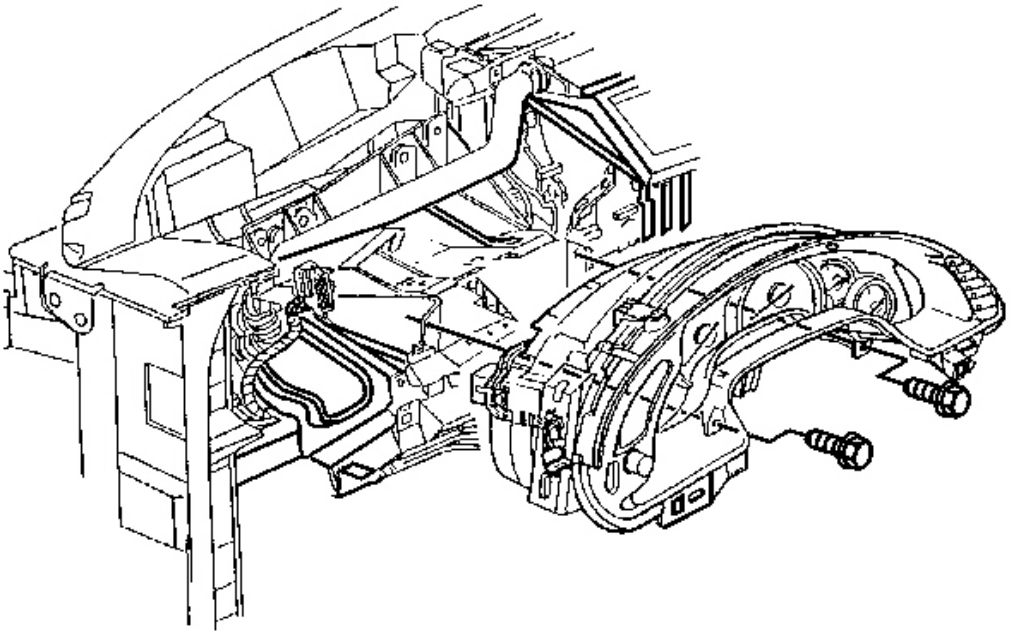

Fig. 193: IPC To Steering Column Bracket Retaining Screws
Courtesy of GENERAL MOTORS CORP.

5. Remove the IPC to steering column bracket retaining screws.
6. Raise the rear of the IPC slightly to release the locator tab, then lift the IPC to access the electrical connector.

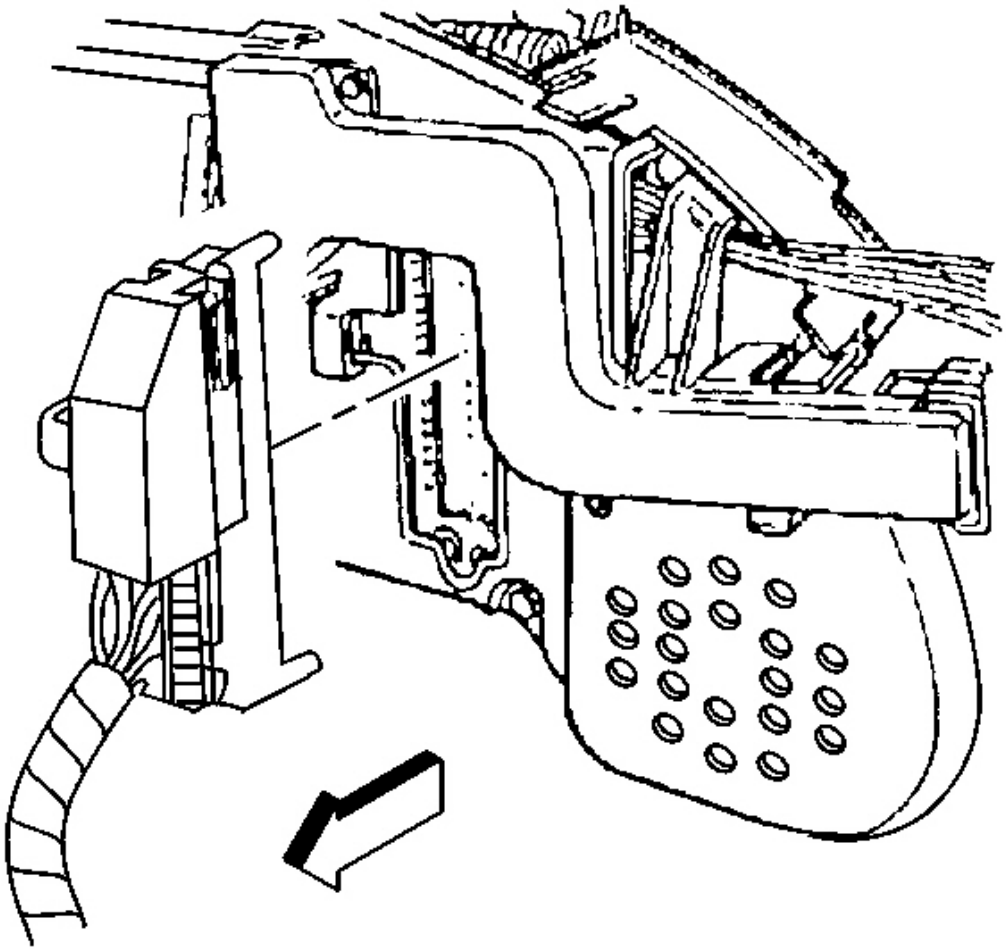

Fig. 194: IPC Electrical Connector
Courtesy of GENERAL MOTORS CORP.

7. Disconnect the IPC electrical connector.
8. Remove the IPC.

Installation Procedure

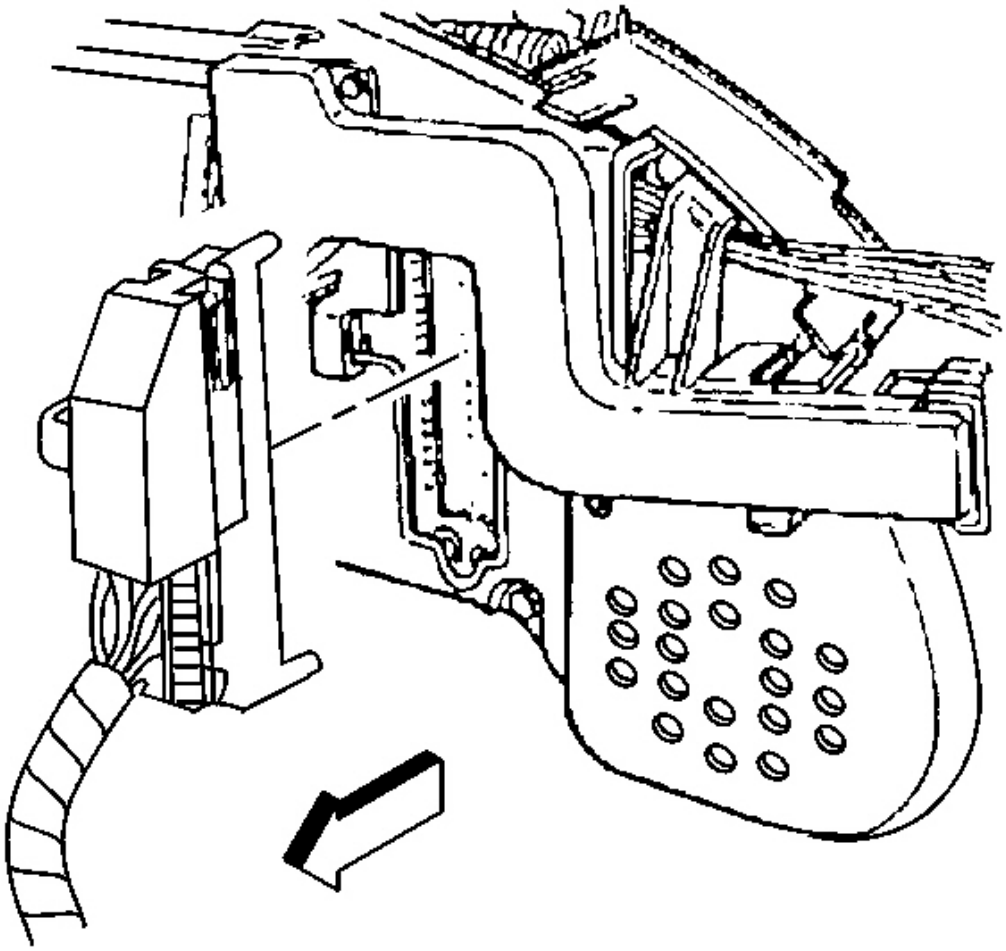

Fig. 195: IPC Electrical Connector
Courtesy of GENERAL MOTORS CORP.

1. Connect the instrument panel cluster (IPC) electrical connector.

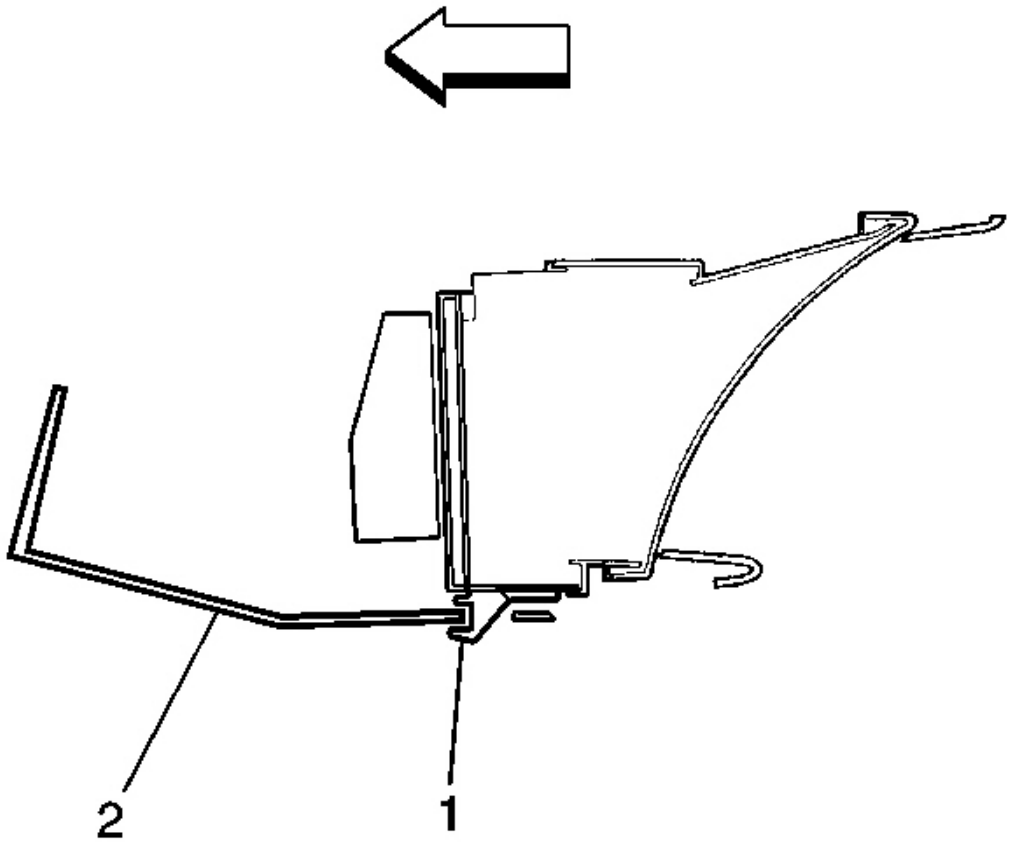

Fig. 196: IPC At Steering Column Bracket
Courtesy of GENERAL MOTORS CORP.

2. Position the IPC to the steering column bracket.
3. Check that the IPC retaining tab (1) is positioned correctly to the steering column bracket (2).

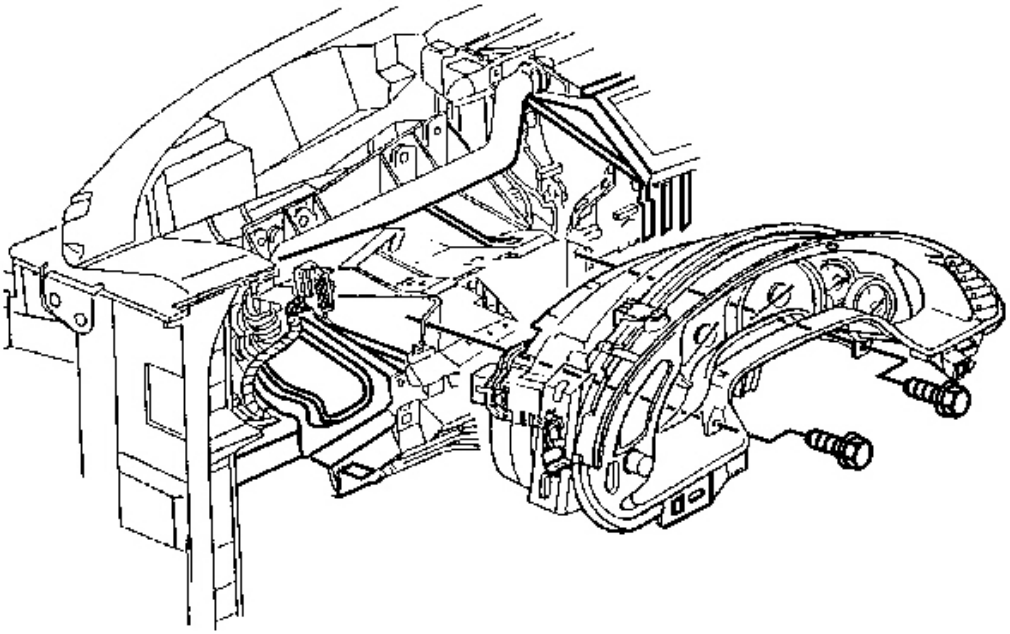

Fig. 197: IPC To Steering Column Bracket Retaining Screws
Courtesy of GENERAL MOTORS CORP.

NOTE: Refer to Fastener Notice in Cautions and Notices.

4. Install the IPC to steering column bracket retaining screws.

   Tighten: Tighten the IPC to steering column bracket retaining screws to 3 N.m (27 lb in).

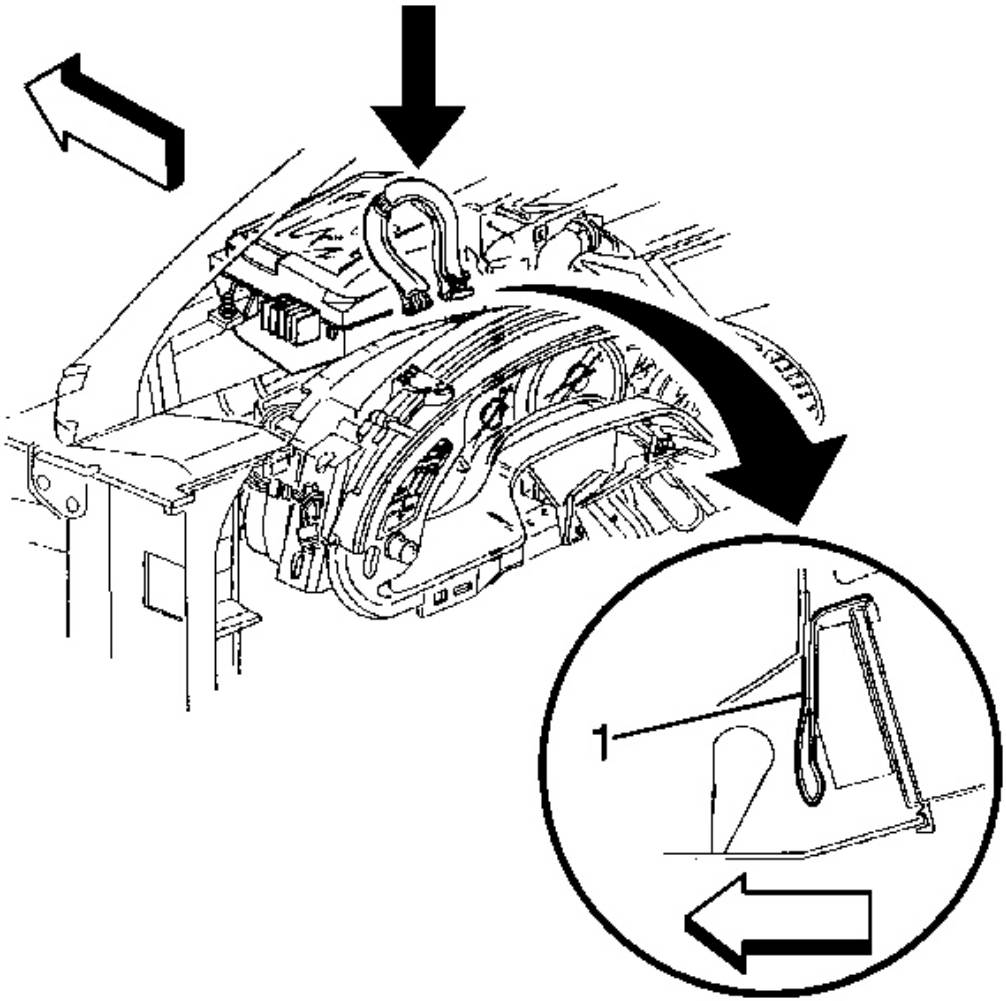

Fig. 198: HUD Electrical Connector To IPC
Courtesy of GENERAL MOTORS CORP.

5. Connect the head-up display (HUD) electrical connector to the IPC, if equipped.
6. Carefully tuck the HUD electrical harness (1) down between the IPC and the HUD as shown, if equipped.
7. Install the I/P upper trim pad. Refer to **Trim Pad Replacement - Instrument Panel (I/P) Upper** .
8. Connect the negative battery cable.

   Tighten: Tighten the negative battery cable bolt to 15 N.m (11 lb ft).

9. Program the transmitters. Refer to **Transmitter Programming** in Keyless Entry.

10. Synchronize the transmitters. Refer to Transmitter Resynchronization in Keyless Entry.

INSTRUMENT PANEL CLUSTER (IPC) LENS REPLACEMENT

Removal Procedure

NOTE: Refer to IPC Servicing Notice in Cautions and Notices.

IMPORTANT: Maintain the cleanest environment possible when servicing the instrument panel cluster (IPC) lens. The cluster utilizes ultra-violet (UV) lighting; the slightest amount of dirt or dust allowed to get behind the lens will be extremely visible when the UV lighting is on.

1. Remove the instrument panel cluster (IPC) from the vehicle. Refer to **Instrument Panel Cluster (IPC) Replacement** .
2. Remove the I/P cluster bezel. Refer to **Bezel Replacement - Instrument Panel (I/P) Cluster** .
3. Working from the outer tabs toward the inner tabs, release the IPC lens locking tabs.
4. Remove the IPC lens from the IPC.

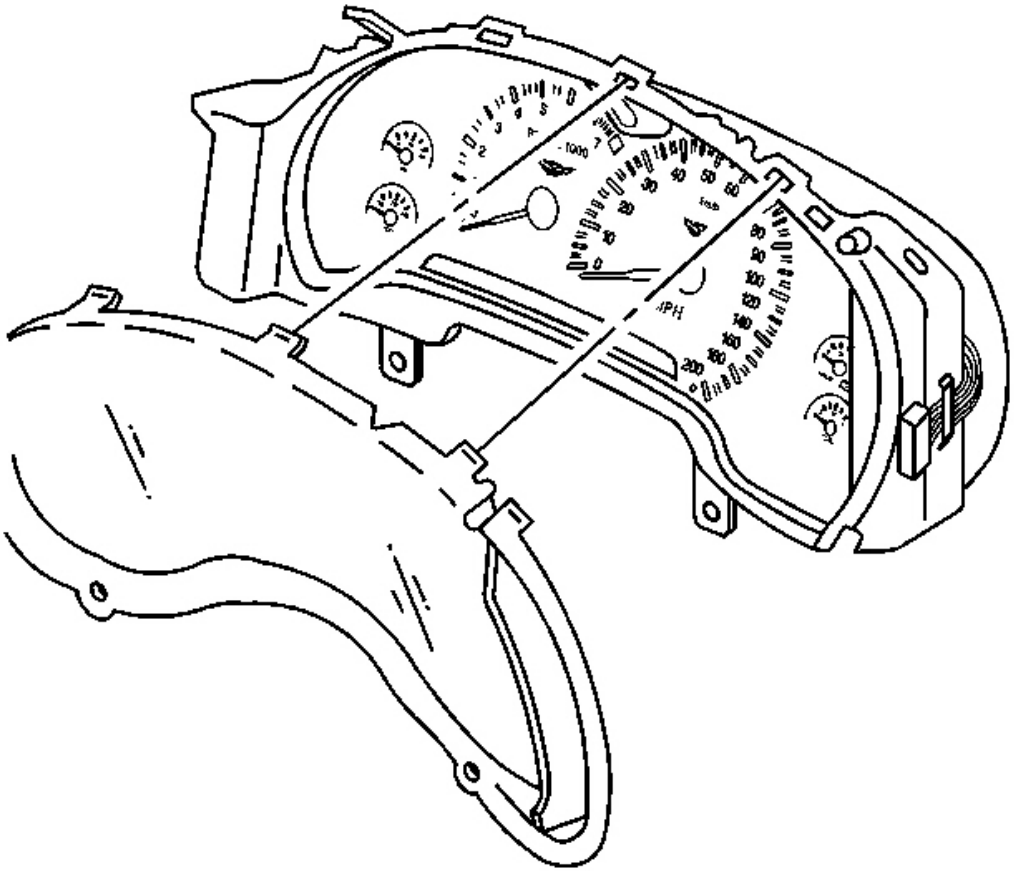

Fig. 199: IPC Lens To IPC
Courtesy of GENERAL MOTORS CORP.

Installation Procedure

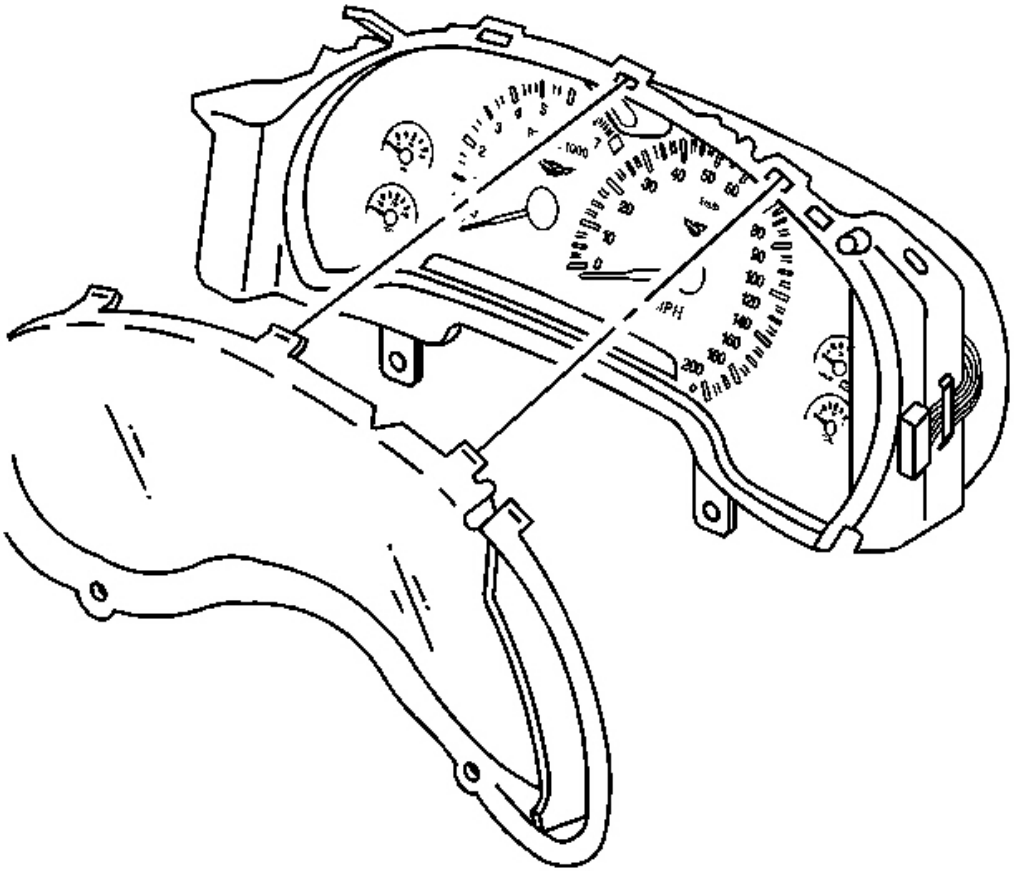

Fig. 200: IPC Lens To IPC
Courtesy of GENERAL MOTORS CORP.

1. Install the instrument panel cluster (IPC) lens into position on the IPC.
    1. Align the lens locking tabs into the slots.
    2. Align the lens onto the alignment pins.
2. Install the IPC lens locking tabs to seat the lens.
3. Install the I/P cluster bezel. Refer to **Bezel Replacement - Instrument Panel (I/P) Cluster** .
4. Install the IPC to the vehicle. Refer to **Instrument Panel Cluster (IPC) Replacement** .

INSTRUMENT PANEL CLUSTER (IPC) INDICATOR LAMP REPLACEMENT

Removal Procedure

NOTE: **Refer to IPC Servicing Notice in Cautions and Notices.**

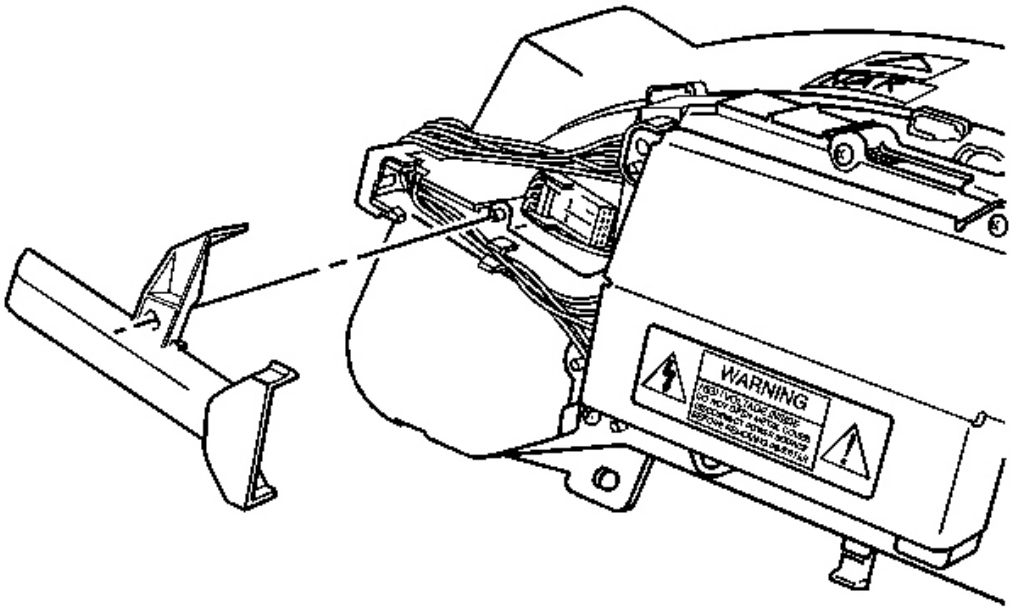

Fig. 201: UV Inverter Wiring Covers
Courtesy of GENERAL MOTORS CORP.

1. Remove the instrument panel cluster (IPC) from the vehicle. Refer to **Instrument Panel Cluster (IPC) Replacement** .
2. Remove the ultra-violet (UV) inverter wiring covers; unsnap.

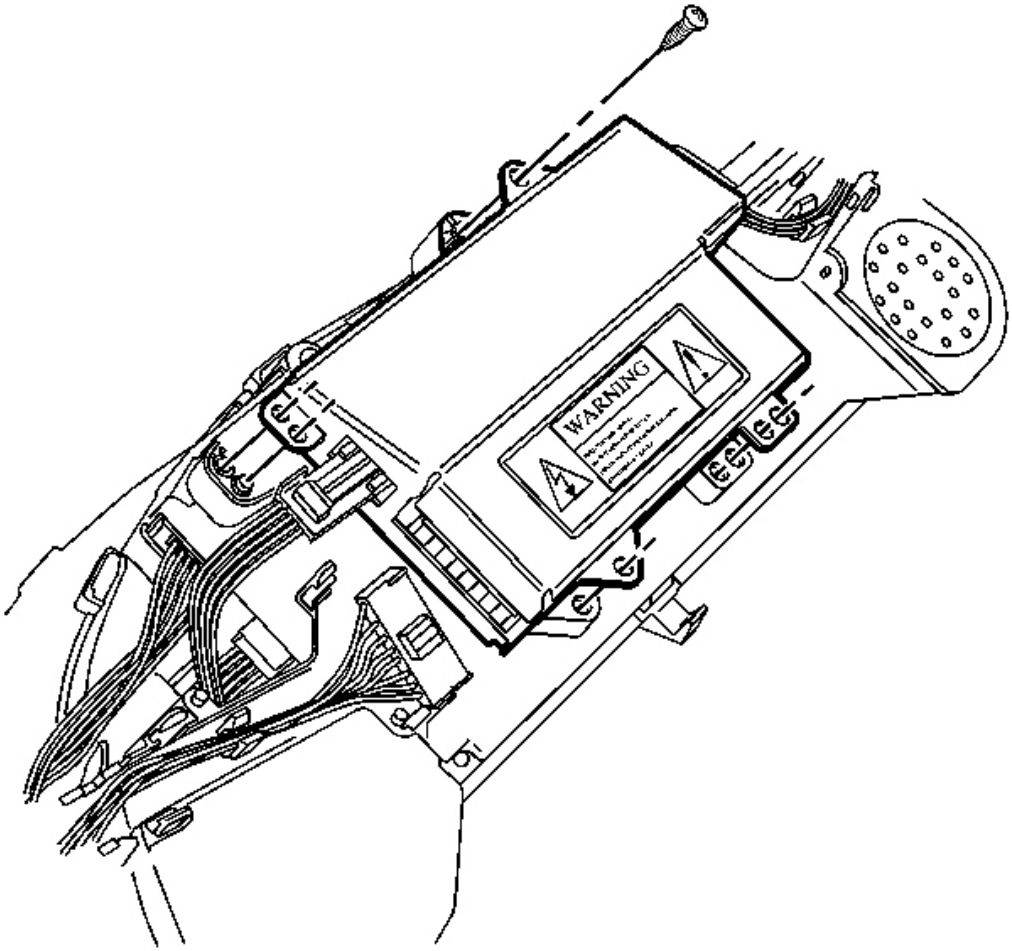

Fig. 202: UV Inverter Electrical Connectors
Courtesy of GENERAL MOTORS CORP.

3. Disconnect the UV inverter electrical connectors.
4. Remove the UV inverter mounting screws.
5. Remove the UV inverter.

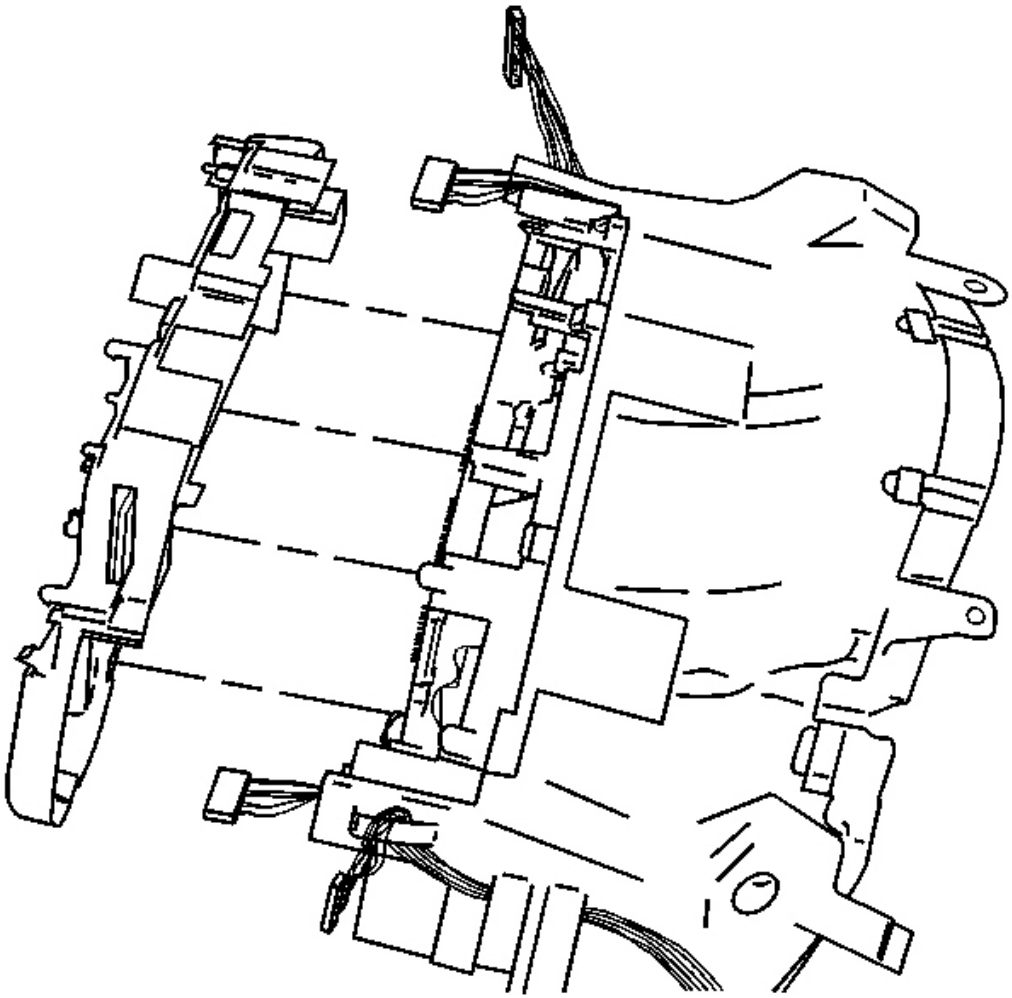

Fig. 203: Electrical Connectors At IPC Printed Circuit Board
Courtesy of GENERAL MOTORS CORP.

6. Disconnect the electrical connectors from the IPC printed circuit board.
7. Remove the IPC rear cover retaining screws.
8. Remove the rear cover; unsnap.

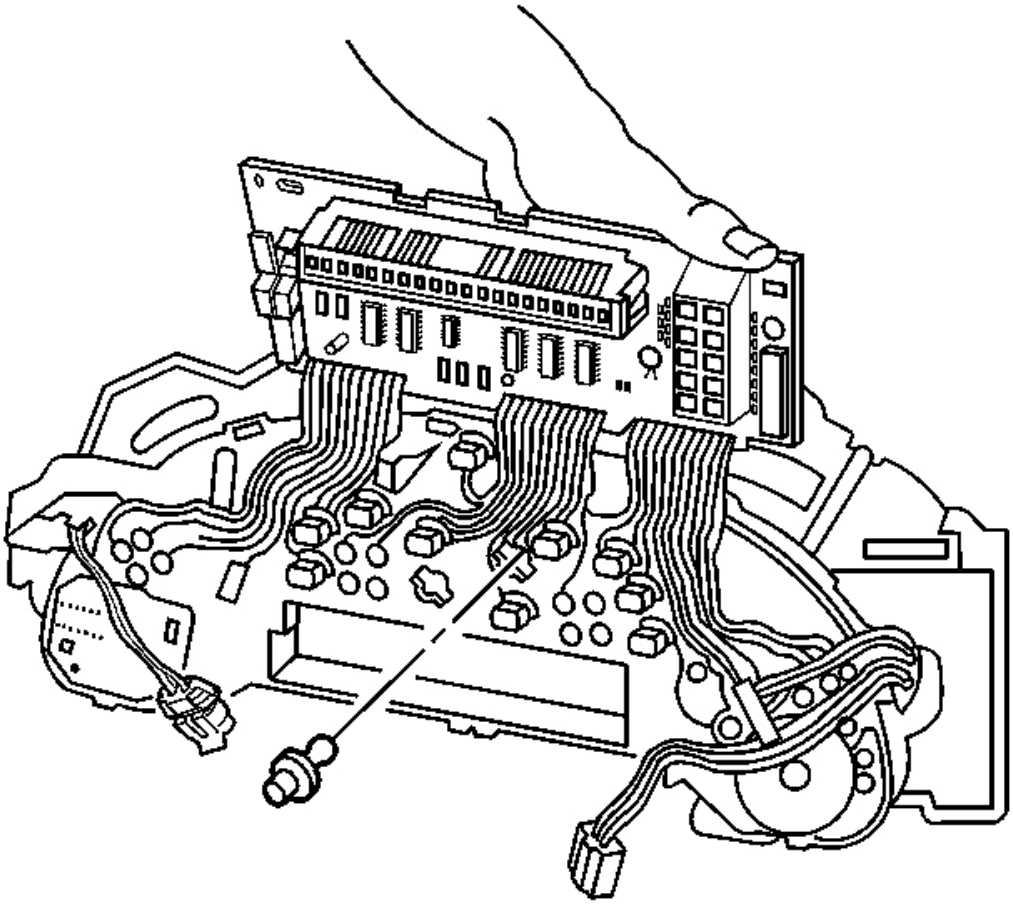

Fig. 204: Side Electrical Connector To Circuit Board
Courtesy of GENERAL MOTORS CORP.

9. Disconnect the (side) electrical connector from the circuit board.
10. Remove the circuit board retaining screws.
11. Tilt the circuit board up slightly.
12. Unsnap the circuit board tabs and lift slowly.
13. Disconnect the chime connector from the circuit board.
14. Tilt the circuit board out of the way.

    Tilt the board slowly and make sure the flat wires do not become kinked or loose.

15. Twist to remove the appropriate bulb/socket from the IPC.

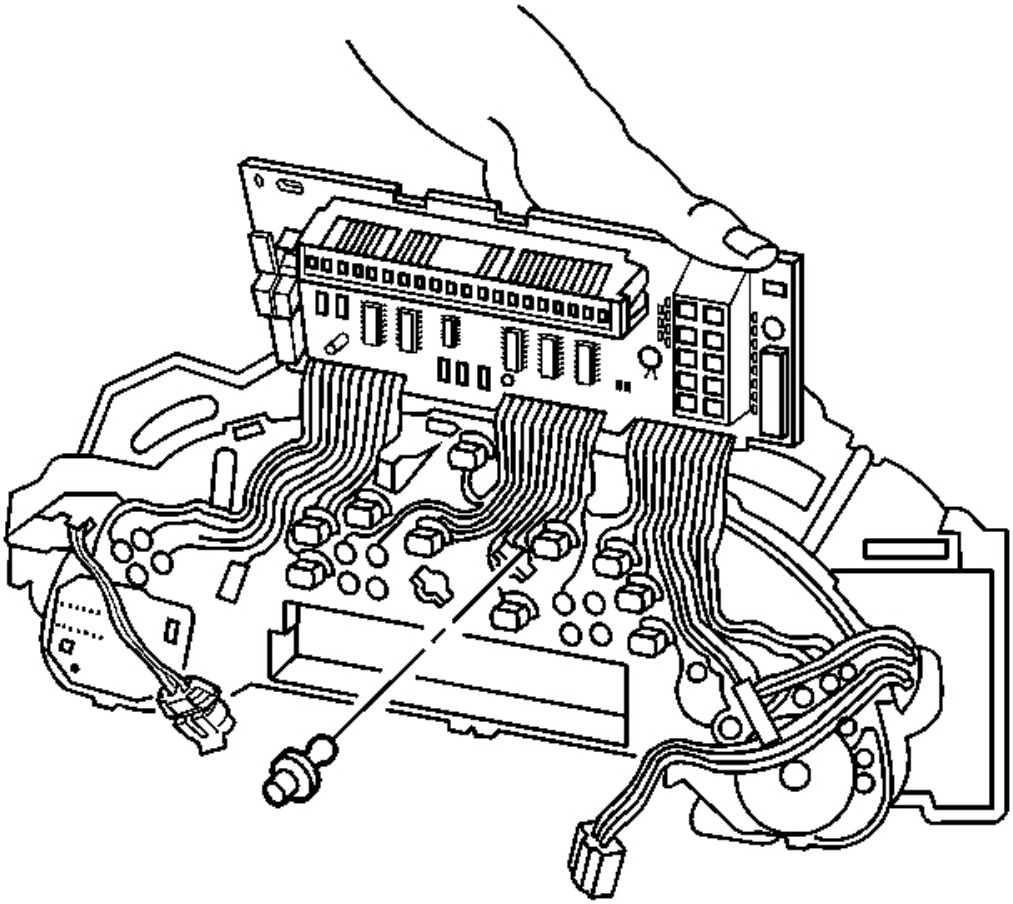

Fig. 205: Electrical Connector To Circuit Board
Courtesy of GENERAL MOTORS CORP.

1. Twist to install the bulb/socket to the IPC.
2. Tilt the circuit board back toward its mounting position.

   Tilt the board slowly, and make sure the flat wires do not become kinked or loose.

3. Connect the chime connector to the circuit board.
4. Tilt the circuit board the rest of the way to its mounting position.
5. Snap the circuit board tabs into place.
6. Install the circuit board retaining screws.

7. Connect the (side) electrical connector to the circuit board.

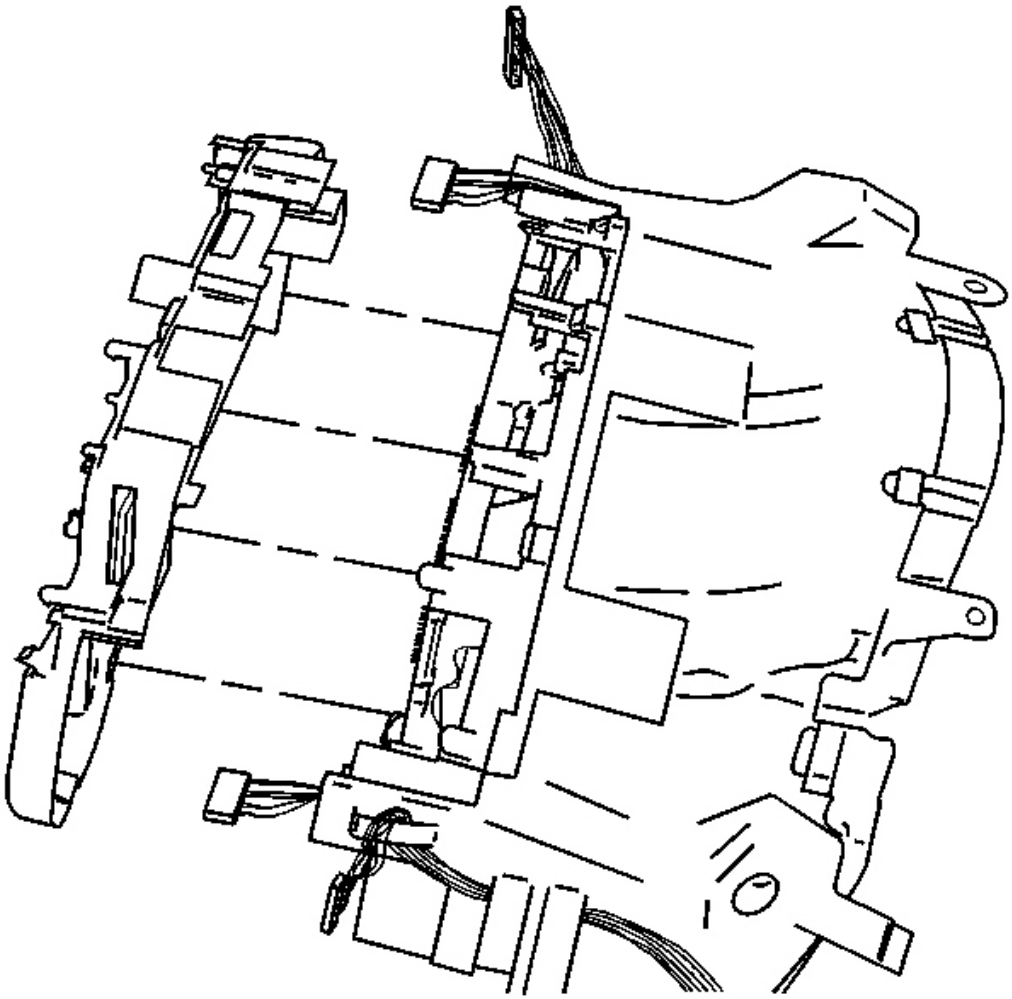

Fig. 206: Electrical Connectors To IPC Printed Circuit Board
Courtesy of GENERAL MOTORS CORP.

8. Position the IPC rear cover.
9. Snap the IPC rear cover into place.

NOTE: Refer to Fastener Notice in Cautions and Notices.

10. Install the IPC rear cover retaining screws.

Tighten: Tighten the IPC rear cover retaining screws to 0.7 N.m (6 lb in).

11. Connect the electrical connectors to the circuit board.

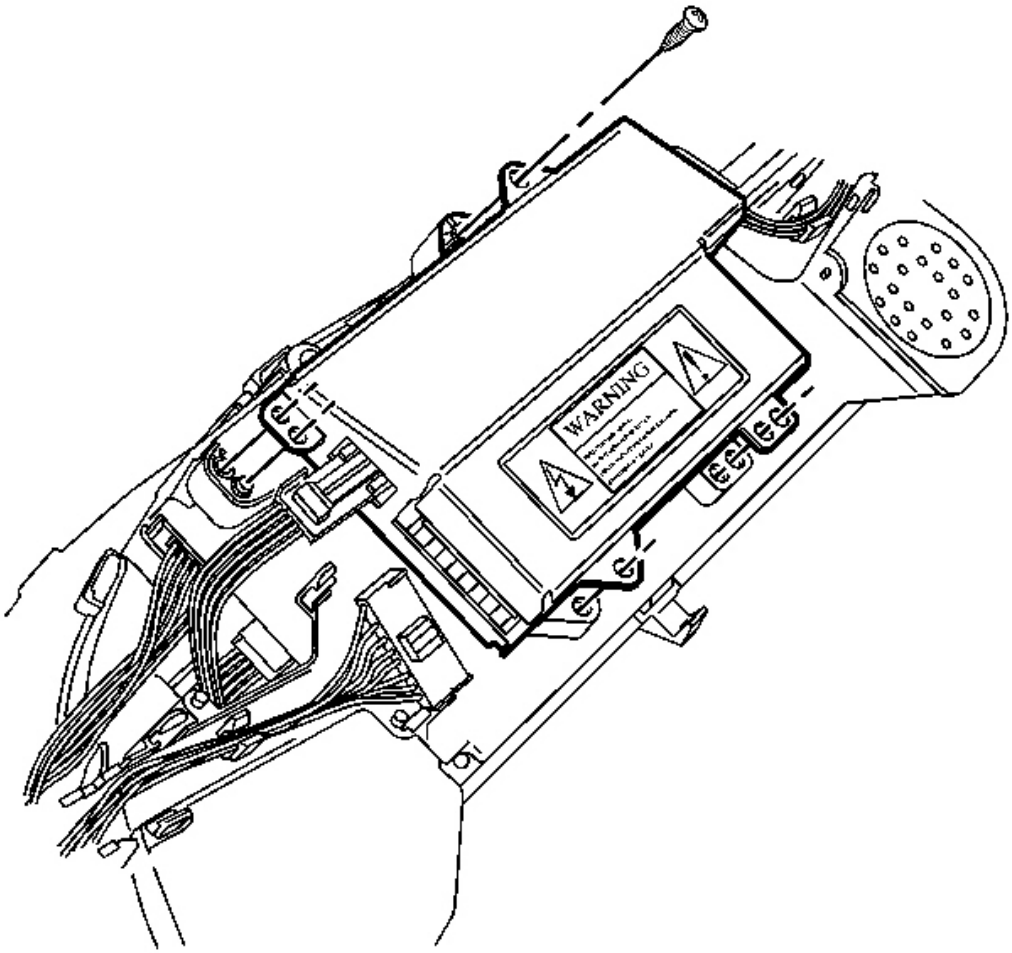

Fig. 207: UV Inverter Electrical Connectors
Courtesy of GENERAL MOTORS CORP.

12. Install the UV inverter to the IPC rear cover.

    Align the UV inverter onto the rear cover alignment pins.

13. Install the UV inverter mounting screws.

Tighten: Tighten the UV inverter mounting screws to 0.7 N.m (6 lb in).

14. Connect the UV inverter electrical connectors.

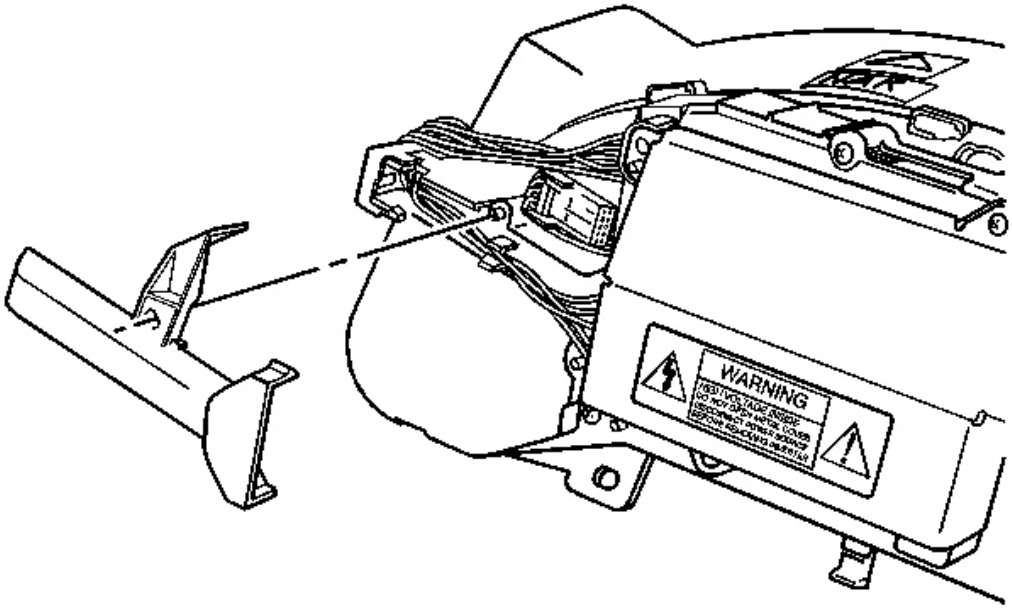

Fig. 208: UV Inverter Wiring Covers
Courtesy of GENERAL MOTORS CORP.

15. Install the UV inverter wiring covers.
    1. Align the covers on the alignment pins.
    2. Snap the covers into place.
16. Install the IPC to the vehicle. Refer to **Instrument Panel Cluster (IPC) Replacement** .

CONSOLE COMPARTMENT DOOR HINGE REPLACEMENT

Removal Procedure

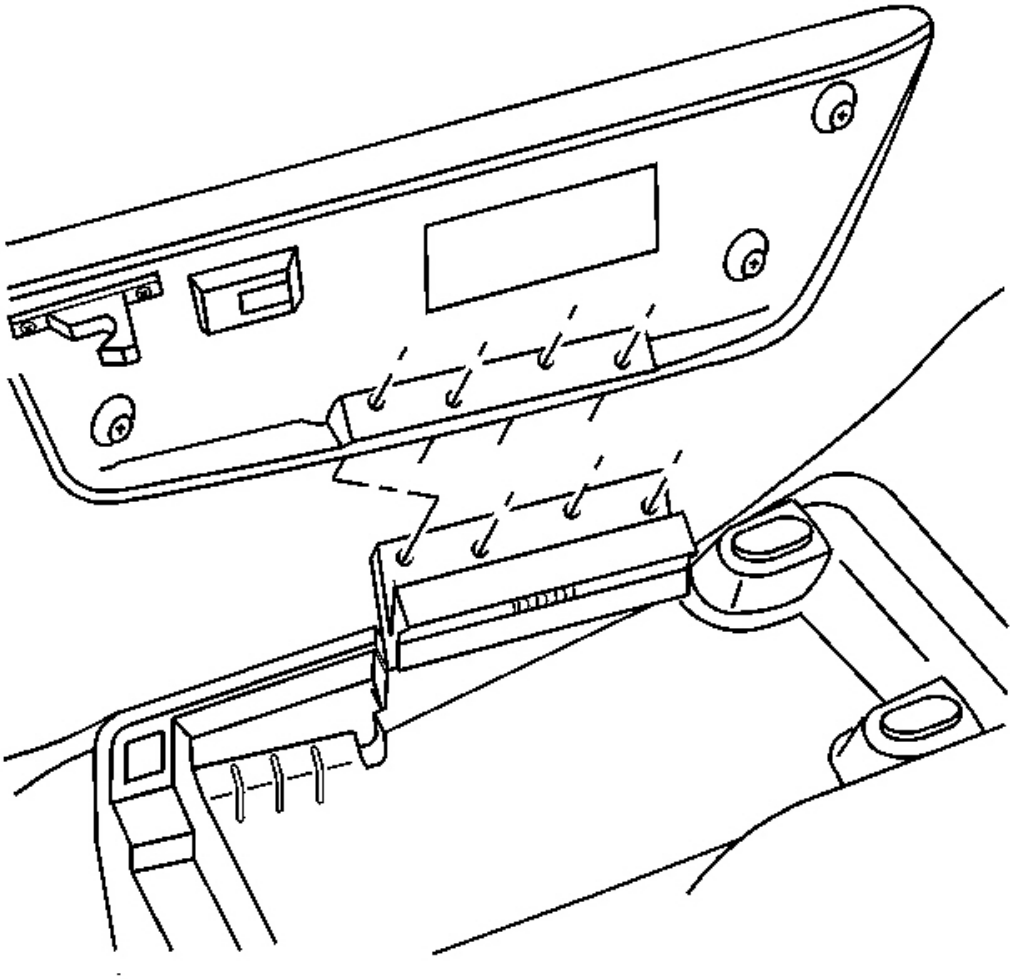

Fig. 209: Console Door To Door Hinge
Courtesy of GENERAL MOTORS CORP.

1. Remove the console from the vehicle. Refer to **Console Replacement** .
2. Open the console door.
3. Remove the screws retaining the console door to the door hinge.
4. Remove the console door.

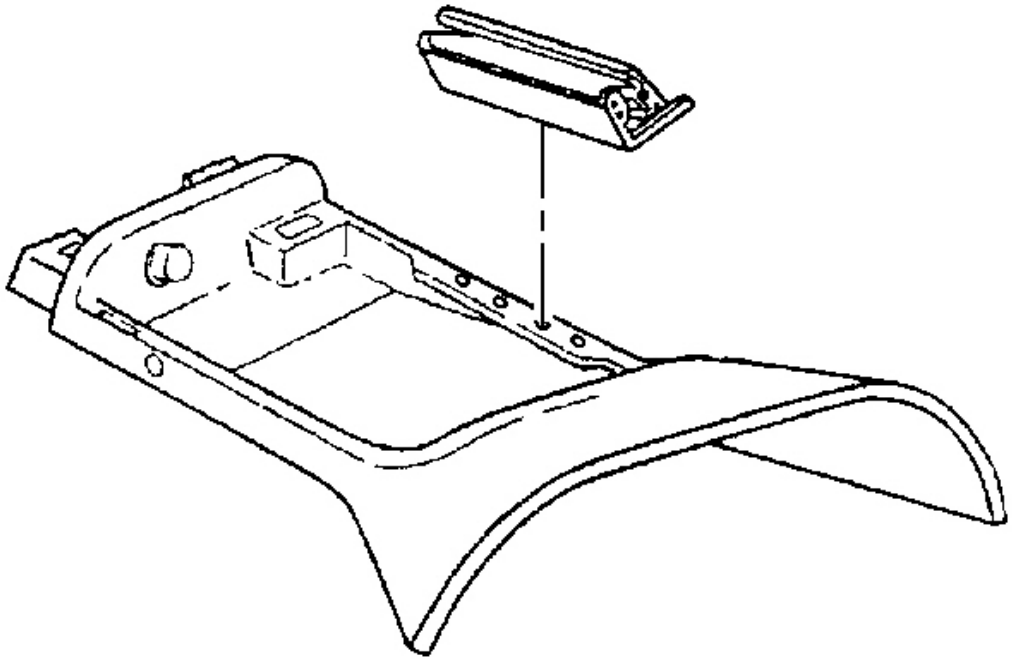

Fig. 210: Hinge To Console
Courtesy of GENERAL MOTORS CORP.

5. Remove the nuts retaining the hinge to the console.
6. Remove the hinge from the console.

Installation Procedure

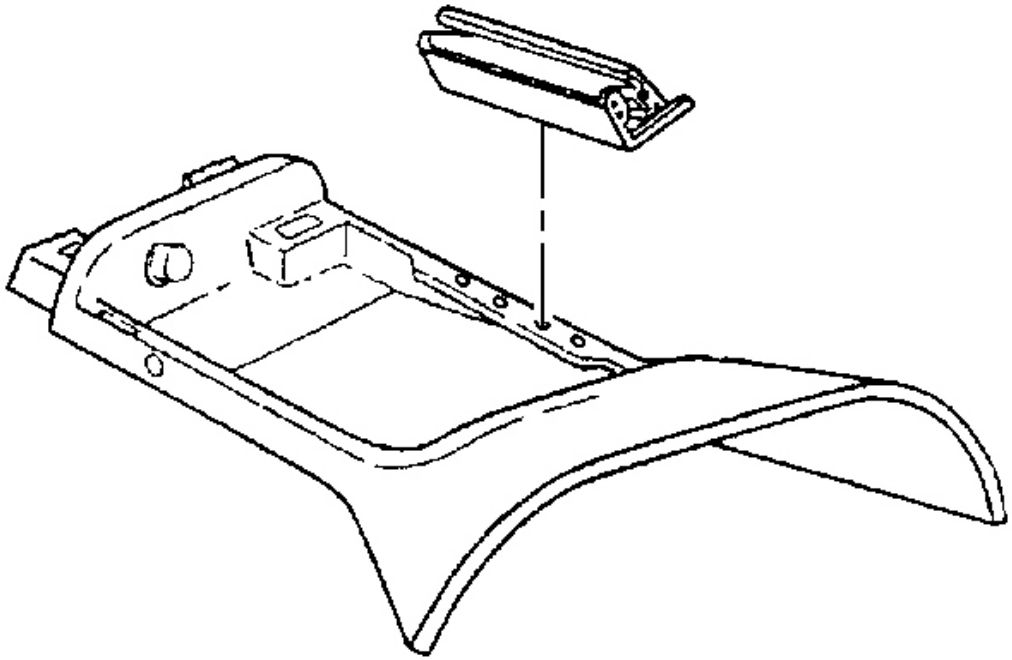

Fig. 211: Hinge To Console
Courtesy of GENERAL MOTORS CORP.

1. Position the console door hinge to the console.

NOTE: **Refer to Fastener Notice in Cautions and Notices.**

2. Install the nuts retaining the door hinge to the console.

Tighten: Tighten the console door hinge retaining nuts to 2.4 N.m (21 lb in).

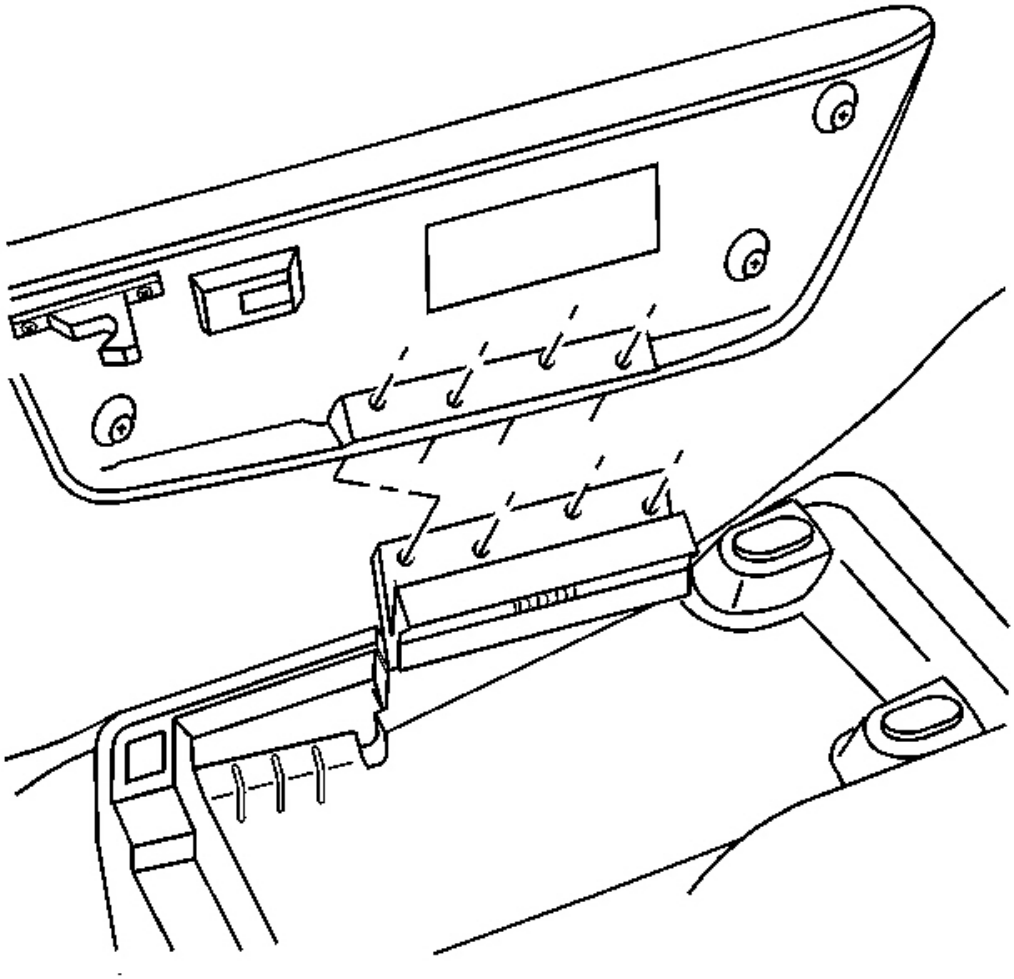

Fig. 212: Console Door To Door Hinge
Courtesy of GENERAL MOTORS CORP.

3. Position the console door to the door hinge.

   Insert both door alignment pins into the hinge alignment holes.

4. Install the screws retaining the console door to the door hinge.

   Tighten: Tighten the console door retaining screws to 1.9 N.m (17 lb in).

5. Install the console to the vehicle. Refer to **Console Replacement** .

LOCK CYLINDER REPLACE - CONSOLE COMPARTMENT DOOR

Removal Procedure

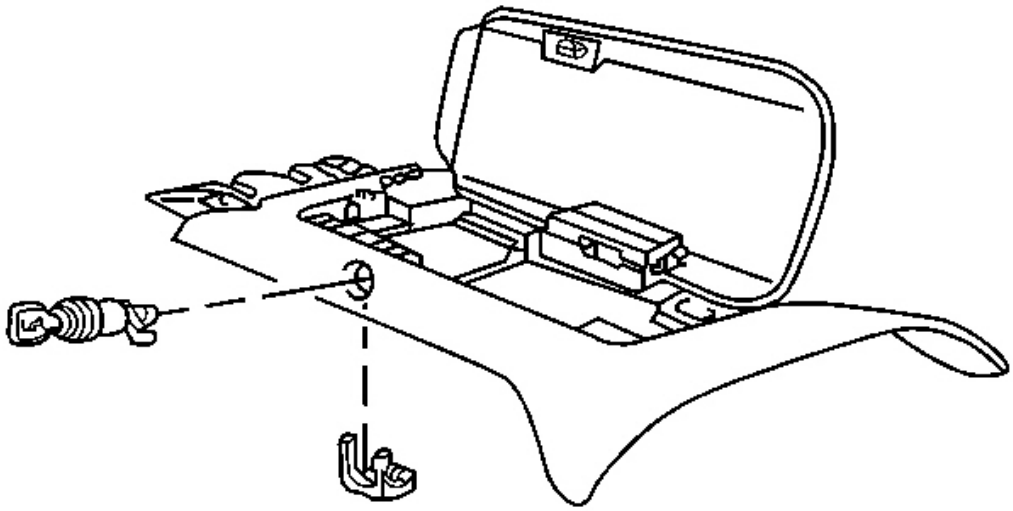

Fig. 213: Lock Cylinder To Console
Courtesy of GENERAL MOTORS CORP.

1. Remove the console from the vehicle. Refer to **Console Replacement** .
2. Remove the console lock cylinder retainer.
3. Remove the lock cylinder from the console.

Installation Procedure

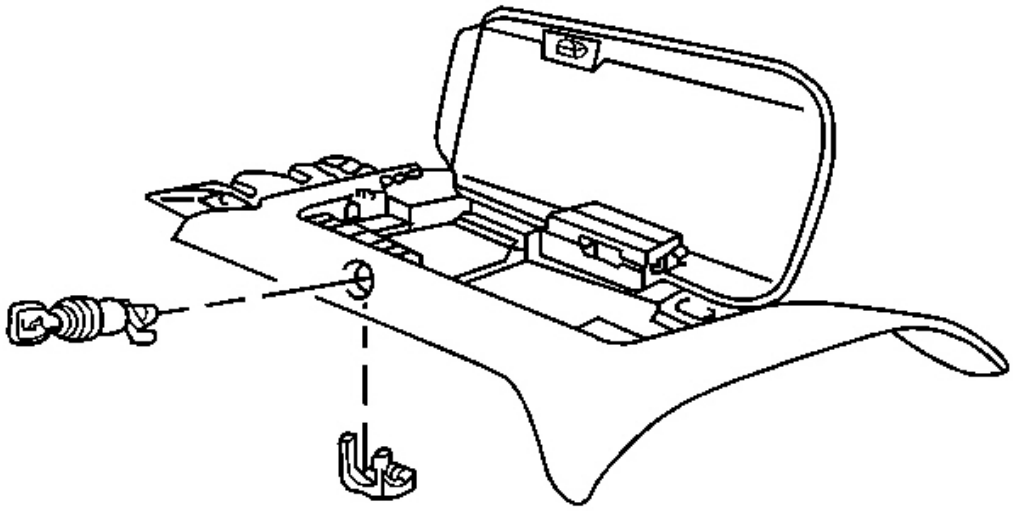

Fig. 214: Lock Cylinder To Console
Courtesy of GENERAL MOTORS CORP.

1. Install the lock cylinder to the console.
2. Install the lock cylinder retainer.
3. Install the console to the vehicle. Refer to **Console Replacement** .

LATCH REPLACEMENT - CONSOLE COMPARTMENT DOOR

Removal Procedure

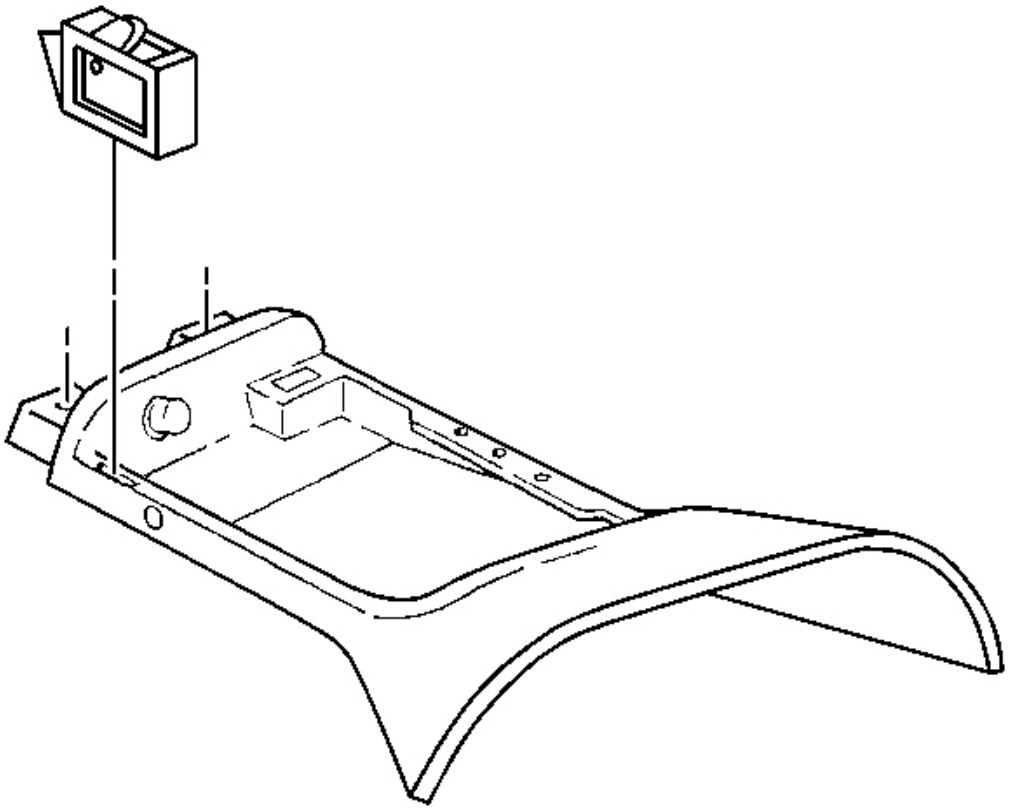

Fig. 215: Console Latch Plate To Latch Plate
Courtesy of GENERAL MOTORS CORP.

1. Remove the console from the vehicle. Refer to **Console Replacement** .
2. Depress the console latch plate retaining tabs and remove the latch plate.

Installation Procedure

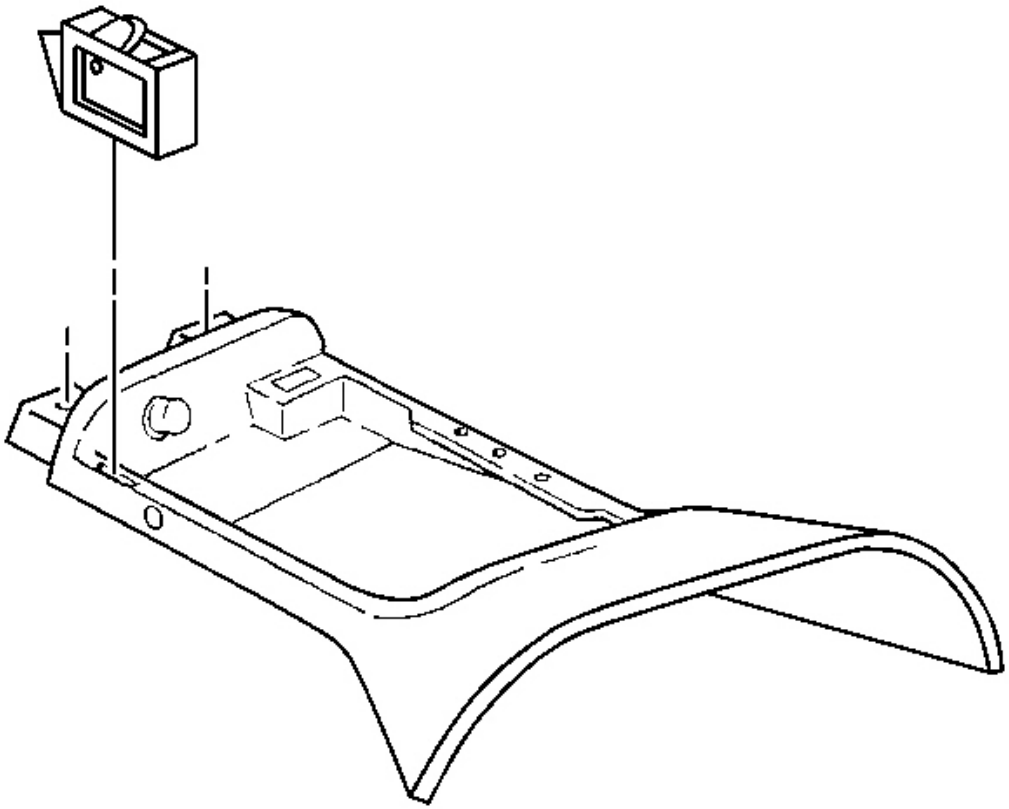

Fig. 216: Console Latch Plate To Latch Plate
Courtesy of GENERAL MOTORS CORP.

1. Press the latch plate into place on the console until the tabs lock in place.
2. Install the console to the vehicle. Refer to **Console Replacement** .

CONSOLE REPLACEMENT

Removal Procedure

1. Remove the folding top stowage compartment lid extension panel (convertible). Refer to **Compartment Lid Extension - Folding Top Stowage** in Interior Trim.
2. Open the console door.
3. Pull up on the rear of the electronic traction control, ride control switch (2) in order to release the retaining clips; if the switch does not release from the trim plate, perform the following steps:

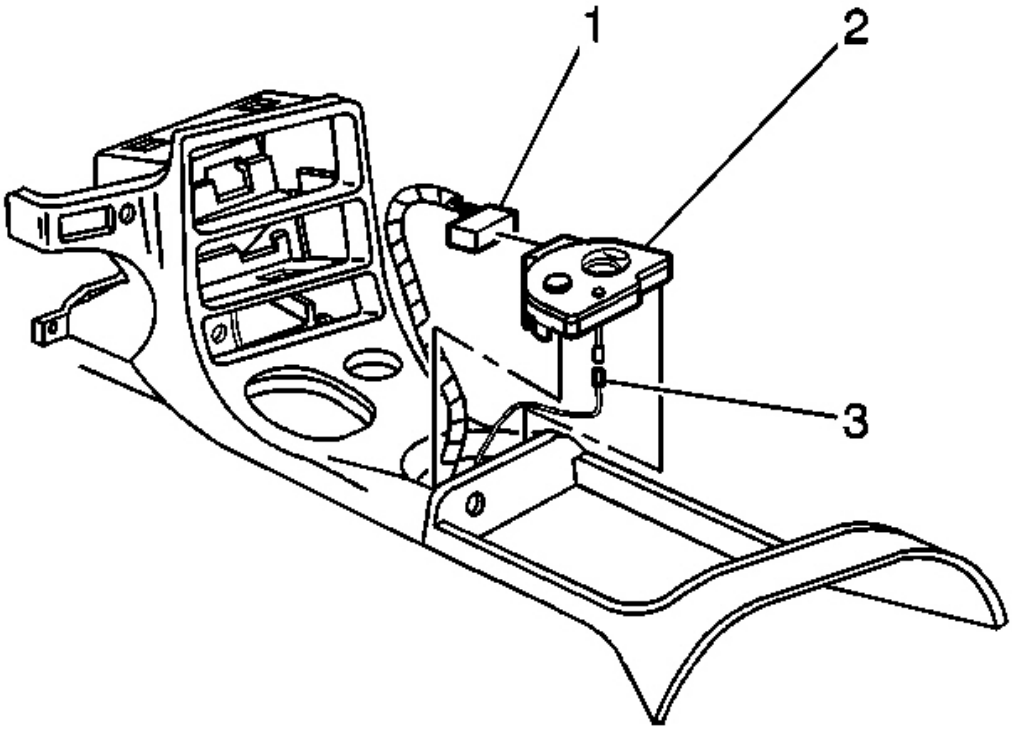

Fig. 217: Electrical Connector To Electronic Traction Control
Courtesy of GENERAL MOTORS CORP.

- Carefully insert a screwdriver into the recess located at the rear of the switch.
- Gently pull up the rear of the switch.

4. Disconnect the electrical connector (1) from the switch.

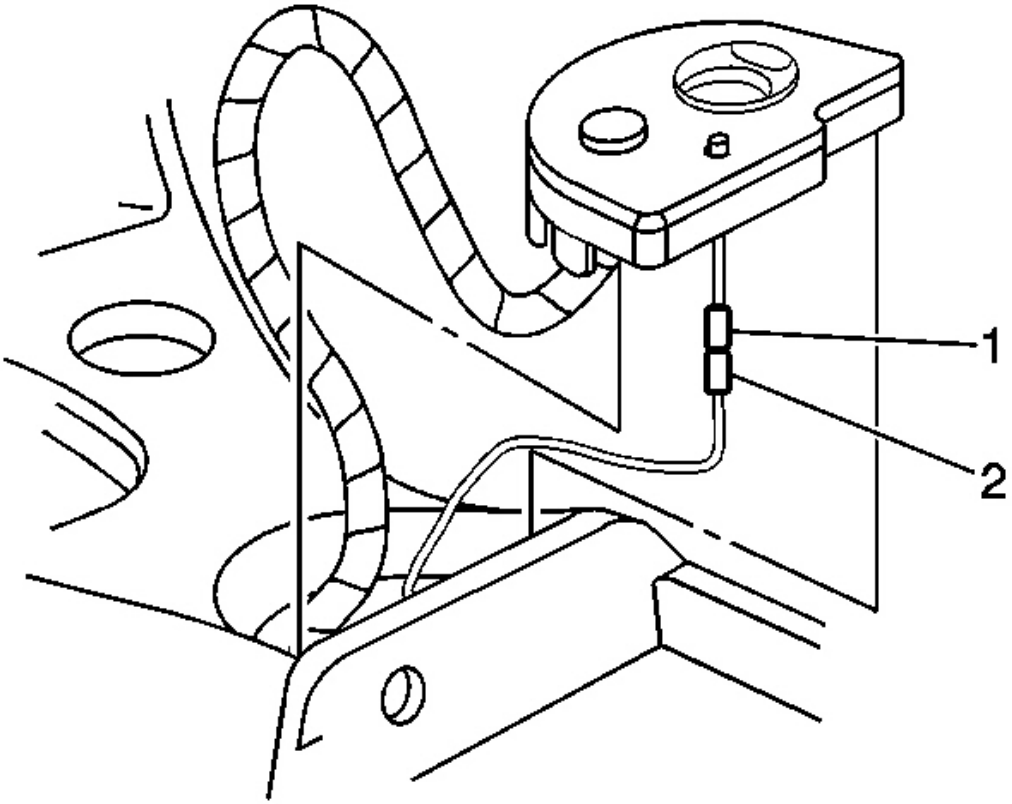

Fig. 218: Led Connector To Wiring Harness Connector
Courtesy of GENERAL MOTORS CORP.

5. Disconnect the LED connector (1) from the wiring harness connector (2).
6. Remove the switch.
7. Using a small flat bladed screwdriver, carefully remove the console retaining nut covers.
8. Remove the nuts retaining the rear of the console.
9. Remove the nuts retaining the front of the console and the IP accessory trim plate.

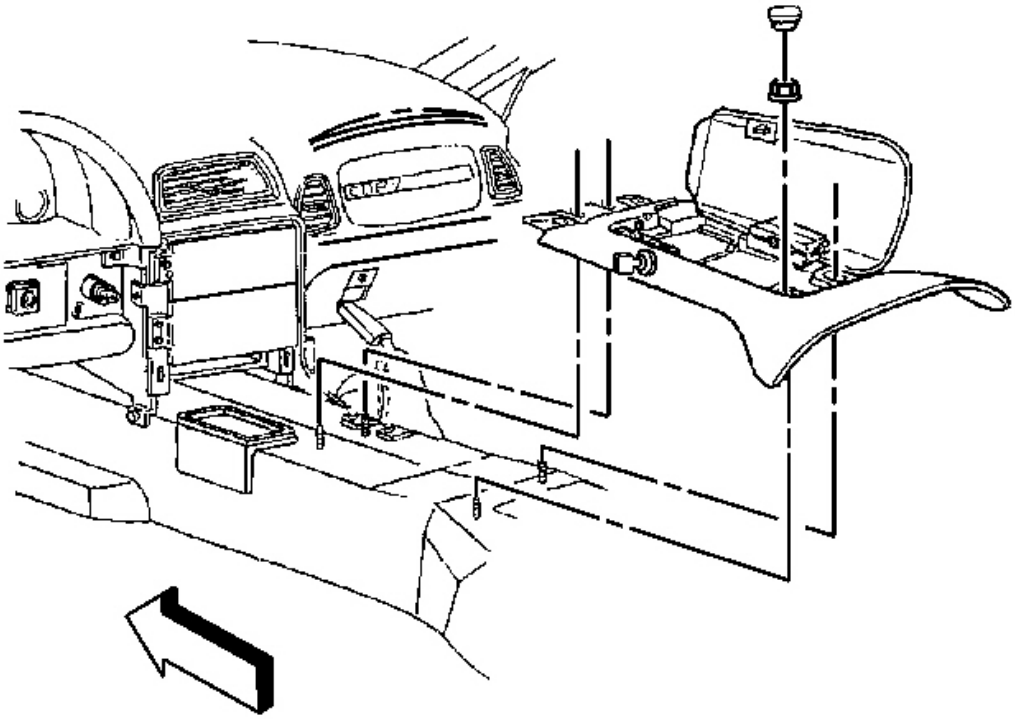

Fig. 219: Console Under Rear Of IP Accessory Trim Plate
Courtesy of GENERAL MOTORS CORP.

10. Lift the rear of the console slightly and pull rearward to release the front of the console from under the IP accessory trim plate.

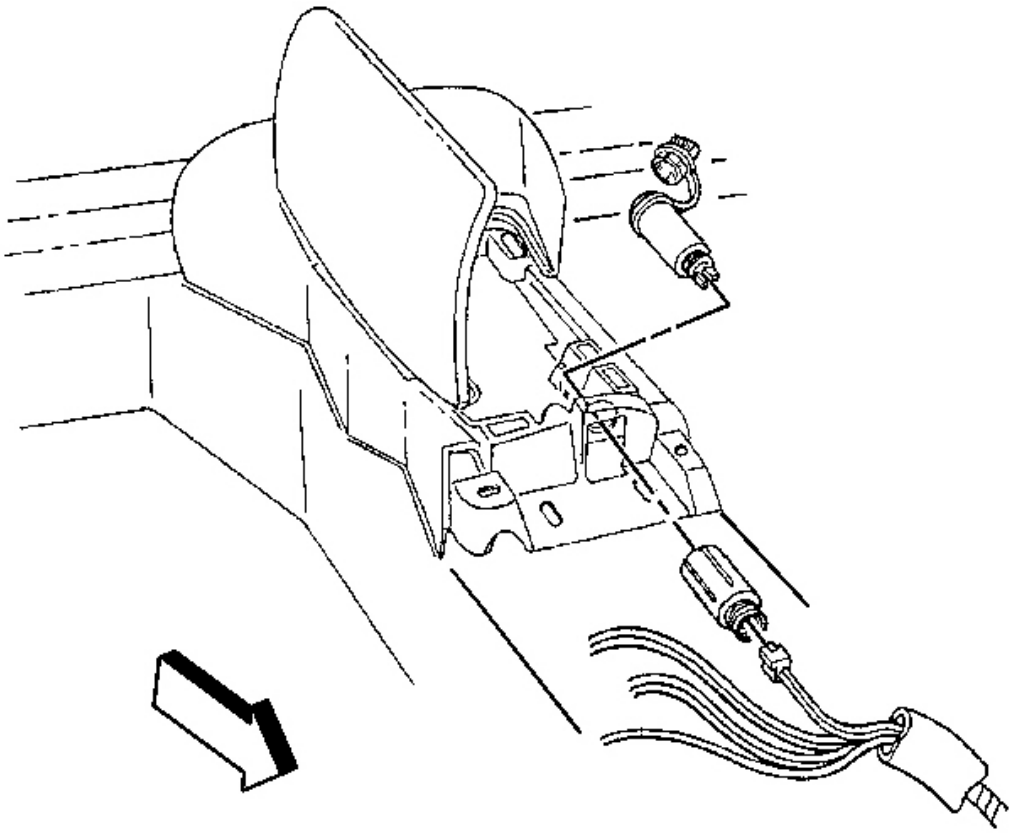

Fig. 220: Electrical Connector At Electrical Accessory Plug
Courtesy of GENERAL MOTORS CORP.

11. Disconnect the electrical connector from the electrical accessory plug.
12. Unscrew to remove the console electrical accessory plug retainer from the console electrical accessory plug housing.
13. Remove the electrical accessory plug housing from the console.

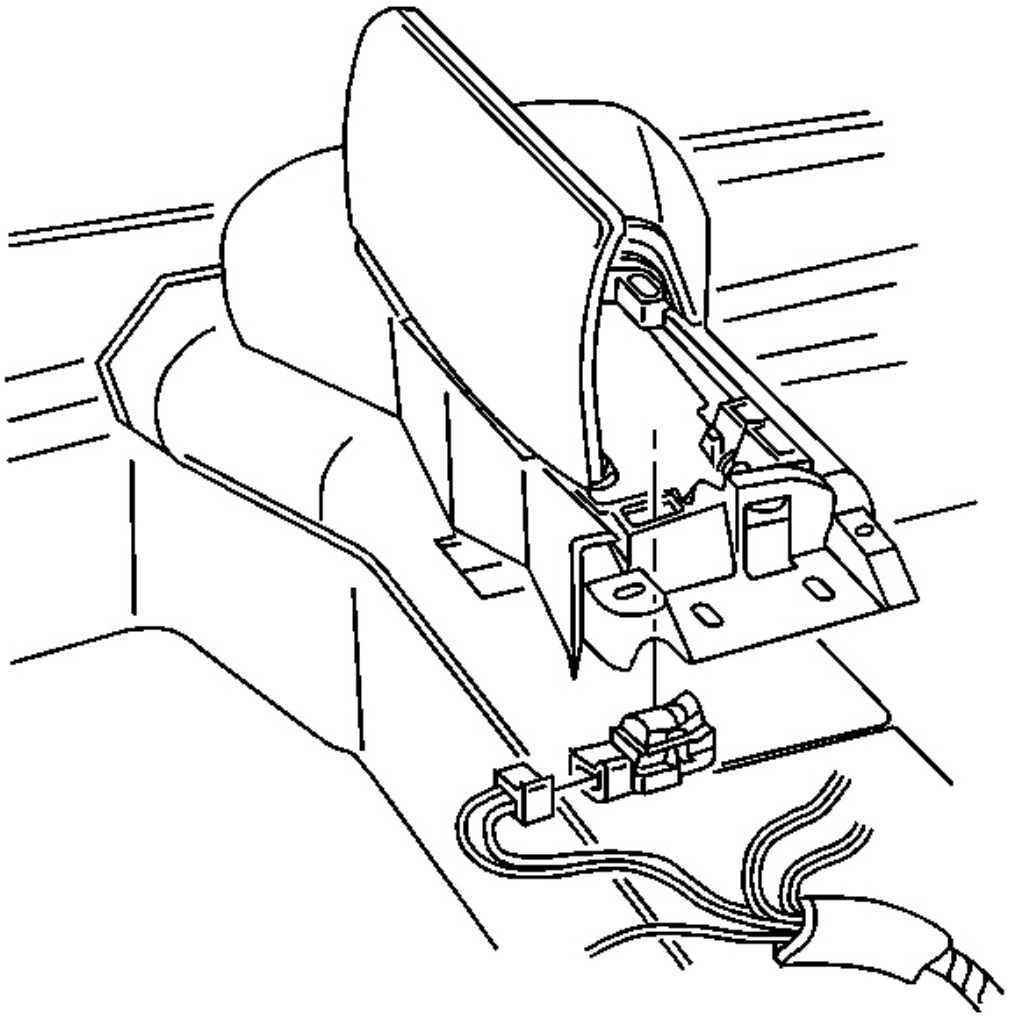

Fig. 221: Electrical Connector At Fuel Door Release
Courtesy of GENERAL MOTORS CORP.

14. Disconnect the electrical connector from the fuel door release, rear lift window release (export) switch.
15. Remove the fuel door release, rear lift window release (export) switch from the console.

    Turn the console over and carefully insert a small flat bladed screwdriver to release the switch tabs.

16. Remove the console from the vehicle.

Installation Procedure

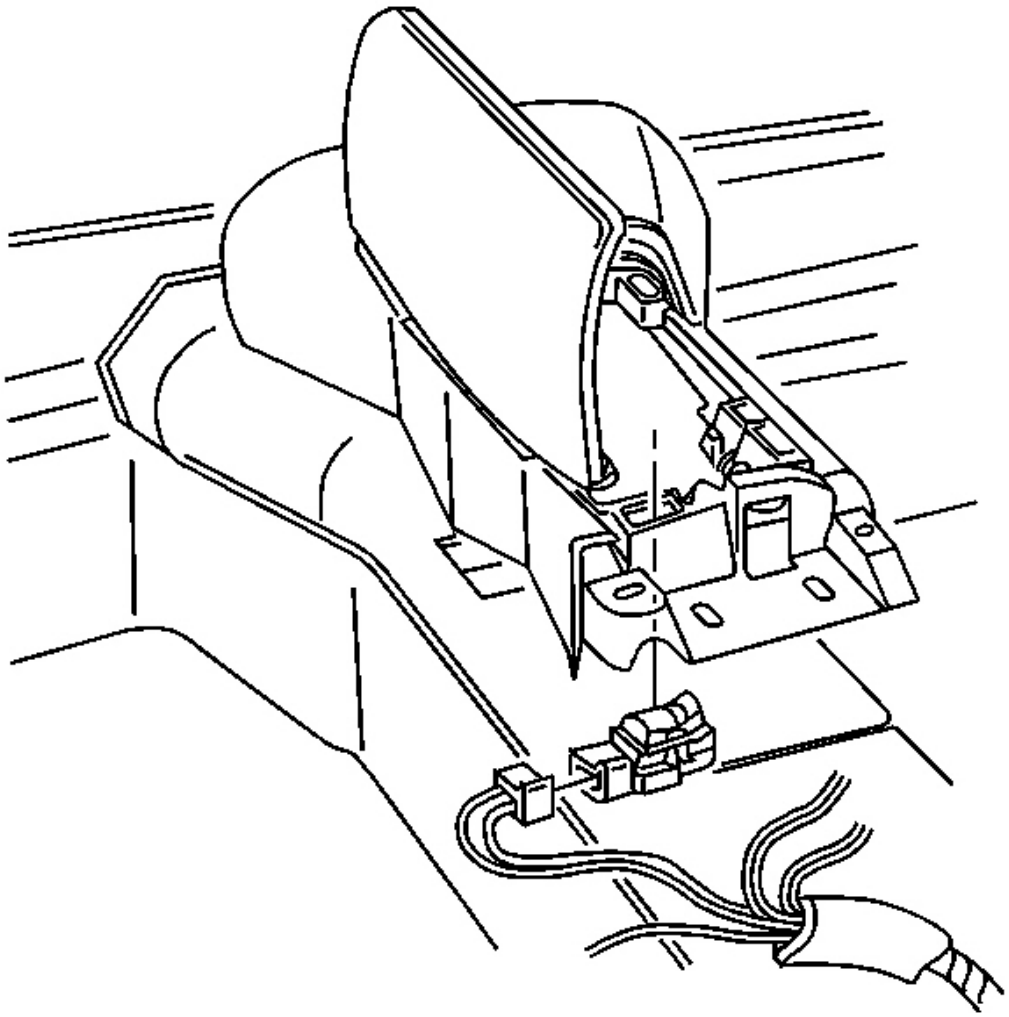

Fig. 222: Electrical Connector At Fuel Door Release
Courtesy of GENERAL MOTORS CORP.

1. Install the fuel door release, rear lift window release (export) switch to the console.

   Align the switch, then push to secure.

2. Connect the electrical connector to the switch.

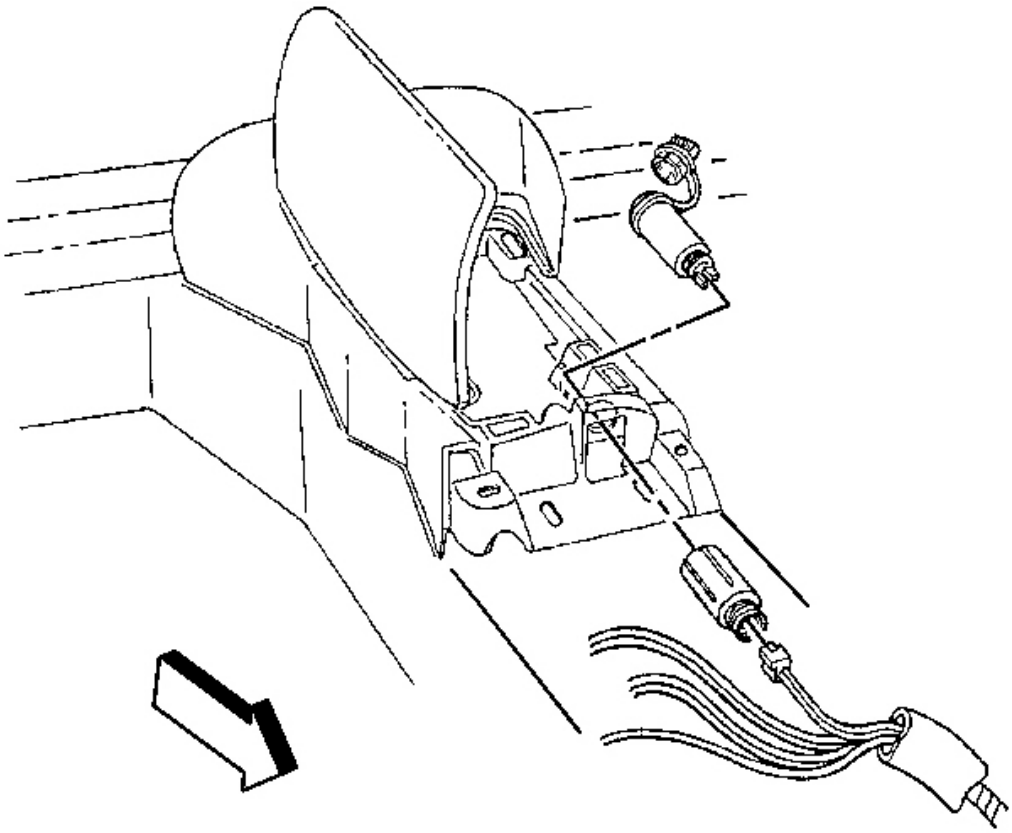

Fig. 223: Electrical Connector At Electrical Accessory Plug
Courtesy of GENERAL MOTORS CORP.

3. Install the electrical accessory plug housing to the console.

   Check that the cover plug is in place on the accessory plug housing.

4. Install the electrical accessory plug retainer onto the accessory plug housing.

   Screw the retainer onto the housing until secure.

5. Connect the electrical connector to the electrical accessory plug.

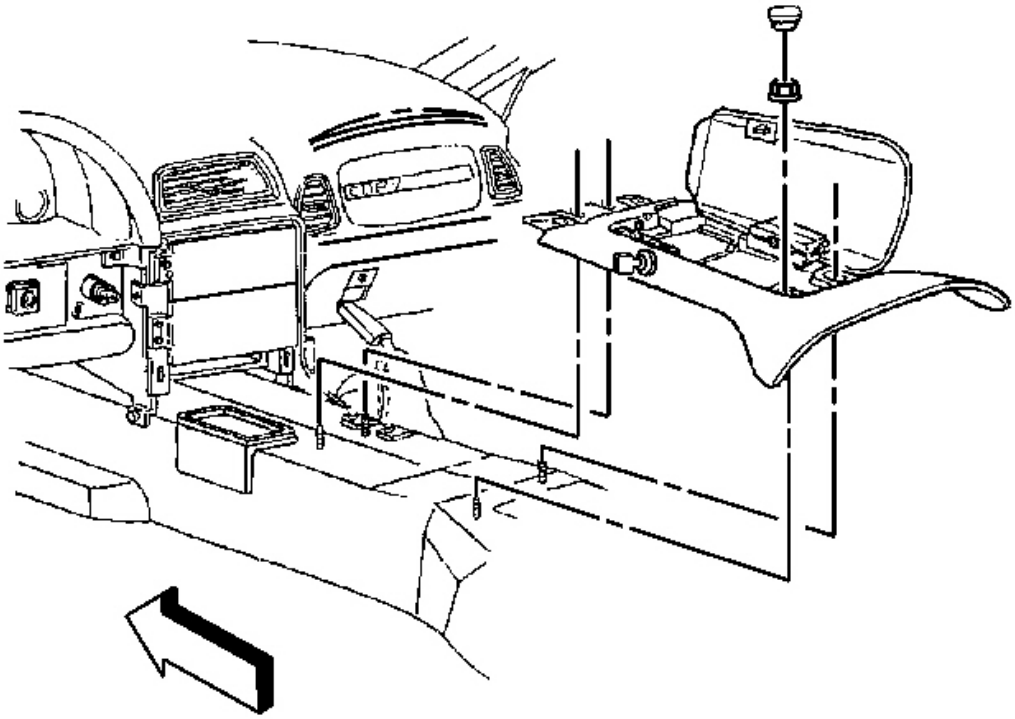

Fig. 224: Console Under Rear Of IP Accessory Trim Plate
Courtesy of GENERAL MOTORS CORP.

IMPORTANT: Be sure to install the front of the console UNDER the rear of the IP accessory trim plate.

6. Install the console into position.

   Insert the front of the console under the rear of the IP accessory trim plate.

7. Loosely install the console retaining nuts.

   NOTE: Refer to Fastener Notice in Cautions and Notices.

8. Position the console to the IP accessory trim plate (at the front) and the floor extension carpet (at the rear) for best appearance.

   Tighten: Tighten the console retaining nuts to 10 N.m (89 lb in).

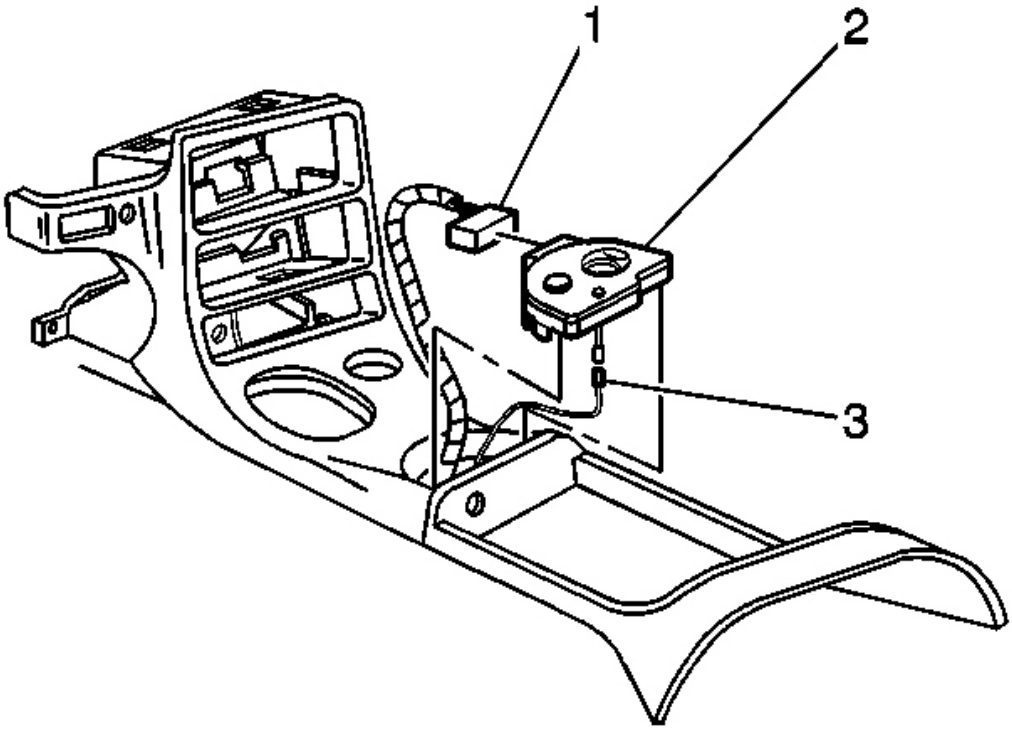

Fig. 225: Electrical Connector To Electronic Traction Control
Courtesy of GENERAL MOTORS CORP.

9. Connect the electrical connector (1) to the electronic traction control, ride control switch.

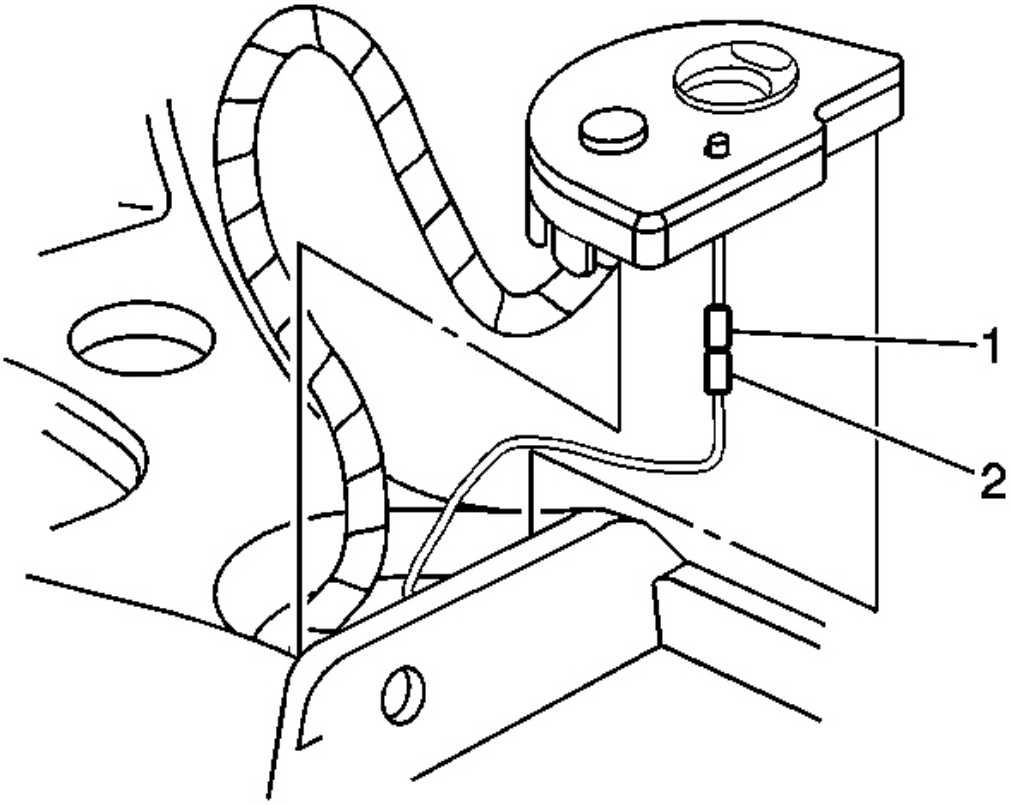

Fig. 226: Led Connector To Wiring Harness Connector
Courtesy of GENERAL MOTORS CORP.

10. Connect the LED connector (1) to the wiring harness connector (2).
11. Insert the electronic traction control, ride control switch front retaining tab under the edge of the IP accessory trim plate.
12. Lower the rear of the switch into position, then push to secure the retaining clips.
13. Close the console door.
14. Install the folding top stowage compartment lid extension panel (convertible). Refer to **Compartment Lid Extension - Folding Top Stowage** in Interior Trim.

DESCRIPTION AND OPERATION

INSTRUMENT PANEL CLUSTER (IPC) DESCRIPTION AND OPERATION

Displays Test

Certain instrument panel cluster (IPC) features are tested when the ignition is turned on in order to verify the features are working properly. The following occurs at key up:

- The air bag indicator flashes 7 times.
- The ABS indicator illuminates briefly.
- The check engine indicator (MIL) illuminates briefly.
- The brake indicator illuminates briefly.
- All gages sweep.
- The HUD illuminates all segments briefly.
- The security indicator illuminates briefly.
- The check gages indicator illuminates briefly.
- The traction indicator illuminates briefly.
- The seat belt indicator illuminates.
- The MPH or KM/H indicator illuminates.
- The DIC displays CORVETTE BY CHEVROLET briefly and then it will display the last item before key off.
- The audible warning chimes 6 times.

Indicators and Warning Messages

Refer to **Indicator/Warning Message Description and Operation** .

Engine Coolant Temperature Gage

The IPC displays the engine coolant temperature as determined by the PCM. The IPC receives a class 2 message from the PCM indicating the engine coolant temperature. The engine coolant temperature gage defaults to 215°C (260°F) or below if:

- The PCM detects a malfunction in the engine coolant temperature sensor circuit.
- The IPC will display the engine coolant temperature message on the DIC.
- The check gages indicator turns on.

Engine Oil Pressure Gage

The IPC displays the engine oil pressure as determined by the PCM. The IPC receives a class 2 message from the PCM indicating the engine oil pressure. The engine oil pressure gage defaults to 0 kPa (0 psi) or below if:

- The PCM detects a malfunction in the engine oil pressure sensor circuit.
- The IPC will display the low oil pressure message on the DIC.
- The check gages indicator turns on.

Fuel Gage

The IPC displays the fuel level as determined by the PCM. The IPC receives a class 2 message from the PCM indicating the fuel level percent. The fuel gage defaults to empty if:

- The PCM detects a malfunction in the fuel level sensor circuit.
- The IPC displays a low fuel message on the DIC.
- The check gages indicator turns on.

Speedometer

The IPC displays the vehicle speed based on the information from the vehicle speed sensor. The PCM converts the data from the vehicle speed sensor to a 4000 pulses/mile signal. The IPC uses the vehicle speed signal circuit (4000 pulses/mile) from the PCM in order to calculate the vehicle speed. The speedometer defaults to 0 km/h (0 mph) if a malfunction in the vehicle speed signal circuit (4000 pulses/mile) exists. The speedometer displays either miles or kilometers as requested by the activation of the English/metric button on the driver information center (DIC). The associated indicator (MPH or KM/H) illuminates.

Tachometer

The IPC displays the engine speed as determined by the PCM. The IPC receives a class 2 message from the PCM indicating the engine speed. The tachometer will default to 0 RPM if the PCM detects a malfunction in the engine speed sensor circuit.

Voltmeter

The IPC displays the system voltage as detected at the ignition 1 input of the IPC. The voltage on the volt gage is also displayed on the DIC. The IPC displays high or low voltage on the DIC when the IPC detects voltage levels out of range.

INDICATOR/WARNING MESSAGE DESCRIPTION AND OPERATION

Indicators

Symbol	Description
1-4 SHIFT	Refer to **Skip Shift Description and Operation** in Manual Transmission
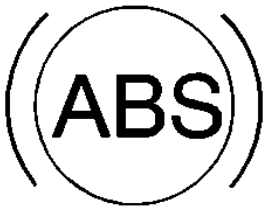	ABS: Refer to **ABS Description and Operation** in Antilock Brake System

	Air Bag: Refer to **SIR System Description and Operation** in SIR
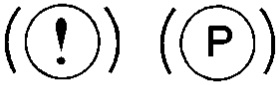	Brake: Refer to **ABS Description and Operation** in Antilock Brake System
CHECK GAGES	CHECK GAGES; Refer to Indicator/Warning Message Description and Operation
	Fasten Safety Belt: Refer to **Seat Belt System Description and Operation** in Seat Belts
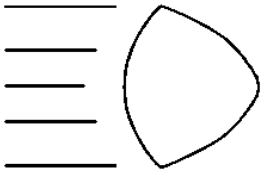	High Beam: Refer to **Exterior Lighting Systems Description and Operation** in Lighting Systems
	MPH or KM/H: Refer to Indicator/Warning Message Description and

MPH or KM/H	Operation
SECURITY	SECURITY: Refer to **Vehicle Theft Deterrent (VTD) Description and Operation** in Theft Deterrent
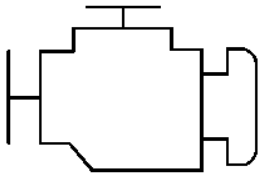	Service Engine Soon: Refer to **Powertrain Control Module (PCM) Description** in Engine Controls
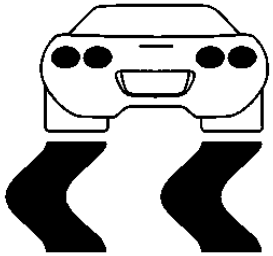	Traction Control Active: Refer to **ABS Description and Operation** in Antilock Brake System
	Turn Signals: Refer to **Exterior Lighting Systems Description and Operation** in Lighting Systems

DIC Warning Messages

Symbol	Description
ABS ACTIVE	Refer to **ABS Description and Operation** in Antilock Brake System
ACT HNDLG-WARMING UP	Refer to **ABS Description and Operation** in Antilock Brake System
ACTIVE HANDLING	Refer to **ABS Description and Operation** in Antilock Brake System
BRAKE BEFORE SHIFT	Refer to **Automatic Transmission Shift Lock Control Description and Operation** in Transmission
CHANGE OIL NOW	Refer to Indicator/Warning Message Description and Operation
CHANGE OIL SOON	Refer to Indicator/Warning Message Description and Operation
CHARGE SYSTEM FAULT	Refer to **Charging System Description and Operation** in

	Engine Electrical
COMPETITIVE DRIVING	Refer to **ABS Description and Operation** in Antilock Brake System
COOLANT OVER TEMP	Refer to **Cooling System Description and Operation** in Engine Cooling
CRUISE DISENGAGED	Refer to **Cruise Control Description and Operation** in Cruise Control
CRUISE SET XX KM/H (XX MPH)	Refer to **Cruise Control Description and Operation** in Cruise Control
DOOR AJAR	Refer to **Door Ajar Indicator Description and Operation** in Doors
ENGINE PROTECTION, REDUCE ENGINE RPM	Refer to **Powertrain Control Module (PCM) Description** in Engine Controls
FLAT TIRE-XX, MAX SPD 55, REDUCED HNDLG	Refer to **Tire Pressure Monitor Description and Operation** in Tire Pressure Monitoring
HATCH AJAR	Refer to **Luggage Compartment Description and Operation** in Body Rear End
HIGH OIL TEMPERATURE, REDUCE ENGINE RPM	Refer to Indicator/Warning Message Description and Operation
HIGH TIRE PRESSURE-XX	Refer to **Tire Pressure Monitor Description and Operation** in Tire Pressure Monitoring
HIGH TRANS TEMP	Refer to **Transmission Component and System Description** in Automatic Transmission-4L60 E
HIGH VOLTAGE	Refer to **Charging System Description and Operation** in Engine Electrical
LOW BRAKE FLUID	Refer to **ABS Description and Operation** in Antilock Brake System
LOW FUEL	Refer to Indicator/Warning Message Description and Operation
LOW OIL LEVEL	Refer to Indicator/Warning Message Description and Operation
LOW OIL PRESSURE	Refer to Indicator/Warning Message Description and Operation
LOW TIRE PRESSURE-XX	Refer to **Tire Pressure Monitor Description and Operation** in Tire Pressure Monitoring
LOW VOLTAGE	Refer to **Charging System Description and Operation** in Engine Electrical
LOW WASHER FLUID	Refer to **Wiper/Washer System Description and Operation** in Wipers/Washer System
MAXIMUM SPEED 129 KM/H (80 MPH)	Refer to **Electronic Suspension Control Description and Operation** in Electronic Suspension Control
OVER SPEED WARNING	Refer to **Powertrain Control Module (PCM) Description** in Engine Controls
PULL KEY-WAIT 10 SEC	Refer to **Steering Wheel and Column Description and Operation** in Steering Wheel and Column
REDUCED ENGINE POWER	Refer to **Powertrain Control Module (PCM) Description** in

	Engine Controls
RESERVE FUEL	Refer to Indicator/Warning Message Description and Operation
SERVICE ABS	Refer to **ABS Description and Operation** in Antilock Brake System
SERVICE ACTIVE HNDLG	Refer to **ABS Description and Operation** in Antilock Brake System
SERVICE COLUMN LOCK	Refer to **Steering Wheel and Column Description and Operation** in Steering Wheel and Column
SERVICE RIDE CONTROL	Refer to **Electronic Suspension Control Description and Operation** in Electronic Suspension Control
SERVICE TIRE MONITOR	Refer to **Tire Pressure Monitor Description and Operation** in Tire Pressure Monitoring
SERVICE TRACTION SYSTEM	Refer to **ABS Description and Operation** in Antilock Brake System
SERVICE VEHICLE SOON	Refer to Indicator/Warning Message Description and Operation
SHOCKS INOPERATIVE	Refer to **Electronic Suspension Control Description and Operation** in Electronic Suspension Contro
TONNEAU AJAR	Refer to **Luggage Compartment Description and Operation** in Body Rear End
TRAC/ACT HNDLG-ON/OFF	Refer to **ABS Description and Operation** in Antilock Brake System
TRACTION SYS ACTIVE	Refer to **ABS Description and Operation** in Antilock Brake System
TRUNK AJAR	Refer to **Luggage Compartment Description and Operation** in Body Rear End
UPSHIFT NOW!	Refer to **Skip Shift Description and Operation** in Manual Transmission-MM6
WARM UP COMPLETE	Refer to **ABS Description and Operation** in Antilock Brake System

CHANGE ENGINE OIL NOW

The IPC illuminates the CHANGE OIL NOW message in the driver information center (DIC) when the powertrain control module (PCM) determines that the engine oil needs to be changed now. The PCM sends a class 2 message to the IPC requesting illumination. After the oil is changed, reset the engine oil monitor. Refer to **GM Oil Life System - Resetting** in Maintenance and Lubrication.

CHANGE ENGINE OIL SOON

The IPC illuminates the CHANGE ENGINE OIL SOON message in the driver information center (DIC) when the powertrain control module (PCM) determines that the engine oil should be changed in the near future.The PCM sends a class 2 message to the IPC requesting illumination. After the oil is changed, reset the engine oil monitor. Refer to **GM Oil Life System - Resetting** in Maintenance and Lubrication.

CHECK GAGES

The IPC illuminates the CHECK GAGES message when the IPC illuminates any following indicators.

- Charging system
- Engine coolant temperature
- Low coolant
- Low fuel
- Low oil pressure

HIGH OIL TEMPERATURE, REDUCE ENGINE RPM

The IPC illuminates the HIGH OIL TEMPERATURE message and then the REDUCE ENGINE RPM messages in the driver information center (DIC) in 3 second intervals if the IPC detects that the engine oil temperature exceeds 160°C (320°F). The IPC monitors the engine oil temperature signal circuit to determine the engine oil temperature. A low resistance indicates high engine oil temperature.

Km/h and MPH Indicator(s)

km/h

The IPC illuminates the km/h indicator when the IPC detects that metric units have been requested. The IPC monitors the signal circuit of the ENG/MET switch. The IPC sends a class 2 message indicating the requested units to the head up display (HUD).

MPH

The IPC illuminates the MPH indicator when the IPC detects that English units have been requested. The IPC monitors the signal circuit of the ENG/METswitch. The IPC sends a class 2 message indicating the requested units to the head up display (HUD).

LOW FUEL

The IPC illuminates the LOW FUEL message in the driver information center (DIC) when the PCM detects that the fuel level is less than a pre-determined value.The IPC receives a class 2 message from the PCM indicating the fuel level.

LOW OIL LEVEL

The IPC illuminates the LOW OIL LEVEL message in the driver information center (DIC) when the powertrain control module (PCM) detects low engine oil level, and the signal circuit is high. The PCM only monitors the signal circuit of the engine oil level switch for a brief period when the key moves from ON to START. The IPC receives a class 2 message requesting illumination from the PCM.

LOW OIL PRESSURE

The IPC illuminates the LOW OIL PRESSURE message in the driver information center (DIC) when the PCM detects low engine oil pressure, and the signal circuit is low. The IPC receives a class 2 message requesting

illumination from the PCM.

RESERVE FUEL

The IPC illuminates the RESERVE FUEL message driver information center (DIC) when the PCM detects the following conditions:

- The fuel level is less than 12 L for 60 seconds.
- The fuel level is less than 12 L for 5 seconds immediately after the ignition is turned ON, and the vehicle speed is less than 1 MPH.

The IPC receives a class 2 message requesting illumination from the PCM.

SERVICE VEHICLE SOON

The IPC illuminates the SERVICE VEHICLE SOON message in the driver information center (DIC) when the powertrain control module (PCM) detects certain malfunctions that are not related to the emissions system. The IPC receives a class 2 message requesting illumination from the PCM.

DRIVER INFORMATION CENTER (DIC) DESCRIPTION AND OPERATION

When the driver information center (DIC) powers up it will display CORVETTE BY CHEVROLET for 3 seconds. Then the DIC will return to display status it had before the no power condition.

The DIC can also display several warning messages. These warning messages make the driver aware of a particular problem with the vehicle. These messages are displayed along with the items below. For a list of the warning DIC messages refer to **Indicator/Warning Message Description and Operation** .

There are 6 buttons on the DIC switch:

1. Fuel
2. Gages
3. Trip
4. Options
5. E/M
6. Reset

1. Fuel

By pressing the Fuel button on the DIC, the following information will be displayed:

Average Fuel Economy (AFE)

AFE is calculated as the ratio between the following values:

- AFE=Distance/Fuel
- Distance=The accumulated distance since the last AFE reset
- Fuel=The accumulated fuel consumption since the last AFE reset

The IPC receives fuel level information from the PCM via class 2. You can reset the AFE mode by pressing the Reset button on the DIC. The value of this mode is retained during ignition OFF.

Instantaneous Fuel Economy (IFE)

Instantaneous fuel economy is calculated as the ratio between the following values:

- IFE=Distance/Fuel
- Distance=The accumulated distance since last update
- Fuel=The accumulated fuel delivered since last update

The IPC receives fuel level information from the PCM via class 2. You cannot reset the IFE mode. The value of this mode is retained during ignition OFF.

Fuel Range

The IPC calculates and displays the total amount of fuel used since the last reset operation.

The IPC receives fuel level information from the PCM via class 2. You cannot reset the Fuel Used mode. The value of this mode is retained during ignition OFF.

Fuel Display Range

Parameter	Update Range	Range	Reset Value	Units
Average Fuel Economy	2 seconds	0.0-99.9	0.0	MPG or L/100 KM
Instant Fuel Economy	1 second	0-99	N/A	MPG or L/100 KM
Fuel Range	2 seconds	0.0-999	0.0	mi/km

2. Gages

By pressing the GAGES button on the DIC, the following information will be displayed:

Oil Pressure

The IPC receives a class 2 message from the PCM for oil pressure data. The gage on the IPC will also display this information.

Oil Temp

The IPC monitors the signal circuit of the engine oil temperature sensor to determine the engine oil temperature.

Coolant Temp

The IPC receives a class 2 message from the PCM for coolant temperature data. The gage on the IPC will also display this information.

Trans Fluid

The IPC receives a class 2 message from the PCM for transmission fluid data.

Battery Volts

The IPC monitors the voltage at the battery voltage circuit. The gage on the IPC will also display this information.

Front

The IPC receives a class 2 message from the tire pressure monitoring (TPM) system for front tire pressure data.

Rear

The IPC receives a class 2 message from the tire pressure monitoring (TPM) system for rear tire pressure data.

Gage Display Range

Parameter	Update Range	Range	Reset Value	Units
Oil Pressure	2 seconds	0-199	0	KPA or PSI
Oil Temp	2 seconds	0-199	0	°C or °F
Coolant Temp	2 seconds	0-300	0	°C or °F
Trans Fluid	2 seconds	0-199	0	°C or °F
Battery Volts	2 seconds	0-29	0	V
Front	2 seconds	0-99	0	KPA or PSI
Rear	2 seconds	0-99	0	KPA or PSI

3. Trip

By pressing the Trip button on the DIC, the following information will be displayed:

Odometer

The IPC determines vehicle odometer mileage based on Vehicle Speed Sensor (VSS) data from the PCM. The IPC permanently stores this information in memory and displays the calculated amount on the IPC. The IPC also sends this information on the serial data line to other systems requesting this information.

Trip A

The Trip A displays accumulated mileage/km to tenths of a mile/km since the last reset occurred. The Trip A odometer may be reset by pressing the RESET button on the DIC. If after the trip odometer is reset, the RESET is again pressed for at least 3 seconds, the trip odometer will display the odometer readings since the last ignition cycle. If the trip odometer is not reset, the trip odometer will roll over at 999.9 km (mi).

Trip B

The Trip B odometer functions are the same as Trip A odometer. Performing any reset functions on Trip A will not reset Trip B.

Elap. Time

The Elapsed Time feature is available for display on the IPC. When the elapsed time is displayed on the IPC, starting the timer is accomplished by pressing the RESET button on the DIC for less than 3 seconds. The IPC is able to display elapsed time in hours, minutes, and seconds. To reset the timer press and hold the RESET button on the DIC for at least 3 seconds.

Average Speed

Average speed is calculated as the ratio between the following values:

- Average Speed=Distance/Ignition On
- Distance=Accumulated distance since last reset
- Ignition On=Accumulated ignition on time since last reset

Ignition on time is measured from the time that the ignition is turned ON to the time when the ignition is turned OFF.

You can reset the Average Speed mode by pressing the Reset button. The value of this mode is retained during ignition OFF.

Oil Life Remaining

Oil life left % is based on the information the IPC receives via class 2 from the PCM. The DIC displays the current % of the GM Oil Life System. When the oil needs changing the change engine oil indicator in the message center turns on. When the engine oil is changed the changed engine oil indicator needs to be cleared out of the message center and the oil life left needs to be reset. While in this mode press and hold the Reset button until 100% is displayed.

Off

This will turn off the DIC.

Trip Display Range

DIC Trip Display	Range	
	Metric	English
ODOMETER	0-999999 km	0-999999 mi
TRIP A	0.0-99999.9 km	0.0-99999.9 mi
TRIP B	0.0-99999.9 km	0.0-99999.9 mi
ELAP. TIME	0-99:59:59	0-99:59:59
AVG. SPEED	00.0-999.9 km/h	00.0-999.9 mph

OIL LIFE REMAIN	0-100%	0-100%

4. Options (Personalization)

For options refer to **Vehicle Personalization** in Personalization.

5. English/Metric Display

While in this mode all units in the DIC can be changed to English or metric. By pressing the Set button you can change the units from English to metric and vice versa. The heads up display (HUD) units will also change.

6. Reset

This button is used to reset values within the DIC. Refer to the descriptions above to find out which items can be reset.

HEAD UP DISPLAY (HUD) DESCRIPTION AND OPERATION

The head-up display (HUD) is a secondary display system that optically projects critical vehicle information off of the windshield. The head-up display (HUD) system has an electric tilt adjust that is controlled by the HUD up/down switch. Moving this switch directs the motor to move the HUD image up or down on the windshield. The HUD is also equipped with automatic dimming which gives the HUD the ability to sense outside light conditions, via a photo-cell and automatically adjusts the brightness levels. The HUD image brightness can be manually adjusted by moving the HUD dim switch. There is an ambient light sensor which allows the HUD image display to adapt to the brightness levels of the environment. During the start up of the vehicle all segments of the head-up display illuminate for 3 seconds.

There are 5 different HUD modes that can be selected by pressing and holding the PAGE button on the HUD switch:

1. Speed only
2. Speed and gage
3. Speed, gage, and tach
4. Speed and tach
5. Tach only

The HUD displays the following images:

- The speedometer reading in either English or metric units.
- The turn signal indicators
- The high beam indicator
- The 1-4 shift indicator
- The check gages indicator
- Either the oil pressure gage, coolant temp gage, or fuel gage. When any of the 3 gage modes are displayed

press the PAGE button quickly in order to change between these gages.
- Values in English or metric units

Speedometer

The HUD receives a signal from the IPC indicating vehicle speed in either English (mph) or metric (km/h) units.

LH Turn Signal and RH Turn Signal Indicator Inputs

The left and right turn indicators are driven by hardware inputs from the exterior lighting system. The signal is active high (12 volts) and inactive when circuit is open. During hazard mode, both the right and left turn signal circuits are active high, causing both the right and left turn signal indicators to illuminate at the same time.

High Beam Indicator Input

The HUD receives a signal from the IPC with the high beam switch input.

1-4 Shift

The HUD receives a signal from the IPC indicating when to shift gears.

CHECK GAGES Inputs

The IPC monitors different inputs and vehicle messages and sends the information to the HUD. When the HUD receives the information, the CHECK GAGES indicator illuminates.

The HUD will illuminate the CHECK GAGES indicator for the following:

- Low Oil Pressure
- Coolant Temp Hot
- Low Fuel

Gages

The HUD receives a signal from IPC for either the oil pressure gage, fuel gage, or the coolant temp gage.

AUDIBLE WARNINGS DESCRIPTION AND OPERATION

The audible warnings alert the driver of a system concern or a critical vehicle condition. The IPC generates the audible warnings. If the IPC receives multiple audible warning requests, the warning with the highest priority sounds first. The following lists the audible warning priority and the pulse rate:

1. Fast rate chime (180 pulses per minute)
2. Medium rate chime (120 pulses per minute)
3. Slow rate chime (60 pulses per minute)

4. Single chime

Fasten Safety Belt Warning

The IPC activates the fasten safety belt audible warning as requested by the IPC. The IPC receives a low input signal from the seat belt switch for 8 seconds. The fasten safety belt warning sounds and the fasten safety belt indicator illuminates when the following occurs:

- The ignition switch transitions to ON.
- The IPC detects that the driver's seat belt is not buckled (signal is low).

If the seat belt is buckled when the ignition is turned on, the chime does not sound. If the seat belt is buckled while the chime is sounding, the chime stops. If the seat belt is unbuckled after the initial transition to ON, the chime does not sound.

Key-In-Ignition Warning

The IPC activates the key-in-ignition audible warning as requested by the BCM. The BCM sends a class 2 message to the IPC indicating the chime frequency (medium rate) and duration (continuous). The key-in-ignition warning sounds when the following occurs:

- The ignition switch is OFF.
- The body control module (BCM) determines that the driver's door is open (signal circuit is low). The IPC receives a class 2 message from the BCM indicating the door ajar status.
- The BCM determines that the key-in-ignition switch is closed (signal circuit is low). The IPC receives a class 2 message from the BCM indicating the key-in-ignition status.

Lights On Warning

The IPC activates the lights on warning as requested by the body control module (BCM). The BCM sends a class 2 message to the IPC indicating the chime frequency (fast rate) and duration (continuous). The lights on warning sounds when the following occurs:

- The ignition is OFF.
- The BCM determines that the driver's door is open (signal circuit is low). The IPC receives a class 2 message from the BCM indicating the door ajar status.
- The IPC determines that the headlamp switch is in the park or head position.

Turn Signal Reminder

The IPC activates theturn signal warning as requested by the IPC. The IPC receives a low input signal from the turn signal switch indicating the chime frequency (medium rate) and duration (continuos). The turn signal warning sounds when the following occurs:

- The ignition is in RUN.

- The turn signal switch is in either turn position, sensing, within 1 second, an open to B+ transition in the turn signal control circuit (left or right turn).
- The vehicle has traveled a distance of 1.2 km (0.75 mi) by counting pulses on the vehicle speed input circuit.

The IPC turns off the turn signal reminder when either the ignition switch is turned to the OFF position, or the turn signal switch returns to the OFF position, or the turn signal switch returns to the OFF position, sensing, within 1 second, no transitions from open to B+ in either of the turn signal control circuits (left turn or right turn).

Refer to **Indicator/Warning Message Description and Operation** .

Additional Chimes

The following chimes will turn on when an associated indicator turns on in the IPC:

- ACT HNDLG-WARMING UP indicator
- CHECK GAGES indicator
- COOLANT OVER TEMP indicator
- DOOR AJAR indicator
- LOW OIL PRESSURE indicator
- OVER SPEED indicator
- SERVICE ABS indicator
- SERVICE ACTIVE HNDLG indicator
- WARMUP COMPLETE indicator

For a description of an indicator refer to **Indicator/Warning Message Description and Operation** .

For diagnosis of an indicator refer to **Symptoms - Instrument Panel, Gages and Console** .

SPECIAL TOOLS AND EQUIPMENT

SPECIAL TOOLS

Special Tools

Illustration	Tool Number/ Description
	J 33431-C Signal Generator and Instrument Panel Tester

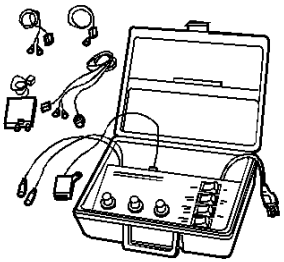	
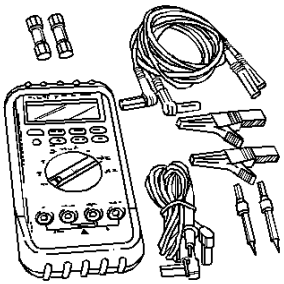	J 39200 Digital Multimeter