Power Steering System

Specifications

Fastener Tightening Specifications

Application	Specification	
	Metric	English
Hydraulic Pump Control Fitting-to-Power Steering Pump	75 N·m	55 lb ft
Power Steering Fluid Reservoir Bolt/Screw (5.7L VIN G)	10 N·m	89 lb in
Power Steering Fluid Reservoir Bracket Nuts (3800 VIN K)	12 N·m	107 lb in
Power Steering Gear Bolt/Screw	85 N·m	63 lb ft
Power Steering Gear Inlet Hose Fitting-to-Power Steering Gear	28 N·m	21 lb ft
Power Steering Gear Inlet Hose Fitting-to-Power Steering Pump	28 N·m	21 lb ft
Power Steering Gear Outlet Hose Fitting-to-Power Steering Gear	28 N·m	21 lb ft
Power Steering Pump Bolt/Screw (5.7L VIN G)	25 N·m	18 lb ft
Power Steering Pump Nut (3800 VIN K)	30 N·m	23 lb ft
Power Steering Pump Rear Bracket Bolt/Screw (5.7L VIN G)	50 N·m	37 lb ft

Fluid Specifications

Application	Type of Material	GM Part Number
Warm Climate	Power Steering Fluid	1050017 or 1052884 or equivalent meeting GM Specification 9985010
Cold Climate (see note)	Power Steering Fluid	12345867 or 12345866
Important: Drain and refill the system prior to using this fluid.		

GM SPO Group Numbers

Application	GM SPO Group Number
Power Steering Gear	6.000
Power Steering Pump (V8)	6.000
Power Steering Pump (V6)	6.000
Remote Power Steering Fluid Reservoir (V6)	6.000
Power Steering Pulley (V6)	6.000
Power Steering Pulley (V8)	6.000
Power Steering Pump Front Bracket (V8)	6.000
Power Steering Pump Rear Bracket (V6)	6.000
Power Steering Hose Inlet (V6)	6.000
Power Steering Hose Inlet (V8)	6.000
Power Steering Hose Outlet (V6)	6.000
Power Steering Hose Outlet (V8)	6.000
Power Steering Cooler (V8)	6.000

cardiagn.com

Visual Identification

Power Steering Gear - Disassembled View (Quiet Valve)

Power Rack and Pinion – End Take Off

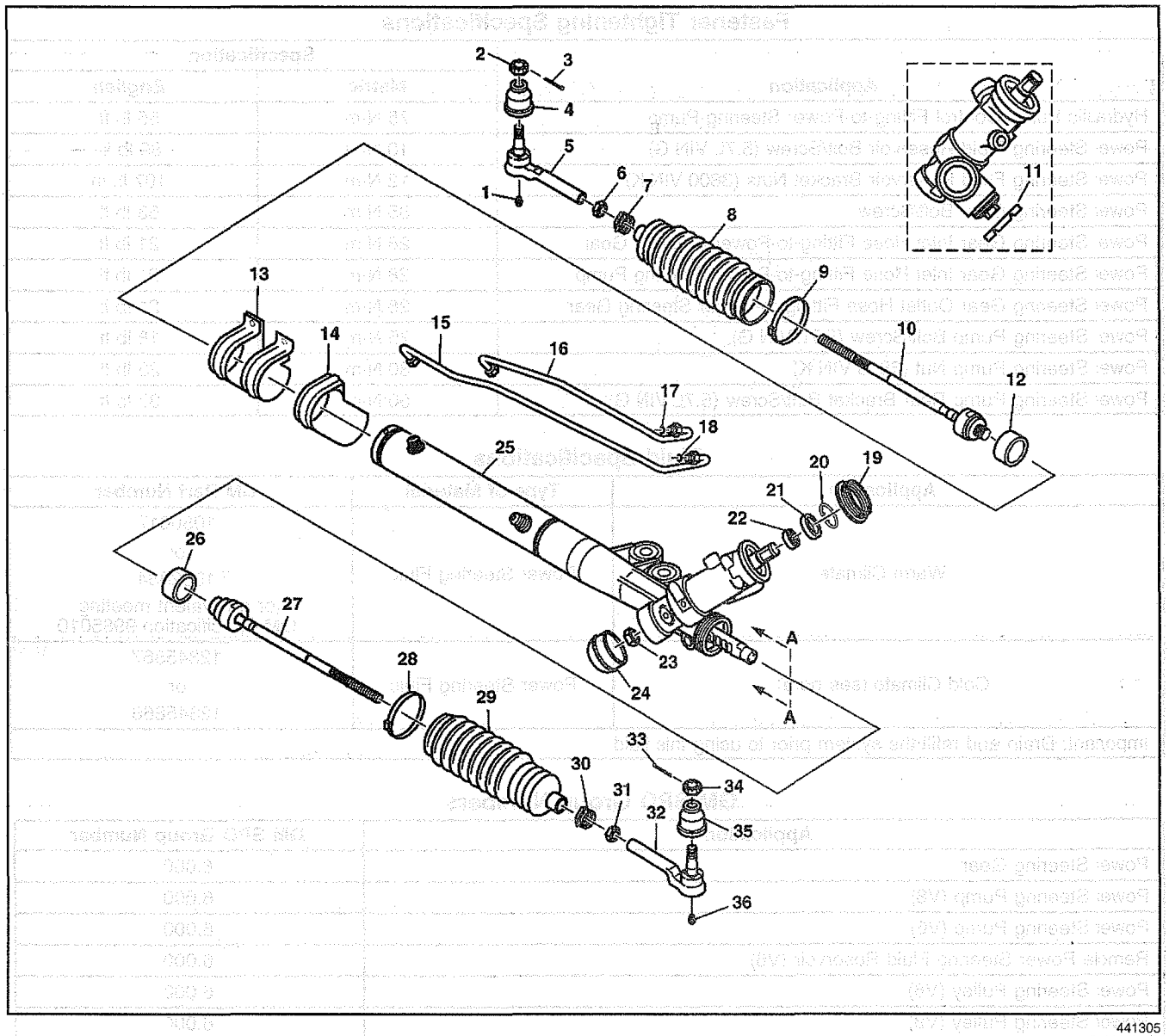

441305

Legend

(1) Lubrication Fitting
(2) Hexagon Slotted Nut
(3) Cotter Pin
(4) Tie Rod Seal
(5) Outer Tie Rod Assembly
(6) Hexagon Jam Nut
(7) Tie Rod End Clamp
(8) Rack and Pinion Boot
(9) Boot Clamp
(10) Inner Tie Rod Assembly
(11) Adjuster Plug Lock Nut
(12) Shock Dampener Ring
(13) Mounting Bracket Assembly
(14) Mounting Grommet
(15) Cylinder Line (Left Hand) Assembly
(16) Cylinder Line (Right Hand) Assembly
(17) O-Ring Seal
(18) O-Ring Seal
(19) Seal Adapter
(20) Retaining Ring
(21) Stub Shaft Seal
(22) Annulus Bearing Assembly
(23) Hexagon Lock Nut
(24) Dust Cover

cardiagn.com

(25) Rack and Pinion (Partial) Gear Assembly
(26) Shock Dampener Ring
(27) Inner Tie Rod Assembly
(28) Boot Clamp
(29) Rack and Pinion Boot
(30) Tie Rod End Clamp
(31) Hexagon Jam Nut
(32) Outer Tie Rod Assembly
(33) Cotter Pin
(34) Hexagon Slotted Nut
(35) Tie Rod Seal
(36) Lubrication Fitting

Power Steering Pump - Disassembled View (Return Tube)

Power Steering Pump

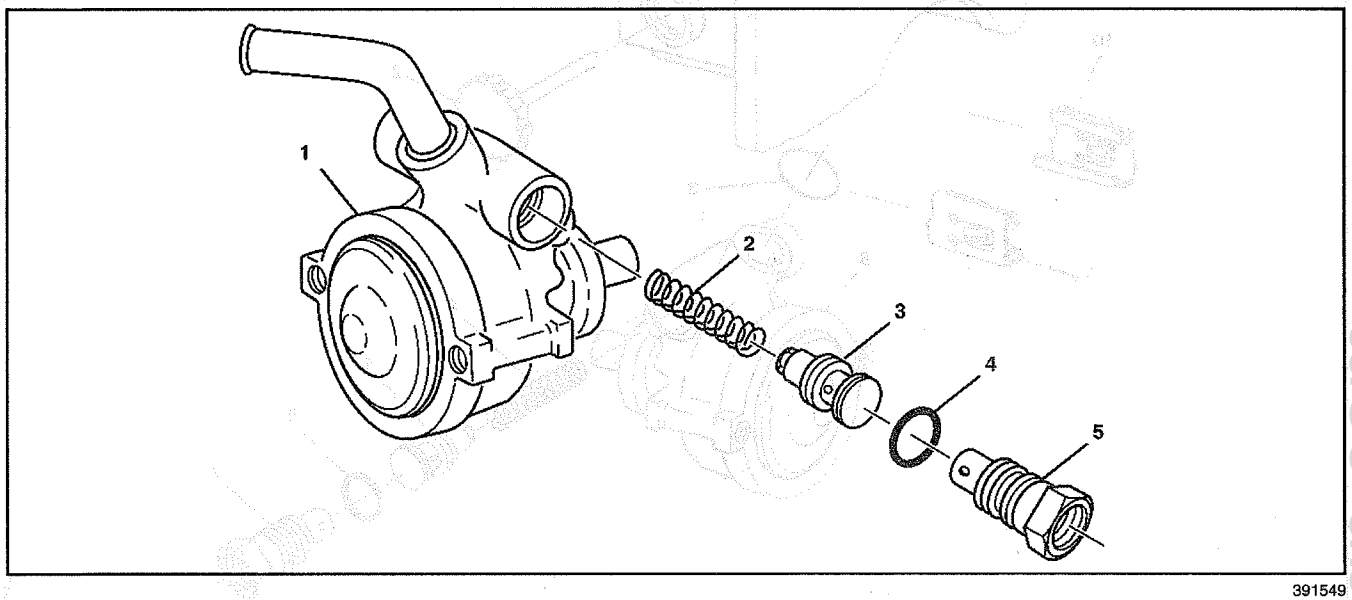

391549

Legend

(1) Hydraulic Pump Housing Assembly
(2) Flow Control Spring
(3) Control Valve Assembly
(4) O-ring Seal
(5) O-ring Union Fitting

cardiagn.com

Power Steering Pump - Disassembled View (CB Series Pump)

Power Steering Pump Assembly–CB Series

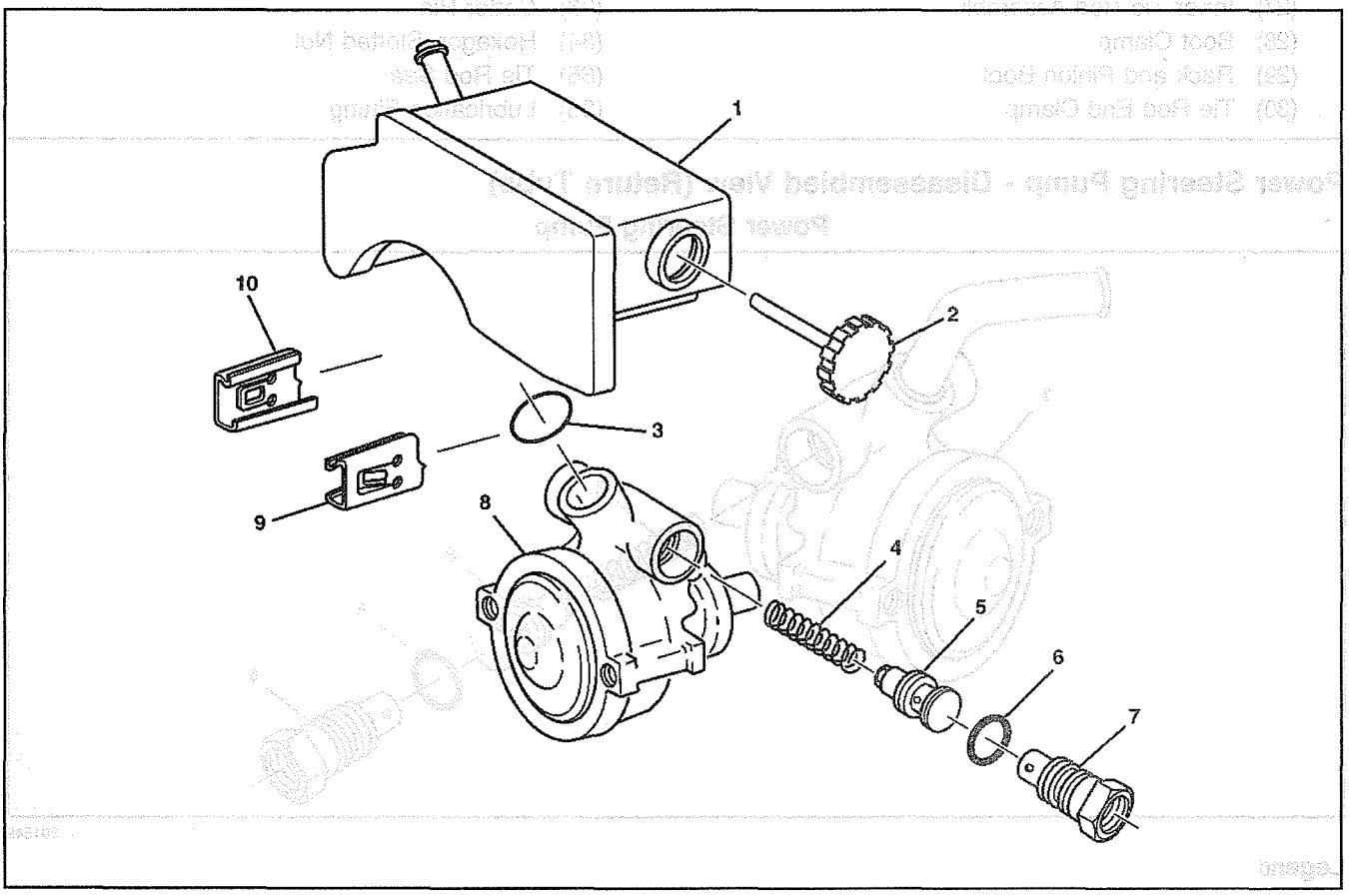

391553

Legend

(1) Hydraulic Pump Reservoir Assembly (Typical)
(2) Reservoir Capstick Assembly
(3) O-ring Seal
(4) Flow Control Spring
(5) Control Valve Assembly
(6) O-ring Seal
(7) O-ring Union Fitting
(8) Hydraulic Pump Housing Assembly
(9) Reservoir Retaining Clip (RH)
(10) Reservoir Retaining Clip (LH)

cardiagn.com

Diagnostic Information and Procedures

Hissing Noise In Steering Gear

Problem	Action
There is a hissing noise in the steering gear.	• Inspect for loose intermediate steering shaft universal joints. • If the noise is very objectionable, replace the steering gear.

Rattle in Rack and Pinion Steering Gear

Problem	Action
There is a rattling noise.	Inspect for the following conditions: • Contact between the outlet (pressure) hose and the frame • Loose tie rod ends • Loose steering gear attachment • A loose pinion shaft
A rattling noise occurs when driving over bumps.	Inspect the front brake linings for the following conditions: • A loose fit • Missing antirattle clips

Power Steering Gear and Pump Leaks

- Determine if any of the following conditions exist:
  - The vehicle leaks fluid onto the garage floor.
  - Fluid leaks are visible on the steering gear or the pump.
  - There is a growling noise when you are parking the vehicle.
  - There is a growling noise when the engine is cold.
  - The power steering does not operate when you are parking the vehicle.
  - The vehicle requires excessive steering effort.
- Inspect for an overfilled power steering fluid reservoir.
- Inspect for fluid aeration and overflow.
- Inspect the hose connections.
- Identify the exact point of system leakage. Refer to External Leakage Check.

  The point from which fluid is dripping is not necessarily the point where the system is leaking from.

External Leakage Check

Use this procedure in order to help identify the exact location of a leak. Some leaks can be easily located, but seepage type leaks may be more difficult to locate. To locate seepage leaks use the following method:

1. Turn the engine off.
2. Wipe the complete power steering system dry.

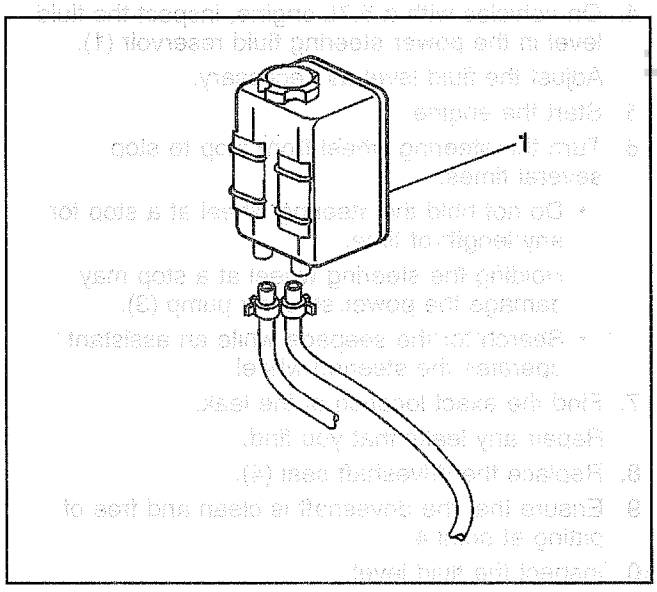

291852

3. On vehicles with a 3800 engine, inspect the fluid level in the power steering fluid reservoir (1).

   Adjust the fluid level as necessary.

cardiagn.com

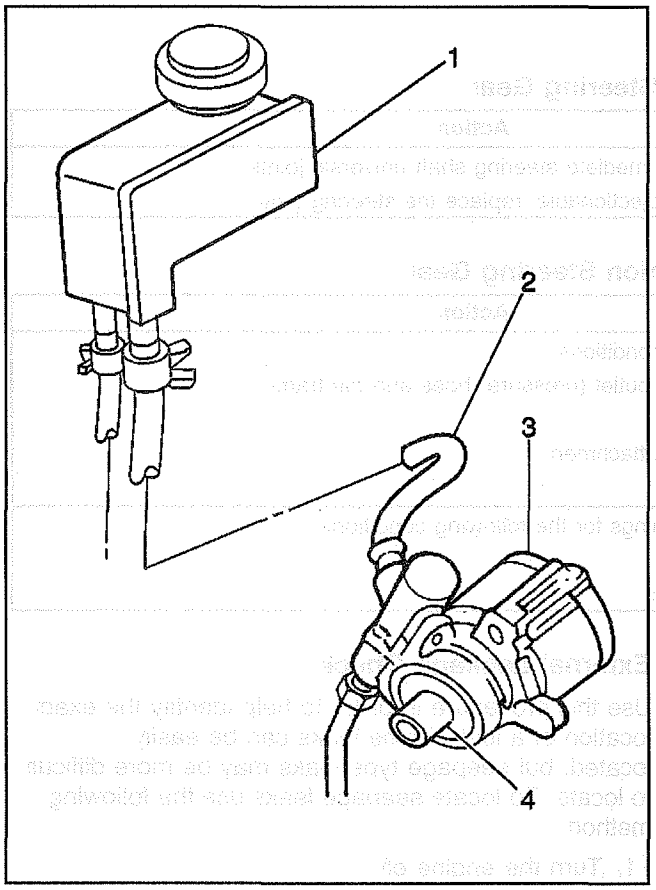

291841

4. On vehicles with a 5.7L engine, inspect the fluid level in the power steering fluid reservoir (1).
   Adjust the fluid level as necessary.
5. Start the engine.
6. Turn the steering wheel from stop to stop several times:
   - Do not hold the steering wheel at a stop for any length of time.
     Holding the steering wheel at a stop may damage the power steering pump (3).
   - Search for the seepage while an assistant operates the steering wheel.
7. Find the exact location of the leak.
   Repair any leaks that you find.
8. Replace the driveshaft seal (4).
9. Ensure that the driveshaft is clean and free of pitting at point 4.
10. Inspect the fluid level.
    Determine if leakage persists under the following conditions:
    - The fluid level is correct.
    - The hydraulic pump reservoir cap is tight.
11. Replace the hydraulic pump reservoir cap if leakage persists.
12. Inspect the hydraulic pump fluid reservoir for the following conditions:
    - Cracks
    - Bending
13. Replace the hydraulic pump fluid reservoir if you detect these conditions.

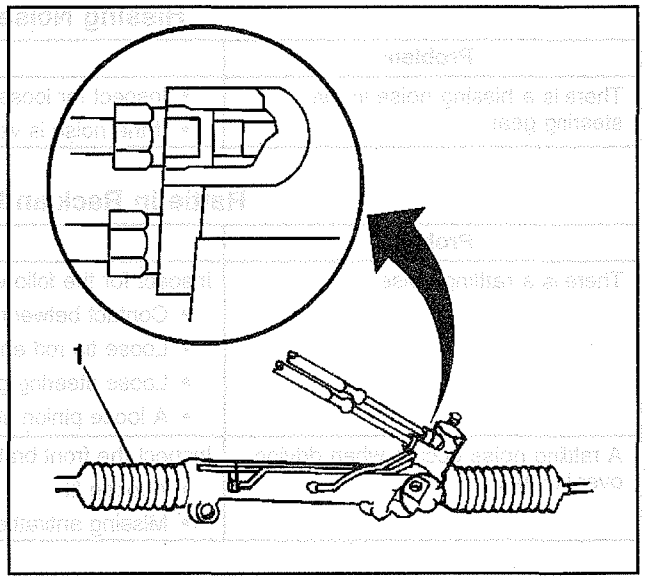

291855

14. Torque the steering gear (1) pipe fitting seat to specifications.
    If leakage persists, replace the steering gear pipe seal (O-ring).

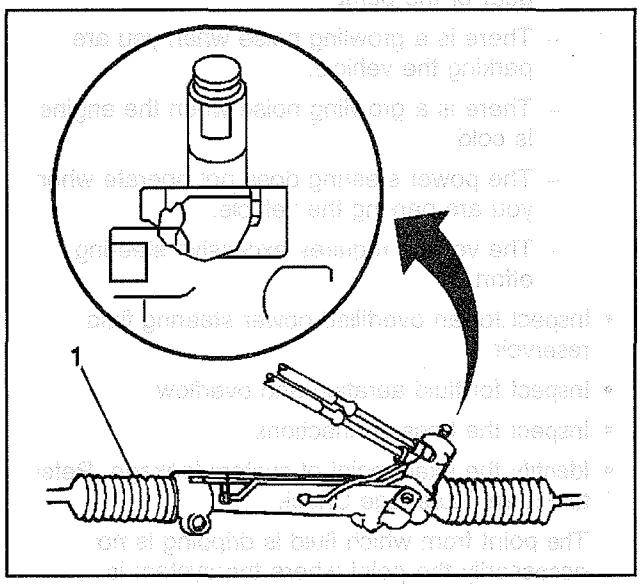

291858

15. Replace the steering gear (1) with a partial steering gear.
16. If you observe leakage between the torsion bar and the steering gear pinion shaft, replace the gear with a partial steering gear.

cardiagn.com

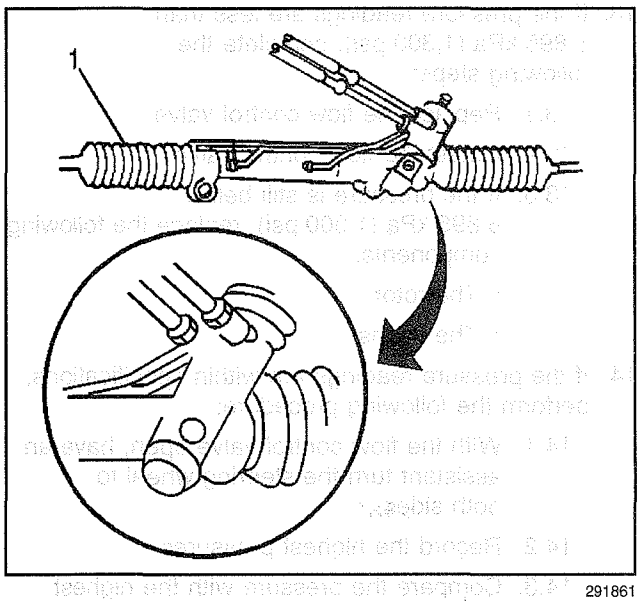

291861

17. Determine if the following conditions exist:
    - You observe a leakage at the driver side.
    - The leakage is not affected by the direction of the turn.
18. If the above conditions exist, replace the steering gear (1) with a partial steering gear.
19. Determine if the following conditions exist:
    - You observe a leakage at the steering gear housing end.
    - The fluid spurts when bottomed in a left turn.
20. If the above conditions exist, replace the steering gear with a partial steering gear.

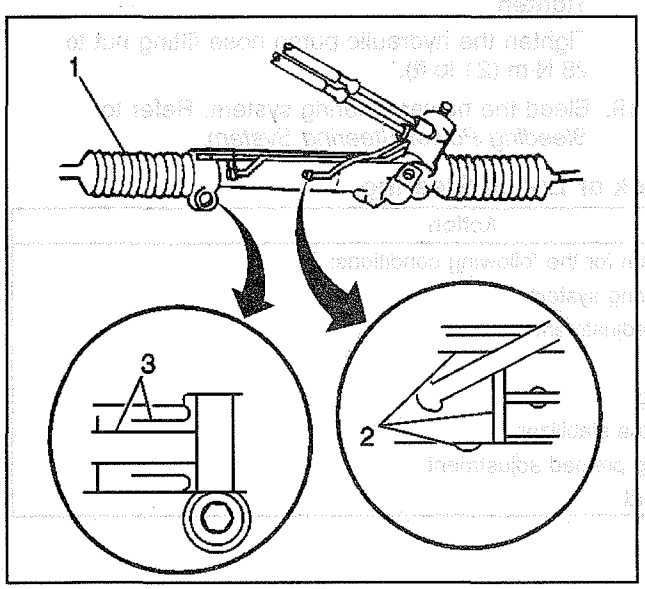

291864

21. Determine if leakage exists (2, 3).
22. If the above conditions exist, replace the steering gear (1) with a partial steering gear.
23. Tighten the following components to specifications:
    - The hydraulic pump hose fitting.
    - The hydraulic pump hose fitting nut.
24. Replace the hydraulic pump seal (O-ring) if leakage persists.

Seal Replacement Recommendations

Lip Seals

Lip seals seal the rotating shafts. The lip seals require special treatment. Lip seals are used on the hydraulic pump shaft of the power steering pump. When the lip seals leak complete the following steps:

1. Inspect the sealing surfaces.
2. Thoroughly clean the sealing surfaces.
3. Replace the seal(s).

Replace the shaft if you find pitting. If there is slight corrosion in the lip seal contact zone, clean the surface of the shaft with crocus cloth. Replace the shaft only if you cannot stop the leakage by smoothing the shaft with crocus cloth.

O-Ring Seals

When you remove a part which forms a sealing surface for an O-ring complete the following steps:

1. Remove the original O-ring seal.
2. Replace the original O-ring seal with a new O-ring seal.

Lubricate all of the new O-ring seals with power steering fluid in order to ease the installation.

Power Steering System Test Procedure

Tools Required

- *J 5176-E* Power Steering Pressure Tester
- *J 5176-92* Pressure Tester Adapter
- *J 25323-D* Power Steering System Analyzer
- *J 29525* Steering Analyzer Adapter (18 mm)

If you suspect a hydraulic or mechanical malfunction of one of the following components, perform this procedure in order to determine the cause:

- The power steering pump
- The power steering gear

1. Place a drain pan under the reservoir.
2. Disconnect the outlet hose at the reservoir.
3. Connect a spare pressure hose to the reservoir.

Important: Test the power steering system using the *J 5176-E*. Testing the power steering system with the *J 25323-D* will also measure the flow rate as well as the pressure.

4. Connect the *J 5176-E* and the *J 5176-92* or *J 25323-D* and *J 29525* to the following hoses:
    - The outlet hose
    - The spare pressure hose
5. Open the valve on the *J 5176-E* or *J 25323-D*.
6. Start the engine and allow to reach a normal operating temperature.

cardiagn.com

7. Ensure that the engine is at idle and that the valve on the *J 5176-E* or *J 25323-D* is open.
8. Read the pressure reading.

Important: The pressure should be no more than 1 050 kPa (150 psi).

9. If the pressure is more than 1 050 kPa (150 psi), perform the following steps:
   - Inspect the hoses for restrictions.
   - Inspect the popper valve on the steering gear for the proper installation.

Notice: Do not leave the valve fully closed for more than 5 seconds, or the pump could be damaged internally.

10. Fully close the valve on the *J 5176-E* or *J 25323-D* three times.

    Record the pressure readings each time.

    The power steering pump is functioning properly when the pressure readings fall within the following range:
    - Each reading is at least 6 895 kPa (1,300 psi).
    - The 3 readings are within 345 kPa (50 psi) of each other.
11. The power steering pump control valve is sticking if the following conditions exist:
    - The pressure readings are at least 6 895 kPa (1,300 psi).
    - The pressure readings are not within 345 kPa (50 psi) of each other.
12. If the pressure readings indicate that there is a sticking flow control valve, perform the following steps:
    12.1. Remove the flow control valve.
    12.2. Clean the flow control valve.
    Remove any burrs using a crocus cloth of fine hone.
    12.3. Flush the system if the system contains any contamination.
13. If the pressure readings are less than 6 895 kPa (1,300 psi), complete the following steps:
    13.1. Replace the flow control valve.
    13.2. Retest the flow control valve.
    13.3. If the pressure is still below 6 895 kPa (1,300 psi), replace the following components:
    - The rotor
    - The vanes
14. If the pressure readings are within specifications, perform the following procedure:
    14.1. With the flow control valve open, have an assistant turn the steering wheel to both sides.
    14.2. Record the highest pressures.
    14.3. Compare the pressure with the highest pump pressures that you recorded earlier.
15. If the pressure at both stops is not the same as the maximum pressure previously recorded, then the steering gear is leaking internally.

    Repair the steering gear if the steering gear is leaking internally.
16. Turn off the engine.
17. Remove the *J 5176-E* and *J 5176-92* or *J 25323-D* and *J 29525*.

Notice: Refer to *Fastener Notice* in Cautions and Notices.

18. Connect the outlet hose to the remote reservoir.

    Tighten

    Tighten the hydraulic pump hose fitting nut to 28 N·m (21 lb ft).
19. Bleed the power steering system. Refer to *Bleeding Power Steering System*.

Excessive Wheel Kickback or Loose Steering

Problem	Action
There is excessive steering wheel kickback or loose steering.	Inspect the steering system for the following conditions: • Air in the power steering system • Loose steering gear adjustment • Loose tie rod ends • A worn wheel bearing • A loose coupling on the stabilizer • A loose thrust bearing preload adjustment • A worn pipe fitting seat

cardiagn.com

Increase in Effort While Turning Steering Wheel

Problem	Action
There is a momentary increase in effort when turning the steering wheel fast to the right or left.	Inspect the steering system for the following conditions: • High internal leakage • A sticking or damaged steering gear valve spool • Insufficient pump pressure • A low fluid level

Poor Return of Steering Wheel

Problem	Action
The steering wheel has poor returnability.	Inspect the steering system for the following conditions: • Incorrect caster setting • A bind in the following components: – The control arm ball stud – The steering column – The intermediate steering shaft joints • A misadjusted steering gear • An incorrect steering gear valve spool

Steering Wheel Surges/Jerks While Turning

Problem	Action
The steering wheel surges or jerks.	Inspect the vehicle for the following conditions: • A defective tire • A bad tire • A sluggish steering gear valve spool • A serpentine drive belt which is in one of the following conditions: – Loose – Soaked with oil • Air in the power steering system

Steering Wheel Kickback

Problem	Action
There is kickback in the steering wheel.	Inspect the steering system for the following conditions: • Air in the power steering system • A loose steering gear mounting • Loose or worn joints from the steering column to the steering gear • Loose tie rod ends • A worn or missing pipe fitting seat • A worn wheel bearing • Misadjusted steering gear

Steering Effort Hard in Both Directions

Problem	Action
The steering is hard.	• Perform the test on the hydraulic system. Refer to *Power Steering System Test Procedure.* • Inspect the steering system for the following conditions: – Misadjusted steering gear – A bind or catch in the steering gear – A loose steering gear mounting – A faulty pipe fitting seat

Cardiagn.com

Too Much Play in Steering

Problem	Action
There is too much play in the steering wheel.	Inspect the steering system for the following conditions: • A loose steering gear mounting • Loose or worn joints from the steering column to the steering gear • Misadjusted steering gear

Wander or Poor Steering Stability

Problem	Action
There is a wander or poor stability in the steering.	Inspect the vehicle for the following conditions: • Mismatched tires • Uneven tires • Worn shock absorbers • A loose stabilizer shaft • A broken spring • A sagging spring • Misadjusted steering gear • A misaligned tire and wheel

Vehicle Leads to One Side or the Other

Problem	Action
The vehicle pulls or leads.	Inspect the vehicle for the following conditions: • A misaligned front tire and wheel • Mismatched tires • Uneven tires • Broken springs • Sagging springs • Radial tire lead/pull • An unbalanced steering gear valve spool • A dragging front brake

Foaming, Milky-Appearing Power Steering Fluid

Problem	Action
The following conditions exist: • The fluid is foamy or milky. • The fluid level is low. • The fluid pressure is low.	• Inspect for air in the fluid. • Inspect for an internal pump leak. • Extremely cold temperatures will cause air bubbles if the fluid level is low. • If the fluid level is correct and the pump still foams, perform the following steps: – Remove the reservoir. – Inspect the reservoir for cracks. If the reservoir is cracked, replace the reservoir.

Low Oil Pressure Due to Steering Gear

Problem	Action
There is low pressure due to the steering gear.	Inspect the steering gear for the following conditions: • A scored housing bore • Leakage at one of the following areas: – The valve rings – The seals

cardiagn.com

Low Oil Pressure Due to Steering Pump

Problem	Action
There is low pressure due to the power steering pump.	Inspect the steering system for the following conditions: • A stuck or inoperative flow control valve • A pressure plate that is not flat against the ring • An extremely worn ring • Scoring on one of the following components: – The pressure plate – The thrust plate – The rotor • Vanes sticking in the rotor slots • A break or crack on one of the following components: – The thrust plate – The pressure plate • A high internal leakage

Groan Noise in Steering Pump

Problem	Action
There is a groaning noise in the pump.	Inspect the pump for the following conditions: • Air in the fluid • A low fluid level • A loose pump mounting

Growl Noise in Steering Pump

Problem	Action
There is a growling noise in the power steering pump.	Inspect the system for the following conditions: • Excessive back pressure that is caused by one of the following conditions: – A restricted hose – A restricted steering gear • Scoring on one of the following components: – The pressure plates – The thrust plate – The rotor • A worn ring

Whine Noise in Steering Pump

Problem	Action
There is a whining noise in the power steering pump.	Inspect the system for scoring on one of the following components: • The power steering pump shaft bushing • The pressure plates • The vanes

Repair Instructions

Checking and Adding Power Steering Fluid

Notice: When adding fluid or making a complete fluid change, always use the proper fluid. Failure to use the proper fluid will cause hose and seal damage and fluid leaks. Refer to Power Steering Fluid Recommendations in this section.

The fluid level is indicated by marks on the fluid level indicator. The fluid level indicator is located on the reservoir cap.

- If the fluid is about 77°C (170°F), the fluid level should be at the H mark.
- If the fluid is about 21°C (70°F), the fluid level should be at the C mark.

cardiagn.com

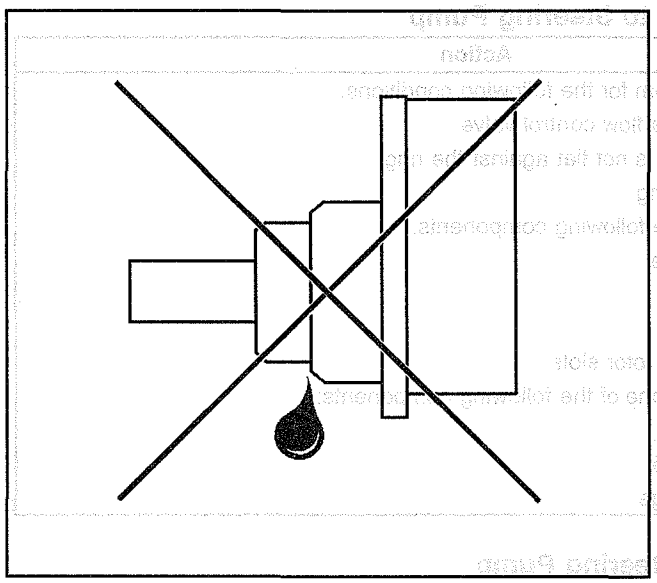

443641

Bleeding Power Steering System

Tools Required

- *J 35555* Mity Vac
- *J 43485* Power Steering Bleeder Adapter

Important: Use clean, new power steering fluid type only.

- See the Maintenance and Lubrication subsection for fluid specifications.

Notice: If the power steering system has been serviced, an accurate fluid level reading cannot be obtained unless air is bled from the steering system. The air in the fluid may cause pump cavitation noise and may cause pump damage over a period of time.

Notice: When adding fluid or making a complete fluid change, always use the proper power steering fluid. Failure to use the proper fluid will cause hose and seal damage and fluid leaks.

Important: Hoses touching the frame, body, or engine may cause system noise.

- Verify that the hoses do not touch any other part of the vehicle.

Important: Loose connections may not leak, but could allow air into the steering system.

- Verify that all hose connections are tight.

Important: Maintain the fluid level throughout the bleed procedure.

1. Remove the pump reservoir cap.
2. Fill the pump reservoir with fluid to the "FULL COLD" level.

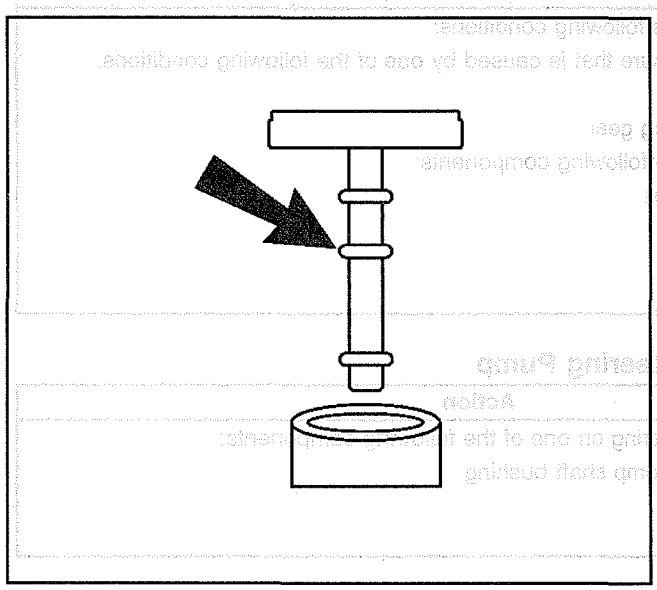

443644

cardiagn.com

3. Attach *J 43485* to *J 35555* or equivalent.
4. Place *J 43485* on or in the pump reservoir filler neck.
5. Apply a vacuum of 68 kPa (20 in Hg) maximum.
6. Wait 5 minutes.

   Typical vacuum drop is 7–10 kPa (2–3 in Hg). If the vacuum does not remain steady, refer to Excessive Vacuum Drop Diagnosis at the end of this procedure.

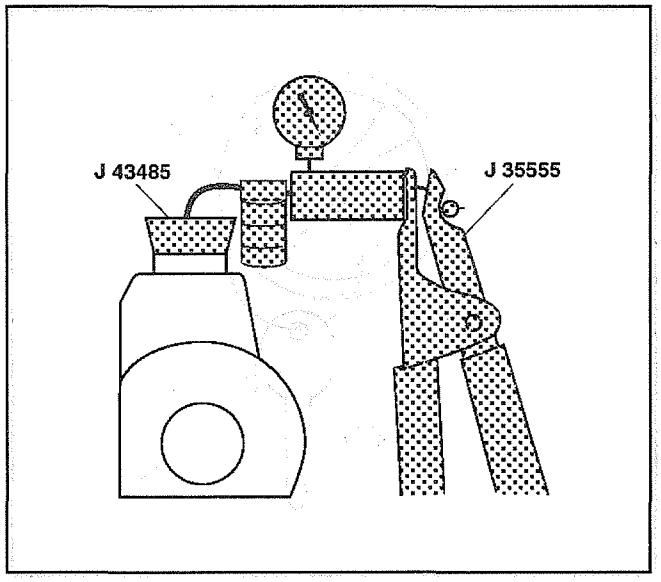

443646

7. Remove the *J 43485* and the *J 35555*.
8. Reinstall the pump reservoir cap.
9. Start the engine. Allow the engine to idle.
10. Turn off the engine.
11. Verify the fluid level. Repeat steps 9 through 11 until fluid stabilizes.

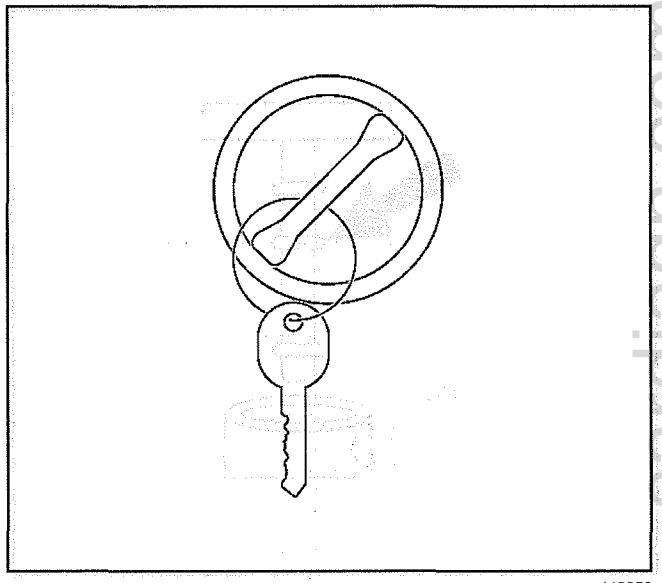
443650

Important: Do not turn steering wheel to lock.

12. Start the engine. Allow the engine to idle.
13. Turn the steering wheel 180–360 degrees in both directions 5 times.

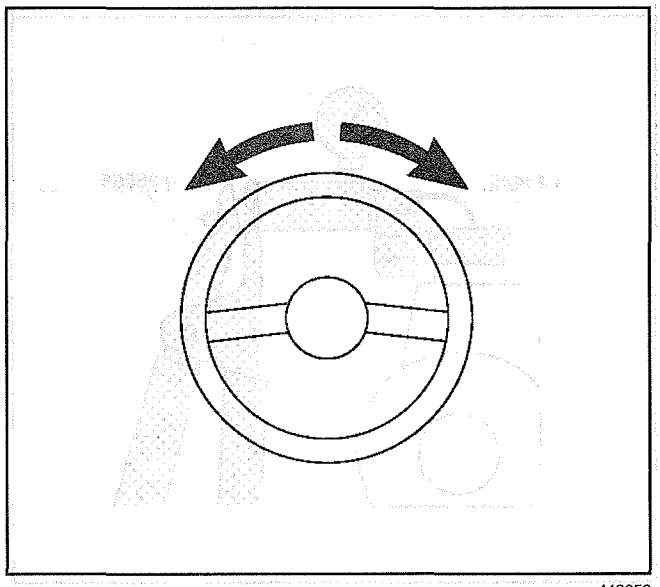
443653

cardiagn.com

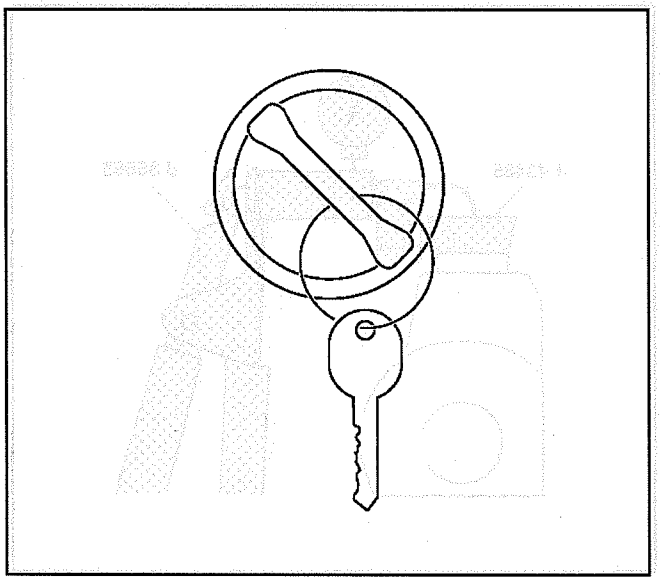

443655

14. Switch the ignition off.
15. Verify the fluid level.

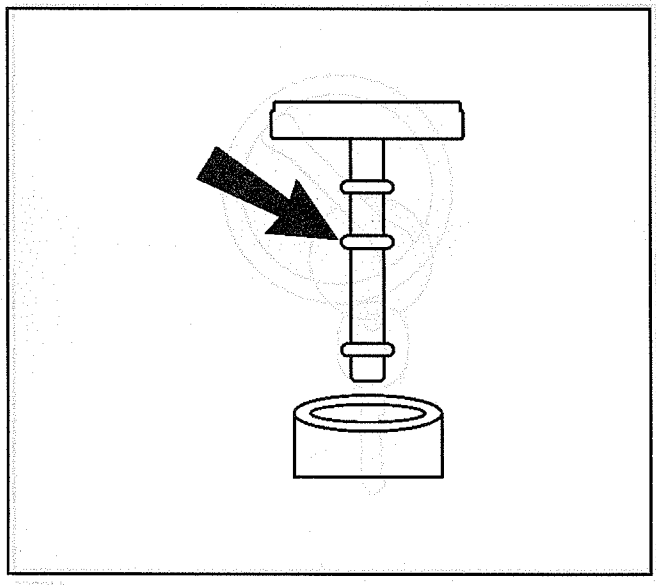

443644

16. Remove the pump reservoir cap.

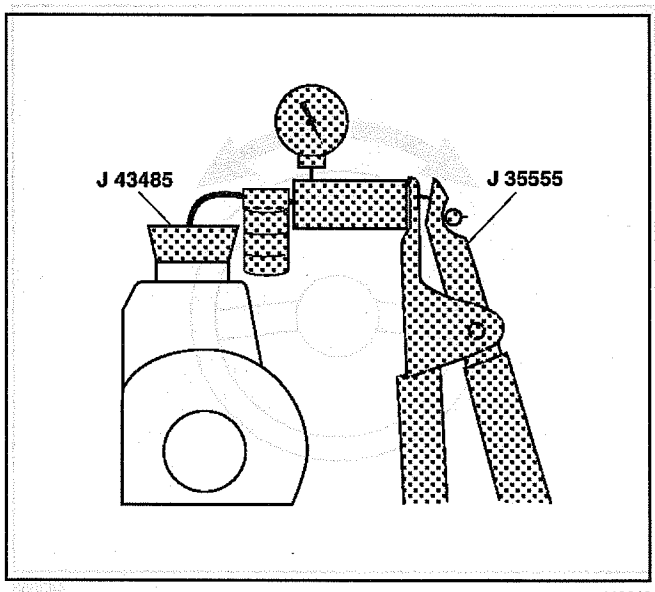

443646

17. Attach *J 43485* to *J 35555* or equivalent.
18. Place *J 43485* on or in the pump reservoir filler neck.
19. Apply a vacuum of 68 kPa (20 in Hg) maximum.
20. Wait 5 minutes.
21. Remove the *J 43485* and the *J 35555*.
22. Verify the fluid level.

cardiagn.com

23. Reinstall the pump reservoir cap.

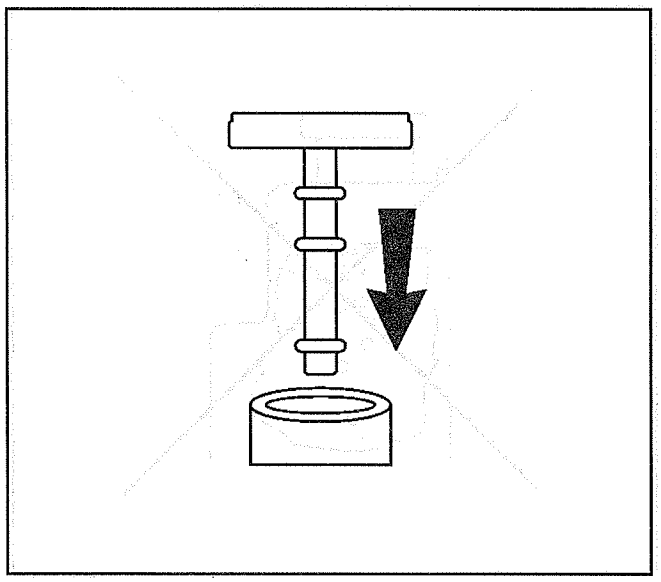

443656

Excessive Vacuum Drop Diagnosis

Tools Required

- *J 35555* Mity Vac
- *J 43485* Power Steering Bleed Adapter

1. If the vacuum continues to drop, remove the pressure and return hose from the pump.
2. Install the plugs (1) (2) supplied with *J 43485* into the pressure and return port.

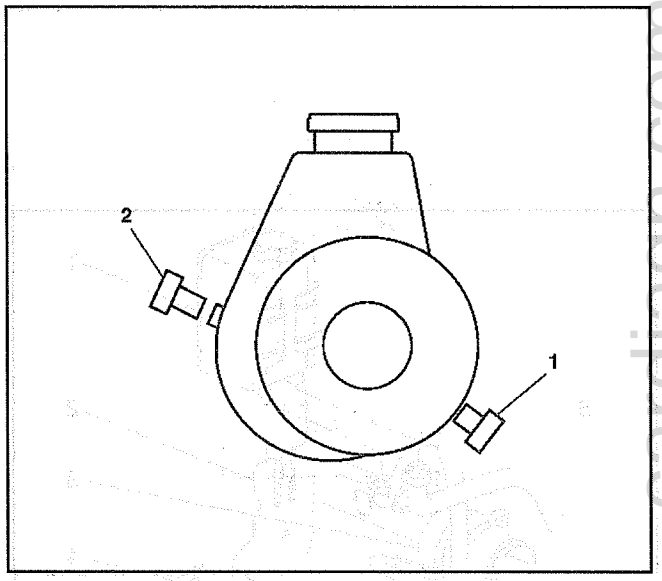

443667

3. Attach *J 43485* to *J 35555* or equivalent.
4. Place *J 43485* on or in the pump reservoir filler neck.
5. Apply a vacuum of 68 kPa (20 in Hg) maximum.
6. If the vacuum drops again, repair or replace the pump. If the vacuum holds steady, continue to check the other parts of the steering system.

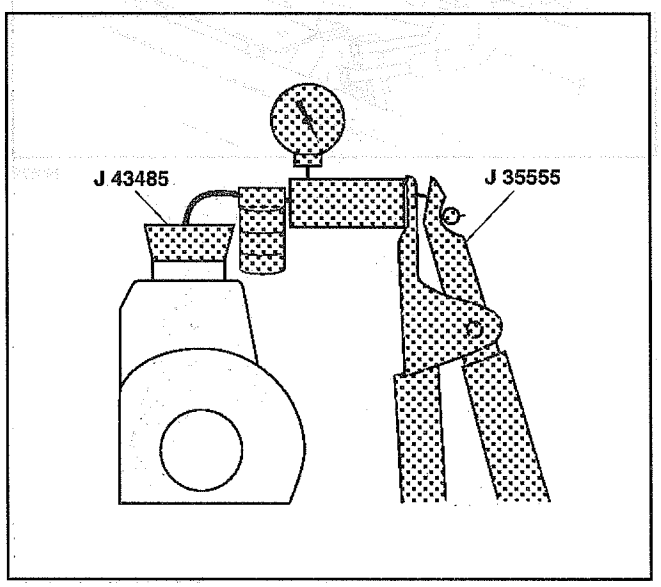

443646

cardiagn.com

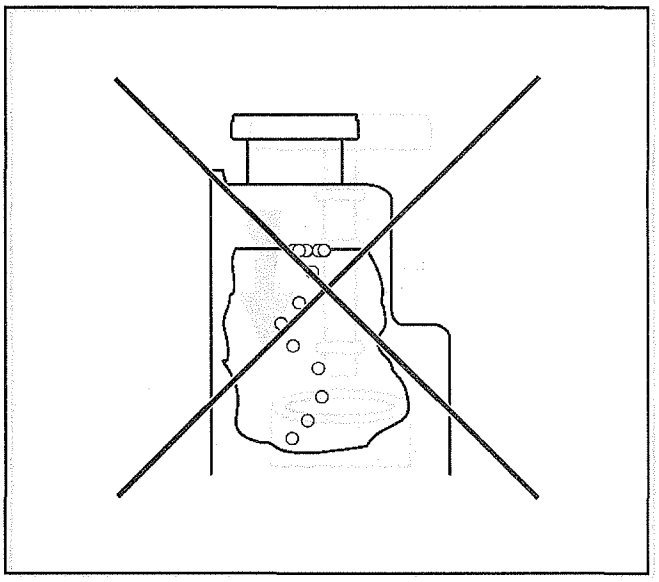

443673

Important: Fluid must be free from bubbles and foam. Be aware of periodic bubbles that indicate a loose connection or leaking O-ring seal in the return hose or the pressure hose.

Fluid must be free from discoloration.

7. Observe the fluid.
8. If condition persists, replace the following parts:
   - The return hose clamps
   - The return hose O-rings
   - The pressure hose O-rings
   - The gear cylinder line O-rings
   - The reservoir to pump O-ring
9. Repeat the bleed procedure from the beginning.
10. Drive the vehicle approximately 16 kilometers (10 miles) to warm the system to operating temperature. Evaluate vehicle on a smooth flat surface.
11. Verify the following conditions:
    - There is smooth power assist.
    - The vehicle operates quietly.
    - The pump maintains the proper fluid level.
    - There is no leaking in the steering system.
    - The fluid is free of foam or discoloration.

Remote Power Steering Fluid Reservoir Replacement

Removal Procedure

1. Place a drain pan under the reservoir (1).
2. Remove the cap from the reservoir (1).
3. Remove the reservoir (1) from the bracket (2).
4. Disconnect the reservoir and outlet hoses (4, 6) from the reservoir (1).

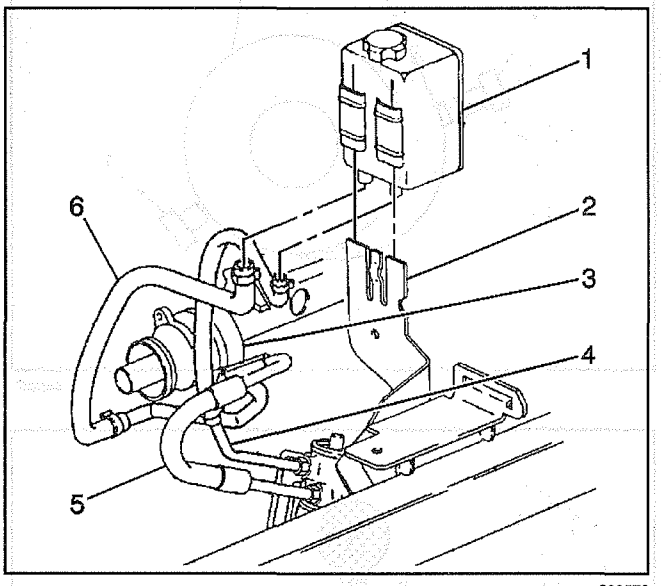

290572

cardiagn.com

Installation Procedure

1. Connect the reservoir and outlet hoses (4, 6) to the reservoir (1).
2. Install the reservoir (1) to the bracket (2).
3. Refill the reservoir and Install the cap to the reservoir.
4. Remove drain pan.
5. Bleed the power steering system. Refer to *Bleeding Power Steering System*.

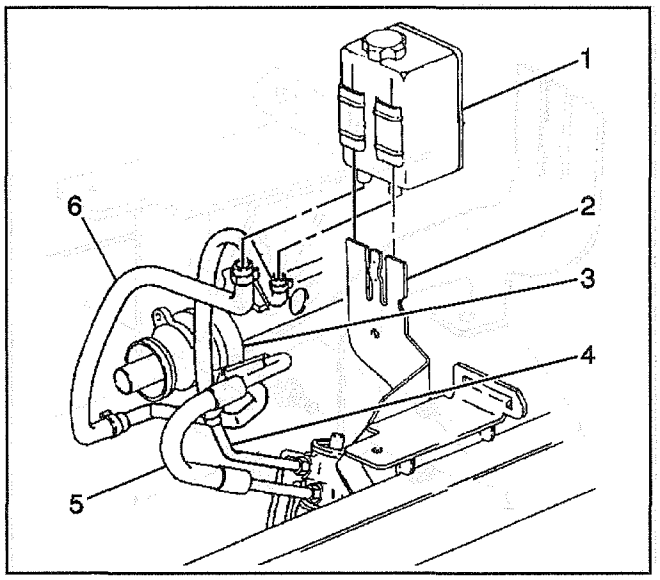

290572

Remote PS Fluid Reservoir Bracket Replacement

Removal Procedure

1. Remove the reservoir (1) from the bracket (2).
2. Use a wire, or an equivalent, in order to secure the reservoir (1) in an upright position.
   An upright position will prevent leakage.
3. Raise and support the vehicle. Refer to *Lifting and Jacking the Vehicle* in General Information.
4. Remove the electrical harness from the bracket (2).

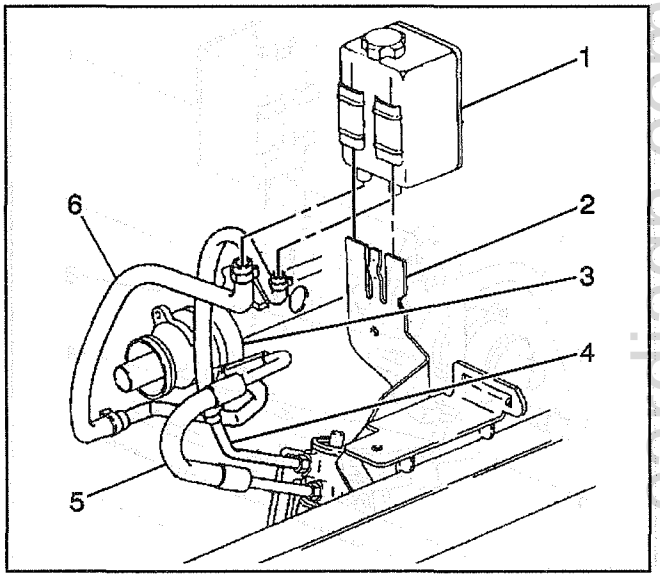

290572

5. Remove the bolt/screw (1).
6. Remove the nuts (2).

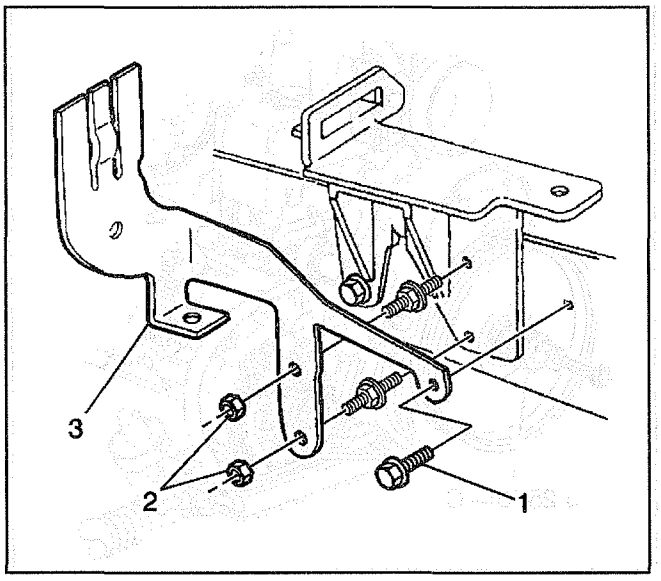

290571

cardiagn.com

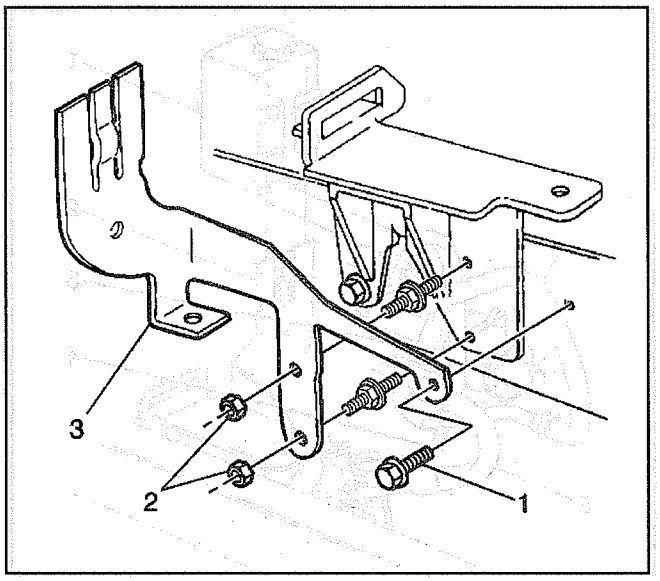

290571

Installation Procedure

Notice: Refer to *Fastener Notice* in Cautions and Notices.

1. Install the nuts (2).

   Tighten

   Tighten the nuts to 12 N·m (107 lb in).
2. Install the bolt/screw (1).

   Tighten

   Tighten the bolt/screw to 50 N·m (37 lb ft).
3. Install the electrical harness to the bracket (3).
4. Lower the vehicle.

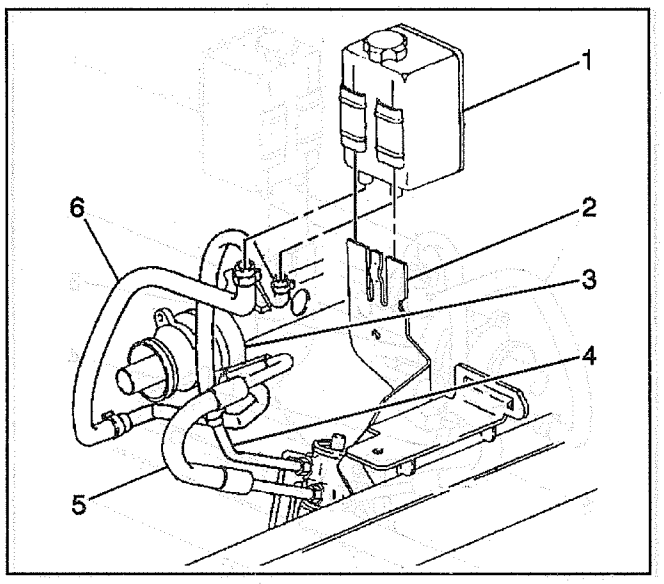

290572

5. Install the reservoir (1) to the bracket (2).

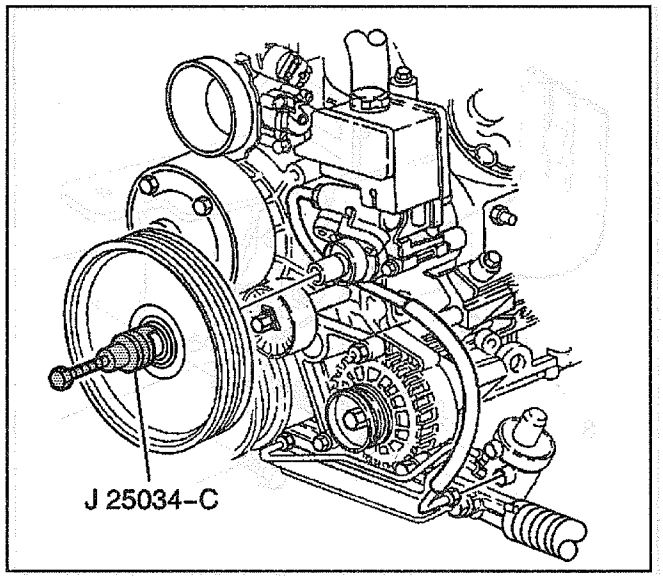

354410

Power Steering Pulley Replacement

Removal Procedure

Tools Required

J 25034-C Power Steering Pump Pulley Remover

1. Remove the air intake resonator and mass airflow assembly (LS1 only).
2. Remove the serpentine belt.
3. Use the *J 25034-C* in order to remove the power steering pulley from the power steering pump.

cardiagn.com

Installation Procedure

Tools Required

J 25033-C Power Steering Pump Pulley Installer

Important:

- 3.8 Liter Engine: Ensure that the face of the pulley hub is flush with the end of the pump shaft before you apply a load to the pulley hub.
- 5.7 Liter Engine: Ensure that the pulley hub shoulder bottoms out completely on the pulley shaft before you apply a load to the pulley hub.
- Ensure that the pulley goes on snug when installing the pulley with the special tool. If the pulley installs onto the pump shaft too easily, it will not relay engine power to the pump and should be replaced.

1. Use the *J 25033-C* in order to install the power steering pulley to the power steering pump.
2. Install the air intake resonator and mass airflow assembly (LS1 only)
3. Install the serpentine belt.
4. Check power steering operation and visibly check pulley for any irregular wobble when operating.

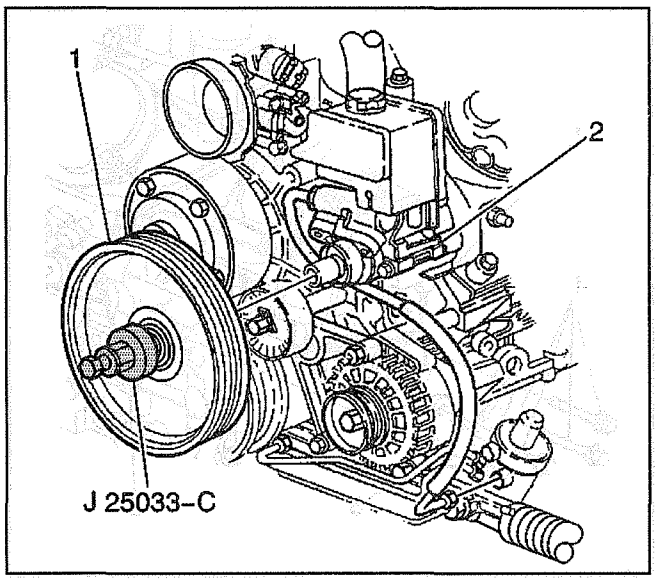

290557

Power Steering Pump Replacement (V8)

Removal Procedure

1. Place a drain pan under the power steering pump (1).
2. Remove the air intake resonator and mass airflow assembly.
3. Remove the serpentine belt.
4. Remove the power steering pump pulley. Refer to *Power Steering Pulley Replacement.*
5. Remove the outlet hose and the clamp from the reservoir (This allows fluid to drain from reservoir).
6. Remove the inlet hose fitting from the pump.
7. Remove power steering pump attaching bolts (4) and power steering pump front brace (3) from pump (1).
8. Remove pump (1) from rear bracket (2).

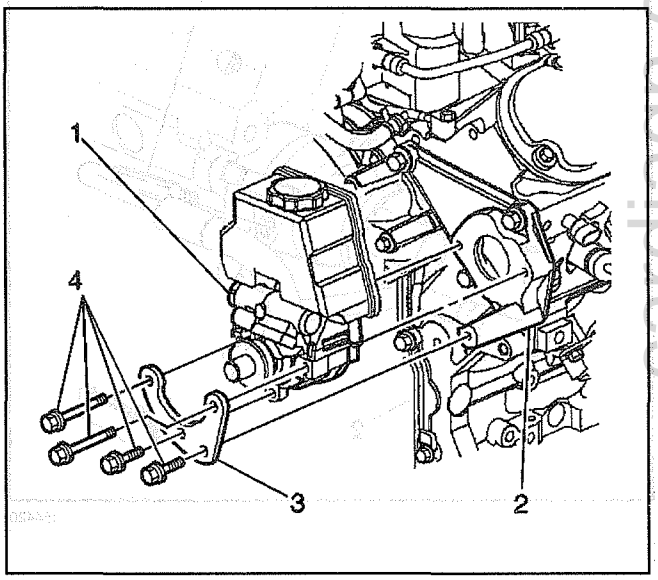

290570

cardiagn.com

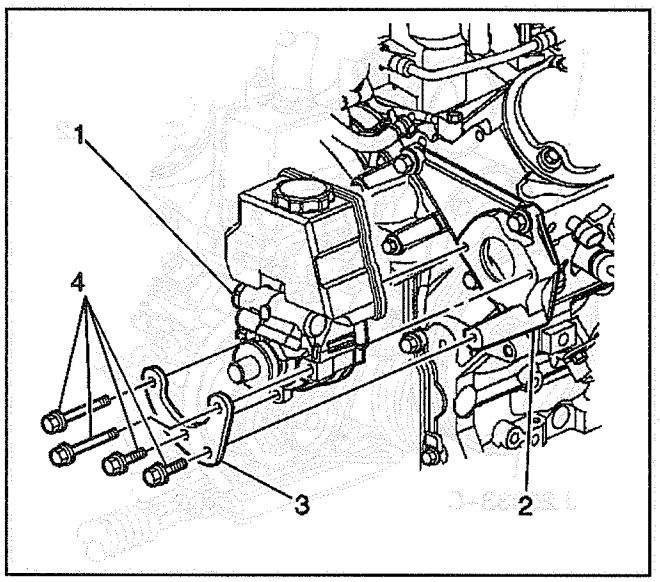

290570

Installation Procedure

Notice: Refer to *Fastener Notice* in Cautions and Notices.

1. Install pump (1), pump front brace (3), and attaching bolts (4) to rear bracket (2).

   Tighten

   Tighten the bolts/screws to 25 N·m (18 lb ft).
2. Install the inlet hose fitting from pump.

   Tighten

   Tighten the fitting to 28 N·m (21 lb ft).
3. Install the outlet hose and clamp to reservoir.
4. Install the power steering pump pulley. Refer to *Power Steering Pulley Replacement.*
5. Install the serpentine belt.
6. Install the air intake resonator and mass airflow assembly.
7. Remove drain pan.
8. Refill and bleed the power steering system. Refer to *Bleeding Power Steering System.*

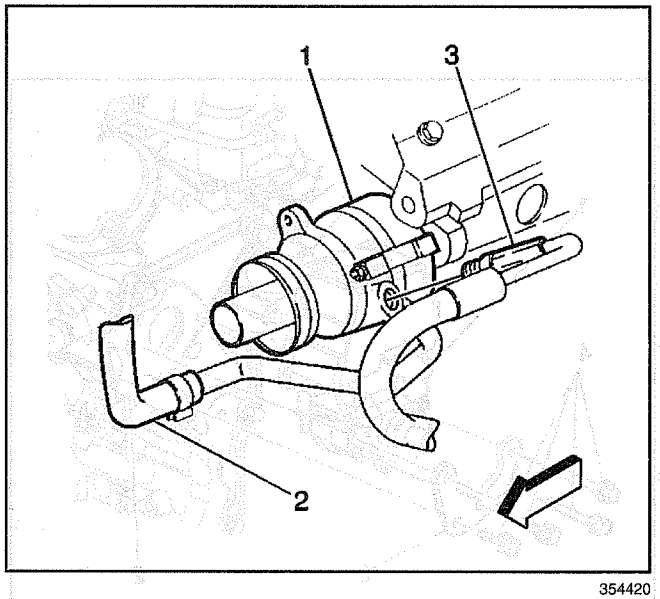

354420

Power Steering Pump Replacement (V6)

Removal Procedure

1. Place a drain pan under the power steering pump (1).
2. Remove the serpentine belt.
3. Remove the front air intake duct.
4. Remove the pulley from the power steering pump (1). Refer to *Remote Power Steering Fluid Reservoir Replacement.*
5. Disconnect the inlet hose (3) from the power steering pump (1).
6. Disconnect the reservoir hose (2) from the power steering pump (1).

cardiagn.com

7. Remove the power steering pump nuts.
8. Remove the power steering pump.

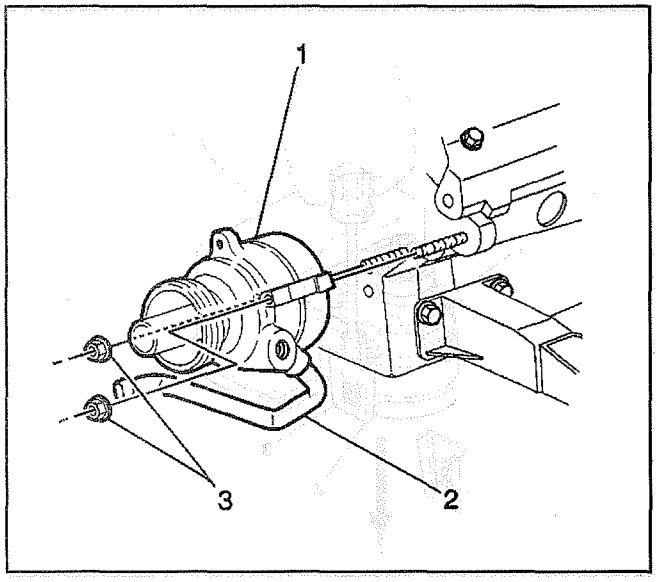

290569

Installation Procedure

1. Position the power steering pump onto the mounting studs.

Notice: Refer to *Fastener Notice* in Cautions and Notices.

2. Tighten the power steering pump nuts.

   Tighten

   Tighten the power steering pump nuts to 30 N·m (23 lb ft).

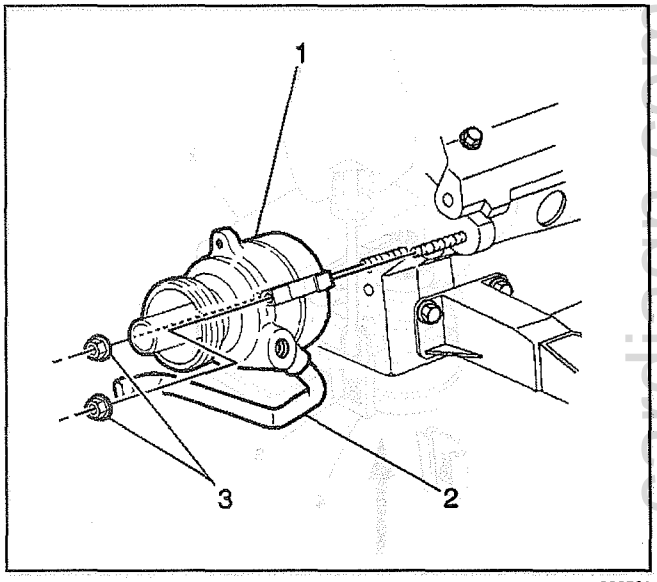

290569

3. Connect the inlet hose to the power steering pump (2).
4. Connect the reservoir hose (2) to the power steering pump (1).
5. Install the pulley to the power steering pump (1). Refer to *Remote Power Steering Fluid Reservoir Replacement.*
6. Install the front air intake duct.
7. Install the serpentine belt.
8. Refill and bleed the power steering system. Refer to *Bleeding Power Steering System.*

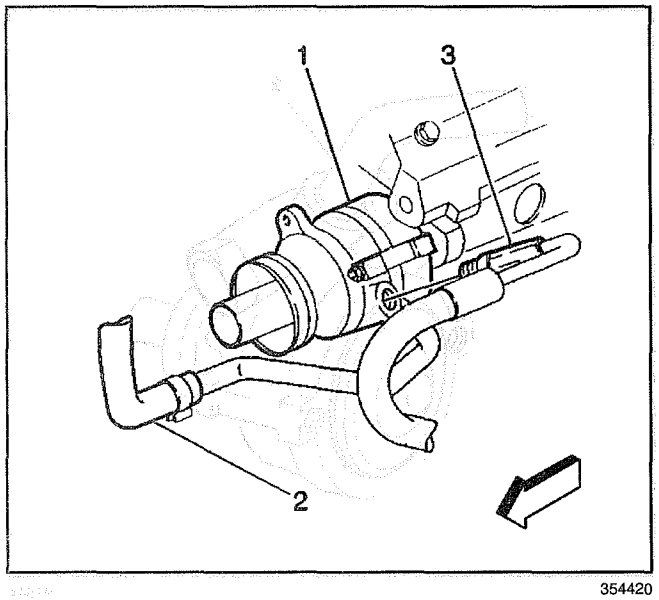

354420

cardiagn.com

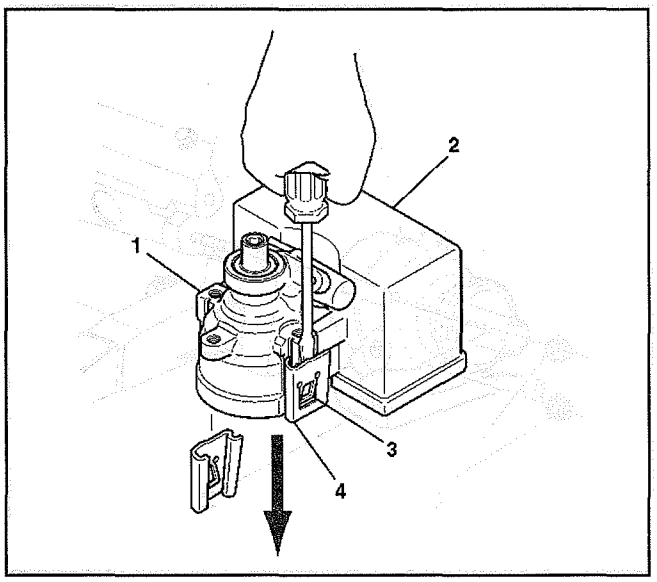

482358

Power Steering Reservoir Replacement - Off Vehicle (CB Series)

Disassembly Procedure

1. Place the hydraulic pump (1) on a fixed, flat surface, with the shaft facing upward.
2. Insert a screwdriver into the retaining clip tab (3).
3. Using the screwdriver, force the retaining clip tab (3) outward.
4. Slide the reservoir clip (4) away from the hydraulic pump assembly (1).
5. Remove the reservoir (2) from the hydraulic pump housing (1).
6. Remove the O-ring seal from the neck of the reservoir (2) or the hydraulic pump housing (1). Discard the O-ring seal.

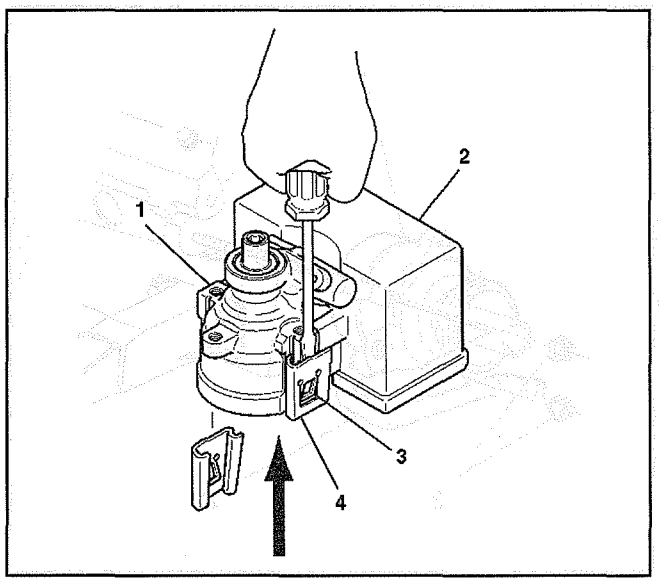

482357

Assembly Procedure

1. Lubricate the new O-ring seal with power steering fluid.
2. Install the new O-ring seal onto the neck of the reservoir (2).
3. Install the reservoir (2) onto the hydraulic pump assembly (1). Ensure the reservoir neck is completely engaged onto the hydraulic pump assembly (1).
4. Align the feet of the reservoir with the sides of the hydraulic pump housing.
5. Install the new reservoir retaining clips (4) (supplied with the pump). Ensure the retaining clip tabs (3) fully engage with the hydraulic pump housing (1).

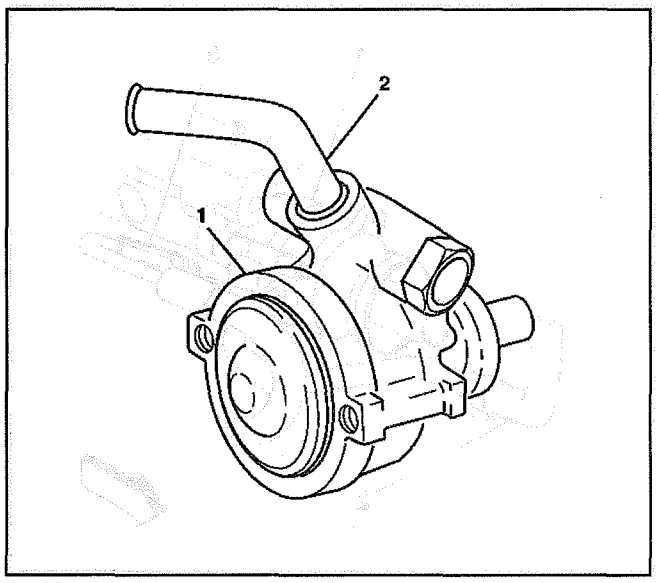

391544

Power Steering Pump Flow Control Valve Replacement - Off Vehicle (Return Tube)

Disassembly Procedure

Important: Handle the pump with care. Do not carry the hydraulic pump housing assembly (1) by the return tube (2).

Important: Replace the hydraulic pump housing assembly (1) if the return tube (2) is cracked or loose. Do not attempt to repair the hydraulic pump housing assembly (1).

1. Inspect the return tube (2) on hydraulic pump housing assembly (1).

cardiagn.com

2. Remove the O-ring union fitting (5) from the hydraulic pump housing assembly (1).
3. Remove the O-ring seal (4) from the O-ring union fitting (5).
4. Remove the control valve assembly (3).
5. Remove the flow control spring (2).

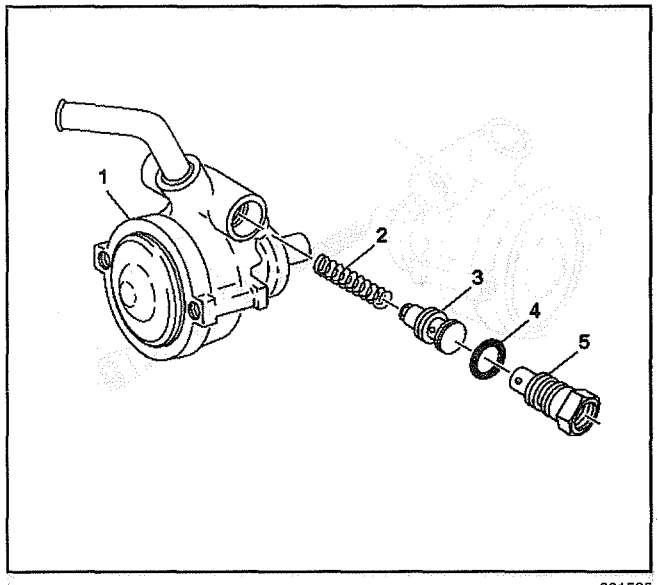

391535

Assembly Procedure

1. Install the flow control spring (2) to the hydraulic pump housing assembly (1).
2. Install the control valve assembly (3).
3. Lubricate the O-ring seal (4) with power steering fluid.
4. Install the O-ring seal (4) on to the O-ring union fitting (5).

Notice: Refer to *Fastener Notice* in Cautions and Notices.

5. Install the O-ring union fitting (5) into the hydraulic pump housing assembly (1).

   Tighten

   Tighten the O-ring union fitting (5) to 75 N·m (55 lb ft).

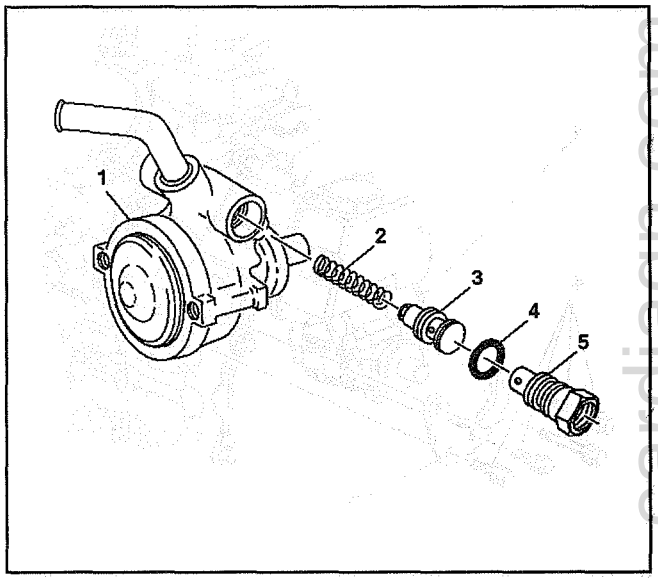

391535

Power Steering Pump Flow Control Valve Replacement - Off Vehicle (CB Series)

Removal Procedure

1. Remove the O-ring union fitting (5) from the hydraulic pump housing assembly (1).
2. Remove the O-ring seal (4) from the O-ring union fitting (5).
3. Remove the control valve assembly (3).
4. Remove the flow control spring (2).

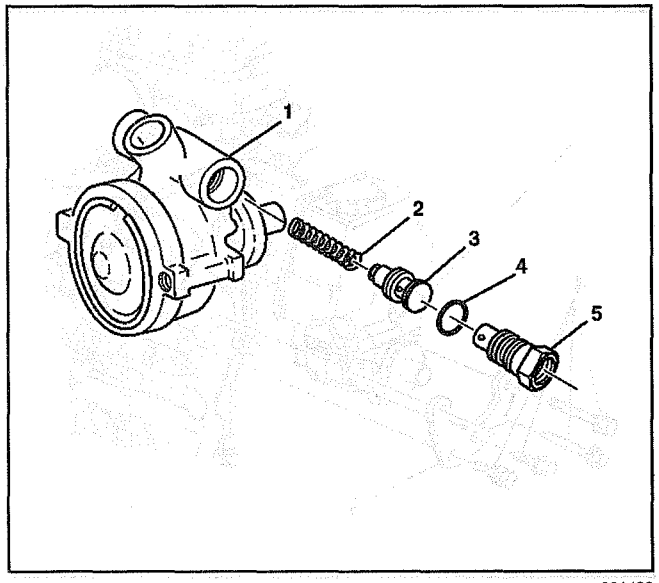

391490

cardiagn.com

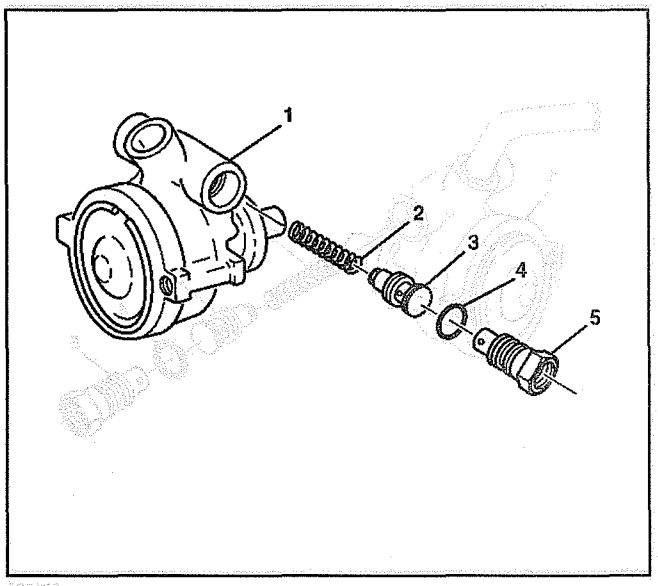

391490

Installation Procedure

1. Install the flow control spring (2) to the hydraulic pump housing assembly (1).
2. Install the control valve assembly (3).
3. Lubricate the O-ring seal (4) with power steering fluid.
4. Install the O-ring seal (4) onto the O-ring union fitting (5).

Notice: Refer to *Fastener Notice* in Cautions and Notices.

5. Install the O-ring union fitting (5) into the hydraulic pump housing assembly (1).

   Tighten

   Tighten the fitting (5) to 75 N·m (55 lb ft).

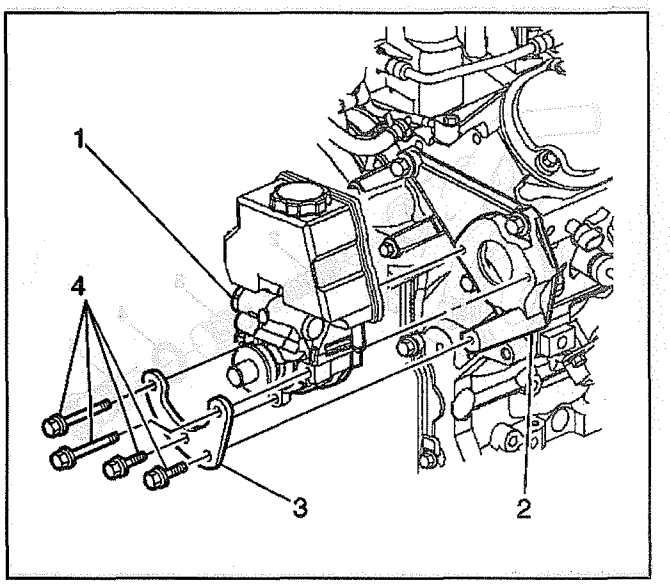

290570

Power Steering Pump Front Bracket Replacement

Removal Procedure

1. Place drain pan under pump (1).
2. Remove air intake resonator and mass airflow sensor assembly.
3. Remove the serpentine belt.
4. Remove the power steering pump pulley from the pump. Refer to *Power Steering Pulley Replacement.*
5. Support pump assembly with twine or rope.

Important: The front power steering pump bracket can be removed without the complete disconnection of the pump. The hydraulic hoses do not need to be disconnected.

6. Remove power steering pump attaching bolts (4) and front power steering pump bracket (3).

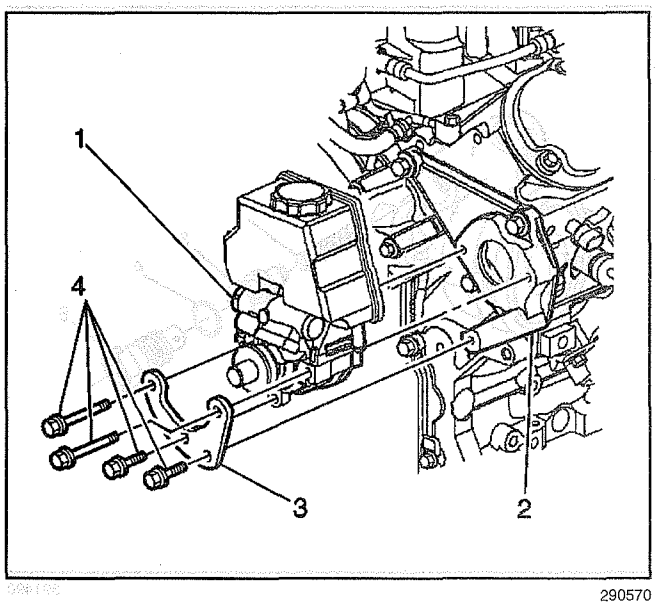

290570

Installation Procedure

1. Install power steering pump attaching bolts (4) and front power steering pump bracket (3).
2. Remove twine or rope used for support.
3. Install the power steering pump pulley to the pump. Refer to *Power Steering Pulley Replacement.*
4. Install the serpentine belt.
5. Install the air intake resonator and mass airflow sensor assembly.
6. Remove drain pan and verify power steering operation.

cardiagn.com

Power Steering Pump Rear Bracket Replacement

Removal Procedure

1. Remove the power steering pump (V8 only). Refer to *Power Steering Pump Replacement (V8).*
2. Remove the rear power steering pump bracket bolts (3).
3. Remove the rear power steering pump bracket (2) from cylinder head (1).

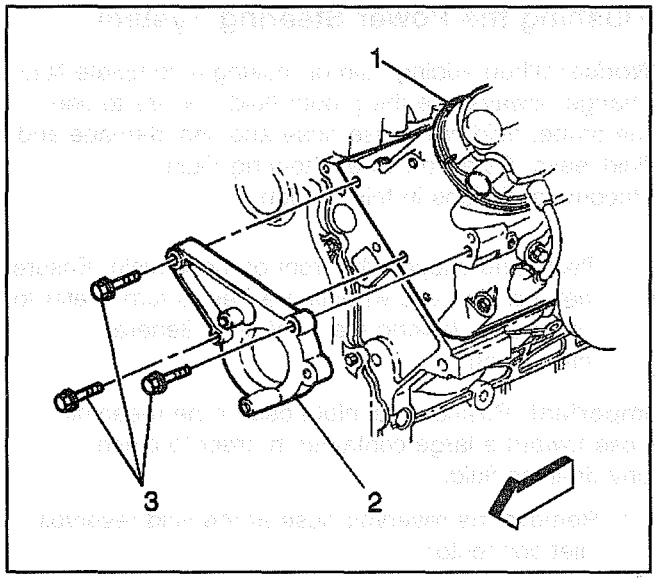

354413

Installation Procedure

1. Install the rear power steering pump bracket (2) to cylinder head (1).

Notice: Refer to *Fastener Notice* in Cautions and Notices.

2. Install the rear power steering pump bracket bolts (3).

   Tighten

   Tighten the power steering pump bracket bolts (3) to 50 N·m (37 lb ft).
3. Install the power steering pump (V8 only). Refer to *Power Steering Pump Replacement (V8).*
4. Bleed the power steering system. Refer to *Bleeding Power Steering System.*

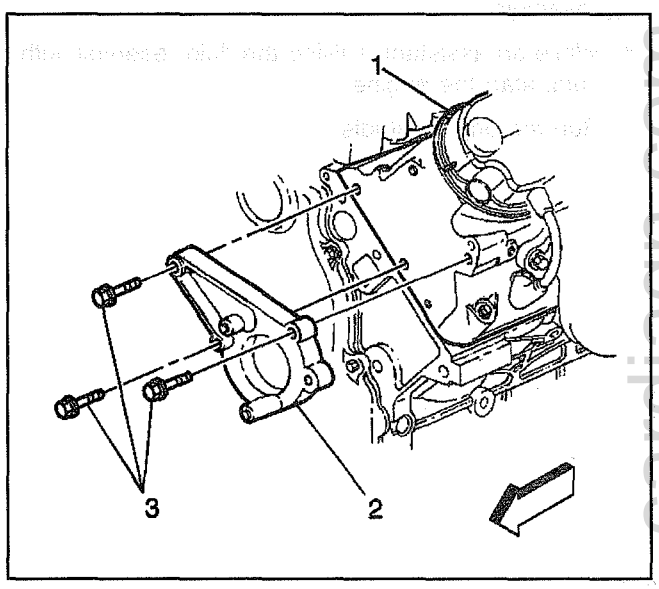

354413

cardiagn.com

Flushing the Power Steering System

Notice: When adding fluid or making a complete fluid change, always use the proper fluid. Failure to use the proper fluid will cause hose and seal damage and fluid leaks. Refer to Power Steering Fluid Recommendations in this section.

1. Raise and support the front of the vehicle. Ensure that the tires and wheels are free to turn. Refer to *Lifting and Jacking the Vehicle* in General Information.

Important: Position the inlet hose or the reservoir hose toward a large container in order to catch any draining fluid.

2. Remove the reservoir hose at the fluid reservoir inlet connector.
3. Plug the fluid inlet connector port on the fluid reservoir.
4. While an assistant is filling the fluid reservoir with fluid, start the engine.

   Run the engine at idle.

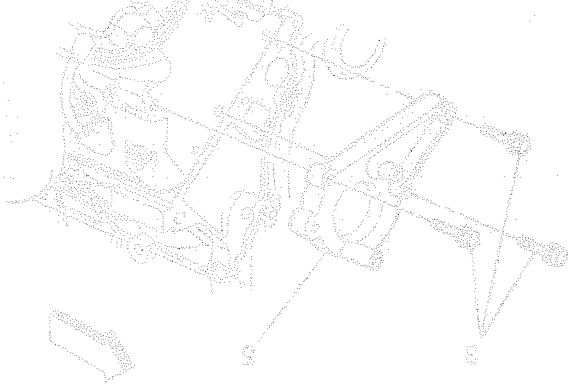

Notice: Do not hold the steering wheel against the stops while flushing the power steering system. Holding the steering wheel against the wheel stops will cause high system pressure, overheating, and damage to the power steering pump and/or gear.

5. Turn the steering wheel from stop to stop.
6. Continue to drain the reservoir until all of the old fluid is cleared from the power steering system.
7. Add approximately 0.94 liters (1 quart) of new fluid in order to flush the system.
8. Inspect the fluid that is draining while you are refilling the fluid reservoir.

   Do not reuse any drained fluid.
9. If necessary, perform the following steps:
   - Replace all of the lines.
   - Disassemble and clean the system components.
   - Replace the system components.
10. Unplug the reservoir hose at the fluid reservoir inlet connector.
11. Turn the engine off.
12. Fill the fluid reservoir to the C mark on the fluid level indicator.
13. Bleed the power steering system. Refer to *Bleeding Power Steering System.*

cardiagn.com

Power Steering Cooler Pipe/Hose Replacement

Removal Procedure

1. Place drain pan under vehicle under cooler.
2. Drain engine coolant from engine.
3. Remove power steering gear outlet hoses (3) and clips from cooler (1).
4. Remove hose clamps from radiator hoses at cooler (1).
5. Remove radiator hoses from cooler (1).
6. Remove cooler (1) from radiator support bracket.

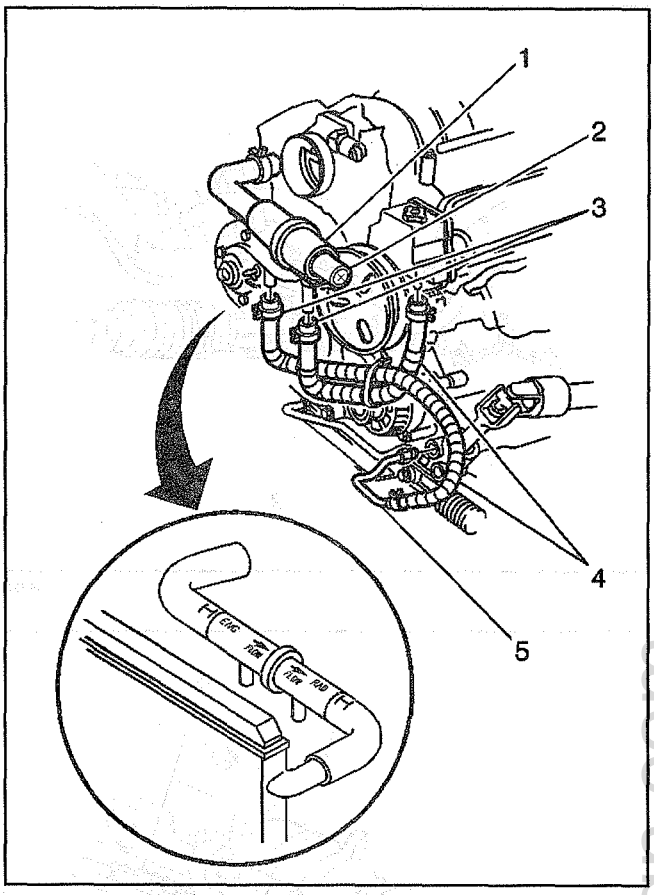

354416

Installation Procedure

1. Install cooler (1) to radiator support bracket.

Important: Ensure that the cooler is installed with the "ENGINE" marking pointed toward the engine and the "RADIATOR" marking pointing toward the radiator (drivers side of the vehicle).

Alignment marks on cooler should align with alignment marks on radiator hoses so cooler is properly positioned (Power steering circuit outlets pointing straight down).

2. Install radiator hoses to cooler (1).
3. Install radiator hose clamps to radiator hoses at cooler.
4. Install the power steering gear outlet hoses (3) and clips to the cooler (1).
5. Refill engine with coolant.
6. Refill and bleed power the power steering system. Refer to *Bleeding Power Steering System.*

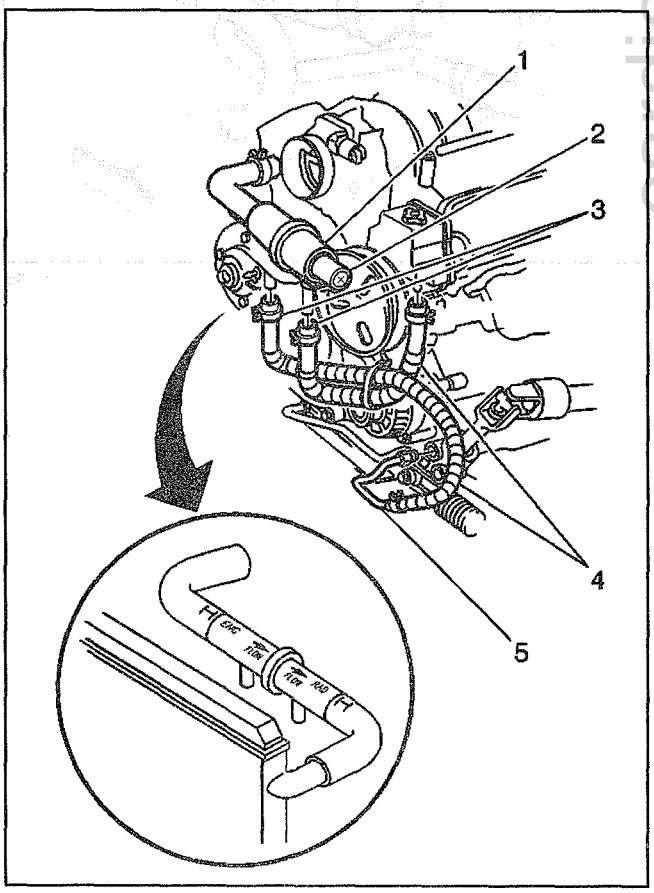

354416

cardiagn.com

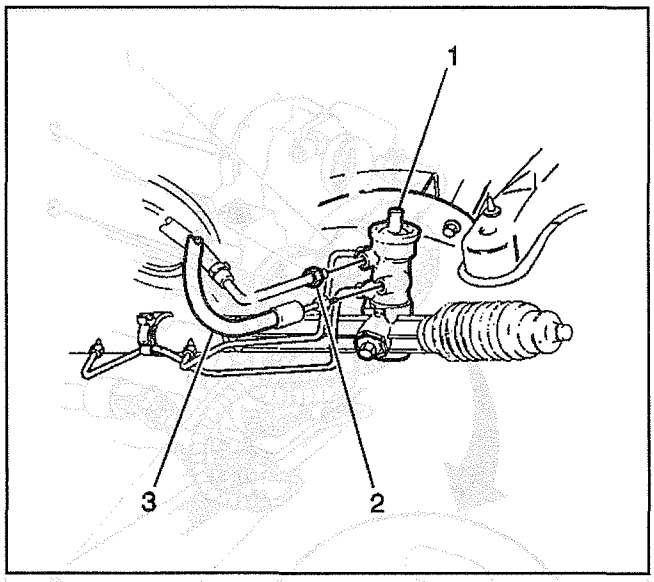

354423

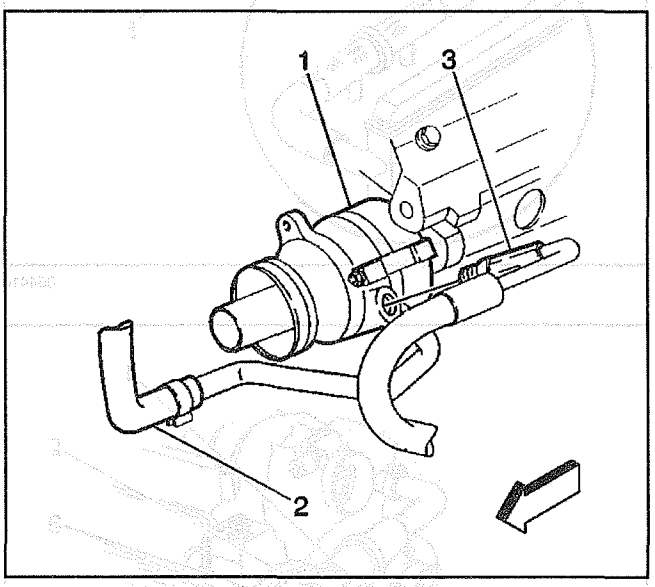

354420

Power Steering Return Hose Replacement

Removal Procedure

1. Place drain pan(s) under vehicle under steering gear and pump.
2. Raise and suitably support vehicle. Refer to *Lifting and Jacking the Vehicle* in General Information.
3. Remove power steering gear inlet (3) and outlet (2) hoses from steering gear (1).
4. Lower vehicle.
5. Remove the serpentine belt.
6. Remove the power steering pump pulley. Refer to *Power Steering Pulley Replacement.*
7. Remove inlet hose fitting (3) from pump (1) (V6 shown, V8 similar).

cardiagn.com

Important: If vehicle is equipped with a power steering cooler (V8 only), outlet hose (3) and cooler hose (if replacing) must be removed from the power steering cooler (1) as the cooler is installed in the outlet hose (return back to reservoir).

8. Remove outlet hose from reservoir (V8 with cooler shown, remote-mount reservoir on V6).

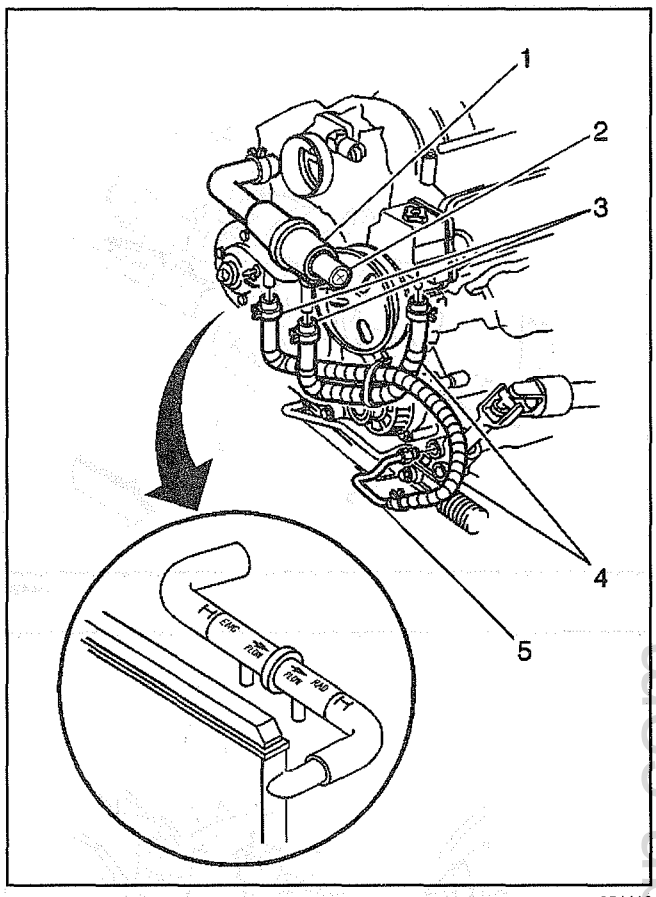

354416

Installation Procedure

Important: Inlet and outlet hoses must be oriented so as adequate clearance is maintained between both hoses and surrounding components to prevent chafing. Use minimum clearance of 12 mm (0.47 in). The outlet hose (3) must not be twisted during installation. Do not bend or distort inlet and outlet hoses to make installation easier. Failure to follow these procedures could result in component damage.

1. Install outlet hose to reservoir (V8 with cooler shown, remote-mount reservoir on V6). (Pump mounted on V8, body mounted on V6)

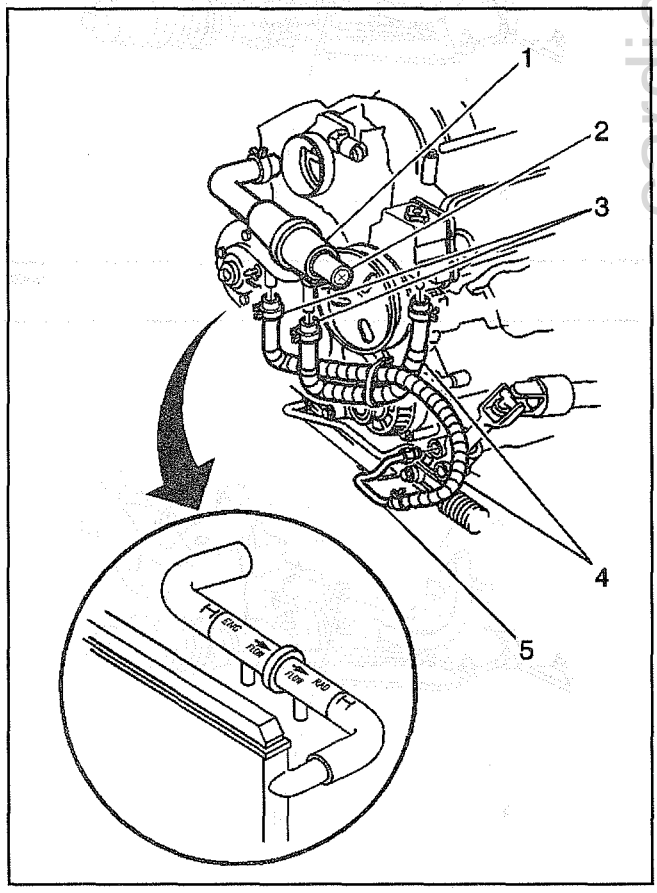

354416

cardiagn.com

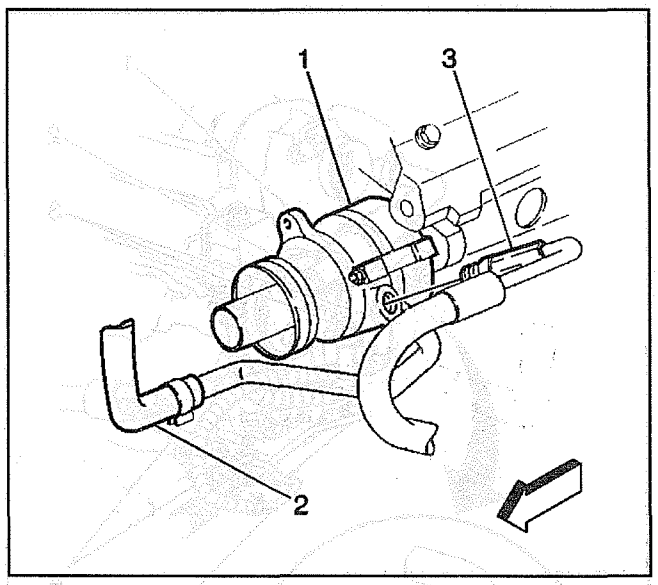

354420

2. Install inlet hose fitting (3) to pump (1) (V6 shown,V8 similar).

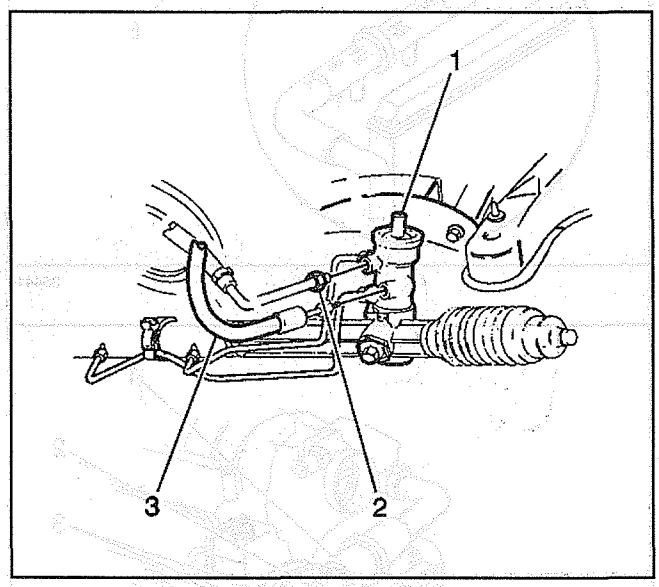

354423

3. Install the power steering pump pulley. Refer to *Power Steering Pulley Replacement.*
4. Install the serpentine belt.
5. Raise and suitably support vehicle. Refer to *Lifting and Jacking the Vehicle* in General Information.
6. Install inlet and outlet hoses (2, 3) to steering gear (1).

   Tighten

   6.1. Tighten the inlet hose (3) to 28 N·m (21 lb ft).

   6.2. Tighten the outlet hose (2) to 28 N·m (21 lb ft).
7. Lower vehicle.
8. Remove drain pan.
9. Refill and bleed power steering system. Refer to *Bleeding Power Steering System.*

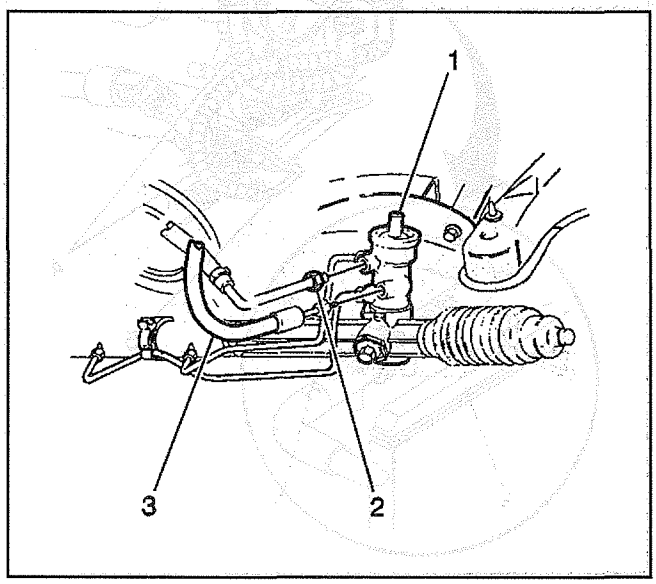

354423

Power Steering Gear Replacement (V6)

Removal Procedure

1. Place drain pan(s) under vehicle under steering gear and pump.
2. Raise and suitably support vehicle. Refer to *Lifting and Jacking the Vehicle* in General Information.
3. Remove power steering gear inlet (3) and outlet (2) hoses from steering gear (1).

cardiagn.com

4. Lower vehicle.
5. Remove the serpentine belt.
6. Remove the power steering pump pulley. Refer to *Power Steering Pulley Replacement.*
7. Remove inlet hose fitting (3) from pump (1).
8. Remove outlet hose from reservoir.

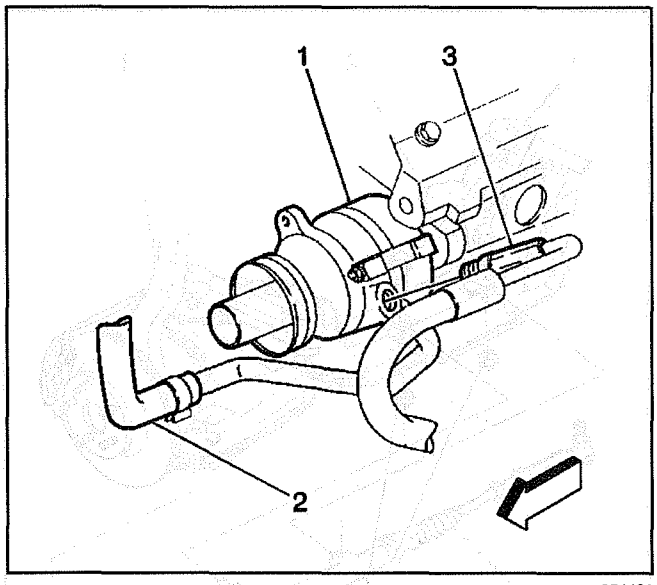

354420

Installation Procedure

Important: Inlet and outlet hoses must be oriented so as adequate clearance is maintained between both hoses and surrounding components to prevent chafing. Use minimum clearance of 12 mm (0.47 in). The outlet hose must not be twisted during installation. Do not bend or distort inlet and outlet hoses to make installation easier. Failure to follow these procedures could result in component damage.

1. Install outlet hose to reservoir.
2. Install inlet hose fitting (3) to pump (1).
3. Install the power steering pump pulley. Refer to *Power Steering Pulley Replacement.*
4. Install the serpentine belt.
5. Raise and suitably support vehicle. Refer to *Lifting and Jacking the Vehicle* in General Information.

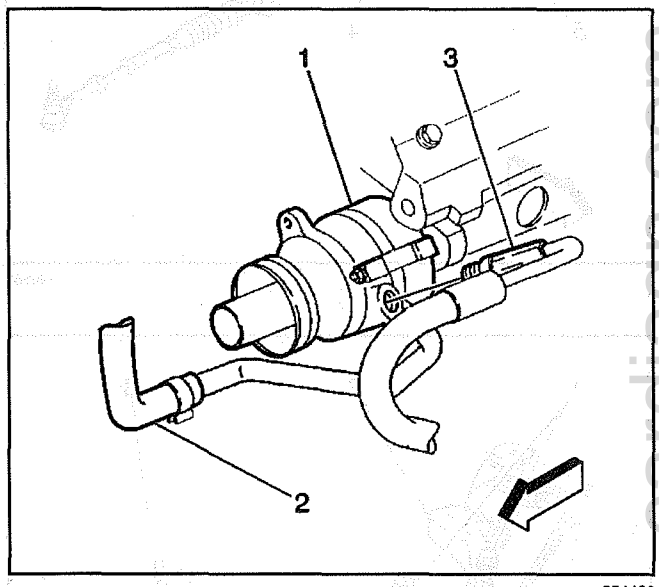

354420

Notice: Refer to *Fastener Notice* in Cautions and Notices.

6. Install inlet and outlet hoses (2, 3) to steering gear (1).
   Tighten
   - Tighten the inlet hose (3) to 28 N·m (21 lb ft).
   - Tighten the outlet hose (2) to 28 N·m (21 lb ft).
7. Lower vehicle.
8. Remove drain pan.
9. Refill and bleed power steering system. Refer to *Bleeding Power Steering System.*

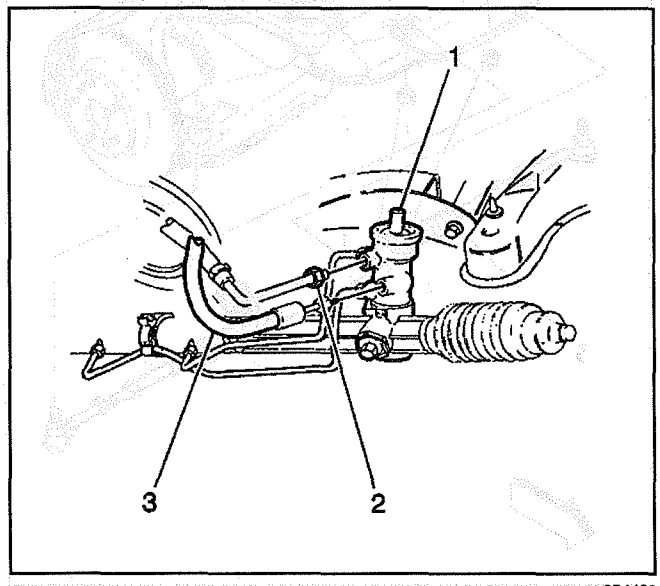

354423

cardiagn.com

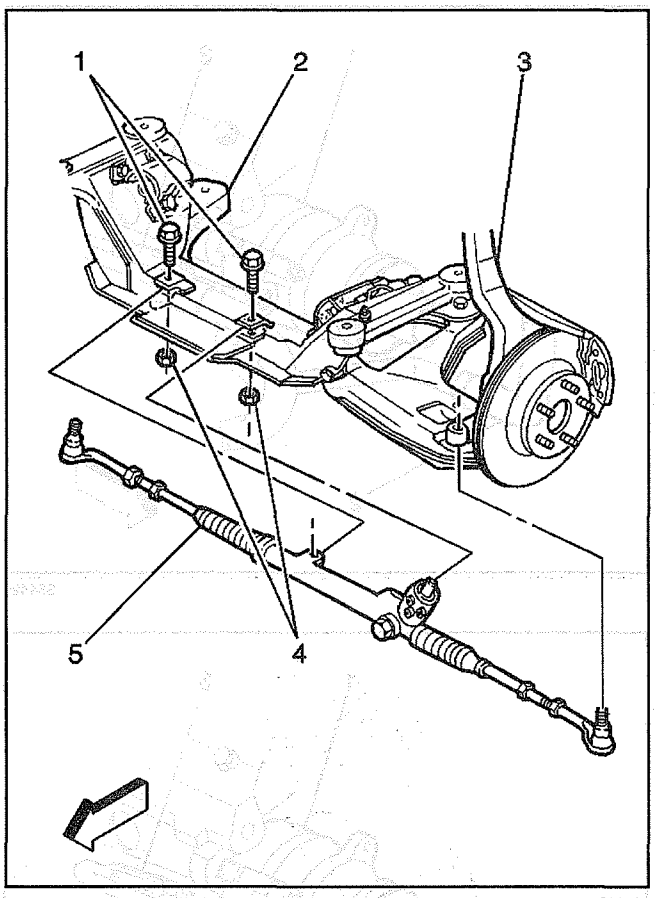

290561

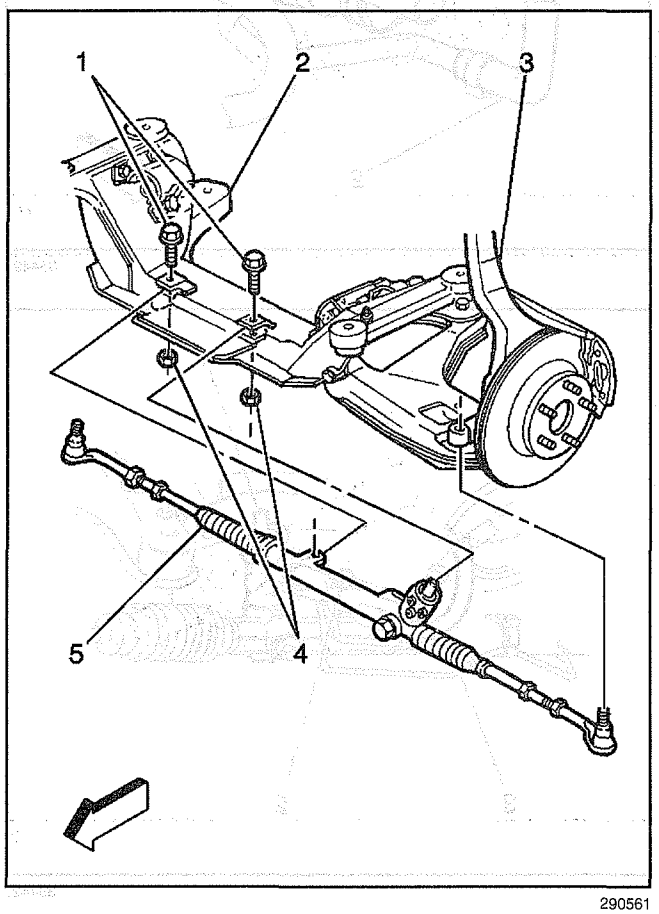

290561

Power Steering Gear Replacement (V8)

Removal Procedure

1. Remove the air intake resonator.
2. Remove the serpentine belt.
3. Support the engine with a hydraulic jack.
4. Raise and support the vehicle. Refer to *Lifting and Jacking the Vehicle* in General Information.
5. Remove the tires and wheels. Refer to *Tire and Wheel Removal and Installation* in Tires and Wheels.
6. Place a drain pan under the steering gear (5).
7. Disconnect the steering gear outer tie rods.
8. Remove the generator.
9. Remove the left-side engine mount through bolt.
10. Lower the vehicle.
11. Raise the engine with the hydraulic jack.
12. Disconnect the following hoses from the steering gear (5):
    - The power steering gear inlet hose
    - The power steering gear outlet hose
13. Remove the steering gear flexible coupling from the steering gear (5). Refer to *Intermediate Steering Shaft Replacement* in Steering Wheel and Column.
14. Remove the nuts (4) and bolts/screws (1).
15. Remove the steering gear (5).

Installation Procedure

1. Position the steering gear (5) to the crossmember (2).
2. Adjust the steering gear (5).
   Ensure that the steering aligns as straight as possible with the steering gear coupling shaft.
3. Hand start the bolts (1) and nut (4).

Notice: Refer to *Fastener Notice* in Cautions and Notices.

4. Position the back-up wrench to the nuts (4).
   Tighten
   Tighten the bolts to 85 N·m (63 lb ft).
5. Install the steering gear flexible coupling to the steering gear. Refer to *Intermediate Steering Shaft Replacement* in Steering Wheel and Column.
   Tighten
   Tighten the bolts to 47 N·m (35 lb ft).
6. Connect the following hoses to the steering gear (5).
   Tighten
   6.1. Tighten the inlet hose to 28 N·m (21 lb ft).
   6.2. Tighten the outlet hose to 28 N·m (21 lb ft).
7. Lower the vehicle. Allow the vehicle to stay slightly above the ground while the tires and wheels are not installed.

cardiagn.com

8. Lower the engine with the hydraulic jack.
9. Raise and suitably support the vehicle. Refer to *Lifting and Jacking the Vehicle.*
10. Install the left side engine mount through-bolt.
11. Install the generator.
12. Connect the steering gear outer tie rods to the steering knuckles.
13. Install the tire and wheels. Refer to *Tire and Wheel Removal and Installation* in Tires and Wheels.
14. Lower the vehicle.
15. Remove the hydraulic jack supporting the engine.
16. Install the serpentine belt.
17. Install the air intake resonator.
18. Refill and bleed the power steering system. Refer to *Bleeding Power Steering System.*

Rack and Pinion Gear Rack Bearing Preload Adjustment - Off Vehicle (Quiet Valve)

Adjustment Procedure

1. Loosen the adjuster plug lock nut (1).
2. Turn the adjuster plug clockwise until the adjuster plug bottoms in the gear assembly.
3. Turn the adjuster plug back 50 degrees to 70 degrees (approximately one flat).

Notice: Refer to *Fastener Notice* in Cautions and Notices.

4. Install the adjuster plug lock nut (1) to the adjuster plug. Hold the adjuster plug stationary while tightening the adjuster plug lock nut (1)

   Tighten

   Tighten the lock nut to 75 N·m (55 lb ft).

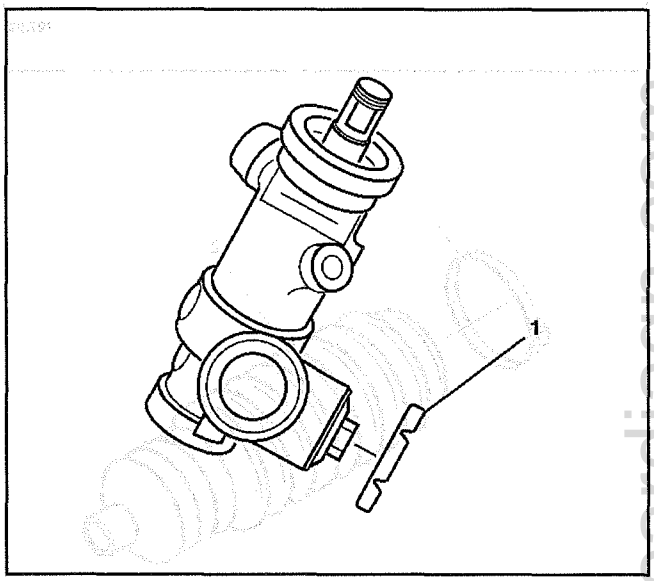

423455

Rack and Pinion Boot Replacement - Off Vehicle (Quiet Valve)

Disassembly Procedure

Tools Required

J 22610 Service Boot Clamp Installer

1. Remove the outer tie rod. Refer to *Tie Rod End Replacement - Outer - Off Vehicle.*
2. Remove the hex jam nut (2) from the inner tie rod assembly (1).

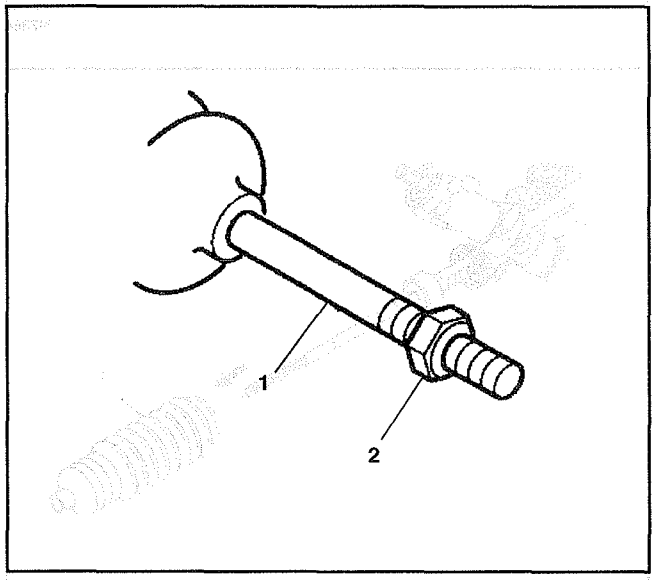

297360

cardiagn.com

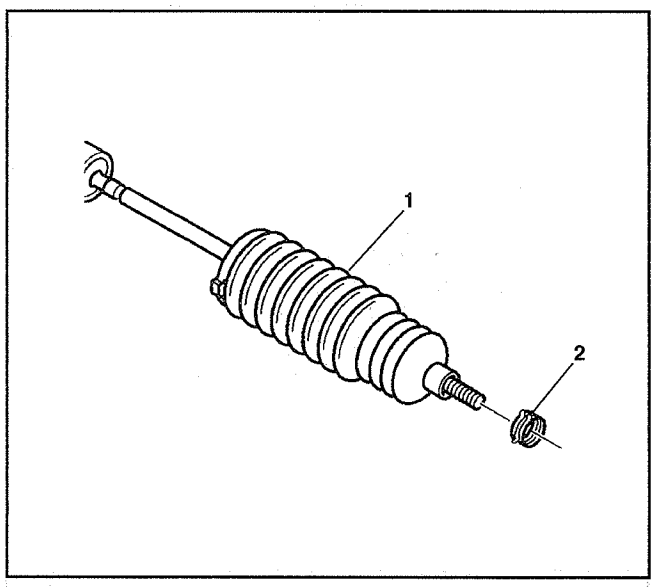

297362

3. Remove the tie rod end clamp (2) from the rack and pinion boot (1).

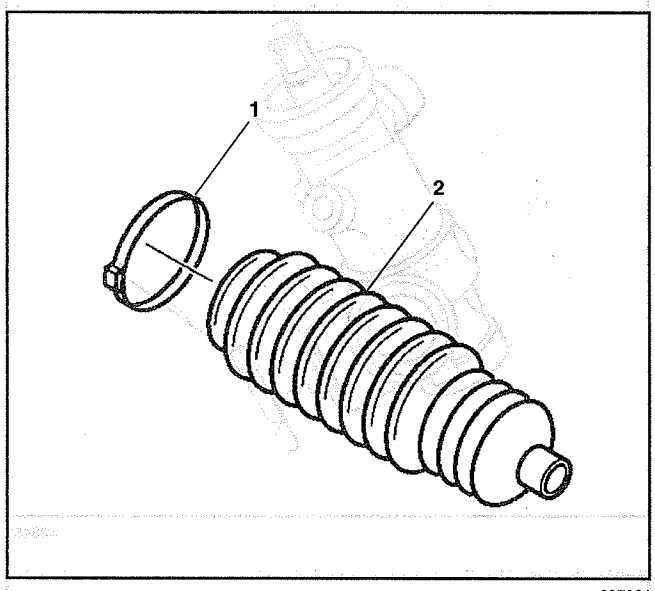

297364

4. Remove the boot clamp (1) from the rack and pinion boot (2) with side cutters.

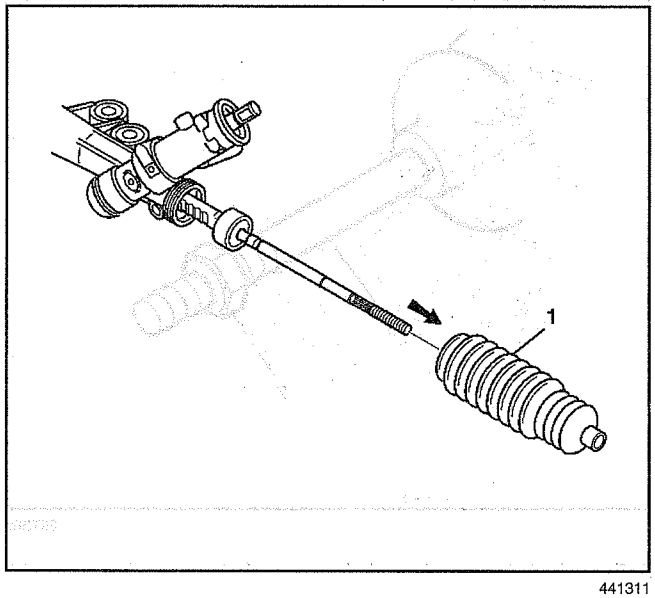

441311

5. Remove the rack and pinion boot (1) from the rack and pinion gear assembly.
6. Discard the boot clamp.
7. Inspect the rack and pinion boot (1) for damage.
8. Look for gear oil leakage inside the rack and pinion boot (1).
9. Drain the oil.
10. Clean the rack and pinion boot (1) with solvent.

cardiagn.com

Assembly Procedure

Tools Required

J 22610 Service Boot Clamp Installer

1. Install the new boot clamp (2) onto the rack and pinion boot (1).

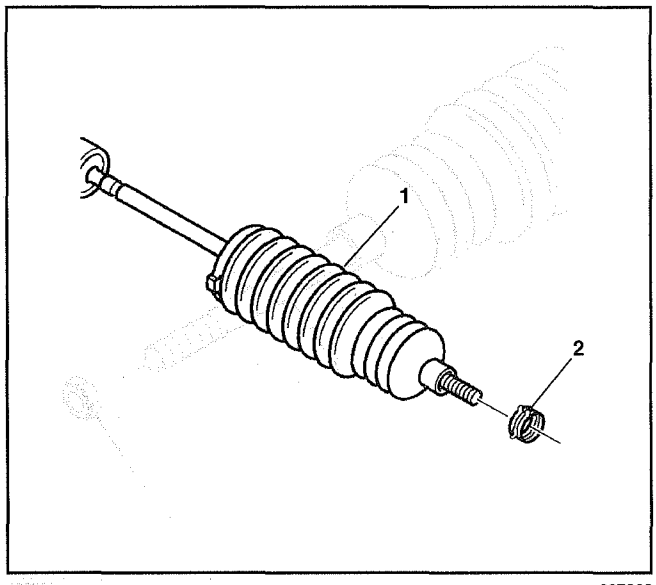

297362

2. Prior to rack and pinion boot installation, apply grease to the inner tie rod assembly (2) and the rack and pinion gear assembly (1).
3. Install the rack and pinion boot (3) onto the inner tie rod assembly (2).

Important: The rack and pinion boot (3) must not be twisted, puckered or out of shape. If the rack and pinion boot (3) is not shaped properly, adjust the rack and pinion boot by hand before installing the boot clamp.

4. Install the rack and pinion boot onto the gear assembly (1) until the rack and pinion boot (3) is seated in the gear assembly groove.

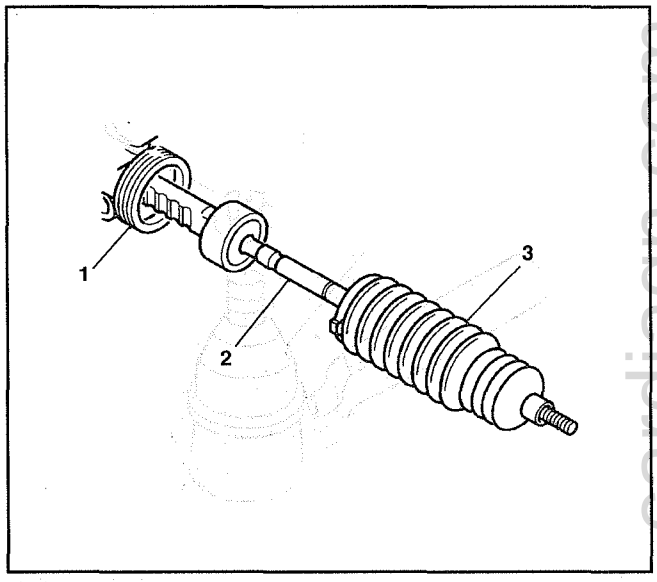

297371

5. Install the boot clamp (1) on the rack and pinion boot (2) with *J 22610*.
6. Crimp the boot clamp (1).
7. Pinch the pliers together on the rack and pinion boot (2) in order to install the tie rod end clamp.

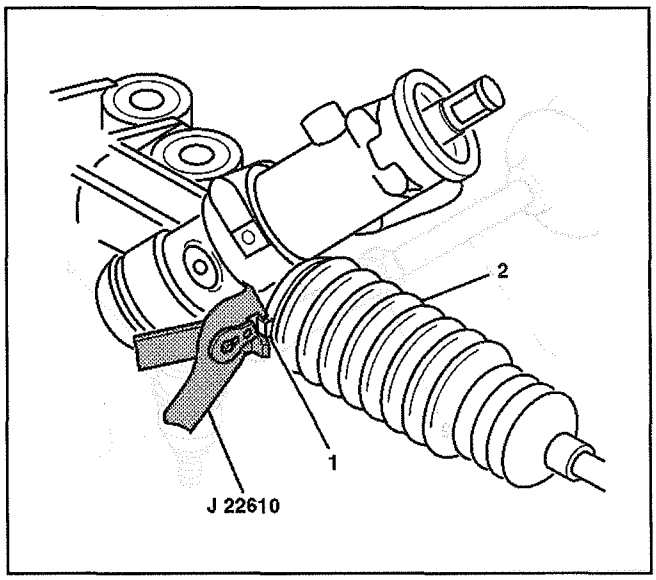

441313

cardiagn.com

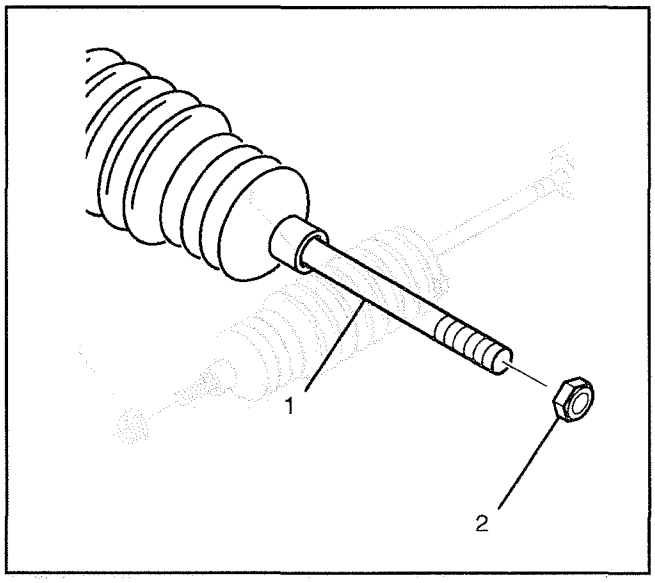

297638

8. Install the hex jam nut (2) to the inner tie rod assembly (1).
9. Assemble the outer tie rod assembly. Refer to *Tie Rod End Replacement - Outer - Off Vehicle.*

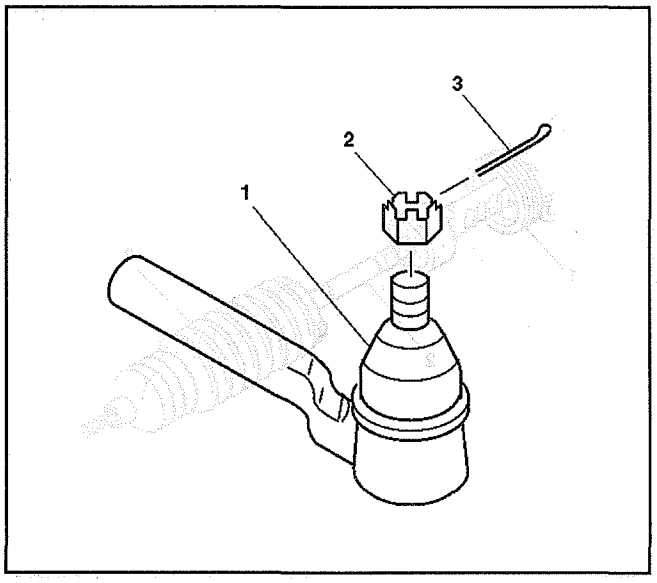

423439

Tie Rod End Replacement - Outer - Off Vehicle

Disassembly Procedure

Tools Required

J 24319-01 Universal Steering Linkage Puller

1. Pull the cotter pin (3) and the hex slotted nut (2) from outer tie rod assembly (1).

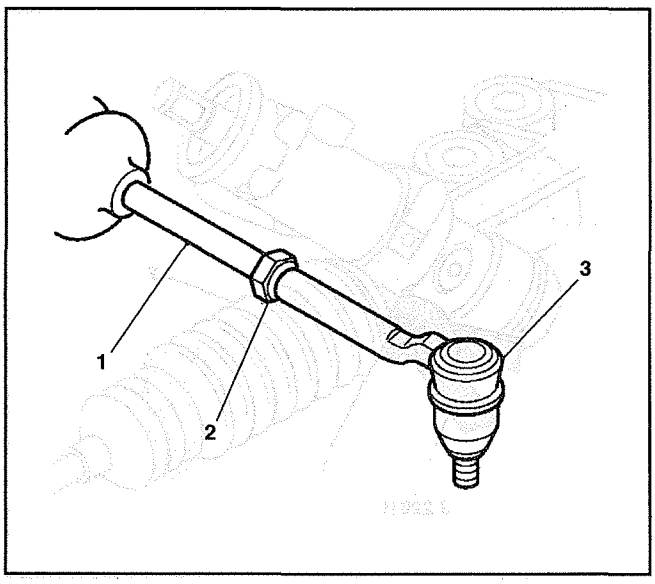

297349

2. Loosen the jam nut (2) on the inner tie rod assembly (1).

cardiagn.com

3. Remove the outer tie rod assembly (2) from the steering knuckle (1) using *J 24319-01*.

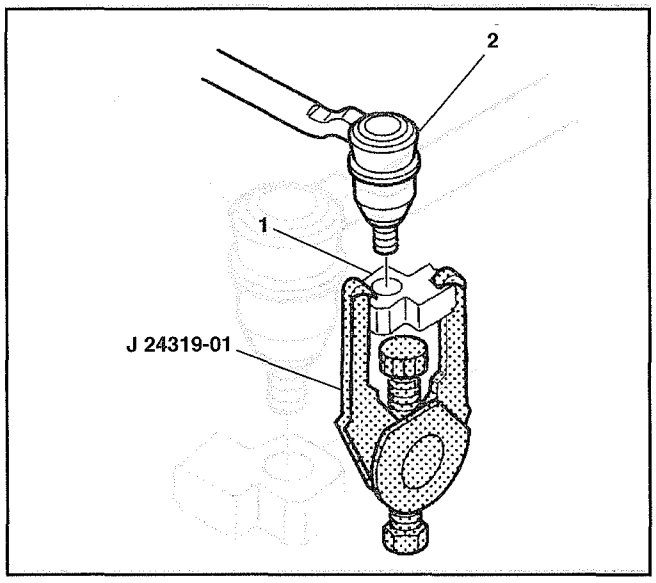

297353

4. Remove the outer tie rod assembly (3) from the inner tie rod assembly (1).

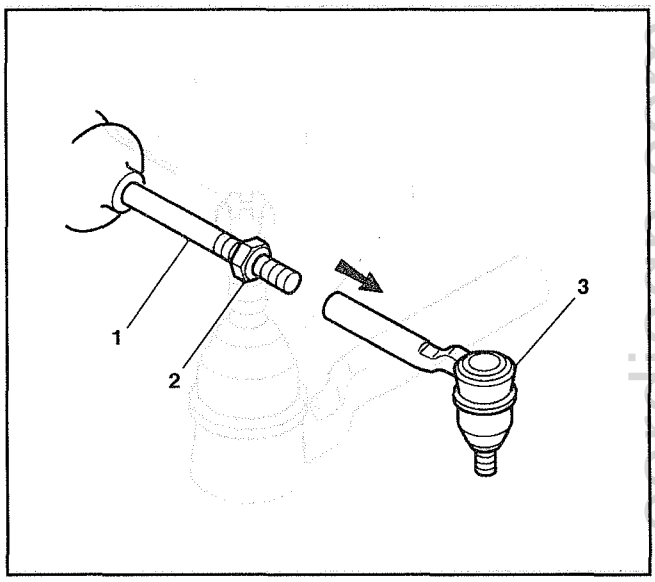

297358

Assembly Procedure

1. Connect the outer tie rod assembly (3) to the inner tie rod (1). Do not tighten the jam nut (2).

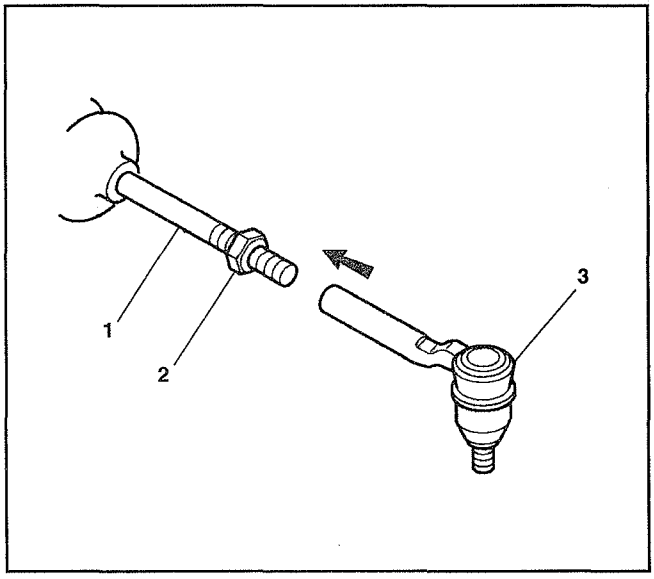

297355

cardiagn.com

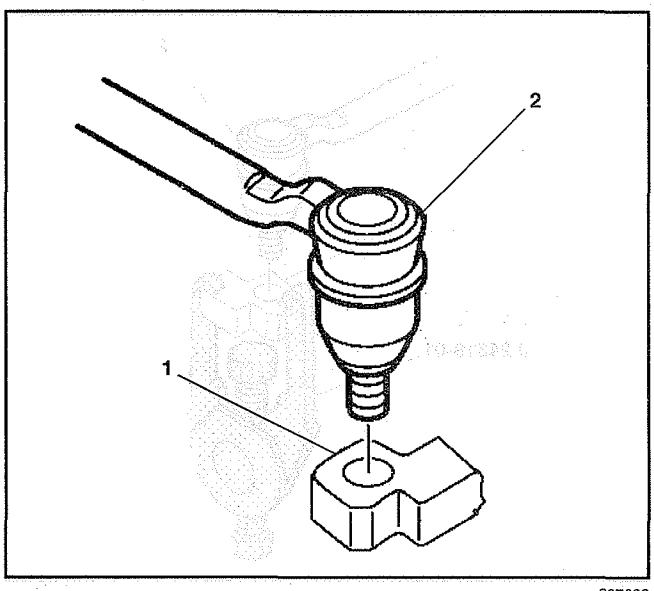

297628

2. Connect the outer tie rod assembly (2) to the steering knuckle (1).

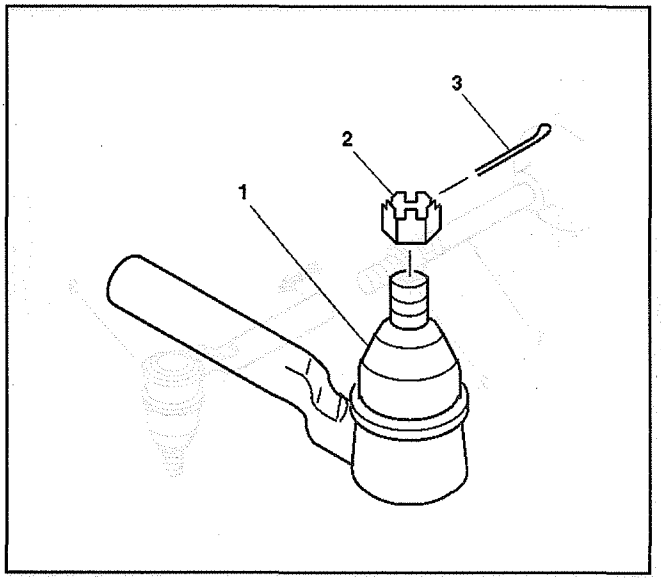

423439

3. Connect the hex slotted nut (2) to the outer tie rod stud (1).

Notice: Refer to *Fastener Notice* in Cautions and Notices.

Tighten

Tighten the hex slotted nut (2) to 47 N·m (35 lb ft). Align the cotter pin slot by tightening the hex slotted nut (2) up to 1/6 additional turn, or 70 N·m (52 lb ft) maximum. Do not back off the hex slotted nut (2) for the cotter pin (3) insertion.

4. Install the cotter pin (3) into the hole in the tie rod stud.

Important: Be sure the rack and pinion boot is not twisted or puckered during toe adjustment.

5. Adjust the toe by turning the inner tie rod. Follow recommended manufacturer specifications.

Tighten

Tighten the hex jam nut against the outer tie rod to 68 N·m (50 lb ft).

cardiagn.com

Tie Rod Replacement - Inner

Disassembly Procedure

1. To remove the rack and pinion boot; refer to *Rack and Pinion Boot Replacement - Off Vehicle (Quiet Valve).*

Important: The rack must be held during removal and installation of the inner tie rod to prevent damage to the rack.

2. Remove the shock dampener (2) from the inner tie rod assembly (5).
3. Slide the shock dampener (2) back on the rack (1).
4. Remove the inner tie rod assembly (5) from the rack assembly (1) as follows:
   4.1. Place a wrench on flats of rack assembly (3).
   4.2. Place another wrench on the flats of the inner tie rod housing (4).
   4.3. Rotate the inner tie rod housing (4) counterclockwise until the inner tie rod (5) separates from the rack (1).
5. Remove the old Loctite® from the threads (2) of the rack (1) and the inner tie rod (3).

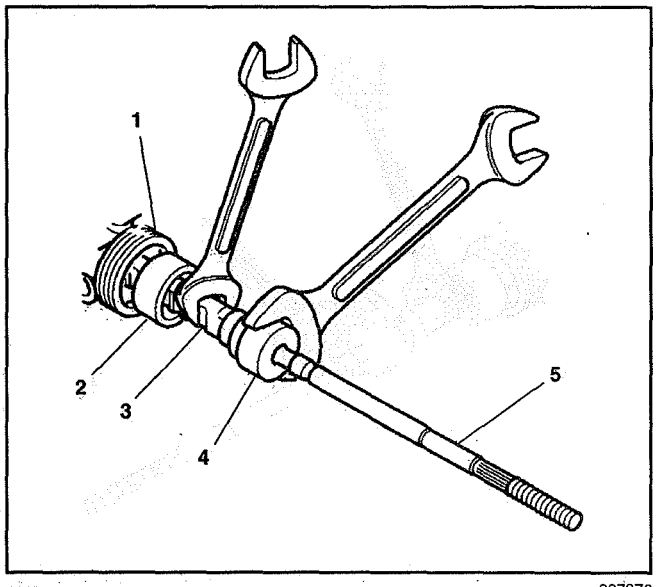

297376

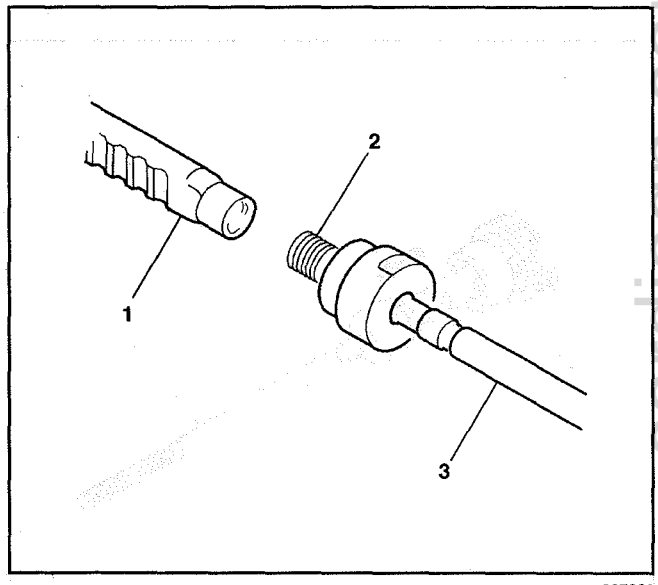

297389

cardiagn.com

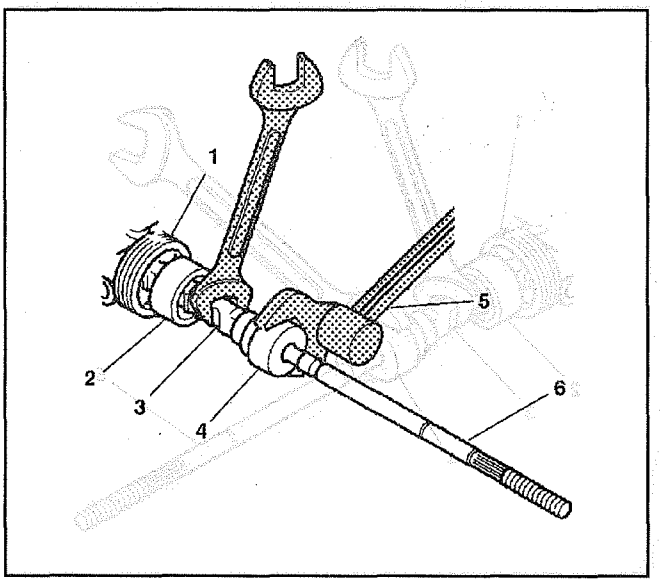

297392

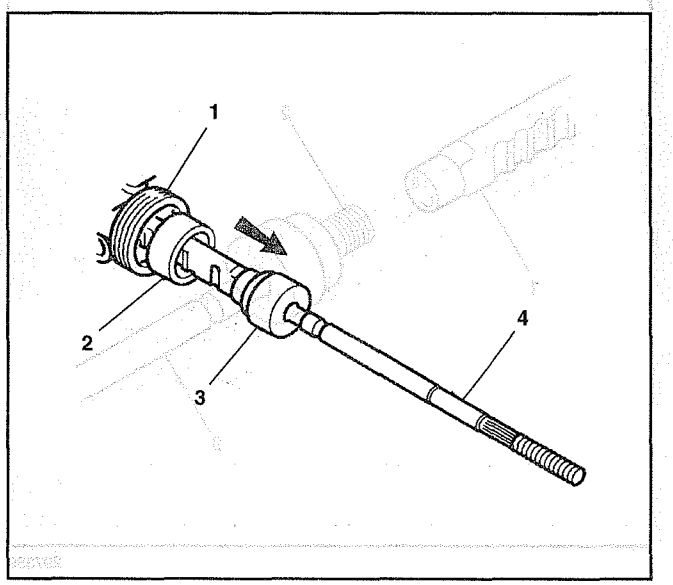

297398

Assembly Procedure

Important: The rack must be held during removal and installation of the inner tie rod to prevent damage to the rack.

1. Slide the shock dampener (2) forward onto the rack (1).

Important: Threads must be clean prior to Loctite® application. Check Loctite® (or equivalent) container for expiration date. Use only enough Loctite® to evenly coat threads.

2. Apply Loctite® 262 (or equivalent) to the inner tie rod threads.

Notice: Refer to *Fastener Notice* in Cautions and Notices.

3. Attach the inner tie rod (6) on the rack (1) as follows:
   3.1. Place a wrench on the flats of the rack assembly (3).
   3.2. Place a torque wrench (5) on the flats of the inner tie rod housing (4).

   Tighten

   Inner tie rod to 100 N·m (74 lb ft).
4. Slide the shock dampener (2) over the inner tie rod housing (3) until the front lip of the shock dampener (2) bottoms against the inner tie rod housing (3).
5. To assemble the rack and pinion boot; refer to *Rack and Pinion Boot Replacement - Off Vehicle (Quiet Valve).*

cardiagn.com

Steering Gear Cylinder Pipe Assemblies/O-Ring Seals Replacement - Off Vehicle (Quiet Valve)

Disassembly Procedure

1. Loosen both cylinder line fittings (1) on the cylinder end of the gear assembly (2).
2. Loosen both fittings on the cylinder line assemblies (3) at the valve end of the gear assembly (2).

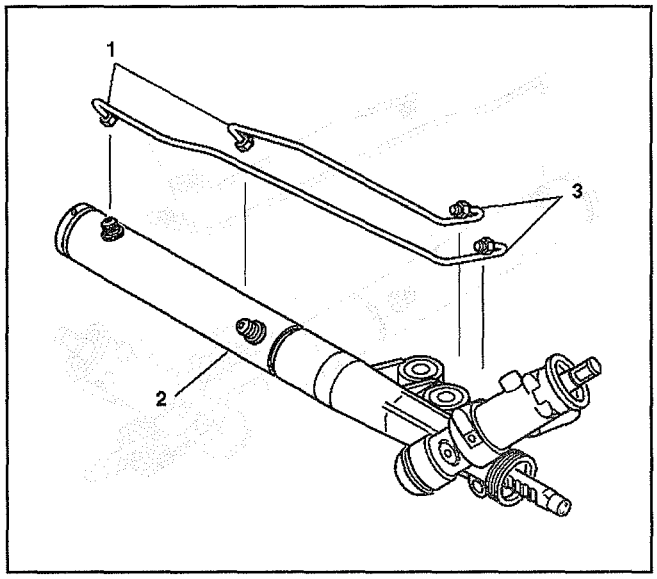

423409

3. Remove both cylinder line assemblies (1) from the rack and pinion gear assembly (2).

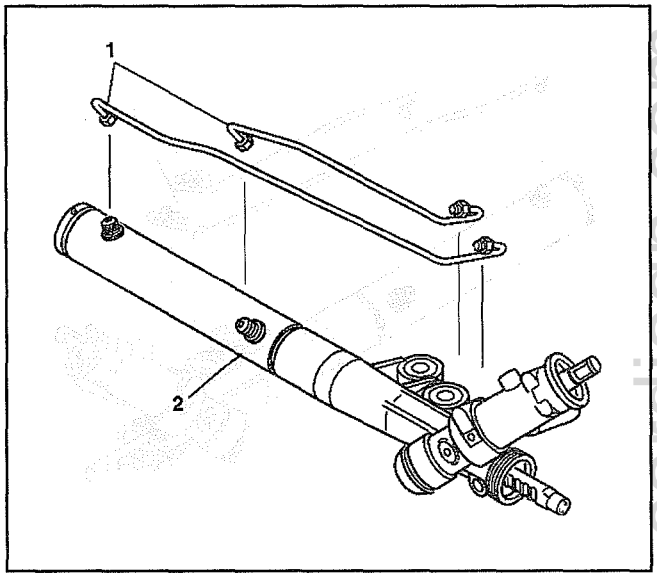

423417

4. Remove the O-ring seals (1) from the valve end of line.
5. Discard the O-ring seals (1).

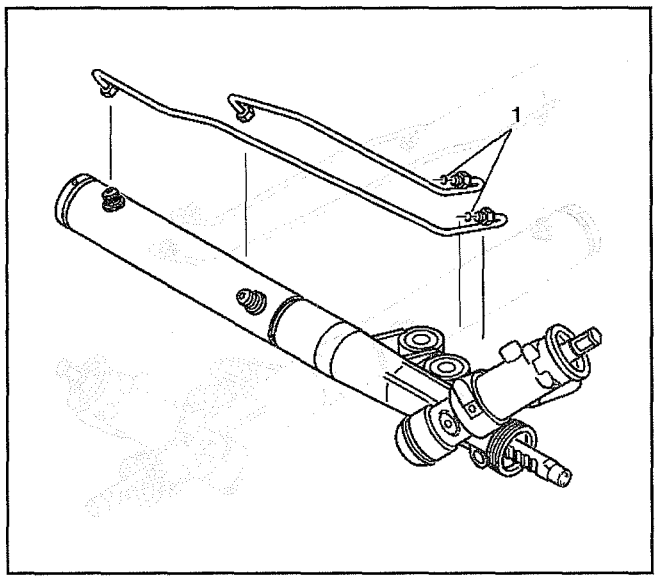

423421

cardiagn.com

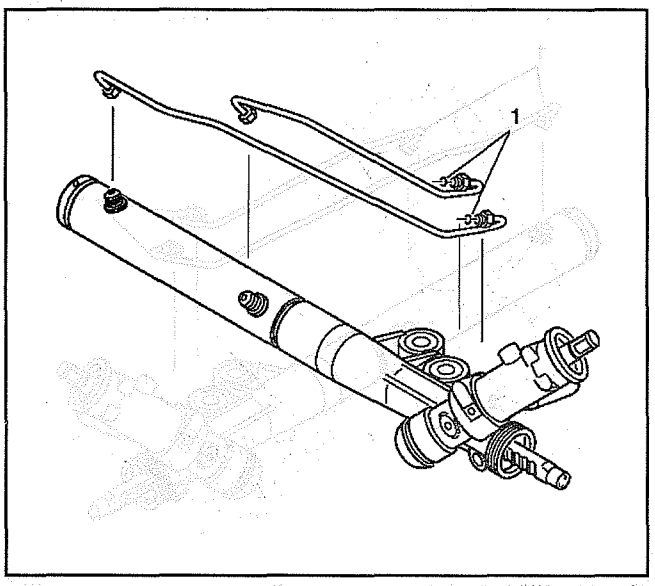

423421

Assembly Procedure

1. Inspect the cylinder lines (1) for the following items:
   - Cracks
   - Dents
   - Damage to the threads
2. Replace the parts as needed.

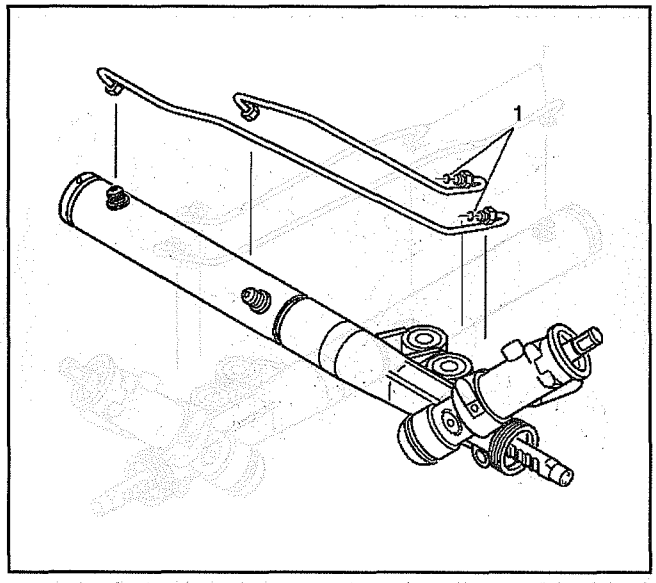

423421

3. Install the new O-ring seals (1) to the valve end of the cylinder lines.

Important: Carefully align the threads on all of the fittings.

4. Finger tighten the fittings in order to avoid stripping and cross-threading the fittings.

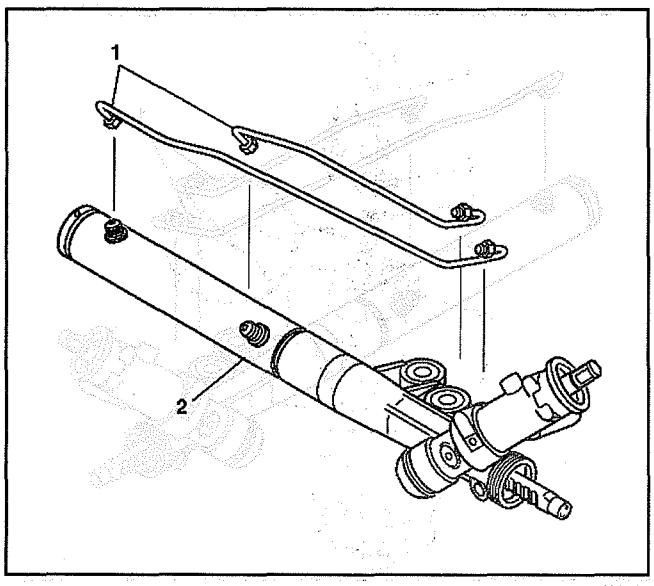

423417

5. Install the cylinder line assemblies (1) to the gear assembly (2).

Notice: Refer to *Fastener Notice* in Cautions and Notices.

Tighten

Valve end fittings to 16.9 N·m (12.6 lb ft). Cylinder end fittings to 27 N·m (20 lb ft).

Important: Flush and bleed power steering system (hoses, reservoir and cooler lines) with power steering fluid GM Part #1050017 (or equivalent meeting GM Specification #9985010).

6. Flush and bleed power steering system. Refer to *Bleeding Power Steering System.*

cardiagn.com

Steering Gear Stub Shaft Seals and Bearing Replacement - Off Vehicle

Disassembly Procedure

1. Remove the adjuster plug lock nut (5) from the adjuster plug (4).
2. Remove the adjuster plug (4) from the gear assembly (1).
3. Remove the adjuster spring (3) and the rack bearing (2).

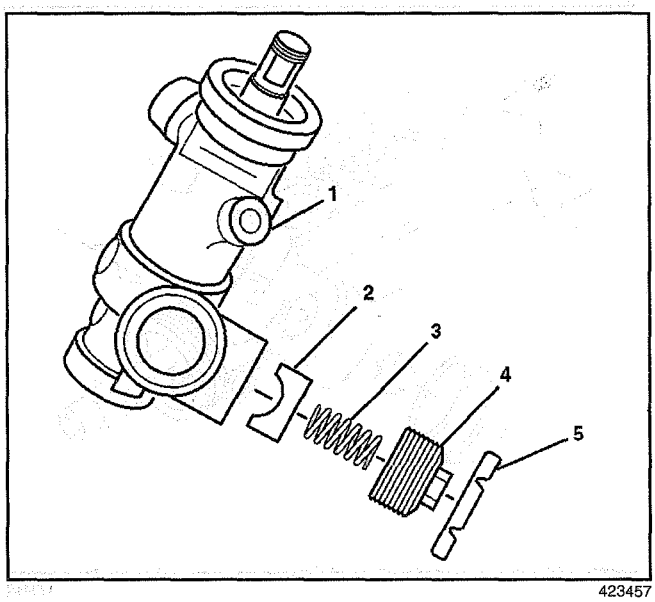

423457

4. Remove the retaining ring (1) from the valve bore of the rack and pinion gear assembly (2).
5. Remove the dust cover (4) from the bottom of the rack and pinion gear assembly (2).

Important: Hold the stub shaft in order to prevent damage to the pinion teeth.

6. Remove the hex lock nut (3) from the lower end of the pinion and valve assembly while holding the stub shaft with a 14 mm crowfoot wrench.

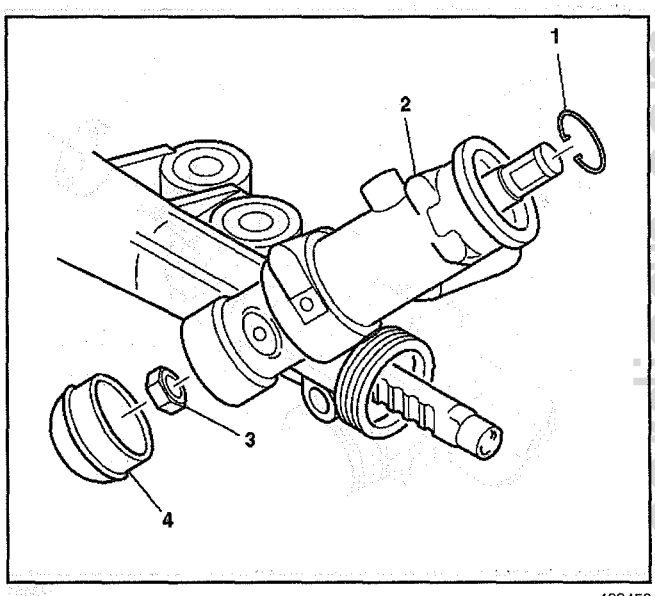

423458

Important: When performing the following procedure, do not remove pinion and valve assembly from the rack and pinion gear assembly (5). Press the pinion and valve assembly only far enough to allow removal of the stub shaft bearing annulus (2) and the stub shaft seal (2).

7. Using an arbor press (1), press on the threaded end of the pinion until removal of the following items is possible:
   - 7.1. The stub shaft (4)
   - 7.2. The stub shaft seal (3)
   - 7.3. The stub shaft bearing annulus assembly (2)

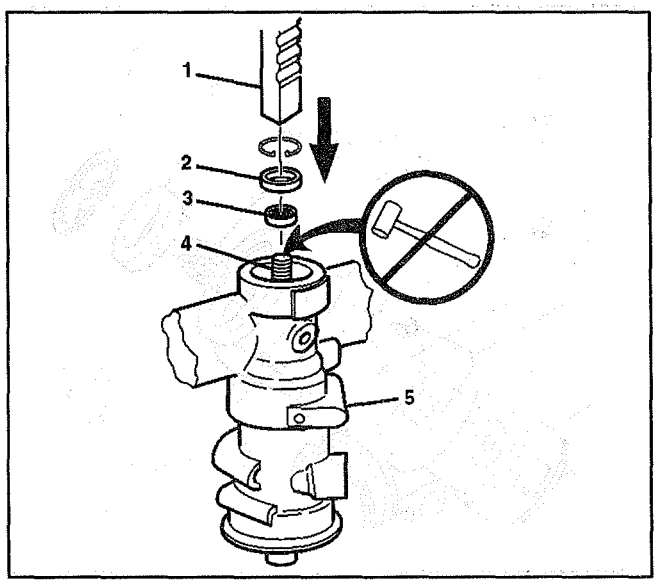

423459

cardiagn.com

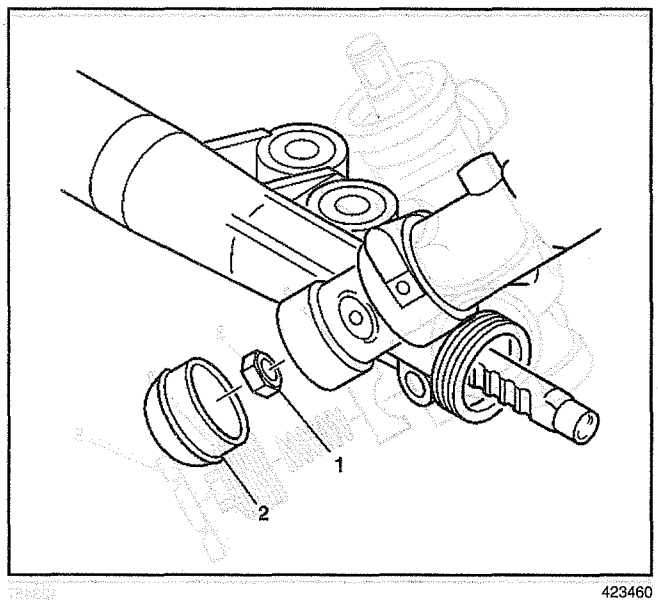

423460

Assembly Procedure

Tools Required

J 29810 Stub Shaft Seal Protector

Important: Hold the stub shaft in order to prevent damage to the pinion teeth.

1. Install the hex lock nut (1) onto the pinion while holding the valve stub shaft.
2. Install the dust cover (2) to the rack and pinion gear assembly.

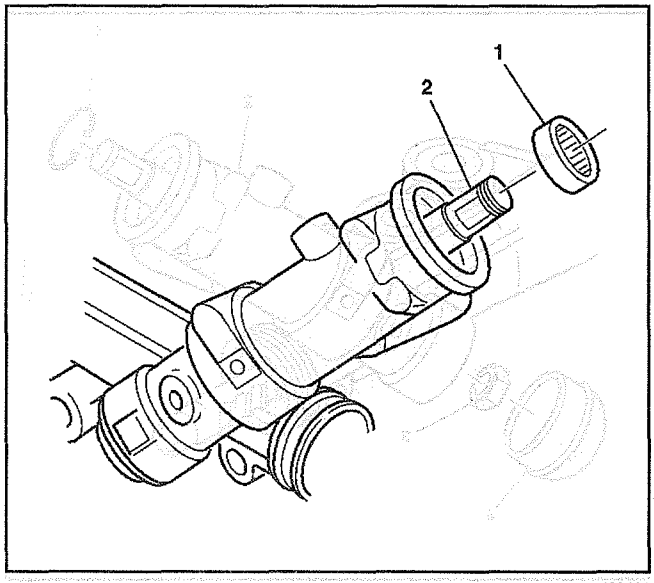

423461

3. Install the stub shaft bearing annulus assembly (1) onto the valve stub shaft (2).

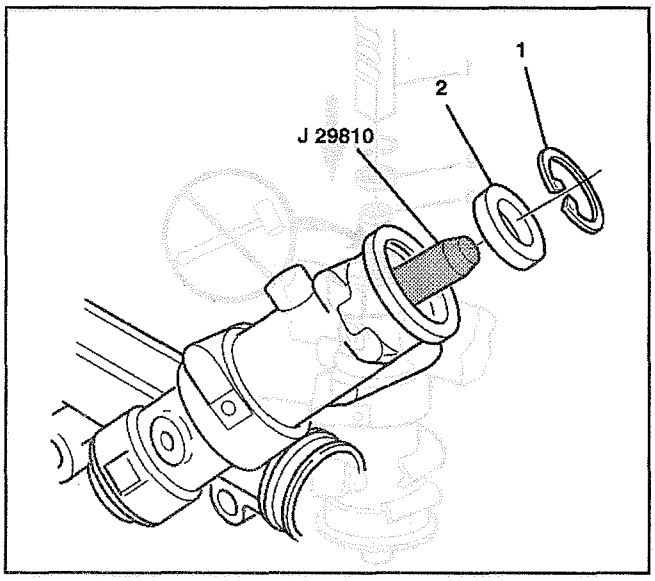

423462

4. Install the *J 29810* onto the valve stub shaft.
5. Lubricate the stub shaft seal (2) with grease.
6. Install the stub shaft seal (2) into the rack and pinion gear assembly.
7. Install the retaining ring (1) into the groove in the rack and pinion gear assembly.

cardiagn.com

8. Lubricate the following items with lithium base grease:
   8.1. The rack bearing (2)
   8.2. The adjuster spring (3)
   8.3. The adjuster plug (4)
9. Install the following items into the gear assembly:
   9.1. The rack bearing (2)
   9.2. The adjuster spring (3)
   9.3. The adjuster plug (4)
10. Turn the adjuster plug (4) clockwise onto the rack and pinion gear assembly (1) until the adjuster plug (4) bottoms in the rack and pinion gear assembly (1), then turn the adjuster plug (4) back 50 degrees to 70 degrees.
11. Inspect the rotational torque on the pinion. The maximum pinion preload torque is 1.8 N·m (16 lb in).

Notice: Refer to *Fastener Notice* in Cautions and Notices.

12. Install the adjuster plug lock nut (5) to the adjuster plug (4).

    Tighten

    Finger tighten the adjuster plug lock nut (5) while holding the adjuster plug (4) stationary.

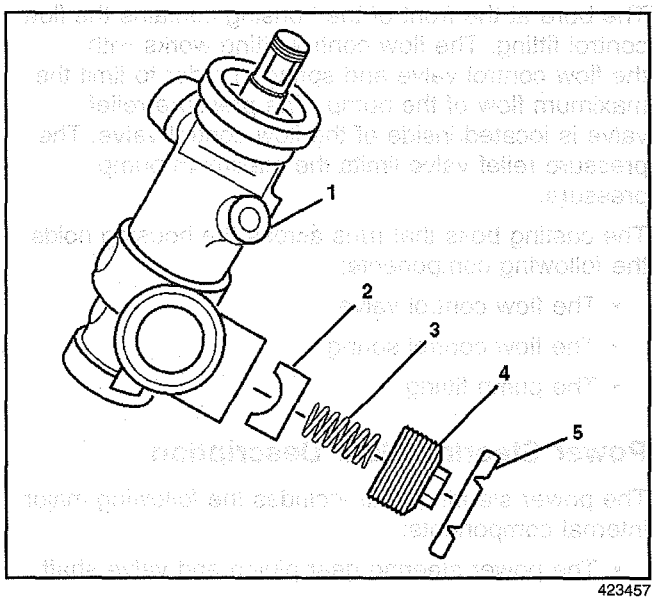

423457

Description and Operation

Power Steering Pump Description

A constant displacement vane-type pump provides hydraulic pressure and flow for the power steering system. The pump is located on the engine and is belt driven by the serpentine belt through the power steering pulley. The power steering reservoir is integrally mounted on the LS1 V8 system (engine mounted) and is remote-mounted (radiator support mounted) on L36 V6 systems.

The power steering pump contains the following major components:

- The drive shaft
- The pump housing
- The pump fitting
- The flow control valve
- The flow control spring
- The thrust plates
- The pressure plates
- The pump ring
- The pump rotor
- The pump vanes

The power steering system has a remote reservoir. The reservoir cap has an attached fluid level indicator which shows the fluid level in the reservoir.

cardiagn.com

The bore at the front of the housing contains the flow control fitting. The flow control fitting works with the flow control valve and spring in order to limit the maximum flow of the pump. The pressure relief valve is located inside of the flow control valve. The pressure relief valve limits the maximum pump pressure.

The casting boss that runs across the housing holds the following components:

- The flow control valve
- The flow control spring
- The pump fitting

Power Steering Gear Description

The power steering gear includes the following major internal components:

- The power steering gear pinion and valve shaft
- The steering gear rack and piston
- The inner tie rods
- The outer tie rods

The steering gear rack and piston is supported at the ends in the steering gear housing. The steering gear rack and piston is sealed in order to prevent leakage across the piston. The pinion and valve intersects with the rack and piston and meshes directly with the teeth of the rack and piston.

Manual steering is always available during the following situations:

- When the engine is not running
- In the event of power steering pump failure
- In the event of serpentine belt failure

Steering effort is increased when the above conditions exists.

The power steering pump provides hydraulic pressure and fluid flow in order to move the gear components. This action occurs when the vehicle is parked or moving. The valve directs pressurized fluid during a steering maneuver. The fluid travels through the external steel cylinder lines in order to act on the rack and piston. When the vehicle is turned right, the steering valve opens and routes pressurized fluid to the left side of the piston. At the same time, the valve allows fluid to escape from the right side of the piston and return to the valve area. The fluid pressure is converted into a mechanical force which is applied to the piston. This difference in force across the piston causes the rack to move to the right. The opposite action occurs when the gear is turned to the left.

The effort to steer the vehicle is created by the pressure difference at the piston when the following conditions exist:

- The power steering pump (3) provides pressurized fluid to the gear.
- The valve is operating correctly.

Seal Replacement Recommendations

Lip Seals

Lip seals, which seal rotating shafts, require special treatment. This type of seal is used on the hydraulic pump shaft of the pump. When leakage occurs in this area, always replace the seal or seals, after inspecting and thoroughly cleaning the sealing surface. Replace the shaft if pitting is found. If corrosion in the lip seal contact zone is slight, clean the surface of the shaft with crocus cloth. Replace the shaft only if the leakage cannot be stopped by smoothing with crocus cloth first.

O-Ring Seals

Whenever a part which forms a sealing surface for an O-ring is removed, the O-ring seal should also be removed and replaced with a O-ring seal. Lubricate all new O-rings with fresh power steering fluid to ease installation.

Special Tools and Equipment

Illustration	Tool Number/ Description
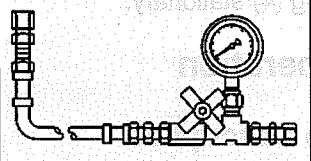 65360	J 5176-E Power Steering Pressure Tester
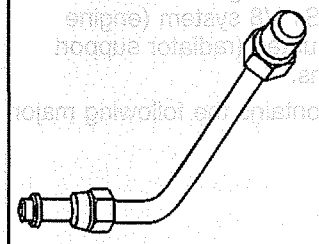 293487	J 5176-92 Pressure Tester Adapter
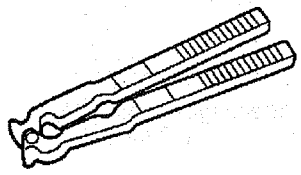 82243	J 22610 Keystone Clamp Plier

cardiagn.com

Illustration	Tool Number/ Description
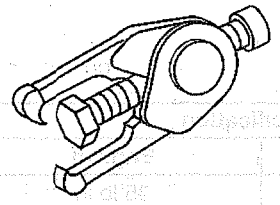 82244	J 24319-01 Universal Linkage Puller
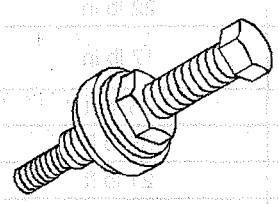 676	J 25033-C Power Steering Pump Pulley Installer
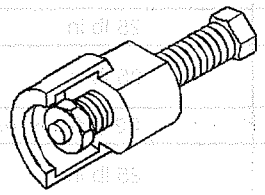 675	J 25034-C Power Steering Pump Pulley Remover
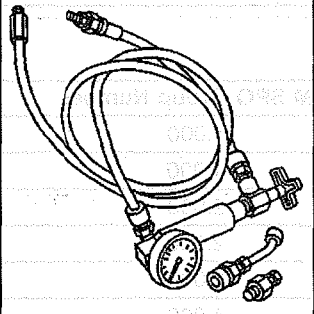 315384	J 25323-D Power Steering System Analyzer
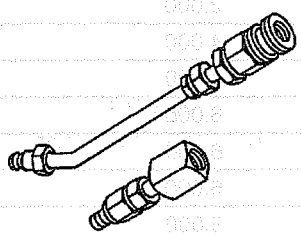 309644	J 29525 Steering Analyzer Adapter (18 mm)

Illustration	Tool Number/ Description
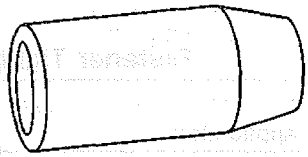 283637	J 29810 Stub Shaft Seal Protector
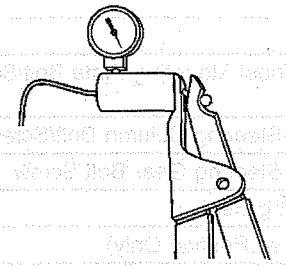 444239	J 35555 Mity Vac
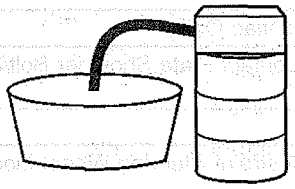 443571	J 43485 Power Steering Bleeder Adapter

cardiagn.com